# 2009 Can-Am ATV Service Manual

**Includes 2009 Dealer Only Technical Update Book.**

**Use the 2007/2008 Base manual for everything not contained in the 2009 Service Manual Supplement.**

**Some models may need supplemental manuals which have blue titles. Use the base manual for everything not contained in the supplement if your model or year requires a supplement.**

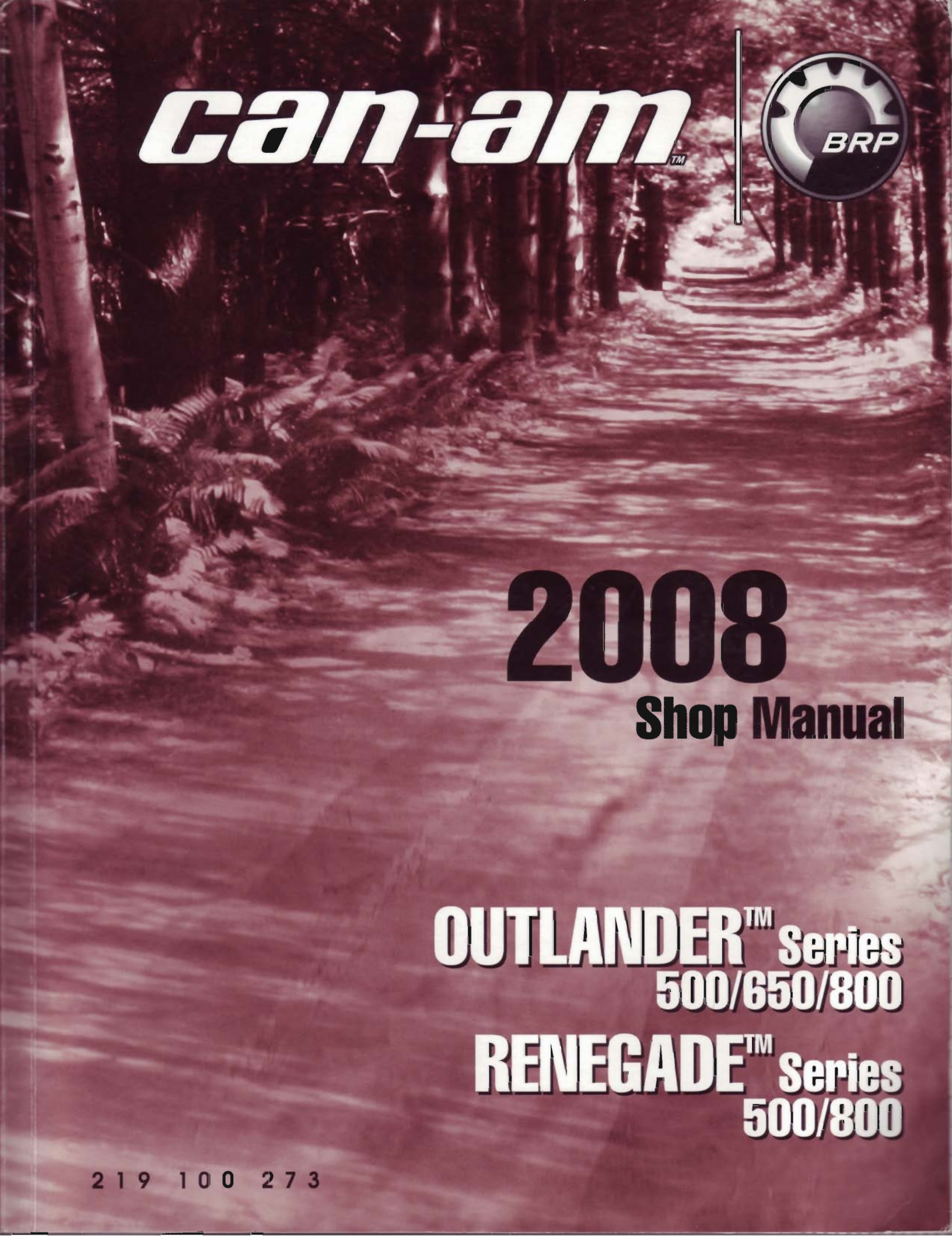
can-am™
BRP
2008
Shop Manual
OUTLANDER™ Series
500/650/800
RENEGADE™ Series
500/800
219 100 273

# TABLE OF CONTENTS


**SAFETY NOTICE** ..... **VIII**

**INTRODUCTION** ..... **IX**
- GENERAL INFORMATION ..... IX
- VEHICLE INFORMATION ..... X
- ENGINE EMISSIONS INFORMATION ..... X
- SELF-LOCKING FASTENERS PROCEDURE ..... XI
- LOCTITE® APPLICATION PROCEDURE ..... XI
- TIGHTENING TORQUES ..... XIV
- MANUAL INFORMATION ..... XVI

**01 MAINTENANCE**
- **01 – MAINTENANCE CHART** ..... **1**
  - MAINTENANCE CHART ..... 1
- **02 – PRESEASON PREPARATION** ..... **5**
- **03 – STORAGE PROCEDURES** ..... **7**
  - FUEL STABILIZER ..... 7
  - ENGINE LUBRICATION ..... 7
  - RAGS INSTALLATION ..... 7
  - COOLANT DENSITY ..... 8
  - DRIVE AND DRIVEN PULLEYS PROTECTION ..... 8
  - VEHICLE CLEANING ..... 8
  - VEHICLE PROTECTION ..... 8
- **04 – SPECIAL PROCEDURES** ..... **9**
  - TURN OVER ..... 9
  - ATV IMMERSION ..... 9

**02 TROUBLESHOOTING**
- **01 – TROUBLESHOOTING CHART** ..... **11**
  - ELECTRICAL SYSTEM ..... 11
  - COOLING SYSTEM ..... 12
  - MAGNETO SYSTEM ..... 13
  - LUBRICATION ..... 14
  - CYLINDER AND HEAD ..... 15
  - CRANKSHAFT ..... 15
  - GEARBOX ..... 15
  - COUPLING UNIT ..... 17
  - CVT ..... 17
  - ENGINE GENERAL ..... 20

**03 ENGINE AND GEARBOX (V490/V660/V810)**
- **01 – ENGINE REMOVAL AND INSTALLATION** ..... **25**
  - GENERAL ..... **26**
  - PROCEDURES ..... **26**
    - ENGINE REMOVAL ..... 26
    - ENGINE INSTALLATION ..... 32
    - ENGINE MOUNT REPLACEMENT ..... 33
- **02 – AIR INTAKE SYSTEM** ..... **35**
  - GENERAL ..... **37**
  - PROCEDURES ..... **37**
    - AIR FILTER ..... 37
    - AIR FILTER HOUSING ..... 37
    - RESTRICTOR ..... 39
- **03 – EXHAUST SYSTEM** ..... **41**
  - GENERAL ..... **42**
  - PROCEDURES ..... **42**

# TABLE OF CONTENTS


FRONT EXHAUST PIPE ..... 42
MUFFLER ..... 43
"Y" EXHAUST PIPE ..... 43
FUEL TANK PROTECTOR ..... 44
**04 – LUBRICATION SYSTEM ..... 45**
COMPONENTS ..... 46
ENGINE LUBRICATION ..... 47
GENERAL ..... 48
MAINTENANCE ..... 48
ENGINE OIL ..... 48
INSPECTION ..... 49
ENGINE OIL PRESSURE ..... 49
PROCEDURES ..... 49
OIL FILTER ..... 49
OIL PRESSURE SWITCH (OPS) ..... 50
ENGINE OIL PRESSURE REGULATOR ..... 51
OIL PUMP ..... 52
ENGINE OIL STRAINER ..... 54
REED VALVE ..... 54
**05 – COOLING SYSTEM ..... 55**
GENERAL ..... 58
INSPECTION ..... 58
COOLING SYSTEM LEAK TEST ..... 58
MAINTENANCE ..... 59
COOLANT REPLACEMENT ..... 59
PROCEDURES ..... 60
THERMOSTAT ..... 60
RADIATOR CAP ..... 61
RADIATOR ..... 61
COOLANT TANK ..... 61
COOLANT TEMPERATURE SENSOR (CTS) ..... 62
RADIATOR FAN RELAY (R1) ..... 62
RADIATOR FAN ..... 63
WATER PUMP HOUSING ..... 65
WATER PUMP IMPELLER ..... 66
WATER PUMP SHAFT AND SEALS ..... 66
**06 – MAGNETO SYSTEM ..... 71**
GENERAL ..... 73
PROCEDURES ..... 73
MAGNETO COVER ..... 73
STATOR ..... 74
ROTOR ..... 75
SPRAG CLUTCH ..... 76
SPRAG CLUTCH GEAR ..... 77
STARTER DRIVE GEARS ..... 77
**07 – INTAKE MANIFOLD, CYLINDER HEAD AND CYLINDER ..... 79**
GENERAL ..... 84
MAINTENANCE ..... 84
VALVE ADJUSTMENT ..... 84
INSPECTION ..... 85
LEAK TEST ..... 85
PROCEDURES ..... 87
INTAKE MANIFOLD ..... 87
VALVE COVER ..... 88
TIMING CHAIN TENSIONER ..... 89
CAMSHAFT TIMING GEAR ..... 90

ROCKER ARM ..... 92
TIMING CHAIN ..... 93
CYLINDER HEAD ..... 94
CAMSHAFT ..... 95
VALVE SPRING ..... 100
VALVE ..... 102
VALVE GUIDE ..... 104
CYLINDER ..... 105
PISTON ..... 106
PISTON RINGS ..... 111
**08 – BOTTOM END ..... 113**
GENERAL ..... 117
PROCEDURES ..... 117
ENGINE DRIVE SHAFT ..... 117
PTO COVER OIL SEAL ..... 119
PTO COVER ..... 119
DRIVE GEARS ..... 122
TIMING CHAIN ..... 123
TIMING CHAIN GUIDE ..... 124
CRANKCASE ..... 124
CRANKSHAFT ..... 128
**09 – GEARBOX AND 4X4 COUPLING UNIT ..... 135**
GENERAL ..... 138
MAINTENANCE ..... 138
GEARBOX OIL CHANGE ..... 138
PROCEDURES ..... 139
GEARBOX POSITION INDICATOR SWITCHES ..... 139
4WD INDICATOR SWITCH ..... 140
OIL SEALS ..... 140
ACTUATOR ..... 142
OUTPUT SHAFT AND COUPLING MECHANISM ..... 144
GEARBOX ..... 149
**10 – SHIFTER ..... 167**
GENERAL ..... 168
PROCEDURES ..... 168
TRANSMISSION LEVER ..... 168
LINK ROD ..... 169
SHIFTING PLATE ..... 170

**04 ENGINE MANAGEMENT (V490/V660/V810)**
**01 – OVERVIEW ..... 173**
OPERATING PRINCIPLE ..... 174
AIR INDUCTION ..... 174
FUEL SYSTEM ..... 174
ELECTRICAL SYSTEM ..... 176
ENGINE MANAGEMENT SYSTEM ..... 178
ELECTRONIC FUEL INJECTION ..... 178
IGNITION ..... 178
ENGINE MODES OF OPERATION ..... 179
MONITORING SYSTEM ..... 180
DIAGNOSTIC MODE ..... 180
ENGINE MANAGEMENT SYSTEM FLOW CHART ..... 181
**02 – EMS DIAGNOSTIC ..... 183**
GENERAL ..... 183
FAULT CODES ..... 184
FAULT CODE TABLE ..... 185

# TABLE OF CONTENTS


**03 – ADJUSTMENT AND REPAIR PROCEDURES ..... 193**
GENERAL ..... 193
FUEL SYSTEM ..... 193
ELECTRICAL SYSTEM ..... 194
BASIC ADJUSTMENTS ..... 197
IDLE SPEED ..... 197
THROTTLE CABLE ..... 197
CLOSED THROTTLE AND IDLE ACTUATOR RESET ..... 198
IGNITION TIMING ..... 199
REPAIR PROCEDURES ..... 199
MAIN RELAY (R2) ..... 199
D1 DIODE (ECM) ..... 199
ENGINE CONTROL MODULE (ECM) ..... 200
FUEL INJECTOR ..... 203
FUEL RAIL ..... 206
THROTTLE BODY ..... 207
THROTTLE POSITION SENSOR (TPS) ..... 210
IDLE BYPASS VALVE (IBV) ..... 212
CRANKSHAFT POSITION SENSOR (CPS) ..... 214
CAMSHAFT POSITION SENSOR (CAPS) ..... 215
MANIFOLD AIR PRESSURE AND TEMPERATURE SENSOR (MAPTS) ..... 216
COOLANT TEMPERATURE SENSOR (CTS) ..... 218

**05 FUEL SYSTEM**
**01 – FUEL TANK AND FUEL PUMP ..... 219**
GENERAL ..... 221
INSPECTION ..... 221
FUEL TANK LEAK TEST ..... 221
FUEL PRESSURE TEST ..... 224
PROCEDURES ..... 225
FUEL HOSE AND OETIKER CLAMPS ..... 225
IN-LINE FUEL FILTER ..... 225
FUEL TANK ..... 226
FUEL PUMP ..... 228
FUEL SYSTEM DIAGNOSTIC FLOW CHART ..... 230

**06 ELECTRICAL SYSTEM**
**01 – COMMUNICATION TOOLS AND B.U.D.S. SOFTWARE ..... 231**
COMMUNICATION TOOLS ..... 231
MULTI-PURPOSE INTERFACE (MPI) ..... 231
MULTI-PURPOSE INTERFACE-2 (MPI-2) ..... 232
B.U.D.S. SOFTWARE ..... 233
**02 – IGNITION SYSTEM ..... 235**
GENERAL ..... 235
PROCEDURES ..... 235
IGNITION SWITCH ..... 235
ENGINE RUN/STOP SWITCH ..... 237
IGNITION COIL ..... 238
SPARK PLUG ..... 240
**03 – CHARGING SYSTEM ..... 243**
GENERAL ..... 243
PROCEDURES ..... 244
VOLTAGE REGULATOR/RECTIFIER ..... 244
STATOR ..... 246
BATTERY ..... 248
MAIN GROUND ..... 251

**04 – STARTING SYSTEM** ..... **253**
GENERAL ..... 253
PROCEDURES ..... 254
FUSES ..... 254
D2 DIODE (STARTER SOLENOID) ..... 254
START BUTTON ..... 255
STARTING SOLENOID ..... 256
ELECTRIC STARTER ..... 258
**05 – DIGITALLY ENCODED SECURITY SYSTEM (DESS)** ..... **261**
GENERAL ..... 261
DESS KEY PROGRAMMING ..... 261
TROUBLESHOOTING ..... 262
**06 – LIGHTS, GAUGE AND ACCESSORIES** ..... **263**
GENERAL ..... 263
PROCEDURES ..... 264
FUSES ..... 264
ACCESSORY RELAY (R3) ..... 265
MULTIFUNCTION GAUGE ..... 266
VEHICLE SPEED SENSOR (VSS) ..... 276
FUEL LEVEL SENDER ..... 277
MULTIFUNCTION SWITCH ..... 277
12-VOLT AUXILIARY POWER OUTLET ..... 279
12-VOLT POWER OUTLET ..... 279
HEADLAMP ..... 280
TAILLIGHT ..... 283
WINCH ..... 283
WINCH CONTROL SWITCH ..... 285
D5 AND D6 DIODES (WINCH RELAY) ..... 286

**07 TRANSMISSION**
**01 – CONTINUOUSLY VARIABLE TRANSMISSION (CVT)** ..... **289**
GENERAL ..... 291
PROCEDURES ..... 291
DRIVE BELT ..... 291
DRIVE PULLEY ..... 292
DRIVEN PULLEY ..... 300
CVT AIR GUIDE ..... 305

**08 DRIVETRAIN**
**01 – FRONT DRIVE** ..... **307**
GENERAL ..... 309
PROCEDURES ..... 309
TIRES AND WHEELS ..... 309
WHEEL HUB ..... 309
FRONT DRIVE SHAFT ..... 310
DRIVE SHAFT BOOT ..... 312
FRONT DIFFERENTIAL ..... 312
FRONT PROPELLER SHAFT ..... 316
PROPELLER SHAFT U-JOINT ..... 317
**02 – REAR DRIVE** ..... **319**
GENERAL ..... 321
PROCEDURES ..... 321
TIRES AND WHEELS ..... 321
WHEEL HUB ..... 321
DIFFERENTIAL PROTECTOR ..... 322
DRIVE SHAFT ..... 322

# TABLE OF CONTENTS


DRIVE SHAFT BOOT ..... 323
REAR PROPELLER SHAFT ..... 323
REAR PROPELLER SHAFT U-JOINT ..... 325
REAR DIFFERENTIAL ..... 326

**09 STEERING SYSTEM**
**01 – STEERING SYSTEM ..... 331**
GENERAL ..... 333
PROCEDURES ..... 333
HANDLEBAR GRIP ..... 333
HANDLEBAR COVER ..... 333
HANDLEBAR ..... 333
STEERING COLUMN ..... 334
STEERING COLUMN BEARING ..... 335
TIE-ROD ..... 335
KNUCKLE ..... 336
WHEEL BEARING ..... 338
MULTIFUNCTION SWITCH ..... 339
THROTTLE HANDLE ..... 339
HANDLE BRAKE ..... 340
ADJUSTMENT ..... 340
STEERING ALIGNMENT ..... 340

**10 SUSPENSION**
**01 – FRONT SUSPENSION ..... 343**
GENERAL ..... 347
PROCEDURES ..... 347
TIRES AND WHEELS ..... 347
SHOCK ABSORBER AND SPRING ..... 347
LOWER SUSPENSION ARM PROTECTOR ..... 349
LOWER SUSPENSION ARM ..... 349
LOWER BALL JOINT ..... 351
UPPER SUSPENSION ARM ..... 352
UPPER SUSPENSION ARM BRACKET ..... 353
UPPER BALL JOINT ..... 354
**02 – REAR SUSPENSION ..... 357**
GENERAL ..... 359
PROCEDURES ..... 359
TIRES AND WHEELS ..... 359
REAR SHOCK ..... 359
TORSION BAR ..... 360
TRAILING ARM ..... 361
TRAILING ARM BEARINGS ..... 362

**11 BRAKES**
**01 – FRONT AND REAR BRAKES ..... 365**
GENERAL ..... 369
MAINTENANCE ..... 369
BRAKE FLUID ..... 369
PROCEDURES ..... 371
REAR BRAKE LIGHT SWITCH ..... 371
FRONT BRAKE LIGHT SWITCH ..... 372
PARKING BRAKE MECHANISM ..... 372
BRAKE LEVER ..... 373
FRONT MASTER CYLINDER ..... 373
REAR MASTER CYLINDER ..... 374

CALIPER ..... 376
BRAKE PADS ..... 377
BRAKE DISC ..... 379
BRAKE PEDAL ..... 380
BRAKE HOSES ..... 380

**12 BODY/FRAME**
**01 – BODY ..... 383**
GENERAL ..... 393
PROCEDURES ..... 393
DECALS ..... 393
SEAT ..... 393
CENTRAL PANEL ..... 395
DASH BOARD ..... 396
SIDE PANEL ..... 396
FOOTREST ..... 397
INNER FENDER ..... 397
HEAVY DUTY BUMPER ..... 397
FRONT BUMPER/FRONT SKID PLATE/FRONT FASCIA ..... 398
LUGGAGE RACK ..... 399
FENDER ..... 399
FENDER SUPPORT ..... 402
**02 – FRAME ..... 403**
GENERAL ..... 405
PROCEDURES ..... 405
FOOTREST SUPPORT ..... 405
BATTERY SUPPORT ..... 405
HITCH ..... 406
RECOVERY HOOK ..... 406
FRAME ..... 407

**13 TECHNICAL SPECIFICATIONS**
**01 – OUTLANDER SERIES ..... 409**
**02 – RENEGADE MODELS ..... 419**

**14 ELECTRICAL CONNECTORS AND WIRING DIAGRAMS**
**01 – ELECTRICAL CONNECTORS ..... 429**
DEUTSCH CONNECTORS ..... 429
ECM CONNECTORS ..... 430
MULTIFUNCTION SPEEDOMETER CONNECTOR ..... 433
BATTERY AND STARTER CABLE TERMINALS ..... 434
**02 – WIRING DIAGRAMS ..... 437**
WIRING CONNECTORS CODING ..... 437

# SAFETY NOTICE

This manual has been prepared as a guide to correctly service and repair 2008 Can-Am ATVs as describe in the model list in the *INTRODUCTION*.

This edition was primarily published to be used by mechanical technicians who are already familiar with all service procedures relating to BRP products. Mechanical technicians should attend training courses given by B.R.P.T.I.

Please note that the instructions will apply only if proper hand tools and special service tools are used.

It is understood that this manual may be translated into another language. In the event of any discrepancy, the English version shall prevail.

The content depicts parts and/or procedures applicable to the particular product at time of writing. Service and Warranty Bulletins may be published to update the content of this manual. Make sure to read and understand these. It does not include dealer modifications, whether authorized or not by BRP, after manufacturing the product.

In addition, the sole purpose of the illustrations throughout the manual, is to assist identification of the general configuration of the parts. They are not to be interpreted as technical drawings or exact replicas of the parts.

The use of BRP parts is most strongly recommended when considering replacement of any component. Dealer and/or distributor assistance should be sought in case of doubt.

The engines and the corresponding components identified in this document should not be utilized on product(s) other than those for which it was designed.

**⚠ WARNING**

**Unless otherwise specified, engine should be turned OFF and cold for all maintenance and repair procedures.**

This manual emphasizes particular information denoted by the wording and symbols:

**⚠ WARNING**

**Identifies an instruction which, if not followed, could cause serious personal injury including possibility of death.**

**CAUTION: Denotes an instruction which, if not followed, could severely damage vehicle components.**

**NOTE:** Indicates supplementary information needed to fully complete an instruction.

Although the mere reading of such information does not eliminate the hazard, your understanding of the information will promote its correct use. Always use common shop safety practice.

BRP disclaims liability for all damages and/or injuries resulting from the improper use of the contents. We strongly recommend that any services be carried out and/or verified by a highly skilled professional mechanic. It is understood that certain modifications may render use of the vehicle illegal under existing federal, provincial and state regulations.

# INTRODUCTION

## GENERAL INFORMATION

This shop manual covers the following BRP made 2008 Can-Am ATVs.

| MODEL | COLOR | ENGINE | MODEL NUMBER |
|---|---|---|---|
| Outlander 500 | Green, Red, Yellow | V490 | 2T8A, 2T8C, 2T8D, 2T8E, 2T8F |
| Outlander 500 XT | Camo, Green, Red, Yellow | V490 | 2U8A, 2U8B, 2U8C, 2U8D |
| Outlander MAX 500 | Red | V490 | 2W8C |
| Outlander MAX 500 XT | Green, Red, Yellow | V490 | 2X8A, 2X8B, 2X8C, 2X8D |
| Outlander 650 | Green, Red, Yellow | V660 | 2N8A, 2N8C, 2N8E, 2N8F, 2N8H, 2N8J |
| Outlander 650 XT | Camo, Green, Red, Yellow | V660 | 2P8A, 2P8B, 2P8C, 2P8D, 2P8E, 2P8F |
| Outlander MAX 650 | Green, Red, Yellow | V660 | 2R8A, 2R8C, 2R8D, 2R8E, 2R8F, 2R8G, 2R8H |
| Outlander MAX 650 XT | Camo, Green, Red, Yellow | V660 | 2S8A, 2S8B, 2S8C, 2S8D, 2S8E, 2S8F |
| Outlander 800 | Green, Red, Yellow | V810 | 2H8A, 2H8C, 2H8E, 2H8F, 2H8H, 2H8J |
| Outlander 800 XT | Camo, Green, Red, Yellow | V810 | 2J8A, 2J8B, 2J8C, 2J8D, 2J8E, 2J8F |
| Outlander Max 800 | Green, Red, Yellow Steel Gray Metallic | V810 | 2K8A, 2K8C, 2K8D, 2K8E, 2K8F, 2K8G, 2K8H |
| Outlander MAX 800 XT | Camo, Green, Red, Yellow | V810 | 2L8A, 2L8B, 2L8C, 2L8D, 2L7E, 2L8F, 2L8G |
| Outlander MAX 800 Ltd | Steel Gray Metallic | V810 | 2M8A, 2M8B, 2M8C |
| Renegade 500 | Yellow | V490 | 4E8A, 4E8B, 4E8C |
| Renegade 800 | Yellow | V810 | 4B8A, 4B8B, 4B8C |

The information and component/system descriptions contained in this manual are correct at time of writing. BRP however, maintains a policy of continuous improvement of its products without imposing upon itself any obligation to install them on products previously manufactured.

Due to late changes, there may be some differences between the manufactured product and the description and/or specifications in this document.

BRP reserves the right at any time to discontinue or change specifications, designs, features, models or equipment without incurring obligation.

# VEHICLE INFORMATION

## Model Number

*TYPICAL — VEHICLE IDENTIFICATION NUMBER LABEL*
*1. Model number*

## Vehicle Identification Number (V.I.N.)

*TYPICAL*
*1. V.I.N. (Vehicle Identification Number)*

## Engine Identification Number (E.I.N.)

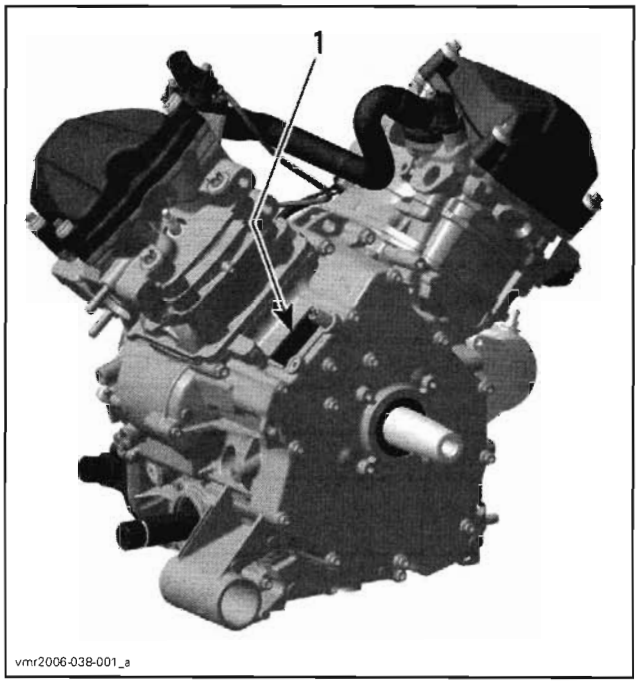


*1. Engine Identification Number (E.I.N.)*

# ENGINE EMISSIONS INFORMATION

## Manufacturer's Responsibility

Manufacturers of ATVs engines must determine the exhaust emission levels for each engine horsepower family and certify these engines with the United States of America Environmental Protection Agency (EPA). An emissions control information label, showing emission levels and engine specifications, must be placed on each vehicle at the time of manufacture.

## Dealer Responsibility

When performing service on ATVs that carry an emissions control information label, adjustments must be kept within published factory specifications.

Replacement or repair of any emission related component must be executed in a manner that maintains emission levels within the prescribed certification standards.

Dealers are not to modify the engine in any manner that would alter the horsepower or allow emission levels to exceed their predetermined factory specifications.

Exceptions include manufacturer's prescribed changes, such as altitude adjustments for example.

### Owner Responsibility

The owner/operator is required to have engine maintenance performed to maintain emission levels within prescribed certification standards.

The owner/operator is not to, and should not allow anyone to modify the engine in any manner that would alter the horsepower or allow emissions levels to exceed their predetermined factory specifications.

### EPA Emission Regulations

Some ATVs manufactured by BRP are certified to the EPA as conforming to the requirements of the regulations for the control of air pollution from new ATV engines. This certification is contingent on certain adjustments being set to factory standards. For this reason, the factory procedure for servicing the product must be strictly followed and, whenever practicable, returned to the original intent of the design.

The responsibilities listed above are general and in no way a complete listing of the rules and regulations pertaining to the EPA requirements on exhaust emissions for ATVs products. For more detailed information on this subject, you may contact the following locations:

FOR ALL COURIER SERVICES:
U.S. Environmental Protection Agency
Office of Transportation and Air Quality
1310 L Street NW
Washington D.C. 20005

REGULAR US POSTAL MAIL:
1200 Pennsylvania Ave. NW
Mail Code 6403J
Washington D.C. 20460

INTERNET: http://www.epa.gov/otaq/

E-MAIL: otaqpublicweb@epa.gov

## SELF-LOCKING FASTENERS PROCEDURE

The following describes the most common application procedures when working with self-locking fasteners.

Use a metal brush or a screw tap to clean the hole properly then use a solvent, let act during 30 minutes and wipe off. The solvent utilization is to ensure the adhesive works properly.

## LOCTITE® APPLICATION PROCEDURE

The following describes the most common application procedures when working with Loctite products.

NOTE: Always use proper strength Loctite product as recommended in this manual.

### Threadlocker

#### Uncovered Holes (bolts and nuts)

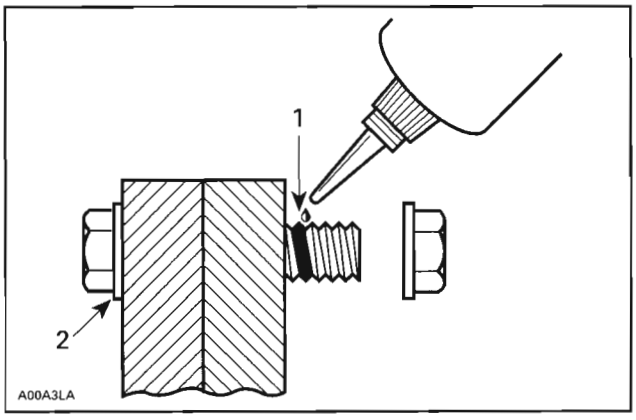


*1. Apply here*
*2. Do not apply*

Clean threads (bolt and nut) with solvent.

Apply Loctite Primer N (P/N 293 800 041) on threads and allow to dry.

Choose proper strength Loctite threadlocker.

Fit bolt in the hole.

Apply a few drops of threadlocker at proposed tightened nut engagement area.

Position nut and tighten as required.

#### Blind Holes

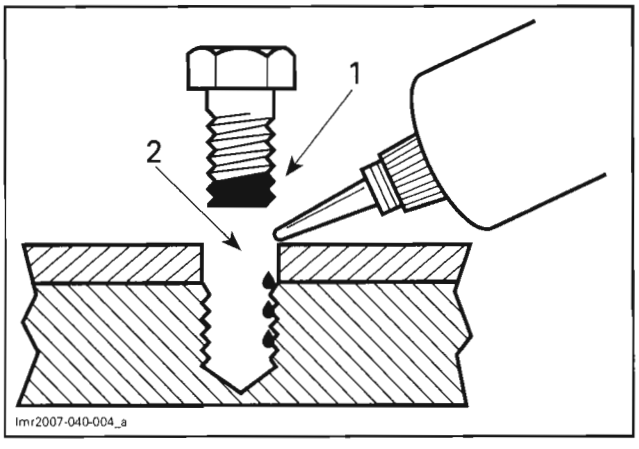


*1. On screw threads*
*2. On hole threads*

Clean threads (screw and hole) with solvent.

Apply Loctite Primer N (P/N 293 800 041) on threads (screw and nut) and allow to dry for 30 seconds.

Choose proper strength Loctite threadlocker.

Apply 2 or 3 drops along the threaded hole.

**NOTE:** To avoid a hydro lock situation, do not apply too much Loctite.

Apply several drops on screw threads.

Tighten as required.

### Stud in Blind Holes

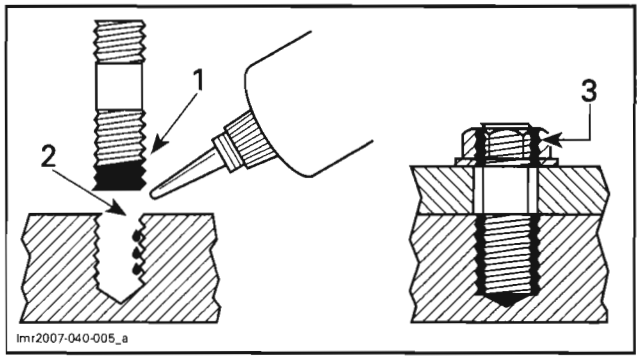


1. *On stud threads*
2. *On hole threads*
3. *Onto nut threads*

Clean threads (stud and hole) with solvent.

Apply Loctite Primer N (P/N 293 800 041) on threads and allow to dry.

Put 2 or 3 drops of proper strength Loctite threadlocker along the threaded hole.

**NOTE:** To avoid a hydro lock situation, do not apply too much Loctite.

Apply several drops of proper strength Loctite on stud threads.

Install stud.

Install cover, etc.

Apply drops of proper strength Loctite on uncovered threads.

Tighten nuts as required.

### Preassembled Parts

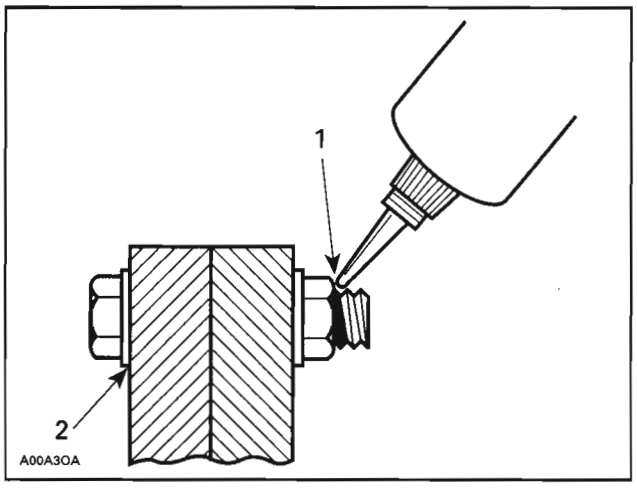


1. *Apply here*
2. *Do not apply*

Clean bolts and nuts with solvent.

Assemble components.

Tighten nuts.

Apply drops of proper strength Loctite on bolt/nut contact surfaces.

Avoid touching metal with tip of flask.

**NOTE:** For preventive maintenance on existing equipment, retighten nuts and apply proper strength Loctite on bolt/nut contact surfaces.

### Adjusting Screw

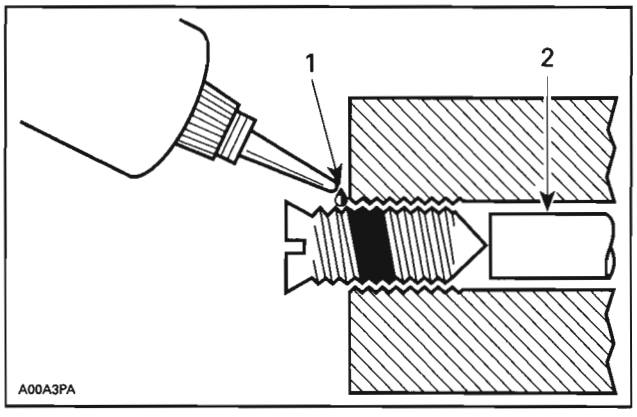


1. *Apply here*
2. *Plunger*

Adjust screw to proper setting.

Apply drops of proper strength Loctite threadlocker on screw/body contact surfaces.

Avoid touching metal with tip of flask.

**NOTE:** if it is difficult to readjust, heat screw with a soldering iron (232°C (450°F)).

## Stripped Thread Repair

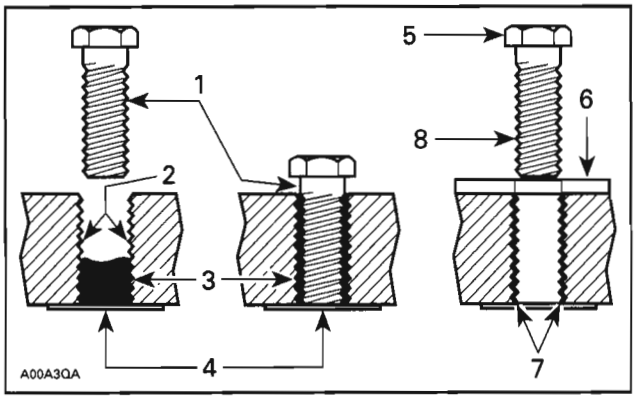


1. *Release agent*
2. *Stripped threads*
3. *Form-A-Thread*
4. *Tape*
5. *Cleaned bolt*
6. *Plate*
7. *New threads*
8. *Threadlocker*

### Standard Thread Repair

Follow instructions on Loctite FORM-A-THREAD 81668 package.

If a plate is used to align bolt:

- Apply release agent on mating surfaces.
- Put waxed paper or similar film on the surfaces.

Twist bolt when inserting it to improve thread conformation.

**NOTE:** NOT intended for engine stud repairs.

### Repair of Small Holes/Fine Threads

**Option 1:** Enlarge damaged hole, then follow *STANDARD THREAD REPAIR* procedure.

**Option 2:** Apply FORM-A-THREAD on the screw and insert in damaged hole.

### Permanent Stud Installation (light duty)

Use a stud or thread on desired length.

DO NOT apply release agent on stud.

Do a *STANDARD THREAD REPAIR*.

Allow to cure for 30 minutes.

Assemble.

## Gasket Compound

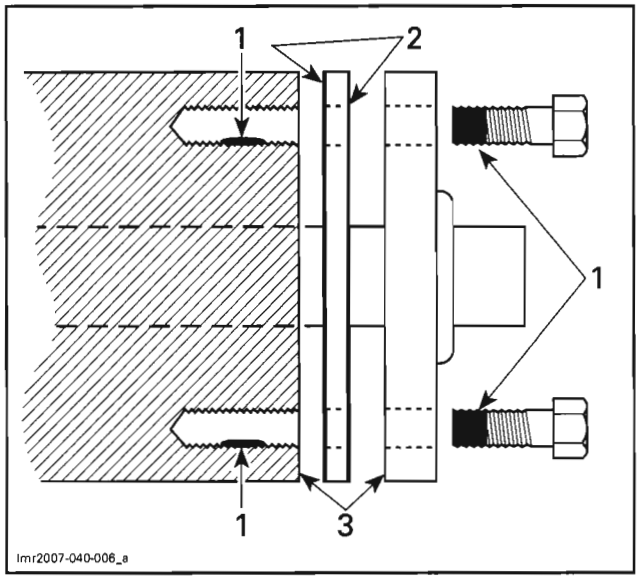


1. *Proper strength Loctite*
2. *Loctite Primer N (P/N 293 800 041) and Loctite 518 (P/N 293 800 038) on both sides of gasket*
3. *Loctite Primer N only*

Remove old gasket and other contaminants with Loctite Chisel remover (P/N 413 708 500). Use a mechanical mean if necessary.

**NOTE:** Avoid grinding.

Clean both mating surfaces with solvent.

Spray Loctite Primer N on both mating surfaces and on both sides of gasket. Allow to dry 1 or 2 minutes.

Apply Loctite 518 (P/N 293 800 038) on both sides of gasket, using a clean applicator.

Place gasket on mating surfaces and assemble immediately.

**NOTE:** If the cover is bolted to blind holes (above), apply proper strength Loctite on the threads of hole. Tighten.

If holes are sunken, apply proper strength Loctite on bolt threads.

Tighten as usual.

## Mounting on Shaft

### Mounting with a Press

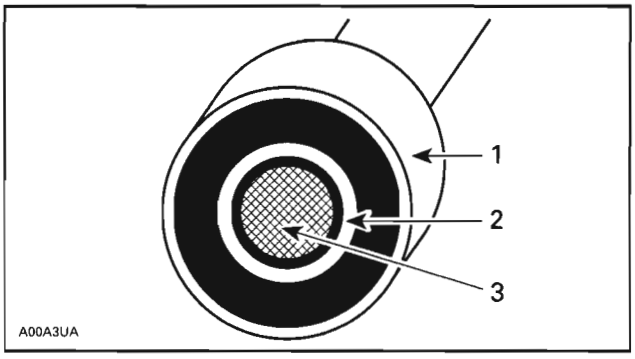


1. *Bearing*
2. *Proper strength Loctite*
3. *Shaft*

Clean shaft external part and element internal part.

Apply a strip of proper strength Loctite on shaft circumference at insert or engagement point.

NOTE: Retaining compound is always forced out when applied on shaft.

DO NOT use antiseize Loctite or any similar product.

No curing period is required.

### Mounting in Tandem

Apply retaining compound on internal element bore.

Continue to assemble as shown above.

## Case-In Components

### Metallic Gaskets

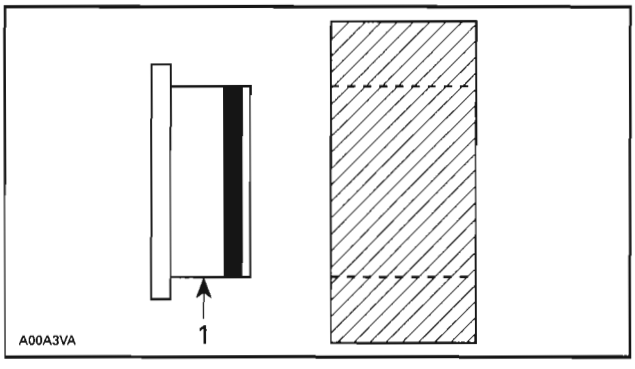


1. *Proper strength Loctite*

Clean inner housing diameter and outer gasket diameter.

Spray housing and gasket with Loctite Primer N (P/N 293 800 041).

Apply a strip of proper strength Loctite on leading edge of outer metallic gasket diameter.

NOTE: Any Loctite product can be used here. A low strength liquid is recommended as normal strength and gap are required.

Install according to standard procedure.

Wipe off surplus.

Allow it to cure for 30 minutes.

NOTE: Normally used on worn-out housings to prevent leaking or sliding.

It is generally not necessary to remove gasket compound applied on outer gasket diameter.

# TIGHTENING TORQUES

Tighten fasteners to torque mentioned in exploded views and/or text. When they are not specified, refer to following table.

**⚠ WARNING**

**Torque wrench tightening specifications must strictly be adhered to.**
**Locking devices (e.g.: locking tabs, elastic stop nuts, self-locking fasteners, etc.) must be installed or replaced with new ones, where specified. If the efficiency of a locking device is impaired, it must be renewed.**

In order to avoid a poor assembling, tighten screws, bolts or nuts in accordance with the following procedure:

Manually screw all screws, bolts and/or nuts.

Apply the half of the recommended torque value.

**CAUTION: Be sure to use the proper tightening torque for the proper strength grade.**

NOTE: When possible, always apply torque on the nut.

Torque to the recommended torque value.

NOTE: Always torque screws, bolts and/or nuts in a criss-cross sequence.

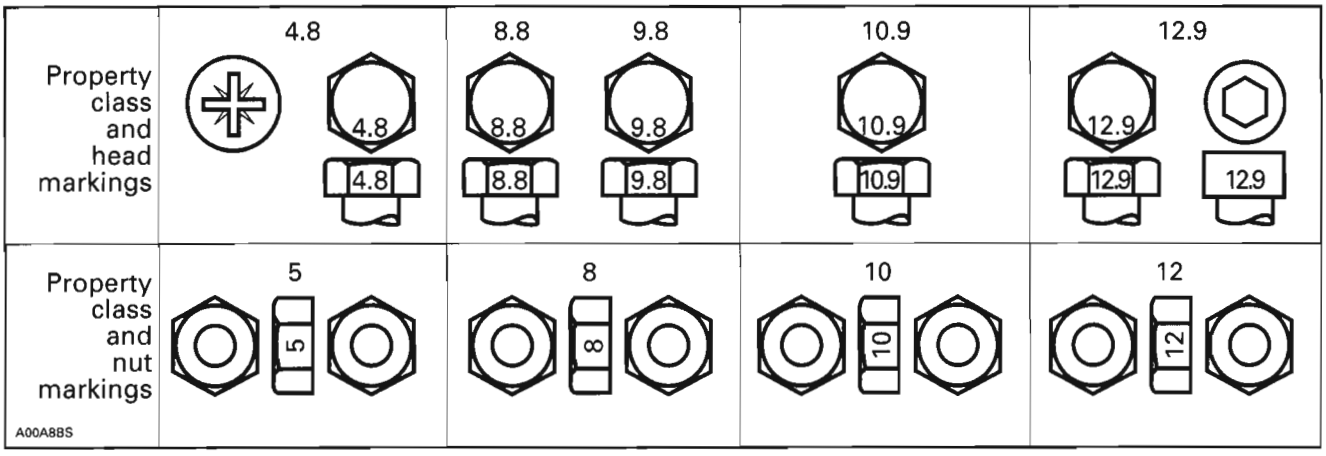


| FASTENER SIZE | FASTENER GRADE/TORQUE | | | |
|---|---|---|---|---|
| | **5.8** Grade | **8.8** Grade | **10.9** Grade | **12.9** Grade |
| M4 | 1.5 – 2 N•m (13 – 18 lbf•**in**) | 2.5 – 3 N•m N•m (22 – 27 lbf•**in**) | 3.5 – 4 N•m (31 – 35 lbf•**in**) | 4 – 5 N•m (35 – 44 lbf•**in**) |
| M5 | 3 – 3.5 N•m (27 – 31 lbf•**in**) | 4.5 – 5.5 N•m (40 – 47 lbf•**in**) | 7 – 8.5 N•m (62 – 75 lbf•**in**) | 8 – 10 N•m (71 – 89 lbf•**in**) |
| M6 | 6.5 – 8.5 N•m (58 – 75 lbf•**in**) | 8 – 12 N•m (71 – 106 lbf•**in**) | 10.5 – 15 N•m (93 – 133 lbf•**in**) | 16 N•m (142 lbf•**in**) |
| M8 | 15 N•m (133 lbf•**in**) | 25 N•m (18 lbf•ft) | 32 N•m (23 lbf•ft) | 40 N•m (30 lbf•ft) |
| M10 | 29 N•m (21 lbf•ft) | 48 N•m (35 lbf•ft) | 61 N•m (45 lbf•ft) | 73 N•m (53 lbf•ft) |
| M12 | 52 N•m (38 lbf•ft) | 85 N•m (63 lbf•ft) | 105 N•m (77 lbf•ft) | 128 N•m (94 lbf•ft) |
| M14 | 85 N•m (63 lbf•ft) | 135 N•m (100 lbf•ft) | 170 N•m (125 lbf•ft) | 200 N•m (148 lbf•ft) |

## MANUAL INFORMATION

The manual is divided into many major sections as you can see in the main table of contents at the beginning of the manual.

Each section is divided in various subsections, and again, each subsection has one or more division.

The illustrations show the typical construction of the different assemblies and, in all cases, may not reproduce the full detail or exact shape of the parts shown, however, they represent parts which have the same or a similar function.

**CAUTION: Most components in the vehicles are built with parts dimensioned in the metric system. Most fasteners are metric and must not be replaced by customary fasteners or vice-versa. Mismatched or incorrect fasteners could cause damage to the vehicle or possible personal injury.**

As many of the procedures in this manual are interrelated, we suggest that before undertaking any task, you read and thoroughly understand the entire section or subsection in which the procedure is contained.

A number of procedures throughout the book require the use of special tools. Before starting any procedure, be sure that you have on hand all required tools, or approved equivalents.

The use of RIGHT and LEFT indications in the text, always refers to the driving position (sitting on the vehicle).

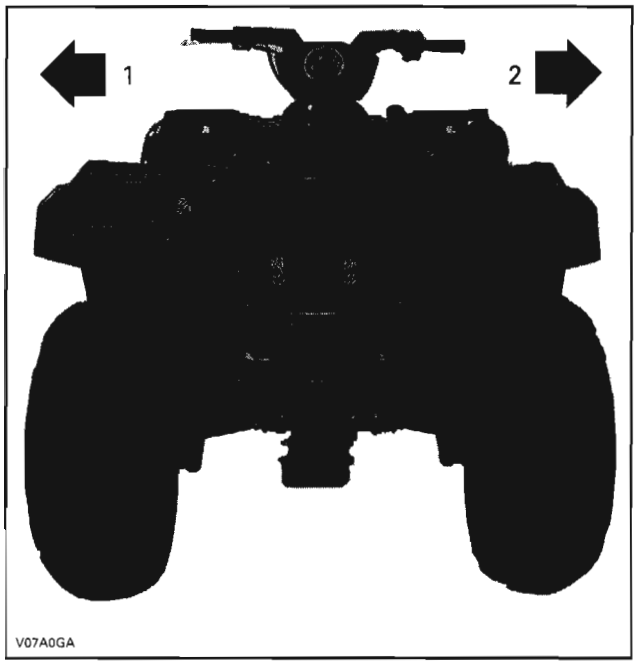


*TYPICAL*
*1. Left*
*2. Right*

This manual uses technical terms which may be different from the ones of the *PARTS CATALOGS*.

When ordering parts always refer to the specific model *PARTS CATALOGS*.

## TYPICAL PAGE

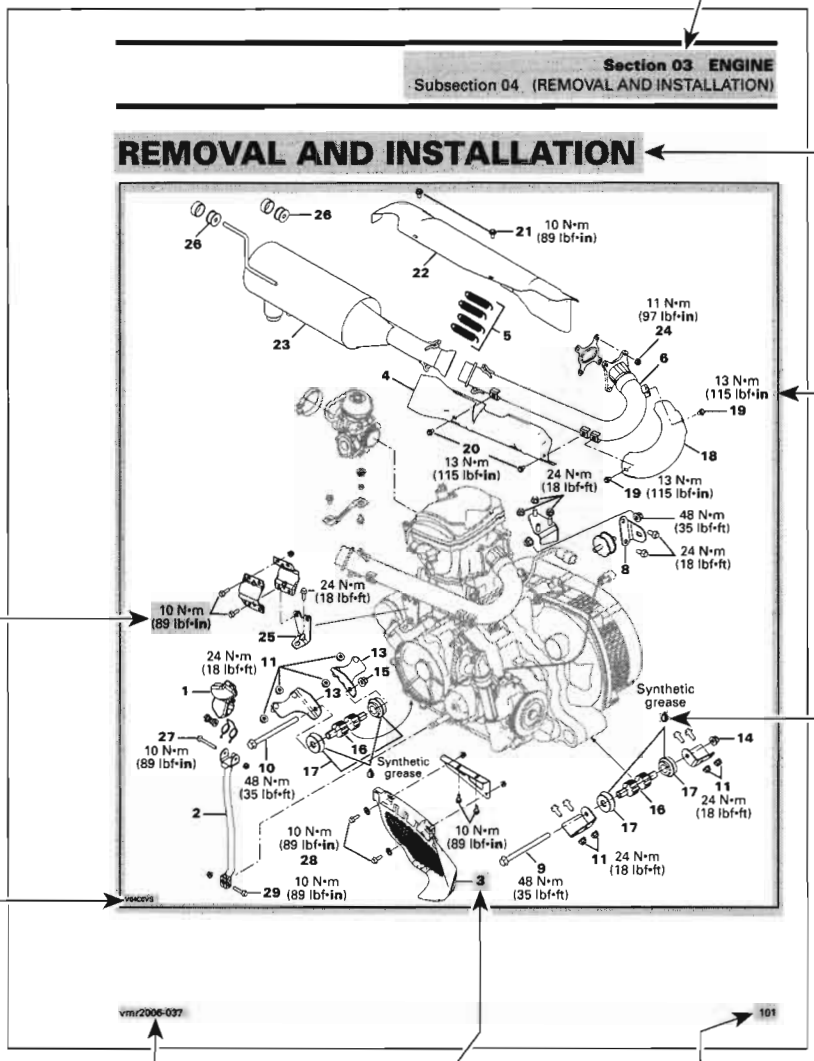


Page heading indicates section and subsection detailed.

Subsection title indicates beginning of the subsection.

Exploded view assists you in identifying parts and related positions.

Tightening torque nearby fastener. In this case, nut must be torqued to 10 N•m or 89 lbf•**in**.

**CAUTION:** Pay attention to torque specifications. Some of these are in lbf•**in** instead of lbf•ft. Use appropriate torque wrench.

Drop represents a liquid product to be applied to a surface.

Illustration number for publishing process.

Document number for publishing process.

Bold face number indicates special procedure concerning this part.

Page number

vmr2008-040-001_aen

## TYPICAL PAGE

**Section 03 ENGINE**
Subsection 06 (MAGNETO SYSTEM)

Title indicates main procedure to be carried-out.

### BEARING

#### Inspection

Ball bearing **no. 10** must rotate freely. Othewise, replace it.

#### Removal

- Heat up the magneto housing cover to about 100°C (212°F) for an easy ball bearing removal.

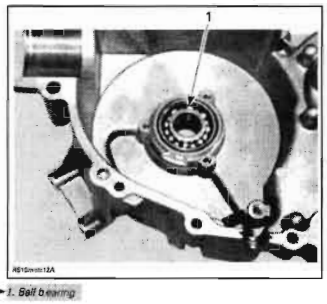


Call-outs for above illustration.

*1. Ball bearing*

#### Installation

For installation also heat the magneto housing up to about 100°C (212°F) to put ball bearing in place.

Place new ball bearing in freezer for 10 minutes approximately.

Reinstall other removed parts in the reverse order.

### STATOR AND TRIGGER COIL

#### Removal

Remove.

- magneto housing cover **no. 7**
- screw **no. 11** and **12**
- stator with trigger coil **no. 13**.

Bold face number following part name refers to exploded view at beginning of subsection.

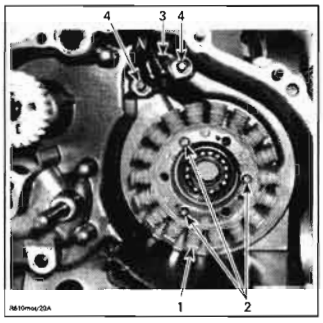


*1. Stator*
*2. Stator screws*
*3. Trigger coil*
*4. Trigger coil screws*

#### Inspection

Check stator and trigger coil condition. If damaged replace the faulty part.

For electrical inspection, refer to CHARGING SYSTEM for the stator and IGNITION SYSTEM for the trigger coil.

Reference to look up a certain section and subsection. In this case it concerns IGNITION SYSTEM.

138 vmr2008-048

V01A71S

# MAINTENANCE CHART

## MAINTENANCE CHART

The schedule should be adjusted according to operating conditions and use.

**NOTE:** The chart gives an equivalence between number of hours and months/year. Perform the maintenance operation to whatever time comes first.

**IMPORTANT:** ATV rental operations or intensive use of ATV, will require greater frequency of inspection and maintenance.

| A: ADJUST<br>C: CLEAN<br>I: INSPECT<br>L: LUBRICATE<br>R: REPLACE | **10 HOURS OR 300 KM (185 mi)**<br>**(The initial maintenance is very important and must not be neglected.)** | **EVERY 25 HOURS OR 750 KM (470 mi** | **EVERY 50 HOURS OR 1500 KM (930 mi)** | **EVERY 100 HOURS OR 3000 KM (1865 mi) OR 1 YEAR** | **EVERY 200 HOURS OR 6000 KM (3730 mi) OR 2 YEAR** | |
|---|---|---|---|---|---|---|
| PART/TASK | | | | | | REFER TO |
| **ENGINE** | | | | | | |
| Engine oil and filter | R | | | R | | *LUBRICATION SYSTEM* |
| Valve adjustment | I, A | | | I, A | | *INTAKE MANIFOLD, CYLINDER HEAD AND CYLINDER* |
| Condition of engine seals | I | | | I | | *ENGINE* |
| Engine mounting fasteners | I | | | I | | *ENGINE REMOVAL AND INSTALLATION* |
| Air filter (1) | | C | R | | | *AIR INTAKE SYSTEM* |
| Exhaust system | I | | | I | | *EXHAUST SYSTEM* |
| Spark arrester | | | | C | | |
| Coolant | I | | | I (2) | R | *COOLING SYSTEM* |
| Radiator cap/cooling system pressure test | I | | | | I | |
| Radiator condition/cleanliness (radiator fins) | I | | I | | | |
| **ENGINE MANAGEMENT SYSTEM** | | | | | | |
| Sensors (4) | I | | | I | | *ENGINE MANAGEMENT* |
| Fault code reading (4) | I | | | I | | |
| **FUEL SYSTEM** | | | | | | |
| Throttle body | I | | | I,L | | *ENGINE MANAGEMENT* |
| Throttle cable | I, A | | I, A, L | | | |
| Fuel lines, fuel rail, connections, check valves and fuel tank pressure test (4) | I | | | | I | *FUEL TANK AND FUEL PUMP* |
| In-line fuel filter | | | | R | | |
| Fuel pump pressure test | | | | | I | |

A: ADJUST
C: CLEAN
I: INSPECT
L: LUBRICATE
R: REPLACE

| PART/TASK | 10 HOURS OR 300 KM (185 mi) (The initial maintenance is very important and must not be neglected.) | EVERY 25 HOURS OR 750 KM (470 mi | EVERY 50 HOURS OR 1500 KM (930 mi) | EVERY 100 HOURS OR 3000 KM (1865 mi) OR 1 YEAR | EVERY 200 HOURS OR 6000 KM (3730 mi) OR 2 YEAR | REFER TO |
|---|---|---|---|---|---|---|
| **ELECTRICAL SYSTEM** | | | | | | |
| Spark plug (3) (4) | I | | | | R | *IGNITION SYSTEM* |
| Battery connections | I | | I | | | *CHARGING SYSTEM* |
| ECM connectors (visual inspection without disconnecting) | | | | I | | *ELECTRICAL CONNECTORS* |
| Electrical connections and fastening (ignition system, starting system, fuel injectors etc.) | I | | | I | | |
| Digitally Encoded Security System | I | | | I | | *DIGITALLY ENCODED SECURITY SYSTEM* |
| Condition of ignition switch, start button and engine run/stop switch | I | | | I | | *LIGHTS, GAUGE AND ACCESSORIES* |
| Condition of lighting system (HI/LO intensity, brake light, beam aiming, etc.) | I | | | I | | |
| Winch connections | | | | | | Refer to *BASIC GUIDE TO WINCHING TECHNIQUES* |
| **CONTINUOUSLY VARIABLE TRANSMISSION (CVT)** | | | | | | |
| Drive belt | | | | I | | *CVT* |
| Drive and driven pulleys | | | | I, C | | |
| One-way bearing inside CVT | | | | I, L | | |
| CVT air inlet | I | | I, C | | | |
| **GEARBOX** | | | | | | |
| Gearbox oil (1) | R | | | I | R | *GEARBOX AND 4 X 4 COUPLING UNIT* |
| Speed sensor | C | | | C | | |
| 4 x 4 coupling unit | I | | | I | | |
| **DRIVE TRAIN** | | | | | | |
| Drive shaft boots and protectors | I | I | | | | *FRONT DRIVE* and *REAR DRIVE* |
| Rear propeller shaft joints (1) | I | | I, L | | | |
| Drive shaft joints | | | I | | | |
| Wheel bearings | | | | I | | |
| Wheel nuts/studs | I | | I | | | |
| Tire wear and pressure | Every ride | | | | | |
| Front and rear differentials oil level, seals and vents | I | | I | | R | |

A: ADJUST
C: CLEAN
I: INSPECT
L: LUBRICATE
R: REPLACE

| PART/TASK | 10 HOURS OR 300 KM (185 mi) (The initial maintenance is very important and must not be neglected.) | EVERY 25 HOURS OR 750 KM (470 mi | EVERY 50 HOURS OR 1500 KM (930 mi) | EVERY 100 HOURS OR 3000 KM (1865 mi) OR 1 YEAR | EVERY 200 HOURS OR 6000 KM (3730 mi) OR 2 YEAR | REFER TO |
|---|---|---|---|---|---|---|
| **STEERING SYSTEM** | | | | | | |
| Handlebar fastener | | | | I | | *STEERING SYSTEM* |
| Steering system mechanism (column, bearing, etc.) (2) | I | | | I | | |
| Tie rod ends | | | I | | | |
| Front wheel alignment | I | | | I, A | | |
| **SUSPENSION** | | | | | | |
| Trailing arms | | | | I | | *REAR SUSPENSION* |
| Trailing arm bearings | | | | | I | |
| Shock absorbers | | | I | | | *FRONT SUSPENSION* and *REAR SUSPENSION* |
| A-arms | | | I, L | | | *FRONT SUSPENSION* |
| Ball joints | | I | | | | |
| **BRAKES** | | | | | | |
| Brake fluid | I | I | | | R | *HYDRAULIC BRAKES* |
| Brake system (discs, hoses, etc.) | | | | I | | |
| Brake pads (1) | | I | | | | |
| **BODY/FRAME** | | | | | | |
| Frame fastener | | | I | | | *BODY/FRAME* |
| Frame | | | | I | | |
| Hitch/trailer ball condition (if installed) | Every ride | | | | | |
| Storage cover latches | Every ride | | | | | |
| Operator's seat and its fasteners | Every ride | | | | | |
| Passenger's seat or storage box and its fasteners (MAX models) | Every ride | | | | | |
| Grab handles (MAX models) | Every ride | | | | | |
| Vehicle cleaning and protection | | | C | | | |

(1) More often under severe use such as dusty area, sand, snow, wet or muddy conditions.

(2) Every 100 hours, check coolant strength.

(3) Make sure that the spark plug gap is correct.

(4) Emission-related component.

# PRESEASON PREPARATION

Prior to use vehicle, proper vehicle preparation is required after performing the storage procedure.

Any worn, broken or damaged parts found during the storage procedure should have been replaced. If not, proceed with the replacement.

Using the maintenance chart, performed items in the column indicated: EVERY 100 HOURS OR 3000 km (1865 mi) OR 1 YEAR.

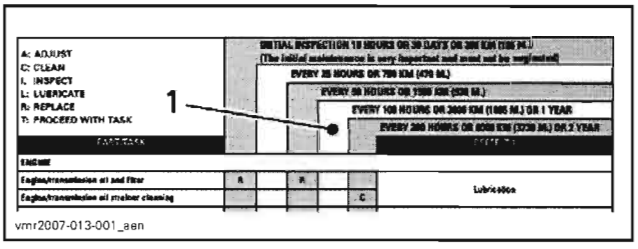


*1. Use this column*

Furthermore, proceed with the following:

**Vehicles Prepared as per Storage Procedure**

Remove rags from: CVT inlet and outlet hoses, engine air intake and muffler.

Test drive vehicle to confirm proper operation.

**Vehicles Not Prepared as per Storage Procedure**

Replace engine oil and filter.

Drain fuel tank and fill with fresh fuel.

Test drive vehicle to confirm proper operation.

# STORAGE PROCEDURES

## SERVICE PRODUCTS

| Description | Part Number | Page |
|---|---|---|
| BRP heavy duty cleaner | 293 110 001 | 8 |
| XP-S Lube | 293 600 016 | 8 |
| BRP fuel stabilizer | 413 408 600 | 7 |
| Vinyl & Plastic Cleaner | 413 711 200 | 8 |
| storage oil | 413 711 600 | 7 |
| storage oil (US) | 413 711 900 | 7 |

If the ATV is not used or is to be stored for an extended period of time, more than 4 months, be sure to perform the storage procedures described below.

## FUEL STABILIZER

With the new fuel additives, it is critical to use the BRP fuel stabilizer (P/N 413 408 600) or an equivalent to prevent fuel deterioration and fuel system gumming. Follow the manufacturer's instructions for proper use.

**CAUTION: Fuel stabilizer should be added prior to engine lubrication to ensure fuel system components protection against varnish deposits.**

Pour fuel stabilizer in fuel tank. Fill up fuel tank.

Do not drain fuel system.

## ENGINE LUBRICATION

Engine internal parts must be lubricated to protect them from rust formation during the storage period.

**⚠ WARNING**

**This procedure must only be performed in a well-ventilated area. Do not run engine during storage period.**

Proceed as follows:

- Start the engine and allow it to run at idle speed until the engine reaches its operating temperature.
- Stop the engine.
- Change engine oil and filter. Refer to *LUBRICATION SYSTEM.*
- Remove spark plugs and spray storage oil (P/N 413 711 600) into each cylinder.

**NOTE:** For US citizens, use storage oil (US) (P/N 413 711 900) only.

**CAUTION: Do not inject storage oil into throttle body bore to avoid blocking idle bypass valve.**

- Press start button, 1 or 2 seconds maximum, to lubricate cylinders.
- Reinstall the spark plugs.
- Remove the battery. Store it in dry and cool place out of the sun, refer to *BATTERY* in *CHARGING SYSTEM.*

## RAGS INSTALLATION

Using cleans rags, block the following locations: CVT inlet and outlet hoses, air intake inlet and muffler. The rags will prevent the intrusion of small animals, leaves or other debris.

**CAUTION: Do not forget, these rags must be removed during preseason preparation before starting the vehicle.**

To reach the CVT inlet hose and the air intake inlet, remove the front inner fender on the left side of vehicle.

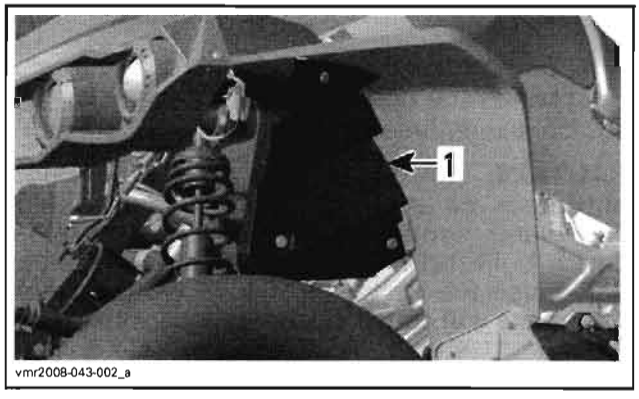


*TYPICAL — RENEGADE SHOWN*
*1. Inner fender*

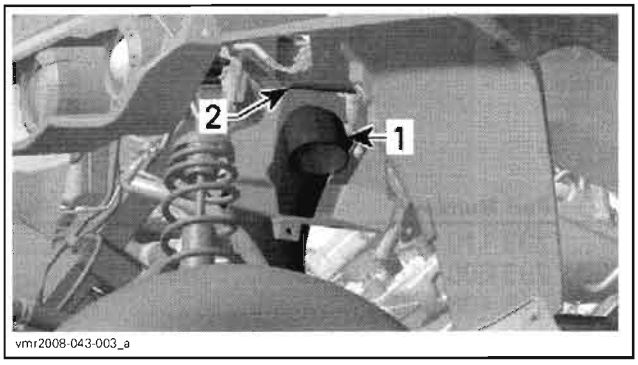


*TYPICAL — RENEGADE SHOWN*
*1. CVT inlet hose*
*2. Air intake inlet*

The CVT outlet hose is located at the rear of engine, against vertical frame beam. The removal of the left side panel is necessary to reach the hose.

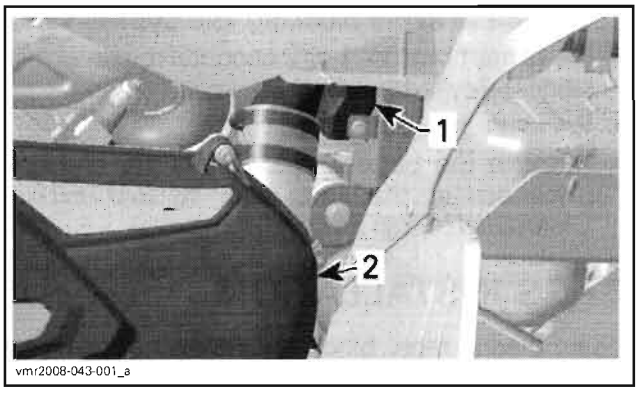


*TYPICAL — RENEGADE SHOWN*
*1. CVT outlet hose*
*2. CVT cover*

## COOLANT DENSITY

Test coolant density using an antifreeze hydrometer.

NOTE: Follow manufacturer's instructions for proper use.

A 50/50 mixture of antifreeze and distilled water will provide the optimum cooling, corrosion protection and antifreeze protection.

**CAUTION: Do not use tap water, straight antifreeze or straight water in the system. Tap water contains minerals and impurities which build up in the system. Straight water will cause the system to freeze while straight antifreeze will cause system temperature problems.**

Change coolant if necessary. Refer to *COOLING SYSTEM*.

## DRIVE AND DRIVEN PULLEYS PROTECTION

Remove drive belt from pulleys.

Inspect and clean pulleys then spray XP-S Lube (P/N 293 600 016) on pulley faces.

Do not reinstall drive belt. Close CVT cover.

## VEHICLE CLEANING

To facilitate the inspection and ensure adequate lubrication of components, it is recommended to clean the entire vehicle.

Wash and dry the vehicle.

**CAUTION: Never use a high pressure washer to clean the vehicle. USE LOW PRESSURE ONLY (like a garden hose). The high pressure can cause electrical or mechanical damages.**

Remove any dirt or rust.

To clean the vinyl or plastic parts, use only flannel clothes with Vinyl & Plastic Cleaner (P/N 413 711 200).

**CAUTION: It is necessary to use flannel cloths on plastic parts to avoid damaging surfaces. Never clean plastic parts with strong detergent, degreasing agent, paint thinner, acetone, products containing chlorine, etc.**

To clean the entire vehicle, including metallic parts use BRP heavy duty cleaner (P/N 293 110 001).

Inspect the vehicle and repair any damage. Touch up all metal spots where paint has been scratched off. Spray all metal parts with XP-S Lube (P/N 293 600 016).

## VEHICLE PROTECTION

Protect the vehicle with a cover to prevent dust accumulation during storage.

**CAUTION: The vehicle has to be stored in a cool and dry place and covered with an opaque tarpaulin. This will prevent sun rays and grime from affecting plastic components and vehicle finish.**

# SPECIAL PROCEDURES

## SERVICE PRODUCTS

| Description | Part Number | Page |
|---|---|---|
| XP-S Lube | 293 600 016 | 9–10 |

## TURN OVER

If the check engine indicator light stays ON after starting engine and the engine oil level is good, check the following:

- Oil filter for contamination.
  - Replace oil filter and oil.
- Oil pressure regulator valve stays open in the crankcase due to contamination (metallic particles).
  - Clean and/or replace the valve.
- Valve piston stuck in the oil pump housing.
  - Repair valve piston.
- Oil pressure switch for damages.
  - Replace it if necessary.
- Oil pump cleanliness and working.
  - Clean and/or replace oil pump if necessary.
- Oil strainer cleanliness and damages.
  - Clean and/or replace oil strainer.

## ATV IMMERSION

### ATV Submerged for a Long Time (over one hour)

Disassemble engine and transmission to clean the internal parts and check if there is no rust or corrosion on any internal parts. Refer to *TRANSMISSION* and to the specific *ENGINE* section.

Drain air filter housing then clean and dry air filter.

Remove muffler and empty it. Let muffler dry then reinstall it on the vehicle.

Flush fuel tank and refill with new gas.

Lubricate the throttle body. Refer to *ENGINE MANAGEMENT*.

Look for water in:

- brake system (replace brake fluid)
- differentials (drain oil and check internal parts for rust or corrosion then refill).

Lubricate all cables. Check if the cables operate properly.

Spray all metal parts with XP-S Lube (P/N 293 600 016).

Test drive to confirm all is working well (electrical and mechanical components).

### ATV Submerged for a Short Time (fewer one hour)

Check if engine oil is contaminated (oil will be milky). If so, perform the following instructions.

Drain engine oil.

Drain air filter housing then clean and dry air filter.

Look for water in fuel tank, in doubt, flush fuel tank and refill with new gas.

Drain the CVT housing by removing the bottom rear screw.

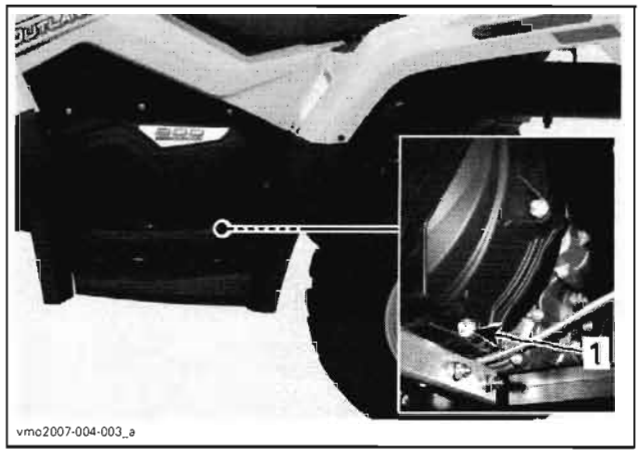


*OUTLANDER SHOWN*
*1. CVT cover drain plug*

Remove the CVT cover then clean and check all parts of CVT. Refer to *CVT*.

Lubricate all cables. Check if the cables operate properly.

Remove spark plugs then crank engine several times.

Add a small quantity of engine oil in cylinders (approximately 2 teaspoonfuls). Do not reinstall spark plugs at this moment.

Refill engine at the proper level with the recommended oil. Crank engine several times.

Check condition of spark plugs. If spark plugs appear good reinstall them, if not install new ones.

Start the engine and allow it to run at idle speed until the engine reaches its operating temperature.

Stop the engine.

Change engine oil and filter.

NOTE: Change oil as many times as necessary, until there is no white appearance in engine oil.

Spray all metal parts with XP-S Lube (P/N 293 600 016).

Test drive to confirm all is working well (electrical and mechanical components).

# TROUBLESHOOTING CHART

The following charts are provided to help in diagnosing the probable source of troubles. It should be used as a guideline. This section pertains to engine mechanical components only. Some related problems can come from other systems such as ignition system, fuel system etc. and have an impact on the engine. Ensure to check the other systems before concluding that the engine is faulty.

## ELECTRICAL SYSTEM

Symptom: **STARTER DOES NOT TURN**

1. **Ignition switch is in the OFF position.**
   - *Turn switch to the ON position.*
2. **Engine run/stop switch is in the OFF position.**
   - *Turn switch to the RUN position.*
3. **DESS key not programmed for the vehicle.**
   - *Refer to DESS SYSTEM.*
4. **Defective DESS key or switch.**
   - *Check key and switch.*
5. **Burnt fuse.**
   - *Check main fuse and wiring condition.*
6. **Transmission is not set to Park or Neutral position or brake switch is not activated.**
   - *Set transmission to PARK or NEUTRAL position or squeeze the brake lever or press on brake pedal.*
7. **Weak battery.**
   - *Recharge battery.*
8. **Poor contact of battery terminal(s) or ground cable connections.**
   - *Clean and tighten terminal(s).*
9. **Poor contact or open circuit of: start button, engine run/stop switch, ignition switch or starting solenoid.**
   - *Check and replace defective part.*
10. **GBPS switch(es) is (are) defective.**
    - *Check GBPS switch(es) and wiring condition. Refer to GEARBOX.*
11. **Diode incorrectly installed or failure.**
    - *Check diode installation and condition.*
12. **Defective ECM.**
    - *Check. Refer to ENGINE MANAGEMENT.*
13. **Multifunction speedometer replaced but not updated with proper coding.**
    - *Use B.U.D.S. and update ECM. Refer to LIGHTS, GAUGES AND ACCESSORIES.*
14. **Defective brake switch.**
    - *Check brake switch and its connectors. Replace defective part.*
15. **Engine mechanical problem (ensure that other electric components are good).**
    - *Check and replace defective part.*

Symptom: **STARTER TURNS, BUT DOES NOT CRANK THE ENGINE**

1. **Worn sprag clutch.**
   - *Replace.*
2. **Worn gears.**
   - *Replace.*

Symptom: **STARTER MOTOR KEEPS RUNNING**

1. **Shorted starting solenoid switch winding.**
   - *Replace starter solenoid.*
2. **Melted solenoid contacts.**
   - *Replace starter solenoid.*
3. **Sticking or defective starter clutch.**
   - *Lubricate or replace electric starter.*
4. **Start button stock.**
   - *Fix or remove mud/ice/dirt or replace multifunction switch.*

# COOLING SYSTEM

Symptom: **HIGH ENGINE OPERATING TEMPERATURE**

1. **Check coolant level.**
   - *Coolant level lower than recommended. Refill (refer to COOLING SYSTEM).*
2. **Check for air bubbles in cooling system.**
   - *Air in cooling system. Refill and bleed cooling system (refer to COOLING SYSTEM).*
3. **Check temperature sensor for electrical/mechanical failure.**
   - *Temperature sensor defective. Replace.*
4. **Check thermostat.**
   - *Thermostat defective (does not open when engine gets hot). Replace (refer to COOLING SYSTEM).*
5. **Check leak indicator hole (in crankcase MAG side-water pump housing area) if coolant leaks.**
   - *Coolant leaking from indicator hole means a damaged water pump rotary seal. Replace rotary seal (refer to COOLING SYSTEM).*
6. **Check condition of hoses and hose clamps fixation.**
   - *Hoses are brittle and/or hard. Replace.*
   - *Hose clamps are loose. Retighten clamps.*
7. **Check condition of impeller located on the water pump shaft.**
   - *Impeller wings broken and/or impeller threads are damaged. Replace (refer to COOLING SYSTEM).*
8. **Check gasket on water pump housing.**
   - *Gasket on water pump housing leaks. Retighten screws and/or replace gasket.*
9. **Check cylinder head and/or cylinder base gasket.**
   - *Worn out gasket(s) is (are) causing coolant leakage. Replace.*
10. **Check coolant drain screw on water pump housing MAG side (marked "DRAIN").**
    - *Copper ring on drain screw leaks. Retighten screw and/or replace copper ring.*

Symptom: **HIGH ENGINE OPERATING TEMPERATURE** (cont'd)

**11. Check intermediate gear(s) behind of PTO cover.**

- *Worn out and/or broken gear(s) is/are causing less coolant supply. Replace worn out and/or broken gear(s) (refer to BOTTOM END).*

**12. Check if water pump shaft is seized.**

- *Water pump shaft does not turn. Replace defective part(s).*

**13. Check cooling fan and connection.**

- *Fan motor faulty. Replace.*
- *Wire harness is brittle or hard (no connection). Replace.*

**14. Check radiator fan switch and fuse 20 A.**

- *Faulty fan switch and/or faulty fuse. Replace defective part(s).*

**15. Check radiator condition for leakage.**

- *Radiator swelled, cracked or deformed. Replace radiator.*

**16. Check mud/dust in radiator fins.**

- *Radiator fin obstructed, hard air cooling. Clean radiator fins.*

**17. Check radiator cap.**

- *Defective radiator cap relief valve. Replace.*

**18. Check vent holes in coolant expansion tank cap.**

- *Inner cap vent hole of coolant expansion tank is clogged. Replace.*
- *Cap vent hole of coolant expansion tank is clogged. Replace.*

# MAGNETO SYSTEM

Symptom: **BATTERY NOT CHARGING OR CHARGING VOLTAGE INADEQUATE**

**1. Check battery.**

- *Battery shows less power. Reload battery.*
- *Battery has electrical failure. Replace.*

**2. Check magneto for damage and/or electrical failure.**

- *Radial position of rotor wrong due to broken Woodruff key. Replace Woodruff key.*
- *Coating on stator winding is damaged. Replace stator.*
- *Resistance value is out of specification (refer to TECHNICAL SPECIFICATIONS). Replace magneto.*
- *Connector on magneto is damaged and/or has electrical failure. Repair and clean contacts of connector.*

**3. Check voltage regulator/rectifier.**

- *Refer to CHARGING SYSTEM.*

**4. Check wiring harness for cracks or other damages.**

- *Harness shows electrical failure and/or other damages. Replace/repair wiring harness.*

# LUBRICATION

## Symptom: LOW OR NO OIL PRESSURE/HIGH OIL CONSUMPTION

1. **Check oil level and search for leakage on crankcase and/or sealing parts.**
   - *Crankcase is leaking due to damage. Rebuild engine with new crankcase and gasket parts. Use recommended oil (refer to TECHNICAL SPECIFICATIONS).*
   - *Crankcase is leaking due to loose screws. Retighten screws with recommended torque.*
   - *Sealing rings, O-rings and/or gaskets are brittle, hard or damaged. Replace damaged parts.*
   - *Piston rings worn out (blue colored engine exhaust emission). Replace piston rings (refer to INTAKE MANIFOLD, CYLINDER HEAD AND CYLINDER).*
   - *Piston rings are broken (low compression). Replace piston rings (refer to INTAKE MANIFOLD, CYLINDER HEAD AND CYLINDER).*
   - *Valve stem seal damaged and/or sealing lip is hard and/or brittle. Replace all valve stem seals.*
2. **Check oil filter for contamination.**
   - *Oil filter clogged. Replace oil and oil filter at the same time. Use recommended oil (refer to TECHNICAL SPECIFICATIONS).*
3. **Check oil drain plug on engine bottom.**
   - *Plug is loose and/or gasket ring is missing. Retighten the plug and/or place gasket ring.*
4. **Check leak indicator hole if oil leaks (in crankcase MAG side-water pump housing area).**
   - *Oil leaking from leak indicator hole means a damaged oil seal on water pump shaft. Replace oil seal (refer to COOLING SYSTEM).*
5. **Check oil pressure switch function.**
   - *Oil pressure switch damaged. Replace oil pressure switch.*
6. **Check oil orifice(s) on the oil pump suction side.**
   - *Oil orifice(s) is (are) clogged. Clean from contamination. Replace oil and oil filter if necessary (refer to LUBRICATION SYSTEM).*
7. **Check oil pump function.**
   - *Oil pump rotor is out of wear limit. Replace oil pump (refer to LUBRICATION SYSTEM).*
   - *Oil pump seized due to oil leakage and/or air inclusion. Replace oil pump (refer to LUBRICATION SYSTEM).*
   - *Gears driving oil pump are broken or otherwise damaged. Replace gears.*
   - *Incorrect oil being used. Use recommended oil (refer to TECHNICAL SPECIFICATIONS).*
8. **Check oil pressure regulator valve (spring) function.**
   - *Valve spring damaged (valve always open). Replace spring.*
   - *Valve piston is worn or broken. Replace valve piston (refer to LUBRICATION SYSTEM).*
   - *Valve piston stays open due to contamination. Clean or repair valve piston.*
9. **Check plain bearings in crankcase for heavy wear.**
   - *Plain bearings out of specification (increased clearance). Replace plain bearings (refer to BOTTOM END).*
10. **Check engine oil strainer in crankcase.**
    - *Oil strainer is clogged due to contamination. Clean or replace strainer and diagnose causes. Replace possible damaged parts (refer to BOTTOM END).*

## Symptom: OIL CONTAMINATION (white appearance)

1. **Check leak indicator hole (in crankcase MAG side-water pump housing area) if coolant and oil leaks.**
   - *Leakage of oil/colant mixture from indicator bore means damaged water pump seal ring and rotary seal. Replace sealing ring, rotary seal and change oil, oil filter and/or coolant (refer to LUBRICATION SYSTEM, COOLING SYSTEM and BOTTOM END).*

Symptom: **OIL CONTAMINATION (white appearance)** (cont'd)

2. **Check cylinder head and/or cylinder base gasket.**
   - *Gasket damaged or leaking. Retighten cylinder head with recommended torque and/or replace gasket.*
3. **Check tightening torque of cylinder head screws.**
   - *Screws not properly tightened. Retighten screws to recommended torque and replace oil.*
4. **Check oil for particles (may indicate possible engine internal damages).**
   - *Oil contamination due to metal or plastic particles. Replace possibly damaged part(s) including oil and oil filter. Use recommended oil (refer to TECHNICAL SPECIFICATIONS).*

## CYLINDER AND HEAD

Symptom: **UNUSUAL ENGINE NOISE AND/OR VIBRATION**

1. **Check noise coming from cylinder head area.**
   - *Improper valve clearance adjustment. Readjust valve clearance and/or replace defective part(s).*
   - *Faulty chain tensioner. Replace spring and/or mechanism.*
   - *Chain guide worn out. Replace chain guide.*
   - *Stretched chain and/or worn out sprockets. Replace chain and sprockets.*
   - *Sprocket screws got loose. Retighten screws with recommended torque.*
   - *Rocker arm(s) is (are) worn out (valve adjustment). Readjust valve clearance and/or replace rocker arm(s).*
   - *Incorrect camshaft timing adjustment. Replace damaged components and readjust camshaft timing (refer to INTAKE MANIFOLD, CYLINDER HEAD AND CYLINDER).*

Symptom: **OIL CONTAMINATION ON CYLINDER AND/OR HEAD**

1. **Check screws for torque.**
   - *Loose screws. Retighten screws with recommended torque.*
   - *Gaskets are brittle, hard, worn out or otherwise damaged. Replace damaged gaskets, O-rings or the V-ring on breather.*

## CRANKSHAFT

Symptom: **UNUSUAL ENGINE NOISE AND/OR VIBRATIONS**

1. **Check noise coming from crankshaft area.**
   - *Crankshaft plain bearings are damaged. Replace crankshaft plain bearings (refer to BOTTOM END).*
   - *Connecting rod plain bearings are damaged. Replace connecting rod plain bearings (refer to BOTTOM END).*
   - *Magneto rotor got loose. Replace damaged components and retighten rotor retaining screw with recommended torque (refer to MAGNETO SYSTEM).*

## GEARBOX

Symptom: **UNUSUAL GEARBOX NOISE AND/OR VIBRATIONS**

1. **Check oil level in gearbox.**
   - *Oil leakage from gearbox. Replace damaged gasket(s) and/or oil seal(s), torque screws and refill with oil up to specified level (refer to TECHNICAL SPECIFICATIONS and GEARBOX).*

Symptom: **UNUSUAL GEARBOX NOISE AND/OR VIBRATIONS** (cont'd)

2. **Check bearings in the gearbox for free movement.**
   - *Bearing(s) do(es) not move freely. Replace bearing(s).*
3. **Check for knocking noise.**
   - *Tooth of gears are damaged and/or worn. Replace respective gears.*

Symptom: **GEAR INDICATION FAILS**

1. **Check contact screws on gear housing center.**
   - *Check contact screw outside for contamination and wetness. Clean contact screw and screw for wiring harness.*
   - *Contact(s) is (are) corroded and/or contact screw for wiring harness got loose. Clean contact surface and retighten contact screw(s) with recommended torque.*
   - *Wiring harness has broken cables. Replace wiring harness.*
   - *Shifting indicator switch(es) pin(s) is (are) worn and/or damaged. Replace shifting indicator switch(es).*

Symptom: **GEAR(S) IS (ARE) HARD TO SHIFT**

1. **Check shift shaft spline and/or shift forks for wear and/or damages.**
   - *Shift shaft is worn out and/or shows damaged splines. Replace shift shaft.*
   - *Shift drum track(s) and/or splines is (are) worn out or damaged. Replace shift drum and damaged part(s).*
   - *Shift fork(s) is (are) worn out and/or engagement pins are damaged. Replace shift fork(s).*
   - *Shift fork(s) is (are) worn out and/or fork(s) is (are) damaged. Replace shift fork(s).*
   - *Shift gear(s) is (are) worn out. Replace shift gear(s).*
   - *Shifting indicator switch(es) pin(s) is (are) worn out (no roundings on top of pin). Replace shifting indicator switch(es).*
2. **Check engine idle speed.**
   - *Check throttle cable and throttle adjustment.*
   - *Check bypass idle valve and connectors.*
3. **Check CVT one way clutch on drive pulley.**
   - *CVT one way clutch was not lubricated correctly. Lubricate CVT one way clutch (refer to CONTINUOUSLY VARIABLE TRANSMISSION (CVT)).*
   - *CVT one way clutch is worn out or damaged. Replace defective part(s) (refer to CONTINUOUSLY VARIABLE TRANSMISSION (CVT)).*
   - *Check if friction washer at one way clutch is worn. Replace friction washer (refer to CONTINUOUSLY VARIABLE TRANSMISSION (CVT)).*
4. **Check transmission lever and connecting rod.**
   - *Ball joint and/or ball joint nut is (are) loose. Retighten or replace the ball joint.*
5. **Check spring on shift shaft in gearbox.**
   - *Broken spring. Replace the spring (refer to GEARBOX).*
6. **Check for any mud intrusions.**
   - *CVT parts dirty. Clean all CVT parts.*

Symptom: **UNUSUAL GEARBOX NOISE AND/OR VIBRATIONS** (cont'd)

2. **Check bearings in the gearbox for free movement.**
   - *Bearing(s) do(es) not move freely. Replace bearing(s).*
3. **Check for knocking noise.**
   - *Tooth of gears are damaged and/or worn. Replace respective gears.*

Symptom: **GEAR INDICATION FAILS**

1. **Check contact screws on gear housing center.**
   - *Check contact screw outside for contamination and wetness. Clean contact screw and screw for wiring harness.*
   - *Contact(s) is (are) corroded and/or contact screw for wiring harness got loose. Clean contact surface and retighten contact screw(s) with recommended torque.*
   - *Wiring harness has broken cables. Replace wiring harness.*
   - *Shifting indicator switch(es) pin(s) is (are) worn and/or damaged. Replace shifting indicator switch(es).*

Symptom: **GEAR(S) IS (ARE) HARD TO SHIFT**

1. **Check shift shaft spline and/or shift forks for wear and/or damages.**
   - *Shift shaft is worn out and/or shows damaged splines. Replace shift shaft.*
   - *Shift drum track(s) and/or splines is (are) worn out or damaged. Replace shift drum and damaged part(s).*
   - *Shift fork(s) is (are) worn out and/or engagement pins are damaged. Replace shift fork(s).*
   - *Shift fork(s) is (are) worn out and/or fork(s) is (are) damaged. Replace shift fork(s).*
   - *Shift gear(s) is (are) worn out. Replace shift gear(s).*
   - *Shifting indicator switch(es) pin(s) is (are) worn out (no roundings on top of pin). Replace shifting indicator switch(es).*
2. **Check engine idle speed.**
   - *Check throttle cable and throttle adjustment.*
   - *Check bypass idle valve and connectors.*
3. **Check CVT one way clutch on drive pulley.**
   - *CVT one way clutch was not lubricated correctly. Lubricate CVT one way clutch (refer to CONTINUOUSLY VARIABLE TRANSMISSION (CVT)).*
   - *CVT one way clutch is worn out or damaged. Replace defective part(s) (refer to CONTINUOUSLY VARIABLE TRANSMISSION (CVT)).*
   - *Check if friction washer at one way clutch is worn. Replace friction washer (refer to CONTINUOUSLY VARIABLE TRANSMISSION (CVT)).*
4. **Check transmission lever and connecting rod.**
   - *Ball joint and/or ball joint nut is (are) loose. Retighten or replace the ball joint.*
5. **Check spring on shift shaft in gearbox.**
   - *Broken spring. Replace the spring (refer to GEARBOX).*
6. **Check for any mud intrusions.**
   - *CVT parts dirty. Clean all CVT parts.*

# COUPLING UNIT

Symptom: **4 WHEEL DRIVE INDICATION FAILS**

1. **Check contact screw on gear housing right side for damage and/or wear.**
   - *Shifting indicator switch pin is worn and/or damaged. Replace shifting indicator switch (refer to GEARBOX).*
   - *Contact is corroded and/or contact screw for wiring harness got loose. Clean contact surface and retighten contact screw with recommended torque.*
   - *Wiring harness has broken cable. Replace wiring harness.*

Symptom: **4 WHEEL DRIVE DOES NOT ENGAGE OR DISENGAGE**

1. **Check actuator and/or actuator shifting fork for wear and/or damages.**
   - *Check if selector works properly. If so, check actuator.*
   - *If selector is out of specifications, check wires, connectors and/or replace selector.*
   - *Actuator shifting fork is worn out and/or damaged. Replace shifting fork of actuator.*
   - *Check function of actuator. Replace if actuator is not turning, refer to GEARBOX.*
2. **Check shifting sleeve spline and/or shifting fork for wear and/or damages.**
   - *Shifting sleeve shows damaged splines. Replace shifting sleeve (refer to GEARBOX).*
   - *Shifting fork is worn out and/or engagement pin is damaged. Replace shifting fork.*

# CVT

Symptom: **UNUSUAL ACCELERATION BEHAVIOR**

1. **Check drive belt condition.**
   - *Belt is too narrow (drive belt engagement is higher in drive pulley). Replace belt if width is less than specified (refer to CONTINUOUSLY VARIABLE TRANSMISSION (CVT) and/or TECHNICAL SPECIFICATIONS).*
2. **Check lever condition on drive pulley sliding sheave and/or roller(s) on governor cup.**
   - *Lever(s) on drive pulley sliding sheave is (are) worn and/or damaged (refer to CONTINUOUSLY VARIABLE TRANSMISSION (CVT)). Replace all levers at the same time (lever kit).*
   - *Roller(s) is (are) worn and/or damaged (refer to CONTINUOUSLY VARIABLE TRANSMISSION (CVT)). Replace governor cup assembly.*
3. **Check drive/driven pulley sliding sheave for free axial movement.**
   - *Sliding sheave is stuck (refer to CONTINUOUSLY VARIABLE TRANSMISSION (CVT)). Replace damaged part(s).*
4. **Check condition of drive/driven pulley spring.**
   - *Drive pulley spring tension is too smooth and/or damaged (refer to CONTINUOUSLY VARIABLE TRANSMISSION (CVT)). Replace spring.*
   - *Driven pulley spring tension is too stiff (refer to CONTINUOUSLY VARIABLE TRANSMISSION (CVT)). Replace spring.*
5. **Check if cam of driven pulley is worn.**
   - *Replace if out of specifications; refer to CONTINUOUSLY VARIABLE TRANSMISSION (CVT).*
6. **Check condition of fixed and sliding sheaves (drive and driven pulley).**
   - *Check surface of fixed and sliding sheaves (drive and driven pulley) for grooves or other damages; refer to CONTINUOUSLY VARIABLE TRANSMISSION (CVT).*
7. **Check with B.U.D.S. at diagnostic communication port for failure.**
   - *Repair or replace defective part.*

Symptom: **UNUSUAL ACCELERATION BEHAVIOR** (cont'd)

8. **Check valve adjustment.**
   - *Intake and/or exhaust valves are not adjusted correctly. Adjust valves.*
9. **Check engine condition.**
   - *Low engine compression; refer to LEAK TEST in INTAKE MANIFOLD, CYLINDER HEAD AND CYLINDER.*
10. **Check ignition condition.**
   - *Faulty spark plug. Install new spark plug(s).*
11. **Check differentials operation.**
   - *Vehicle on Neutral is hard to move. Repair or replace defective part(s).*

Symptom: **ENGINE MAXIMUM RPM IS TOO HIGH AND TOP SPEED IS NOT REACHED**

1. **Check drive/driven pulley area for contamination and/or water intrusion.**
   - *CVT area is contaminated with water, dirt or oil. Clean CVT system and replace damaged part(s).*
2. **Check items 1 to 3 of *UNUSUAL ACCELERATION BEHAVIOR*.**
3. **Check drive/driven pulley spring tension.**
   - *Drive pulley spring tension is too stiff. Replace spring (recommended BRP spring).*
   - *Driven pulley spring tension is too smooth and/or damaged (refer to CONTINUOUSLY VARIABLE TRANSMISSION (CVT)). Replace spring.*

Symptom: **DRIVE PULLEY NOISE IN IDLE SPEED**

1. **Check slider shoes (drive pulley).**
   - *Worn slider shoes (increased clearance between governor cup and drive pulley sliding sheave). Replace all slider shoes at the same time (slider shoes kit).*
2. **Check driven pulley sliding mechanism (between driven pulley outer and inner sheave).**
   - *Mechanism is stuck and/or damaged. Replace driven pulley assembly.*
3. **Check roller(s) and/or levers for wear (located on sliding sheave of drive pulley).**
   - *Roller(s) on governor cup is (are) worn out and/or damaged (refer to CONTINUOUSLY VARIABLE TRANSMISSION (CVT)). Replace governor cup assembly.*
   - *Lever(s) on drive pulley sliding sheave is (are) worn out and/or damaged (refer to CONTINUOUSLY VARIABLE TRANSMISSION (CVT)). Replace all levers at the same time (lever kit).*
4. **Check drive pulley screw for torque.**
   - *Loose screw. Retighten screw with recommended torque.*
5. **Check one-way clutch condition on drive pulley sliding sheave.**
   - *Bearing(s) do(es) not move freely. Replace damaged part(s) and lubricate inside of one-way clutch (refer to CONTINUOUSLY VARIABLE TRANSMISSION (CVT)).*
   - *Spring sleeve(s) inside one-way clutch is (are) worn out. Replace both sleeves and springs and lubricate inside of one-way clutch (refer to CONTINUOUSLY VARIABLE TRANSMISSION (CVT)).*
   - *Spring(s) inside one-way clutch is (are) worn out. Replace both pins and springs and lubricate inside of one-way clutch (refer to CONTINUOUSLY VARIABLE TRANSMISSION (CVT)).*

Symptom: **DRIVE PULLEY NOISE WHEN ACCELERATING/DECELERATING**

1. **Check items 1 to 5 of *DRIVE PULLEY NOISE IN IDLE SPEED*.**
2. **Check if belt runs in dry conditions.**
   - *Drive pulley area is wet/contaminated due to water/dirt intrusion. Clean driven pulley area and/or drain water out of CVT cover.*

Symptom: **DRIVE PULLEY NOISE WHEN ACCELERATING/DECELERATING** (cont'd)

3. **Check drive/driven pulley screw for torque.**
   - *Loose screw on drive and/or driven pulley. Retighten screw with recommended torque.*
4. **Check cam and driven pulley fixed sheave for wear.**
   - *Cam and/or drive pulley fixed sheave out of wear limit and/or damaged. Replace damaged part(s).*
5. **Check torque gear fixed in driven pulley sliding sheave for wear.**
   - *Torque gear out of wear limit and/or damaged. Replace torque gear (refer to CONTINUOUSLY VARIABLE TRANSMISSION (CVT)).*
6. **Check for foreign particles in CVT area (stones, dirt, etc.).**
   - *Small particles damaged belt and/or pulley surface(s). Clean system and replace damaged parts (refer to CONTINUOUSLY VARIABLE TRANSMISSION (CVT)).*

Symptom: **VIBRATIONS ORIGINATING FROM DRIVE PULLEY**

1. **Check tightening torque of drive pulley screw.**
   - *Moving sliding sheave. Retighten screw.*
2. **Check fixed sheave bushings.**
   - *Excessive gap between bushings and fixed sheave shaft, thus restraining sliding sheave movements. Replace fixed sheave assembly.*
3. **Check if slider shoes are present and/or placed in correct position.**
   - *Slider shoe(s) is (are) missing and/or damaged. Replace all slider shoes at the same time (slider shoes kit).*

Symptom: **VIBRATIONS ORIGINATING FROM DRIVEN PULLEY**

1. **Check fixed and sliding sheave bushings on driven pulley.**
   - *Excessive gap between bushings and CVT shaft, thus restraining sliding sheave movements. Replace fixed and/or sliding sheave of driven pulley, polish CVT shaft area with fine emery cloth and wipe clean with a cloth.*

Symptom: **PULLEYS DO NOT DOWN/UP SHIFT PROPERLY**

1. **Check drive pulley bushings (cleanliness, wear, etc.).**
   - *Check items 1 and 2 of UNUSUAL ACCELERATION BEHAVIOR.*
   - *Bushings stick to fixed sheave pulley shaft. Clean or replace.*
   - *Spring seat sticks to sliding sheave pulley bushing. Clean system and/or replace sliding sheave pulley.*
   - *One-way clutch does not operate properly. Clean system and/or replace damaged part(s).*
2. **Check driven pulley spring tension.**
   - *Driven pulley spring tension is too weak or broken. Replace.*
   - *Driven pulley cam is worn or damaged. Replace.*

Symptom: **BELT GLAZED EXCESSIVELY OR HAVING BAKED APPEARANCE**

1. **Check if CVT air intake and/or outlet is clogged.**
   - *CVT area heats up due to contamination. Clean air intake and/or outlet from contamination.*
   - *Fans located on drive pulley fixed sheave are clogged. Clean from contamination.*
2. **Check if pulley sheaves are clean.**
   - *Oil on pulley surfaces. Clean pulley sheaves and replace belt.*
   - *Water intrusion in CVT area. Find root cause and repair. Drain water and replace belt.*

Symptom: **BELT WORN EXCESSIVELY IN TOP WIDTH**

1. **Check drive belt width.**
   - *Considerable wear. Replace belt if narrower than specified (refer to CONTINUOUSLY VARIABLE TRANSMISSION (CVT) or TECHNICAL SPECIFICATIONS).*
2. **Check drive belt identification number.**
   - *Wrong type of belt. Replace belt with an appropriate drive belt.*
3. **Check for localized belt wear caused by belt slippage.**
   - *Localized wear. Replace belt.*

Symptom: **BELT DISINTEGRATION**

1. **Check drive belt lifetime is exceeded.**
   - *Clean CVT system and rebuild with a new drive belt.*
2. **Check drive belt identification number.**
   - *Excessive belt speed. Using unspecified type of belt. Replace belt with proper type of belt (refer to TECHNICAL SPECIFICATIONS).*
3. **Check if pulley sheaves are clean.**
   - *Oil on pulley surfaces. Clean pulley surfaces with fine emery cloth and wipe clean using Pulley Flange Cleaner (P/N 413 711 809) and a cloth.*
   - *Drive/driven pulley sheaves are damaged through stones inside CVT area. Clean pulley surfaces with fine emery cloth, wipe clean with a cloth or replace drive/driven pulley sheaves and belt.*

Symptom: **CRACKS BETWEEN COGS**

1. **Check drive belt condition.**
   - *Considerable use, belt wearing out. Replace.*
   - *Brittle belt condition through aging. Replace belt.*

# ENGINE GENERAL

Symptom: **ENGINE CRANKS BUT FAILS TO START**

1. **Check if spark plug connectors fit on spark plugs (refer to *IGNITION SYSTEM*).**
2. **Check spark plugs.**
   - *Define spark plugs (no spark) or wrong spark plug gap. Readjust gap and clean spark plugs or replace.*
3. **Check for fuel on spark plugs.**
   - *Flooded engine (spark plugs wet when removed). Activate engine drowned mode and crank engine with rags over the spark plug holes (refer to OVERVIEW in EMS SYSTEM).*
4. **Check battery voltage.**
   - *Battery is discharged and starter works not properly. Charge battery.*
5. **Check fuel level in fuel tank and fuel pressure. Ensure fuel pump was not disabled by B.U.D.S.**
   - *Low or no fuel pressure. Replace defective part(s) (refer to FUEL TANK AND FUEL PUMP).*
6. **Check fuel injectors.**
   - *Plugged or faulty injector(s). Replace defective part(s) (refer to ENGINE MANAGEMENT).*
7. **Check idle bypass valve.**
   - *Stuck or defective. Refer to ENGINE MANAGEMENT.*

Symptom: **ENGINE CRANKS BUT FAILS TO START** (cont'd)

8. **Check encoder wheel.**
   - *Bent tooth. Refer to MAGNETO SYSTEM.*
9. **Check engine compression.**
   - *Insufficient engine compression. Replace defective part(s) (refer to LEAK TEST in INTAKE MANIFOLD, CYLINDER HEAD AND CYLINDER).*
10. **Check fault codes in B.U.D.S system.**
   - *Check if electrical actuator(s) is/are defective. Replace defective part(s) (refer to ENGINE MANAGEMENT).*

Symptom: **ENGINE DOES NOT START**

1. **Electrical problem.**
   - *Determine if the electrical system works correctly (fuse(s), battery, wiring harness, etc.). Refer to IGNITION SYSTEM.*
2. **Problem with fuel system (carburetor, fuel pump, hoses, etc.).**
   - *Clean, inspect, repair or replace defective parts. Refer to FUEL SYSTEM.*
3. **Check engine compression.**
   - *Insufficient engine compression. Replace defective parts.*
   - *Valve seat worn and/or damaged. Repair by performing valve guide procedure (refer to INTAKE MANIFOLD, CYLINDER HEAD AND CYLINDER). Readjust valve clearance.*
4. **Internal engine problem.**
   - *Overhaul engine to find defective parts. refer to the appropriate section in ENGINE.*

Symptom: **ENGINE HARD TO START**

1. **Check idle bypass valve.**
   - *Stuck or defective. Refer to ENGINE MANAGEMENT.*
2. **Check closed throttle and idle actuator with B.U.D.S.**
   - *Wrong TPS zero setting/idle bypass valve reset. Refer to ENGINE MANAGEMENT.*
3. **Check throttle cable adjustment.**
   - *Wrong adjustment (likely too tight). Refer to ENGINE MANAGEMENT.*
4. **Check engine compression.**
   - *Insufficient engine compression. Replace defective part(s) (refer to LEAK TEST in INTAKE MANIFOLD, CYLINDER HEAD AND CYLINDER).*
5. **Verify spark plug condition.**
   - *Defective, improperly set, worn out, fouled. Identify source of problem and correct. Replace spark plug.*
6. **Check fuel level in fuel tank and fuel pressure.**
   - *Low or no fuel pressure. Replace defective part(s) (refer to FUEL TANK AND FUEL PUMP).*
7. **Check CAPS (camshaft position sensor).**
   - *Defective sensor/wiring. Refer to ENGINE MANAGEMENT.*

Symptom: **ENGINE SUDDENLY TURNS OFF**

1. **Perform engine leak test. Refer to *INTAKE MANIFOLD, CYLINDER HEAD AND CYLINDER.***
   - *Damaged head gasket and/or seal and/or leaking inlet/exhaust valve(s). Replace and/or repair defective parts.*

## Symptom: ENGINE SUDDENLY TURNS OFF (cont'd)

**2. Check spark plugs condition and/or gap.**

- *Fouled spark plugs or wrong spark plug gap. Readjust gap and clean spark plugs or replace.*

**3. Piston seizure.**

- *Spark plugs heat range is too hot. Install spark plugs with appropriate heat range (refer to TECHNICAL SPECIFICATIONS).*
- *Compression ratio is too high. Install genuine parts.*
- *Poor oil quality. Use recommended oil.*
- *Leaks at air intake manifold (engine gets too lean). Retighten screws or replace air intake manifold gasket.*
- *Snow/water intrusion through intake system into combustion chamber. Clean intake system and replace defective part(s).*

**4. Melted and/or perforated piston dome; melted section at ring end gap.**

- *Spark plugs heat range is too hot. Install recommended spark plugs (refer to TECHNICAL SPECIFICATIONS).*
- *Coolant less than recommended level (engine gets too hot). Repair cooling circuit and/or refill with recommended liquid.*
- *Poor quality and/or wrong fuel. Clean from contamination and use appropriate fuel (refer to TECHNICAL SPECIFICATIONS).*

**5. Piston color is dark due to seizure on intake and exhaust sides.**

- *Cooling system leaks and lowers coolant level. Tighten clamps or replace defective parts. Add antifreeze in cooling system until appropriate level is reached. Replace damaged parts.*

**6. Cracked or broken piston.**

- *Cracked or broken piston due to excessive piston/cylinder clearance or engine overreving. Replace piston. Check piston/cylinder clearance (refer to INTAKE MANIFOLD, CYLINDER HEAD AND CYLINDER).*

**7. Check piston rings and cylinder surface for grooves.**

- *Poor oil quality. Use recommended oil.*
- *Contamination through engine intake. Replace defective part(s) and use new air filter.*

**8. Check crankshaft, rocker arms movement.**

- *Oil pump failure due to lack of oil. Repair and replace defective parts and use recommended oil.*
- *Oil contamination due to clogged oil filter/oil strainer. Replace oil and oil filter at the same time, replace defective part(s) (refer to LUBRICATION SYSTEM).*

**9. Check valve springs exhaust/intake.**

- *Broken valve spring damages the cylinder head, valve(s), rocker arm(s), piston, piston rings and connecting rod. Replace defective part(s).*

**10. Check if fuel supply is sufficient.**

- *Low fuel level.*
- *Clogged fuel filter or fuel injector filter.*
- *Fuel line is contaminated and/or bent. Clean and/or replace defective part(s).*

**11. Check fault codes in B.U.D.S. system.**

- *Check if electrical actuator(s) is/are defective. Replace defective part(s) (refer to ENGINE MANAGEMENT).*

## Symptom: ENGINE BACKFIRES

**1. Check spark plugs.**

- *Carbon accumulation caused by defective spark plugs. Replace spark plugs.*

Symptom: **ENGINE BACKFIRES** (cont'd)

2. **Check leakage on intake manifold.**
   - *Air leak on intake system. Retighten screws and/or replace intake manifold gasket.*
3. **Check exhaust air leaking.**
   - *Exhaust gasket is leaking. Retighten screws and/or replace exhaust gasket.*
4. **Check intake valve(s) for leaking.**
   - *Intake valve(s) is (are) leaking. Repair or replace valve(s).*
5. **Check if fuel supply is sufficient.**
   - *Fuel line is contaminated and/or bent (engine gets lean). Clean and/or replace defective part(s).*
6. **Check engine ground.**
   - *Poor engine ground. Clean.*
7. **Check fault codes in B.U.D.S. system.**
   - *Check if electrical actuator(s) is/are defective. Replace defective part(s) (refer to ENGINE MANAGEMENT).*

Symptom: **ENGINE DOES NOT OFFER MAXIMUM POWER AND/OR DOES NOT REACH MAXIMUM OPERATING RPM**

1. **Check spark plugs condition and/or gap.**
   - *Fouled spark plugs or wrong spark plug gap. Readjust gap and clean spark plugs or replace.*
2. **Check spark plugs type.**
   - *Improper spark plugs heat range. Install recommended spark plugs (refer to TECHNICAL SPECIFICATIONS).*
3. **Perform engine leak test. Refer to *LEAK TEST* procedure in *INTAKE MANIFOLD, CYLINDER HEAD AND CYLINDER*.**
   - *Damaged head gasket and/or seal and/or leaking intake/exhaust valve(s). Replace and/or repair defective parts.*
4. **Check for water in fuel (wrong fuel).**
   - *There is water in fuel or wrong fuel. Drain fuel system, search for leakage and refill it with appropriate fuel.*
5. **Check engine compression.**
   - *Worn piston(s) and/or piston ring(s). Replace defective part(s) (refer to INTAKE MANIFOLD, CYLINDER HEAD AND CYLINDER).*
6. **Check fuel pressure.**
   - *Low fuel pressure. Perform fuel pressure test (refer to FUEL SYSTEM).*
7. **Check air intake system.**
   - *Air filter is clogged due to contamination. Replace air filter.*
8. **Check if EMS (engine management system) is in limp home mode. Check fault codes in B.U.D.S system.**
   - *Check if electrical actuator(s) is/are defective. Replace defective part(s) (refer to ENGINE MANAGEMENT).*
9. **Check drive belt.**
   - *Worn. Replace belt if its width is less than specified (refer to CONTINUOUSLY VARIABLE TRANSMISSION (CVT)).*

Symptom: **HIGH ENGINE OPERATING TEMPERATURE**

1. **Check if cooling system shows any failure (see *COOLING SYSTEM*).**
   - *System is leaking. Repair and/or replace damaged part(s).*

Symptom: **HIGH ENGINE OPERATING TEMPERATURE** (cont'd)

2. **Check function of lubrication system (see *LUBRICATION SYSTEM*).**
   - *Lubrication is not working properly. Repair and/or replace damaged part(s).*
3. **Check condition and heat range of spark plugs.**
   - *Melted spark plug tip or inadequate heat range. Replace.*
4. **Check air leakage on engine intake.**
   - *Leakage causes overheating. Replace/repair damaged part(s).*
5. **Check air inlet and outlet of the CVT cover.**
   - *Air circulation is clogged (overheating). Clean air circulation from contamination.*
   - *Drive belt worn and/or damaged. Replace belt with an appropriate drive belt (refer to TECHNICAL SPECIFICATIONS).*

# ENGINE REMOVAL AND INSTALLATION

## SERVICE TOOLS

| Description | Part Number | Page |
|---|---|---|
| engine lifting tool | 529 036 022 | 31 |

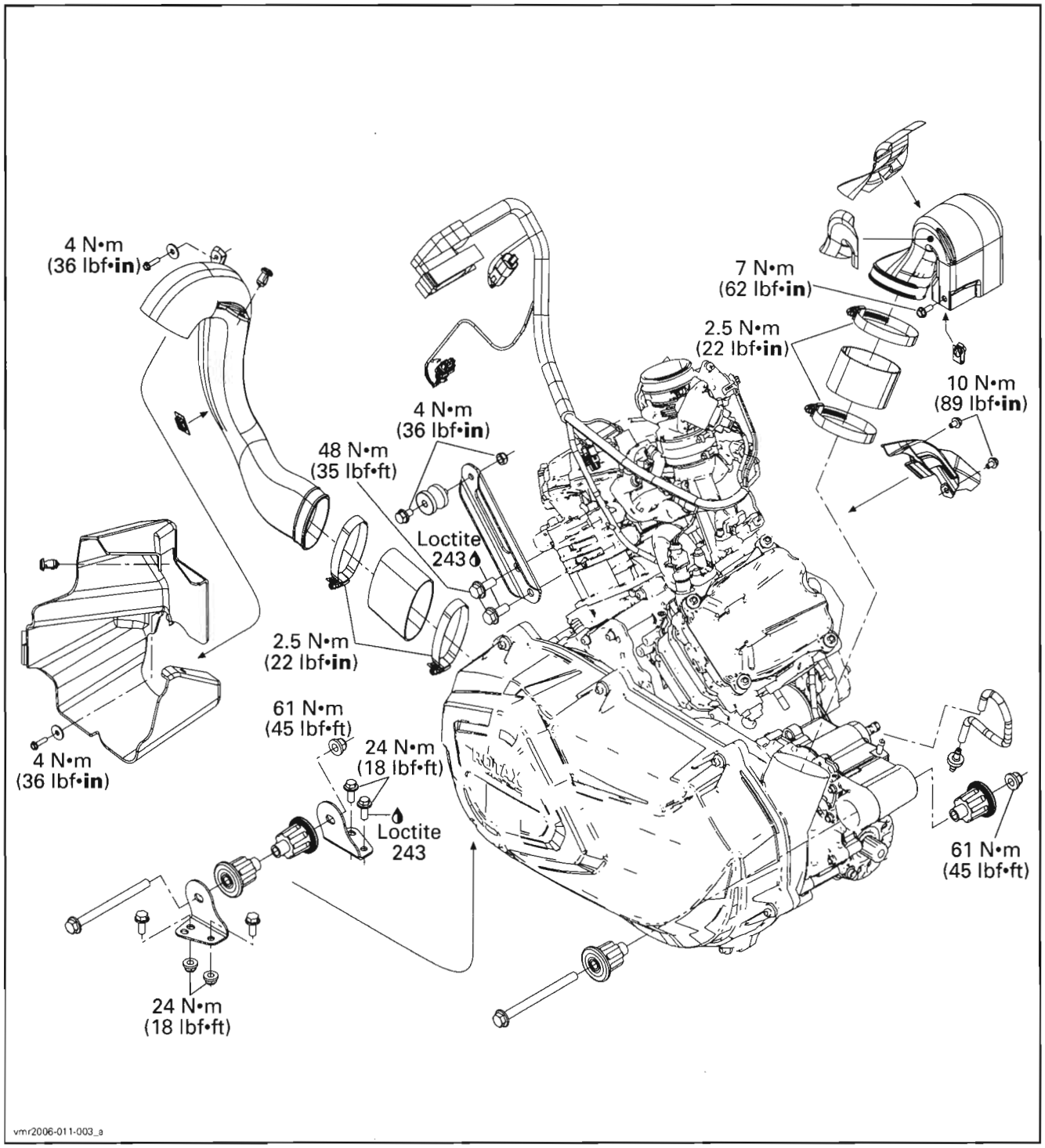

# GENERAL

**⚠ WARNING**

**To avoid potential burns, let engine and exhaust system cool down before servicing.**

During assembly/installation, use the torque values and service products as in the exploded view.

Clean threads before applying a threadlocker. Refer to *SELF-LOCKING FASTENERS* and *LOCTITE APPLICATION* at the beginning of this manual for complete procedure.

**⚠ WARNING**

**Torque wrench tightening specifications must strictly be adhered to.**
**Locking devices (e.g.: locking tabs, elastic stop nuts, self-locking fasteners, cotter pin, etc.) must be installed or replaced with new one where specified. If the efficiency of a locking device is impaired, it must be renewed.**

# PROCEDURES

## ENGINE REMOVAL

### Vehicle and Engine Preparation

Place vehicle on a workstation that will have access to an engine-lifting hoist. Then start with initial preparation of vehicle by doing the following.

Select 4WD position then place transmission lever to PARK.

Using B.U.D.S., remove fuel pressure in the fuel system. Refer to *ENGINE MANAGEMENT*.

Disconnect the BLACK (-) cable from battery, then the RED (+) cable.

**⚠ WARNING**

**Always disconnect battery cables exactly in the specified order, the BLACK (-) cable first. It is recommended to disconnect electrical connections prior to disconnecting fuel lines.**

Drain oil and coolant from engine.

**NOTE:** Drain engine oil only if engine overhaul is necessary. To work on gearbox the engine removal is necessary but not engine oil drain.

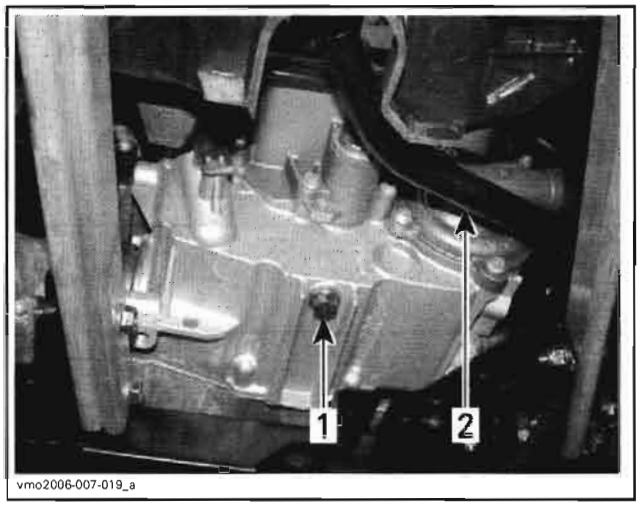


1. *Oil drain plug*
2. *Brake pedal*

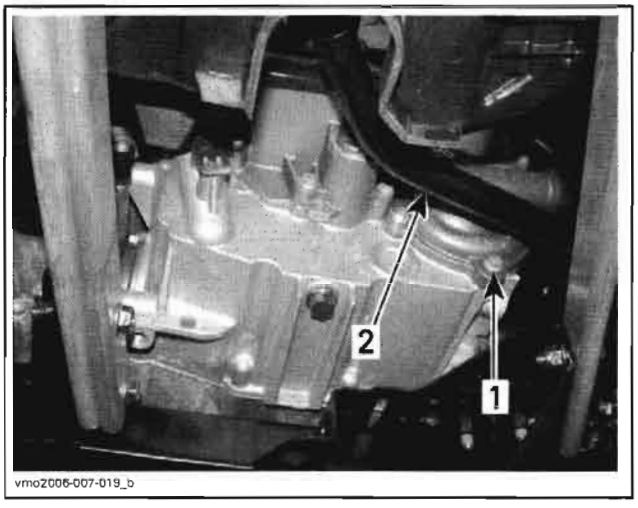


1. *Cooling drain plug*
2. *Brake pedal*

Remove:
- seat
- both side panels. Refer to *BODY*.
- both footrests. Refer to *BODY*.
- central panel. Refer to *BODY*.
- air filter housing cover. Refer to *AIR INTAKE SYSTEM*.

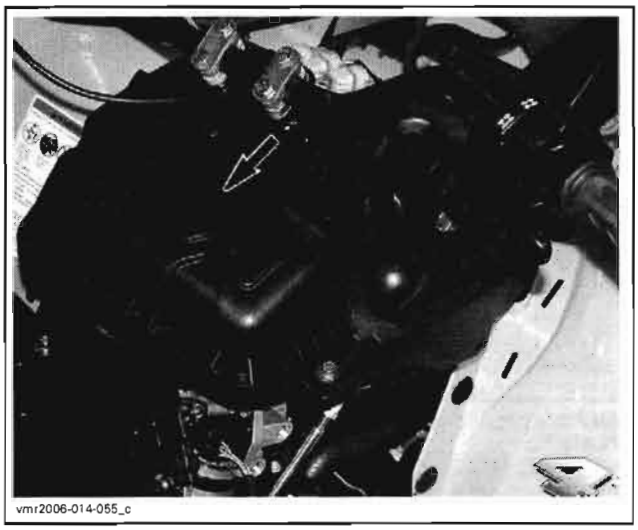
vmr2006-014-055_c

On Left Side of Vehicle, Remove the Following Parts:

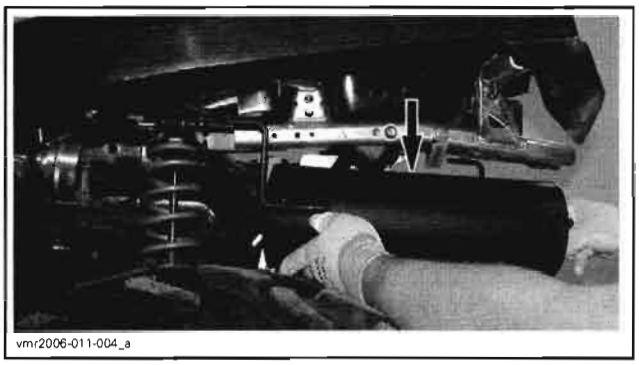
vmr2006-011-004_a

*MUFFLER — OUTLANDER SHOWN*

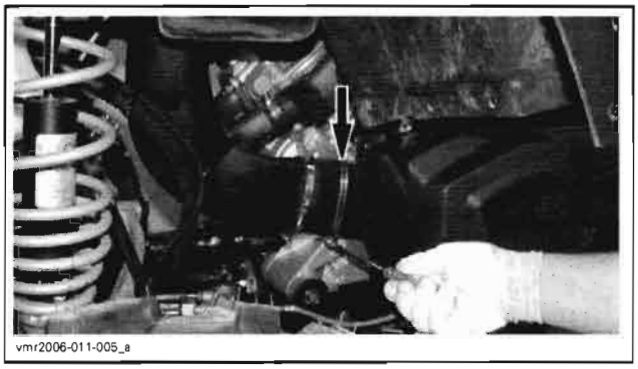
vmr2006-011-005_a

*CVT INLET HOSE CLAMP*

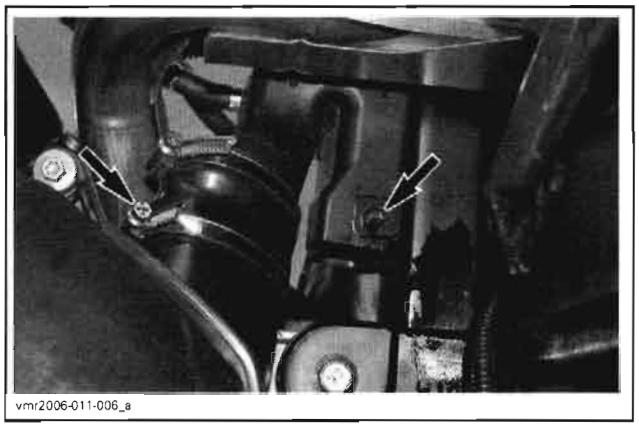
vmr2006-011-006_a

*CVT OUTLET HOSE (UNSCREW BOTTOM CLAMP AND BOLT)*

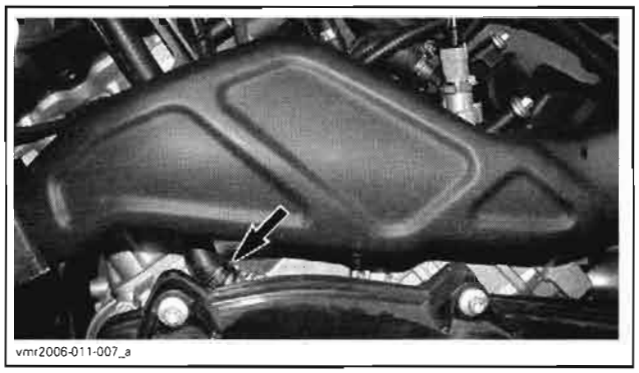
vmr2006-011-007_a

*CRANKCASE VENT TUBE FROM ENGINE*

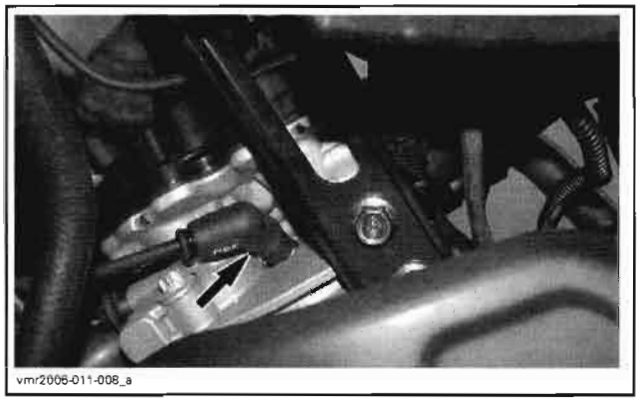
vmr2006-011-008_a

*FRONT SPARK PLUG CABLE*

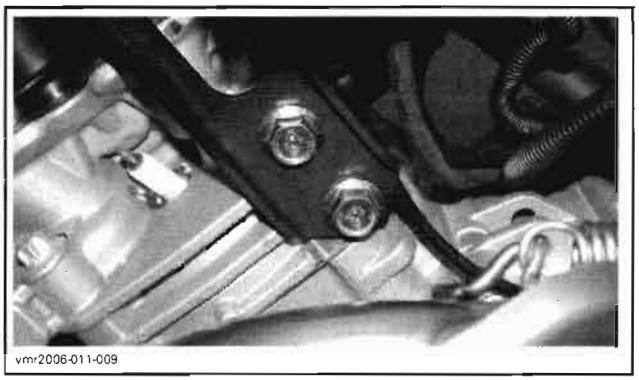
vmr2006-011-009

*LOWER BOLTS FROM UPPER ENGINE SUPPORT*

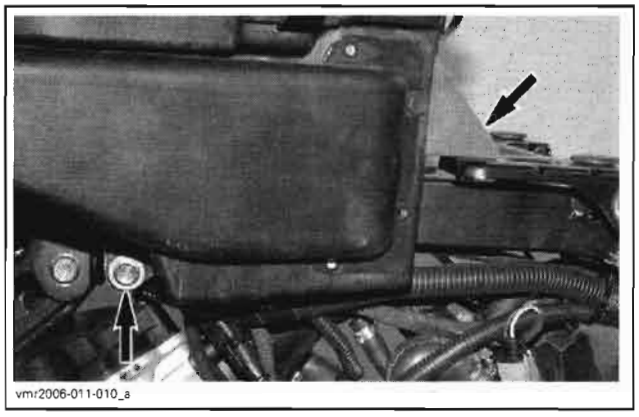


*BOLTS RETAINING AIR FILTER HOUSING*

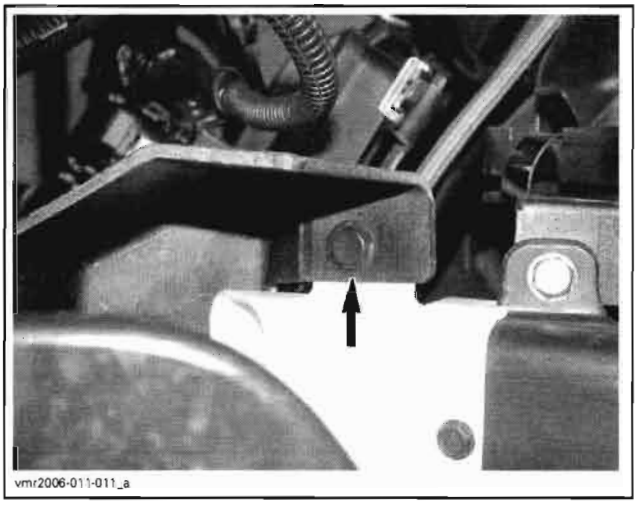


*DART HOLDING AIR INTAKE INLET*

On right side of vehicle, remove or disconnect the following:

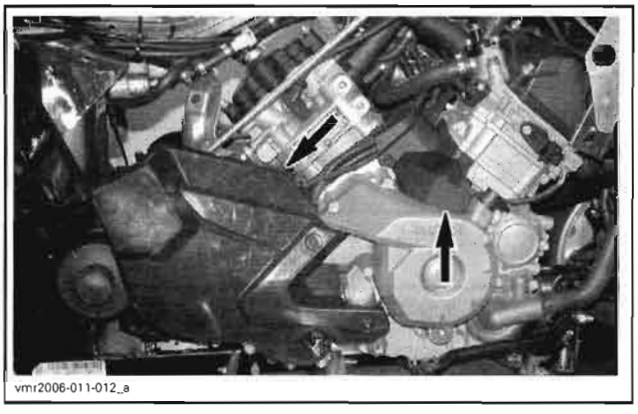


*FRONT AND REAR ENGINE COVERS*

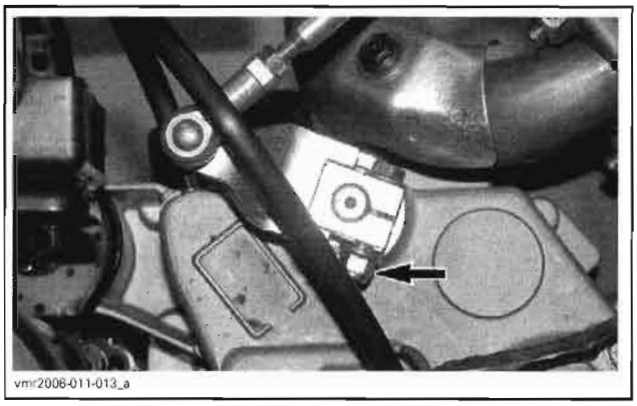


*SHIFTING PLATE (UNSCREW BOLT TO REMOVE SHIFTING PLATE)*

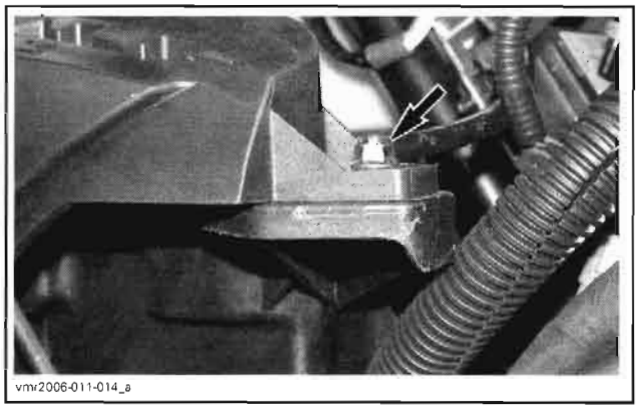


*AIR FILTER HOUSING BOLT*

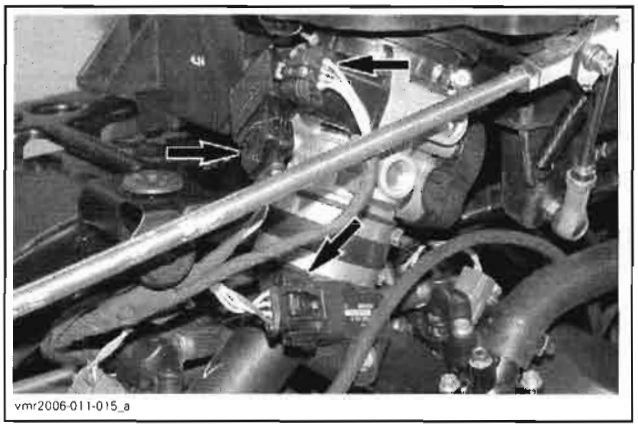


*CONNECTORS FROM THROTTLE BODY AND INTAKE MANIFOLD*

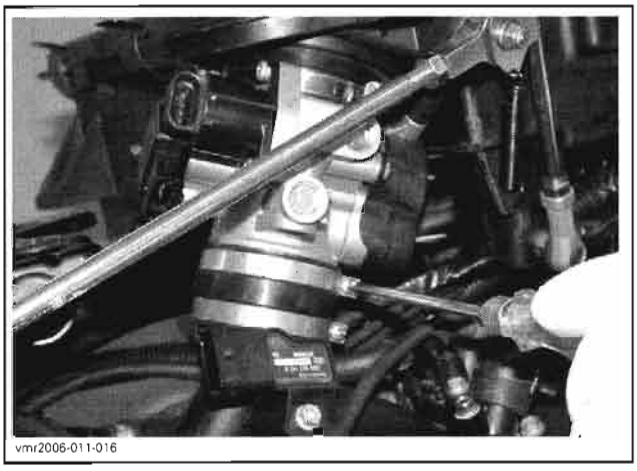
vmr2006-011-016

*UPPER THROTTLE BODY CLAMP*

vmr2006-011-017

*AIR FILTER HOUSING AND PLACE IT ON FRONT RACK (ON RENEGADE MODELS, REMOVE IT COMPLETELY)*

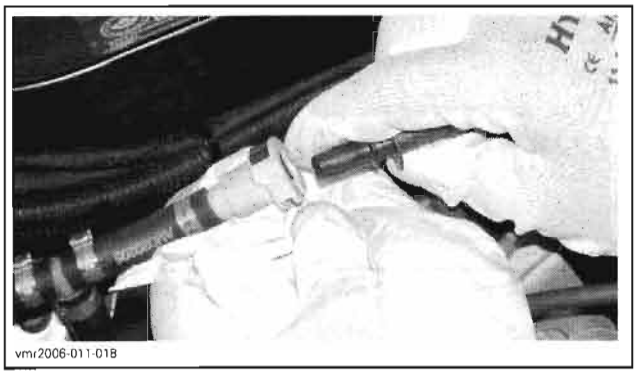
vmr2006-011-018

*FUEL SUPPLY LINE*

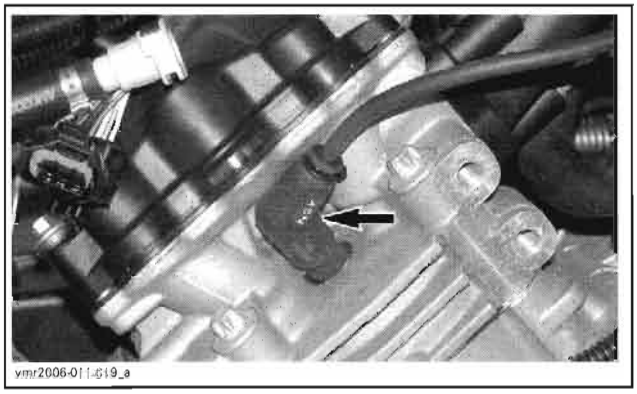
vmr2006-011-019_a

*THE OTHER SPARK PLUG CABLE*

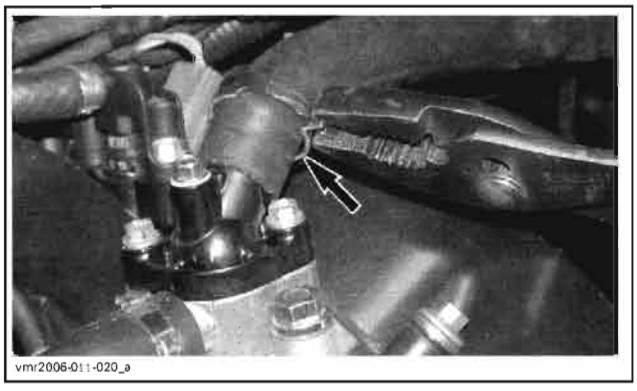
vmr2006-011-020_a

*OUTLET ENGINE COOLANT HOSE*

vmr2006-011-021_a

*FUEL INJECTOR CONNECTORS*

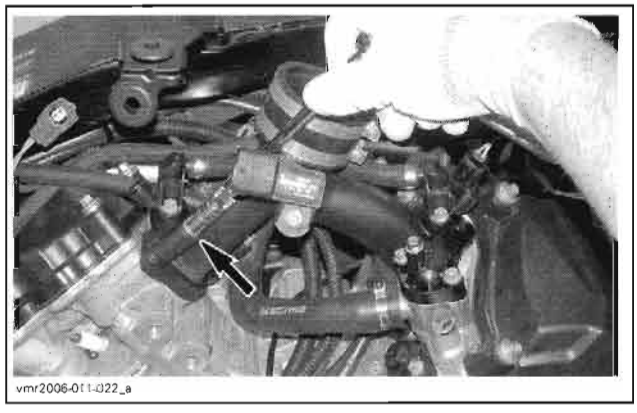
vmr2006-011-022_a

*INTAKE MANIFOLD*

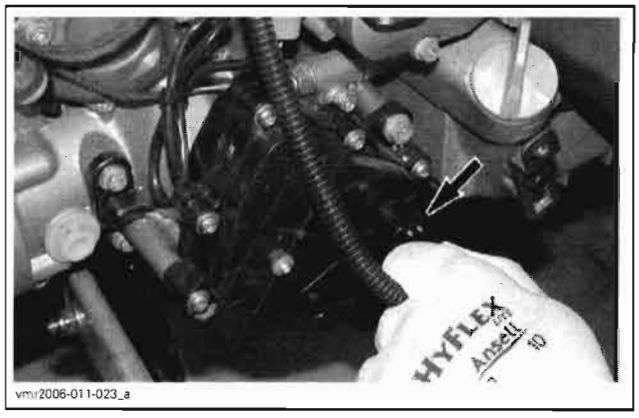


*COUPLING UNIT CONNECTOR*

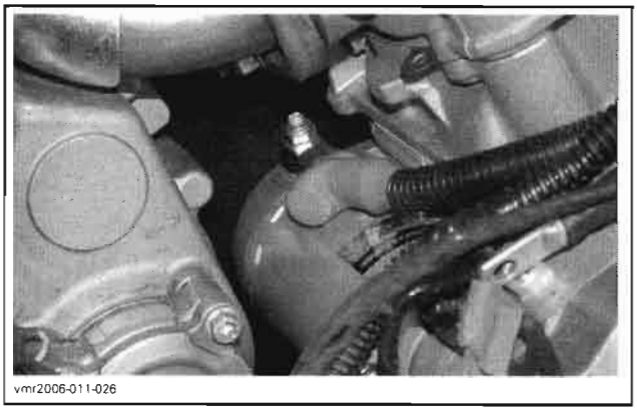


*STARTER CABLE*

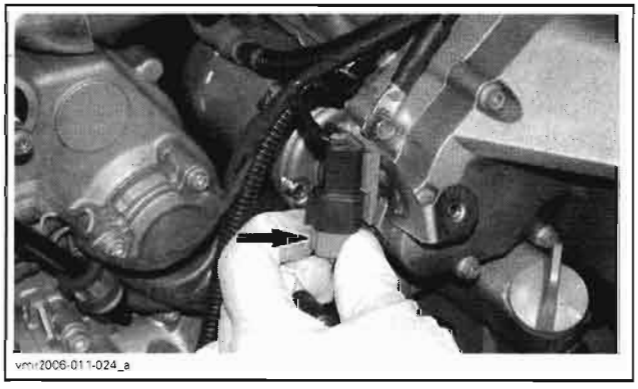


*2WD/4WD SWITCH CONNECTOR THEN REMOVE HOUSING FROM BRACKET*

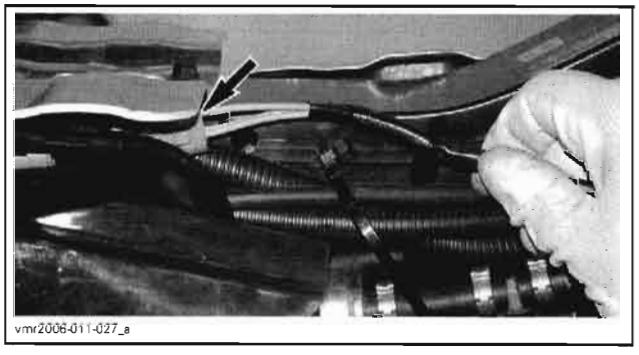


*MAGNETO CONNECTOR*

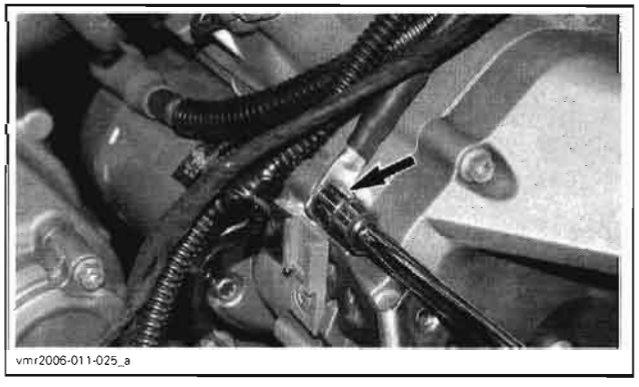


*ENGINE GROUND*

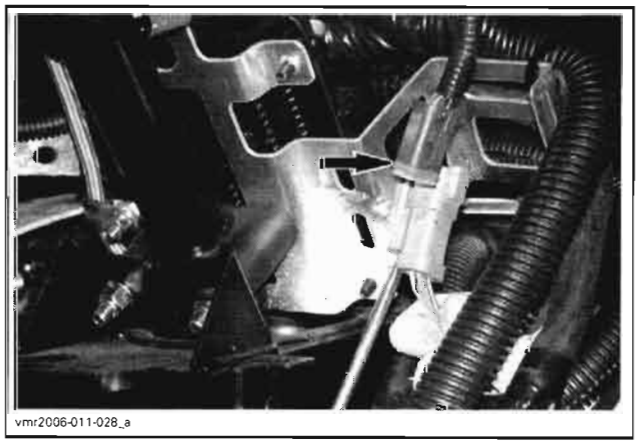


*B.U.D.S. CONNECTOR THEN REMOVE HOUSING FROM BRACKET*

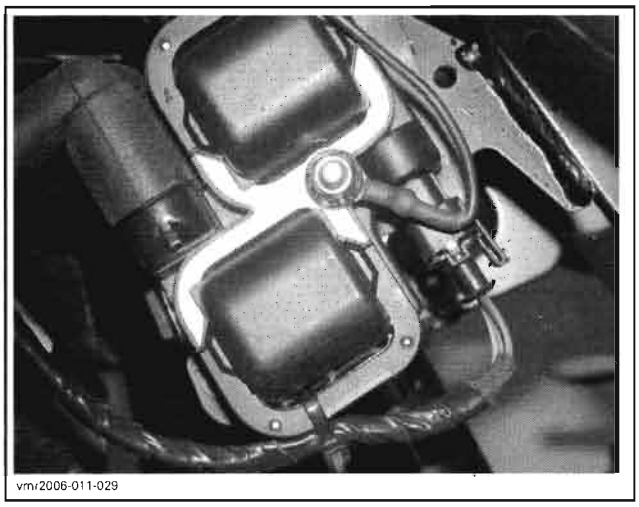
vmr2006-011-029

*IGNITION COIL CONNECTOR THEN CUT THE LOCKING TIE*

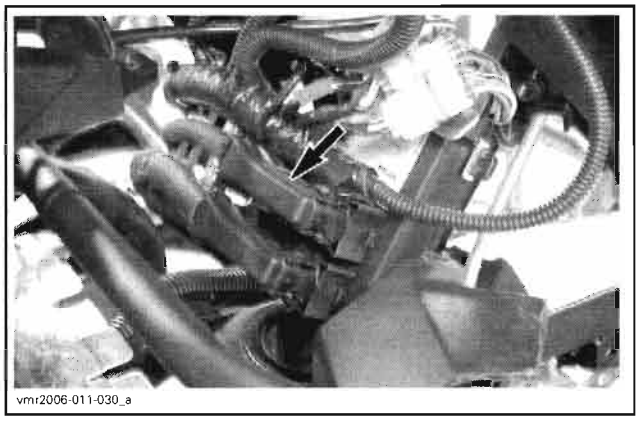
vmr2006-011-030_a

*CONNECTOR "A" FROM ECM*

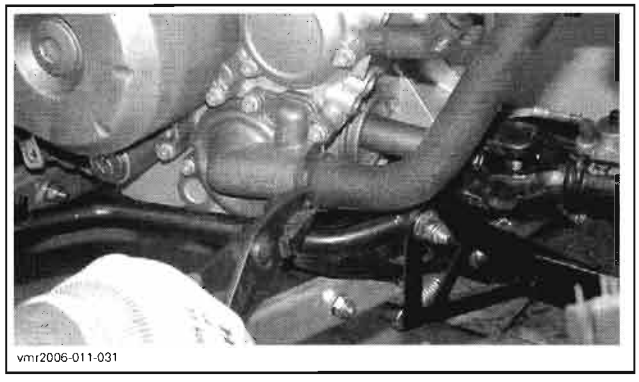
vmr2006-011-031

*INLET ENGINE COOLANT HOSE*

vmr2006-011-032

*FRONT PROPELLER BOLT*

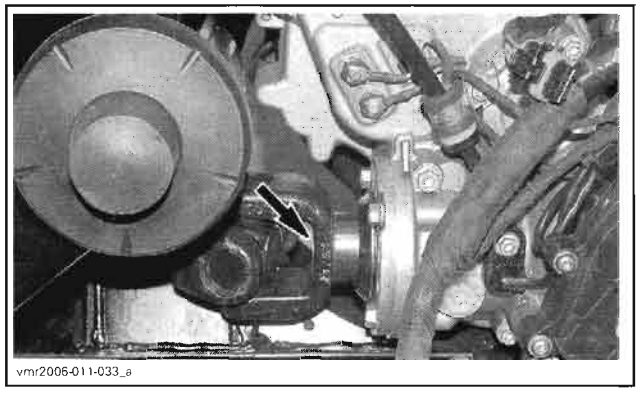
vmr2006-011-033_a

*REAR PROPELLER BOLT*

## Lifting Engine

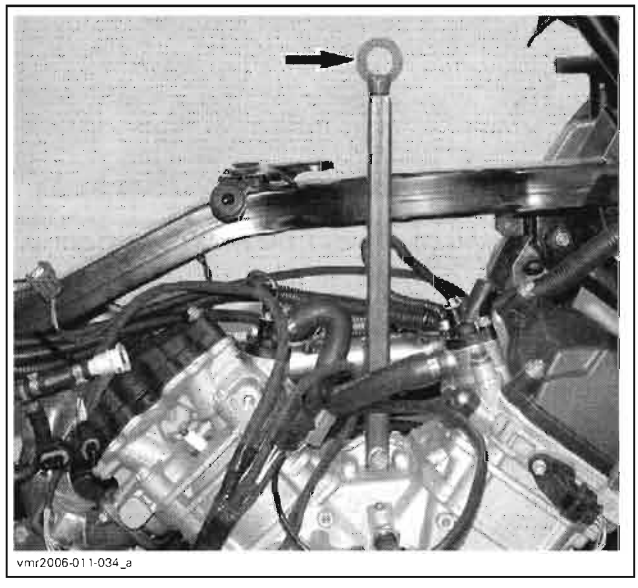
vmr2006-011-034_a

*INSTALL THE ENGINE LIFTING TOOL (P/N 529 036 022)*

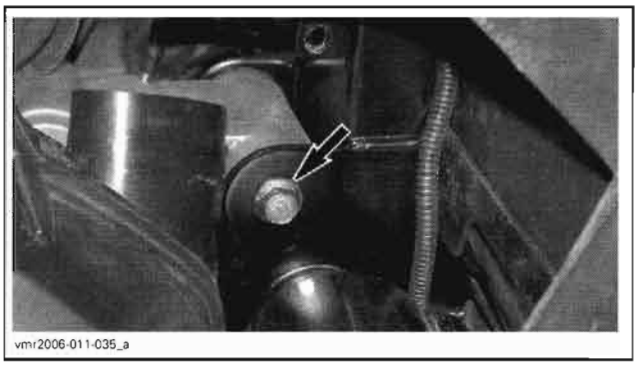


*REMOVE THE REAR ENGINE MOUNTING BOLT*

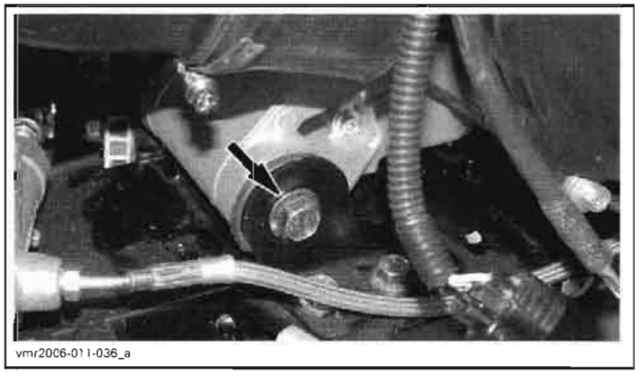


*THEN THE FRONT ENGINE MOUNTING BOLT*

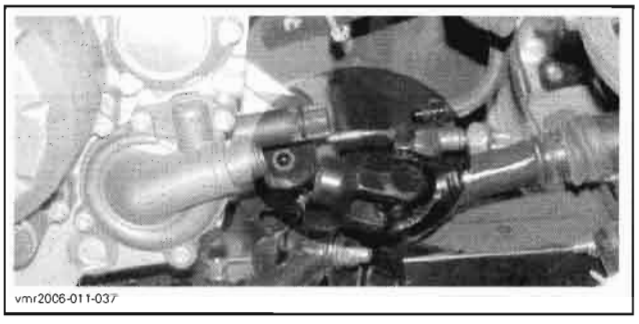


*LIFT ENGINE AND DISCONNECT THE FRONT PROPELLER SHAFT FROM ENGINE*

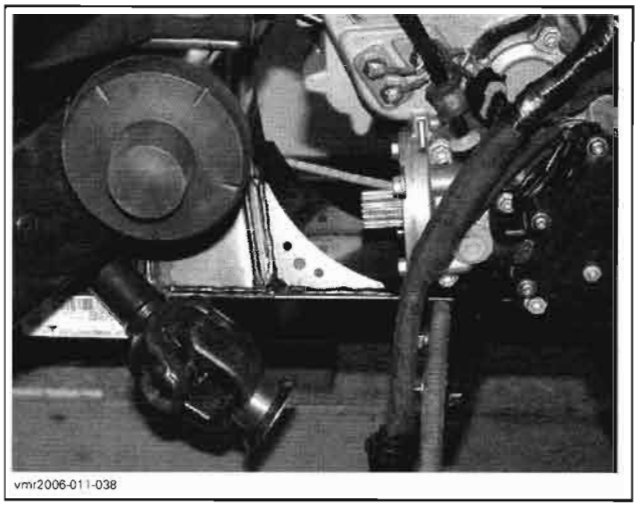


*MOVE ENGINE FORWARD AND DISCONNECT REAR PROPELLER SHAFT*

Lift engine to clear mounting brackets.

Turn engine 90°, cylinder head towards right side of vehicle.

Remove engine from vehicle.

# ENGINE INSTALLATION

The installation is the reverse of the removal procedure. However, pay attention to the following.

NOTE: Prior to install engine, inspect condition of engine mounts.

Install the rear engine mounting bolt. Do not torque yet.

Install the rear propeller shaft onto engine output shaft.

Connect the front propeller shaft to engine output shaft while lowering engine.

Install front engine mounting bolt then torque all mounting bolts.

Install and connect all other removed parts.

## Final Assembly Procedure

Make sure coolant and oil drain plugs are reinstalled and tight.

Fill cooling system. Refer to *COOLING SYSTEM.*

Fill engine with the recommended oil and quantity. Refer to *LUBRICATION.*

Reconnect battery.

**⚠ WARNING**

**Connect RED (+) cable then BLACK (-) cable. Always connect RED (+) cable in first.**

Start engine and let it reach its operating temperature.

Stop engine and check coolant and oil levels. Refill as necessary.

Test drive vehicle to confirm proper operation.

# ENGINE MOUNT REPLACEMENT

NOTE: Use the same procedure for the front and rear engine mounts.

## Removal

Insert a punch in any engine mount bushing and push the other bushing out.

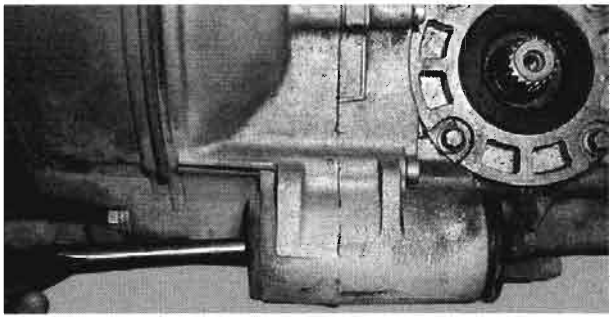

V07C1FA

*TYPICAL*

Use punch from the other side to remove the remaining bushing.

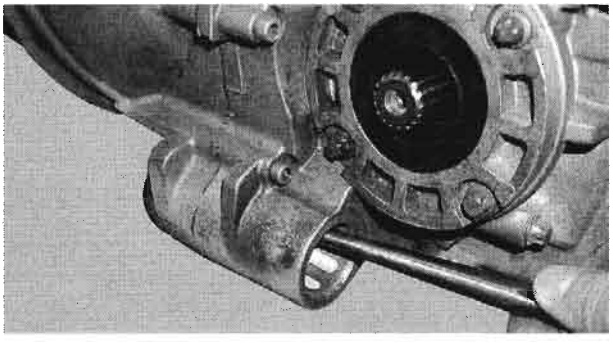

V07C1GA

*TYPICAL*

## Installation

The installation is the reverse of the removal procedure.

# AIR INTAKE SYSTEM

## SERVICE PRODUCTS

| Description | Part Number | Page |
|---|---|---|
| air filter cleaning solution | 219 700 341 | 37 |
| Loctite 5910 | 293 800 081 | 39 |

# AIR FILTER HOUSING

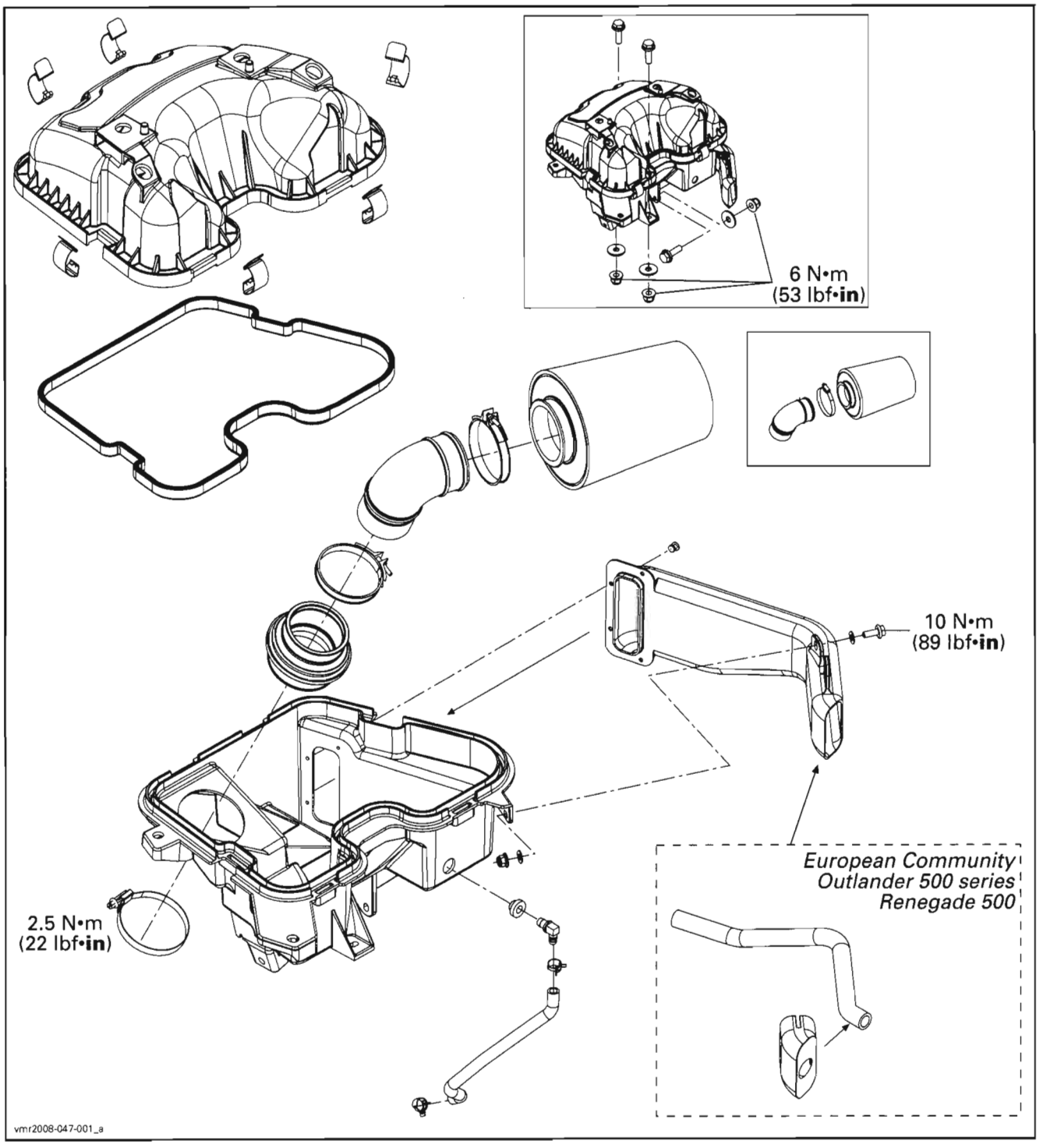

# GENERAL

During assembly/installation, use the torque values and service products as in the exploded views.

Clean threads before applying a threadlocker. Refer to *SELF-LOCKING FASTENERS* and *LOCTITE APPLICATION* at the beginning of this manual for complete procedure.

**⚠ WARNING**

**Torque wrench tightening specifications must strictly be adhered to.**
**Locking devices (e.g.: locking tabs, elastic stop nuts, cotter pin, etc.) must be replaced with new ones.**

# PROCEDURES

## AIR FILTER

### Air Filter Removal

**CAUTION: Never remove or modify any component in the air filter housing. The engine management system is calibrated to operate specifically with these components. Otherwise, engine performance degradation or damage can occur.**

Remove seat, side panels, central panel and dashboard. Refer to *BODY*.

Release clamps and remove air filter housing cover.

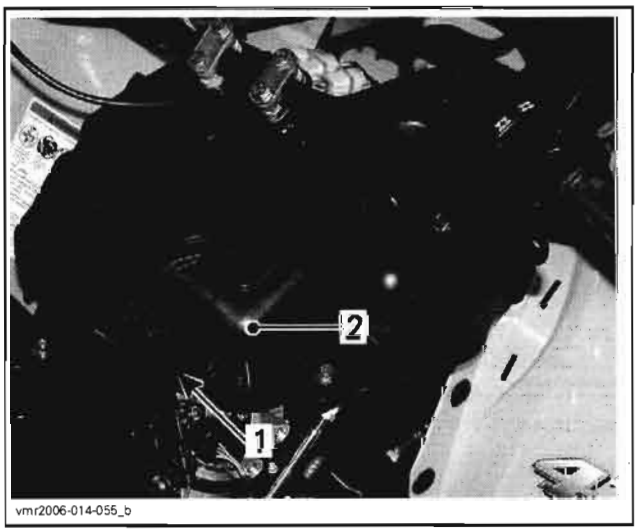


1. *Clamps*
2. *Cover*

Loosen clamp and remove air filter.

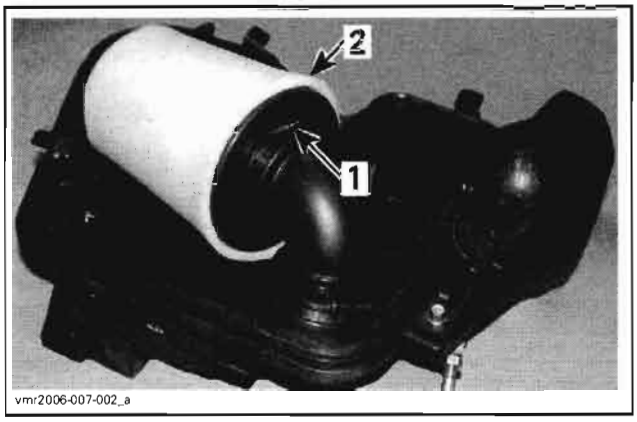


1. *Clamp*
2. *Air filter*

**NOTE:** If vehicle is used in dusty area, inspect more frequently than specified in *MAINTENANCE CHART*.

If liquid/deposits are found, squeeze and dry the foam filter. Replace filter element if damaged.

**CAUTION: Do not start engine if liquid or deposit are found. If there is oil in the air filter housing, check engine oil level. Oil level may be too high.**

Pour air filter cleaning solution (P/N 219 700 341) or an equivalent into a bucket. Put the foam filter in to soak. Do not wash filter element.

While filter soaks, clean inside of air filter housing.

Rinse foam filter with warm water and let it dry completely.

Blow low pressure compressed air on filter element to clean it.

### Air Filter Installation

Properly reinstall removed parts in the reverse order of their removal.

## AIR FILTER HOUSING

### Air Filter Housing Removal

Remove seat, side panels, central panel and dashboard. Refer to *BODY*.

Set shifter lever to PARK.

Disconnect ball joint from shifting plate.

**NOTE:** If you prefer to remove the shifting plate from transmission shaft, refer to *SHIFTER* section for the procedure.

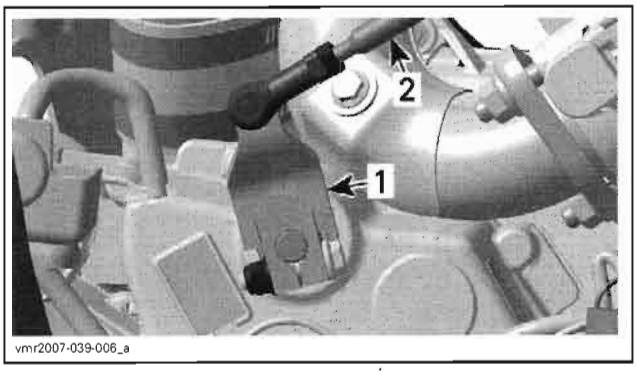


1. *Shifting plate*
2. *Shifter link rod*

Detach throttle cable from shifter panel.

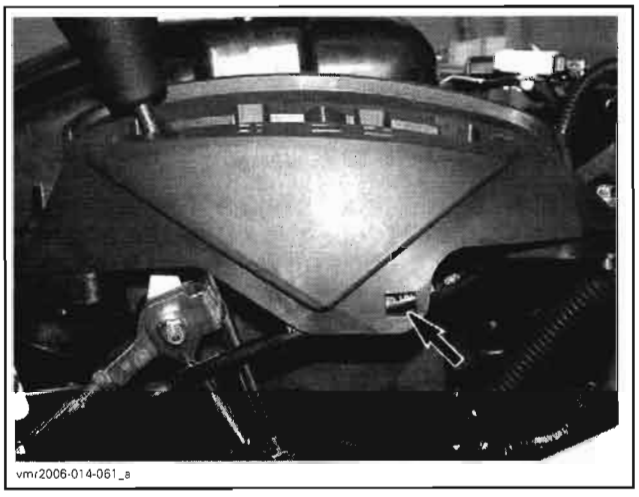


Remove retaining fasteners.

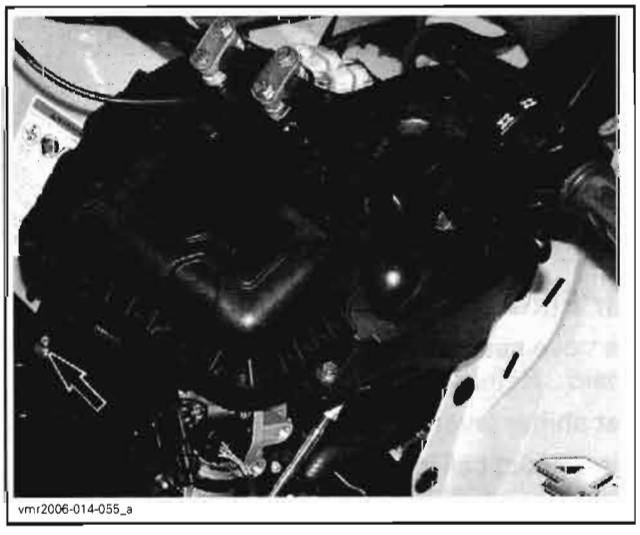


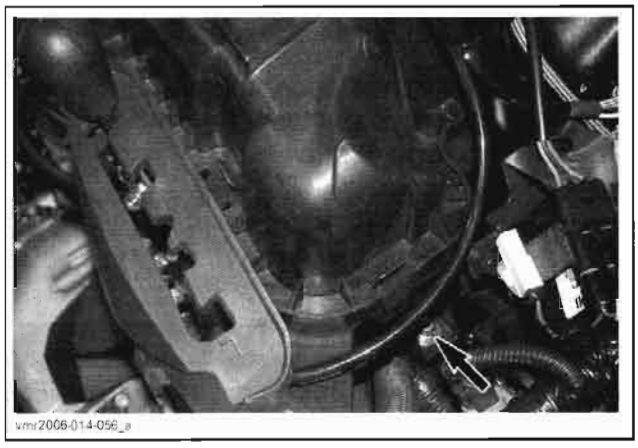


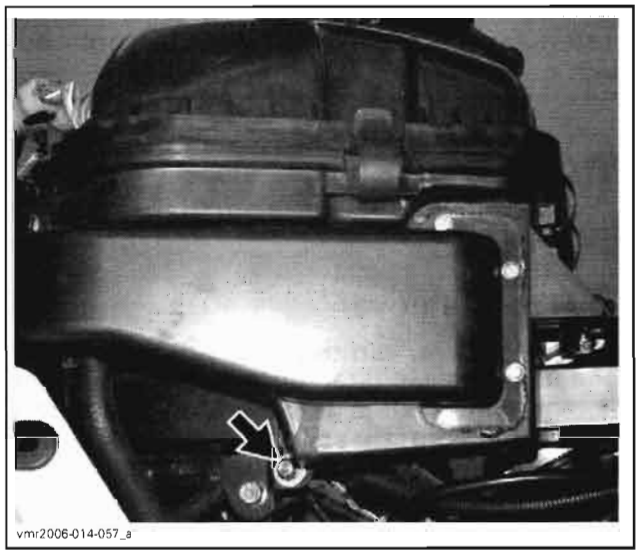


Remove dart.

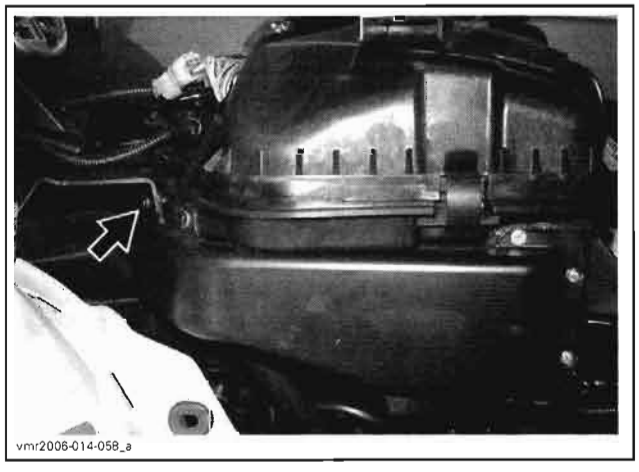


Disconnect vent tube.

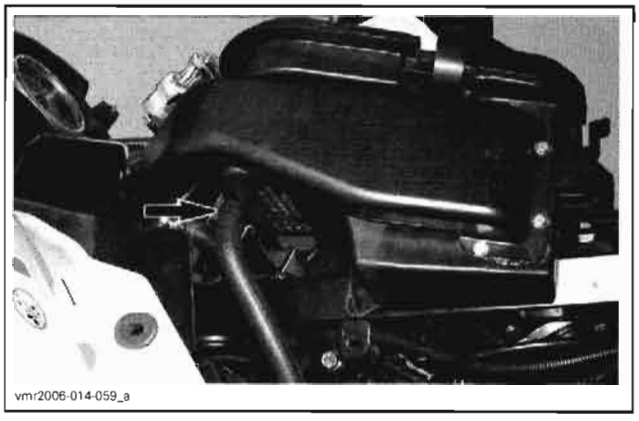


Pull air filter housing out.

## Air Filter Housing Installation

For installation, reverse the removal procedure but pay attention to the following.

If the baffle is removed, reseal it with Loctite 5910 (P/N 293 800 081) and replace rivets by screws (M4 x 12 mm) and elastic stop nuts.

Set shifter lever to PARK then reinstall shifter to transmission shaft. Check its operation and adjust as necessary. Refer to *GEARBOX*.

Secure throttle cable to shifter panel.

Gently pull throttle cable toward rear to have a gap between cable and shifter mechanism.

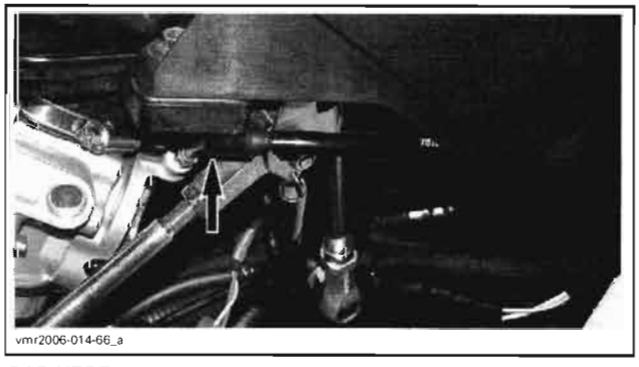


*GAP HERE*

**⚠ WARNING**

**Ensure shifter mechanism does not touch throttle cable. Depress throttle lever several times to ensure it properly returns.**

# RESTRICTOR

***Outlander 500 and Renegade 500 (European Community Models)***

## Restrictor Removal

The restrictor is installed on the inlet tube of the air filter housing.

Remove the water deflector.

Pull the restrictor.

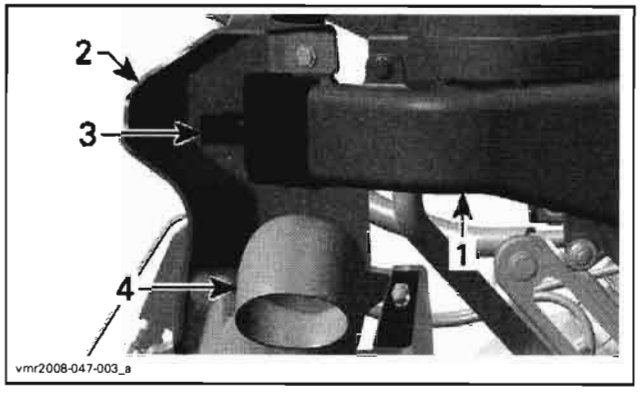


1. *Inlet tube of air filter housing*
2. *Water deflector*
3. *Restrictor*
4. *CVT air inlet*

## Restrictor Installation

The installation is the reverse of the removal procedure.

# EXHAUST SYSTEM

## SERVICE TOOLS

| Description | Part Number | Page |
|---|---|---|
| exhaust spring tool | 529 035 983 | 42 |

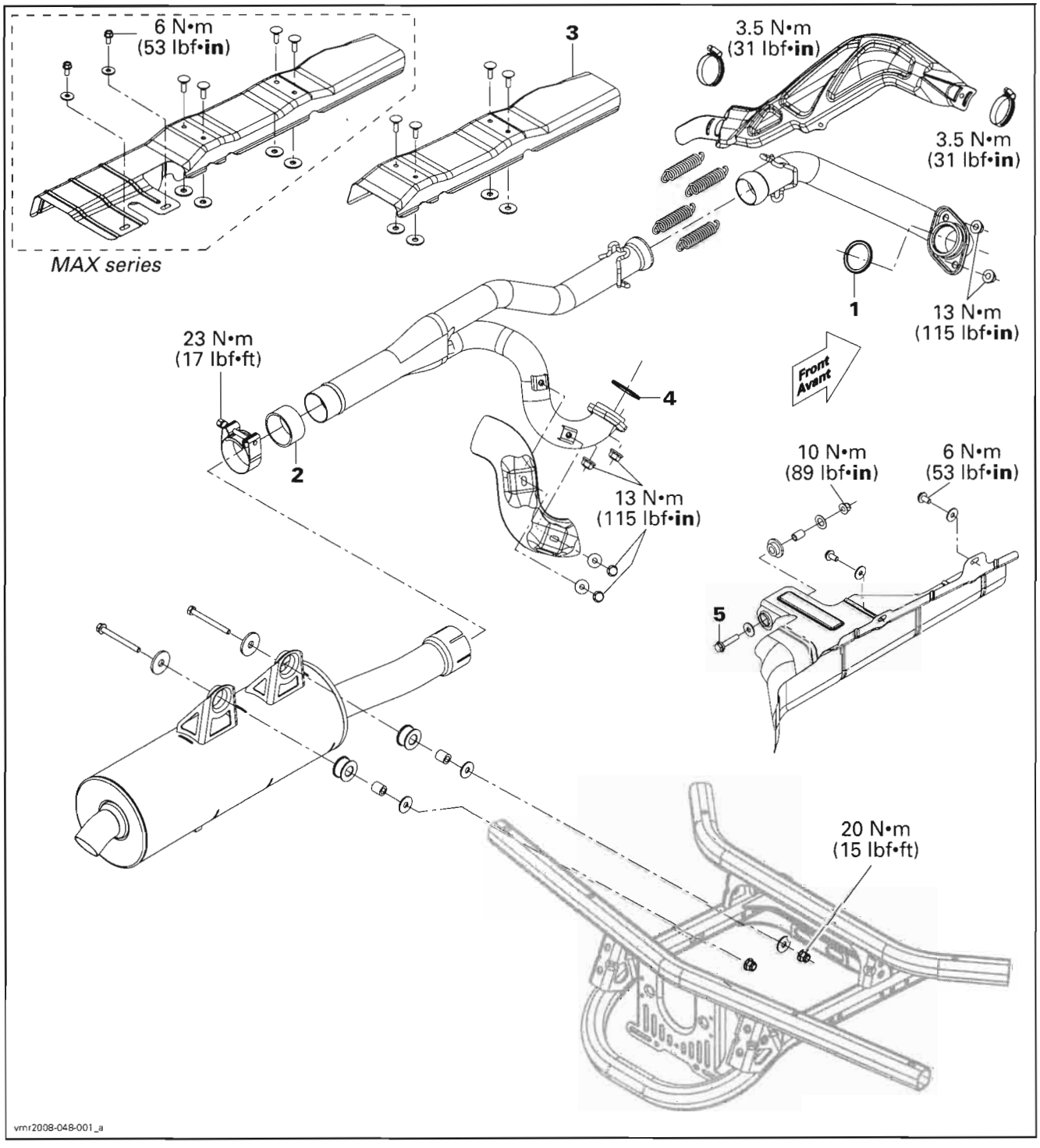

# GENERAL

**⚠ WARNING**

To avoid potential burns, never touch exhaust system components immediately after the engine has been run because these components are very hot. Let engine and exhaust system cool down before performing any servicing.

During assembly/installation, use the torque values and service products as in the exploded views.

Clean threads before applying a threadlocker. Refer to *SELF-LOCKING FASTENERS* and *LOCTITE APPLICATION* at the beginning of this manual for complete procedure.

**⚠ WARNING**

Torque wrench tightening specifications must strictly be adhered to.
Locking devices (e.g.: locking tabs, elastic stop nuts, self-locking fasteners, cotter pin, etc.) must be installed or replaced with new ones where specified. If the efficiency of a locking device is impaired, it must be renewed.

# PROCEDURES

## FRONT EXHAUST PIPE

### Inspection

Check for cracks, bending or other damages. Replace if necessary.

### Removal

Remove LH side panel.

Unscrew heat shield clamps.

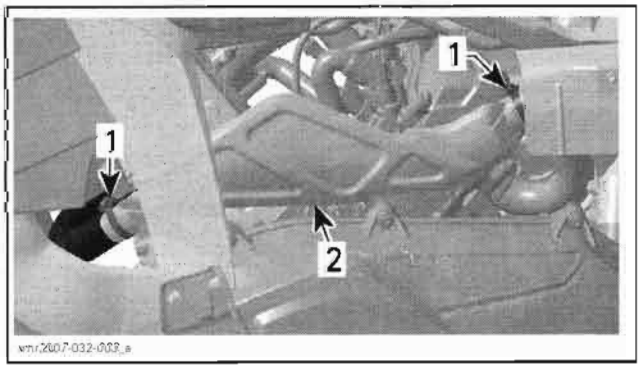


1. *Heat shield clamps*
2. *Heat shield of front exhaust pipe*

Using the exhaust spring tool (P/N 529 035 983), remove exhaust springs.

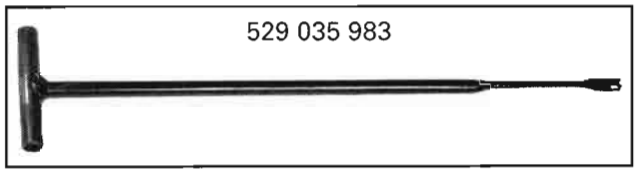


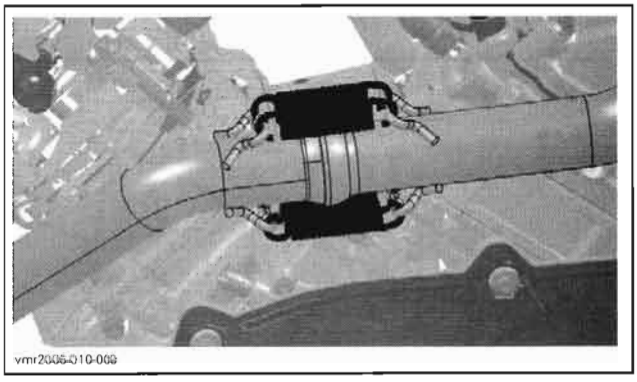

Unscrew exhaust pipe nuts.

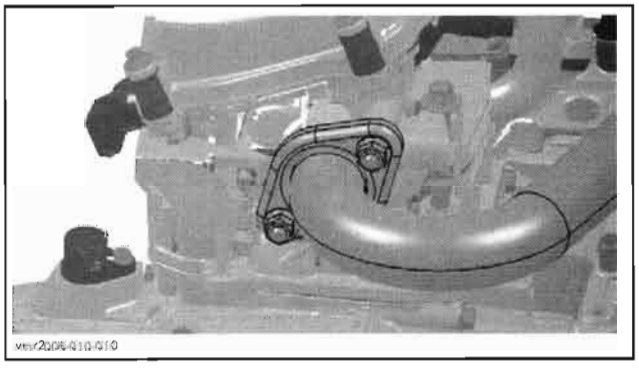

Move front exhaust pipe forward then remove it.

Remove exhaust gasket **no. 1** from engine exhaust port.

### Installation

Install a new exhaust gasket on front exhaust pipe end.

Loosely install front exhaust pipe on cylinder head with exhaust nuts.

Make sure front exhaust pipe end is properly aligned inside ball socket of "Y" exhaust pipe. Install exhaust springs.

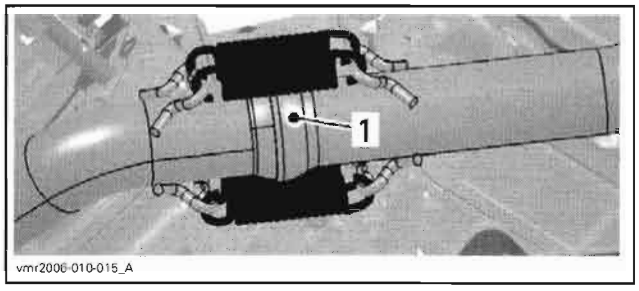


*1. "Y" exhaust pipe ball socket*

Torque exhaust pipe nuts.

Reinstall all other removed parts.

# MUFFLER

## Removal

Unscrew muffler clamp.

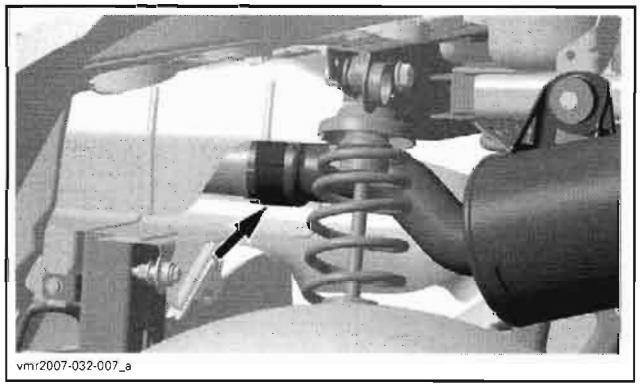


Remove muffler screws then pull muffler to remove it.

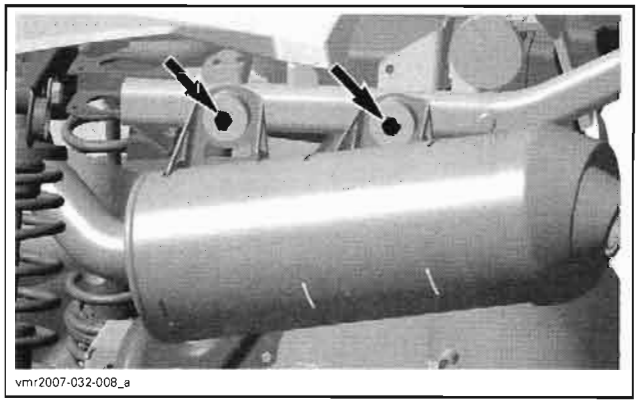


Discard the gasket **no. 2** at the end of "Y" exhaust pipe.

## Inspection

Check muffler for cracks or other damages. Replace if necessary.

## Installation

For the installation, reverse the removal procedure.

# "Y" EXHAUST PIPE

## Inspection

Check for cracks, bending or other damages. Replace if necessary.

## Removal

Remove heat shield **no. 3**.

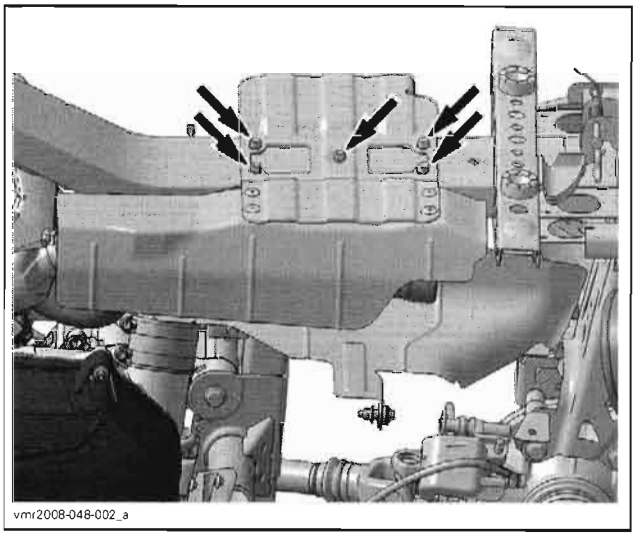


Remove muffler.

Remove front exhaust pipe.

Discard the gasket **no. 2**.

Unscrew exhaust pipe nuts then remove "Y" exhaust pipe.

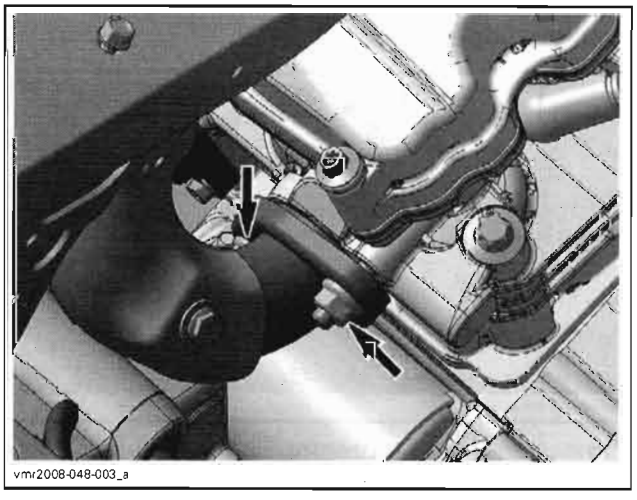


Remove exhaust gasket **no. 4** from engine exhaust port.

## Installation

Install a new gasket on each end of Y-exhaust pipe end and another on the end of "Y" exhaust pipe (cylinder side).

While sliding the "Y" exhaust pipe end over the front exhaust pipe end, align its other end with the studs on cylinder head.

Secure the front exhaust pipe on cylinder with exhaust nuts.

Torque exhaust nuts and exhaust clamp.

Reinstall all other removed parts.

# FUEL TANK PROTECTOR

## Inspection

Check for wear, cracks or other damages. Replace if necessary.

## Removal

Remove muffler.

Unscrew front bolt.

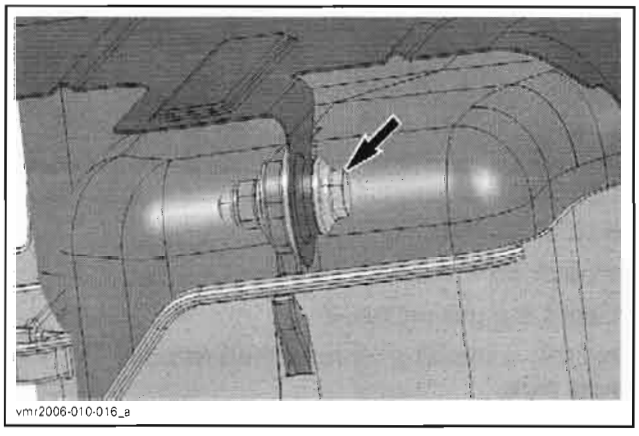


Unscrew upper bolts.

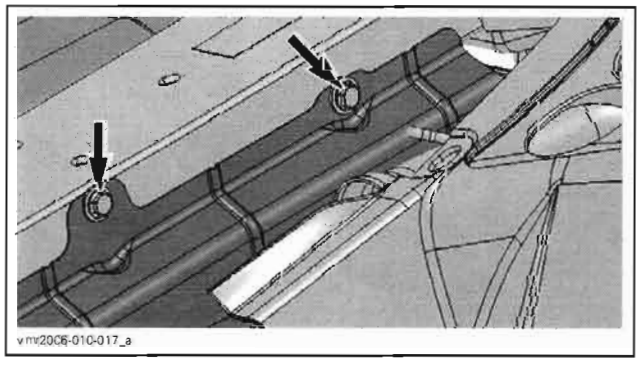


Remove fuel tank protector.

## Installation

The installation is the reverse of the removal procedure but pay attention to the following.

First, loosely install front bolt then install remaining bolts. Torque all bolts as per installation sequence.

# LUBRICATION SYSTEM

## SERVICE TOOLS

| Description | Part Number | Page |
|---|---|---|
| adapter hose | 529 035 652 | 49 |
| oil pressure gauge | 529 035 709 | 49 |
| disconnect tool | 529 035 714 | 49 |

## SERVICE PRODUCTS

| Description | Part Number | Page |
|---|---|---|
| XP-S 5W30 mineral oil | 219 700 706 | 48 |
| Loctite 243 (blue) | 293 800 060 | 51 |

## COMPONENTS

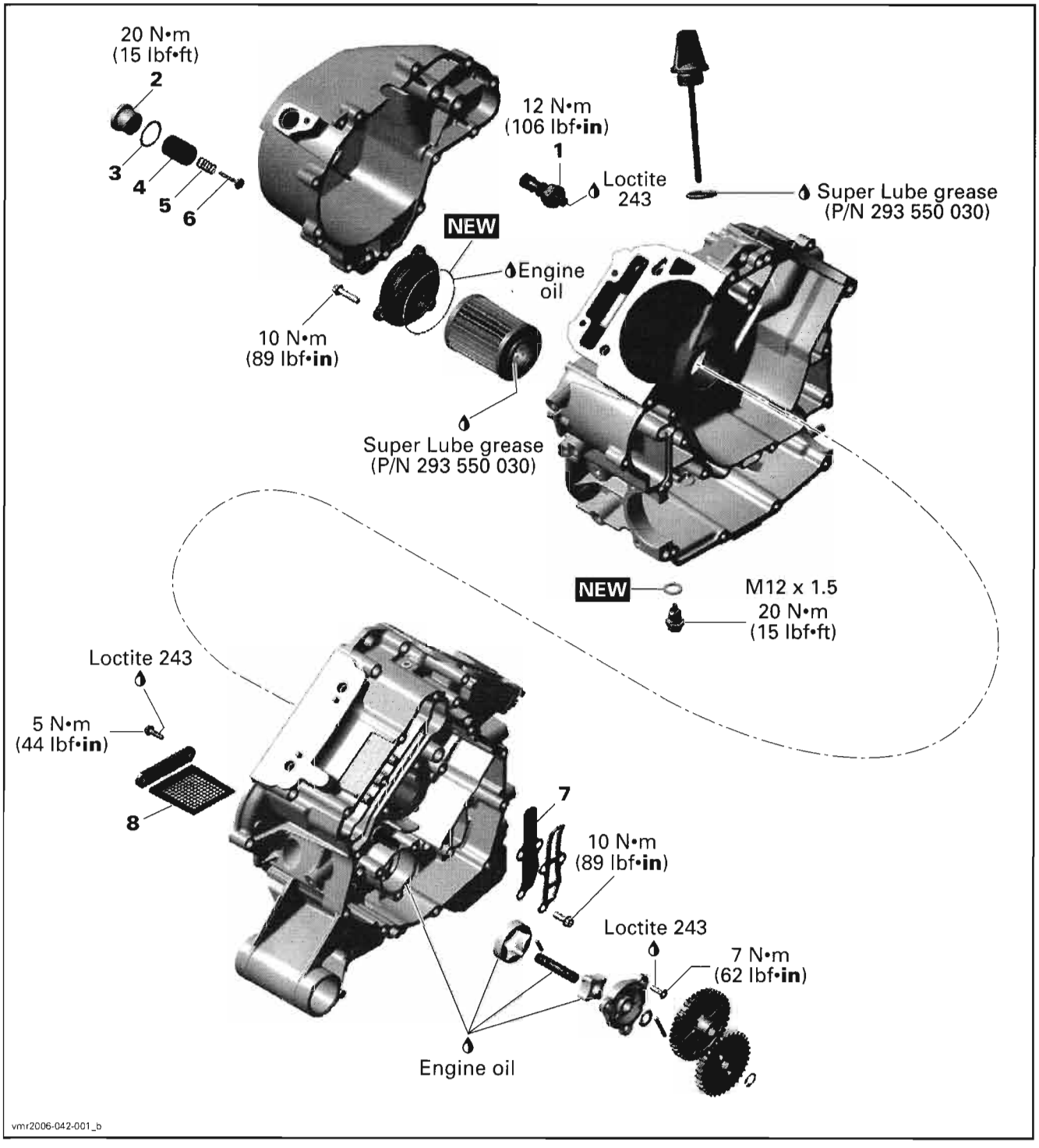
20 N•m
(15 lbf•ft)
2
3
4
5
6
12 N•m
(106 lbf•in)
1
Loctite
243
Super Lube grease
(P/N 293 550 030)
NEW
Engine
oil
10 N•m
(89 lbf•in)
Super Lube grease
(P/N 293 550 030)
NEW
M12 x 1.5
20 N•m
(15 lbf•ft)
Loctite 243
5 N•m
(44 lbf•in)
8
7
10 N•m
(89 lbf•in)
Loctite 243
7 N•m
(62 lbf•in)
Engine oil
vmr2006-042-001_b

# ENGINE LUBRICATION

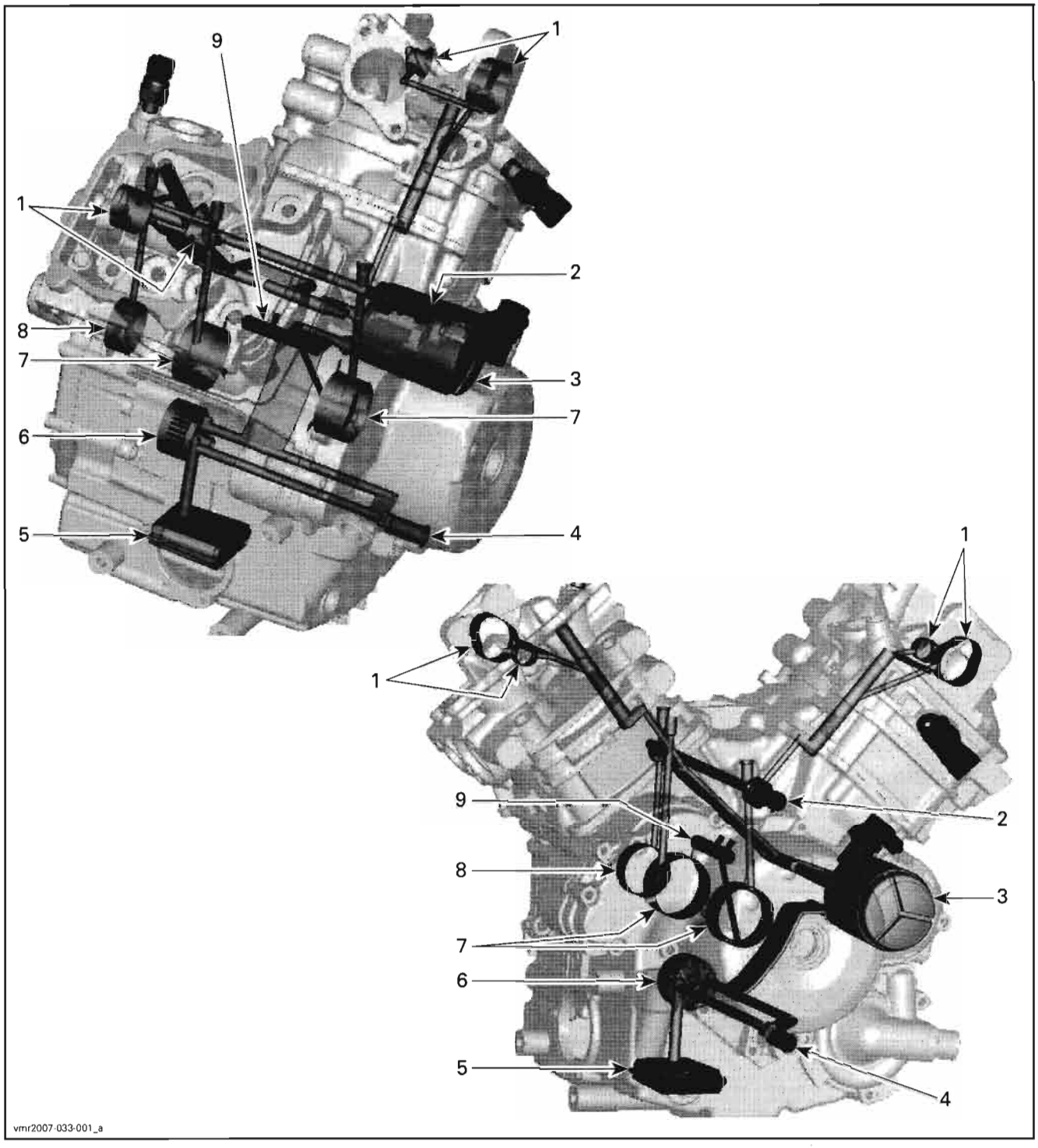


1. *Camshaft bearings*
2. *Oil pressure switch*
3. *Oil filter*
4. *Oil pressure regulator valve*
5. *Oil strainer*
6. *Oil pump*
7. *Crankshaft main bearings*
8. *Crankshaft support bearing*
9. *Connecting rod bearings*

# GENERAL

During assembly/installation, use the torque values and service products as in the exploded view.

Clean threads before applying a threadlocker. Refer to *SELF-LOCKING FASTENERS* and *LOCTITE APPLICATION* at the beginning of this manual for complete procedure.

**⚠ WARNING**

**Torque wrench tightening specifications must strictly be adhered to.**
**Locking devices (e.g.: locking tabs, elastic stop nuts, self-locking fasteners, etc.) must be installed or replaced with new ones where specified. If the efficiency of a locking device is impaired, it must be renewed.**

# MAINTENANCE

## ENGINE OIL

### Recommended Oil

Use 4-stroke engine oil that meets or exceeds the requirements for API service classification SM, SL or SJ. Always check the API service label certification on the oil container, it must contain at least one of the above standards.

### Oil Viscosity

XP-S 5W30 mineral oil (P/N 219 700 706) is recommended for all seasons.

Refer to the following chart for other viscosity grades.

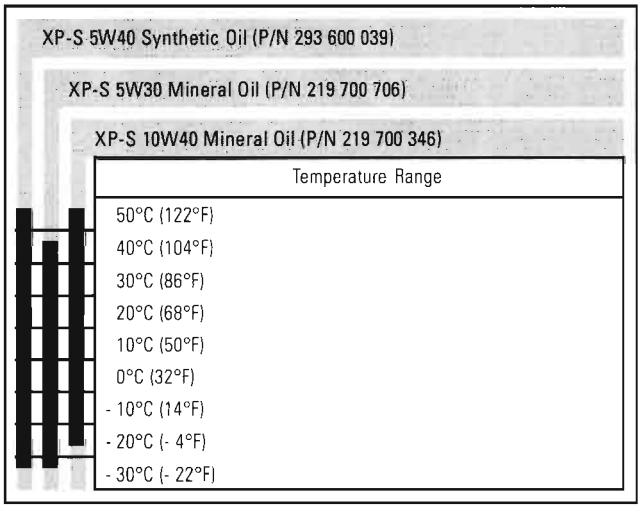


### Oil Level Verification

NOTE: Strictly follow this procedure, otherwise wrong oil level may be indicated.

Ensure vehicle is on a level surface.

Start engine and let idle for a few minutes.

Stop engine. Wait a few minutes to allow oil to flow down to crankcase then check oil level.

**Fully screw in dipstick** to check oil level.

Remove dipstick and read oil level.

Oil level must be between minimum and maximum marks on dipstick.

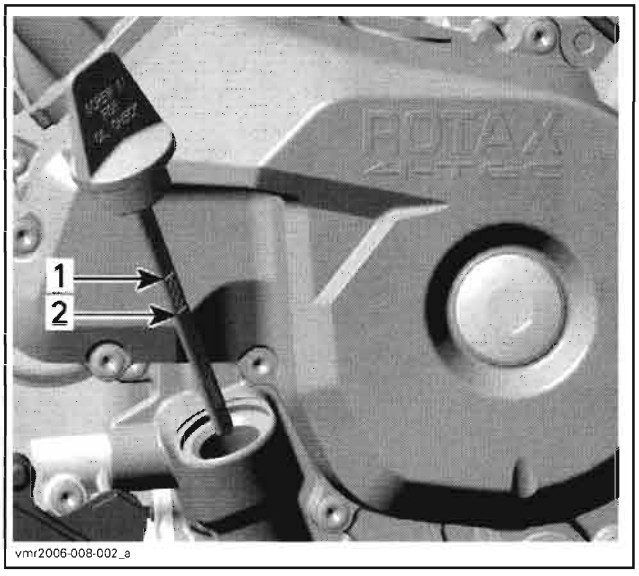


*TYPICAL — FULLY SCREW DIPSTICK TO CHECK OIL LEVEL*
*1. Maximum*
*2. Minimum*

There is a capacity of 300 mL (10 U.S. oz) between the two marks.

Refill oil as necessary. Do not overfill.

Reinstall dipstick.

### Oil and Filter Change

Prior to change the oil, ensure vehicle is on a level surface.

Oil and oil filter must be replaced at the same time. Oil change and oil filter replacement should be done with a warm engine.

**⚠ WARNING**

**The engine oil can be very hot. Wait until engine oil is warm.**

Place a drain pan under the engine drain plug area.

Clean the drain plug area.

Unscrew drain plug and discard the gasket ring.

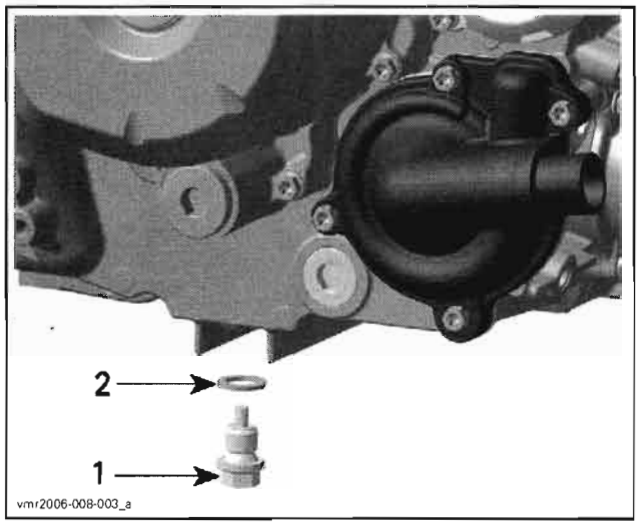


*1. Drain plug*
*2. Gasket ring*

Remove dipstick.

Allow oil to drain completely from crankcase.

NOTE: Oil condition gives information about the engine condition. See *TROUBLESHOOTING* section.

Clean the magnetic drain plug from metal shavings and residue. Presence of debris gives an indication of failure inside the engine. Check engine to correct the problem.

Install a **NEW** gasket ring on drain plug. Torque drain plug to 20 N•m (15 lbf•ft).

**CAUTION: Never use the gasket ring a second time. Always replace by a new one.**

Replace oil filter. Refer to *OIL FILTER* further in this section.

Refill engine with recommended engine oil. See *RECOMMENDED OIL* and *OIL VISCOSITY CHART* above.

Oil change capacity with filter: 2 L (2.11 qt).

After filling, check the oil level with the dipstick. Refer to *OIL LEVEL CHECK* above.

Run engine to ensure oil filter and drain plug areas are not leaking.

Dispose oil and filter as per your local environmental regulations.

# INSPECTION

## ENGINE OIL PRESSURE

NOTE: The engine oil pressure test should be done with a **warm engine** 90°C (194°F) and the **recommended oil**.

Remove the oil pressure switch. See procedure below.

Install oil pressure gauge (P/N 529 035 709) and adapter hose (P/N 529 035 652).

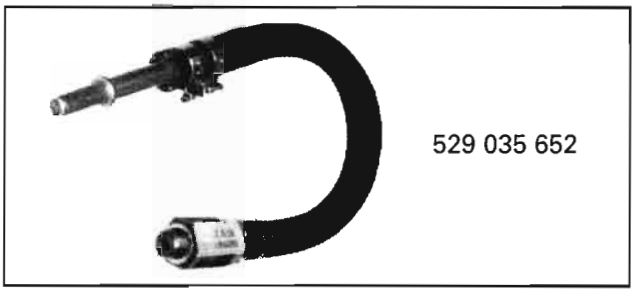


The engine oil pressure should be within the following values.

| OIL PRESSURE | 1250 RPM | 6000 RPM |
|---|---|---|
| MINIMAL | 70 kPa (10 PSI) | 350 kPa (51 PSI) |
| NOMINAL | 180 kPa (26 PSI) | 420 kPa (61 PSI) |
| MAXIMAL | 300 kPa (43 PSI) | 550 KPa (80 PSI) |

If the engine oil pressure is out of specifications, check the points described in *TROUBLESHOOTING* section.

Remove oil pressure gauge and adapter hose.

NOTE: To remove adapter hose from oil pressure gauge, use the disconnect tool (P/N 529 035 714).

Reinstall the oil pressure switch.

# PROCEDURES

## OIL FILTER

### Oil Filter Removal

Remove oil filter screws.

Remove oil filter cover.

Remove oil filter.

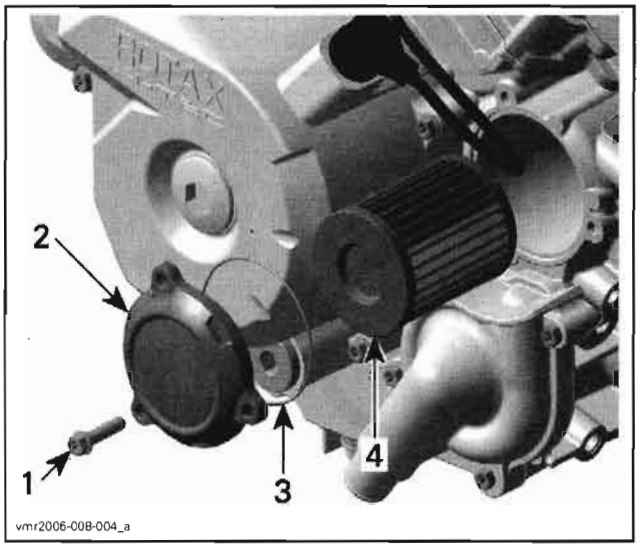


1. *Oil filter screw*
2. *Oil filter cover*
3. *O-ring*
4. *Oil filter*

## Oil Filter Inspection

Check and clean the oil filter inlet and outlet area for dirt and other contaminations.

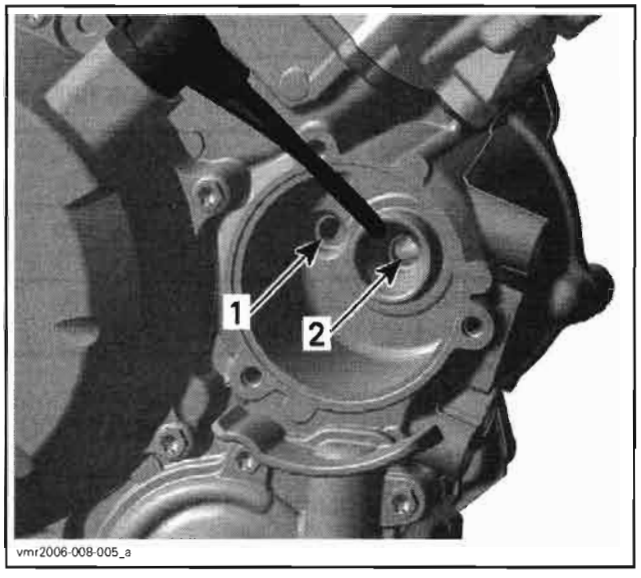


1. *Inlet bore from the oil pump to the oil filter*
2. *Outlet bore to the engine oil providing system*

## Oil Filter Installation

Install a NEW O-ring on oil filter cover.

Install the filter into the cover.

Apply engine oil on O-ring and grease on the end of filter.

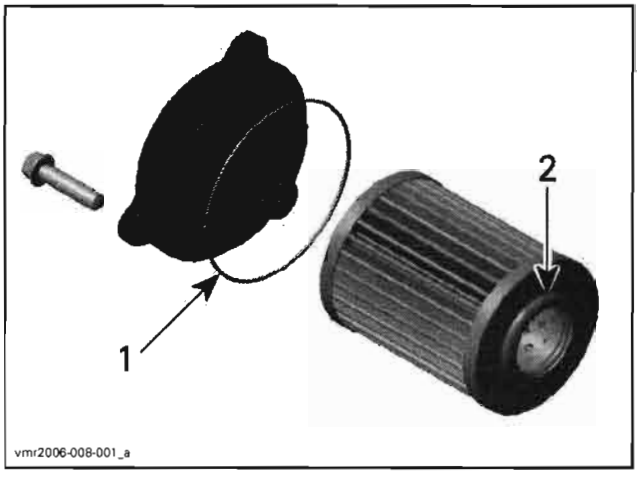


1. *Slightly oil*
2. *Slightly grease*

Install the cover on the engine.

Torque screws to 10 N•m (89 lbf•**in**).

# OIL PRESSURE SWITCH (OPS)

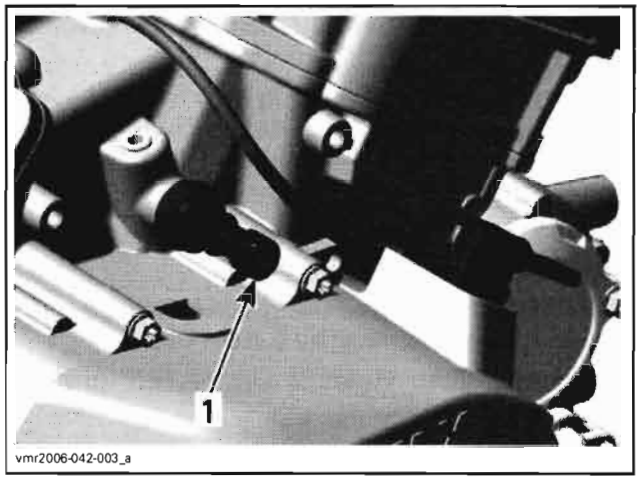


1. *Oil pressure switch*

## Oil Pressure Switch Activation

Oil pressure switch works when engine oil pressure is between 20 and 40 kPa (2.9 and 5.8 PSI).

To check the function of the oil pressure switch, an oil pressure test has to be performed. Refer to *ENGINE OIL PRESSURE*.

If the engine oil pressure is good, check the resistance of the oil pressure switch while engine is off and while engine is running.

## Oil Pressure Switch Resistance Test

Disconnect the connector from the oil pressure switch.

Use a multimeter to check the resistance between as shown.

| OPS CONNECTOR | | ENGINE NOT RUNNING | ENGINE RUNNING |
|---|---|---|---|
| PIN | | RESISTANCE (Ω) | |
| 1 | Engine ground | Close to 0 Ω (normally closed switch) | Infinitely high when pressure reaches 20 - 40 kPa (2.9 - 5.8 PSI) |

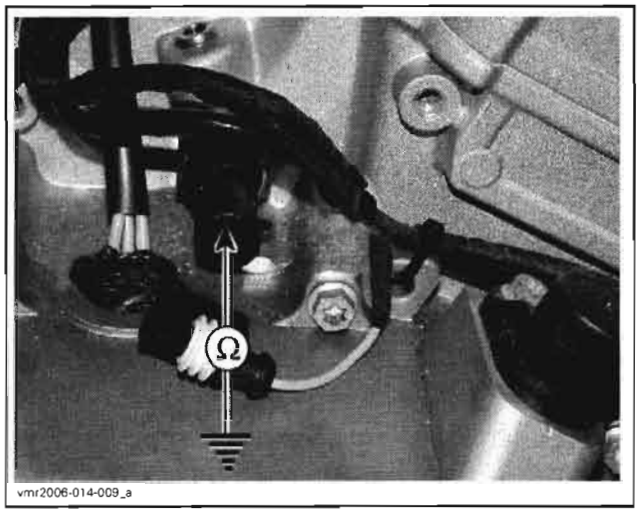


If resistance values are incorrect, replace the oil pressure switch.

If the values are correct, check the continuity of the wiring harness.

Disconnect the connector "A" from the ECM and check continuity of circuit 10.

### Oil Pressure Switch Removal

Unplug then unscrew the oil pressure switch **no. 1**, mounted on the crankcase.

### Oil Pressure Switch Installation

Torque switch to 12 N•m (106 lbf•**in**).

NOTE: Install oil pressure switch with Loctite 243 (blue) (P/N 293 800 060).

## ENGINE OIL PRESSURE REGULATOR

The oil pressure regulator is located on the engine magneto side (inside magneto cover).

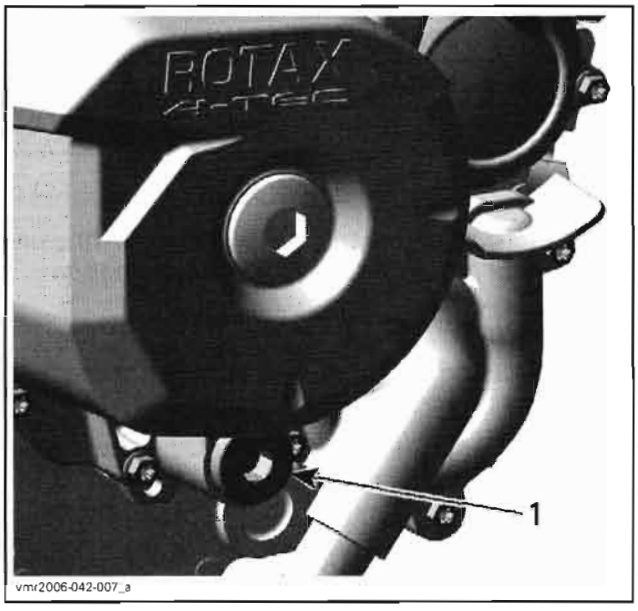


*1. Engine oil pressure regulator*

NOTE: The oil pressure regulator system works when the oil pressure exceeds 450 kPa (65 PSI).

### Removal

Remove plug screw **no. 2** and pull oil pressure regulator out.

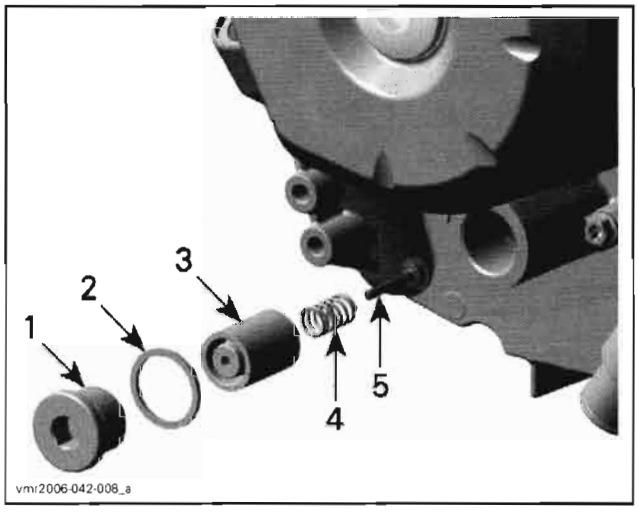


*1. Plug screw*
*2. Gasket ring*
*3. Pressure regulator housing*
*4. Spring*
*5. Pressure regulator valve*

### Inspection

Inspect pressure regulator housing **no. 4** and valve **no. 6** for scoring or other damages.

Check spring **no. 5** for free length.

| SPRING FREE LENGTH | |
|---|---|
| NEW NOMINAL | 39 mm (1.535 in) |
| SERVICE LIMIT | 37 mm (1.457 in) |

NOTE: Replace worn or damaged components.

Clean bore and thread in the magneto housing from metal shavings and other contaminations.

### Installation

For installation, reverse the removal procedure. Pay attention to the following details.

NOTE: At installation, always replace the gasket ring **no. 3** of the plug screw.

## OIL PUMP

The oil pump is located on the engine PTO side (behind cover).

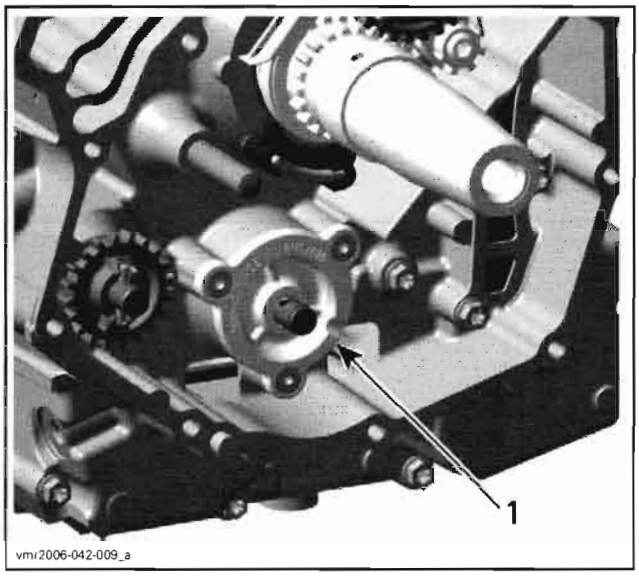


*1. Oil pump*

### Removal

Remove parts to access the engine crankcase PTO cover.

Remove the engine crankcase PTO cover. Refer to *BOTTOM END* section.

Remove:
- retaining ring
- oil pump gear
- needle pin
- thrust washer

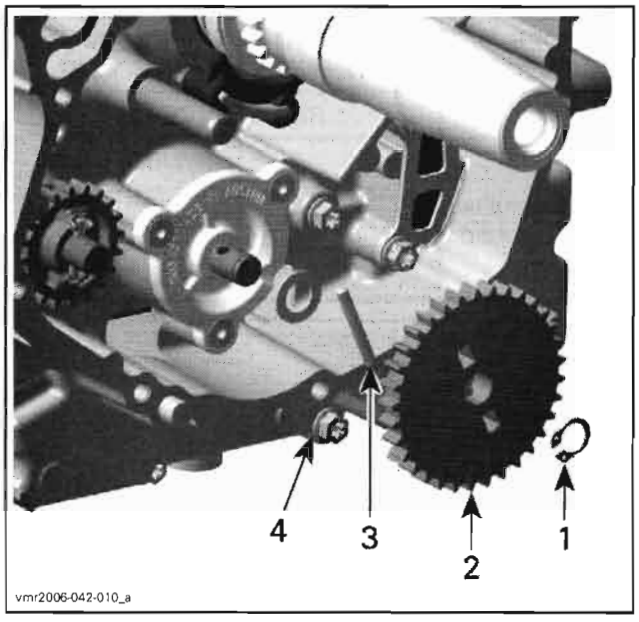


*1. Retaining ring*
*2. Oil pump gear*
*3. Needle pin*
*4. Thrust washer*

- oil pump cover screws and pull oil pump cover
- oil pump shaft with inner rotor and outer rotor.

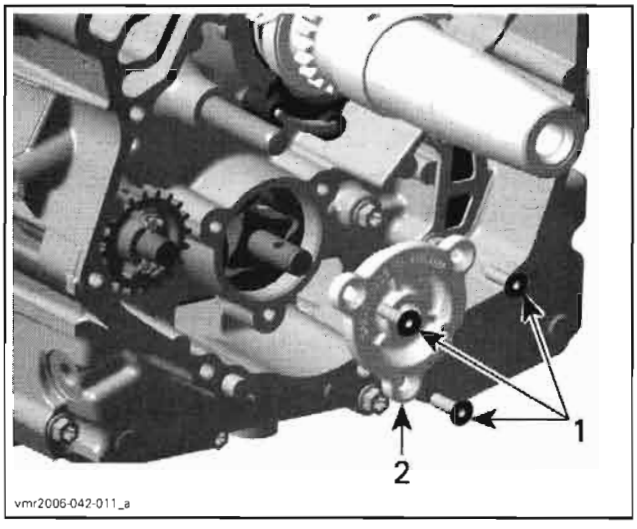


*1. Retaining screws*
*2. Oil pump cover*

### Inspection

Inspect oil pump for marks or other damages. Check for scratches in crankcase between outer rotor and oil pump bore. If so, replace damaged parts.

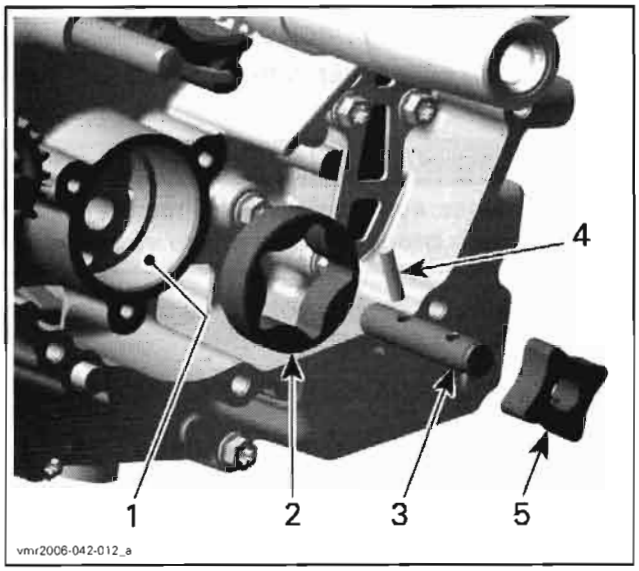


1. *Oil pump bore*
2. *Outer rotor*
3. *Oil pump shaft*
4. *Needle pin*
5. *Inner rotor*

Check inner rotor for corrosion pin holes or other damages. If so, replace oil pump shaft assembly.

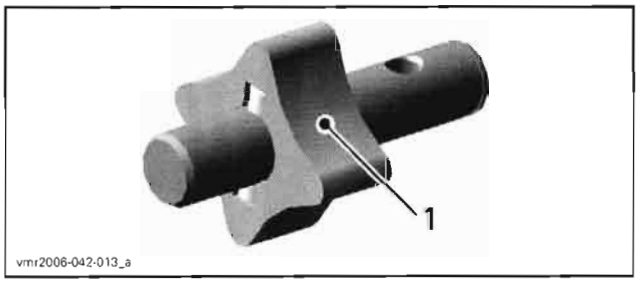


1. *Pittings on the teeth*

Using a feeler gauge, measure the clearance of inner and outer rotors as shown.

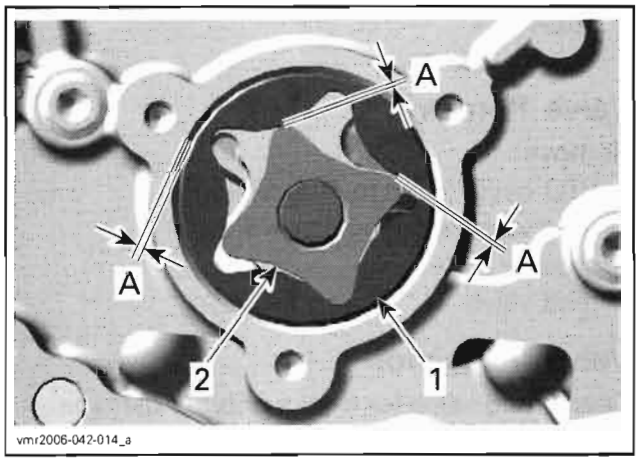


1. *Outer rotor*
2. *Inner rotor*

A. *Service limit: 0.25 mm (.009 in)*

If clearance of inner and outer rotors exceeds the tolerance, replace oil pump shaft assembly. Ensure to also check oil pump cover. If damaged, replace the complete oil pump assembly.

If clearance between outer rotor and its bore in crankcase exceeds the tolerance, replace the complete oil pump assembly and/or the crankcase.

Using a depth gauge, measure the axial clearance of the oil pump as shown.

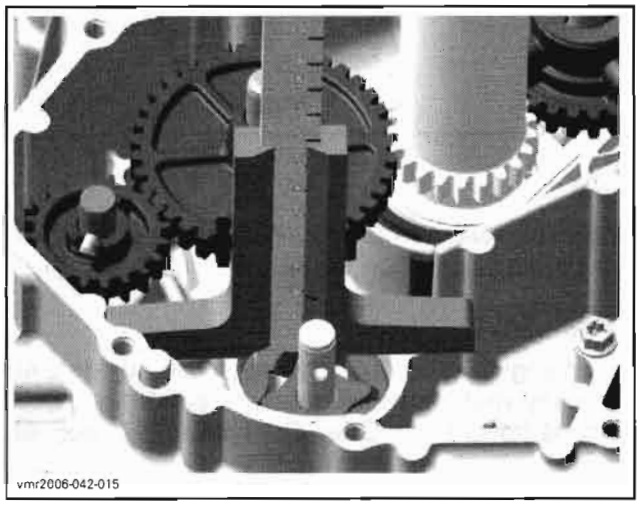


*OIL PUMP — MEASUREMENT "A"*

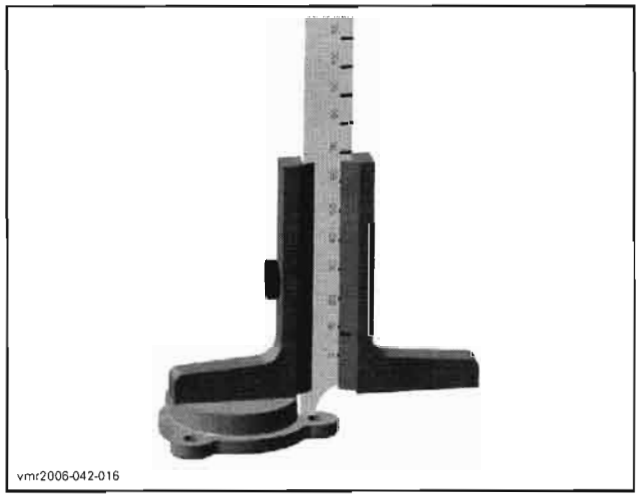


*OIL PUMP COVER — MEASUREMENT "B"*

Difference between measurements should not exceed 0.2 mm (.008 in). If so, replace the complete oil pump assembly.

**NOTE:** When the axial clearance of the oil pump shaft assembly increases, the oil pressure decreases.

## Installation

For installation, reverse the removal procedure.

Pay attention to the following details.

NOTE: The outer rotor and inner rotor are marked. When installing, make sure both markings are on the upper side.

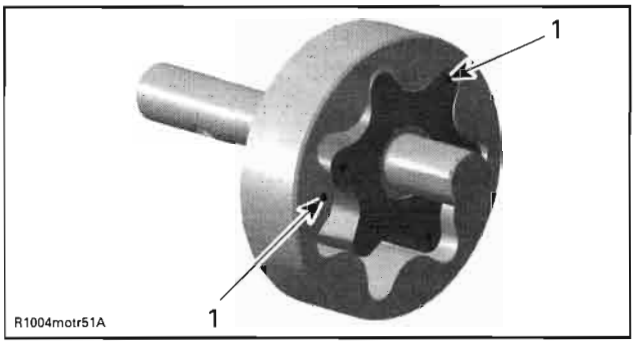


*TYPICAL*
*1. Markings*

After reinstallation of the remaining parts, check for smooth operation of the oil pump assembly.

### Final Test

After engine is completely reassembled, start engine and make sure oil pressure is within specifications (refer to *ENGINE OIL PRESSURE* above).

## ENGINE OIL STRAINER

The engine oil strainer **no. 7** is located between both crankcase halves.

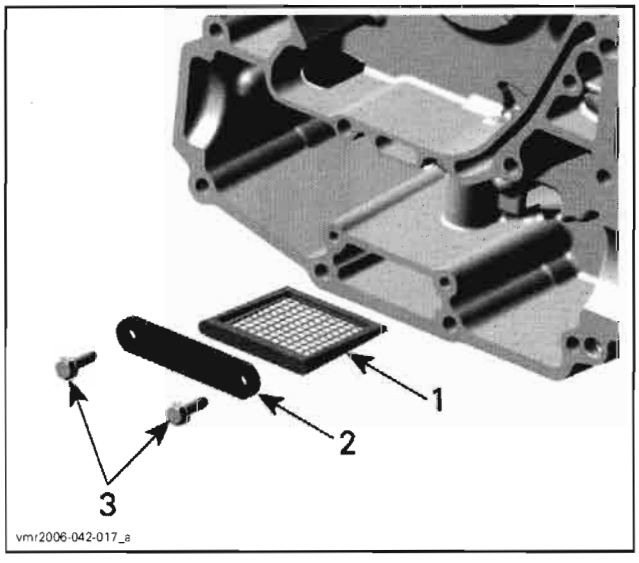


*1. Engine oil strainer*
*2. Retaining plate*
*3. Screws*

### Removal

Refer to *BOTTOM END* section.

### Cleaning and Inspection

Clean engine oil strainer with a part cleaner then use an air gun to dry it.

**⚠ WARNING**

**Always wear eye protector. Chemicals can cause a rash break out and injure your eyes.**

Check engine oil strainer for cracks or other damage. Replace if damaged.

### Installation

Refer to *BOTTOM END* section.

## REED VALVE

The engine is equipped with a reed valve **no. 8** which prevents accumulation of larger oil quantities in the crankcase. The reed valve is fitted into the crankcase.

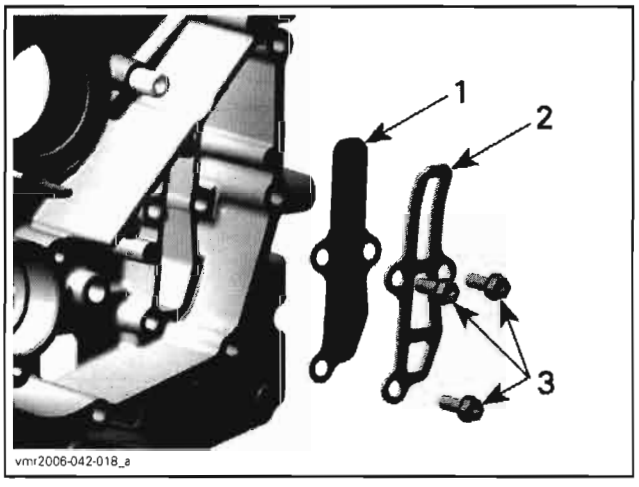


*1. Reed valve*
*2. Stopper*
*3. Screws*

### Valve Removal

Remove:
- PTO cover (refer to *PTO COVER*)
- reed valve retaining screws
- stopper plate
- reed valve.

### Valve Inspection

Check reed valve for cracks or other damage.

NOTE: Replace reed valve if damaged.

### Valve Installation

The installation is the reverse of the removal procedure.

# COOLING SYSTEM

## SERVICE TOOLS

| Description | Part Number | Page |
|---|---|---|
| installer handle | 420 877 650 | 68 |
| pressure/vacuum pump | 529 021 800 | 58 |
| large hose pincher | 529 032 500 | 59 |
| oil seal pusher | 529 035 757 | 68 |
| rotary seal installer | 529 035 766 | 69 |
| Fluke 111 multimeter | 529 035 868 | 62 |
| test cap | 529 035 991 | 58 |
| puller kit | 529 036 056 | 68 |

## SERVICE PRODUCTS

| Description | Part Number | Page |
|---|---|---|
| BRP premixed coolant | 219 700 362 | 59 |
| Molykote 111 | 413 707 000 | 69 |

# RADIATOR

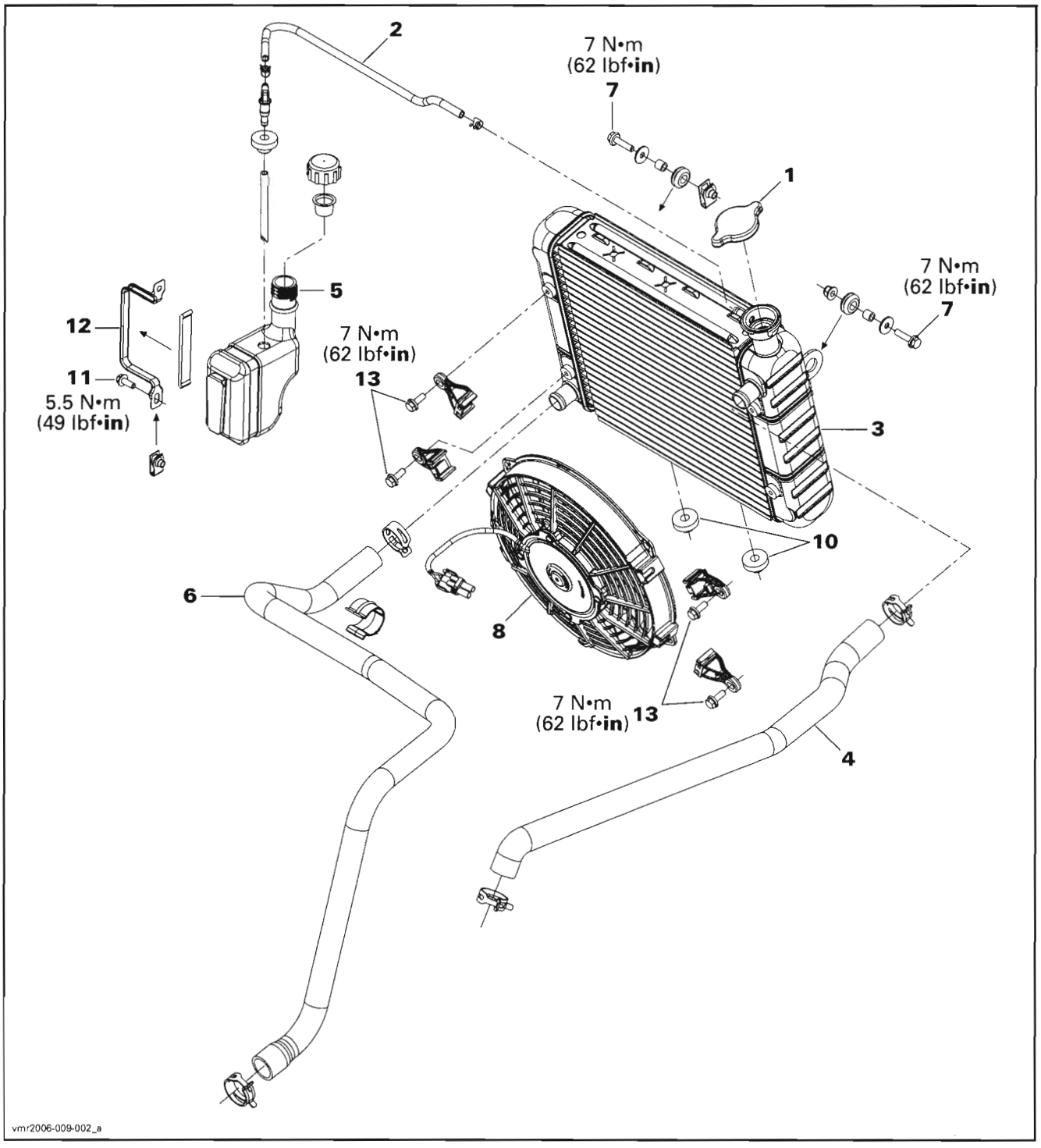
2
7 N•m
(62 lbf•in)
7
1
7 N•m
(62 lbf•in)
7
5
12
7 N•m
(62 lbf•in)
13
11
5.5 N•m
(49 lbf•in)
3
10
6
8
7 N•m
(62 lbf•in)
13
4
vmr2006-009-002_a

# WATER PUMP

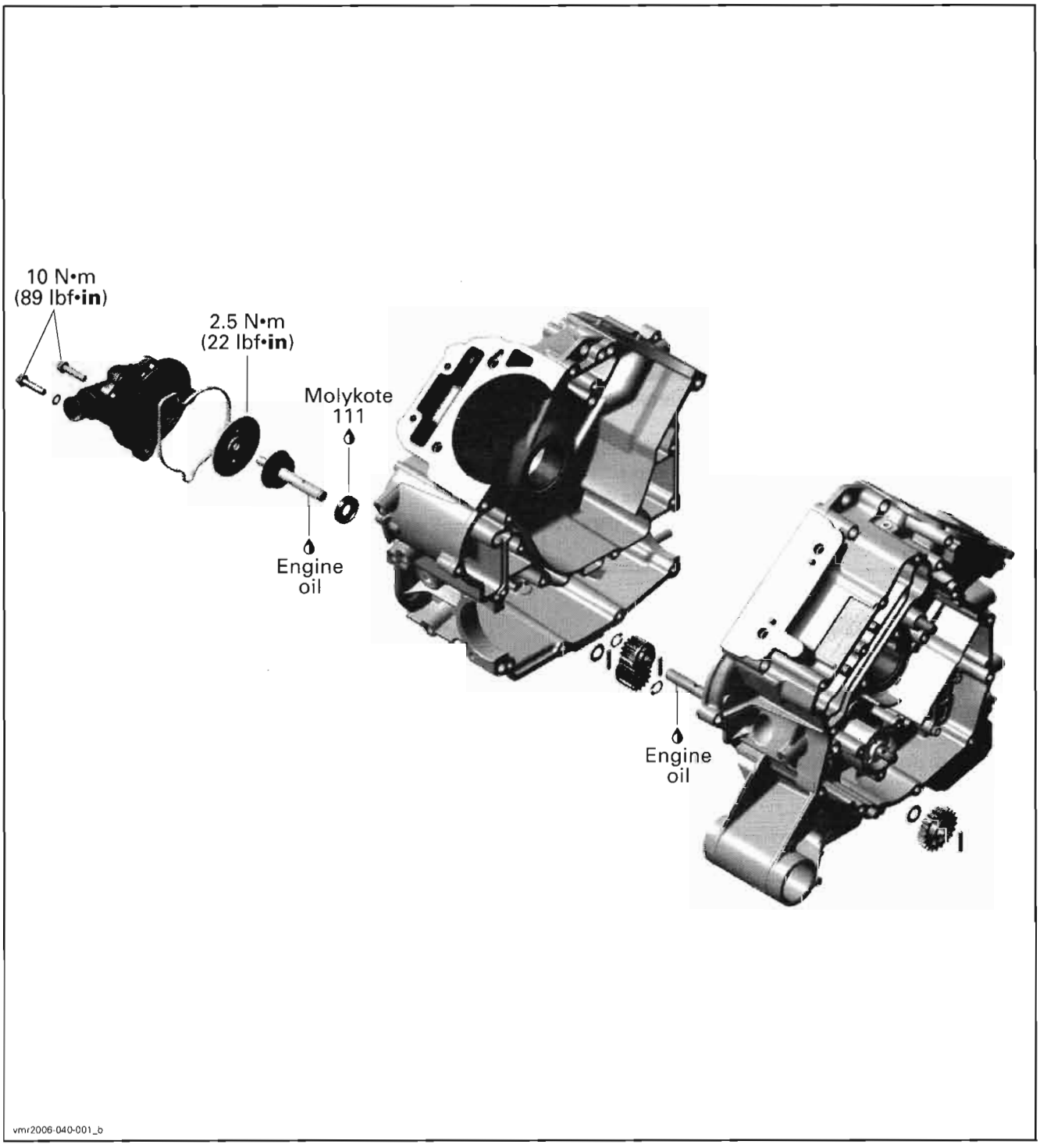
10 N•m
(89 lbf•in)
2.5 N•m
(22 lbf•in)
Molykote
111
Engine
oil
Engine
oil
vmr2006-040-001_b

# GENERAL

**⚠ WARNING**

**Never start engine without coolant. Some engine parts such as the rotary seal on water pump shaft can be damaged.**

During assembly/installation, use the torque values and service products as in the exploded views.

Clean threads before applying a threadlocker. Refer to *SELF-LOCKING FASTENERS* and *LOCTITE APPLICATION* at the beginning of this manual for complete procedure.

**⚠ WARNING**

**Torque wrench tightening specifications must strictly be adhered to.**
**Locking devices (e.g.: locking tabs, elastic stop nuts, self-locking fasteners, etc.) must be installed or replaced with new ones where specified. If the efficiency of a locking device is impaired, it must be renewed.**

# INSPECTION

## COOLING SYSTEM LEAK TEST

**⚠ WARNING**

**To avoid potential burns, do not remove the radiator cap or loosen the cooling drain plug if the engine is hot.**

Open the access panel and remove the radiator cap **no. 1**.

Install the test cap (P/N 529 035 991) on filler neck.

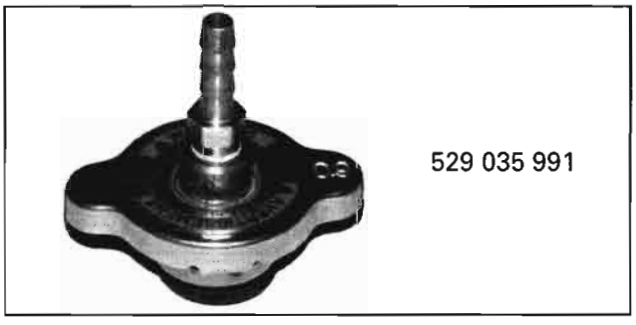


Using pressure/vacuum pump (P/N 529 021 800), pressurize system to 103 kPa (15 PSI).

*TYPICAL*
*1. Special radiator cap*

Check all hoses, radiator **no. 3** and cylinder(s)/base for coolant leaks or air bubbles.

### Inspection

Check general condition of hoses and clamps tightness.

Check the leak indicator hole if there is oil or coolant.

NOTE: Leaking coolant indicates a defective rotary seal. Leaking oil indicates a defective inner oil seal. If either seal is leaking, both seals must be replaced at the same time. Refer to *WATER PUMP SHAFT AND SEALS* in this section.

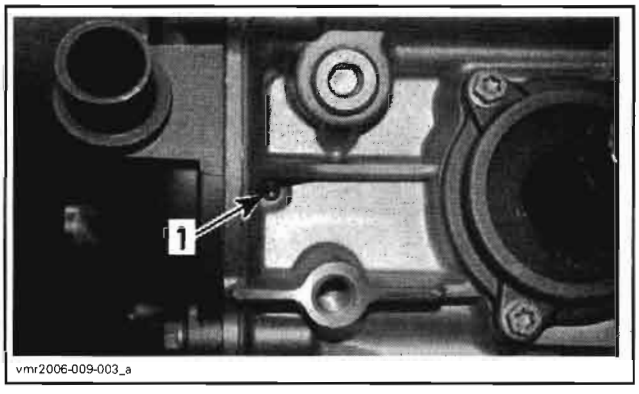


*1. Leak indicator hole*

Another leak indicator hole is visible on the PTO side. It indicate if the PTO gasket is in good condition. If a liquid leaks by this hole, the PTO gasket replacement is necessary.

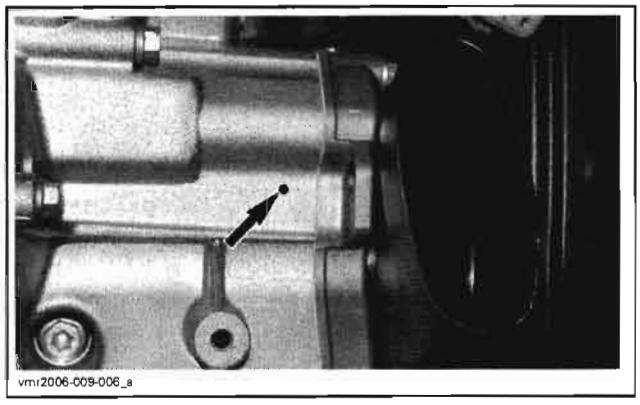
vmr2006-009-006_a

# MAINTENANCE

## COOLANT REPLACEMENT

**⚠ WARNING**

**To avoid potential burns, do not remove the radiator cap or loosen the cooling drain plug if the engine is hot.**

### Recommended Coolant

Use BRP premixed coolant (P/N 219 700 362) or a blend of 50% antifreeze with 50% water.

To prevent antifreeze deterioration, always use the same brand. Never mix different brands unless cooling system is completely flushed and refilled.

**CAUTION: To prevent rust formation or freezing condition, always replenish the system with the BRP premixed coolant or with 50% antifreeze and 50% water. Do not use tap water, straight antifreeze or straight water in the system. Tap water contains minerals and impurities which build up in the system. During cold weather, straight water causes the system to freeze while straight antifreeze thickens and does not have the same efficiency. Always use ethylene glycol antifreeze containing corrosion inhibitors specifically recommended for aluminum engines.**

### Draining the System

**⚠ WARNING**

**Never drain or refill cooling system when engine is hot.**

Remove radiator cap **no. 1**.

Partially unscrew cooling drain plug located below water pump housing.

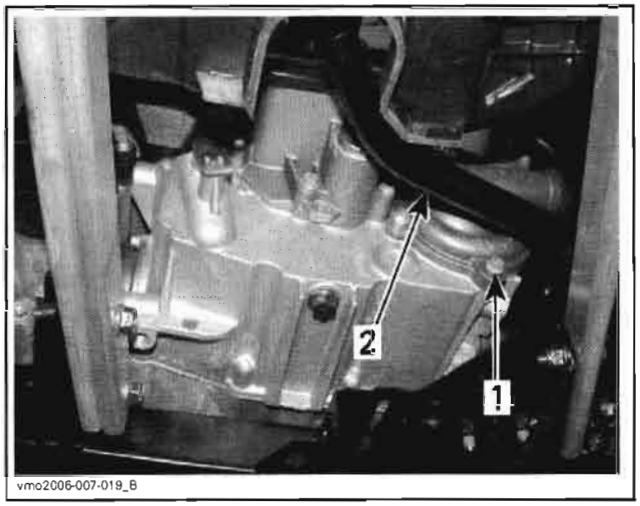

vmo2006-007-019_B

*UNDER RH FOOTREST*
*1. Cooling drain plug*
*2. Brake pedal*

When cooling system is drained completely, remove cooling drain plug completely and install a new gasket ring. Screw the cooling drain plug and torque it to 10 N•m (89 lbf•**in**).

### Refilling the System

Remove the RH side panel.

Pinch radiator inlet hose **no. 4** between radiator and thermostat housing with a large hose pincher (P/N 529 032 500).

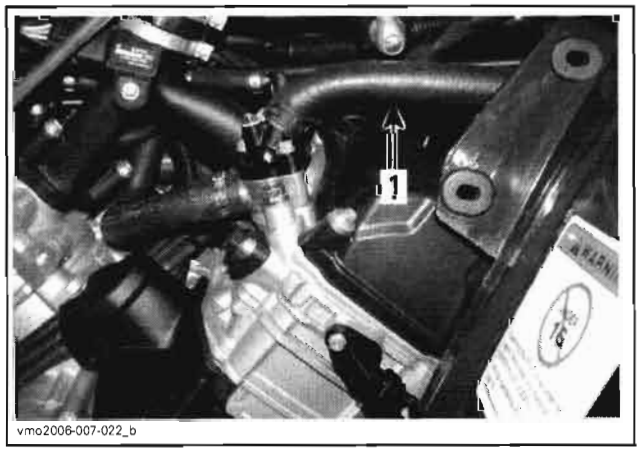

vmo2006-007-022_b

*1. Place hose pincher here*

Unscrew bleeding screws on top of thermostat housing.

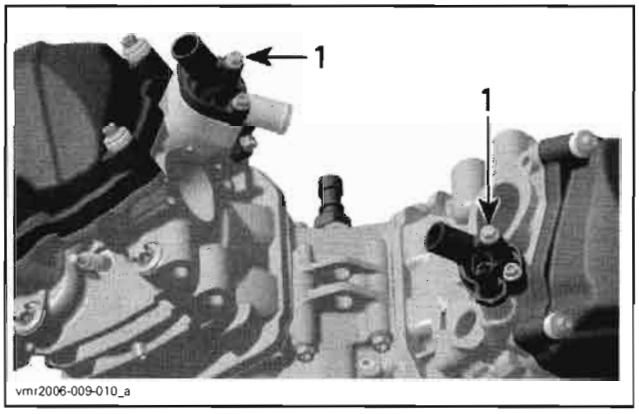


*1. Bleeding screws*

NOTE: Both cylinders must be bled.

With vehicle on a flat surface, engine cold, refill radiator **no. 3**. When the coolant comes out by the thermostat housing hole, install the bleeding screw with its gasket ring and torque to 5 N•m (44 lbf•**in**).

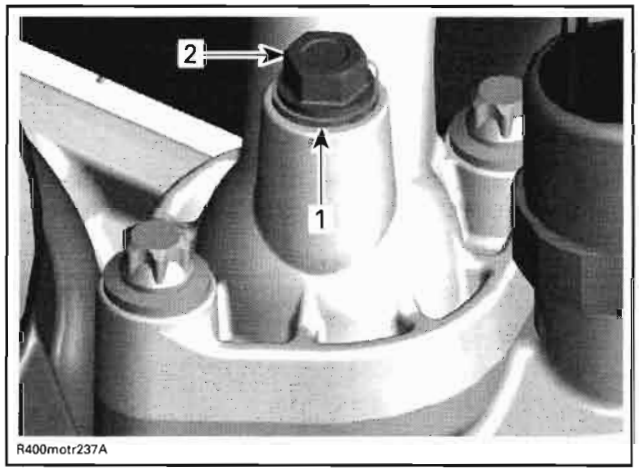


*TYPICAL*
*1. Gasket ring*
*2. Bleeding screw*

Remove hose pincher, fill up the radiator then install radiator cap.

Refill coolant tank **no. 5** up to cold level mark. Install the coolant tank cap. Run engine until thermostat opens then stop engine.

When engine has completely cooled down, recheck coolant level in radiator and coolant tank and top up if necessary. The level in the coolant tank should be between MIN. and MAX. marks.

NOTE: Each year or every 100 hours or when vehicle reaches 3000 km (1865 mi), check coolant concentration (freezing point) with proper tester.

# PROCEDURES

## THERMOSTAT

The thermostat is a single action type.

### Thermostat Removal

NOTE: The thermostat is located on the top of cylinder head, on intake side (front cylinder).

Install a hose pincher on both radiator hoses.

Remove:

- thermostat housing screws and pull thermostat cover

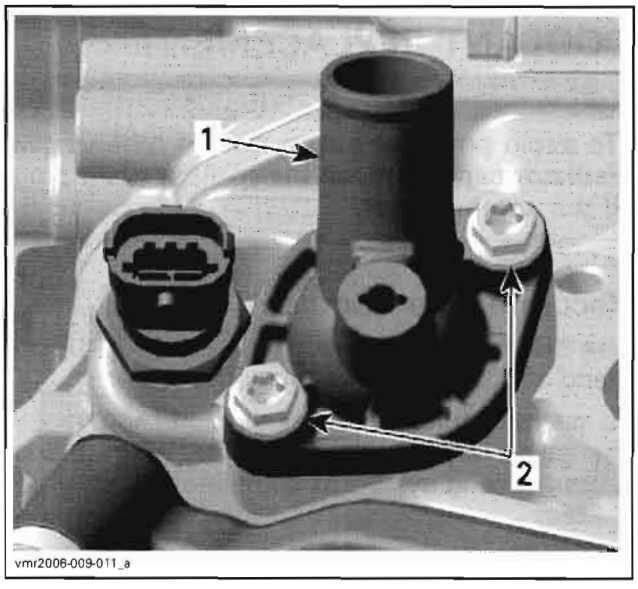


*1. Thermostat cover*
*2. Screws*

- thermostat with gasket out of the hole.

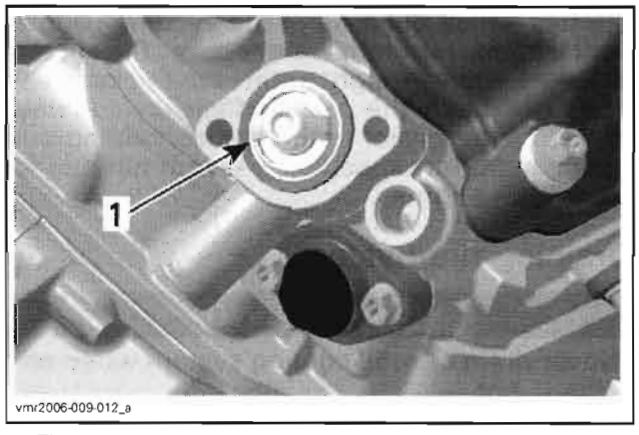


*1. Thermostat with gasket*

### Thermostat Test

To check thermostat, put in water and heat water. Thermostat should open when water temperature reaches 65°C (149°F).

Check if the gasket is brittle, hard or damaged. If so, replace gasket.

### Thermostat Installation

For installation, reverse the removal procedure, pay attention to the following details.

Install the thermostat cover then torque screws to 6 N•m (53 lbf•**in**).

Check coolant level in radiator and coolant tank and top up if necessary.

**CAUTION:** Do not forget to bleed the cooling system. Refer to *COOLANT REPLACEMENT.*

## RADIATOR CAP

Using a pressure cap tester, check the efficiency of radiator cap **no. 1**. If the efficiency is feeble, install a new 110 kPa (16 PSI) cap (do not exceed this pressure).

## RADIATOR

### Radiator Inspection

Check radiating fins for clogging or damage.

Remove insects, mud or other obstructions with compressed air or low pressure water.

### Radiator Removal

Drain cooling system.

Remove front fascia and radiator shroud, refer to *BODY.*

Remove:

- radiator inlet **no. 4** and radiator outlet **no. 6** hoses
- overflow hose **no. 2**
- mounting bolts **no. 7**.

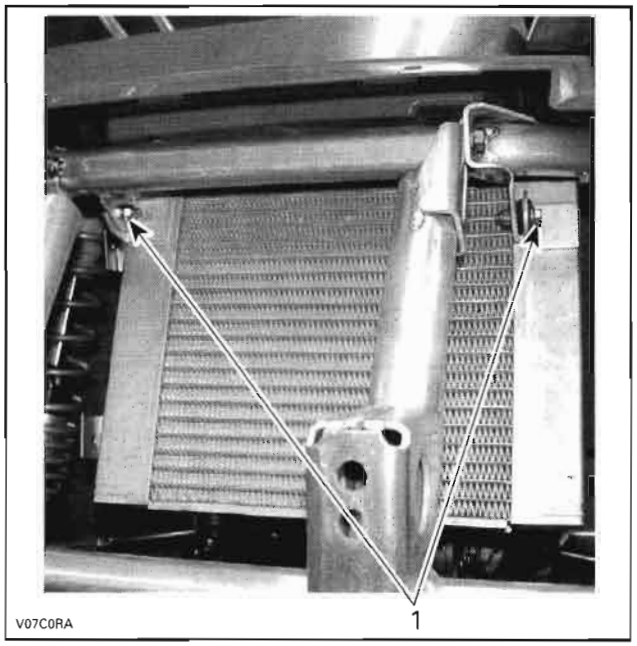


*TYPICAL*
*1. Radiator mounting bolts*

Unplug radiator fan **no. 8**.

Remove radiator **no. 3**.

### Radiator Installation

For installation, reverse the removal procedure. Pay attention to the following detail.

Install rubber bushings **no. 10** between the bottom of radiator and radiator supports.

Fill up the radiator. Refer to *COOLANT REPLACEMENT*, in this section.

Check for any coolant leakage from radiator and hoses.

## COOLANT TANK

The coolant expands as the temperature (up to 100 - 110°C (212 - 230°F)) and pressure rise in the system. If the limiting system working pressure cap is reached 110 kPa (16 PSI), the pressure relief valve in the pressure cap is lifted from its seat and allows coolant to flow through the overflow hose into the overflow coolant tank **no. 5**.

Ensure ventilation holes are not obstructed.

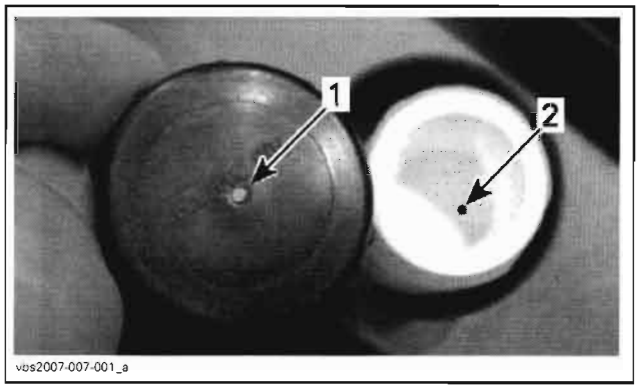


1. *Outer cap vent*
2. *Inner cap vent*

## Tank Removal

Remove:

- LH inner fender (refer to *BODY*)
- coolant tank support bolt **no. 11**

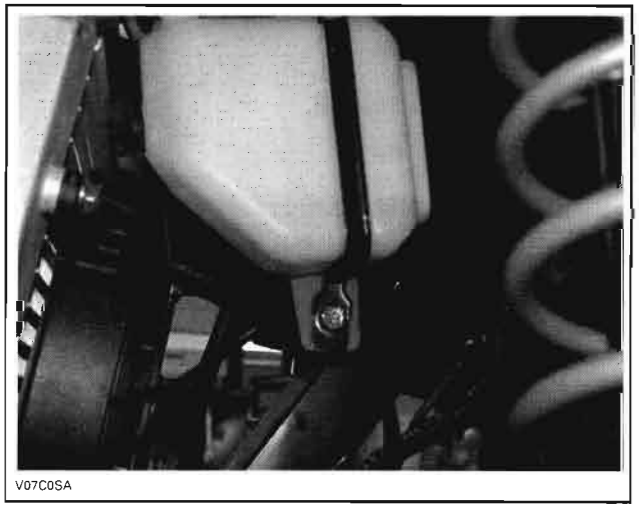


*TYPICAL*

- overflow hose **no. 2**
- support **no. 12** and coolant tank **no. 5**.

Empty coolant tank.

## Tank Installation

The installation is the reverse of the removal procedure.

# COOLANT TEMPERATURE SENSOR (CTS)

Refer to *ENGINE MANAGEMENT* section for testing and replacement procedures of the coolant temperature sensor (CTS).

# RADIATOR FAN RELAY (R1)

## Relay Installation

**NOTE:** Relay may be inverted by 180° at installation and it will work correctly. Ensure to align tabs of relay with terminals of fuse holder at installation.

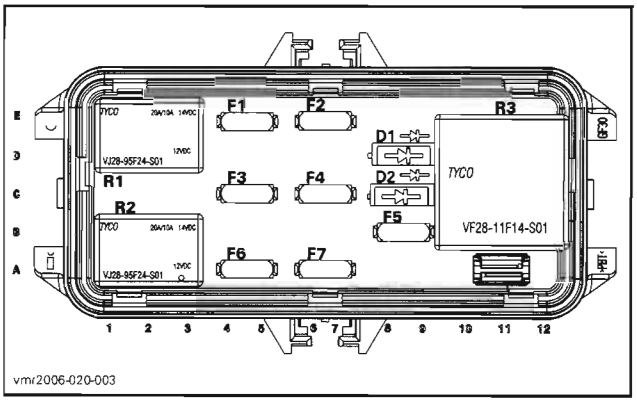


*R1: Radiator fan relay*

## Relay Operation Test

The easiest way to check the relay is to remove it and bypass it with a jumper. If the radiator fan is activated, replace the relay. See illustration to find where to bypass the relay.

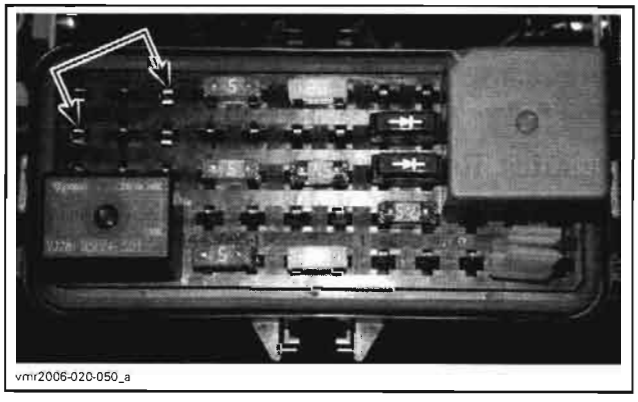


*RELAY R1 (RADIATOR FAN)*

## Relay Continuity Test

Remove relay.

Use the Fluke 111 multimeter (P/N 529 035 868), and select the Ω position.

Probe relay as follows.

| TERMINAL | | RESISTANCE |
|---|---|---|
| 30 | 87 | Open circuit (OL) |

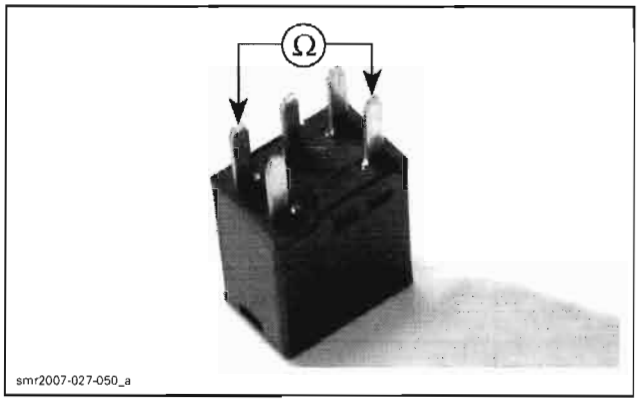


Connect battery as shown and probe relay again as follows.

| TERMINAL | | RESISTANCE |
|---|---|---|
| 30 | 87 | 0.5 Ω max. (continuity) |

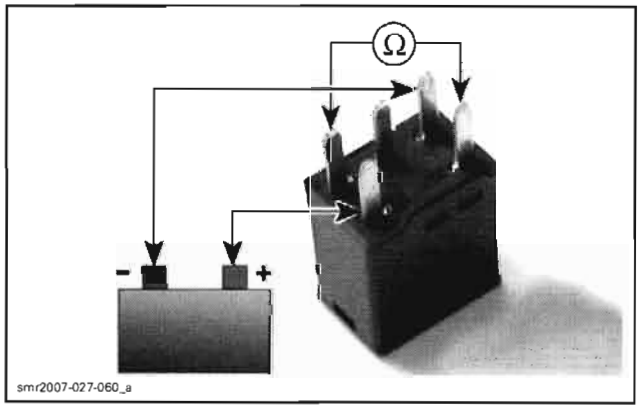


If relay failed any test, replace it.

# RADIATOR FAN

## Radiator Fan Operation

The ECM controls the radiator fan via the input of the coolant temperature sensor (CTS) and the manifold air pressure and temperature sensor (MAPTS).

The radiator fan should turn on when coolant temperature reaches 98°C (208°F) and should turn off when the coolant cools down at 95°C (203°F).

| ENGINE TEMPERATURE | INTAKE TEMPERATURE | COOLING FAN | CHECK ENGINE LIGHT | MESSAGE IN MULTIFUNCTION GAUGE | LIMP HOME MODE |
|---|---|---|---|---|---|
| | 88°C (190°F) | Turns ON | | | |
| | 85°C (185°F) | Turns OFF | | | |
| 98°C (208°F) | | Turns ON | | | |
| 95°C (203°F) | | Turn OFF | | | |
| 115°C (239°F) | | ON | Turns ON | - Check engine<br>- Hi Temp | |
| 118°C (244°F) | | ON | Flashes | Limp Home | Engine RPM limited to 4000 |

## Radiator Fan Test

Connect the vehicle to B.U.D.S. Refer to *ENGINE MANAGEMENT* for procedure and connector location.

In ACTIVATION folder, press COOLANT FAN button.

If fan turns, check CTS, wiring harness and connectors. If all parts are good, replace the ECM.

If fan does not turn when COOLANT FAN button is pressed, use the following troubleshooting chart to resolve the problem.

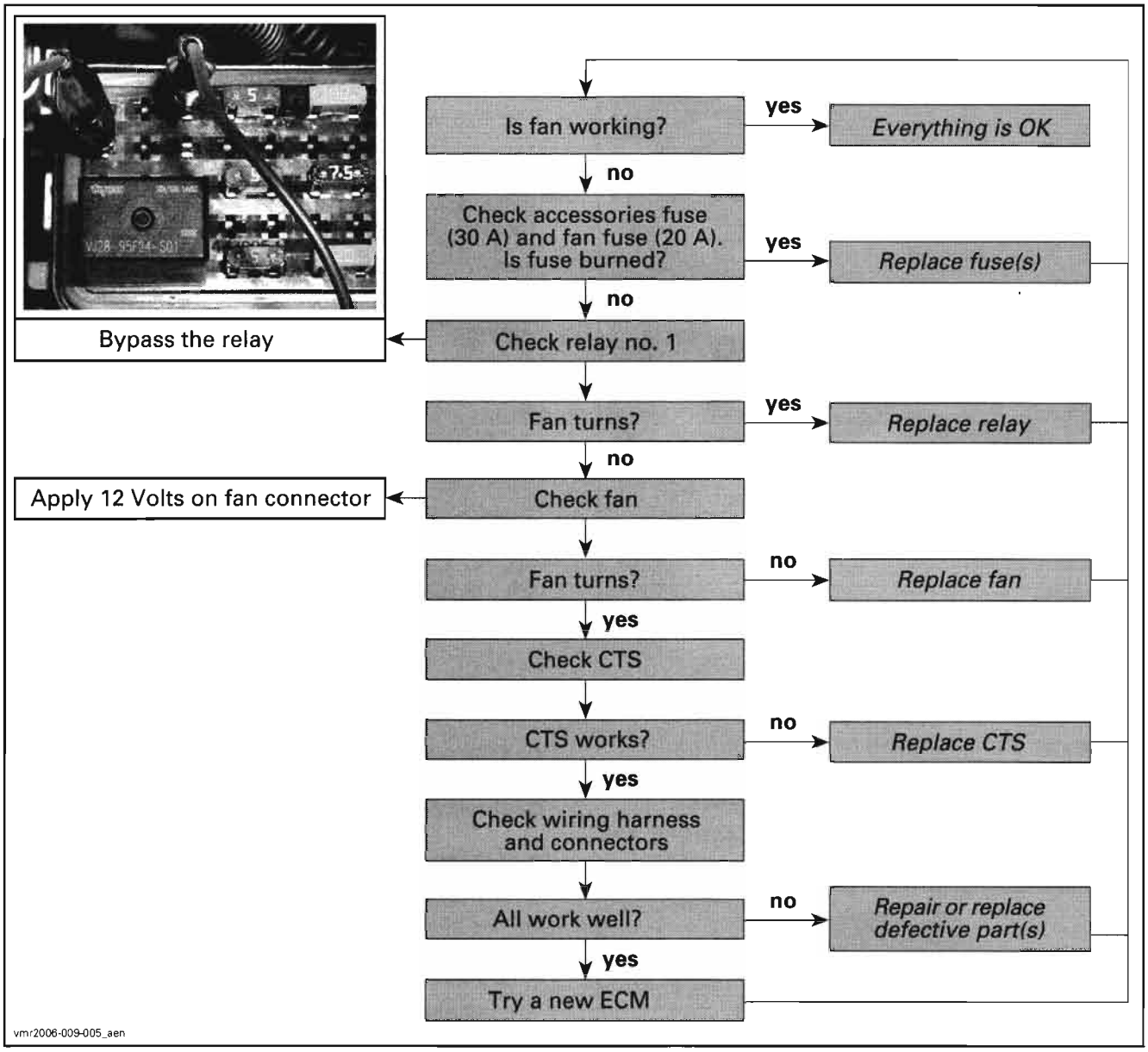


## Radiator Fan Removal

Remove radiator shroud.

Remove bolts **no. 13**.

Remove the radiator fan.

## Radiator Fan Installation

For the installation, reverse the removal procedure.

# WATER PUMP HOUSING

It is located on the engine MAG side.

## Water Pump Housing Removal

**⚠ WARNING**

**To avoid potential burns, do not remove the radiator cap or loosen the cooling drain plug if the engine is hot.**

Drain cooling system.

Remove radiator outlet hose from water pump housing.

Remove screws retaining water pump housing.

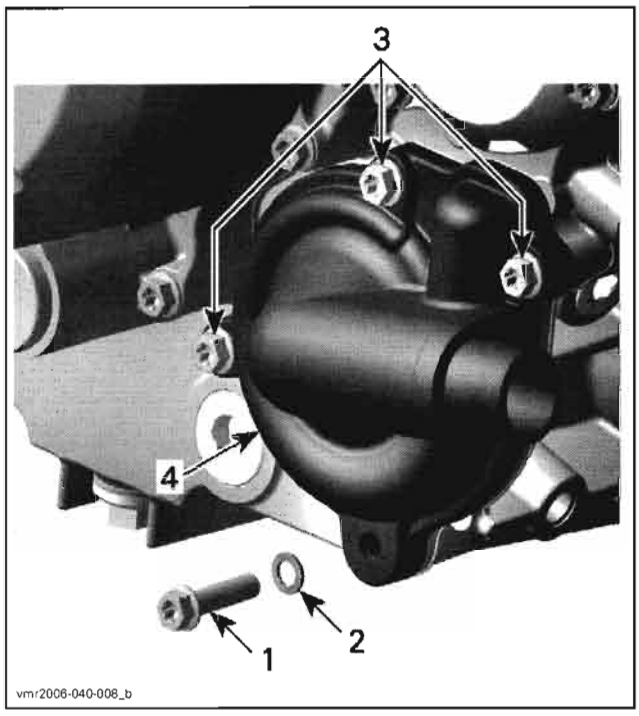


*TYPICAL*
1. *Cooling drain plug*
2. *Sealing ring*
3. *Screws*
4. *Water pump housing*

Pull water pump housing to remove it.

## Water Pump Housing Inspection

Check if gasket is brittle, hard or damaged and replace as necessary.

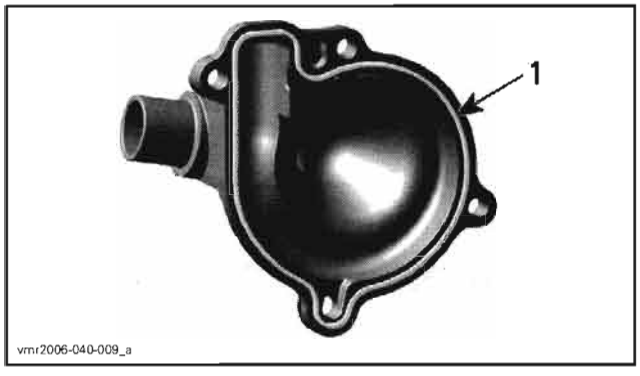


*TYPICAL*
1. *Gasket*

## Water Pump Housing Installation

The installation is the opposite of the removal procedure.

**CAUTION: To prevent leaking, take care that the gasket is exactly in groove when you reinstall the water pump housing.**

Tighten screws of water pump housing in a criss cross sequence.

# WATER PUMP IMPELLER

## Impeller Removal

Remove water pump housing.

Unscrew impeller.

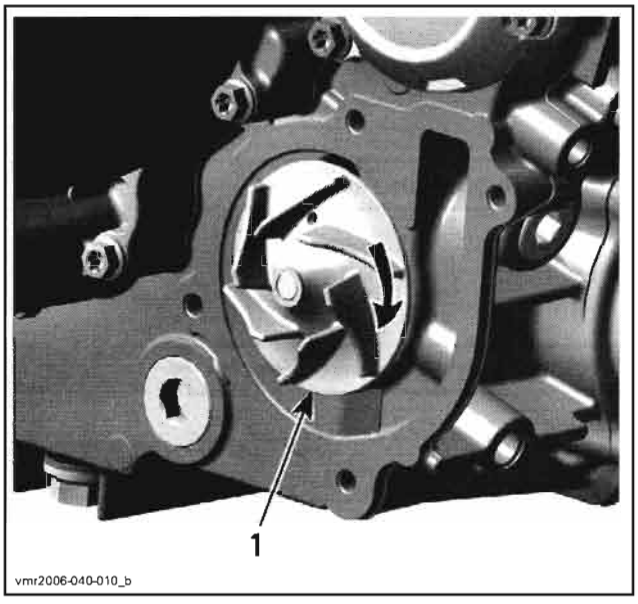


1. *Turn clockwise to unscrew*

**CAUTION: Water pump shaft and impeller have right-hand threads. Remove by turning counterclockwise and install by turning clockwise.**

## Impeller Inspection

Check impeller for cracks or other damage. Replace impeller if damaged.

## Impeller Installation

The installation is the opposite of the removal procedure.

**CAUTION: Be careful not to damage impeller wings during installation.**

# WATER PUMP SHAFT AND SEALS

## Shaft/Seal Removal

**NOTE:** It is not required to split crankcase to replace the water pump shaft and seals, but engine removal is necessary.

Drain engine oil. Refer to *LUBRICATION SYSTEM.*

Drain gearbox oil. Refer to *GEARBOX AND 4X4 COUPLING UNIT.*

Remove CVT and inner cover. Refer to *TRANSMISSION* section.

Remove engine from vehicle. Refer to *ENGINE REMOVAL AND INSTALLATION* section.

Detach gearbox from engine. Refer to *GEARBOX AND 4X4 COUPLING UNIT.*

Remove engine drive shaft and engine PTO cover. Refer to *BOTTOM END.*

Remove water pump housing and impeller. See procedures in this section.

Pull out water pump gear to disengage the inner drive gear.

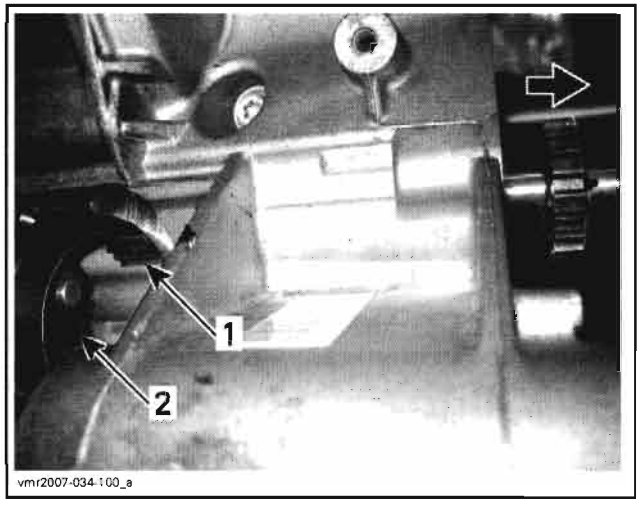


1. *Water pump gear*
2. *Inner drive gear*

Sharply strike water pump shaft out with a plastic hammer.

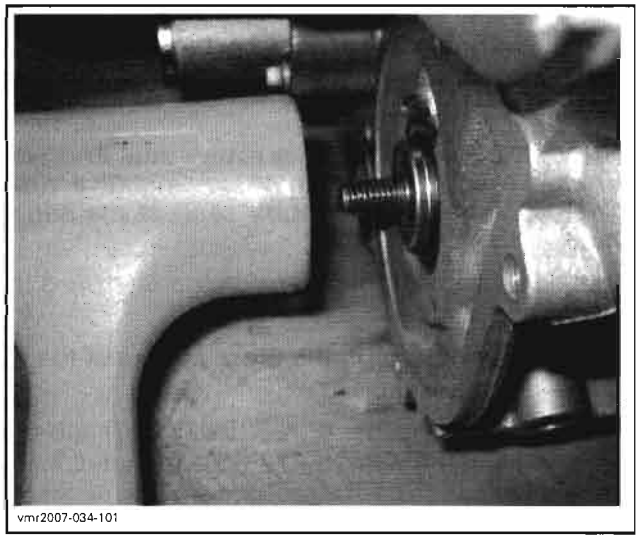


Pull out water pump shaft through the engine drive shaft opening.

**NOTE:** Pay attention to hold thrust washer to prevent it from falling in crankcase.

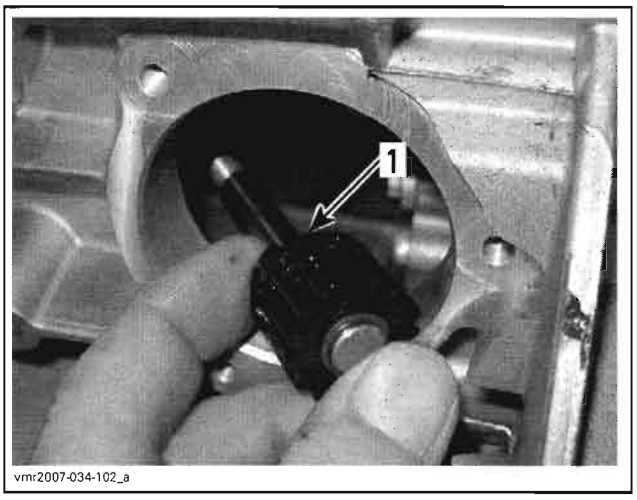


1. *Thrust washer here*

**CAUTION: If thrust washer is not on water pump shaft, use a magnet to retrieve it inside crankcase.**

Using appropriate pliers, remove and discard the retaining ring securing water pump gear on water pump shaft.

To remove plastic gear from water pump shaft, place gear between your fingers and briskly tap shaft end.

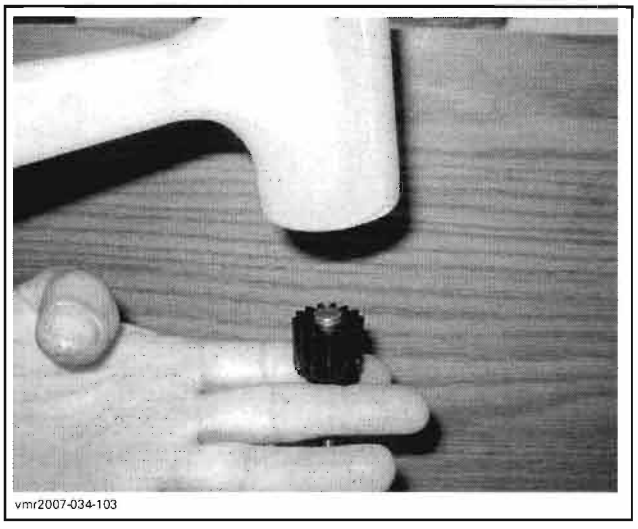


Using 2 screwdrivers, pry out inner part of the rotary seal.

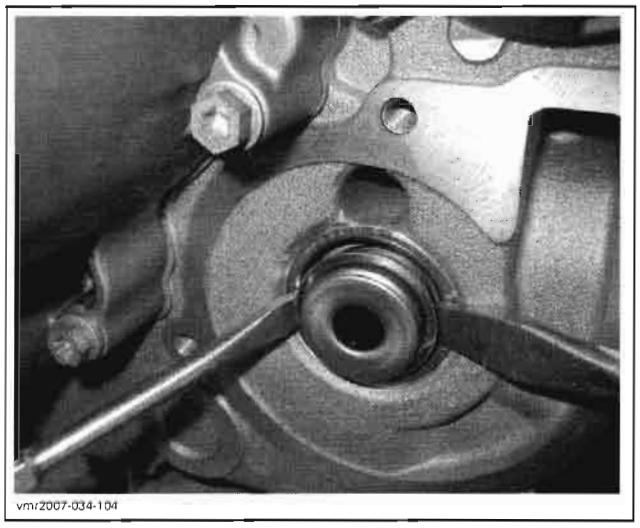


To remove outer part of rotary seal, use an expander from puller kit (P/N 529 036 056).

Install expander snugly against outer part and pull rotary seal out.

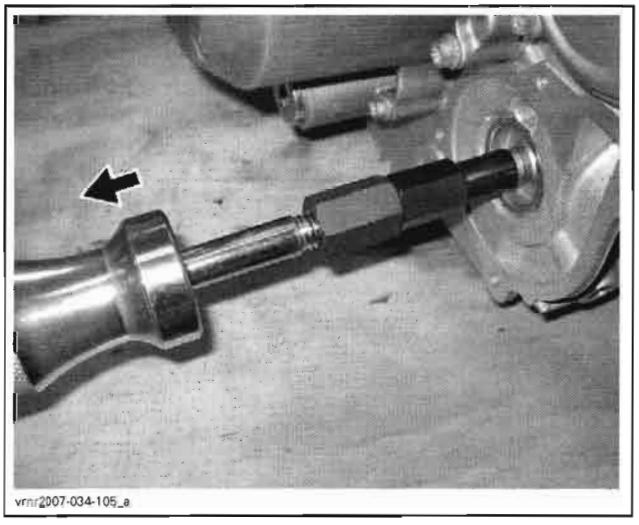


Remove inner oil seal.

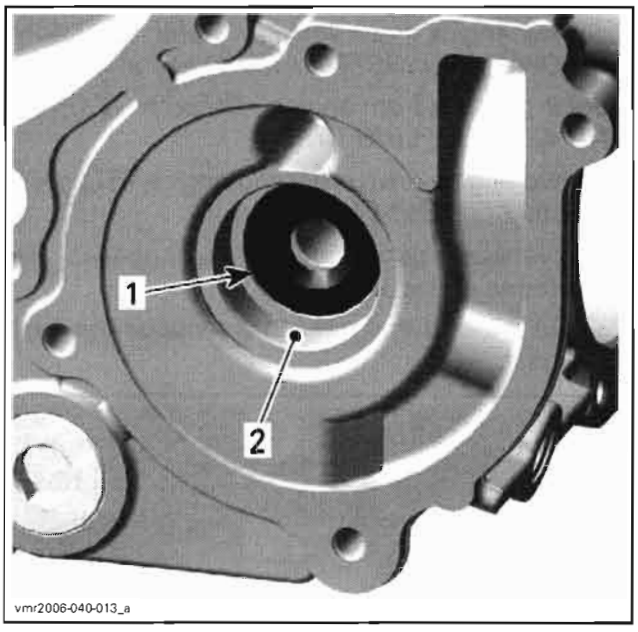


*1. Inner oil seal*
*2. Rotary seal surface*

**CAUTION: Be careful not to damage the rotary seal surface in crankcase.**

## Part Inspection

Inspect water pump gear for wear and damage on the snap mechanism to the needle pin. Replace if damaged.

## Shaft/Seal Installation

For installation, reverse the removal procedure. However, pay attention to the following.

NOTE: For installation use the torque values in the exploded view. Ensure to use multipurpose grease for oil seal.

**CAUTION: Always replace rotary seal and water pump shaft together. Also, install a new inner oil seal (behind rotary seal) at the same time.**

Apply engine oil on the water pump shaft and intermediate shaft.

NOTE: Never use oil in the press fit area of the oil seal and rotary seal.

Use the oil seal pusher (P/N 529 035 757) and the installer handle (P/N 420 877 650) to install inner oil seal.

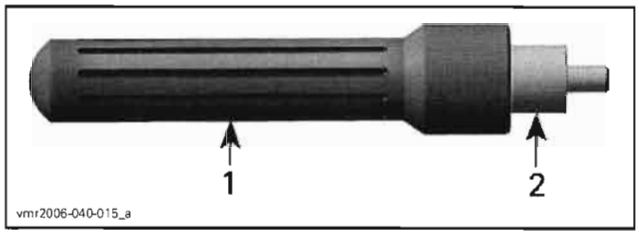


1. *Handle*
2. *Pusher*

Apply Molykote 111 (P/N 413 707 000) inside lips of oil seal.

When installing the oil seal on the pusher, make sure sealing lip points outside.

Push inner oil seal in place.

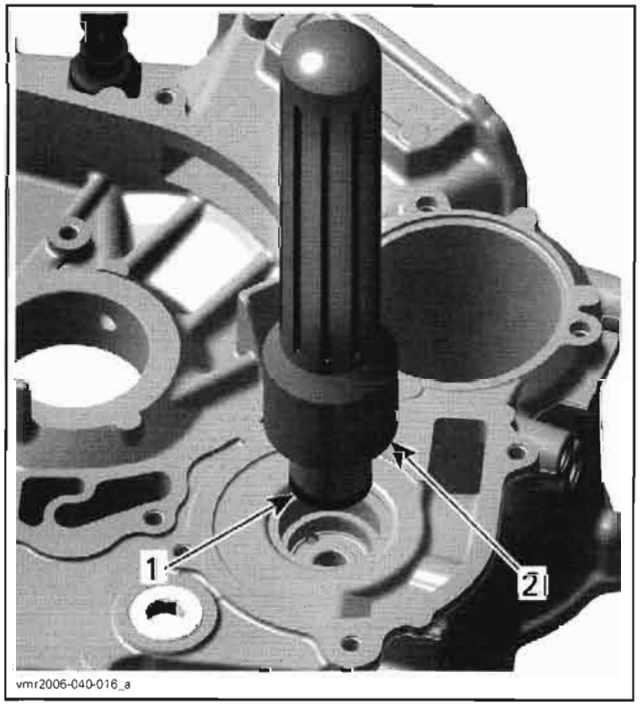


1. *Inner oil seal*
2. *Installer handle with oil seal pusher*

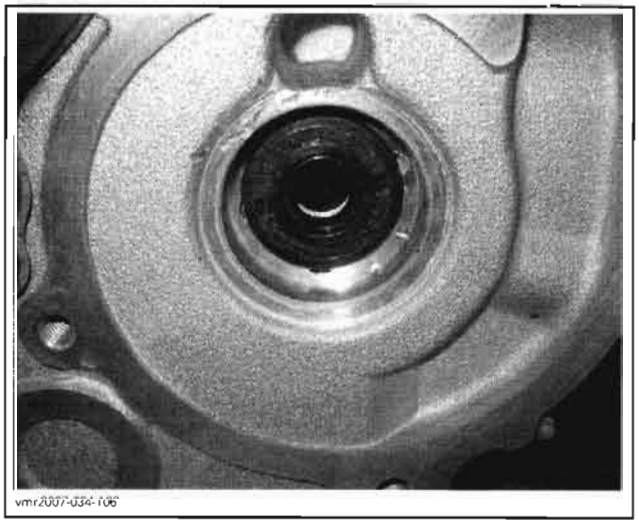


Slide water pump shaft with the new rotary seal into crankcase.

To properly install water pump shaft with rotary seal, use the rotary seal installer (P/N 529 035 766).

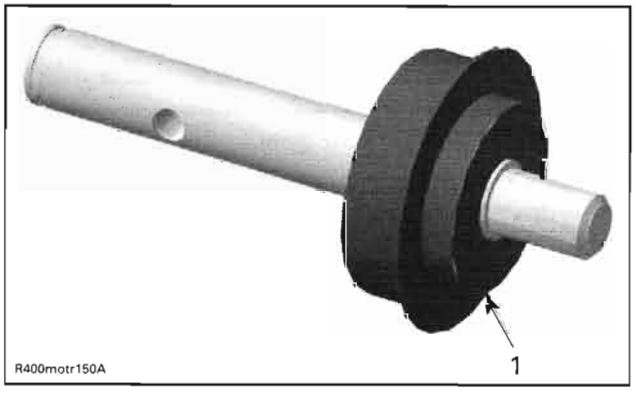


1. *Surface where rotary seal is pushed by tool*

Use a plastic hammer and drive rotary seal into crankcase.

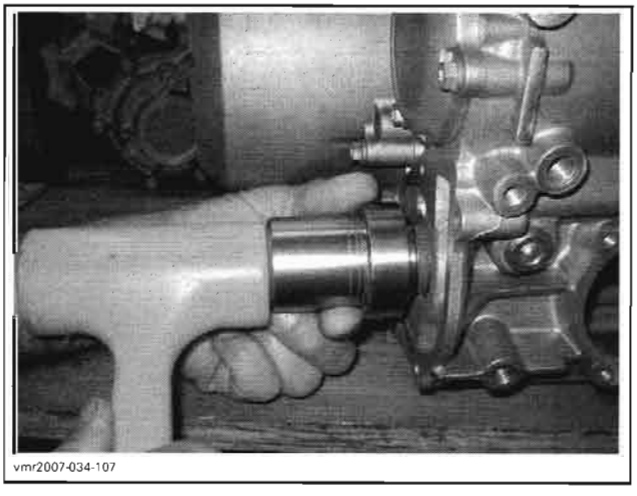


From engine drive shaft opening, insert thrust washer on water pump shaft in crankcase.

Using a flashlight and a mirror, position shaft hole so that pin can be installed.

Position pin between your fingers, push in water pump shaft to fully expose hole then install pin.

Position pin at equal distance out of shaft hole so gear can be installed.

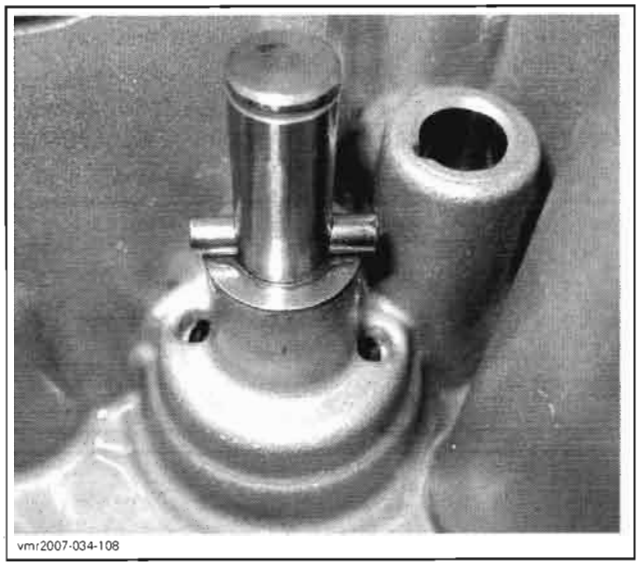
vmr2007-034-108

Install water pump shaft gear.

NOTE: Ensure gear properly snaps on pin. A screwdriver may have to be used to push gear in place.

Use a 45° snap-ring pliers and install a NEW retaining ring on pump shaft end.

**CAUTION: Never use the retaining ring a second time. Always install a new one.**

After installation, water pump shaft with rotary seal must rotate freely.

Carefully push in water pump gear while turning to mesh with the inner drive gear.

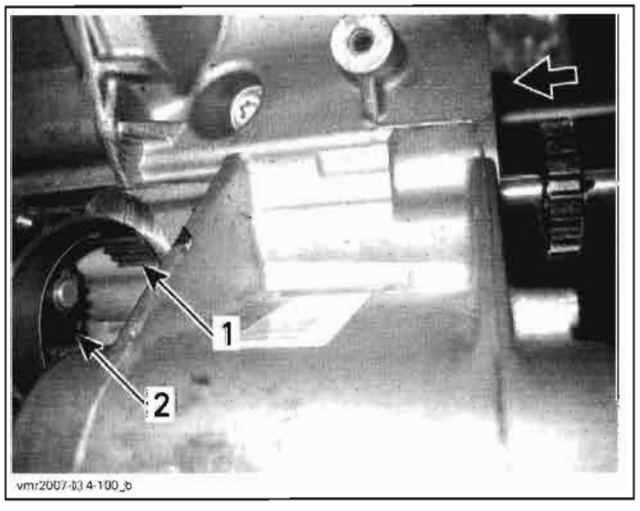

vmr2007-034-100_b

1. *Water pump gear*
2. *Inner drive gear*

Tighten screws of the water pump housing crosswise.

Properly reinstall remaining parts. Refer to appropriate sections.

Refill all fluids.

# MAGNETO SYSTEM

## SERVICE TOOLS

| Description | Part Number | Page |
|---|---|---|
| crankshaft locking bolt | 529 035 617 | 75 |
| magneto puller | 529 035 748 | 75 |
| crankshaft protector | 529 036 034 | 75 |

## SERVICE PRODUCTS

| Description | Part Number | Page |
|---|---|---|
| Loctite 767 (antiseize lubricant) | 293 800 070 | 78 |
| pulley flange cleaner | 413 701 809 | 75 |
| Loctite Chisel (gasket remover) | 413 708 500 | 73 |
| Loctite 648 (green) | 413 711 400 | 77 |
| Drei Bond sealing compound | 420 297 906 | 73 |

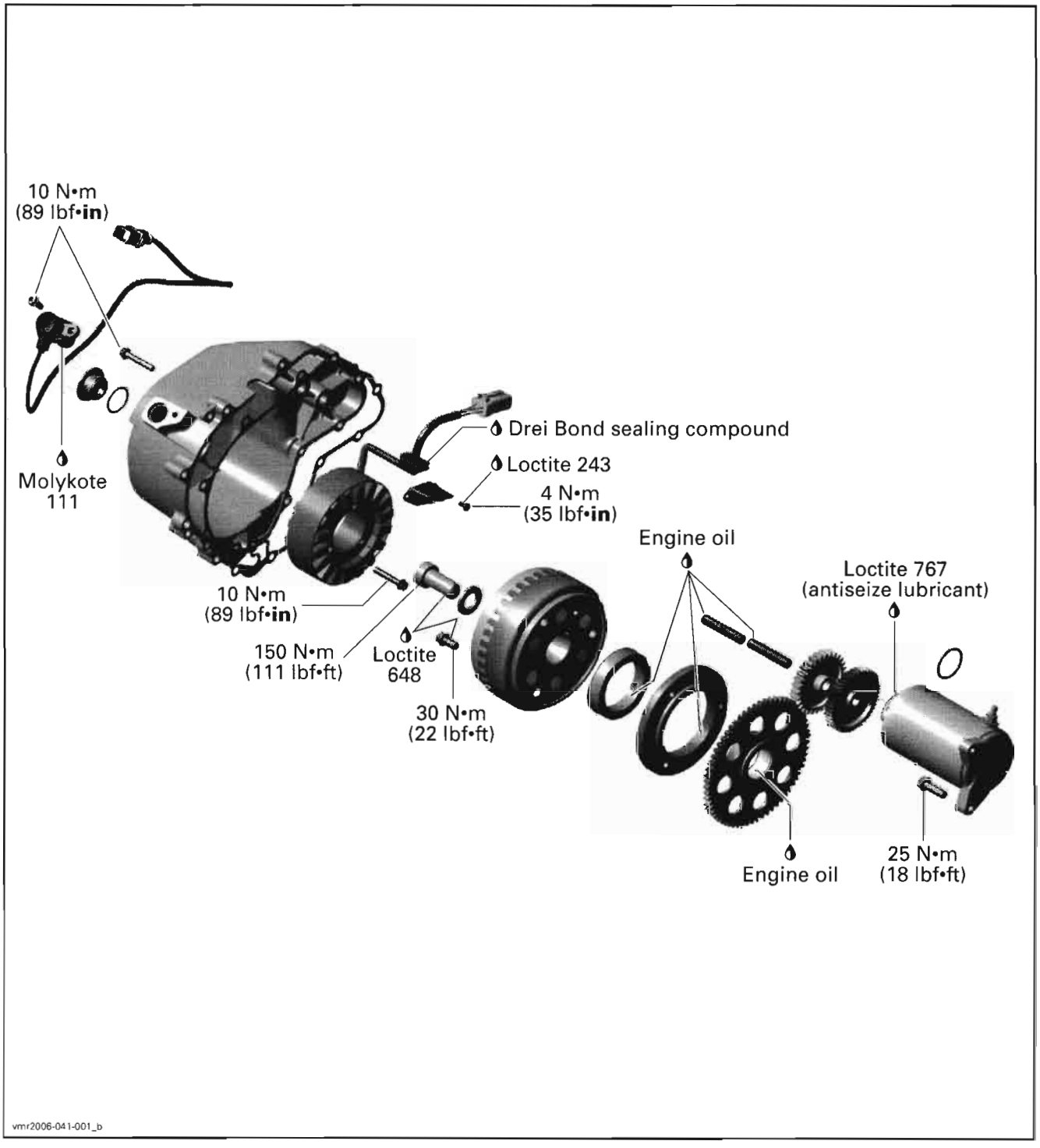
10 N•m
(89 lbf•in)
Molykote
111
Drei Bond sealing compound
Loctite 243
4 N•m
(35 lbf•in)
Engine oil
Loctite 767
(antiseize lubricant)
10 N•m
(89 lbf•in)
150 N•m
(111 lbf•ft)
Loctite
648
30 N•m
(22 lbf•ft)
Engine oil
25 N•m
(18 lbf•ft)
vmr2006-041-001_b

# GENERAL

Always perform the electric tests before removing or installing whatever component.

During assembly/installation, use the torque values and service products as in the exploded view.

Clean threads before applying threadlocker. Refer to *SELF-LOCKING FASTENERS* and *LOCTITE APPLICATION* at the beginning of this manual for complete procedure.

**⚠ WARNING**

**Torque wrench tightening specifications must strictly be adhered to.**
**Locking devices (e.g.: locking tabs, elastic stop nuts, self-locking fasteners, cotter pins, etc.) must be installed or replaced with new ones where specified. If the efficiency of a locking device is impaired, it must be renewed.**

# PROCEDURES

## MAGNETO COVER

### Magneto Cover Removal

Drain engine oil (refer to *LUBRICATION SYSTEM*).

Remove plastic cover.

Remove crankshaft position sensor (CPS) and cut tie raps.

Disconnect magneto connector.

Remove dipstick.

Remove magneto cover retaining screws.

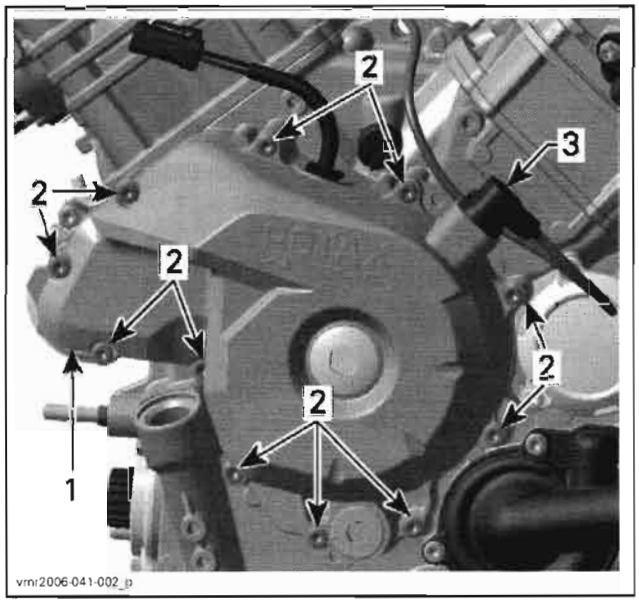


1. *Magneto cover*
2. *Retaining screws*
3. *Crankshaft position sensor*

Pull out magneto cover.

### Magneto Cover Inspection and Cleaning

Check magneto cover for cracks or other damage. Replace if necessary.

NOTE: Clean all metal components in a non-ferrous metal cleaner. Use Loctite Chisel (gasket remover) (P/N 413 708 500), or suitable equivalent.

**⚠ WARNING**

**Wear safety glasses and work in a well ventilated area when working with strong chemical products. Also wear suitable non-absorbent gloves to protect your hands.**

### Magneto Cover Installation

For installation, reverse the removal procedure. However, pay attention to the following.

NOTE: At installation replace magneto cover gasket.

Apply Drei Bond sealing compound (P/N 420 297 906) on stator cable grommet as shown in next illustration.

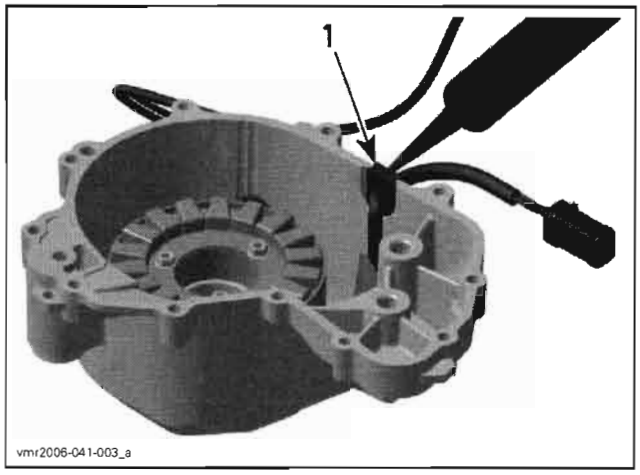


1. *Apply Drei Bond sealing compound*

Tightening sequence for screws on magneto cover is as per following illustration.

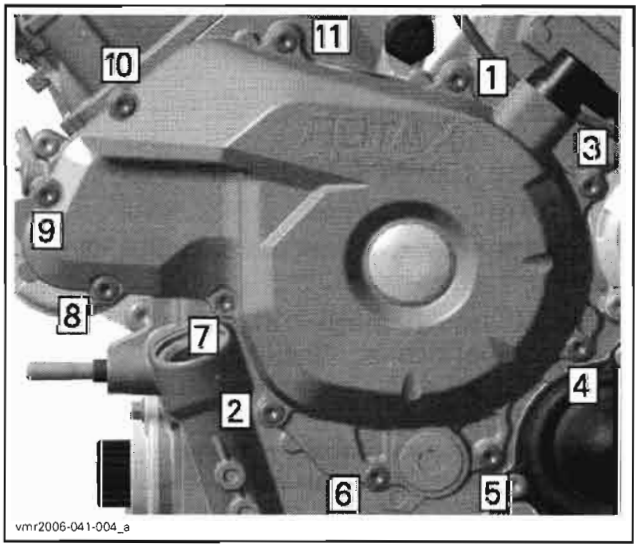


*TIGHTENING SEQUENCE*

Refill engine with recommended oil.

# STATOR

## Stator Removal

Remove magneto cover (refer to *MAGNETO COVER* above).

Remove screws securing holding strip.

Remove stator retaining screws then the stator.

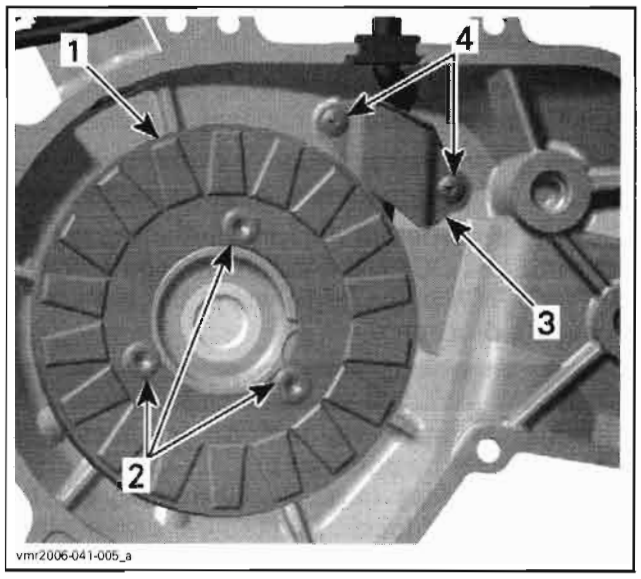


1. *Stator*
2. *Stator retaining screws*
3. *Holding strip*
4. *Holding strip screws*

## Stator Inspection

Check stator condition. If damaged replace it.

Check if stator wires are brittle, hard or otherwise damaged.

For electrical inspection, refer to *CHARGING SYSTEM*.

## Stator Installation

For installation, reverse the removal procedure. However, pay attention to the following.

**CAUTION: When installing the stator take care that the cable is in place (guide for the wire).**

NOTE: There is only one position for the stator (notch in the magneto housing cover).

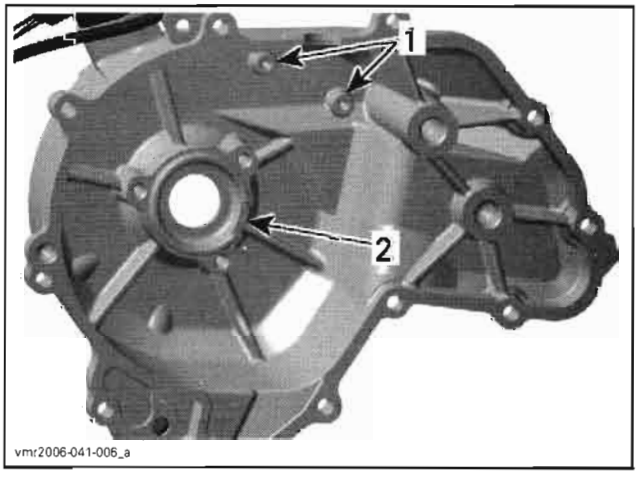


1. *Threads for cable holding strip*
2. *Notch for stator*

# ROTOR

## Rotor Removal

Lock crankshaft with crankshaft locking bolt (P/N 529 035 617) (refer to *BOTTOM END*).

Remove magneto cover. Refer to *MAGNETO COVER* above.

Remove screw and washer securing rotor to crankshaft.

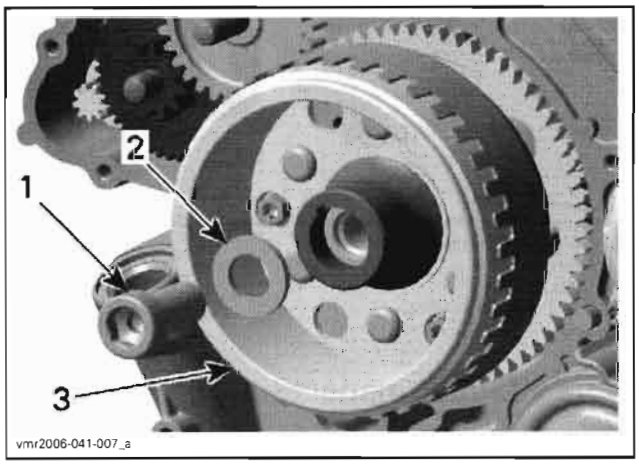


1. *Screw M16*
2. *Washer*
3. *Rotor*

Install magneto puller (P/N 529 035 748) and crankshaft protector (P/N 529 036 034) then remove rotor.

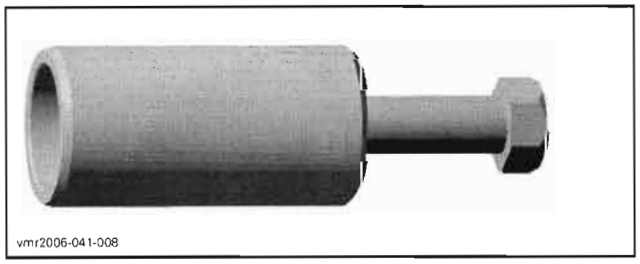


*MAGNETO PULLER*

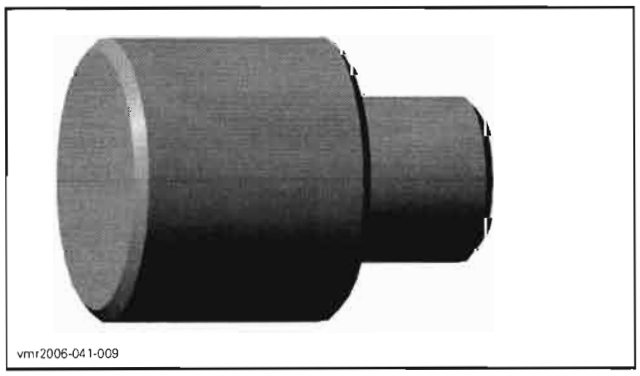


*CRANKSHAFT PROTECTOR*

NOTE: Use grease to place protector on crankshaft end prior to screw on the magneto puller.

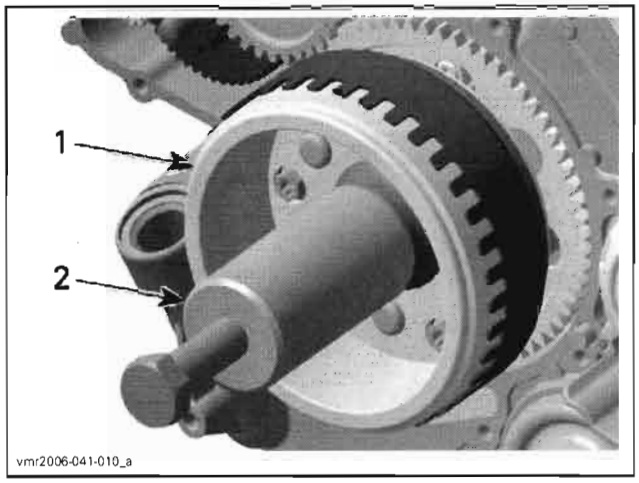


1. *Rotor*
2. *Magneto puller*

Screw magneto puller bolt to remove rotor.

## Rotor Inspection

Check inner side of rotor for scratches or other damage.

Check keyway of the rotor for wear or damages.

Check if trigger wheel teeth are bent or otherwise damaged.

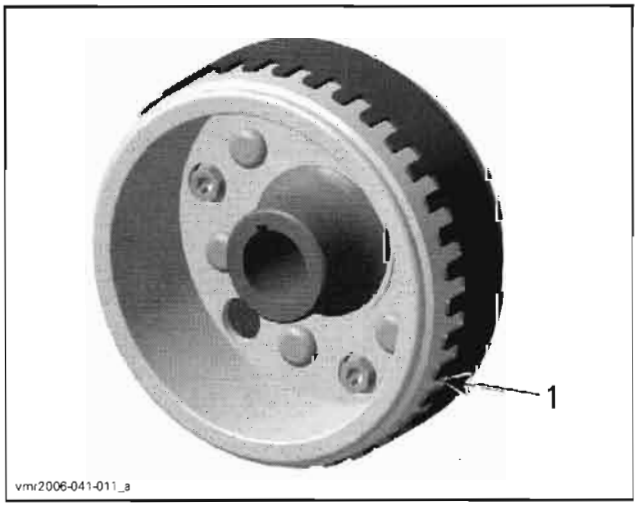


1. *Rotor with trigger wheel*

Check woodruff key and keyway on the crankshaft for wear or damages.

Replace parts as necessary.

## Rotor Installation

For installation, reverse the removal procedure. However, pay attention to the following.

Clean crankshaft taper and rotor with pulley flange cleaner (P/N 413 701 809).

**CAUTION: Taper on crankshaft and rotor must be free of grease.**

Oil sprag clutch in sprag clutch housing and install sprag clutch gear.

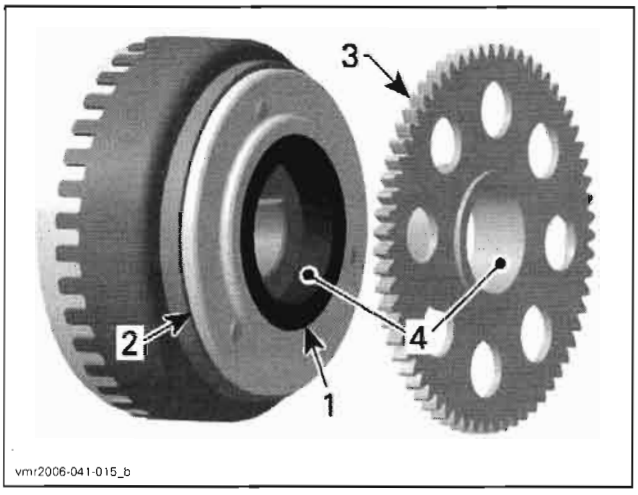


1. *Sprag clutch*
2. *Sprag clutch housing*
3. *Sprag clutch gear*
4. *Apply engine oil here*

Slide rotor onto crankshaft. The woodruff key and the keyway must be aligned.

Rotate starter double gear counterclockwise to align intermediate gear teeth with sprag clutch gear.

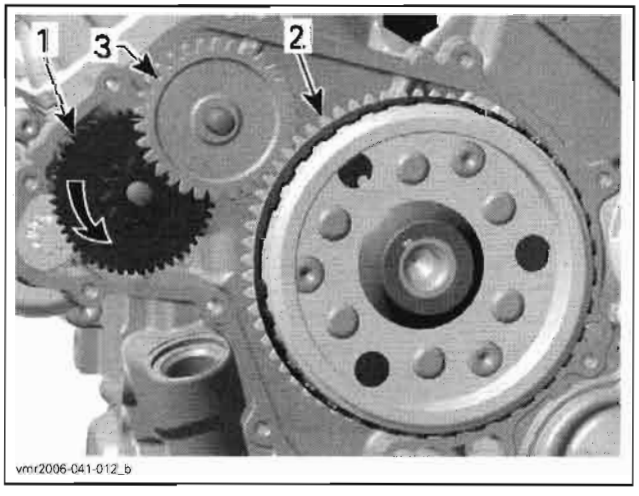


1. *Starter double gear*
2. *Sprag clutch gear*
3. *Intermediate gear*

# SPRAG CLUTCH

## Sprag Clutch Removal

Remove magneto cover (refer to *MAGNETO COVER* above).

Loosen sprag clutch housing screws located inside rotor.

Remove rotor (refer to *ROTOR* above).

Remove sprag clutch gear.

Remove sprag clutch housing screws and sprag clutch housing.

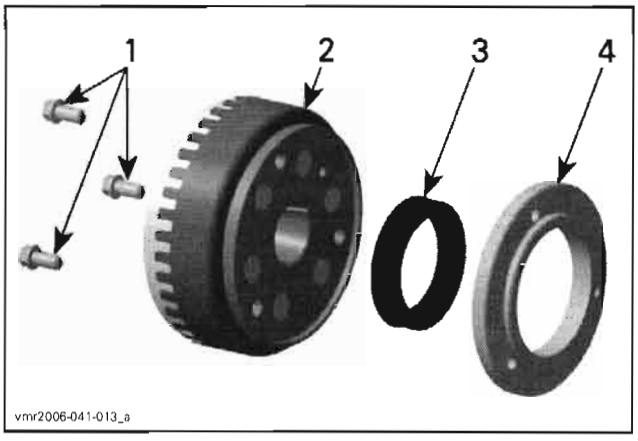


1. *Sprag clutch housing screws*
2. *Rotor*
3. *Sprag clutch*
4. *Sprag clutch housing*

## Sprag Clutch Inspection

Inspect sprag clutch and sprag clutch housing for wear and damage.

Also check the collar of the sprag clutch gear.

Perform a functional test of the sprag clutch. To do so, rotate sprag clutch gear in sprag clutch.

NOTE: Sprag clutch must lock in counterclockwise direction.

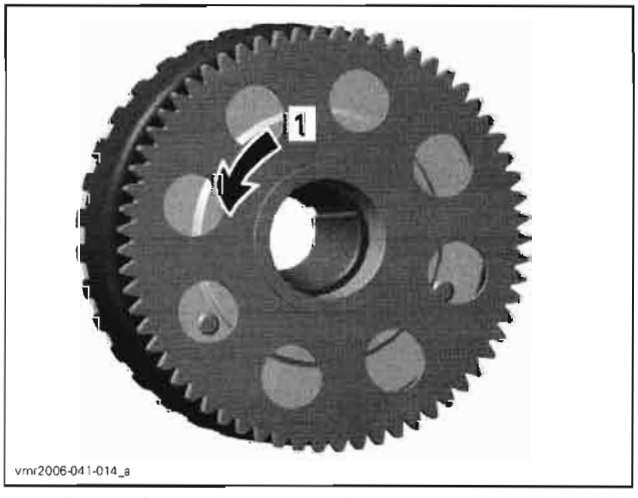


*SPRAG CLUTCH FUNCTIONAL TEST*
1. *Lock*

NOTE: Sprag clutch, housing and gear must be replaced at the same time, if damaged.

## Sprag Clutch Installation

For installation, reverse the removal procedure. Pay attention to the following details.

Apply Loctite 648 (green) (P/N 413 711 400) on threads of sprag clutch housing screws.

Install screws but do not torque yet.

Apply engine oil on sprag clutch and inside sprag clutch gear hole.

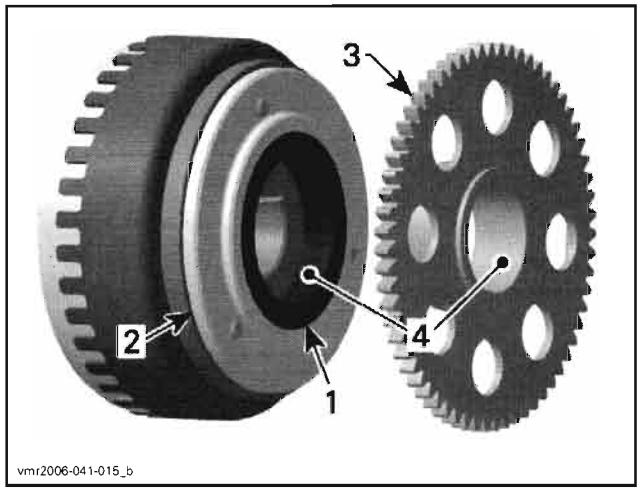


1. *Sprag clutch*
2. *Sprag clutch housing*
3. *Sprag clutch gear*
4. *Apply engine oil here*

Install rotor then torque sprag clutch housing screws to 30 N•m (22 lbf•ft).

# SPRAG CLUTCH GEAR

## Sprag Clutch Gear Removal

Remove rotor (refer to *ROTOR* above).

Pull sprag clutch gear from the rotor.

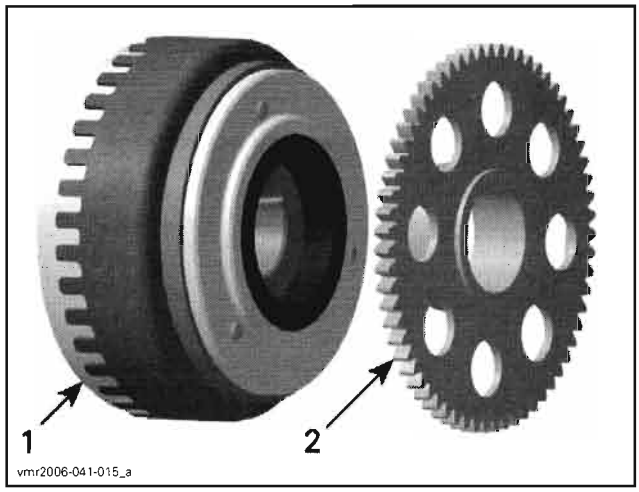


1. *Rotor*
2. *Sprag clutch gear*

## Sprag Clutch Gear Inspection

Inspect gear, especially teeth and sprag clutch collar, for wear and other damage.

Check needle bearing condition. Replace sprag clutch gear if necessary.

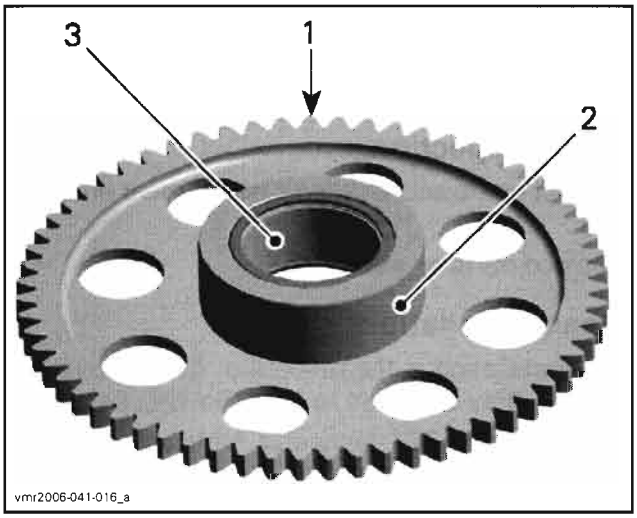


*INSPECT*
1. *Teeth*
2. *Collar*
3. *Needle bearing*

## Sprag Clutch Gear Installation

The installation is the reverse of the removal procedure.

**NOTE:** Apply engine oil on needle bearing and collar of sprag clutch gear.

# STARTER DRIVE GEARS

The starter drive gears are located on the engine MAG side behind the magneto cover.

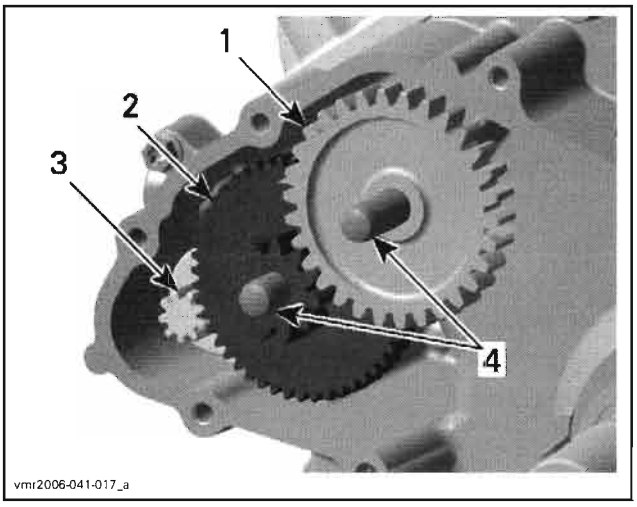


1. *Intermediate gear*
2. *Starter double gear*
3. *Starter gear*
4. *Location pins*

## Gear Removal

Remove magneto cover (refer to *MAGNETO COVER* above).

Remove location pins, starter double gear and intermediate gear.

## Gear Inspection

Inspect gears and location pins for wear and damage.

Replace parts as necessary.

## Gear Installation

The installation is the reverse of the removal procedure. Pay attention to the following details.

Apply Loctite 767 (antiseize lubricant) (P/N 293 800 070) on starter gear before installing the starter double gear.

Apply engine oil on location pins.

# INTAKE MANIFOLD, CYLINDER HEAD AND CYLINDER

## SERVICE TOOLS

| Description | Part Number | Page |
|---|---|---|
| dial gauge | 414 104 700 | 86 |
| crankshaft locking bolt | 529 035 617 | 97, 106 |
| valve spring compressor clamp | 529 035 724 | 100 |
| valve spring compressor cup | 529 035 764 | 100 |
| valve guide installer | 529 035 853 | 104 |
| Piston ring compressor | 529 035 919 | 106 |
| Circlip installer | 529 035 921 | 110 |
| valve guide remover | 529 035 924 | 104 |
| camshaft locking tool | 529 035 926 | 86, 90 |
| Piston ring compressor | 529 035 977 | 106 |
| Circlip installer | 529 036 058 | 110 |

## SERVICE TOOLS – OTHER SUPPLIER

| Description | Part Number | Page |
|---|---|---|
| Snap-on pliers | YA 8230 | 102 |

## SERVICE PRODUCTS

| Description | Part Number | Page |
|---|---|---|
| Loctite 767 (antiseize lubricant) | 293 800 070 | 104 |

# INTAKE MANIFOLD

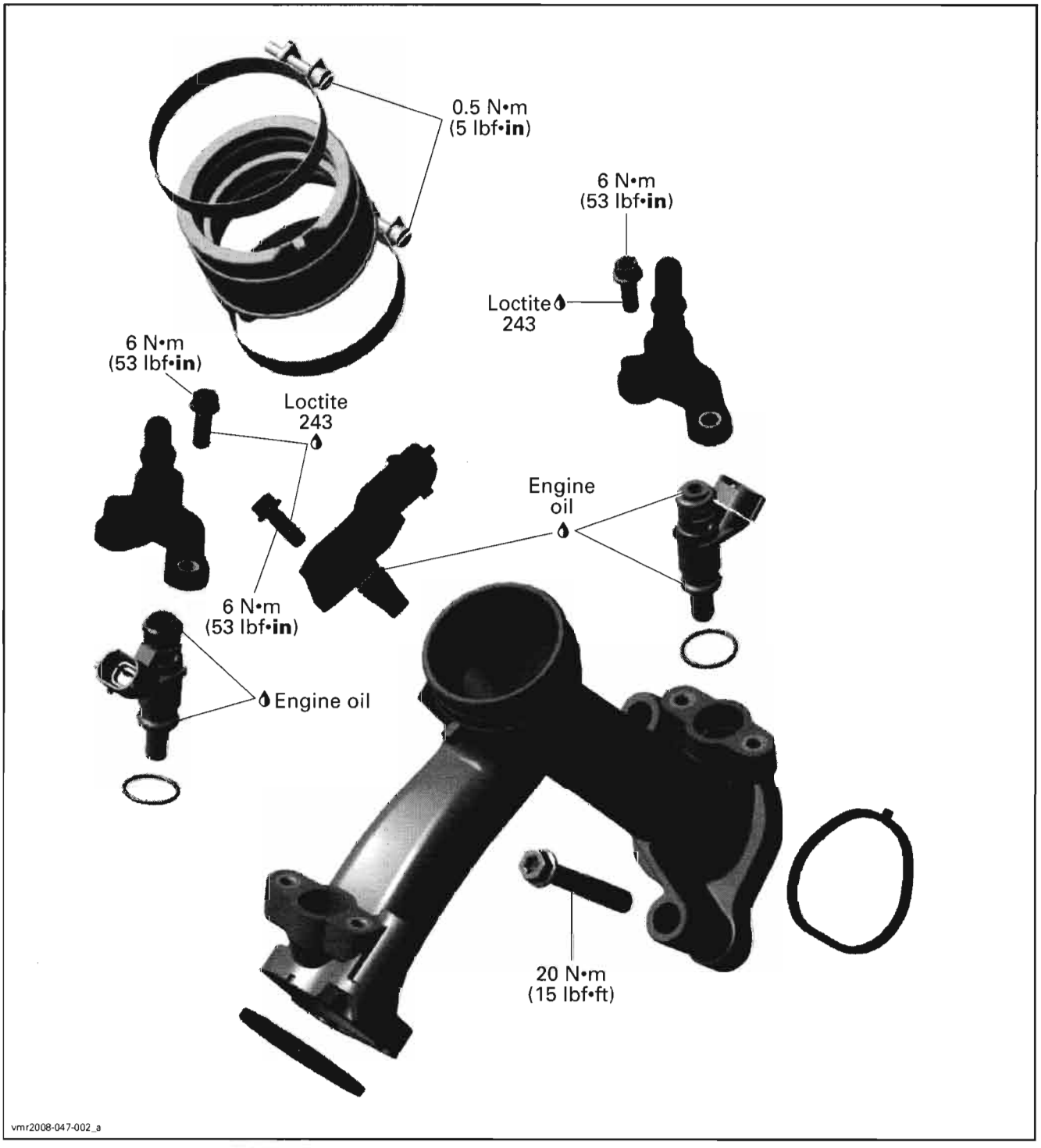

# CYLINDER HEAD NO. 1

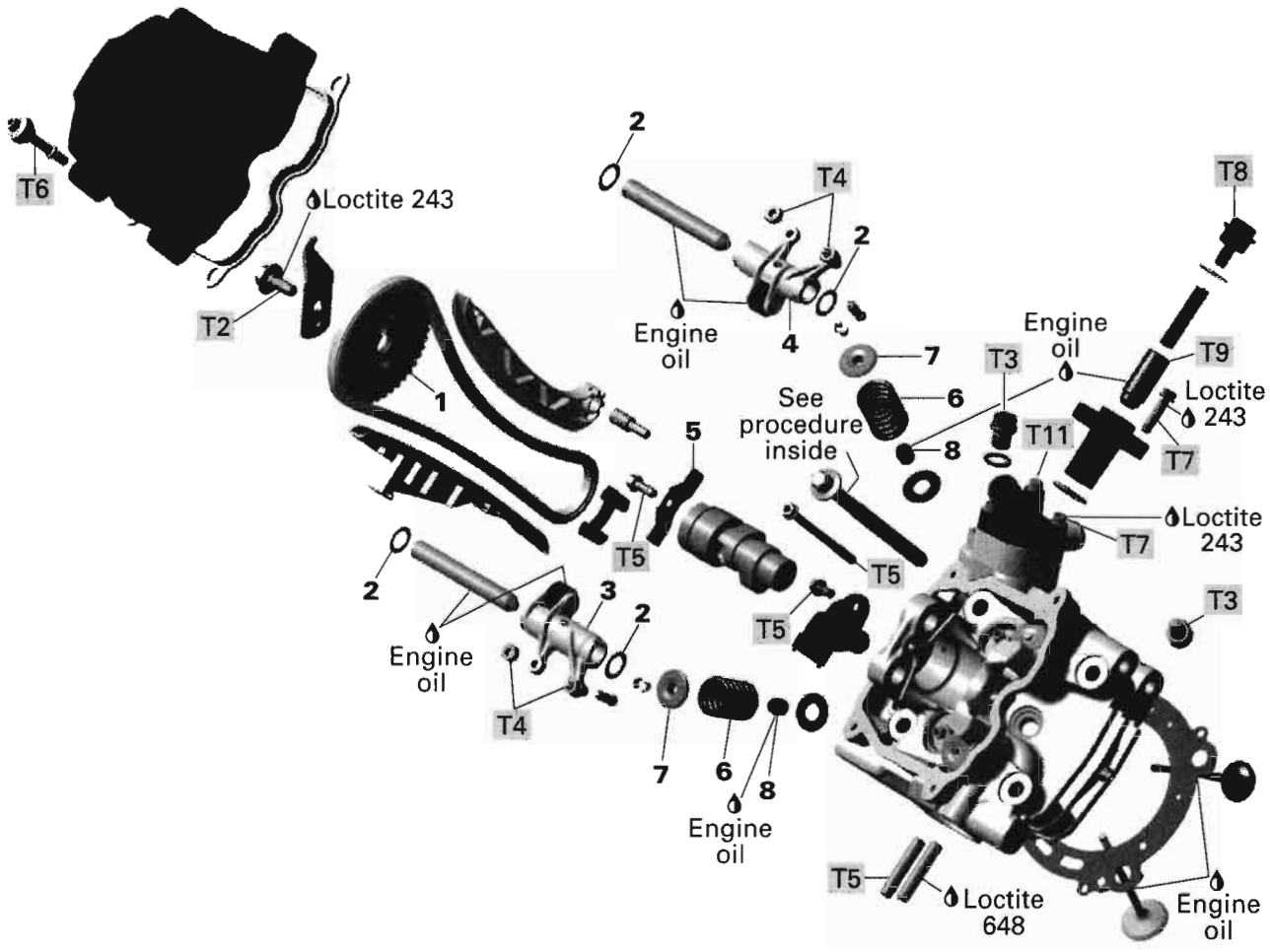


| | |
|---|---|
| T1 | 60 N•m (44 lbf•ft) |
| T2 | 30 N•m (22 lbf•ft) |
| T3 | 20 N•m (15 lbf•ft) |
| T4 | 12 N•m (106 lbf•**in**) |
| T5 | 10 N•m (89 lbf•**in**) |
| T6 | 7 N•m (62 lbf•**in**) |

| | |
|---|---|
| T7 | 6 N•m (53 lbf•**in**) |
| T8 | 4.5 N•m (40 lbf•**in**) |
| T9 | 0.1 N•m (0.89 lbf•**in**) |
| T10 | 16 N•m (141 lbf•**in**) |
| T11 | 5 N•m (44 lbf•**in**) |

vmr2007-036-001_a

# CYLINDER HEAD NO. 2

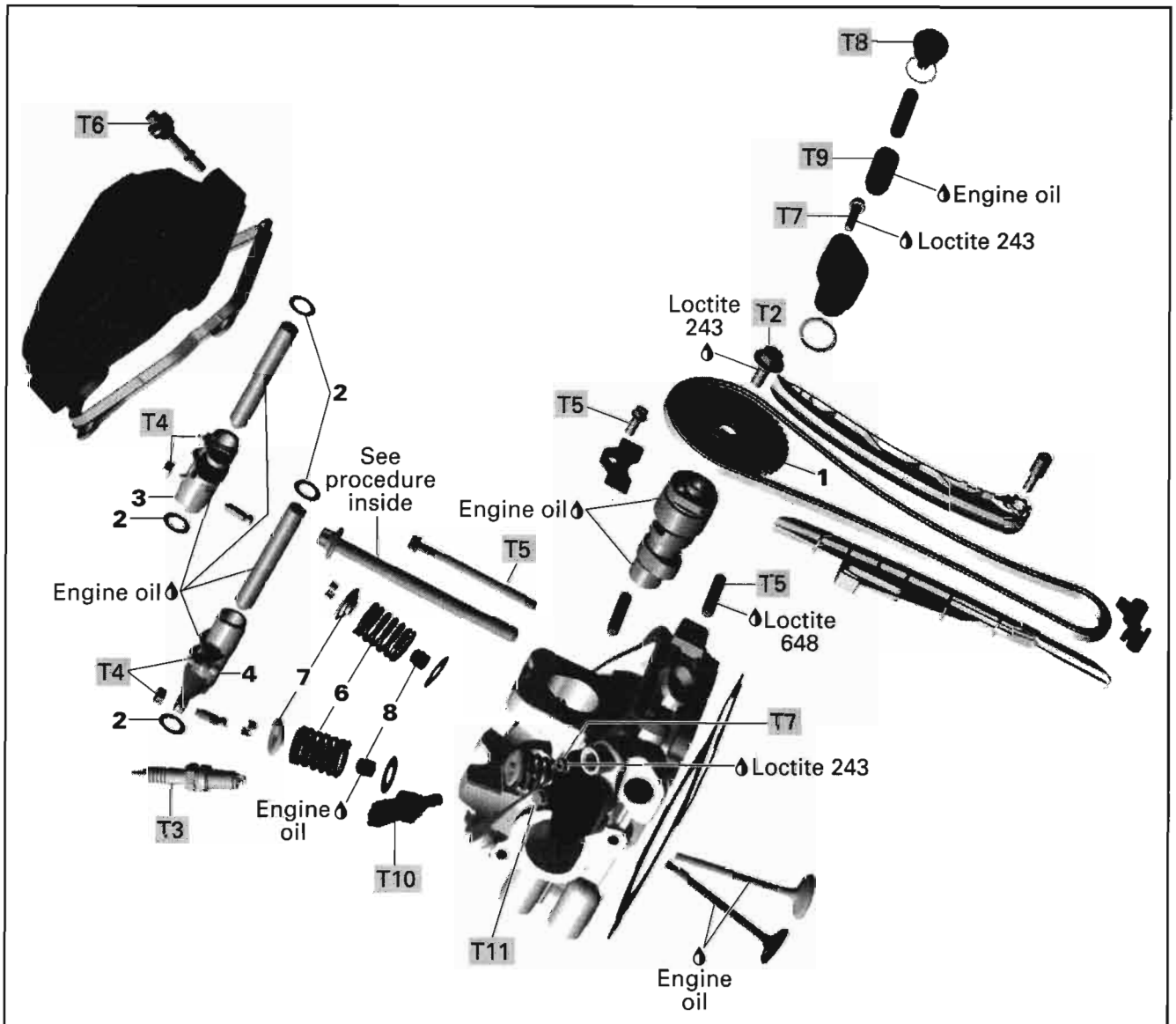


| | |
|---|---|
| T1 | 60 N•m (44 lbf•ft) |
| T2 | 30 N•m (22 lbf•ft) |
| T3 | 20 N•m (15 lbf•ft) |
| T4 | 12 N•m (106 lbf•**in**) |
| T5 | 10 N•m (89 lbf•**in**) |
| T6 | 7 N•m (62 lbf•**in**) |

| | |
|---|---|
| T7 | 6 N•m (53 lbf•**in**) |
| T8 | 4.5 N•m (40 lbf•**in**) |
| T9 | 0.1 N•m (0.89 lbf•**in**) |
| T10 | 16 N•m (141 lbf•**in**) |
| T11 | 5 N•m (44 lbf•**in**) |

vmr2007-036-002_a

# CYLINDERS AND PISTONS

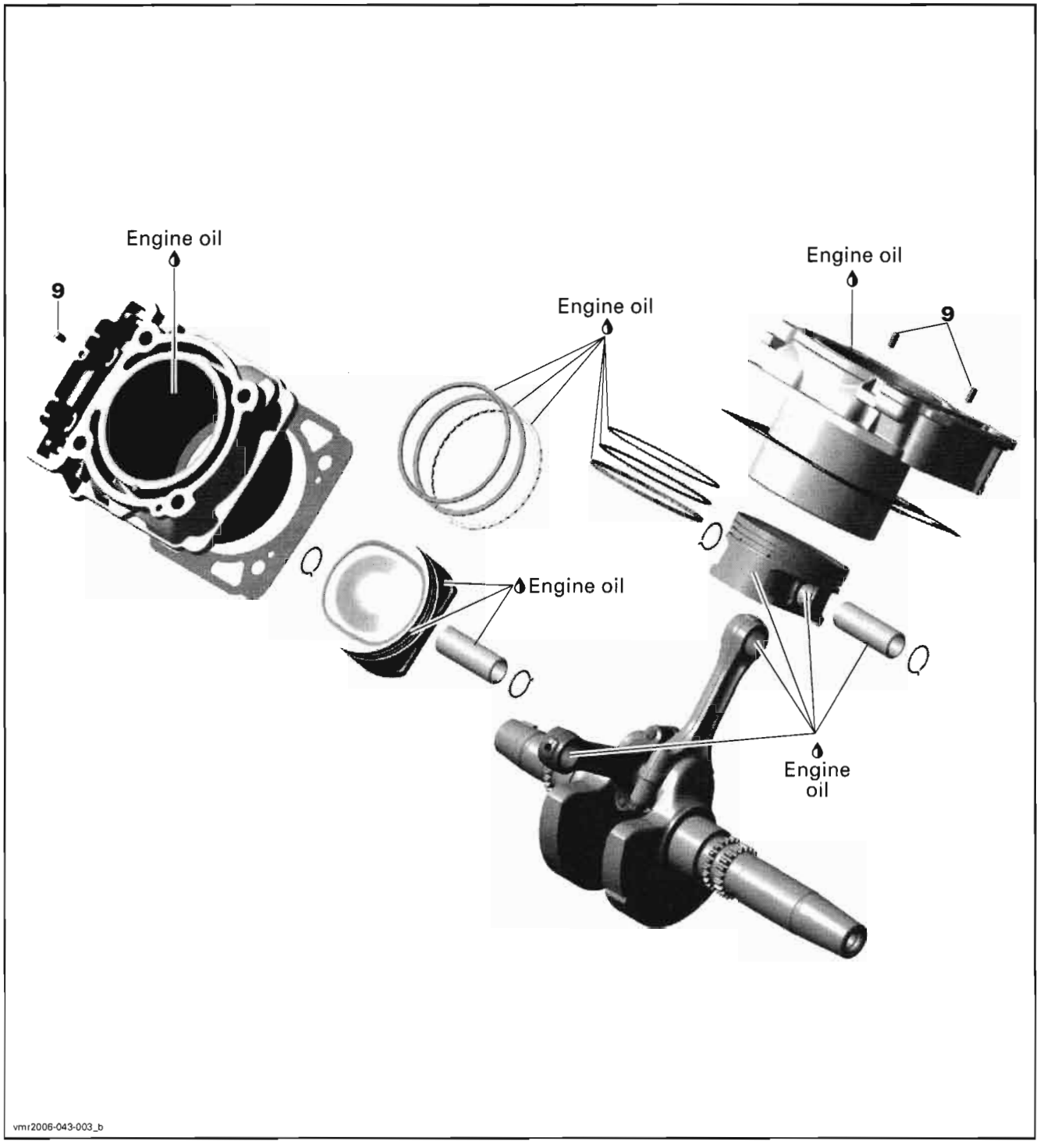


vmr2006-043-003_b

# GENERAL

Components which are identical for both cylinders/cylinder heads are identified in the two exploded views by the same number. Components which are different or which are, for instance, present of one of the cylinders/cylinder heads but not on the other, have different numbers. The information given below always relates as a general rule.

Special reference is made in the text to work instructions which are not the same for cylinder no. 1 and cylinder no. 2.

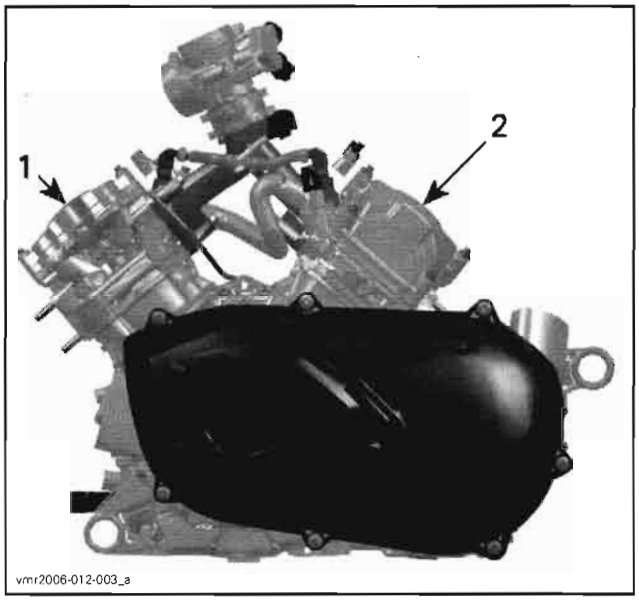


1. *Cylinder 1 (front)*
2. *Cylinder 2 (rear)*

When diagnosing an engine problem, always perform a cylinder leak test.

Always place the vehicle on level surface.

NOTE: For a better understanding, the many illustrations are taken with engine out of vehicle. To perform the following instructions, it is not necessary to remove engine from vehicle.

Always disconnect BLACK (-) cable from the battery, then RED (+) cable before working on the engine.

Even if the removal of many parts is not necessary to reach another part, it is recommended to remove these parts in order to check them.

During assembly/installation, use the torque values and service products as in the exploded views.

Clean threads before applying a threadlocker. Refer to *SELF-LOCKING FASTENERS* and *LOCTITE APPLICATION* at the beginning of this manual for complete procedure.

**⚠ WARNING**

**Torque wrench tightening specifications must strictly be adhered to.**
**Locking devices (e.g.: locking tabs, elastic stop nuts, cotter pin, etc.) must be replaced with new ones.**

When disassembling parts that are duplicated in the engine, (e.g.: valves), it is a strongly recommended to note their position (PTO/MAG side, front/rear cylinder) and to keep them as a "group". If you find a defective component, it would be much easier to find the cause of the failure among its group of parts (e.g.: you found a worn valve guide. A bent spring could be the cause and it will be easy to know which one among the springs is the cause to replace it if you grouped them at disassembly). Also, since used parts have matched together during the engine operation, they will keep their matched fit when you reassemble them together within their "group".

# MAINTENANCE

## VALVE ADJUSTMENT

NOTE: Check and adjust valve clearance only when engine is cold.

Remove valve covers.

Before checking or adjusting the valve clearance, turn crankshaft to TDC ignition of the respective cylinder, see *CAMSHAFT*.

Using feeler gauge, check the valve clearance.

| VALVE CLEARANCE | |
|---|---|
| EXHAUST | 0.11 to 0.19 mm (.0043 to .0075 in) |
| INTAKE | 0.06 to 0.14 mm (.0024 to .0055 in) |

If the valve clearance is out of specification, adjust valves as follows.

NOTE: Use mean value of exhaust/intake to ensure a proper valve adjustment.

Hold the adjustment screw at the proper position and torque the locking nut.

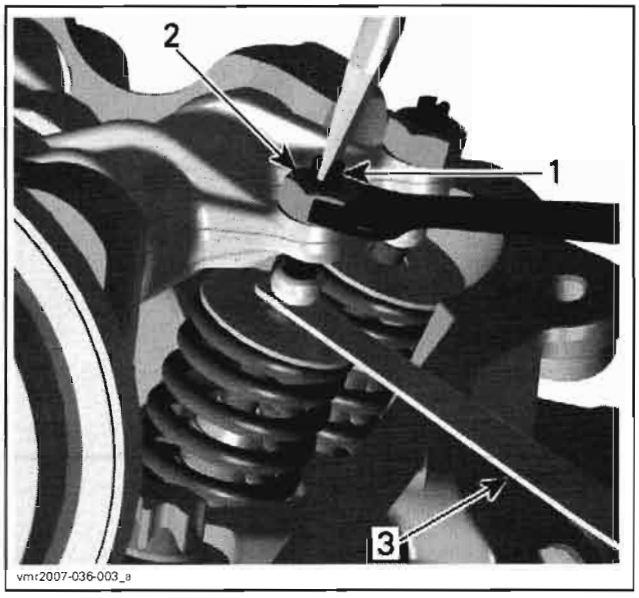


*1. Adjustment screw*
*2. Locking nut*
*3. Feeler gauge*

Repeat the procedure for each valve.

Before installing valve covers, recheck valve clearance.

# INSPECTION

## LEAK TEST

Before performing the cylinder leak test, verify the following:
- clamp(s) tightness
- radiator and hoses.

NOTE: For best accuracy, the leak test should be done with the engine at normal operating temperature.

**⚠ WARNING**

**Prevent burning yourself on hot engine parts.**

### Preparation

Disconnect battery.

**⚠ WARNING**

**Always respect this order for disassembly; disconnect BLACK (-) cable first.**

Remove radiator cap.

**⚠ WARNING**

**To prevent burning yourself only remove the radiator cap by wearing the appropriate safety equipment.**

Remove any parts to have access to engine cylinder heads.

Unplug spark plug cable.

Clean spark plug area and remove spark plug from cylinder head.

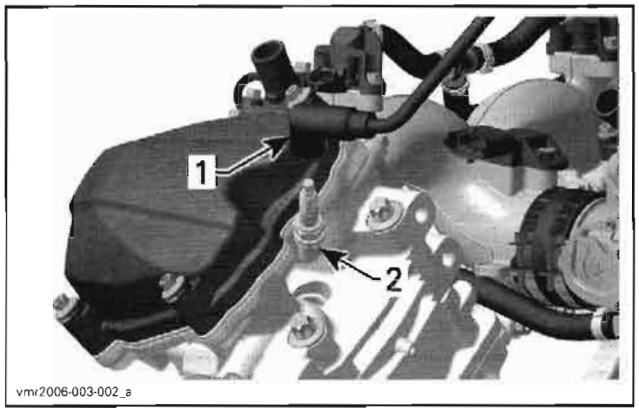


*TYPICAL*
*1. Spark plug cable*
*2. Spark plug*

Remove valve cover.

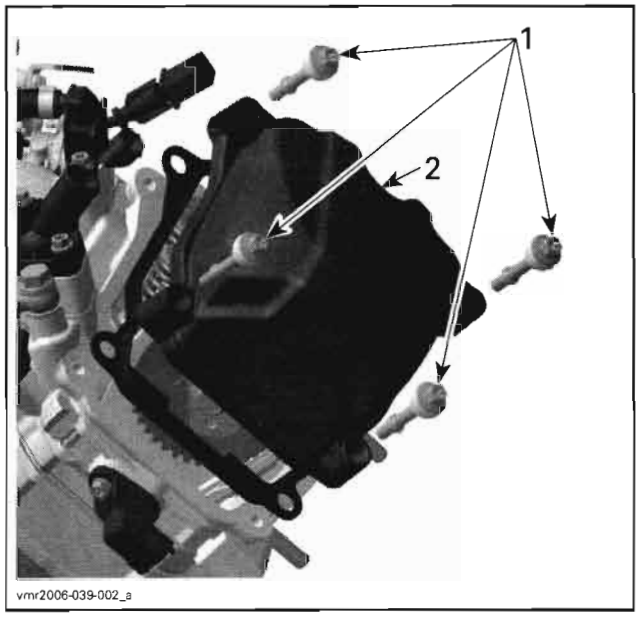


*1. Valve cover screws*
*2. Valve cover*

Rotate crankshaft until piston is at ignition TDC.

To turn crankshaft, there are two possible procedures.

#### First Procedure

- Turn the drive pulley.

#### Second Procedure

- Remove plug screw with O-ring from magneto cover.
- Use a 14 mm Allen key and turn crankshaft.

**CAUTION:** Turn only clockwise to avoid loosening of magneto flywheel Allen screw.

Using the dial gauge (P/N 414 104 700), turn the crankshaft and set the piston to precisely ignition TDC.

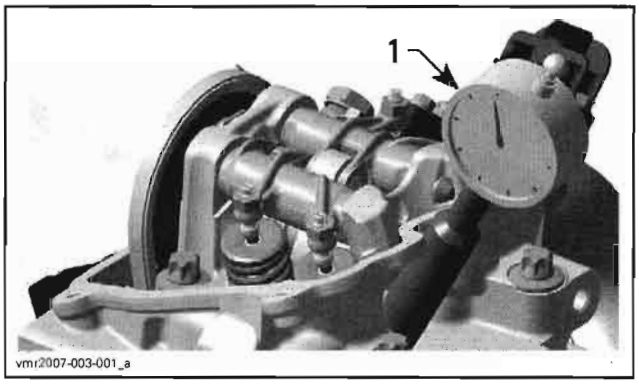


*TYPICAL*
*1. Dial gauge*

NOTE: If a dial gauge is not available, use a screwdriver or another similarly suitable tool.

**CAUTION:** Do not scratch or damage piston/cylinder surface.

NOTE: At ignition TDC the marks on the camshaft timing gear have to be parallel to cylinder head base as per following illustration.

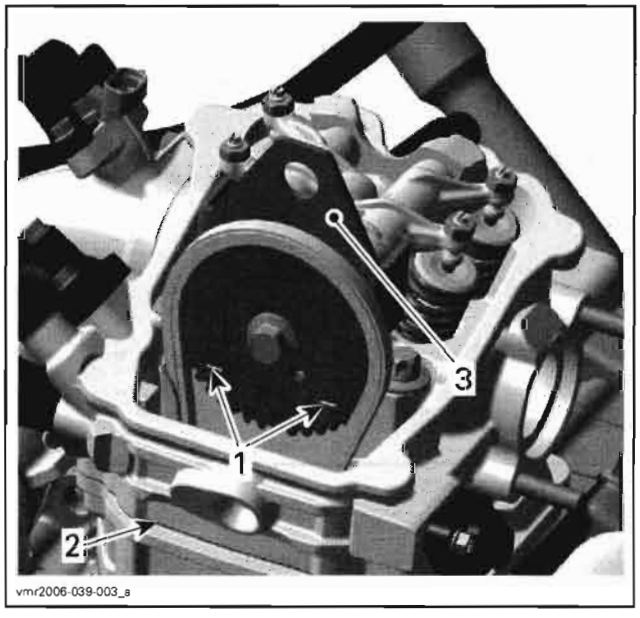


*1. Marks on camshaft timing gear*
*2. Cylinder head base*
*3. Camshaft locking tool*

Lock camshaft at TDC by using camshaft locking tool (P/N 529 035 926).

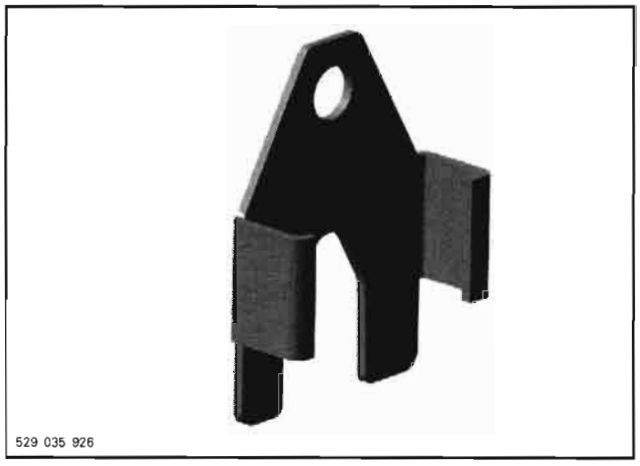


*CAMSHAFT LOCKING TOOL*

## Leak Test

Connect to adequate air supply.

Set needle of measuring gauge to zero.

NOTE: All testers have specific instructions on gauge operation and required pressure.

Install gauge adapter into previously cleaned spark plug hole.

Supply combustion chamber with air pressure.

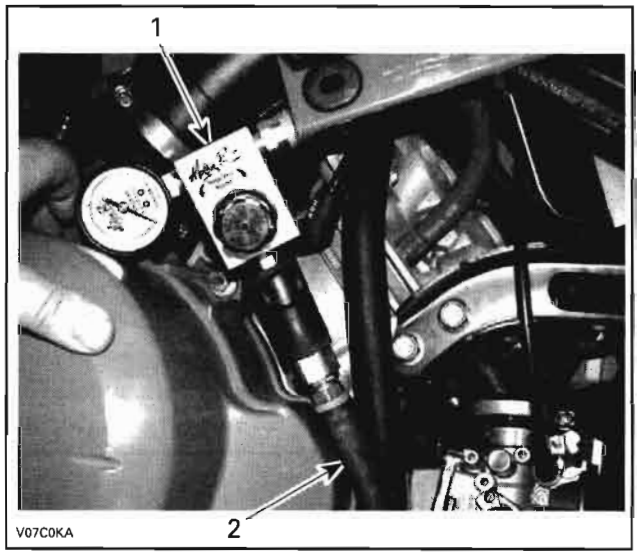


*TYPICAL*
*1. Leak Tester*
*2. Air supply hose*

Note the amount or percentage of leakage (depending on tester).

| LEAKAGE PERCENTAGE | ENGINE CONDITION |
|---|---|
| 0% to 15% | Excellent condition |
| 16% to 25% | Good condition |
| 26% to 40% | Fair condition; reduced engine performance |
| 41% and higher | Poor condition, diagnose and repair engine |

## Diagnosis

Listen for air leaks.

- air escaping on intake port/throttle body means leaking intake valve(s)
- air escaping on exhaust port means leaking exhaust valve(s)
- air bubbles out of radiator means leaking cylinder head gasket
- air/oil escaping from crankcase means damaged gasket and/or loosened screws (refer to *BOTTOM END*)
- air/coolant escaping from cylinder/head means damaged gasket(s) and/or loosened screws (refer to *INTAKE MANIFOLD, CYLINDER HEAD AND CYLINDER*)
- air escaping into crankcase area means excessively worn cylinder and/or broken piston rings (refer to *INTAKE MANIFOLD, CYLINDER HEAD AND CYLINDER*).

**NOTE:** For all the checkpoints mentioned above, see the appropriate engine section to diagnose and repair the engine.

## Reassembly

Reverse the preparation procedure. Ensure to respect torque values and use of appropriate products/lubricants. Refer to exploded views in other sections of this manual as required.

# PROCEDURES

# INTAKE MANIFOLD

## Intake Manifold Removal

Disable fuel pump using B.U.D.S. Look in the **Activation** tab.

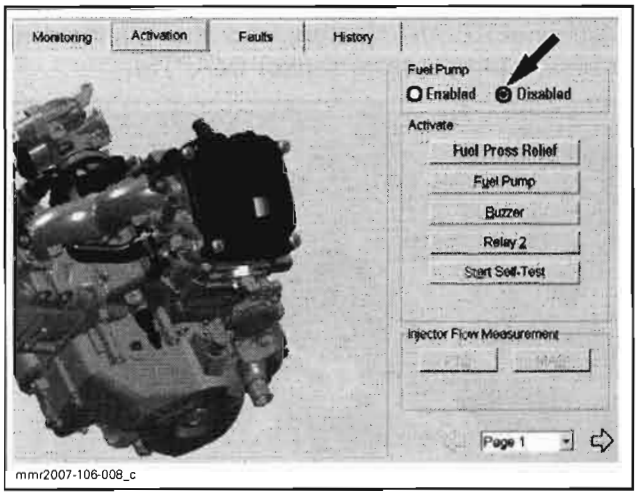

mmr2007-106-008_c

Release fuel pressure by running engine until it runs out of gas.

**⚠ WARNING**

**The fuel hose may be under pressure. Cover the fuel line connection with an absorbent shop rag. Slowly disconnect the fuel hose to release the pressure. Wipe off any fuel spillage.**

Remove seat, both side panels, central panel and dash board. Refer to *BODY.*

Remove the cover of the air filter housing.

Remove the air filter.

Unscrew bolts securing the air filter housing to frame.

Unscrew the lower clamp retaining the manifold adapter between throttle body and intake manifold.

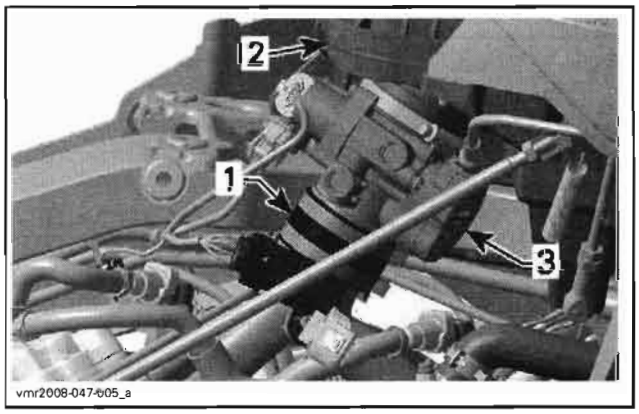

vmr2008-047-005_a

1. *Manifold adapter*
2. *Throttle body*
3. *Air filter housing*

Remove the manifold adapter.

Unplug fuel lines from injectors.

Disconnect both injectors and the manifold air pressure temperature sensor (MAPTS).

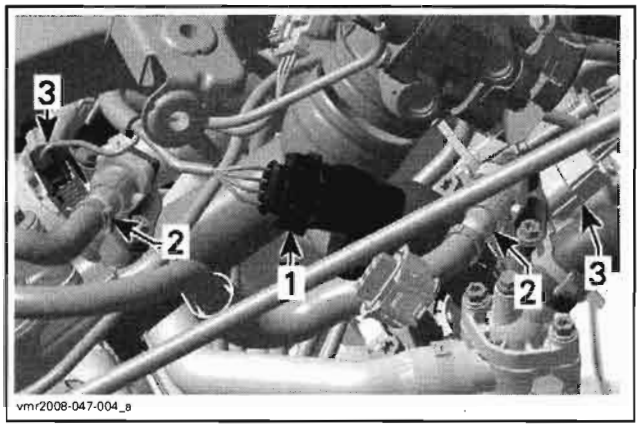


1. *MAPTS*
2. *Fuel lines*
3. *Injectors connectors*

Unscrew intake manifold from cylinders.

Remove intake manifold from vehicle.

**NOTE:** To remove fuel injectors from intake manifold, refer to *ENGINE MANAGEMENT*.

## Intake Manifold Inspection

Check intake manifold for cracks, warping at flanges or any other damage. Replace if necessary.

## Intake Manifold Installation

The installation is the reverse of the removal procedure. However, pay attention to the following.

Torque manifold screws to 20 N•m (15 lbf•ft) one cylinder at a time.

Re-enable fuel pump using B.U.D.S.

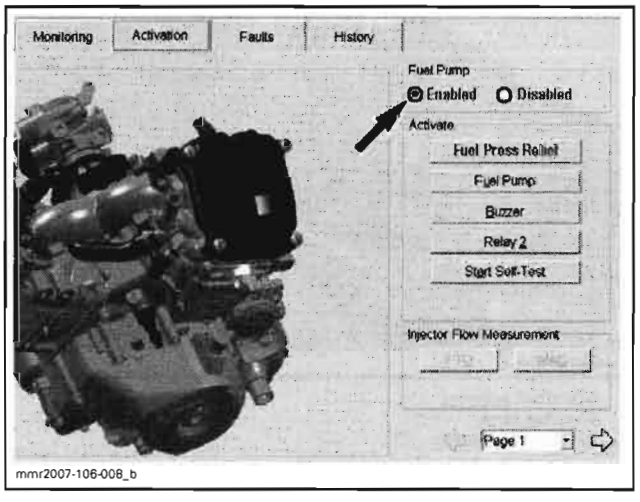


# VALVE COVER

## Cover Removal

Remove distance screws of valve cover.

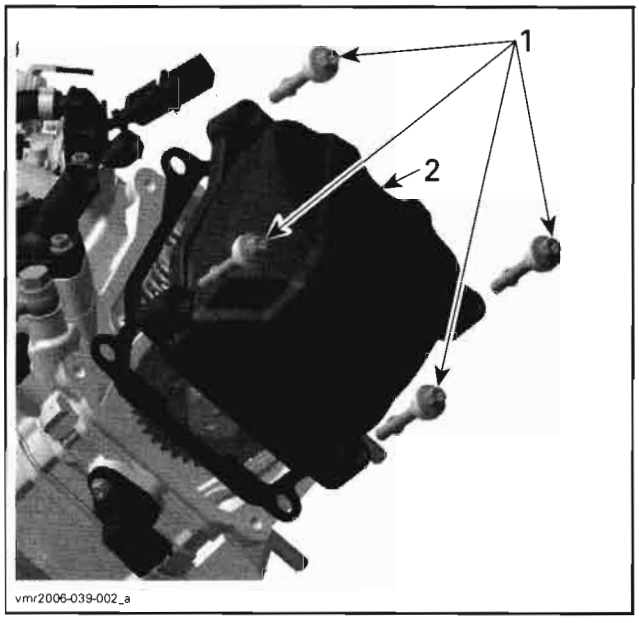


1. *Distance screws*
2. *Valve cover*

Remove valve cover and gasket.

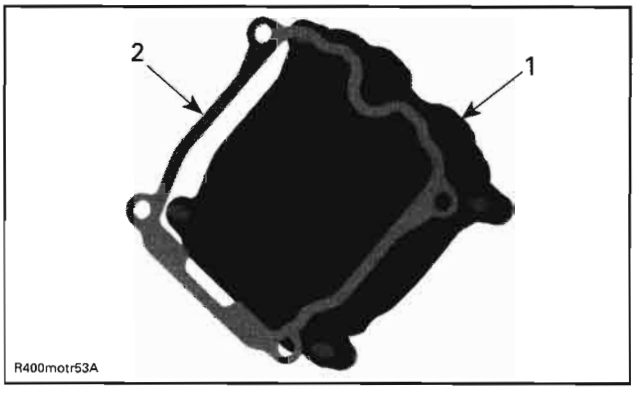


1. *Valve cover*
2. *Gasket*

Repeat the procedure for the other valve cover if required.

## Cover Inspection

Check the gasket on the valve cover if it is brittle, cracked or hard. If so, replace the gasket.

## Cover Installation

For installation, reverse the removal procedure.

Torque the valve cover distance screws in a criss-cross sequence.

# TIMING CHAIN TENSIONER

NOTE: Before removal and installation, make sure that the respective cylinder is set to TDC ignition. Refer to *CAMSHAFT*.

## Tensioner Removal

**⚠ WARNING**

**Timing chain tensioner is spring loaded. Never perform this operation immediately after the engine has been run because the exhaust system can be very hot. Wait until exhaust system is warm or cold.**

Remove chain tensioner plug.

Unscrew chain tensioner plug.

Remove O-ring, spring and chain tensioner plunger.

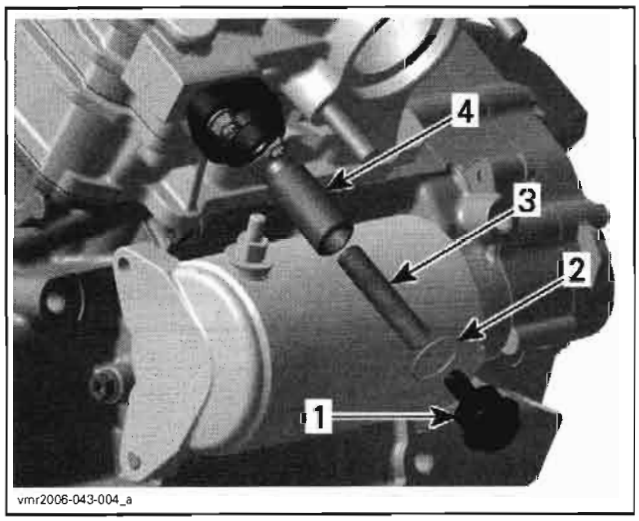


1. *Chain tensioner plug*
2. *O-ring*
3. *Spring*
4. *Chain tensioner plunger*

Unscrew screws retaining chain tensioner housing.

Remove chain tensioner housing with O-ring.

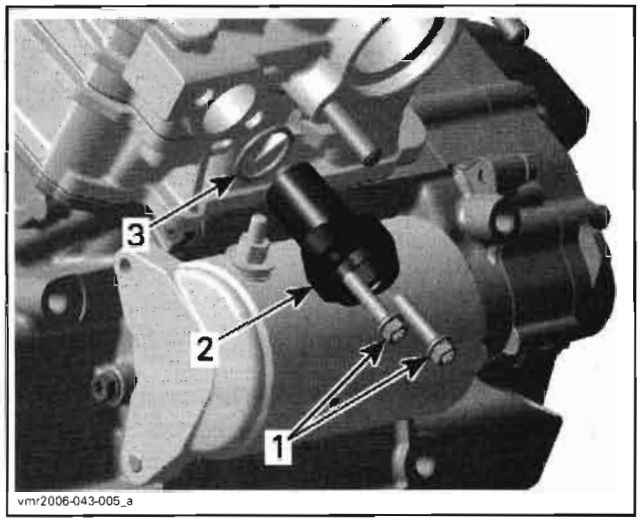


1. *Chain tensioner screws*
2. *Chain tensioner housing*
3. *O-ring*

## Tensioner Inspection

Check the housing for cracks or other damages. Replace if necessary.

Check chain tensioner plunger for free movement and/or scoring.

Check if O-rings are brittle, cracked or hard. Replace if necessary.

Check spring condition. Replace if broken or worn.

## Tensioner Installation

For installation, reverse the removal procedure. However, pay attention to the following.

NOTE: Before installing the chain tensioner make sure, that the camshaft timing gear can be moved back and forth.

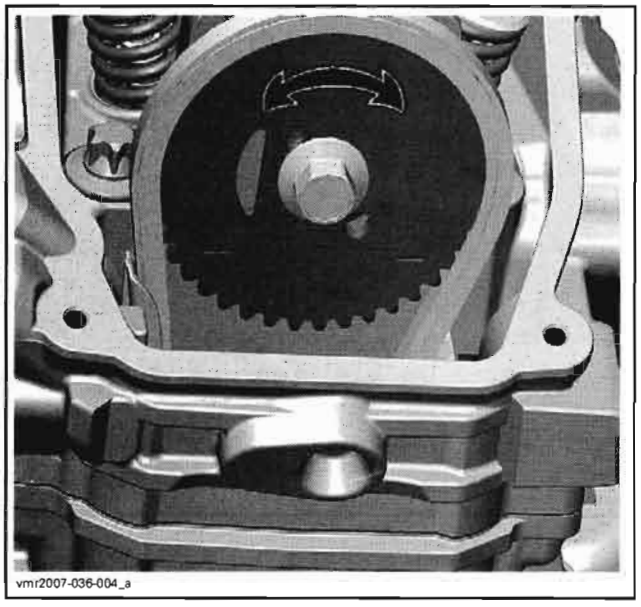


*MOVE GEAR BACK AND FORTH*

Apply engine oil on the plunger before installing.

**NOTE:** Slightly screw in the plunger until the timing chain allows no more back and forth movement of the camshaft timing gear. Then screw in the plunger an additional 1/8 turn to reach the required torque of 0.1 N•m (.9 lbf•**in**).

**CAUTION: Improper adjustment of the timing chain will lead to severe engine damage.**

Fit the spring on one side into the slot of the plug screw and on the other side into the plunger. Turn spring only clockwise in order to fit the spring end into the notch of the plunger and to avoid loosening the plunger during spring installation. Do not preload the spring.

**NOTE:** Do not forget to place the O-ring on chain tensioner plug.

Then compress the spring and screw in the plug screw.

Finally, tighten the plug screw to 4.5 N•m (40 lbf•**in**).

# CAMSHAFT TIMING GEAR

## Gear Removal

Remove the valve cover.

Turn crankshaft to TDC ignition of the respective cylinder, see *CAMSHAFT*.

Unscrew timing chain tensioner.

Remove camshaft timing gear screw.

To prevent timing chain stretching during removal of camshaft timing gear screw, use the camshaft locking tool (P/N 529 035 926).

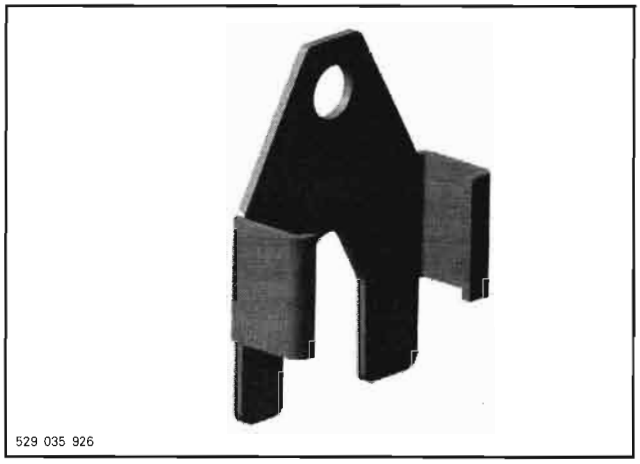


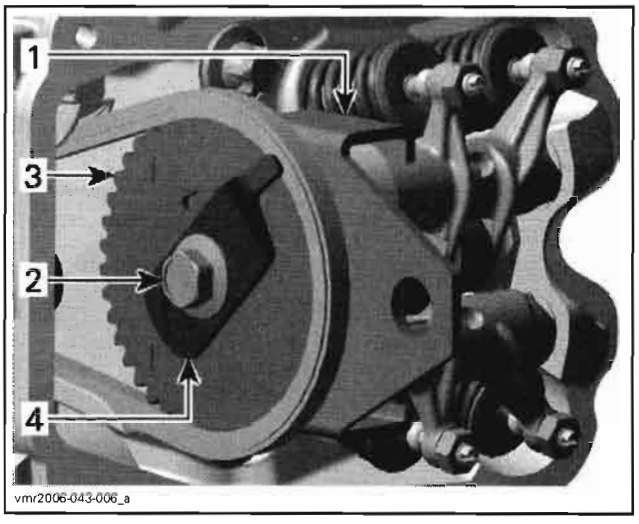


1. *Camshaft locking tool*
2. *Camshaft timing gear screw*
3. *Camshaft timing gear*
4. *Trigger wheel (cylinder head 1 only)*

Remove the camshaft timing gear.

**NOTE:** Secure timing chain with a retaining wire.

## Gear Inspection

Check camshaft timing gear for wear or deterioration.

If gear is worn or damaged, replace it as a set (camshaft timing gear and timing chain).

For crankshaft gear, refer to *BOTTOM END* section, see *CRANKSHAFT*.

## Gear Installation

For installation, reverse the removal procedure. Pay attention to the following details.

Clean mating surface and threads of camshaft prior to assemble camshaft timing gear.

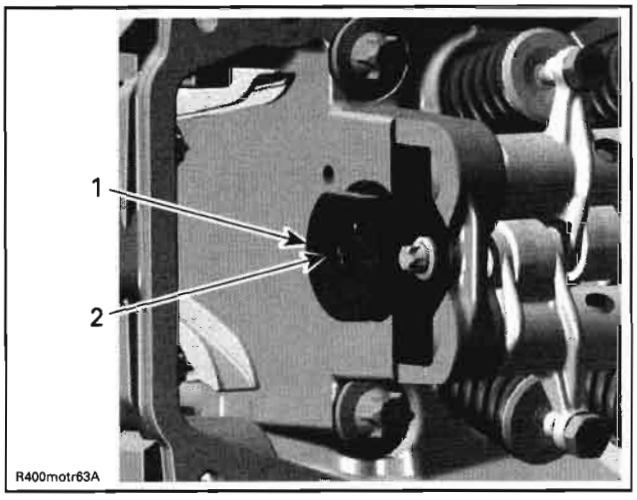


*1. Mating surface on camshaft*
*2. Threads for camshaft screw*

Camshaft timing gear and crankshaft must be at TDC ignition position before installing the timing chain.

**CAUTION: Crankshaft and camshaft must be locked on TDC ignition position to place camshaft timing gear and timing chain in the proper position.**

Install camshaft timing gear so that the timing gear tabs are located into the flat zone of the camshaft.

The printed marks on the camshaft timing gear must be parallel to the cylinder head base. See the following illustration for a proper positioning.

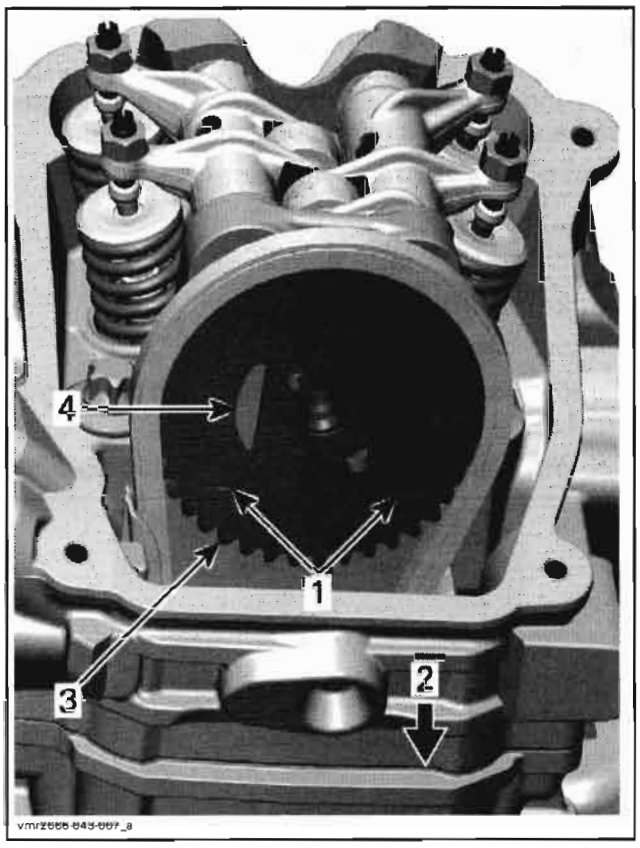


*1. Printed marks on camshaft timing gear*
*2. Cylinder head base*
*3. Camshaft timing gear*
*4. Timing gear tab*

Install trigger wheel on camshaft timing gear of cylinder 1.

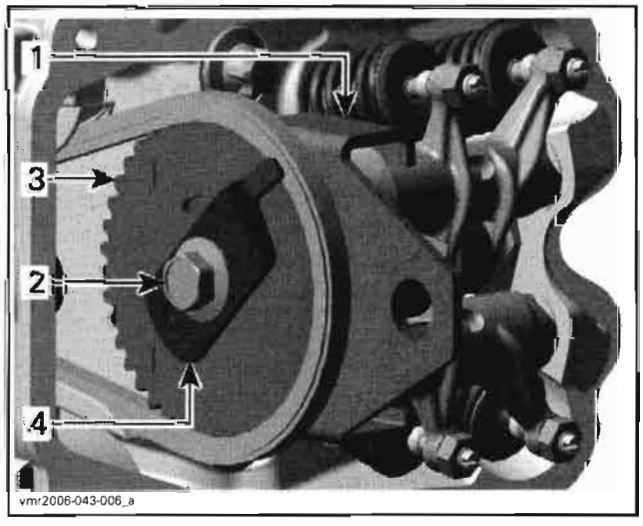


*1. Camshaft locking tool*
*2. Camshaft screw*
*3. Camshaft timing gear*
*4. Trigger wheel (cylinder head 1 only)*

When the camshaft timing gear and the timing chain are installed, remove the crankshaft locking bolt as well as the camshaft locking tool.

NOTE: Before installing the camshaft screw adjust the chain tension (see *CHAIN TENSIONER* below) and check again if marks on the timing gear are parallel to cylinder head base.

Reinstall all other removed parts.

# ROCKER ARM

## Rocker Arm Removal

Remove valve cover.

Remove chain tensioner and camshaft timing gear **no. 1**.

Remove Allen screw and camshaft retaining plate.

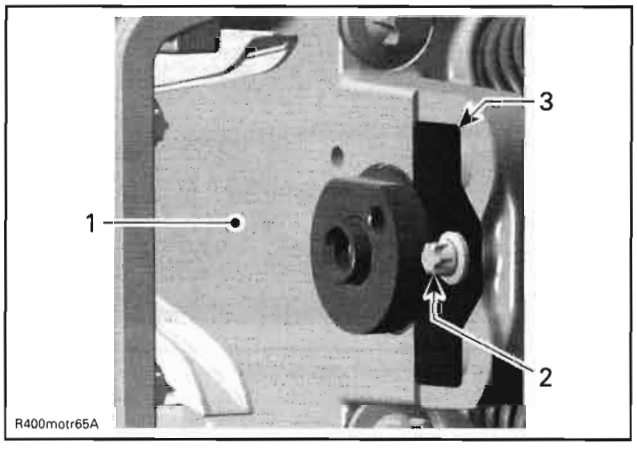


1. *Cylinder head*
2. *Allen screw*
3. *Camshaft retaining plate*

Remove rocker arm shafts.

Remove rocker arm assembly (exhaust side and intake side) with adjustment screws and nuts.

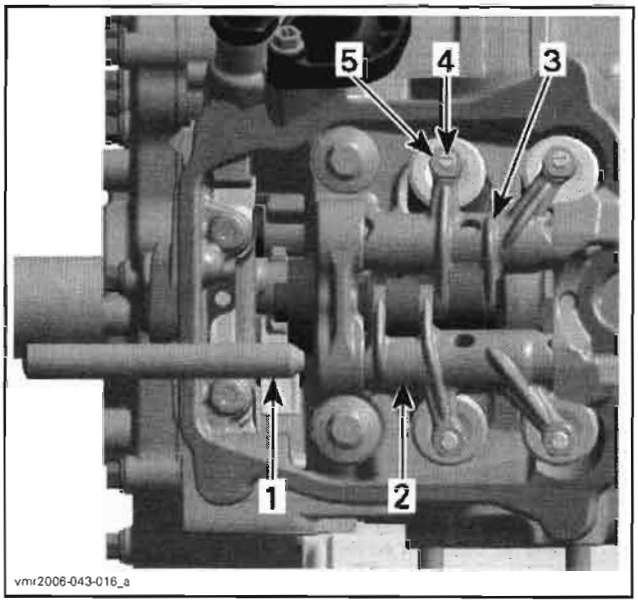


1. *Rocker arm shaft*
2. *Rocker arm (exhaust side)*
3. *Rocker arm (intake side)*
4. *Adjustment screw*
5. *Locking nut*

Remove thrust washers **no. 2**.

**CAUTION:** Pay attention not to lose thrust washers or drop them into the timing chain compartment.

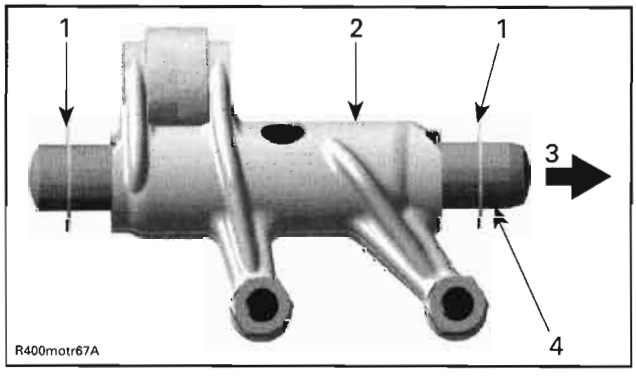


1. *2 thrust washers*
2. *Rocker arm (exhaust side)*
3. *Cylinder head — spark plug side*
4. *Big taper to spark plug side*

## Rocker Arm Inspection

Inspect each rocker arm for cracks and scored friction surfaces. If so, replace rocker arm assembly.

Check the rocker arm rollers for free movement, wear and excessive radial play. Replace rocker arm assembly if necessary.

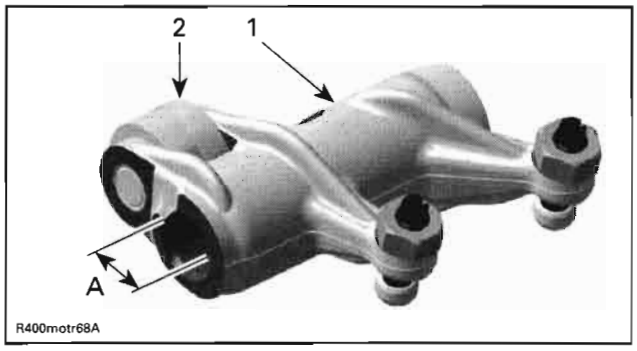


*1. Rocker arm (exhaust side)*
*2. Roller*
*A. Bore for rocker arm shaft*

Measure rocker arm bore diameter. If diameter is out of specification, change the rocker arm assembly.

| ROCKER ARM BORE DIAMETER | |
|---|---|
| NEW | 12.036 to 12.050 mm (.4739 to .4744 in) |
| SERVICE LIMIT | 12.060 mm (.4748 in) |

Check adjustment screws for free movement, cracks and/or excessive play.

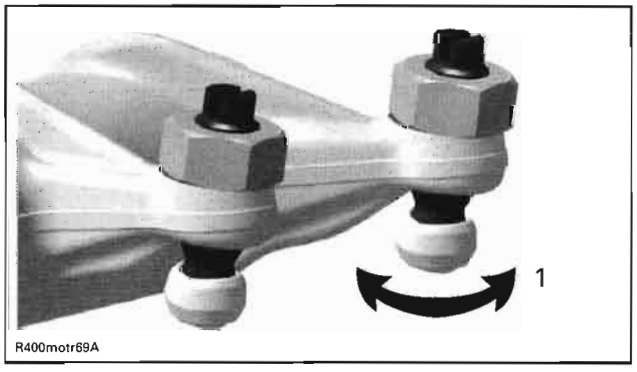


*1. Free movement of adjustment screw top*

### Rocker Arm Shaft

Check for scored friction surfaces; if so, replace parts.

Measure rocker arm shaft diameter.

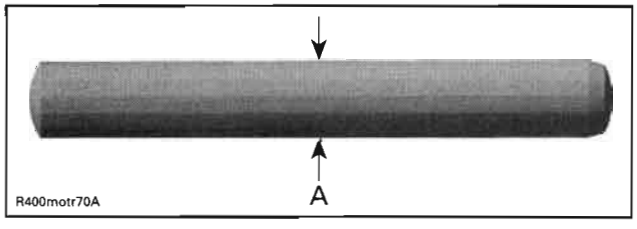


*A. Measure rocker arm shaft diameter here*

| ROCKER ARM SHAFT DIAMETER | |
|---|---|
| NEW | 12.000 to 12.018 mm (.4724 to .4731 in) |
| SERVICE LIMIT | 11.990 mm (.4720 in) |

Any area worn excessively will require parts replacement.

### Rocker Arm Installation

NOTE: Use the same procedure for exhaust and intake rocker arm.

Apply engine oil on rocker arm shaft.

Install the rocker arm shafts with the chamfered edge first and use following procedure.

Insert a rocker arm pin through rocker arm pin bore.

Install a thrust washer **no. 2** then the proper rocker arm **no. 3** (exhaust side) or **no. 4** (intake side).

Push in rocker arm shaft until its chamfer reaches the end of rocker arm bore.

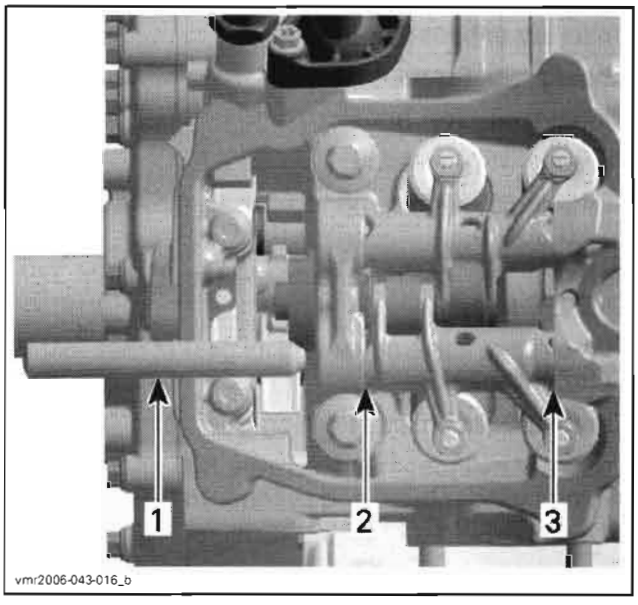


*1. Rocker arm shaft*
*2. Thrust washer (timing chain side)*
*3. Thrust washer (spark plug side)*

Place the other thrust washer and push rocker arm shaft to end position.

Install the camshaft retaining plate **no. 5**.

## TIMING CHAIN

Refer to *BOTTOM END*, see *TIMING CHAIN*.

# CYLINDER HEAD

## Cylinder Head Removal

The removal procedure is the same for both cylinder heads.

Drain coolant (refer to *COOLING SYSTEM*).

NOTE: Before removing cylinder head, blow out remaining coolant by air pressure. During cylinder head removal, the remaining coolant in cylinder head could overflow into the engine and a little quantity of coolant could drop into the engine. In this case, the engine oil will be contaminated.

Disconnect spark plug wire.

Disconnect temperature sensor connector, located at rear cylinder head.

Disconnect camshaft sensor, located at front cylinder head.

Remove both side panels and both inner fenders (refer to *BODY*).

Remove exhaust pipe springs or exhaust pipe clamp.

Unscrew exhaust pipe nuts.

Unplug radiator inlet hose.

Remove air filter housing.

Remove throttle body.

Remove the intake manifold (see *INTAKE MANIFOLD* above.

Remove the chain tensioner (see *CHAIN TENSIONER* above).

Remove the valve cover and its gasket (see *VALVE COVER* above).

Remove the camshaft timing gear.

Unscrew cylinder head screws M6 and M10 retaining cylinder head and cylinder to cylinder base.

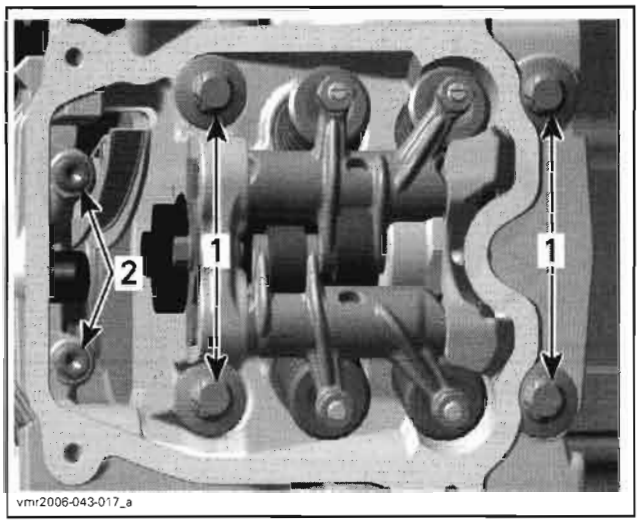


1. *Cylinder head screws M10*
2. *Cylinder head screws M6*

Pull up cylinder head.

Remove chain guide.

Remove the cylinder head gasket and scrap it.

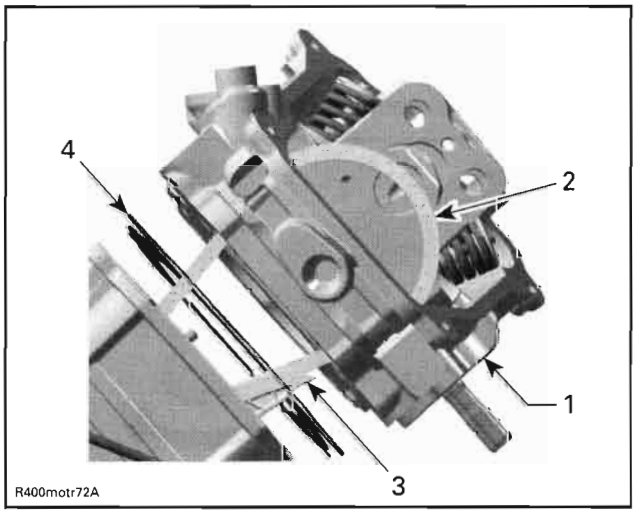


1. *Cylinder head*
2. *Timing chain*
3. *Chain guide*
4. *Cylinder head gasket*

## Cylinder Head Inspection

Inspect timing chain guide for wear, cracks or other damages. Replace if necessary.

Check for cracks between valve seats, if so, replace cylinder head.

Check mating surface between cylinder and cylinder head for contamination. If so, clean both surfaces.

Clean oil support through the cylinder head from contamination.

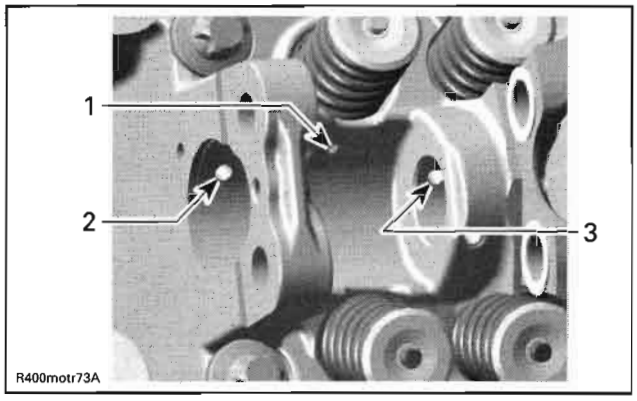


*1. Oil port to lubricate camshaft lobes intake/exhaust*
*2. Oil supply to camshaft bearing journal timing chain side*
*3. Oil supply to camshaft bearing journal spark plug side*

## Cylinder Head Installation

**NOTE:** The cylinder heads are not identical in design. Do not invert the cylinder heads at assembly.

For installation, reverse the removal procedure. Pay attention to the following details.

Ensure dowel pins **no. 9** are in place.

**CAUTION: Chain guide has to be fixed between cylinder and cylinder head.**

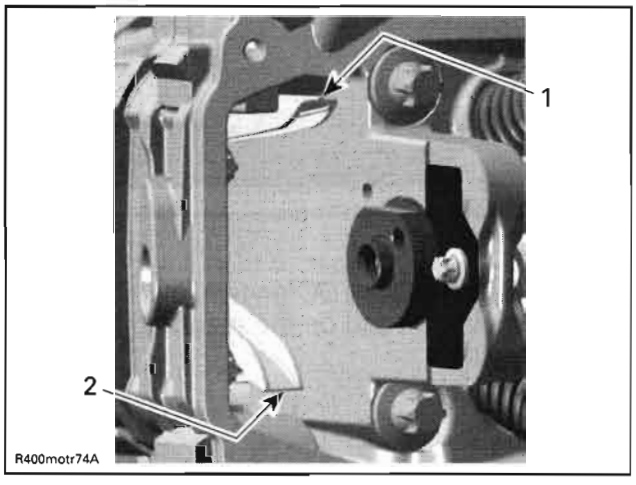


*1. Chain guide (fixed between cylinder and cylinder head)*
*2. Chain tensioner guide (mounted in crankcase)*

Install a **NEW** cylinder head gasket.

First, torque cylinder head screws M10 in criss-cross sequence to 20 N•m (15 lbf•ft) then finish by tightening to 60 N•m (44 lbf•ft).

Install cylinder head screws M6.

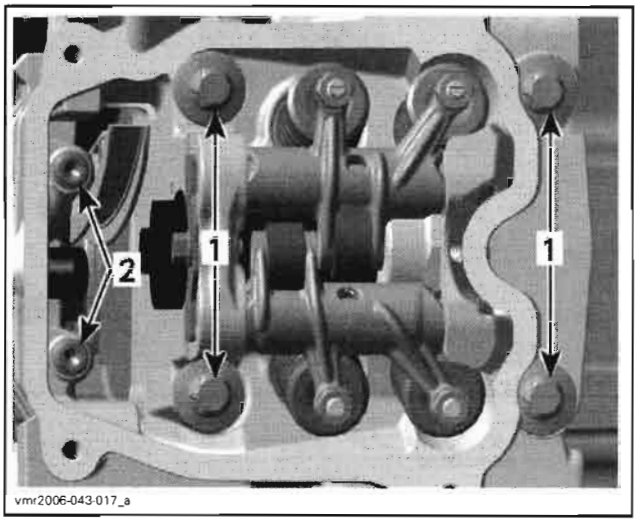


*1. Cylinder head screws M10*
*2. Cylinder head screws M6*

Check chain guide for movement.

Remove crankshaft locking bolt and reinstall plug screw with sealing ring.

# CAMSHAFT

**NOTE:** The engine is equipped with two different camshafts.

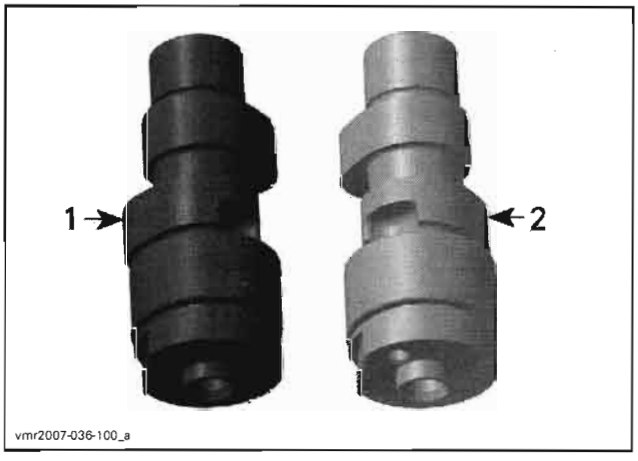


*1. Camshaft of cylinder 1*
*2. Camshaft of cylinder 2*

## Camshaft Timing

**NOTE:** If a piston (of cylinder 1 or 2) is set to TDC ignition, the camshaft timing gear of the opposite cylinder must be in the following position.

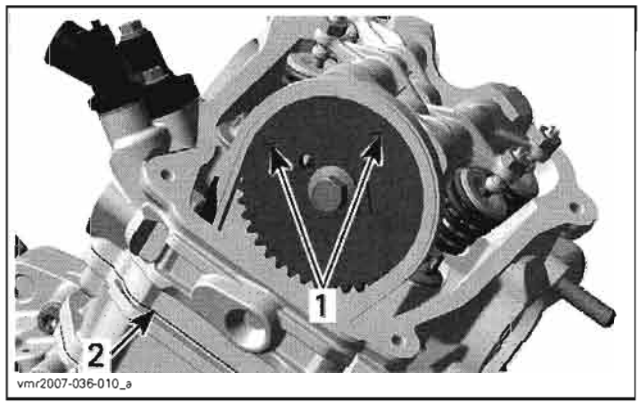


*TYPICAL*
1. *Marks on timing gear of the opposite cylinder*
2. *Cylinder head base*

## Camshaft Timing Cylinder 2

Turn crankshaft until piston is at TDC ignition as follows.

Remove spark plug of both cylinders.

Remove valve covers of both cylinders.

Remove the plug screw and O-ring of magneto cover.

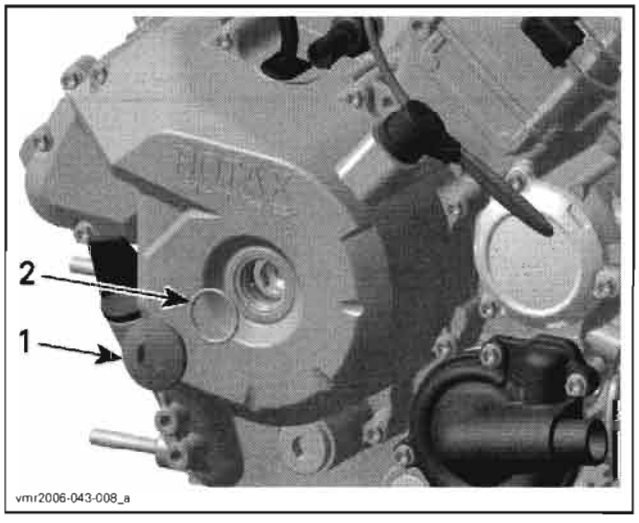


1. *Plug screw*
2. *O-ring*

Remove the crankshaft position sensor (CPS).

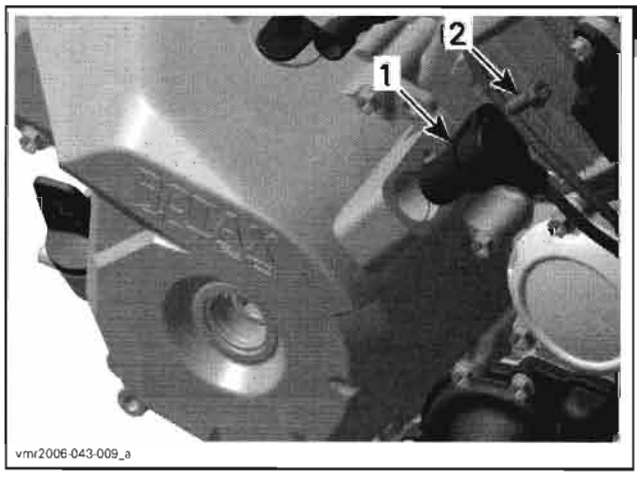


1. *Crankshaft position sensor*
2. *Screw*

Use a 14 mm Allen key to turn crankshaft until piston 2, rear is at TDC ignition.

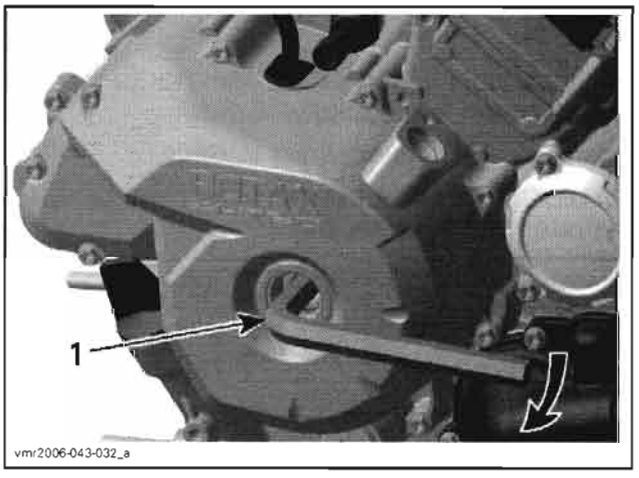


1. *Allen key 14 mm*

When rear piston is at TDC ignition, marks on magneto flywheel "2" and on the magneto cover are aligned.

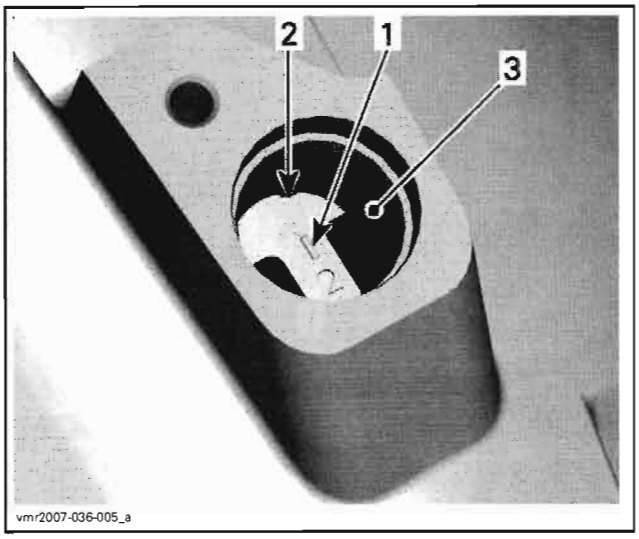


1. *Mark "2" on magneto flywheel*
2. *Notch on magneto cover*
3. *Crankshaft position sensor location*

At TDC ignition, the printed marks on the camshaft timing gear have to be parallel to cylinder head base.

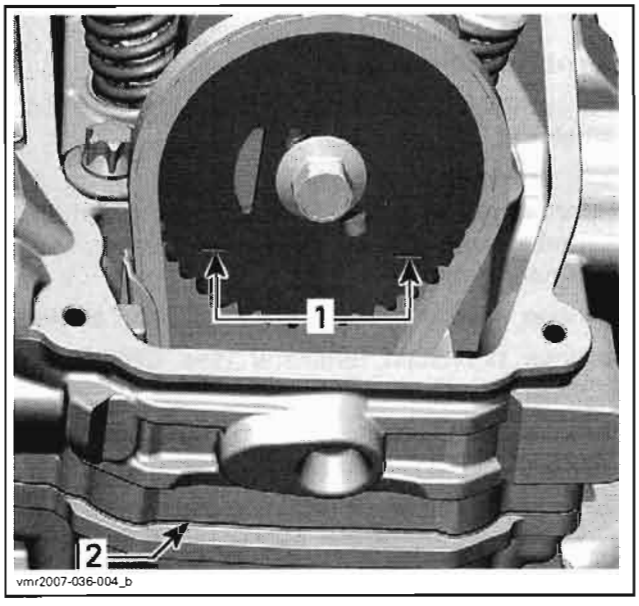


1. *Printed marks on camshaft timing gear*
2. *Cylinder head base*

To lock crankshaft at TDC ignition, proceed as follows.

Remove from crankcase plug screw with sealing ring.

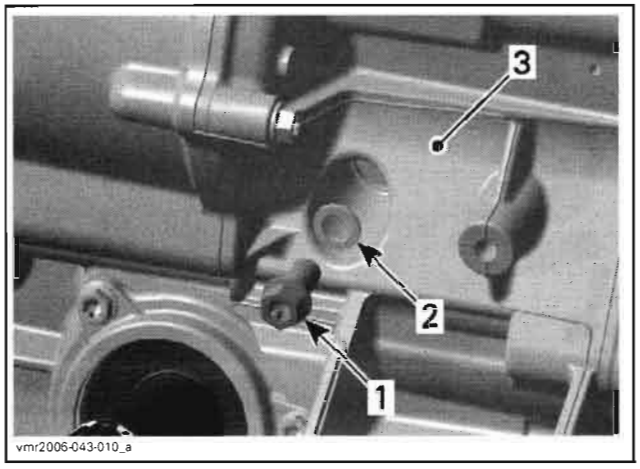


1. *Plug screw*
2. *Sealing ring*
3. *Crankcase PTO side, front side*

Lock crankshaft with the crankshaft locking bolt (P/N 529 035 617).

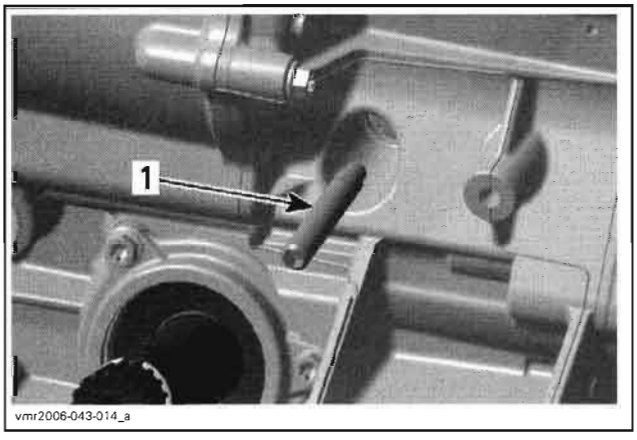


1. *Crankshaft locking bolt*

**NOTE:** Make sure the locking bolt engages in the groove of the crankshaft.

### Camshaft Timing Cylinder 1

Turn cylinder 2 to TDC ignition, see *CAMSHAFT TIMING CYLINDER 2.*

**NOTE:** Do not lock crankshaft.

Using a 14 mm Allen key, turn crankshaft 280° counterclockwise, until marks on magneto flywheel "1" and magneto cover are aligned.

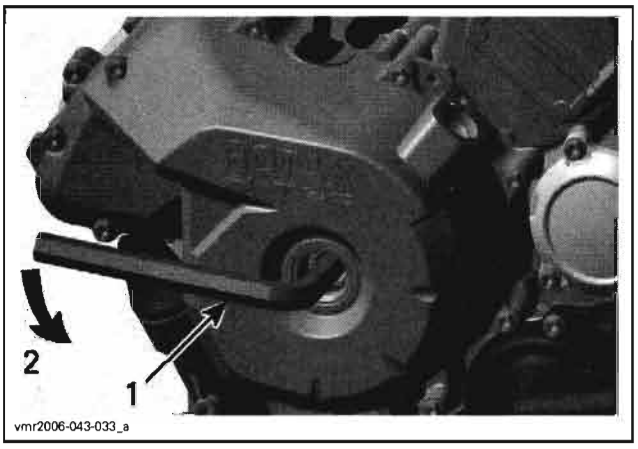


*1. Allen key 14 mm*
*2. Turn crankshaft 280° counterclockwise*

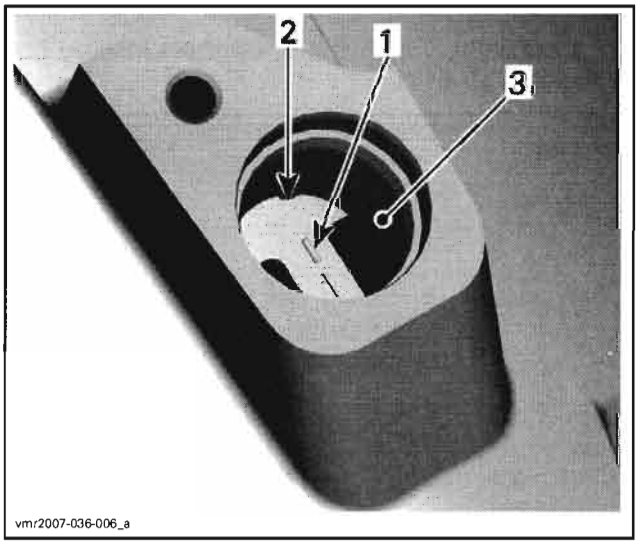


*1. Mark "1" on magneto flywheel*
*2. Notch on magneto cover*
*3. Location of crankshaft position sensor*

NOTE: At TDC ignition, the printed marks on the camshaft timing gear have to be parallel to cylinder head base as per following illustration.

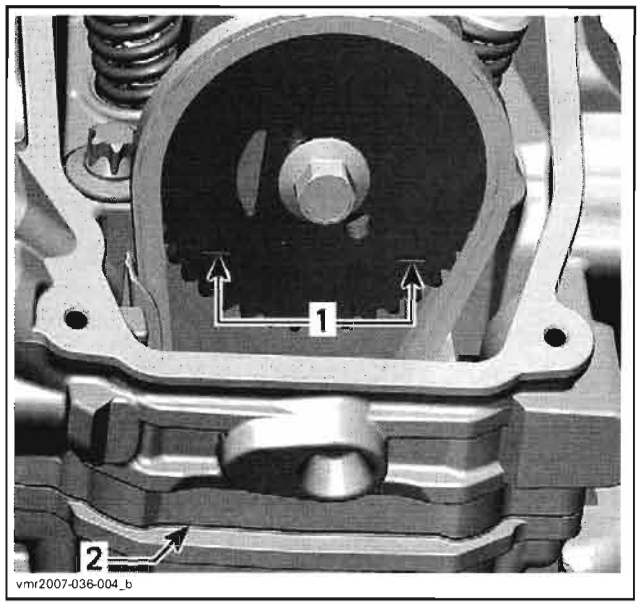


*TYPICAL*
*1. Printed marks on camshaft timing gear*
*2. Cylinder head base*

**CAUTION:** Crankshaft can not be locked at cylinder 1 TDC ignition.

## Camshaft Removal

The removal procedure is the same for both camshafts.

Each camshaft is different in design. Thus, it is important not to mix up any parts of the camshaft assembly with that of the other cylinder. Keep parts as a group.

Remove valve cover (see *VALVE COVER* above).

Remove the chain tensioner (see *CHAIN TENSIONER* above).

Remove the camshaft timing gear (see *CAMSHAFT TIMING GEAR* above).

Remove the camshaft retaining plate.

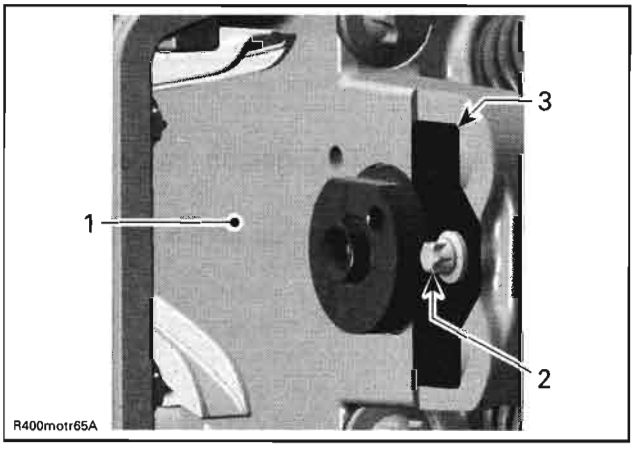


*1. Cylinder head*
*2. Allen screw*
*3. Camshaft retaining plate*

Remove rocker arms (see *ROCKER ARM* above).

Remove the camshaft.

NOTE: For removal rotate camshaft so that intake/exhaust lobe shows to upper side of cylinder head.

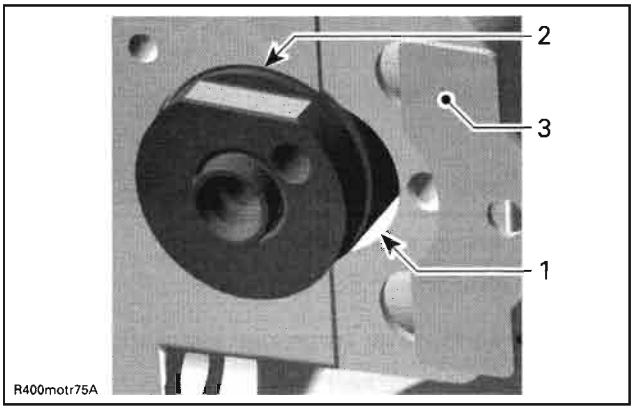


*1. Area for camshaft lobes*
*2. Camshaft*
*3. Camshaft retaining plate*

## Camshaft Inspection

Check each lobe and bearing journal of camshaft for scoring, scuffing, cracks or other signs of wear.

Measure camshaft journal diameter and lobe height using a micrometer.

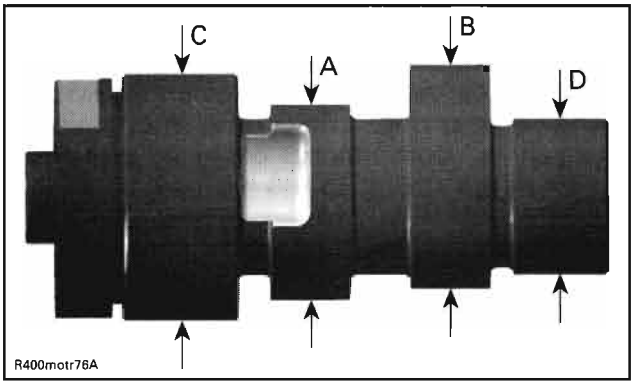


*A. Camshaft lobe (exhaust valves)*
*B. Camshaft lobe (intake valves)*
*C. Camshaft journal (timing chain side)*
*D. Camshaft journal (spark plug side)*

| V490 | |
|---|---|
| **CAMSHAFT LOBE (exhaust)** | |
| NEW | 31.730 to 31.930 mm (1.2492 to 1.2571 in) |
| SERVICE LIMIT | 31.710 mm (1.2484 in) |
| **CAMSHAFT LOBE (intake)** | |
| NEW | 31.830 to 32.030 mm (1.2531 to 1.2610 in) |
| SERVICE LIMIT | 31.810 mm (1.2524 in) |

| V660/V810 | |
|---|---|
| **CAMSHAFT LOBE (exhaust)** | |
| NEW | 31.940 to 32.140 mm (1.2575 to 1.2654 in) |
| SERVICE LIMIT | 31.920 mm (1.2567 in) |
| **CAMSHAFT LOBE (intake)** | |
| NEW | 32.110 to 32.310 mm (1.2642 to 1.2721 in) |
| SERVICE LIMIT | 32.090 mm (1.2634 in) |

| ALL ENGINES | |
|---|---|
| **CAMSHAFT JOURNAL (timing chain side)** | |
| NEW | 34.959 to 34.975 mm (1.3763 to 1.3770 in) |
| SERVICE LIMIT | 34.950 mm (1.3760 in) |
| **CAMSHAFT JOURNAL (spark plug side)** | |
| NEW | 21.959 to 21.980 mm (.8645 to .8654 in) |
| SERVICE LIMIT | 21.950 mm (.8642 in) |

Measure clearance between both ends of camshaft and cylinder head.

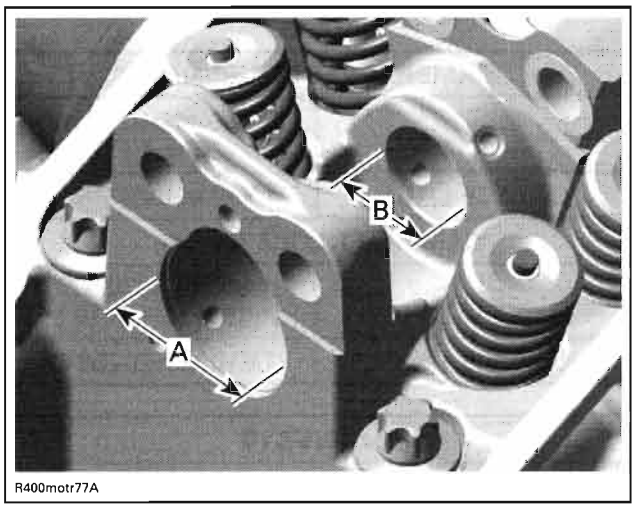


*A. Camshaft bearing (timing chain side)*
*B. Camshaft bearing (spark plug side)*

| ALL ENGINES | |
|---|---|
| **CAMSHAFT BEARING (timing chain side)** | |
| NEW | 35.000 to 35.025 mm (1.3780 to 1.3789 in) |
| SERVICE LIMIT | 35.040 mm (1.3795 in) |
| **CAMSHAFT BEARING (spark plug side)** | |
| NEW | 22.000 to 22.021 mm (.8661 to .8670 in) |
| SERVICE LIMIT | 22.040 mm (.8677 in) |

Replace parts that are not within specifications.

## Camshaft Installation

For installation, reverse the removal procedure. Pay attention to the following details.

**CAUTION: The camshafts are not identical in design. Do not invert the camshafts during assembly. Any mix-up of the components will lead to engine damage.**

Place the camshaft retaining plate in the slot of the camshaft.

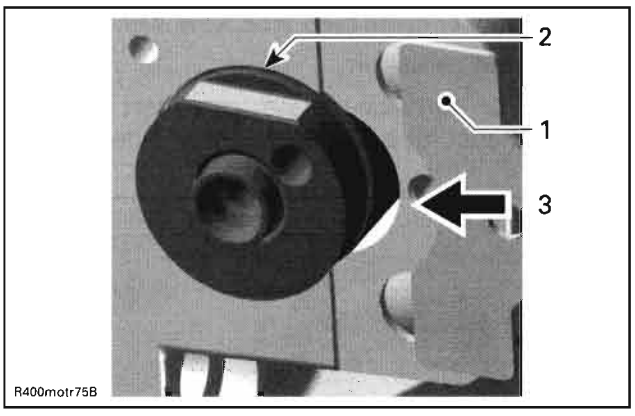


*1. Camshaft retaining plate position*
*2. Slot retaining camshaft*
*3. Direction of movement*

For other parts, refer to proper installation procedure.

# VALVE SPRING

## Valve Spring Removal

Remove rocker arms (see *ROCKER ARM* above).

Remove cylinder head (see *CYLINDER HEAD* above).

Compress valve spring **no. 6**; use valve spring compressor clamp (P/N 529 035 724) and valve spring compressor cup (P/N 529 035 764).

**⚠ WARNING**

**Always wear safety glasses when disassembling valve springs. Be careful when unlocking valves. Components could fly away because of the strong spring preload.**

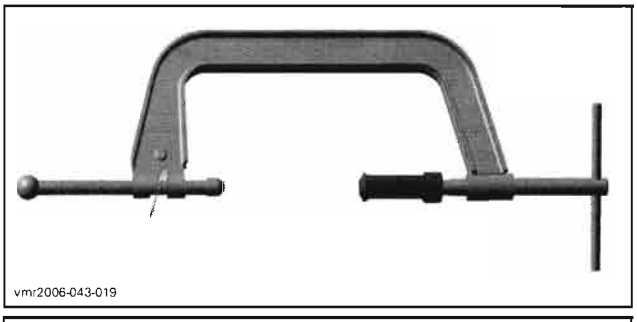


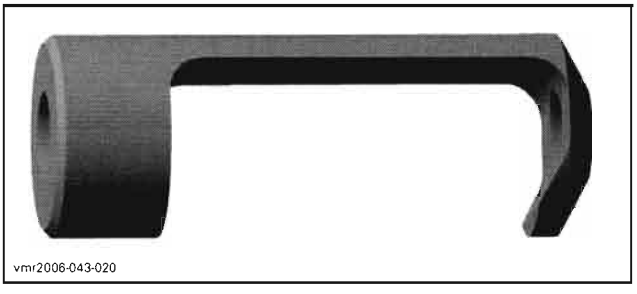

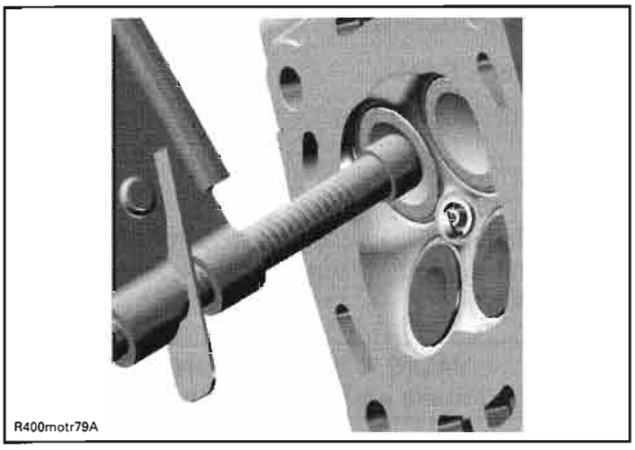


*LOCATE VALVE SPRING COMPRESSOR CLAMP IN CENTER OF THE VALVE*

Remove valve cotters.

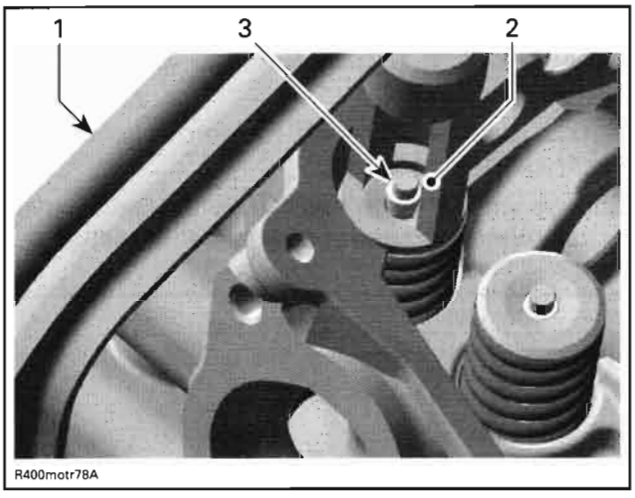


1. *Valve spring compressor clamp*
2. *Valve spring compressor cup*
3. *Valve cotter*

Withdraw valve spring compressor, valve spring retainer **no. 7** and valve spring **no. 6**.

## Valve Spring Inspection

Check valve spring for visible damages. If so, replace valve spring.

Check valve spring for free length and straightness.

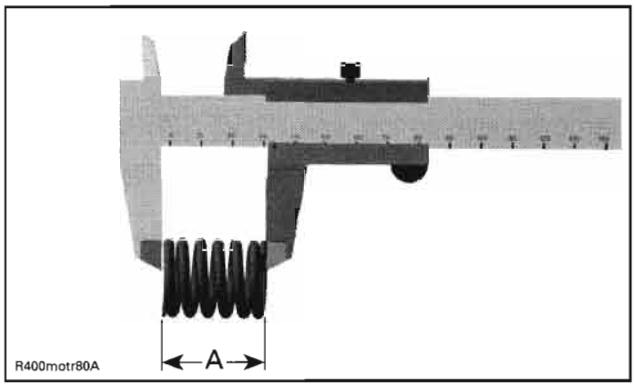


*A. Valve spring length*

| VALVE SPRING FREE LENGTH | |
|---|---|
| NOMINAL NEW | 40.81 mm (1.607 in) |
| SERVICE LIMIT | 39.00 mm (1.535 in) |

Replace valves springs if not within specifications.

## Valve Spring Installation

For installation, reverse the removal procedure. Pay attention to the following details.

Colored area of the valve spring must be placed on top.

To ease installation of cotters, apply oil or grease on them so that they remain in place while releasing the spring.

**NOTE:** Valve cotter must be properly engaged in valve stem grooves.

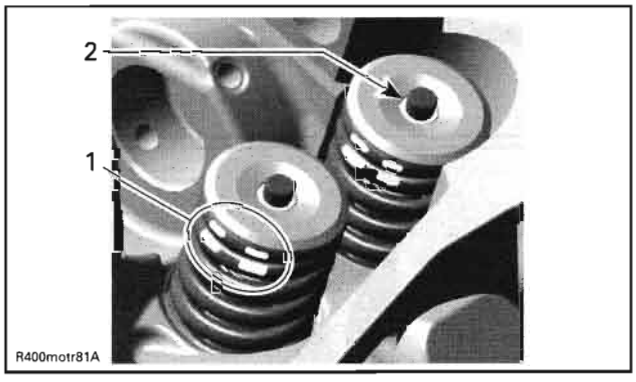


1. *Position of the valve spring*
2. *Valve cotter*

After spring is installed, ensure it is properly locked by tapping on valve stem end with a soft hammer so that valve opens and closes a few times.

**CAUTION: An improperly locked valve spring will cause engine damage.**

# VALVE

## Valve Removal

Remove valve spring, see *VALVE SPRING* above.

Push valve stem, then pull valves (intake and exhaust) out of valve guide.

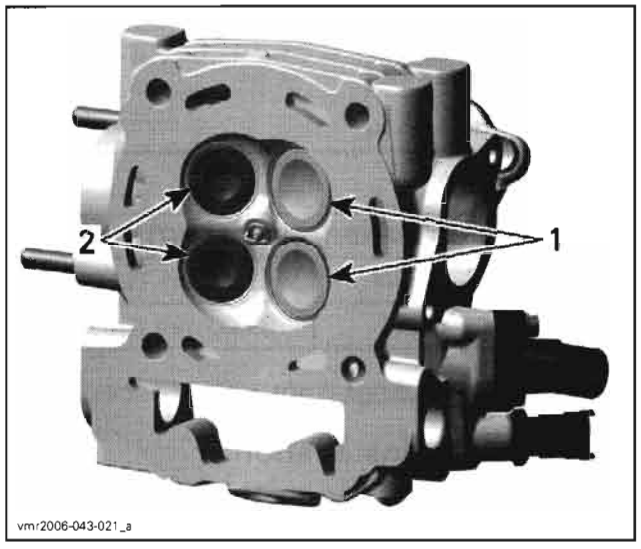


*1. Intake valves 31 mm*
*2. Exhaust valves 27 mm*

Remove valve stem seal **no. 8** with Snap-on pliers (P/N YA 8230) and discard it.

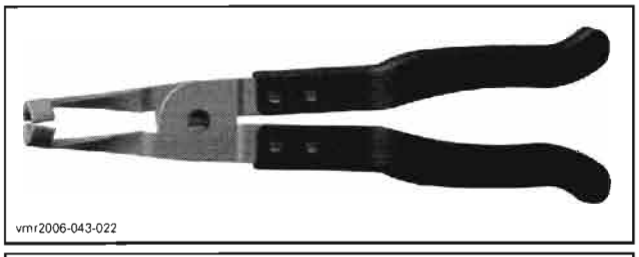

## Valve Inspection

### Valve Stem Seal

Always install new seals whenever valves are removed.

### Valve

Inspect valve surface, check for abnormal stem wear and bending. If out of specification, replace by a new one.

| VALVE OUT OF ROUND (intake and exhaust valves) | |
|---|---|
| NEW | 0.005 mm (.0002 in) |
| SERVICE LIMIT | 0.06 mm (.0024 in) |

### Valve Stem and Valve Guide Clearance

Measure valve stem and valve guide in three places using a micrometer and a small bore gauge.

NOTE: Clean valve guide to remove carbon deposits before measuring.

Change valve if valve stem is out of specification or has other damages such as wear or friction surface.

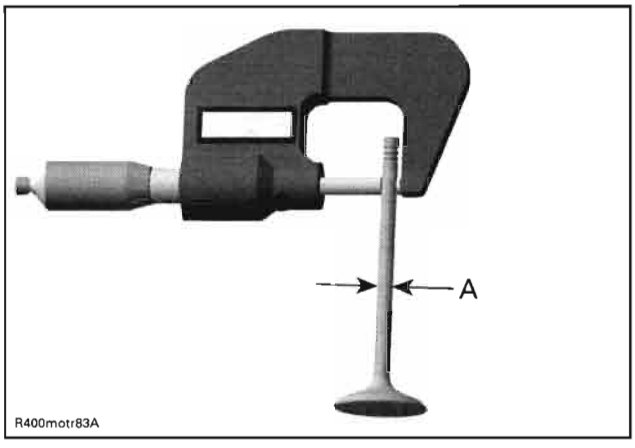


*A. Valve stem diameter*

| VALVE STEM DIAMETER | |
|---|---|
| **EXHAUST VALVE** | |
| NEW | 4.956 to 4.970 mm (.1951 to .1957 in) |
| SERVICE LIMIT | 4.930 mm (.1941 in) |
| **INTAKE VALVE** | |
| NEW | 4.966 to 4.980 mm (.1955 to .1960 in) |
| SERVICE LIMIT | 4.930 mm (.1941 in) |

Replace valve guide out of cylinder head if valve guide is out of specification or has other damages such as wear or friction surface (see *VALVE GUIDE PROCEDURE* below).

| VALVE GUIDE DIAMETER (intake and exhaust valves) | |
|---|---|
| NEW | 4.998 to 5.018 mm (.1968 to .1976 in) |
| SERVICE LIMIT | 5.050 mm (.1988 in) |

### Valve Face and Seat

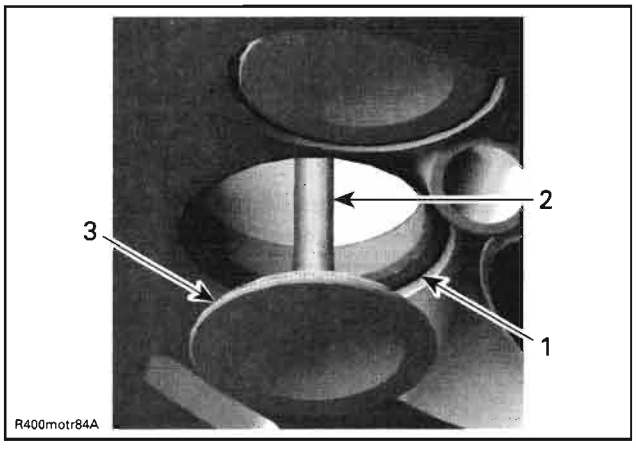


1. *Valve seat*
2. *Exhaust valve contaminated area*
3. *Valve face (contact surface to valve seat)*

Check valve face and seat for burning or pittings and replace valve or cylinder head if there are signs of damage.

Ensure to seat valves properly. Apply some lapping compound to valve face and work valve on its seat with a lapping tool (see *VALVE GUIDE PROCEDURE* below).

Measure valve face contact width.

**NOTE:** The location of contact area should be in center of valve seat.

Measure valve seat width using a caliper.

| VALVE SEAT CONTACT WIDTH | |
|---|---|
| **EXHAUST VALVE** | |
| NEW | 1.25 to 1.55 mm (.049 to .061 in) |
| SERVICE LIMIT | 2.00 mm (.078 in) |
| **INTAKE VALVE** | |
| NEW | 1.05 to 1.35 mm (.041 to .053 in) |
| SERVICE LIMIT | 1.80 mm (.070 in) |

If valve seat contact width is too wide or has dark spots, replace the cylinder head.

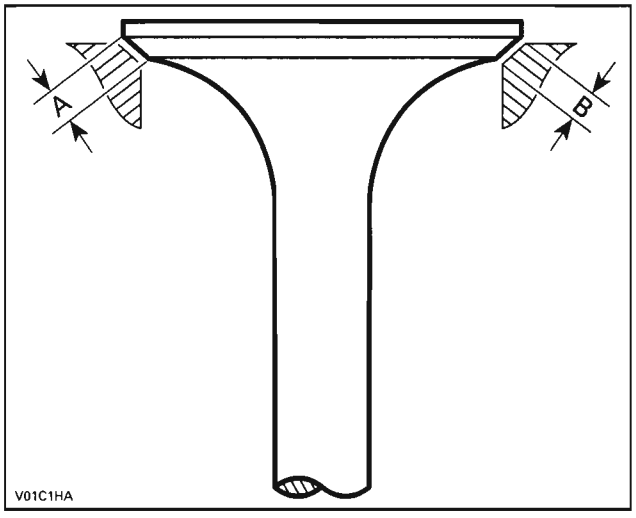


*A. Valve face contact width*
*B. Valve seat contact width*

## Valve Installation

For installation, reverse the removal procedure. Pay attention to the following details.

Install a **NEW** valve stem seal. Make sure thrust washer is installed before installing seal.

Apply engine oil on valve stem and install it.

**CAUTION: Be careful when valve stem is passed through sealing lips of valve stem seal.**

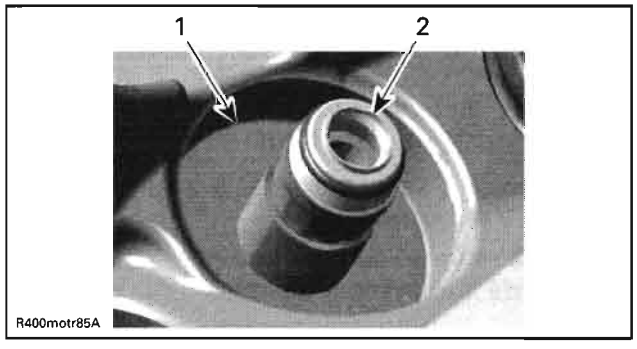


1. *Thrust washer*
2. *Sealing lips of valve stem seal*

To ease installation of cotters, apply oil or grease on them so that they remain in place while releasing the spring.

After spring is installed, ensure it is properly locked by tapping on valve stem end with a soft hammer so that valve opens and closes a few times.

**CAUTION: An improperly locked valve spring will cause engine damage.**

# VALVE GUIDE

## Valve Guide Removal

Remove cylinder head (see *CYLINDER HEAD* above).

Remove valves (see *VALVE* above).

NOTE: Clean valve guide area from contamination before removal.

Using the valve guide remover (P/N 529 035 924) and a hammer, drive the valve guide out of cylinder head.

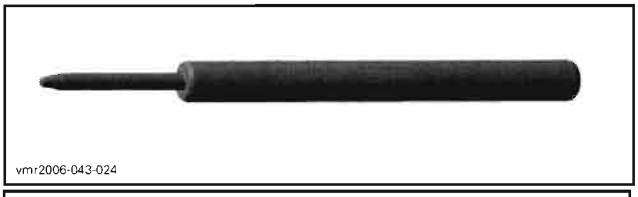


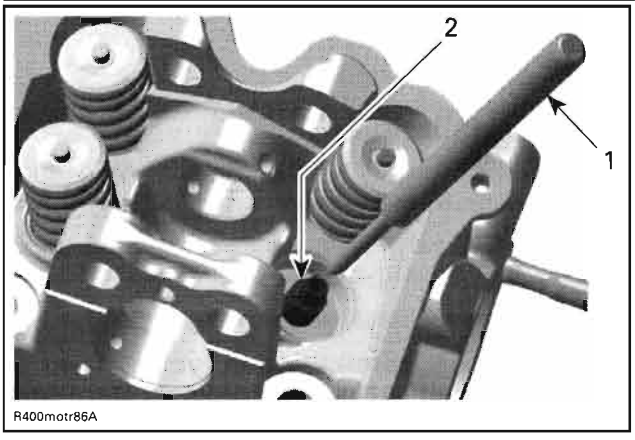


1. *Valve guide remover*
2. *Valve guide*

## Valve Guide Inspection

Always replace valve stem seals whenever valve guides are removed.

Clean the valve guide bore before reinstalling the valve guide into cylinder head.

## Valve Guide Installation

For installation, reverse the removal procedure. Pay attention to the following details.

Use the valve guide installer (P/N 529 035 853) to install valve guide.

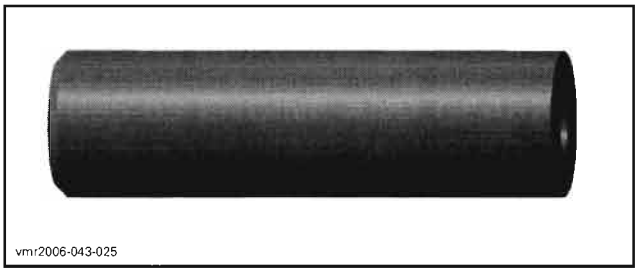


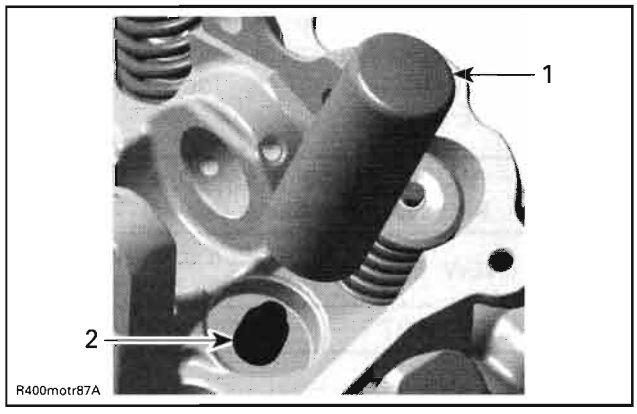


1. *Valve guide installer*
2. *Valve guide*

NOTE: Apply Loctite 767 (antiseize lubricant) (P/N 293 800 070) on valve guide prior to install it into the cylinder head.

**CAUTION: Push valve guide in the cold cylinder head as per following illustration.**

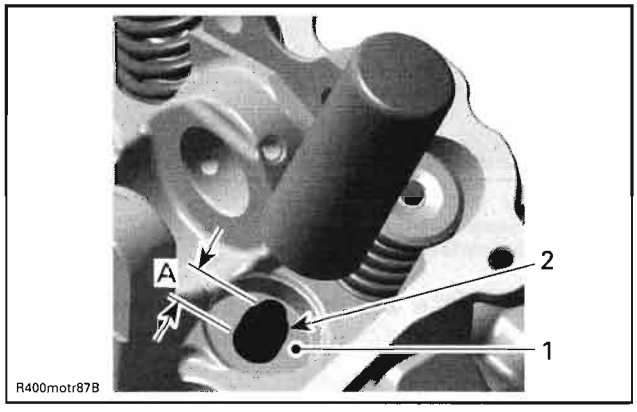


1. *Thrust surface of cylinder head*
2. *Valve guide*

A. *Measurement from thrust surface to valve guide top*

| VALVE GUIDE (measurement "A") | |
|---|---|
| NEW | 14.00 to 14.40 mm (.5512 to .5669 in) |

Valve guide to be adjusted in diameter by using a reamer.

| VALVE GUIDE DIAMETER (intake and exhaust valves) | |
|---|---|
| NEW | 4.998 to 5.018 mm (.1968 to .1976 in) |

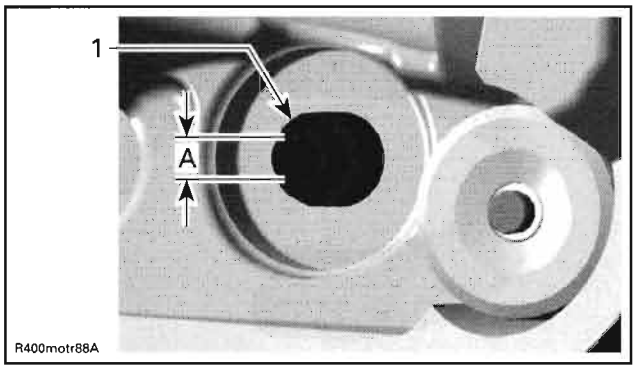


*1. Valve guide*
*A. Valve guide diameter*

**NOTE:** Ensure to turn reamer in the right direction. Use cutting oil and make brakes to clean reamer/valve guide from metal shavings.

Apply some lapping compound to valve face and work valve on its seat with a lapping tool.

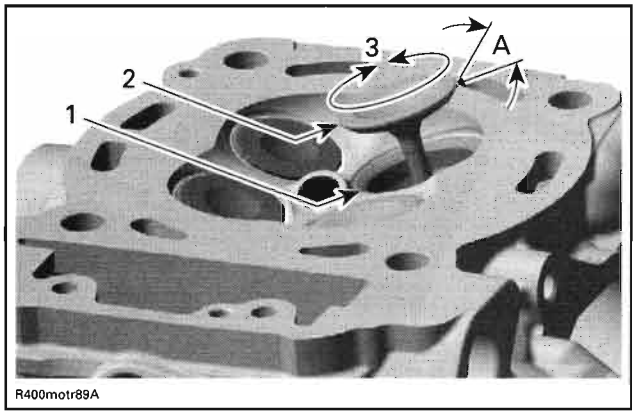


*1. Valve seat*
*2. Valve face (contact surface to valve seat)*
*3. Turn valve while pushing against cylinder head*
*A. Valve seat angle 45°*

**NOTE:** Ensure to seat valves properly. Apply marking paste to ease checking contact pattern.

Repeat procedure until valve seat/valve face fits together.

# CYLINDER

## Cylinder Removal

Remove chain tensioner (see *CHAIN TENSIONER*).

Remove the camshaft timing gear (see *CAMSHAFT TIMING GEAR*).

Remove the cylinder head (see *CYLINDER HEAD*).

Pull cylinder.

Discard cylinder base gaskets.

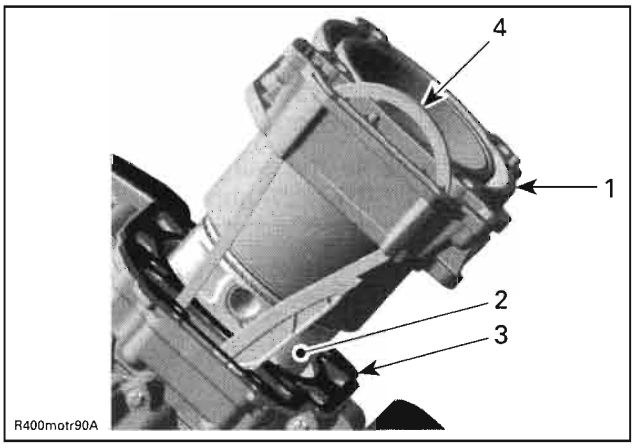


*1. Cylinder*
*2. Piston assembly*
*3. Cylinder base gasket*
*4. Camshaft timing chain*

## Cylinder Inspection

Check cylinder for cracks, scoring and wear ridges on the top and bottom of the cylinder. If so, replace cylinder.

### Cylinder Taper

Measure cylinder bore and if it is out of specifications, replace cylinder and piston rings.

Measure cylinder bore at 3 recommended positions. See the following illustration.

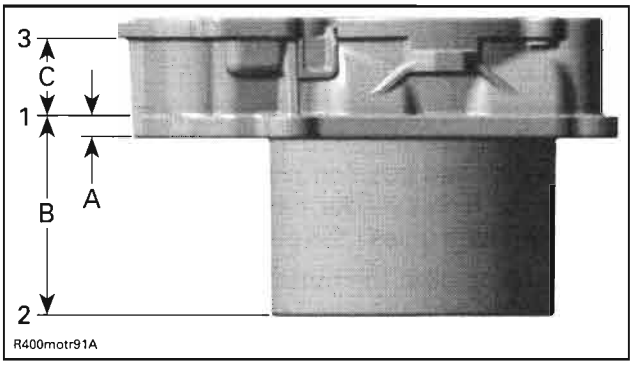


*1. First measuring of diameter*
*2. Second measuring of diameter*
*3. Third measuring of diameter*
*A. 7 mm (.276 in) from cylinder bottom*
*B. 68 mm (2.68 in)*
*C. 32 mm (1.260 in)*

| CYLINDER TAPER IN DIAMETER | |
|---|---|
| NEW (maximum) | 0.038 mm (.0015 in) |
| SERVICE LIMIT | 0.090 mm (.0035 in) |

Distance between measurements should not exceed the service limit mentioned above.

### Cylinder Out of Round

Measure cylinder diameter in piston axis direction from top of cylinder. Take another measurement 90° from first one and compare.

NOTE: Take the same measuring points like described in *CYLINDER TAPER* above.

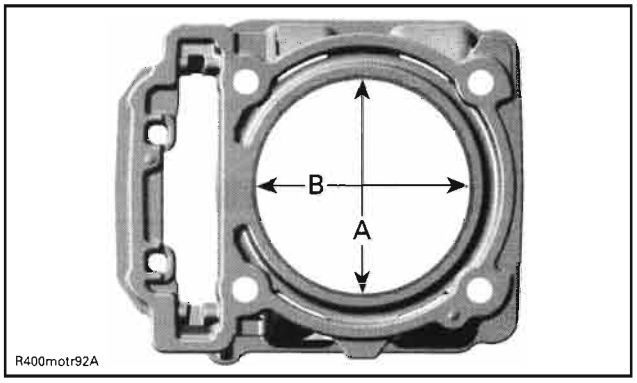


*A. Perpendicular to crankshaft axis*
*B. Parallel to crankshaft axis*

| CYLINDER OUT OF ROUND | |
|---|---|
| NEW (maximum) | 0.015 mm (.0006 in) |
| SERVICE LIMIT | 0.020 mm (.0008 in) |

## Cylinder Installation

For installation, reverse the removal procedure. Pay attention to the following details.

**CAUTION: Always replace cylinder base gasket before installing the cylinder.**

First mount cylinder 2. Then remove the crankshaft locking bolt (P/N 529 035 617). Crank the engine further and position piston 1 at TDC. Mount cylinder 1. The cylinder can not be pushed fully over the piston unless the piston is located at TDC.

Apply engine oil in the bottom area of the cylinder bore and also on the band of the piston ring compressor tool.

| ENGINE | TOOL |
|---|---|
| V490/V660 | Piston ring compressor (P/N 529 035 977) |
| V810 | Piston ring compressor (P/N 529 035 919) |

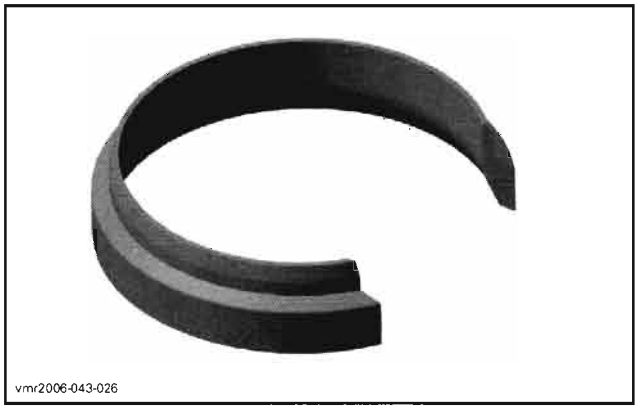


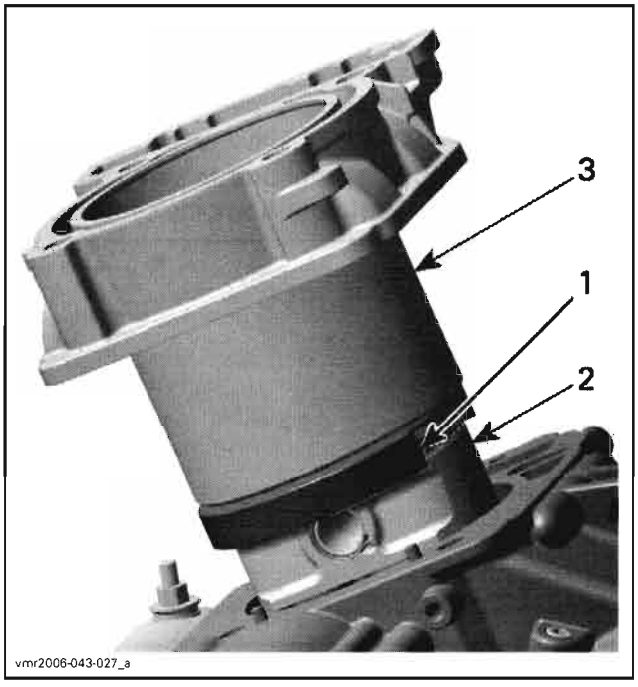


*1. Piston ring compressor tool*
*2. Piston*
*3. Cylinder*

NOTE: Put timing chain through the chain pit then put the cylinder in place.

**CAUTION: Chain guide has to be fixed between cylinder and cylinder head.**

NOTE: After both cylinders are installed, turn crankshaft until piston of cylinder 2 is at TDC ignition and lock crankshaft. Refer to *CAMSHAFT*.

Install cylinder head and the other parts in accordance with the proper installation procedures.

# PISTON

## Piston Removal

Remove cylinder head (see *CYLINDER HEAD* above).

Remove the cylinder (see *CYLINDER* above).

Place a rag under piston and in the area of timing chain compartment.

**⚠ WARNING**

**Piston circlips are spring loaded.**

Remove one piston circlip and discard it.

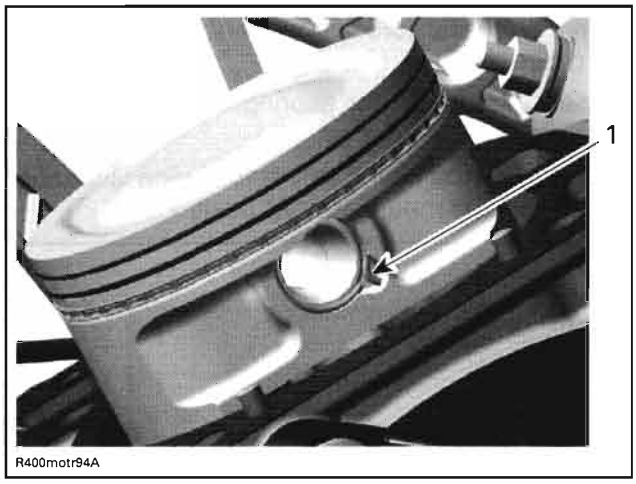


*1. Piston circlip*

NOTE: The removal of both piston circlips is not necessary to remove piston pin.

Push piston pin out of piston.

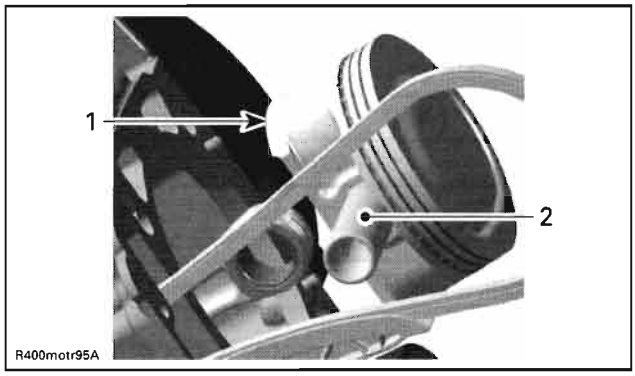


*1. Piston*
*2. Piston pin*

Detach piston from connecting rod.

## Piston Inspection

Inspect piston for scoring, cracking or other damages. Replace piston and piston rings if necessary.

Using a micrometer, measure piston at 8 mm (.315 in) perpendicularly (90°) to piston pin.

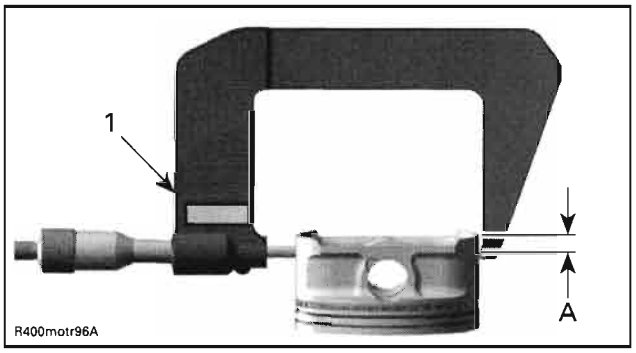


*1. Measuring perpendicularly (90°) to piston pin*
*A. 8 mm (.315 in)*

The measured dimension should be as described in the following tables. If not, replace piston.

| PISTON MEASUREMENT | |
|---|---|
| **V490/V660** | |
| NEW | 81.950 to 81.966 mm (3.2264 to 3.2270 in) |
| SERVICE LIMIT | 81.850 mm (3.2224 in) |
| **V810** | |
| NEW | 90.950 to 90.966 mm (3.5807 to 3.5813 in) |
| SERVICE LIMIT | 90.850 mm (3.577 in) |

### Piston/Cylinder Clearance

Adjust and lock a micrometer to the piston dimension.

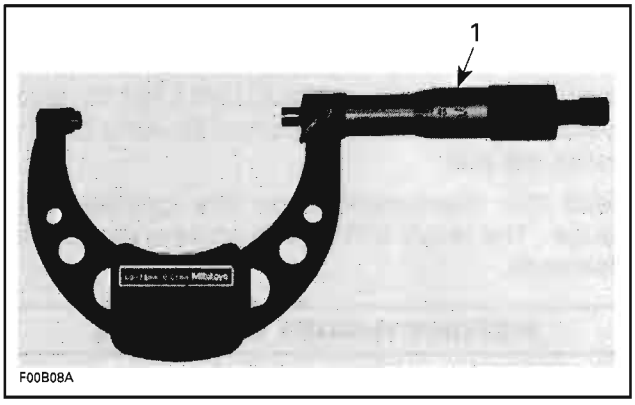


*1. Micrometer set to the piston dimension*

With the micrometer set to the dimension, adjust a cylinder bore gauge to the micrometer dimension and set the indicator to 0 (zero).

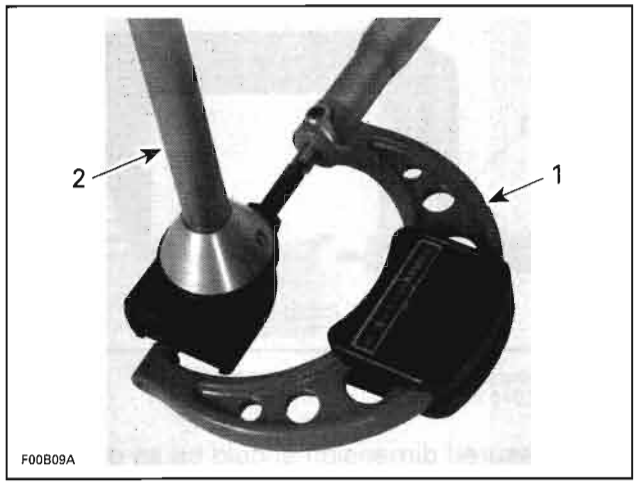


*1. Use the micrometer to set the cylinder bore gauge*
*2. Dial bore gauge*

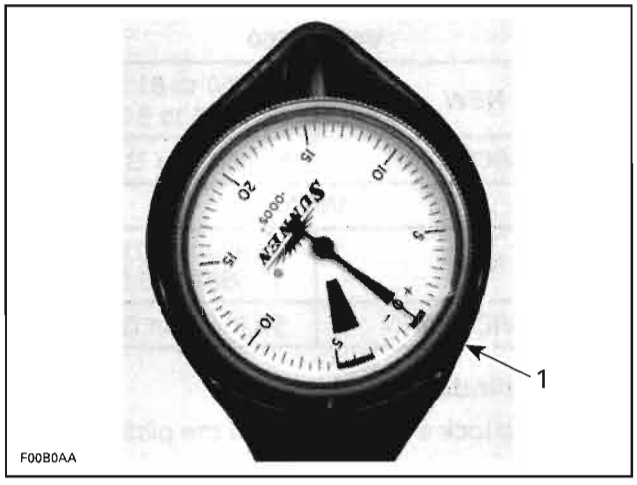


*TYPICAL*
*1. Indicator set to 0 (zero)*

Position the dial bore gauge 20 mm (.787 in) above cylinder base, measuring perpendicularly (90°) to piston pin axis.

Read the measurement on the cylinder bore gauge. The result is the exact piston/cylinder wall clearance.

| PISTON/CYLINDER CLEARANCE | |
|---|---|
| **V490/V660** | |
| NEW | 0.057 to 0.087 mm (.0022 to .0034 in) |
| SERVICE LIMIT | 0.130 mm (.0051 in) |
| **V810** | |
| NEW | 0.027 to 0.057 mm (.0011 to .0022 in) |
| SERVICE LIMIT | 0.100 mm (.0040 in) |

NOTE: Make sure used piston is not worn.

If clearance exceeds specified tolerance, replace piston by a new one and measure piston/cylinder clearance again.

NOTE: Make sure the cylinder bore gauge indicator is set exactly at the same position as with the micrometer, otherwise the reading will be false.

### Connecting Rod/Piston Pin Clearance

Using synthetic abrasive woven, clean piston pin from deposits.

Inspect piston pin for scoring, cracking or other damages.

Measure piston pin. See the following illustration for the proper measurement positions.

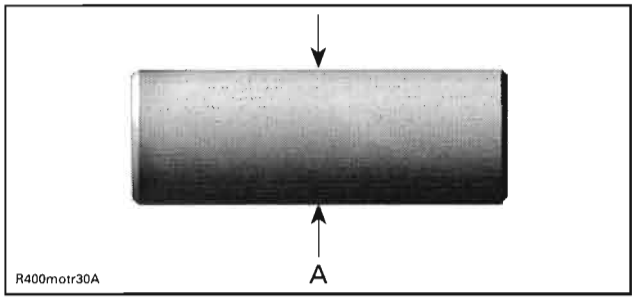


*A. Piston pin diameter*

| PISTON PIN DIAMETER | |
|---|---|
| **V490** | |
| NEW | 17.996 to 18.000 mm (.7085 to .7087 in) |
| SERVICE LIMIT | 17.980 mm (.7079 in) |
| **V660/V810** | |
| NEW | 19.996 to 20.000 mm (.7872 to .7874 in) |
| SERVICE LIMIT | 19.980 mm (.7866 in) |

Replace piston pin if diameter is out of specifications.

Measure inside diameter of connecting rod small end bushing.

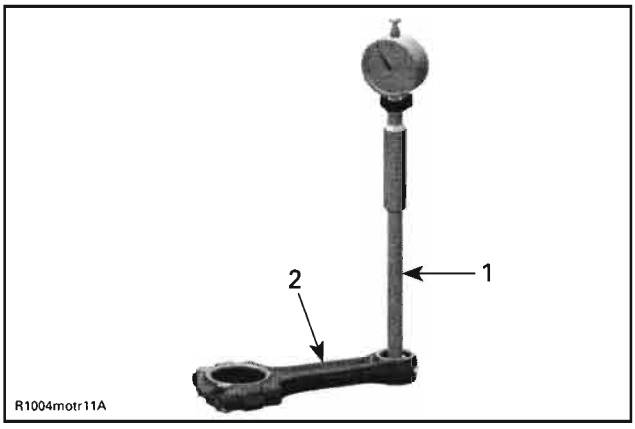


*1. Bore gauge*
*2. Connecting rod*

| CONNECTING ROD SMALL END DIAMETER | |
|---|---|
| **V490** | |
| NEW | 18.010 to 18.020 mm (.7091 to .7095 in) |
| SERVICE LIMIT | 18.060 mm (.7110 in) |
| **V660/V810** | |
| NEW | 20.010 to 20.020 mm (.7878 to .7882 in) |
| SERVICE LIMIT | 20.060 mm (.7898 in) |

Replace connecting rod if diameter of connecting rod small end is out of specifications. Refer to *BOTTOM END* for removal procedure.

Compare measurements to obtain the connecting rod/piston pin clearance.

| CONNECTING ROD/ PISTON PIN CLEARANCE | |
|---|---|
| **ALL ENGINES** | |
| SERVICE LIMIT | 0.080 mm (.0035 in) |

## Piston Installation

For installation, reverse the removal procedure. Pay attention to the following details.

Apply engine oil on the piston pin.

Insert piston pin into piston and connecting rod.

**CAUTION: The mounting direction of the pistons is different between the V490/V660 and the V810.**

### *V490 and V660 Engines*

For each cylinder, install piston with the punched arrow on piston dome is pointing toward the exhaust side.

**Front cylinder:** Mark on top of piston must show to exhaust side.

**Rear cylinder:** Mark on top of piston must show to exhaust side.

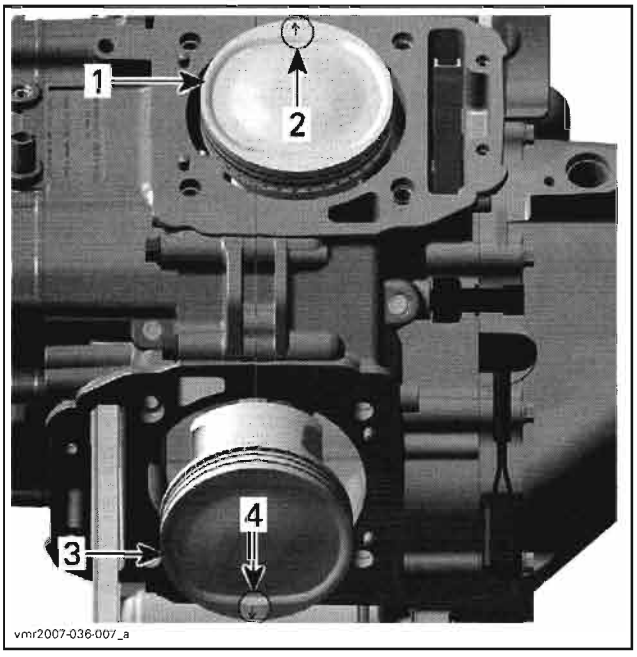


*1. Piston of cylinder 1*
*2. Mark on piston must show to exhaust side of cylinder 1*
*3. Piston of cylinder 2*
*4. Mark on piston must show to exhaust side of cylinder 2*

### *V810 Engines*

For each cylinder, install piston with the punched arrow on piston dome is pointing toward the rear side of the engine.

**Front cylinder:** Mark on top of piston must show to intake side.

**Rear cylinder:** Mark on top of piston must show to exhaust side.

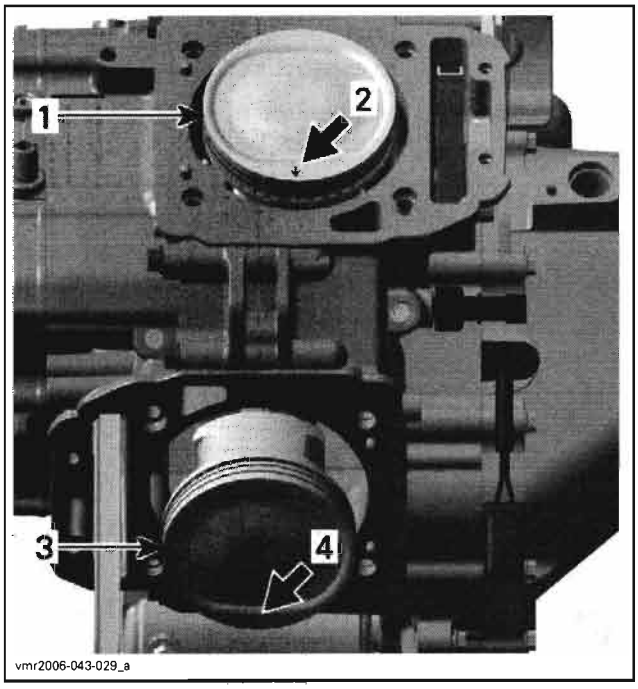


1. *Piston of cylinder 1*
2. *Mark on piston must show to intake side of cylinder 1*
3. *Piston of cylinder 2*
4. *Mark on piston must show to exhaust side of cylinder 2*

Use the piston appropriate circlip installer to assemble the **NEW** piston circlip as per following procedure:

| ENGINE TYPE | TOOL |
|---|---|
| V490 | Circlip installer (P/N 529 036 058) |
| V660 and V810 | Circlip installer (P/N 529 035 921) |

**CAUTION: Always replace disassembled piston circlip(s) by new ones. Place a rag on cylinder base to avoid dropping the circlip inside the engine.**

Place circlip in sleeve as per following illustration.

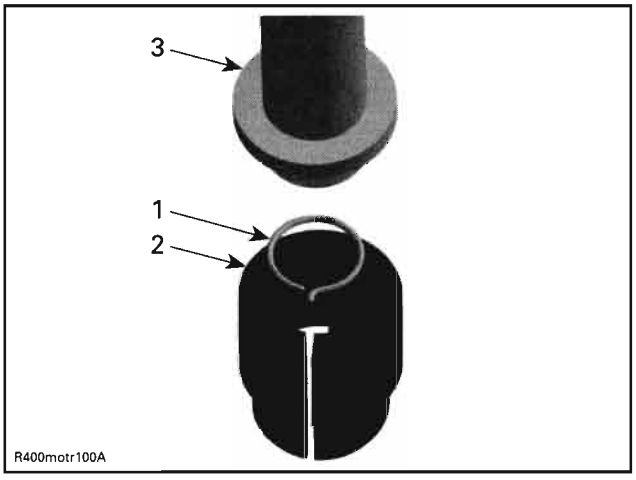


1. *Circlip*
2. *Sleeve*
3. *Assembly jig from piston clip installer*

Push taper side of assembly jig until circlip reaches middle of sleeve.

Align sleeve with piston pin axis and push assembly jig until circlip engages in piston.

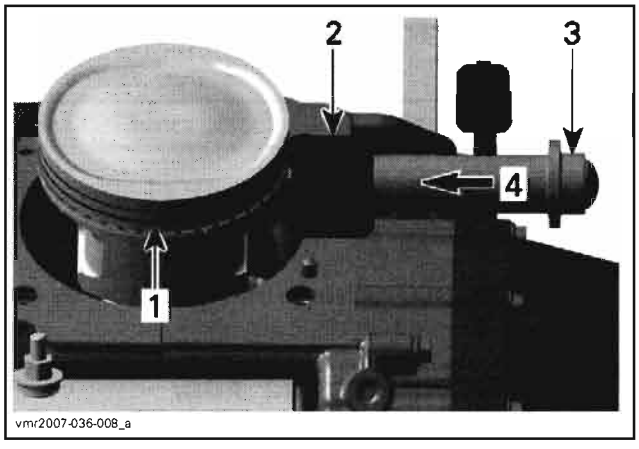


1. *Hold piston while pushing circlip in place*
2. *Sleeve*
3. *Assembly jig*
4. *Direction to push circlip*

**NOTE:** Take care that the hook of the piston circlip is positioned properly.

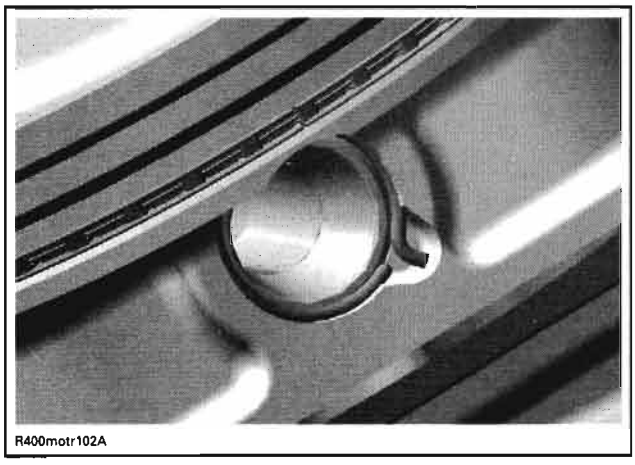


*CORRECT POSITION OF THE PISTON CIRCLIP*

# PISTON RINGS

## Ring Removal

Remove the piston (see *PISTON* above).

## Ring Inspection

### Ring/Piston Groove Clearance

Using a feeler gauge measure each ring/piston groove clearance. If the clearance is too large, the piston and the piston rings should be replaced.

| RING/PISTON GROOVE CLEARANCE | |
|---|---|
| **UPPER COMPRESSION RING** | |
| NEW | 0.030 to 0.070 mm (.0012 to .0028 in) |
| SERVICE LIMIT | 0.150 mm (.0059 in) |
| **LOWER COMPRESSION RING** | |
| NEW | 0.020 to 0.060 mm (.0008 to .0024 in) |
| SERVICE LIMIT | 0.150 mm (.0059 in) |
| **OIL SCRAPER RING** | |
| NEW | 0.010 to 0.180 mm (.0004 to .0071 in) |
| SERVICE LIMIT | 0.250 mm (.0098 in) |

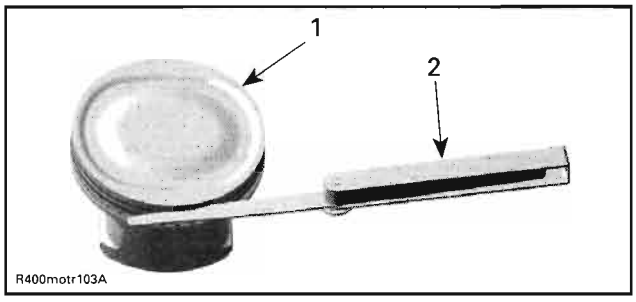


1. *Piston*
2. *Feeler gauge*

### Ring End Gap

| RING END GAP | |
|---|---|
| **UPPER COMPRESSION RING** | |
| NEW | 0.20 to 0.40 mm (.008 to .016 in) |
| SERVICE LIMIT | 1.50 mm (.059 in) |
| **LOWER COMPRESSION RING** | |
| NEW | 0.20 to 0.40 mm (.008 to .016 in) |
| SERVICE LIMIT | 1.50 mm (.059 in) |
| **OIL SCRAPER RING** | |
| NEW | 0.20 to 0.70 mm (.008 to .028 in) |
| SERVICE LIMIT | 1.50 mm (.059 in) |

To measure the ring end gap place the ring in the cylinder in the area of 8 to 16 mm (5/16 to 5/8 in) from top of cylinder.

NOTE: In order to correctly position the ring in the cylinder, use piston as a pusher.

Using a feeler gauge, check ring end gap. Replace ring if gap exceeds above described specified tolerance.

## Ring Installation

For installation, reverse the removal procedure. Pay attention to the following details.

NOTE: First install spring and then rings of oil scraper ring.

Install the oil scraper ring first, then the lower compression ring with the word "N and TOP " facing up, then the upper compression ring with the word "N and TOP" facing up.

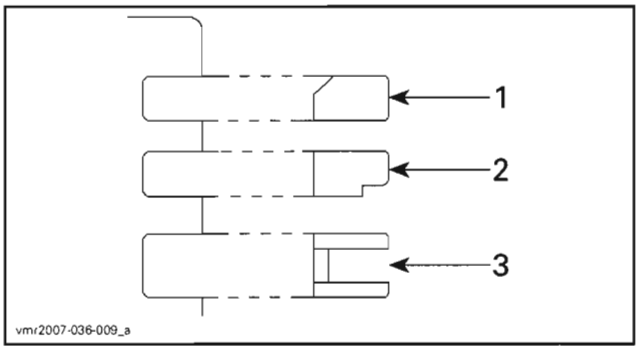


*1. Upper compression ring*
*2. Lower compression ring*
*3. Oil scraper ring*

**CAUTION:** Ensure that top and second rings are not interchanged.

NOTE: Use a ring expander to prevent breakage during installation. The oil ring must be installed by hand.

Check that rings rotate smoothly after installation.

Space the piston ring end gaps 120° apart and do not align the gaps with the piston pin bore or the thrust side axis.

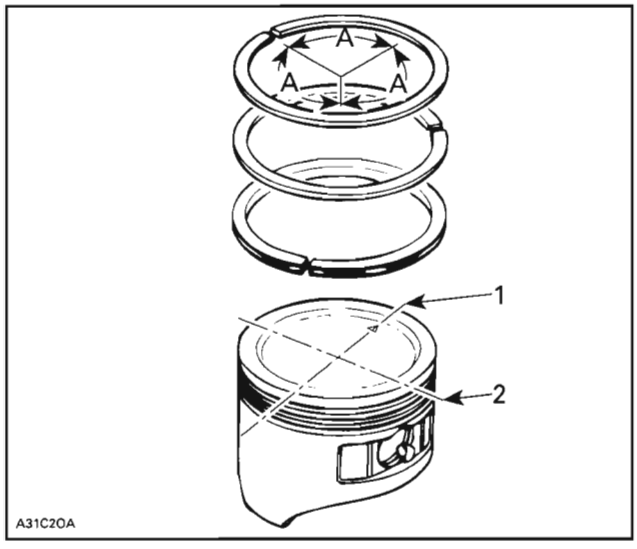


*1. DO NOT align ring gap with piston thrust side axis*
*2. DO NOT align ring gap with piston pin bore axis*
*A. 120°*

# BOTTOM END

## SERVICE TOOLS

| Description | Part Number | Page |
|---|---|---|
| crankshaft locking bolt | 529 035 617 | 129 |
| plain bearing remover/installer | 529 035 917 | 126 |
| oil seal installer | 529 036 028 | 118 |
| oil seal protection sleeve | 529 036 029 | 118 |
| crankcase support sleeve | 529 036 031 | 126 |
| plain bearing remover/installer | 529 036 032 | 120–121 |
| oil seal installer | 529 036 033 | 119 |

## SERVICE PRODUCTS

| Description | Part Number | Page |
|---|---|---|
| Loctite 5910 | 293 800 081 | 118 |
| Loctite chisel | 413 708 500 | 118 |

# ENGINE DRIVE SHAFT

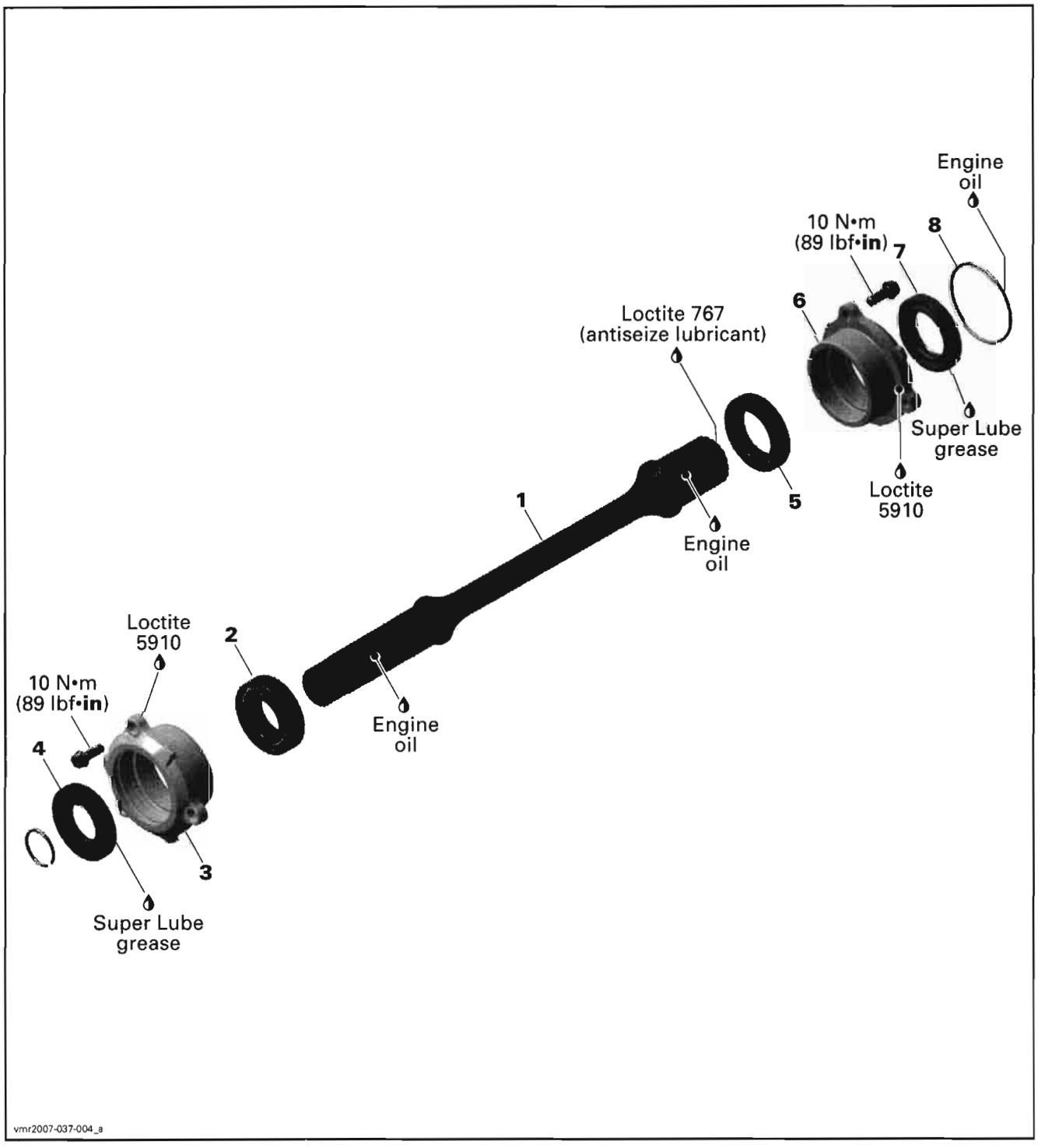

# CRANKCASE AND PTO COVER

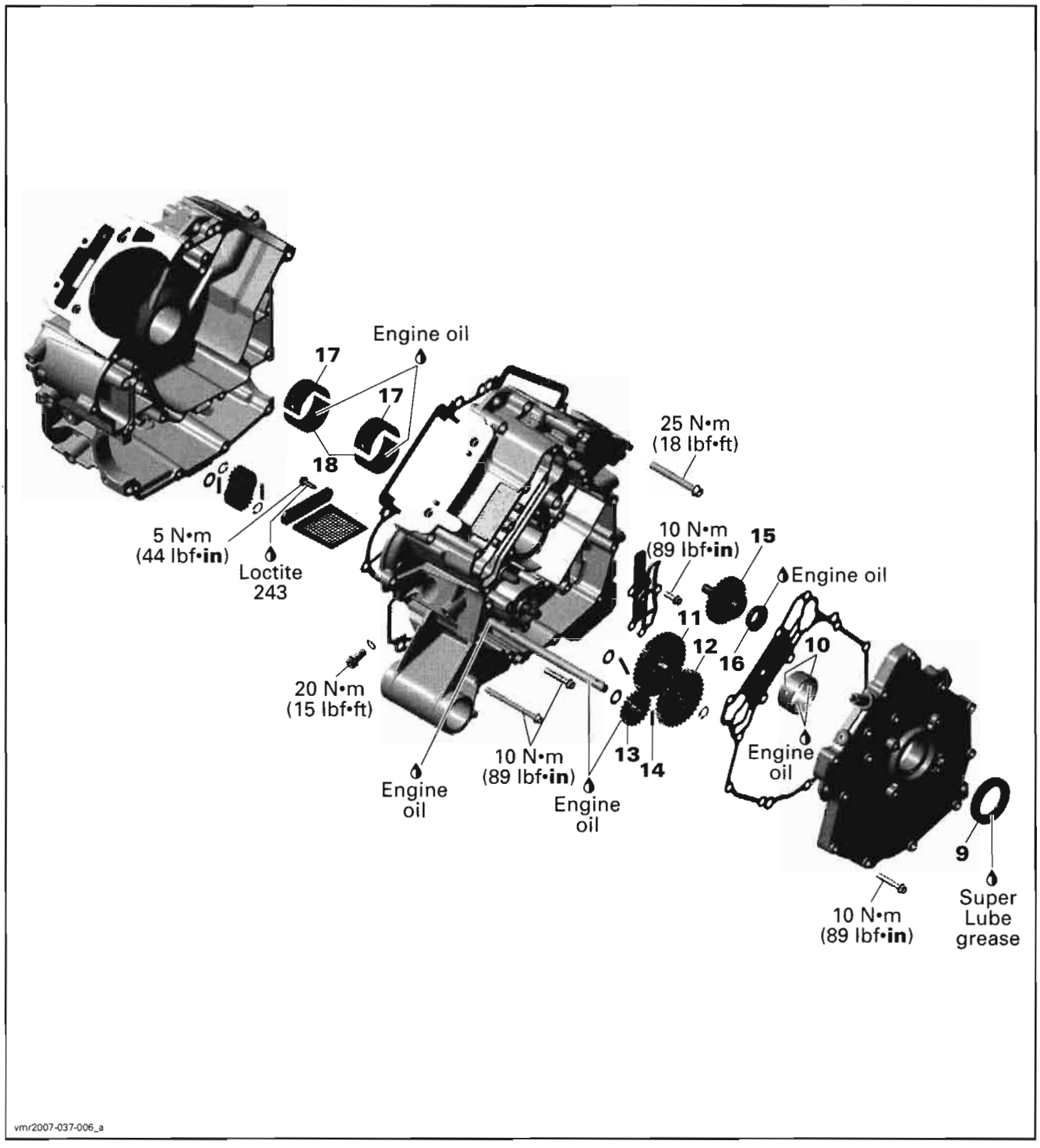

# CRANKSHAFT

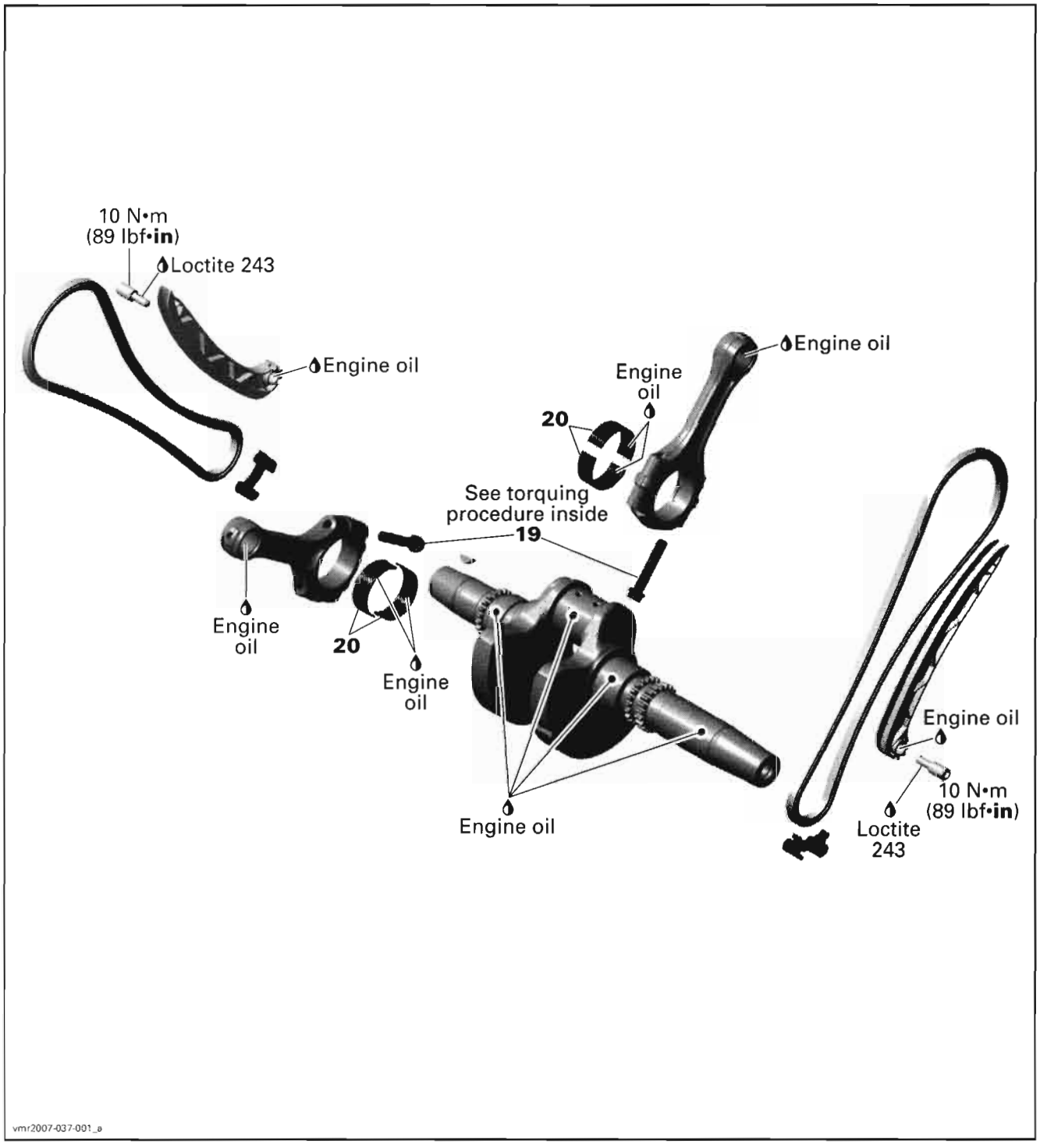
10 N•m
(89 lbf•in)
Loctite 243
Engine oil
Engine oil
Engine oil
20
See torquing procedure inside
19
Engine oil
20
Engine oil
Engine oil
Engine oil
10 N•m
(89 lbf•in)
Loctite 243
vmr2007-037-001_a

# GENERAL

During assembly/installation, use the torque values and service products as shown in the exploded view(s).

Clean threads before applying a threadlocker. Refer to *SELF-LOCKING FASTENERS* and *LOCTITE APPLICATION* in *INTRODUCTION* section.

**⚠ WARNING**

**Torque wrench tightening specifications must strictly be adhered to.**
**Locking devices (e.g.: locking tabs, elastic stop nuts, self-locking fasteners, cotter pin, etc.) must be replaced with new ones where specified.**

# PROCEDURES

## ENGINE DRIVE SHAFT

### Oil Seal Removal

To remove the front oil seal **no. 4**, no need to remove the engine. Lift the front of vehicle to avoid engine oil spillage. Separate the front propeller shaft from engine, refer to *FRONT DRIVE*.

For the rear oil seal **no. 7** the gearbox removal is necessary.

For oil seal installation, refer to *ENGINE DRIVE SHAFT INSTALLATION*.

### Engine Drive Shaft Removal

**NOTE:** The engine drive shaft **no. 1** is located inside the engine and comes through it to drive the front differential.

Separate gearbox from engine.

To the rear of engine, remove the bearing cover and its O-ring.

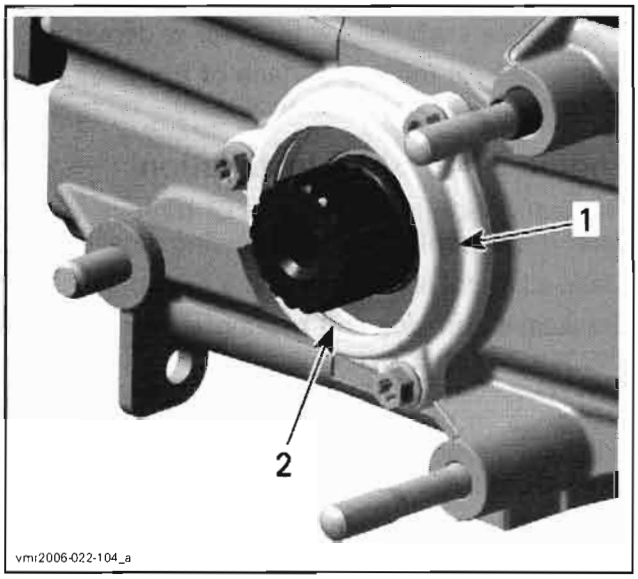


1. *Bearing cover*
2. *O-ring*

Pull out drive shaft **no. 1**.

**CAUTION:** Check ends of the circlip for sharp edges or burr before removing the drive shaft, to avoid damaging the oil seal.

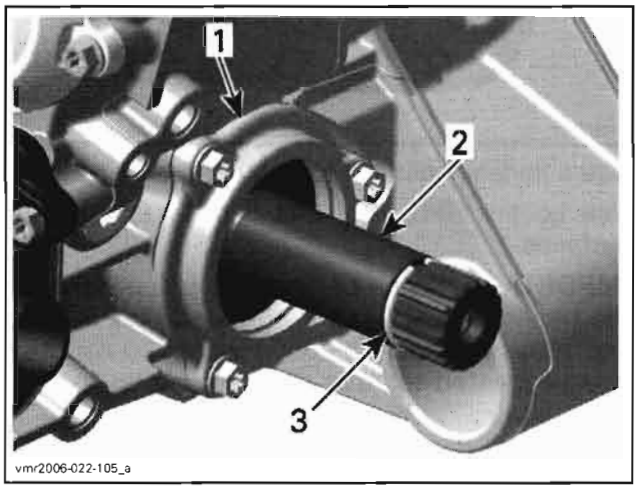


1. *Bearing cover gearbox side*
2. *Drive shaft*
3. *Circlip*

Remove the other bearing cover **no. 3** at the front of engine.

### Engine Drive Shaft Inspection

Replace oil seals **no. 4** and **no. 7** and/or O-ring **no. 8** if they are brittle, hard or damaged.

Check drive shaft bearings **no. 2** and **no. 5** for contamination and/or metal shavings. Check if bearings turn freely and smoothly. Replace if necessary.

Check drive shaft for cracks, bend, pitting or other visible damages.

Check drive shaft splines for wear or damages.

Check oil seal running surface of the drive shaft for scratches. Replace if necessary.

## Engine Drive Shaft Installation

The installation is the reverse of removal procedure. Pay attention to the following details.

Clean all metal components in a solvent.

Crankcase surfaces and bearing covers are best cleaned using a combination of Loctite chisel (P/N 413 708 500) and a brass brush. Brush a first pass in one direction then make the final brushing perpendicularly (90°) to the first pass cross (hatch).

**CAUTION: Do not wipe with rags. Use a new clean hand towel only.**

Then install drive shaft oil seals **no. 4** and **no. 7** with the oil seal installer (P/N 529 036 028).

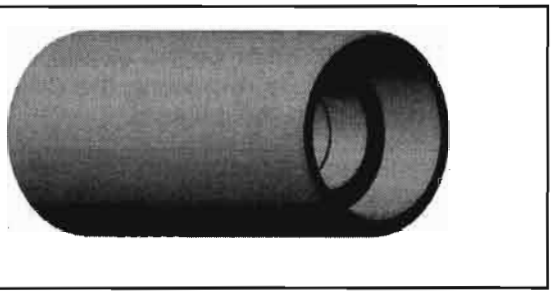
529036028

Use a suitable installer for installing bearings.

Use Loctite 5910 (P/N 293 800 081) on mating surfaces.

**IMPORTANT:** When beginning the application of the bearing cover sealant, the assembly and the first torquing should be done within 10 minutes. It is suggested to have all you need on hand to save time.

Use a plexiglass plate and apply some sealant on it. Use a soft rubber roller (50 - 75 mm (2 - 3 in)), available in arts products suppliers for printing, and roll the sealant to get a thin uniform coat on the plate (spread as necessary). When ready, apply the sealant on bearing cover surfaces.

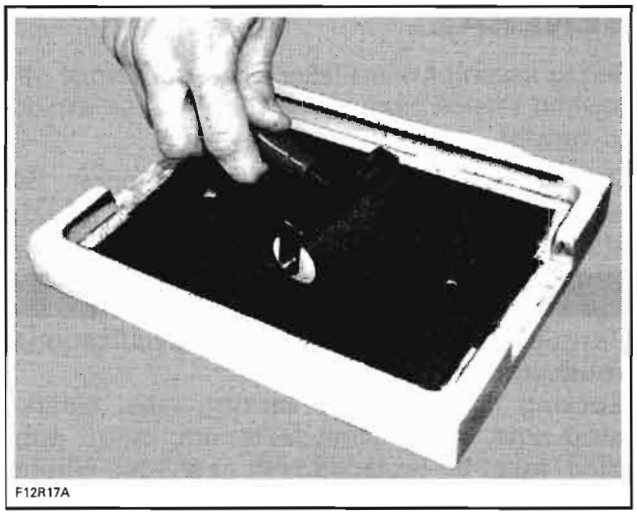
F12R17A

Do not apply in excess as it will spread out inside crankcase.

**NOTE:** It is recommended to apply this specific sealant as described here to get a uniform application without lumps. If you do not use the roller method, you may use your finger to uniformly distribute the sealant (using a finger will not affect the adhesion).

To install bearing cover **no. 6**, fit oil seal protection sleeve (P/N 529 036 029) into oil seal.

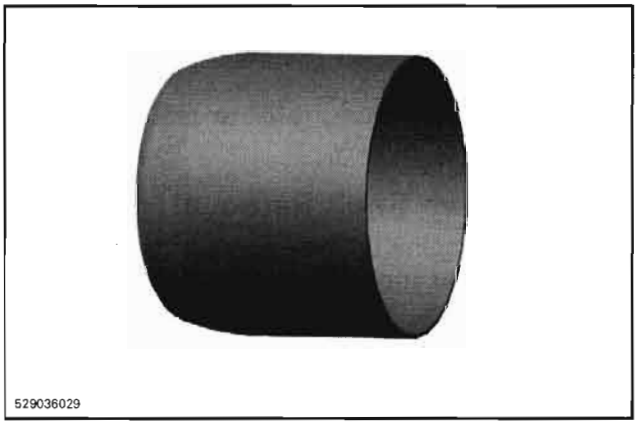
529036029

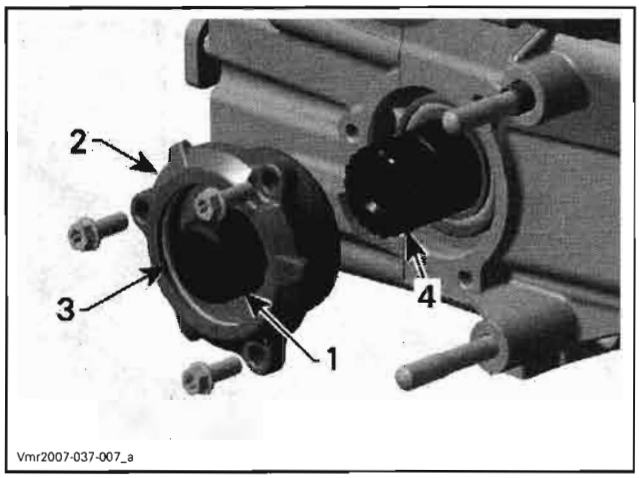


1. *Protection sleeve*
2. *Bearing cover*
3. *O-ring*
4. *Drive shaft*

Install bearing cover then place the O-ring **no. 8** inside cover.

Finally check for axial play of the drive shaft.

# PTO COVER OIL SEAL

To replace oil seal **no. 9** it is not necessary to remove engine from vehicle.

## PTO Oil Seal Removal

Remove CVT cover, drive and driven pulleys and air guide.

Remove oil seal **no. 9** with a small flat screwdriver.

**CAUTION: Avoid scoring surfaces with tool.**

## PTO Oil Seal Inspection

Check oil seal running surface of crankshaft PTO side for grooves. Replace if necessary.

## PTO Oil Seal Installation

The installation is the reverse of the removal procedure.

Pay attention to the following details.

**CAUTION: Oil seal must be installed with sealing lip toward the engine.**

Push oil seal in place by using the oil seal installer (P/N 529 036 033).

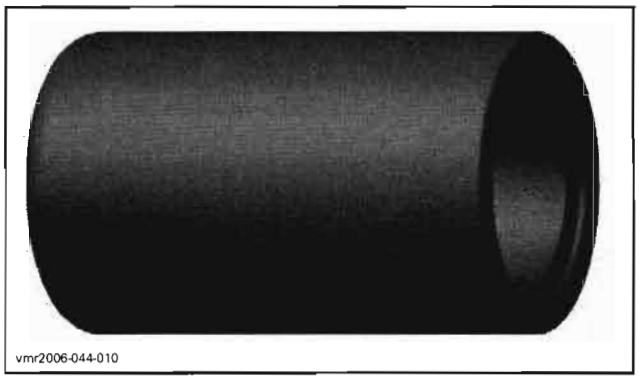


*OIL SEAL INSTALLER*

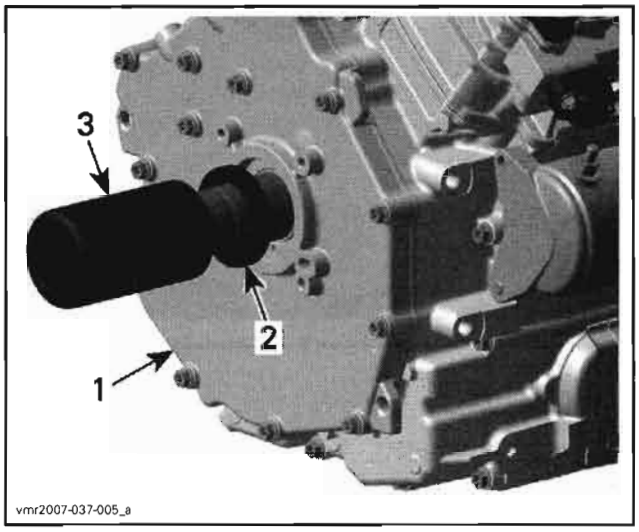


1. *PTO cover*
2. *Oil seal*
3. *Oil seal installer*

# PTO COVER

## PTO Cover Removal

Remove:

- CVT and air guide. Refer to *TRANSMISSION*)
- disconnect vent hose
- PTO cover screws and pull PTO cover.

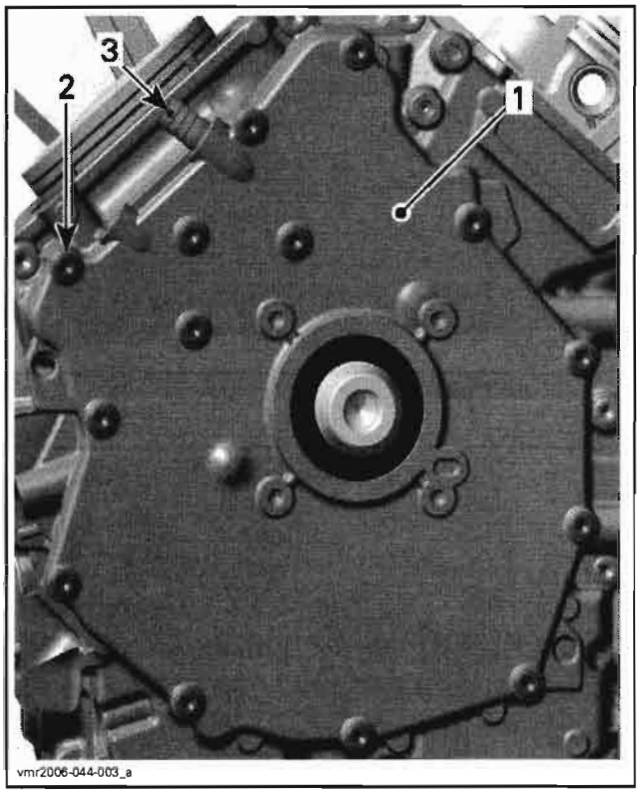


1. *PTO cover*
2. *PTO cover screws*
3. *Vent hose nipple*

## PTO Cover Inspection

Check the PTO cover for cracks or other damage.

Replace PTO cover if damaged.

Clean oil breather bore in PTO cover from contaminations with part cleaner then use an air gun to dry it.

**⚠ WARNING**

**Always wear eye protector. Chemicals can cause a rash break out and injure your eyes.**

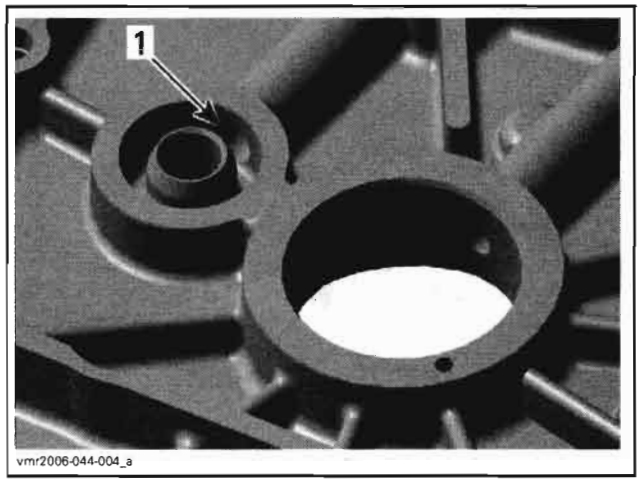


1. *Oil breather bore*

Check plain bearings **no. 10** for scorings or other damages.

NOTE: Measure plain bearing inside diameter and compare to crankshaft journal diameter (PTO support bearing). Refer to *CRANKSHAFT* in this section. Replace if the measurement is out of specification.

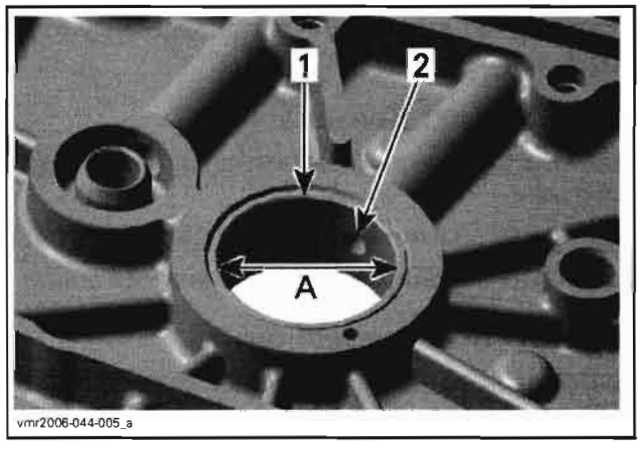


1. *Plain bearing*
2. *Oil bore*

A. *Measure plain bearing inside diameter*

| PLAIN BEARING INSIDE DIAMETER (PTO side support bearing) | |
|---|---|
| SERVICE LIMIT | 34.120 mm (1.3433 in) |

## Plain Bearing Replacement Procedure

### Plain Bearing Removal

Carefully remove the oil seal **no. 9** with a screwdriver, without damaging the PTO cover.

Push-out the plain bearings from the outside towards the inside using the plain bearing remover/installer (P/N 529 036 032).

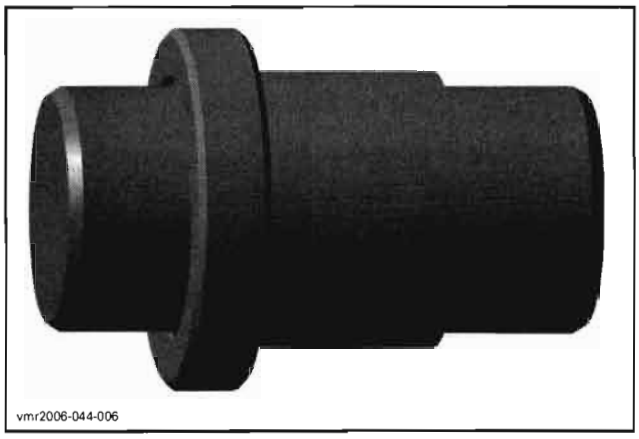


*PLAIN BEARING REMOVER/INSTALLER — PTO COVER*

The PTO cover has to be supported from below with suitable support with straight surface, in order to prevent damage of the sealing surface.

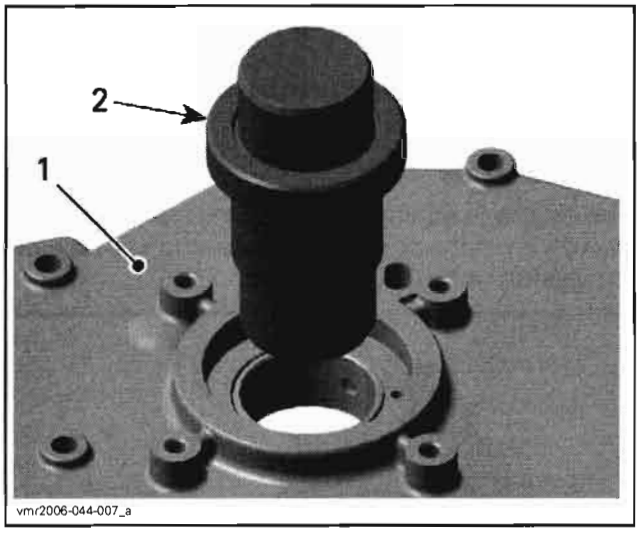


1. *PTO cover*
2. *Plain bearing remover/installer*

### Plain Bearing Installation

**CAUTION: Unless otherwise instructed, never use hammer to install plain bearings. Use press only.**

Install plain bearings with the proper plain bearing remover/installer (P/N 529 036 032) in a cool PTO cover. Do not lubricate plain bearings and/or PTO cover for installation.

Carefully press-in the plain bearings in the same direction as during disassembly, from the outside towards the inside. Support PTO cover with suitable support with straight surface, in order to prevent damage of the sealing surface.

**CAUTION: Mark position of oil bore on PTO cover and on plain bearing remover/installer. Align mark on plain bearing remover/installer with mark on PTO cover.**

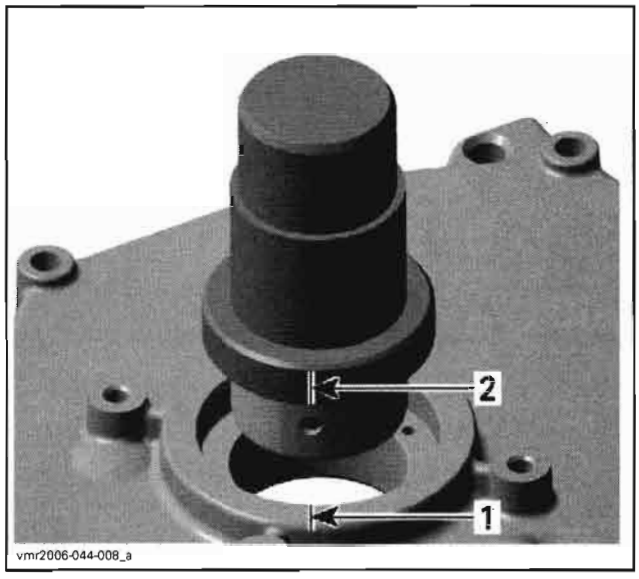


1. *Mark position of oil bore on PTO cover*
2. *Mark position of oil bore on plain bearing remover/installer*

NOTE: Wrong oil bore position will stop oil supply to plain bearings and will damage the engine.

**CAUTION: The partition of the plain bearings must be positioned near to oil bore in counterclockwise direction (refer to no. 3 in next illustration).**

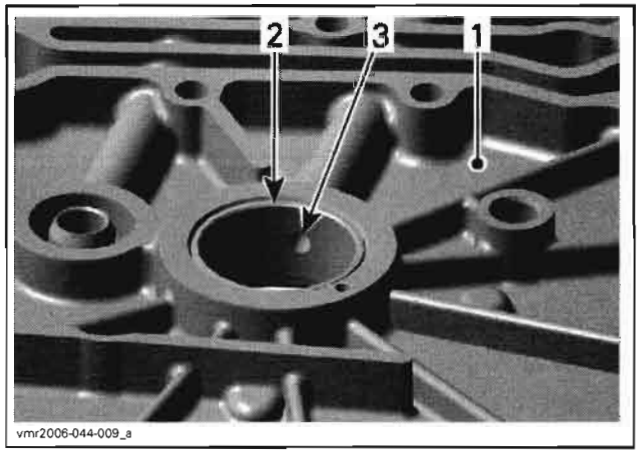


1. *PTO cover (inside)*
2. *Partition*
3. *Oil bore*

## PTO Cover Installation

For installation, reverse the removal procedure.

Pay attention to the following details.

NOTE: At installation, replace PTO cover gasket and oil seal.

Tightening sequence for screws on PTO cover is as per following illustration.

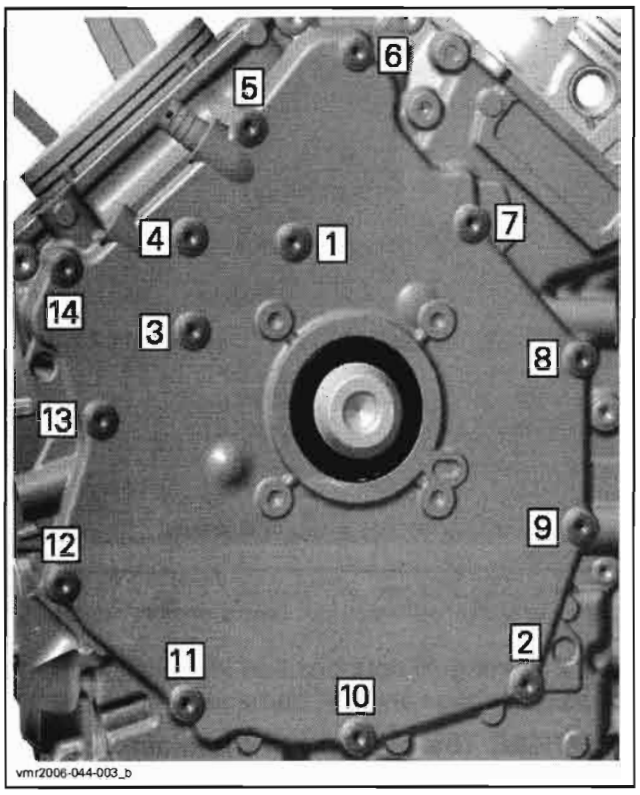


*TIGHTENING SEQUENCE*

# DRIVE GEARS

The drive gears are located on the engine PTO side behind the PTO cover.

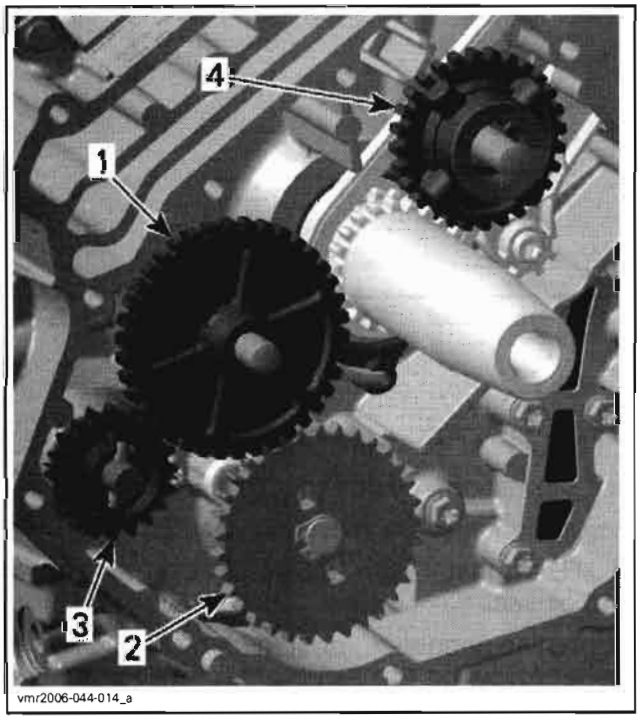


1. *Intermediate gear*
2. *Oil pump gear*
3. *Water pump gear*
4. *Breather gear*

## Drive Gear Removal

Remove:

- PTO cover (refer to *PTO COVER*)
- intermediate gear **no. 11**
- oil pump gear **no. 12** (refer to *OIL PUMP* in *LUBRICATION SYSTEM*)
- water pump gear **no. 13**.

To remove water pump gear, pull the shaft assembly a bit out and turn it about one teeth until it stays out.

Now you can push water pump gear down. Remove needle pin **no. 14** and pull water pump gear out.

Remove breather gear **no. 15**.

## Drive Gear Inspection

### Intermediate Gear/Oil Pump Gear/Water Pump Gear

Inspect gears for wear or other damage. Replace if damaged.

### Breather Gear

The engine is equipped with a breather gear which prevents engine oil coming out through the breathing system into the air box.

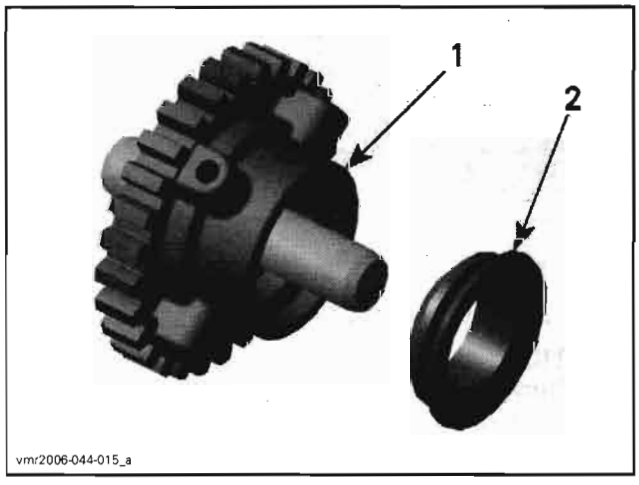


1. *Breather gear*
2. *V-ring*

Inspect gear for wear or other damage.

Check ball bearing for excessive play and smooth operation. Replace breather gear assembly if necessary.

## Drive Gear Installation

The installation is essentially the reverse of the removal procedure, but pay attention to the following details.

NOTE: At installation replace the V-ring **no. 16** of the breather gear.

Adequately oil the ball bearing of the breather gear.

# TIMING CHAIN

The engine is equipped with two timing chains. One of the timing chain is located on engine MAG side behind the magneto cover. The second timing chain is located on engine PTO side behind the PTO cover.

## Timing Chain Removal (Magneto Side)

Remove:

- valve cover, chain tensioner and camshaft timing gear (refer to *INTAKE MANIFOLD, CYLINDER HEAD AND CYLINDER*)
- magneto cover and rotor (refer to *MAGNETO SYSTEM*)
- timing chain guide and lower timing chain guide.

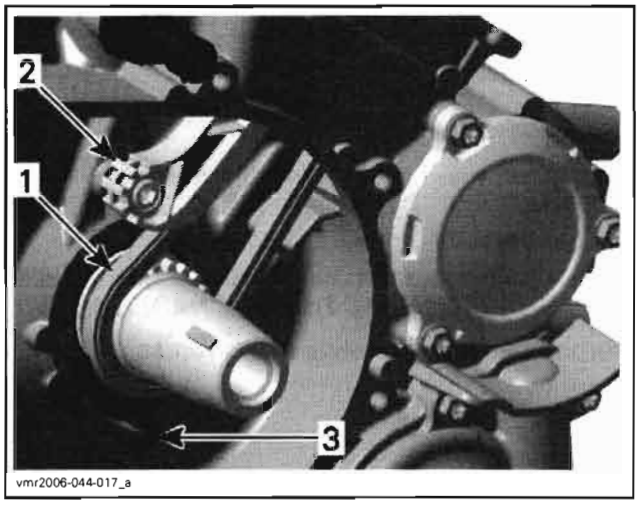


1. *Timing chain*
2. *Timing chain guide*
3. *Lower timing chain guide*

Carefully pull the timing chain sideward and down from the crankcase.

NOTE: Mark the operating direction of the timing chain before removal.

## Timing Chain Removal (PTO Side)

Remove:

- valve cover, chain tensioner and camshaft timing gear (refer to *INTAKE MANIFOLD, CYLINDER HEAD AND CYLINDER* section)
- PTO cover (refer to *PTO COVER*)
- intermediate gear and breather gear (refer to *DRIVE GEARS*)
- timing chain guide and lower timing chain guide (see illustration above).

Carefully pull the timing chain sideward and down from the crankcase.

NOTE: Mark the operating direction of the timing chain before removal.

## Timing Chain Inspection

Inspection is the same for both timing chains.

NOTE: Check timing chain on camshaft timing gear for excessive radial play.

Check chain condition for wear and teeth condition.

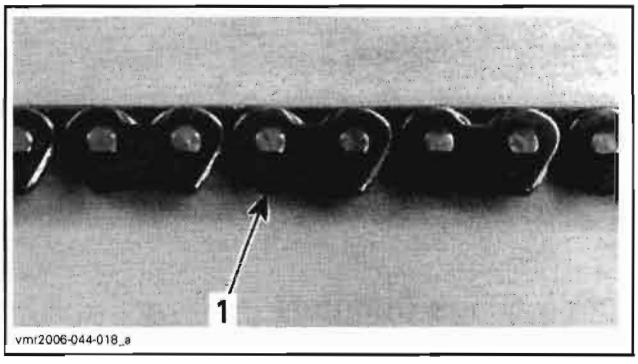


1. *Timing chain*

If chain is excessively worn or damaged, replace it as a set (camshaft timing gear and timing chain).

## Timing Chain Installation

Installation is the same for both timing chains.

The installation is essentially the reverse of the removal procedure, but pay attention to the following details.

NOTE: Ensure to perform proper valve timing. Lock crankshaft (see *CRANKSHAFT*) and camshaft at TDC ignition (refer to *INTAKE MANIFOLD, CYLINDER HEAD AND CYLINDER* section).

Install timing chain with camshaft timing gear then, adjust chain tension (refer to *INTAKE MANIFOLD, CYLINDER HEAD AND CYLINDER* section).

**CAUTION: Improper valve timing will damage engine components.**

# TIMING CHAIN GUIDE

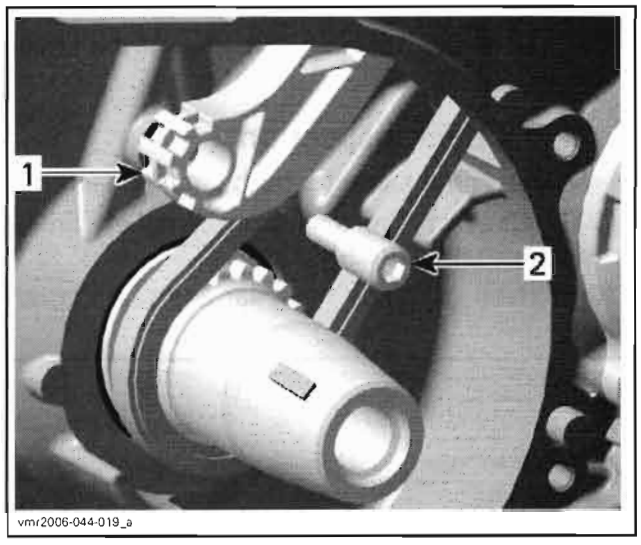


1. *Timing chain guide*
2. *Bearing screw*

## Chain Guide Removal

Refer to *TIMING CHAIN* above.

## Chain Guide Inspection

Check timing chain guide for wear, cracks or other damage. Replace if necessary.

## Chain Guide Installation

The installation is the reverse of the removal procedure.

# CRANKCASE

NOTE: Before disassembly, drain engine oil and engine coolant.

## Crankcase Disassembly

NOTE: Before splitting the crankcase, measure crankshaft axial play. Refer to *CRANKSHAFT*.

Remove:

- drive shaft (refer to *ENGINE DRIVE SHAFT*)
- PTO cover (refer to *PTO COVER*)
- drive gears (refer to *DRIVE GEARS*)

NOTE: Oil pump removal from crankcase is not necessary, but recommended to see condition of oil pump (refer to *LUBRICATION SYSTEM* section).

- electric starter

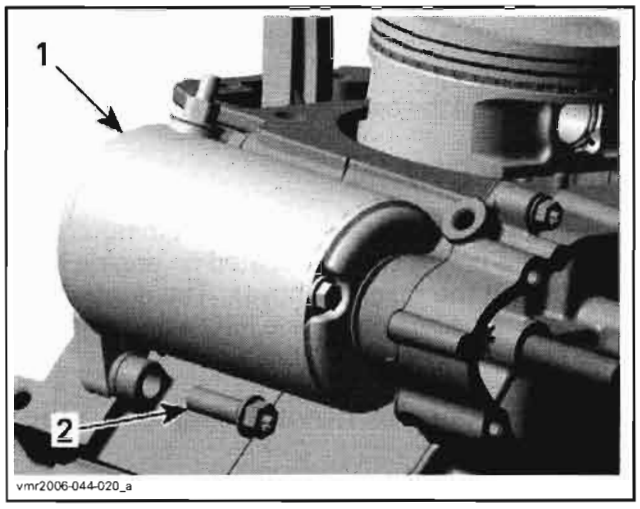


1. *Electric starter*
2. *Screw*

- magneto cover and rotor (refer to *MAGNETO SYSTEM* section)
- electric starter drive gears (refer to *MAGNETO SYSTEM* section)
- water pump housing (refer to *COOLING SYSTEM* section)
- oil filter (refer to *LUBRICATION SYSTEM* section)
- cylinder head and cylinder (refer to *INTAKE MANIFOLD, CYLINDER HEAD AND CYLINDER* section)
- timing chains and timing chain guides (refer to *TIMING CHAIN* and *TIMING CHAIN GUIDE*).

Remove retaining screws of crankcase.

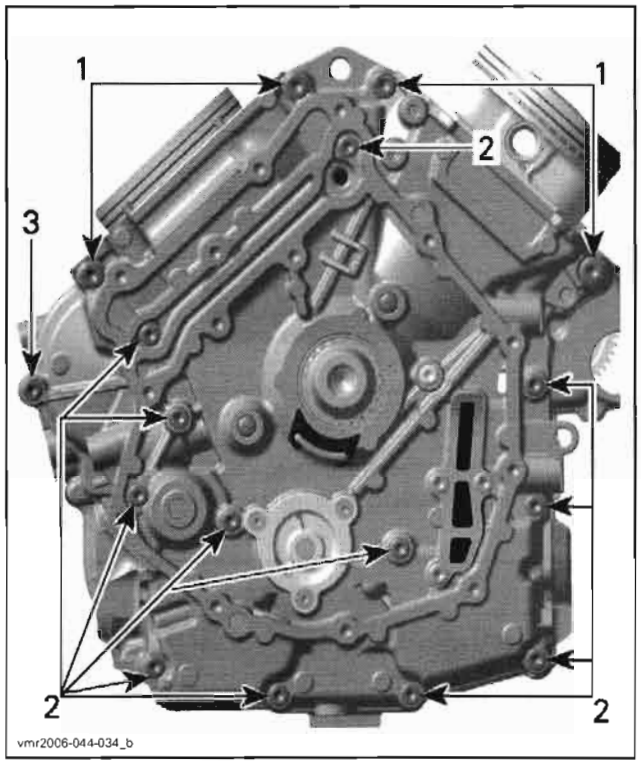


1. *Four screws M8 x 65*
2. *12 screws M6 x 75*
3. *One screw M6 x 35*

Carefully split crankcase halves by using a screwdriver and a soft hammer.

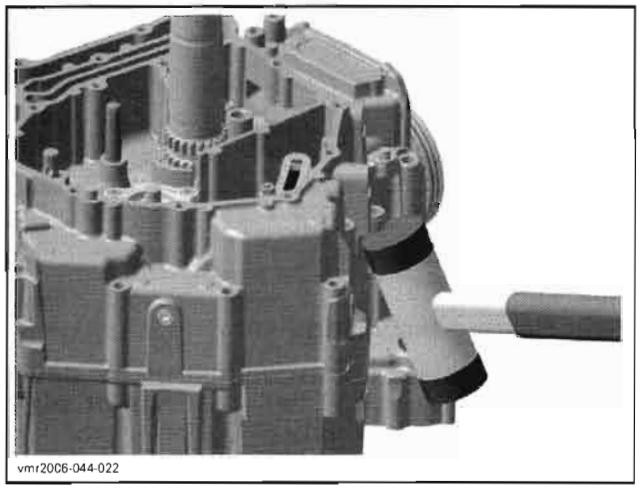


NOTE: During disassembly, do not damage the sealing surfaces of the crankcase halves.

Pull crankshaft out of crankcase.

Remove the water pump intermediate shaft and the water pump gear.

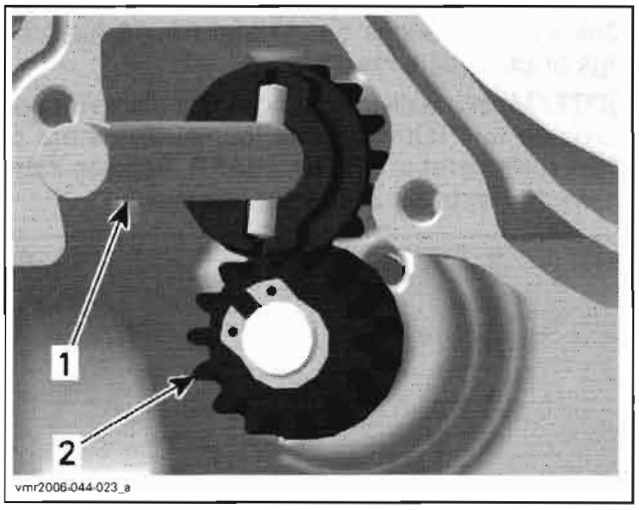


1. *Water pump intermediate shaft*
2. *Water pump gear*

Remove engine oil strainer.

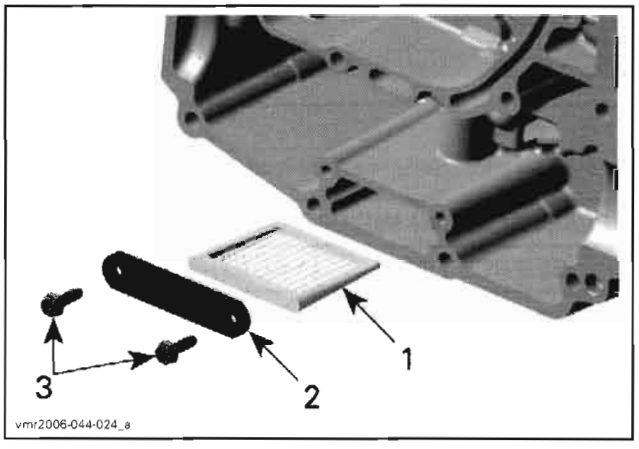


1. *Engine oil strainer*
2. *Retaining plate*
3. *Screws*

## Crankcase Cleaning

**⚠ WARNING**

**Use safety goggles to avoid eye injuries.**

Clean crankcase using a part cleaner.

Dry crankcase using compressed air.

Blow the oil supply lines.

### Oil Strainer

Clean the engine oil strainer (same procedure as for the crankcase).

## Crankcase Inspection

Check crankcase halves for cracks or other damage. Replace if damaged.

Check plain bearings **no. 17** and **no. 18** for scorings or other damages.

NOTE: Measure plain bearing inside diameter and compare to PTO/MAG side journal diameters of crankshaft (refer to *CRANKSHAFT*). Replace if the measurements are out of specification.

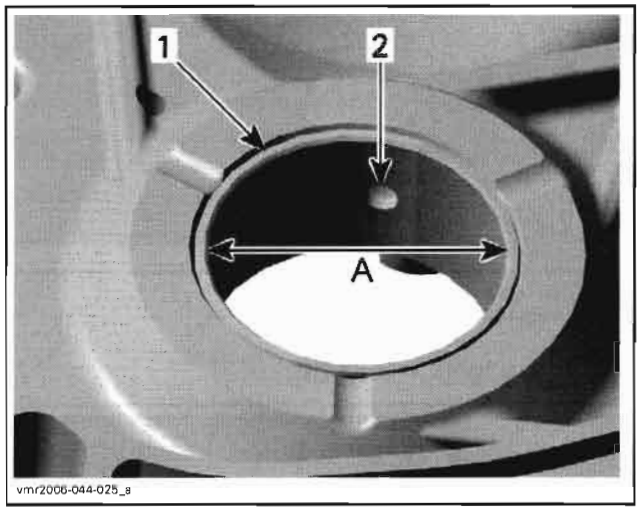


*1. Plain bearing*
*2. Oil bore*
*A. Measure plain bearing inside diameter*

| PLAIN BEARING INSIDE DIAMETER (PTO/MAG) | |
|---|---|
| SERVICE LIMIT | 42.100 mm (1.6575 in) |

## Plain Bearing Replacement

### Plain Bearing Removal

**CAUTION: Always support crankcase halves properly when ball bearings or plain bearings are removed. Damages to crankcase halves may occur if this procedure is not performed correctly.**

NOTE: Always use a press for removal of plain bearings.

Remove plain bearings **no. 17** and **no. 18** with the proper plain bearing remover/installer (P/N 529 035 917).

*PLAIN BEARING REMOVER/INSTALLER (P/N 529 035 917)*

Carefully push the plain bearings out, from the crankcase half inside towards the outside.

NOTE: Place the proper crankcase support sleeve (P/N 529 036 031) under crankcase halves before removing plain bearings.

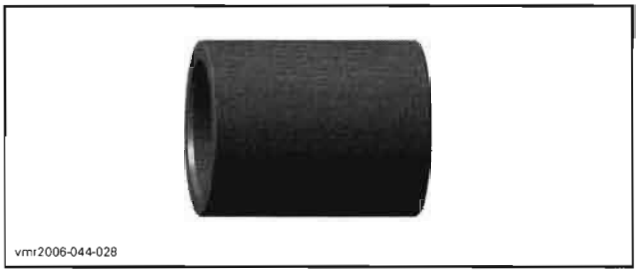


*CRANKCASE SUPPORT SLEEVE (P/N 529 036 031)*

NOTE: During disassembly, make sure not to damage the sealing surfaces of the crankcase halves.

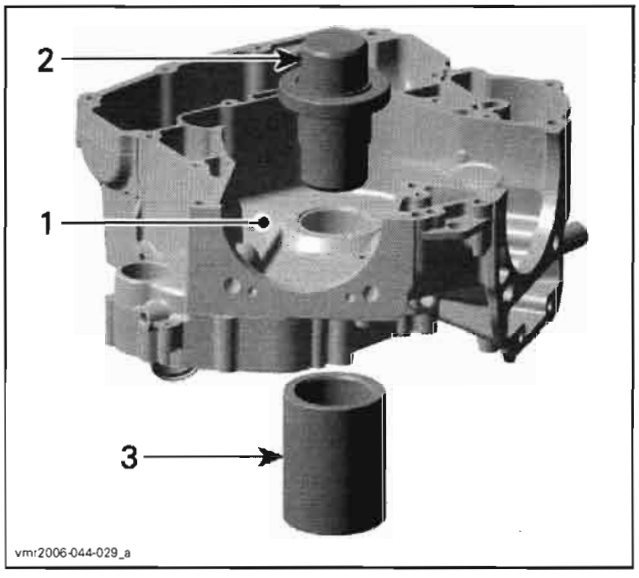


*PUSH PLAIN BEARINGS OUTSIDE*
*1. Crankcase half*
*2. Plain bearing remover/installer*
*3. Crankcase support sleeve (P/N 529 036 031)*

### Plain Bearing Installation

**CAUTION: Unless otherwise instructed, never use hammer to install ball bearings or plain bearings. Use press only.**

Install plain bearings with the proper plain bearing remover/installer (P/N 529 035 917) in a cool crankcase. Do not lubricate plain bearings and/or crankcase for installation.

NOTE: Place the proper crankcase support sleeve under crankcase halves before installing the plain bearings (refer to *BEARING REMOVAL PROCEDURE*).

Carefully press-in the plain bearings in the same direction as during disassembly, from the crankcase inside towards the outside.

During reassembly, make sure not to damage the sealing surfaces of the crankcase halves.

**CAUTION:** Mark position of oil bore on crankcase half and on plain bearing remover/installer. Align mark on plain bearing remover/installer with mark on crankcase half.

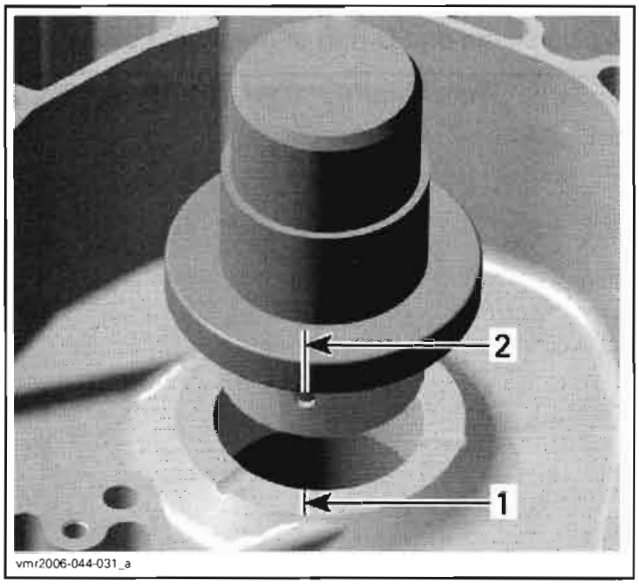


1. *Oil bore position marked on crankcase*
2. *Oil bore position marked on plain bearing remover/installer*

NOTE: Wrong oil bore position will stop oil supply to plain bearings and will cause engine damage.

**CAUTION: The partition of the plain bearings in crankcase half MAG side must be positioned near to oil bore in clockwise direction (refer to no. 3 in next illustration).**

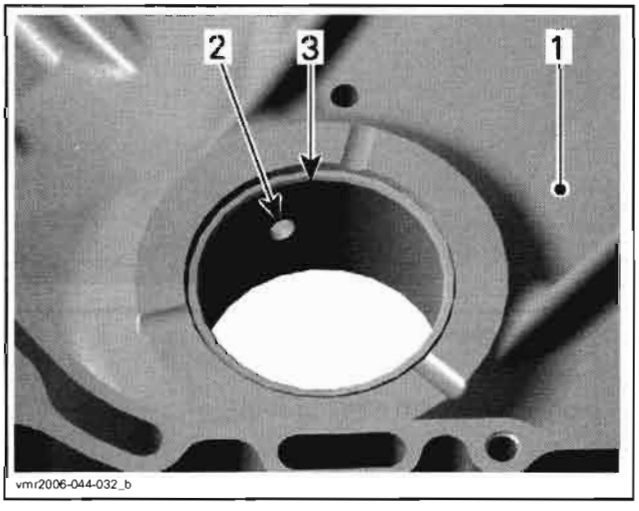


1. *Crankcase half* MAG *(inside)*
2. *Oil bore*
3. *Partition*

**CAUTION: The partition of the plain bearings in crankcase half PTO side must be positioned near to oil bore in counterclockwise direction (refer to no. 3 in next illustration).**

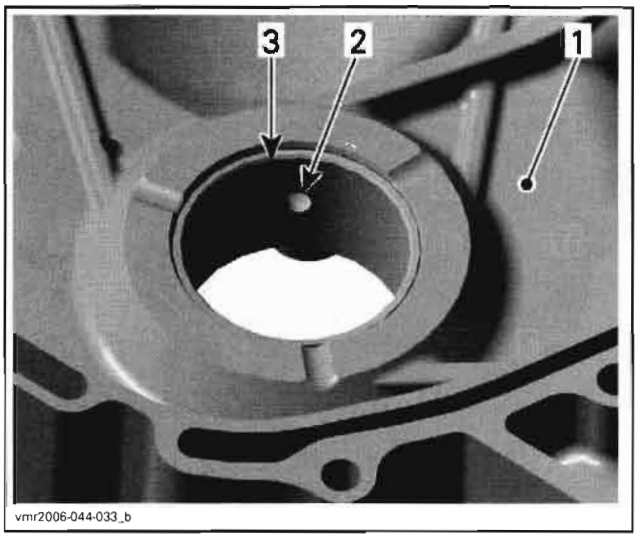


1. *Crankcase half* PTO *(inside)*
2. *Oil bore*
3. *Partition*

NOTE: Use an O-ring (∅ 42 x 1 to 1.5 mm (.04 to .06 in) thickness) to hold plain bearings in place during installation. The O-ring will disappear in the groove of the plain bearing remover/installer.

## Crankcase Assembly

The assembly of crankcase is essentially the reverse of removal procedure. However, pay attention to the following details.

Clean oil passages and make sure they are not clogged.

Clean all metal components in a solvent.

Install a new crankcase gasket.

Oil the plain bearings before mounting the crankshaft.

**CAUTION: Correctly reinstall crankshaft (refer to *CRANKSHAFT*).**

Properly reinstall engine oil strainer and screws.

Reinstall water pump shaft shafts/gears (refer to *COOLING SYSTEM* section).

Tightening sequence for screws on crankcase is as per following illustration.

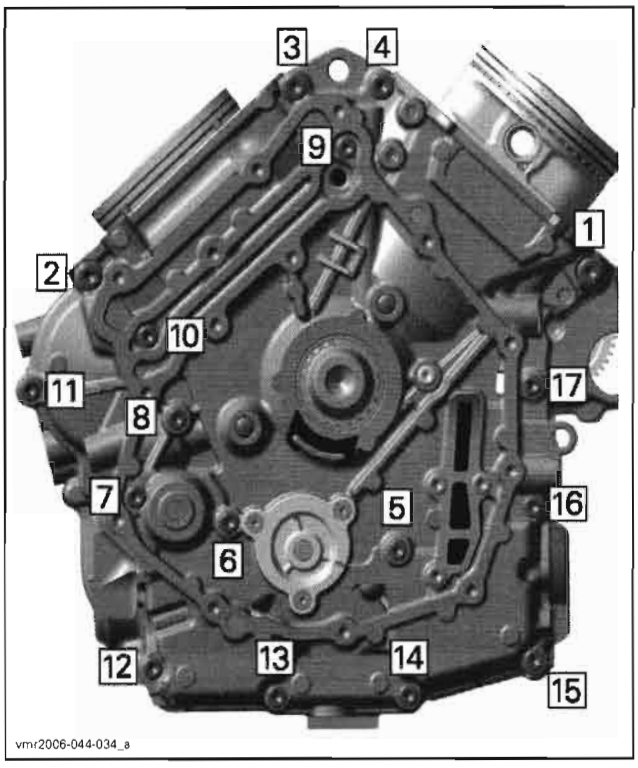


*TIGHTENING SEQUENCE*

# CRANKSHAFT

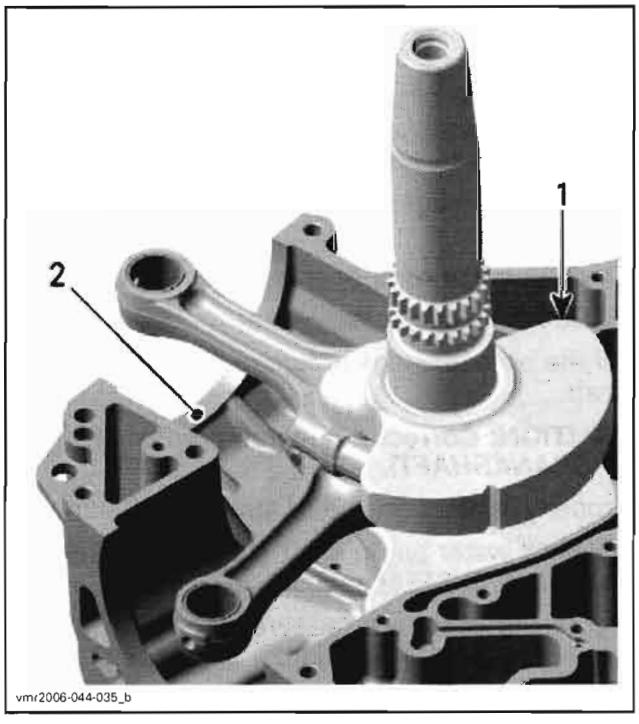


1. *Crankshaft*
2. *Crankcase MAG*

## Crankshaft Locking Procedure

NOTE: When crankshaft is locked, the rear piston (cylinder 2, rear) is at TDC ignition. Crankshaft can not be locked at cylinder 1 (front) TDC.

Remove:

- spark plug cable and spark plug of both cylinders
- valve covers of both cylinders
- plug screw and O-ring of magneto cover

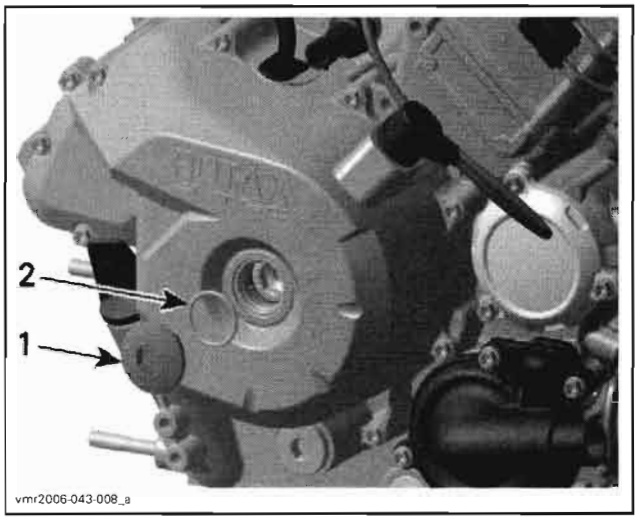


1. *Plug screw*
2. *O-ring*

- crankshaft position sensor

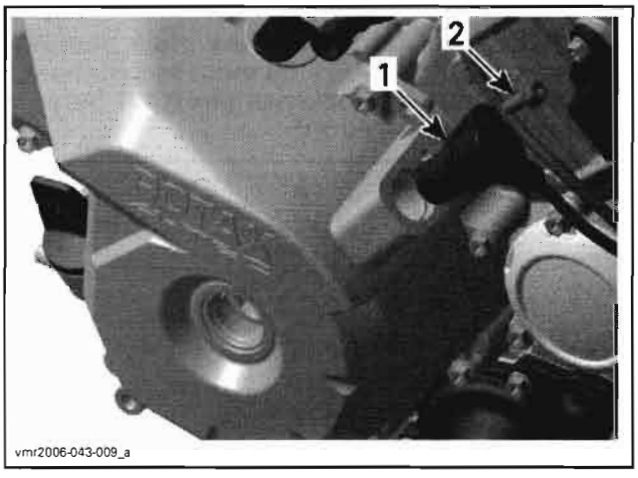


1. *Crankshaft position sensor*
2. *Screw*

- plug screw with sealing ring.

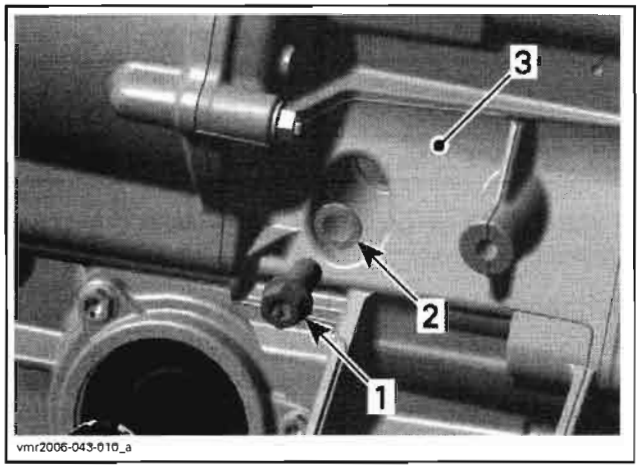


1. *Plug screw*
2. *Sealing ring*
3. *Crankcase PTO side, front side*

Use a 14 mm Allen key to turn crankshaft until piston 2, rear is at TDC ignition.

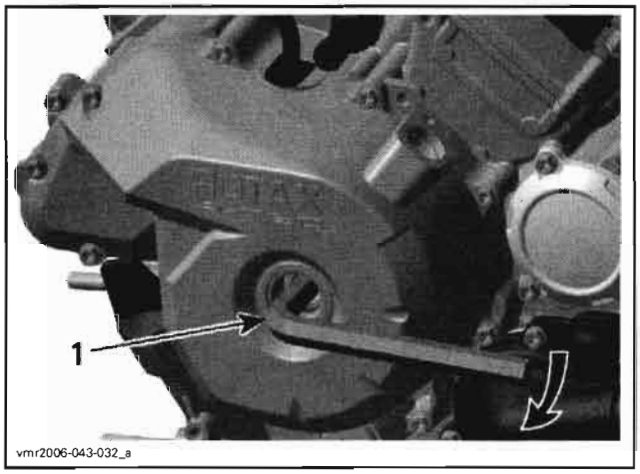


1. *Allen key 14 mm*

When rear piston is at TDC ignition, marks on magneto flywheel "2" and on the magneto cover are aligned.

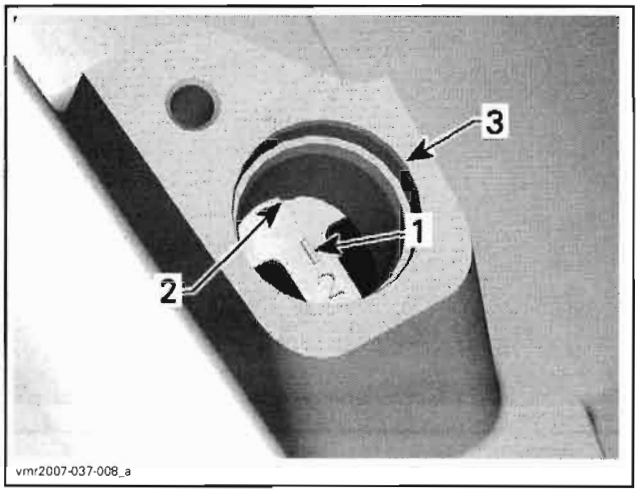


1. *Mark "2" on magneto flywheel*
2. *Notch on magneto cover*
3. *Crankshaft position sensor location*

Use a screwdriver to check if the groove in the crankshaft is aligned with the hole.

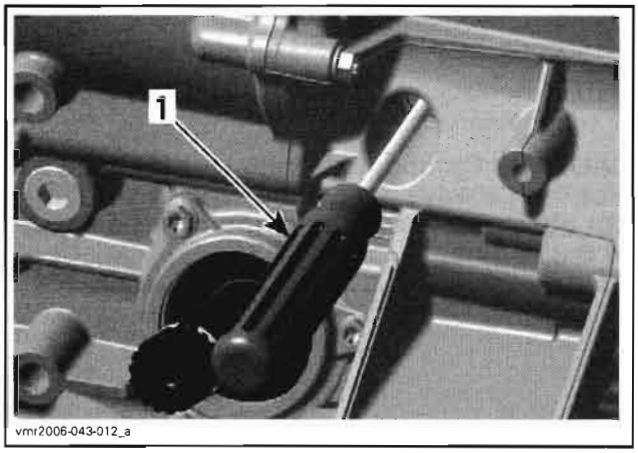


1. *Screwdriver*

Lock crankshaft with crankshaft locking bolt (P/N 529 035 617).

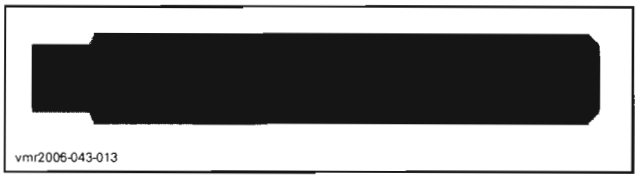

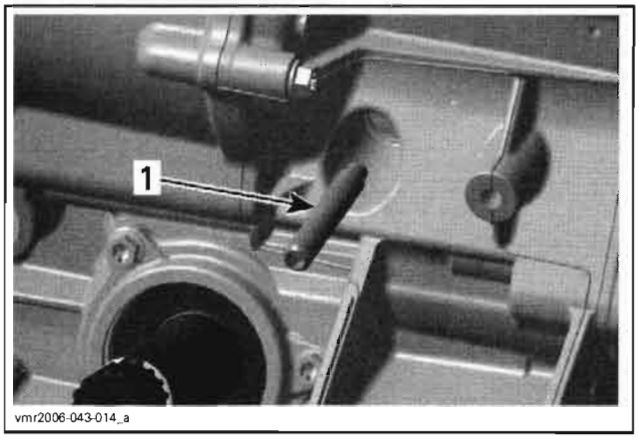


*1. Crankshaft locking bolt*

## Crankshaft Removal

Refer to *CRANKCASE*.

## Crankshaft Inspection

NOTE: Check each bearing journal of crankshaft for scoring, scuffing, cracks or other signs of wear.

NOTE: Replace crankshaft if the gears are worn or otherwise damaged.

**CAUTION: Components with less than the service limit always have to be replaced. If this is not observed, severe damage may be caused to the engine.**

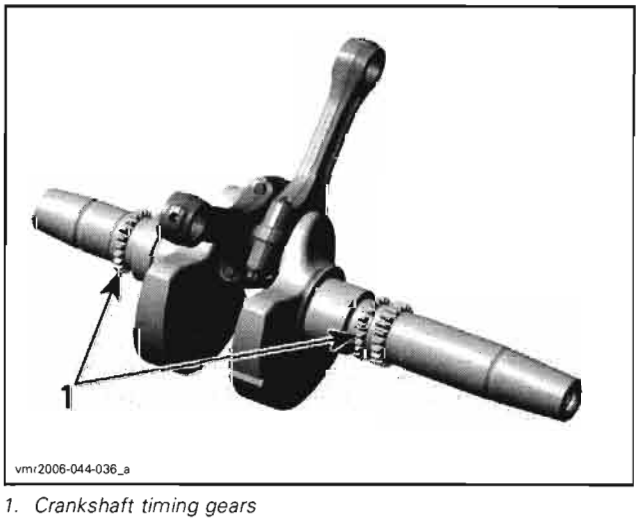


*1. Crankshaft timing gears*

### Crankshaft Axial Play

NOTE: Axial play needs to be measured before splitting the crankcase.

Measure play on PTO end, using a dial indicator.

| CRANKSHAFT AXIAL PLAY | |
|---|---|
| NEW | 0.200 to 0.500 mm (.008 to .020 in) |
| SERVICE LIMIT | 0.6 mm (.024 in) |

If play is out of specification, replace crankcase and/or crankshaft.

### Connecting Rod Big End Axial Play

Using a feeler gauge, measure distance between butting face of connecting rods and crankshaft counterweight. If the distance exceeds specified tolerance, replace the crankshaft.

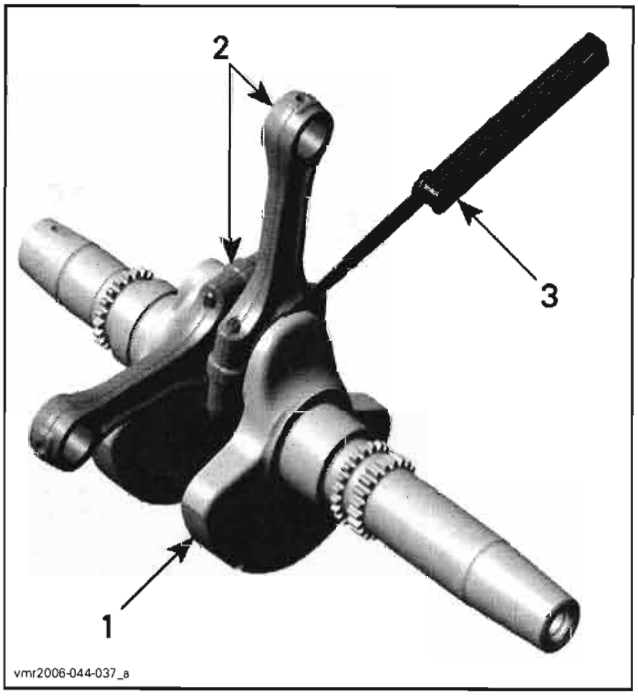


*1. Crankshaft*
*2. Connecting rods*
*3. Feeler gauge*

| CONNECTING ROD BIG END AXIAL PLAY | |
|---|---|
| NEW | 0.200 to 0.500 mm (.008 to .020 in) |
| SERVICE LIMIT | 0.6 mm (.024 in) |

### Connecting Rod/Piston Pin Clearance

Refer to *INTAKE MANIFOLD, CYLINDER HEAD AND CYLINDER* section.

### Connecting Rod Big End Radial Play

NOTE: Prior to remove connecting rod from the crankshaft, mark big end halves together to ensure a correct reinstallation (cracked surface fits in only one position).

Remove connecting rods from crankshaft.

**CAUTION:** Always replace connecting rod screws no. **19** if removing the connecting rod. It is recommended to replace plain bearings no. **20**, in case of installing the connecting rod.

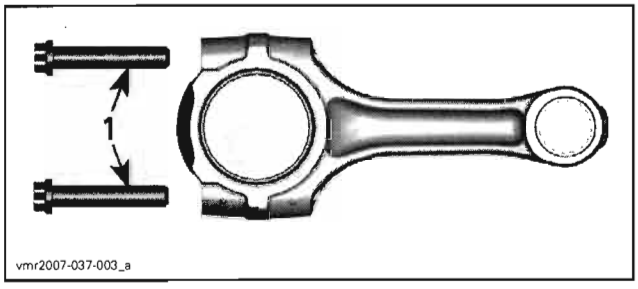


*1. Connecting rod screws*

Measure crankpin. Compare to inside diameter of connecting rod big end.

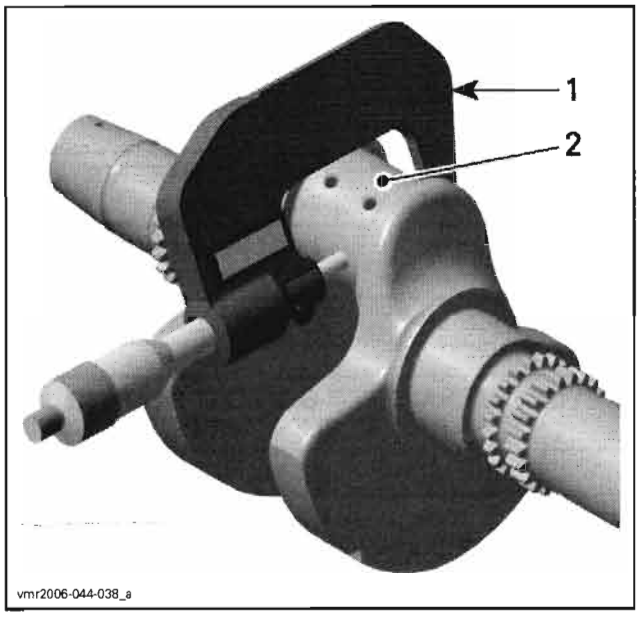


*1. Micrometer*
*2. Crankpin area for plain bearing*

To measure the connecting rod big end diameter, use the OLD screws **no. 19**.

Install the OLD plain bearings **no. 20** as they were mounted initially.

Do the torque procedure as described further.

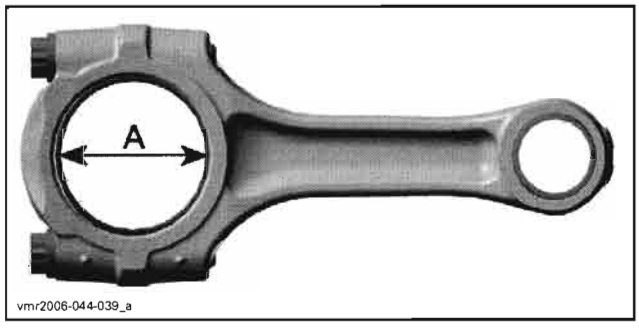


*A. Connecting rod big end plain bearing*

| OUTLANDER 500 | |
|---|---|
| **CRANKSHAFT PIN DIAMETER** | |
| NEW | 35.064 to 35.080 mm (1.3805 to 1.3811 in) |
| SERVICE LIMIT | 35.050 mm (1.3800 in) |
| **CONNECTING ROD BIG END DIAMETER** | |
| SERVICE LIMIT | 35.150 mm (1.3839 in) |
| **CONNECTING ROD BIG END RADIAL PLAY** | |
| SERVICE LIMIT | 0.09 mm (.0035 in) |

| OUTLANDER 650/800 | |
|---|---|
| **CRANKSHAFT PIN DIAMETER** | |
| NEW | 40.009 to 40.025 mm (1.5752 to 1.5758 in) |
| SERVICE LIMIT | 39.990 mm (1.5744 in) |
| **CONNECTING ROD BIG END DIAMETER** | |
| SERVICE LIMIT | 40.100 mm (1.5787 in) |
| **CONNECTING ROD BIG END RADIAL CLEARANCE** | |
| SERVICE LIMIT | 0.09 mm (.0035 in) |

## Crankshaft Radial Play MAG/PTO Side

Measure crankshaft on MAG/PTO side. Compare to inside diameter of MAG/PTO plain bearing (refer to *CRANKCASE*).

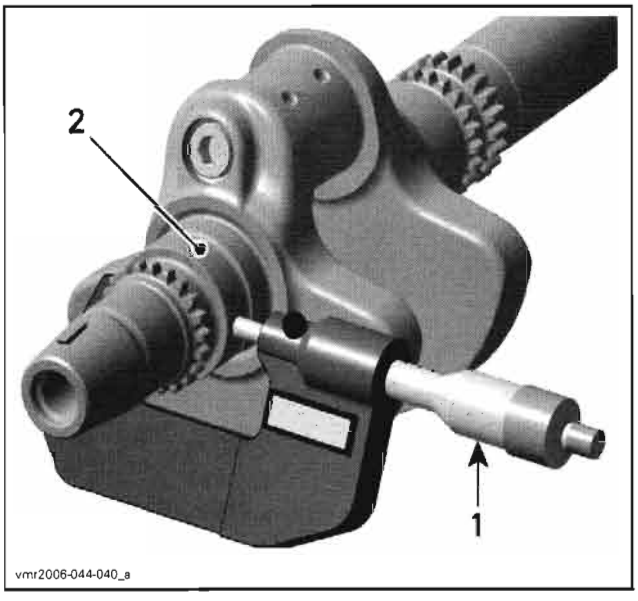


*1. Micrometer*
*2. Crankshaft area for MAG plain bearing*

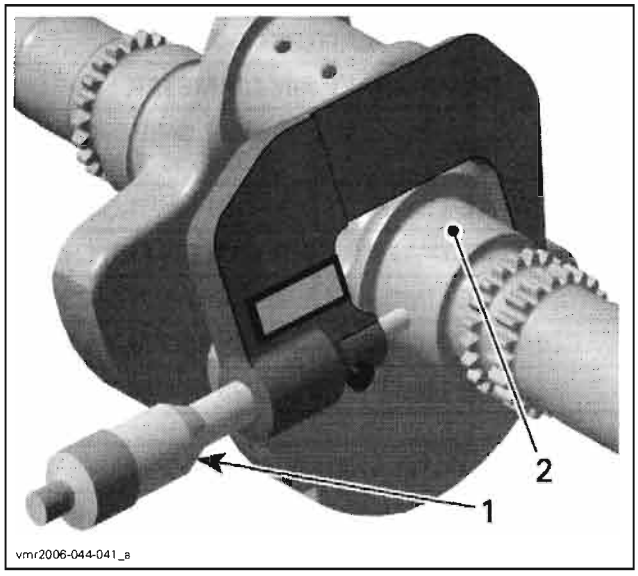


1. *Micrometer*
2. *Crankshaft area for PTO plain bearing*

| CRANKSHAFT MAG/PTO SIDE DIAMETER | |
|---|---|
| NEW | 42.024 to 42.040 mm (1.6545 to 1.6551 in) |
| SERVICE LIMIT | 42.000 mm (1.6535 in) |

| CRANKSHAFT MAG/PTO SIDE RADIAL CLEARANCE | |
|---|---|
| SERVICE LIMIT | 0.07 mm (.0031 in) |

### Crankshaft Radial Play (PTO Side Support Bearing)

Measure crankshaft journal of PTO support bearing. Compare to inside diameter of PTO support bearing in PTO cover (refer to *PTO COVER*).

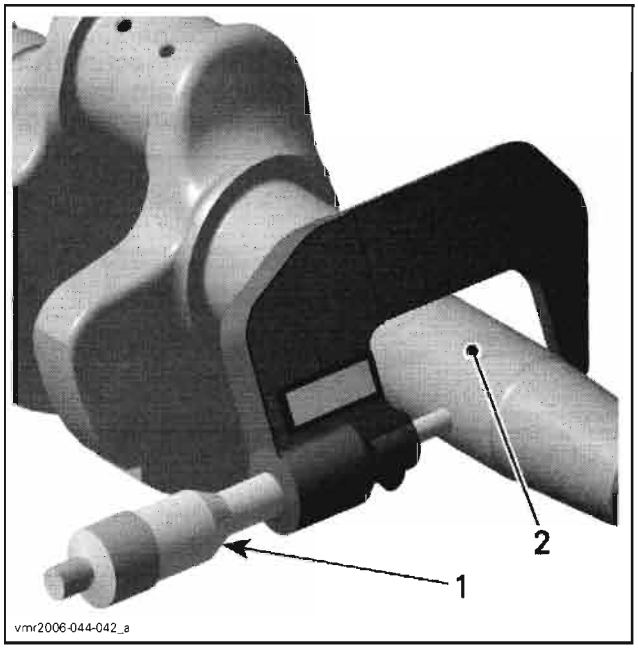


1. *Micrometer*
2. *Crankshaft journal (PTO support bearing)*

| CRANKSHAFT JOURNAL DIAMETER (PTO support bearing) | |
|---|---|
| NEW | 34.024 to 34.040 mm (1.3395 to 1.3402 in) |
| SERVICE LIMIT | 34.010 mm (1.3390 in) |

| CRANKSHAFT PTO SUPPORT BEARING RADIAL CLEARANCE | |
|---|---|
| SERVICE LIMIT | 0.10 mm (.0039 in) |

## Crankshaft Assembly

For assembly, reverse the disassembly procedure. Pay attention to following details.

NOTE: Use NEW plain bearings **no. 20**, when connecting rod big end diameter is out of specification.

Put plain bearings correctly in place and clean the split surface on both sides (cracked area) carefully with compressed air.

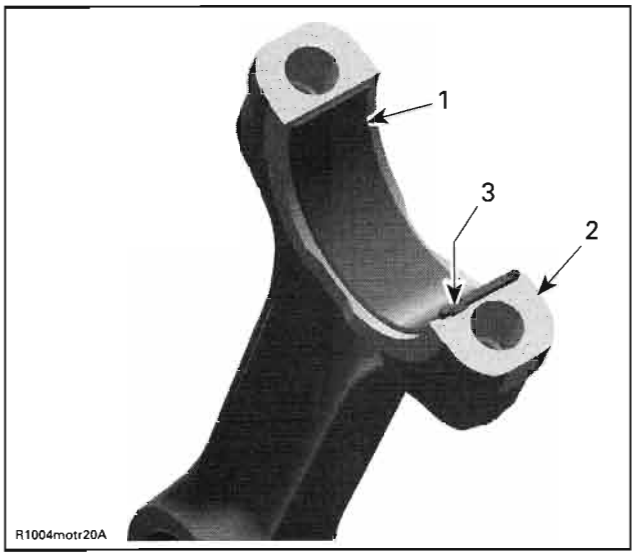


1. *Half plain bearing of connecting rod big end*
2. *Split surface of the connecting rod*
3. *Nose of plain bearing in line with connecting rod groove*

NOTE: Oil the plain bearing surface of the connecting rod and crank pin before installation.

Torque NEW connecting rod screws **no. 19** as per following procedure:

Outlander 500:

- First, install screws with half of the recommended torque. Do not apply any thread locker.
- Secondly, torque screws to 12 N•m (106 lbf•**in**).
- Finish tightening the screws with an additional 70° turn using an angle torque wrench.

Outlander 650 and 800:

- First, install screws with half of the recommended torque. Do not apply any thread locker.
- Secondly, torque connecting rod screws to 20 N•m (15 lbf•ft).
- Finish tightening the screws with an additional 60° turn using an angle torque wrench.

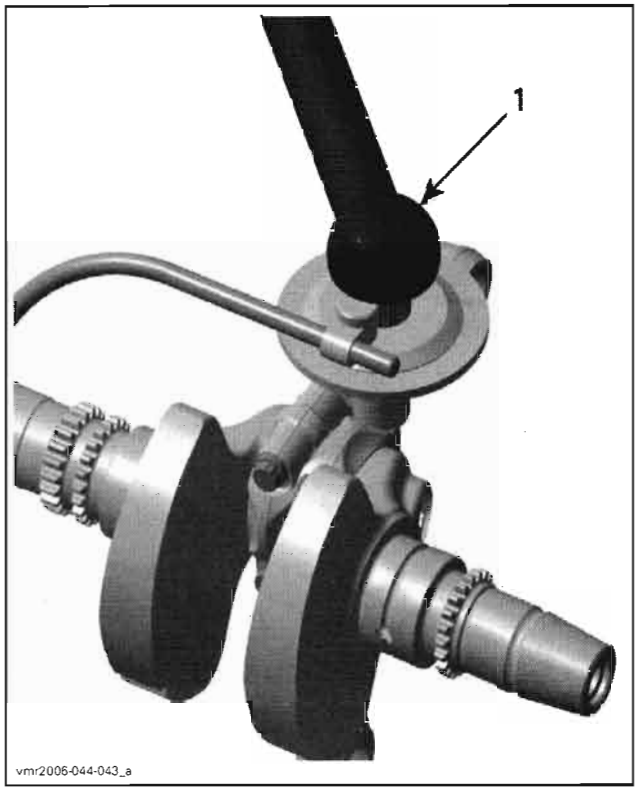


1. *Angle torque wrench*

**CAUTION: Failure to strictly follow this procedure may cause screw to loosen and lead to engine damage. The plain bearing tapered end must be against the counterweight. Besides, as the "crankpin" screw has been stretched from the previous installation, it is very important to use a new screw at assembly.**

NOTE: The running direction of the big end bearings and of the piston pins must not change.

## Crankshaft Installation

For installation of crankshaft in crankcase reverse the removal procedure. Pay attention to the following details.

Do not mix up the connecting rods of cylinders 1 and 2 during installation.

**CAUTION: Observe the correct installation position when fitting the crankshaft with the connecting rods. The connecting rod MAG side has to face to cylinder 1.**

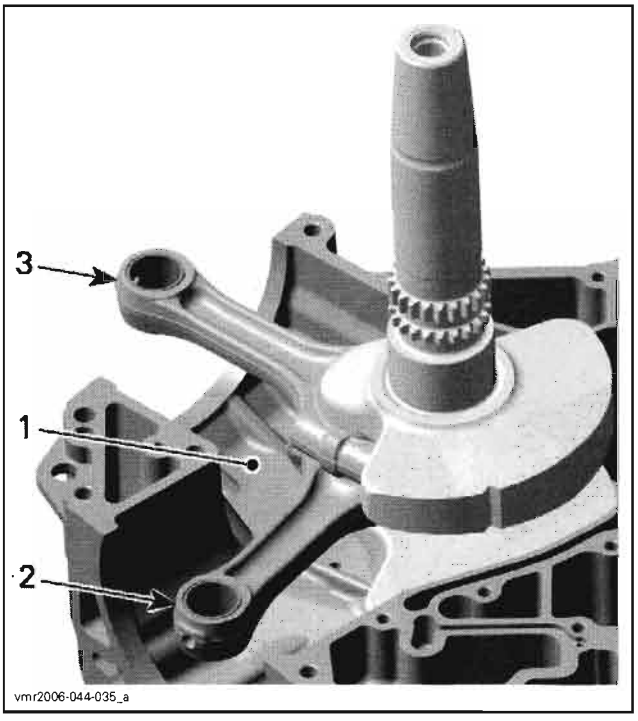


*1. Crankcase half MAG side*
*2. Connecting rod cylinder 1*
*3. Connecting rod cylinder 2*

**CAUTION:** Install CRANKSHAFT LOCKING BOLT to put crankshaft in TDC position before installing the camshaft and rocker arms (refer to *CRANKSHAFT LOCKING PROCEDURE*.

# GEARBOX AND 4X4 COUPLING UNIT

## SERVICE TOOLS

| Description | Part Number | Page |
|---|---|---|
| installer handle | 420 877 650 | 142, 160 |
| oil seal installer | 529 035 758 | 142 |
| main shaft needle bearing installer | 529 035 762 | 160 |
| bevel gear needle bearing installer | 529 035 763 | 160 |
| Fluke 111 multimeter | 529 035 868 | 142 |
| oil seal installer | 529 036 028 | 141 |
| backlash measurement tool | 529 036 030 | 144 |

## SERVICE PRODUCTS

| Description | Part Number | Page |
|---|---|---|
| Super Lube grease | 293 550 030 | 143, 149 |
| Loctite 5910 | 293 800 081 | 139–140, 148–149, 164 |
| Loctite chisel (gasket remover) | 413 708 500 | 148, 156, 164 |
| XP-S chaincase oil | 413 801 900 | 139 |
| XP-S synthetic chaincase oil | 413 803 300 | 139 |

# GEARBOX COMPONENTS AND 4X4 COUPLING MECHANISM

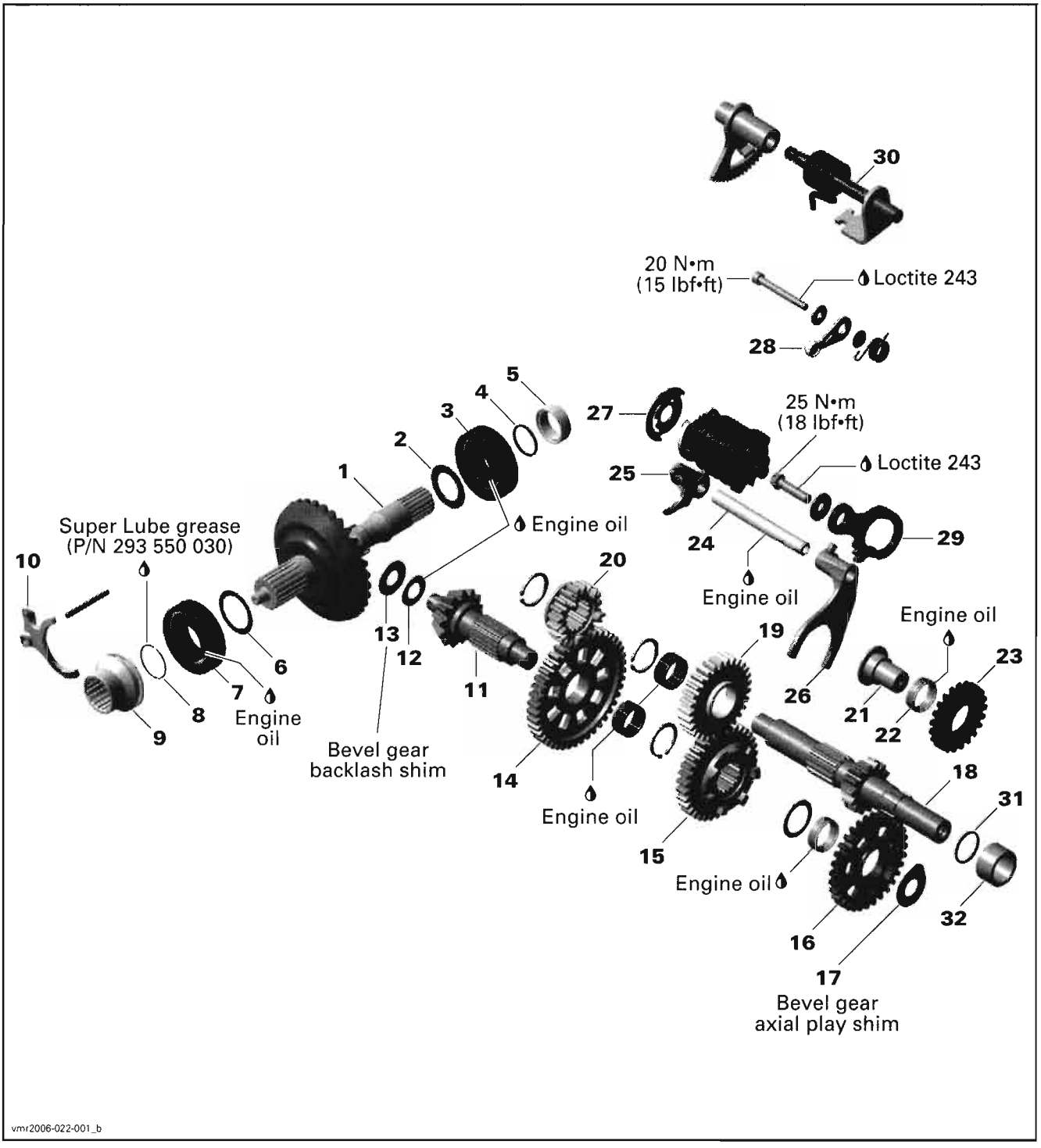

# GEARBOX HOUSING AND 4X4 ACTUATOR UNIT

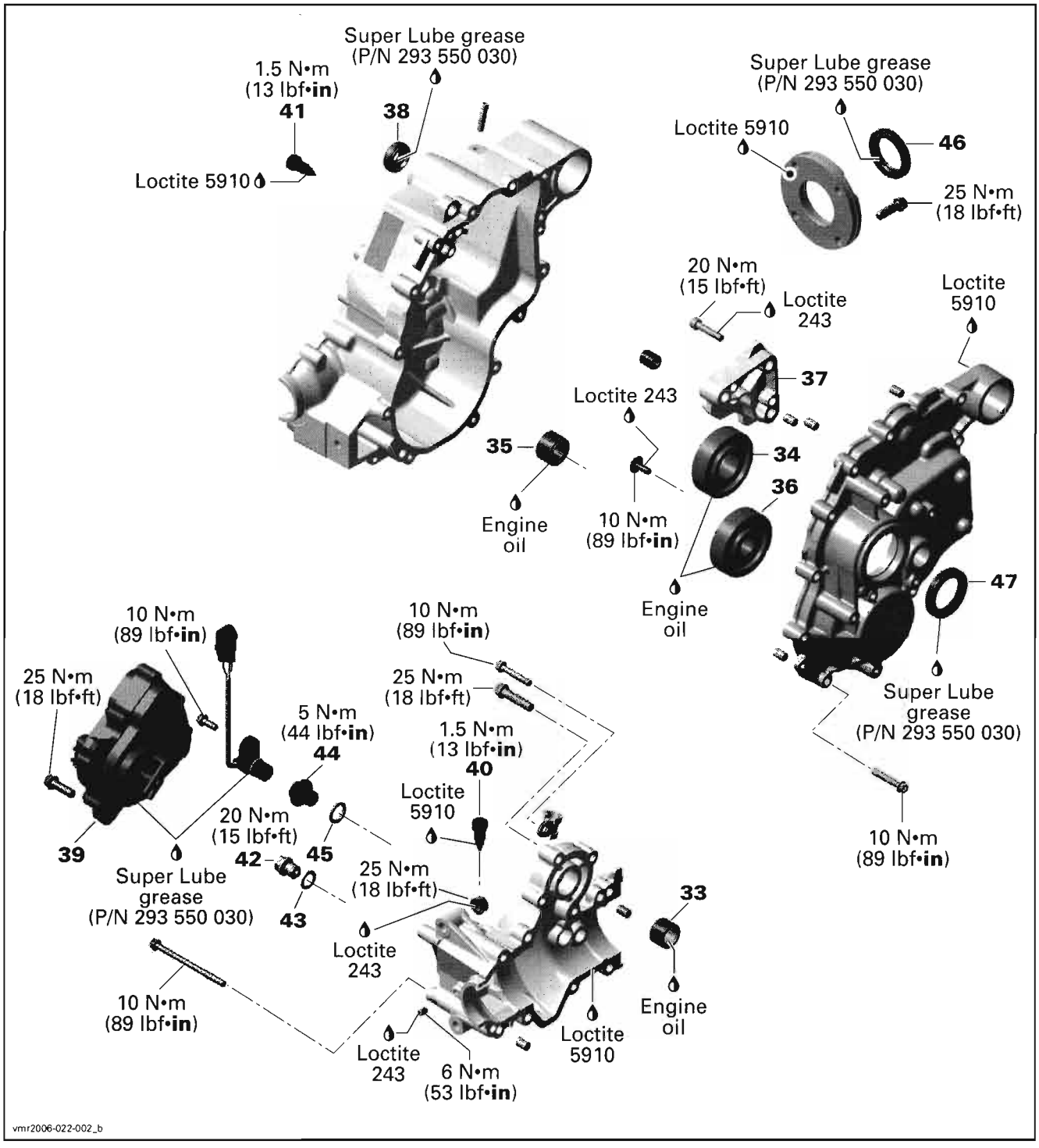

# GENERAL

During assembly/installation, use the torque values and service products as in the exploded views.

Clean threads before applying a threadlocker. Refer to *SELF-LOCKING FASTENERS* and *LOCTITE APPLICATION* at the beginning of this manual for complete procedure.

**⚠ WARNING**

**Torque wrench tightening specifications must strictly be adhered to.**
**Locking devices (e.g.: locking tabs, elastic stop nuts, self-locking fasteners, etc.) must be installed or replaced with new ones where specified. If the efficiency of a locking device is impaired, it must be renewed.**

Always drain the gearbox before working on it.

To remove gearbox, the engine removal is necessary. Refer to *ENGINE REMOVAL AND INSTALLATION.*

Remove drive and driven pulley and CVT air guide, refer to *CVT.*

## Overview

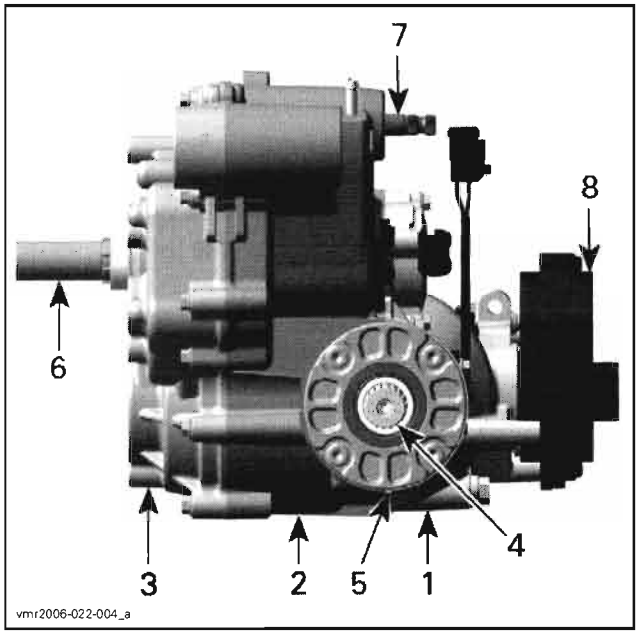


1. *Right housing*
2. *Center housing*
3. *Left housing*
4. *Output shaft*
5. *Bearing cover*
6. *Countershaft*
7. *Shift shaft*
8. *Actuator*

# MAINTENANCE

## GEARBOX OIL CHANGE

### Draining Procedure

Prior to change the oil, ensure vehicle is on a level surface.

Oil change should be done with a warm engine.

**⚠ WARNING**

**The gearbox oil can be very hot.**

Place a drain pan under the gearbox drain plug area.

Clean drain plug area and remove magnetic drain plug **no. 42** with its sealing ring **no. 43** to drain gearbox oil.

Remove oil filler screw **no. 44** including its O-ring **no. 45**.

**CAUTION: Pay attention not to loose O-ring on drain plug screw.**

Wait a while to allow oil flow out of gearbox.

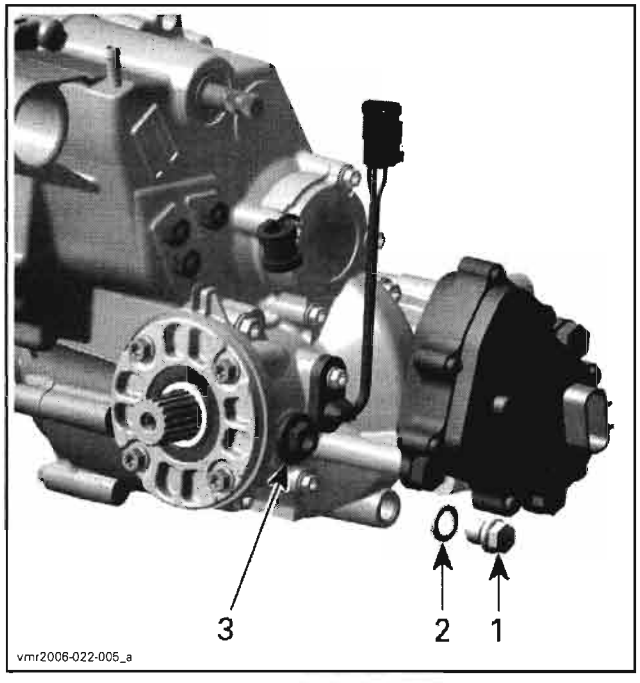


1. *Magnetic drain plug*
2. *Sealing ring*
3. *Oil filler screw*

Dispose gearbox oil as per your local environmental regulations.

### Inspection

Oil condition gives information about the teeth condition inside the gearbox. See *TROUBLESHOOTING* section.

Clean the magnetic drain plug from metal shavings and dirt. Presence of debris gives an indication of failure inside the gearbox. Check gearbox to correct the problem.

Change gasket ring **no. 43** on the magnetic drain plug if damaged.

Replace O-ring **no. 45** if brittle, hard or otherwise damaged.

### Filling Procedure

Make sure that magnetic drain plug **no. 42** is reinstalled and tight.

With the vehicle on a level surface, fill the gearbox through the oil filler hole with XP-S chaincase oil (P/N 413 801 900) or XP-S synthetic chaincase oil (P/N 413 803 300) or with an equivalent product until the oil reaches the lower threads of the oil filler hole (around 400 mL (13.5 oz U.S.)).

# PROCEDURES

## GEARBOX POSITION INDICATOR SWITCHES

**NOTE:** The gearbox removal is not necessary to reach the gearbox position indicator switches.

### Removal

To reach the gearbox position indicator switches **no. 41**, remove the rear engine cover.

Remove screw retaining indicator switch wire.

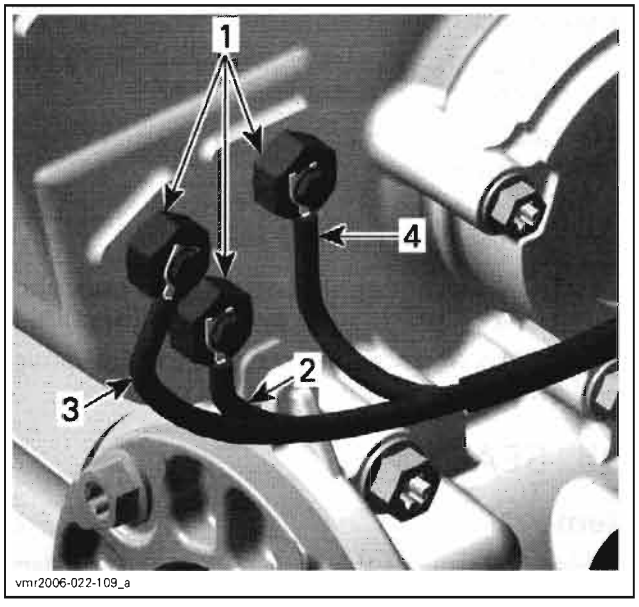


*1. Gearbox position indicator switches*
*2. BROWN/GREY wire*
*3. WHITE/GREY wire*
*4. ORANGE/GREY wire*

Unscrew switch.

### Test

Check if gearbox position indicator switches work properly as per following procedure:

Disconnect wires from switches.

**NOTE:** Remove insulating paint to obtain correct readings.

Put gearbox in park, reverse, neutral, high and low position.

Use a multimeter to measure the resistance from the indicator switch to engine ground. Compare results with the logic table below.

| SHIFTER POSITION | CORRESPONDING SWITCH WIRES | | |
|---|---|---|---|
| | BROWN/ GREY | WHITE/ GREY | ORANGE/ GREY |
| L | X | | X |
| H | | | X |
| N | | X | X |
| R | | X | |
| P | X | X | |

An "X" indicates switch is making ground contact, thus there should be continuity (R is close to 0 Ohms).

A blank space indicates switch is not making contact, there should be no continuity (R = infinite).

If the indicator switch is good, check the vehicle harness and/or indicator lights.

### Installation

For installation, reverse the removal procedure. Pay attention to the following details.

Take care do not damage shifting indicator switches threads during installation.

Apply carefully some Loctite 5910 (P/N 293 800 081) on threads of shifting indicator switches.

**CAUTION: Do not apply Loctite 5910 on switch plunger, as it will lead to switch malfunction.**

If all switches are removed, make sure to put the wires back in the right location.

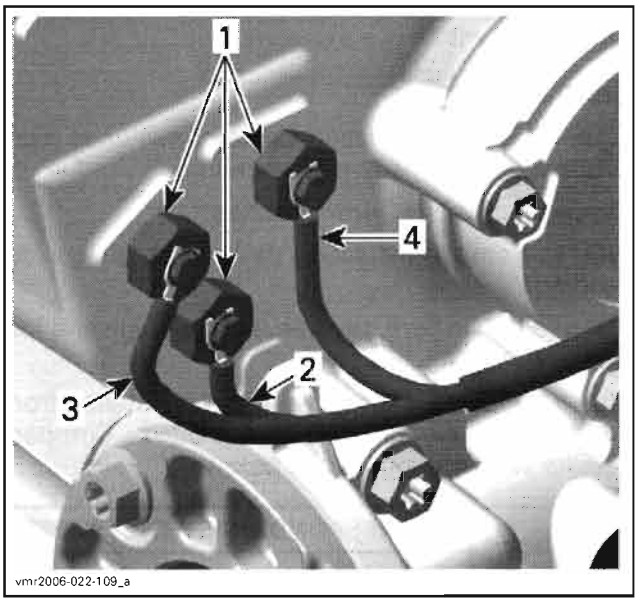


1. *Indicator switches*
2. *BROWN/GREY wire*
3. *WHITE/GREY wire*
4. *ORANGE/GREY wire*

Spray a layer of electrical insulating paint or varnish over switches to prevent shorts and corrosion.

# 4WD INDICATOR SWITCH

NOTE: The gearbox removal is not necessary to reach the 4WD indicator switch.

## Removal

To reach the 4WD indicator switch **no. 40**, remove the rear engine cover.

Remove screw retaining 4WD indicator switch wire.

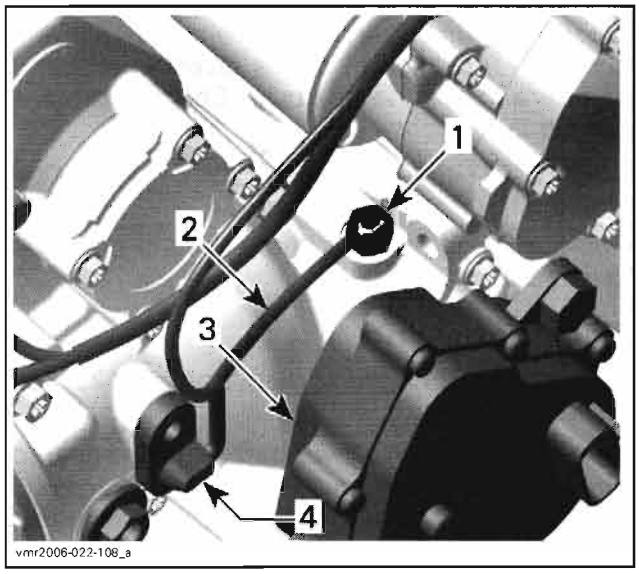


1. *4 WD indicator switch*
2. *BLACK/YELLOW wire for contact to 4WD*
3. *Actuator*
4. *Speed sensor*

## Test

Measure switch resistance as follows.

| SWITCH POSITION | SWITCH WIRE | | RESISTANCE |
|---|---|---|---|
| 2WD | BLACK/ YELLOW | Engine ground | Infinite (0L) |

If the resistance is out of specification, replace the 4WD indicator switch.

## Installation

For installation, reverse the removal procedure. Pay attention to the following details.

Take care do not damage indicator switch threads during installation.

Apply carefully some Loctite 5910 (P/N 293 800 081) on threads of indicator switch.

**CAUTION: Do not apply Loctite 5910 on switch plunger, as it will lead to switch malfunction.**

Spray a layer of electrical insulating paint or varnish over switch to prevent shorts and corrosion.

# OIL SEALS

## Removal

Replace oil seals if they are brittle, hard or damaged.

A small flat screwdriver can be used to remove most of these oil seals.

**CAUTION:** Avoid scoring housings, bearing cover, shift shaft, distance sleeve of countershaft or output shaft during oil seal removal.

### Countershaft Oil Seal

The countershaft oil seal **no. 47** can be removed without removing gearbox from vehicle. Remove drive and driven pulley and CVT air guide.

NOTE: When oil seal is removed also inspect O-ring **no. 31**.

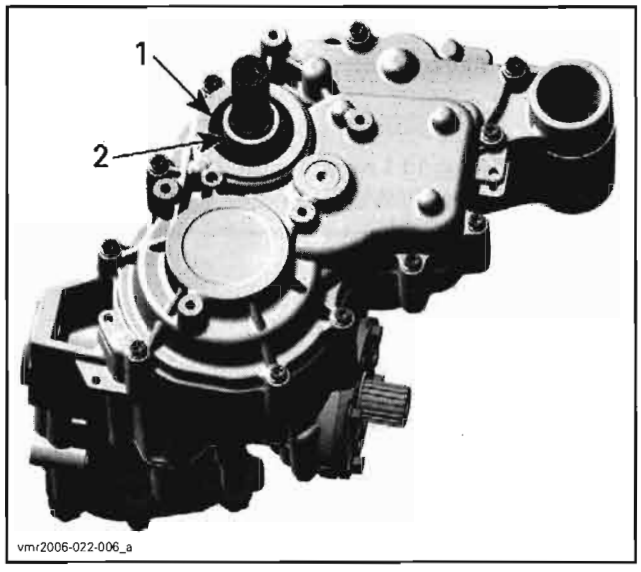


*1. Countershaft oil seal*
*2. Distance sleeve*

### Shift Shaft Oil Seal

The shift shaft oil seal **no. 38** can be removed without removing the gearbox from the vehicle.

Remove side panel and the shifting plate from shift shaft to reach the oil seal.

### Output Shaft Oil Seal

Removal of output shaft oil seal **no. 46** requires that the rear propeller shaft is separated from the output shaft (refer to *DRIVE TRAIN* section). The removal of the gearbox or bearing cover is not necessary.

NOTE: When oil seal is removed also inspect O-ring **no. 4**.

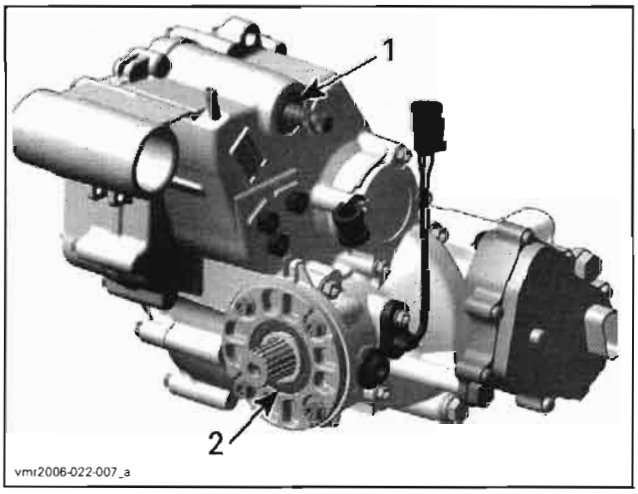


*1. Shift shaft oil seal*
*2. Output shaft oil seal*

## Inspection

Check bearings behind each oil seal for contamination and/or metal shavings.

Check oil seal running surfaces for scratches. Replace if necessary (see *GEARBOX* below).

Check if the countershaft O-ring **no. 31** and the output shaft O-ring **no. 4** are brittle, hard or damaged. Replace if necessary.

## Installation

The installation is the reverse of removal procedure. Pay attention to the following details.

### Output Shaft and Countershaft Oil Seal

Install output shaft oil seal and countershaft oil seal with the oil seal installer (P/N 529 036 028).

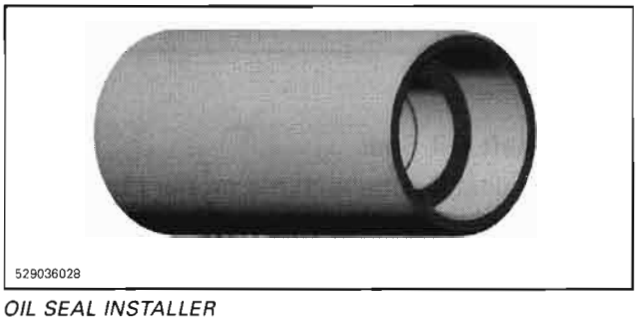


*OIL SEAL INSTALLER*

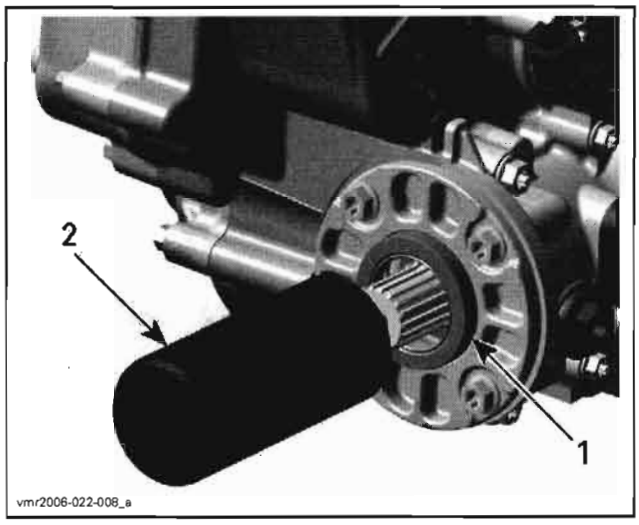


1. *Output shaft oil seal*
2. *Oil seal installer*

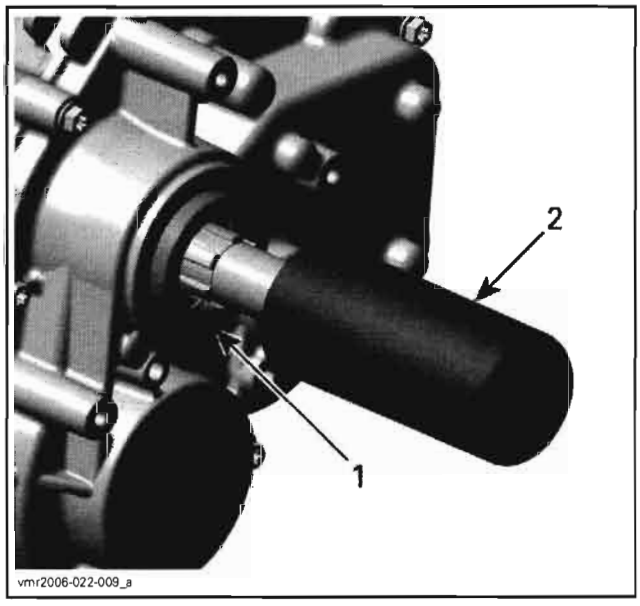


1. *Countershaft oil seal*
2. *Oil seal installer*

### Shift Shaft Oil Seal

Using a suitable tube with the proper diameter to install the shift shaft oil seal.

If gearbox housing is apart, the oil seal installer (P/N 529 035 758) and installer handle (P/N 420 877 650) can be used for shift shaft oil seal installation.

529 035 758

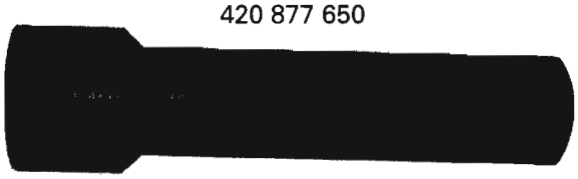

420 877 650

**CAUTION:** Oil seal must be installed with sealing lip toward gearbox.

## ACTUATOR

***European Community Models (CE)***

### Test

Using the Fluke 111 multimeter (P/N 529 035 868), check if the 2WD/4WD selector works properly.

529 035 868

Remove the rear engine cover.

Unplug actuator connector.

- Turn ignition key ON and set engine run/stop switch to RUN.
- Measure voltage as follows.

| SWITCH POSITION | SWITCH WIRE | | VOLTAGE |
|---|---|---|---|
| 2WD | WHITE/BLUE | WHITE | Battery voltage |
| 4WD | WHITE/BLACK | | |

If the selector is out of specifications, check wires, connectors and replace the selector if necessary.

If the selector is good, check the vehicle harness.

If the vehicle harness is good, replace the actuator **no. 39**.

### Removal

**NOTE:** Before beginning any servicing on the actuator, make sure the vehicle is in 4WD position. No need to remove engine from vehicle.

Remove the RH footrest and the rear engine cover. Refer to *BODY*.

Unplug actuator connector.

Place a drain pan under actuator.

Unscrew actuator bolts.

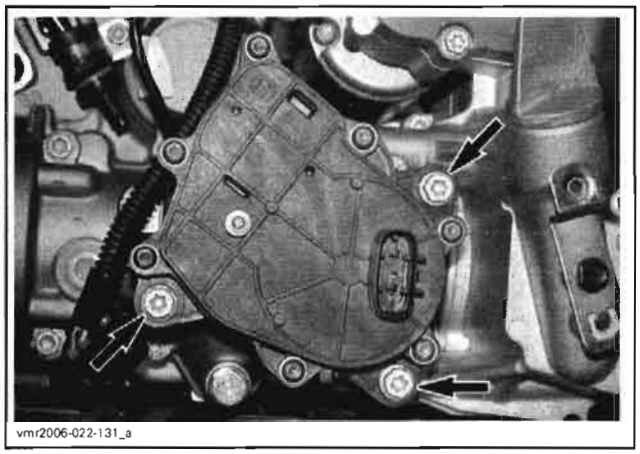
vmr2006-022-131_a

When all actuator bolts are removed, pull the actuator out of housing.

## Installation

Apply a small amount of Super Lube grease (P/N 293 550 030) on actuator O-ring.

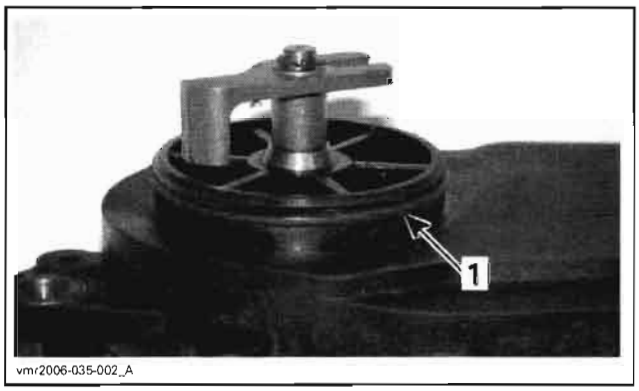

vmr2006-035-002_A

*1. Actuator O-ring*

Verify if coupling fork **no. 10** is in 4WD position. The coupling fork should be positioned toward the front of vehicle.

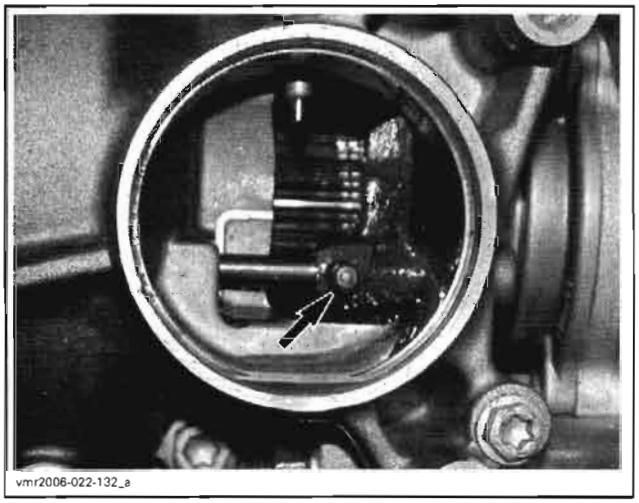
vmr2006-022-132_a

Align the actuator fork with the pin on coupling fork **no. 10** then push the actuator in the housing. See the following illustration to position the actuator correctly.

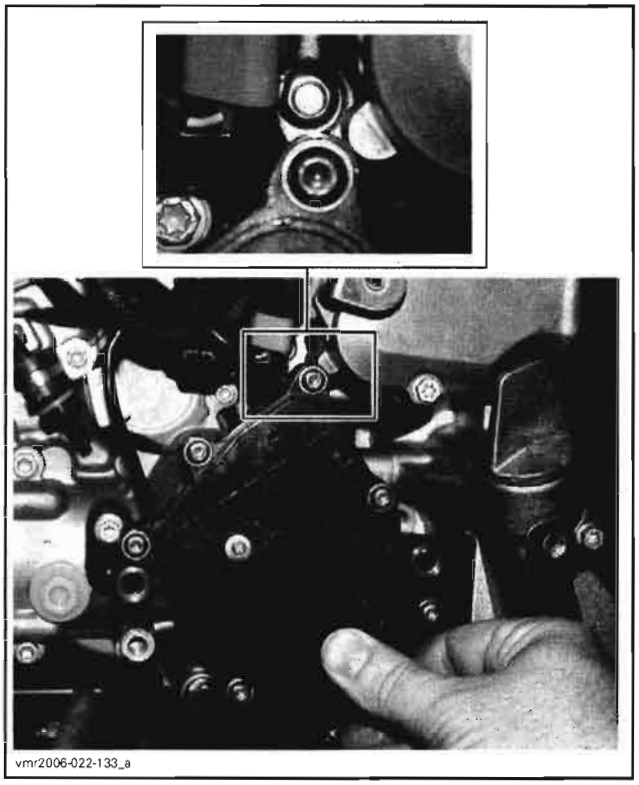
vmr2006-022-133_a

Rotate the actuator counterclockwise until it orients itself to mounting position.

**CAUTION: Do not cut or break the actuator O-ring.**

Install all actuator bolts then torque them to 25 N•m (18 lbf•ft).

Connect actuator.

Lift the front of vehicle.

Turn front wheels. The front propeller shaft should not turn (the PARK position must be selected).

If the front propeller shaft turns, the actuator is not installed correctly. Remove actuator and reinstall it.

Place ignition switch to ON position and select the 2WD position.

Turn front wheel again. The front propeller shaft. The shaft should turn easily.

If the front propeller shaft does not turn, the actuator is not installed correctly. Remove actuator and reinstall it.

**CAUTION: Refill missing gearbox oil, refer to *GEARBOX OIL CHANGE* above.**

Install all other removed parts.

# OUTPUT SHAFT AND COUPLING MECHANISM

Remove gearbox. Refer to *GEARBOX* further in this section.

Before removing the right housing and output shaft **no. 1** measure the backlash on output shaft. This measure will indicate if output shaft adjustment is necessary.

## Output Shaft Backlash Procedure

Engage PARK position on the gear shaft to block gearbox.

Remove:

- bearing cover with oil seal

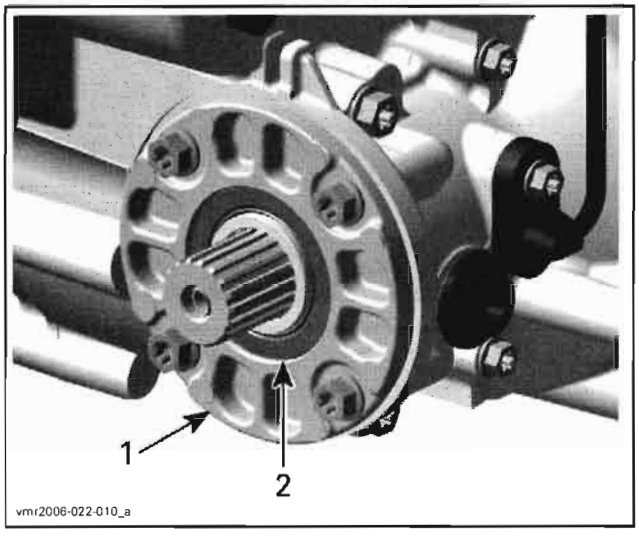


*1. Bearing cover*
*2. Oil seal*

- distance sleeve
- O-ring.

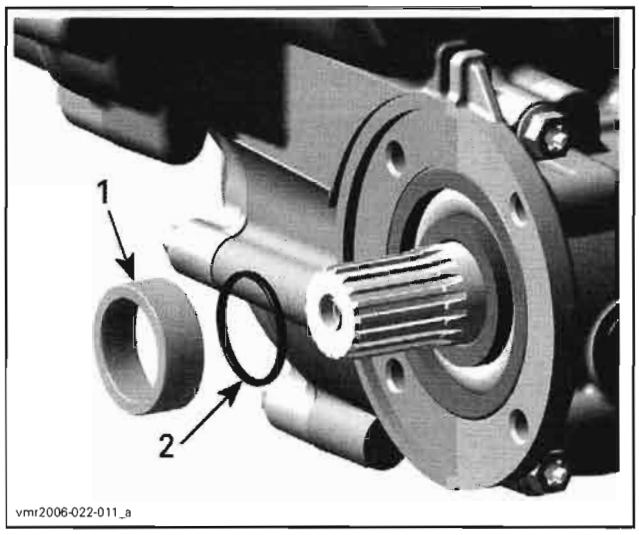


*1. Distance sleeve*
*2. O-ring*

Install the backlash measurement tool (P/N 529 036 030) at the end of output shaft.

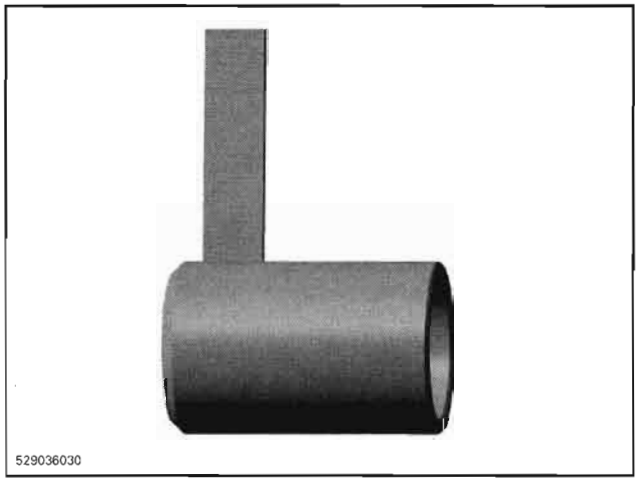


From center of tool bolt, measure 47 mm (1.85 in) and place a mark on the tab.

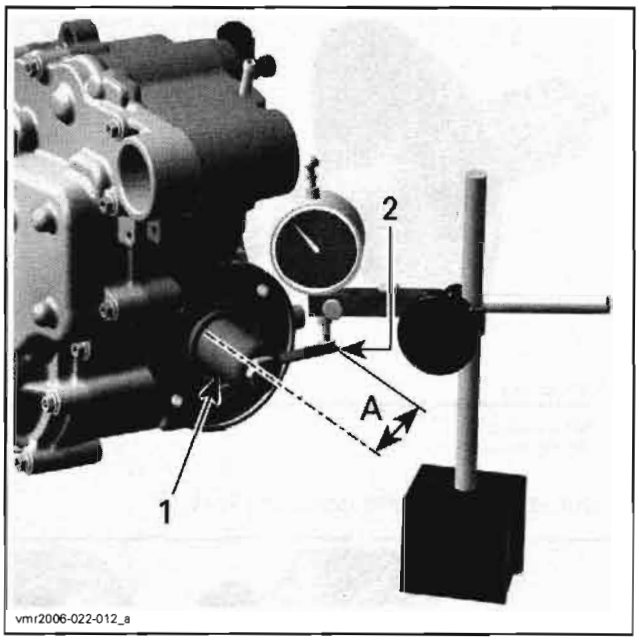


*1. Backlash measurement tool*
*2. Mark on tab*
*A. 47 mm (1.85 in)*

Position the head of the dial indicator, against the tab at a 90° angle and on the line. Then, gently rotate the output shaft.

This reading gives the backlash measurement. Refer to the following table for backlash specifications.

| OUTPUT SHAFT BACKLASH | |
|---|---|
| NEW | 0.10 to 0.20 mm (.0039 to .0079 in) |
| SERVICE LIMIT | 0.25 mm (.0098 in) |

If backlash is not within the specification, remove the output shaft and select the next thicker or thinner shim to meet the specifications.

**NOTE:** Use next thicker shim to increase backlash and next thinner shim to reduce backlash.

## Removal

Remove actuator **no. 39**.

Remove the bearing cover with oil seal.

Unscrew all bolts retaining the right housing to the center housing.

To remove right housing, use 2 big screwdrivers.

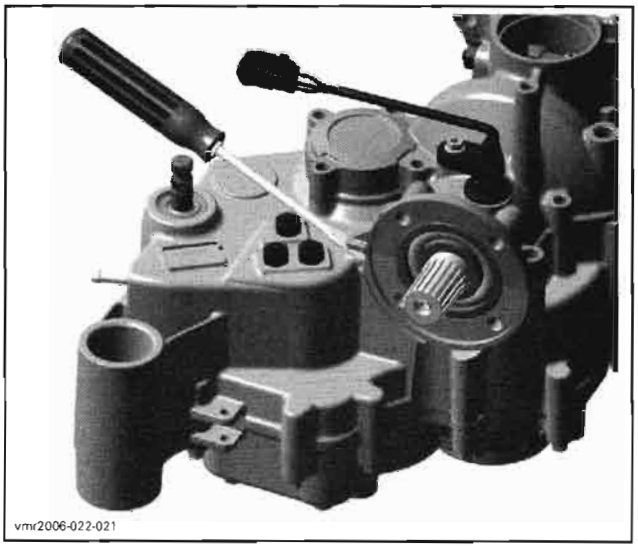


*POSITION FOR BIG FLAT SCREWDRIVER*

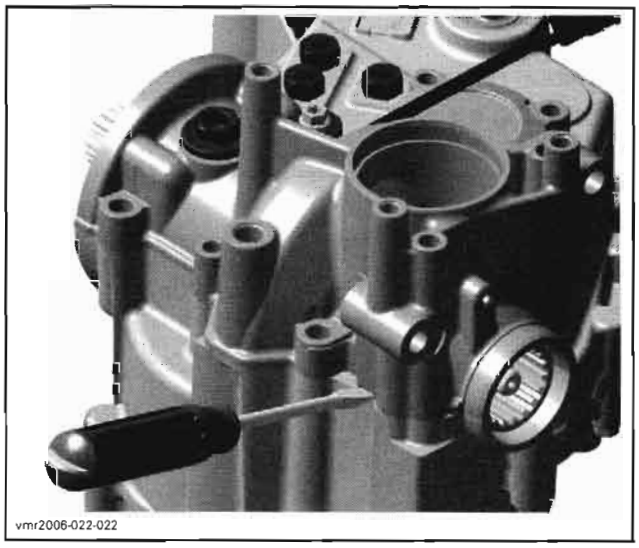


*POSITION FOR BIG FLAT SCREWDRIVER*

Remove output shaft.

**CAUTION:** Use a soft hammer to remove output shaft from center housing.

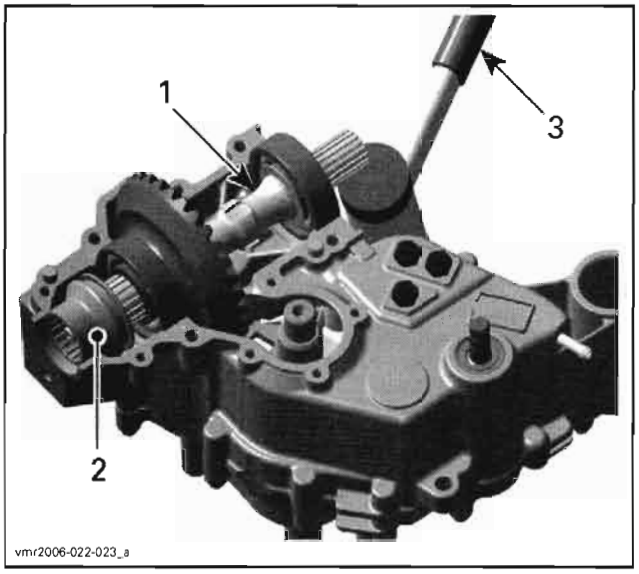


1. *Output shaft*
2. *Coupling sleeve*
3. *Soft hammer*

Continue removal procedure by removing:

- coupling sleeve, O-ring, ball bearing and thrust washer.

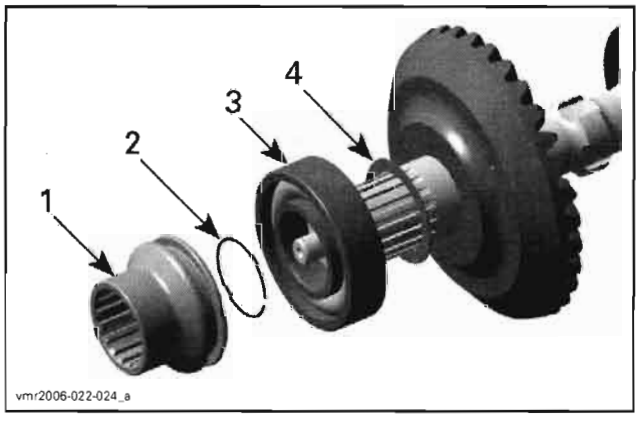


1. *Coupling sleeve*
2. *O-ring*
3. *Ball bearing*
4. *Thrust washer*

- ball bearing and thrust washer

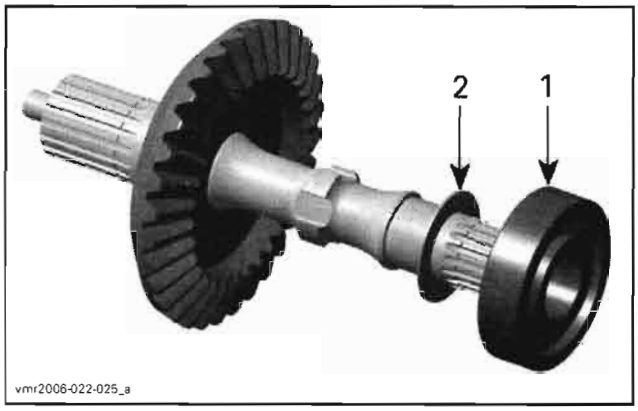


1. *Ball bearing*
2. *Thrust washer*

- set screw, pin and coupling fork.

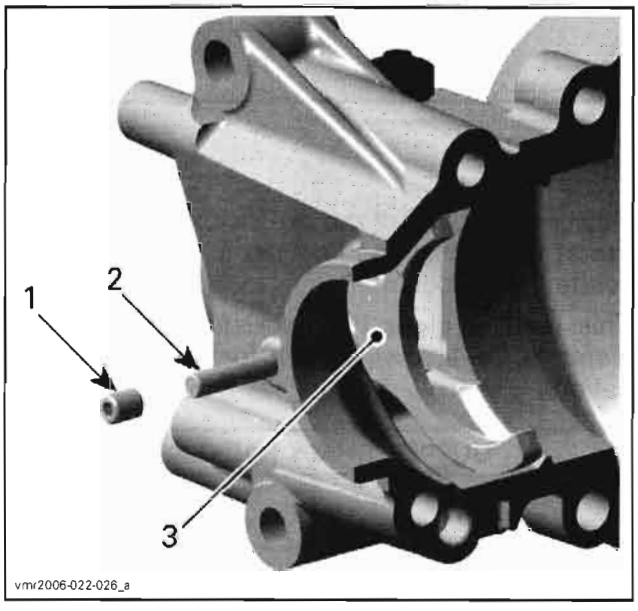


1. *Set screw*
2. *Pin*
3. *Coupling fork*

## Inspection

Check output shaft **no. 1** and its gear for cracks, bend, pitting or other visible damages.

Check output shaft splines for wear or other damages.

**CAUTION: Always replace output shaft and bevel gear shaft at the same time. Adjust these components upon replacement.**

Check if the output shaft bearings **no. 3** and **no. 7** turn freely and smoothly. Replace if necessary.

Replace oil seal **no. 46** if brittle, hard or damaged.

Replace O-rings **no. 4** and **no. 8** if brittle, hard or damaged.

Check splines of coupling sleeve **no. 9** for wear or other damages.

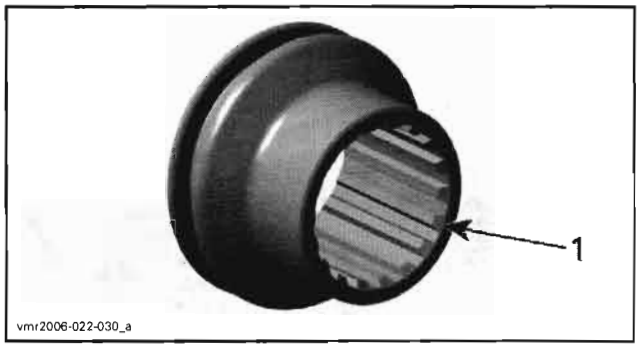


*1. Inspect splines*

Measure the coupling sleeve groove width.

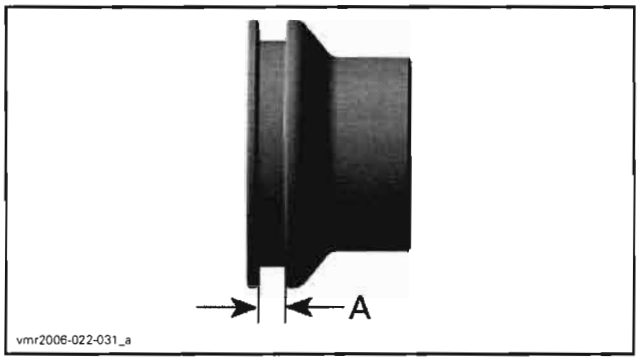


*A. Groove width*

| COUPLING SLEEVE GROOVE WIDTH | |
|---|---|
| NEW | 5.25 to 5.35 mm (.207 to .211 in) |
| SERVICE LIMIT | 5.50 mm (.217 in) |

Check coupling fork claw thickness.

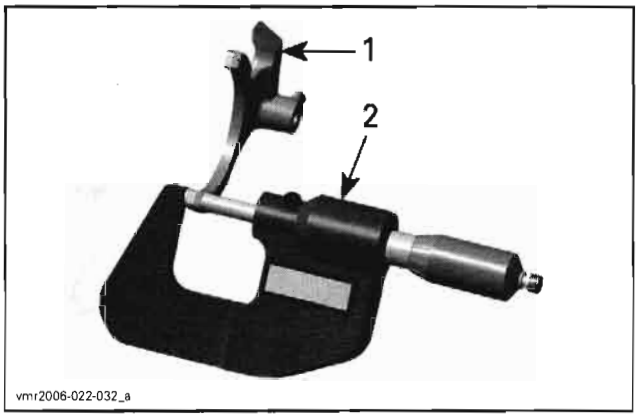


*1. Coupling fork*
*2. Micrometer*

| COUPLING FORK CLAW THICKNESS | |
|---|---|
| NEW | 4.95 to 5.05 mm (.195 to .199 in) |
| SERVICE LIMIT | 4.80 mm (.189 in) |

Clean housing split surface and especially the bearing areas from metal particles or other contamination.

## Installation

Install thrust washer **no. 6**, bearing **no. 7**, O-ring **no. 8** and coupling sleeve **no. 9** onto the output shaft.

Install thrust washer **no. 2** and ball bearing **no. 3**. O-ring **no. 4** and distance sleeve **no. 5** are not installed at this time.

Place the output shaft into the center housing.

Use soft hammer to put bearing exactly in place against center housing.

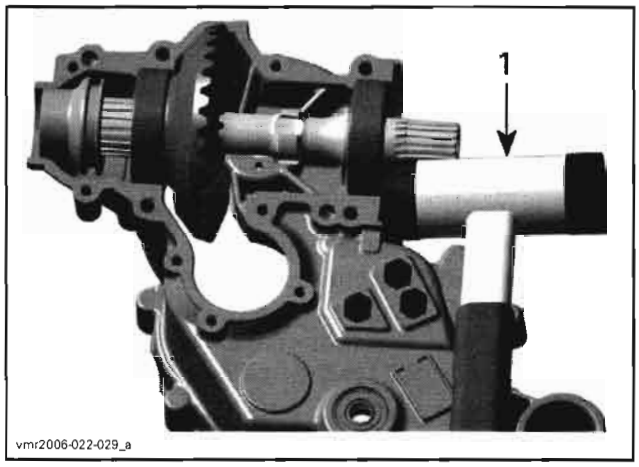


*1. Soft hammer*

Clean the bearing cover location then attach bearing cover with oil seal to the housing.

Temporarily install the right housing with the four (4) M8 TORX screws beside bearing seats.

**NOTE:** Prior to tightening the TORX screws, tap on the gear end of output shaft with a soft hammer to take up all gear free play.

Verify output shaft backlash. Refer to *OUTPUT SHAFT BACKLASH PROCEDURE* in this section. Adjust as required.

If backlash is within specifications, remove dial indicator, backlash measuring tool, bearing cover and right housing.

**NOTE:** Install coupling fork, pin and set screw in right housing before applying sealant to the mating surface.

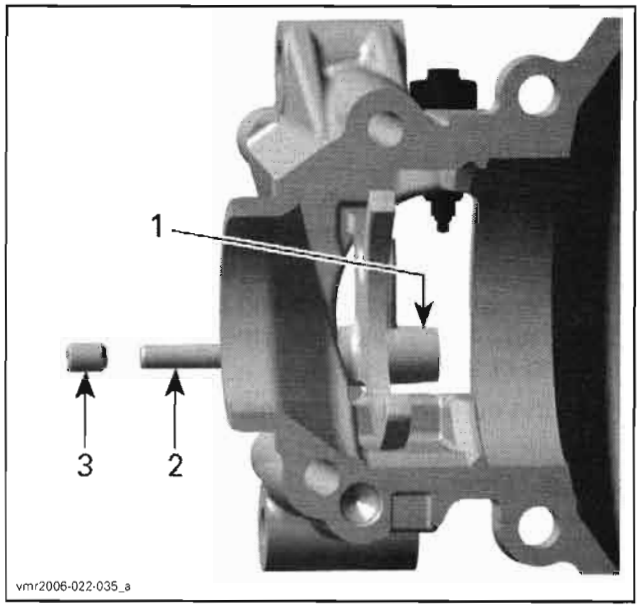


*1. Coupling fork*
*2. Pin*
*3. Set screw*

Clean all metal components in a solvent.

Housing mating surfaces are best cleaned using a combination of Loctite chisel (gasket remover) (P/N 413 708 500) and a brass brush. Brush a first pass in one direction then make the final brushing perpendicularly (90°) to the first pass cross (hatch).

**CAUTION: Do not wipe with rags. Use a new clean hand towel only.**

IMPORTANT: When beginning the application of sealant, the assembly and the first torquing should be done within 10 minutes. It is suggested to have all you need on hand to save time.

Use Loctite 5910 (P/N 293 800 081) on mating surfaces.

Use a plexiglass plate and apply some sealant on it. Use a soft rubber roller (50 - 75 mm (2 - 3 in)), available in arts products suppliers for printing, and roll the sealant to get a thin uniform coat on the plate (spread as necessary). When ready, apply the sealant on housing mating surfaces.

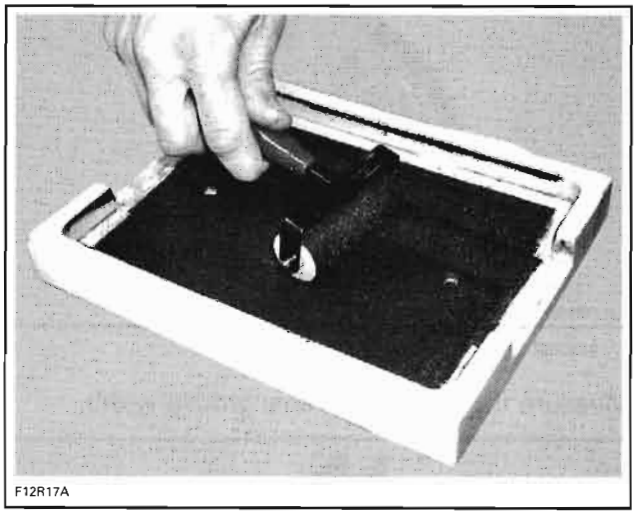


Do not apply in excess as it will spread out inside housings.

NOTE: It is recommended to apply this specific sealant as described here to get a uniform application without lumps. If you do not use the roller method, you may use your finger to uniformly distribute the sealant (using a finger will not affect the adhesion).

Install all other screws on right housing then the O-ring **no. 4** and the distance sleeve **no. 5** on end of output shaft. Chamfered bore of distance sleeve has to face the engine.

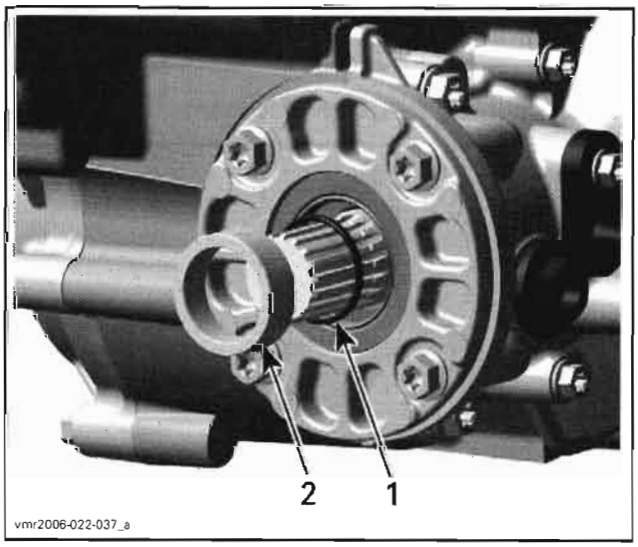


*1. O-ring*
*2. Distance sleeve*

NOTE: To install the right housing align the coupling fork **no. 10** with the groove in the coupling sleeve **no. 9**.

First, torque the four (4) M8 Torx screws in a criss-cross sequence by hand then retighten to 25 N•m (18 lbf•ft).

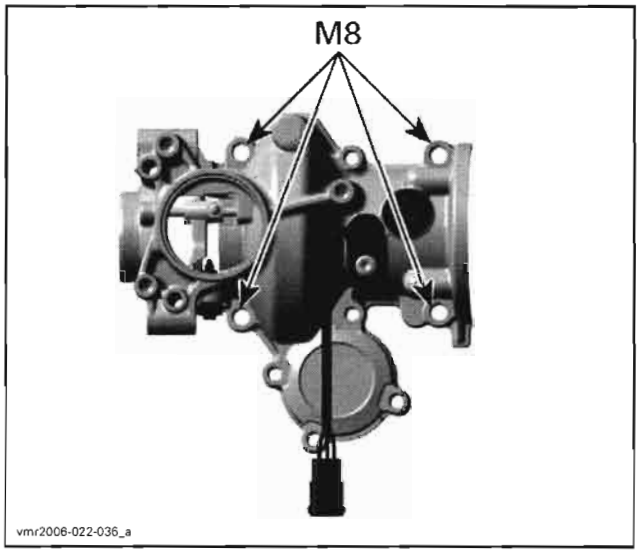


Tighten all M6 Torx screws to 10 N•m (89 lbf•**in**)

Before installing bearing cover, apply Loctite 5910 (P/N 293 800 081) on the housing and Super Lube grease (P/N 293 550 030) on seal.

Install the actuator, refer to *ACTUATOR*.

Once this is done, complete final assembly.

# GEARBOX

## Removal

Remove engine from vehicle and place it on footrest support. Refer to *ENGINE REMOVAL AND INSTALLATION* for the procedure.

Drain gearbox. Refer to *GEARBOX OIL CHANGE* in *MAINTENANCE* of this section for the procedure.

Unscrew the three (3) nuts that attach the gearbox to the engine.

Pull gearbox to separate it from engine.

## Disassembly

NOTE: During gearbox disassembly, inspect the condition of each part closely.

Remove the output shaft. Refer to *OUTPUT SHAFT AND COUPLING MECHANISM* in this section.

Push bevel gear **no. 11** with a pin slightly down and measure the axial clearance of bevel gear with a feeler gauge.

NOTE: Bevel gear axial clearance must be measured before center and left housings separation.

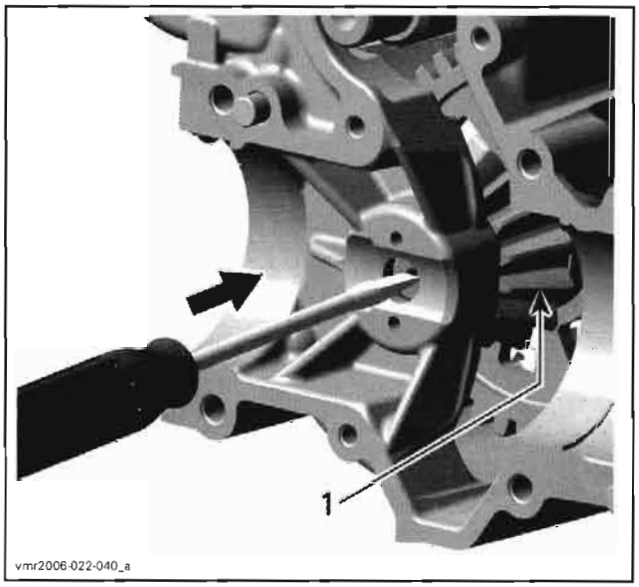


*1. Bevel gear*

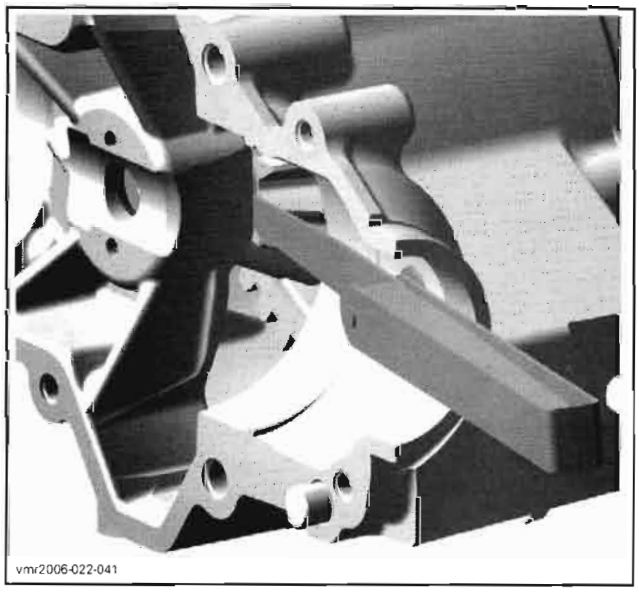


*MEASURE AXIAL CLEARANCE OF BEVEL GEAR*

| BEVEL GEAR AXIAL CLEARANCE | |
|---|---|
| NEW | 0.02 to 0.15 mm (.00079 to .0059 in) |
| SERVICE LIMIT | 0.19 mm (.0075 in) |

Unscrew the left housing screws.

Place the left housing on a wood stand, center housing pointing upwards.

Using 2 big flat screwdrivers, lift the center housing.

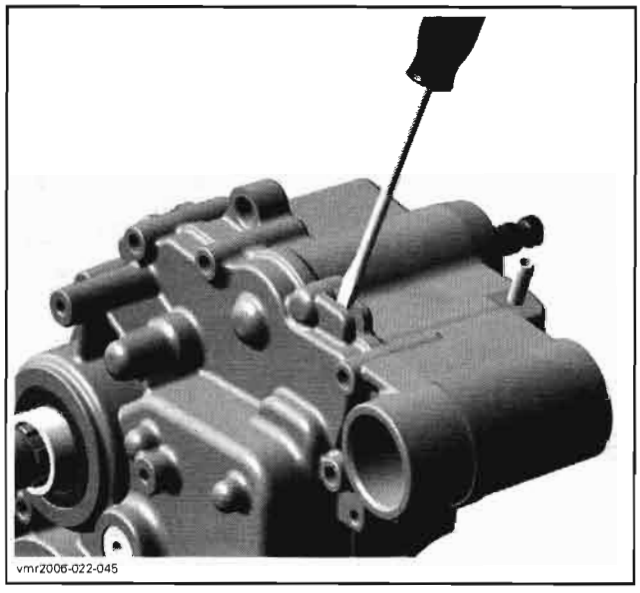


*POSITION FOR BIG FLAT SCREWDRIVER*

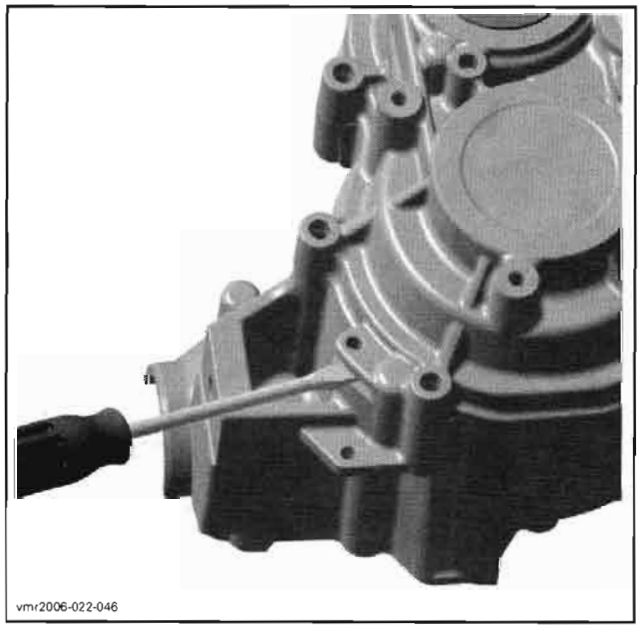


*POSITION FOR BIG FLAT SCREWDRIVER*

Remove center housing completely.

Remove shift shaft assembly.

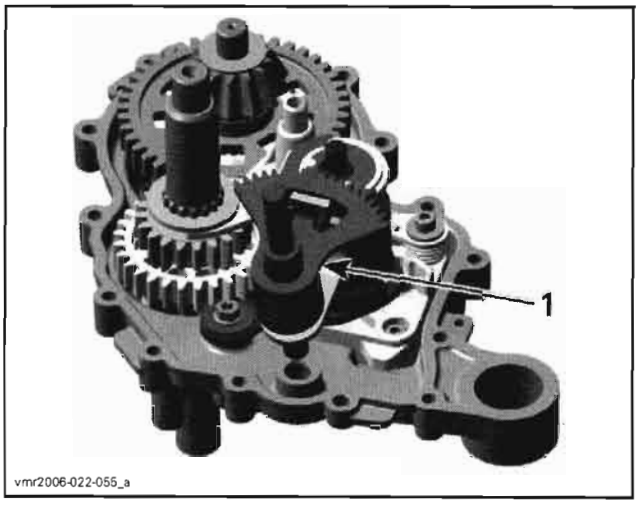


*1. Shift shaft assembly*

Remove shift fork shaft.

Remove disengage shift fork from shift drum.

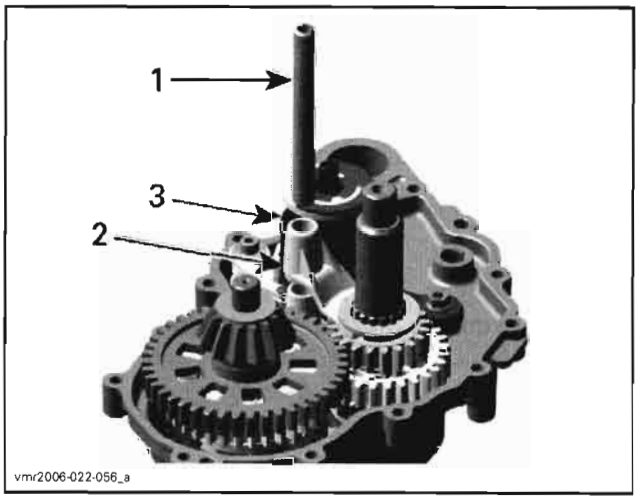


*1. Shift fork shaft*
*2. Shift fork*
*3. Shift drum*

Remove bevel gear shaft with low range gear assembly and shim.

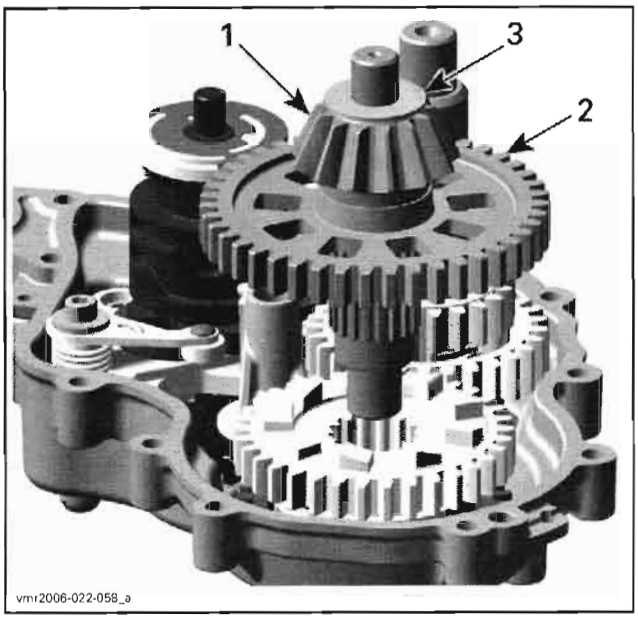


1. *Bevel gear*
2. *Low range gear*
3. *Shim*

Remove sliding gear with shift fork.

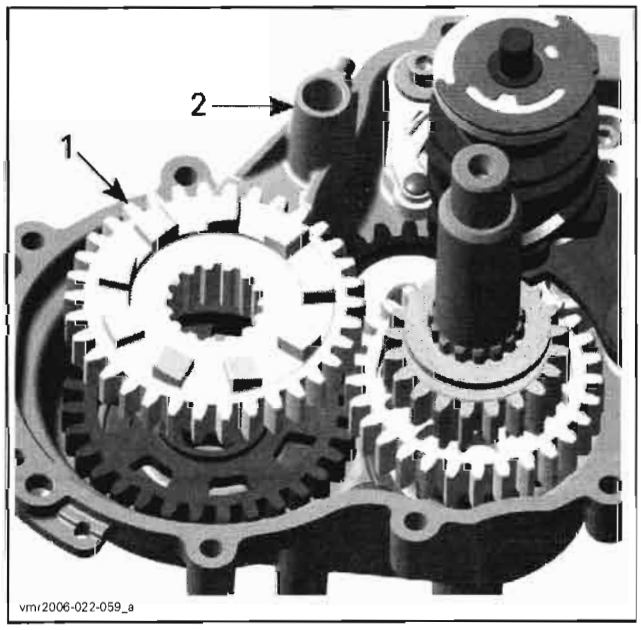


1. *Sliding gear*
2. *Shift fork*

Remove thrust washer, needle bearing and reverse gear.

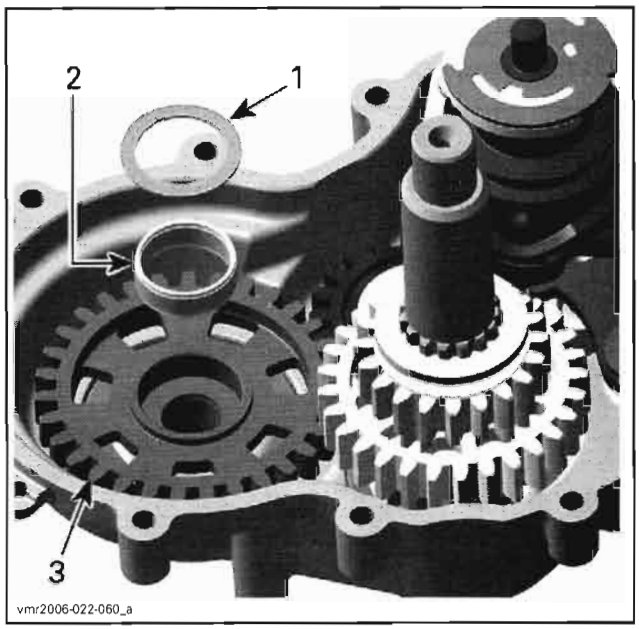


1. *Thrust washer*
2. *Needle bearing*
3. *Reverse gear*

Remove shim on CVT side.

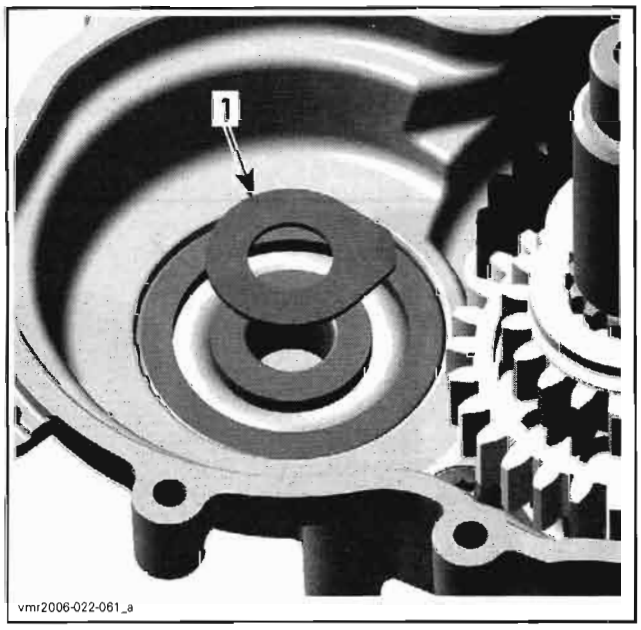


1. *Shim on CVT side*

Remove countershaft **no. 18** with low range gear and high range gear assembly.

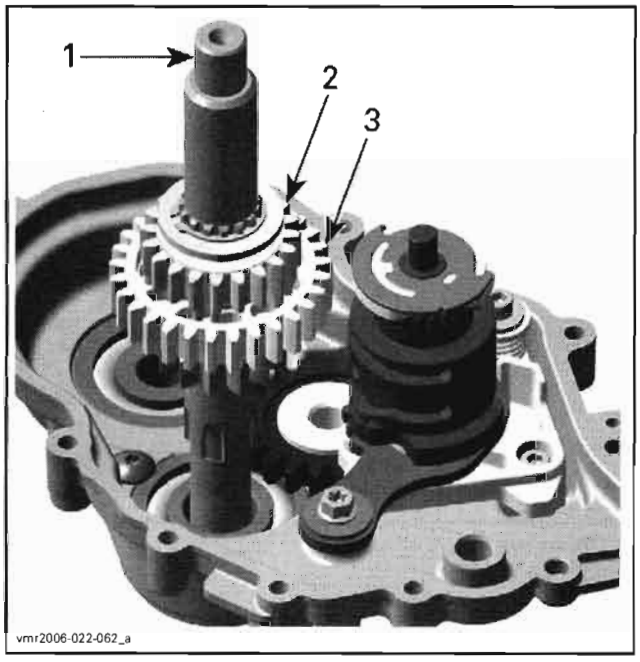


*1. Countershaft*
*2. Low range gear*
*3. High range gear*

Insert a flat screwdriver in the slot of index lever. Turn screwdriver clockwise and remove shift drum.

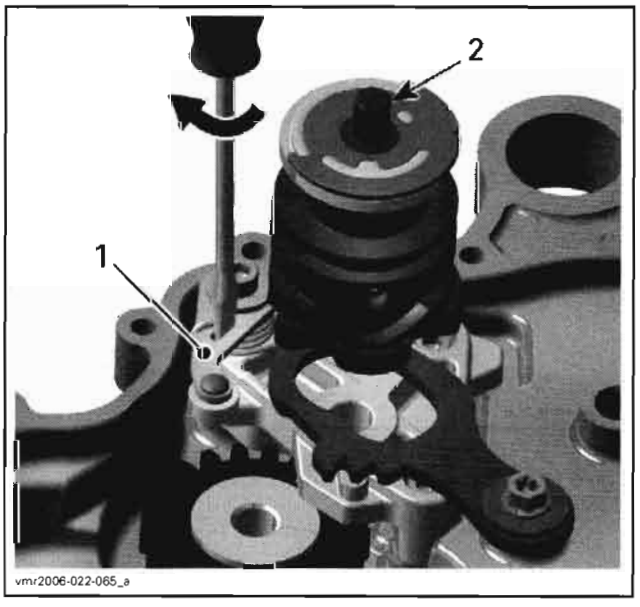


*1. Index lever*
*2. Shift drum*

Continue by removing the following;
- parking lock lever

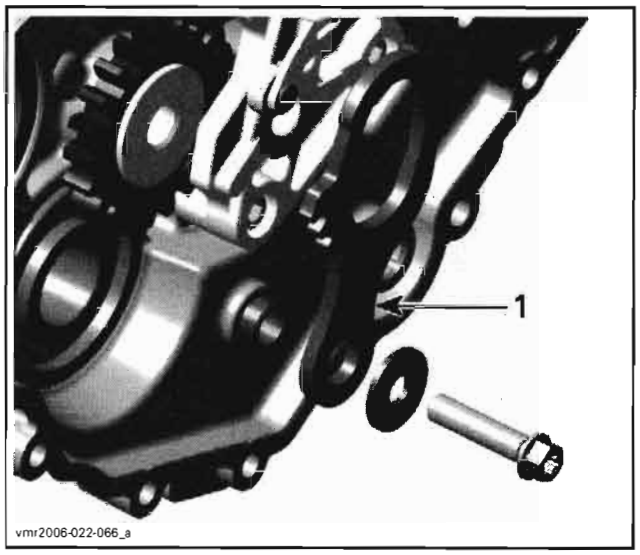


*1. Parking lock lever*

- index lever with washer, step ring and spring

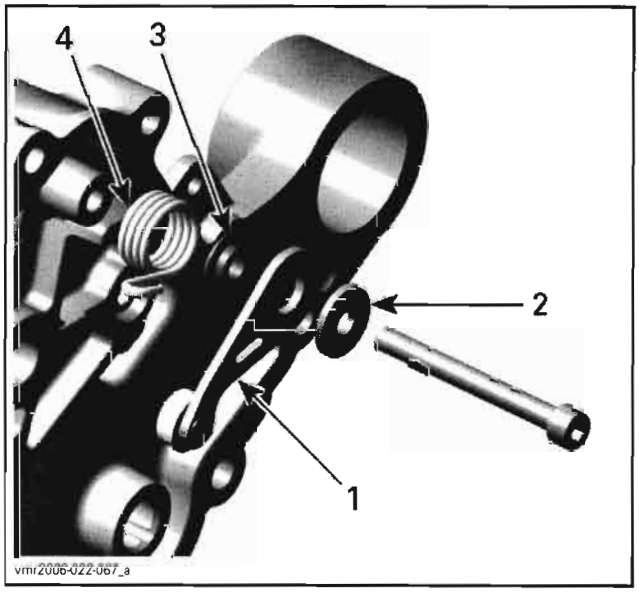


*1. Index lever*
*2. Washer*
*3. Step ring*
*4. Index spring*

- support flange **no. 37**.

To remove intermediate gear **no. 23** and needle bearing **no. 22**, use a press bench to push out the intermediate gear shaft **no. 21**.

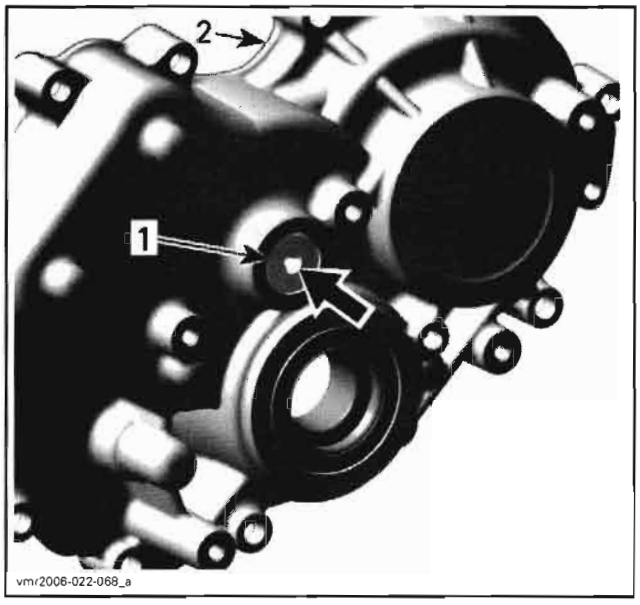


*PRESS SHAFT IN THE DIRECTION AS SHOWN BY THE ARROW*
1. *Intermediate gear shaft*
2. *Left housing*

## Bearing Removal in Housing

If necessary heat housing up to 100°C (212°F) before removing ball bearings or needle bearings.

**⚠ WARNING**

**Clean oil, outside and inside, from housing before heating.**

**CAUTION: Always support gearbox housings properly when ball bearings or needle bearings are removed. Housing damages may occur if this procedure is not performed correctly.**

To remove bevel gear needle bearing use a punch.

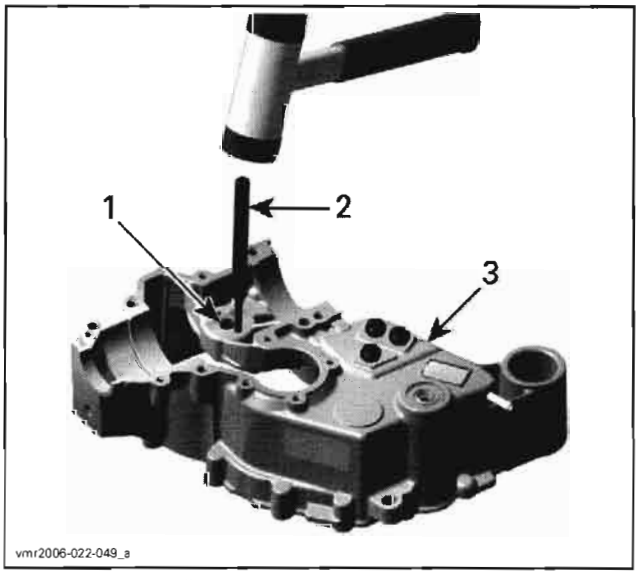


1. *Bevel gear needle bearing*
2. *Punch*
3. *Center housing*

To remove ball bearings of bevel gear **no. 36** and needle bearing of countershaft **no. 33**, use a blind hole bearing puller.

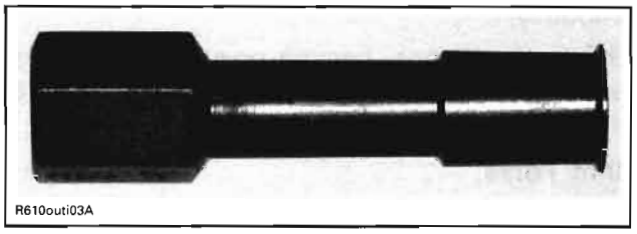


For countershaft ball bearing, remove screw and intermediate gear shaft, then push with a suitable puller from outside in.

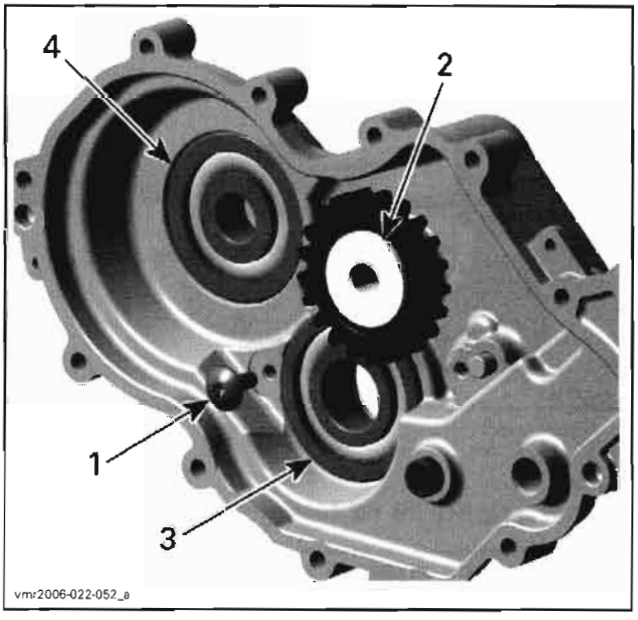


1. *Screw*
2. *Intermediate gear shaft*
3. *Ball bearing countershaft*
4. *Bevel gear ball bearing*

## Inspection

Always verify for the following when inspecting gearbox components:

- gear teeth damage
- worn or scoured bearing surfaces
- worn or scoured shift fork
- worn or scoured shift fork shaft
- rounded engagement dogs and slots
- bent shift forks
- bent shift fork shaft
- worn shift fork engagement pins
- worn tracks on shift drum
- worn shift fork engagement groove
- worn splines on shafts and gears.

### Bearings

Check if bearings **no. 34** and **no. 36** as well as needle bearings **no. 33** and **no. 35** turn freely and smoothly.

Check all bearings, bearing points, tooth flanks, taper grooves and annular grooves. Annular grooves must have sharp edges.

### Shift Forks

Check both shift forks for visible damage, wear or bent shift fork claws.

Measure the shift fork claw thickness.

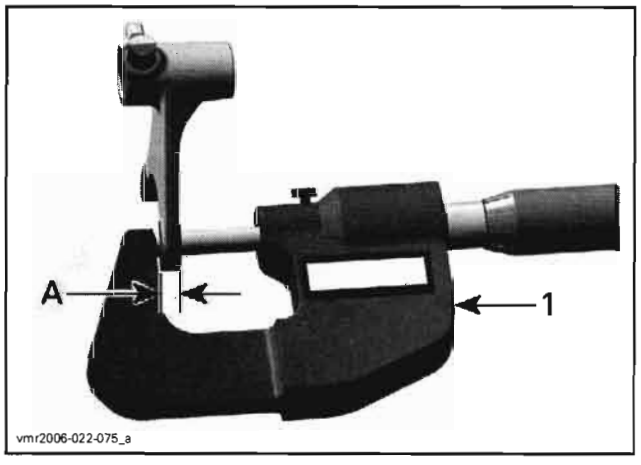


*1. Micrometer*
*A. Shift fork claw thickness*

- Shift fork **no. 25** for high gear shifting.

| SHIFT FORK CLAW THICKNESS (high gear shifting) | |
|---|---|
| NEW | 4.80 to 4.90 mm (.189 to .193 in) |
| SERVICE LIMIT | 4.70 mm (.185 in) |

- Shift fork **no. 26** for low/reverse gear shifting.

| SHIFT FORK CLAW THICKNESS (low/reverse gear shifting) | |
|---|---|
| NEW | 5.10 to 5.20 mm (.200 to .205 in) |
| SERVICE LIMIT | 5.00 mm (.197 in) |

Measure shift fork pins.

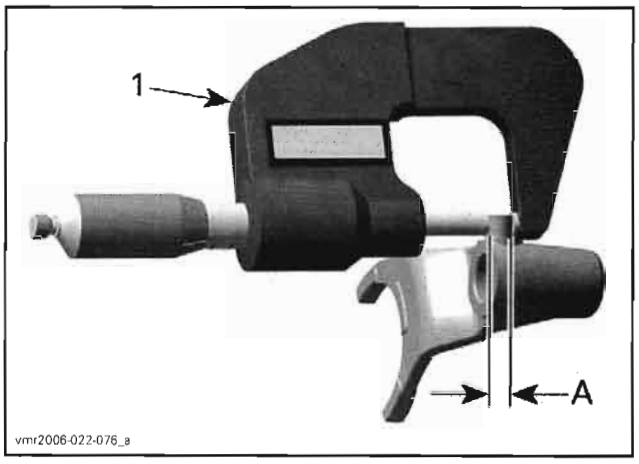


*1. Micrometer*
*A. Shift fork pin diameter*

| SHIFT FORK PIN DIAMETER | |
|---|---|
| NEW | 6.920 to 6.970 mm (.272 to .274 in) |
| SERVICE LIMIT | 6.850 mm (.270 in) |

### Shift Drum

Check shift drum tracks for scouring or heavy wear, like rounded engagement slots.

Replace isolating washer **no. 27** if there are signs of wear or visible damages.

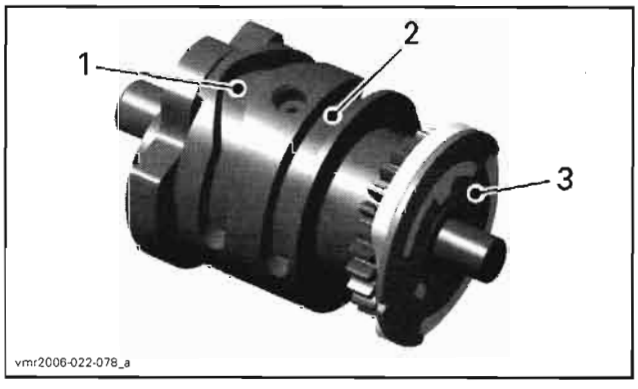


*1. Track for the low/reverse gear shift fork*
*2. Track for the high gear shift fork*
*3. Isolating washer on the shift drum*

### Levers

Check parking lever **no. 29** for cracks or other damages.

Index lever with roller **no. 28** must move freely.

### Gears

NOTE: Replace gears only together with the corresponding meshing gears. Always replace circlips and use special pliers to install them.

Measure the width of shift fork engagement groove.

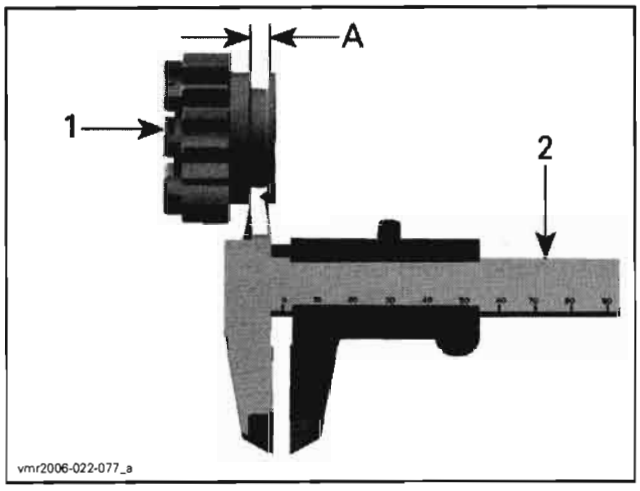


*1. Main gear*
*2. Caliper*
*A. Width for engagement of shift fork*

– Gear **no. 20** for high gear shifting.

| WIDTH OF SHIFT FORK ENGAGEMENT GROOVE (high gear shifting) | |
|---|---|
| NEW | 5.00 to 5.10 mm (.197 to .201 in) |
| SERVICE LIMIT | 5.20 mm (.205 in) |

– Gear **no. 15** for low/reverse gear shifting.

| WIDTH OF SHIFT FORK ENGAGEMENT GROOVE (low/reverse gear shifting) | |
|---|---|
| NEW | 5.30 to 5.40 mm (.209 to .213 in) |
| SERVICE LIMIT | 5.50 mm (.217 in) |

Check free pinions **no. 14**, **no. 16**, **no. 19** and **no. 23** for wear.

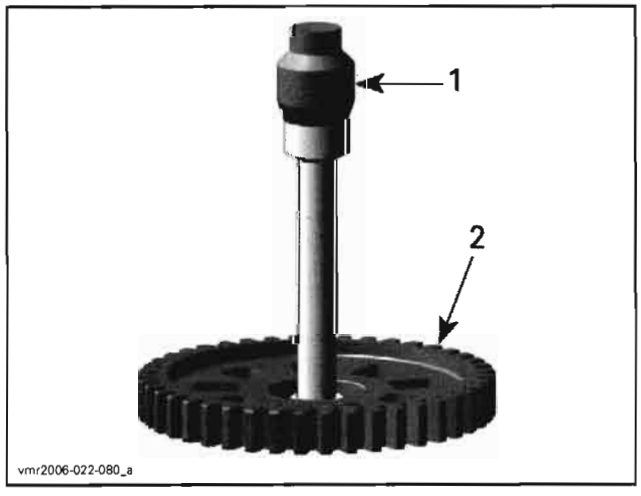


*TYPICAL*
*1. Micrometer*
*2. Free pinion*

| DIAMETER FREE PINION | |
|---|---|
| NEW | 29.000 to 29.013 mm (1.1417 to 1.1422 in) |
| SERVICE LIMIT | 29.015 mm (1.1423 in) |

## Shafts

Check shift shaft **no. 30** for worn splines and gears.

Check intermediate shaft for wear.

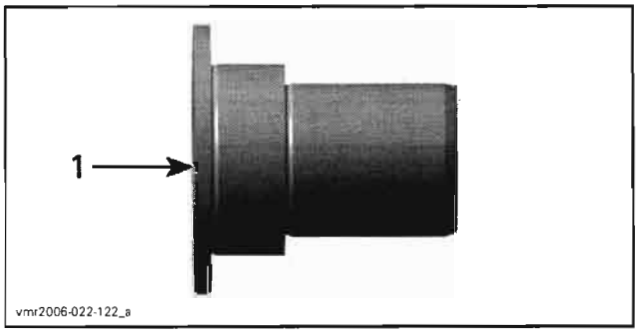


*1. Intermediate gear bearing*

| INTERMEDIATE GEAR SHAFT | |
|---|---|
| NEW | 24.979 to 25.000 mm (.9834 to .9842 in) |
| SERVICE LIMIT | 24.977 mm (.9833 in) |

Check countershaft for wear.

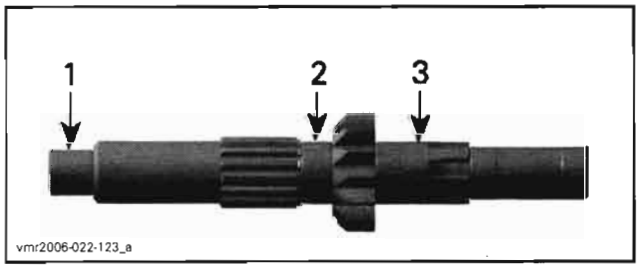


*1. MAG side*
*2. Free pinion bearing*
*3. CVT side*

| COUNTERSHAFT | |
|---|---|
| SERVICE LIMIT | |
| MAG side | 17.990 mm (.708 in) |
| Free pinion bearing | 24.970 mm (.983 in) |
| CVT side | 24.970 mm (.983 in) |

Check bevel gear shaft.

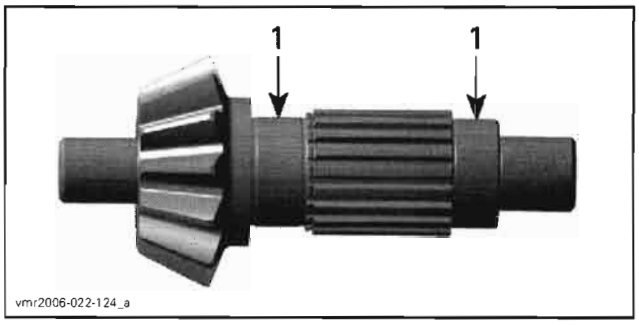


*1. Free pinion bearings*

| BEVEL GEAR SHAFT | |
|---|---|
| SERVICE LIMIT | |
| Free pinion bearing | 24.984 mm (.9836 in) |

### Shims

Always replace shim by a new one with the same thickness, when reassembling the gearbox with existing output shaft **no. 1** and bevel gear shaft **no. 11**.

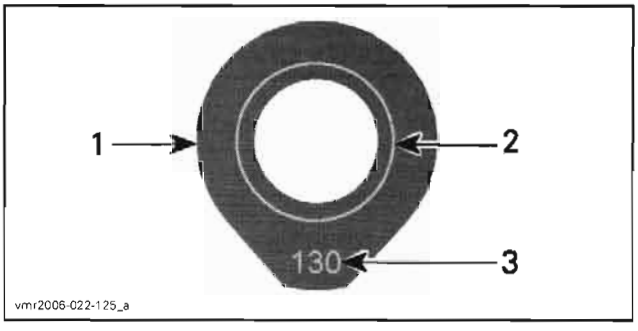


*1. Shim for adjusting the bevel gear on center housing side*
*2. Area where wear signs appear*
*3. Thickness of the shim*

## Adjustment

### Bevel Gear

NOTE: Only necessary if the backlash and axial clearance of the bevel gear is out of specification or if parts are changed (output shaft, bevel gear shaft or housing).

There are 2 adjustments to perform on the bevel gear.

- bevel gear backlash on center housing
- bevel gear axial clearance on left housing.

The bevel gear backlash is adjusted by finding the proper shim thickness **E** as per following illustration.

The bevel gear axial clearance is adjusted by finding the proper shim thickness **J** as per following illustration.

Clean mating surface of housing before taking measurements using a combination of Loctite chisel (gasket remover) (P/N 413 708 500) and a brass brush. Brush a first pass in one direction then make the final brushing perpendicularly (90°) to the first pass cross (hatch).

**CAUTION: Do not wipe with rags. Use a new clean hand towel only.**

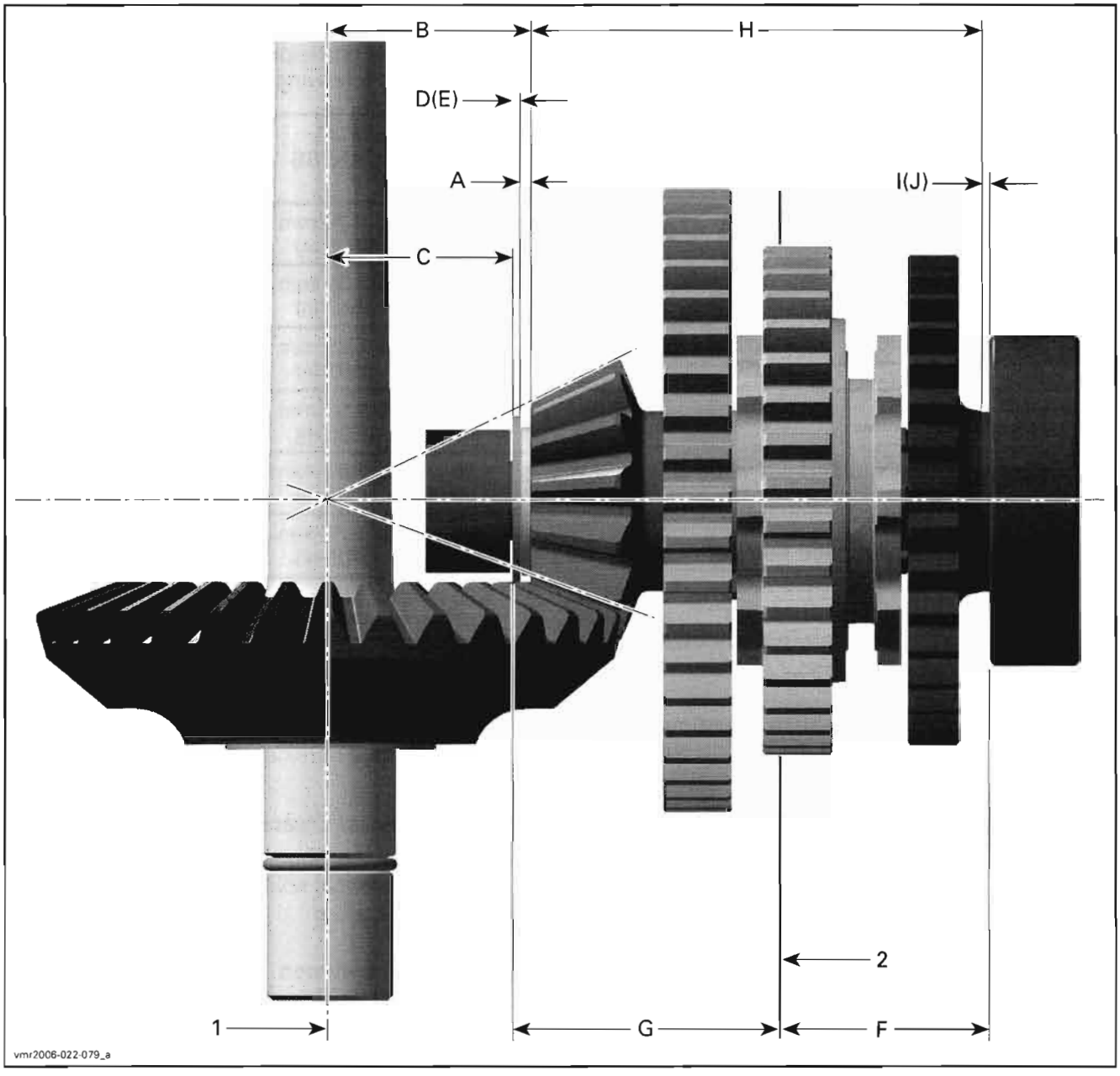


*1. Mating surface — output shaft*
*2. Mating surface — left housing*

## Bevel Gear Backlash Procedure

Use the following course of calculation to determine the theoretical shim thickness D:

D = B - C - A

B = The distance between the thrust surface of the bevel gear and the theoretical center of its taper. This is defined by manufacturer and is written on the bevel gear shaft.

This bevel gear reference number could be between - 10 and + 10.

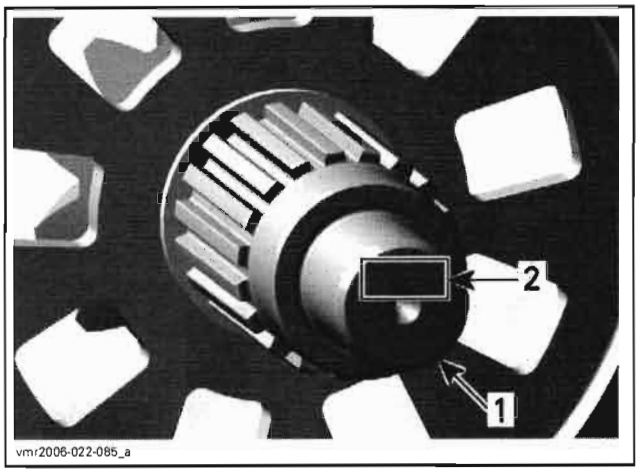


*1. Bevel gear*
*2. Bevel gear reference number*

Use following formula to find out value **B**.

$$B = \left( \frac{\text{Bevel gear reference number}}{100} \right) + 37.8$$

For example: bevel gear reference number = - 3.

**B = (- 3/100) + 37.8 = 37.77**

C = Distance between the shim thrust surface in the center housing and the mating surface to left housing.

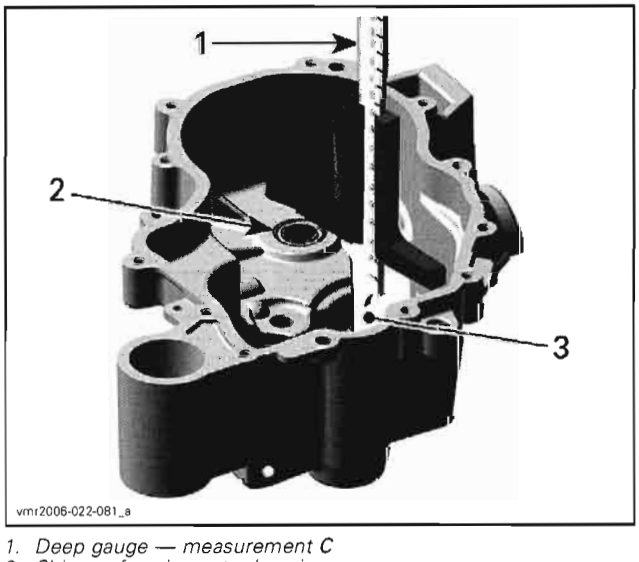


*1. Deep gauge — measurement C*
*2. Shim surface in center housing*
*3. Mating surface to left housing*

A = 2 mm (.0787 in) nominal thickness of axial needle bearing **no. 12**.

When the measurements are taken, calculate the theoretical shim thickness **D** using the formula (**D** = B - C - A).

Take the obtained theoretical shim thickness **D** and choose the corresponding shim number **E** according to the following table.

| THEORETICAL SHIM THICKNESS **D** | SHIM NUMBER **E** |
|---|---|
| 1.20 mm to 1.29 mm (.0472 to .0508 in) | 120 |
| 1.30 mm to 1.39 mm (.0512 to .0547 in) | 130 |
| 1.40 mm to 1.49 mm (.0551 to .0587 in) | 140 |
| 1.50 mm to 1.59 mm (.0591 to .0626 in) | 150 |
| 1.60 mm to 1.69 mm (.0630 to .0665 in) | 160 |
| 1.70 mm to 1.79 mm (.0669 to .0705 in) | 170 |
| 1.80 mm to 1.89 mm (.0709 to .0744 in) | 180 |

**NOTE:** For example, if the theoretical shim thickness **D** is 1.53 mm (.0602 in), choose the corresponding shim number 150 **E**. The shim number 150 represents a nominal value equal to 1.50 mm (.0591 in).

### Bevel Gear Axial Clearance Procedure

Use the following course of calculation to determine the theoretical shim thickness **I**:

**I = F + G - H - A - E**

F = Distance between mating surface of left housing to ball bearing inner race.

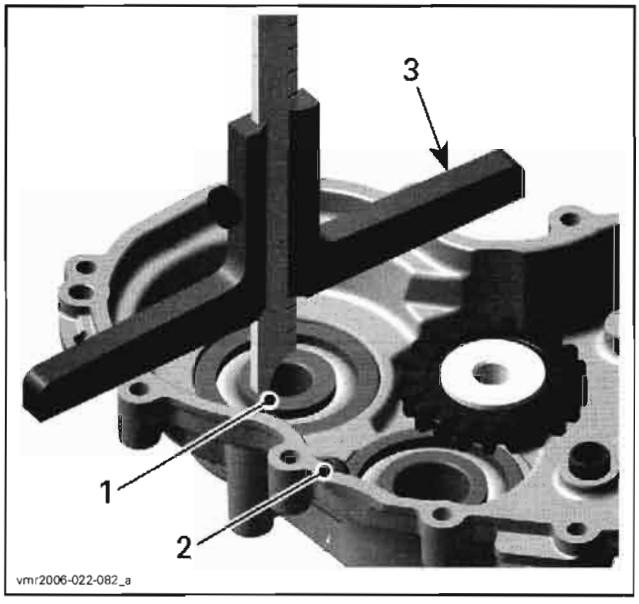


1. *Ball bearing inner race*
2. *Mating surface of left housing*
3. *Depth gauge*

G = Distance between mating surface of center housing and shim surface.

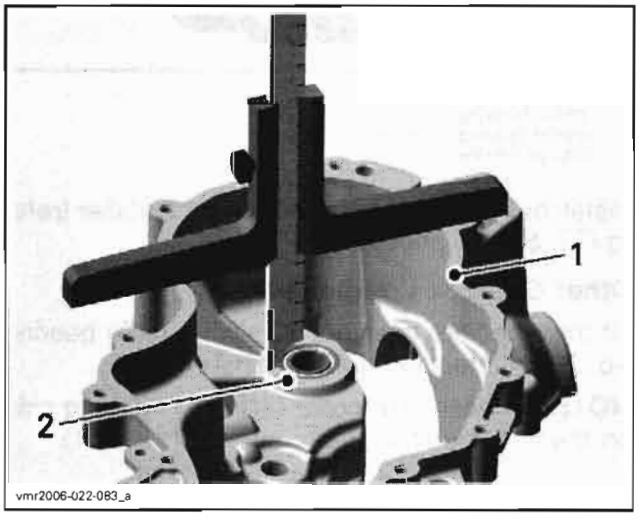


1. *Mating surface of center gear housing*
2. *Shim surface*

H = Distance between thrust surfaces of bevel gear shaft.

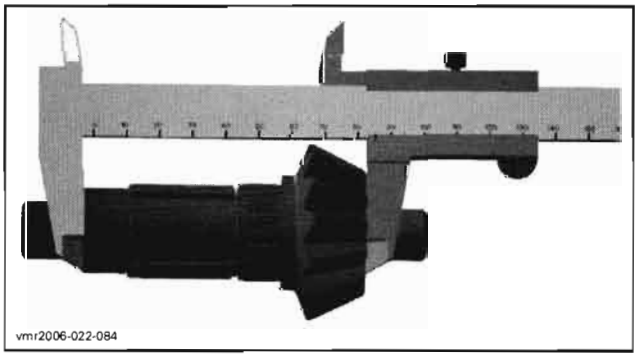


A = 2 mm (.0787 in) nominal thickness of axial needle bearing **no. 12**.

E = The shim number nominal value as found in the *BEVEL GEAR BACKLASH PROCEDURE*. For example, shim number 150 represents a value of 1.50 mm (.0591 in).

When the measurements are taken, calculate the theoretical shim thickness I using the formula (I = F + G - H - A - E).

Take the obtained theoretical shim thickness I and choose the corresponding shim number J according to the following table.

| THEORETICAL SHIM THICKNESS I | SHIM NUMBER J |
|---|---|
| 1.22 mm to 1.31 mm (.0480 to .0516 in) | 120 |
| 1.32 mm to 1.41 mm (.0519 to .0555 in) | 130 |
| 1.42 mm to 1.51 mm (.0559 to .0594 in) | 140 |
| 1.52 mm to 1.61 mm (.0598 to .0634 in) | 150 |
| 1.62 mm to 1.71 mm (.0638 to .0673 in) | 160 |
| 1.72 mm to 1.81 mm (0.677 to .0713 in) | 170 |
| 1.82 mm to 1.91 mm (0.717 to .0752 in) | 180 |

For example, if the theoretical shim thickness I is 1.53 mm (.0602 in), choose the corresponding shim number 150 J.

Bevel gear axial clearance of 0.02 to 0.11 mm (.00079 to .00433 in) is included in the above table.

## Assembly

The assembly of gearbox is essentially the reverse of disassembly procedure. However, pay attention to the following details.

### Bearing Installation in Housing

Unless otherwise instructed, never use hammer to install ball bearings or needle bearings. Use press machine only.

If necessary heat housings up to 100°C (212°F) before installing ball bearings or needle bearings.

**⚠ WARNING**

**Clean oil, outside and inside, from housing before heating.**

Place new bearing in freezer for 10 minutes before installation.

Use a suitable installer for installing ball bearings of countershaft and bevel gear.

NOTE: Place gearbox housings on a wood stand before installing bearings **no. 34** and **no. 36**.

Install countershaft needle bearing **no. 33** with the main shaft needle bearing installer (P/N 529 035 762) and the installer handle (P/N 420 877 650) in right housing.

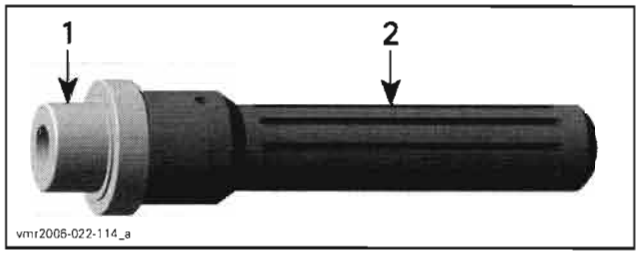


*1. Needle bearing installer*
*2. Installer handle*

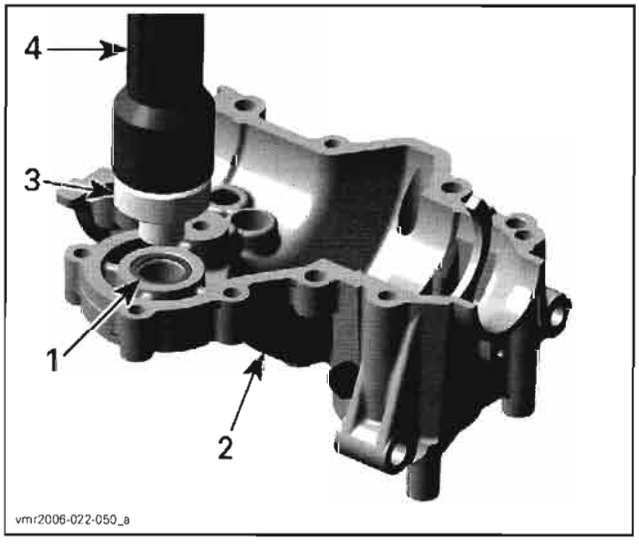


*1. Countershaft needle bearing*
*2. Right housing*
*3. Needle bearing installer*
*4. Installer handle*

Install bevel gear needle bearing **no. 35** using the bevel gear needle bearing installer (P/N 529 035 763) and the installer handle (P/N 420 877 650).

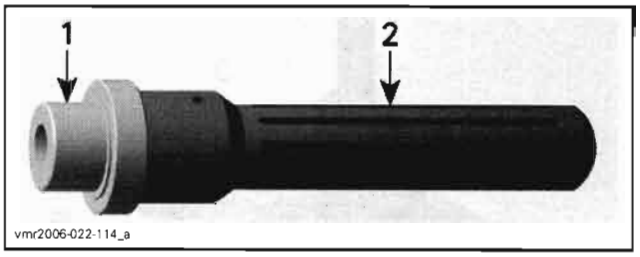


*1. Needle bearing installer*
*2. Installer handle*

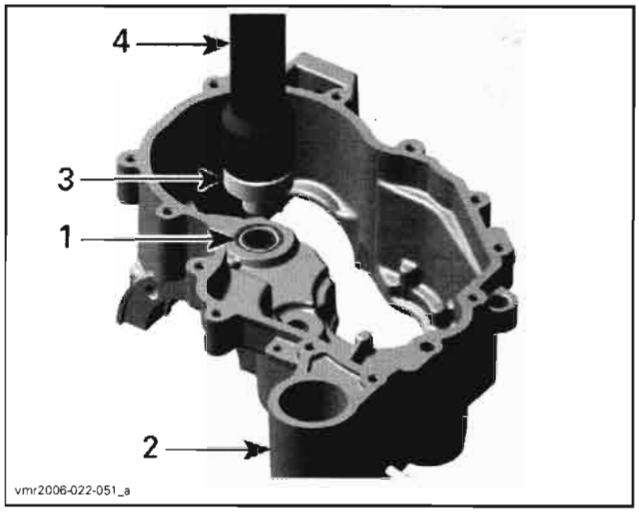


*1. Bevel gear needle bearing*
*2. Center housing*
*3. Needle bearing installer*
*4. Installer handle*

Install new oil seals with the proper installer (refer to *OIL SEALS* above).

### Other Gearbox Components

Fit intermediate gear **no. 23** with needle bearing **no. 22** on intermediate gear shaft **no. 21**.

NOTE: Fit gear with collar facing to housing side on the intermediate shaft.

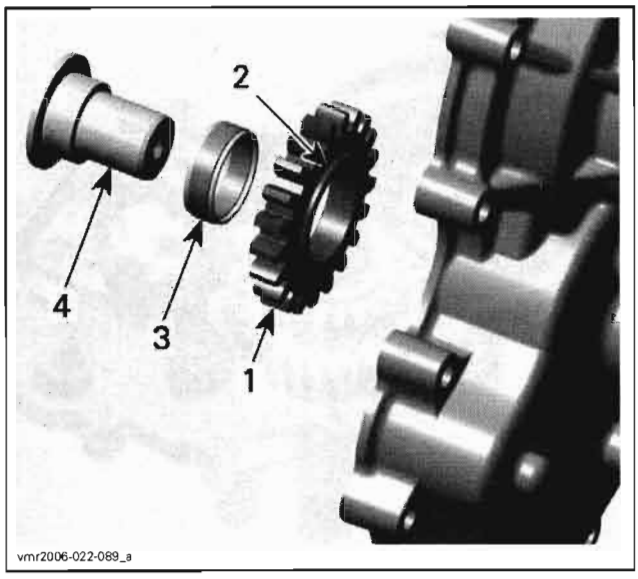


1. *Intermediate gear*
2. *Collar facing housing*
3. *Needle bearing*
4. *Intermediate gear shaft*

Press intermediate gear shaft in the left housing.

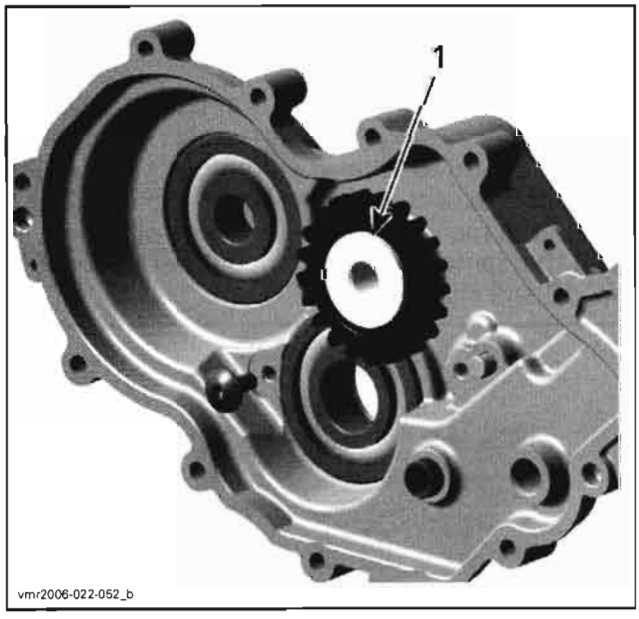


1. *Intermediate gear shaft*

Fit support flange **no. 37** in the left housing and install index lever.

**NOTE:** Fit step ring into index lever.

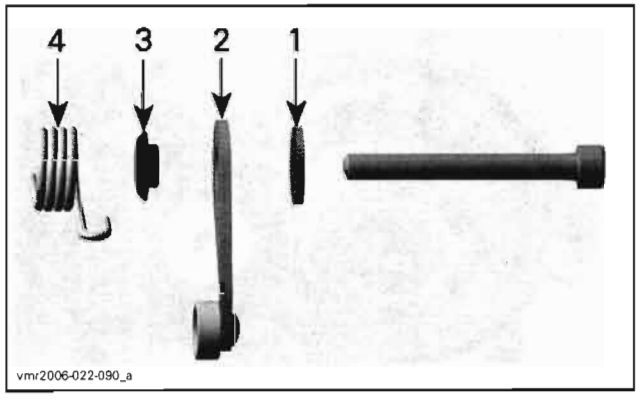


1. *Washer*
2. *Index lever*
3. *Step ring*
4. *Index spring*

Install parking lock lever, teeth showing to countershaft.

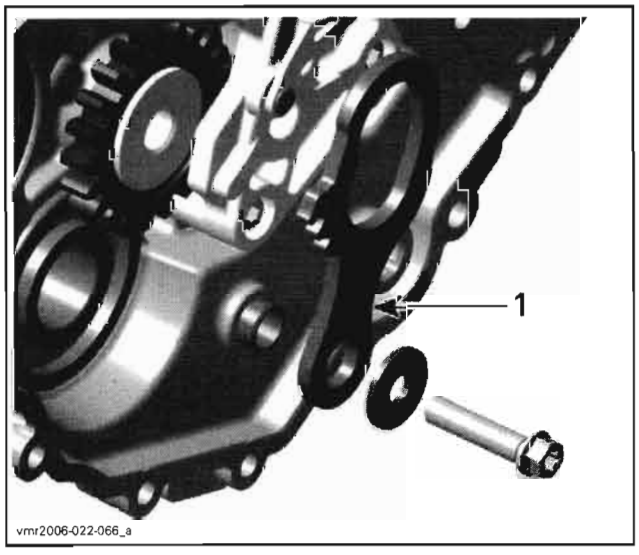


1. *Parking lock lever*

Place shim of CVT side on bearing.

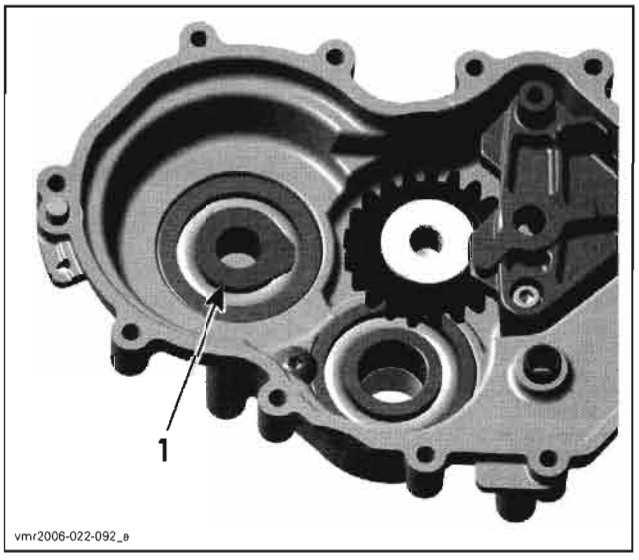


*1. Shim CVT side*

Place reverse gear with needle bearing and thrust washer.

NOTE: Check if the screw to secure countershaft bearing is installed.

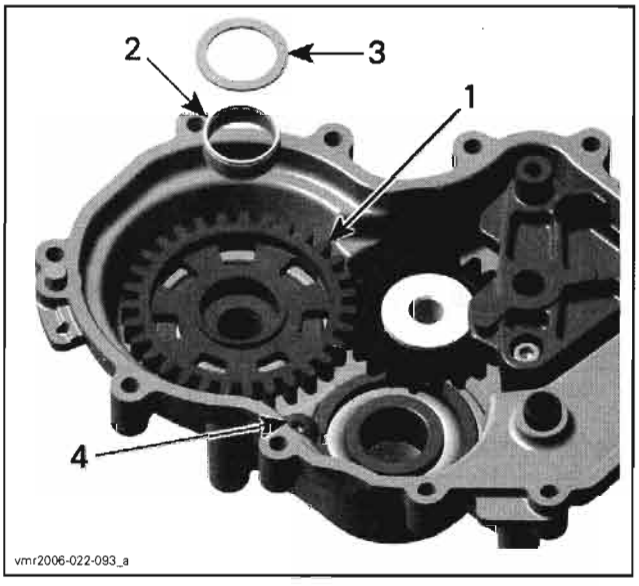


*1. Reverse gear*
*2. Needle bearing*
*3. Thrust washer*
*4. Countershaft bearing screw*

Install countershaft with low gear and high gear assembly.

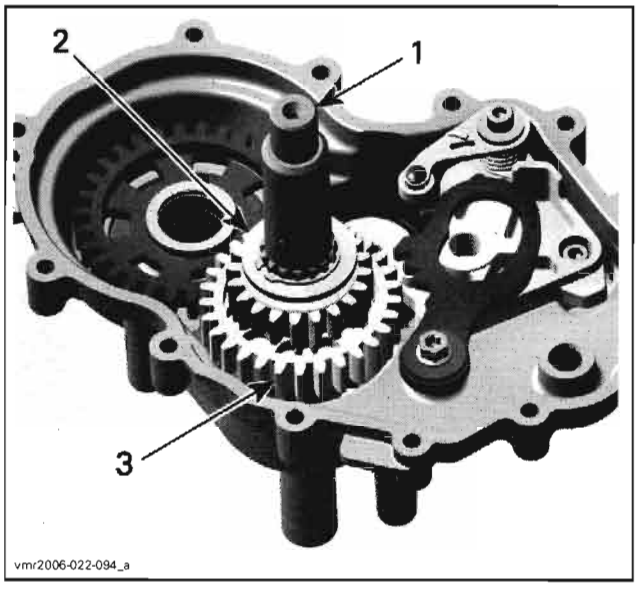


*1. Countershaft*
*2. Low gear*
*3. High gear*

Install a new shim **no. 17** onto bevel gear shaft, fork side.

Install bevel gear with sliding gear assembly together with shift fork.

NOTE: If a new bevel gear and output shaft are used, it is necessary to verify the shim adjustment prior to finalize assembly. Refer to *ADJUSTMENT* above in this section. If the existing bevel gear is used, it is mandatory to use a new shim **no. 17** with the same thickness, a new needle bearing **no. 12** and shim **no. 13**.

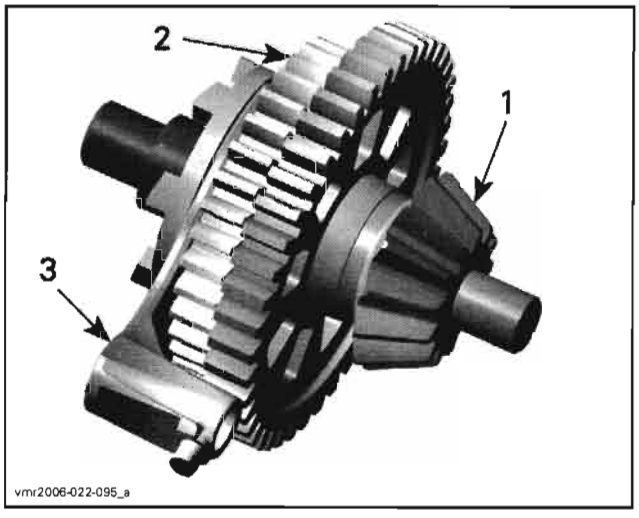


*1. Bevel gear*
*2. Sliding gear*
*3. Shift fork*

Install a new needle bearing and shim.

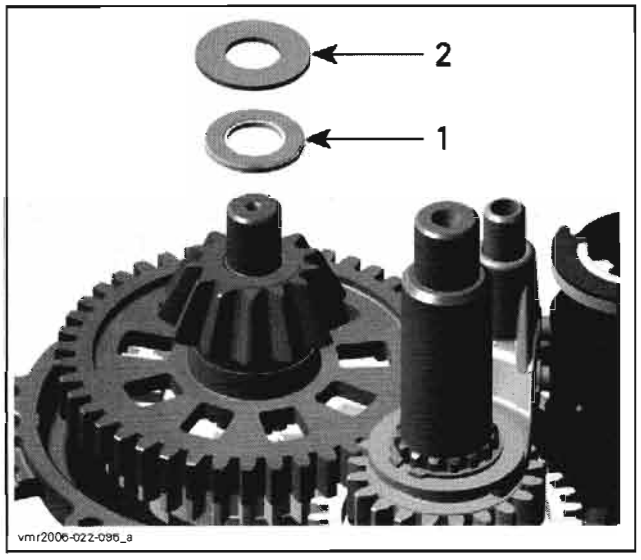


1. *Needle bearing*
2. *Shim*

Insert a flat screwdriver in the slot of the index lever, turn screwdriver clockwise and install shift drum on neutral position as per following illustration.

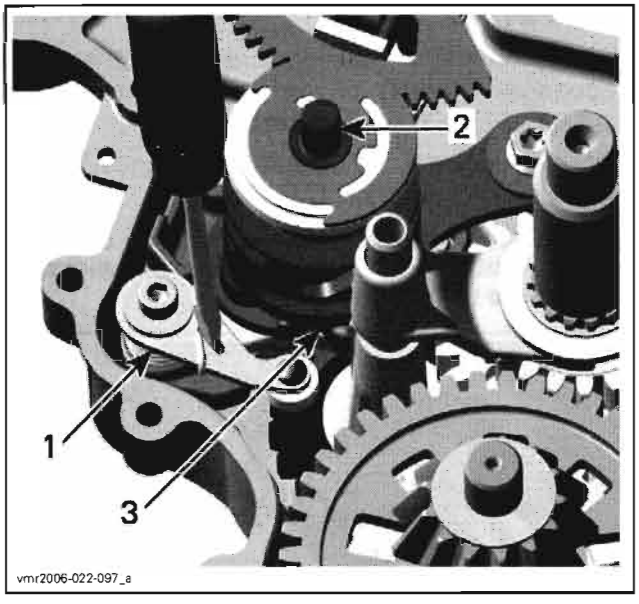


1. *Index lever*
2. *Shift drum*
3. *Neutral position*

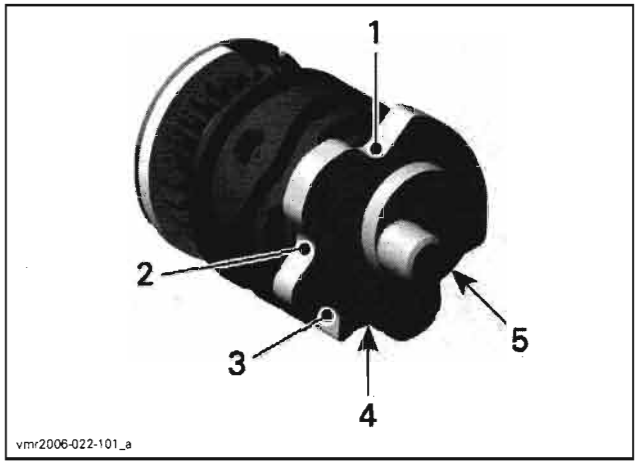


1. *Parking stop location*
2. *Reverse stop location*
3. *Neutral stop location*
4. *High gear stop location*
5. *Low gear stop location*

Install shift shaft assembly.

**NOTE:** Marks on shift drum/isolating washer and shift shaft must align.

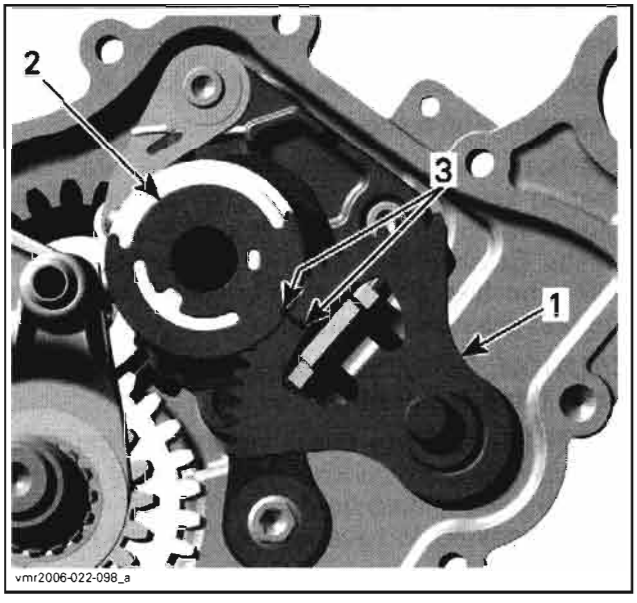


1. *Shift shaft assembly*
2. *Isolating washer*
3. *Marks*

Install shift fork **no. 25** then engage both shift fork pins in their corresponding groove on the shift drum.

**NOTE:** Move sliding gears to facilitate engagement of pins inside grooves.

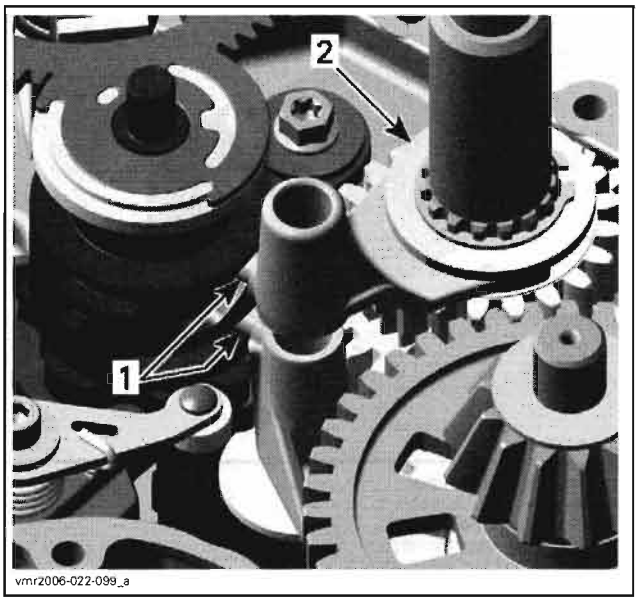


*1. Shift fork pins*
*2. Sliding gear*

Install shift fork shaft **no. 24**.

NOTE: Run all gears as a final function check before installing center housing.

Now, close the housings by doing the following:

Clean all metal components in a solvent.

Gearbox housing mating surfaces are best cleaned using a combination of Loctite chisel (gasket remover) (P/N 413 708 500) and a brass brush. Brush a first pass in one direction then make the final brushing perpendicularly (90°) to the first pass cross (hatch).

**CAUTION: Do not wipe with rags. Use a new clean hand towel only.**

IMPORTANT: When beginning the application of the gear housing sealant, the assembly and the first torquing should be done within 10 minutes. It is suggested to have all you need on hand to save time.

Use Loctite 5910 (P/N 293 800 081) on mating surfaces.

Use a plexiglass plate and apply some sealant on it. Use a soft rubber roller (50 - 75 mm (2 - 3 in)), available in arts products suppliers for printing, and roll the sealant to get a thin uniform coat on the plate (spread as necessary). When ready, apply the sealant on gear housing mating surfaces.

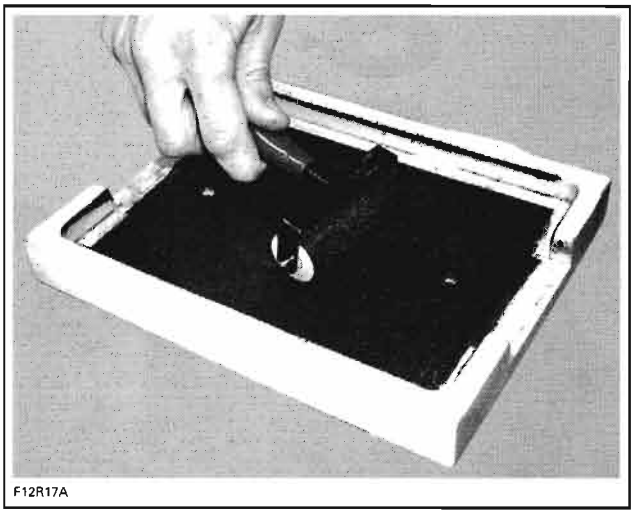


Do not apply in excess as it will spread out inside gear housing.

NOTE: It is recommended to apply this specific sealant as described here to get a uniform application without lumps. If you do not use the roller method, you may use your finger to uniformly distribute the sealant (using a finger will not affect the adhesion).

Hand-torqued gear housing screws in a crisscross sequence. Repeat procedure, retightening all screws to 10 N•m (89 lbf•**in**).

Install O-ring **no. 31** including distance sleeve **no. 32** on countershaft CVT side.

**CAUTION: Place O-ring including distance sleeve right away. Chamfered bore of distance sleeve has to face the gearbox.**

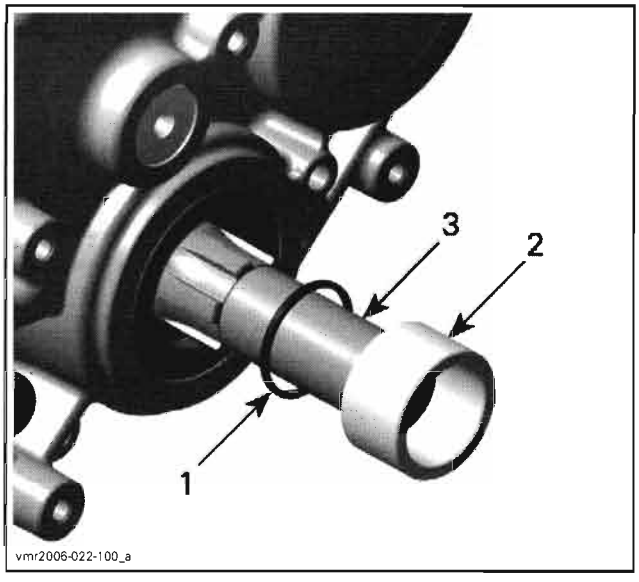


*COUNTERSHAFT END CVT SIDE*
*1. O-ring*
*2. Distance sleeve*
*3. Countershaft end CVT side*

Refer to *OUTPUT SHAFT AND COUPLING MECHANISM* to install these components. Measure the output shaft backlash.

## Installation

The installation is the reverse of the removal procedure.

# SHIFTER

## SERVICE PRODUCTS

| Description | Part Number | Page |
|---|---|---|
| Loctite 243 (blue) | 293 800 060 | 169 |

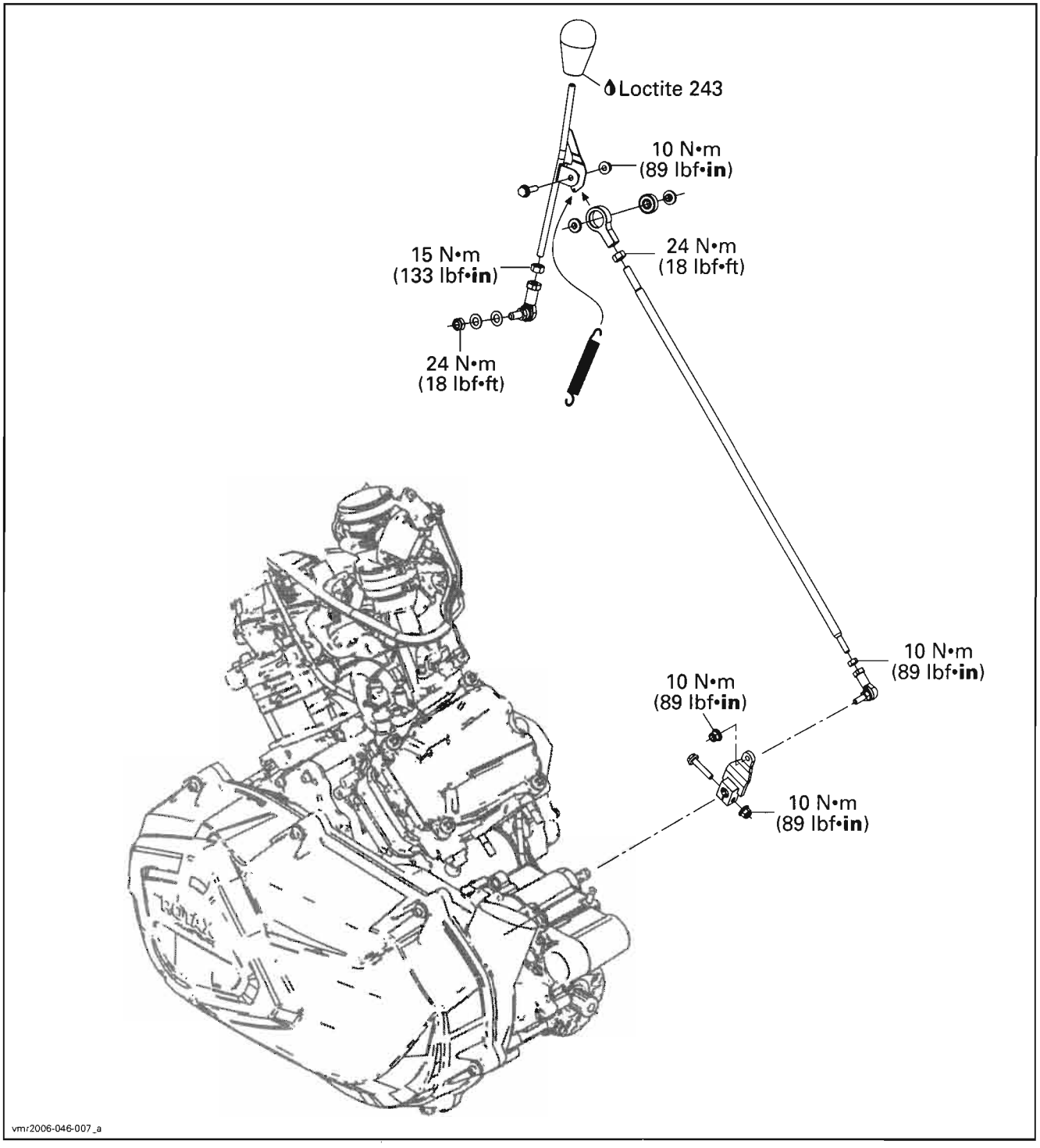

# GENERAL

Before performing any servicing on the transmission linkage system, be sure the transmission lever is on NEUTRAL position and the parking brake is applied.

During assembly/installation, use the torque values and services products as in the exploded view.

Clean threads before applying a threadlocker. Refer to *SELF-LOCKING FASTENERS* and *LOCTITE APPLICATION* at the beginning of this manual for complete procedure.

**⚠ WARNING**

**Torque wrench tightening specifications must strictly be adhered to.**
**Locking devices (e.g.: locking tabs, elastic stop nuts, self-locking fasteners, cotter pins, etc.) must be replaced with a new one.**

# PROCEDURES

## TRANSMISSION LEVER

### Shifter Lever Removal

To remove the transmission lever, do the following:

- Place transmission lever in NEUTRAL position.
- Apply parking brake.
- Unscrew the transmission lever handle.

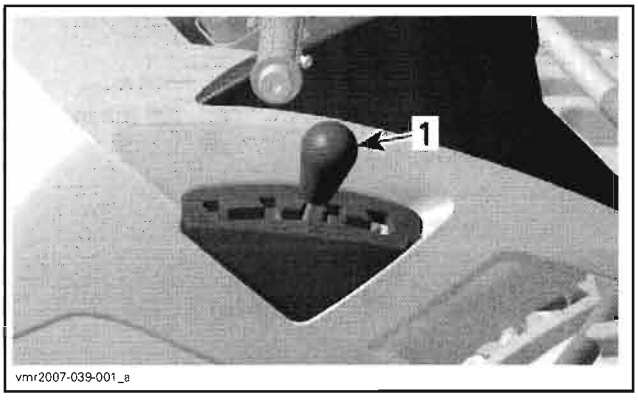


1. *Transmission lever handle*

- Remove the RH side panel and the console. Refer to *BODY*.
- Detach tension spring from bracket.

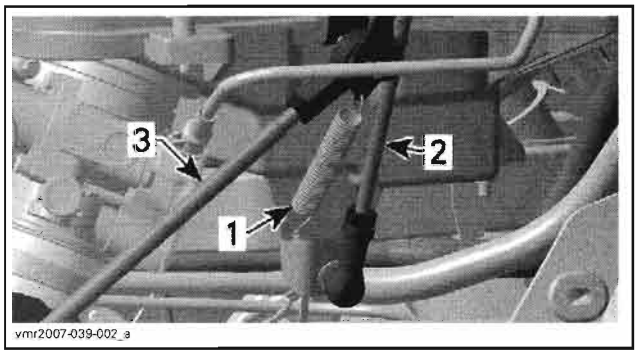


1. *Tension spring*
2. *Transmission lever*
3. *Link rod*

- Detach tie-rod end from bracket.

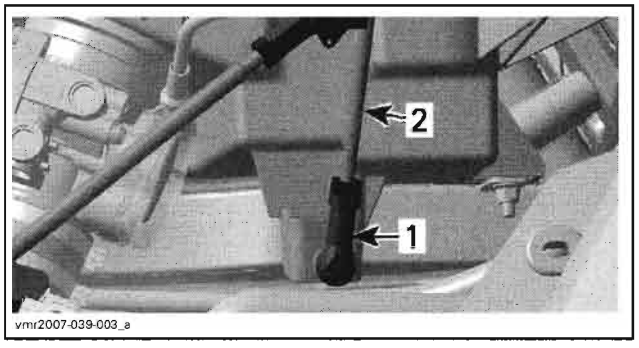


1. *Tie-rod end*
2. *Transmission lever*

- Unscrew link rod bolt.

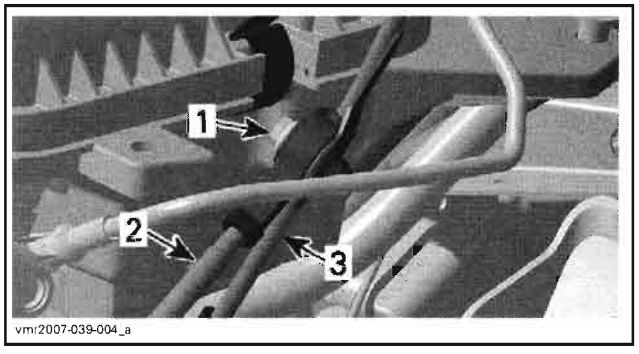


1. *Link rod bolt*
2. *Link rod*
3. *Transmission lever*

Pull link rod out of transmission lever bracket, pay attention not to loose bushings located each side of link rod anchor.

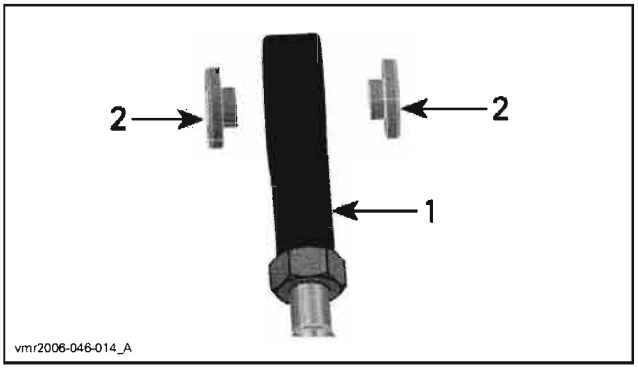


*1. Link rod anchor*
*2. Bushings*

## Shifter Lever Inspection

Check the transmission lever for bending or cracks.

Check the tie-rod at the end of lever.

Replace the lever or the tie-rod if necessary.

## Shifter Lever Installation

The installation is the reverse of the removal procedure. However, pay attention to the following.

Place a washer on both sides of bracket when installing tie-rod end on bracket.

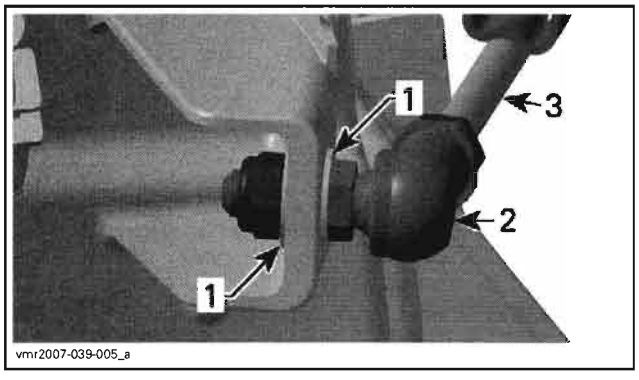


*1. Washers*
*2. Tie-rod end*
*3. Transmission lever*

Apply Loctite 243 (blue) (P/N 293 800 060) on transmission lever threads before installing the handle.

If the tie-rod end replacement is necessary, use the following illustration to position the tie-rod properly.

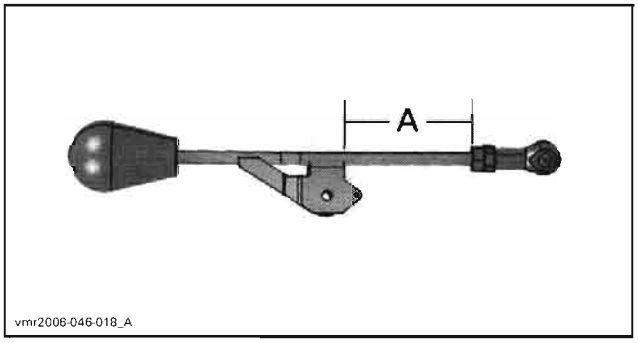


*A. 82 mm ± 1 mm (3.228 in ± .039 in)*

# LINK ROD

## Link Rod Removal

Remove RH side panel and rear engine cover.

Remove link rod from shifting plate.

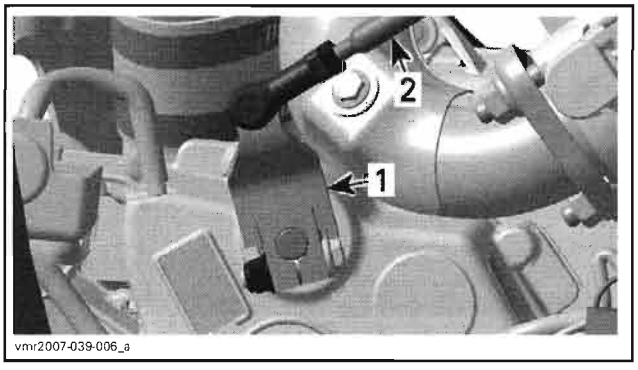


*1. Shifting plate*
*2. Link rod*

At the other end of link rod, unscrew link rod bolt.

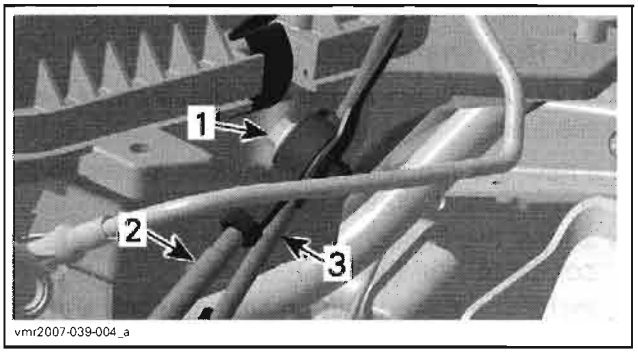


*1. Link rod bolt*
*2. Link rod*
*3. Transmission lever*

Pull link rod out of transmission lever bracket, pay attention not to loose bushings located each side of link rod anchor.

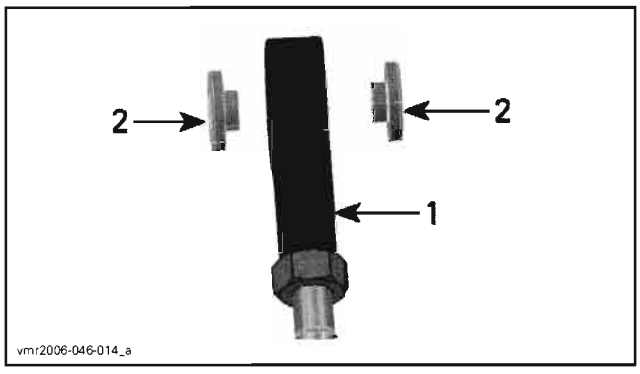


*1. Link rod anchor*
*2. Bushings*

## Link Rod Inspection

Check link rod for bending or cracks.

Check ball bearing in link rod anchor. The bearing should turn smoothly and freely.

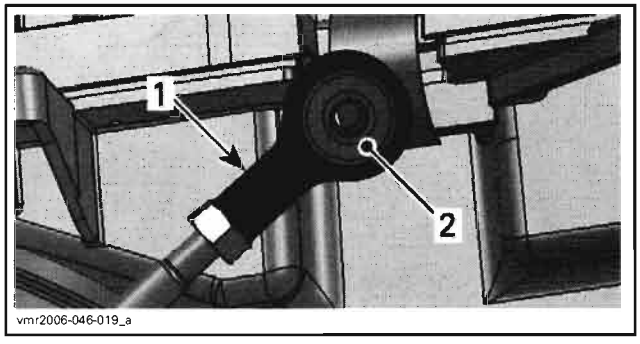


*1. Link rod anchor*
*2. Ball bearing*

Check tie-rod end for wear and excessive play.

Replace all defective parts.

## Link Rod Installation

If no new parts are installed, reverse the removal procedure.

If a new link rod, link rod anchor or a new tie-rod end is installed, do the following:

- Screw the tie-rod end and the link rod anchor completely on the link rod.
- Install the tie-rod end on shifting plate and link rod anchor on transmission lever.
- Be sure gearbox is engaged on NEUTRAL position.
- Turn link rod until the transmission lever is located in the middle of the NEUTRAL slot.

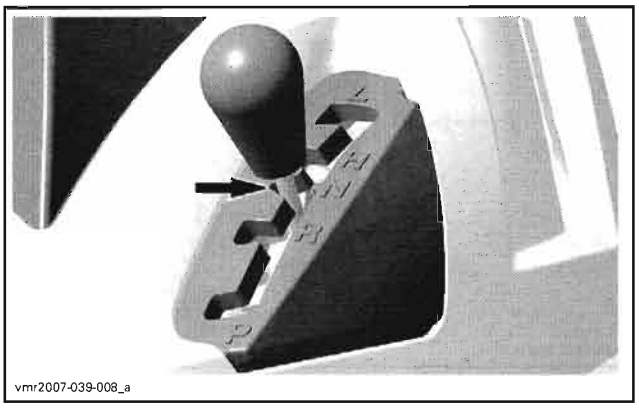


- Torque jam nuts, one on both ends of link rod.
- Verify if the transmission lever moves into the PARK and LOW slots. If not, the gearbox was not engaged on NEUTRAL. Place gearbox on NEUTRAL position and redo the procedure.
- Install removed parts and test drive to confirm all is working well.

# SHIFTING PLATE

## Shifting Plate Removal

**NOTE:** Do not remove shifting plate needlessly.

Remove link rod from shifting plate.

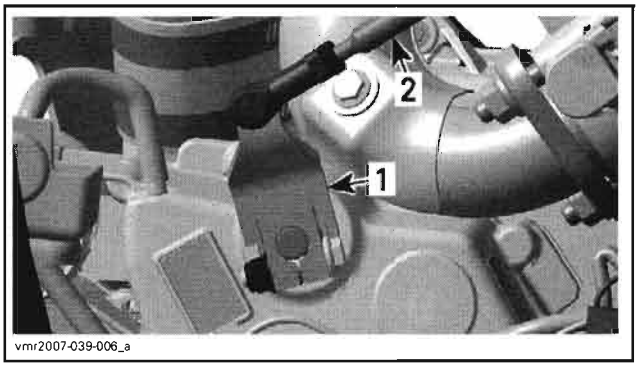


*1. Shifting plate*
*2. Link rod*

**NOTE:** Mark the location of shifting plate before removing it from shift shaft.

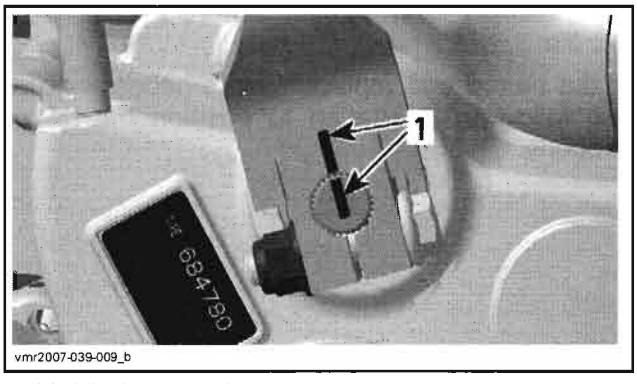


*1. Mark both parts position*

Remove shifting plate bolt.

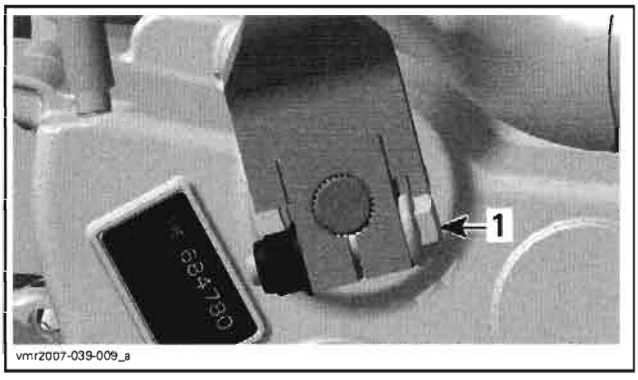


*1. Shifting plate bolt*

## Shifting Plate Inspection

Check shifting plate for cracks, bending or other damages. Replace if necessary.

## Shifting Plate Installation

The installation is the reverse of the removal procedure. However, pay attention to the following.

Be sure the gearbox is engaged on NEUTRAL before performing this procedure.

Align shifting plate mark with shift shaft mark. If new parts are used, align shifting plate slot with the shift shaft location without splines.

Install all removed parts and test drive to confirm all is working well.

# OVERVIEW

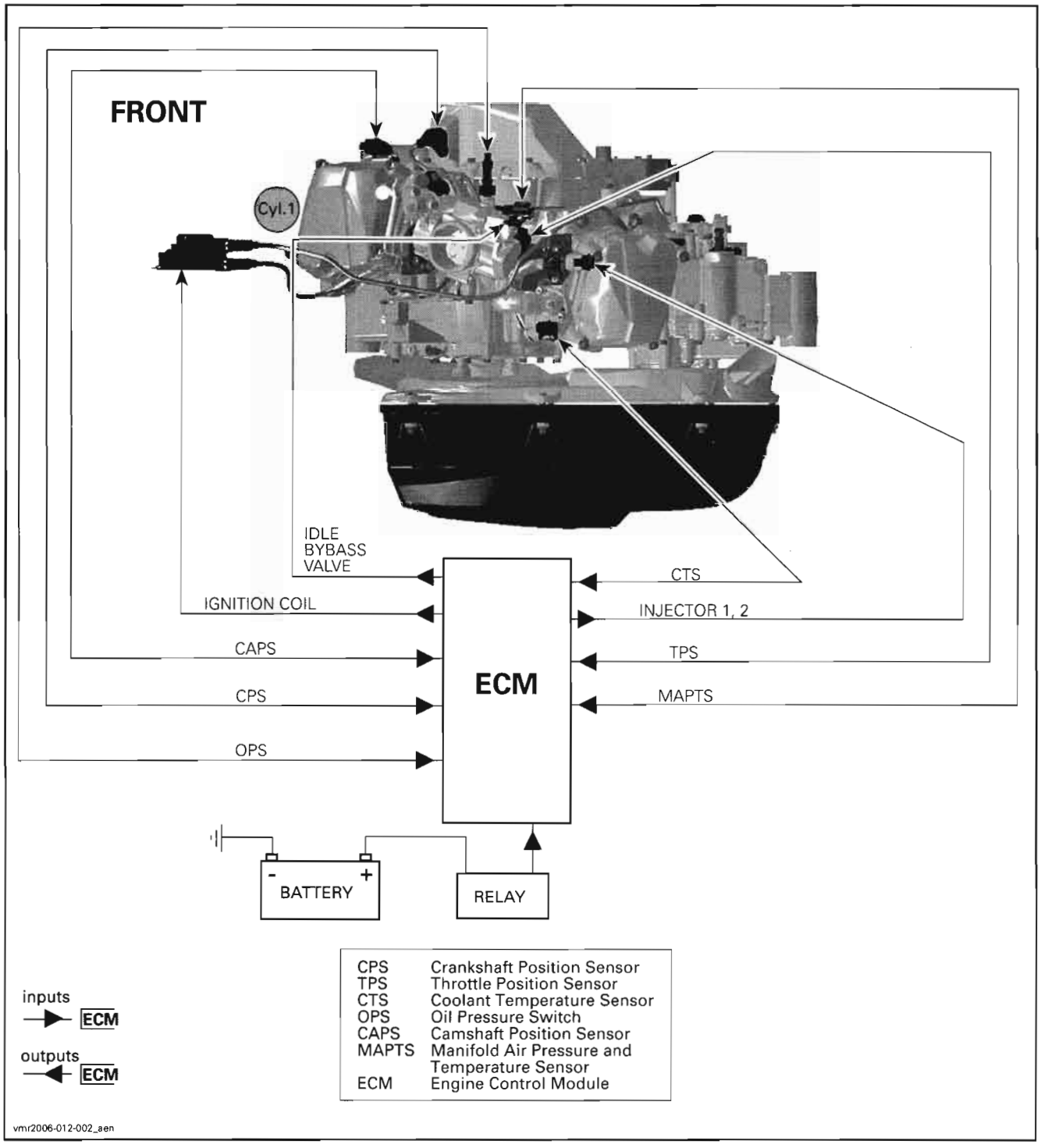


*ENGINE MANAGEMENT SYSTEM OVERVIEW*

# OPERATING PRINCIPLE

A highly advanced engine management system (EMS) has been used to ensure a high power output with cleaner combustion.

There are 3 main systems in interaction with the engine management system (EMS):

1. Air induction.
2. Fuel system.
3. Electrical system.

NOTE: The cylinders are referenced as 1 (front) and 2 (rear).

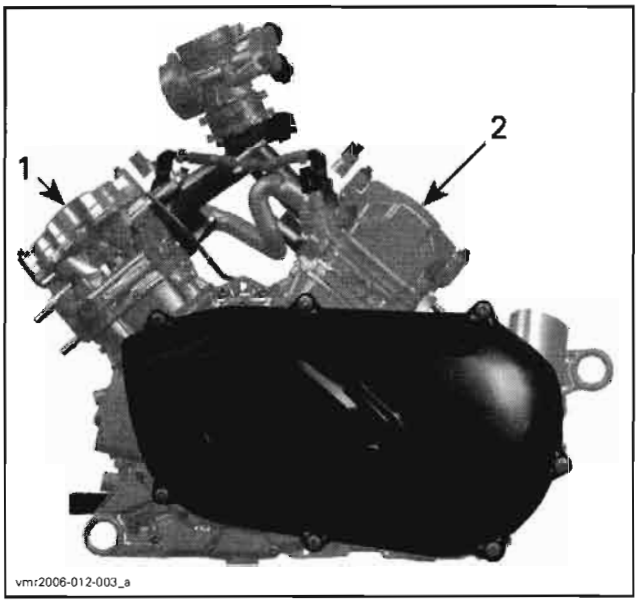


*1. Cylinder 1 (front)*
*2. Cylinder 2 (rear)*

# AIR INDUCTION

Air flows through air silencer, air filter, throttle body, intake manifold and then goes into combustion chamber.

## Throttle Body

The 46 mm throttle body is mounted on top of intake manifold. Fitted on the throttle body, there is the TPS and the idle bypass valve which allows the ECM to control the idle speed while the throttle plate is closed.

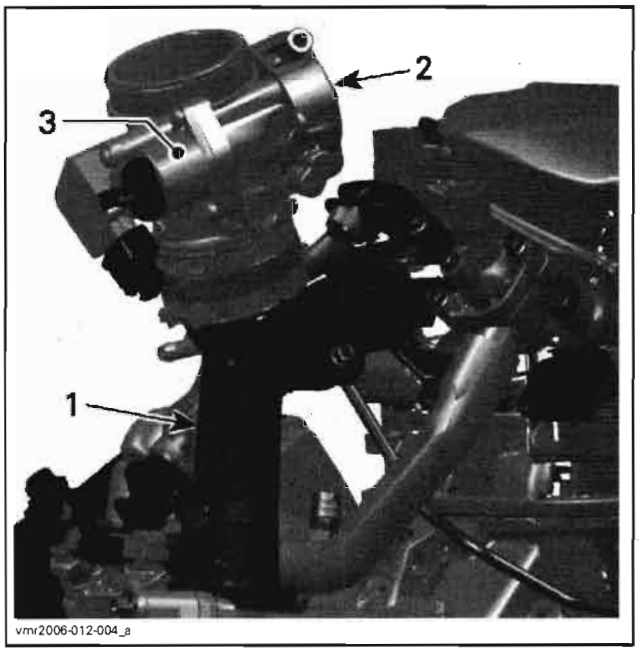


*1. Intake manifold*
*2. Throttle body*
*3. Idle bypass valve*

## Intake Manifold

The intake manifold is mounted on the top of the engine on both cylinder heads. It provides support for the throttle body, fuel injectors, the fuel rails and the MAPTS (manifold air pressure and temperature sensor).

The air intake manifold is a resonator between the throttle body and the air intake at the cylinder heads.

# FUEL SYSTEM

When the intake valve reaches the correct position, the ECM (engine control module) opens the fuel injector and fuel is discharged into the intake port at the air intake manifold by the high fuel pressure inside the fuel rail. The air/fuel mixture enters then the combustion chamber through the open intake valve. This mixture is then ignited by the spark plug.

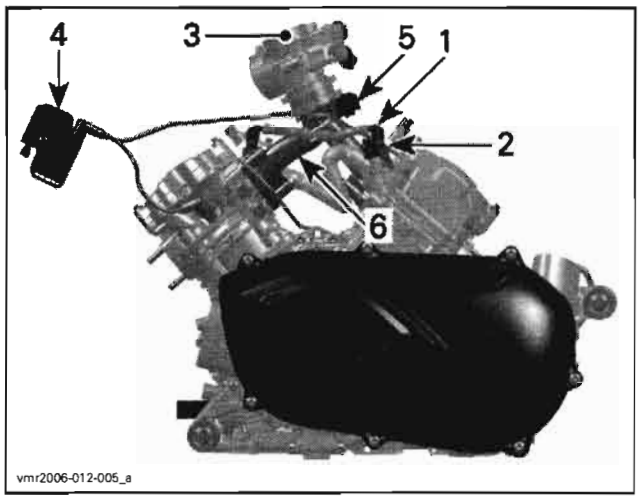


1. *Fuel rail (2)*
2. *Injector (2)*
3. *Throttle body*
4. *Ignition coil*
5. *Manifold air pressure and temperature sensor (MAPTS)*
6. *Intake manifold*

## Fuel Rail

Two fuel rails, one for each injector, are mounted on the intake manifold. The fuel rails ensure all the time, that enough fuel can be delivered to the fuel injectors. The fuel rails are fed by the fuel pump with the properly regulated fuel pressure.

## Fuel Injector

Two fuel injectors (one per cylinder) are used to inject fuel into the intake port of the cylinder head.

## Fuel Pump Module

The fuel pump module is underneath fuel tank. The module includes fuel pump, fuel pressure regulator and fuel level sensor. Refer to *FUEL SYSTEM*.

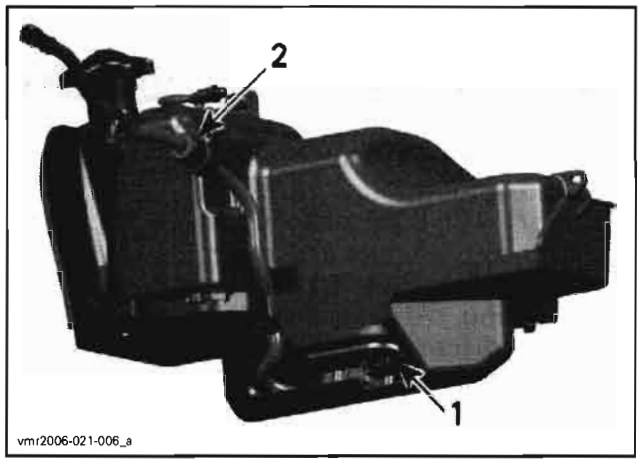


1. *Fuel pump module*
2. *In-line fuel filter*

## Fuel Pressure Regulator

A fuel pressure regulator controls the pressure in the system and allows excess fuel to return to the fuel tank. Refer to *FUEL SYSTEM*.

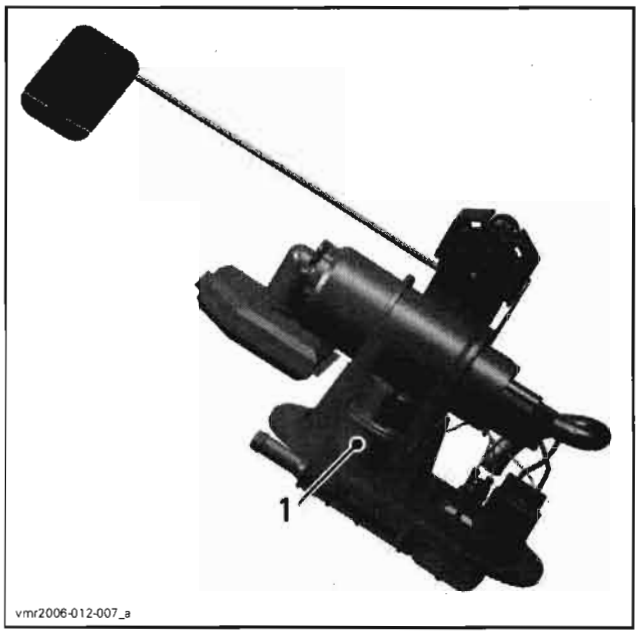


1. *Fuel pressure regulator*

## Fuel Filter

The fuel filter is located between engine and fuel tank. Refer to *FUEL SYSTEM*.

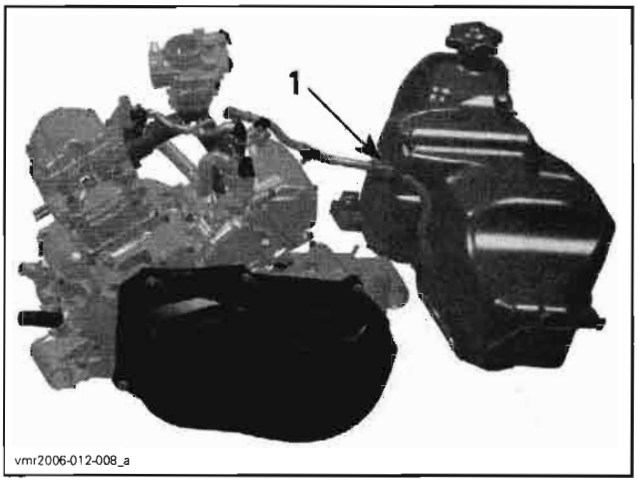


1. *Fuel filter*

# ELECTRICAL SYSTEM

A communication link (CAN lines) is used to communicate between the ECM and the multifunction speedometer. CAN lines consist of a pair of wires (WHITE/BEIGE and BEIGE/GREEN).

The communication link is also used to communicate with the B.U.D.S. software. Refer to *COMMUNICATION TOOLS AND B.U.D.S. SOFTWARE.*

The speedometer multifunction display can show fault codes. Refer to *EMS DIAGNOSTIC.*

## Engine Control Module (ECM)

The ECM controls the electrical system and the engine management functions, by processing the information given by various sensors.

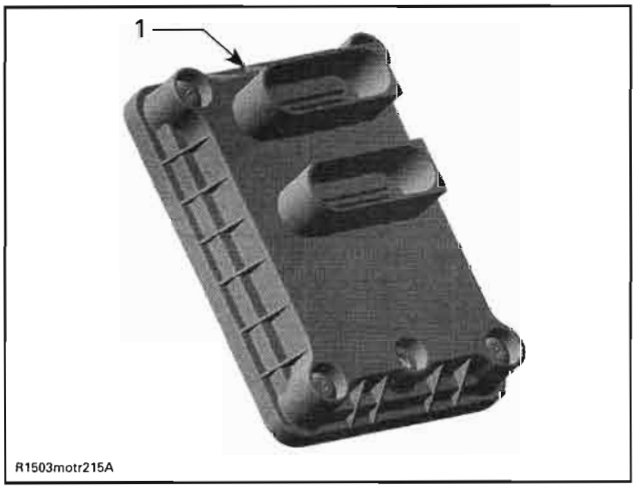


*TYPICAL*
*1. ECM*

The ECM is located in front of steering column.

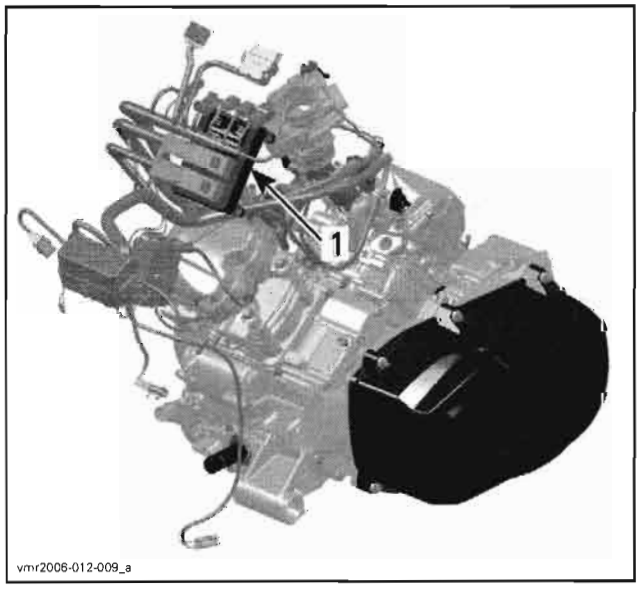


*1. ECM location*

The ECM features a permanent memory that will keep the programmed ignition key(s) active, fault codes, customer information and other engine information, even when the battery is removed from the vehicle.

The ECM features a self-diagnostic mode when ignition key is turned on. However, some components need the engine to be running so that they can be monitored. Some problems will turn on a warning lamp or will set the engine in limp home mode. Refer to *EMS DIAGNOSTIC* section for more information.

## Power Distribution

Three relays are used to distribute power to different components. When ignition key is turned ON and engine run/stop switch is in RUN position, relay 2 is energized and in turn, it supplies the windings of relay 1 and relay 3. The ECM provides the trigger signal to activate each relay individually. Refer to the following diagram.

When starting engine, relay 1 and 3 are temporary disabled to make all power available for the starter, the fuel pump and the EMS.

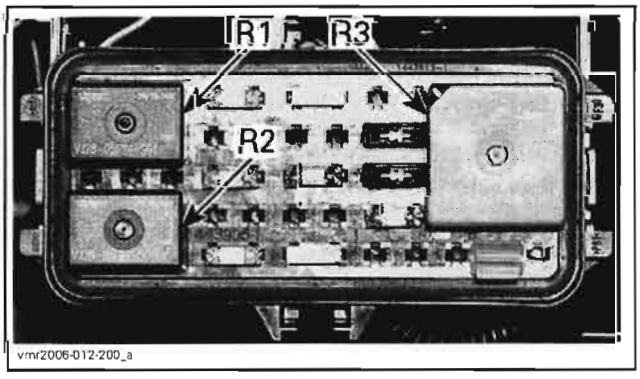


*R1: Cooling fan*
*R2: Main*
*R3: Accessories*

**⚠ WARNING**

**Some components are continuously powered by the VFB when ignition key is turned on and engine run/stop switch is in RUN position. The ECM switches the circuit to the ground to complete the electrical circuits it controls. Take this into account when troubleshooting. Always disconnect the battery prior to disconnecting any electric or electronic parts.**

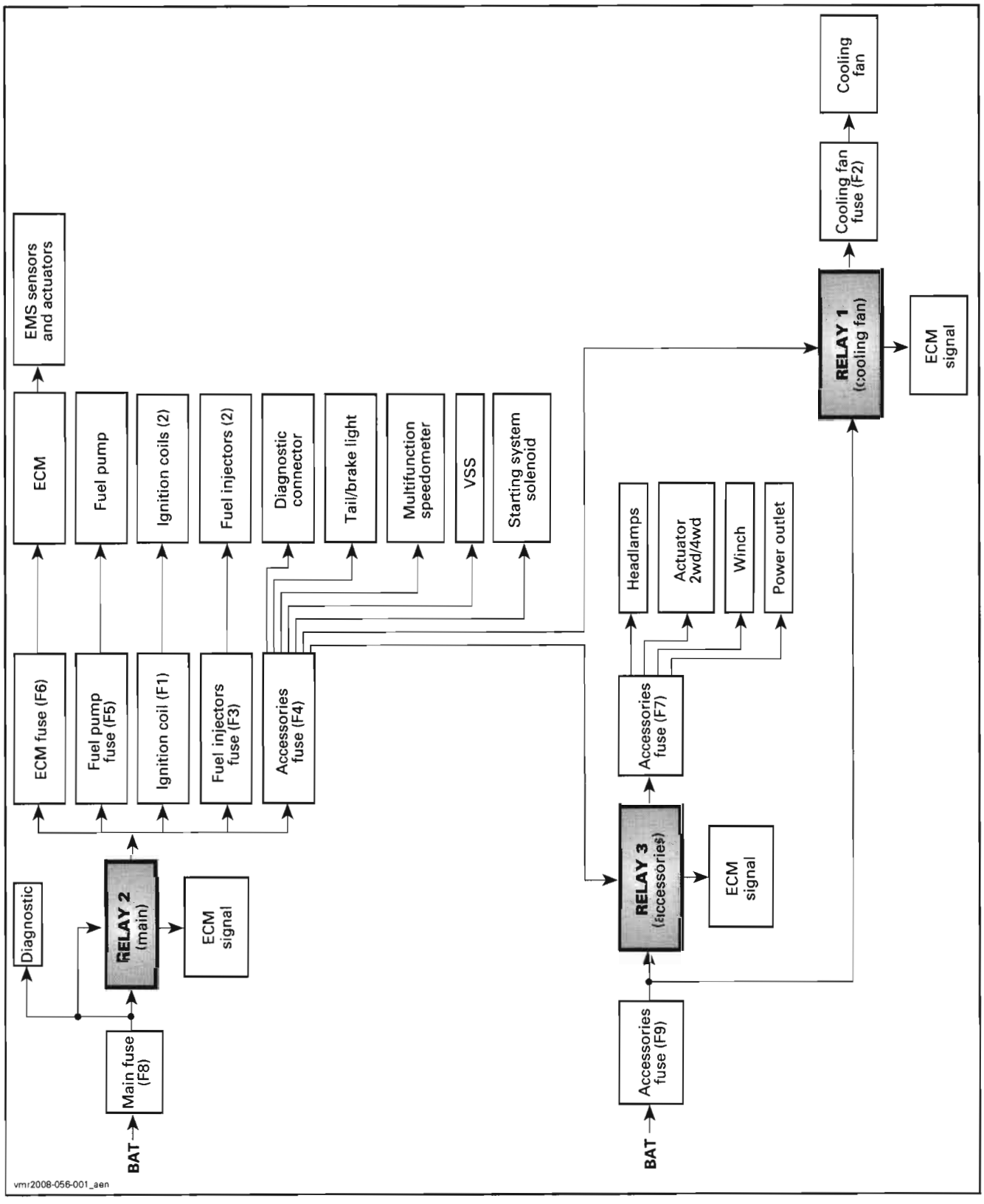
EMS sensors and actuators
ECM
Fuel pump
Ignition coils (2)
Fuel injectors (2)
Diagnostic connector
Tail/brake light
Multifunction speedometer
VSS
Starting system solenoid
Headlamps
Actuator 2wd/4wd
Winch
Power outlet
Cooling fan
Cooling fan fuse (F2)
RELAY 1 (cooling fan)
ECM signal
ECM fuse (F6)
Fuel pump fuse (F5)
Ignition coil (F1)
Fuel injectors fuse (F3)
Accessories fuse (F4)
Accessories fuse (F7)
RELAY 3 (accessories)
ECM signal
Diagnostic
RELAY 2 (main)
ECM signal
Main fuse (F8)
BAT
Accessories fuse (F9)
BAT
vmr2008-056-001_aen

## ECM and VFB Interaction with the Electrical System

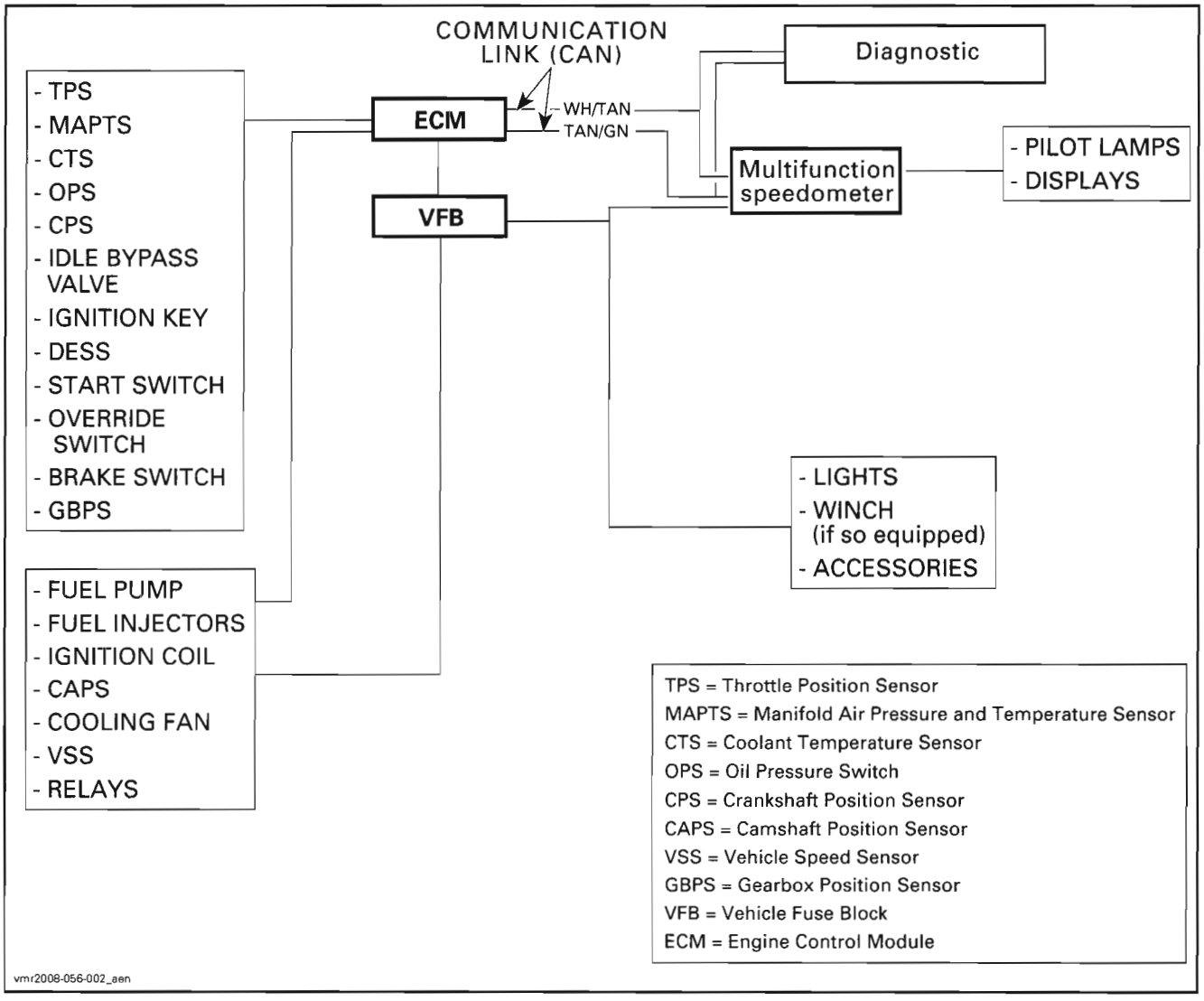


# ENGINE MANAGEMENT SYSTEM

The EMS calculates the proper air/fuel mixture and ignition timing for each cylinder separately.

The ECM is the central point of the engine management system. It reads the inputs, makes computations, uses pre-determined parameters and sends the proper signals to the outputs for proper engine management.

## ELECTRONIC FUEL INJECTION

The ECM reads the signals from different sensors which indicate engine operating conditions at millisecond intervals.

Signals from sensors are used by the ECM to determine the injection parameters (fuel maps) required for optimum air-fuel ratio.

The CPS, the MAPTS and the TPS are the primary sensors used to control the injection and ignition timing. Other sensors (like temperature sensors, etc.) are used for secondary input.

## IGNITION

The ignition system is fully managed by the ECM which controls the ignition system parameters, such as spark timing, duration and firing order to achieve the proper engine requirements.

### Ignition Coil

A double ignition coil induces voltage to a high level in the secondary winding to produce a spark at each spark plug independently.

The ignition coil receives input from the ECM.

Ignition coil is located in front of engine.

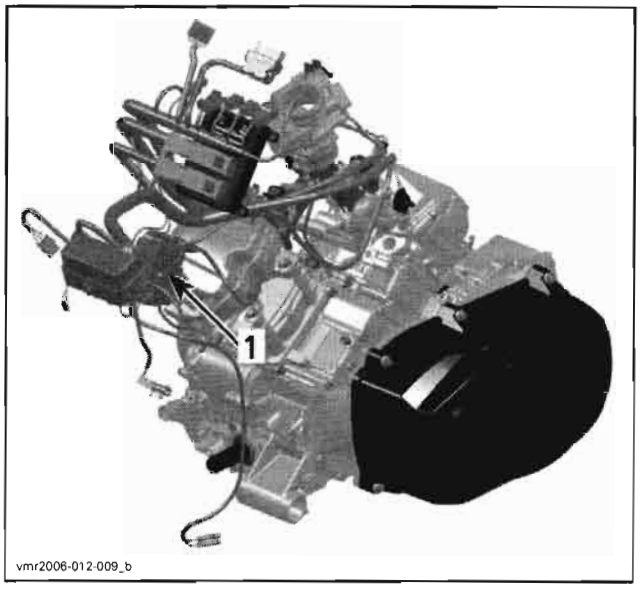


*1. Ignition coil location*

## Ignition Timing

The ECM is programmed with data (it contains ignition mappings) for optimum ignition timing under all operating conditions. Using engine operating conditions provided by the sensors, the ECM controls the ignition timing for optimum engine operation. There is no adjustment to perform.

# ENGINE MODES OF OPERATION

## Engine RPM Limiter

The ECM will limit the maximum engine speed when vehicle shifter is in:

- forward position (Hi and LO individually)
- neutral position
- park position
- reverse position.

The ECM uses the CPS and the GBPS (gearbox position sensor) for this function.

An override switch, on the handlebar, allows the engine speed to run higher than the RPM limiter when more power is needed in reverse operation. Refer to *LIGHTS, GAUGE AND ACCESSORIES.*

## Vehicle Speed Limiter

The ECM will limit the maximum vehicle speed both in 2WD and in 4WD. For this purpose, the ECM uses the VSS (vehicle speed sensor) and the GBPS (gearbox position sensor).

## Limp Home Mode

Besides the signals seen above, the ECM may automatically set default parameters to the engine management to ensure the adequate operation of the engine if a component of the fuel injection system is not operating properly. The engine will operate with reduced performance to protect the engine. In more severe cases, the engine RPM will be limited, also to protect the engine.

These performance-reduced modes allow the rider to go back home which would not be otherwise possible without this advanced system. Refer to the *COMMUNICATION TOOLS AND B.U.D.S. SOFTWARE* for a complete chart.

When a sensor failure occurs,the ECM will send out a signal to the multifunction speedometer to warn the operator.

**NOTE:** LIMP MODE will be displayed in the multifunction speedometer and check engine light will flash. Refer to *LIGHTS, GAUGE AND ACCESSORIES.*

When minor fault occurs, the fault and message in the multifunction speedometer may disappear automatically when the ignition key is turned off and kept off until lights turn off in multifunction speedometer, then turned back on.

In the following situations, engine RPM will be limited.

| CONDITION | MAX ALLOWED RPM |
|---|---|
| High engine temperature | 4000 |
| Low battery voltage | 5000 |
| Low oil pressure | |
| Safety fuel cut-off (TPS or internal memory error) | |
| High battery voltage | 7000 |

## Drowned Mode (flooded engine)

If engine is fuel-flooded and does not start, this special mode can be activated to prevent fuel injection and ignition while cranking. Proceed as follows to activate it.

With ignition key in ignition switch while engine is stopped, press and HOLD throttle lever at WOT position.

Press the start button. The mode is now on.

Releasing throttle lever will bring back the normal mode.

If engine does not start, it may be necessary to remove spark plugs and crank engine with rags over spark plug holes. Refer to *ADJUSTMENT AND REPAIR PROCEDURES* subsection.

**⚠ WARNING**

**When disconnecting coil from spark plug, always disconnect coil from main harness first. Never check for engine ignition spark from an open coil and/or spark plug in the engine compartment as spark may cause fuel vapor to ignite.**

## MONITORING SYSTEM

The ECM monitors the electronic components of the fuel injection system and also parts of the electrical system. When a fault occurs, the ECM sends out signals to the multifunction speedometer to inform you of a particular condition. Refer to the *COMMUNICATION TOOLS AND B.U.D.S. SOFTWARE* for the fault codes chart.

### Battery Voltage Warning Device

When the battery voltage is either too low or too high, the ECM sends out a signal to the multifunction speedometer.

**NOTE:** Either LO BATT or HI BATT will be displayed in the multifunction speedometer and check engine light will flash. Limp home will be set.

### Low Oil Pressure Warning Device

When the engine oil pressure falls under a certain level, the ECM sends out a signal to the multifunction speedometer.

**NOTE:** LOW OIL will be displayed in the multifunction speedometer and check engine light will flash. Limp home will be set.

### Brake Monitoring

The ECM monitors the brakes through the brake switch. If parking brake is activated or the driver inadvertently keeps the brake depressed for more than 15 seconds (either when vehicle moves or not), the ECM sends out a signal to the speedometer. BRAKE will be displayed in the multifunction speedometer.

### Shutdown Mode

When engine run/stop switch is turned OFF **or** ignition key is turned OFF position, speedometer will turn off within 15 seconds. All the electrical system is cut-off.

**Engine not running:** When engine run/stop switch is in RUN position **and** ignition key is left in the ON position, the accessories are powered. After 15 minutes, the ECM shuts down all functions except multifunction speedometer. ECM and multifunction speedometer will draw power.

**NOTE:** If engine starting is desired at this point, it is required to turn ignition key OFF, wait until speedometer turns OFF then, turn key back ON.

To prevent battery drain, always turn OFF either ignition key **or** engine run/stop switch.

## DIAGNOSTIC MODE

The fault codes are recorded in the memory of the ECM. They can be checked by using the software B.U.D.S.

Refer to the *COMMUNICATION TOOLS AND B.U.D.S. SOFTWARE* subsection.

# ENGINE MANAGEMENT SYSTEM FLOW CHART

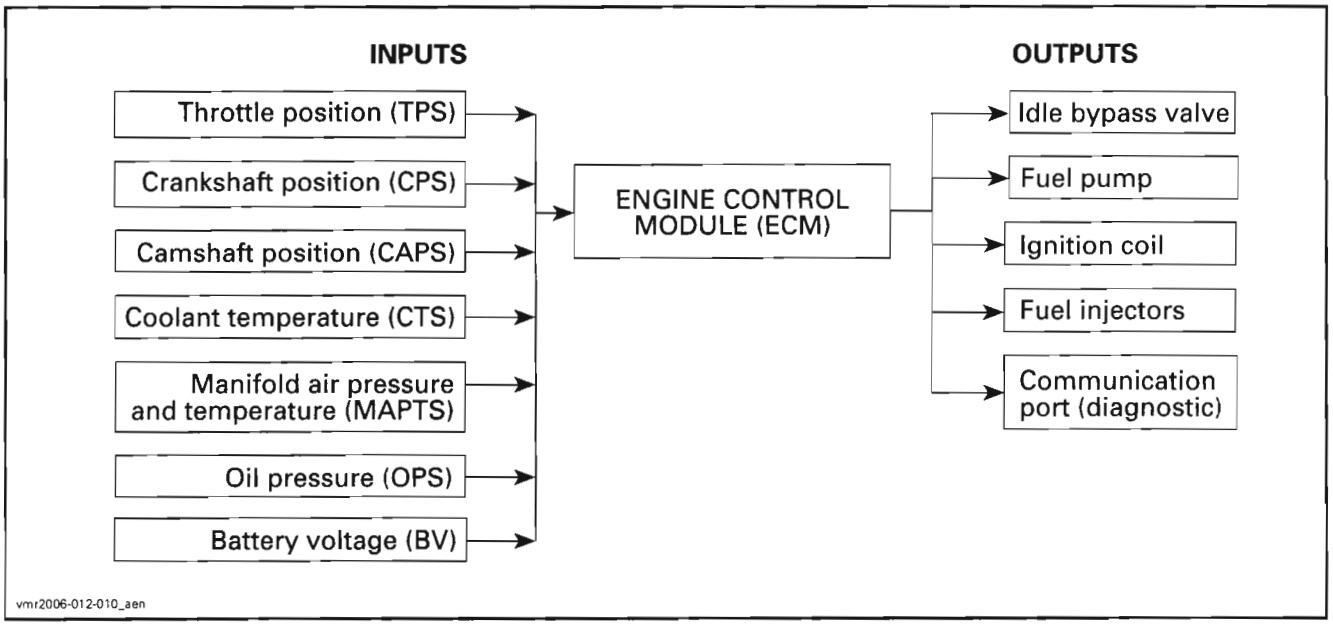

# EMS DIAGNOSTIC

## GENERAL

Here is the basic order suggested to diagnose a suspected engine management or fuel injection related problem:

- Check the chart in the *TROUBLESHOOTING* section to have an overview of problems and suggested solutions.
- Check if the engine management system (EMS) pilot lamp is ON or blinks. If so, use the B.U.D.S. software and look for fault codes to diagnose the trouble.

**NOTE:** When a fault code is present, the EMS pilot lamp will turn on. When EMS is in limp home mode, the lamp will blink.

- Check all fuses.
- Check relay(s).
- Check fuel pressure.
- Check spark plugs condition.
- Check all connections of the wiring harness.
- Refer to *ADJUSTMENT AND REPAIR PROCEDURES* section for procedures.

When using the service action suggested in the **Fault** section of B.U.D.S., the system circuits are referred to as 2-A-41, which means connector "A" on the ECM and pin 41. The first digit (2) indicates connector location in vehicle such as shown in the *WIRING DIAGRAMS.*

### On-Board Diagnostic

Fault codes starting with the letter "P" followed by 4 digits (P-1234) can be displayed in the multifunction gauge for troubleshooting.

Proceed as follows:

**NOTE:** Renegade gauge is shown but procedures apply to Outlander models as well.

Turn ignition key to lights ON position.

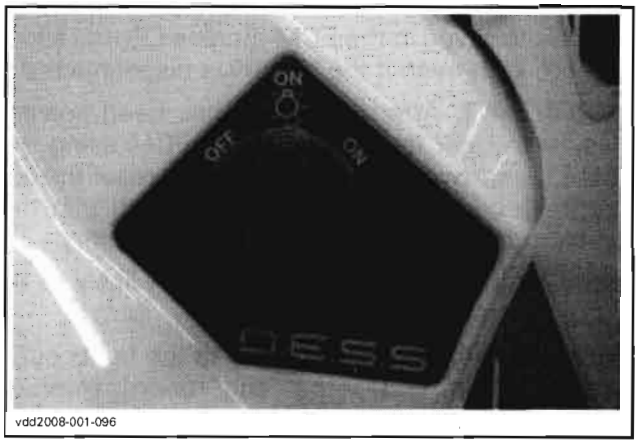

vdd2008-001-096

Use the mode button and scroll to Engine Hour (EH) on the gauge.

vdd2008-001-095

Press and HOLD mode button while QUICKLY toggling HI - LO beam.

**NOTE:** A minimum of 3 HI - LO toggles must be completed within 2 seconds.

vdd2008-001-097_a

*Step 1: Press and hold*
*Step 2: Quickly toggle HI - LO beam*

If there is no P-Code, the "No Active P Codes" will be displayed.

If there is any P-Code, it will be displayed.

- If there is more than one P-Code, they will automatically scroll.
- Once the last P-Code is displayed, gauge displays END then defaults back to normal operation.

# FAULT CODES

## General

The faults saved in the ECM (Engine Control Module) are kept even if the battery is disconnected.

**IMPORTANT:** After a problem has been solved, ensure to clear the fault(s) in the ECM using the B.U.D.S. software. This will properly reset the appropriate counter(s) and will also record that the problem has been fixed in the ECM memory.

Many fault codes at the same time is likely to be burnt fuse(s) or a faulty relay.

For more information pertaining to the fault codes (state, count, first, etc.) and report, refer to B.U.D.S. online help.

## TPS (Throttle Position Sensor) Faults

Faults which are reported in B.U.D.S. fall into two groups: TPS faults and adaptation faults. These are displayed on the B.U.D.S. system as TPS OUT OF RANGE and TPS ADAPTATION FAILURE.

### TPS "OUT OF RANGE" Fault

It is caused by the sensor reading going out of its allowable range. This fault can occur during the whole range of movement of the throttle.

To diagnose this fully, it is recommended to operate the throttle through its full range. It is also recommended to release the throttle quickly as this may also reveal a fault that is intermittent.

| POSSIBLE CAUSES | ACTION |
|---|---|
| Check if connector is disconnected from TPS | Fix. |
| Check if sensor is loose | Tighten and reset **Closed Throttle and Idle Actuator**. |
| Inspect sensor for damage or corrosion | Replace and reset **Closed Throttle and Idle Actuator**. |
| Inspect wiring (voltage test) | Repair. |
| Inspect wiring and sensor (resistance test) | If bad wiring, repair. If bad TPS, replace and reset **Closed Throttle and Idle Actuator**. |
| Test sensor operation (wear test) | Replace and reset **Closed Throttle and Idle Actuator**. |

### TPS "ADAPTATION FAILURE" Fault

It is caused by the idle position moving out of an acceptable range.

Following problems can be caused by a TPS "Adaptation Failure":

- Idle speed is out of range.
- Engine stops when throttle is released quickly.
- Engine runs inconsistent in low partload or low RPM.

| POSSIBLE CAUSES | ACTION |
|---|---|
| Sensor has been replaced and TPS closed position not reset | Reset **Closed Throttle and Idle Actuator**. |
| Throttle body has been replaced and TPS closed position not reset | Reset **Closed Throttle and Idle Actuator**. |
| ECM has been replaced and TPS closed position not reset | Reset **Closed Throttle and Idle Actuator**. |
| Throttle cable too tight | Tighten and reset **Closed Throttle and Idle Actuator**. |
| Sensor is loose | Tighten and reset **Closed Throttle and Idle Actuator**. |
| Throttle bracket is loose | Tighten and reset **Closed Throttle and Idle Actuator**. |
| Idle speed screw (tamper proof) worn or loose | Change throttle body. |
| Idle bypass valve replaced but not reset | Reset **Closed Throttle and Idle Actuator** using B.U.D.S. |

## Fault Code P2119

Wrong ECM. Installed ECM is not appropriate for the vehicle. Engine will crank but will not start. Refer to *PARTS CATALOG* for proper ECM according to vehicle.

# FAULT CODE TABLE

| P-CODE | DESCRIPTION | CAUSE | ACTION | GAUGE | ENGINE REACTION | DESCRIPTION OF LIMP HOME EFFECT |
|---|---|---|---|---|---|---|
| P0106 | Air pressure sensor voltage out of range | Sensing port dirty or blocked. Sensor failure or unexpected reading at idle. Sensor fallen out of intake manifold. | Make sure sensor's connector is fully inserted. Check for approximately 5 volts between sensor connector pins 1 and 3. Check system circuits 2-A-12, 2-A-28 and 2-A-40. | Engine pilot lamp/check engine and limp home | Limp home | No rev limit but air pressure is set to a default value |
| P0107 | Air pressure sensor voltage too low | Damaged circuit wires, damaged or disconnected sensor, sensor shorted to ground. | Make sure sensor's connector is fully inserted. Check for approximately 5 volts between sensor connector pins 1 and 3. Check system circuits 2-A-12, 2-A-28 and 2-A-40. | Engine pilot lamp/check engine and limp home after a few seconds | Limp home | No rev limit but air pressure is set to a default value |
| P0108 | Air pressure sensor voltage too high | Damaged circuit wires, damaged or disconnected sensor, sensor shorted to a supply. | Make sure sensor's connector is fully inserted. Check for approximately 5 volts between sensor connector pins 1 and 3. Check system circuits 2-A-12, 2-A-28 and 2-A-40. | Engine pilot lamp/check engine and limp home | Limp home | No rev limit but air pressure is set to a default value |
| P0111 | Air temperature sensor functional problem | Intermittent air temperature sensor reading or circuit wires shorted to ground. | Check system circuits 2-A-7 and 2-A-21. Replace the sensor if necessary. | Engine pilot lamp/check engine and limp home | Limp home | No rev limit but air temperature is set to a default value |
| P0112 | Air temperature sensor voltage too low | Air temperature sensor or circuit wires shorted to ground. | Disconnect the sensor and check for a change in the fault code. If the fault code stays the same, look for a short circuit on the harness. If the fault code is different, replace the sensor. Check system circuits 2-A-7 and 2-A-21. | Engine pilot lamp/check engine and limp home | Limp home | No rev limit but air temperature is set to a default value |
| P0113 | Air temperature sensor voltage too high | Disconnected sensor or sensor's resistance too high. | Check for disconnected air temperature sensor on the intake. Check the air temperature sensor for approximately 2000 to 4200 ohms at 10 to 25°C (50 to 77°F). Replace the sensor if necessary. Check system circuits 2-A-7 and 2-A-21. | Engine pilot lamp/check engine and limp home | Limp home | No rev limit but air temperature is set to a default value |
| P0116 | Engine temperature sensor functional problem | Intermittent engine temperature sensor reading or circuit wires shorted to ground. | Check system circuits 2-A-11 and 2-A-27. Replace the sensor if necessary. | Engine pilot lamp/check engine and limp home | No effect | No rev limit but engine temperature is set to a default value |

| P-CODE | DESCRIPTION | CAUSE | ACTION | GAUGE | ENGINE REACTION | DESCRIPTION OF LIMP HOME EFFECT |
|---|---|---|---|---|---|---|
| P0117 | Engine temperature sensor voltage too low | Engine temperature sensor or circuit wires shorted to ground. | Disconnect the sensor and check for a change in the fault code. If the fault code stays the same, look for a short circuit on the harness. If the fault code is different, replace the sensor. Check for leakage between sensor's connection and ground. Check system circuits 2-A-11 and 2-A-27. | Engine pilot lamp/check engine and limp home | No effect | No rev limit but engine temperature is set to a default value |
| P0118 | Engine temperature sensor voltage too high | Disconnected sensor or sensor's resistance too high. | Check for disconnected engine temperature sensor. Check the engine temperature sensor for approximately 2280 to 2736 ohms at 19 to 21°C (66 to 70°F). Replace the sensor if necessary. Check system circuits 2-A-11 and 2-A-27. | Engine pilot lamp/check engine and limp home | No effect | No rev limit but engine temperature is set to a default value |
| P0122 | Throttle position sensor voltage too low | Damaged circuit wires, damaged throttle position sensor or damaged ECM pins. | Check system circuits 2-A-24, 2-A-25 and 2-A-39. Refer to the *SERVICE MANUAL* for complete throttle position sensor testing procedure. | Engine pilot lamp and check engine | Engine will not start | |
| P0123 | Throttle position sensor voltage too high | Damaged circuit wires, damaged throttle position sensor or damaged ECM pins. | Check system circuits 2-A-24, 2-A-25 and 2-A-40. Refer to the *SERVICE MANUAL* for complete throttle position sensor testing procedure. | Engine pilot lamp and check engine | Engine will not start | |
| P0231 | Fuel pump open circuit or shorted to ground | Damaged or disconnected fuel pump, damaged circuit wires, damaged connectors or damaged ECM output pins. | Check for damaged or disconnected connector on fuel pump. Check for approximately 1 ohm between pins 5-FP-3 and 5-FP-4 of the fuel pump connector. Check for approximately 1 ohm between pins F5 and 2-B-29. | Engine pilot lamp and check engine | Will not run | |
| P0232 | Fuel pump shorted to battery | Damaged fuel pump, damaged circuit wires, damaged connectors or damaged ECM output pins. | Check for approximately 1 ohm between pins 5-FP-3 and 5-FP-4 of the fuel pump connector. Check for approximately 1 ohm between pins F5 and 2-B-29. Check if system circuit 2-B-29 is shorted to 12 V. | Engine pilot lamp and check engine | Will not run long | |

| P-CODE | DESCRIPTION | CAUSE | ACTION | GAUGE | ENGINE REACTION | DESCRIPTION OF LIMP HOME EFFECT |
|---|---|---|---|---|---|---|
| P0261 | Cylinder #1 injector open circuit or shorted to ground | Blown fuse, damaged or disconnected injector, damaged or disconnected circuit wires, damaged ECM output pins. | Check fuse F1. Check connections on injector. Check for approximately 14.5 ohms on injector. Check system circuit 2-A-15. Check connector CJ connecting the two harnesses together. | Engine pilot lamp/check engine and limp home | Engine pilot lamp/check engine and limp home | No rev but cylinder 1 will not work properly |
| P0262 | Cylinder #1 injector shorted to battery | Damaged injector, damaged circuit wires, damaged connector or damaged ECM output pins. | Check for approximately 14.5 ohms on injector. Check if system circuit 2-A-15 is shorted to 12 V. | Engine pilot lamp/check engine and limp home | Engine pilot lamp/check engine and limp home | No rev but cylinder 1 will not work properly |
| P0264 | Cylinder #2 injector open circuit or shorted to ground | Blown fuse, damaged or disconnected injector, damaged or disconnected circuit wires, damaged ECM output pins. | Check fuse F1. Check connections on injector. Check for approximately 14.5 ohms on injector. Check system circuit 2-A-33. Check connector CJ connecting the two harnesses together. | Engine pilot lamp/check engine and limp home | Engine pilot lamp/check engine and limp home | No rev but cylinder 2 will not work properly |
| P0265 | Cylinder #2 injector shorted to battery | Damaged injector, damaged circuit wires, damaged connector or damaged ECM output pins. | Check for approximately 14.5 ohms on injector. Check if system circuit 2-A-33 is shorted to 12 V. | Engine pilot lamp/check engine and limp home | Engine pilot lamp/check engine and limp home | No rev but cylinder 2 will not work properly |
| P0336 | High engine RPM detected | CPS signal not plausible, damaged circuit wires, damaged connector or damaged tooth wheel. | Check for metal deposit on sensor. Check circuit between 2-A-5, 2-A-19 and 4-CPS-1, 4-CPS-2. Replace sensor if necessary. | Engine pilot lamp and check engine | Erratic engine behavior | |
| P0337 | No crankshaft signal detected | Damaged circuit wires, damaged CPS or damaged tooth wheel. | Check for metal deposit on sensor. Check circuit between 2-A-5, 2-A-19 and 4-CPS-1, 4-CPS-2. Replace sensor if necessary. | Engine pilot lamp and check engine | No start | |
| P0339 | Crankshaft signal fault | CPS signal not plausible, damaged circuit wires, damaged connector or damaged tooth wheel. | Check for metal deposit on sensor. Check circuit between 2-A-5, 2-A-19 and 4-CPS-1, 4-CPS-2. Replace sensor if necessary. | Engine pilot lamp and check engine | Will not run | |
| P0344 | Cam phase sensor signal missing | Blown fuse, damaged circuit wires or damaged sensor. | Check fuse F4. Check for 12 volts between sensor's connector pins 1 and 3. Check system circuits 2-A-20, 2-A-34 and F4. | Engine pilot lamp and check engine | Limp home | No rev but calculation of RPM will be less precise. Cold start will take more time. |
| P0351 | No ignition output stage cylinder #1 | Blown fuse, damaged circuit wires, damaged connector or damaged ignition coil. | Check fuse F3. Check for 2.2 ± 0.3 ohm between ignition coil pins. Check connector HIC connecting the two harnesses together. Check system circuit 2-A-1. | Engine pilot lamp/check engine and limp home | Limp home | No rev but cylinder 1 will not work properly |

| P-CODE | DESCRIPTION | CAUSE | ACTION | GAUGE | ENGINE REACTION | DESCRIPTION OF LIMP HOME EFFECT |
|---|---|---|---|---|---|---|
| P0352 | No ignition output stage cylinder #2 | Blown fuse, damaged circuit wires, damaged connector or damaged ignition coil. | Check fuse F3. Check for 2.2 ± 0.3 ohm between ignition coil pins. Check connector HIC connecting the two harnesses together. Check system circuit 2-A-1. | Engine pilot lamp/check engine and limp home | Limp home | No rev but cylinder 2 will not work properly |
| P0480 | Engine fan short-circuit to battery | Blown fuse, damaged fan relay, damaged circuit wires, damaged pins or damaged ECM output pin. | Check fuse F4. Check for approximately 12 volts between 3-PF-1D and engine ground. Check system circuit 2-B-3. | Engine pilot lamp and check engine | No effect | |
| P0480 | Engine fan short-circuit to ground or open | Blown fuse, damaged fan relay, damaged circuit wires, damaged or disconnected pins or damaged ECM output pin. | Check fuse F4. Check for disconnected relay or pin 3-PF-1 D and 3-PF-1E. Check for approximately 12 volts between 3-PF-1D and engine ground. Check system circuit 2-B-3. | Engine pilot lamp and check engine | No effect | |
| P0505 | Idle air control valve output stage cutoff memory difference | Damaged actuator, damaged circuit wires, damaged connector or damaged ECM output pins. | Check for approximately 50 ohms between pins A and D and also between pins B and C of the idle air control valve. Check for damaged circuit wires. Check system circuits 2-A-35, 2-A-36, 2-A-37 and 2-A-38. Check for damaged connector or damaged ECM output pins. | Engine pilot lamp and check engine | Erratic engine behavior | |
| P0505 | Idle air control valve output stage fault | Damaged actuator, damaged circuit wires, damaged connector or damaged ECM output pins. | Check for approximately 50 ohms between pins A and D and also between pins B and C of the idle air control valve. Check for damaged circuit wires. Check system circuits 2-A-35, 2-A-36, 2-A-37 and 2-A-38. Check for damaged connector or damaged ECM output pins. | Engine pilot lamp and check engine | Erratic engine behavior | |
| P0513 | Incorrect DESS® key | DESS key not programmed. Wrong DESS key used. Bad contact on the DESS key. DESS key failure. | Clean DESS key. Program the DESS key. | Check engine/ incorrect DESS | Will not start | |

| P-CODE | DESCRIPTION | CAUSE | ACTION | GAUGE | ENGINE REACTION | DESCRIPTION OF LIMP HOME EFFECT |
|---|---|---|---|---|---|---|
| P0520 | Oil pressure switch functional problem | Low oil level, engine leak, oil pump failure, damaged sensor, damaged or shorted circuit wires. | Check oil level. Check oil pressure switch resistance. With engine stopped, the resistance should be less than 1 ohm. With engine running, the resistance of oil switch should be infinitely high (OL). Check system circuit 2-A-10 to engine ground. | Engine pilot lamp and check engine | No effect | |
| P0562 | Battery voltage too low | Battery failure, damaged circuit wires, damaged or disconnected magneto and regulator. | Check battery voltage for 12 to 13 volts with engine stopped. Check battery voltage for 13.8 to 15.0 volts with engine idling. Check connections on magneto and regulator. | Engine pilot lamp/check engine/low batt and limp home | Limp home | Rev at 5000 |
| P0563 | Battery voltage too high | Bad battery, damaged circuit wires or damaged regulator. An external battery charger may have been used. | Check battery voltage for 13.8 to 15.0 volts with engine idling. Check connections on battery. Replace regulator if necessary. | Engine pilot lamp/check engine/hi batt and limp home | Limp home | Rev at 7000 |
| P0600 | CAN Bus Off | Communication error between cluster and ECM and/or B.U.D.S. | Check for damaged circuit between 1-CI-23, 4-B-29 and 2-DB-1. Check for damaged circuit between 1-CI-24, 4-B-27 and 2-DB-2. Replace cluster if necessary. | No ECU communi-cation | No effect | |
| P0600 | CAN ID 514 missing | Communication error between cluster and ECM and/or B.U.D.S. | Check system circuits 2-B-27 and 2-B-28 with 1-CI-23 and 1-CI-24. Refer to the *SERVICE MANUAL* for more details. | No ECU communi-cation | No effect | |
| P0601 | Throttle position sensor adaptation failure | Wrong throttle body mechanical position during reset of closed TPS or no initialization after ECM replacement. | Check cable adjustment. Check idle stop for wear. Make sure throttle plate is against throttle stop. Reset closed TPS. | Engine pilot lamp/check engine | | |
| P0601 | Module call monitoring | Damaged ECM or faulty programming. | Try updating the ECM. If the problem persists, replace the ECM. | Engine pilot lamp/check engine | | |
| P0602 | ECM not coded | Damaged ECM or faulty programming. | Try updating the ECM. If the problem persists, replace the ECM. | Engine pilot lamp/check engine | Will not start | |
| P0604 | RAM fault | Damaged ECM or faulty programming. | Try updating the ECM. If the problem persists, replace the ECM. | Engine pilot lamp/check engine | | |
| P0605 | EEPROM fault | Damaged ECM or faulty programming. | Try updating the ECM. If the problem persists, replace the ECM. | Engine pilot lamp/check engine | | |

| P-CODE | DESCRIPTION | CAUSE | ACTION | GAUGE | ENGINE REACTION | DESCRIPTION OF LIMP HOME EFFECT |
|---|---|---|---|---|---|---|
| P0605 | EEPROM checksum fault | Damaged ECM or faulty programming. | Try updating the ECM. If the problem persists, replace the ECM. | Engine pilot lamp/check engine | | |
| P0605 | Coding ID checksum fault | Damaged ECM or faulty programming. | Try updating the ECM. If the problem persists, replace the ECM. | Engine pilot lamp/check engine | | |
| P0605 | Coding checksum fault | Damaged ECM or faulty programming. | Try updating the ECM. If the problem persists, replace the ECM. | Engine pilot lamp/check engine | | |
| P0605 | Programming checksum fault | Damaged ECM or faulty programming. | Try updating the ECM. If the problem persists, replace the ECM. | Engine pilot lamp/check engine | | |
| P0608 | Sensor's power supply voltage too low | Inverted connectors between air pressure sensor and TPS. Damaged circuit wires, shorted air pressure sensor or shorted TPS. | Check system circuits 2-A-12, 2-A-28, 2-A-40, 2-A-24, 2-A-25 and 2-A-39. | Engine pilot lamp/check engine | Limp home | No rev but all associated sensors will be set to a default value |
| P0608 | Sensor's power supply voltage too high | Damaged circuit wires, TPS or air pressure sensor shorted to a supply. | Check system circuits 2-A-12, 2-A-28, 2-A-40, 2-A-24, 2-A-25 and 2-A-39. | Engine pilot lamp/check engine | Limp home | No rev but all associated sensors will be set to a default value |
| P0616 | Starter relay open circuit or shorted to ground | Blown fuse, damaged or disconnected starter relay, damaged circuit wires, damaged connectors or damaged ECM output pins. | Check fuse F4. Disconnect the starter relay and check for approximately 7.3 ohms between the small starter relay terminals. Check for approximately 12 volts between starter relay OR/GN wire and ground. Check system circuit 2-B-31. | Engine pilot lamp/check engine | Will not start | |
| P0617 | Starter relay shorted to battery | Damaged solenoid, damaged circuit wires, damaged connector or damaged ECM output pins. | Disconnect the starter relay and check for approximately 7.3 ohms between the small starter relay terminals. Check if system circuit 2-B-31 is shorted to 12 V. | Engine pilot lamp/check engine | Will not start | |
| P0705 | Transmission range sensor circuit malfunction (PRNHL) | Improbable combination of transmission switches. | Check for disconnected or damaged transmission contact. Check circuit 2-A-2, 2-A-6 and 2-A-31. Refer to *B.U.D.S. TRANSMISSION* switch diagnostic. Refer to *SERVICE MANUAL* for transmission service. | Check engine/"E" is displayed | Limp home | No rev but engine will react as if the gear were in high |
| P1102 | Throttle position sensor adaptation failure | Wrong throttle body mechanical position during reset of closed TPS or no initialization after ECM replacement. | Check cable adjustment. Check idle stop for wear. Make sure throttle plate is against throttle stop. Reset closed TPS. | Engine pilot lamp/check engine | | |

| P-CODE | DESCRIPTION | CAUSE | ACTION | GAUGE | ENGINE REACTION | DESCRIPTION OF LIMP HOME EFFECT |
|---|---|---|---|---|---|---|
| P1104 | Throttle position sensor adaptation failure | Wrong throttle body mechanical position during reset of closed TPS or no initialization after ECM replacement. | Check cable adjustment. Check idle stop for wear. Make sure throttle plate is against throttle stop. Reset closed TPS. | Engine pilot lamp/check engine | | |
| P1116 | High temp | High temperature of the cooling liquid. | Refer to *SERVICE MANUAL* for high engine temperature. | Check engine/hi temp | Limp home | Rev at 4050 |
| P1148 | Safety fuel cut off detected | TPS adaptation failure, TPS failure, damaged ECM memory or battery voltage out of range. | Check cable adjustment. Check idle stop for wear. Make sure throttle plate is against throttle stop. Reset closed TPS. | Engine pilot lamp/check engine | Limp home | Rev at 5000 |
| P1202 | Oil pressure switch still closed | Low oil level, engine leak, oil pump failure, damaged sensor, damaged or shorted circuit wires. | Check oil level. Check oil pressure switch resistance. With engine stopped, the resistance should be less than 1 ohm. With engine running, the resistance of oil switch should be infinitely high (OL). Check system circuit 2-A-10 to engine ground. | Engine pilot lamp/check engine | No effect | |
| P1203 | Oil pressure switch leakage | Low oil level, engine leak, oil pump failure, damaged sensor, damaged or shorted circuit wires. | Check oil level. Check oil pressure switch resistance. With engine stopped, the resistance should be less than 1 ohm. With engine running, the resistance of oil switch should be infinitely high (OL). Check system circuit 2-A-10 to engine ground. | Engine pilot lamp/check engine | No effect | |
| P1520 | Low oil | Low oil detected in engine. | Refer to *SERVICE MANUAL* for low oil service. | Check engine/low oil | Limp home | Rev at 4000 |
| P1655 | DESS® line shorted to battery | Damaged circuit wires or mixed up connection pins. | Check system circuits 2-B-38, and 2-B-39 with 1-CC-C and 1-CC-D. | Check engine/ incorrect DESS | Will not start | |
| P1656 | DESS® line shorted to ground | Damaged circuit wires or mixed up connection pins. | Check system circuits 2-B-38, and 2-B-39 with 1-CC-C and 1-CC-D. | Check engine/ incorrect DESS | Will not start | |
| P1675 | Relay 2 shorted to battery | Damaged relay, damaged circuit wires, damaged connector or damaged ECM output pins. | Check for approximately 100 ohms between relay pins 85 and 86. Check if system circuit 2-B-14 is shorted to 12 V. | Engine pilot lamp/check engine | ECM will not do memory tracking sequence | |

| P-CODE | DESCRIPTION | CAUSE | ACTION | GAUGE | ENGINE REACTION | DESCRIPTION OF LIMP HOME EFFECT |
|---|---|---|---|---|---|---|
| P1676 | Relay 2 open circuit or shorted to ground | Blown fuse, damaged or disconnected relay, damaged or disconnected circuit wires, damaged ECM output pins. | Check fuse F4. Check for approximately 100 ohms between relay pins 85 and 86. Check system circuit 2-B-14. | Engine pilot lamp/check engine | ECM will not do memory tracking sequence | |
| P1683 | CAN RAM Fault | Communication error between cluster and ECM and/or B.U.D.S. | Check for damaged circuit between 1-CI-23, 4-B-29 and 2-DB-1. Check for damaged circuit between 1-CI-24, 4-B-27 and 2-DB-2. Replace cluster if necessary. | Engine pilot lamp/check engine | No effect | |
| P2119 | ECU wrong | Incorrect ECU or cluster for engine. | Install proper recommended ECU or gauge for vehicle. | Engine pilot lamp/check engine | Will not start | |

# ADJUSTMENT AND REPAIR PROCEDURES

## SERVICE TOOLS

| Description | Part Number | Page |
|---|---|---|
| pliers | 295 000 070 | 206 |
| ECM adapter | 420 277 010 | 195 |
| tachometer | 529 014 500 | 197 |
| Fluke 111 multimeter | 529 035 868 | 195, 199 |
| Back probe test wires | 529 036 063 | 195 |

## SERVICE PRODUCTS

| Description | Part Number | Page |
|---|---|---|
| Loctite 243 | 293 800 060 | 212, 216, 218 |

## GENERAL

Engine problems are not necessarily related to the electronic fuel injection system.

It is important to ensure that the mechanical integrity of the engine/propulsion system is present:

- good transmission system operation
- good engine compression and properly operating mechanical components, no leaks etc.
- fuel pump connection and fuel lines without leaks.

Check the chart in *TROUBLESHOOTING* section to have an overview of problems and suggested solutions.

When replacing a component, always check its operation after installation.

## FUEL SYSTEM

**⚠ WARNING**

**Fuel is flammable and explosive under certain conditions. Ensure work area is well ventilated. Do not smoke or allow open flames or sparks in the vicinity.**

**⚠ WARNING**

**Always disconnect battery prior to working on the fuel system. Always disconnect battery exactly in the specified order, BLACK (-) cable first. It is recommended to disconnect electrical connections prior to disconnecting fuel lines.**

**⚠ WARNING**

**The fuel system of a fuel injection system holds much more pressure than on a carbureted ATV. Prior to disconnecting a hose or to removing a component from the fuel system, follow the recommendation described here.**

- Use the B.U.D.S. software to release the fuel pressure in the system (refer to *EMS DIAGNOSTIC*). Look in the **Activation** section of the software B.U.D.S.

**⚠ WARNING**

**Fuel lines remain under pressure at all times. Always proceed with care and use appropriate safety equipment when working on pressurized fuel system. Wear safety glasses. Proceed with care when removing/installing pressure test equipment or disconnecting fuel line connections. Use the software B.U.D.S. to release fuel pressure prior to removing a hose. Cover the fuel line connection with an absorbent shop rag. Slowly disconnect the fuel hose to minimize spilling. Wipe off any fuel spillage in the engine compartment. Do not allow fuel to spill on hot engine parts and/or on electrical connectors. Never use a hose pincher on injection system high pressure hoses. Replace any damaged or deteriorated fuel lines.**

When the repair is completed, ensure that all hoses are connected and secured. Perform the *FUEL PRESSURE TEST* and the *FUEL TANK LEAK TEST* as explained in *FUEL TANK AND FUEL PUMP* section.

**⚠ WARNING**

**Always perform the fuel pressure test if any component has been removed. A pressure test must be done before turning the ignition key to ON and setting the engine run/stop switch to RUN. The fuel pump is activated each time in these conditions. After performing a fuel pressure test, use the valve on the fuel pressure gauge to release the pressure (if so equipped).**

To locate a leak, pressurize the system. Check for leaking fuel or fuel odor. Spray soapy water on all hose connections, fuel rail and injectors. Air bubbles will show the leaking area.

## ELECTRICAL SYSTEM

It is important to check that the electrical system is functioning properly:

- battery
- fuses
- relay(s)
- diodes
- DESS
- ignition (spark)
- ground connections
- wiring connectors
- multifunction gauge.

It is possible that a component seems to operate in static condition but in fact, it is defective. In this case, the best way to solve this problem is to remove the original part and replace it with one which is in good condition.

Never use a battery charger to substitute temporarily the battery, as it may cause the ECM (engine control module) to work erratically or not to work at all. Check related-circuit fuse solidity and condition with an ohmmeter. Visual inspection could lead to false results.

**⚠ WARNING**

**Some EMS components are continuously powered by the VFB (Vehicle Fuse Block) when ignition key is turned on and engine run/stop switch is set in RUN position. The ECM switches the circuit to the ground to complete the electrical circuits it controls. Take this into account when troubleshooting. Always disconnect the battery prior to disconnecting any electric or electronic parts.**

Pay particular attention to ensure that pins are not out of their connectors or out of shape.

When probing terminals, pay attention not to bend the terminal as this could bring a loose connection that would be difficult to troubleshoot.

**⚠ WARNING**

**Ensure all terminals are properly crimped on wires and connector housings are properly fastened.**

Before replacing an ECM, always check electrical connections. Make sure terminals are properly crimped on wires and fastened in housing, and that they are free of corrosion or moisture. Check if wiring harness shows any signs of scoring. Ensure proper electrical connection. Particularly check ECM ground connections. A "defective module" could possibly be repaired simply by unplugging and replugging the ECM. The voltage and current might be too weak to go through dirty wire pins.

For the electrical connectors, pay attention to the following:

- ECM connectors: Do not apply dielectric grease or any other lubricant.
- Other connectors: Apply a silicon-based dielectric grease or other appropriate lubricant.

Ensure that all electronic components are genuine. Any modification on the wiring harness may lead to generate fault codes or bad operation.

NOTE: For diagnostics purposes, use B.U.D.S. software. See *COMMUNICATION TOOLS AND B.U.D.S. SOFTWARE* subsection.

After a problem has been solved, ensure to clear the fault(s) in the ECM using the B.U.D.S. software. Refer to *EMS DIAGNOSTIC* subsection.

## Diagnostic Tools

To perform verifications, use the Fluke 111 multimeter (P/N 529 035 868).

To easily probe wire terminals through the back of their connectors, Back probe test wires (P/N 529 036 063) can be used.

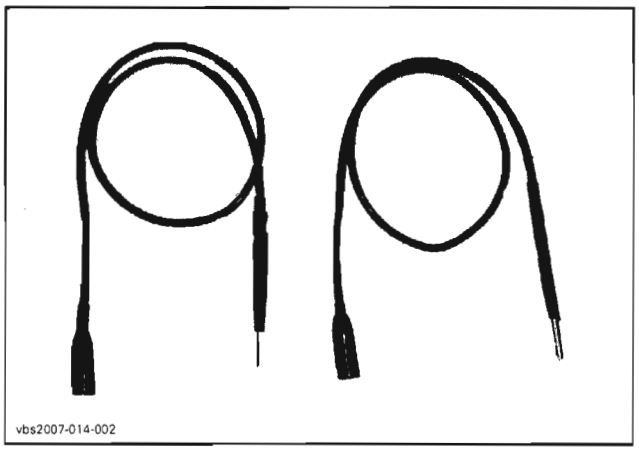
vbs2007-014-002

They can be inserted at the end of the standard probes of the Fluke 111 multimeter (P/N 529 035 868).

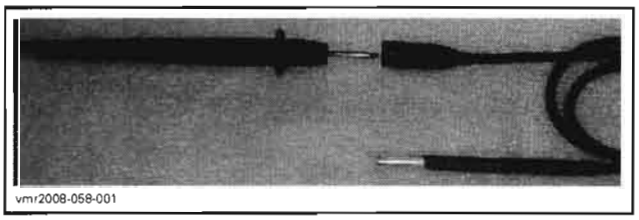
vmr2008-058-001

The most recommended and safest method to probe ECM connector terminals is to use the ECM adapter (P/N 420 277 010). This tool will prevent deforming or enlarging terminals which would lead to bad ECM terminal contact creating intermittent or permanent problems.

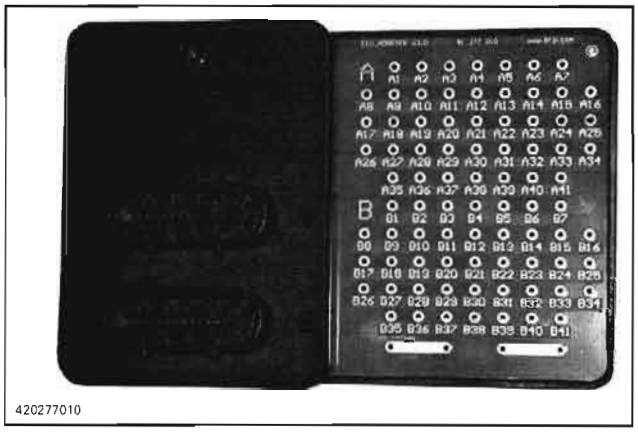
420277010

Disconnect the desired connector from ECM and reconnect on the tool connector. Probe required terminals directly in the tool holes.

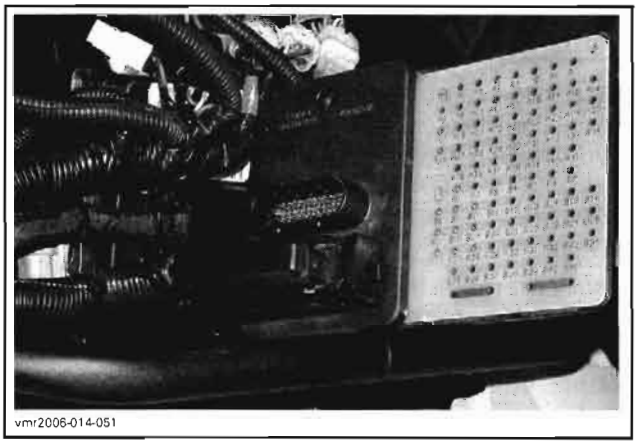
vmr2006-014-051

## Resistance Measurement

When measuring the resistance with an ohmmeter, all values are given for a temperature of 20°C (68°F). The resistance value of a resistance varies with the temperature. The resistance value for usual resistor or windings (such as injectors) **increases** as the temperature increases. However, our temperature sensors are NTC types (Negative Temperature Coefficient) and work the opposite which means that the resistance value **decreases** as the temperature increases. Take it into account when measuring at temperatures different from 20°C (68°F). Use this table for resistance variation relative to temperature for **temperature** sensors.

| TEMPERATURE SENSOR TABLE | | | |
|---|---|---|---|
| TEMPERATURE | | RESISTANCE (ohms) | |
| °C | °F | MAPTS | CTS |
| - 40 | - 40 | — | 45000 |
| - 30 | - 22 | 28000 | 28000 |
| - 20 | - 4 | 14500 | 15000 |
| 0 | 32 | 5500 | 5750 |
| 20 | 68 | 2500 | 2600 |
| 40 | 104 | 1200 | 1200 |
| 60 | 140 | 600 | 600 |
| 80 | 176 | 320 | 320 |
| 100 | 212 | 180 | 180 |
| 130 | 266 | 90 | 90 |

*CONVERSION CHART FOR TEMPERATURE SENSORS*

The resistance value of a temperature sensor may test good at a certain temperature but it might be defective at other temperatures. If in doubt, try a new sensor.

Also remember this validates the operation of the sensor at room temperature. It does not validate the over temperature functionality. To test it, the sensor could be removed from the engine and heated with a heat gun while it is still connected to the harness to see if the ECM will detect the high temperature condition and generate a fault code.

## ECM Connectors

The ECM connectors are identified by the letter "A" and "B".

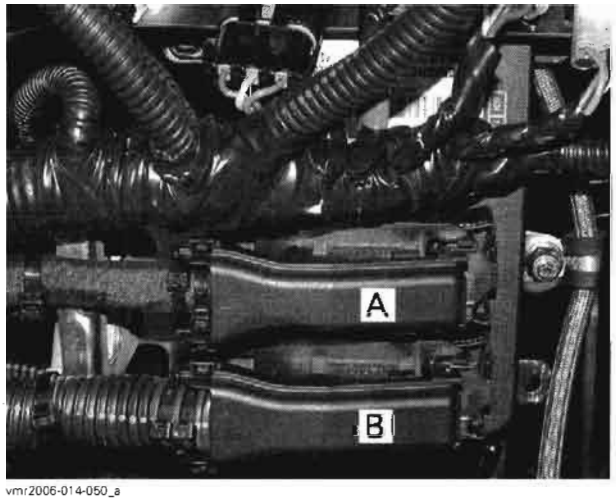

vmr2006-014-050_a

## Engine Connector

Remove center panel and dashboard. Refer to *BODY*.

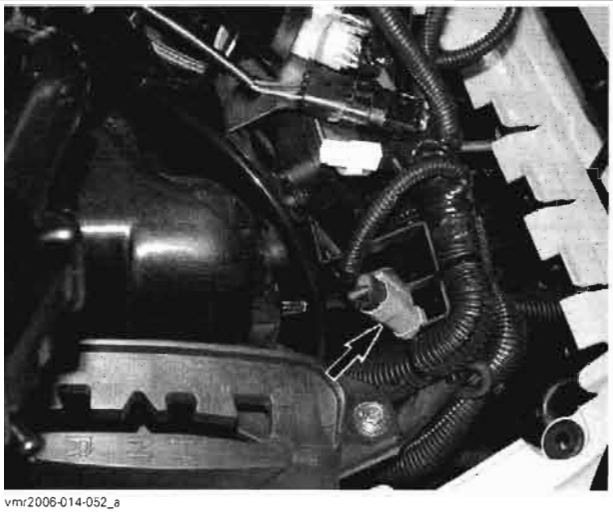
vmr2006-014-052_a

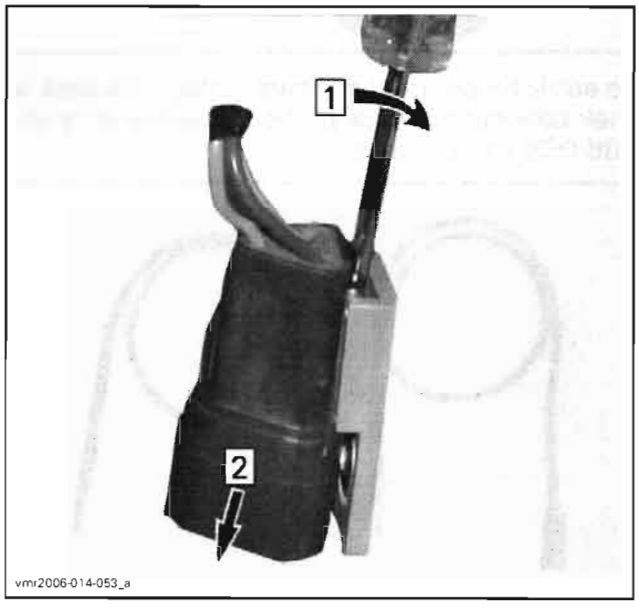

vmr2006-014-053_a

*TYPICAL — CONNECTOR REMOVAL*

Use this illustration to locate the pin numbers on the engine connector when performing tests.

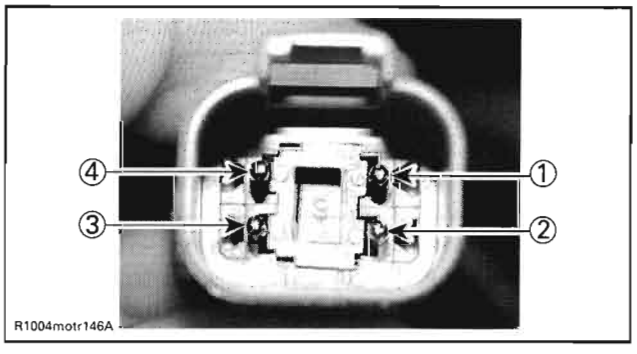

R1004motr146A

*ENGINE CONNECTOR PIN-OUT (ENGINE SIDE)*

# BASIC ADJUSTMENTS

## IDLE SPEED

The idle speed is not adjustable. The ECM controls the idle speed of the engine.

**CAUTION: Never attempt to adjust the sealed idle stop screw. It is calibrated at the factory. If the screw adjustment is changed, the throttle body must be replaced.**

If desired, the engine RPM can be verified with the tachometer (P/N 529 014 500).

Install the tachometer wire on spark plug cable.

vmr2006-014-054

## THROTTLE CABLE

Mechanically adjust the throttle cable as follows.

Handlebar and throttle cable must be at their normal position. Throttle cable routing must have been performed before adjusting cable.

Activate throttle lever a few times. Make sure throttle cam of throttle body rests against set screw without any tension in the cable.

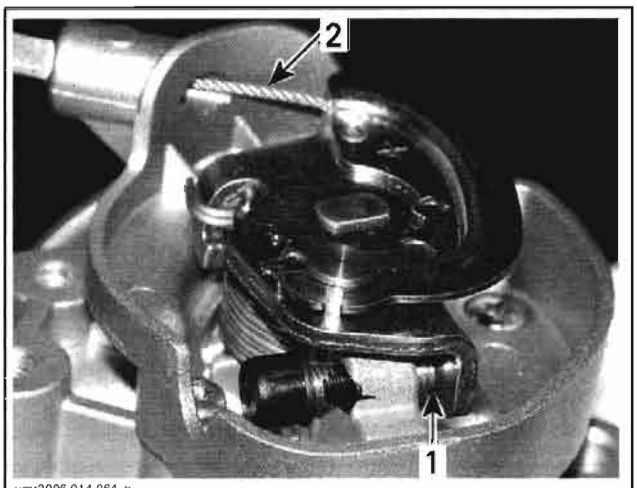


vmr2006-014-064_b

1. *Contact here*
2. *Free-play here*

**CAUTION: If there is no free-play at idle position, it may cause poor idling and startability problems. Improper cable adjustment will cause strain on cable and/or damage cable bracket or throttle lever at handlebar.**

**⚠ WARNING**

**Make sure idle speed stopper contacts throttle cam when throttle lever is fully released at handlebar.**

If adjustment is needed, proceed with adjuster at handlebar. Adjust to have 2 mm (.078 in) free-play. When done, slide back cable protector over adjuster.

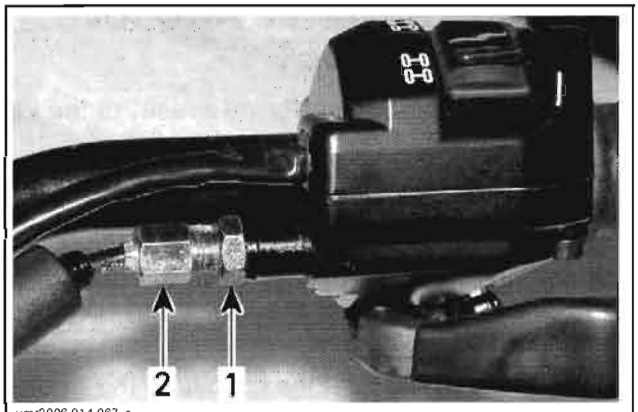


vmr2006-014-067_a

1. *Adjuster lock nut*
2. *Adjuster*

Turn handlebar side to side and ensure there is still free-play in each position.

To ensure there is no strain in the cable at wide open position:

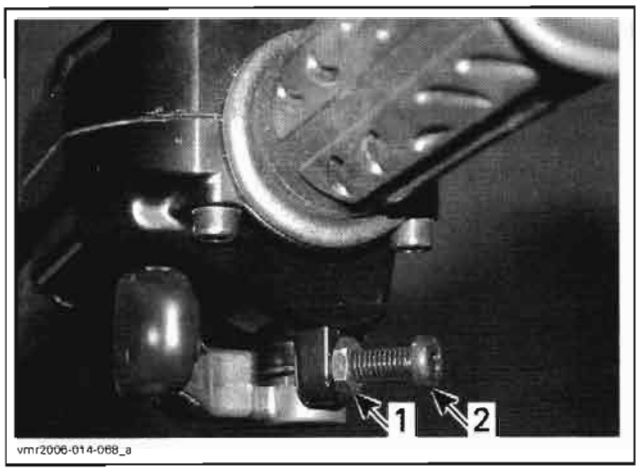


*1. Adjuster lock nut*
*2. Adjuster*

- Fully depress throttle lever and hold.
- Slacken adjuster lock nut/adjuster until it just releases lever.
- Turn adjuster clockwise until it touches lever again.
- From there, tighten adjuster 1/2 turn (to remove strain in cable).
- Tighten lock nut.
- Release throttle lever.

Reinstall throttle body cover.

### Closed Throttle and Idle Actuator Reset

Perform the **Closed Throttle and Idle Actuator** reset.

## CLOSED THROTTLE AND IDLE ACTUATOR RESET

NOTE: This operation performs a reset of the values in the ECM.

This reset is very important. The setting of the TPS will determine the basic parameters for all fuel mapping and several ECM calculations and the setting of the idle bypass valve will determine the basic parameters for the idle speed control of the engine.

NOTE: Reset must be done each time the throttle position sensor (TPS) is loosened or removed or throttle body is replaced or ECM is replaced.

**CAUTION: An improperly set TPS or idle bypass valve may lead to poor engine performance and emission compliance could possibly be affected. In addition, improper idle bypass valve reset may lead to poor engine starting, improper idle (too low or too high) and engine stop on deceleration.**

Use the B.U.D.S. software to perform this adjustment.

Remove throttle body cap and ensure the throttle cam of throttle body rests against set screw without any tension in the cable.

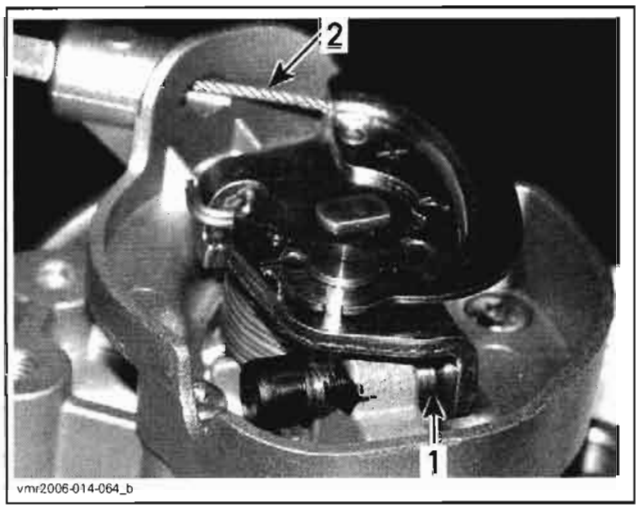


*1. Contact here*
*2. Free-play here*

Open throttle approximately one quarter then quickly release. Repeat 2 - 3 times to settle throttle plate. If stopper does not rest against its stop lever, perform throttle cable adjustment. Refer to *THROTTLE BODY* in this section.

To reset valve and TPS, click on the **Reset** button in the **Setting** section of B.U.D.S.

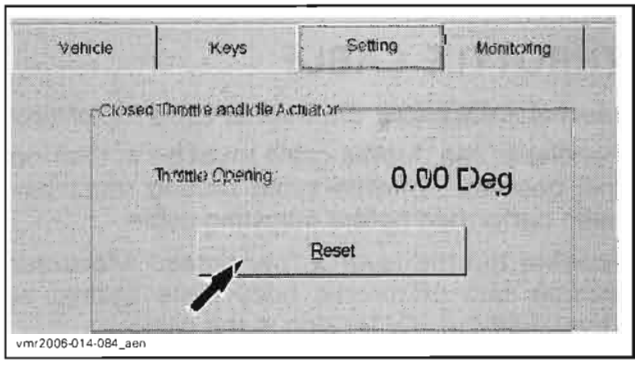


NOTE: No message will be displayed if operation is successful. If operation is wrong, an error message will be displayed.

NOTE: There is no idle speed adjustment to perform. The ECM takes care of that. If TPS is not within the allowed range while resetting the **Closed Throttle and Idle Actuator**, the ECM will generate a fault code and will not accept the setting.

Start engine and make sure it operates normally through its full engine RPM range. If fault codes appear, refer to *EMS DIAGNOSTIC* section for more information.

## IGNITION TIMING

The ignition timing is not adjustable.

# REPAIR PROCEDURES

## MAIN RELAY (R2)

### Relay (R2) Installation

**NOTE:** Relays may be inverted by 180° at installation and they will work correctly. Ensure to align tabs of relay with terminals of fuse holder at installation.

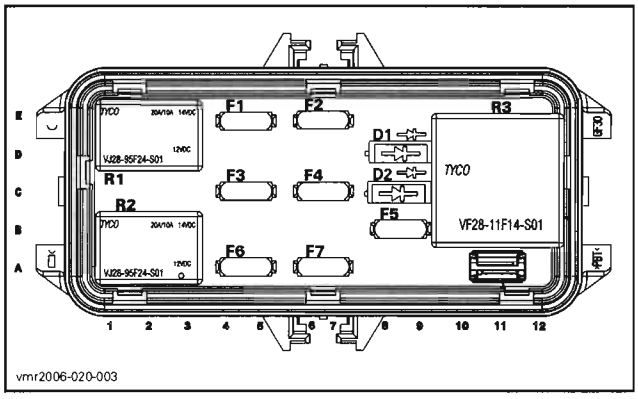


*R2: Main relay*

### Relay (R2) Continuity Test

Remove relay.

Use the Fluke 111 multimeter (P/N 529 035 868), and select the Ω position.

Probe relay as follows.

| TERMINAL | | RESISTANCE |
|---|---|---|
| 30 | 87 | Open circuit (OL) |

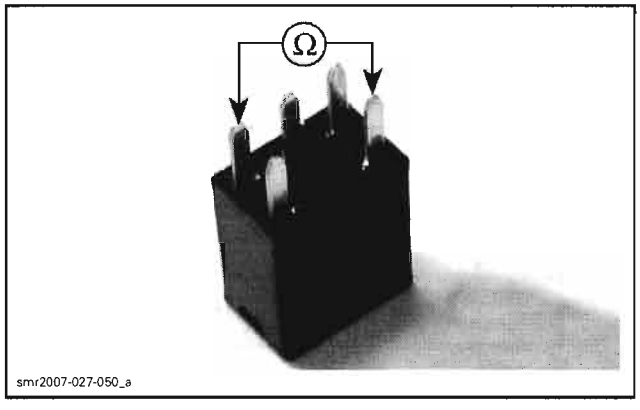


Connect battery as shown and probe relay again as follows.

| TERMINAL | | RESISTANCE |
|---|---|---|
| 30 | 87 | 0.5 Ω max. (continuity) |

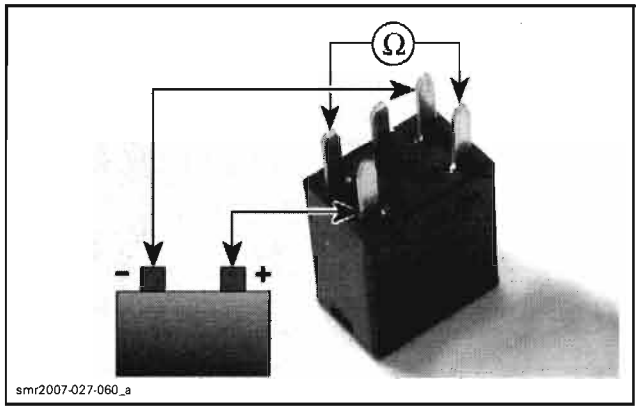


If relay failed any test, replace it.

## D1 DIODE (ECM)

The diode D1 is located in the fuse holder.

The fuse holder is located in the front service compartment.

### Diode (D1) Installation

Validate D1 diode installation as shown.

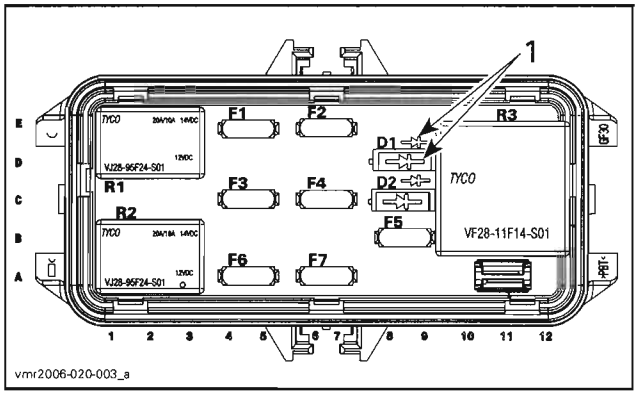


1. *Position symbol on diode in same direction as symbol on fuse holder*

### Problems Related to Diode D1

| | |
|---|---|
| ECM does not turn on | – Missing diode<br>– Inverted diode installation<br>– Defective diode (open) |
| ECM does not turn off (engine will not shut off) | – Defective diode (shorted) |

## Diode (D1) Test

Remove diode and lay down on a non-metallic table.

Set multimeter as shown.

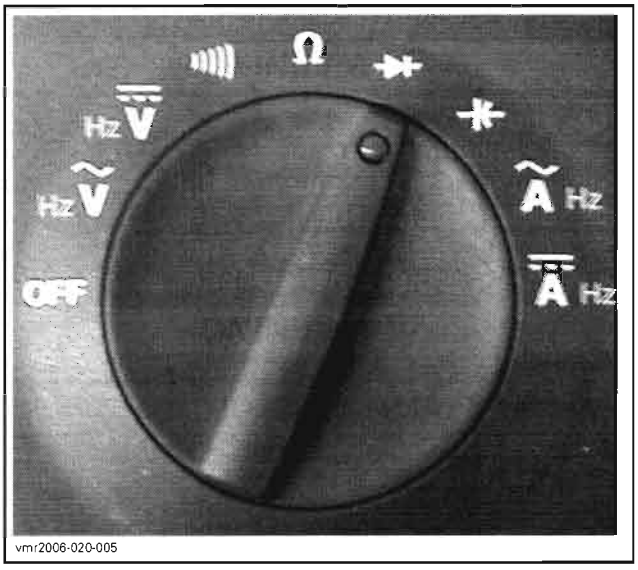

vmr2006-020-005

Probe diode paying attention to proper polarity.

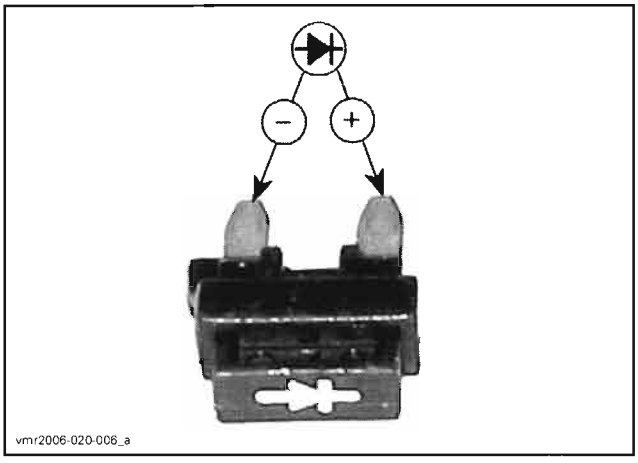

vmr2006-020-006_a

*MUST BE OPEN CIRCUIT*

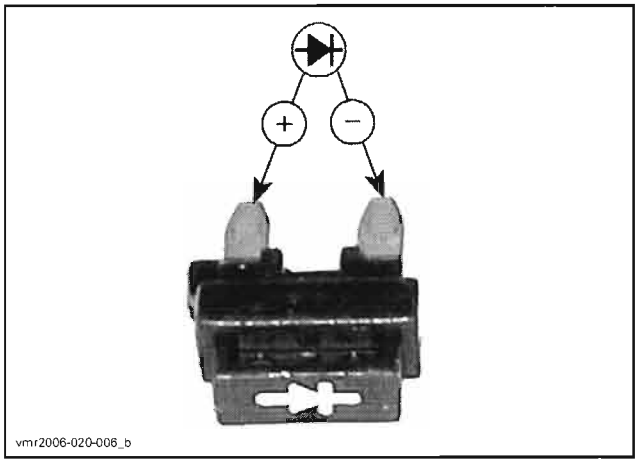

vmr2006-020-006_b

*MUST BE AROUND 0.5 V*

If diode fail any test, replace it.

# ENGINE CONTROL MODULE (ECM)

## Quick Test to Validate ECM Operation

Turn ignition key to ON **AND** set engine run/stop switch to RUN.

**NOTE:** When both switches are ON, it triggers the ECM and it then turns on.

| QUICK INDICATION THAT ECM IS NOT WORKING (assuming the observed component is working) |
|---|
| Multifunction gauge does not turn on. |
| Fuel pump does not turn on for approx. 5 seconds (when turning key on and setting engine run/stop switch RUN). |
| Rear light does not turn on. |
| Headlamp do not turn on (with ignition key at light position). |

### If Engine Stop Running for no Reason

It may be caused by the ECM that is improperly reset (it restarts).

- If it occurs when using the winch, check diodes D5 and D6. Refer to *LIGHTS, GAUGE AND ACCESSORIES* section for diode testing procedure.
- If it occurs at any time, check diode D2. Refer to *STARTING SYSTEM* section for diode testing procedure.

## ECM Power Supply and Ground Pinout

| FUNCTION | CONNECTOR PIN |
|---|---|
| Power 12 Vdc | B-11 |
| Grounds | B1, B2, B32 and B41 |

## ECM Power Supply Verification

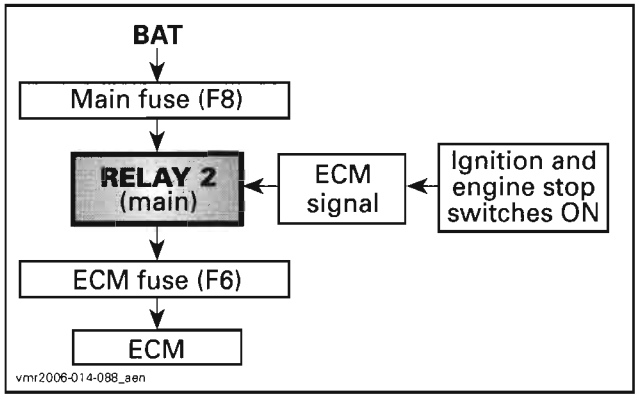

vmr2006-014-088_aen

**NOTE:** If engine is not started within 15 minutes after ignition switch was turned on and engine run/stop switch was set to RUN, ECM will go in sleep mode and will cut power to everything except the multifunction gauge. To exit that mode, turn off ignition key and WAIT until multifunction gauge turns off then, turn ignition key back on.

Check fuses F8 and F6.

Check main relay R2.

To check relay operation, remove relay and bypass it with a jumper between terminals as shown.

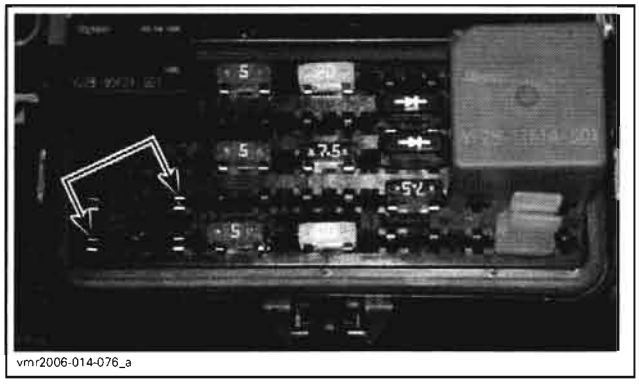
vmr2006-014-076_a

### If ECM does NOT Work when Bypassing Relay R2:

Problem is on the **contact side of relay** circuit, check wiring/connectors from battery to ECM.

- Disconnect connector "B" from ECM.
- Keep the jumper to bypass relay.

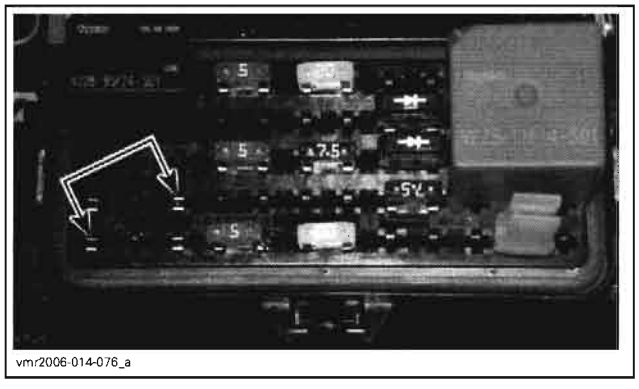
vmr2006-014-076_a

- Read voltage as follows.

| ECM CONNECTOR "B" | | MEASUREMENT |
|---|---|---|
| PIN | | VOLTAGE |
| B-1 (ground) | B-11 | 12 Vdc |

- If voltage is good, check ignition switch, engine run/stop switch and their wiring/connectors. Refer to *IGNITION SYSTEM*. If they test good, check **signal side of relay** as described under *IF ECM WORKS WHEN BYPASSING RELAY* below.
- If voltage is not good, read voltage as follows.

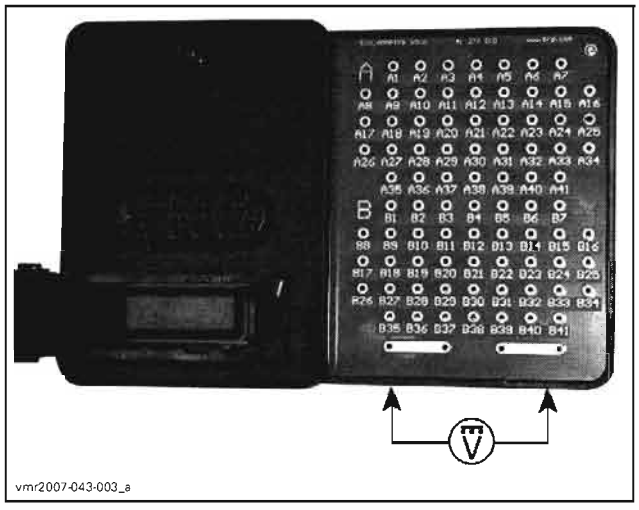
vmr2007-043-003_a

| ECM CONNECTOR "B" | | MEASUREMENT |
|---|---|---|
| PIN | | VOLTAGE |
| B-11 | Battery ground | Battery voltage |

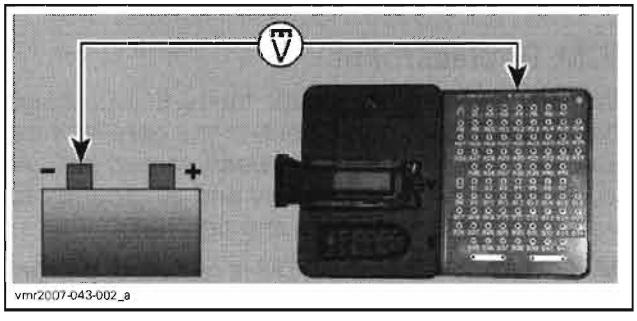
vmr2007-043-002_a

- If voltage is now good, check ECM ground circuits and battery ground.
- If voltage is still not good, remove jumper in fuse box and read voltage as follows.

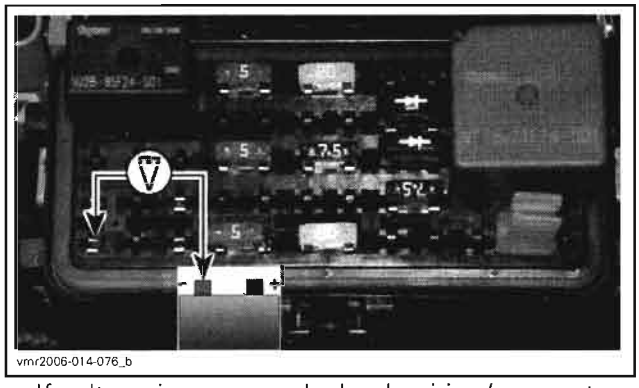
vmr2006-014-076_b

- If voltage is now good, check wiring/connectors from fuse block to ECM.
- If voltage is NOT good, check wiring/connectors from battery to fuse block.

**If ECM WORKS when Bypassing Relay:**

Relay is likely to be faulty. Test relay. Refer to *MAIN RELAY (R2)* above in this section.

If relay tested good, problem is on the **input signal of relay** circuit. Do the following:

- Check diode D1. Refer to *DIODE D1 (ECM)* above in this section.
- Check wiring/connectors from battery to fuse block.
- Check wiring/connectors from fuse block to ECM.
- Try a new ECM.

## ECM Replacement

Prior to replacing a possibly faulty ECM, ensure that all the recommendations in the general introduction of this section have been carried out. Also, check ECM power supply and all grounds for proper contact/cleanliness and tightness.

**IMPORTANT:** When the ECM is replaced, the ignition key(s) and the **Closed Throttle and Idle Actuator** must be reprogrammed/reset. Refer to their specific section for adjustment.

To allow transferring the previous recorded information from the old ECM to the new one, use the B.U.D.S. software. Select ECM, **Replace** in the **Module** menu. Follow instructions in its help system.

**NOTE:** If the old ECM still works, its information must be read by B.U.D.S. before being removed from the vehicle in order to transfer vehicle information and history to the new ECM.

Disconnect battery cables.

**⚠ WARNING**

**Battery BLACK negative cable must always be disconnected first and connected last.**

Remove center panel and dashboard. Refer to *BODY.*

Disconnect both connectors from ECM.

Unscrew retaining screws and remove the ECM from vehicle.

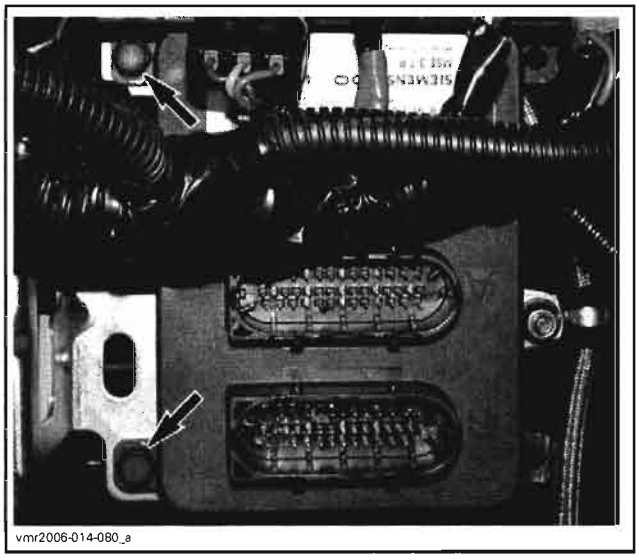
vmr2006-014-080_a

Install the new ECM to the vehicle.

Reconnect connectors to ECM, and then battery cables.

Transfer the data from the previous ECM to the new one using B.U.D.S. then proceed with the required resets and reprogram ignition key(s), if you were unable to transfer the data.

**NOTE:** If data cannot be transferred, manually enter information in **Vehicle** tab and **Engine serial number** in **History, Part Replacement.**

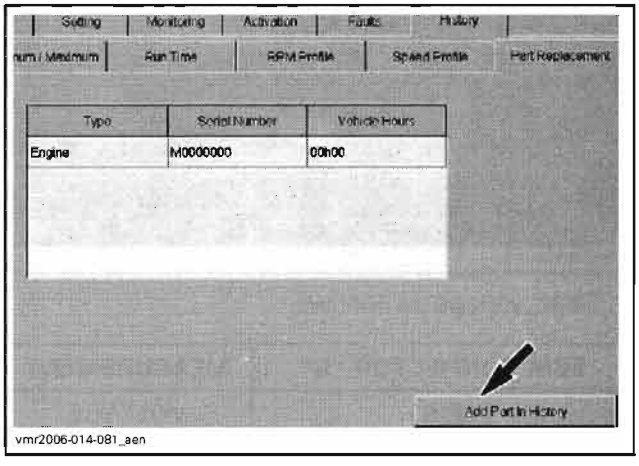

vmr2006-014-081_aen

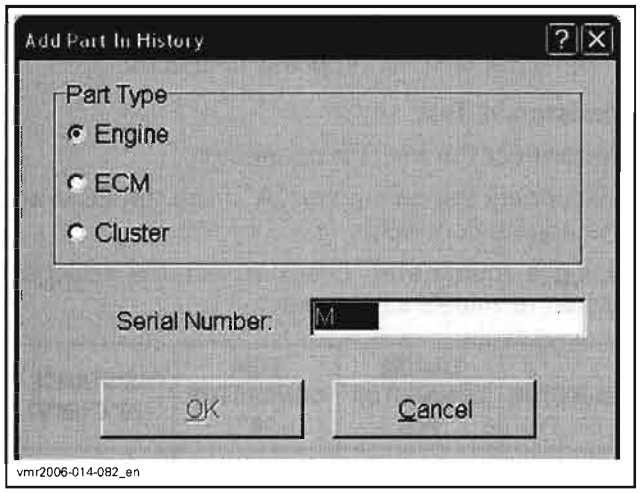

vmr2006-014-082_en

After performing the required resets, ensure to clear all faults from the newly replaced ECM.

### Security Exchange

If you get the message shown in the following illustration, the installed ECM is not appropriate for the vehicle or its calibration has been changed. Engine will crank but will not start.

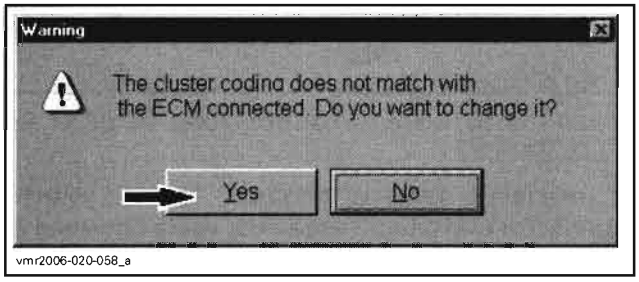

vmr2006-020-058_a

If it occured just after replacing the ECM, refer to *PARTS CATALOG* to get the proper ECM according to vehicle.

If you get this message after you have purposely changed the ECM calibration, Click "Yes" to update the system and to allow engine starting.

**CAUTION: It is not recommended to start an engine with the wrong calibration.**

# FUEL INJECTOR

## Leakage Test

The leakage test is validated when performing the "fuel delivery system diagnostic flow chart" in *FUEL TANK AND FUEL PUMP.*

## Electrical Test

Turn ignition key ON and set engine run/stop switch to RUN.

Using the B.U.D.S. software, energize the fuel injector from the **Activation** section.

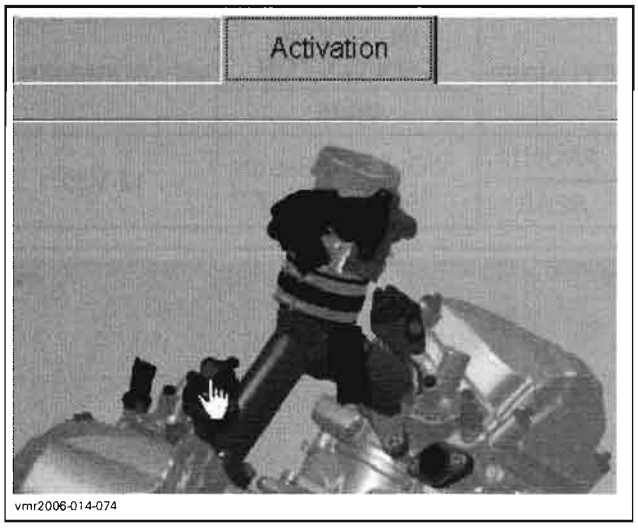

vmr2006-014-074

You should hear the injector working.

This will validate the injector mechanical and electrical operation.

If the injector does not work, check injector power supply.

### Voltage Test

Disconnect the connector from the injector.

NOTE: If connector is hard to unlock, gently use a screwdriver to release connector.

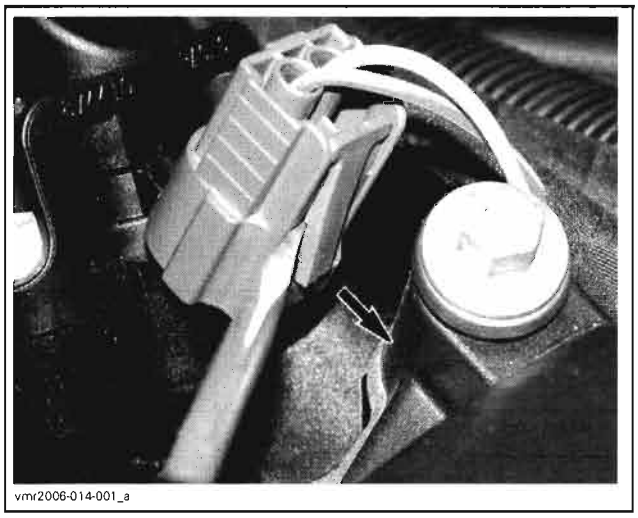
vmr2006-014-001_a

NOTE: It is not necessary to activate the injector since it is continuously powered.

Use a multimeter and set it to Vdc. Read voltage.

| CYLINDER | INJECTOR CONNECTOR WIRE | | MEASUREMENT |
|---|---|---|---|
| FRONT | VIOLET/ BLUE | Battery ground | 12 Vdc |
| REAR | | | |

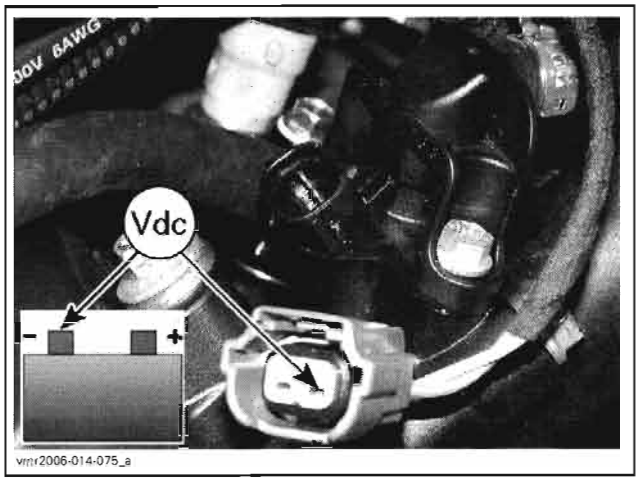


If supply voltage is good, check ground circuit between injector and ECM (see *WIRING DIAGRAMS*).

- If ground circuit is faulty, repair/replace.
- If ground circuit is good, refer to *ECM REPLACEMENT*.

If supply voltage is not good, check continuity between fuse F3 and injector (see *WIRING DIAGRAMS*).

NOTE: Probe fuse exactly as shown. This validates fuse at the same time.

Use a multimeter and set it to Ω. Read resistance.

| CYLINDER | INJECTOR CIRCUIT WIRE | | MEASUREMENT |
|---|---|---|---|
| FRONT | VIOLET/ BLUE | Fuse F3 | Close to 0 Ω |
| REAR | | | |

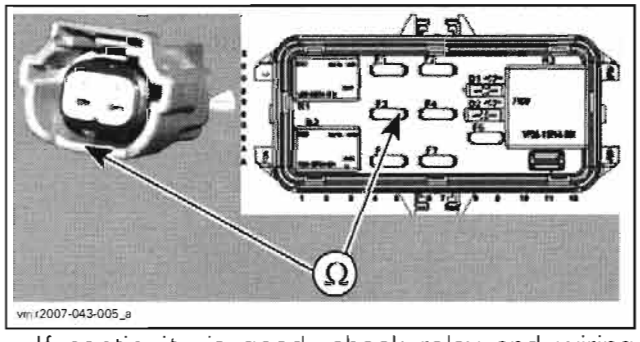


- If continuity is good, check relay and wiring from battery.
- If continuity is faulty, check fuse and if ok, repair/replace wiring going to injector.

Resistance Test

**Reconnect** the injector connector.

Disconnect the connector "A" from the ECM and the engine connector.

Using a multimeter, check resistance value between terminals as follows.

| INJECTOR | ENGINE CONNECTOR PIN | ECM CONNECTOR "A" | RESISTANCE @ 20°C (68°F) |
|---|---|---|---|
| FRONT | 3 | A-15 | 13.8 - 15.2 Ω |
| REAR | | A-33 | |

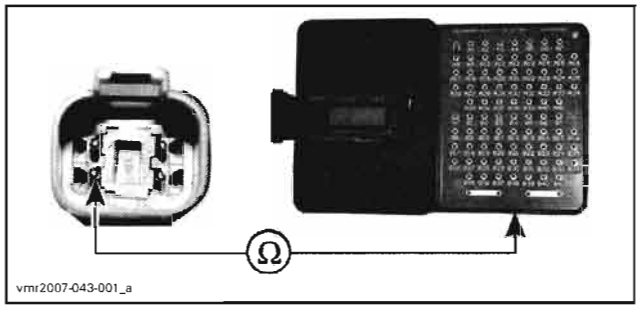


If resistance value is correct, refer to *ECM REPLACEMENT*.

If resistance value is incorrect, remove injector connector and check resistance value between injector pins as follows.

| INJECTOR | INJECTOR PIN | | RESISTANCE @ 20°C (68°F) |
|---|---|---|---|
| FRONT | 1 | 2 | 13.8 - 15.2 Ω |
| REAR | | | |

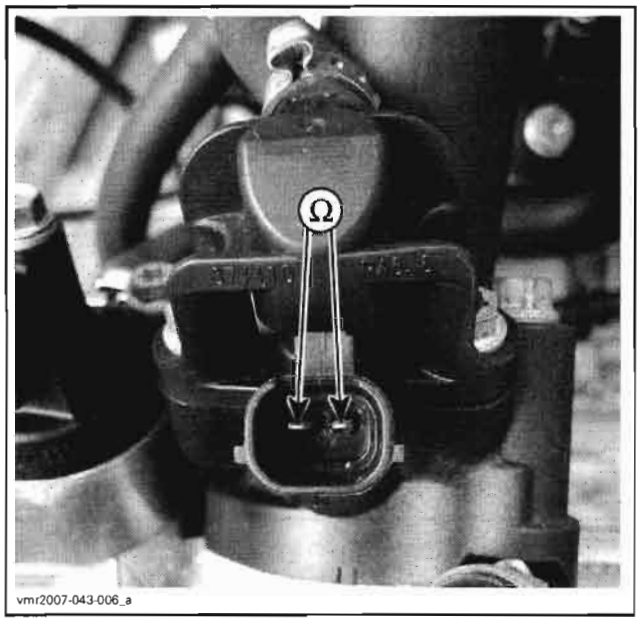


If readings are out of specifications, replace injector.

If readings are good, repair/replace wiring going to injector.

## Fuel Injector Replacement

### Removal

Before removing the injector, the fuel rail has to be removed from the engine. Refer to *FUEL RAIL* for the procedure.

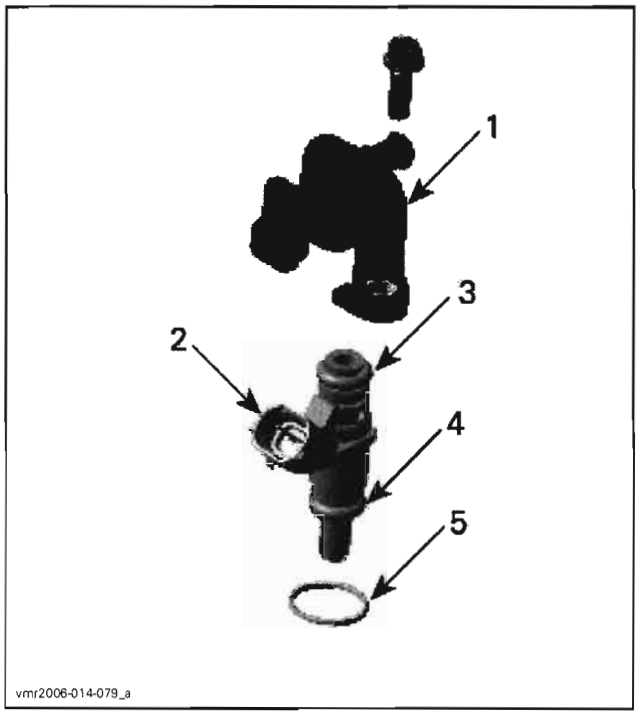


*FUEL RAIL ASS'Y*
1. *Fuel rail*
2. *Fuel injector*
3. *Injector top O-ring*
4. *Injector bottom O-ring*
5. *Manifold O-ring*

The fuel injector can be easily pulled out of the fuel rail.

### Installation

For the installation, reverse the removal procedure. Pay attention to the following details.

Apply a thin film of engine oil to O-rings to ease insertion in rail.

Install new O-rings, if you reinstall a used injector then insert the fuel injector in place with your hand. Do not use any tool.

Position the manifold O-ring as shown on injector.

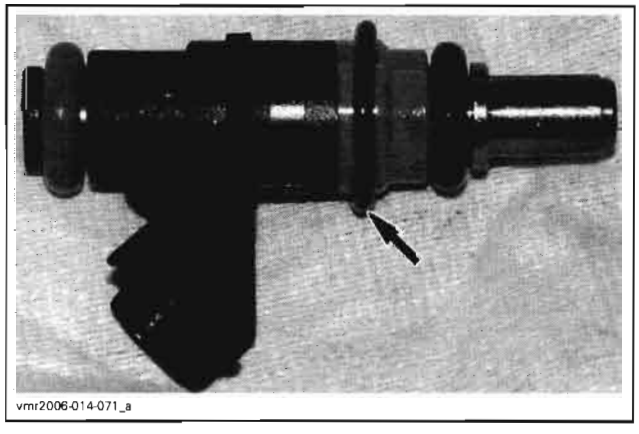

Carefully insert injector in manifold paying attention to the manifold O-ring. Gently push in evenly all around while inserting injector. O-ring must be completely inserted and not visible, before finishing pushing injector.

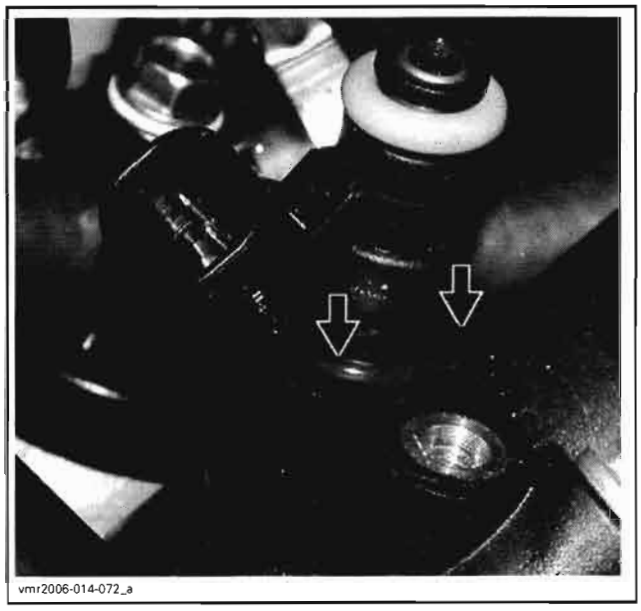
vmr2006-014-072_a

Firmly push injector until it bottoms.

Reinstall fuel rail. See above.

# FUEL RAIL

Pressure at fuel rails is supplied and controlled by the fuel pump module. Refer to *FUEL TANK AND FUEL PUMP* for pressure test.

## Fuel Rail Replacement

### Removal

Disable fuel pump using B.U.D.S. Look in the **Activation** tab.

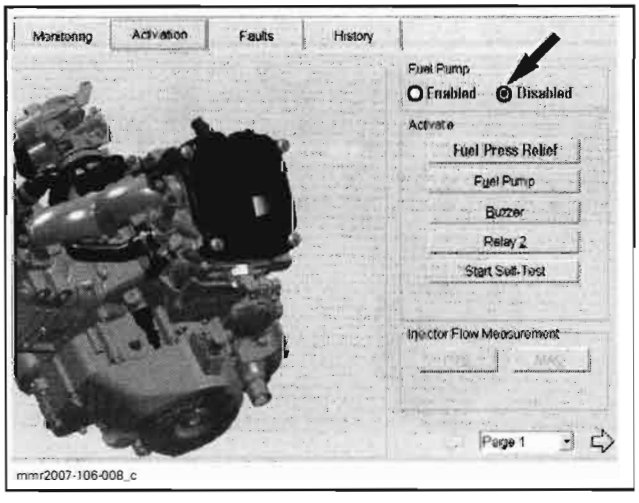

mmr2007-106-008_c

Release fuel pressure by running engine until it runs out of gas.

Turn ignition key off.

Wrap a rag around the inlet hose and release the quick fitting.

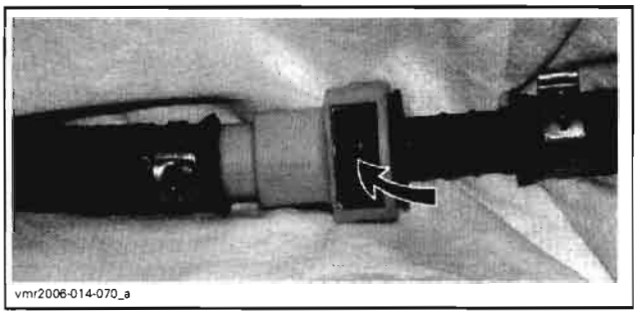
vmr2006-014-070_a

Unscrew rail retaining screws.

Gently pull rail up by hand.

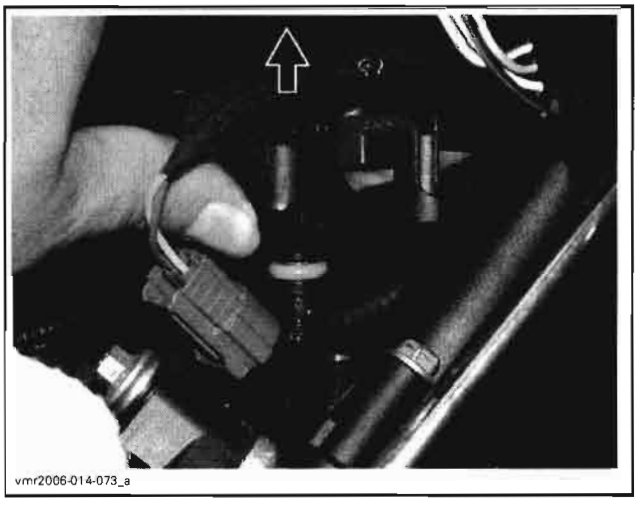
vmr2006-014-073_a

To disconnect fuel rail, cut clamp on fuel hose using pliers (P/N 295 000 070). Refer to *FUEL TANK AND FUEL PUMP* for clamp removal/installation procedures.

**NOTE:** If fuel rail is removed purposely to access fuel injector, it is not necessary to cut hose clamp. Only to replace fuel rail.

### Installation

For installation, reverse the removal process but pay attention to the following.

Install new clamps using pliers as per removal (if fuel rail was replaced).

A thin film of injection oil should be applied to O-rings of fuel injector to ease installation of fuel rail.

Install new O-rings.

Install fuel rail and evenly tighten screws a little at a time each side.

Tightening torque of the rail retaining screws is 6 N•m (53 lbf•**in**).

After securing inlet hose at quick fitting, re-enable fuel pump using B.U.D.S.

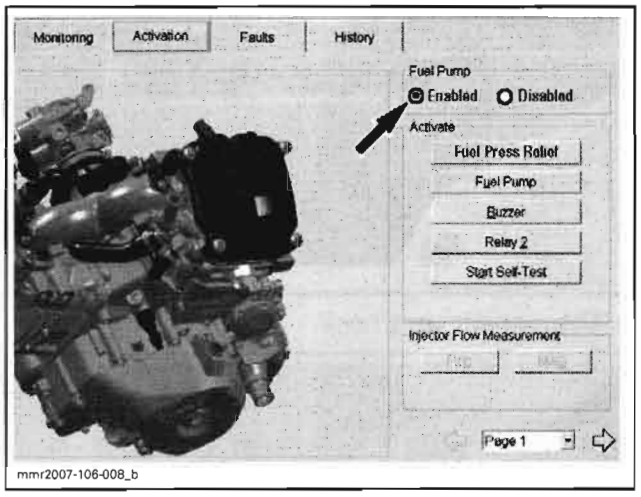

mmr2007-106-008_b

**⚠ WARNING**

**Perform a fuel pressure test and ensure that there is no leak. Refer to *FUEL TANK AND FUEL PUMP*. Run engine and check for leaks.**

# THROTTLE BODY

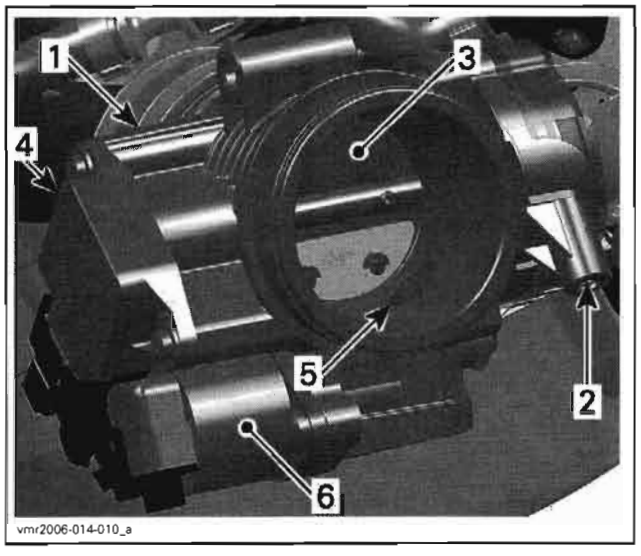

vmr2006-014-010_a

1. *Throttle body*
2. *Throttle cable attachment*
3. *Throttle plate*
4. *TPS*
5. *Idle bypass channel*
6. *Idle bypass valve*

## Mechanical Inspection

Check that the throttle plate moves freely and smoothly when depressing throttle lever.

IMPORTANT: Never attempt to adjust the sealed idle stop screw. It is calibrated at the factory. If the screw adjustment is changed, the throttle body must be replaced.

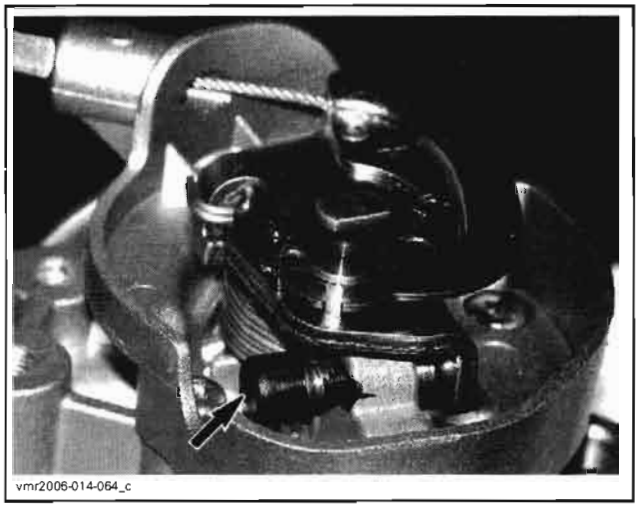
vmr2006-014-064_c

Before replacing any part, check the following as these could be causing the fault. Perform the test while the engine is off.

- Throttle cable adjustment too tight. Not returning fully to idle stop.
- Throttle body idle set screw is loose or worn.
- TPS is loose.
- Idle bypass valve is loose.
- Corroded or damaged wiring or connectors.
- Throttle body has been replaced and the **Closed Throttle and Idle Actuator** reset has not been performed.
- ECM has been replaced and the **Closed Throttle and Idle Actuator** reset has not been performed.

## Electrical Inspection

Refer to *THROTTLE POSITION SENSOR (TPS)* and *IDLE BYPASS VALVE* in this section.

## Throttle Body Replacement

### Removal

To remove the throttle body from engine, proceed as follows:

- Remove side panels, center panel and dashboard. Refer to *BODY*.
- Remove air box retaining fasteners.

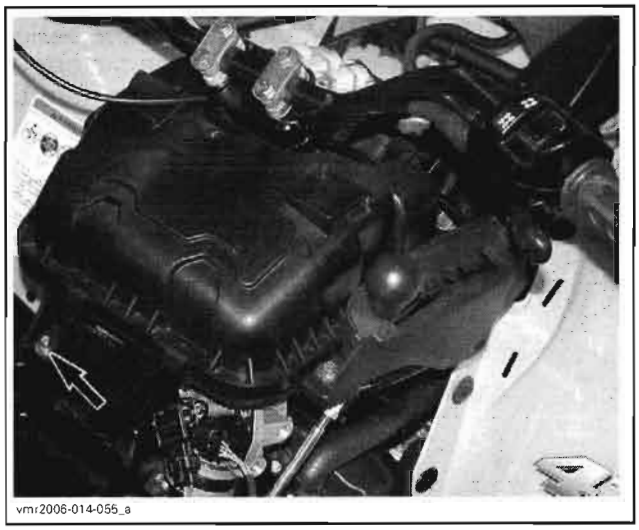
vmr2006-014-055_a

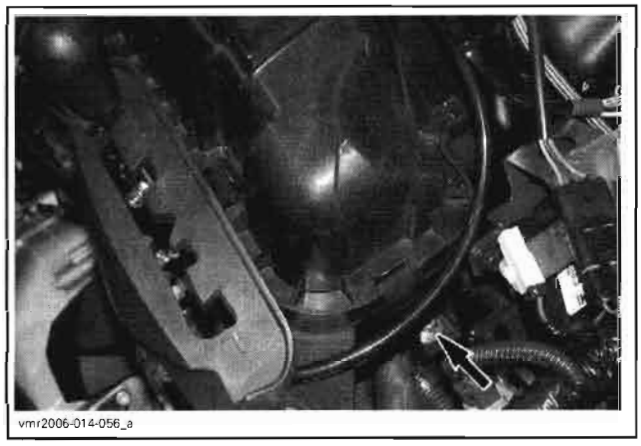
vmr2006-014-056_a

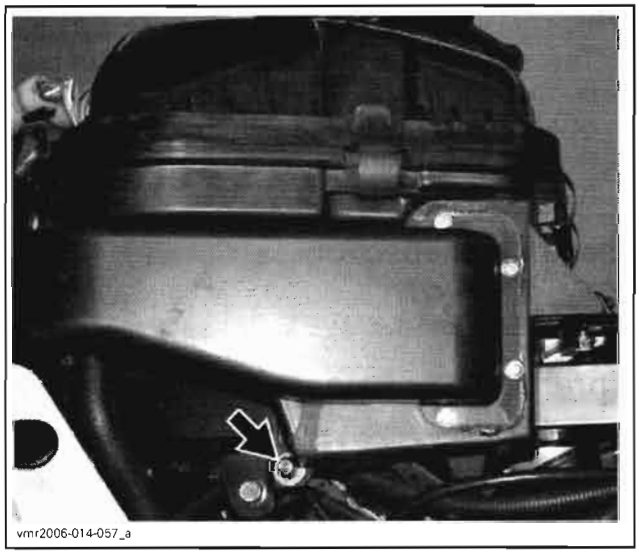
vmr2006-014-057_a

- Remove dart.

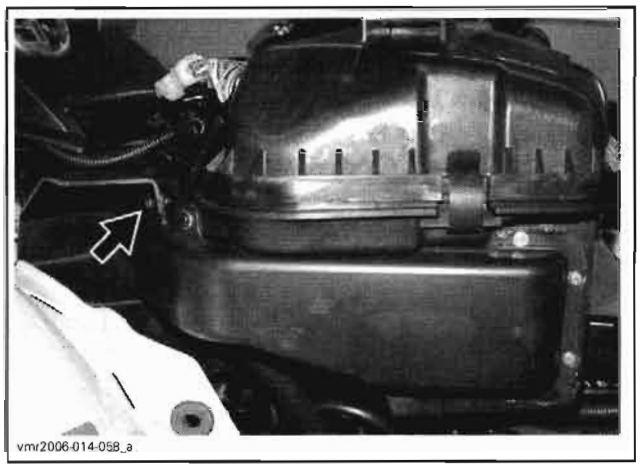
vmr2006-014-058_a

- Disconnect vent hose.

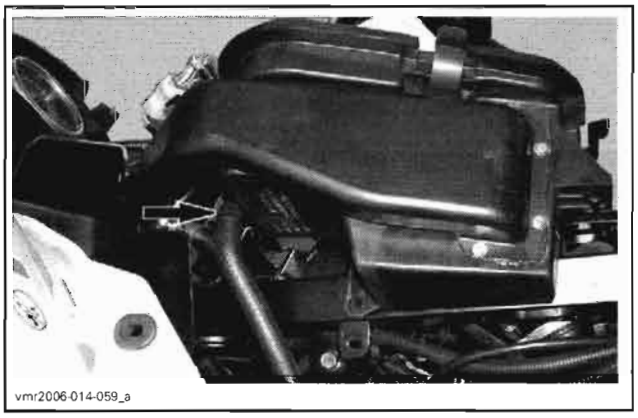
vmr2006-014-059_a

- Detach throttle cable from shifter panel.

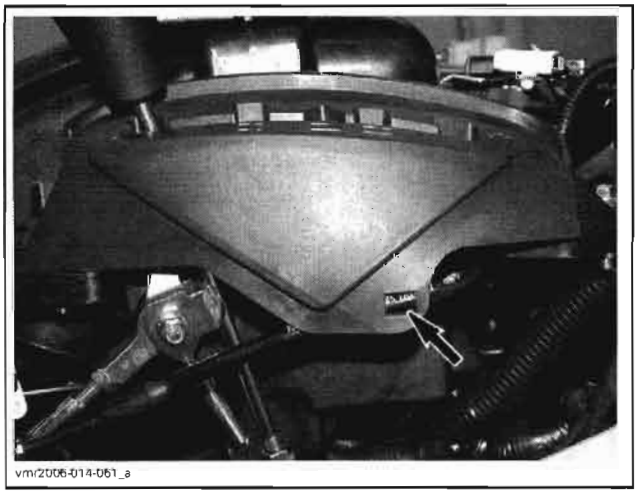
vmr2006-014-061_a

- Disconnect TPS and idle bypass valve connectors.
- Detach throttle body from intake manifold.

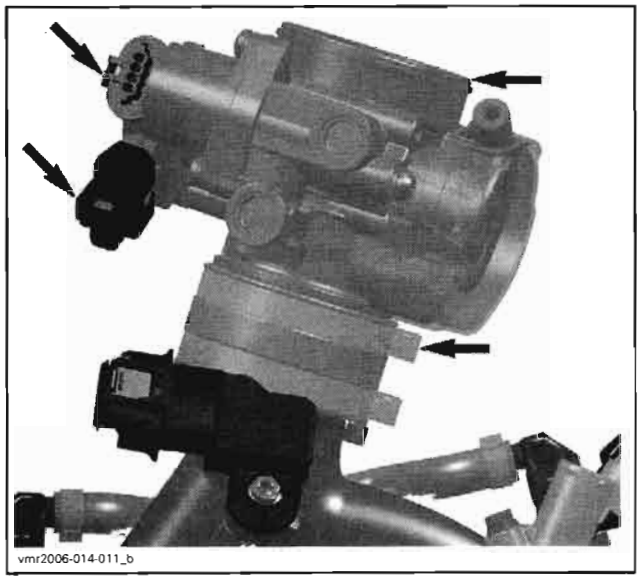
vmr2006-014-011_b

- Gently move throttle body away to detach throttle cable.
- Remove throttle body cover.
- Detach throttle cable.

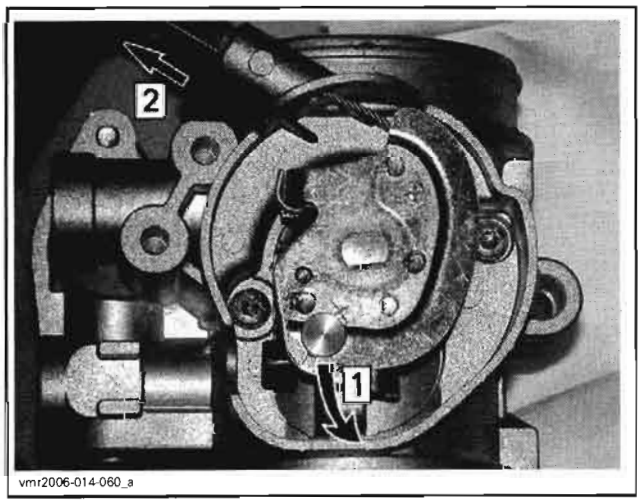

vmr2006-014-060_a

## Installation

Installation of the new throttle body is the reverse of the removal procedure. Pay attention for the following details.

Properly install cable barrel to throttle cable end.

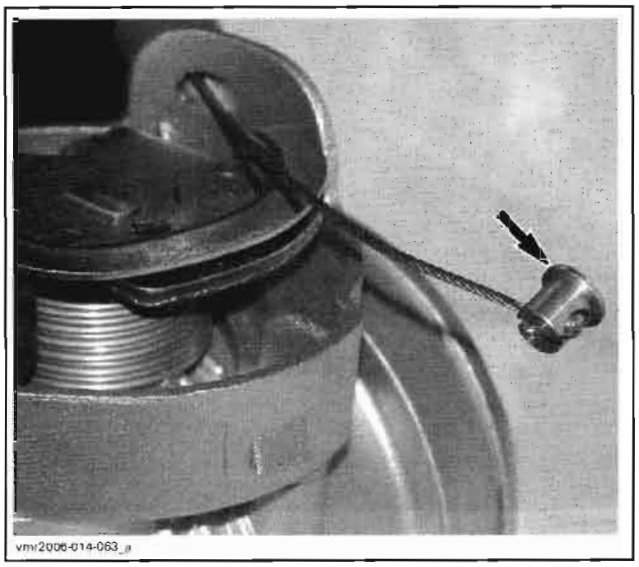
vmr2006-014-063_a

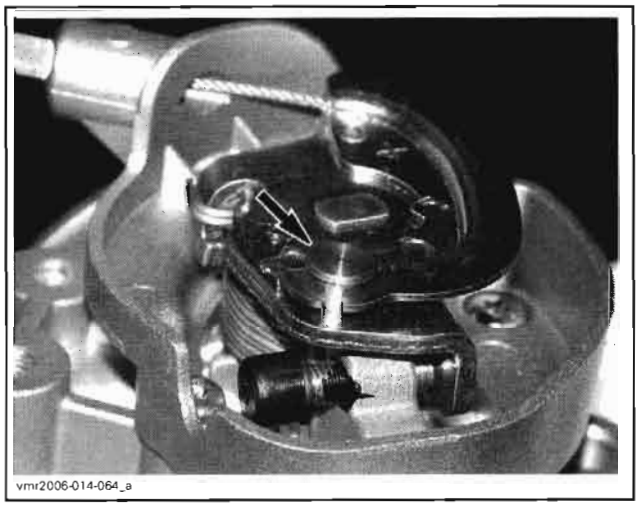
vmr2006-014-064_a

Do not reinstall cover yet.

Install throttle body on intake manifold. Ensure to index throttle body tab with boot notch.

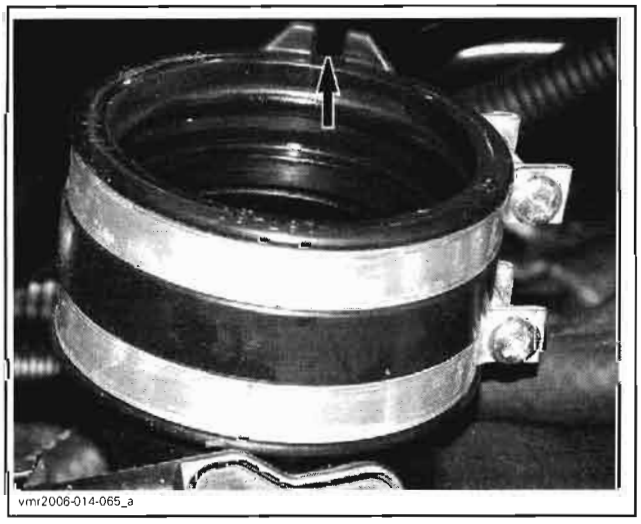
vmr2006-014-065_a

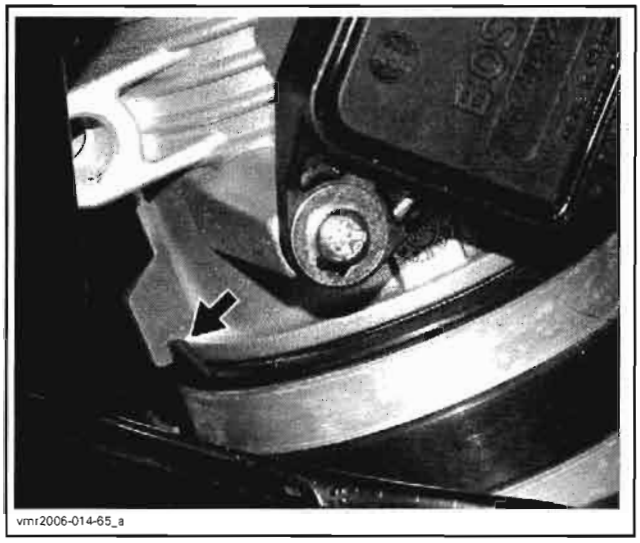
vmr2006-014-65_a

Clip throttle cable to shifter panel.

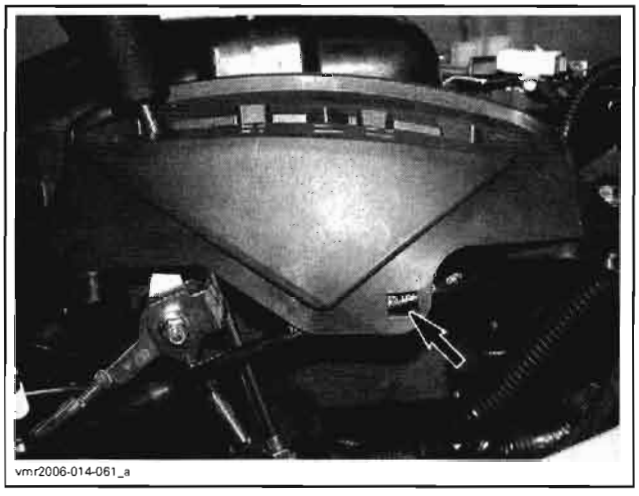
vmr2006-014-061_a

Gently pull throttle cable toward rear to have a gap between cable and shifter mechanism.

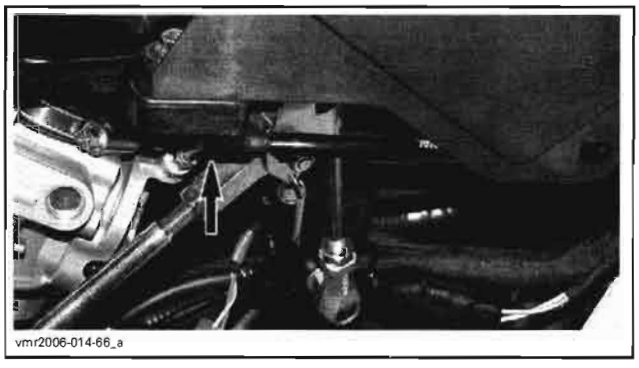
vmr2006-014-66_a

*GAP HERE*

**⚠ WARNING**

**Ensure shifter mechanism does not touch throttle cable. Depress throttle lever several times to ensure it properly returns.**

For TPS and idle bypass valve replacement procedures, refer to the respective paragraph in this section.

### Adjustment

When the throttle body has been replaced, perform throttle cable adjustment and the **Closed Throttle and Idle Actuator** reset. Refer to *BASIC ADJUSTMENTS* in this section.

## THROTTLE POSITION SENSOR (TPS)

### General

The throttle position sensor (TPS) is a potentiometer that sends a signal to the ECM which is proportional to the throttle shaft angle.

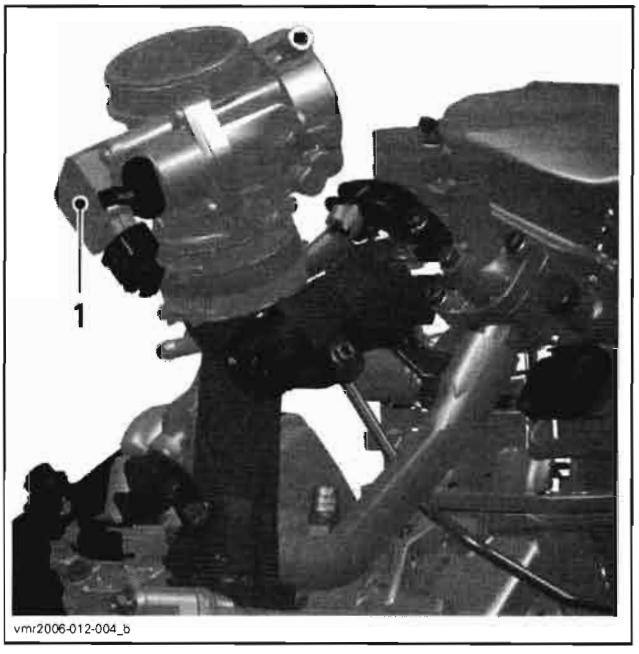

vmr2006-012-004_b

*1. Throttle position sensor (TPS)*

**IMPORTANT:** Prior to testing the TPS, ensure that mechanical components/adjustments of throttle body are adequate.

The EMS may generate several fault codes pertaining to the TPS. Refer to *EMS DIAGNOSTIC* section for more information.

### TPS Wear Test

While engine is not running, activate throttle and pay attention for smooth operation without physical stops of the cable.

Using the B.U.D.S. software, use the **Throttle Opening** display under **Monitoring**.

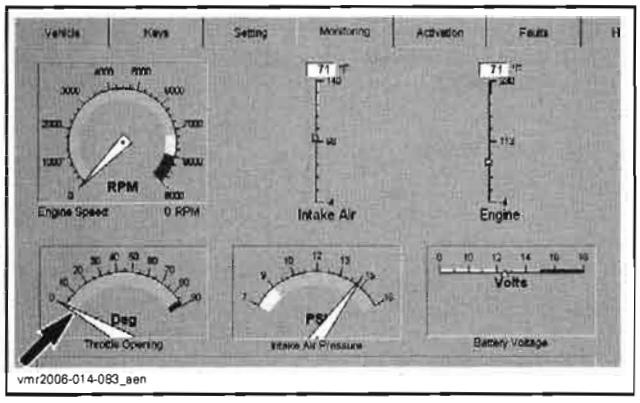

vmr2006-014-083_aen

Slowly and regularly depress the throttle. Observe the needle movement. It must change gradually and regularly as you move the throttle. If the needle "sticks", bounces, suddenly drops or if any discrepancy between the throttle movement and the needle movement is noticed, it indicates that the TPS needs to be replaced or the computer used may be too slow to transfer data fast enough for real time display.

## TPS Resistance Test

Ensure TPS is connected to wiring harness.

Disconnect the connector "A" from the ECM.

Using a multimeter, check resistance values on ECM connector as per the following table.

| ECM CONNECTOR | | THROTTLE IDLE POSITION | WIDE OPEN THROTTLE POSITION |
|---|---|---|---|
| PIN | | RESISTANCE Ω @ 20°C (68°F) | |
| A-24 | A-25 | 710 - 1300 | 2600 - 2700 |
| A-25 | A-39 | 1600 - 2400 | 1600 - 2400 |
| A-24 | A-39 | 2600 - 2700 | 710 - 1300 |

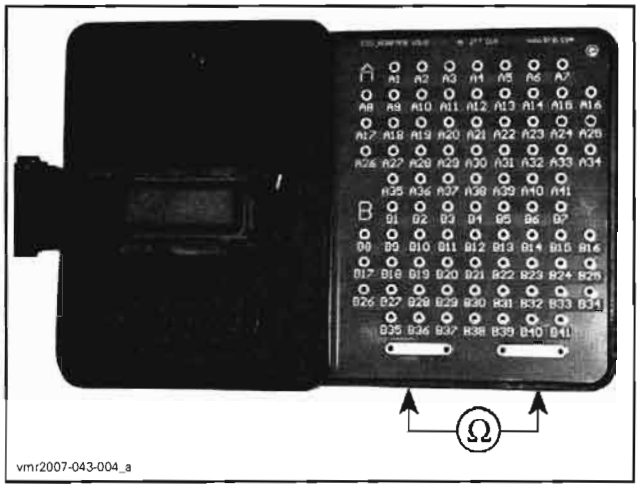

vmr2007-043-004_a

NOTE: The resistance value should change smoothly and proportionally to throttle movement. Otherwise, replace TPS.

If resistance values are correct, perform the *VOLTAGE TEST* below.

If resistance values are incorrect, check wiring harness. If wiring is faulty, repair/replace. If wiring is good, replace TPS.

Reconnect ECM connector.

## TPS Input Voltage Test

Disconnect connector from TPS.

Turn ignition key ON and set engine run/stop switch to RUN.

Check the voltage readings from harness connector as follows.

| CONNECTION | VOLTAGE |
|---|---|
| Pin 1 with battery ground | 5.0 V |
| Pin 2 with battery ground | 0 V |
| Pin 3 with battery ground | 4.75 - 5 V |

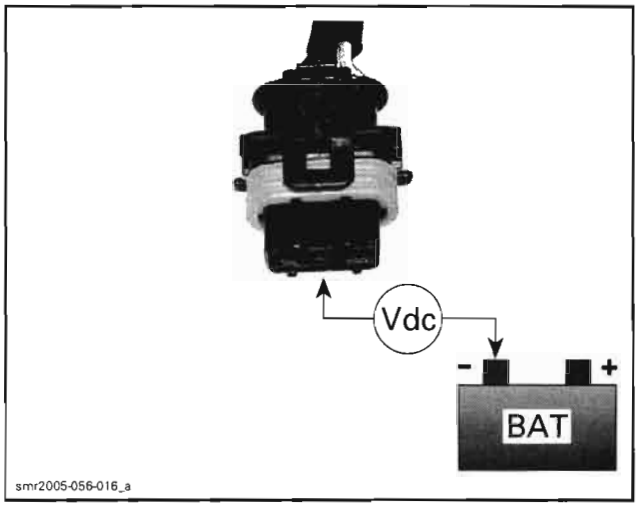

smr2005-056-016_a

If voltage test is not good, check/repair wiring harness. If wiring tests good, refer to *ECM REPLACEMENT*.

If voltage test is good, everything is in order (assuming resistance test was performed).

## TPS Replacement

Remove center panel and dashboard. Refer to *BODY*.

Loosen two screws retaining the TPS.

Remove TPS.

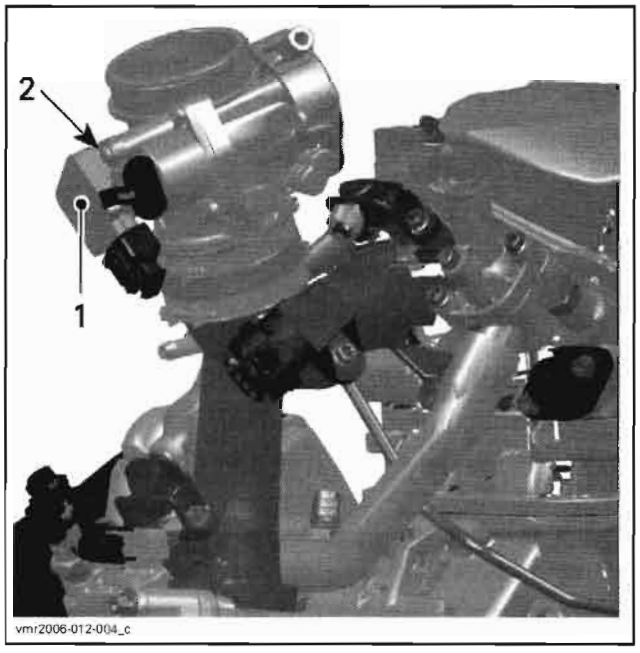


*THROTTLE BODY*
*1. Throttle position sensor (TPS)*
*2. Screws*

Install the new TPS.

Apply Loctite 243 (P/N 293 800 060) on the TPS retaining screws, then torque to 3 N•m (27 lbf•**in**).

Reinstall remaining removed parts.

Proceed with the **Closed Throttle and Idle Actuator Reset**. See *BASIC ADJUSTMENTS* at the beginning of this section.

# IDLE BYPASS VALVE (IBV)

An idle bypass valve with good resistance measurement can still be faulty. It is also possible that a mechanical failure occurs which is not detectable without measuring the air flow. Replacing the idle bypass valve may be necessary as a test.

## IBV Information in B.U.D.S. Software

The IBV position (Idle Bypass Valve) is displayed for information purposes only.

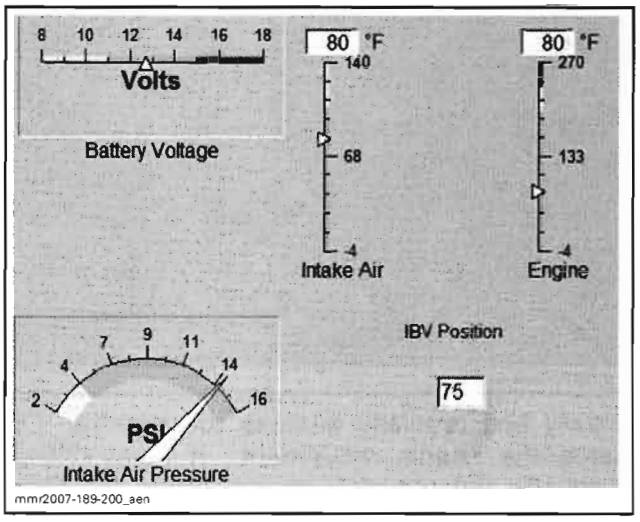


This value implies no maintenance, it is NOT adjustable.

The IBV is controlled by a stepper motor (via the ECM) and the value given is the position of the stepper motor.

The value is given in steps. See chart.

| IBV STEPS IN B.U.D.S. | VALVE POSITION |
|---|---|
| 0 | Fully closed |
| Typical values: 25 - 50 (1) | Partially open |
| 150 | Fully open |

(1) Typical IBV values at idle are given for a warm engine and vary depending on altitude, air temperature and production tolerances.

The ECM constantly controls the IBV to maintain its target idle speed when the throttle is closed.

NOTE: An engine giving an IBV position outside of this range is not necessarily faulty. It may only give clues if poor idle or light throttle behavior is experienced. Lower values may indicate a leakage in the air intake system; higher values can suggest a dirty throttle body, obstructed idle by-pass valve passage etc.

## IBV Resistance Test

Disconnect idle bypass valve from the wiring harness.

Using a multimeter, check the resistance in both windings.

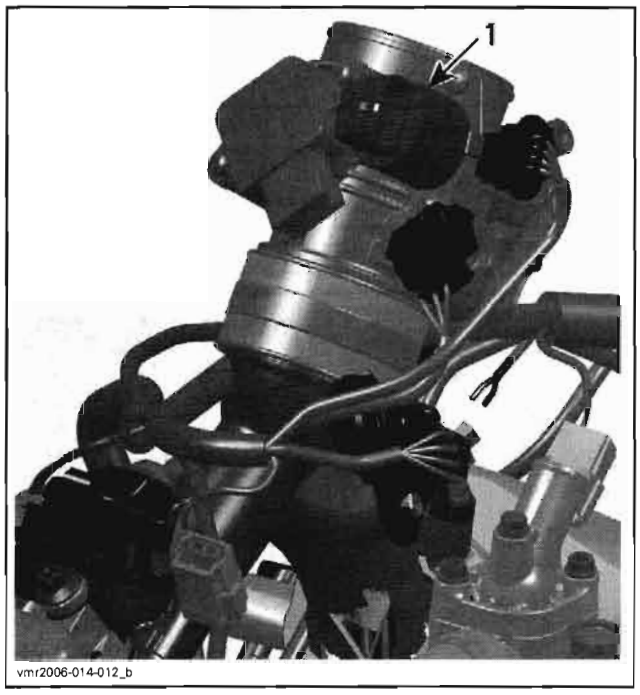


*1. Idle bypass valve*

Check the resistance between pins as shown.

| IDLE BYPASS VALVE | | MEASUREMENT |
|---|---|---|
| PIN | | RESISTANCE Ω @ 20°C (68°F) |
| 1 | 4 | 50 |
| 2 | 3 | |

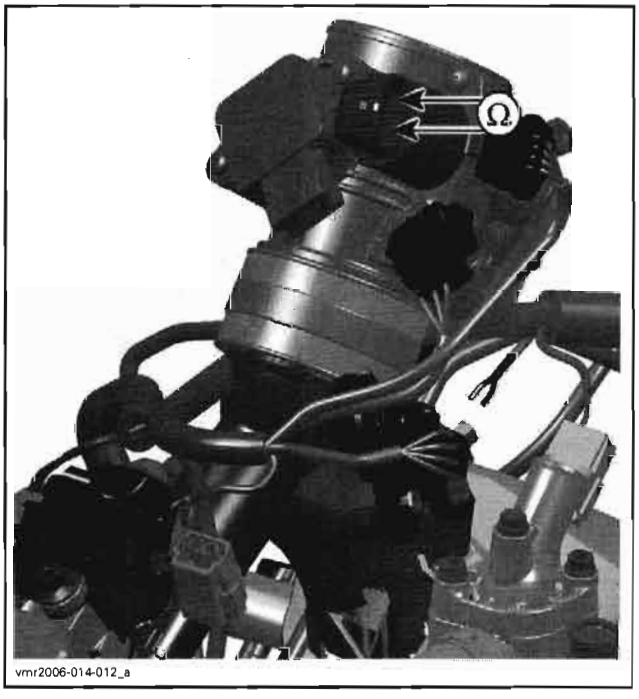


If the resistance of one or both windings is not good, replace the idle bypass valve.

If resistance test of valve windings is good, check continuity of circuits A-35, A-36, A-37, A-38. If not good, check/repair wiring/connectors.

## IBV Visual Inspection

NOTE: Make sure the ignition key is turned off during the following procedure.

Remove idle bypass valve from throttle body.

Check the piston and bypass channel for dirt/deposits which can cause a sticking piston.

**CAUTION: Always keep the ignition key turned OFF, while the idle bypass valve is removed.**

**CAUTION: Do not try to operate the piston of the idle bypass valve when it is dismounted. Also do not move the piston by hand. The drive screw is very sensitive and may be destroyed.**

Using a part cleaner, clean idle bypass in throttle body from contamination then use an air gun to dry it.

**⚠ WARNING**

Always wear eye protector. Chemicals can cause a rash break out and injure your eyes.

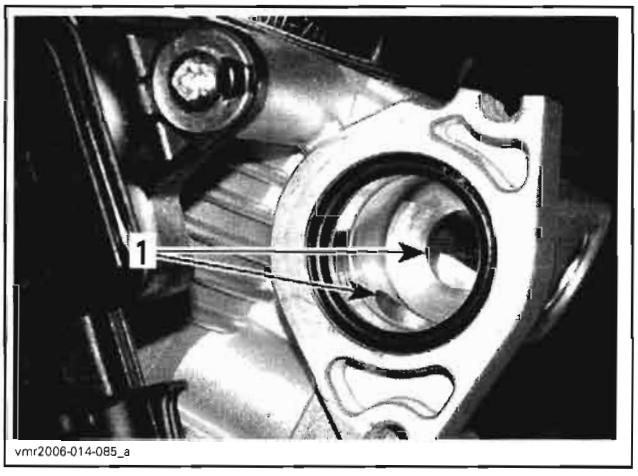


*1. Clean bore from contamination*

Clean all remaining parts and install the idle bypass valve on the throttle body.

Proceed with the **Closed Throttle and Idle Actuator Reset**. See procedure in *BASICS ADJUSTMENTS* at the beginning of this section.

# CRANKSHAFT POSITION SENSOR (CPS)

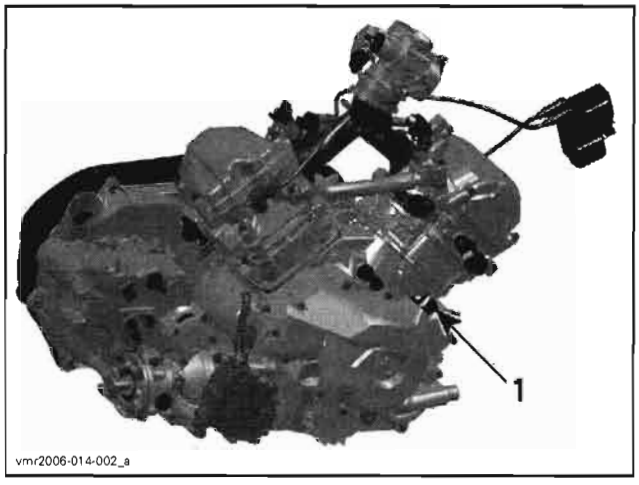


*1. CPS connector*

NOTE: Take into account that a CPS fault can be triggered by bent or missing encoder wheel teeth. First check fault codes (refer to *EMS DIAGNOSTIC*) then check the teeth condition if necessary (refer to *MAGNETO SYSTEM*).

## CPS Resistance Test

Disconnect CPS wiring harness connector. Probe terminals as shown.

| CPS CONNECTOR | | MEASUREMENT |
|---|---|---|
| PIN | | RESISTANCE Ω @ 20°C (68°F) |
| 1 | 2 | 700 - 900 Ω |

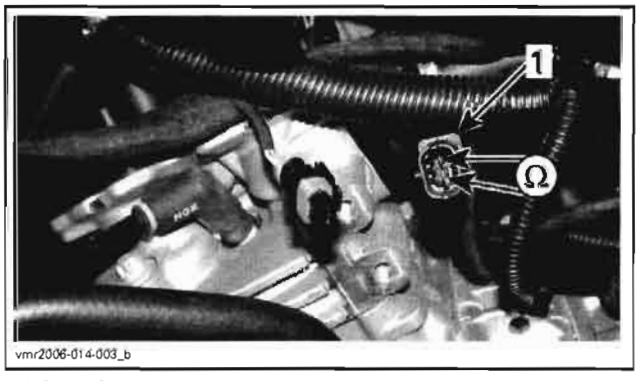


*LH SIDE OF VEHICLE*
*1. CPS connector*

If resistance is not within specifications, replace the CPS.

If resistance tests good, **reconnect** the CPS connector and disconnect the connector "A" on the ECM.

Using a multimeter, recheck resistance as per table.

| ECM CONNECTOR | | MEASUREMENT |
|---|---|---|
| PIN | | RESISTANCE Ω @ 20°C (68°F) |
| A-5 | A-19 | 700 - 900 Ω |

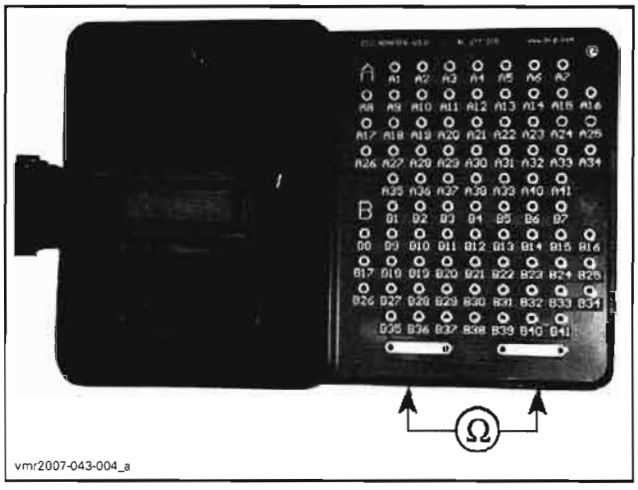


If resistance value is correct, refer to *ECM REPLACEMENT*.

If resistance value is incorrect, repair the connectors or replace the wiring harness between ECM connector and the CPS.

## CPS Replacement

Unplug connector and remove CPS.

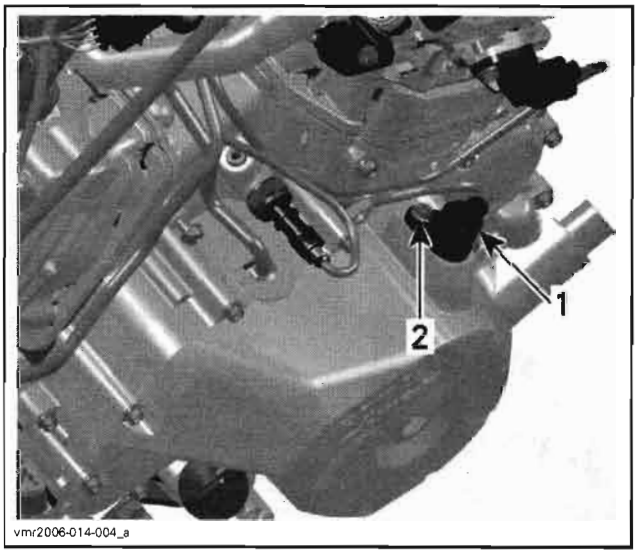


*1. CPS*
*2. Retaining screw*

Install new CPS and secure harness with a locking tie.

Tightening torque of the CPS retaining screws is 10 N•m (89 lbf•**in**).

## CAMSHAFT POSITION SENSOR (CAPS)

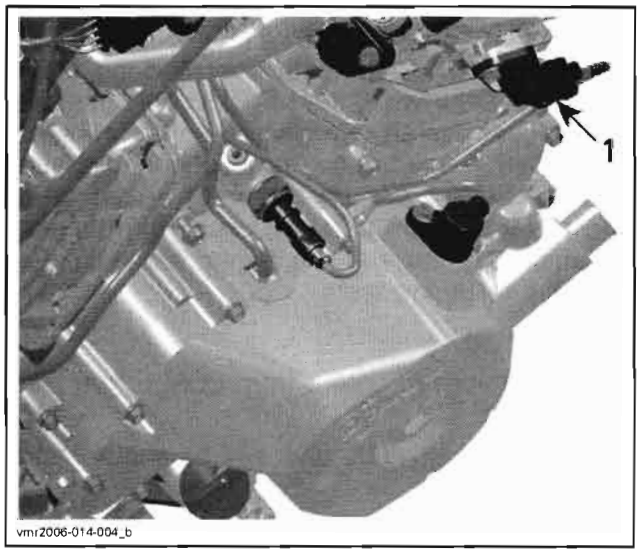


*1. CAPS*

### CAPS Voltage Test

Turn ignition key ON and set engine run/stop switch to RUN.

Use a multimeter and set it to Vdc.

Back-probe connector and read voltage as follows.

| CAPS CONNECTOR | | VOLTAGE |
|---|---|---|
| ORANGE/GREEN | BLACK/GREEN | Battery voltage |

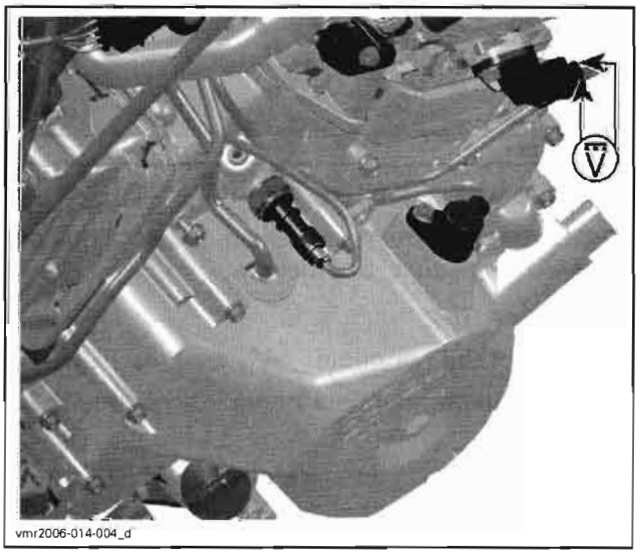


If voltage is not good, check/repair wiring/connectors.

If voltage is good, do the following test.

Remove CAPS sensor from engine.

Ensure connector is plugged.

Use a multimeter and set it to Vdc.

Back-probe connector and read voltage as follows.

| CAPS CONDITION | CAPS CONNECTOR | | VOLTAGE |
|---|---|---|---|
| Free | ORANGE/ GREEN | YELLOW/ GREEN | Close to 0 Vdc |

| CAPS CONDITION | CAPS CONNECTOR | | VOLTAGE |
|---|---|---|---|
| Metallic object on sensor | ORANGE/ GREEN | YELLOW/ GREEN | Battery voltage |

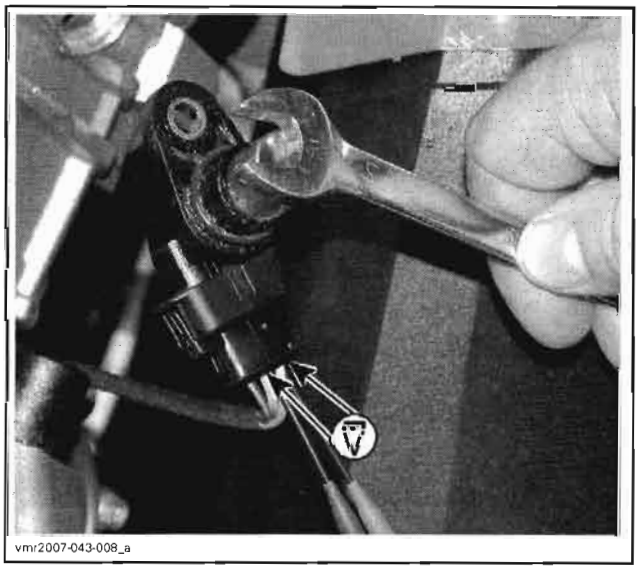

If voltage is appropriate, check/repair wiring/connector between sensor and ECM. If it is good, refer to *ECM REPLACEMENT*.

If voltage is wrong, try a new CAPS.

## CAPS Replacement

Unscrew the retaining screw and replace the CAPS. Ensure to reinstall O-ring.

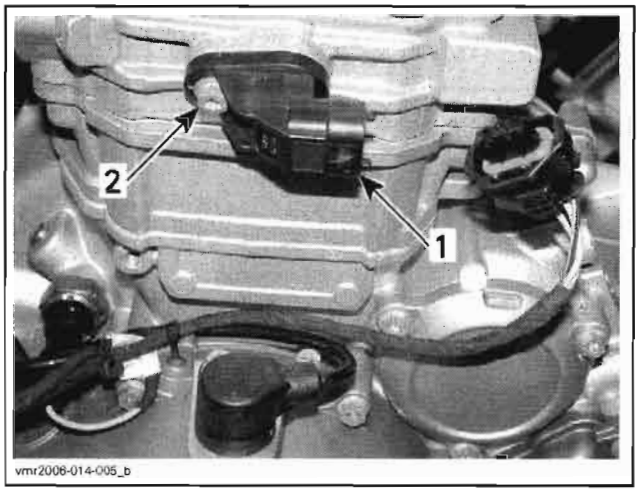


1. *CAPS*
2. *Retaining screw*

Apply Loctite 243 (P/N 293 800 060) on thread and torque to 10 N•m (89 lbf•**in**).

# MANIFOLD AIR PRESSURE AND TEMPERATURE SENSOR (MAPTS)

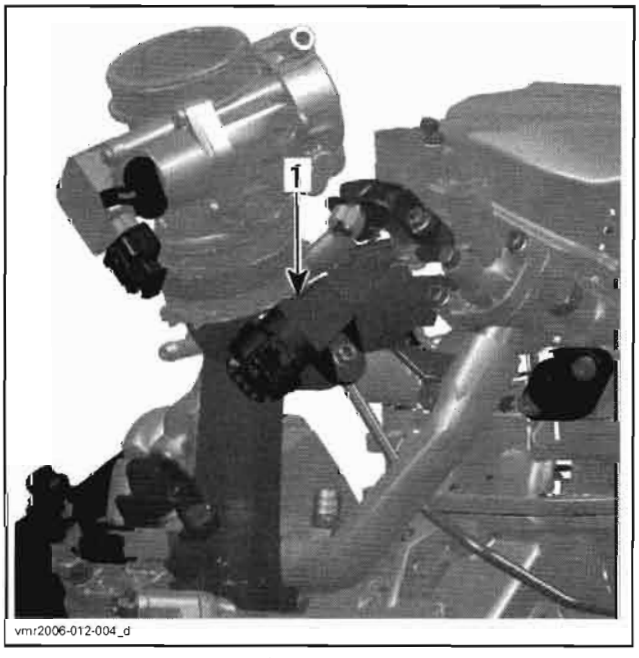


1. *Manifold air pressure and temperature sensor (MAPTS)*

NOTE: This sensor is a multifunction device.

## Sensor Pressure Function

When engine is started and it runs at idle speed, the sensor takes the atmospheric pressure and stores it in the ECM. Thereafter, it takes the manifold air pressure at operating RPMs.

Ensure sensor is correctly installed on intake manifold. Otherwise, the MAPTS could generate a fault code for an unexpected sensor range at idle when it reads the atmospheric pressure. Remove sensor and check for oil or dirt on its end and if problem persists, check throttle plate condition/position and the wiring harness. Perform the following tests.

### Voltage Test

Check the voltage output from ECM to the pressure sensor.

Turn ignition key ON and set engine run/stop switch to RUN.

Disconnect plug connector from MAPTS and connect a voltmeter as shown.

| MAPTS CONNECTOR | | MEASUREMENT |
|---|---|---|
| PIN | | VOLTAGE |
| 1 | 3 | 5 Vdc |

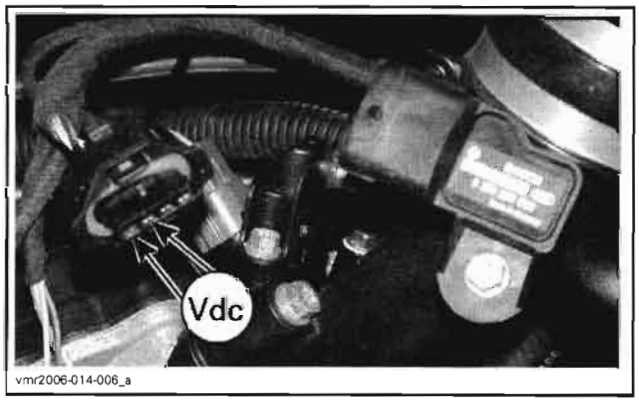


If voltage test is good, replace the MAPTS.

If voltage test is not good, check the continuity of the MAPTS circuit. See below.

### Resistance Test

Disconnect the connector "A" from the ECM.

Using a multimeter, check continuity of circuits 12, 28 and 40.

If wiring harness is good, refer to *ECM REPLACEMENT*.

Otherwise, repair the connectors or replace the wiring harness between ECM connector and the MAPTS.

### Quick Test

Using B.U.D.S. software, look the MAPTS from the **Monitoring** section and read out the pressure value while engine is stopped.

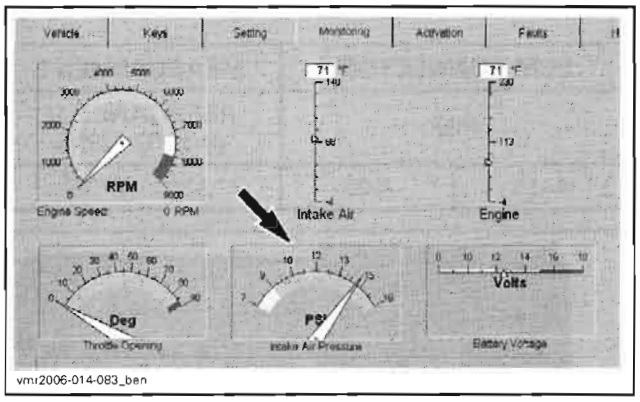

vmr2006-014-083_ben

Perform the same test with a new MAPTS and compare both readings.

Values have to be within ± 3.4 kPa (0.5 PSI).

If old MAPTS's value is out of this range, replace it.

## Sensor Temperature Function

The sensor also monitors the temperature at manifold.

### Resistance Test

Disconnect the connector from the MAPTS.

Using a multimeter, check the resistance of the sensor itself as shown.

| MAPTS | | MEASUREMENT |
|---|---|---|
| PIN | | RESISTANCE Ω @ 20°C (68°F) |
| 1 | 2 | 2280 - 2740 |

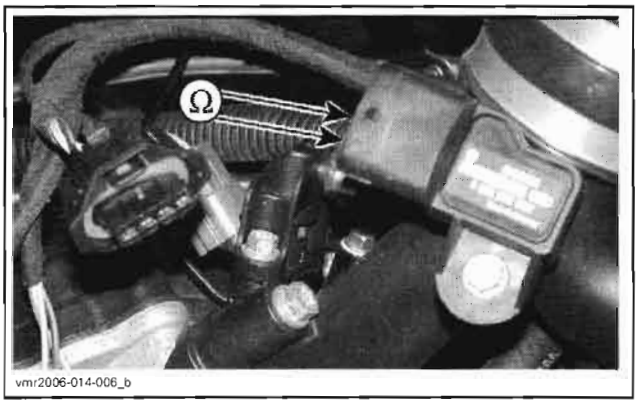
vmr2006-014-006_b

If resistance is not within specification, replace the MAPTS.

If resistance tests good, **reconnect** the MAPTS and disconnect the connector "A" from the ECM.

Using a multimeter, recheck resistance value between pins as shown.

| ECM CONNECTOR | | MEASUREMENT |
|---|---|---|
| PIN | | RESISTANCE Ω @ 20°C (68°F) |
| A-7 | A-28 | 2280 - 2740 |

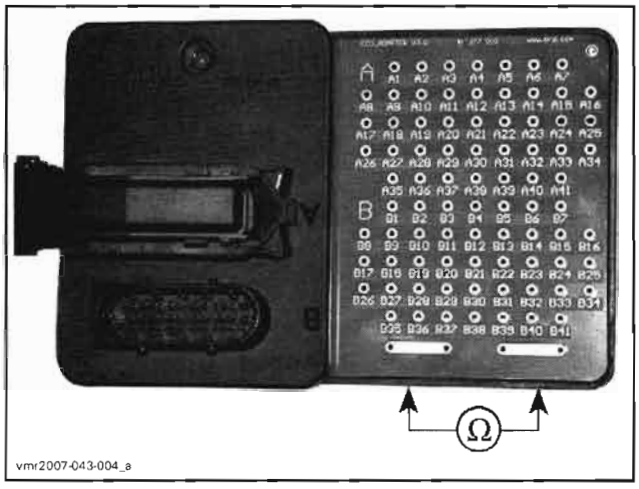
vmr2007-043-004_a

If resistance value is correct, refer to *ECM REPLACEMENT.*

If resistance value is incorrect, inspect/repair/replace wiring harness between ECM connector and the MAPTS.

## MAPTS Replacement

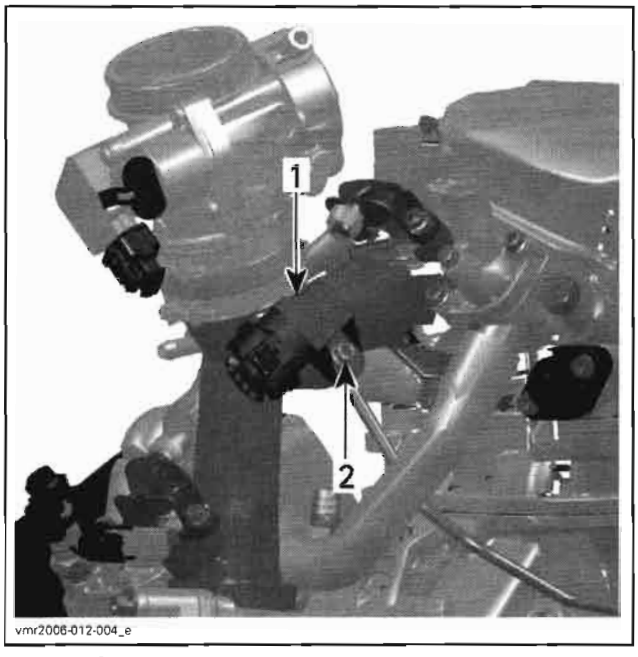

vmr2006-012-004_e

1. *MAPTS*
2. *Retaining screw*

Disconnect MAPTS connector and remove the MAPTS.

Apply Loctite 243 (P/N 293 800 060) on screw then torque to 6 N•m (53 lbf•**in**).

# COOLANT TEMPERATURE SENSOR (CTS)

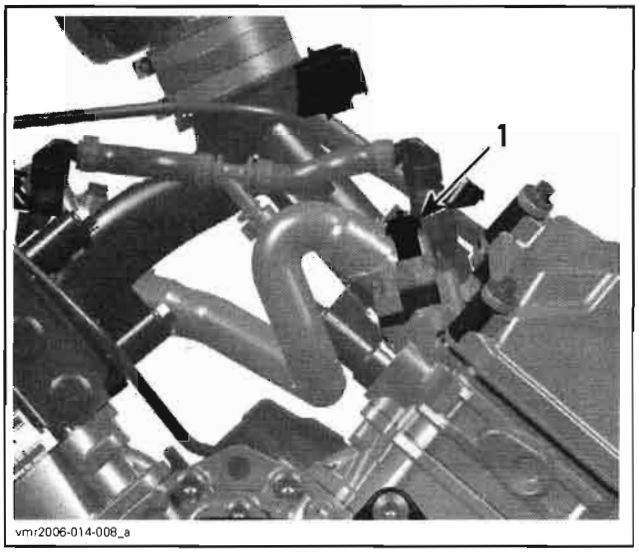


*1. Coolant temperature sensor (CTS)*

## CTS Resistance Test

Disconnect the plug connector from the CTS and check the resistance of the sensor itself.

| CTS SENSOR | | MEASUREMENT |
|---|---|---|
| PIN | | RESISTANCE Ω @ 20°C (68°F) |
| 1 | 2 | 2280 - 2740 |

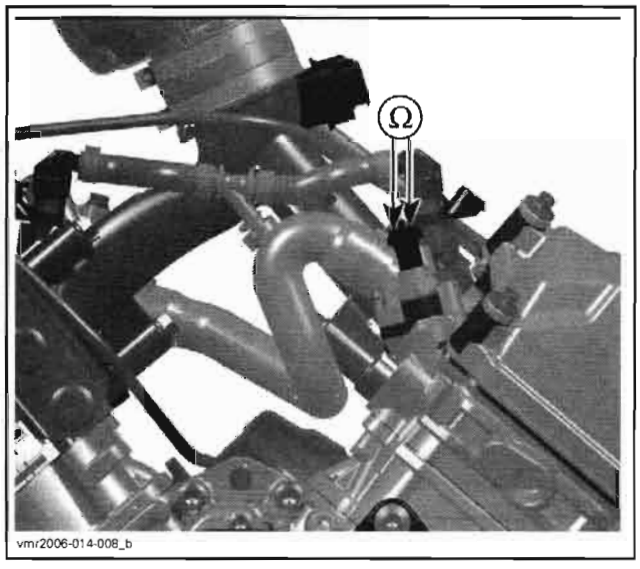


If resistance is out of specification, replace the CTS.

If resistance tests good,**reconnect** the CTS and disconnect the ECM connector "A" from the ECM.

Using a multimeter, recheck resistance on the ECM connector as per table.

| ECM CONNECTOR | | MEASUREMENT |
|---|---|---|
| PIN | | RESISTANCE Ω @ 20°C (68°F) |
| A–11 | A-27 | 2280 - 2736 |

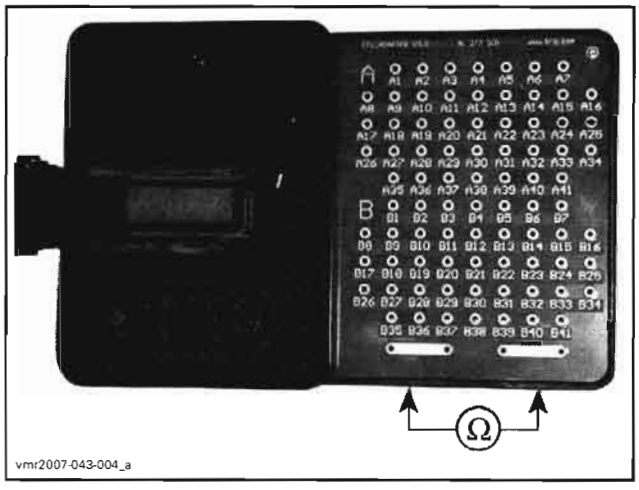


If resistance value is correct, refer to *ECM REPLACEMENT.*

If resistance value is incorrect, repair the connectors or replace the wiring harness between ECM connector and the CTS.

## CTS Replacement

Disconnect CTS connector and remove CTS.

Install the new CTS and torque to 16 N•m (142 lbf•**in**).

Reinstall remaining removed parts.

Refill and bleed the cooling system, refer to *COOLING SYSTEM* subsection.

# FUEL TANK AND FUEL PUMP

## SERVICE TOOLS

| Description | Part Number | Page |
|---|---|---|
| pliers | 295 000 070 | 225 |
| small hose pincher | 295 000 076 | 221 |
| vacuum/pressure pump | 529 021 800 | 222 |
| pressure gauge | 529 035 709 | 224 |
| T-fitting | 529 036 023 | 224 |

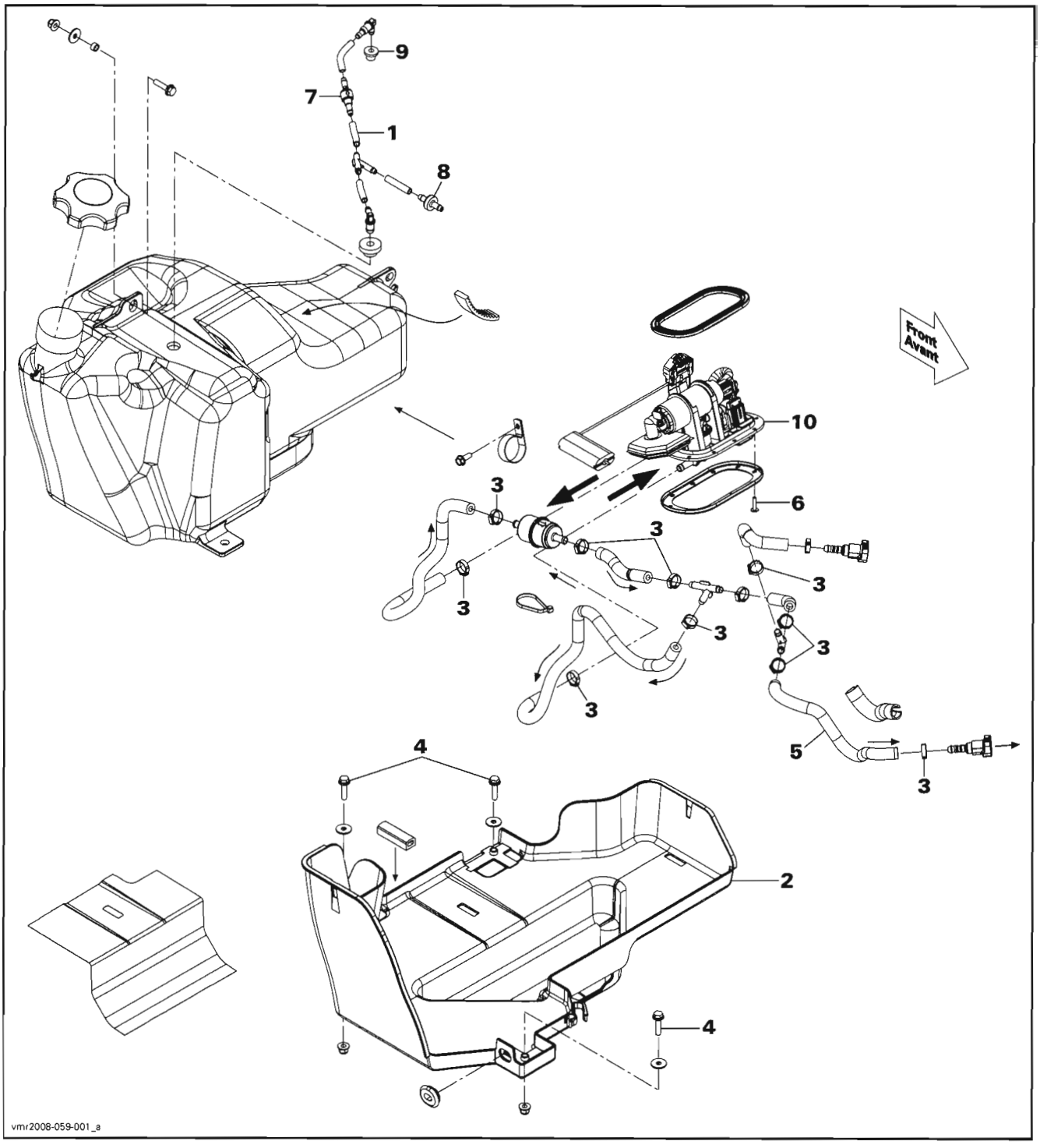
9
7
1
8
10
6
3
3
3
3
3
3
3
3
5
3
4
2
4
Front
Avant
vmr2008-059-001_a

# GENERAL

**⚠ WARNING**

Fuel is flammable and explosive under certain conditions. Ensure work area is well ventilated. Do not smoke or allow open flames or sparks in the vicinity.

**⚠ WARNING**

Always disconnect battery prior to working on the fuel system. Always disconnect battery exactly in the specified order, BLACK (-) cable first. It is recommended to disconnect electrical connections prior to disconnecting fuel lines.

Whenever working on fuel system, always verify for water or dust infiltration in reservoir.

During assembly/installation, use the torque values and service products as in the exploded views.

Clean threads before applying a threadlocker. Refer to *SELF-LOCKING FASTENERS* and *LOCTITE APPLICATION* at the beginning of this manual for complete procedure.

**⚠ WARNING**

Torque wrench tightening specifications must strictly be adhered to.
Locking devices (e.g.: locking tabs, elastic stop nuts, self-locking fasteners, cotter pin, etc.) must be replaced with new ones.

**⚠ WARNING**

The fuel system of a fuel injection system holds much more pressure than on a carbureted ATV. Prior to disconnecting a hose or to removing a component from the fuel system, follow the recommendation described here.

– Use the B.U.D.S. software to release the fuel pressure in the system. Look in the **Activation** section.

**⚠ WARNING**

Fuel lines remain under pressure at all times. Always proceed with care and use appropriate safety equipment when working on pressurized fuel system. Wear safety glasses. Proceed with care when removing/installing pressure test equipment or disconnecting fuel line connections. Use the B.U.D.S. software to release fuel pressure prior to removing a hose. Cover the fuel line connection with an absorbent shop rag. Slowly disconnect the fuel hose to minimize spilling. Wipe off any fuel spillage in the engine compartment. Do not allow fuel to spill on hot engine parts and/or on electrical connectors. Never use a hose pincher on injection system high pressure hoses. Replace any damaged or deteriorated fuel lines.

When the repair is completed, ensure that all hoses are connected and secured. Perform the *FUEL PRESSURE TEST* and the *FUEL TANK LEAK TEST* as explained in this section.

**⚠ WARNING**

Always perform the fuel pressure test if any component has been removed. A pressure test must be done before turning the ignition key to ON and setting the engine run/stop switch to RUN. The fuel pump is activated each time in these conditions. After performing a fuel pressure test, use the valve on the fuel pressure gauge to release the pressure (if so equipped).

To locate a leak, pressurize the system. Check for leaking fuel or fuel odor. Spray soapy water on all hose connections and injectors. Air bubbles will show the leaking area.

# INSPECTION

## FUEL TANK LEAK TEST

**⚠ WARNING**

Ensure to also perform the fuel pressure test.

Fill up fuel tank.

Remove the RH side panel. Refer to *BODY*.

Install a small hose pincher (P/N 295 000 076) on vent line (OUTLET side) **no. 1**.

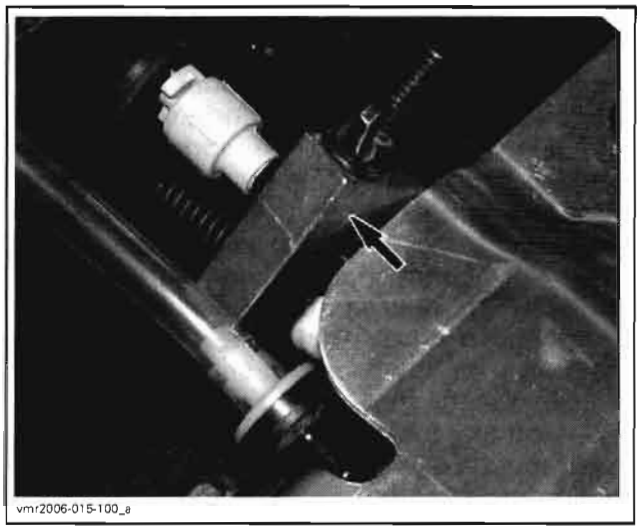


*PINCHER ON OUTLET SIDE*

Using the vacuum/pressure pump (P/N 529 021 800), pressurize fuel tank through vent line (INLET side).

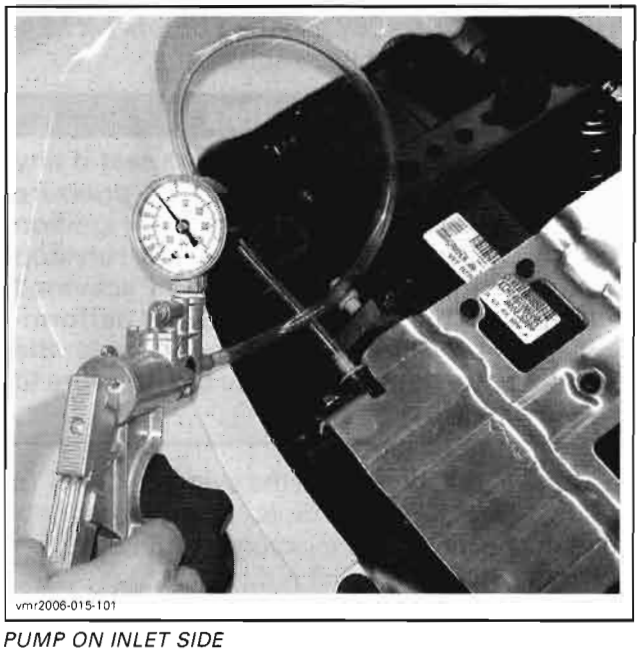


*PUMP ON INLET SIDE*

Pressurize fuel tank as follows.

| PRESSURE | TIME WITHOUT PRESSURE DROP |
|---|---|
| 21 kPa (3 PSI) | 3 minutes |

If pressure drops, locate fuel leak(s) and repair/replace leaking component(s).

To ease locating leak(s), spray soapy water on components; bubbles will indicate leak location(s).

## Check Valve and Pressure Relief Valve

### Operation

Air can enter fuel tank at all times through INLET side (check valve).

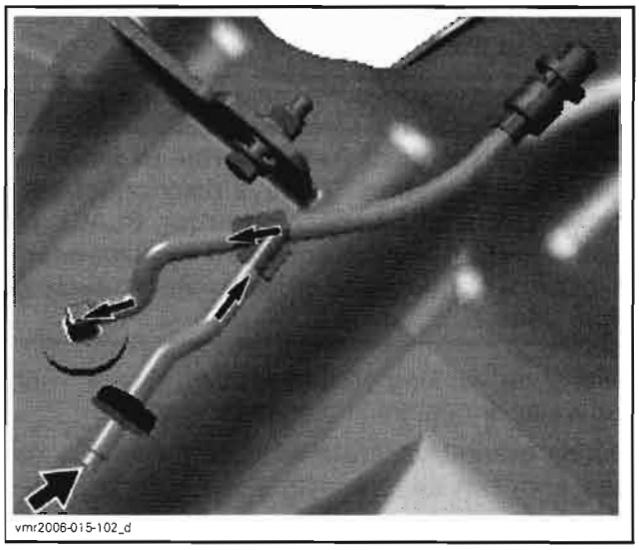


The **check valve** prevents fuel to flow out.

Air cannot go out through pressure relief valve.

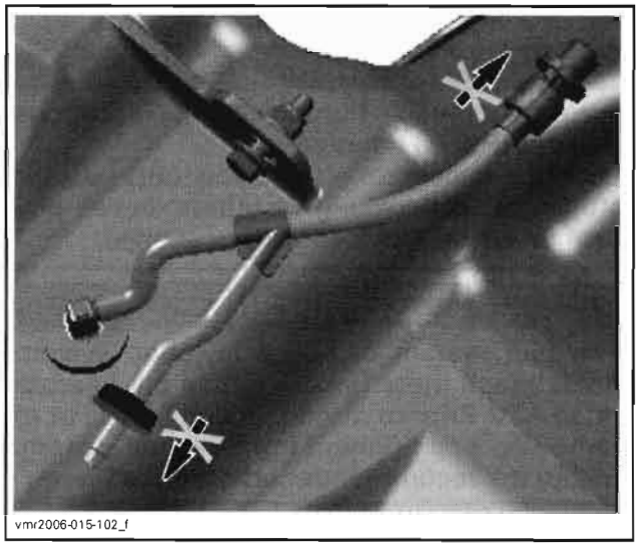


If pressure in fuel tank builds up and exceeds 2.5 - 7.6 kPa (.36 - 1.1 PSI), **pressure relief valve** opens and let excess pressure evacuate through OUTLET side.

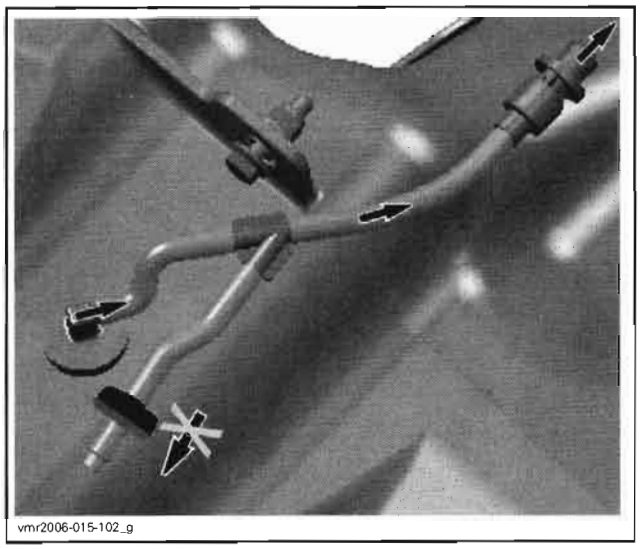
vmr2006-015-102_g

### Test

While tank is still pressurized from the above test, do the following:

When removing hose pincher, alternately touch and release end of pressure relief valve **no. 7**. You should feel pressurized air flowing out indicating relief valve is working.

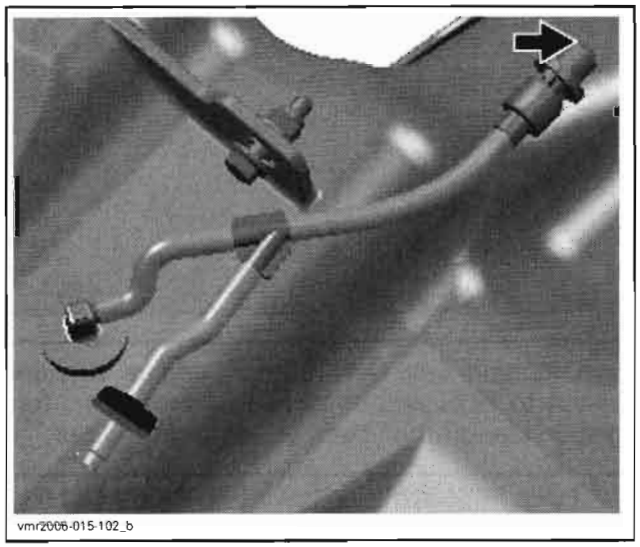
vmr2006-015-102_b

Ensure grommet **no. 9** is not plugged.

Remove fuel tank cap.

Blow air from outlet nipple. Air must freely flows towards fuel tank neck.

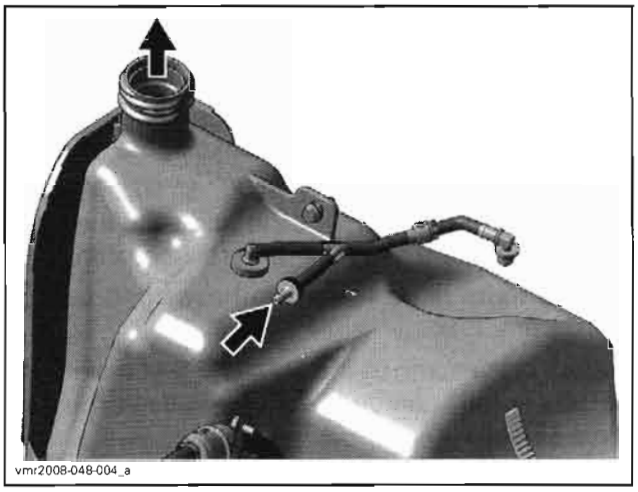
vmr2008-048-004_a

### Installation

Always reinstall check valve with the black side as shown.

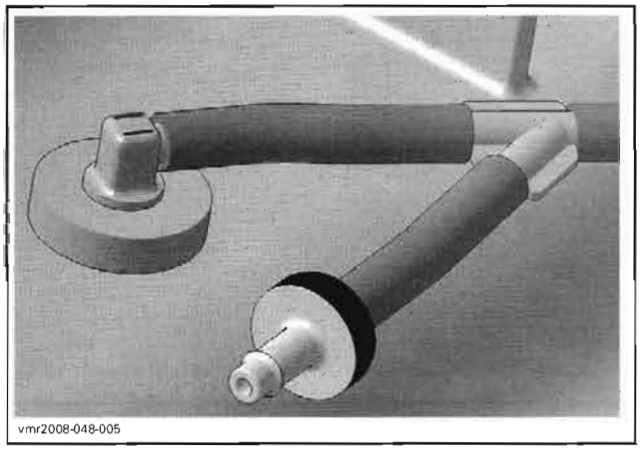
vmr2008-048-005

Always reinstall pressure relief valve according to arrow on valve as shown.

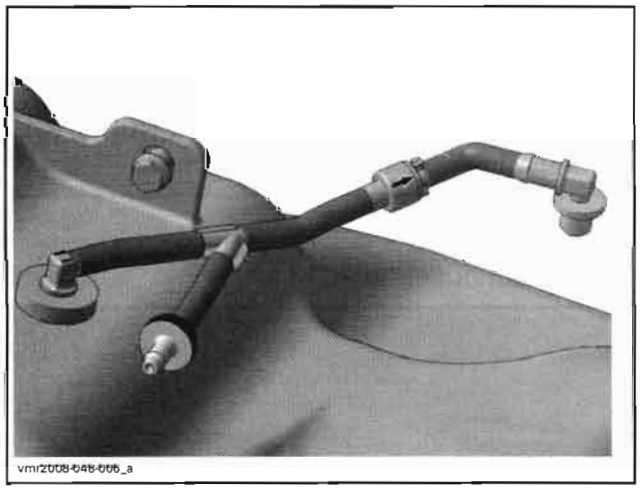
vmr2008-048-006_a

## FUEL PRESSURE TEST

The pressure test will show the available pressure at the fuel pump outlet. It validates the pressure regulator, the fuel pump and leaks in the system.

NOTE: Refer also to the *FUEL SYSTEM DIAGNOSTIC FLOW CHART* at the end of this section to help diagnose a fuel system related problem.

Ensure there is no leak from hoses and fittings. Repair any leak.

Before proceeding to the pressure test ensure the battery is fully charged. Battery voltage must be over 12 volts.

Disable fuel pump using B.U.D.S. Look in the **Activation** tab and select **Disabled**.

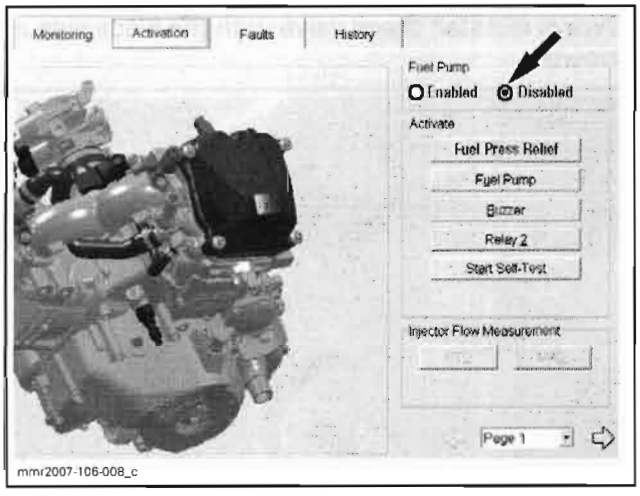


Release fuel pressure by running engine until it runs out of gas.

**⚠ WARNING**

**The fuel hose may be under pressure. Cover the fuel line connection with an absorbent shop rag. Slowly disconnect the fuel hose to release the pressure. Wipe off any fuel spillage inside engine compartment.**

Ensure there is enough gas in fuel tank.

Disconnect outlet hose.

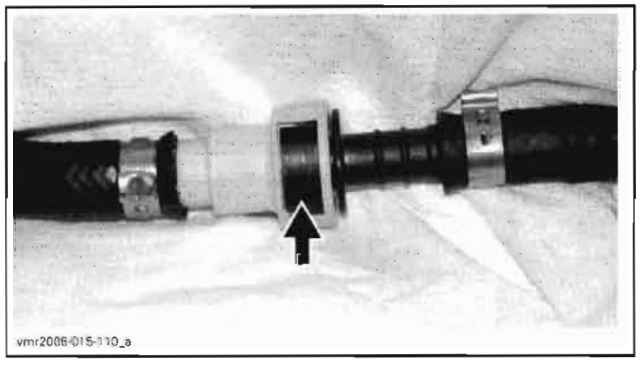


Install fuel pressure gauge (P/N 529 035 709) and T-fitting (P/N 529 036 023) between disconnected hoses (in-line installation).

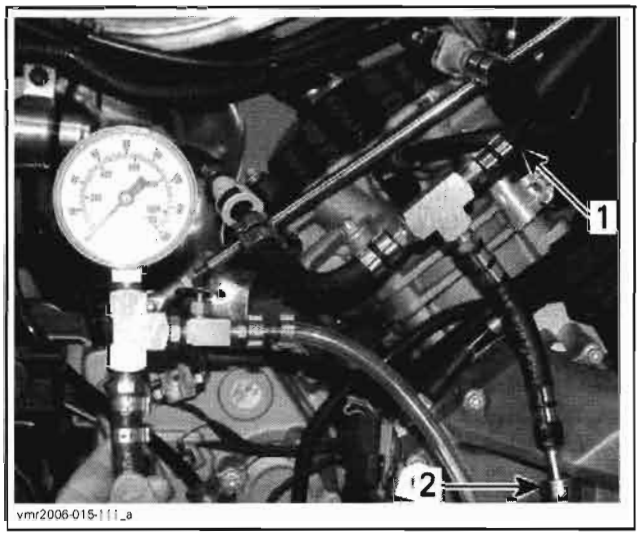


1. *T-fitting — In-line installation*
2. *Fuel pressure gauge connection*

Using B.U.D.S., reactivate fuel pump by selecting **Enabled**.

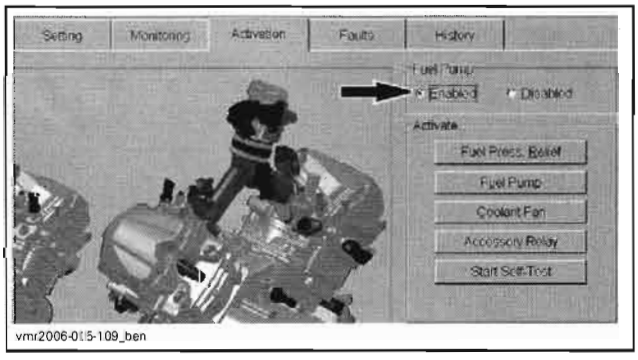


Turn ignition key ON and set engine run/stop switch to RUN and observe fuel pressure. Turn ignition key off then back on. Repeat the test.

| | |
|---|---|
| FUEL PRESSURE | 350 kPa (51 PSI) |

A rapid pressure drop indicates leakage either from the fuel rail or from the fuel pump check valve. Check fuel rail for leaks. If it is not leaking then replace fuel pump.

A slow pressure drop indicates leakage either from the fuel injector or from the fuel pressure regulator. Check fuel injector for leaks. If it is not leaking then replace fuel pump.

If there is no leakage, **start engine** and observe fuel pressure. The fuel pressure should be the same as above.

If pressure is within limits, fuel pump and pressure regulator are working adequately.

Release fuel pressure in the system using B.U.D.S. Look in the **Activation** tab.

Remove pressure gauge from inlet hose. Reconnect inlet hose.

**⚠ WARNING**

**Wipe off any fuel spillage. Fuel is flammable and explosive under certain conditions. Always work in a well ventilated area.**

Reinstall removed parts.

# PROCEDURES

## FUEL HOSE AND OETIKER CLAMPS

### Fuel Hose Replacement

When replacing fuel hoses, be sure to use hoses and clamps as available from BRP parts department. This will ensure continued proper and safe operation.

**⚠ WARNING**

**Use of improper fuel lines could compromise fuel system integrity.**

**⚠ WARNING**

**Whenever removing a hose in the fuel system, always use new Oetiker clamps at assembly. Then, validate fuel tightness by performing a fuel pressure test.**

### Oetiker Clamp Replacement

To secure or cut Oetiker clamps **no. 3** on fuel lines, use pliers (P/N 295 000 070).

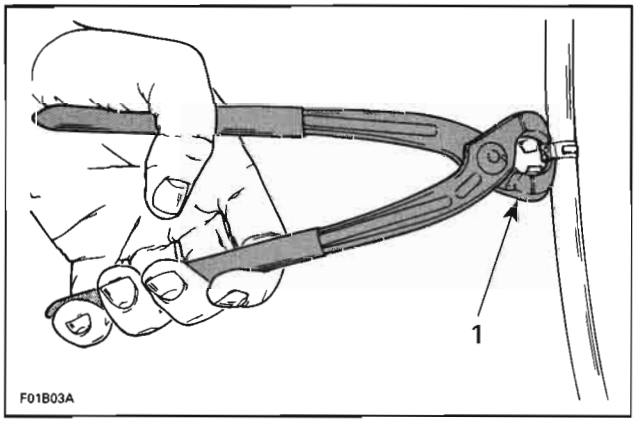


*1. Cutting clamp*

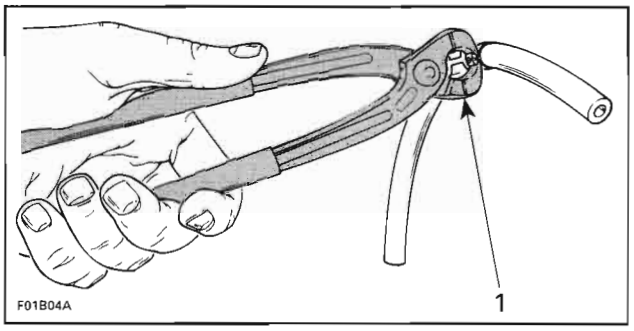


*1. Securing clamp*

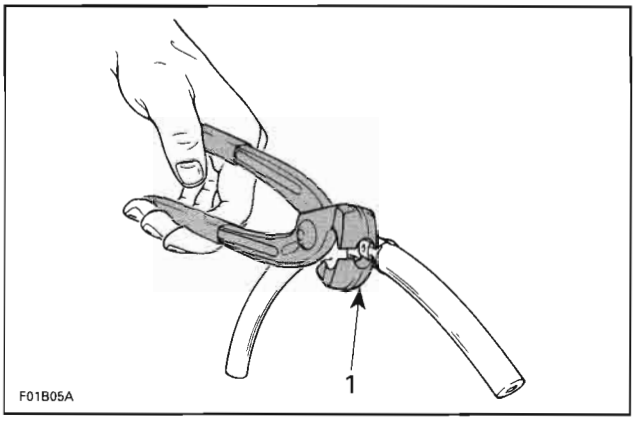


*1. Securing clamp in limited access*

## IN-LINE FUEL FILTER

Replace fuel filter as per maintenance chart schedule. Refer to *MAINTENANCE*.

### Filter Removal

Detach filter from body.

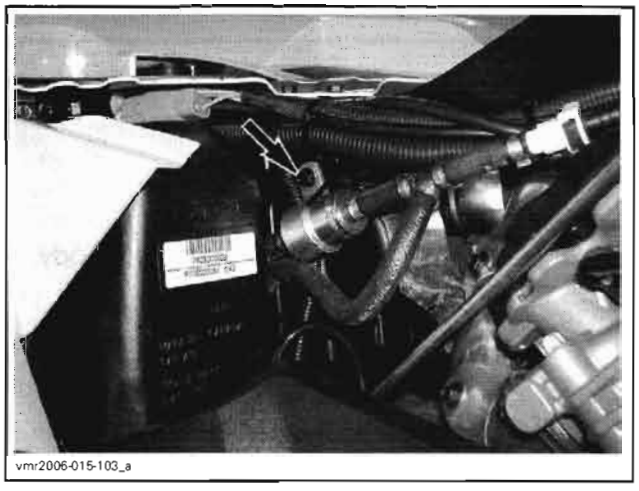


Remove Oetiker clamps and pull hoses off.

### Filter Inspection

If fuel filter is suspected to be clogged, it may be checked as follows.

Using low compressed air, check if fuel filter is clogged. Air should flow easily through filter. In doubt, install a new filter.

### Filter Installation

Use arrow on filter to position it according to fuel flow.

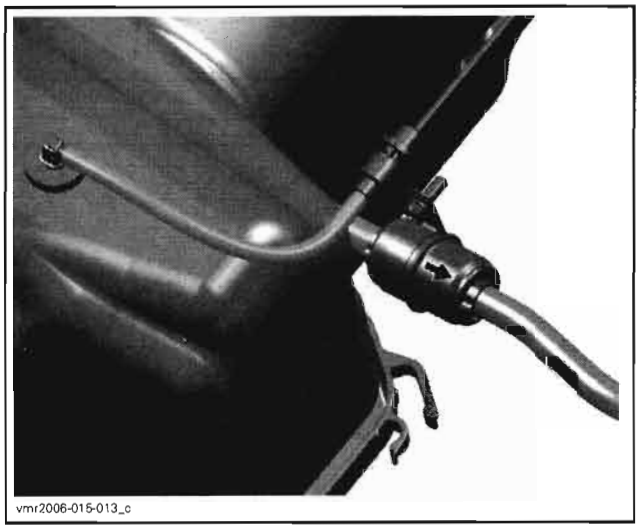
vmr2006-015-013_c

*TYPICAL*

## FUEL TANK

### Fuel Tank Draining

**⚠ WARNING**

**Never perform this operation when the engine and/or the exhaust system is/are hot. Never use a hose pincher on injection system high pressure hoses.**

Remove fuel tank cap and siphon gas in an approved fuel container.

### Fuel Tank Removal

Remove side panels (refer to *BODY*).

Disconnect vent line (OUTLET side) from body.

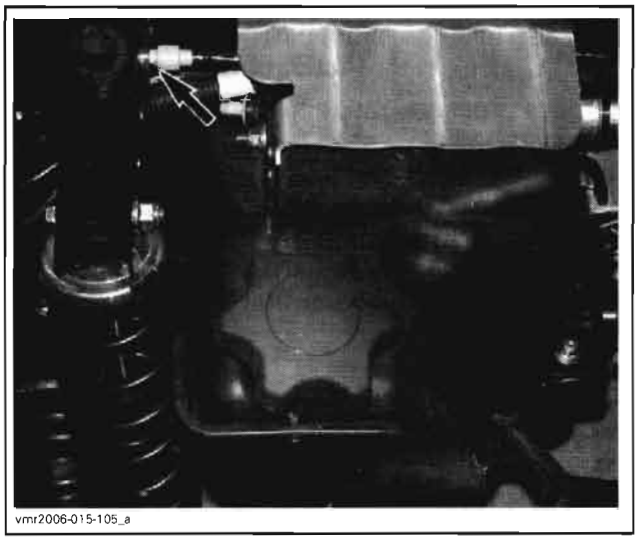
vmr2006-015-105_a

*FENDER REMOVED FOR CLARITY*

Disconnect fuel line **no. 5** at quick connect. See *FUEL PUMP* below.

Detach in-line fuel filter from body.

vmr2006-015-103_a

Remove retaining screws **no. 4**.

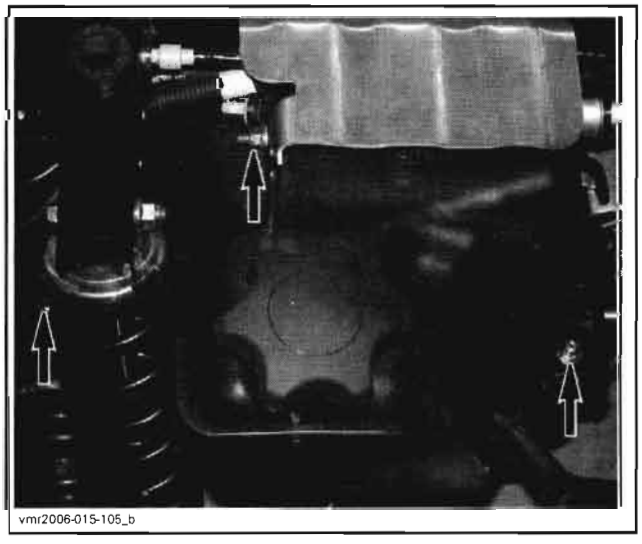
vmr2006-015-105_b

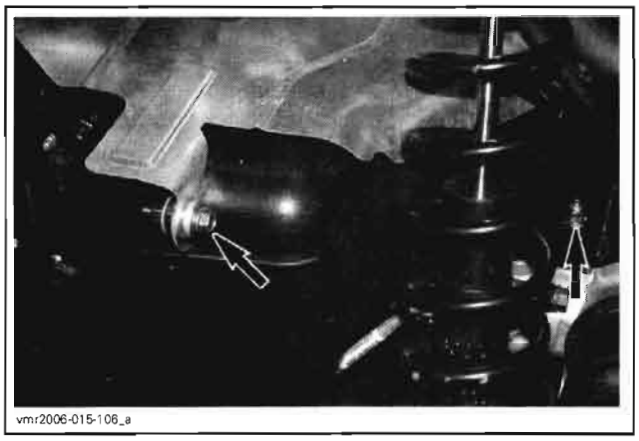
vmr2006-015-106_a

Lift frame just enough to extend RH rear shock absorber. Remove upper screw and move shock absorber away.

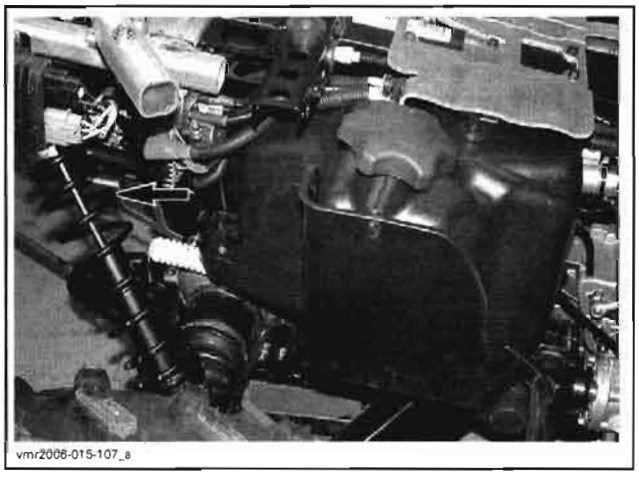
vmr2006-015-107_a

*FENDER REMOVED FOR CLARITY*

Bend fender then pull out the fuel tank through the RH side of vehicle. Pull enough to reach fuel pump connector and unplug it.

vmr2006-015-108_a

### Fuel Tank Protector

To release protector **no. 2** from tank:

**NOTE:** This procedure should be done with parts at room temperature.

- Work on a stable table.
- Lay down front of fuel tank on table.
- Firmly push on top of fuel tank and hold.
- Pull out protector from tank tab.

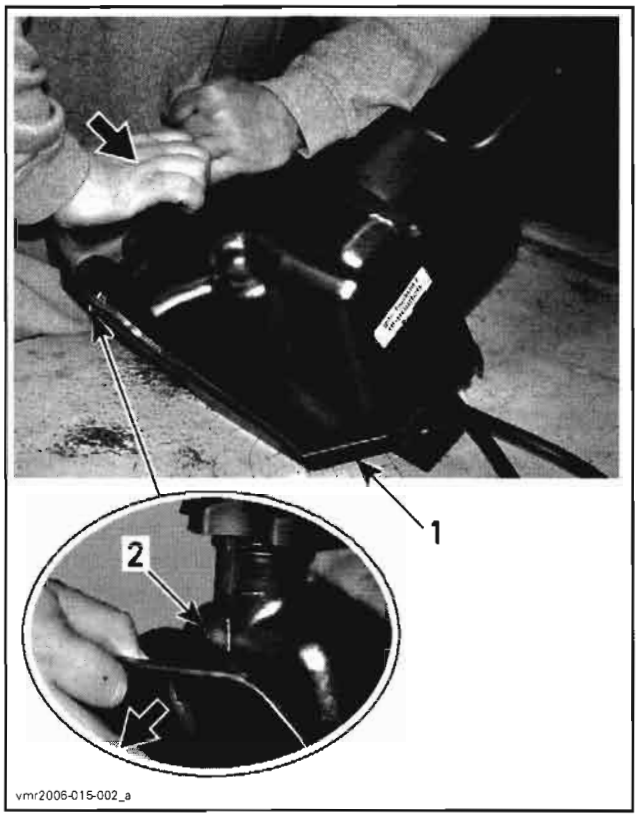

vmr2006-015-002_a

1. *Tank protector*
2. *Tank tab*

- Completely remove protector.

## Fuel Tank Inspection

Inspect fuel tank for any damage or cracks which may result in fuel leaks. If so, replace tank with a new one. Inspect tank and protector attachment points for damage. Inspect protector for damage.

## Fuel Tank Installation

**NOTE:** Removing top plate from frame to ease routing hoses and wiring.

Secure tank into protector. Reverse removal procedure.

Reconnect fuel pump connector.

Insert the fuel tank into the frame.

Reconnect hoses.

Tighten retaining screws as per following sequence.

**⚠ WARNING**

**Ensure wiring is on the top of fuel tank.**

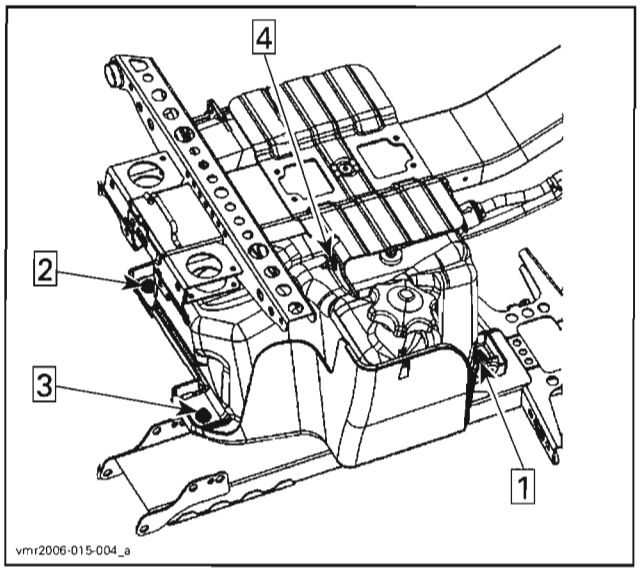

vmr2006-015-004_a

Install gearbox vent tube in its hook on fuel tank protector.

Refuel tank and ensure there are no leaks by performing the *FUEL TANK LEAK TEST* and the *FUEL PRESSURE TEST* as described in this section.

# FUEL PUMP

## Fuel Pump Circuit Test

Turn ignition key ON and set engine run/stop switch to RUN.

Read voltage as follows.

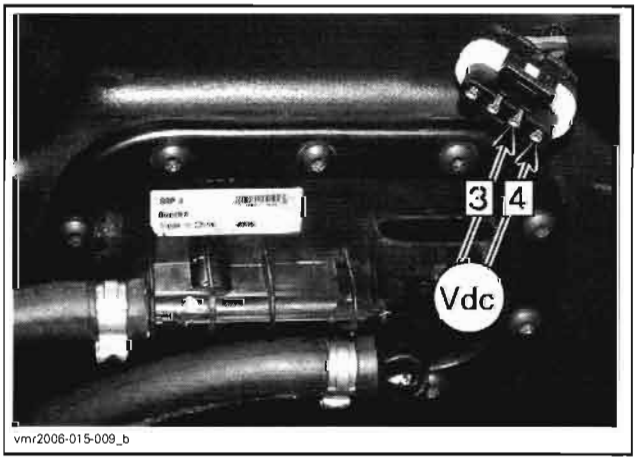

vmr2006-015-009_b

| OBSERVATION | SIGNIFICATION |
|---|---|
| Battery voltage is read for approx 2 seconds then, it will drop to approx. 11 Vdc | – It validates relay R2 supplies power to fuel pump.<br>– It validates the ground circuit through ECM.<br>– When voltage drops to approx 11 Vdc, it validates the ECM works to switch fuel pump on and off. |
| Battery voltage is not read | – Fuel pump power supply circuit from relay R2 is defective.<br>– Fuel pump ground circuit to ECM is defective.<br>– ECM is faulty. |

If battery voltage is not read, check the fuel pump power supply and ground circuits as follows.

### Fuel Pump Power Supply

Recheck voltage as follows.

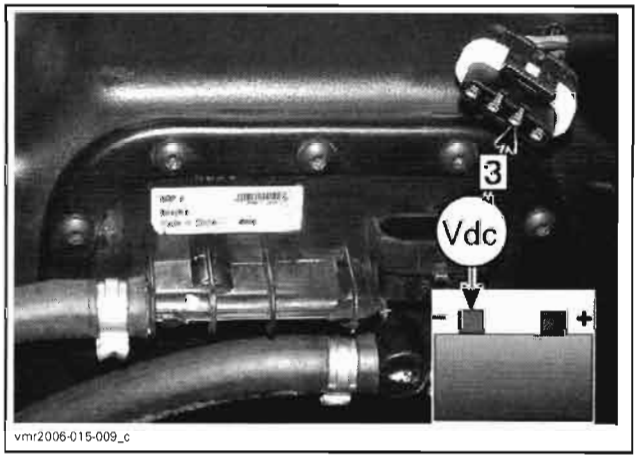

vmr2006-015-009_c

If battery voltage is not read, remove relay R2 and read voltage as follows.

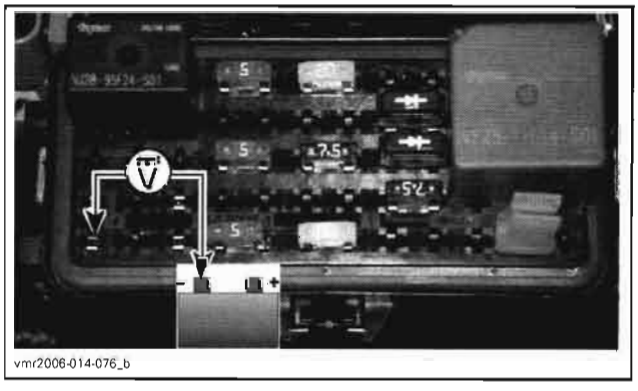

vmr2006-014-076_b

If voltage is now good, check fuse block wiring and wiring/connectors between fuse block and fuel pump.

If battery voltage is read, check fuel pump ground circuit to ECM.

### Fuel Pump Ground Circuit

Check continuity of fuel pump circuit going to ECM.

| ECM CONNECTOR | FUEL PUMP CONNECTOR | MEASUREMENT |
|---|---|---|
| PIN | | RESISTANCE Ω @ 20°C (68°F) |
| B-29 | 4 | Close to 0Ω |

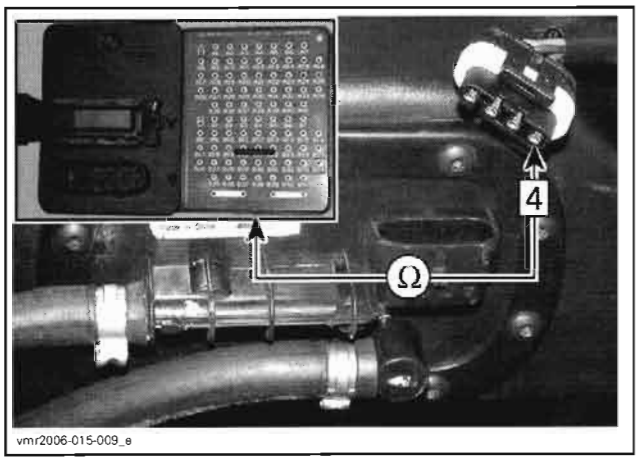


If it is good, check ECM. Refer to *ENGINE MANAGEMENT.*

## Fuel Pump Removal

Use B.U.D.S. to release fuel pressure. Look in **Activation** tab.

Remove fuel tank.

Remove fuel pump retaining screws **no. 6**.

Gently push pump up as shown.

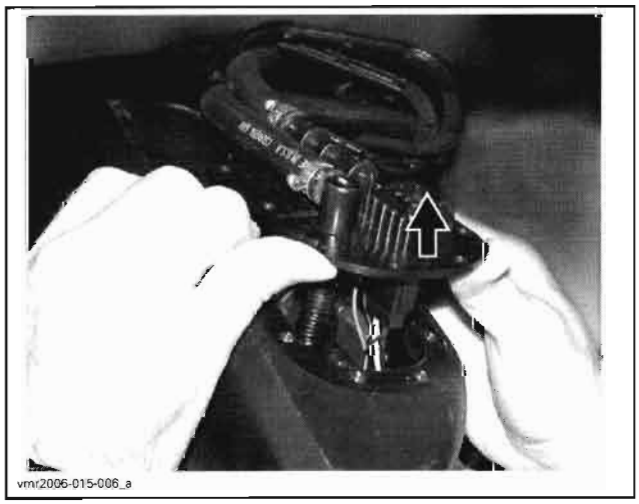


*GASKET AND FLANGE NOT SHOWN FOR CLARITY PURPOSES ONLY*

**CAUTION:** While pulling out the fuel pump, pay attention to fuel sensor float arm. Float arm can get stuck and bend which can reduce the fuel sensor capabilities.

## Fuel Pump Installation

For installation, reverse the removal process but pay attention to the following.

Install a new gasket.

Pay attention to pump orientation as shown.

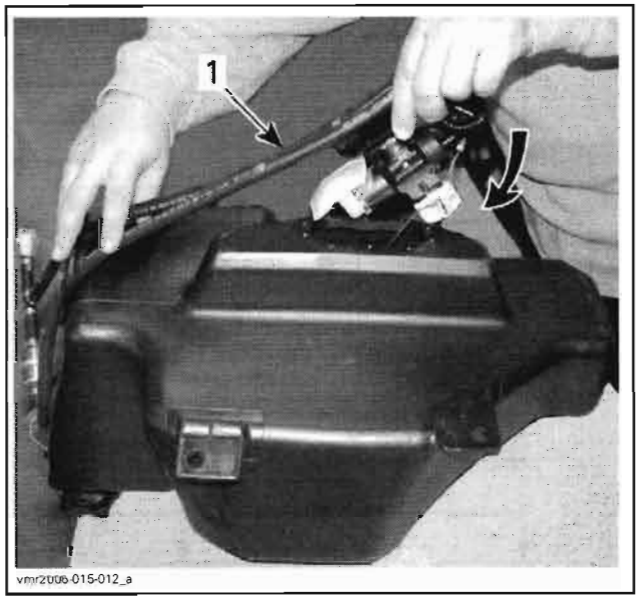


*GASKET AND FLANGE NOT SHOWN FOR CLARITY PURPOSES ONLY*
*1. Fuel line on this side*

Tighten retaining screws as per illustrated sequence. For the first sequence from 1 to 10, turn screws only to make a contact between parts, do not tighten yet. For sequence 11 to 19, properly torque to 2 N•m (18 lbf•**in**).

Install hoses properly on IN and OUT nipples.

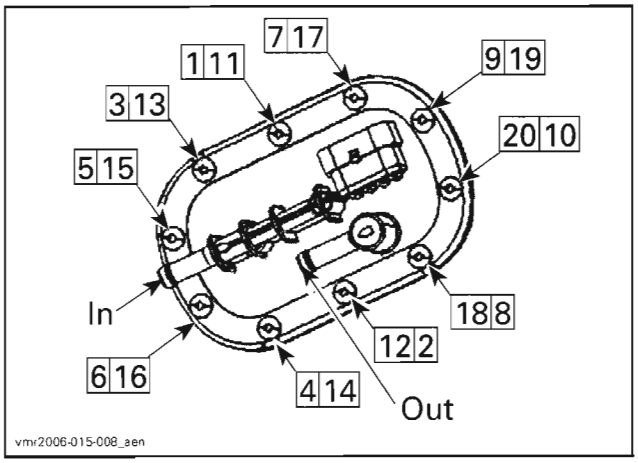

# FUEL SYSTEM DIAGNOSTIC FLOW CHART

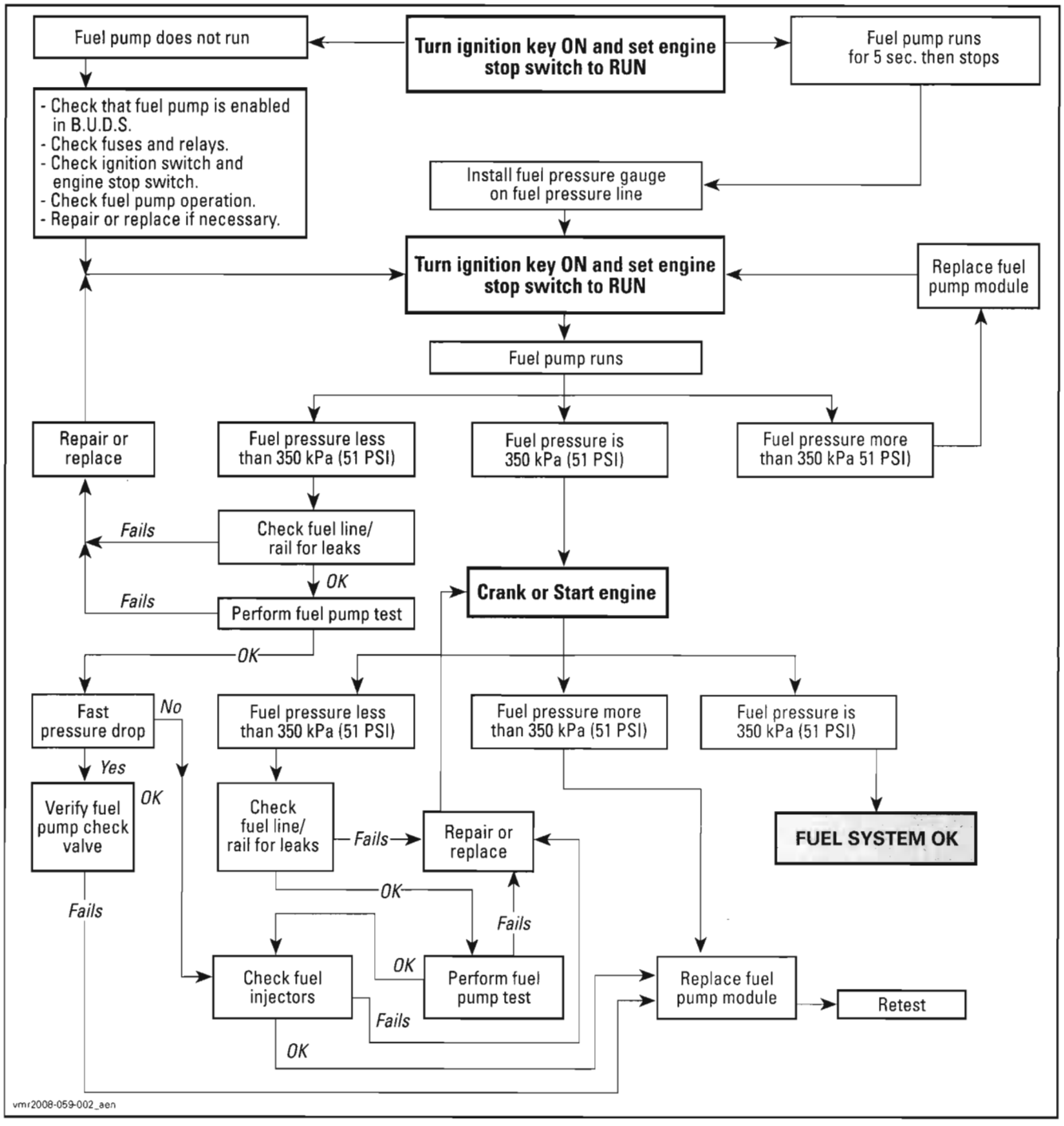

# COMMUNICATION TOOLS AND B.U.D.S. SOFTWARE

## SERVICE TOOLS

| Description | Part Number | Page |
|---|---|---|
| Optional extension cable | 529 035 697 | 232 |
| Optional extension cable | 529 035 703 | 231 |
| Communication kit | 529 035 981 | 231 |
| MPI-2 | 529 036 018 | 232 |
| Diagnostic cable | 710 000 851 | 232 |

## COMMUNICATION TOOLS

Two different MPI (Multi-Purpose Interface) can be used with B.U.D.S. software: MPI and MPI-2.

## MULTI-PURPOSE INTERFACE (MPI)

| PART REQUIRED |
|---|
| PC computer |
| B.U.D.S. software<br>Use latest version available on BOSSWeb |
| Communication kit (P/N 529 035 981)<br> |
| Optional extension cable (P/N 529 035 703)<br> |

### MPI Supply

The MPI can use the vehicle power for its supply. Four AA batteries or an AC/DC power supply can also be used. Make sure to respect MPI specification if a power supply is used.

### Connections with Vehicle

**⚠ WARNING**

**If the computer you are using is connected to the power outlet, there is a potential risk of electrocution when working in contact with water. Be careful not to touch water while working with the computer.**

Remove service compartment cover and locate communication connector.

Unplug communication connector.

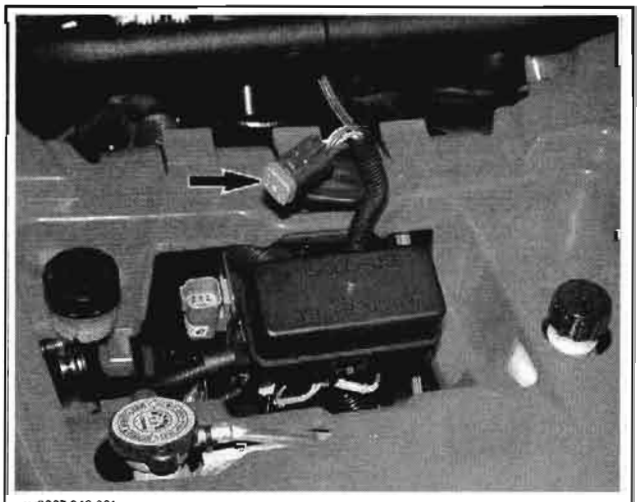

vmr2007-042-001_a

Connect the 6-pin adapter to the vehicle connector.

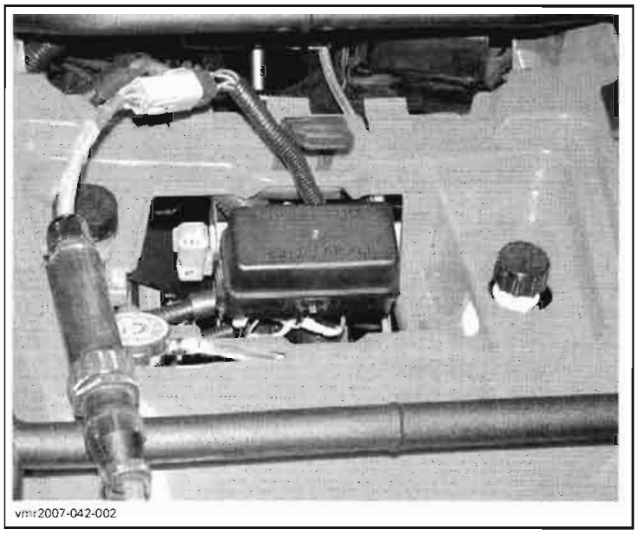
vmr2007-042-002

Connect the diagnostic cable to the 6-pin adapter.

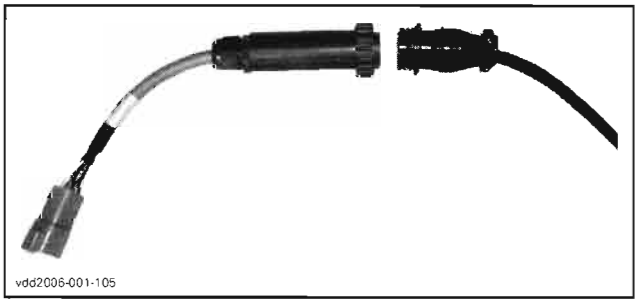
vdd2006-001-105

Connect the other diagnostic cable connector to MPI connector.

Connect serial cable to MPI connector.

vdd2006-001-102

Connect remaining serial cable connector to the serial port of a PC (personal computer).

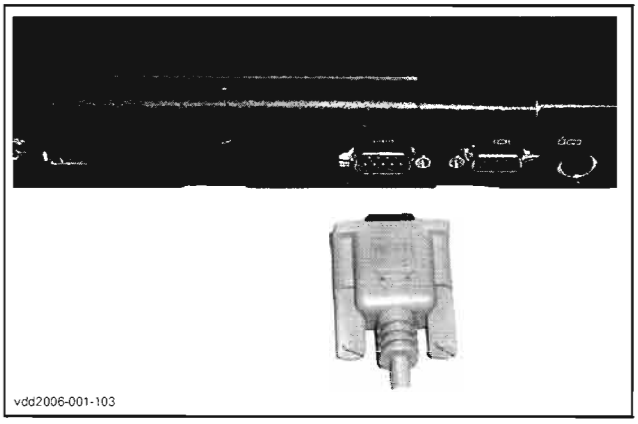
vdd2006-001-103

Use B.U.D.S. software as described further in *B.U.D.S. SOFTWARE*.

## MULTI-PURPOSE INTERFACE-2 (MPI-2)

| PART REQUIRED |
|---|
| PC computer |
| B.U.D.S. software<br>Use latest version available on BOSSWeb |
| MPI-2 (P/N 529 036 018)<br> 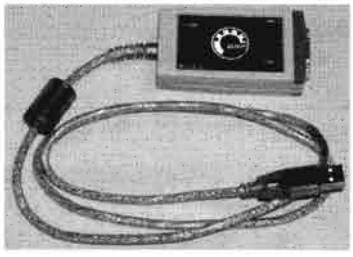 |
| Optional extension cable<br>(P/N 529 035 697)<br> 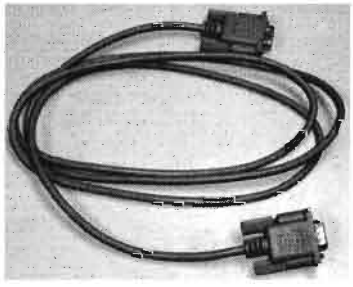 |
| Diagnostic cable (P/N 710 000 851)<br> |

## MPI-2 Supply

The MPI-2 uses the USB power of the PC computer for its supply.

## Connections with Vehicle

**⚠ WARNING**

**If the computer you are using is connected to the power outlet, there is a potential risk of electrocution when working in contact with water. Be careful not to touch water while working with the computer.**

Remove service compartment cover and locate communication connector.

Unplug communication connector.

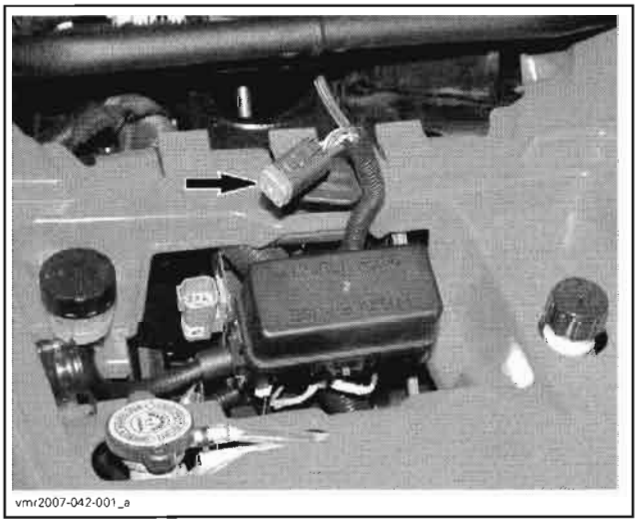
vmr2007-042-001_a

Connect diagnostic cable to vehicle connector.

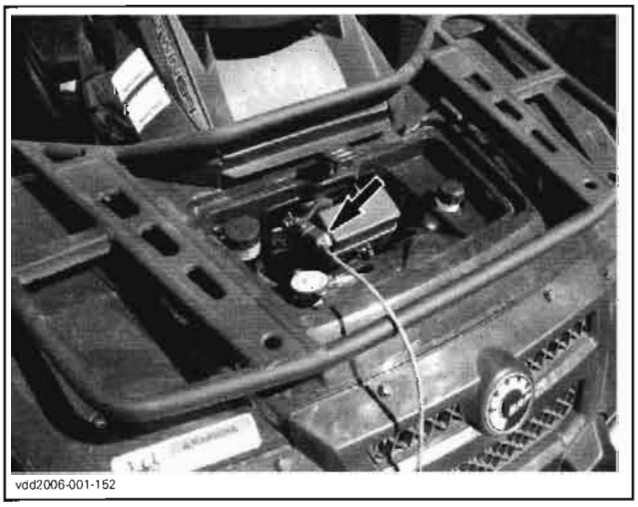
vdd2006-001-152

Connect remaining connector to MPI-2 connector.

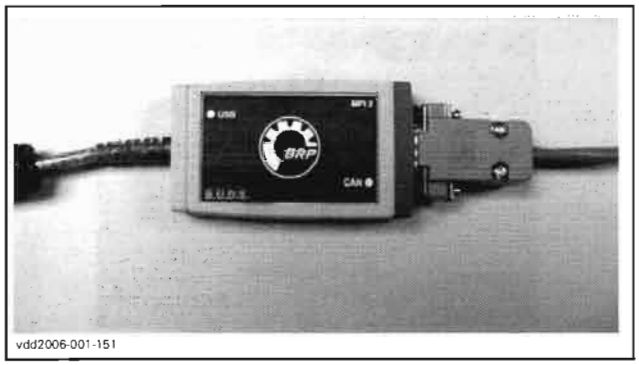
vdd2006-001-151

Connect remaining MPI-2 connector to the USB port of a PC (personnal computer).

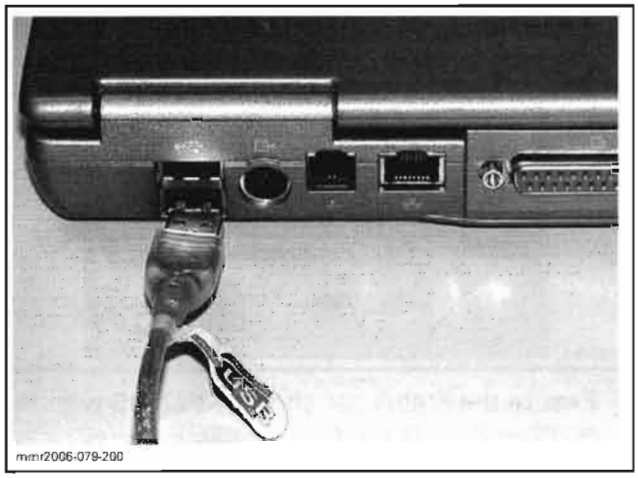
mmr2006-079-200

Use B.U.D.S. software as described further in *B.U.D.S. SOFTWARE*.

# B.U.D.S. SOFTWARE

B.U.D.S. (Bombardier Utility and Diagnostic Software) is designed to program key(s), to allow electrical component inspection, diagnostic options and adjustments such as the closed throttle.

For more information pertaining to the use of the B.U.D.S. software, use its help which contains detailed information on its functions.

Ensure to use the latest B.U.D.S. version available on BOSSWeb.

When using the B.U.D.S. software:

- Turn ignition switch ON and set engine run/stop switch to RUN to activate the communication.
- Ensure that 115200 speed is properly selected in "**MPI**" under "**Choose speed**".

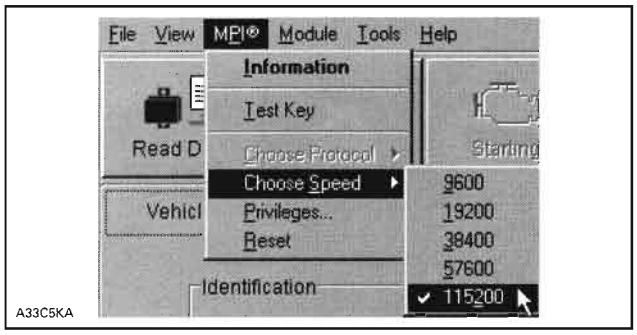


NOTE: If you are using an old PC computer, it may be necessary to use a slower speed so that the communication works.

- Ensure that the protocol "Kw2000" is properly selected in "MPI" under "**Choose protocol**.

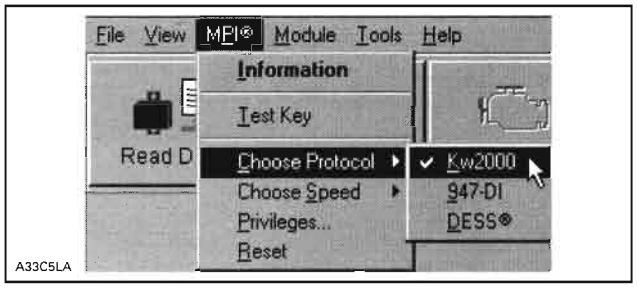


- Ensure the status bar shows KW2000 with the number 2 to its right.

NOTE: Number 2 means that 2 "ECU" are connected (ECM and multifunction gauge).

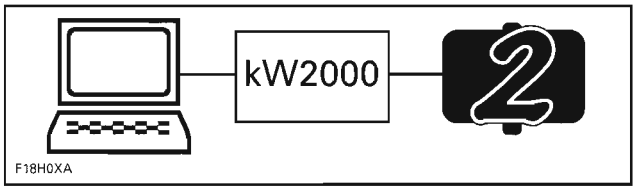


*CONNECTION SUCCESSFUL — ECM AND MULTIFUNCTION GAUGE ARE CONNECTED*

If an "X" is shown, this means that no communication between MPI and ECM/multifunction gauge takes place. Possible causes are:

- ECM is not powered-up
- multifunction gauge is not powered-up
- wrong protocol is used
- bad connection between MPI and module.

## Changes in ECM

Anytime a change is brought in ECM through B.U.D.S., there will be an "EMS Tracking" message that will say "Remove key from vehicle". When this occurs, remove the key from ignition switch and wait until the message disappears (it lasts approximately 15 seconds after key removal).

# IGNITION SYSTEM

## SERVICE TOOLS

| Description | Part Number | Page |
|---|---|---|
| ECM adapter | 420 277 010 | 235 |
| Fluke 111 multimeter | 529 035 868 | 235 |

## GENERAL

NOTE: It is a good practice to check for fault codes using B.U.D.S. software as a first troubleshooting step. Refer to *EMS DIAGNOSTIC* sub section.

The EMS controls the ignition system. For more information, refer to *ENGINE MANAGEMENT* section.

The battery supplies the primary side of ignition coil through a relay while the ECM completes the circuit for each cylinder by switching it to the ground at the right moment. The ECM can detect open and short circuit in the primary winding but it does not check the secondary winding.

**⚠ WARNING**

**Never check for engine ignition spark from an open coil and/or spark plug as spark may cause potential fuel vapor to ignite.**

### Ignition Timing

Ignition timing is not adjustable.

### Tools

For best electrical measurement results, use the Fluke 111 multimeter (P/N 529 035 868).

529 035 868

NOTE: To probe the ECM connector terminals, use the ECM adapter (P/N 420 277 010) to prevent damaging terminals. Refer to *ENGINE MANAGEMENT* for more information.

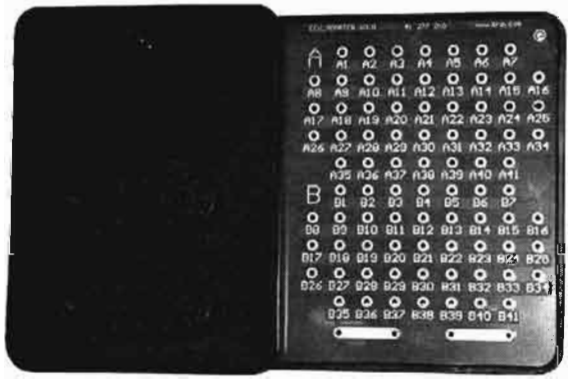

420277010

## PROCEDURES

### IGNITION SWITCH

#### Quick Test

Set engine run/stop switch (located on multifunction switch housing) in the RUN position.

Turn ignition switch to ON position.

If multifunction speedometer turns on (assuming it works), the ignition switch and engine run/stop switch are good.

If multifunction speedometer does not turn on, check the following in this order:

- ECM is properly powered (refer to *ENGINE MANAGEMENT*)
- ignition switch
- engine run/stop switch.

#### Switch Resistance Test

Remove center panel and dashboard. Refer to *BODY*.

Unplug ignition switch connector.

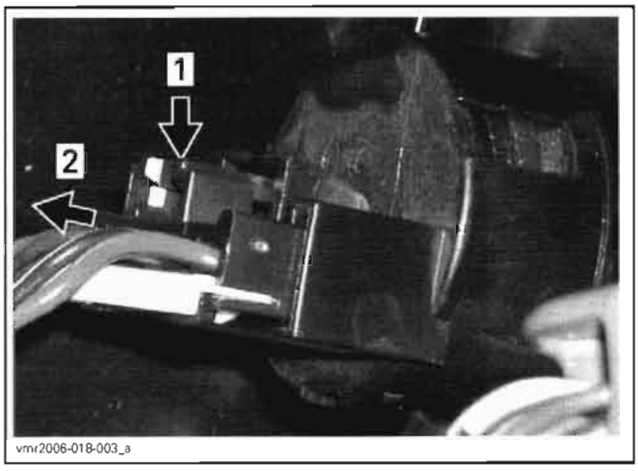


Using a multimeter, test switch as follows.

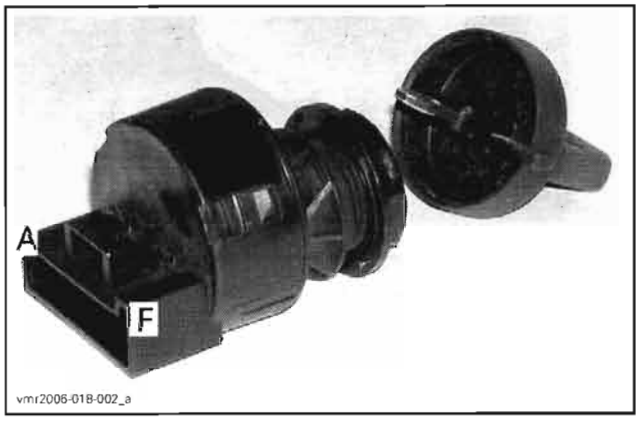


*PINOUT*

| IGNITION SWITCH | PIN | | RESISTANCE @ 20°C (68°F) |
|---|---|---|---|
| OFF | B | E | Infinite (0L) |
| ON with lights | | | 1 Ω max. |
| ON without lights | | | |

If switch is out of specification, replace with a new one.

If switch tests good, continue testing.

## Switch Wiring Test (Ignition Function)

### Wiring Test between Ignition Switch and Battery Ground

| IGNITION SWITCH CONNECTOR | | RESISTANCE @ 20°C (68°F) |
|---|---|---|
| Pin "B" | Battery ground | Close to 0 Ω |

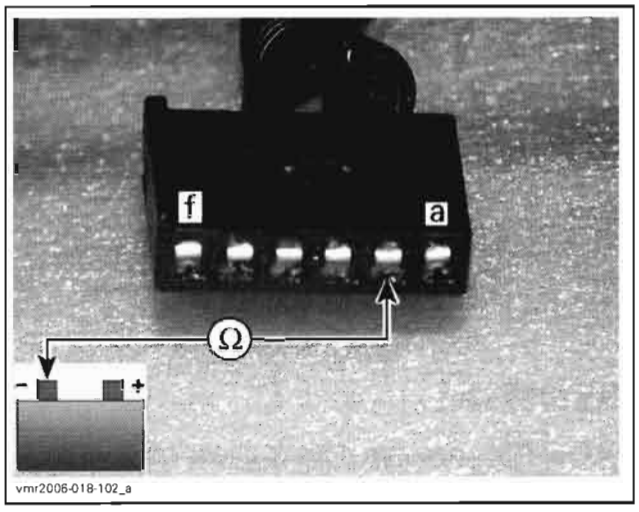


If out of specification, repair wiring/connector.

If as per specification, continue testing.

### Wiring Test Between Ignition Switch and Multifunction Switch

| IGNITION SWITCH CONNECTOR | MULTIFUNCTION SWITCH CONNECTOR (MG1) | RESISTANCE @ 20°C (68°F) |
|---|---|---|
| Pin E | Pin 2 | Close to 0 Ω |

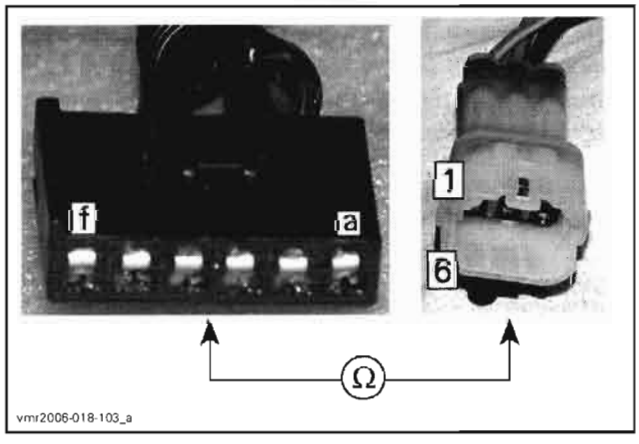


If out of specification, repair wiring/connector.

## Switch Wiring Test (DESS Function)

### Wiring Test Between Ignition Switch and ECM

Unplug ignition switch connector and disconnect connector B from ECM.

Check continuity of wiring between ignition switch and ECM as follows.

| IGNITION SWITCH CONNECTOR | ECM CONNECTOR | RESISTANCE @ 20°C (68°F) |
|---|---|---|
| C | B-39 | Close to 0 Ω |
| D | B-38 | |

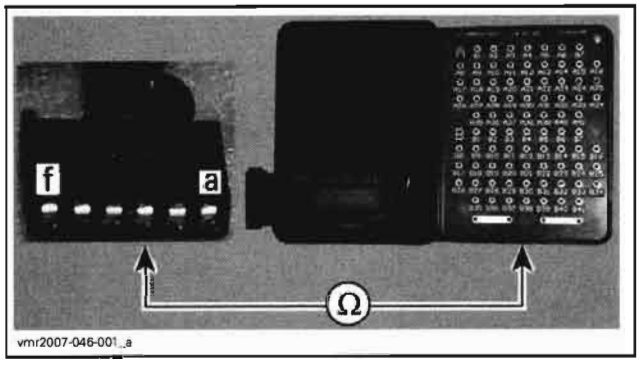


If any test fails, repair wiring/connector.

## ENGINE RUN/STOP SWITCH

NOTE: The engine run/stop switch is located on multifunction switch housing.

### Quick Test

Refer to *IGNITION SWITCH* above.

### Switch Resistance Test (Ignition Function)

Using a multimeter, test switch as follows.

| POSITION | MULTIFUNCTION SWITCH CONNECTOR (MG1) (run/stop) | | RESISTANCE @ 20°C (68°F) |
|---|---|---|---|
| RUN | 1 | 2 | 1 Ω MAX. |
| STOP | | | Infinite (OL) |

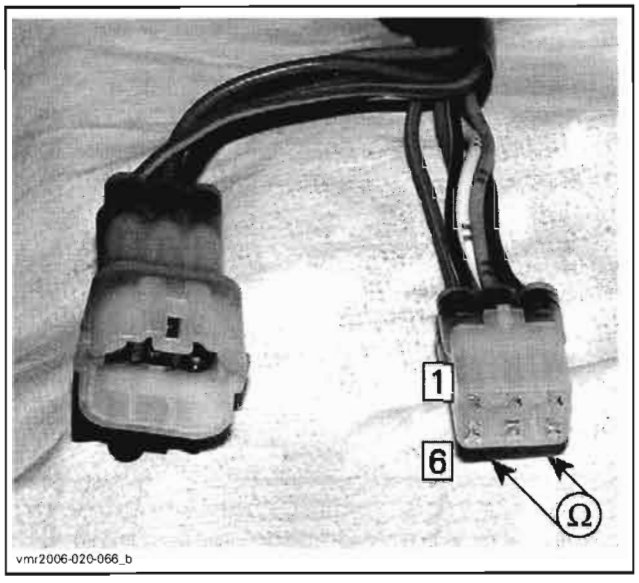


If switch is out of specification, replace with a new one.

### Switch Wiring Test (Ignition Function)

#### Wiring Test Between Multifunction Switch and ECM

| ECM CONNECTOR | MULTIFUNCTION SWITCH CONNECTOR | RESISTANCE @ 20°C (68°F) |
|---|---|---|
| B-26 | Pin 1 | Close to 0 Ω |

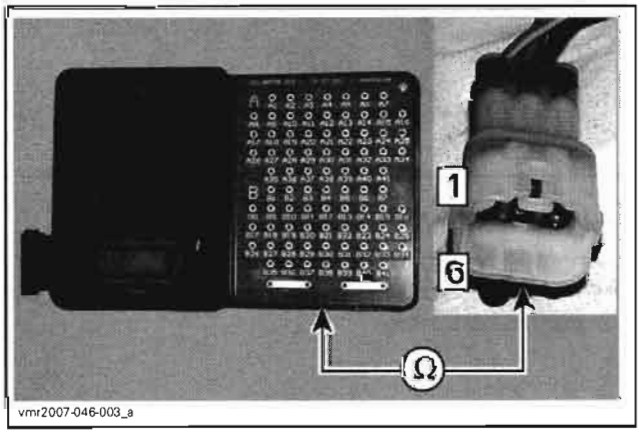


### Switch Resistance Test (DESS Function)

Check multifunction switch as follows.

| MULTIFUNCTION SWITCH | ECM CONNECTOR | | RESISTANCE @ 20°C (68°F) |
|---|---|---|---|
| STOP | B-38 | B-39 | Close to 0 Ω |
| RUN | | | Infinite (OL) |

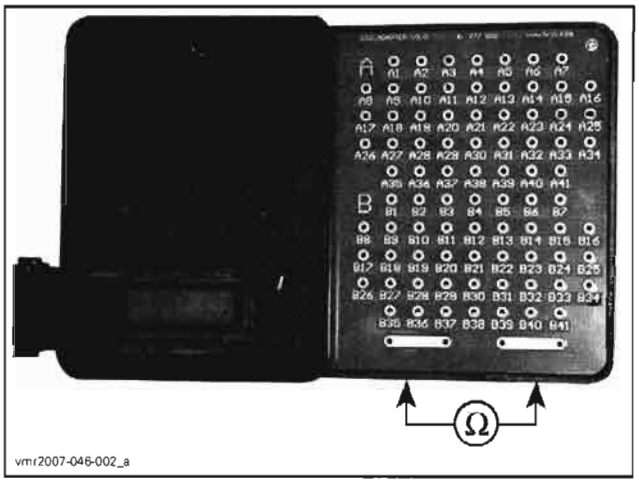

vmr2007-046-002_a

If any test fails, check continuity of wiring/connectors. If they test good, replace switch.

## IGNITION COIL

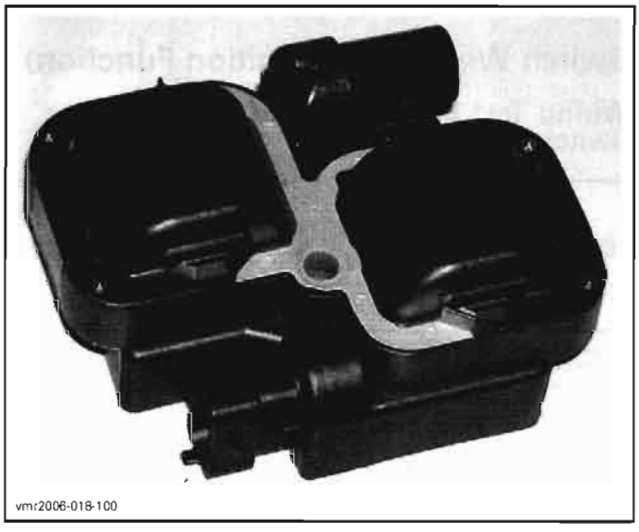
vmr2006-018-100

### Quick Test with B.U.D.S.

Using the vehicle communication kit (VCK) with the B.U.D.S. software, energize the ignition coil for each spark plug.

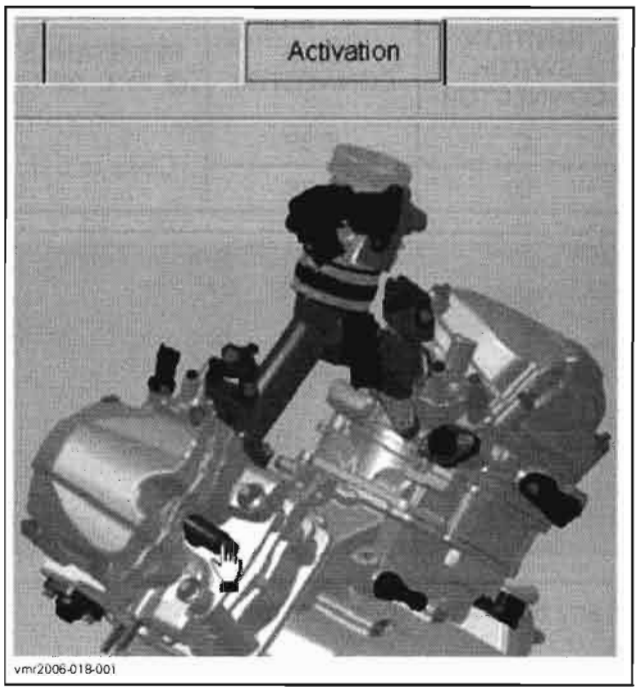

vmr2006-018-001

You should hear the spark occurring. In doubt, use an inductive spark tester. If there is no spark, perform the following checks.

NOTE: Keep in mind that even if there is a spark during this static test, voltage requirement is higher to produce a spark in the combustion chamber when engine is running. Ignition coil could be not working in real operation. Replacing ignition coil may be necessary as a test.

NOTE: Ensure spark plug cable is on the appropriate cylinder.

### Ignition Coil Input Voltage

Ensure ignition coil is properly powered as follows.

Remove RH inner fender. Refer to *BODY*.

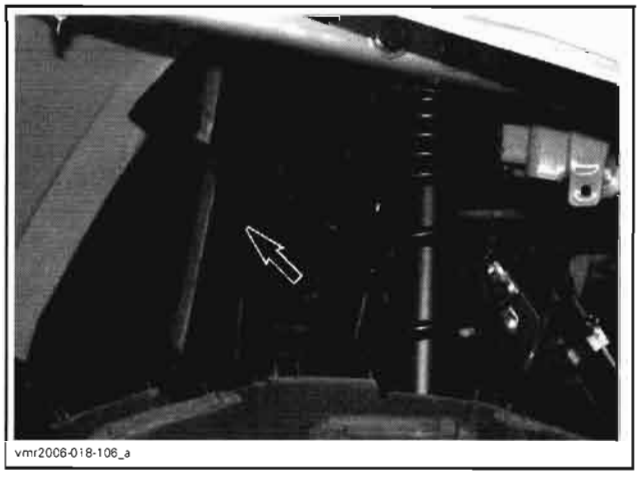
vmr2006-018-106_a

Disconnect the 3-pin connector from the ignition coil and check the voltage supplied by the main relay.

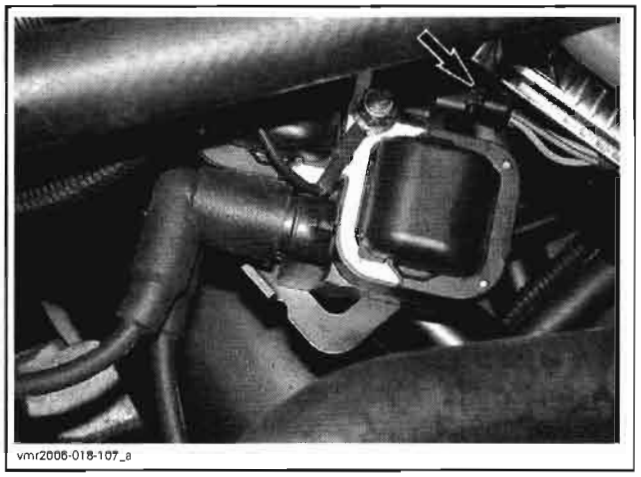
vmr2006-018-107_a

Turn ignition switch to ON and set engine run/stop switch to RUN.

Using a multimeter, read voltage.

| IGNITION COIL CONNECTOR | VOLTAGE |
|---|---|
| Pin 2 with battery ground | 12 V |

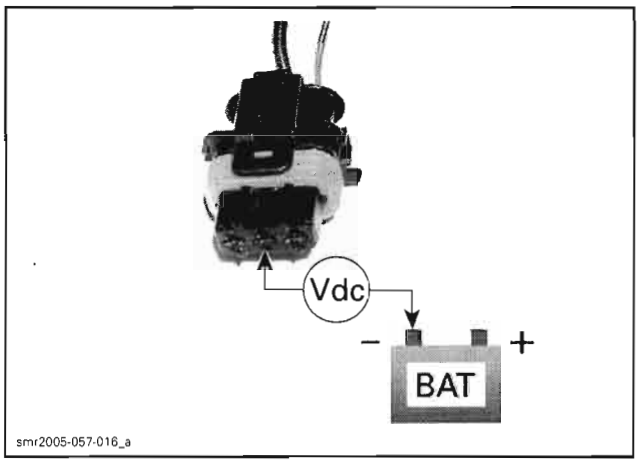

smr2005-057-016_a

*TYPICAL*

The voltage should be 12 V.

If 12 V is NOT read, check continuity of ignition coil supply circuit.

If 12 V is read, disconnect the ECM connector "A" and check the continuity of appropriate circuit.

| COMPONENT | CIRCUIT NUMBER (ignition coil connector) | CIRCUIT NUMBER (ECM connector) |
|---|---|---|
| Cylinder 1 (front) | 1 | A-1 |
| Cylinder 2 (rear) | 3 | A-41 |

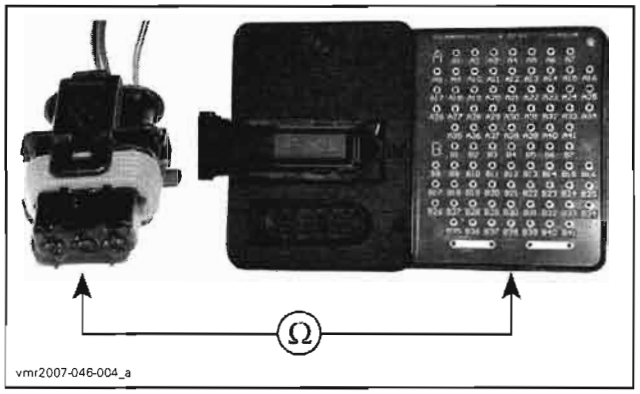

vmr2007-046-004_a

If wiring harness is defective, repair the connector or replace the wiring harness between ECM connector and the ignition coil.

If wiring harness is good, refer to ECM in *ENGINE MANAGEMENT*.

## Ignition Coil Resistance Test

An ignition coil with good resistance measurement can still be faulty. Voltage leak can occur at high voltage level which is not detectable with an ohmmeter. Replacing the ignition coil may be necessary as a test.

Disconnect ignition cable from spark plug.

### Primary Windings

Reconnect connector to ignition coil.

Remove center panel and dashboard. Refer to *BODY*.

Disconnect engine connector.

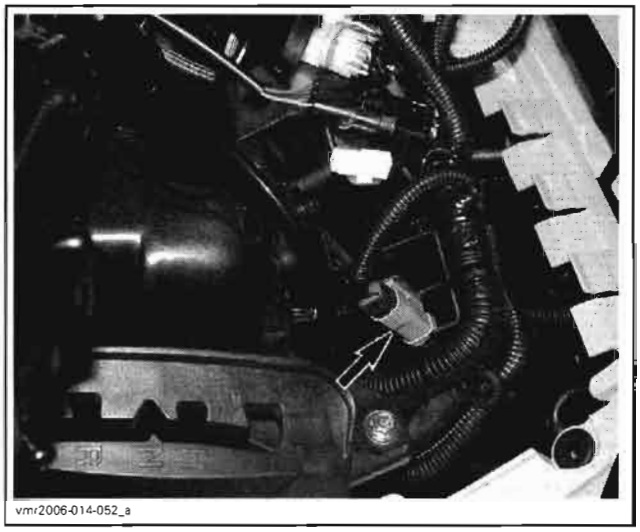
vmr2006-014-052_a

Disconnect "A" connector from ECM.

Using a multimeter, check resistance in primary windings as follows.

| PRIMARY CIRCUIT | ENGINE CONNECTOR | ECM CONNECTOR "A" | RESISTANCE @ 20°C (68°F) |
|---|---|---|---|
| Front | Pin 2 | A-1 | .3 - .6 Ω |
| Rear | | A-41 | |

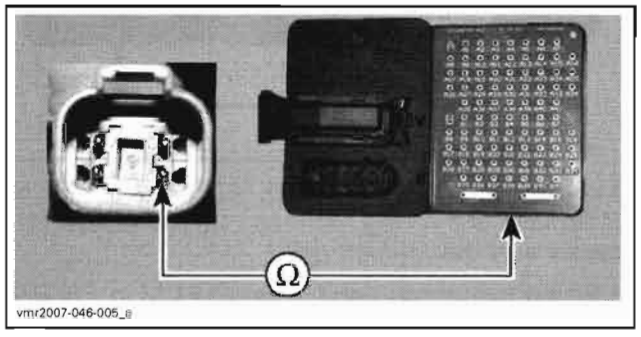


If any resistance is not good, replace ignition coil.

If the windings test good, check wiring/connectors and if adequate, try a new ECM.

### Secondary Windings

Due to the integrated diode, it is not possible to take any resistance measurement of the secondary winding.

# SPARK PLUG

## Spark Plug Removal

Unplug the spark plug cable.

Clean the spark plug area with pressurized air.

Unscrew spark plug.

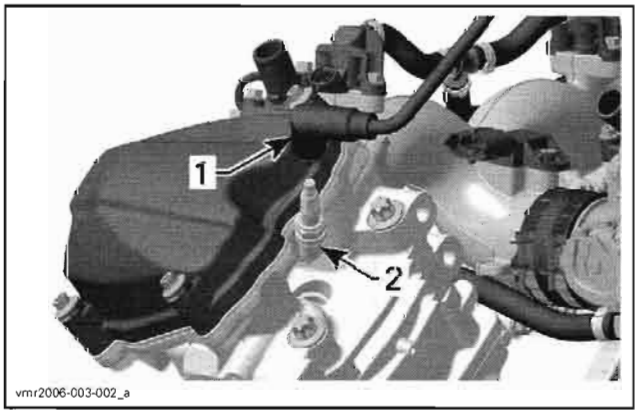


*TYPICAL*
1. *Spark plug cable*
2. *Spark plug*

## Troubleshooting Fouled Spark Plug

Fouling of the spark plug is indicated by irregular running of the engine, decreased engine speed due to misfiring, reduced performance, and increased fuel consumption. This is due to a loss of compression. Other possible causes are: prolonged idling or low-speed riding, a clogged air filter, incorrect fuel, defective ignition system, incorrect spark plug gap, lubricating oil entering the combustion chamber, or too cold spark plug. The plug face of a fouled spark plug has either a wet black deposit or a black carbon fouling. Such coatings form a conductive connection between the center electrode and ground.

## Spark Plug Analysis

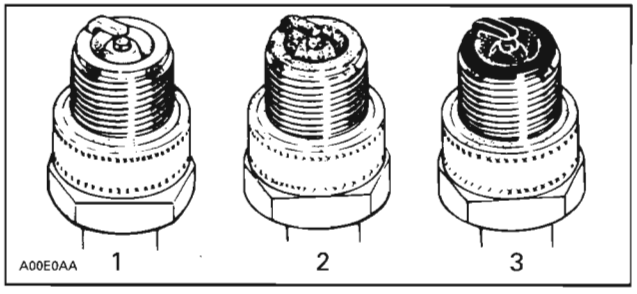


*TYPICAL*
1. *Overheated (light grey, white)*
2. *Normal (light brown, brown)*
3. *Fouled (black, wet or dry, dark deposits, grey, melted coating)*

The plug face reveals the condition of the engine, operating condition, method of driving and fuel mixture. For this reason it is advisable to inspect the spark plug at regular intervals, examining the plug face (i.e. the part of the plug projecting into the combustion chamber).

## Spark Plug Installation

Prior to installation make sure that contact surfaces of the cylinder head and spark plug are free of grime.

- Using a wire feeler gauge, set electrode gap as specified in *TECHNICAL SPECIFICATIONS*.
- Apply antiseize lubricant over the spark plug threads to prevent possible seizure.
- Hand screw spark plug into cylinder head and tighten with a torque wrench and a proper socket.

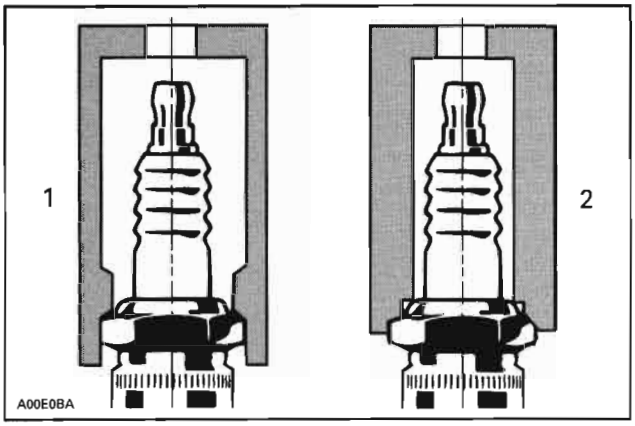


*1. Proper socket*
*2. Improper socket*

– Torque spark plug to 20 N•m (15 lbf•ft).

# CHARGING SYSTEM

## SERVICE TOOLS

| Description | Part Number | Page |
|---|---|---|
| Fluke 111 multimeter | 529 035 868 | 244 |
| 4-pin magneto harness adapter | 529 036 021 | 246–247 |

## SERVICE TOOLS – OTHER SUPPLIER

| Description | Part Number | Page |
|---|---|---|
| Snap-on inductive ammeter | MT110 | 244 |

## SERVICE PRODUCTS

| Description | Part Number | Page |
|---|---|---|
| dielectric grease | 293 550 004 | 250 |

## GENERAL

The purpose of the charging system is to keep the battery at a full state of charge.

NOTE: For an overview of the vehicle electrical system, refer to *ENGINE MANAGEMENT*.

### Magneto

The magneto is the primary source of electrical energy. It transforms magnetic field into electric current (AC).

The magneto has a 3 phase series stator.

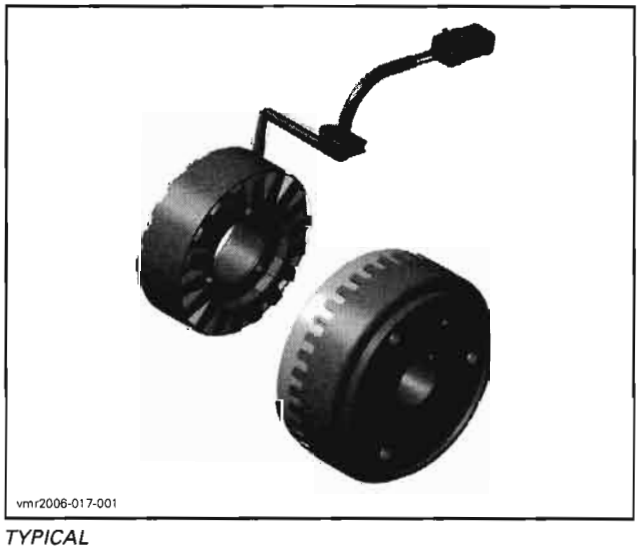


*TYPICAL*

### Voltage Regulator/Rectifier

The rectifier receives AC current from the magneto and transforms it into direct current (DC).

The voltage regulator, included in the same unit, limits voltage as follows to prevent any damage to electrical components.

| MODEL | VOLTAGE Vdc |
|---|---|
| All | 14.8 |

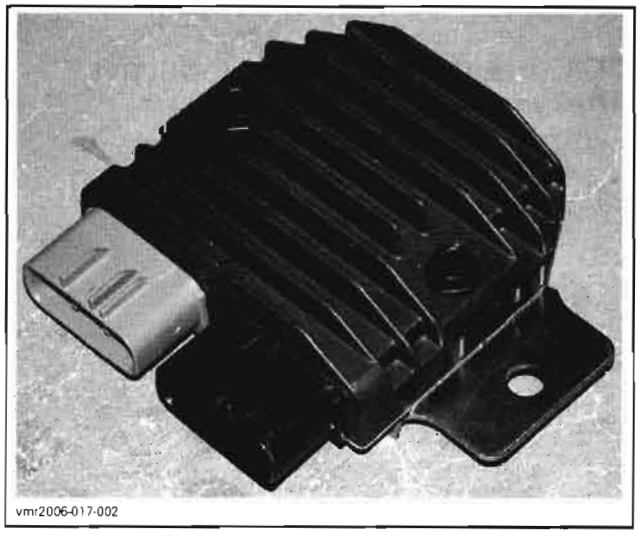

NOTE: If the battery will not stay charged, the problem can be any of the charging system components. If these all check good, try a new voltage regulator/rectifier.

### Battery

The battery is the DC source for the electric starter, the ECM and all accessories.

## PROCEDURES

NOTE: First, ensure that battery is in good condition prior to performing the following test.

For best results, use the Fluke 111 multimeter (P/N 529 035 868).

529 035 868

If the battery is regularly discharged, check battery and solenoid terminals.

## VOLTAGE REGULATOR/RECTIFIER

### Static Test: Continuity

Due to internal circuitry, there is no static test available.

### DC Current Test with an Inductive Ammeter

Pull out cover.

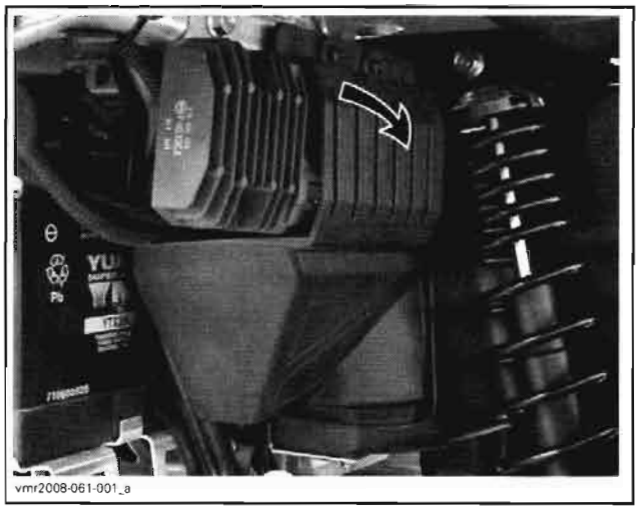


Use a Snap-on inductive ammeter (P/N MT110) or equivalent and place it over the RED wire going out of voltage regulator/rectifier.

- Start engine.
- Read current.

| TEST ENGINE SPEED | CURRENT |
|---|---|
| 4000 RPM | Approx. 3 - 7 A |

- If current is below specification, check magneto (stator) output prior to concluding that rectifier is faulty.

### DC Current Test with a Multimeter

**⚠ WARNING**

**Pay attention not to touch chassis with any tool when disconnecting/connecting wires. Pay attention so that battery positive post does not touch chassis when moving battery.**

- Disconnect battery cable and voltage regulator/rectifier wire from solenoid post.

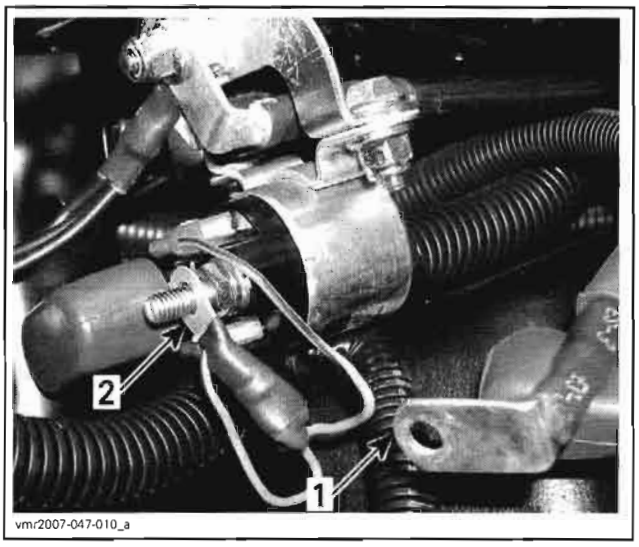


*1. Move battery cable away to remove wire underneath*
*2. Remove this wire*

- Reconnect battery cable.

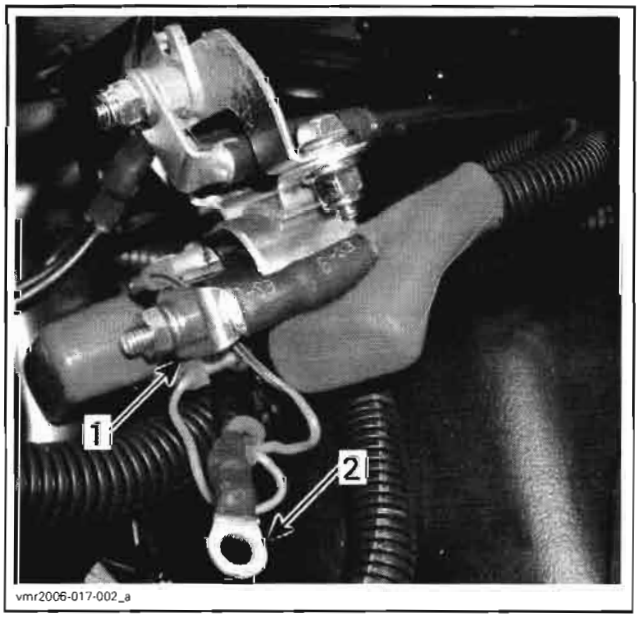


*1. Battery cable installed*
*2. Voltage regulator/rectifier wire disconnected*

- Set multimeter to Adc.
- Start engine.
- Connect multimeter probes between voltage regulator/rectifier wire and solenoid post.
- Read current.

| TEST ENGINE SPEED | CURRENT |
|---|---|
| 4000 RPM | Approx. 3 - 7 A |

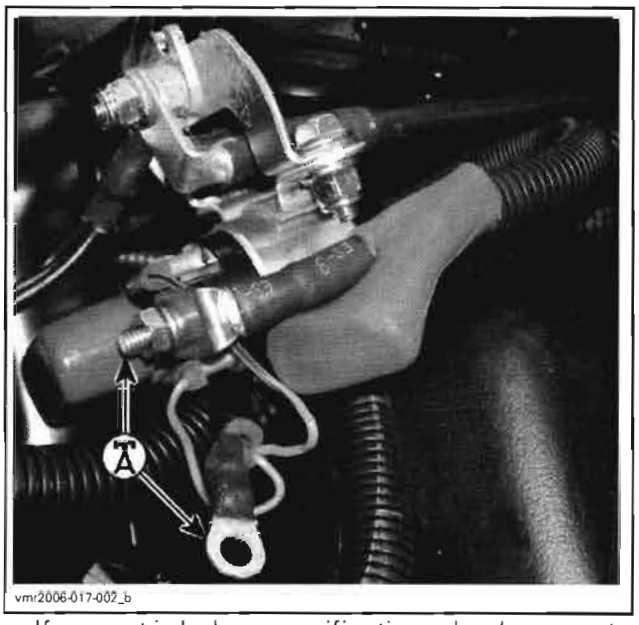


- If current is below specification, check magneto (stator) output prior to concluding that rectifier is faulty.
- Properly reconnect voltage regulator/rectifier wire.

## Voltage Test

Proceed as follows:

- Release battery strap. Pull back battery to reach battery posts.
- Start engine.
- Connect a multimeter to battery posts. Set multimeter to Vdc scale.
- Start engine.
- Read voltage.

| TEST ENGINE SPEED | VOLTAGE |
|---|---|
| 4000 RPM | 14.4 - 15.2 Vdc |

vmr2006-017-003_a

If voltage is above specification, replace voltage regulator/rectifier.

NOTE: If voltage exceeds 19 Vdc, gauge will display OVER VOLTAGE. In this case, replace voltage regulator/rectifier by a new one.

If voltage is below specification, check stator, wiring and connections.

Properly secure battery.

Reinstall cover.

## STATOR

Remove seat and RH side panel.

Remove protective plate as necessary.

### Static Test: Continuity

- Disconnect the magneto wiring harness connector.

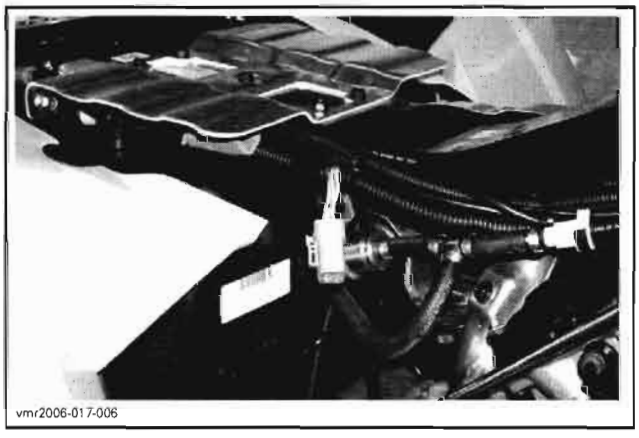
vmr2006-017-006

- Install the 4-pin magneto harness adapter (P/N 529 036 021) on magneto connector. Leave the other connector unplugged.

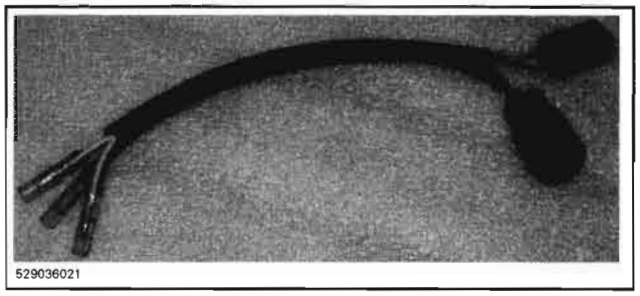
529036021

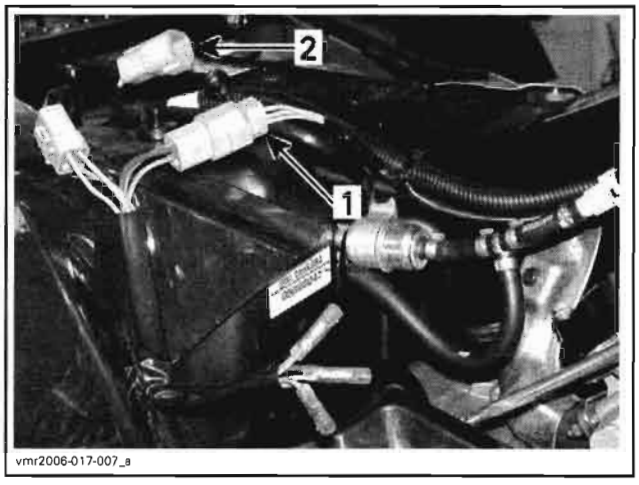

vmr2006-017-007_a

1. *Magneto connector*
2. *Leave this tool connector unplugged*

- Set multimeter to Ω.
- Connect multimeter between YELLOW wires.
- Read resistance.

| TERMINAL | RESISTANCE @ 20°C (69°F) |
|---|---|
| 1 and 2 | 0.1 - 1 Ω |
| 1 and 3 | |
| 2 and 3 | |

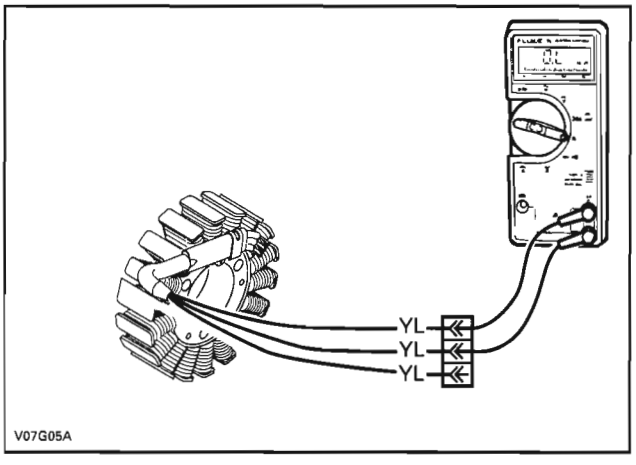

V07G05A

*TYPICAL*

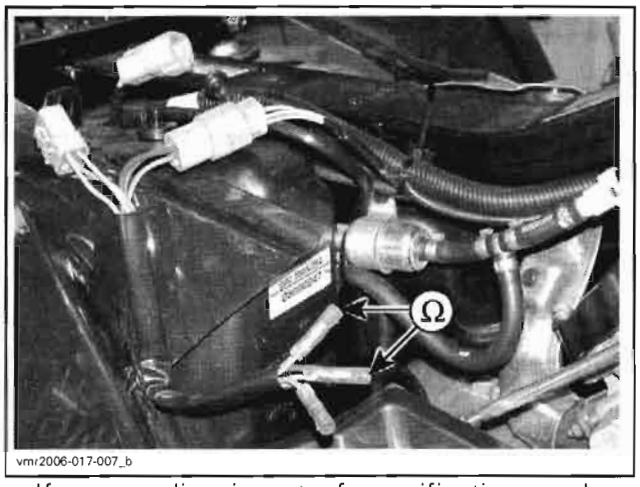

vmr2006-017-007_b

- If any reading is out of specification, replace stator.
- Replug connectors properly.

## Static Test: Insulation

Keep connector as for the previous continuity test.

- Set multimeter to Ω.
- Connect multimeter between any YELLOW wire and engine ground.
- Read resistance.

| PROBE | RESISTANCE @ 20°C (69°F) |
|---|---|
| Any YELLOW wire and engine ground | Infinity (open circuit) |

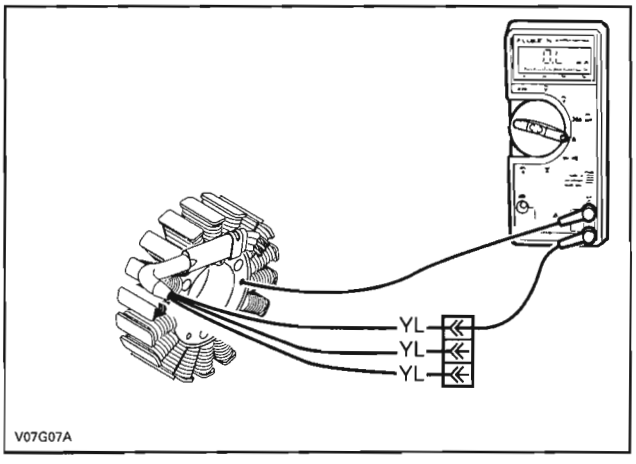


*TYPICAL*

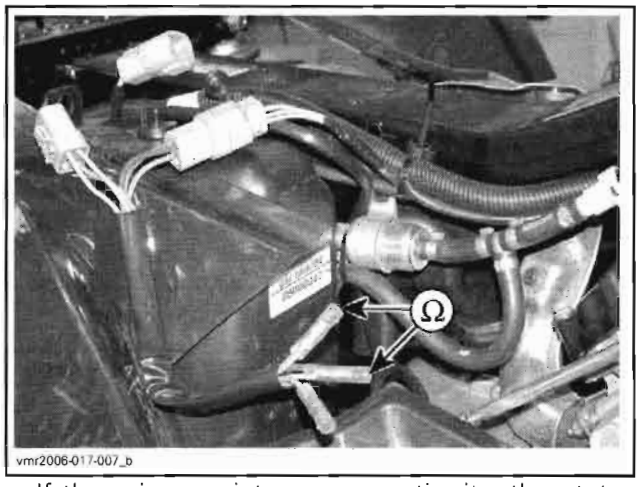

vmr2006-017-007_b

- If there is a resistance or continuity, the stator coils and/or the wiring is grounded and needs to be repaired or replaced.
- Replug connectors properly.

## Dynamic Test: AC Voltage

1. Disconnect the voltage regulator/rectifier connectors.

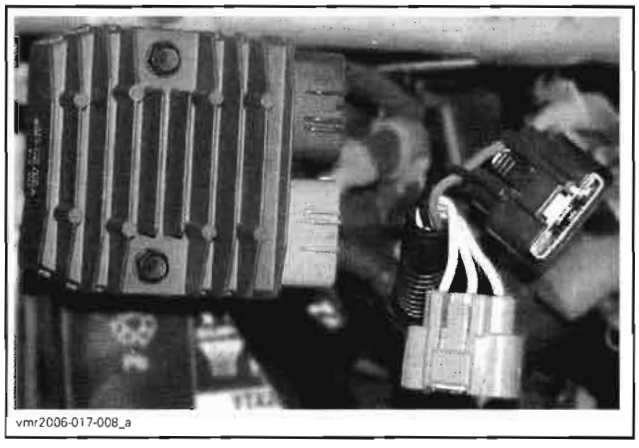
vmr2006-017-008_a

2. Unplug magneto wiring harness connector.

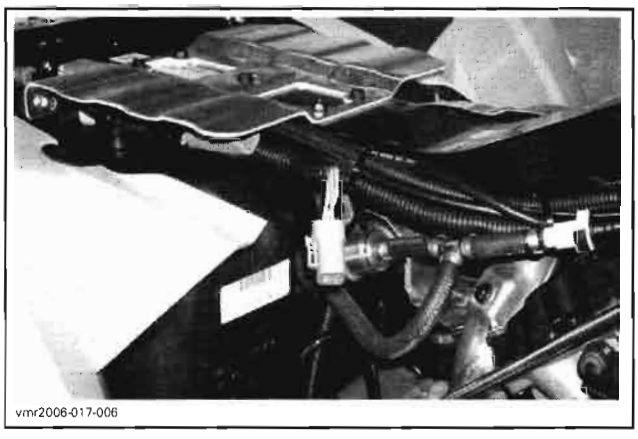
vmr2006-017-006

3. Install the 4-pin magneto harness adapter (P/N 529 036 021) between unplugged connectors.

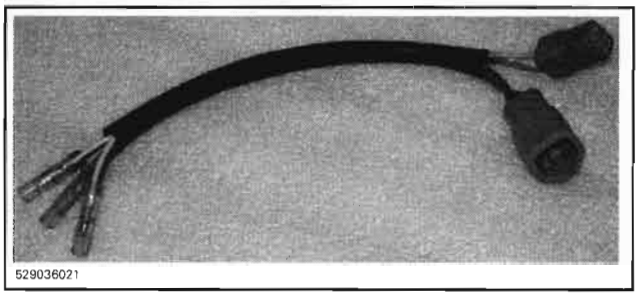
529036021

NOTE: Both connectors must be plugged.

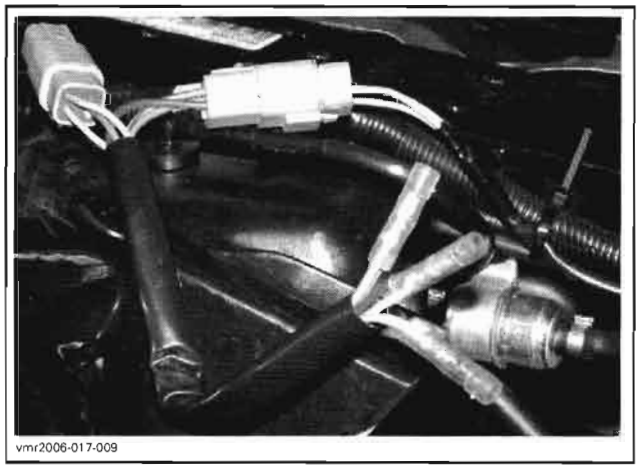
vmr2006-017-009

4. Set multimeter to Vac scale.
5. Start engine.
6. Connect multimeter between YELLOW wires.
7. Read voltage.

| TEST ENGINE SPEED | TERMINAL | VOLTAGE |
|---|---|---|
| 4000 RPM | 1 and 2 | 10 - 25 Vac |
| | 1 and 3 | |
| | 2 and 3 | |

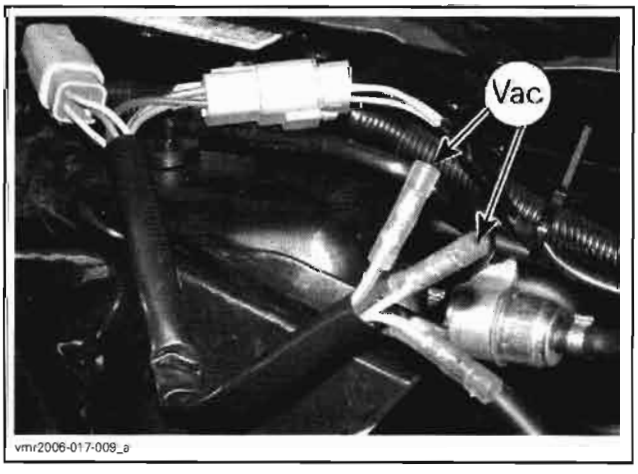

vmr2006-017-009_a

8. If voltage is lower than specification, replace stator.
9. Replug connectors properly.

# BATTERY

## Battery Information

These vehicles are equipped with a VRLA battery (Valve Regulated Lead Acid). **It is a maintenance-free type battery.**

Refer to battery manufacturer's instructions for proper filling, activation and routine charging procedures.

## Troubleshooting

### Discharged or Weak Battery

- battery posts and/or cable terminal oxidized
- loose or bad connections
- faulty battery (does not keep a full charge)
- main system fuse burnt, faulty wiring/ connections, voltage regulator/rectifier or stator.

## Battery Unloaded Test

NOTE: An unloaded test is made on a battery without discharging current. It is the simplest and most commonly used. However, be aware that the voltage test can be good, while the battery does not have enough power to crank the engine. A load test gives a more accurate condition of the battery.

Check the charge condition using a multimeter.

With a multimeter, voltage readings appear instantly to show the state of charge. Always respect polarity.

| FULLY CHARGED BATTERY VOLTAGE |
|---|
| 12.6 Vdc minimum |

## Battery Load Test

This is the best test of the batteries condition. Use a load testing device that has an adjustable load.

Apply a load of 3 times the ampere-hour rating of the battery. At 14 seconds into the test, check battery voltage.

| TIME TO MEASURE INTO TEST | VOLTAGE |
|---|---|
| 14 seconds | Min. 10.5 Vdc |

## Battery Removal

**⚠ WARNING**

Always respect this order for removal; disconnect BLACK (-) cable first. Electrolyte or fuel vapors can be present and a spark may ignite them and possibly cause personal injuries.

### *Outlander 500/650/800 Series*

Release battery strap.

vmr2006-017-004_a

*1. Strap*

Pull back battery to reach battery posts.

vmr2006-017-003

Disconnect BLACK (-) cable first, then the RED (+) cable.

Remove battery.

### *Renegade Models*

Remove storage box.

Unfasten retaining rod.

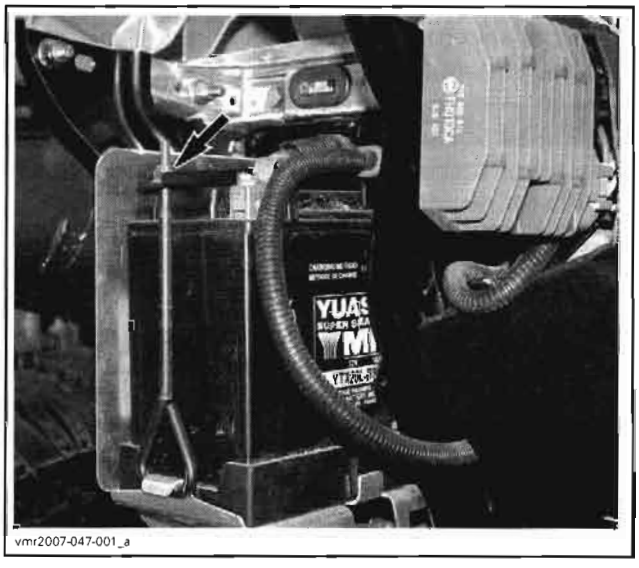

vmr2007-047-001_a

Pull out top bracket.

Disconnect BLACK (-) cable first, then the RED (+) cable.

Remove battery.

## Battery Cleaning

Clean the battery rack, cables and battery posts using a solution of baking soda and water.

Remove corrosion (if so) from battery cable terminals and battery posts using a firm wire brush. Rinse with clear water and dry well.

## Battery Inspection

Visually inspect battery casing for cracks or other damage. If casing is damaged, replace battery and thoroughly clean battery rack with water and baking soda.

Inspect battery posts condition, battery rack mounting, straps and strap attachment points.

## Battery Storage

If the battery is in storage or used infrequently, disconnect the battery cables to eliminate drain from electrical equipment.

For extended storage, remove the battery from vehicle.

Clean battery terminals and cable connections using a wire brush. Apply a light coat of dielectric grease (P/N 293 550 004) on terminals.

Clean battery casing using a solution of baking soda and water. Rinse battery with clear water and dry well using a clean cloth.

Regularly charge battery as per manufacturer's recommendations.

For other recommendations during storage, refer to battery manufacturer's instructions.

**⚠ WARNING**

**Ensure to store battery in a safe place, out of reach for children.**

## Battery Installation

**⚠ WARNING**

**Always connect RED (+) cable first then BLACK (-) cable.**

### *Outlander 500/650/800 Series*

Temporary hook battery strap as shown.

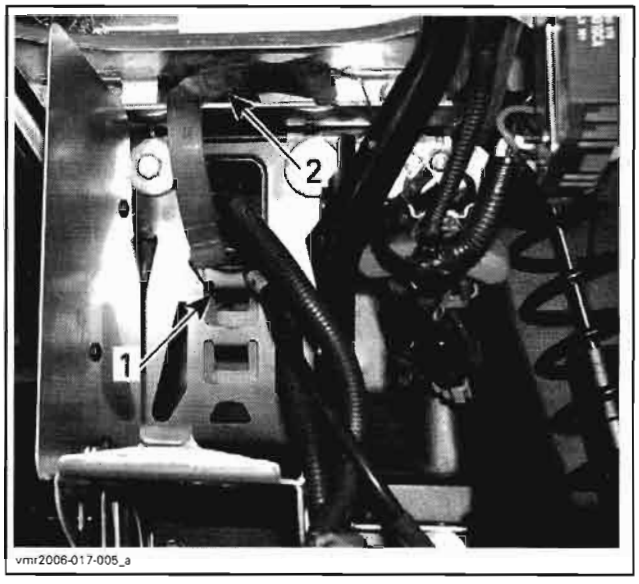


*1. Hook at bottom*
*2. Temporary squeeze strap here*

Temporary put battery in rack.

Connect battery cables.

Properly position battery with positive post towards front and negative post at rear. Route cables as shown.

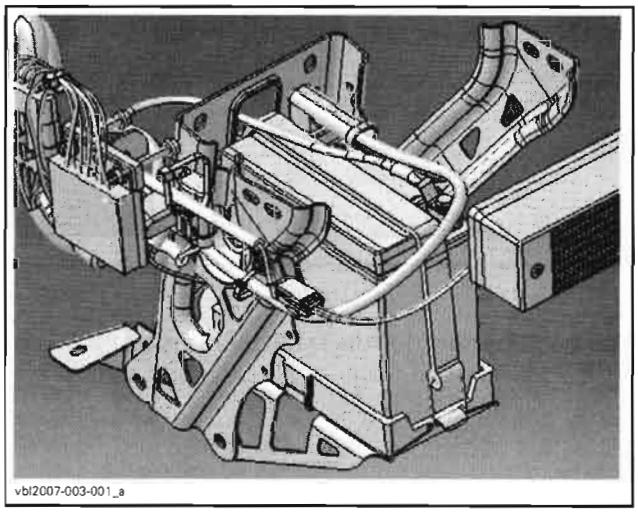


Secure with strap.

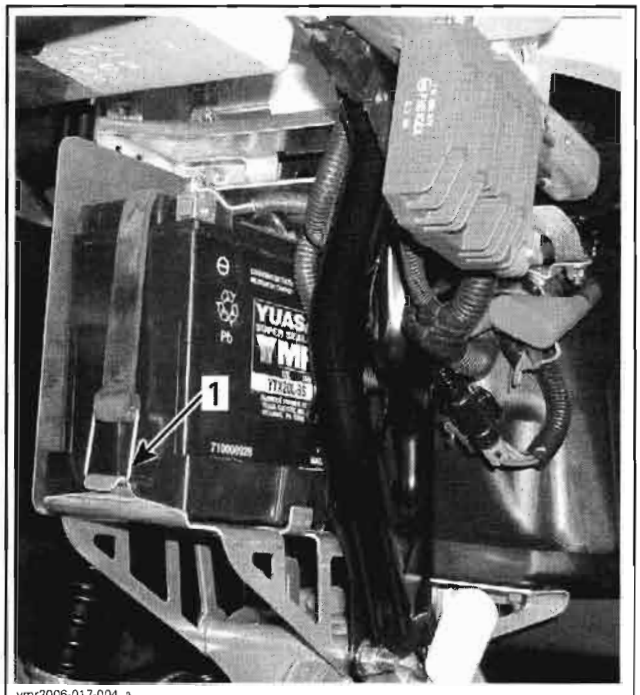


vmr2006-017-004_a

1. *Secured strap*

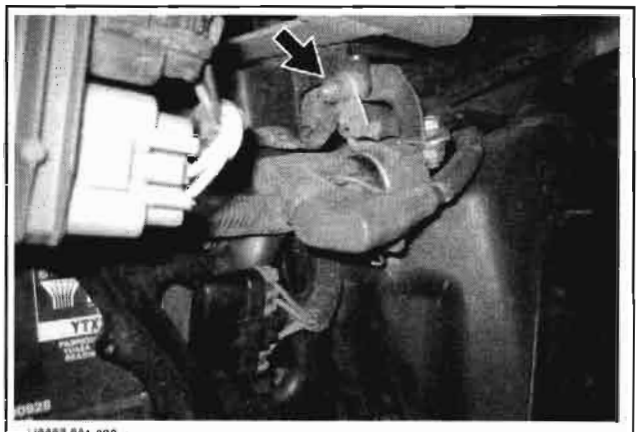

vdd2007-001-086_a

### *Renegade Models*

Reinstall battery in vehicle. Secure retaining rod.

Reinstall storage box.

## MAIN GROUND

Pull out cover.

vmr2008-061-001_a

Ensure main ground connection is clean and tight.

# STARTING SYSTEM

## SERVICE TOOLS

| Description | Part Number | Page |
|---|---|---|
| ECM adapter | 420 277 010 | 254 |
| Fluke 111 multimeter | 529 035 868 | 253 |

## SERVICE PRODUCTS

| Description | Part Number | Page |
|---|---|---|
| dielectric grease | 293 550 004 | 259 |

## GENERAL

First ensure the problem is not related to engine mechanical components. If not, test the starting system.

Causes of problems are not necessarily related to starter but may be due to the following:

- burnt fuse
- faulty battery
- D2 diode
- relay
- start button
- ignition Switch
- engine run/stop switch
- starting solenoid
- electrical cables
- connections.

Check these components before removing starter.

Consult the *TROUBLESHOOTING* section for a general view of possible problems.

### Engine Cranking Conditions

The following conditions must be met to allow engine cranking.

| |
|---|
| Ignition switch turned ON |
| Engine run/stop switch in RUN position |
| Transmission in Park or Neutral position<br><br>**NOTE:** Engine can be cranked in other positions if any brake lever is held when pressing start button. |
| Start button is pressed and held<br>(within 15 minutes since ignition key was turned on. Otherwise, it will be required to turn ignition switch OFF, wait until multifunction gauge turns off then turn ignition back ON). |

### Battery

To check battery condition, refer to *CHARGING SYSTEM* section.

### Ignition Switch and Engine Run/Stop Switch

To validate ignition switch and engine run/stop switch operations, refer to *IGNITION SYSTEM*.

### Electrical Cables and Connections

Check all connections, cables and wires. Tighten any loose connections. Replace any chafed wires/cables.

### Tools

For best electrical measurement results, use the Fluke 111 multimeter (P/N 529 035 868).

529 035 868

To probe the ECM connector terminals, use the ECM adapter (P/N 420 277 010) to prevent damaging terminals. Refer to *ENGINE MANAGEMENT* for more information.

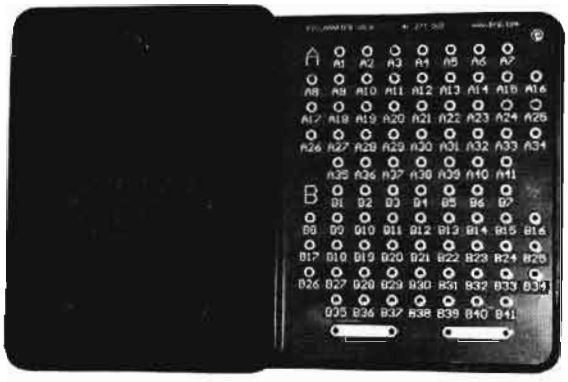

420277010

# PROCEDURES

## FUSES

Make sure the main fuse (F8) and the accessories fuse (F4) is (are) in good condition.

**NOTE:** If fuse F4 continuously burns, diode D2 is likely defective.

**NOTE:** The solenoid may be the cause of a burnt fuse. If the solenoid test good, one of the accessory may be defective.

## D2 DIODE (starter solenoid)

### Diode Test

Remove diode and lay down on a non-metallic table.

Set multimeter as shown.

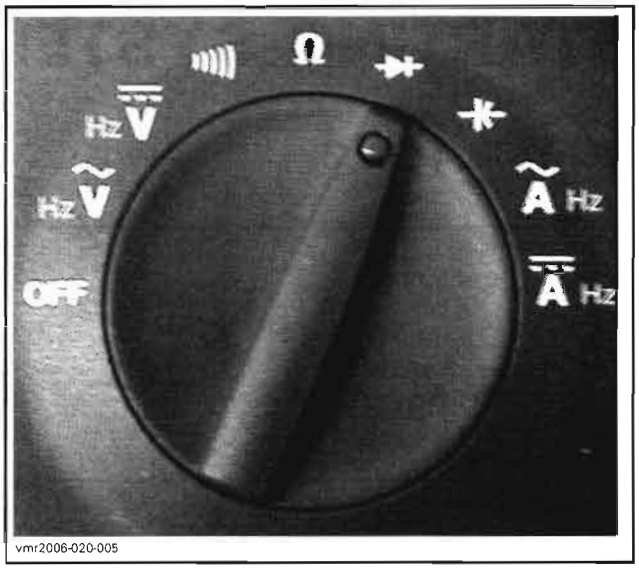


vmr2006-020-005

Probe diode paying attention to proper polarity.

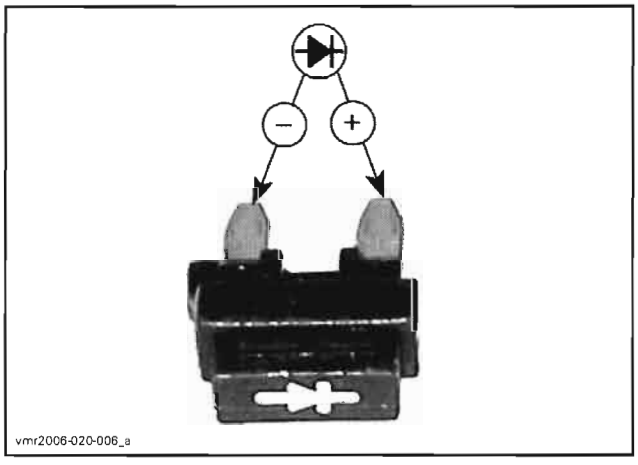


vmr2006-020-006_a

*MUST BE OPEN CIRCUIT*

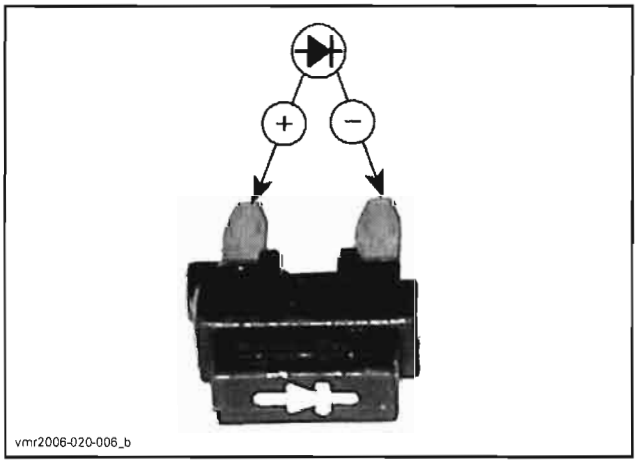


vmr2006-020-006_b

*MUST BE AROUND 0.5 V*

If diode fail any test, replace it.

## Diode Installation

Pay attention to the installation direction to allow proper operation.

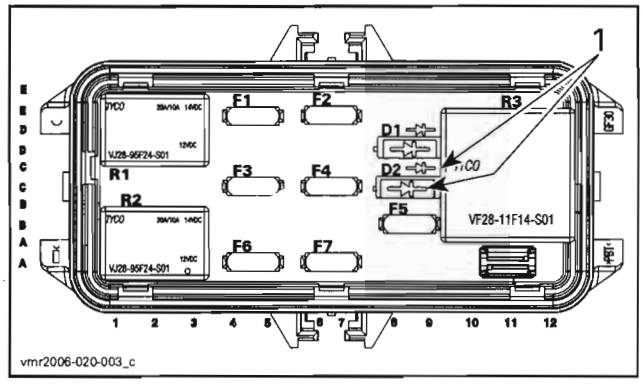


*1. Position symbol on diode in same direction as symbol on fuse holder*

# START BUTTON

## Quick Test

When engine does not crank, here is a quick tip to see if start button works:

- Set engine run/stop switch in RUN position.
- Turn ignition switch on. Wait approx. 5 seconds so that fuel pump stops.
- Press start button. You should hear fuel pump run for approximately 5 seconds. If so, the start button is working.
- If start button does not work, proceed with the tests below.
- If start button is working, depress brake pedal and try start button again.
- If engine starts, check the gearbox position sensor (GBPS). Refer to *GEARBOX*.
- If engine does not start, check the other components of the starting system.

## Test with B.U.D.S.

Use the vehicle communication kit (VCK) with the B.U.D.S. software. Use the **Monitoring** tab. Press the vehicle's start button and look at the **Start button** LED.

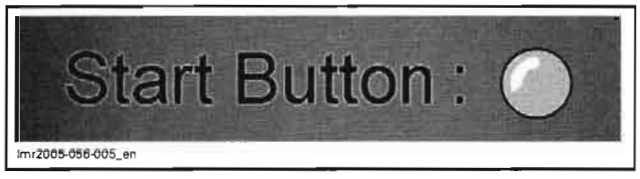


It should turn on, indicating the starting system is working on the input side of the starting system (start button, ECM and wiring).

If it turns on, you are knowing now the problem is on the output side of the starting system (ECM output signal to starting solenoid, wiring harness going to the solenoid and starter motor).

If it does not turn on, check the start button as follows.

## Start Button Resistance Test

Remove center panel and dashboard. Refer to *BODY*.

Using a multimeter, measure the resistance between the following wires.

| POSITION | MULTIFUNCTION SWITCH CONNECTOR (MG2) PIN (start) | | RESISTANCE |
|---|---|---|---|
| Switch released | 1 | 6 | Infinite (0L) |
| Switch depressed and held | | | 0.6 Ω max. |

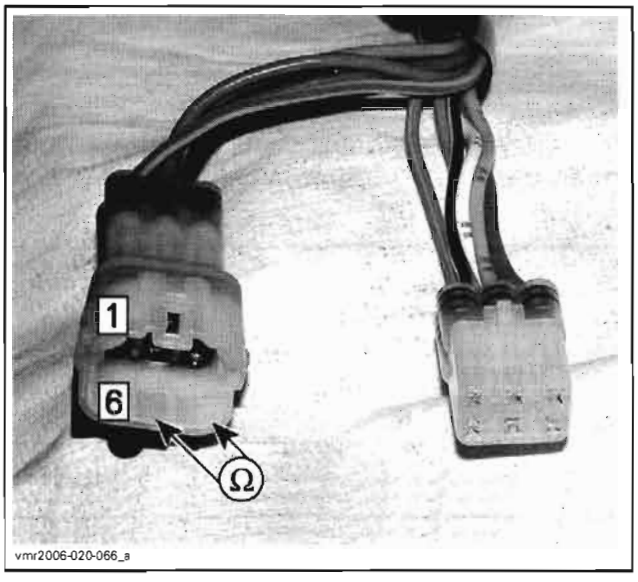


Replace multifunction switch if defective.

If switch tests good, check wiring as follows.

## Start Button Wiring Test

Disconnect ECM connector "B".

Test continuity of wiring between start button connector and ECM connector as follows.

| CONNECTOR | | RESISTANCE @ 20°C (68°F) |
|---|---|---|
| ECM | MULTIFUNCTION SWITCH (MG2) PIN (harness side) (start) | |
| PIN | | |
| B-21 | 1 | 1 Ω max. |

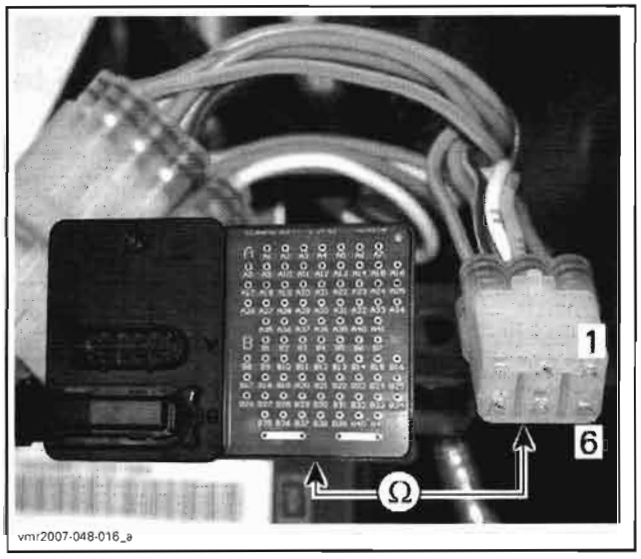


Reconnect ECM connector "B".

If switch tests good, test continuity of wiring between start button connector and battery ground as follows.

| CONNECTOR | | RESISTANCE @ 20°C (68°F) |
|---|---|---|
| MULTIFUNCTION SWITCH (MG2) (start) | BATTERY | |
| PIN | | |
| 6 | Battery ground | 1 Ω max. |

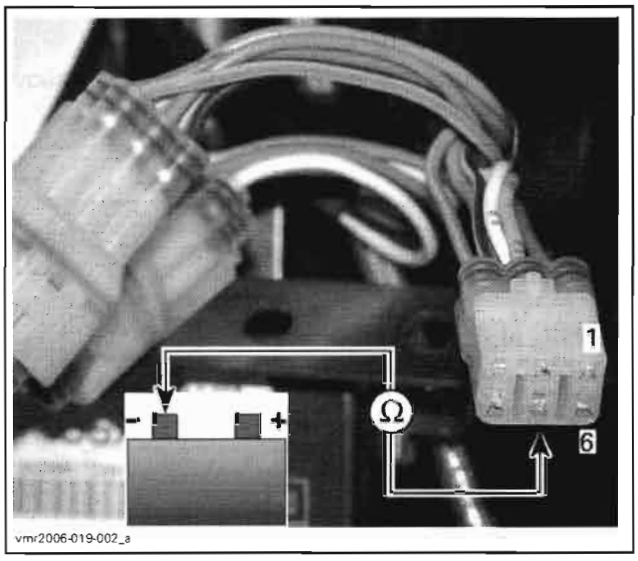


If wiring is faulty, repair/replace harness and/or connectors. If it tests good, check D2 diode. Refer to *D2 DIODE (STARTER SOLENOID)* above.

## STARTING SOLENOID

NOTE: Solenoid is located on the frame, besides battery rack.

Pull out cover.

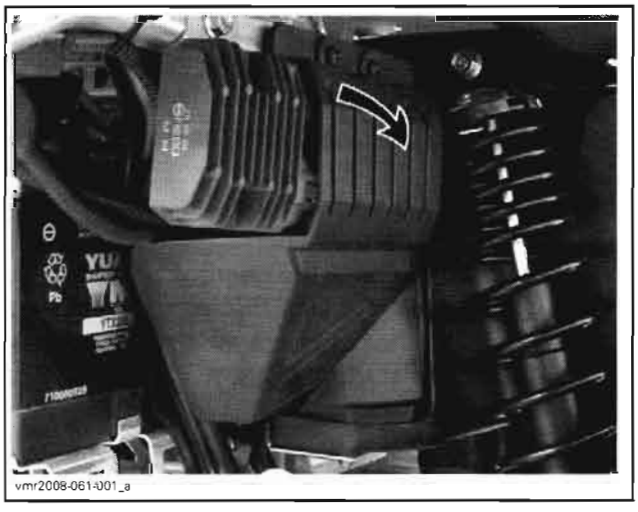

vmr2006-019-003_a

Inspect connections and clean as necessary.

## Solenoid Signal Test

Disconnect connector with ORANGE/GREEN wire from solenoid and check voltage as follows.

Turn ignition key ON and set engine run/stop switch to RUN.

Read voltage (do not press start button).

| SOLENOID CONNECTOR (harness side) | VOLTAGE |
|---|---|
| ORANGE/GREEN with battery ground | 12 Vdc |

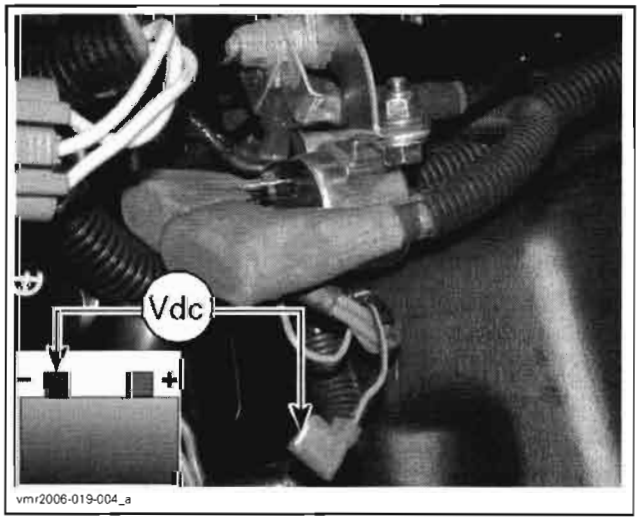

vmr2006-019-004_a

If voltage is not adequate, check accessories fuse (F4). If fuse is good, test continuity of wiring between solenoid and fuse F4.

If voltage is adequate, do the following test.

Reconnect ORANGE/GREEN terminal to solenoid.

Disconnect ORANGE/BROWN terminal from solenoid.

Connect a jumper wire between solenoid terminal and battery ground.

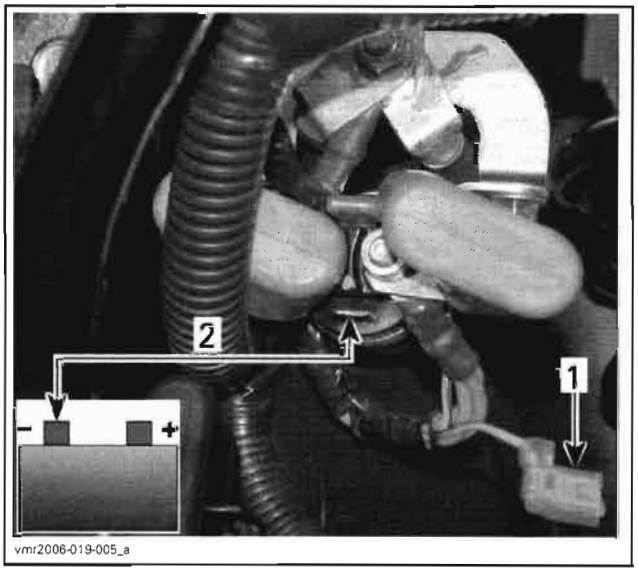

vmr2006-019-005_a

*1. Disconnect ORANGE/BROWN terminal*
*2. Jumper to battery ground*

If solenoid works, check wiring/connectors for continuity as follows.

| ECM CONNECTOR PIN | SOLENOID TERMINAL (harness side) | RESISTANCE @ 20°C (68°F) |
|---|---|---|
| B-31 | ORANGE/BROWN | Close to 0 Ω |

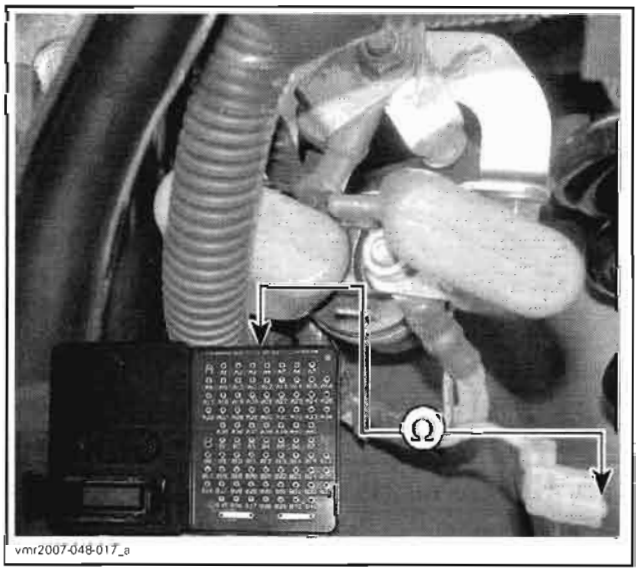

vmr2007-048-017_a

If solenoid does not work, test solenoid.

## Static Test: Continuity

Disconnect terminals from solenoid.

With a multimeter, check primary winding resistance as follows.

| SOLENOID TERMINAL | | MEASUREMENT |
|---|---|---|
| | | RESISTANCE @ 20°C (68°F) |
| A | B | Approximately 5 Ω |

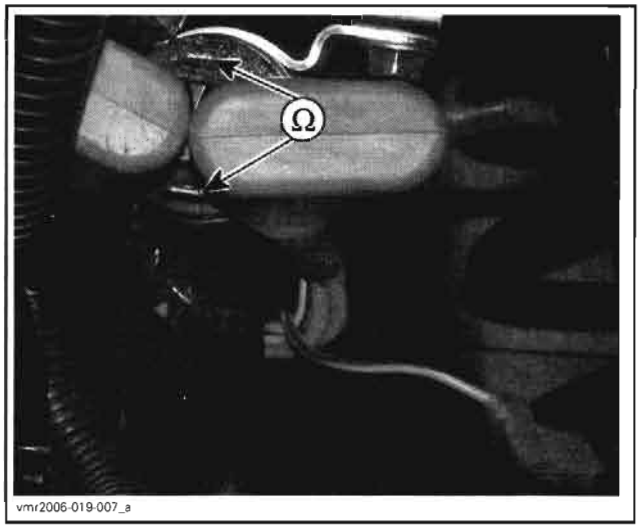

vmr2006-019-007_a

Check for stuck solenoid plunger.

| SOLENOID CONNECTOR | | MEASUREMENT |
|---|---|---|
| Battery post | Starter post | Open circuit |

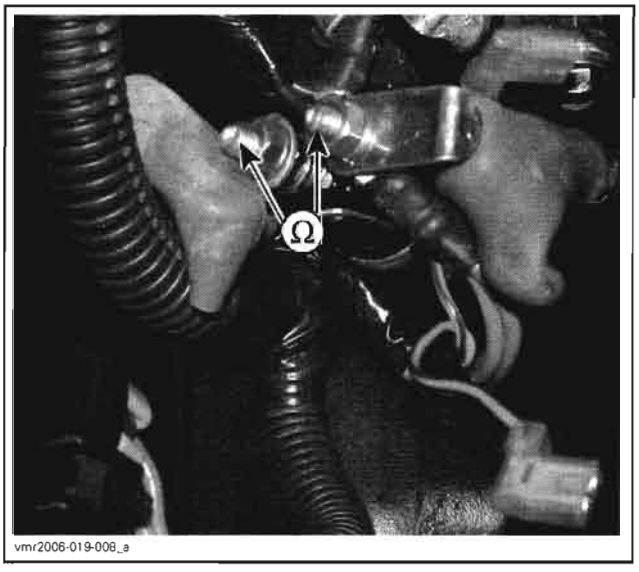

vmr2006-019-008_a

If any measurement is out of specification, replace solenoid.

### Dynamic Test

Turn ignition key ON and set engine run/stop switch to RUN.

For the following test, we do not want the engine to run. Set ECM in engine drowned mode as follows:

- Depress and hold throttle lever at full throttle position.
- Install a rubber band or some tape to maintain throttle lever in this position while testing.

Depress start button and while engine is cranking, measure the voltage drop as follows with a multimeter.

| SOLENOID CONNECTOR | | MEASUREMENT |
|---|---|---|
| Post coming from battery | Post going to starter | 0.2 Vdc max. |

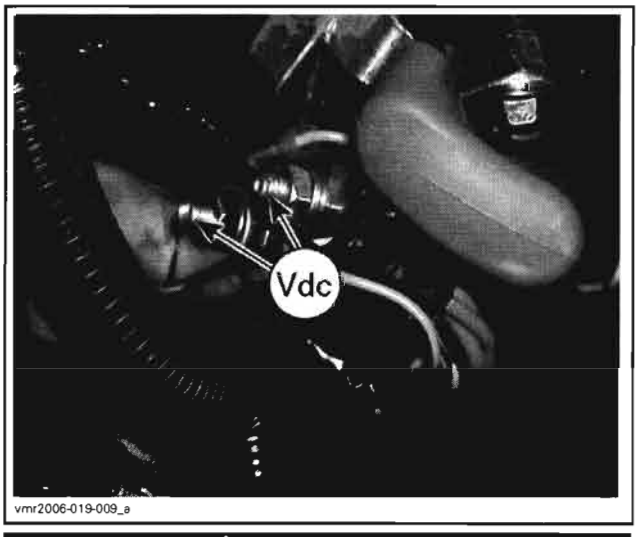

vmr2006-019-009_a

**⚠ WARNING**

**Remove any rubber band or tape from throttle lever to release it.**

If voltage is out of specification, replace solenoid.

If solenoid tests good, check the electric starter.

Reinstall cover.

## ELECTRIC STARTER

### Starter Test

Using booster cables, carefully supply current from the battery directly to the starter. Connect the BLACK (-) cable first. Then connect the remaining jumper cable from the battery then to the starter.

If starter turns ensure the cables/connections from solenoid to starter are in good condition.

If starter does not turn, replace starter.

## Starter Removal

Turn OFF ignition switch.

Disconnect BLACK (-) cable from battery.

**⚠ WARNING**

**Always disconnect BLACK (-) cable first and reconnect last.**

Remove the RH side cover and the engine cover (refer to *BODY*).

Disconnect RED (+) cable from starter.

Clean starter area.

Remove starter mount screw.

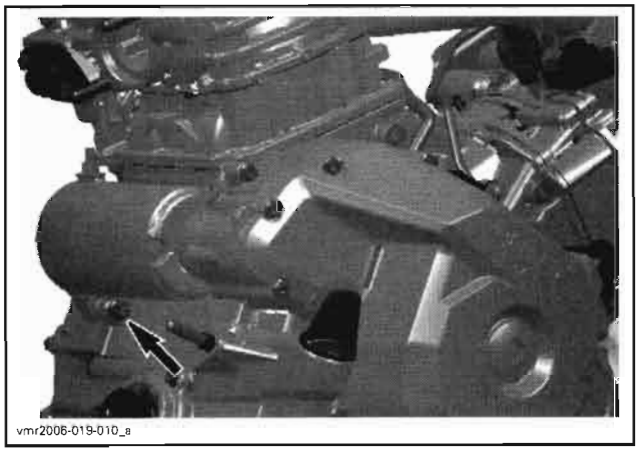
vmr2006-019-010_a

*SOME PARTS REMOVED FOR CLARITY PURPOSE ONLY*

Carefully pry starter out of its housing.

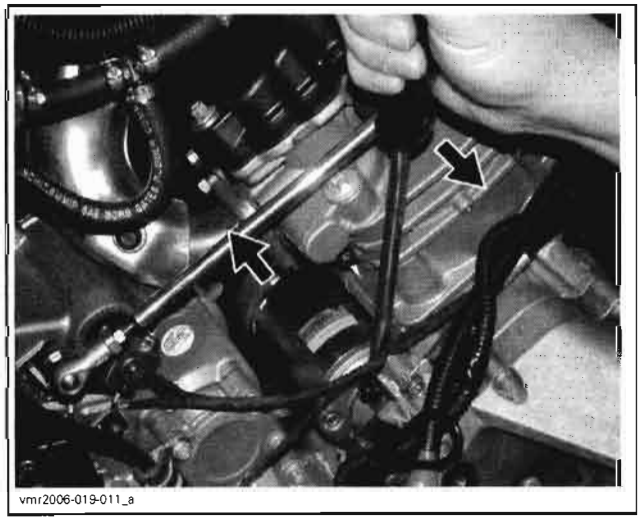
vmr2006-019-011_a

Pull starter out.

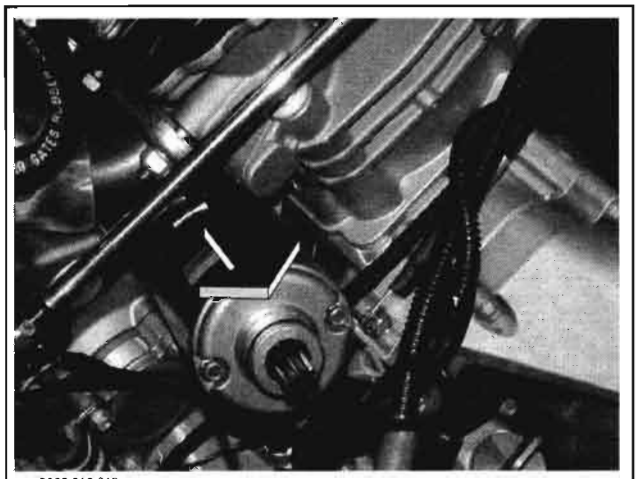
vmr2006-019-013_a

## Starter Installation

Installation is the reverse of removal procedure. However, pay particular attention to the following.

Make sure that starter and engine mating surfaces are free of debris. Serious problem may arise if the starter is not properly aligned.

Bring starter close to its location. Rotate it so that its mounting ear allows installation in engine housing. Push in place and align mounting ear to install screw.

Torque starter screw to 25 N•m (18 lbf•ft).

Connect the RED (+) cable to the starter and torque nut to 6 N•m (53 lbf•**in**). Apply dielectric grease (P/N 293 550 004) on terminal and nut.

First connect RED (+) cable to battery then connect the BLACK (-) cable.

**⚠ WARNING**

**Always connect RED (+) cable first then BLACK (-) cable last. Whenever connecting the RED (+) cable to the starter motor, make sure the battery cables are disconnected to prevent electric shock.**

Test starter operation.

# DIGITALLY ENCODED SECURITY SYSTEM (DESS)

## GENERAL

**NOTE:** It is a good practice to check for fault codes using B.U.D.S. software as a first troubleshooting step. Refer to *EMS DIAGNOSTIC*.

The ignition key contains a ROM chip with a unique digital code that is the equivalent of a unique teeth pattern on a conventional key.

When the ignition key is turned ON, the ECM is powered up as well as the multifunction speedometer and the accessories. Then, the ECM reads the ignition key and, if it is not recognized, no engine starting will be possible.

**NOTE:** When a key is not recognized by the ECM, INVALID KEY will be displayed in the multifunction speedometer.

To work on a particular DESS-equipped vehicle, the ignition key must have been programmed first.

**NOTE:** All ignition keys have the same teeth pattern. Therefore, they can be used and turned in the switch of any DESS-equipped vehicle. However, unless the DESS system recognizes (in the ECM) a valid programmed key, the engine starting will not be allowed.

**NOTE:** Actually, it is the memory of the ECM that is programmed to recognize the digital code of the ignition key.

The system is quite flexible. Up to 8 ignition keys may be programmed in the memory of the ECM. They can also be erased individually or all at once.

Note that the DESS circuitry is already activated on all new ECM.

## DESS KEY PROGRAMMING

Use the latest B.U.D.S. software available from BOSSWeb. Refer to *COMMUNICATION TOOLS AND B.U.D.S. SOFTWARE* for proper connection instructions.

The B.U.D.S. software is designed to allow, among other things, the programming of ignition key(s) and entering customer information.

For more information pertaining to the use of the software B.U.D.S., use its help which contains detailed information on its functions.

**⚠ WARNING**

**If the computer you are using is connected to the 110 Vac power outlet, there is a potential risk of electrocution when working in contact with water. Be careful not to touch water while working with the VCK.**

Connect the MPI or the MPI-2 interface as described in *COMMUNICATION TOOLS AND B.U.D.S. SOFTWARE*.

Install key in ignition switch and turn it to ON.

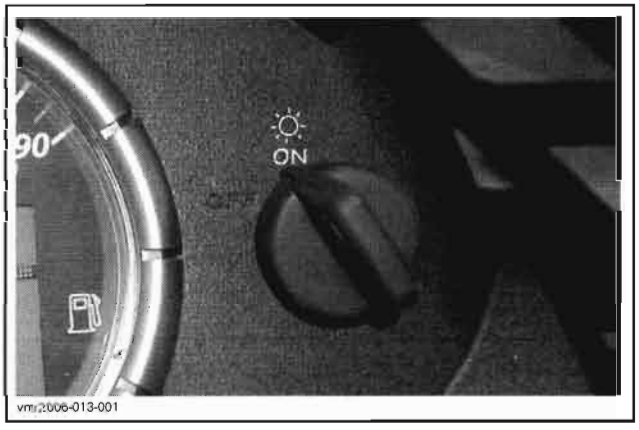


Ensure engine run/stop switch is in RUN position.

*1. Run*

Read ECM using **Read Data** button.

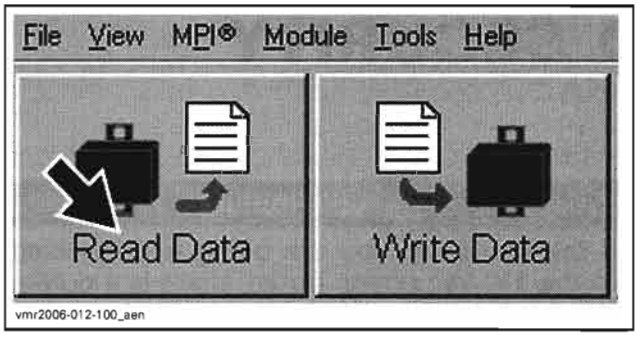


Turn ignition key OFF and remove key.

Install the new key to be programmed.

Turn ignition key ON.

Click on **Keys** tab.

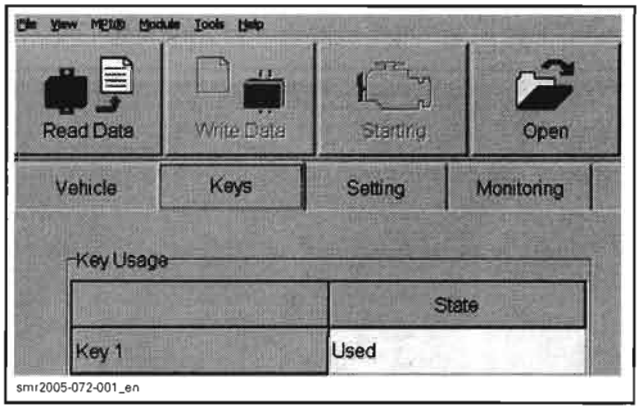


Click on ADD KEY button on bottom of screen.

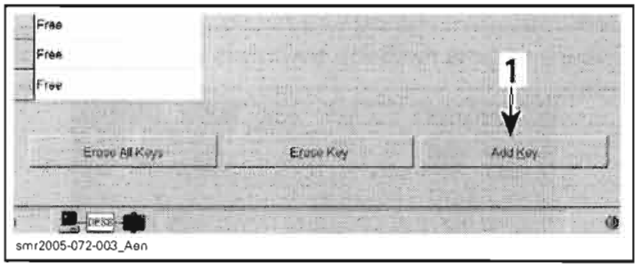


*1. Click on this tab*

A new key is now saved in the computer.

**NOTE:** To program other key(s), install a new key in ignition switch, turn it ON and click again on **Add Key** tab.

Ensure to save new data in ECM using **Write Data** button.

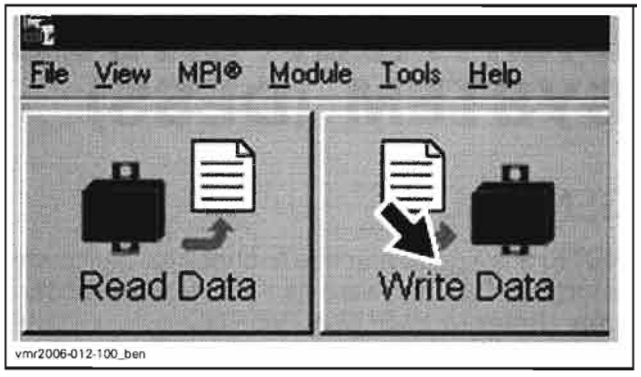


## TROUBLESHOOTING

If DESS key is not recognized by the ECM, key is defective or there is a wiring problem, CHECK ENGINE light will turn on and a message will be displayed in the multifunction speedometer.

Ensure DESS wiring is not reverted (BLACK/GREEN and ORANGE/RED).

To test wiring and ignition switch, refer to *IGNITION SYSTEM* section.

# LIGHTS, GAUGE AND ACCESSORIES

## SERVICE TOOLS

| Description | Part Number | Page |
|---|---|---|
| Fluke 111 multimeter | 529 035 868 | 263–265 |
| Back probe test wires | 529 036 063 | 264 |

## GENERAL

NOTE: For a complete overview of the vehicle electrical system, refer to *ENGINE MANAGEMENT.*

**⚠ WARNING**

**It is recommended to always disconnect the battery when replacing any electric or electronic parts. Always disconnect battery exactly in the specified order, BLACK (-) cable first. Do not place tools on battery.**
**Clean threads before applying a threadlocker. Refer to *SELF-LOCKING FASTENERS* and *LOCTITE APPLICATION* at the beginning of this manual for complete procedure.**
**During assembly/installation, use the torque values and service products as in the exploded views. Torque wrench tightening specifications must strictly be adhered to. Locking devices (e.g.: locking tabs, elastic stop nuts, self-locking fasteners, etc.) must be replaced with new ones.**

### Diagnostic

The following gives general electrical-related problems. For specific system-related problems, refer to proper system section.

It is possible that a component seems to operate in static condition but in fact, it is defective. In this case, the best way to solve this problem is to remove the original part and replace it with a known good component.

IMPORTANT: When solving an electrical problem, the first thing to do is to check battery condition as well as its cables and connections. Also ensure the ignition switch is turned on and engine run/stop switch is set to RUN. Check solidity (close to battery) and related-circuit fuse condition with an ohmmeter (visual inspection could lead to false results). Also visually examine harness and connections.

IMPORTANT: In an usual electric circuit, the battery supplies a switch which then supplies the electric component. Therefore the switch opens and closes the positive side of the circuit. In circuits controlled by the ECM, the battery supplies the electric component and the ECM works as a switch to complete the circuit to the ground. Take this into account when troubleshooting the electrical system.

Pay attention to ground wires.

#### Checking for Shorts Between 2 Wires

When checking continuity of a wire in a circuit, wires should be checked for short circuit as follows.

Make sure to isolate circuit by unplugging connectors.

Let's suppose that the circuit to be checked has a RED and a BLACK wire. Using an ohmmeter, measure the resistance between the RED and the BLACK wire. The resistance should be infinite (0L). Otherwise, there is a short circuit between both wires. We must therefore identify and correct the fault.

#### Recommended Tools

For best results, use the Fluke 111 multimeter (P/N 529 035 868).

529 035 868

To easily probe wire terminals through the back of their connectors, Back probe test wires (P/N 529 036 063) can be used.

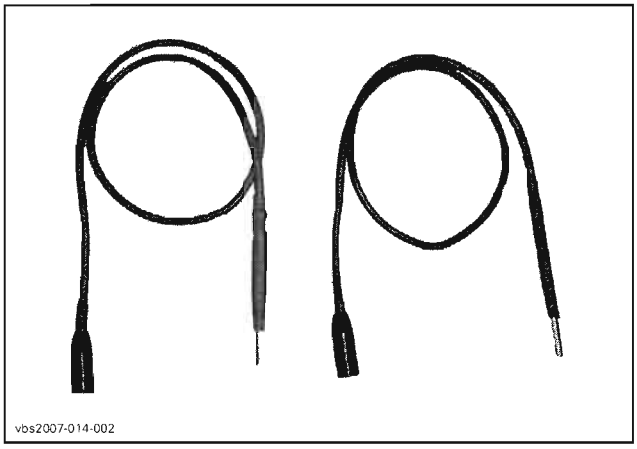
vbs2007-014-002

They can be inserted at the end of the standard probes of the Fluke 111 multimeter (P/N 529 035 868).

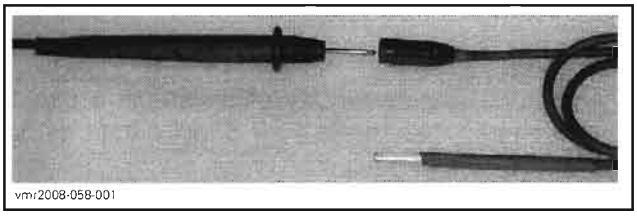
vmr2008-058-001

## Electrical Connectors

Pay particular attention to ensure that pins are not out of their connectors or damaged. The troubleshooting procedures cover problems not resulting from one of these causes.

**CAUTION:** Ensure all terminals are properly crimped on wires and connector housings are properly fastened. replacing any electric or electronic part(s), always check electrical connections. Make sure that they are tight and they make good contact and are corrosion-free. The voltage and current might be too weak to go through dirty wire pins. Check the posts for signs of moisture, corrosion or if they look dull. Clean pins properly and then coat them with silicon-based dielectric grease or other appropriate lubricant (except if otherwise specified) when reassembling them. See connectors information in *ELECTRICAL CONNECTORS*.

# PROCEDURES

## FUSES

If a fuse is damaged, replace it with one of the same rating.

**CAUTION:** Do not use a higher rated fuse as this can cause severe damage.

Fuses are located in the front service compartment and at the back near battery (under cover).

### Fuses in Front Service Compartment

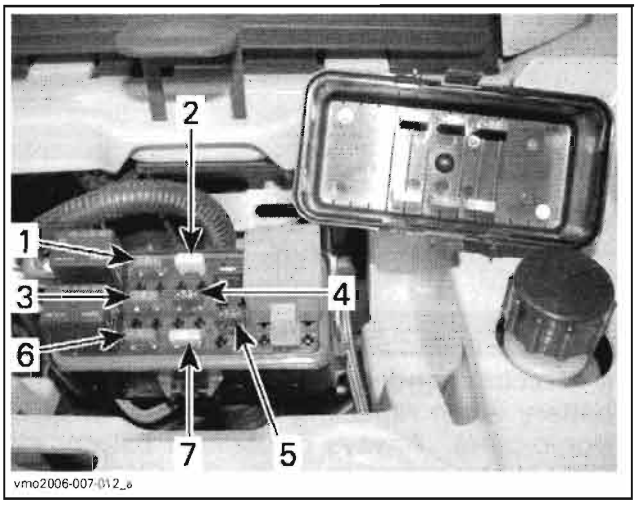

vmo2006-007-012_a

*FRONT — FUSES LOCATION*
1. *(F1) Ignition coils*
2. *(F2) Cooling fan*
3. *(F3) Fuel injectors*
4. *(F4) Accessories*
5. *(F5) Fuel pump*
6. *(F6) Engine Control Module (ECM)*
7. *(F7) Accessories*

NOTE: A short circuited D5 or D6 diode will cause fuse F7 to burn. Refer to *D5 AND D6 DIODES (WINCH RELAY)* further in this section.

### Fuses located at the Rear

Remove cover.

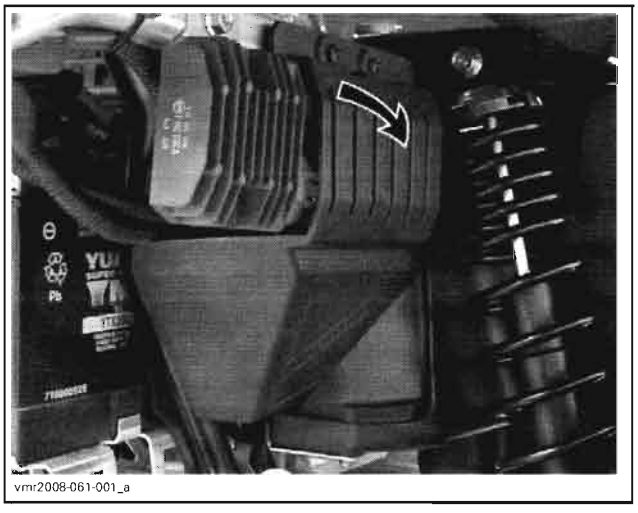
vmr2008-061-001_a

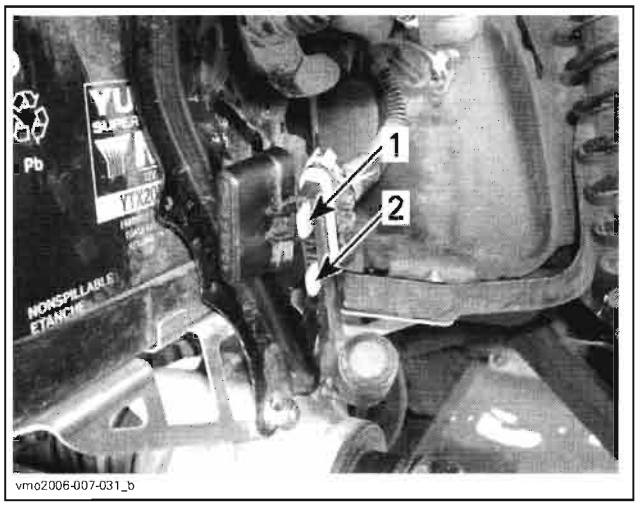


*REAR — FUSES LOCATION*
*1. (F9) Accessories*
*2. (F8) Main*

# ACCESSORY RELAY (R3)

NOTE: Relay may be inverted by 180° at installation and it will work correctly. Ensure to align tabs of relay with terminals of fuse holder at installation.

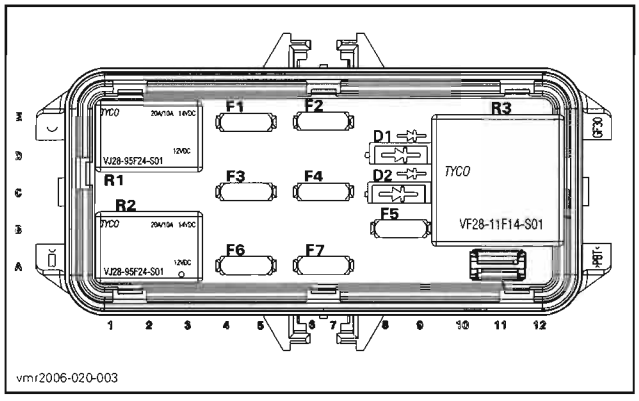


*R3: Accessory relay*

The easiest way to check a relay is to remove it and bypass it with a jumper. If the components then work, test relay. If it tested good, check wiring/connectors. See illustration to find where to bypass the relay.

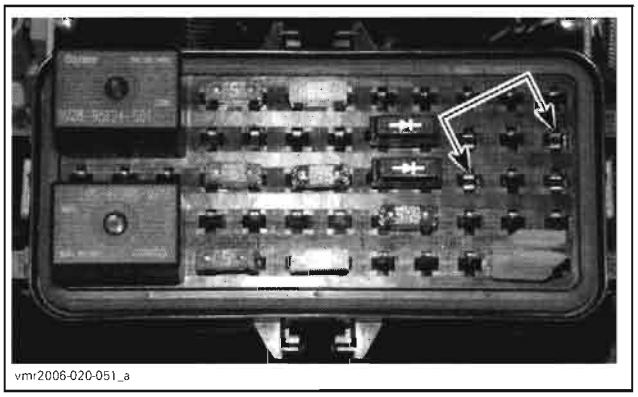


*RELAY R3 (ACCESSORIES)*

## Relay Continuity Test

Remove relay.

Use the Fluke 111 multimeter (P/N 529 035 868), and select the Ω position.

Probe relay as follows.

| TERMINAL | | RESISTANCE |
|---|---|---|
| 30 | 87 | Open circuit (OL) |

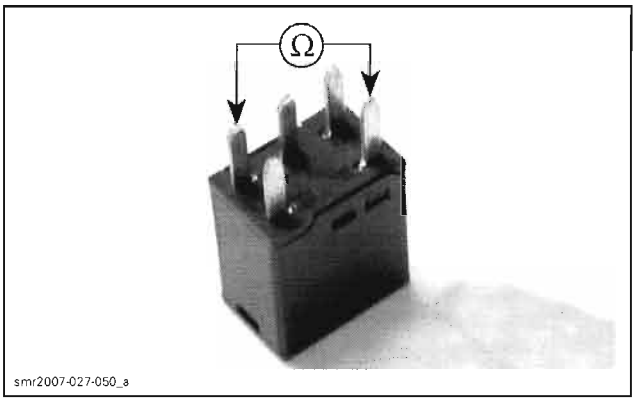


Connect battery as shown and probe relay again as follows.

| TERMINAL | | RESISTANCE |
|---|---|---|
| 30 | 87 | 0.5 Ω max. (continuity) |

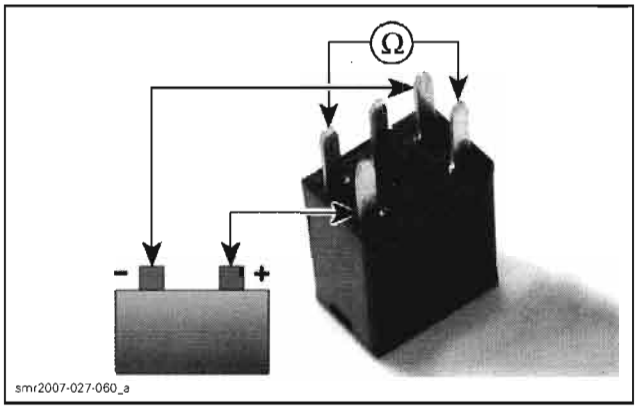


If relay failed any test, replace it.

# MULTIFUNCTION GAUGE

## Unit Selection (MPH vs km/h)

The multifunction gauges are factory preset in Imperial units but it is possible to change them to Metric units

Use B.U.D.S. software. Go in **Setting** tab and use **Cluster Scale**.

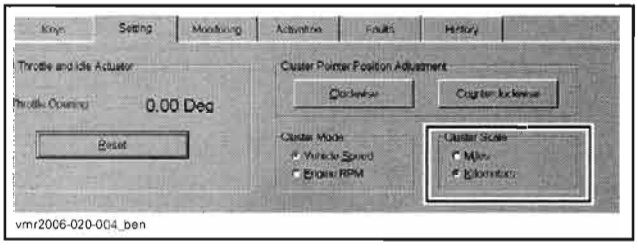


***Outlander 500/650/800 Series***

1. *Unit selection*

## Gauge Operation

***Outlander 500/650/800 Series***

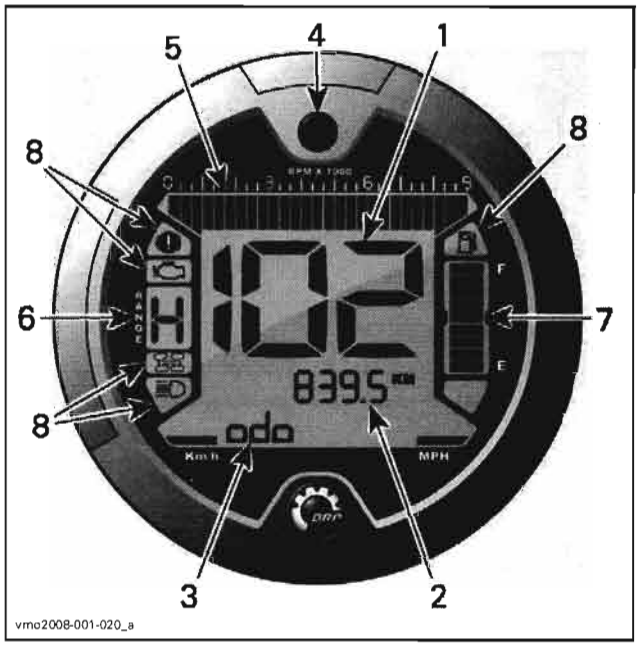


1. *Display 1 (speedometer)*
2. *Display 2 (mode)*
3. *Display 3 (mode/message)*
4. *Display selector button*
5. *Tachometer*
6. *Transmission position display*
7. *Fuel level display*
8. *Indicator lamps*

### Display 1 (Speedometer)

This display will show vehicle speed.

1. *Vehicle speed*
2. *Unit selection*

### Display 2 (mode)

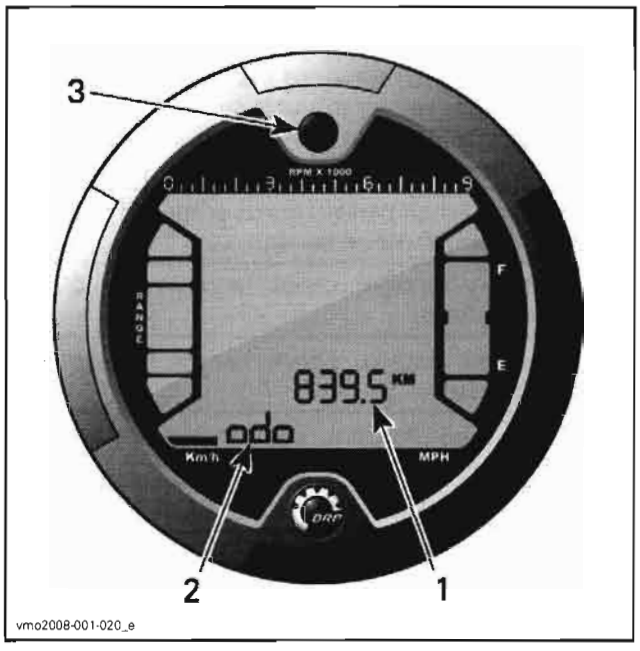


1. *Display 2 (mode)*
2. *Display 3 (mode/message)*
3. *Selector button*

By pressing the selector button, the following modes can be displayed:

- odometer (ODO)
- trip meter (TRIP)
- hour meter (TRIP TIME)
- vehicle hour meter (ENGINE HOURS)
- engine revolutions per minute (RPM).

### Display 3 (mode/message)

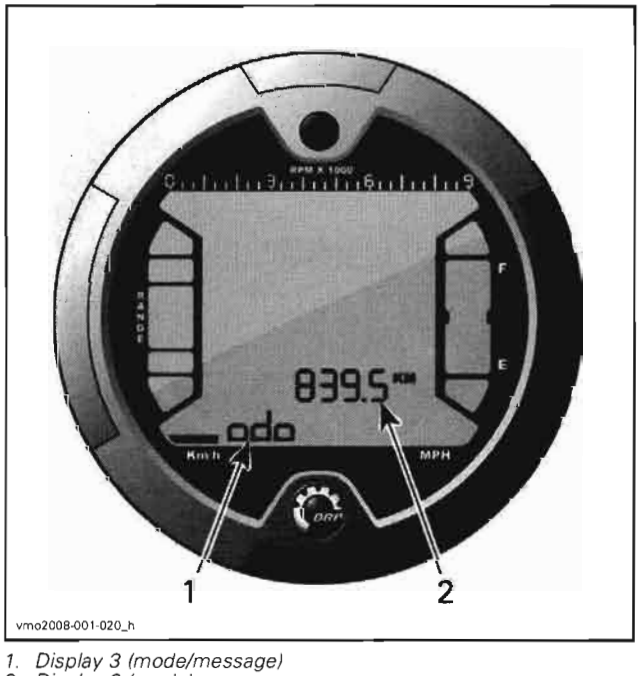


1. *Display 3 (mode/message)*
2. *Display 2 (mode)*

This display will show either an abbreviation of the mode selected in display 2 or will communicate important messages to the operator if an anomaly occurs.

Abbreviation Mode:

- ODO (odometer)
- TRIP (trip meter)
- TRIP TIME (hour meter)
- ENGINE HOURS (vehicle hour meter)
- RPM (engine revolutions per minute).

Message Mode:

| MESSAGE | PILOT LAMP(S) ON | DESCRIPTION |
|---|---|---|
| INVALID KEY | Check engine | Indicates that you have used the wrong ignition key, use the proper key for this vehicle.<br>It is also possible that the ignition key has a bad contact, remove and clean key. |
| PARK BRAKE | Parking brake | Is displayed when parking brake is applied for more than 15 seconds (while riding). |
| LO BATT | Check engine | Low battery voltage, check battery voltage and charging system. |
| HI BATT | Check engine | High battery voltage, check battery voltage and charging system. |
| LOW OIL (1) | Check engine | Engine low oil pressure, stop engine immediately and check oil level. |
| HI TEMP (2) | Check engine | Engine is overheating, refer to *COOLING SYSTEM.* |
| LIMP HOME | Check engine | Serious fault detected by the engine management that can change the normal operation of the engine. Check engine indicator lamp will also blink, refer to *ENGINE MANAGEMENT* for more details. |
| CHECK ENGINE | Check engine | Engine management fault. Check engine indicator lamp will also be ON, refer to *ENGINE MANAGEMENT* for more details. |
| MAINTENANCE SOON | Check engine | Periodic maintenance required.<br>**NOTE:** To reset message, use B.U.D.S. software and click **Reset Service** button in **Vehicle** tab. |
| NO ECM COMMUNICATION | Check engine | Communication error between multifunction gauge and engine control module (ECM). Refer to *ENGINE MANAGEMENT.* |

**CAUTION:** (1) If the light does not turn off right after engine starting, stop engine. Check engine oil level. Refill if necessary. If the oil level is good, see *LUBRICATION.*

**CAUTION:** (2) If the light does not turn off right after engine starting, stop engine. See *COOLING SYSTEM.*

### Display Selector Button

Button used to navigate between modes or to reset data depending on the feature selected.

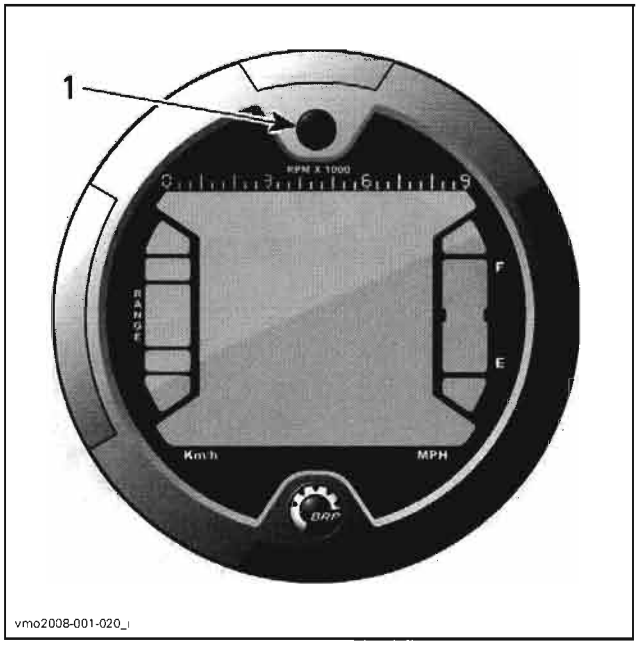


*1. Selector button*

### Tachometer

Measures engine revolutions per minute (RPM). Multiply by 1000 to obtain the actual revolutions.

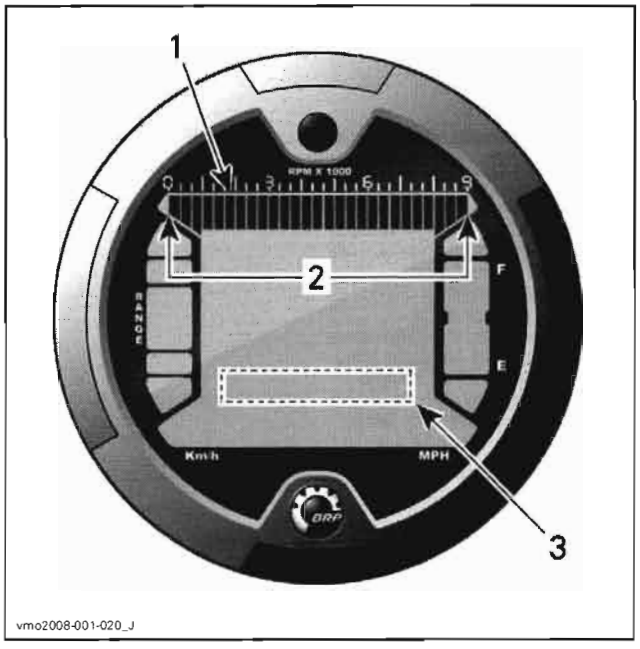


1. *Tachometer*
2. *Operating range*
3. *Tachometer via display 2 (mode)*

### Transmission Position Display

This display will show transmission position.

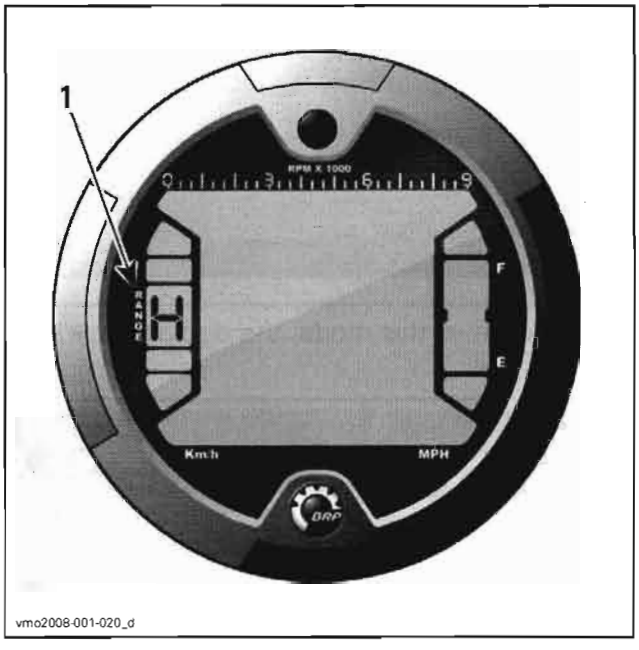


1. *Transmission position*

| DISPLAY | FUNCTION |
|---|---|
| P | Park |
| R | Reverse |
| N | Neutral |
| H | High gear |
| L | Low gear |

**NOTE:** If the letter "E" is displayed in the transmission position display, it means that there is a electrical communication error. Refer to *ENGINE MANAGEMENT*.

### Fuel Level Display

Bar gauge that continuously indicates the amount of fuel left in the fuel tank.

Also, an indicator lamp will indicate a low-fuel condition as only one bar is displayed.

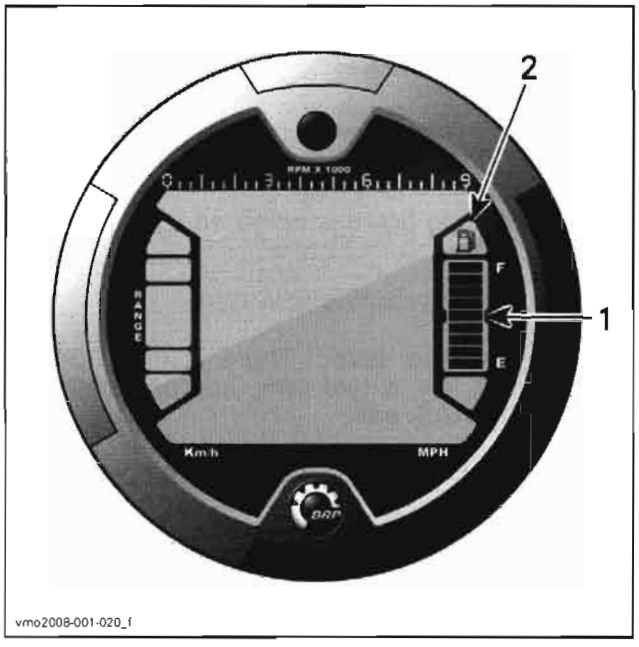


1. *Fuel level display*
2. *Low fuel indicator lamp*

## Indicator Lamps

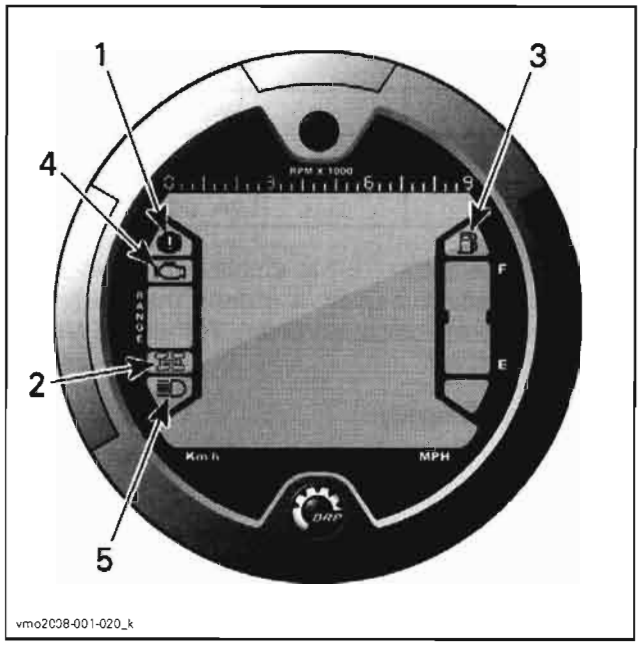


1. *Parking brake indicator lamp*
2. *4WD indicator lamp*
3. *Low fuel level indicator lamp*
4. *Check engine indicator lamp*
5. *High beam indicator lamp*

Parking brake is activated.

4WD system is activated.

Low fuel level. There is only 30% of fuel left in fuel tank, approximately 6 L (1.6 U.S. gal).

Check engine/DESS system operation.

High headlamp beam position selected.

### *Renegade Models*

This vehicle is equipped with an electronic multi-function gauge.

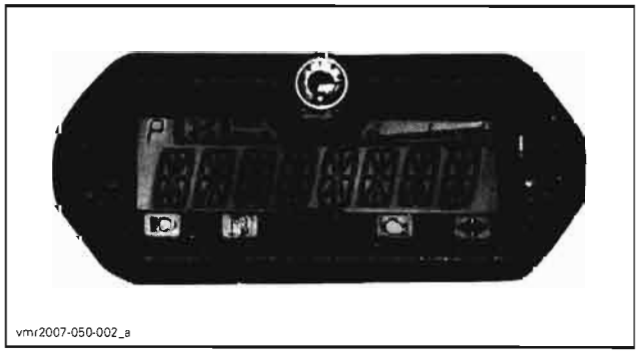


It is backlit every time the ignition switch is turned ON and engine run/stop switch is set to RUN.

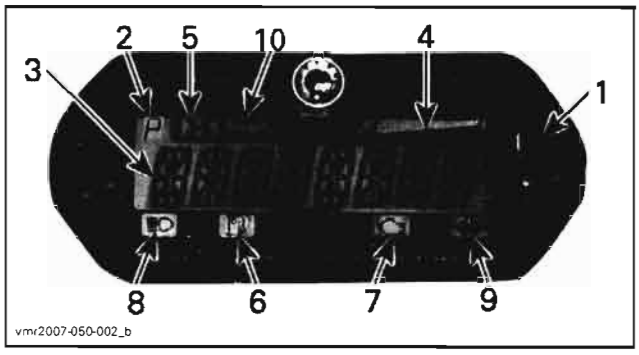


1. *Multifunction display selector button*
2. *Transmission position display*
3. *Multifunction display*
4. *Fuel level display*
5. *4WD indicator lamp*
6. *Low fuel level indicator lamp*
7. *Check engine indicator lamp*
8. *High beam indicator lamp*
9. *Flasher/hazard signal indicator lamp (Europe only)*
10. *MPH, Km/h indicator lamp*

### Multifunction Display (Normal Display Mode)

After vehicle startup, the normal display mode shows either:

- vehicle speed
- engine revolution per minute (RPM)
- both parameters simultaneously (combined mode).

Speed Mode: in this mode, the display shows the speed of the vehicle either in km/h or in MPH.

RPM Mode: in this mode, the display shows the engine RPM.

Combined Mode: in this mode, the display shows the speed of the vehicle and the engine RPM.

vdd2008-001-085

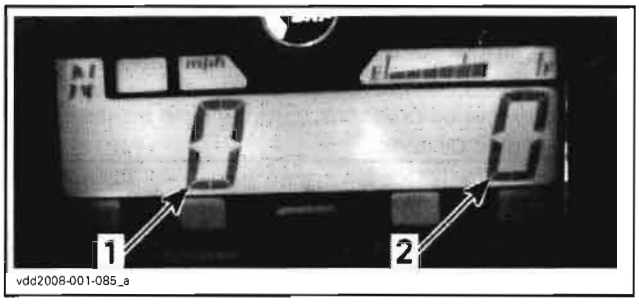

vdd2008-001-085_a

1. *Vehicle speed*
2. *Engine RPM*

Mode Selection: to change from one mode to the other, proceed as follows:

1. Turn ignition key to ON. Wait until 'greeting' is finished.
2. Press and release selector button once to display OD (odometer).

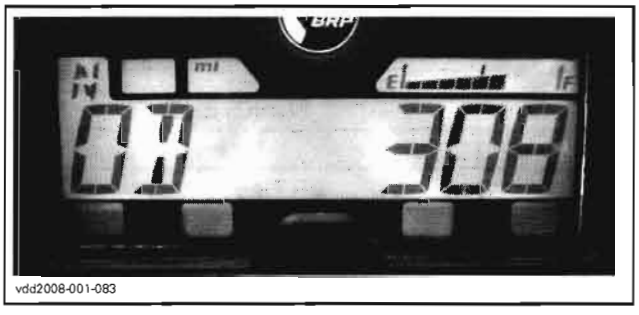
vdd2008-001-083

3. Press selector button and HOLD for 2 seconds. This will change the displayed mode to either Speed, RPM or Combined.
4. To select another mode, repeat steps 2 and 3 until you get the mode desired.

### Multifunction Display (temporary display mode)

Press and release selector button to change the normal display mode to the following temporary mode:

- odometer
- trip meter (resettable)
- hour meter (resettable)
- vehicle hour meter.

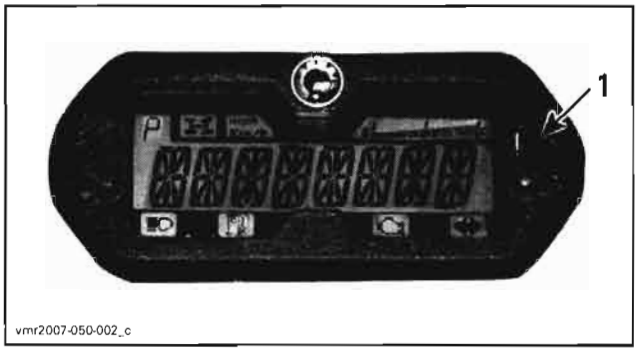

vmr2007-050-002_c

1. *Selector button*

The gauge will display the selected mode for 10 seconds then will return to the normal display mode.

While in a resettable mode, push and HOLD selector button for 2 seconds to reset it.

### Multifunction Display Codes/Messages

Fault Codes:

Fault codes (if so) can be displayed in the gauge. Refer to *ENGINE MANAGEMENT*.

Messages:

The following messages can also be viewed in the multifunction display:

| MESSAGE | DISPLAY FREQUENCY | CHECK ENGINE LAMP | DESCRIPTION |
|---|---|---|---|
| INVALID KEY | — | — | Indicates that you have used the wrong ignition key, use the proper key for this vehicle. It is also possible that the ignition key has a bad contact, remove and clean key. |
| BRAKE | — | — | Displayed whenever brake is used more than 15 seconds. |
| LO BATT | Every 5 seconds | ON | Low battery voltage. Check battery voltage and charging system. |
| HI BATT | Every 5 seconds | ON | High battery voltage. Check battery voltage and charging system. |
| LOW OIL (1) | Every 5 seconds | ON | Engine low oil pressure. Stop engine immediately and check oil level. |
| LOW FUEL | Every 5 seconds | — | Low fuel indicator lamp also turns on. Refer to *INDICATOR LAMPS*. |
| HI TEMP (2) | Every 5 seconds | ON | Engine is overheating. Refer to *COOLING SYSTEM*. |
| LIMP HOME | Every 5 seconds | Blinking | Serious fault on the engine that can change the normal operation of the engine. Refer to *ENGINE MANAGEMENT* for more details. |
| CHECK ENGINE | Every 5 seconds | ON | EMS fault. Refer to *ENGINE MANAGEMENT* for more details. |
| MAINTENANCE SOON | Every 30 minutes | ON | Periodic maintenance required. **NOTE:** To reset message, use B.U.D.S. software and click **Reset Service** button in **Vehicle** tab. |
| NO ECM COMMUNICATION | — | — | Communication error between gauge and engine control module (ECM). Refer to *ENGINE MANAGEMENT*. |

**CAUTION:** (1) If the light does not turn off right after engine starting, stop engine. Check engine oil level. Refill if necessary. Do not use the vehicle until repaired.

**CAUTION:** (2) If the light does not turn off right after engine starting, stop engine. Do not use the vehicle until repaired.

### Transmission Position Display

This display will show transmission position.

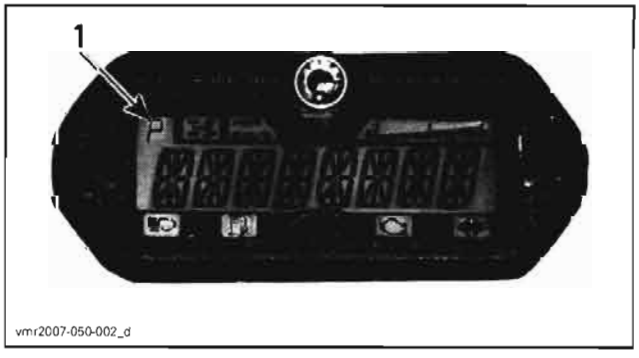


*1. Transmission position*

| DISPLAY | FUNCTION |
|---|---|
| P | Park |
| N | Neutral |
| R | Reverse |
| H | High gear |
| L | Low gear |

**NOTE:** If the letter "E" is displayed in the transmission position display, it means that there is a electrical communication error.

### Fuel Level Display

Bar gauge continuously indicates the amount of fuel in the fuel tank while riding.

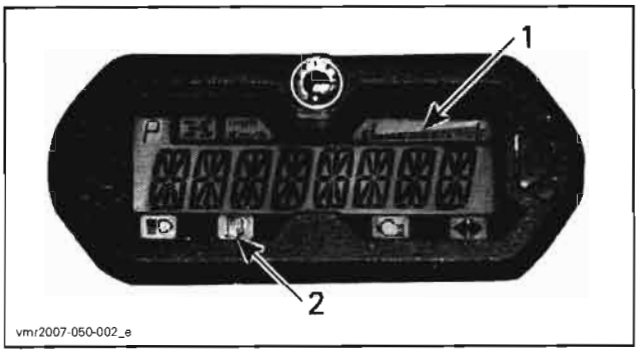


*1. Fuel level display*
*2. Low fuel indicator lamp*

## Indicator Lamps

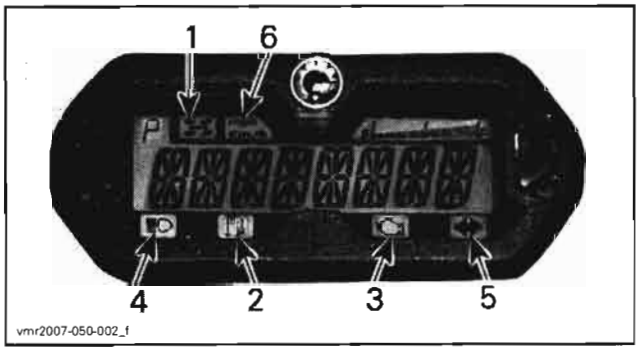


*1. 4WD indicator lamp*
*2. Low fuel level indicator lamp*
*3. Check engine indicator lamp*
*4. High beam indicator lamp*
*5. Flasher/Hazard signal indicator lamp (Europe only)*
*6. MPH or km/h indicator lamp*

When this indicator is ON, it indicates the 4WD system is activated.

When this indicator is ON, it indicates that there is only 30% of fuel left in fuel tank, approximately 6 L (1.6 U.S. gal).

When this indicator is ON, it indicates an engine fault code, look for message in multifunction display.
When this indicator blinks, it indicates that the LIMP HOME mode is activated, refer to *TROUBLESHOOTING* for more details.

When this indicator is ON, it indicates high intensity is selected on the headlamps and ignition key is in LIGHTS position.

When this indicator is blinking, it indicates the flasher/hazard is activated (Europe only).

***mph***
***Km/h*** The proper lamp turns on to indicate the unit the speedometer uses.

## Function Display Problems

When the functions do not display, check for fault code(s). Refer to *ENGINE MANAGEMENT* section. When a specific function does not work, proceed as follows.

### Fuel Level

As a quick test with B.U.D.S., go in **Activation** tab and activate fuel level display area.

If it does not work, check wiring/connectors and if they are good, try a new multifunction gauge.

If it works, check fuel level sender. Refer to procedure further in this section.

### Transmission Position Display

If the letter "E" is displayed in transmission position display, there is an electrical communication error. Refer to *GEARBOX AND 4X4 COUPLING UNIT*.

As a quick test with B.U.D.S., go in **Activation** tab and activate transmission position display area.

If it does not work, try a new multifunction gauge.

If it works, check gearbox switches. Refer to *GEARBOX AND 4X4 COUPLING UNIT*.

### 2/4WD Pilot Lamp

As a quick test with B.U.D.S., go in **Activation** tab and activate 2/4WD lamp area.

If it does not work, try a new multifunction gauge.

If it works, check gearbox switch. Refer to *GEARBOX AND 4X4 COUPLING UNIT*.

### HI Beam Pilot Lamp

As a quick test with B.U.D.S., go in **Activation** tab and activate HI beam lamp area.

If it does not work, try a new multifunction gauge.

If it works, check if headlamp work. If headlamp do not work, refer to *HEADLAMP*. If headlamp work, check wire/connectors between multifunction gauge and low/hi beam switch.

| GAUGE CONNECTOR | MULTIFUNCTION SWITCH CONNECTOR (MG2) | RESISTANCE |
|---|---|---|
| Pin 5 | Pin 5 | Close to 0 Ω |

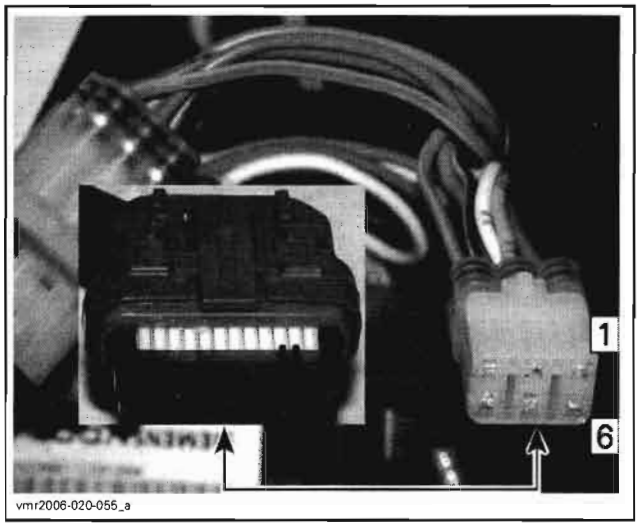


If wire is faulty, replace/repair.

## Multifunction Gauge Pinout

| FUNCTION | PIN |
|---|---|
| Power 12 Vdc | 17 |
| Ground | 20 |
| CAN line | 18 |
| CAN line | 19 |
| Fuel level gauge supply | 4 |
| Fuel level gauge ground | 21 |
| 2/4WD switch signal | 7 |
| HI beam signal | 5 |

## Voltage Test

| QUICK CHECK | |
|---|---|
| OBSERVATION | POSSIBLE CAUSE |
| Multifunction gauge does not turn on | Burnt fuse (F8) |
| | Faulty relay (main) |
| | Burnt fuse (F4) |
| | ECM not powered: – burnt fuse (F6) – defective diode (D1) – defective ECM |
| | Defective multifunction gauge |
| | Faulty multifunction switch or key |
| | Wiring/connectors |

Disconnect gauge connector. Turn ignition key ON and set engine run/stop switch to RUN. Read voltage from vehicle harness as follows.

| GAUGE CONNECTOR (harness side) | | VOLTAGE |
|---|---|---|
| Pin 17 | Pin 20 | Battery voltage |

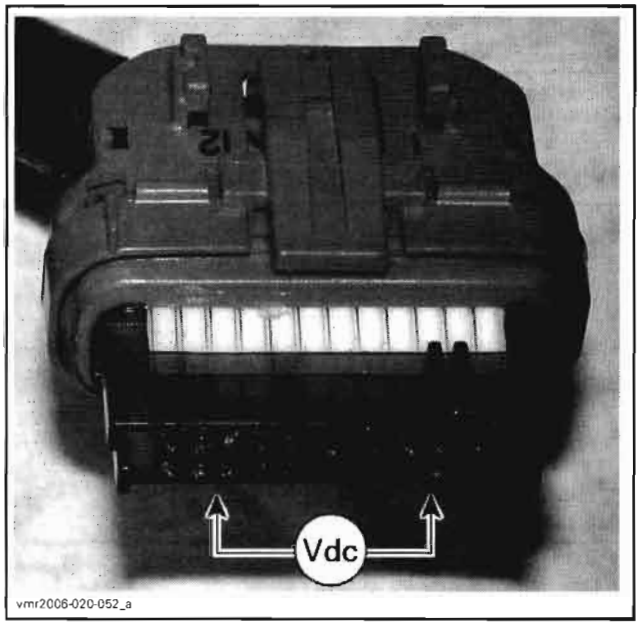


If there is no voltage, recheck voltage as follows.

| GAUGE CONNECTOR (harness side) | | VOLTAGE |
|---|---|---|
| Pin 17 | Battery ground | Battery voltage |

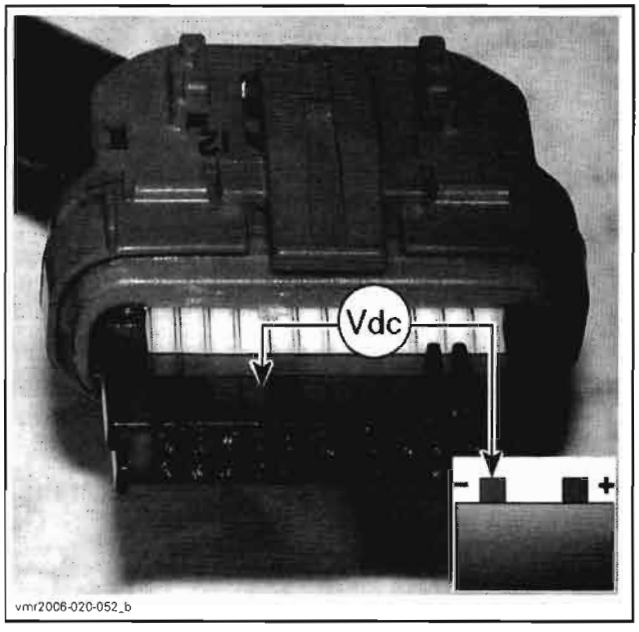


If voltage is not appropriate, check/repair wiring and/or connectors from battery.

If battery voltage is good, check ground circuit (pin 20) wiring/connector. If they test good, temporarily connect pin 20 to battery ground. If multifunction gauge turns on, try a new ECM.

When everything else has been tested and multifunction still does not turn on, try a new one.

## Multifunction Gauge Removal

### *Outlander 500/650/800 Series*

Remove center panel and dashboard. Refer to *BODY*.

Unplug gauge connector.

Locate locking tab then push edge of dashboard to release tab.

vmr2006-020-056_a

While holding tab, rotate gauge to unlock.

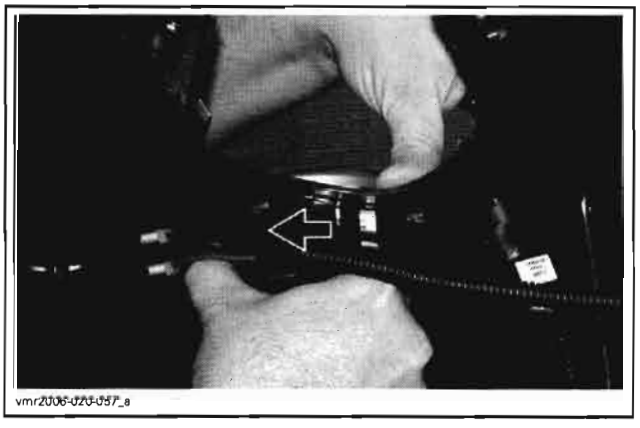
vmr2006-020-057_a

### *Renegade Models*

Remove dashboard. Refer to *BODY*.

Push gauge tabs while pulling it out.

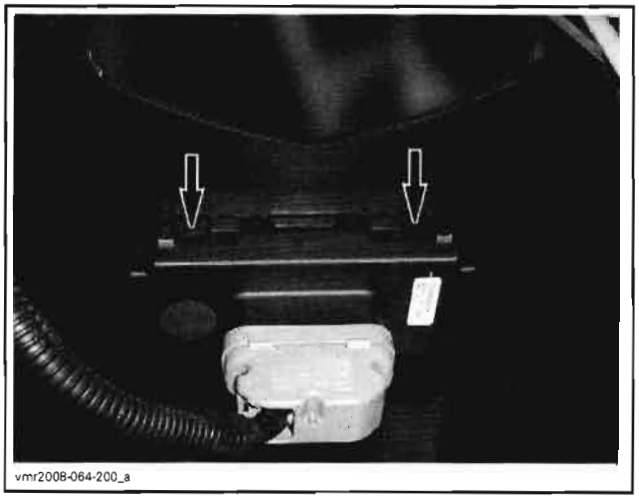
vmr2008-064-200_a

## Multifunction Gauge Installation

For the installation, reverse the removal procedure.

## New Multifunction Gauge Registration (coding)

Whenever multifunction gauge is replaced, it is required to use B.U.D.S. to register it in ECM. Simply click **Yes** when the following message appears.

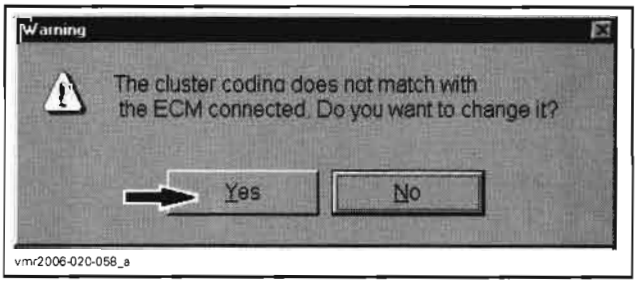

vmr2006-020-058_a

**IMPORTANT:** If a multifunction gauge from another vehicle model is installed and is not registered in ECM through B.U.D.S., **engine starting will not be allowed until gauge is registered with proper coding**.

## Country Selection

### *Renegade Models*

To enable flasher pilot lamp in gauge of European Community (CE) models, use B.U.D.S. software and set cluster country to Renegade CE under **Settings**.

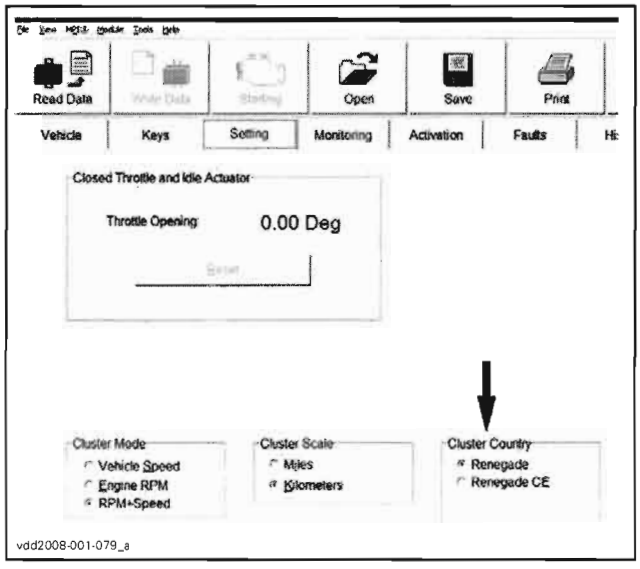


Outside Europe, select Renegade.

## VEHICLE SPEED SENSOR (VSS)

Locate VSS connector in gearbox area.

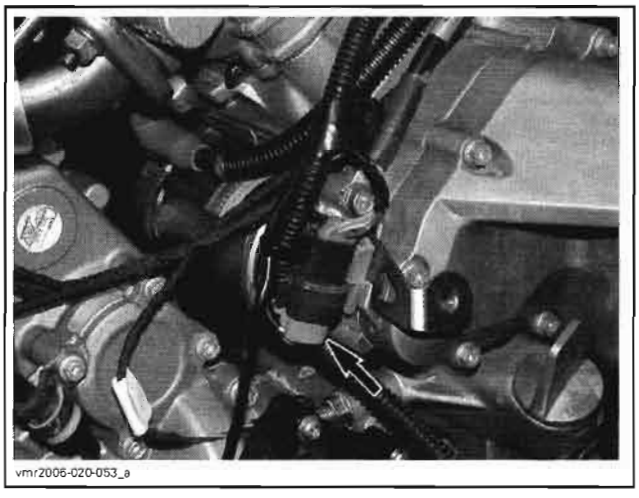


*TYPICAL — V810 ENGINE SHOWN*

Turn ignition key ON.

Set engine run/stop switch to RUN.

Use a multimeter and set it to Vdc.

Back-probe connector and read voltage as follows.

| SPEED SENSOR CONNECTOR (harness side) | | VOLTAGE |
|---|---|---|
| ORANGE/ GREEN | BROWN/ ORANGE | Battery voltage |

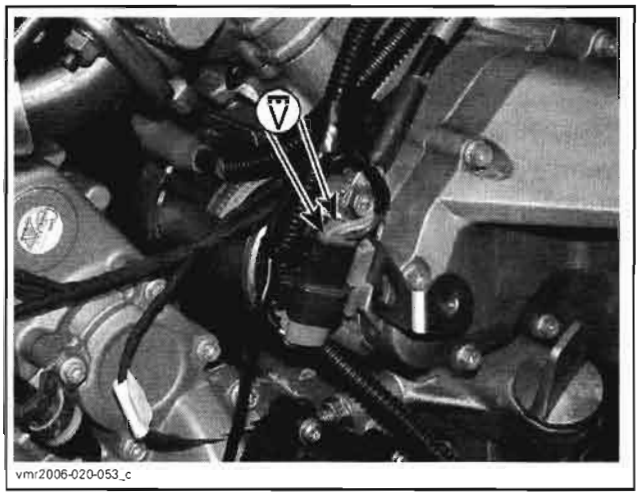


If voltage is not good, check/repair wiring/ connectors.

If voltage is good, do the following test.

Lift rear of vehicle so that rear wheels are off the ground.

Set transmission to 2WD and to Neutral.

Back-probe connector and read voltage while slowly rotating rear wheels with your hands.

| SPEED SENSOR CONNECTOR (harness side) | | VOLTAGE |
|---|---|---|
| ORANGE/ GREEN | PINK | Alternate reading of: battery voltage, approx. 0 Vdc, battery voltage and so on |

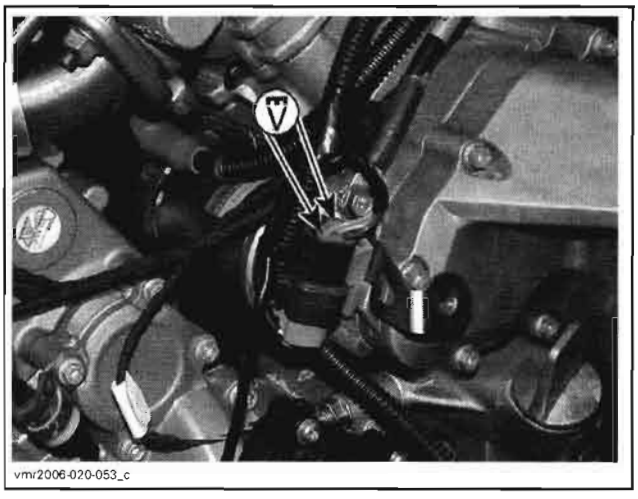


**NOTE:** Since we measure pulsating voltage, the numeric display will continuously change. The analog display may be easier to follow.

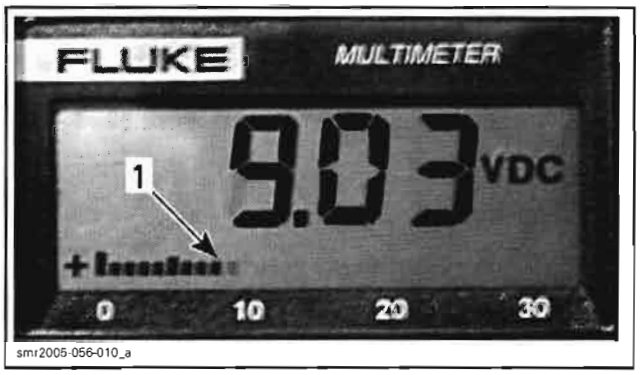


*1. Analog display*

If voltage is appropriate, check/repair wiring/connector between sensor and ECM. If it is good, try a new ECM.

If voltage is wrong, try a new sensor.

NOTE: Whenever the VSS is found defective, check diode D2. It could be the cause of the VSS failure.

Test diode D2 as explained in *STARTING SYSTEM* section.

## FUEL LEVEL SENDER

The fuel level sender is part of the fuel pump module mounted inside the fuel reservoir.

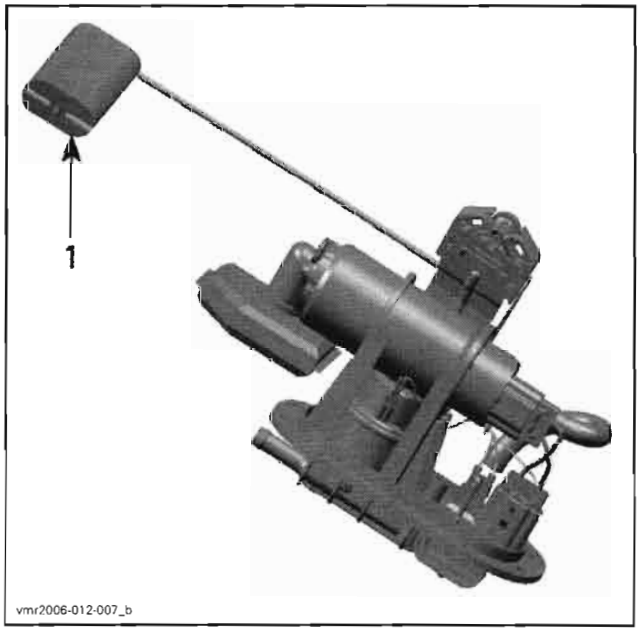


*FUEL PUMP MODULE*
*1. Float and arm*

Disconnect multifunction gauge connector.

Measure resistance as per table.

| FUEL LEVEL AT GAUGE CONNECTOR | | FLOAT POSITION | RESISTANCE MEASUREMENT 20°C (68°F) |
|---|---|---|---|
| Pin 12 | Pin 15 | Float down (empty) | 100 ± 7 Ω |
| | | Float up (full) | 5 ± 2 Ω |

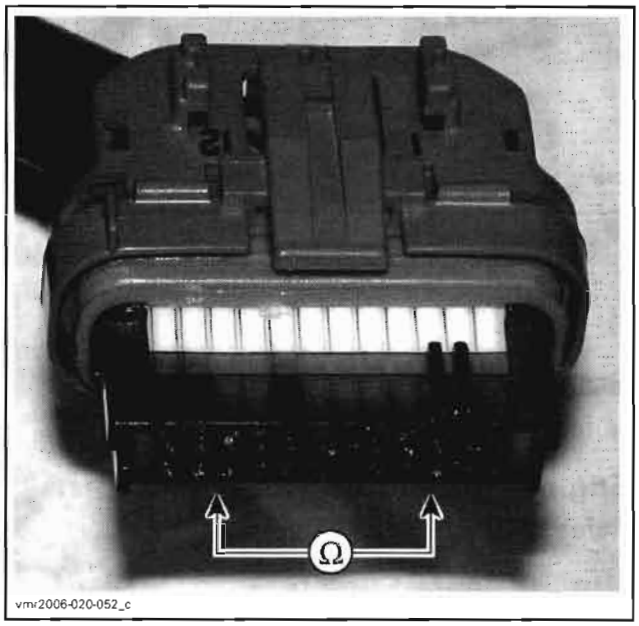


If resistance is not within empty and full values (depending on fuel quantity), check and repair wiring and/or connectors between multifunction gauge and fuel level sender. If they test good, replace fuel pump module. Refer to *FUEL TANK AND FUEL PUMP*.

If fuel level sender and wiring/connectors are good, try a new multifunction gauge.

## MULTIFUNCTION SWITCH

Apply parking brake, place transmission lever in NEUTRAL position and start engine.

1. *Low/Hi beam switch*
2. *Start switch*
3. *Engine run/stop switch*
4. *Override switch*

## Start Switch

Refer to *STARTING SYSTEM.*

## Engine Run/Stop Switch

Refer to *IGNITION SYSTEM.*

## Low/Hi Beam Switch

Using a multimeter, measure the resistance as follows.

| POSITION | MULTIFUNCTION SWITCH CONNECTOR (MG2) | | RESISTANCE @ 20°C (68°F) |
|---|---|---|---|
| Switch to LO | Pin 2 | Pin 4 | 0.2 Ω max. |
| Switch to HI | Pin 5 | Pin 4 | |

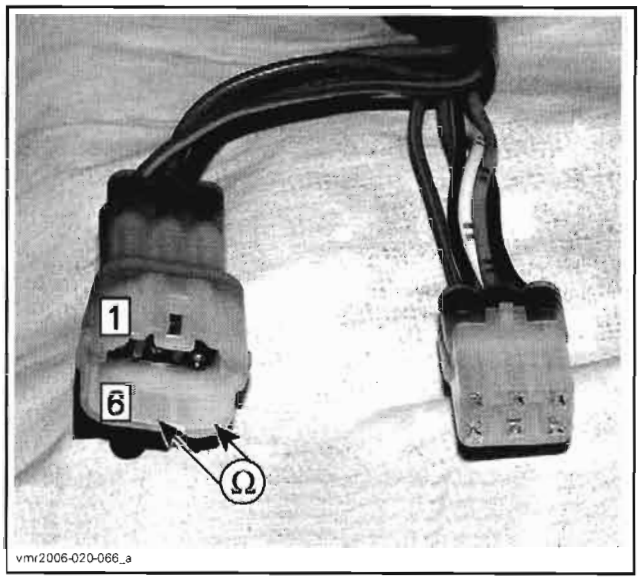


Replace multifunction switch if defective.

## Override Switch

Using a multimeter, measure the resistance between the following wires.

| SWITCH POSITION | MULTIFUNCTION SWITCH CONNECTOR (MG1) | | RESISTANCE @ 20°C (68°F) |
|---|---|---|---|
| Released | Pin 5 | Pin 6 | 0.2 Ω max. |
| Pushed | | | Open (0L) |

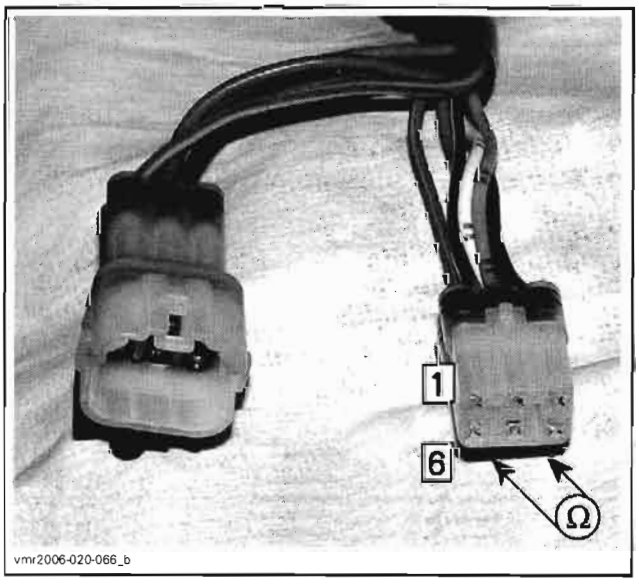


Replace multifunction switch if defective.

# 12-VOLT AUXILIARY POWER OUTLET

The 12-volt auxiliary power outlet allows the installation of additional accessories.

## 12-Volt Auxiliary Power Outlet Test

Remove center panel and dashboard. Refer to *BODY*.

Turn ignition key on and set engine run/stop switch to RUN.

Unplug power outlet connector.

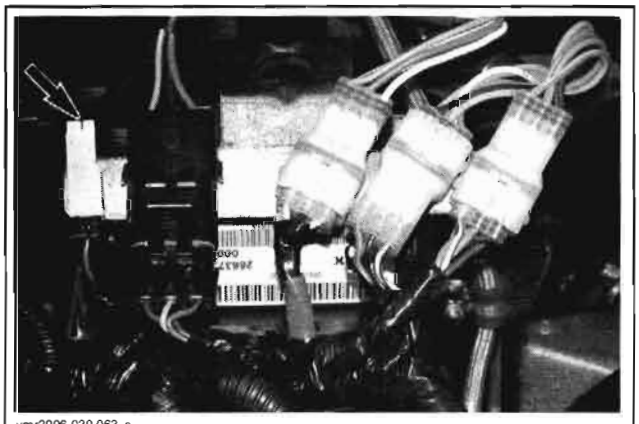
vmr2006-020-063_a

Using a multimeter, measure the voltage as follows.

| WIRE COLOR | | VOLTAGE |
|---|---|---|
| RED/BLACK | BLACK | 12 - 14.5 Vdc |

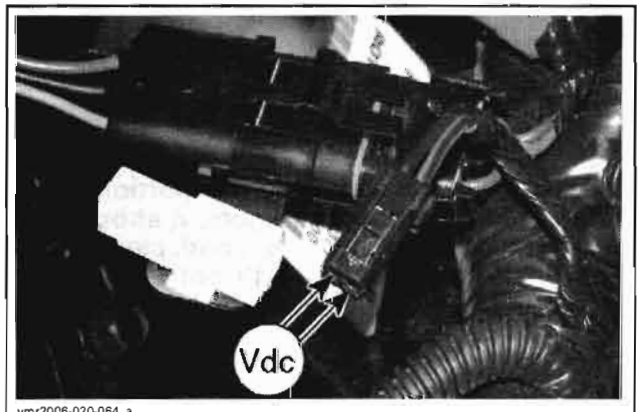

vmr2006-020-064_a

- No voltage:
  - Check fuses F4, F7, relay R3 (accessories) and wiring condition.
- Voltage is good:
  - Check accessories.

# 12-VOLT POWER OUTLET

## 12-Volt Power Outlet Removal

Remove console. Refer to *BODY*.

Unplug the connectors of the power outlet.

Unscrew the retaining nut.

## 12-Volt Power Outlet Installation

Reverse the removal procedure.

## 12-Volt Power Outlet Test

Remove center panel and dashboard. Refer to *BODY*.

Turn ignition key on and set engine run/stop switch to RUN.

Unplug the power outlet connectors.

Using a multimeter, measure the voltage as follows.

| WIRE COLOR | | VOLTAGE |
|---|---|---|
| RED/BLACK | BLACK | 12 - 14.5 Vdc |

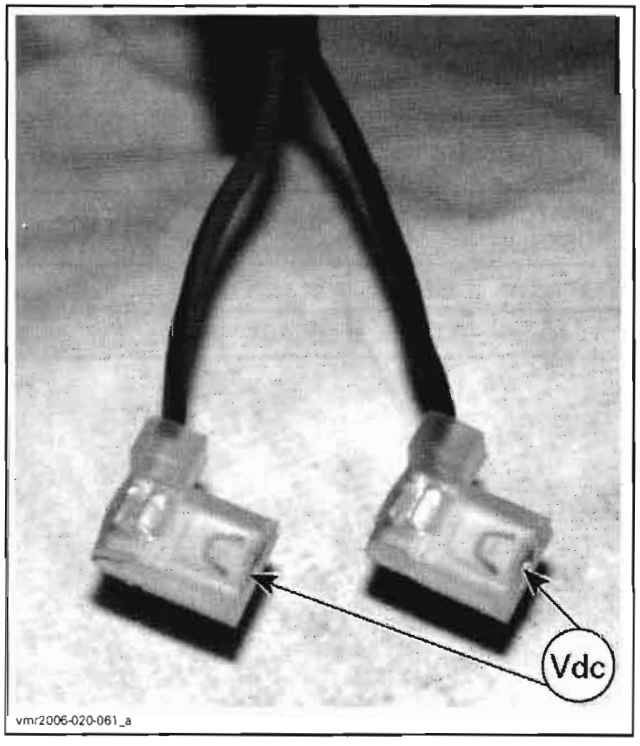

vmr2006-020-061_a

Ensure to reconnect RED/BLACK wire to positive terminal.

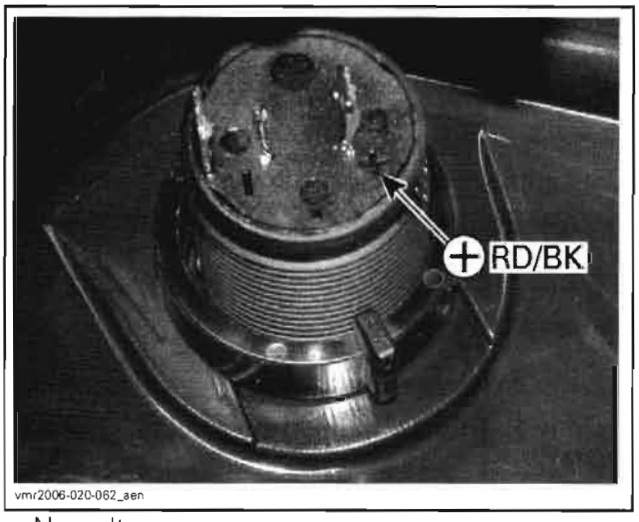


- No voltage:
  - Check fuses F4, F7, relay R3 (accessories) and wiring condition.
- Voltage is good:
  - Change power outlet.

# HEADLAMP

## Headlamp Test

Disconnect headlamp connector. Refer to *BULB REPLACEMENT*.

Using a multimeter, measure the voltage on headlamp connector as follows.

| SWITCH POSITION | WIRE COLOR | | VOLTAGE |
|---|---|---|---|
| LO beam | GREEN | BLACK | 12 - 14.5 Vdc |
| HI beam | BLUE | BLACK | |

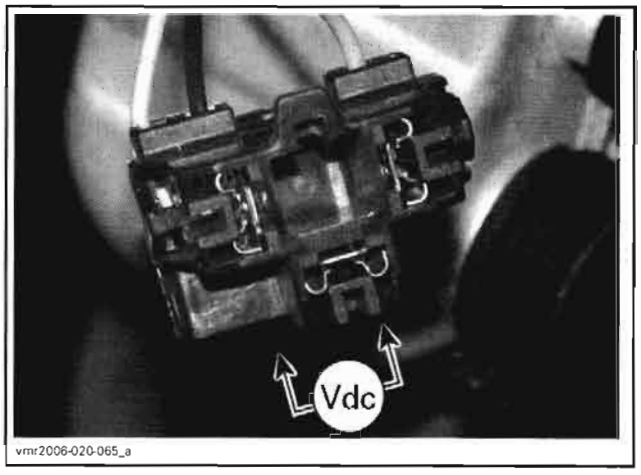


*TYPICAL*

- Voltage is good:
  - Change headlamp bulb(s).
- No voltage:
  - Check fuses F4, F7, relay R3 (accessories) and wiring condition.
  - Check ignition switch as follows.

| SWITCH POSITION | PIN | | RESISTANCE @ 20°C (68°F) |
|---|---|---|---|
| OFF | A | F | Infinite (0L) |
| ON with lights | | | 1 Ω max. |
| ON without lights | | | Infinite (0L) |

  - Check low/hi beam switch. refer to *MULTI-FUNCTION SWITCH* elsewhere in this section.

## Bulb Replacement

**CAUTION:** Never touch glass portion of an halogen bulb with bare fingers, it shortens its operating life. If glass is touched, clean it with isopropyl alcohol which will not leave a film on the bulb.

***All Models except Renegade***

Remove cover screws.

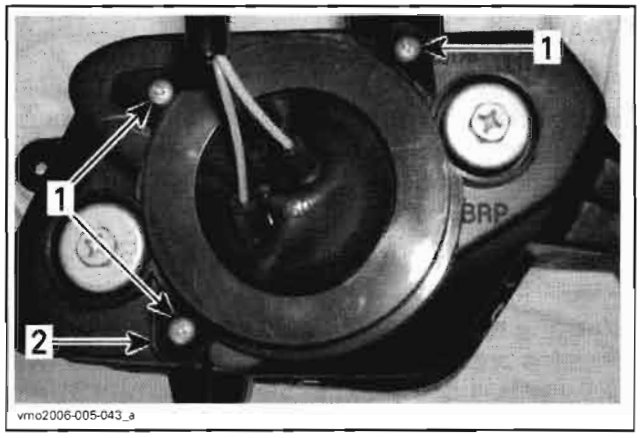


1. *Screws*
2. *Cover*

Remove rubber protector over headlamp housing.

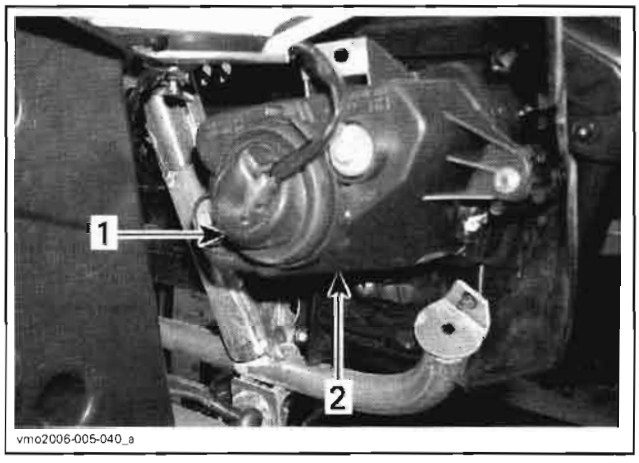


1. *Rubber protector*
2. *Headlamp housing*

Unplug connector from headlamp.

NOTE: Use small locking tab to unlock connector then pull on connector.

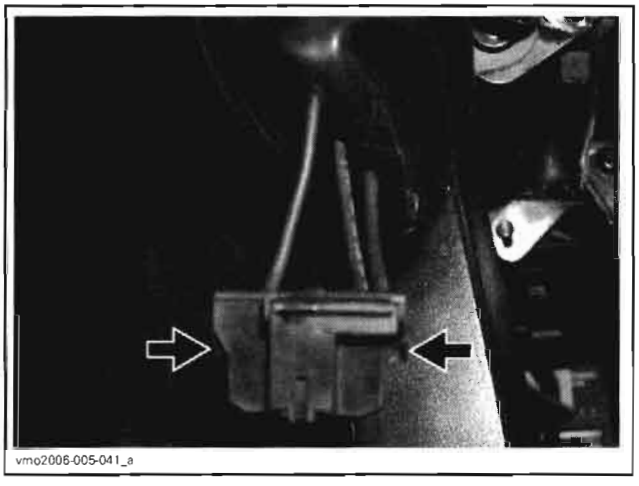


*PUSH ON LOCKING TAB TO UNLOCK CONNECTOR*

Press the spindle then push it on the side to unlock headlamp bulb.

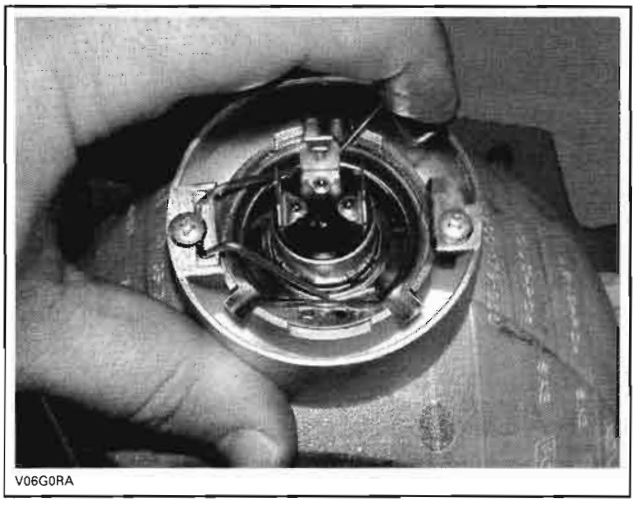


*TYPICAL*

Lift and hold the spindle then remove the bulb.

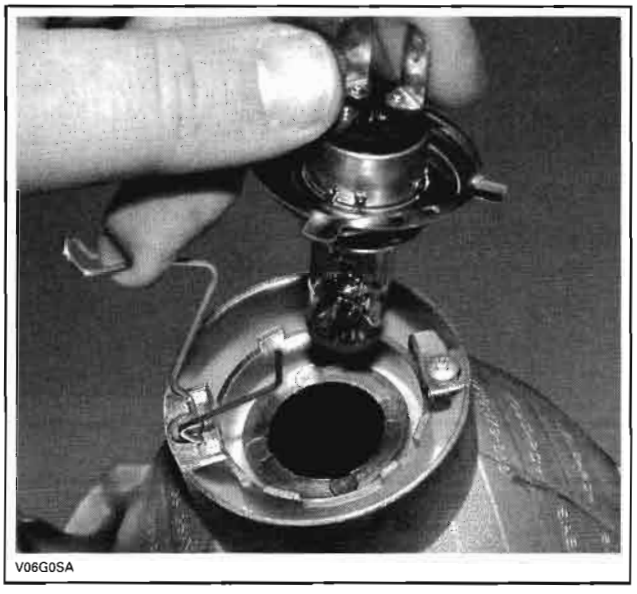


*TYPICAL*

Properly reinstall removed parts in the reverse order of their removal.

Validate headlamp operation.

### *Renegade Models*

NOTE: The same headlamp is used on both sides of vehicle and for LO and HI beams.

Unplug connector from bulb.

Rotate bulb.

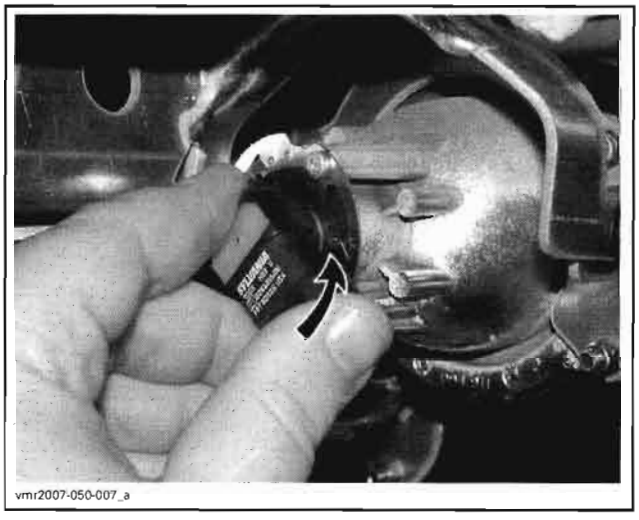


Pull out bulb.

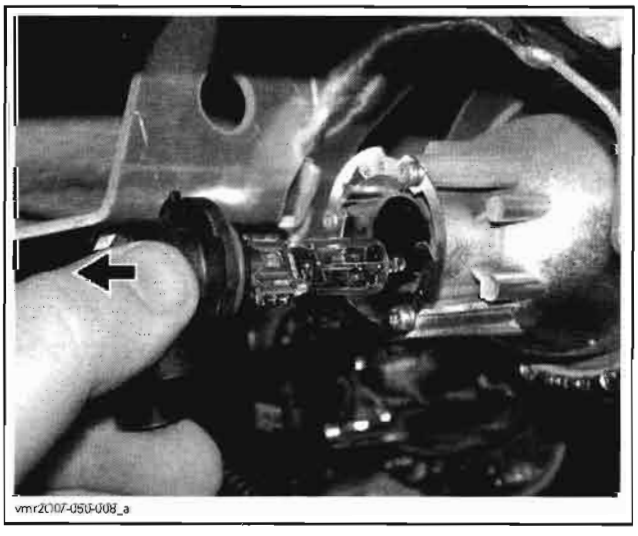


Properly reinstall removed parts in the reverse order of their removal.

Validate headlamp operation.

## Headlamp Beam Aiming

Select high intensity.

Beam aiming is correct when center of high beam is 131 mm (5 in) below the headlamp horizontal center line, scribed on a test surface, 5 m (17 ft) away.

NOTE: Sit down the driver or place the same weight on the vehicle.

Measure headlamp center distance from ground. Scribe a line at this height on test surface (wall or screen). Light beam center should be 131 mm (5 in) below scribed line.

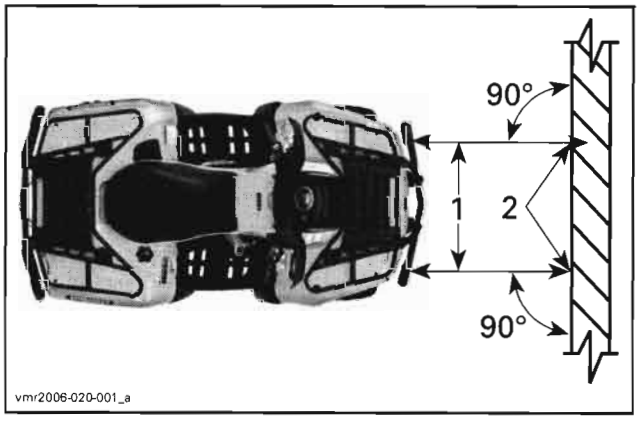


*1. Headlamp center lines*
*2. Light beam center*

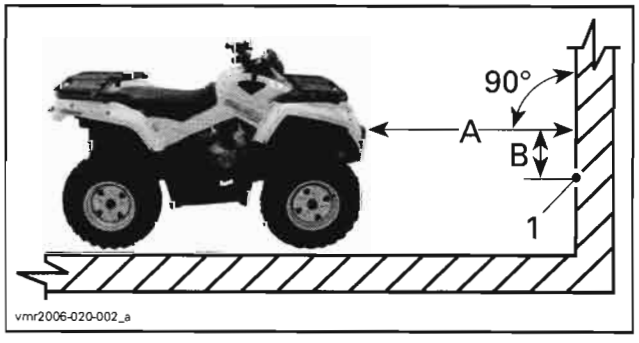


*1. Light beam center*
*A. 5 m (17 ft)*
*B. 131 mm (5 in)*

### Adjustment

Turn adjustment screws to adjust beam height and side orientation as described below. Adjust both headlamps evenly.

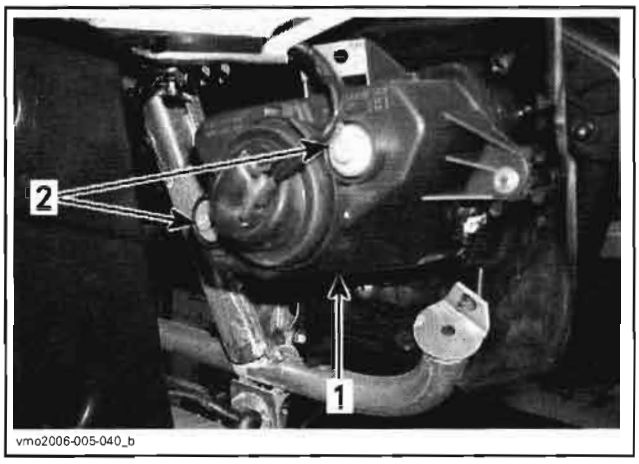

vmo2006-005-040_b

*TYPICAL*
1. *Headlamp cover*
2. *Adjustment screws*

# TAILLIGHT

## Bulb Replacement

Unscrew lens screws to expose bulb.

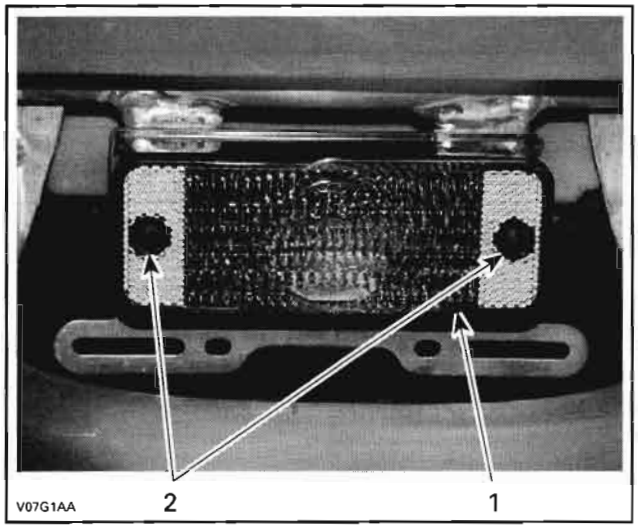


*TYPICAL*
1. *Lens*
2. *Screws*

Push bulb in and hold while turning courterclockwise to release.

Install the new bulb by first pushing in while turning clockwise.

# WINCH

***XT Models Only***

## Winch Test

### Winch Motor

Using boosting cables, connect battery power to IN post of winch then to OUT post.

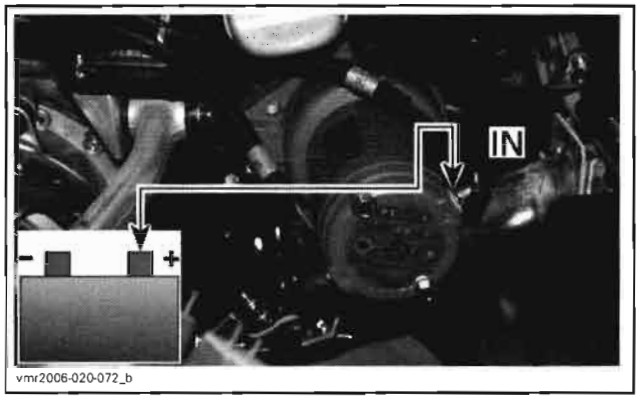

vmr2006-020-072_b

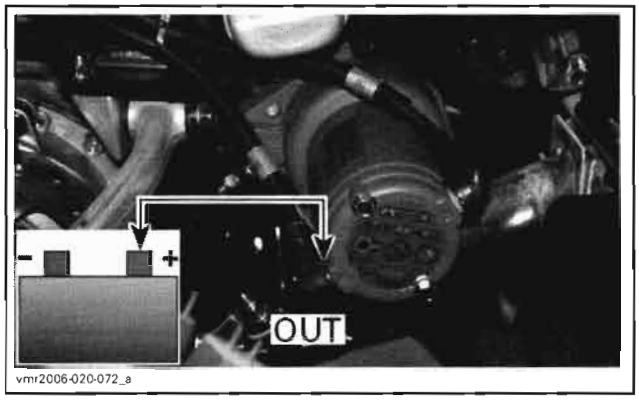

vmr2006-020-072_a

If motor does not turn in any test, replace motor. If it works, continue testing.

### Voltage Supply to Switch

Remove center panel and dashboard. Refer to *BODY*.

Disconnect the winch control switch connector.

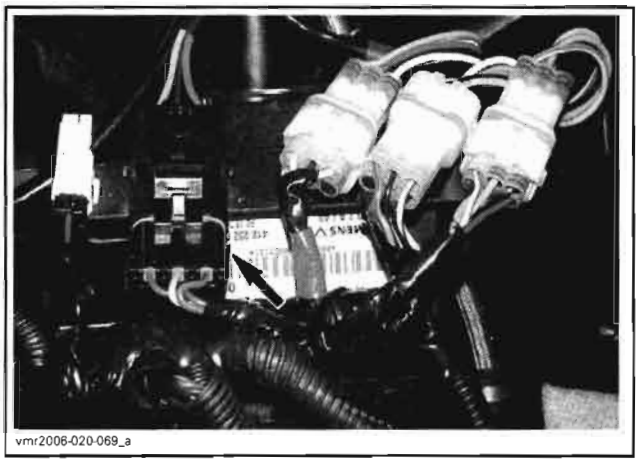
vmr2006-020-069_a

Using a multimeter, measure the resistance as follows.

| WINCH SWITCH CONNECTOR (harness side) | | VOLTAGE |
|---|---|---|
| Pin A | Battery ground | 12 Vdc |

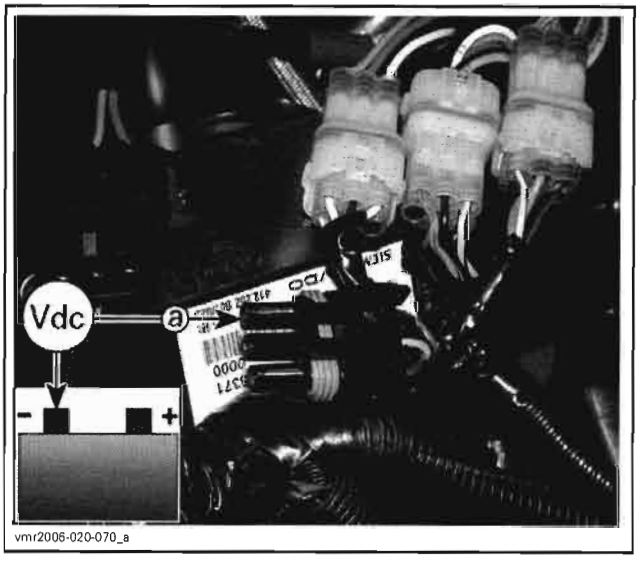

vmr2006-020-070_a

If there is no voltage, check fuses F9, F7, relay R3 (accessories) and wiring condition.

If there is voltage, test switch as follows.

### Winch Control Switch

Disconnect terminals at winch relay.

| POSITION | TERMINAL | VOLTAGE |
|---|---|---|
| Switch pressed to IN and held | LIGHT/BLUE and battery ground | 12 Vdc |

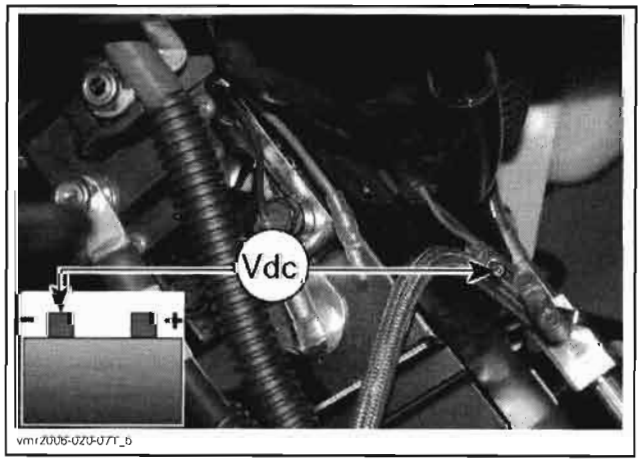

vmr2006-020-071_b

| POSITION | TERMINAL | VOLTAGE |
|---|---|---|
| Switch pressed to OUT and held | GREEN/BLUE and battery ground | 12 Vdc |

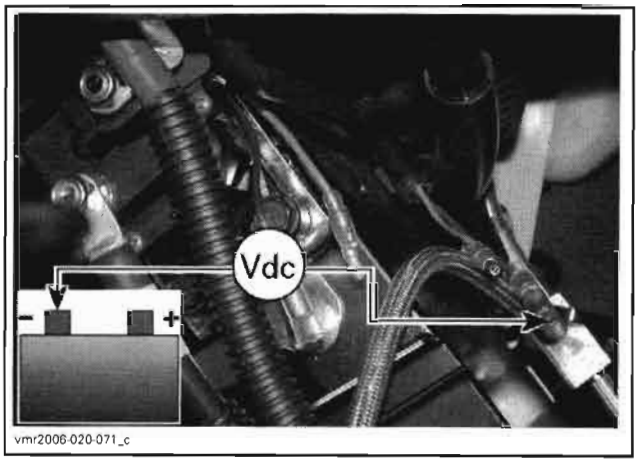

vmr2006-020-071_c

If there is no voltage in either test, check wiring/connectors. If they are good, replace winch switch.

If there is voltage, test winch relay as follows.

### Winch Relay

Reconnect terminals at winch relay.

Measure voltage drop between relay and motor as follows.

| POSITION | RELAY TERMINAL | VOLTAGE DROP |
|---|---|---|
| Switch pressed to IN and held | Battery post and IN cable | 0.2 Vdc max. |

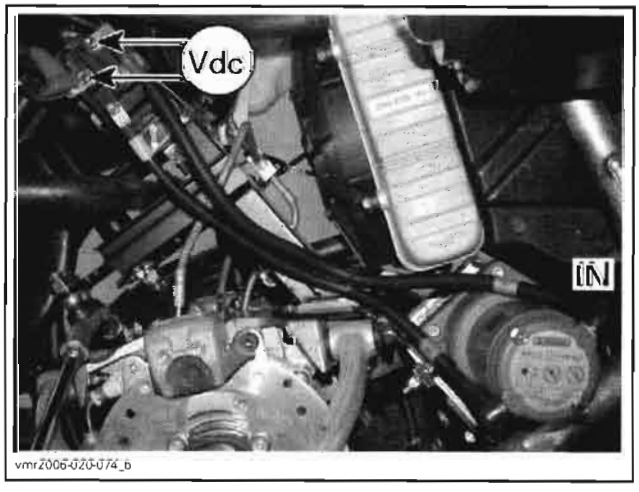

vmr2006-020-074_b

| POSITION | RELAY TERMINAL | VOLTAGE DROP |
|---|---|---|
| Switch pressed to OUT and held | Battery post and OUT cable | 0.2 Vdc max. |

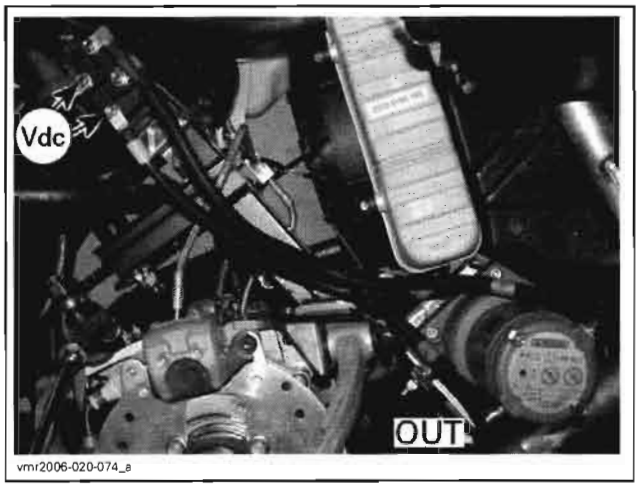


If voltage drop read is higher than specification in either test, check wiring/connectors. If they are good, replace winch relay.

If voltage read is battery voltage, the relay does not close. Replace with a new one.

## Winch Removal

Disconnect, the battery BLACK (-) cable first, then the RED (+) cable.

**⚠ WARNING**

**Always respect this order for disassembly; disconnect BLACK (-) cable first. Electrolyte or fuel vapors can be present in engine compartment and a spark may ignite them and possibly cause personal injuries.**

Disconnect the winch power cables.

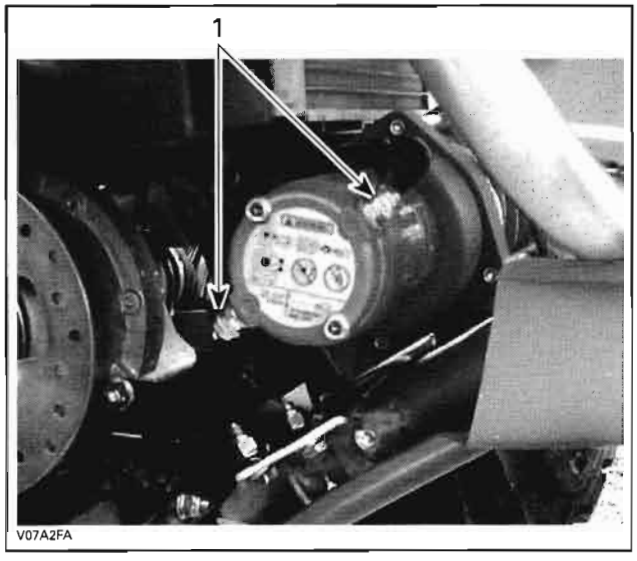


*1. Power connections*

NOTE: Note the position of the power cables for reinstallation.

Remove:
- locking pin

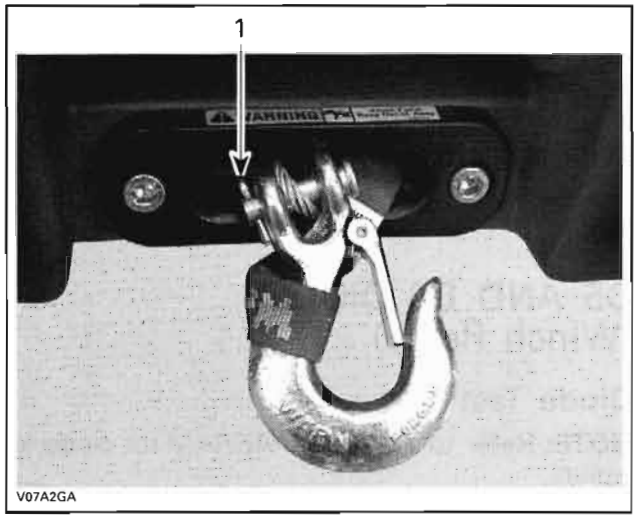


*1. Locking pin*

- hook
- bolts retaining the winch from both LH and RH sides.

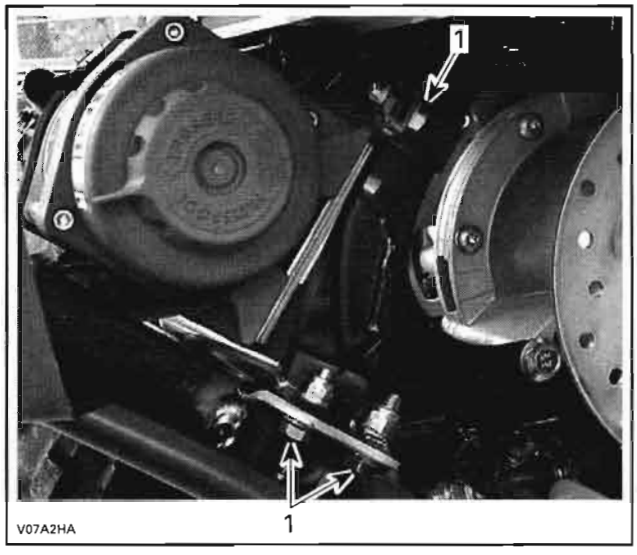


*1. Bolts to be removed*

Remove winch.

## Winch Installation

For the installation, reverse the removal procedure.

# WINCH CONTROL SWITCH

## Winch Control Switch Test

Refer to *WINCH* above.

### Winch Control Switch Removal

Remove screws retaining winch control switch to handlebar.

Remove steering cover, refer to *BODY*.

Disconnect the winch control switch connector.

### Winch Control Switch Installation

For the installation, reverse the removal procedure.

## D5 AND D6 DIODES (Winch Relay)

### Diode Test

**NOTE:** Refer to *WIRING DIAGRAM* for diode location.

Remove center panel and dashboard. Refer to *BODY*.

Disconnect winch switch connector.

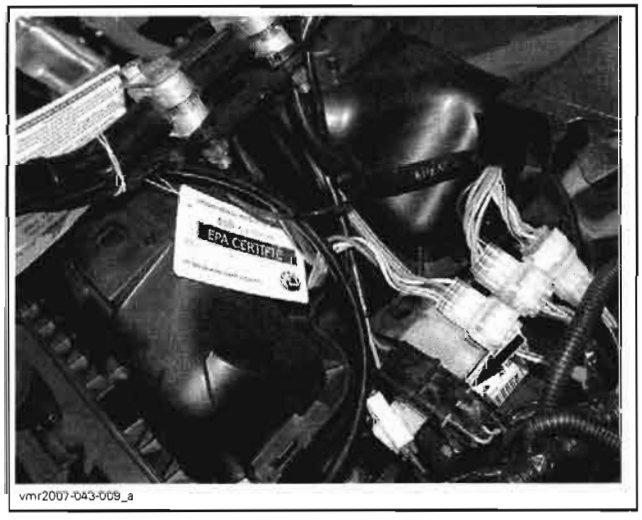

vmr2007-043-009_a

Disconnect appropriate wire going to winch relay (behind RH front wheel). Refer to table.

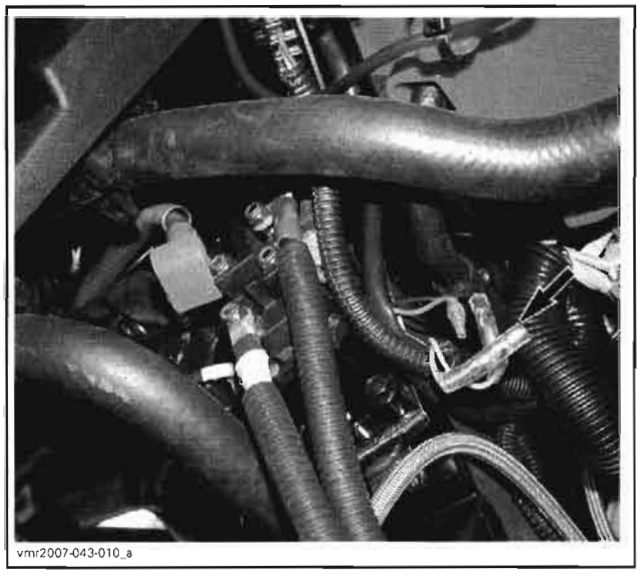
vmr2007-043-010_a

| DIODE | WIRE TO DISCONNECT AT WINCH RELAY | **WIRES TO PROBE (harness side)** | |
|---|---|---|---|
| | | WINCH SWITCH CONNECTOR | WINCH RELAY POST |
| D5 | GREEN/BLUE (green on relay) | GREEN/BLUE | Ground |
| D6 | LIGHT BLUE (black on relay) | LIGHT BLUE | |

Probe diode wires paying attention to proper polarity. See illustrations.

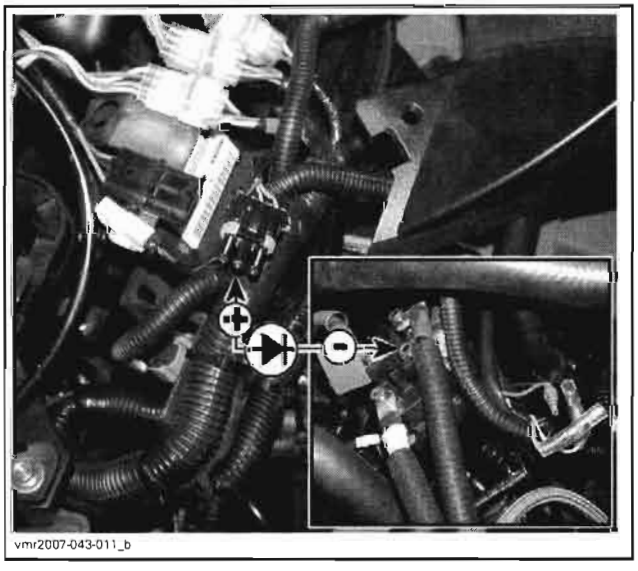
vmr2007-043-011_b

*MUST BE OPEN CIRCUIT*

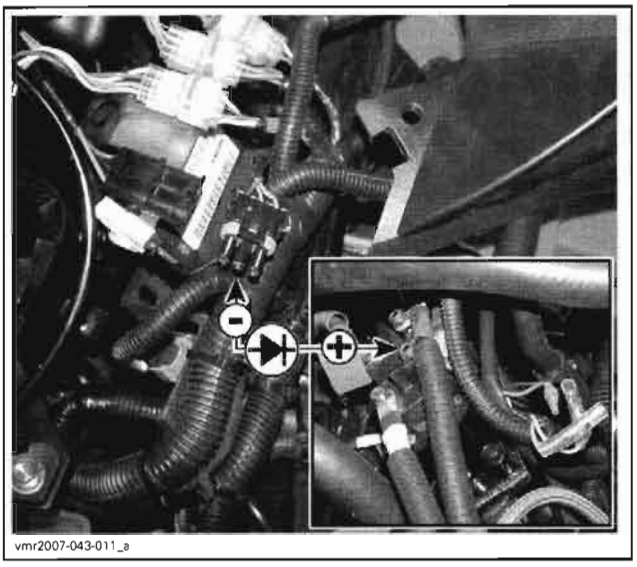


*MUST BE AROUND 0.5 V*

If any diode test fail, replace diode.

**NOTE:** Diodes are located in wiring harness approximately where shown.

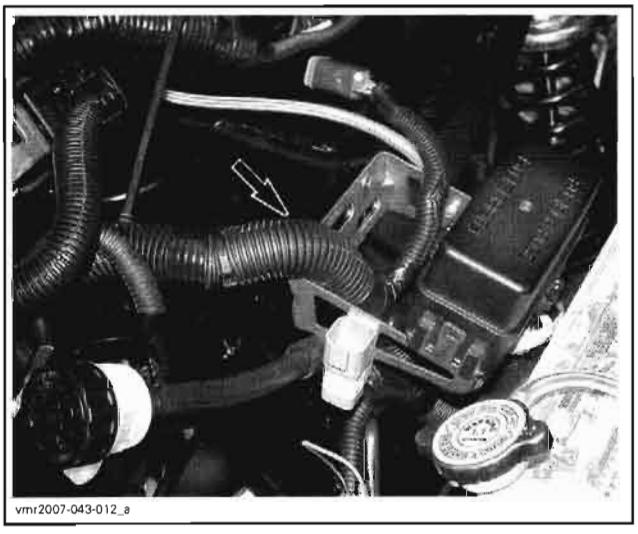


Properly reinstall removed parts.

# CONTINUOUSLY VARIABLE TRANSMISSION (CVT)

## SERVICE TOOLS

| Description | Part Number | Page |
|---|---|---|
| pulley holding tool | 529 006 400 | 293 |
| drive pulley puller | 529 035 746 | 293 |
| driven pulley expander | 529 035 747 | 291 |
| pulley holding tool | 529 035 771 | 300 |

## SERVICE PRODUCTS

| Description | Part Number | Page |
|---|---|---|
| Isoflex grease Topas NB 52 | 293 550 021 | 298–299 |
| pulley flange cleaner | 413 711 809 | 295, 301 |

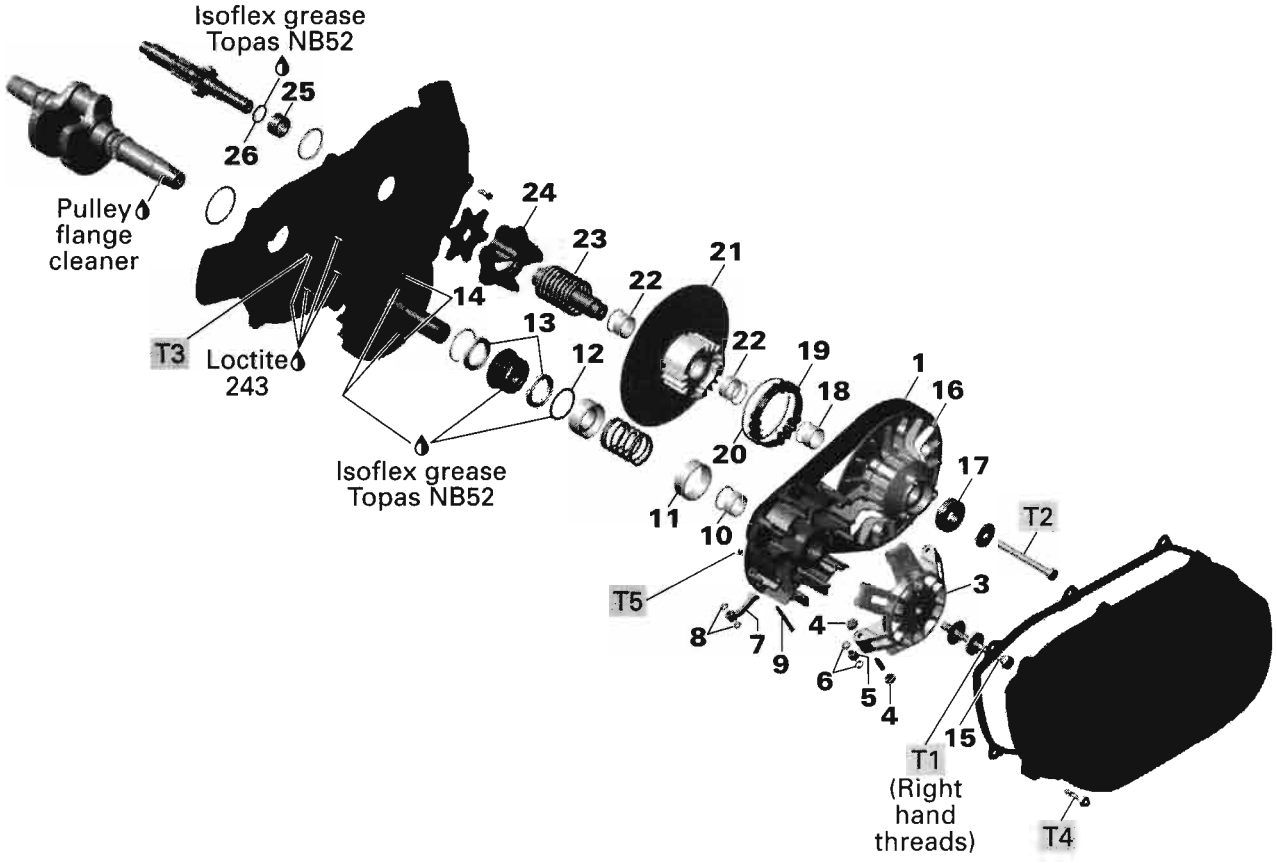


| | |
|---|---|
| T1 | 100 N•m (74 lbf•ft) |
| T2 | 60 N•m (44 lbf•ft) |
| T3 | 10 N•m (89 lbf•**in**) |
| T4 | 7 N•m (62 lbf•**in**) |
| T5 | 5 N•m (44 lbf•**in**) |

vmr2007-051-002_a

# GENERAL

**NOTE:** For a better understanding, the following illustrations are taken with engine out of vehicle. To perform the following instructions, it is not necessary to remove engine.

This CVT is lubrication free. Never lubricate any components except drive pulley one-way clutch and friction washer.

During assembly/installation, use the torque values and service products as in the exploded views.

Clean threads before applying a threadlocker. Refer to *SELF-LOCKING FASTENERS* and *LOCTITE APPLICATION* at the beginning of this manual for complete procedure.

**⚠ WARNING**

**Torque wrench tightening specifications must strictly be adhered to.**
**Locking devices (e.g.: locking tabs, elastic stop nuts, cotter pin, etc.) must be replaced with new ones.**

**⚠ WARNING**

**Never touch CVT while engine is running. Never drive vehicle when CVT cover is removed.**

**⚠ WARNING**

**Any drive pulley repairs must be performed by an authorized Can-Am dealer. Subcomponent installation and assembly tolerances require strict adherence to procedures detailed.**

**CAUTION: Never use any type of impact wrench at drive pulley removal and installation.**

**⚠ WARNING**

**The clutch assembly is a precisely balanced unit. Never replace parts with used parts from another clutch assembly.**

**CAUTION: These pulleys have metric threads. Do not use SAE threads puller. Always tighten puller by hand to ensure that the drive pulley has the same type of threads (metric vs SAE) prior to fully tightening.**

# PROCEDURES

## DRIVE BELT

### Removal

Remove CVT cover screws.

**NOTE:** Remove the center top screw last. This screw allows to support the cover during removal.

Remove the CVT cover and its gasket.

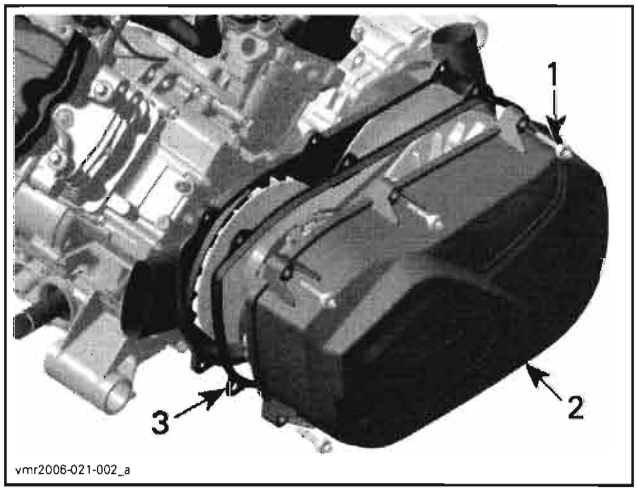


1. *CVT cover screw*
2. *CVT cover*
3. *Gasket*

Open driven pulley with the driven pulley expander (P/N 529 035 747).

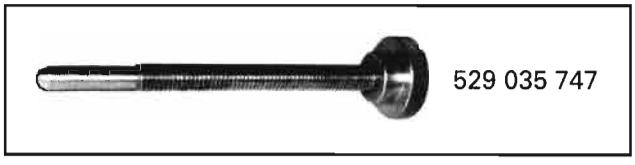


Screw tool in the threaded hole of driven pulley and tighten to open the pulley.

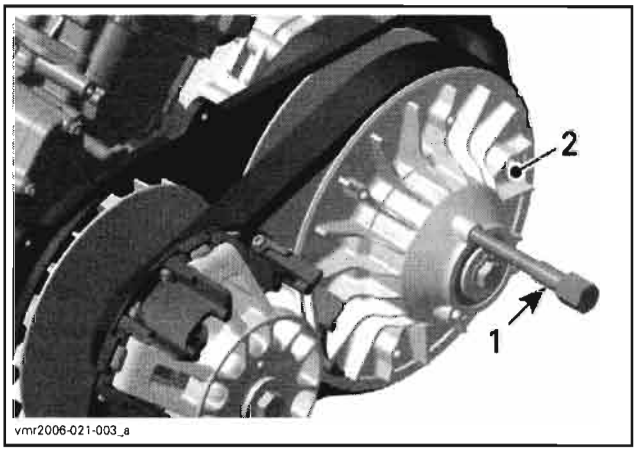


1. *Driven pulley expander*
2. *Fixed sheave of driven pulley*

To remove belt, slip the belt over the top edge of fixed sheave, as shown.

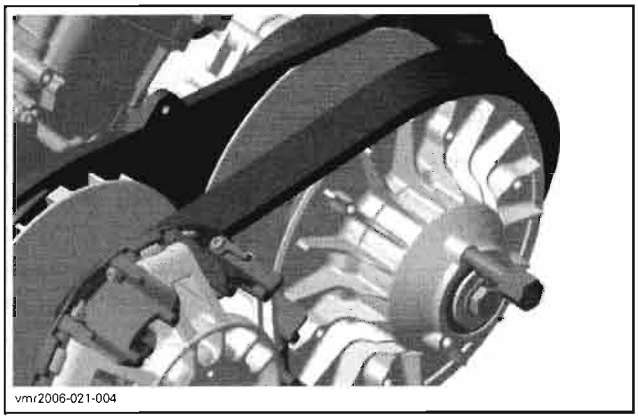
vmr2006-021-004

## Inspection

Inspect belt for cracks, fraying or abnormal wear. Replace if necessary.

Check drive belt width at cord level. Replace if it is out of specification (see table below).

| DRIVE BELT WIDTH | |
|---|---|
| SERVICE LIMIT | 30.00 mm (1.181 in) |

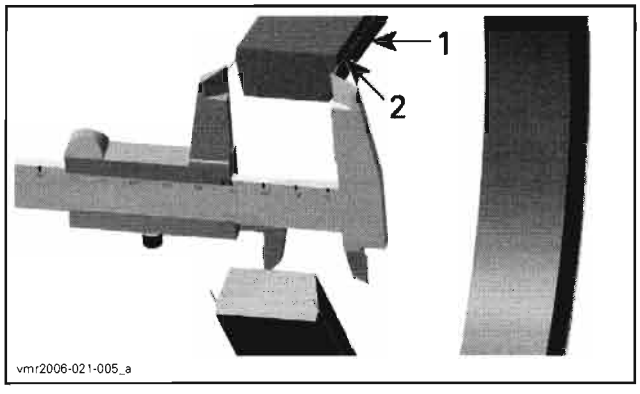

vmr2006-021-005_a

1. *Drive belt*
2. *Cord in drive belt*

## Installation

For installation, reverse the removal procedure. Pay attention to following details.

The maximum drive belt life span is obtained when the drive belt has the proper rotation direction. Install it so that the arrow printed on belt is pointing towards front of the vehicle, viewed from top.

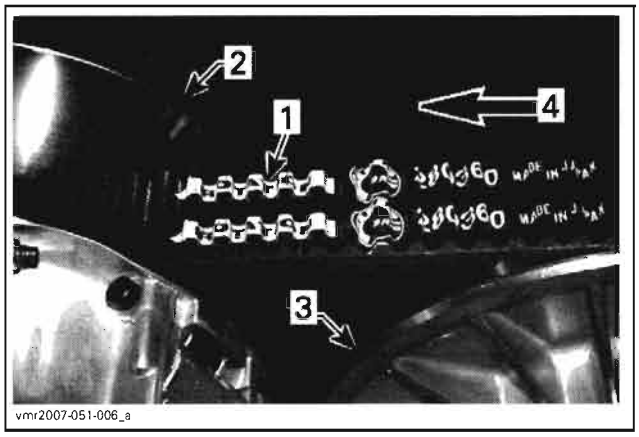

vmr2007-051-006_a

1. *Arrow printed on belt*
2. *Drive pulley (front)*
3. *Driven pulley (rear)*
4. *Rotation direction*

Install the center top screw of cover in first.

Tighten the CVT cover screws as per following sequence.

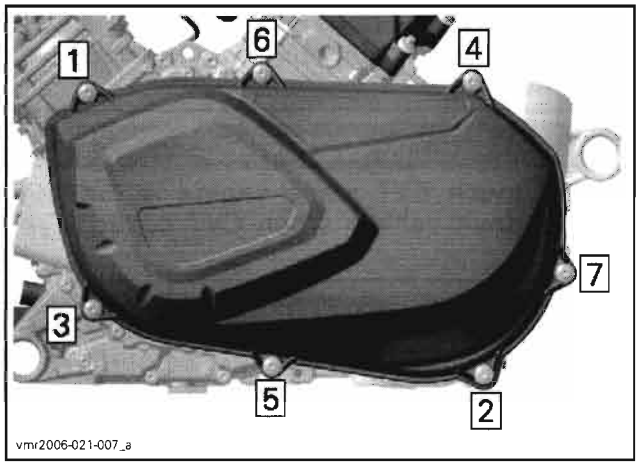

vmr2006-021-007_a

# DRIVE PULLEY

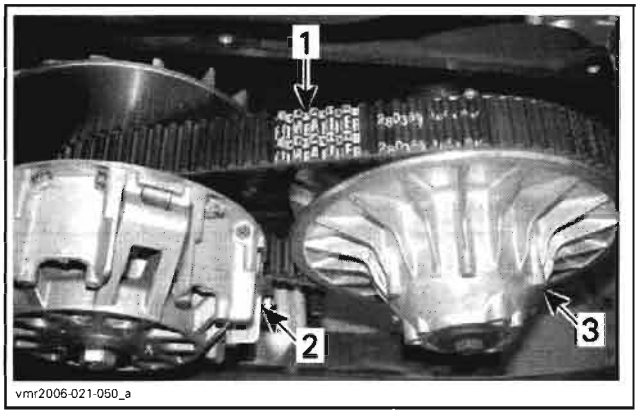

vmr2006-021-050_a

1. *Belt*
2. *Drive pulley*
3. *Driven pulley*

## Removal

Remove belt **no. 1**.

Block the drive pulley. To do this, two procedures can be followed.

### First Possible Procedure:

- Remove spark plugs.
- Lock crankshaft at TDC position. Refer to *BOTTOM END* section.

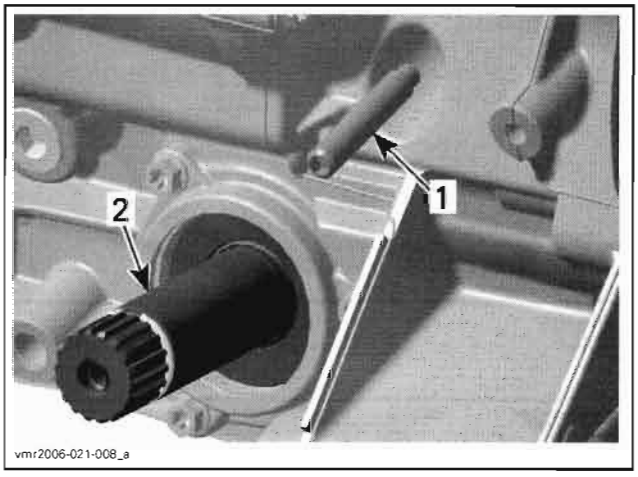


1. *Crankshaft locking bolt*
2. *Engine drive shaft (front side)*

### Second Possible Procedure:

- Block drive pulley with the pulley holding tool (P/N 529 006 400).

**529 006 400**

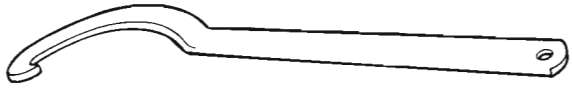

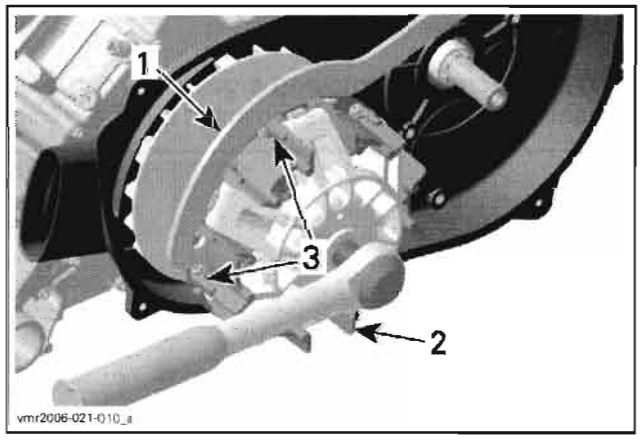


1. *Pulley holding tool*
2. *Drive pulley sliding sheave*
3. *Area to place holding tool hook*

When the drive pulley is blocked, mark sliding sheave and governor cup to ensure correct reinstallation.

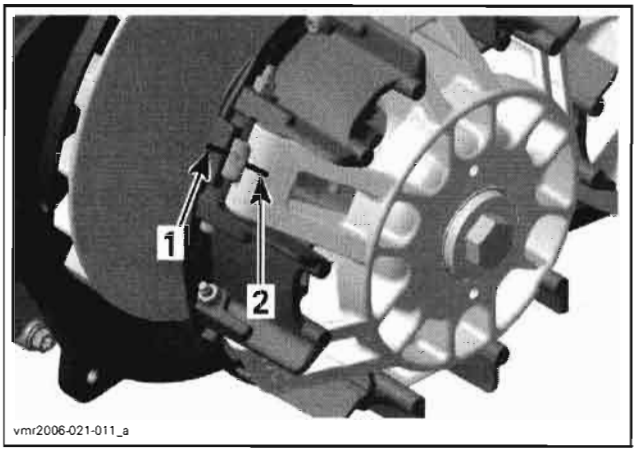


1. *Mark on drive pulley sliding sheave*
2. *Mark on governor cup*

Unscrew the drive pulley screw (**right hand thread**), then remove it as well as the conical spring washer and thrust washer.

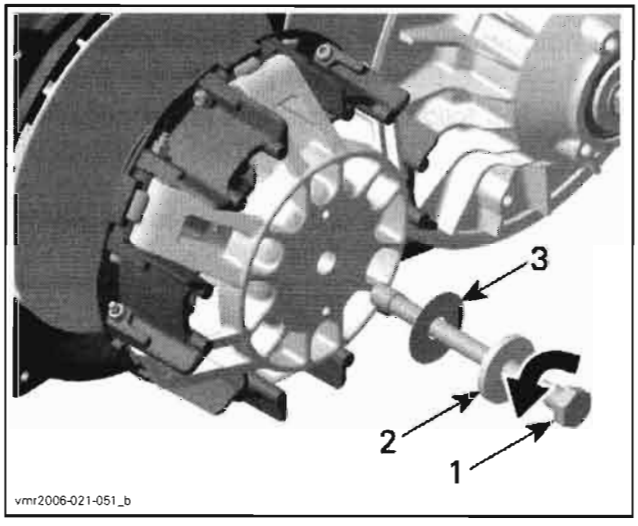


1. *Drive pulley screw*
2. *Conical spring washer*
3. *Thrust washer*

**⚠ WARNING**

**Sliding sheave of drive pulley is spring loaded.**

Push with your hand the sliding sheave **no. 2** of the drive pulley then remove the screw completely.

Slowly release sliding sheave.

Screw drive pulley puller (P/N 529 035 746) in fixed sheave and remove fixed pulley.

**529 035 746**

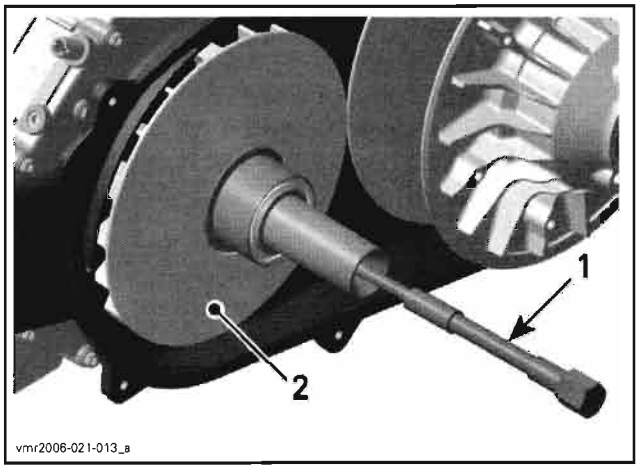


1. *Drive pulley puller*
2. *Fixed sheave*

## Disassembly

### Governor Cup

Carefully lift governor cup **no. 3** until slider shoes **no. 4** come at their highest position into guides.

NOTE: The following procedure is not necessary except if roller must be removed. Refer to *INSPECTION* before proceeding.

Remove slider shoes out of each bearing sleeve. Use a flat screwdriver if necessary.

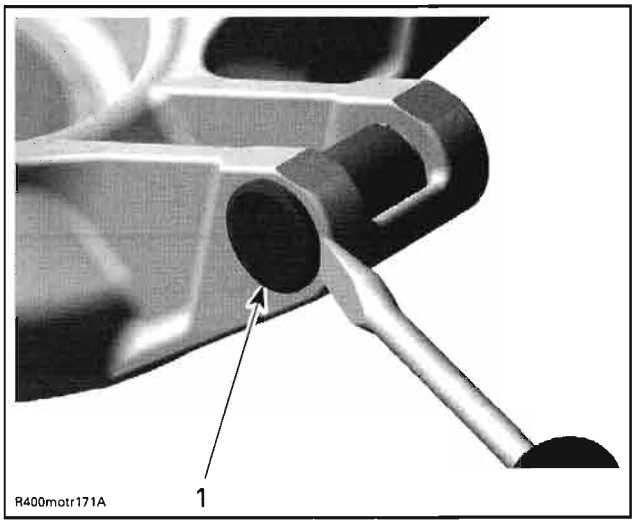


1. *Slider shoe*

Put governor cup on a vice to push out bearing sleeve of roller in the foreseen direction (against arrow). Use an appropriate punch (diameter of punch must be smaller than the bearing sleeve diameter).

**CAUTION: Do not clamp the governor cup in the vice to push out bearing sleeve. Governor cup will be damaged.**

NOTE: Use protection plates to avoid marks and/or damages to the governor cup.

**CAUTION: Always replace all rollers at the same time. Partly worn rollers may cause damage to the CVT system.**

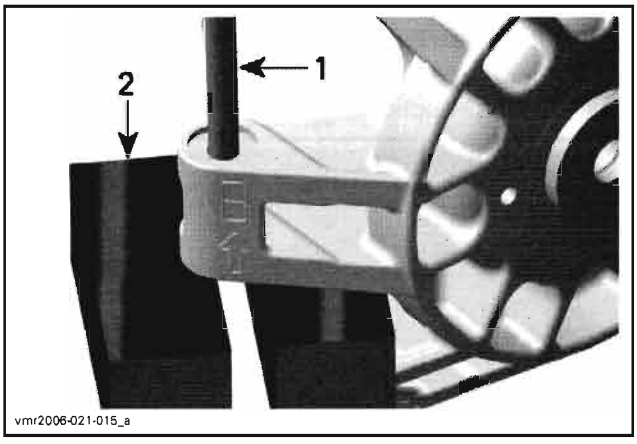


1. *Punch*
2. *Vice*

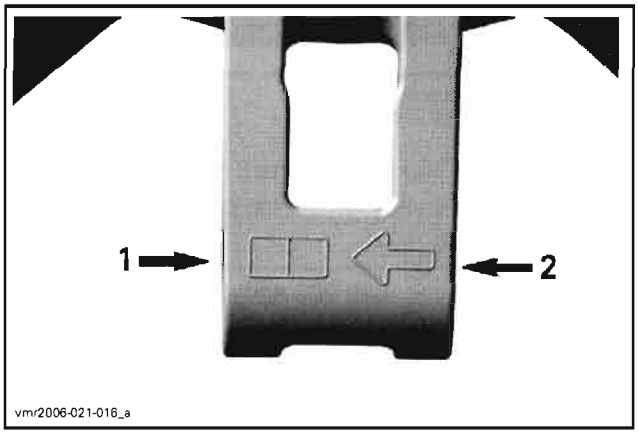


1. *Removal direction*
2. *Assembly direction*

NOTE: Whenever removing a governor cup with already two marked boxes replace it by a new one.

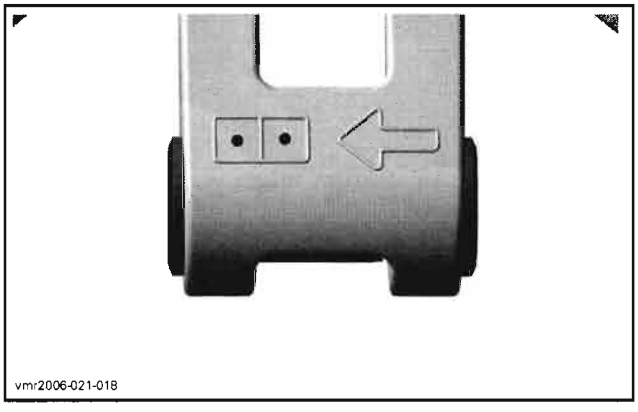

### Sliding Sheave

Unscrew lock nut and remove centrifugal lever pivot bolt. This drive pulley is equipped with 6 levers.

Remove centrifugal lever **no. 7** and both thrust washers **no. 8**.

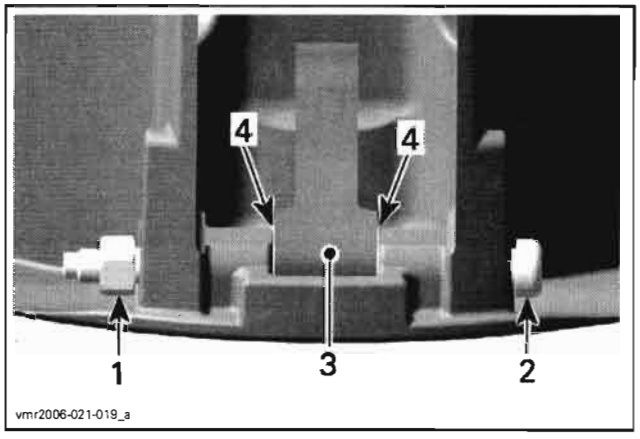


1. *Lock nut*
2. *Centrifugal lever pivot bolt*
3. *Centrifugal lever*
4. *Thrust washers*

### Fixed Sheave

Remove friction washer **no. 12**.

**⚠ WARNING**

**Always wear safety glasses to remove spring sleeves.**

Pull and rotate one-way clutch slowly until the sheave of spring sleeves are visible.

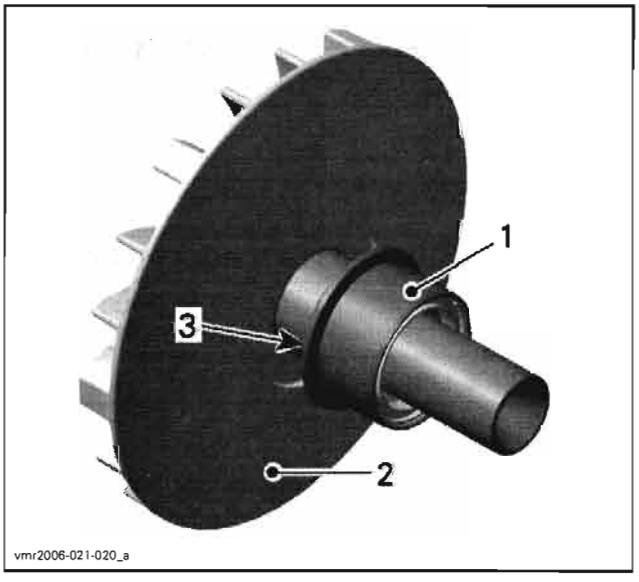


1. *One-way clutch*
2. *Fixed sheave*
3. *Spring sleeve area*

Hold both spring sleeves with fingers and release when one-way clutch is disengaged.

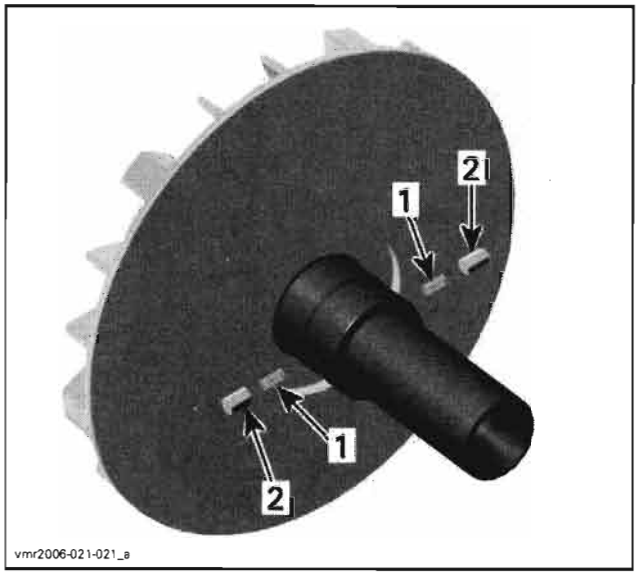


1. *Springs*
2. *Spring sleeves*

## Cleaning

Clean pulley faces and shaft with fine steel wool and dry cloth.

Using a paper towel with pulley flange cleaner (P/N 413 711 809) cleaning solvent, clean crankshaft tapered end and the taper inside the fixed sheave of the drive pulley, crankshaft threads and threads of drive pulley screw **no. 15**.

**CAUTION: Avoid contact between cleaner and crankshaft seal because damage may occur.**

Remove all hardened oil deposits that have baked on crankshaft and pulley tapered surfaces with coarse or medium steel wool and/or sand paper no. 600.

**CAUTION: Do not use any other type of abrasive.**

Reclean mounting surfaces with paper towel and pulley flange cleaner (P/N 413 711 809).

Wipe off the mounting surfaces with a clean, dry paper towel.

**CAUTION: Mounting surfaces must be free of any oil, cleaner or towel residue.**

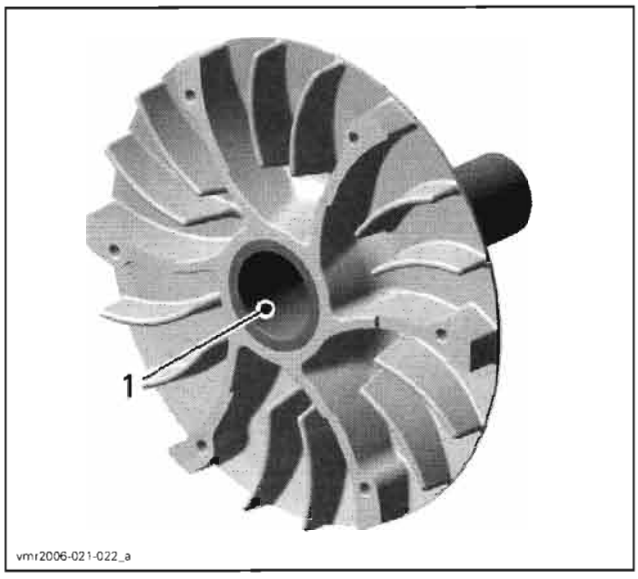


*1. Taper of fixed sheave*

Only use petrol base cleaner when cleaning bushings **no. 10** and **no. 11**.

**CAUTION:** Do not use acetone to clean bushing.

## Inspection

### Drive Pulley

Drive pulley should be inspected annually.

### Governor Cup

Check governor cup for cracks or other visible damages. Replace if necessary.

### Roller and Slider Shoe

Check each roller for roundness of external diameter.

Check if rollers move freely.

**CAUTION: Whenever replacing rollers and slider shoes, always replace all rollers and slider shoes at the same time.**

Check slider shoes for visible wear and replace if damaged.

NOTE: If necessary, use a screwdriver to remove slider shoes.

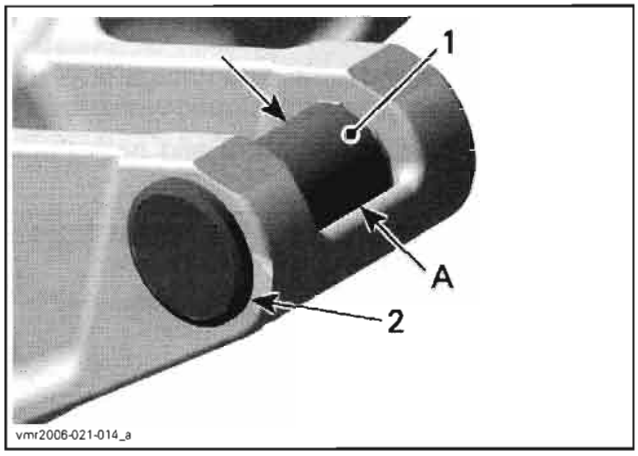


*1. Roller*
*2. Slider shoe*
*A. Roller outer diameter*

| ROLLER OUTER DIAMETER | |
|---|---|
| NEW | 13.70 to 13.80 mm (.539 to .543 in) |
| SERVICE LIMIT | 13.20 mm (.519 in) |
| **ROLLER INNER DIAMETER** | |
| NEW | 8.05 to 8.15 mm (.317 to .321 in) |
| SERVICE LIMIT | 9.00 mm (.354 in) |

### Centrifugal Lever Pivot Bolt

Measure diameter of centrifugal lever pivot bolt **no. 9**, replace if it is out of specification.

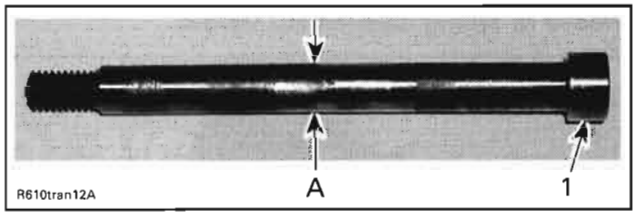


*1. Centrifugal lever pivot bolt*
*A. Measure diameter here*

| CENTRIFUGAL LEVER PIVOT BOLT DIAMETER | |
|---|---|
| NOMINAL | 6.078 to 6.100 mm (.239 to .240 in) |
| SERVICE LIMIT | 6.00 mm (.236 in) |

### Centrifugal Lever

Check bushing diameter in the centrifugal lever **no. 7** for wear. Replace centrifugal lever if necessary.

| CENTRIFUGAL LEVER BORE DIAMETER | |
|---|---|
| NOMINAL | 6.035 to 6.078 mm (.238 to .239 in) |
| SERVICE LIMIT | 6.200 mm (.244 in) |

Replace centrifugal lever, thrust washers, centrifugal lever pivot bolts and lock nuts if the contact surfaces show heavy visible wear.

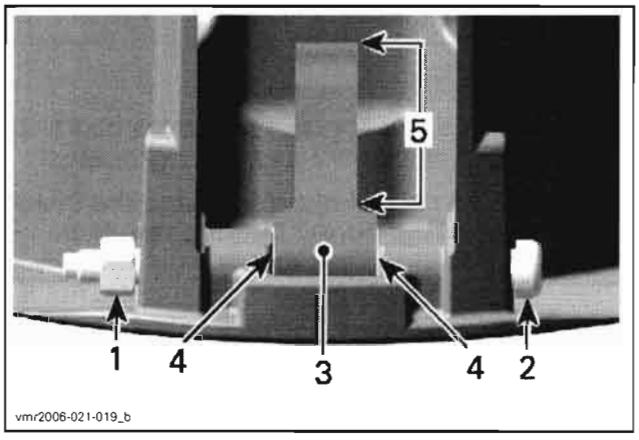


1. *Lock nut*
2. *Centrifugal lever pivot bolt*
3. *Centrifugal lever*
4. *Thrust washers*
5. *Contact surface to the roller*

**⚠ WARNING**

**Whenever replacing centrifugal levers, always replace all lever at the same time. Otherwise, unbalanced drive pulley will occur because of levers difference.**

### Sliding Sheave

Check sliding sheave for cracks and sliding contact surface for excessive wear. Replace sliding sheave if necessary.

Measure centrifugal lever pivot bolt bores. Replace sliding sheave if bores are out of specification or otherwise damaged.

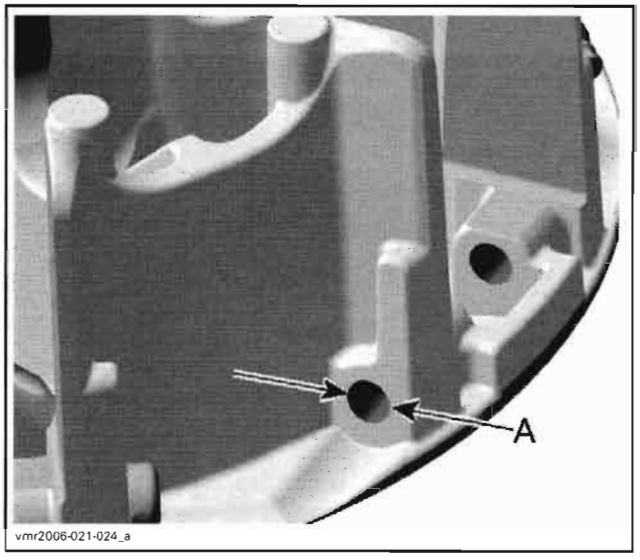


*A. Centrifugal lever pivot bolt bore diameter*

| CENTRIFUGAL LEVER PIVOT BOLT BORE DIAMETER | |
|---|---|
| NOMINAL | 6.113 to 6.171 mm (.241 to .243 in) |
| SERVICE LIMIT | 6.300 mm (.248 in) |

Measure bushing diameters of sliding sheave.

Use a dial bore gauge to measure bushing diameter. Measuring point must be at least 5 mm (1/4 in) from bushing edge.

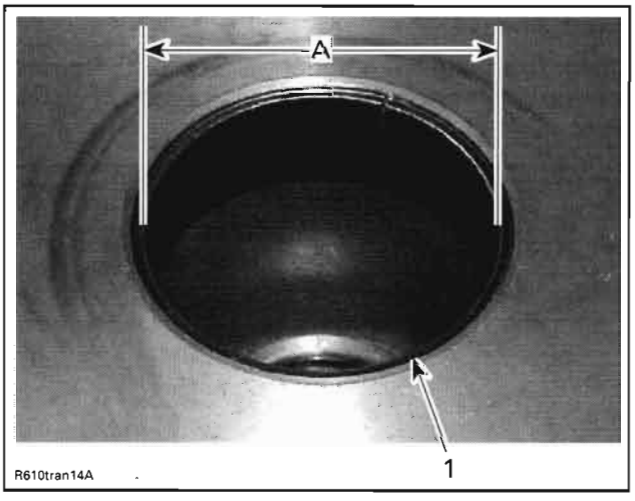


1. *Bushing on fixed sheave side*
A. *Bore diameter of bushing*

| SLIDING SHEAVE LARGE BUSHING | |
|---|---|
| NOMINAL | 55.000 to 55.040 mm (2.165 to 2.167 in) |
| SERVICE LIMIT | 55.200 mm (2.173 in) |

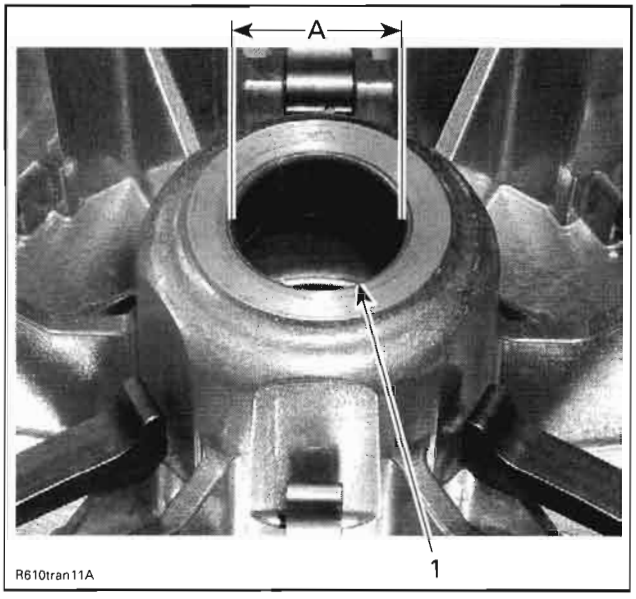


*1. Bushing on governor cup side*
*A. Bore diameter of bushing*

| SLIDING SHEAVE SMALL BUSHING | |
|---|---|
| NOMINAL | 32.000 to 32.040 mm (1.260 to 1.261 in) |
| SERVICE LIMIT | 32.200 mm (1.268 in) |

Replace sliding sheave if bushings **no. 10** and/or **no. 11** is (are) out of specification. Visually inspect coatings.

### Fixed Sheave

Check fixed sheave contact surface to the governor cup for scratches or other damages. If so, replace fixed sheave.

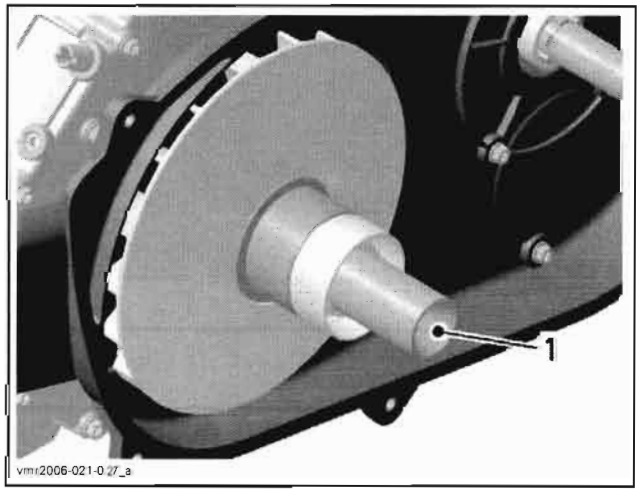


*1. Visually check here*

Check for any marks on fixed sheave plate. Replace if necessary.

### Spring

Measure spring free length and squareness. If spring is out of specification, replace by a new one.

| SPRING FREE LENGTH | |
|---|---|
| SERVICE LIMIT | 85 mm (3.347 in) |
| **CLUTCH SPRING SQUARENESS** | |
| SERVICE LIMIT | 4 mm (.157 in) |

### One-Way Clutch

Check bearings for excessive play and smooth operation. Replace one-way clutch if necessary.

**CAUTION: Be careful not to damage the inside of one-way clutch during bearing removal.**

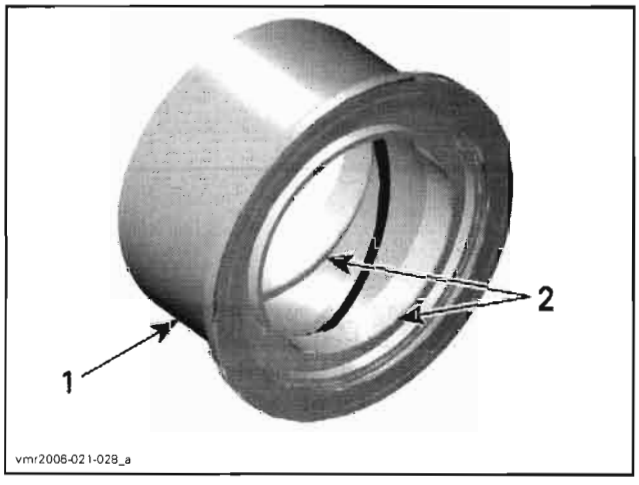


*1. One-way clutch*
*2. Bearings*

Measure length of spring sleeve **no. 14** and check if edges on top of the spring sleeve are excessively worn. If they out of specifications, replace both spring sleeve at the same time.

| SPRING SLEEVE LENGTH | |
|---|---|
| NOMINAL | 9.2 to 9.4 mm (.362 to .370 in) |
| SERVICE LIMIT | 9 mm (.276 in) |

## Assembly

For assembly, reverse the disassembly procedure. Pay attention to following details.

### One-Way Clutch

NOTE: Using Isoflex grease Topas NB 52 (P/N 293 550 021), lubricate spring and spring sleeve **no. 14** and between one way clutch bearings **no. 13**.

### Friction Washer

NOTE: Apply Isoflex grease Topas NB 52 (P/N 293 550 021) on both sides of friction washer **no. 12**.

NOTE: Friction washer has to be assembled with collar towards to the one way clutch.

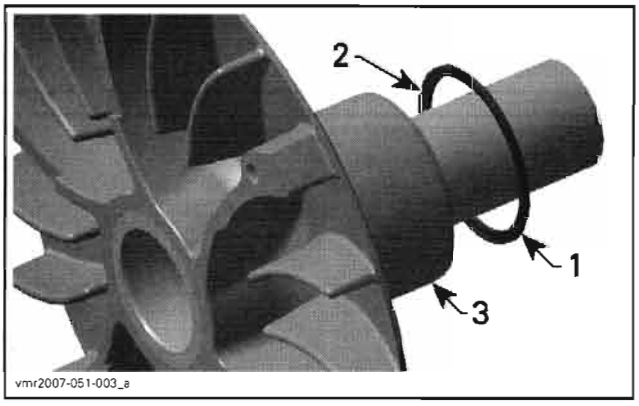


1. *Friction washer*
2. *Collar*
3. *One way clutch*

### Sliding Sheave

Install centrifugal levers **no. 7** with their thrust washers **no. 8**.

**CAUTION: Centrifugal levers must move easily after installation.**

### Governor Cup

Rebuild governor cup with new bearing sleeves, thrust washers **no. 6**, rollers and slider shoes.

**CAUTION: Final position has to be aligned with the contact surface of the slider shoes (no protrusion).**

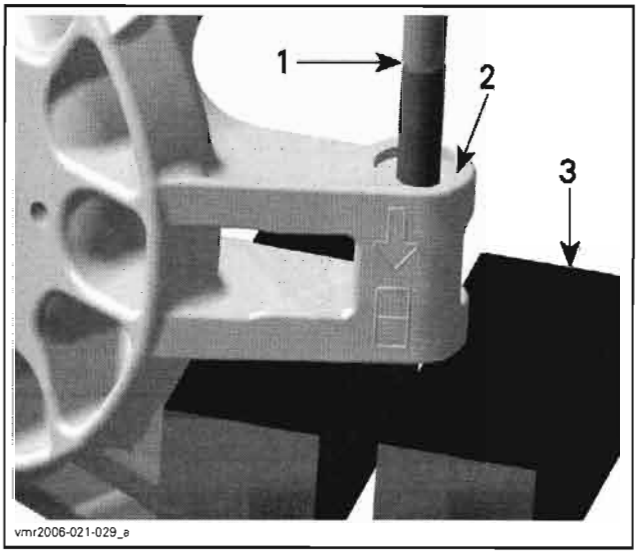


1. *Top edge of bearing sleeve*
2. *Mating surface of slider shoes*
3. *Vice*

Each time when replacing the bearing sleeves sign the foreseen box with a punch.

**CAUTION: Do not tap too hard. Violent damage of the governor cup may appear.**

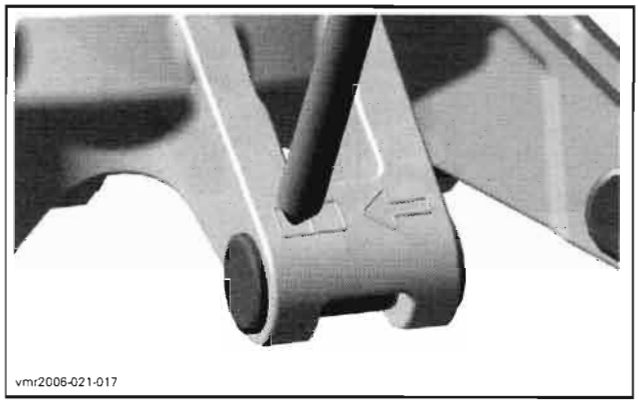


**CAUTION: Rollers must move easily after installation.**

Insert slider shoes into governor cup to properly slide in guides.

## Installation

For installation, reverse the removal procedure. Pay attention to the following details.

**⚠ WARNING**

**Do not apply antiseize or any lubricant on crankshaft and drive pulley tapers.**

**CAUTION: Never use any type of impact wrench at drive pulley removal and installation.**

Clean mounting surfaces as described in *CLEANING* above.

Install drive pulley on crankshaft extension.

**CAUTION: Do not forget to place thrust washer prior to install conical spring washer.**

Install conical spring washer with its concave side towards drive pulley then install drive pulley screw.

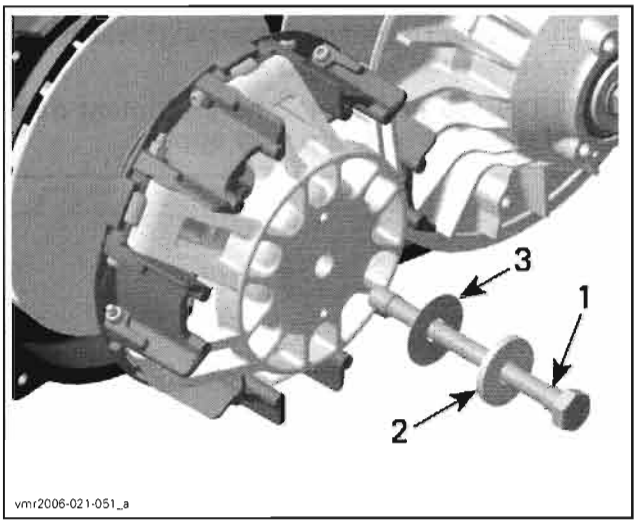


1. *Drive pulley screw*
2. *Conical spring washer*
3. *Thrust washer*

**⚠ WARNING**

**Never substitute conical spring washer and/or screw with jobber ones. Always use BRP genuine parts for this particular case.**

To torque the drive pulley screw, block the drive pulley. Refer at the beginning of this section for the two possible procedures.

When the drive pulley is blocked, torque screw to 100 N•m (74 lbf•ft).

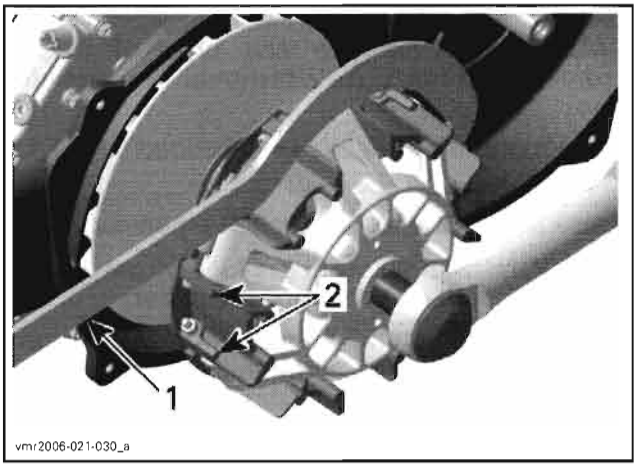


1. *Pulley holding tool (P/N 529 006 400)*
2. *Drive pulley removal/installation area*

# DRIVEN PULLEY

## Removal

Remove drive belt (see *DRIVE BELT* above).

Using the pulley holding tool (P/N 529 035 771), hold the driven pulley during the removal of the driven pulley screw. **Do not remove screw completely.**

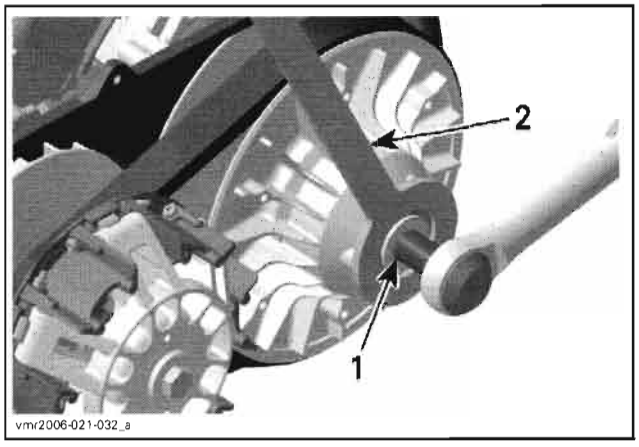


1. *Driven pulley screw*
2. *Pulley holding tool*

Push the driven pulley and maintain it in this position during the removal of screw. Remove driven pulley screw and washer.

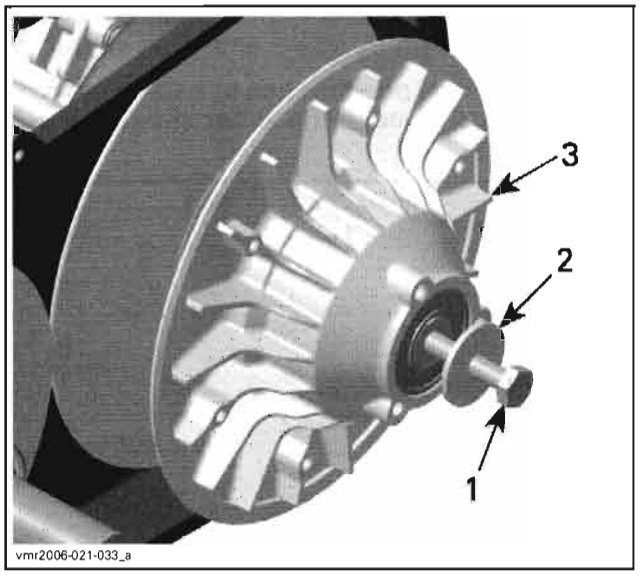


1. *Driven pulley screw*
2. *Thrust washer*
3. *Driven pulley fixed sheave*

**⚠ WARNING**

**Driven pulley is spring loaded. Hold driven clutch pulley tight and slowly remove the driven pulley screw to release spring tension.**

Remove the driven pulley with the spring, cam and the plate.

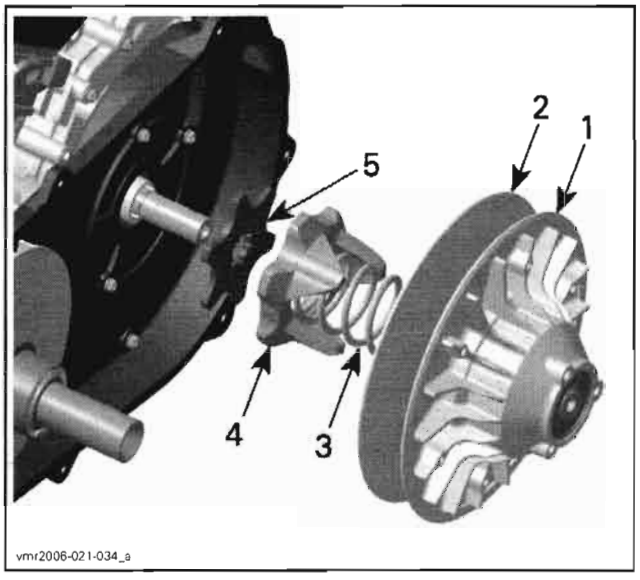


1. *Fixed sheave of driven pulley*
2. *Sliding sheave of driven pulley*
3. *Spring*
4. *Cam*
5. *Plate*

## Disassembly

### Fixed Sheave

Remove retaining ring and lift torque gear.

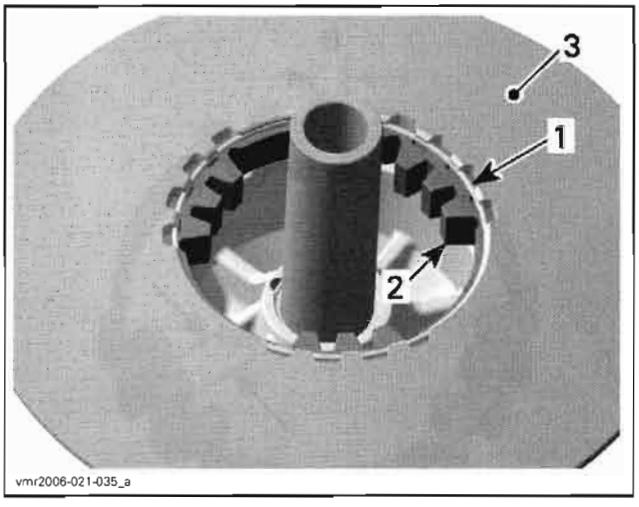


1. *Retaining ring*
2. *Torque gear*
3. *Fixed sheave of driven pulley*

**NOTE:** The following procedure is not necessary except if ball bearing or shaft must be removed. Refer to *INSPECTION* before proceeding.

Heat ball bearing area up to 100°C (212°F) before removing ball bearing.

Use a soft hammer to push shaft with bearing **no. 17** out of fixed sheave.

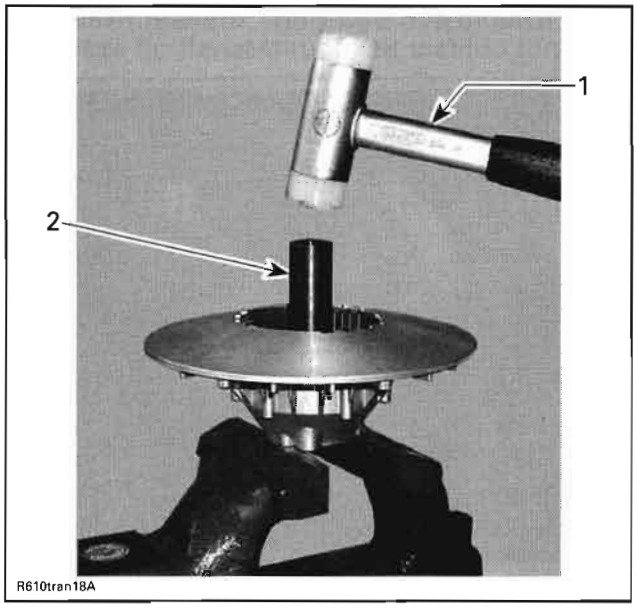


1. *Soft hammer*
2. *Shaft*

Remove shaft from ball bearing.

Remove distance sleeve and O-ring **no. 26** from countershaft.

Replace O-ring if brittle, hard or damaged.

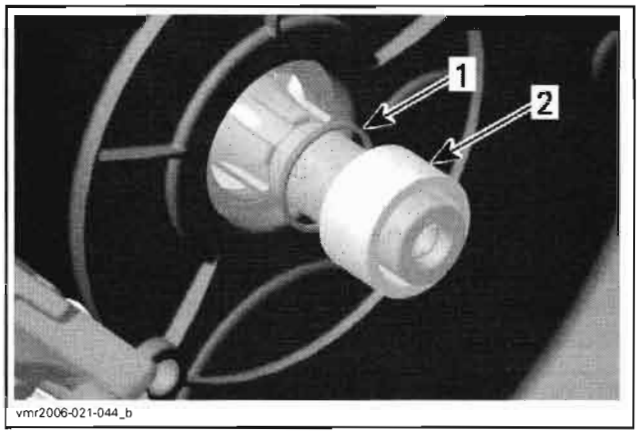


1. *O-ring*
2. *Distance sleeve*

## Cleaning

When a dust deposit has to be removed from the cam or the shaft, use dry cloth.

Clean pulley faces and shaft with fine steel wool and dry cloth.

Use pulley flange cleaner (P/N 413 711 809) to clean driven pulley.

Clean the CVT air guide area from contamination.

Using a paper towel with pulley flange cleaner (P/N 413 711 809) to clean countershaft end and the inside of the shaft **no. 23**.

**CAUTION:** To avoid damage, make sure cleaner does not contact the countershaft oil seal.

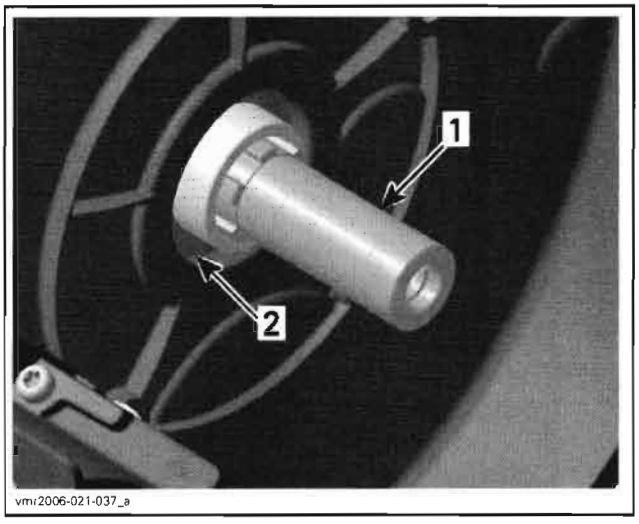


*1. Countershaft support*
*2. Countershaft oil seal*

## Inspection

### Sliding Sheave

Check sliding sheave for cracks and sliding contact surface for excessive wear. Replace sliding sheave if necessary.

Check bushings **no. 22** for cracks, scratch and for free movement when assembled to sliding sheave.

Using a dial bore gauge measure bushing diameter. Measuring point must be at least 5 mm (1/4 in) from bushing edge.

This bushing can not be replaced. Replace sliding sheave if bushings **no. 22** are out of specification. Visually inspect coatings.

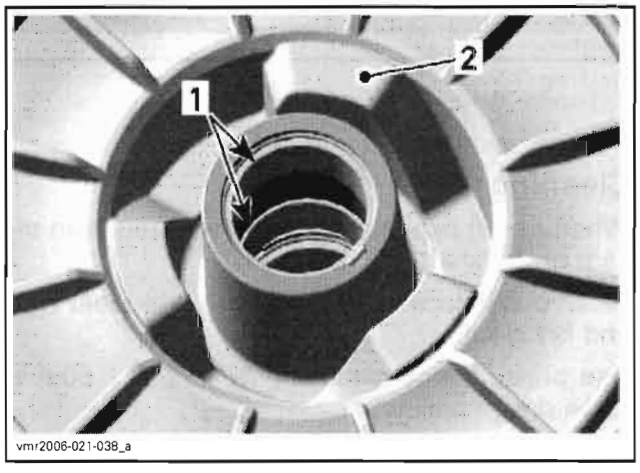


*1. Bushings*
*2. Backside of sliding sheave of driven pulley*

| BUSHINGS BORE DIAMETER | |
|---|---|
| NOMINAL | 30.060 to 30.100 mm (1.183 to 1.185 in) |
| SERVICE LIMIT | 30.200 mm (1.189 in) |

### Fixed Sheave

Check fixed sheave for cracks and excessive wear. Replace fixed sheave if necessary.

Check ball bearing for free play and smooth operation. Replace if necessary.

Check shaft for heavy wear or visible damage. Replace if necessary.

If the shaft is removed, using a dial bore gauge, measure bushing diameter. Measuring point must be at least 5 mm (1/4 in) from bushing edge.

This bushing can not be replaced. Replace fixed sheave if bushing **no. 18** is out of specification. Visually inspect coatings.

| BUSHING BORE DIAMETER | |
|---|---|
| NOMINAL | 30.060 to 30.100 mm (1.183 to 1.185 in) |
| SERVICE LIMIT | 30.200 mm (1.189 in) |

Check torque gear for visible damage and cracks.

Measure wear limit with a caliper.

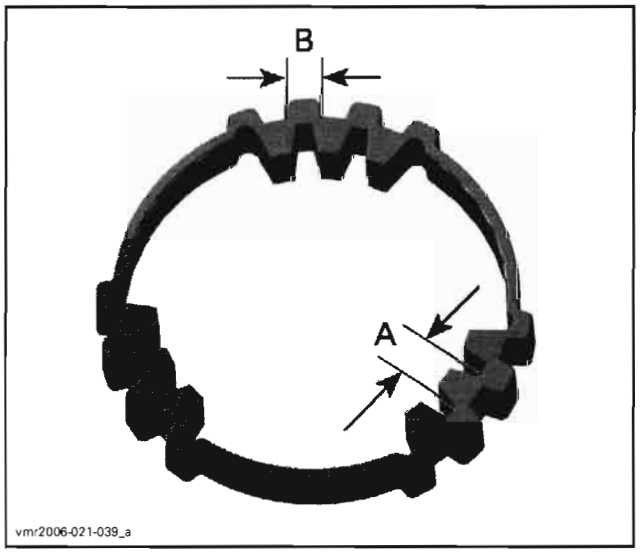


*A. Measurement inside*
*B. Measurement outside*

| WEAR ON TEETH BOTH SIDES | |
|---|---|
| SERVICE LIMIT | 7.500 mm (.295 in) |

### Cam

Check cam for visible damage and wear limit with a caliper.

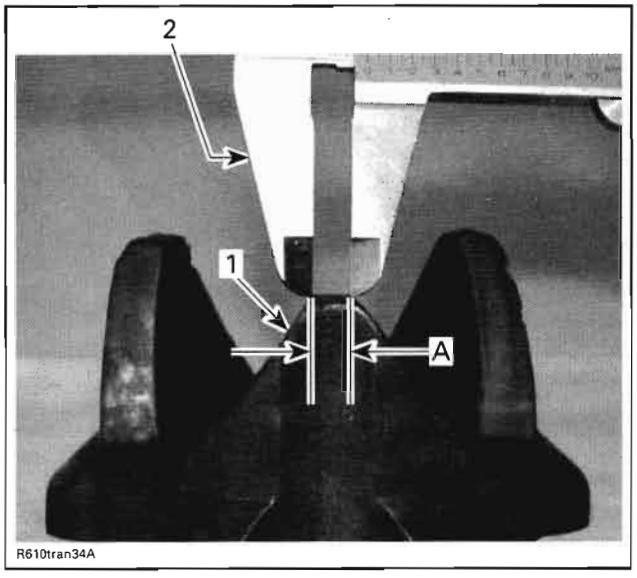


1. *Contact surface*
2. *Caliper*

A. *Width to be measured due to wear on contact surface*

| WIDTH ON TOP SURFACE | |
|---|---|
| SERVICE LIMIT | 9.00 mm (.354 in) |

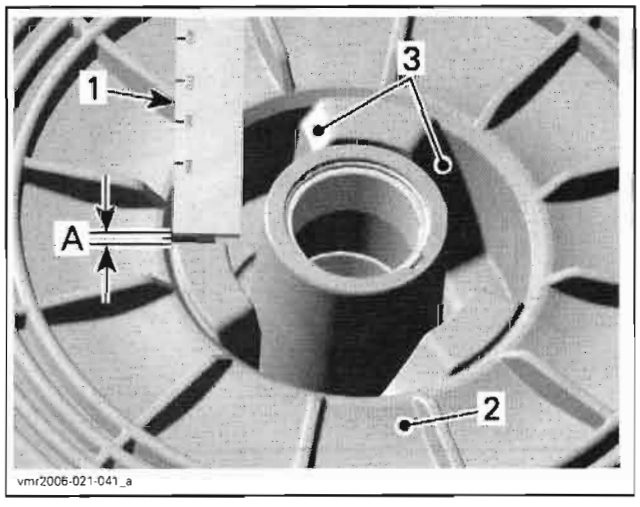


1. *Caliper*
2. *Sliding sheave*
3. *Contact surface*

A. *Wear to be measured*

| WEAR ON CONTACT SURFACE | |
|---|---|
| SERVICE LIMIT | 1.00 mm (.039 in) |

### Spring

Measure spring free length and squareness. If spring is out of specification, replace by a new.

| SPRING FREE LENGTH | |
|---|---|
| SERVICE LIMIT | 125 mm (4.921 in) |
| **CLUTCH SPRING SQUARENESS** | |
| SERVICE LIMIT | 3.8 mm (.150 in) |

## Assembly

For installation, reverse the removal procedure. Pay attention to following details.

Heat ball bearing area up to 100°C (212°F) before ball bearing installation.

**NOTE:** Place new ball bearing in a freezer for 10 minutes before installation.

Install ball bearing with the writing on top and push only on the outer ring.

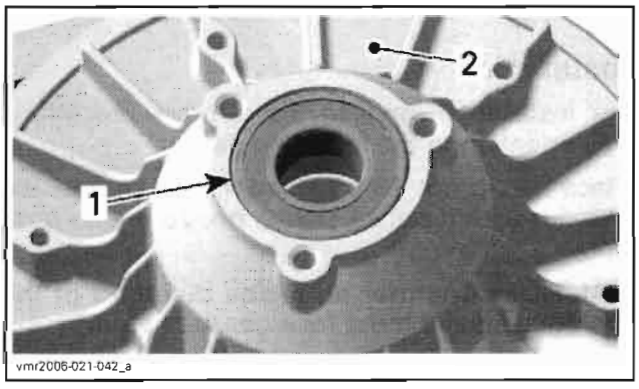


1. *Ball bearing*
2. *Fixed sheave of driven pulley*

**CAUTION:** Do not use hammer, use press machine only.

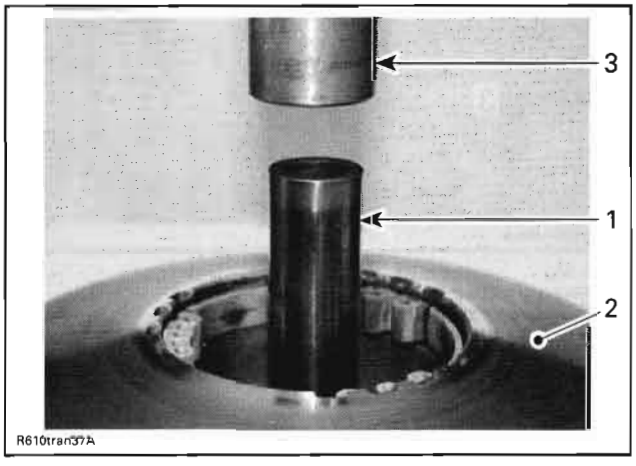


1. *Shaft*
2. *Fixed sheave*
3. *Press machine*

Install torque gear then secure it with retaining ring.

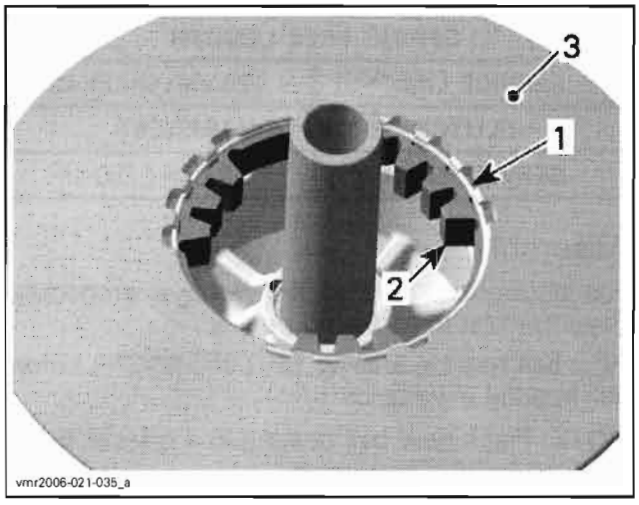


1. *Retaining ring*
2. *Torque gear*
3. *Fixed sheave of driven pulley*

## Installation

For installation, reverse the removal procedure. Pay attention to the following details.

Place O-ring **no. 26** on countershaft splines and move it with distance sleeve **no. 25** in end position.

**CAUTION: Chamfer on inside diameter of the distance sleeve must face gearbox side.**

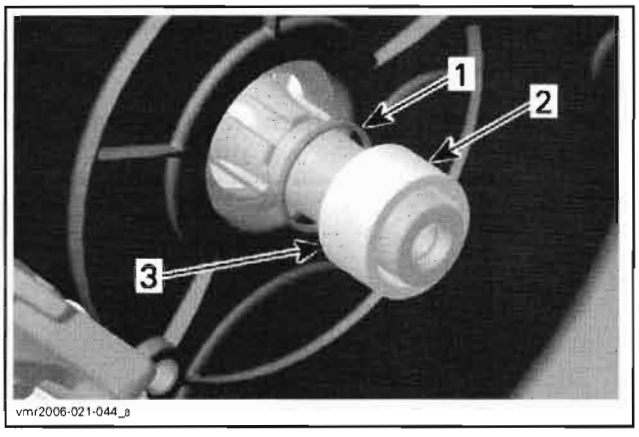


1. *O-ring*
2. *Distance sleeve*
3. *Chamfered area of distance sleeve*

Install cam retainer on countershaft end the right way.

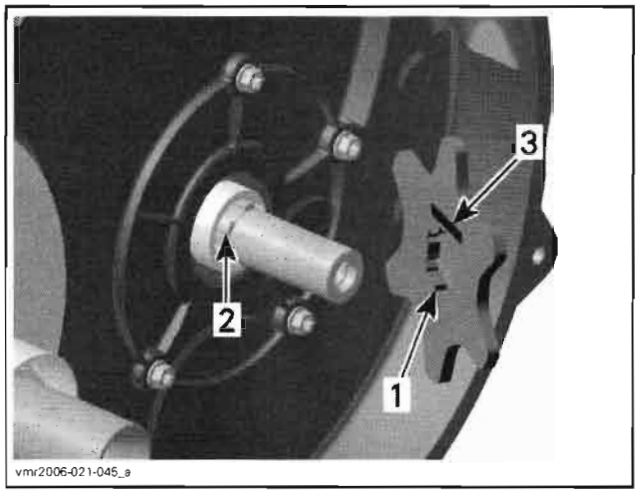


1. *Sharp edge of cam retainer to engine side*
2. *Countershaft spline*
3. *Inscription*

Install cam **no. 24**.

Install sliding sheave **no. 21** into fixed sheave **no. 16**.

Place spring behind sliding sheave then align driven pulley with cam.

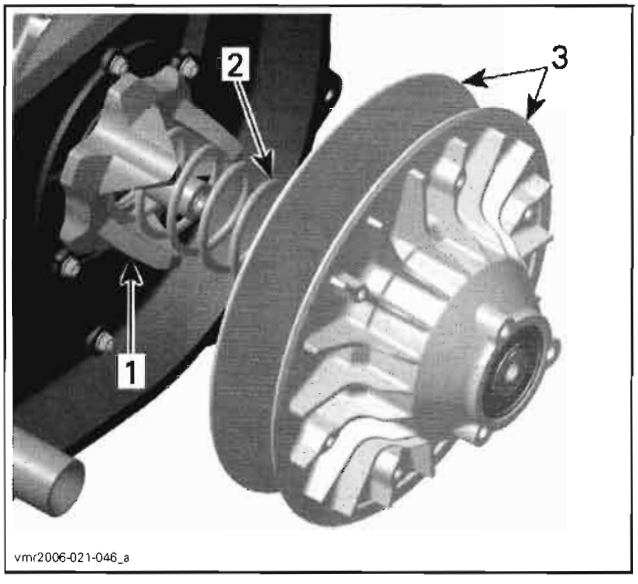


1. *Cam*
2. *Spring*
3. *Driven pulley*

With your hand, push the driven pulley on the shaft to compress the spring. Install the driven pulley screw and thrust washer.

**⚠ WARNING**

**Driven pulley is a spring loaded system.**

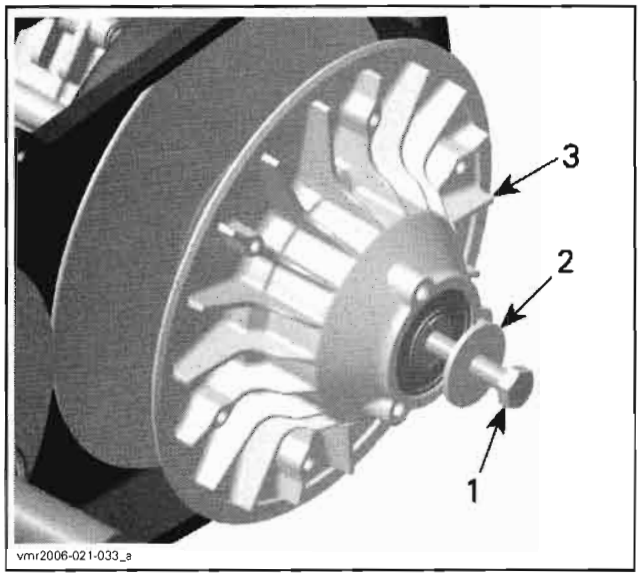


*1. Driven pulley screw*
*2. Thrust washer*
*3. Driven pulley fixed sheave*

**NOTE:** Driven pulley end-play is 0 (zero).

Torque driven pulley screw.

# CVT AIR GUIDE

## Removal

Remove the drive pulley and the driven pulley.

Unscrew the clamps retaining the CVT air hoses.

Remove CVT air guide.

## Inspection

Clean CVT air guide from contamination

Check O-rings if brittle, hard or damaged. Replace if necessary.

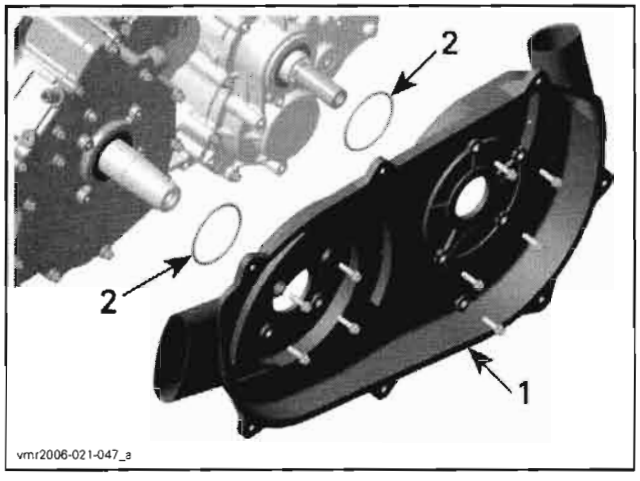


*1. CVT air guide*
*2. O-rings*

## Installation

For installation reverse the removal procedure.

# FRONT DRIVE

## SERVICE TOOLS

| Description | Part Number | Page |
|---|---|---|
| CV boot clamp pliers | 295 000 069 | 312 |
| pliers Oetiker 1099 | 295 000 070 | 312 |
| differential spanner socket | 529 035 649 | 314 |
| backlash measurement tool | 529 035 665 | 315 |
| joint extractor tool | 529 036 005 | 312 |

## SERVICE PRODUCTS

| Description | Part Number | Page |
|---|---|---|
| XP-S synthetic grease | 293 550 010 | 311, 316, 318 |
| XP-S synthetic gear oil | 293 600 043 | 313 |
| Loctite 277 | 293 800 073 | 316 |

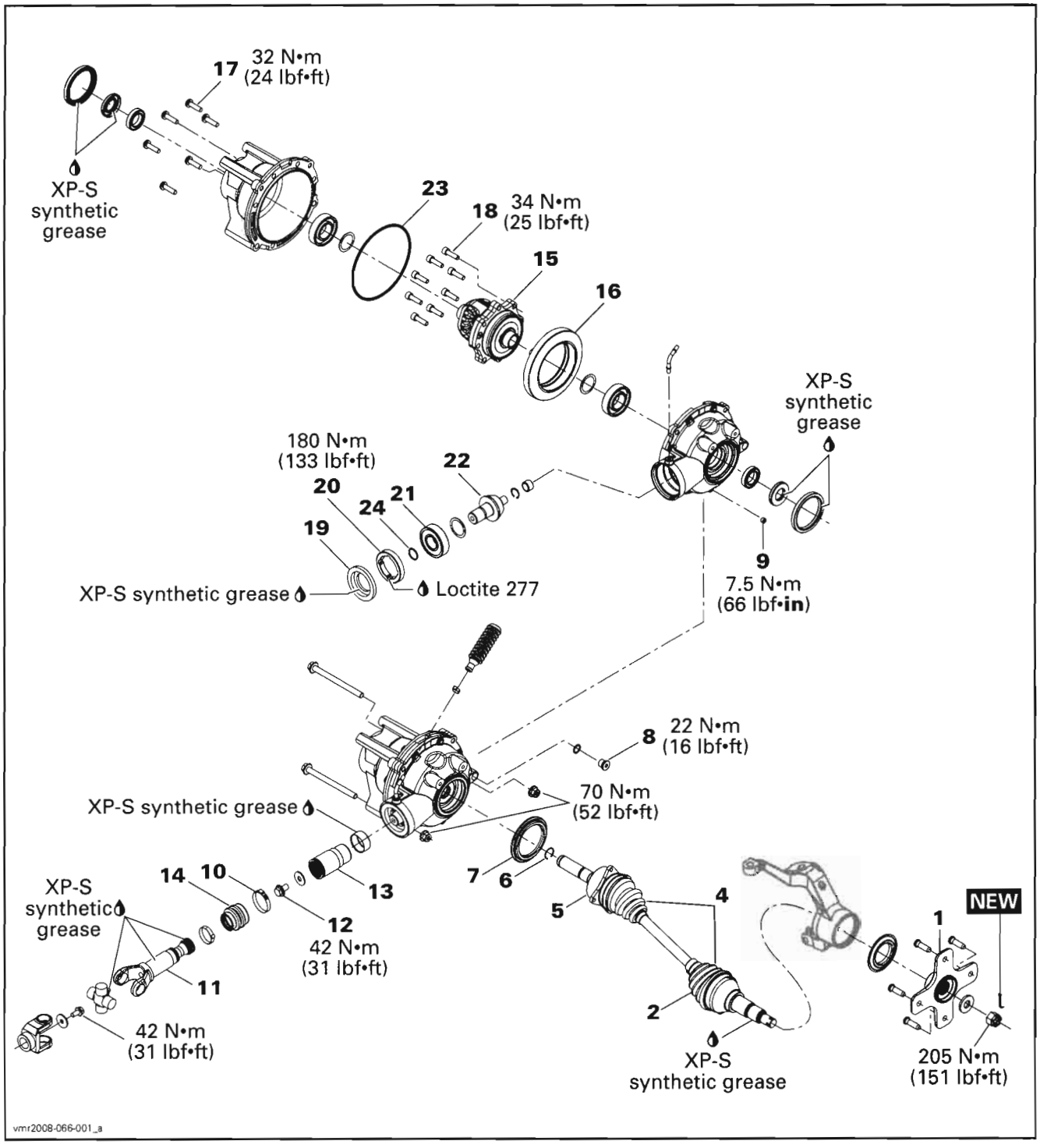
17
32 N•m
(24 lbf•ft)
XP-S
synthetic
grease
23
18
34 N•m
(25 lbf•ft)
15
16
XP-S
synthetic
grease
180 N•m
(133 lbf•ft)
22
20
24
21
19
XP-S synthetic grease
Loctite 277
9
7.5 N•m
(66 lbf•in)
8
22 N•m
(16 lbf•ft)
70 N•m
(52 lbf•ft)
XP-S synthetic grease
14
10
13
7
6
5
4
XP-S
synthetic
grease
12
42 N•m
(31 lbf•ft)
11
42 N•m
(31 lbf•ft)
2
XP-S
synthetic grease
1
NEW
205 N•m
(151 lbf•ft)
vmr2008-066-001_a

# GENERAL

The procedure explains below is the same for the RH and LH sides unless otherwise instructed.

During assembly/installation, use torque values and service products as in the exploded views.

Clean threads before applying threadlocker. Refer to *SELF-LOCKING FASTENERS* and *LOCTITE APPLICATION* at the beginning of this manual for complete procedure.

**⚠ WARNING**

**Torque wrench tightening specifications must strictly be adhered to.**
**Locking devices (e.g.: locking tabs, elastic stop nuts, cotter pins, etc.) must be replaced with new ones.**

# PROCEDURES

## TIRES AND WHEELS

**⚠ WARNING**

**When the tires are replaced, never install a bias tire with a radial tire. Such a combination could create handling and/or stability problems.**
**Do not mix tires of different size and/or design on the same axle.**
**Front and rear tire pairs must be the identical model and manufacturer.**
**For unidirectional tread pattern, ensure that the tires are installed in the correct direction of rotation.**
**The radial tires must be installed as a complete set.**
**Severe injury or death can result if these instructions are not followed.**

The tires are directional and their rotation must be kept in a specific direction for proper operation.

Using the next table, torque wheel nuts in accordance with the following illustration.

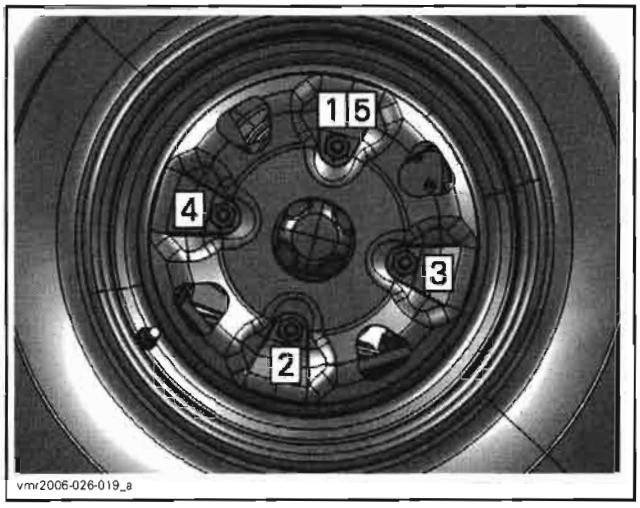


**CAUTION:** Always use the recommended wheel nuts. Using a different nut could cause damages to the rim.

| WHEEL NUT TORQUE | |
|---|---|
| All steel wheels | 70 N•m (52 lbf•ft) |
| All aluminum wheels (except for Outlander MAX 800 Ltd) | 100 N•m (74 lbf•ft) |
| Outlander MAX 800 Ltd (BLACK aluminum wheels) | 70 N•m (52 lbf•ft) |

***Outlander 650 and 800 Series and Renegade Models***

On these models, wheel balancing is necessary. To perform this operation, use a wheel balancer and adhesive weights.

## WHEEL HUB

### Wheel Hub Removal

Raise the front of vehicle, support it securely on jack stands and remove front wheel.

Apply parking brake or select 4WD position and place transmission lever on P.

Remove cotter pin and discard it.

Unscrew the castellated nut.

Remove the Belleville washer.

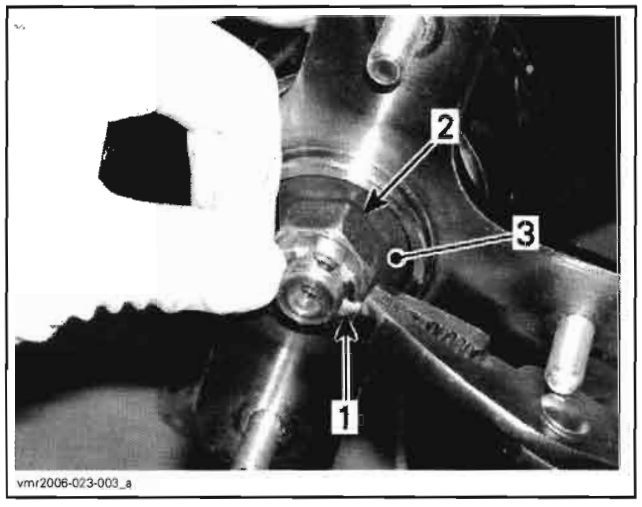


*TYPICAL*
1. *Cotter pin*
2. *Castellated nut*
3. *Belleville washer*

### *Renegade Models*

Remove caliper from knuckle. Refer to *BRAKES*.

### *All Models*

Pull wheel hub **no. 1** to remove it.

## Wheel Hub Inspection

Check wheel hub for cracks or other damages.

Check inner splines for wear or other damages.

If any damage is detected on wheel hub, replace it with a new one.

Check wear ring. If damage is apparent, replace the wear ring.

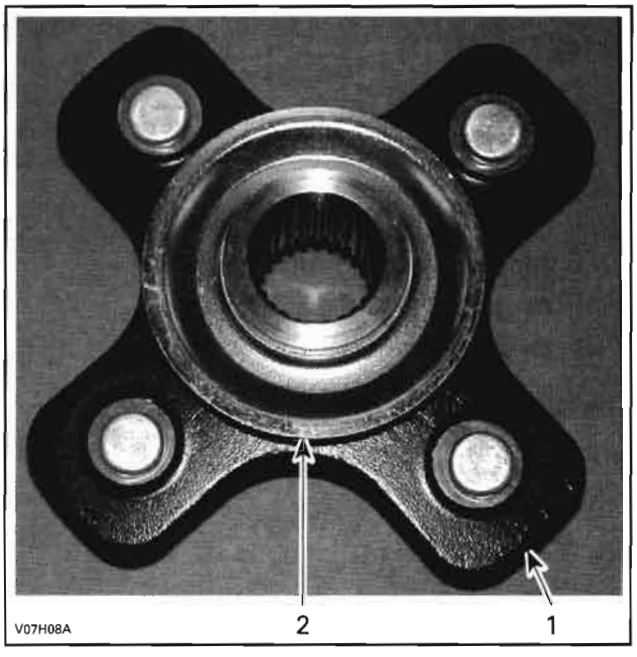


*TYPICAL — FOR ALL OUTLANDER*
1. *Wheel hub*
2. *Wear ring*

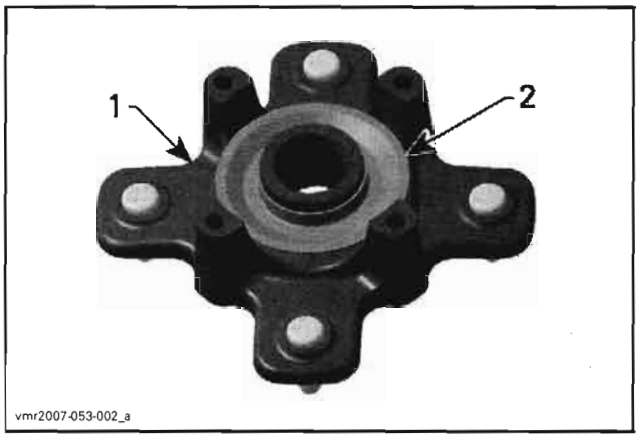


*RENEGADE MODELS*
1. *Wheel hub*
2. *Wear ring*

## Wheel Hub Installation

The installation is the reverse of removal procedure.

Install Belleville washer so that the inside diameter protrudes outward and contacts the nut.

Tighten the castellated nut on the drive shaft end to 205 N•m (151 lbf•ft) and further tighten until one of its grooves is aligned with a cotter pin hole. Install a **NEW** cotter pin and the wheel cap. Fold one pin of cotter pin over drive shaft end.

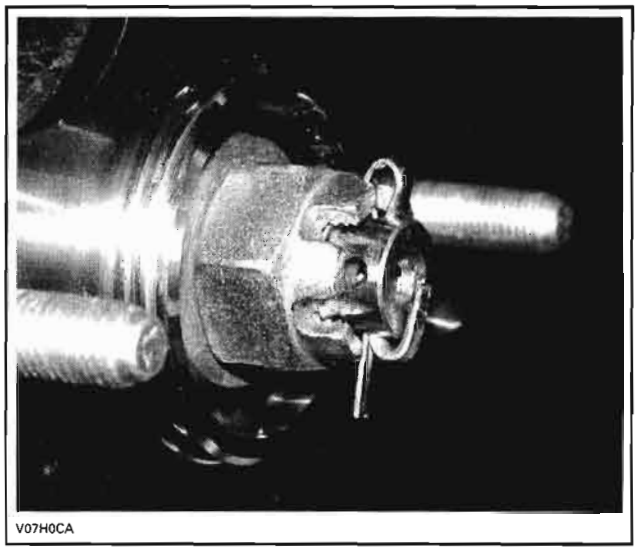


# FRONT DRIVE SHAFT

## Drive Shaft Removal

Remove the appropriate wheel hub **no. 1**, see above.

### *Outlander 500 Series*

Unscrew bolts holding strut to knuckle.

### *Outlander 650/800 Series and Renegade Models*

Remove bolt that attach the shock absorber to the upper suspension arm.

Detach upper suspension arm from knuckle.

### *All Models*

Remove ball joint retaining bolt or ball joint nut from knuckle.

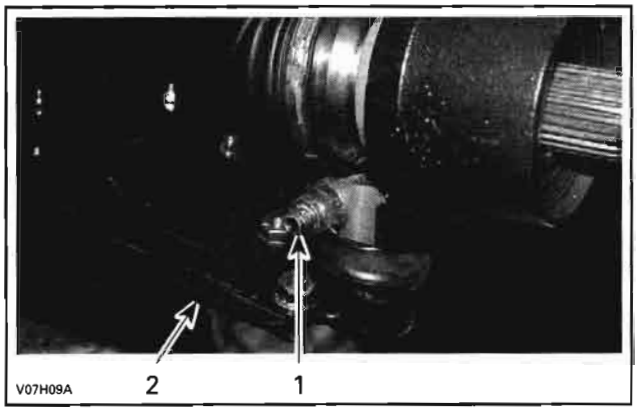


*ALL OUTLANDER MODELS*
1. *Ball joint retaining bolt*
2. *Lower suspension arm*

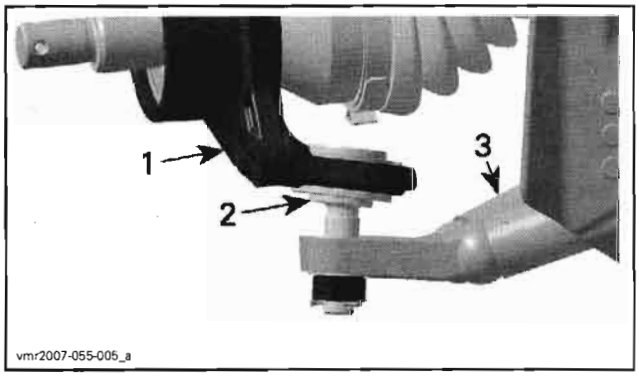


*RENEGADE MODELS*
1. *Knuckle*
2. *Lower ball joint*
3. *Lower suspension arm*

Separate knuckle from lower suspension arm.

Move CV joint **no. 2** out of knuckle then place the knuckle and the tie-rod out of way.

### *All Outlander Models*

Remove caliper. Refer to *BRAKES*.

### *All Models*

Pull drive shaft out of differential **no. 3**.

NOTE: Pull drive shaft strongly.

## Drive Shaft Inspection

Inspect the condition of boots **no. 4**. If there is any damage or evidence of leaking lubricant, replace them. Refer to *DRIVE SHAFT BOOT* further.

Check splines for excessive wear. Replace if necessary.

NOTE: If the splines on plunging joint **no. 5** are worn, a check of differential inner splines should be done.

Check the stop ring **no. 6** at the end of drive shaft. If wear is apparent, replace the wear ring **no. 7**.

Check if the bearings in knuckle move freely and smoothly. If not, replace them. Refer to *STEERING SYSTEM*.

## Drive Shaft Installation

Apply XP-S synthetic grease (P/N 293 550 010) to the splines and insert the end of drive shaft in differential and pull joint a little to make sure that the stop ring is locked in differential side gear groove.

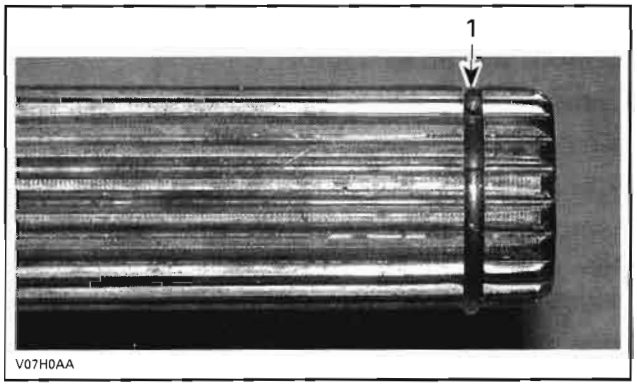


1. *Stop ring*

The wear ring should be closed to the differential.

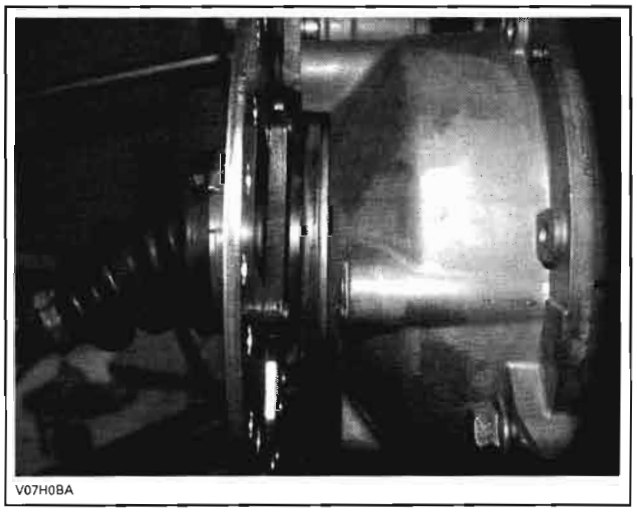


*TYPICAL*

Insert the other end of drive shaft in the knuckle and install the knuckle to the lower suspension arm. Install and torque the ball joint retaining bolts to 45 N•m (33 lbf•ft).

Install all other removed parts.

# DRIVE SHAFT BOOT

## Boot Inspection

Check bearing in plunging joint **no. 5** or CV joint **no. 2**. If bearing is hard to move, change plunging joint or CV joint.

Check circlip for damage, change as necessary.

## Boot Removal

Remove clamps from rubber boot using CV boot clamp pliers (P/N 295 000 069) and pliers Oetiker 1099 (P/N 295 000 070).

Remove the large end of the boot from plunging joint **no. 5** or CV joint **no. 2**.

Separate the joint from the shaft. Two procedures can be done.

### Without the Special Tool

Clamp joint housing in a vise.

Align shaft with joint.

Pull hard on shaft to remove from joint.

Remove boot from drive shaft.

Remove and discard the circlip. A new one is included in the boot kit.

### With the Special Tool

Place drive shaft in vice with the joint downward.

Install the joint extractor tool (P/N 529 036 005) on bearing.

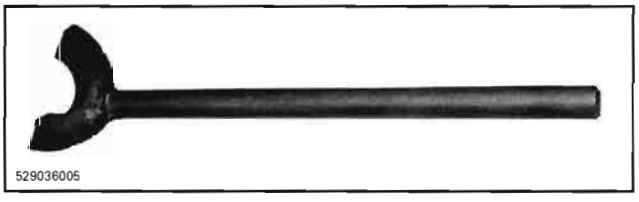


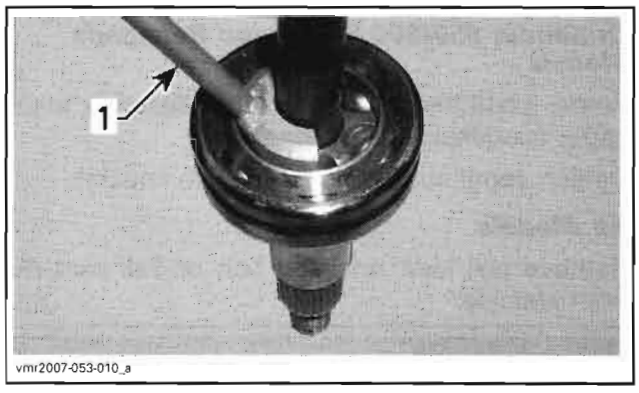


*TYPICAL — CV JOINT SHOWN*
*1. Joint extractor tool*

With an hammer, hit on the tool to separate joint from shaft.

When joint and shaft are separated, remove boot from drive shaft.

Remove and discard the circlip. A new one is included in the boot kit.

## Boot Installation

For installation, reverse the removal procedure. Pay attention to the following details.

Insert the small clamp and the small end of boot on shaft.

Install the **NEW** circlip.

Install the joint in a vise (joint facing up).

Center circlip on shaft.

Carefully insert shaft into joint and push hard to engage circlip.

Pack bearing area with grease (included with the new boot kit).

**NOTE:** Do not use or add other grease.

Install all other removed parts.

# FRONT DIFFERENTIAL

## Oil Level

Clean filler plug prior to checking oil level.

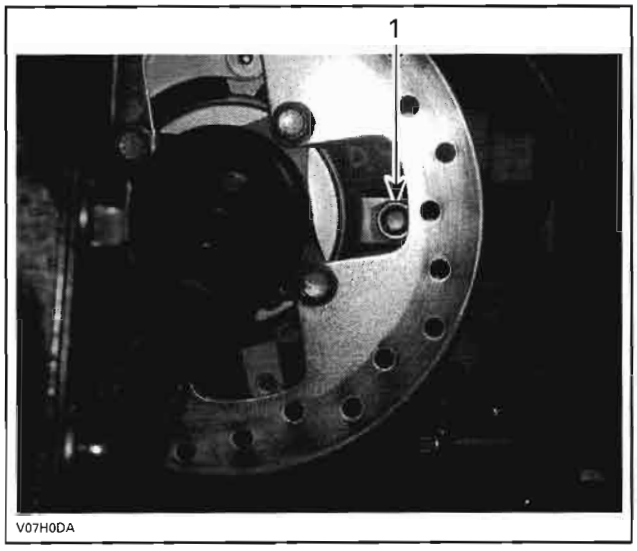


*ALL MODELS EXCEPT RENEGADE*
*1. Filler plug*

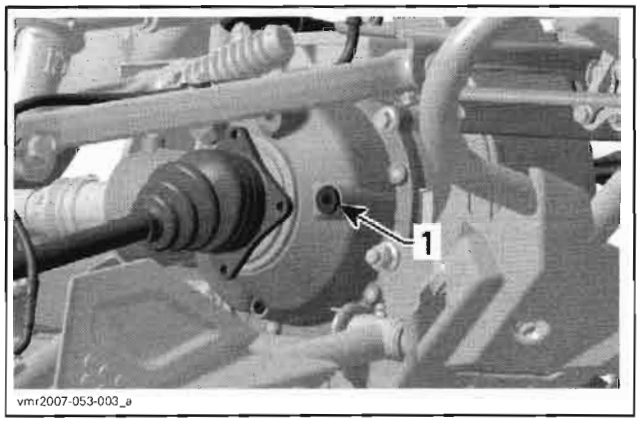


*RENEGADE MODELS*
*1. Filler plug*

With vehicle on a level surface, check oil level by removing filler plug **no. 8**. Oil level must reach the lower edge.

Add oil if necessary. Use XP-S synthetic gear oil (P/N 293 600 043) or a 75W90 synthetic oil (API GL-5).

## Oil Change

Place vehicle on a level surface. Set transmission in park position.

Lift LH side of vehicle.

Clean drain plug area.

Place a drain pan under differential drain plug area.

Remove drain plug **no. 9**.

Unscrew filler plug.

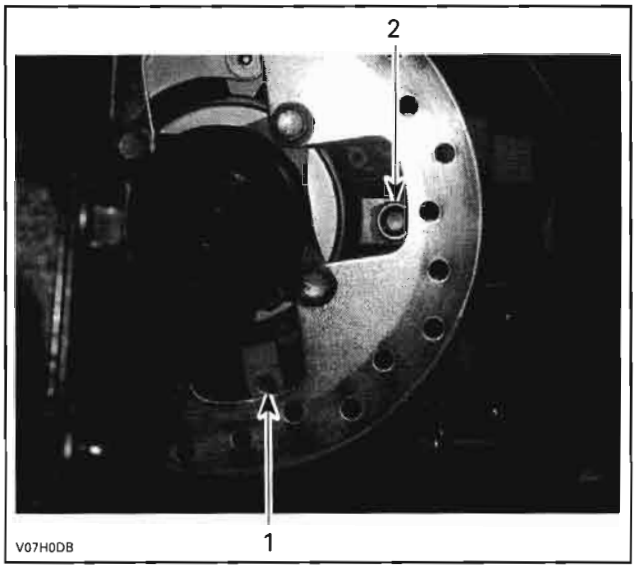


*ALL MODELS EXCEPT RENEGADE*
*1. Drain plug*
*2. Filler plug*

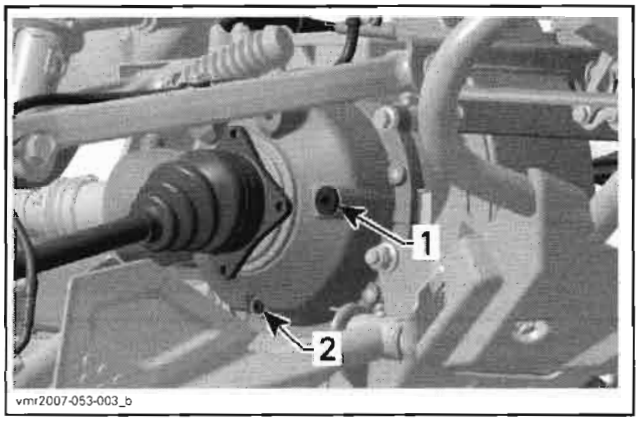


*RENEGADE MODELS*
*1. Filler plug*
*2. Drain plug*

Clean drain plug area then reinstall plug.

Lower vehicle.

Use a funnel and refill front differential with 500 mL (17 oz. US) of XP-S synthetic gear oil (P/N 293 600 043). If the XP-S synthetic gear oil is not available, use a 75W90 synthetic oil (API GL-5).

Reinstall filler plug.

## Removal

Drain the differential.

Raise front of vehicle, support it securely on jack stands and remove front wheels.

On both sides, remove the drive shafts (refer to *FRONT DRIVE SHAFT* above).

Remove both upper suspension arms.

Remove bolts that attach winch bracket to the frame (XT models).

Remove the upper differential bolts.

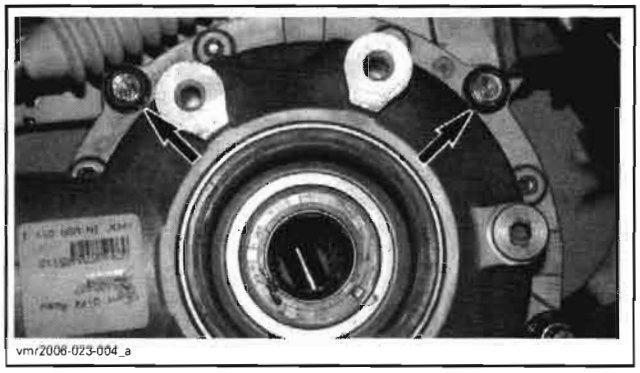
vmr2006-023-004_a

Remove the differential support bolts.

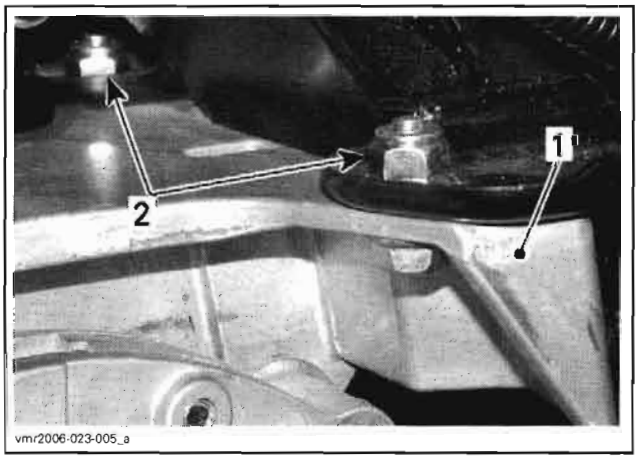

vmr2006-023-005_a

1. *Differential support*
2. *Differential support bolts*

Remove the lower differential bolts.

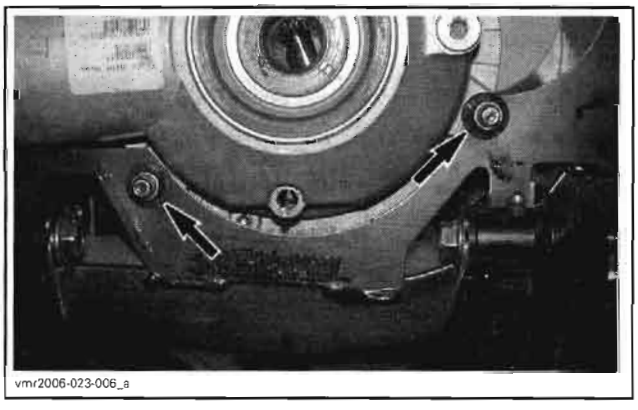
vmr2006-023-006_a

Remove the differential support, by the left side.

Remove the Oetiker clamp **no. 10** that attach propeller shaft bellows **no. 14** to the propeller shaft adaptor **no. 13**.

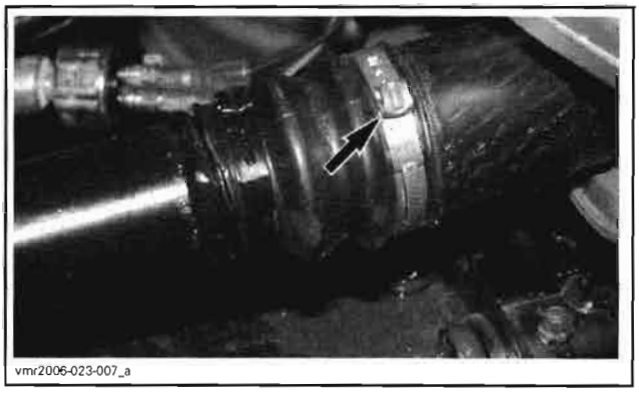
vmr2006-023-007_a

Remove the differential **no. 3** from the right side of vehicle.

## Inspection

Check backlash and drag torque, see *ADJUSTMENT* further in this section.

Check if oil seals are brittle, hard or damaged. Replace if necessary.

## Disassembly

### Ring Gear Carrier/Ring Gear

Unscrew the TORX screws **no. 17**, then separate half housings.

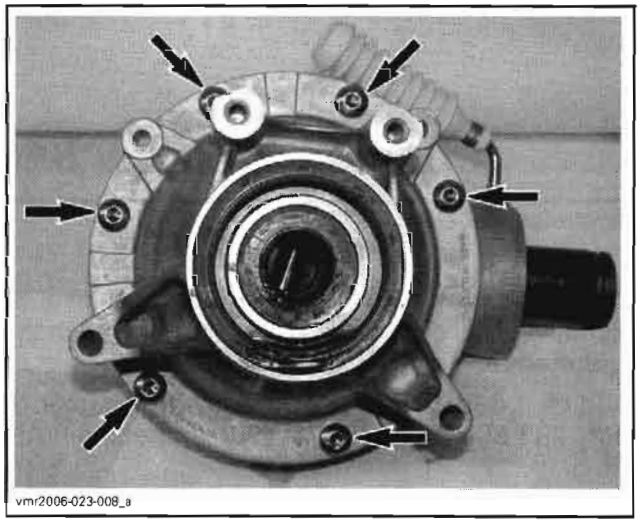
vmr2006-023-008_a

**NOTE:** Be careful to keep track of shims on each end of ring gear carrier.

Extract ring gear carrier **no. 15** with ring gear **no. 16** out of half housing.

Unscrew Allen socket screws **no. 18** then separate ring gear from ring gear carrier.

### Pinion Gear

Remove oil seal **no. 19**.

Unscrew the pinion nut **no. 20**. Use the differential spanner socket (P/N 529 035 649).

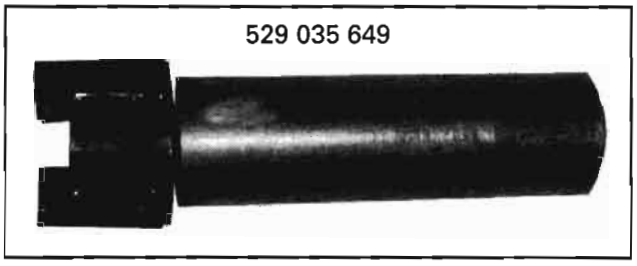


Remove the bearing **no. 21** at the same time as the pinion gear **no. 22**. Be careful to keep track of shims.

**NOTE:** The pinion gear and bearing can be easily removed using the following suggested tool:

- pipe 3-1/2 in diameter x 5 in (1)
- screwed rod M10 x 1.25, 7 in length (1)
- nut M10 x 1.25 (3)
- flat bar (1).

## Adjustment

A shimming procedure must be done when ring gear carrier, pinion gear, ring gear or housing is (are) changed.

Measure the old pinion shim stack. If the shims measure over 1 mm (.039 in), install shim stacks on the differential components as per CHART "A".

If the old pinion shim stack measurement is under 1 mm (.039 in), install a .5 mm (.02 in) shim on the differential components as per CHART "B".

| CHART "A" | | CHART "B" | |
|---|---|---|---|
| PINION | 1.85 mm (.073 in) | PINION | .5 mm (.02 in) |
| BACKLASH | 1 mm (.039 in) | BACKLASH | |
| PRELOAD | | PRELOAD | |

**NOTE:** The procedure above sets the pinion shim thickness and should not be modified thereafter. Any changes should be done on the preload and/or backlash side(s).

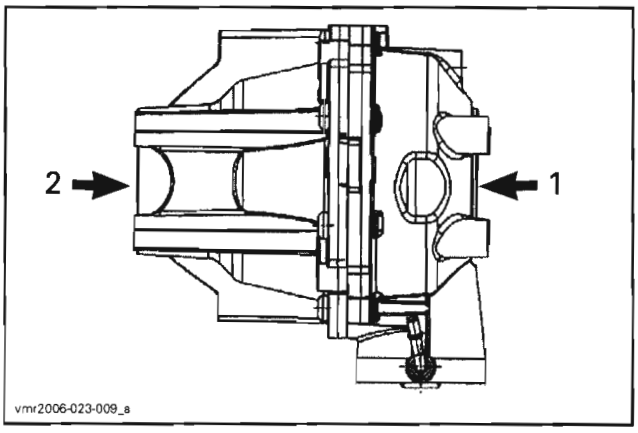


*1. Backlash side*
*2. Preload side*

Assemble the differential and check backlash as well as preload.

### Backlash

Using a dial indicator and the backlash measurement tool (P/N 529 035 665), measure the backlash. Place the backlash measurement tool at the end of pinion gear.

From center of bolt, measure 25.4 mm (1 in) and scribe a mark on the tab.

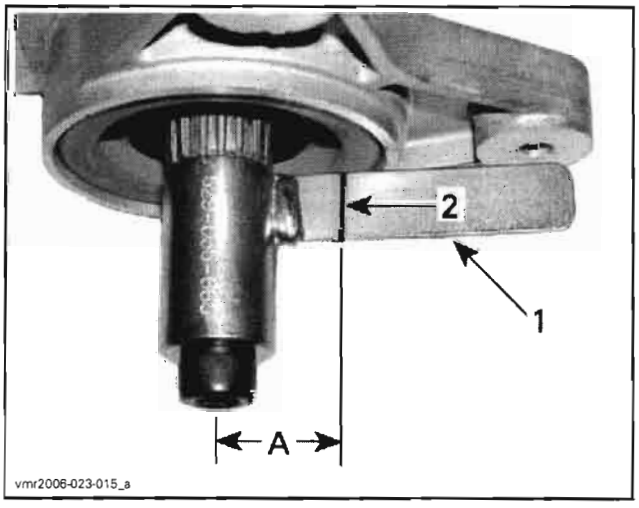


*1. Tab of backlash measurement tool*
*2. Mark on tab*
*A. 25.4 mm (1 in)*

Position the dial indicator tip against the tab at a 90° angle and right on the previously scribed mark.

Gently, move the tab back and forth. Note the result.

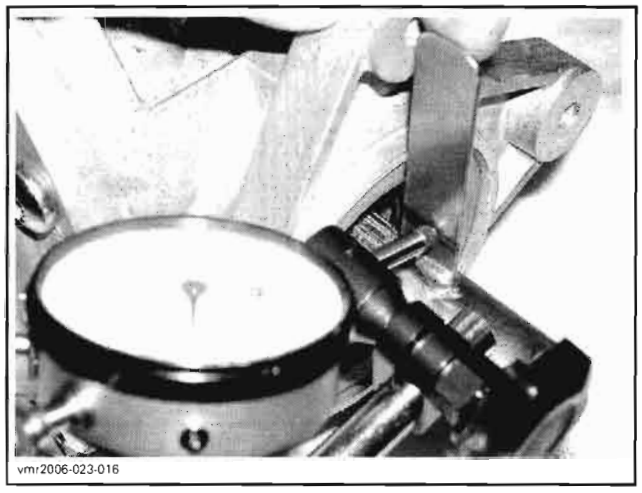
vmr2006-023-016

Rotate pinion gear 1/2 turn and check backlash again. Note the result.

Rotate pinion gear 1 turn and check backlash again.

If backlash is below 0.05 mm (.002 in), increase backlash shim by 0.05 mm (.002 in) and check the backlash again.

If backlash is greater than 0.356 mm (.014 in), decrease backlash shim by 0.05 mm (.002 in) and check the backlash again.

Measure preload.

### Preload

Screw the propeller shaft adaptor bolt **no. 12** in pinion gear.

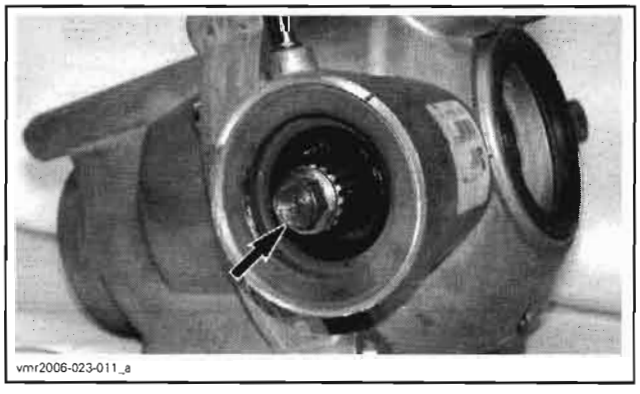
vmr2006-023-011_a

*TYPICAL*

Using a needle torque wrench, measure the drag torque.

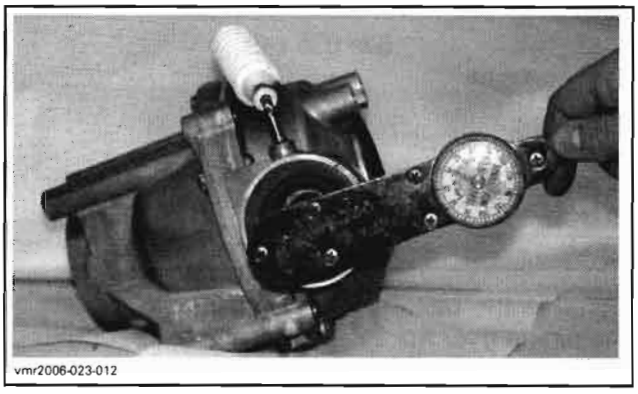
vmr2006-023-012

*TYPICAL*

If the drag torque is greater than 0.7 N•m (6 lbf•**in**), reduce preload shim by 0.05 mm (.002 in) and check drag torque again.

If the drag torque is less than 0.06 N•m (.5 lbf•**in**), increase preload shim by 0.05 mm (.002 in) and check drag torque again.

## Assembly

### Ring Gear Carrier/Ring Gear

To assemble, reverse the removal procedure. Pay attention to the following details.

Verify condition of half housing seal **no. 23**. Change seal if necessary.

Check all bearings and all oil seals. Change them if necessary.

### Pinion Gear

To install, reverse the removal procedure. Pay attention to the following details.

Check O-ring **no. 24** for damage. If so, change it.

Install the shim(s) then the ball bearing.

Install the nut **no. 20**. Apply Loctite 277 (P/N 293 800 073) on threads nut then torque it to 180 N•m (133 lbf•ft).

Apply XP-S synthetic grease (P/N 293 550 010) in the lips of the new oil seal **no. 19** and install it.

## Installation

The installation is the reverse of the removal procedure.

# FRONT PROPELLER SHAFT

## Removal

Place vehicle on PARK position and select 4WD.

Remove the RH footrest.

Unscrew propeller shaft bolt on engine side.

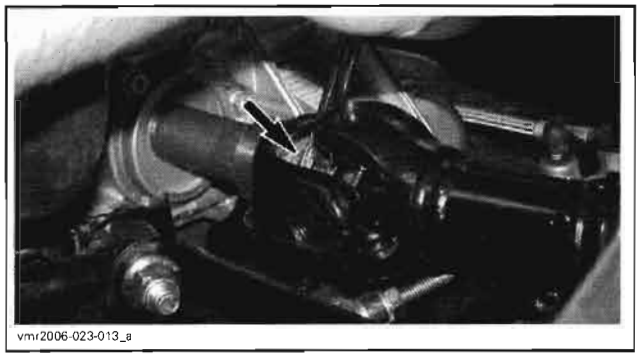
vmr2006-023-013_a

Remove the Oetiker clamp **no. 10** that attach propeller shaft bellows **no. 14** to the propeller shaft adaptor **no. 13**. Discard clamp.

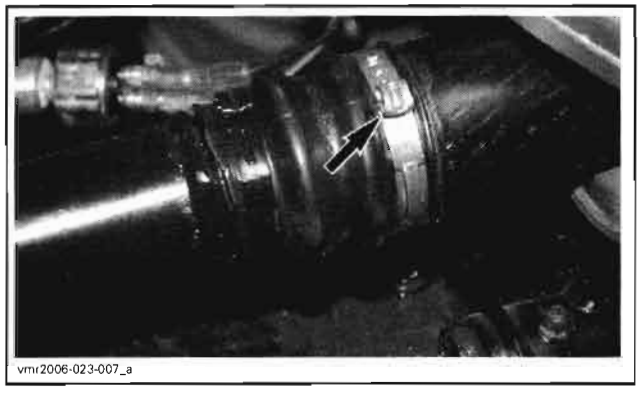
vmr2006-023-007_a

Remove LH drive shaft.

Unscrew lower and upper differential bolts.

Remove them and move the differential forwards.

Remove front propeller shaft **no. 11**.

## Inspection

Check:
- splines for wear or damage
- if U-joint moves freely in all direction
- bellows for holes or brittleness.

## Installation

Installation is the reverse of removal procedure.

# PROPELLER SHAFT U-JOINT

## Removal

Remove internal snap ring from bearing caps.

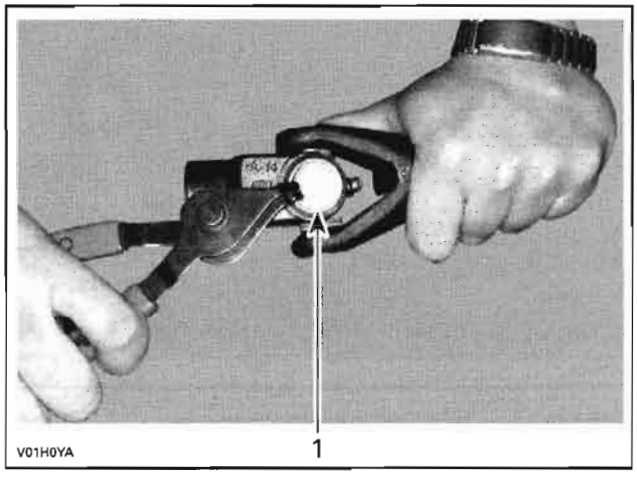


*1. Snap ring*

Support inner yoke in vice and drive other yoke down with a soft hammer.

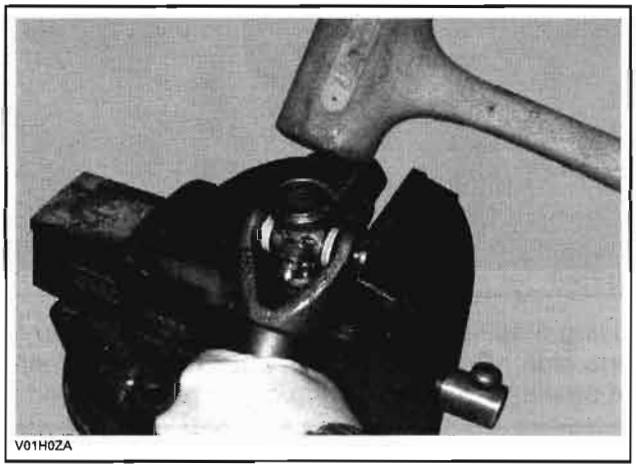
V01H0ZA

Support U-joint in vice and drive inner yoke down to remove remaining bearing caps.

Remove U-joint cross.

## Installation

Install new U-joint cross in inner yoke.

Install new bearing cap by hand.

**NOTE:** Carefully install U-joint cross with grease fitting properly positioned.

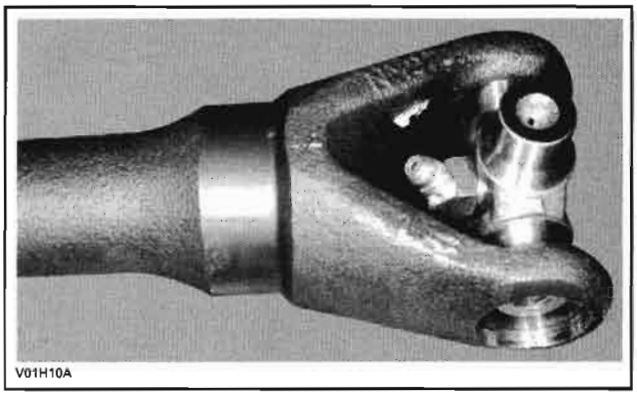
V01H10A

Tighten vise to force bearing caps in.

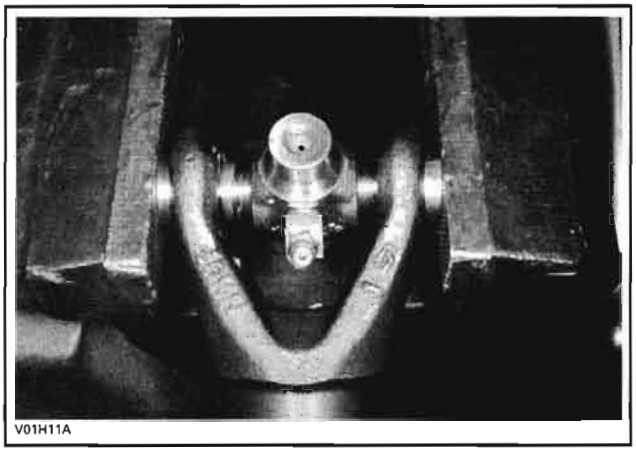
V01H11A

Using a suitable tappet, fully seat bearing cap in one side. Continually, check for free movement of bearing cross as bearing caps are assembled.

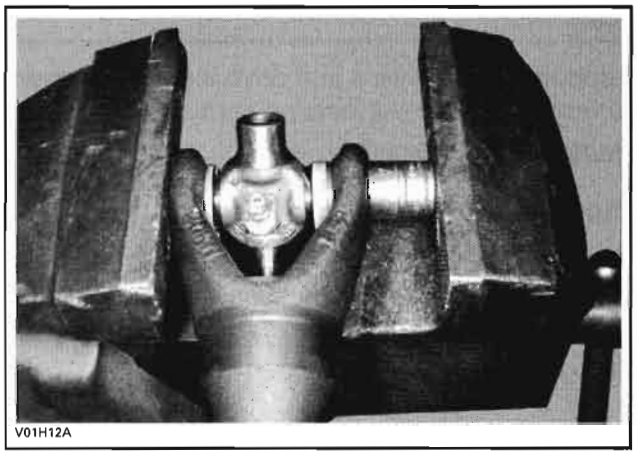
V01H12A

Install snap ring.

Repeat procedure for other sides.

Grease U-joint, using a grease gun with XP-S synthetic grease (P/N 293 550 010).

# REAR DRIVE

## SERVICE TOOLS

| Description | Part Number | Page |
|---|---|---|
| CV boot clamp pliers | 295 000 069 | 323 |
| pliers Oetiker 1099 | 295 000 070 | 323 |
| differential spanner socket | 529 035 649 | 327 |
| backlash measurement tool | 529 035 665 | 328 |

## SERVICE PRODUCTS

| Description | Part Number | Page |
|---|---|---|
| XP-S synthetic grease | 293 550 010 | 322, 325–326, 329 |
| XP-S synthetic gear oil | 293 600 043 | 326 |
| Loctite 277 | 293 800 073 | 329 |

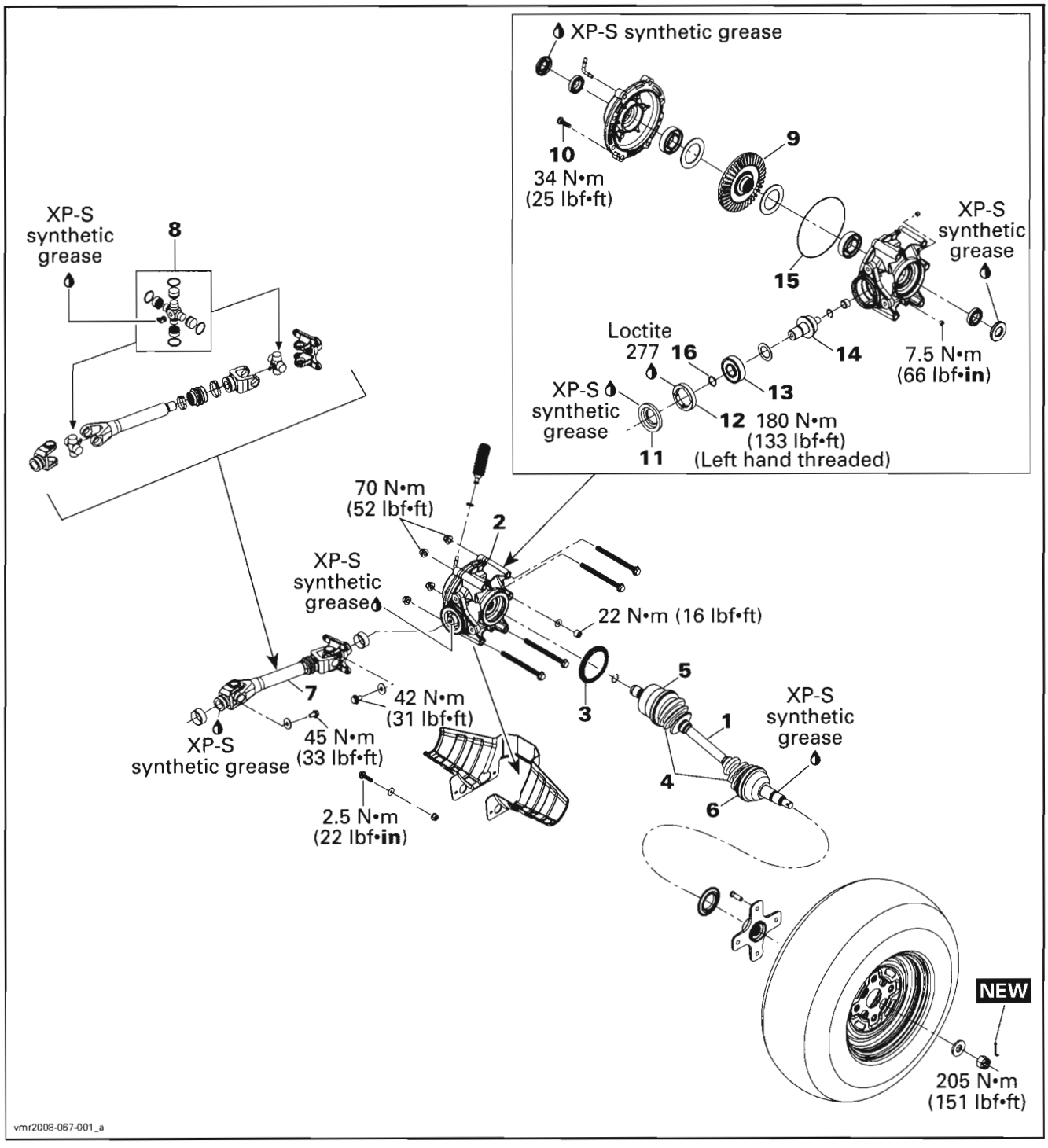
XP-S synthetic grease
10
34 N•m
(25 lbf•ft)
9
XP-S synthetic grease
15
Loctite 277
16
14
7.5 N•m
(66 lbf•in)
XP-S synthetic grease
13
12
180 N•m
(133 lbf•ft)
(Left hand threaded)
11
XP-S synthetic grease
8
70 N•m
(52 lbf•ft)
2
XP-S synthetic grease
22 N•m (16 lbf•ft)
5
7
42 N•m
(31 lbf•ft)
3
1
XP-S synthetic grease
XP-S synthetic grease
45 N•m
(33 lbf•ft)
4
6
2.5 N•m
(22 lbf•in)
NEW
205 N•m
(151 lbf•ft)
vmr2008-067-001_a

# GENERAL

During assembly/installation, use torque values and service products as in the exploded views.

Clean threads before applying a threadlocker. Refer to *SELF-LOCKING FASTENERS* and *LOCTITE APPLICATION* at the beginning of this manual for complete procedure.

**⚠ WARNING**

**Torque wrench tightening specifications must strictly be adhered to.**
**Locking devices (e.g.: locking tabs, elastic stop nuts, cotter pins, etc.) must be replaced with new ones.**

# PROCEDURES

## TIRES AND WHEELS

**⚠ WARNING**

**When the tires are replaced, never install a bias tire with a radial tire. Such a combination could create handling and/or stability problems.**
**Do not mix tires of different size and/or design on the same axle.**
**Front and rear tire pairs must be the identical model and manufacturer.**
**For unidirectional tread pattern, ensure that the tires are installed in the correct direction of rotation.**
**The radial tires must be installed as a complete set.**
**Severe injury or death can result if these instructions are not followed.**

The tires are directional and their rotation must be kept in a specific direction for proper operation.

Using the next table, torque wheel nuts in accordance with the following illustration.

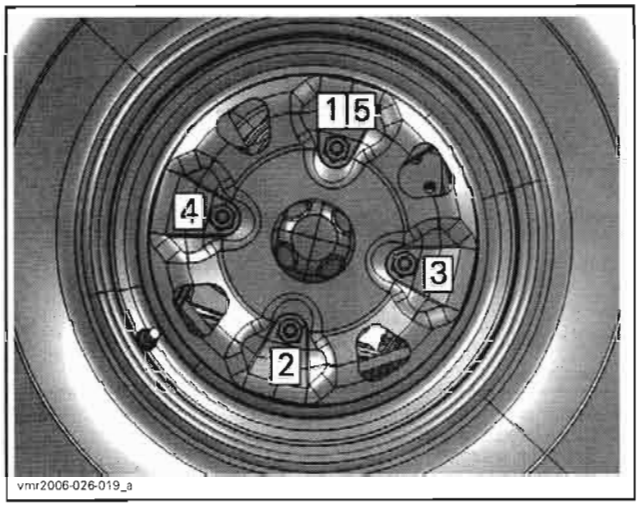

vmr2006-026-019_a

**CAUTION:** Always use the recommended wheel nuts. Using a different nut could cause damages to the rim.

| WHEEL NUT TORQUE | |
|---|---|
| All steel wheels | 70 N•m (52 lbf•ft) |
| All aluminum wheels (except for Outlander MAX 800 Ltd) | 100 N•m (74 lbf•ft) |
| Outlander MAX 800 Ltd (BLACK aluminum wheels) | 70 N•m (52 lbf•ft) |

***Outlander 650/800 Series and Renegade Models***

On these models, wheel balancing is necessary. To perform this operation, use a wheel balancer and adhesive weights.

## WHEEL HUB

### Wheel Hub Removal

Remove the appropriate wheel.

Remove and discard the cotter pin.

Unscrew the castellated nut.

Remove the Belleville washer.

Pull wheel hub to remove it.

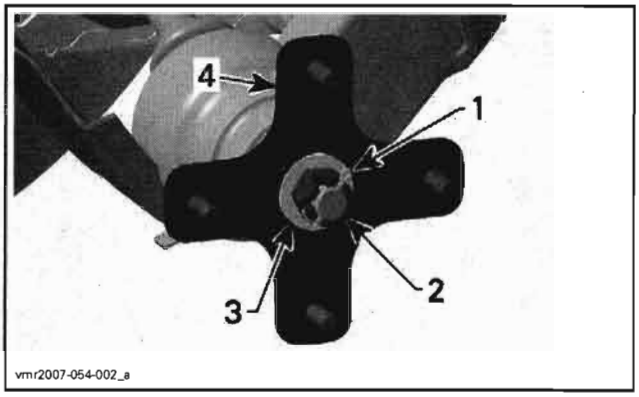


1. *Cotter pin*
2. *Castellated nut*
3. *Belleville washer*
4. *Wheel hub*

## Wheel Hub Inspection

Check wheel hub for cracks or other damages.

Check inner splines for wear or other damages.

If any damage is detected on wheel hub, replace it with a new one.

Check wear ring. If it is loose on hub, replace the wear ring.

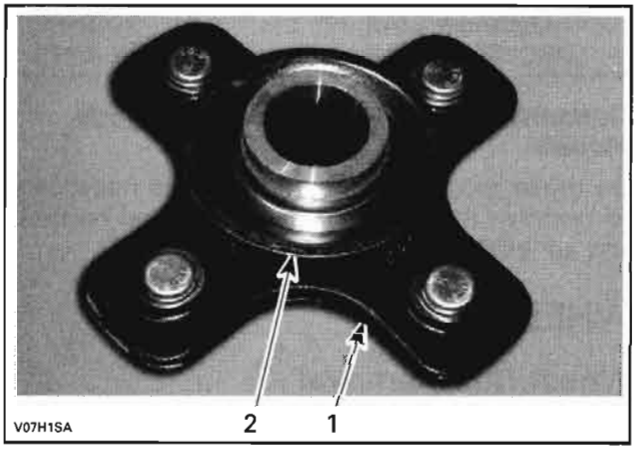


1. *Wheel hub*
2. *Wear ring*

## Wheel Hub Installation

The installation is the reverse of removal procedure. Pay attention to the following.

Apply XP-S synthetic grease (P/N 293 550 010) on drive shaft splines.

Install Belleville washer in correct orientation. Inside diameter must protrude outward.

Torque castellated nut to 205 N•m (151 lbf•ft) and further tighten until one of its grooves is aligned with a cotter pin hole. Install a **NEW** cotter pin. Fold one pin of cotter pin over drive shaft end.

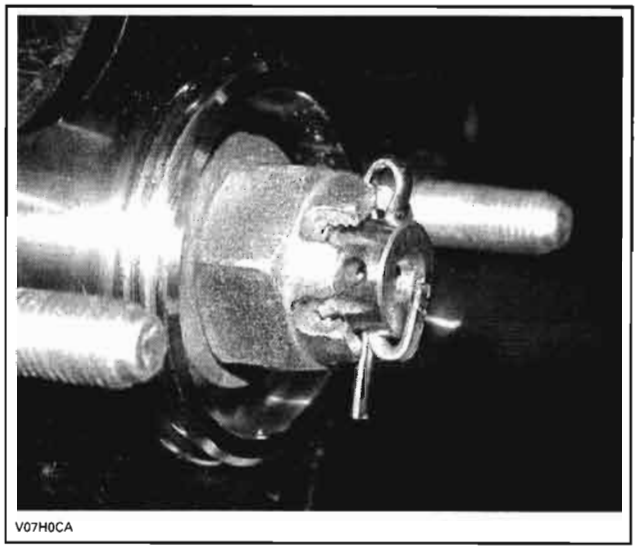


# DIFFERENTIAL PROTECTOR

## Differential Protector Removal

Remove bolts retaining the protector to the frame.

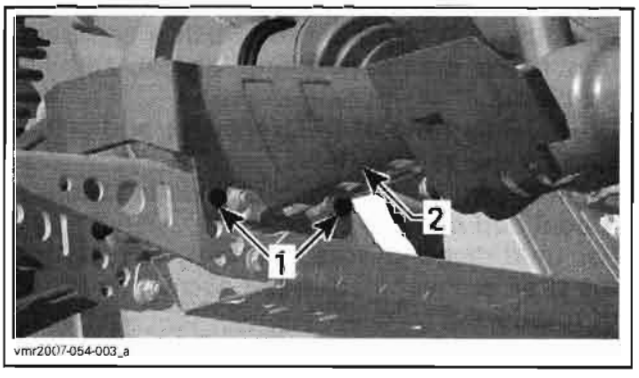


1. *Protector bolts*
2. *Differential protector*

## Differential Protector Installation

The installation is the reverse of removal procedure.

# DRIVE SHAFT

## Drive Shaft Removal

Remove the appropriate wheel hub and the footrest on this side.

Remove the lower shock absorber bolt.

Remove trailing arm. Refer to *REAR SUSPENSION.*

Pull drive shaft **no. 1** out of differential **no. 2**.

**NOTE:** Pull drive shaft strongly.

### Drive Shaft Inspection

Inspect the condition of boots. If there is any damage or evidence of leaking lubricant, replace them. Refer to *DRIVE SHAFT BOOT*.

Check shaft splines. Replace drive shaft if necessary.

Check wear ring **no. 3** on drive shaft end. Replace if necessary.

### Drive Shaft Installation

Insert the end of drive shaft in differential and pull joint a little to make sure that the stop ring is locked in differential gear groove.

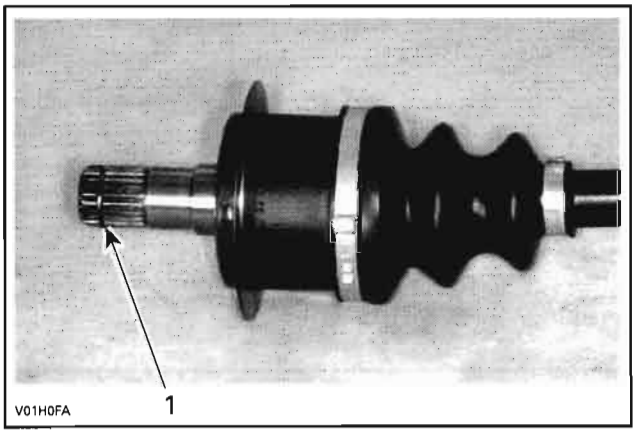


*1. Stop ring*

**NOTE:** Make sure do not interchange LH and RH drive shafts. The shafts are different lengths.

Install the other parts in the reverse order of removal procedure. Refer to the appropriate sections to apply the proper torque.

## DRIVE SHAFT BOOT

### Boot Removal

Remove the drive shaft from vehicle.

Remove the clamps from rubber boot **no. 4** using CV boot clamp pliers (P/N 295 000 069) and pliers Oetiker 1099 (P/N 295 000 070).

Remove the large end of the boot from plunging joint **no. 5** or CV joint **no. 6**.

Move apart circlip and pull out the shaft from bearing. Do not remove circlip.

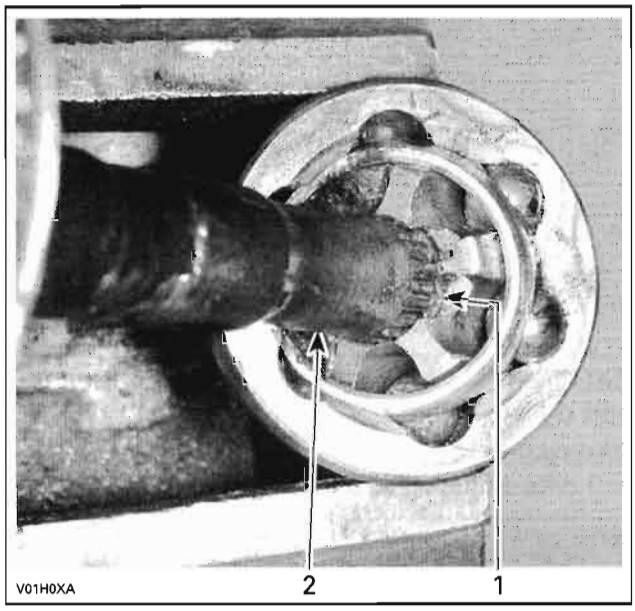


*1. Circlip*
*2. Shaft*

Remove boot from drive shaft.

### Boot Inspection

Check bearing in plunging joint **no. 5** or CV joint **no. 6**. If bearing is hard to move, change plunging joint or CV joint.

Check circlip for damage, change as necessary.

### Boot Installation

For installation, reverse the removal procedure. Pay attention to the following details.

Insert boot, do not forget the small clamp.

Insert shaft and push firmly.

Pack bearing area with grease (including with the new boot kit).

**NOTE:** Do not use any other grease.

Install all other removed parts.

## REAR PROPELLER SHAFT

### Propeller Shaft Removal

Install a jack stand to support the vehicle during the procedure.

Remove rear wheels.

Remove caliper screws and suspend caliper out of the way.

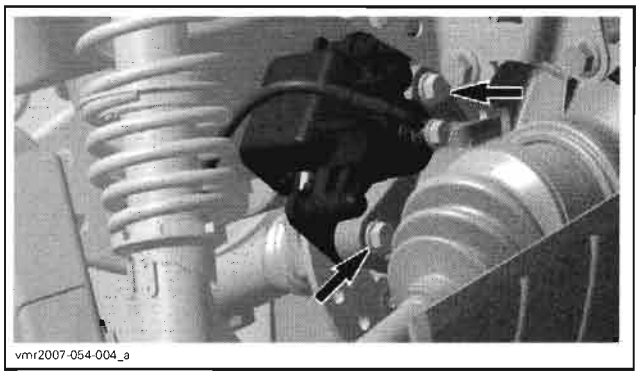


**CAUTION:** Do not let caliper hang by the hose and do not stretch or twist hose.

Unscrew the rear propeller shaft screws (engine and differential sides).

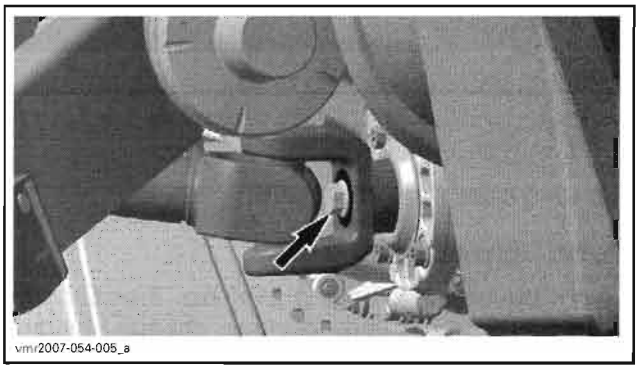


*ENGINE SIDE*

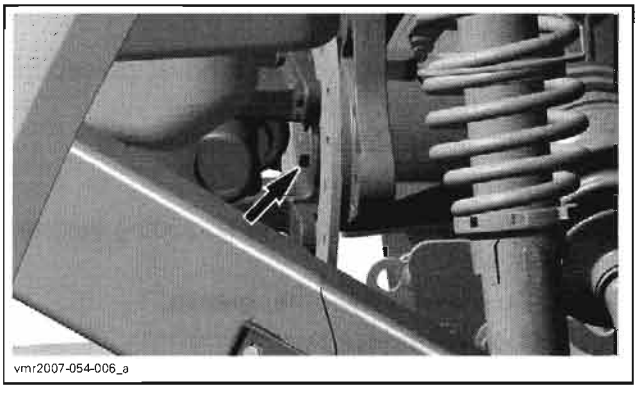


*DIFFERENTIAL SIDE*

NOTE: The propeller shaft bolts are different, they must be reinstalled in same location.

Remove the differential protector.

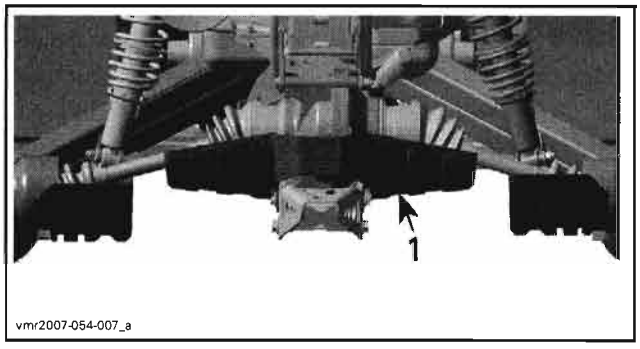


*1. Differential protector*

Unscrew and remove lower and upper differential bolts.

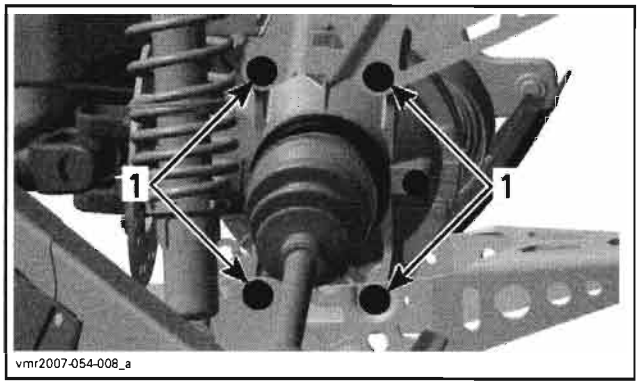


*1. Differential bolts*

Loosen hitch plate bolts.

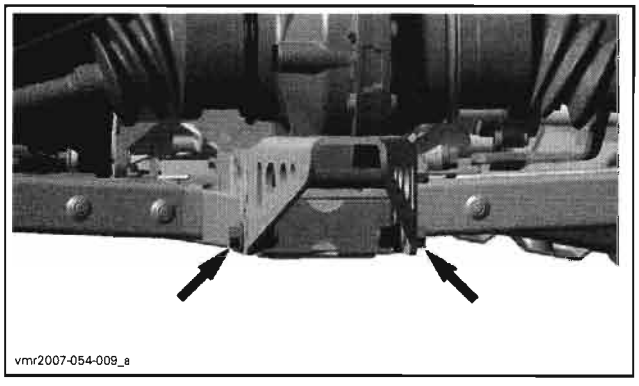


Move the differential **no. 2** backward.

Unplug the propeller shaft **no. 7** from the differential then remove it from vehicle.

## Propeller Shaft Inspection

Check yoke U-joint **no. 8** for wear, backlash or axial play, replace if necessary.

Inspect engine seal for damage or leaks. Replace if necessary.

Inspect brake disc (refer to *HYDRAULIC BRAKES*).

### Propeller Shaft Installation

Installation is essentially the reverse of removal procedure. Pay attention to the following details.

Apply XP-S synthetic grease (P/N 293 550 010) on engine drive shaft splines.

Install the propeller shaft screw (engine side) and torque it to 45 N•m (33 lbf•ft).

Apply XP-S synthetic grease (P/N 293 550 010) to splines before insert the end of the propeller shaft into differential. Torque propeller shaft screw to 34 N•m (25 lbf•ft).

Reinstall all other removed parts.

Grease U-joint from rear propeller shaft. Use a grease gun with XP-S synthetic grease (P/N 293 550 010).

## REAR PROPELLER SHAFT U-JOINT

Remove the brake disc before working on differential side of propeller shaft.

### U-Joint Removal

Remove internal snap ring from bearing caps.

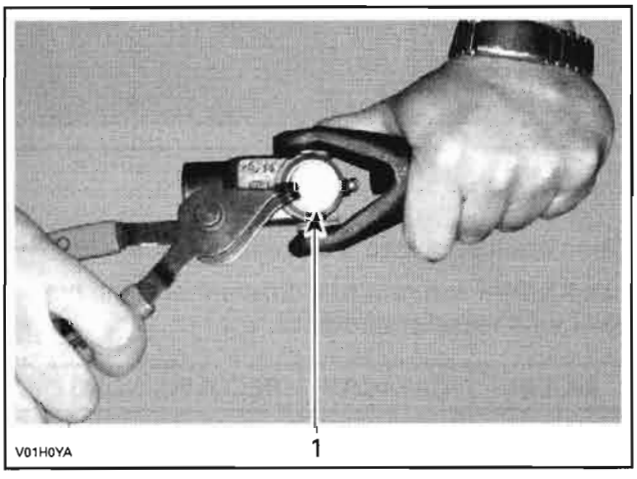


*1. Snap ring*

Support inner yoke in vice and drive other yoke down with a soft hammer.

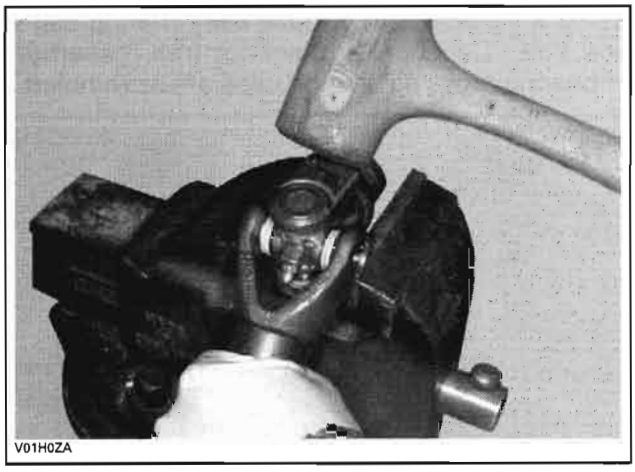


Support U-joint in vice and drive inner yoke down to remove remaining bearing caps.

Remove U-joint cross.

### U-Joint Installation

Install new U-joint cross in inner yoke.

Install new bearing cap by hand.

**NOTE:** Carefully install U-joint cross with grease fitting properly positioned.

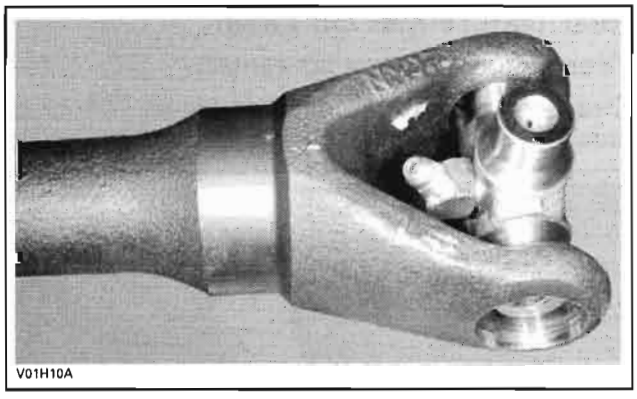


Tighten vise to force bearing caps in.

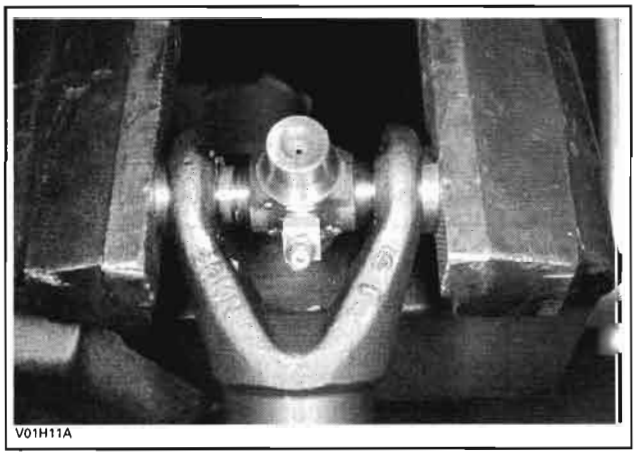

Using a suitable tappet, fully seat bearing cap in one side. Continually, check for free movement of bearing cross as bearing caps are assembled.

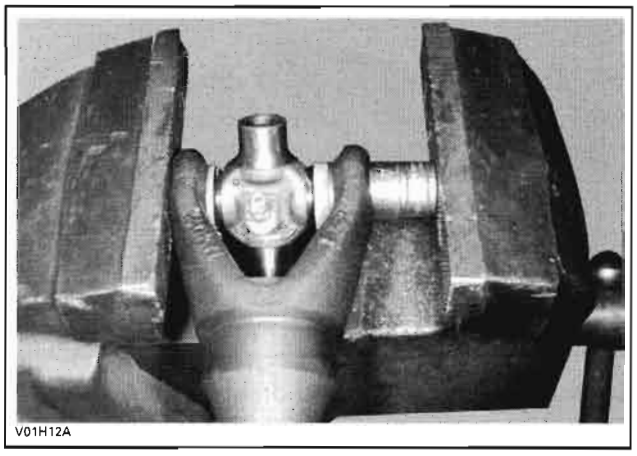


Install snap ring.

Repeat procedure for other sides.

Grease U-joint, using a grease gun with XP-S synthetic grease (P/N 293 550 010).

# REAR DIFFERENTIAL

## Rear Differential Oil Level

Place bottom of frame horizontally.

Clean filler plug prior to check oil level. Check oil level by removing filler plug.

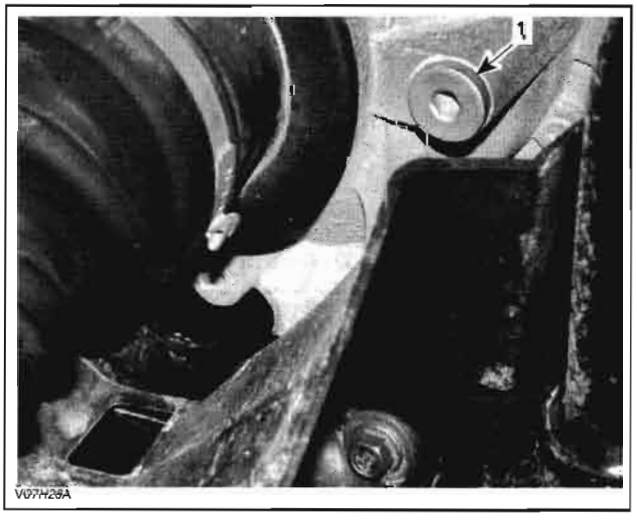


*1. Filler plug*

The rear differential oil is not level with the filler plug threads.

It is possible to verify the oil level by inserting a wire with a 90° bend through the oil filler hole.

Oil level is between 25 to 32 mm (1 to 1-1/4 in) from the bottom of oil filler plug threads when the vehicle is level on ground.

When replacing the oil in the differential, it is easier to measure the right quantity of oil to add in order to reach the proper level. Refer to *OIL REPLACEMENT.*

Add oil if necessary.

## Rear Differential Oil Replacement

Ensure vehicle is on a level surface.

Clean drain plug area.

Place a drain pan under rear differential drain plug area.

Unscrew filler plug.

Remove drain plug.

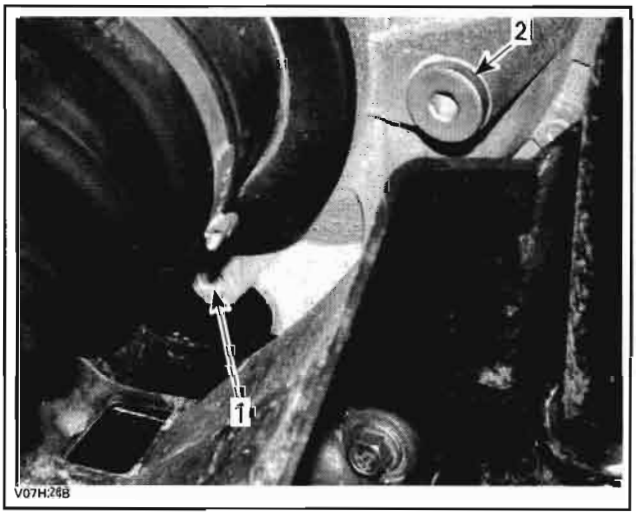


*1. Drain plug*
*2. Filler plug*

Clean drain plug area then reinstall drain plug.

Use a funnel and refill rear differential at the proper level with recommended oil.

| MODEL | CAPACITY | RECOMMENDED OIL |
|---|---|---|
| All models | 250 mL (8.5 U.S. oz) | XP-S synthetic gear oil (P/N 293 600 043) or REDLINE pump oil 75W90 (API GL5) |

Reinstall filler plug.

## Rear Differential Removal

Install a jack stand under differential to support the vehicle during the following procedure.

Remove rear wheels.

Remove both trailing arms. Refer to *REAR SUSPENSION.*

Remove both drive shafts.

Remove the differential protector.

Unscrew and remove lower and upper differential bolts.

Remove the propeller shaft screw and its washer (differential side).

Remove the differential **no. 2**.

## Rear Differential Inspection

Turn rear differential gear with a finger; it should turn smoothly. Replace if necessary.

Check backlash and drag torque, see *ADJUSTMENT* further in this section.

Check if oil seals are brittle, hard or damaged. Replace if necessary.

## Rear Differential Disassembly

### Ring Gear

Unscrew the TORX screws **no. 10**, then separate half housings.

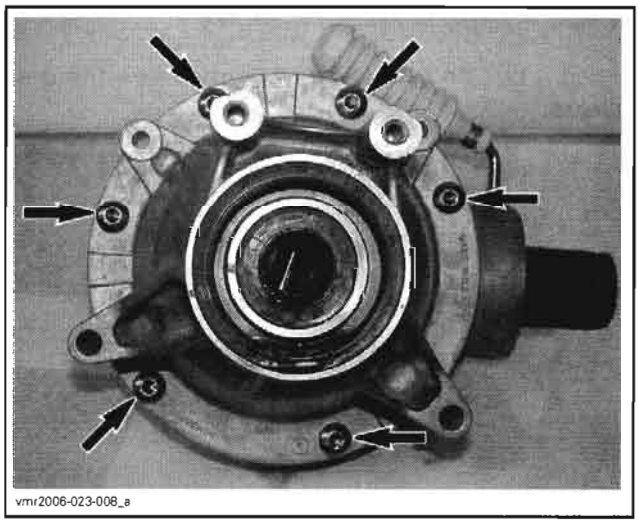


*TYPICAL — FRONT DIFFERENTIAL SHOWN*

**NOTE:** Be careful to keep track of shims on each end of ring gear **no. 9**.

Extract ring gear out of half housing.

### Pinion Gear

Remove oil seal **no. 11**.

Unscrew the pinion nut **no. 12**. Use the differential spanner socket (P/N 529 035 649).

529 035 649

**CAUTION: The pinion nut is left hand threaded. Unscrew by turning clockwise.**

Remove the bearing **no. 13** at the same time as the pinion gear **no. 14**. Be careful to keep track of shims.

**NOTE:** The pinion gear and bearing can be easily removed using the following suggested tool:

- pipe 3-1/2 in diameter x 5 in (1)
- screwed rod M10 x 1.25, 7 in length (1)
- nut M10 x 1.25 (3)
- flat bar (1).

## Rear Differential Adjustment

A shimming procedure must be done when pinion gear, ring gear or housing is (are) changed.

Measure the old pinion shim stack. If the shims measure over 1 mm (.039 in), install shim stacks on the differential components as per CHART "A".

If the old pinion shim stack measurement is under 1 mm (.039 in), install a .5 mm (.02 in) shim on the differential components as per CHART "B".

| CHART "A" | | CHART "B" | |
|---|---|---|---|
| PINION | 2.18 mm (.086 in) | PINION | .5 mm (.02 in) |
| BACKLASH | .94 mm (.037 in) | BACKLASH | |
| PRELOAD | 1.37 mm (.054 in) | PRELOAD | |

**NOTE:** The procedure above sets the pinion shim thickness and should not be modified thereafter. Any changes should be done on preload and/or backlash side(s).

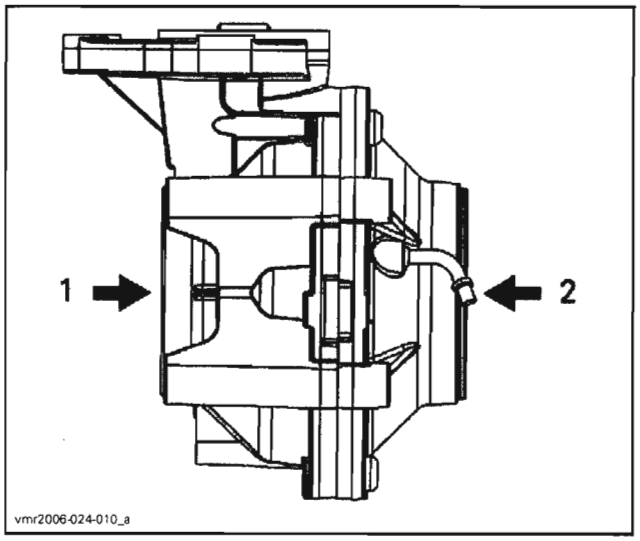


1. *Backlash side*
2. *Preload side*

Assemble the differential.

### Backlash

Using a dial indicator and the backlash measurement tool (P/N 529 035 665), measure the backlash. Place the backlash measurement tool at the end of pinion gear.

From center of bolt, measure 25.4 mm (1 in) and scribe a mark on the tab.

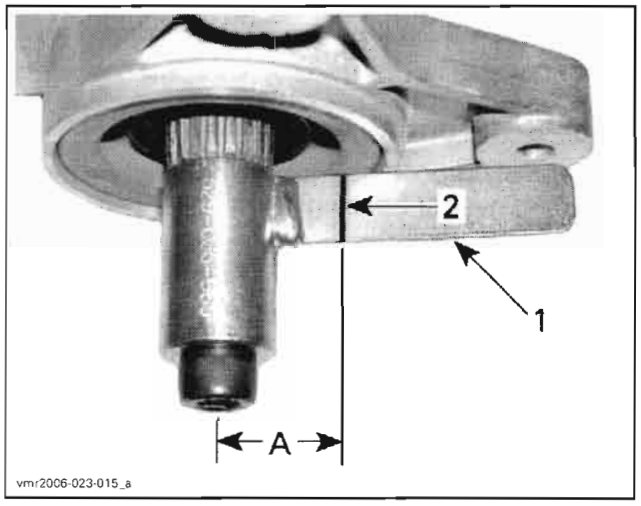


*1. Tab of backlash measurement tool*
*2. Mark on tab*
*A. 25.4 mm (1 in)*

Position the dial indicator tip against the tab at a 90° angle and right on the previously scribed mark.

Gently, move the tab back and forth. Note the result.

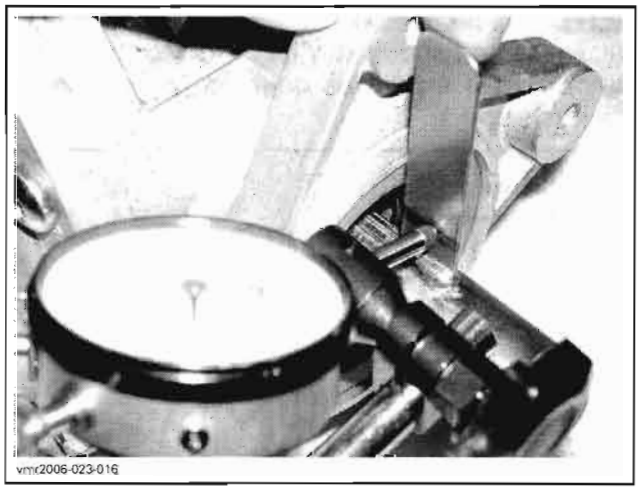


Rotate pinion gear 1/2 turn and check backlash again. Note the result.

Rotate pinion gear 1 turn and check backlash again.

If backlash is below 0.05 mm (.002 in), increase backlash shim by 0.05 mm (.002 in) and check the backlash again.

If backlash is greater than 0.356 mm (.014 in), decrease backlash shim by 0.05 mm (.002 in) and check the backlash again.

Measure preload.

### Preload

Screw the propeller shaft adaptor bolt in pinion gear.

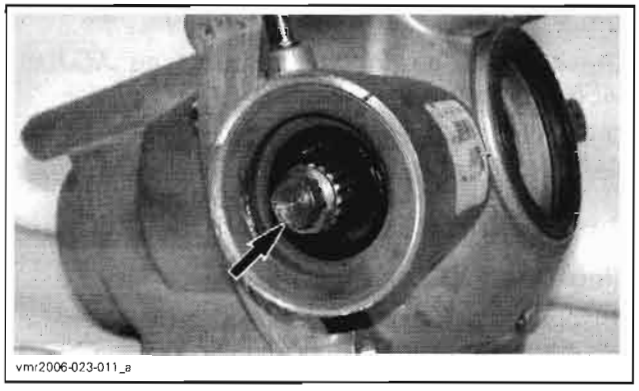


*TYPICAL — FRONT DIFFERENTIAL SHOWN*

Using a needle torque wrench, measure the drag torque.

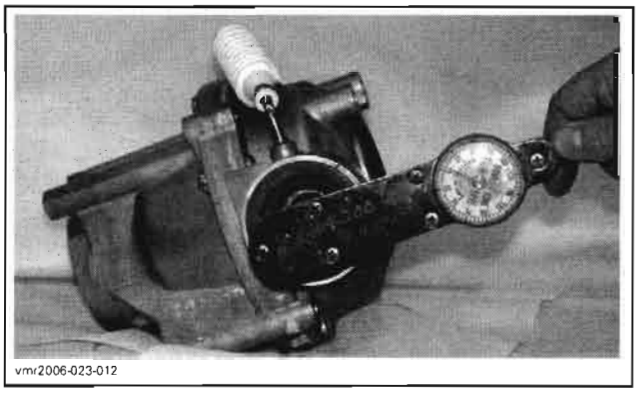


*TYPICAL — FRONT DIFFERENTIAL SHOWN*

If the drag torque is greater than 0.7 N•m (6 lbf•**in**), reduce preload shim by 0.05 mm (.002 in) and check drag torque again.

If the drag torque is less than 0.06 N•m (.5 lbf•**in**), increase preload shim by 0.05 mm (.002 in) and check drag torque again.

## Rear Differential Assembly

### Ring Gear

To assemble, reverse the removal procedure. Pay attention to the following details.

Verify condition of half housing seal **no. 15**. Change seal if necessary.

Check all bearings and all oil seals. Change them if necessary.

### Pinion Gear

To install, reverse the removal procedure. Pay attention to the following details.

Check O-ring **no. 16** for damage. If so, change it.

Install the shim then the ball bearing.

Install the nut **no. 12**. Apply Loctite 277 (P/N 293 800 073) on threads nut then torque it to 180 N•m (133 lbf•ft).

Apply XP-S synthetic grease (P/N 293 550 010) in the lips of the new oil seal **no. 11** and install it.

## Rear Differential Installation

The installation is the reverse of the removal procedure.

# STEERING SYSTEM

## SERVICE TOOLS

| Description | Part Number | Page |
|---|---|---|
| steering alignment tool | 529 036 059 | 340 |

## SERVICE TOOLS – OTHER SUPPLIER

| Description | Part Number | Page |
|---|---|---|
| Smoothflow™ tapered tip | 16 ga<br>#511 rtt-b | 333 |

## SERVICE PRODUCTS

| Description | Part Number | Page |
|---|---|---|
| Loctite 406 (glue) | 293 800 100 | 333 |
| pulley flange cleaner | 413 711 809 | 333 |
| XP-S synthetic grease | 529 550 010 | 335 |

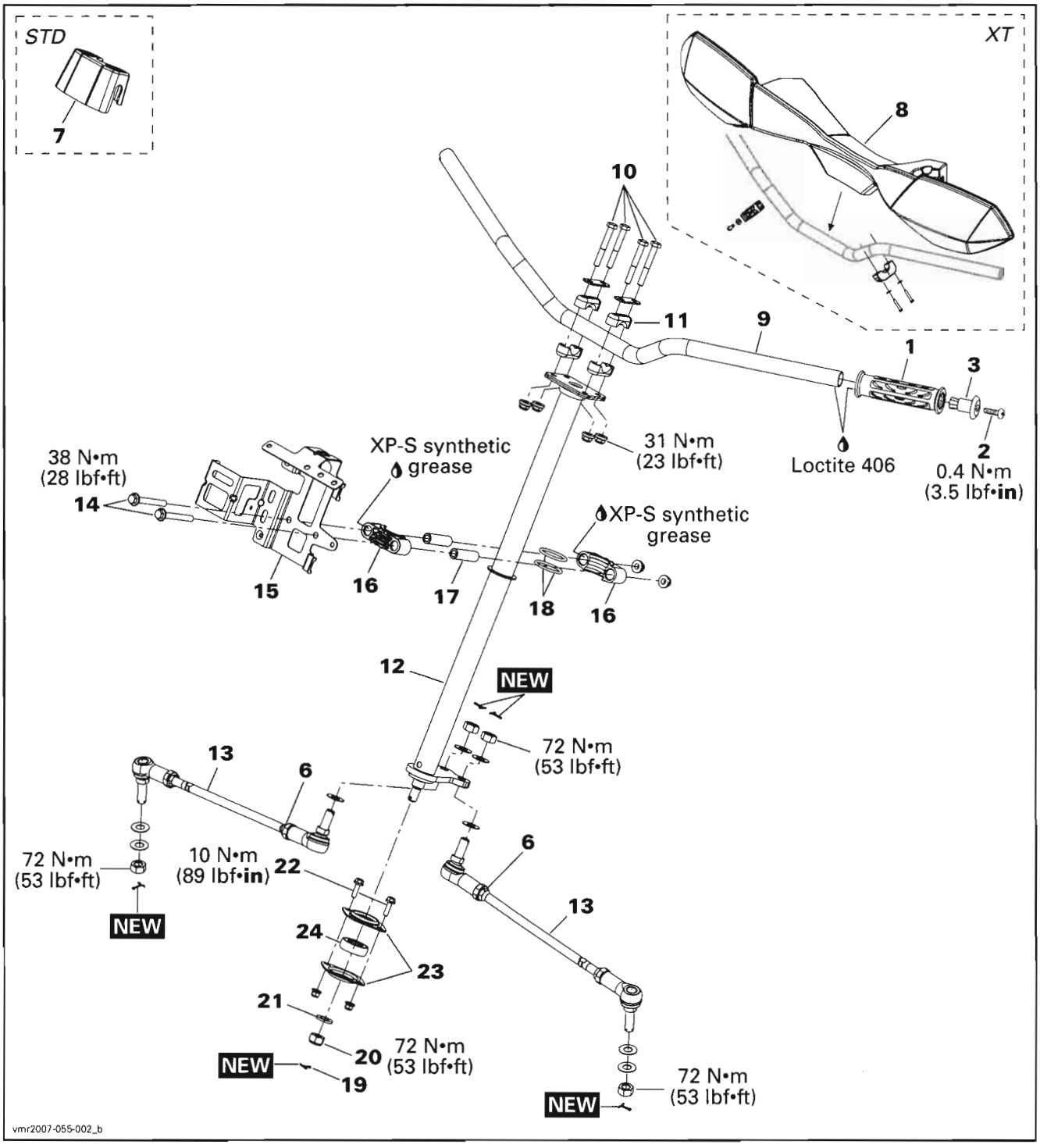
STD
7
XT
8
10
11
9
1
3
2
0.4 N•m
(3.5 lbf•in)
Loctite 406
31 N•m
(23 lbf•ft)
XP-S synthetic
grease
38 N•m
(28 lbf•ft)
14
XP-S synthetic
grease
15
16
17
18
16
12
NEW
72 N•m
(53 lbf•ft)
13
6
72 N•m
(53 lbf•ft)
NEW
10 N•m
(89 lbf•in)
22
6
13
24
23
21
20
72 N•m
(53 lbf•ft)
NEW
19
72 N•m
(53 lbf•ft)
NEW
vmr2007-055-002_b

# GENERAL

During assembly/installation, use the torque values and service products as in the exploded views.

Clean threads before applying a threadlocker. Refer to *SELF-LOCKING FASTENERS* and *LOCTITE APPLICATION* at the beginning of this manual for complete procedure.

**⚠ WARNING**

**Torque wrench tightening specifications must strictly be adhered to.**
**Locking devices (e.g.: locking tabs, elastic stop nuts, cotter pins, etc.) must be replaced with new ones.**

# PROCEDURES

## HANDLEBAR GRIP

### Removal

Loosen the screw **no. 2** at the end of handlebar grip **no. 1**.

Remove the handlebar grip cap **no. 3**.

Cut and remove the handlebar grip.

### Installation

Remove all rubber residues of the old grip before installing the new.

Clean the handlebar with pulley flange cleaner (P/N 413 711 809) or alcohol to remove any greasy matter on it.

Install handlebar grip by blowing compressed air between handle grip and handlebar.

Install a Smoothflow™ tapered tip (P/N 16 ga #511 rtt-b) from EFD Inc on a bottle of Loctite 406 (glue) (P/N 293 800 100).

Lift a part of the grip using a small screwdriver and inject glue (about 4 spots per side).

**NOTE:** The glue dries quickly. Do not apply it before installing grip.

Apply pressure on the grip for approximately 30 seconds to set the glue.

Install the handlebar grip cap and torque screw 0.4 N•m (3.5 lbf•**in**).

## HANDLEBAR COVER

### Removal

On **models without XT package**, just pull the handlebar cover **no. 7** to remove it.

vmr2006-025-004

On **XT models**, unscrew both plastic U-clamps that attach handlebar cover **no. 8** to the handlebar **no. 9**.

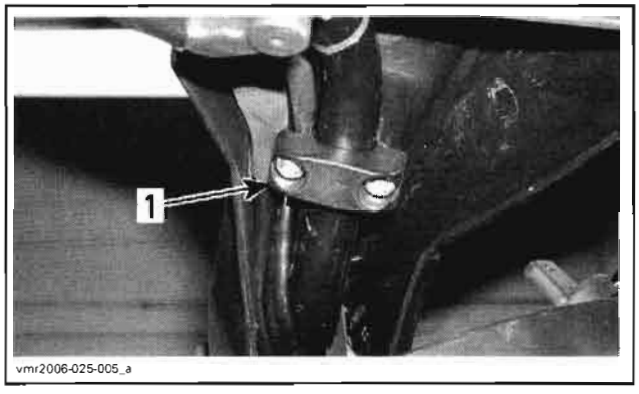

vmr2006-025-005_a

*1. Plastic U-clamp*

### Inspection

Check covers for cracks or other damages. Replace if necessary.

### Installation

The installation is the reverse of removal procedure.

## HANDLEBAR

### Removal

***All Models except Renegade***

Remove handlebar cover.

Remove handlebar grips **no. 1**.

Remove throttle and brake handles as well as multifunction switch (see below in this section).

NOTE: Remove handlebar grips, throttle handle, brake handle and multifunction switch only if the handlebar is defective and replace with a new.

Remove steering clamp mounting bolts **no. 10** and steering clamps **no. 11**.

*TYPICAL — OUTLANDER 800 SHOWN*

Remove the handlebar **no. 9**.

***Renegade Model***

Remove handlebar grips, throttle and brake handles as well as multifunction switch.

NOTE: These items should be removed only if the handlebar is defective and/or replaced with a new.

Unscrew the four socket screws securing the moulded handlebar support.

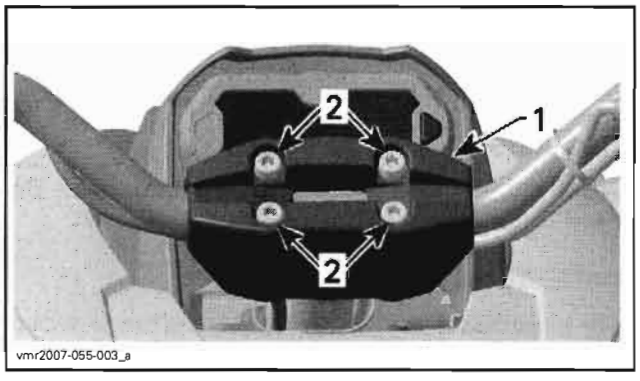


1. *Moulded handlebar support*
2. *Socket screws*

Remove handlebar.

## Inspection

Inspect the handlebar for damage, cracks or bending, replace if any of these problems is detected.

## Installation

For the installation, reverse the removal procedure.

# STEERING COLUMN

## Removal

Remove both footrests.

Remove central panel and dash board.

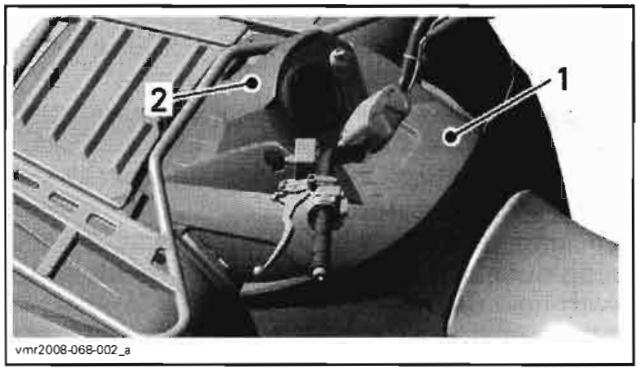


1. *Central panel*
2. *Dash board*

Remove the air intake silencer. Refer to *AIR INTAKE SYSTEM*.

Remove handlebar.

Remove the cotter pin (discard it), the elastic stop nut and the washer to bottom end of steering column.

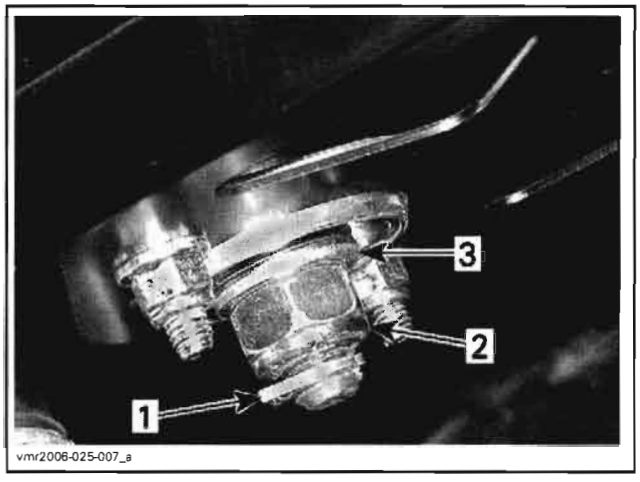


*TYPICAL*
1. *Cotter pin*
2. *Elastic nut*
3. *Washer*

Separate steering column **no. 12** and tie-rods **no. 13**. Refer to *TIE-ROD*, further in this section.

Remove half bushing bolts **no. 14**, stopping plate or module support **no. 15**, half bushing **no. 16** and bushings **no. 17**.

Pull out steering column.

## Inspection

Inspect steering column for wear, cracks or bending, replace if any of these problems is detected.

Check if steering column O-rings **no. 18** are brittle, hard or otherwise damaged. Replace if necessary.

At the same time, check steering column bearing condition. It must turn smoothly and freely. If not, refer to *STEERING COLUMN BEARING* for replacement procedure.

### Installation

For the installation, reverse the removal procedure. Pay attention to the following.

Apply XP-S synthetic grease (P/N 529 550 010) on O-rings and on bushings.

Install **NEW** cotter pins. Both ends of cotter pins must be folded.

## STEERING COLUMN BEARING

### Removal

Place vehicle on jack stands and remove one wheel.

Remove both footrests, central panel and dashboard (refer to *BODY*).

Remove the air intake silencer. Refer to *AIR INTAKE SYSTEM*.

Separate tie-rods **no. 13** from steering column **no. 12**. Refer to *TIE-ROD* section.

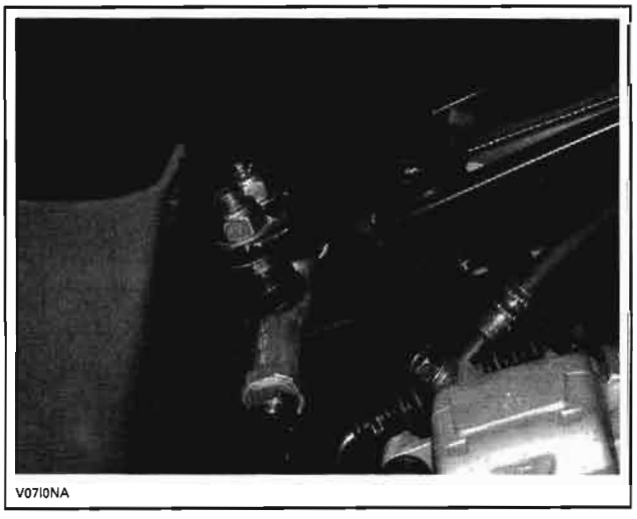


*TYPICAL*

Remove cotter pin **no. 19** (discard it), elastic nut **no. 20** and flat washer **no. 21** to bottom end of steering column **no. 12**.

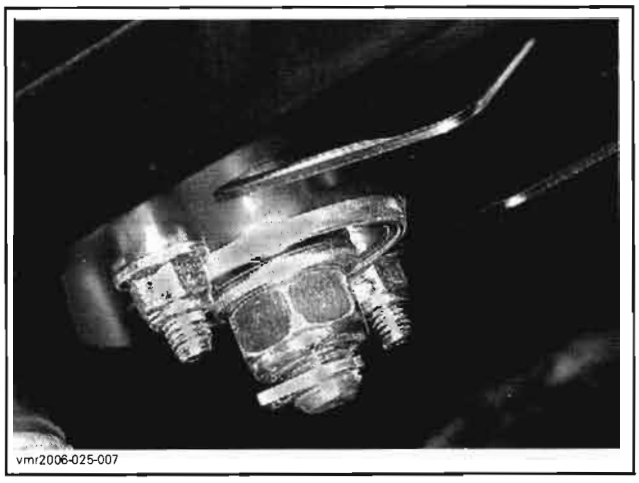


*TYPICAL*

Pull up steering column.

Remove bolts **no. 22** and bearing flanges **no. 23**.

Remove bearing **no. 24**.

### Installation

For installation, reverse the removal procedure. Pay attention to the following details.

Place bearing flanges collars outward.

**NOTE:** Install both bearing flanges on top of frame support.

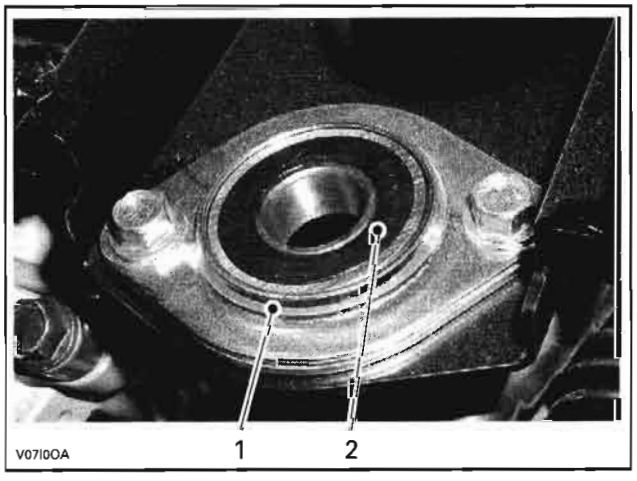


*TYPICAL*
*1. Bearing flange*
*2. Bearing*

Install bearing flange bolts **no. 22**.

Install the steering column, flat washer, elastic nut and a **NEW** cotter pin. Both ends of cotter pin must be folded.

## TIE-ROD

**NOTE:** Use the same procedure for RH and LH side.

## Removal

Place the vehicle on jack stands and remove the appropriate wheel.

Remove cotter pin (discard it), elastic nut and hardened washers from steering column and knuckle.

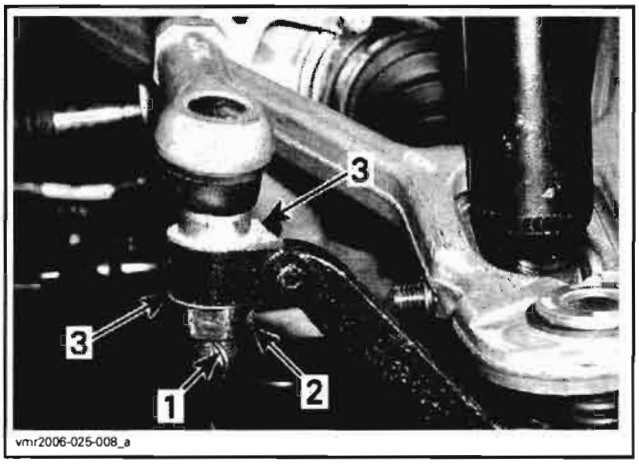


*TYPICAL*
1. *Cotter pin*
2. *Elastic nut*
3. *Hardened washers*

## Inspection

Inspect ball joint ends for wear or looseness, if excessive, replace.

## Installation

For the installation, reverse the removal procedure. Pay attention to the following details.

When installing a tie-rod, screw threaded end of tie-rod into ball joint. The maximum length for tie-rod groove to ball joint end must match value "A" in the following chart:

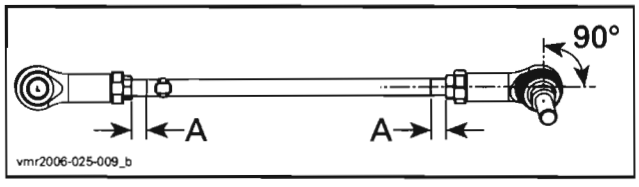


| MODEL | | "A" |
|---|---|---|
| ALL | mm | 17.5 ± 5 |
| | in | 11/16 ± 3/16 |

**NOTE:** Torque the ball joint lock nut **no. 6**.

Install **NEW** cotter pins. Both ends of cotter pins must be folded.

# KNUCKLE

## Removal

Place vehicle on jack stands and remove the appropriate wheel.

Separate tie-rod **no. 13** from knuckle.

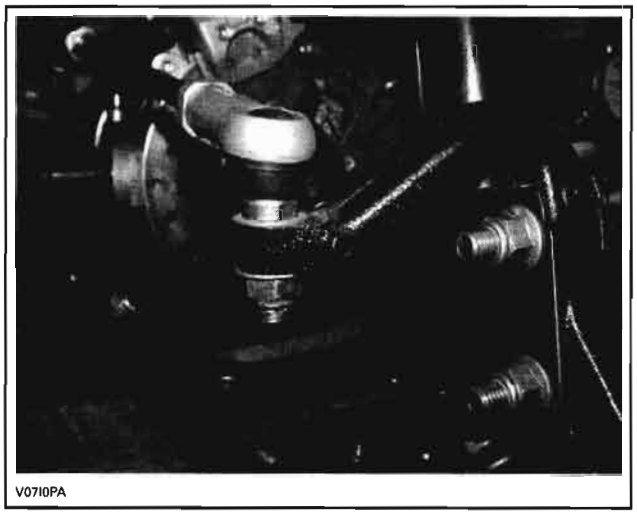


*OUTLANDER 500*

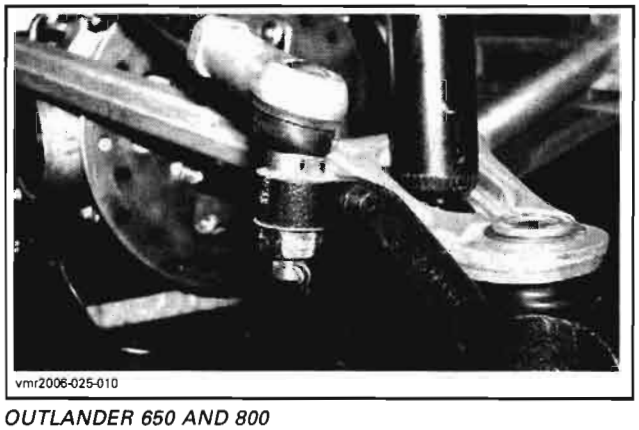


*OUTLANDER 650 AND 800*

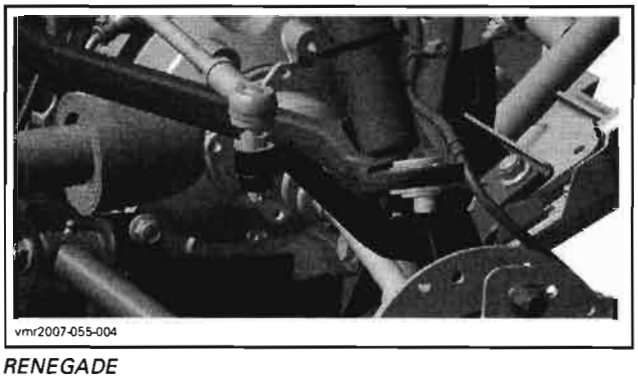


*RENEGADE*

Remove wheel hub. Refer to *FRONT SUSPENSION.*

### *Outlander 500*

Remove strut bolts.

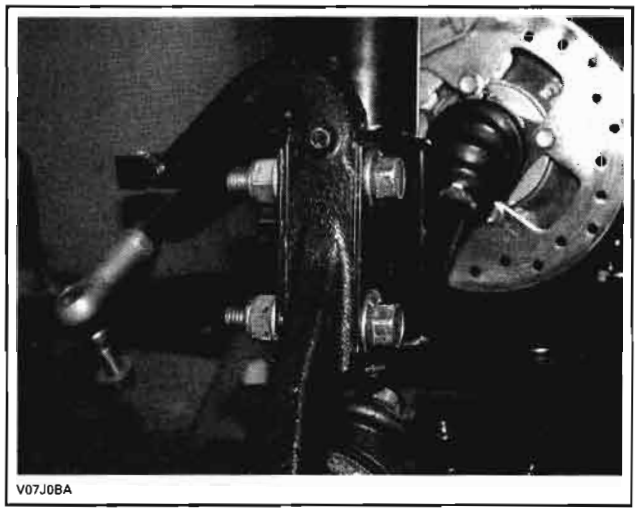
V07J0BA

*TYPICAL*

Remove bolt that attaches lower ball joint to knuckle.

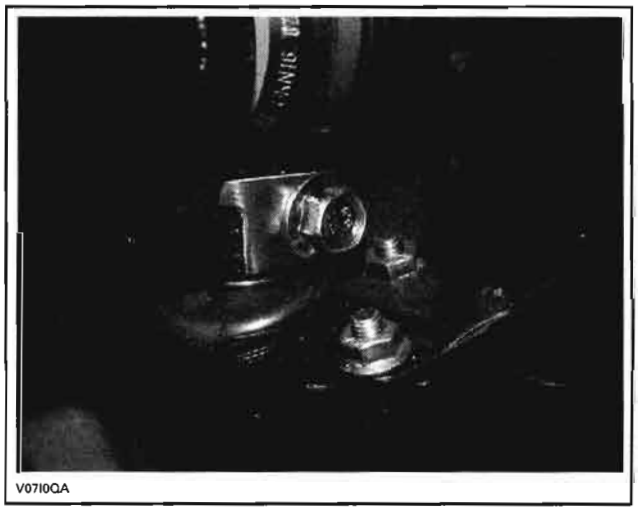
V07I0QA

Remove knuckle.

### *Outlander 650 and 800*

Unscrew the upper ball joint nut and separate upper ball joint to knuckle.

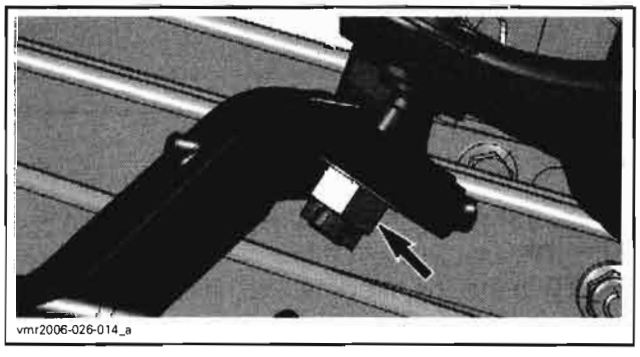
vmr2006-026-014_a

Using a hammer, hit on the knuckle tip to separate ball joint from knuckle. A ball joint remover can be used if the ball joint is jammed into knuckle.

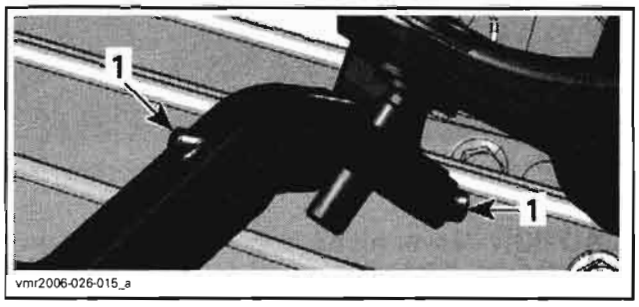

vmr2006-026-015_a

*1. Hit here*

**CAUTION: Never hit on upper suspension arm. Permanent damages could be caused to arm and its replacement would be necessary.**

Remove bolt that attaches lower ball joint to knuckle.

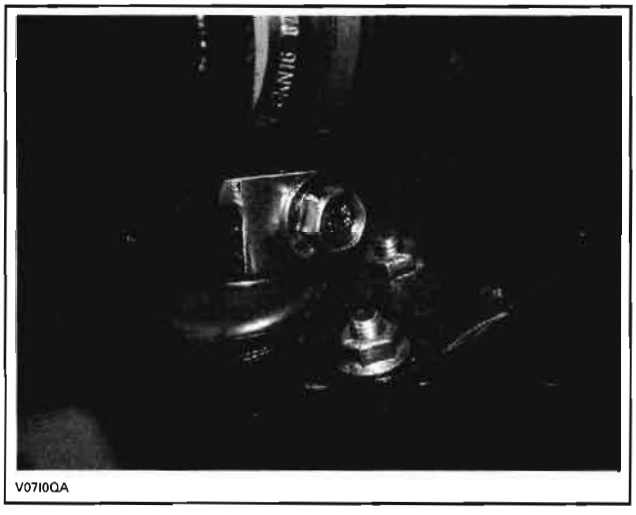
V07I0QA

Remove knuckle.

### *Renegade*

Unscrew the upper ball joint nut and separate upper ball joint to knuckle.

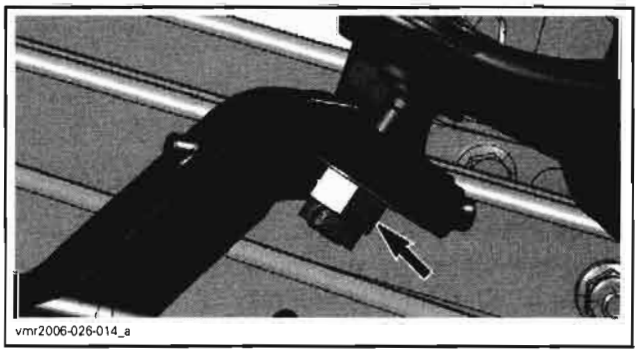
vmr2006-026-014_a

Using a hammer, hit on the knuckle tip to separate ball joint from knuckle. A ball joint remover can be used if the ball joint is jammed into knuckle.

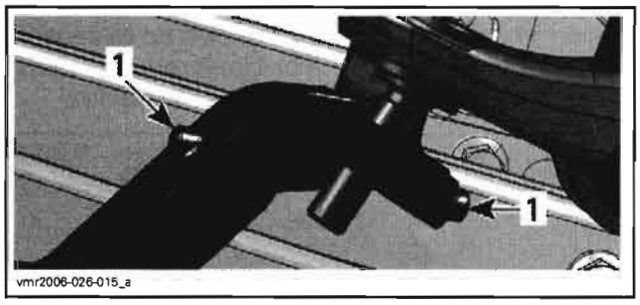


*1. Hit here*

**CAUTION: Never hit on upper suspension arm. Permanent damages could be caused to arm and its replacement would be necessary.**

Remove nut that attaches lower ball joint to lower suspension arm.

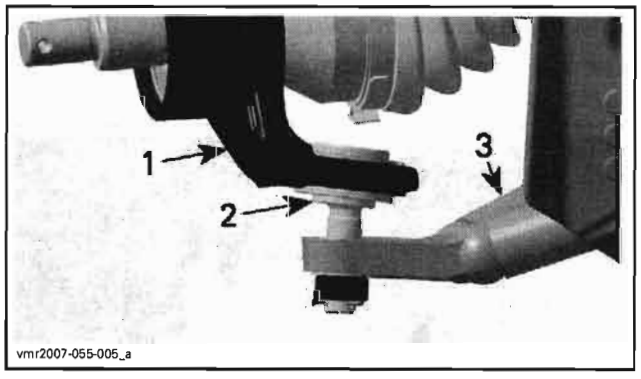


*1. Knuckle*
*2. Lower ball joint*
*3. Lower suspension arm*

Remove knuckle.

## Inspection

Check knuckle for cracks or other damages. Replace if necessary.

Check if wheel bearing turns freely and smoothly. See *WHEEL BEARING* below if the replacement is necessary.

## Installation

The installation is the reverse of removal procedure.

# WHEEL BEARING

## Inspection

Raise the front of vehicle.

Hold the wheel by the top and the bottom and move it. Check for lateral play.

If there is any loose, replace the wheel bearing.

**NOTE:** First, check if ball joint is loose. If necessary repair all defective parts before checking the wheel bearing condition. Be careful not to misjudge loose in the ball joint and loose in the wheel bearing.

## Removal

Remove knuckle from vehicle, (see above).

Remove and discard knuckle seal.

*TYPICAL*

Remove the circlip.

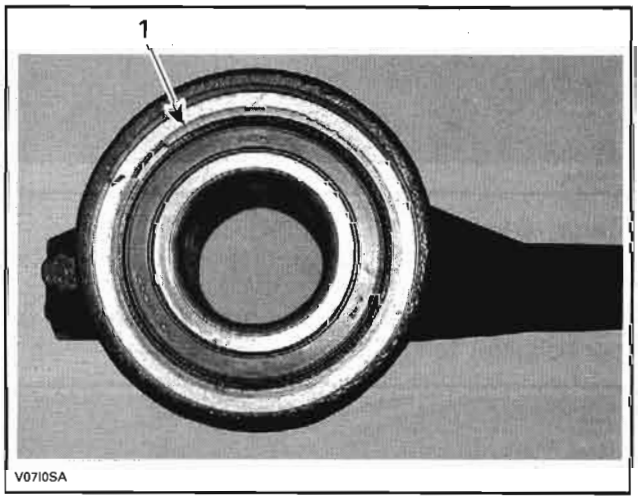


*TYPICAL*
*1. Circlip*

Using a press machine, push the bearing out of knuckle.

**NOTE:** It may be necessary to heat the knuckle to remove the bearing.

**⚠ WARNING**

**Clean all grease, outside and inside, from knuckle before heating it.**

### Installation

Place the bearing in a freezer for 10 minutes before installing.

Place the knuckle in oven to 100°C (212°F) for 30 minutes maximum to ease bearing installation.

When knuckle is cold, install the circlip and the **NEW** seal.

Install the other parts in the reverse order of removal procedure.

## MULTIFUNCTION SWITCH

### Test

Refer to *LIGHTS, GAUGE AND ACCESSORIES* for Hi-Lo Beam button.

Refer to *IGNITION SYSTEM* for engine run/stop switch and start button.

### Removal

Remove multifunction switch screws.

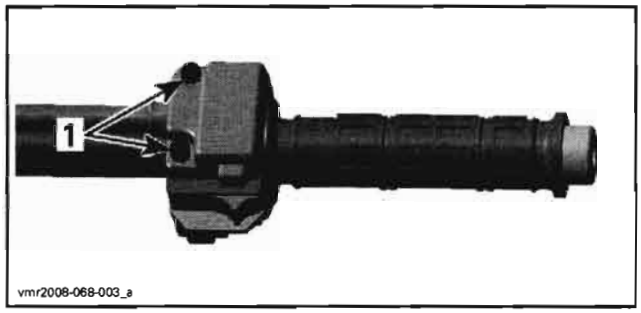


*TYPICAL*
*1. Remove the screws*

Separate multifunction switch from handlebar **no. 9**.

Remove central panel. Refer to *BODY*.

Unplug multifunction switch connector. The connector is located under central panel.

### Installation

For installation, reverse the removal procedure.

## THROTTLE HANDLE

### Removal

Remove central panel and unplug the 2/4WD switch connector (except on CE models).

Remove screws.

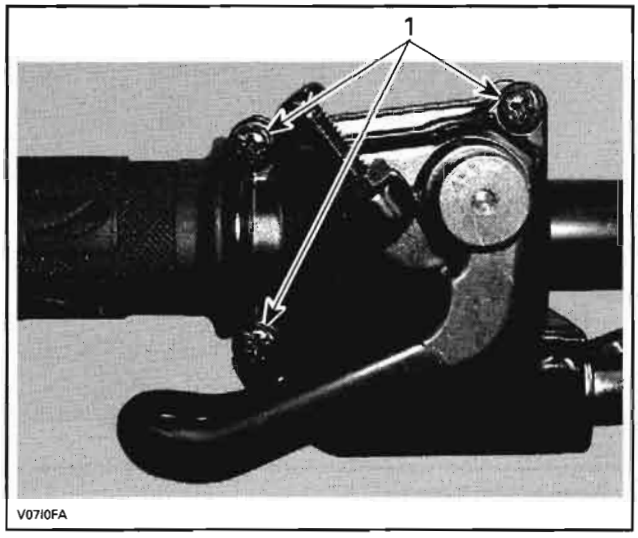


*TYPICAL*
*1. Remove screws*

Separate throttle handle from handlebar **no. 9**. Slide rubber protector back to expose throttle cable adjuster.

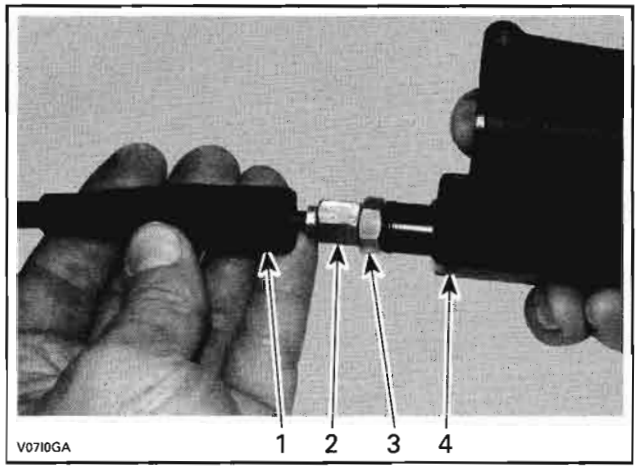


*1. Cable protector*
*2. Throttle cable adjuster*
*3. Lock nut*
*4. Throttle lever housing*

Loosen lock nut and screw in the throttle cable adjuster.

Remove inner housing protector.

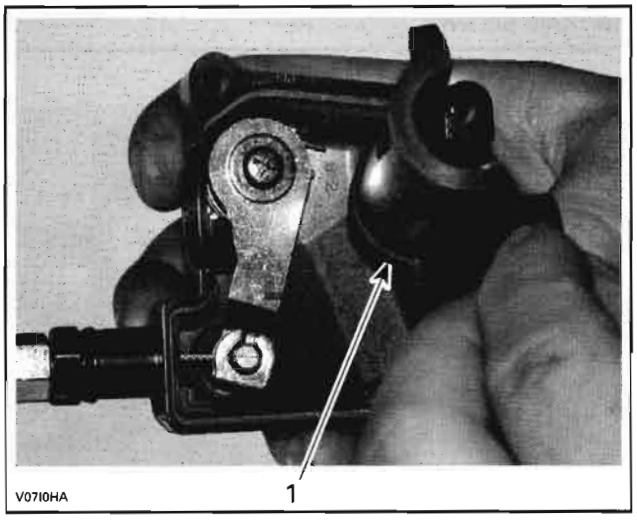


*1. Inner housing protector*

Slide cable in clip slot and remove the end of the cable from clip.

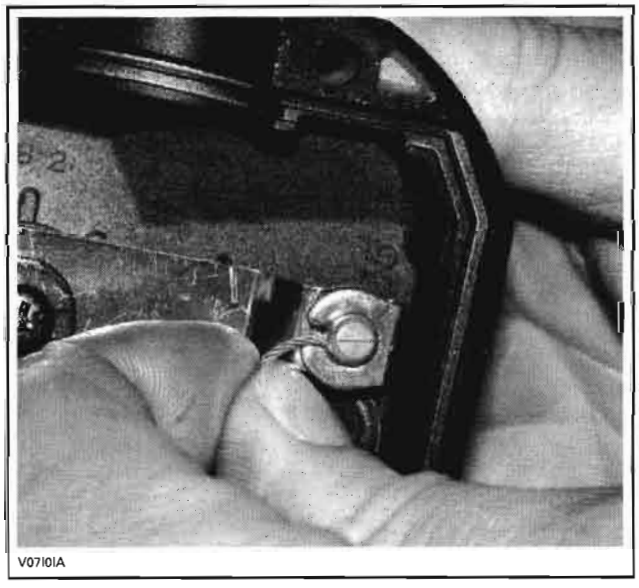


Remove throttle cable from housing.

### Installation

For installation, reverse the removal procedure.

After throttle cable installation, the reset of TPS must be performed. Refer to *ENGINE MANAGEMENT*.

## HANDLE BRAKE

### Removal

Remove screws.

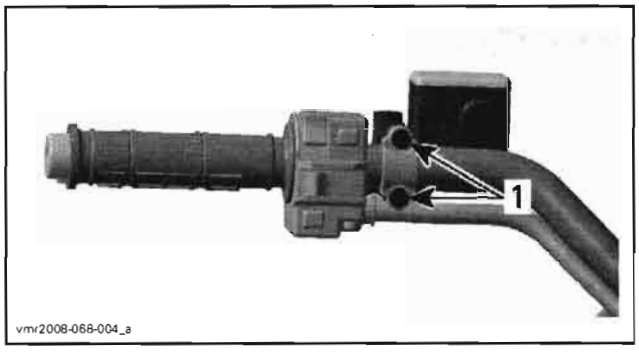


*TYPICAL*
*1. Remove the screws*

Separate handle brake from handlebar **no. 9**.

### Hose Removal

Refer to *HYDRAULIC BRAKES* for specifics instructions.

### Installation

For installation, reverse the removal procedure.

# ADJUSTMENT

## STEERING ALIGNMENT

Place vehicle on level surface.

Check that handlebar is straight.

Check pressure in each tires. Always follow recommended pressure.

Remove two wheel nuts and install the steering alignment tool (P/N 529 036 059).

Move the vehicle to place the tool on a level with the ground.

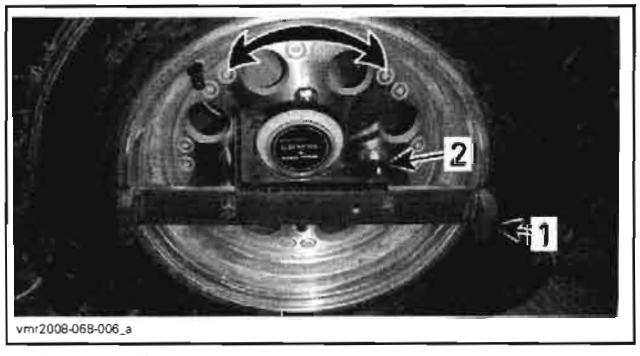


*1. Steering adjustment tool*
*2. Angle gauge or level*

Place a rope around the vehicle and using an elastic, link both ends together.

The rope must be place at the center of the wheels.

From the front of vehicle, near the front of rim, move rope so that it does not touch the first spacer of tool.

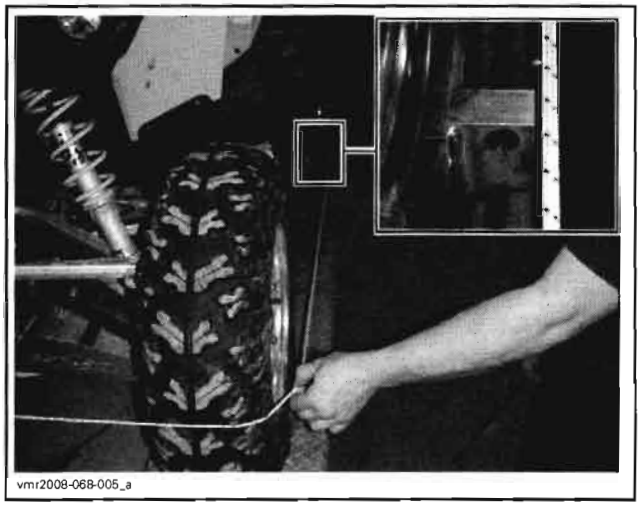


*TYPICAL*

Then, bring the rope back until it touches the spacer.

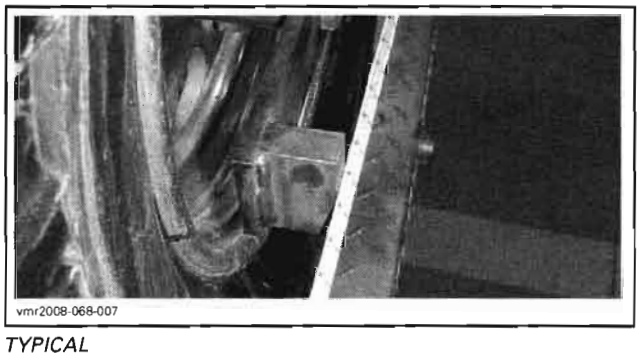


*TYPICAL*

Keep this position and measure the distance between the rope and the rim, to the front and to the rear of wheel.

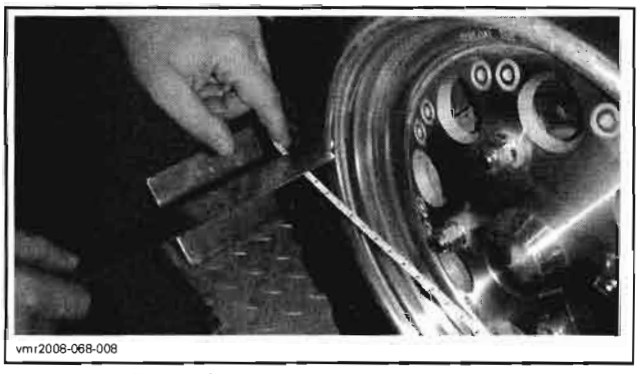


*TYPICAL — FRONT OF WHEEL*

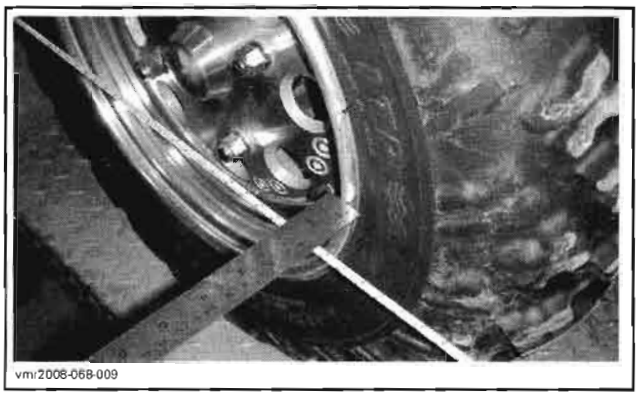


*TYPICAL — REAR OF WHEEL*

Refer to the following chart to know the difference between the rear and the front measurement.

| MODELS | TOE-OUT |
|---|---|
| ALL OUTLANDER | 0 mm ± 4 mm<br>(0 in ± .157 in) |
| RENEGADE | 2 mm (.79 in) |

Set alignment of wheel by adjusting tie-rod.

Repeat the procedure for the other side of vehicle.

# FRONT SUSPENSION

## SERVICE TOOLS

| Description | Part Number | Page |
|---|---|---|
| Supertanium drill bit | 529 031 800 | 349 |
| shock/spring remover | 529 036 007 | 348 |
| ball joint installer | 529 036 020 | 351, 355 |

## SERVICE PRODUCTS

| Description | Part Number | Page |
|---|---|---|
| suspension grease | 293 550 033 | 351–352 |
| Loctite 243 (blue) | 293 800 060 | 349 |

### *Outlander 500 Series*

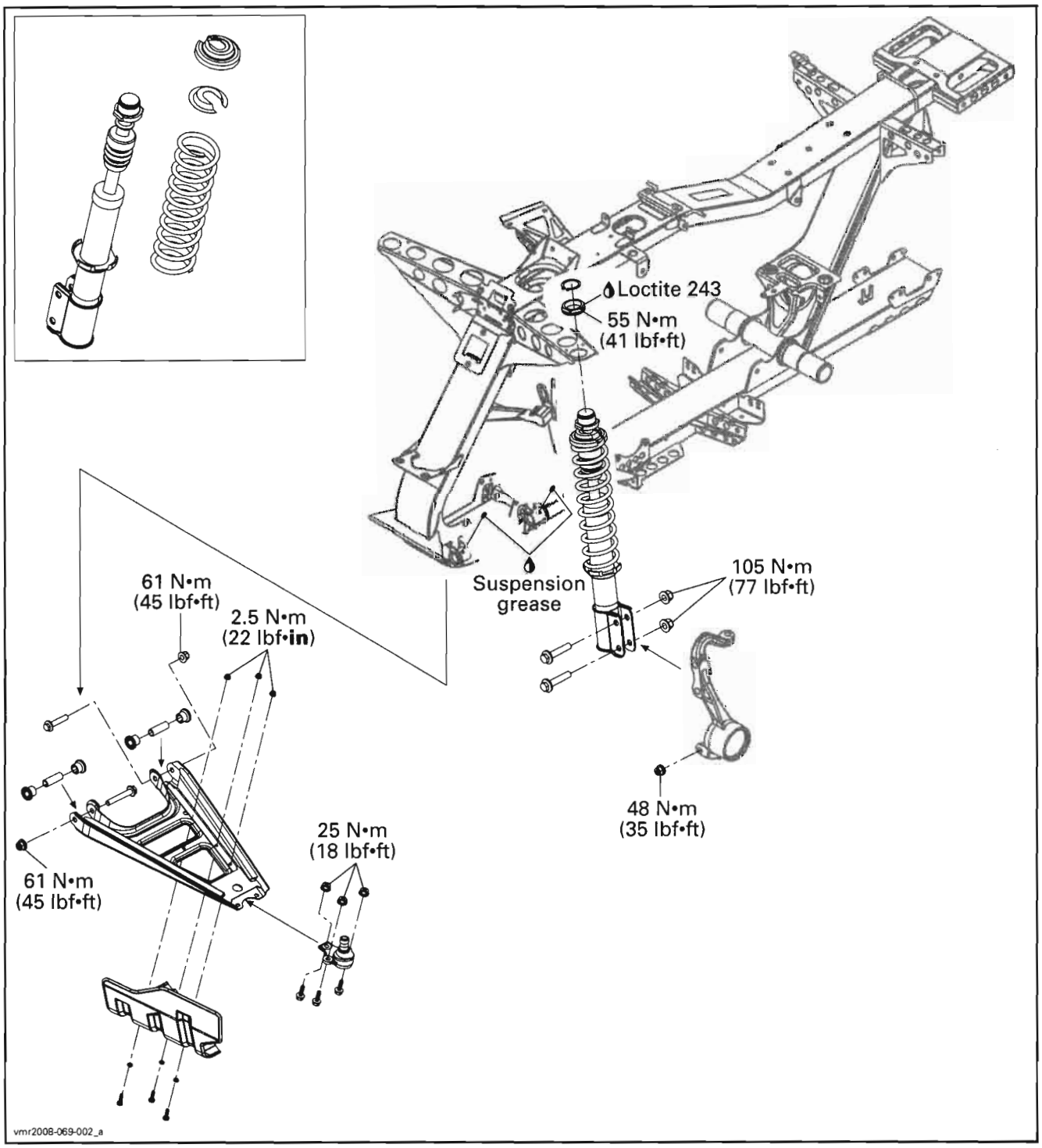

### *Outlander 650/800 Series*

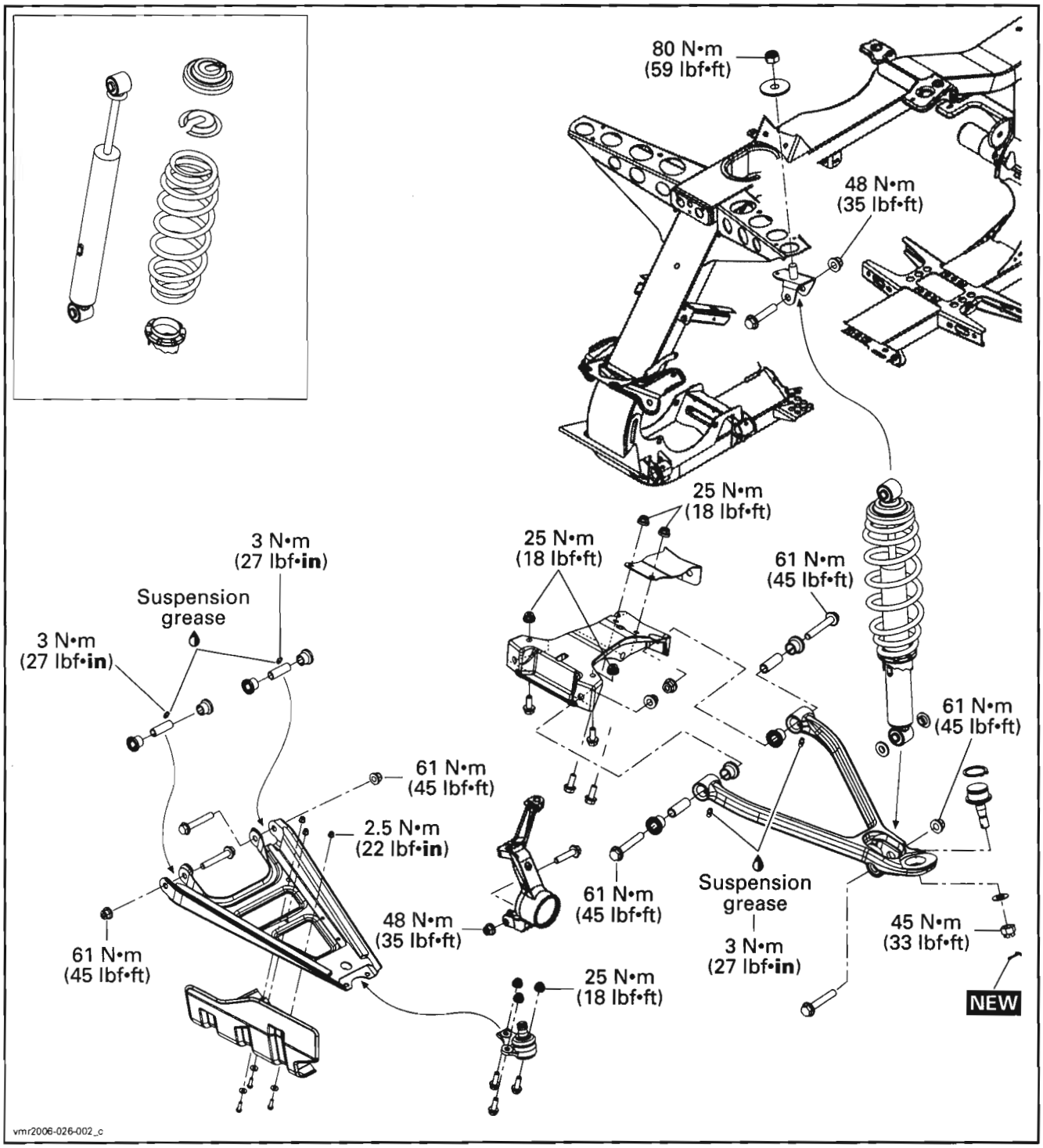

### *Renegade Models*

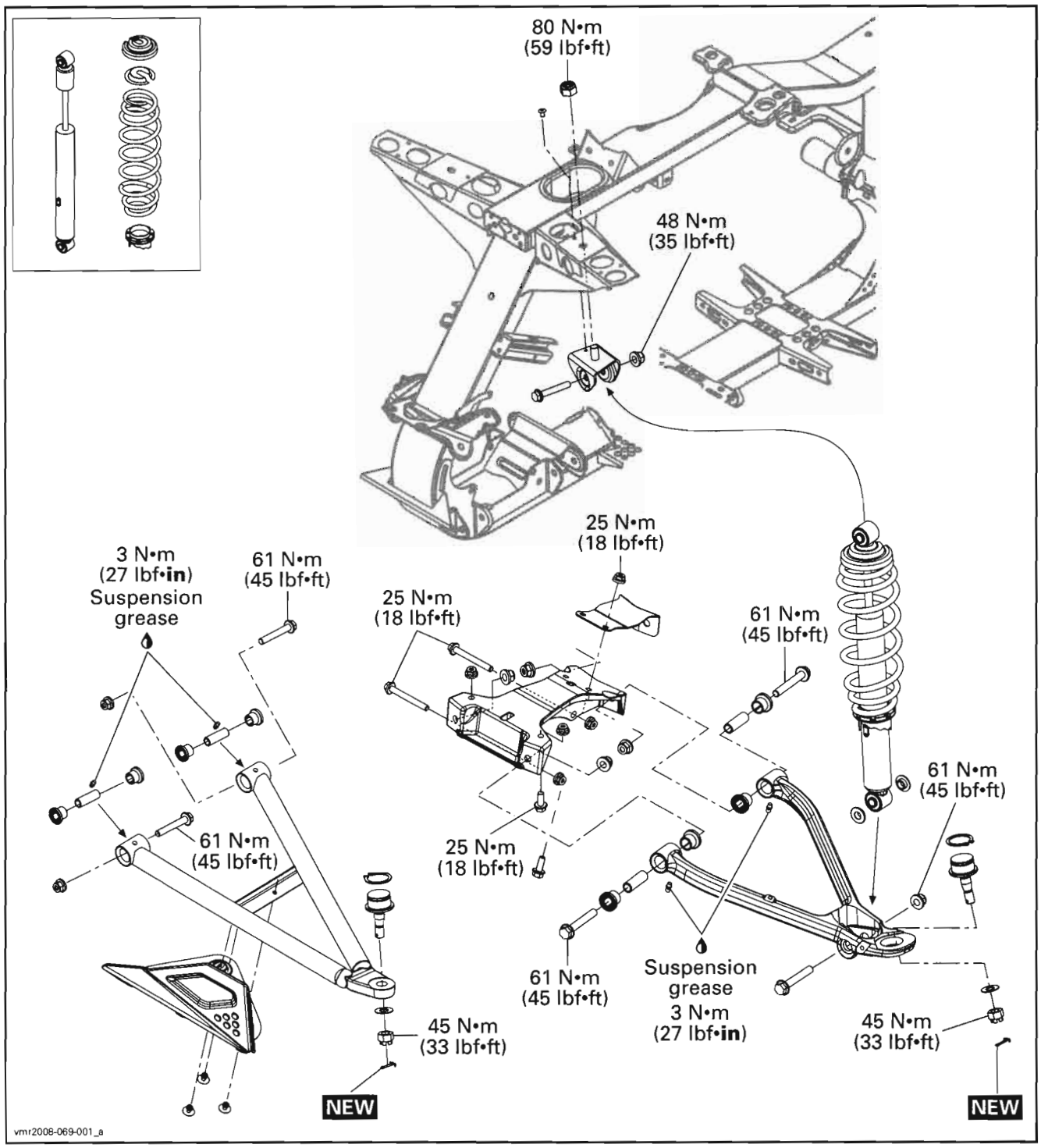

# GENERAL

The procedure explained below is the same for the RH and LH sides unless otherwise noted.

During assembly/installation, use the torque values and service products as in the exploded view.

Clean threads before applying a threadlocker. Refer to *SELF-LOCKING FASTENERS* and *LOCTITE APPLICATION* at the beginning of this manual for complete procedure.

**⚠ WARNING**

**Torque wrench tightening specifications must strictly be adhered to.**
**Locking devices (e.g.: locking tabs, elastic stop nuts, cotter pins, etc.) must be replaced with new ones.**

# PROCEDURES

## TIRES AND WHEELS

**⚠ WARNING**

**When the tires are replaced, never install a bias tire with a radial tire. Such a combination could create handling and/or stability problems.**
**Do not mix tires of different size and/or design on the same axle.**
**Front and rear tire pairs must be the identical model and manufacturer.**
**For unidirectional tread pattern, ensure that the tires are installed in the correct direction of rotation.**
**The radial tires must be installed as a complete set.**
**Severe injury or death can result if these instructions are not followed.**

The tires are directional and their rotation must be kept in a specific direction for proper operation.

## SHOCK ABSORBER AND SPRING

### Removal

***Outlander 500 Series***

Loosen wheel nuts of the appropriate wheel.

Lift front of vehicle until front struts are fully extended then install a jack stand under the frame to support the vehicle off the ground.

Remove wheel.

Remove the front rack and the cap on the top of the front fender.

Unscrew bolts retaining strut to the knuckle.

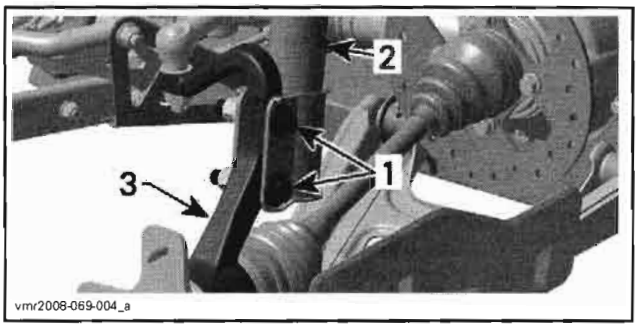


1. *Strut bolts*
2. *Strut*
3. *Knuckle*

Remove the circlip and unscrew the strut nut.

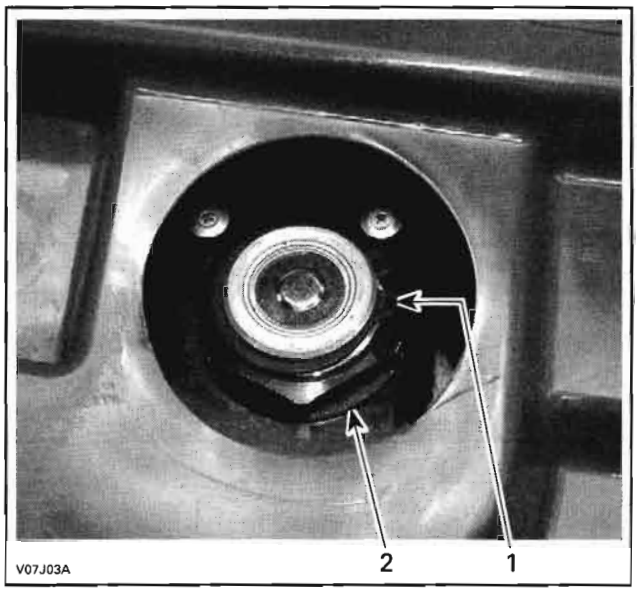


1. *Circlip*
2. *Strut nut*

Remove strut from vehicle.

***Outlander 650/800 Series and Renegade Models***

Loosen wheel nuts of the appropriate wheel.

Lift the front of the vehicle until shock absorber is fully extended then install a jack stand under the frame to support the vehicle off the ground.

Remove wheel.

Remove lower bolt securing shock absorber to upper suspension arm.

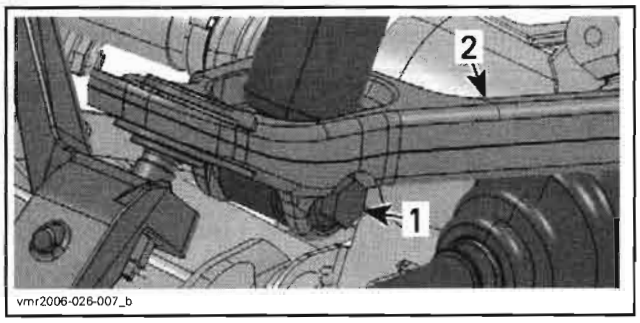


1. *Shock absorber's lower bolt*
2. *Upper suspension arm*

Then the upper bolt from shock absorber support.

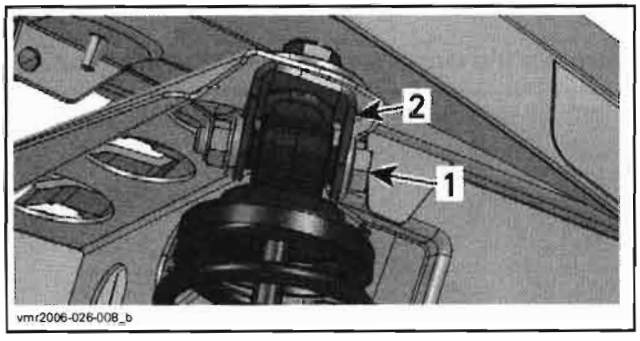


1. *Shock absorber's upper bolt*
2. *Shock absorber support*

When the shock absorber is removed from upper arm, pay attention not to mislay the both metallic bushings.

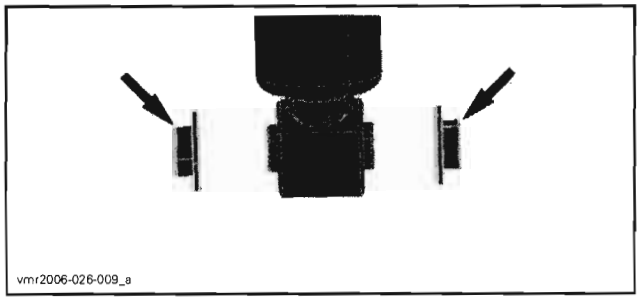


## Disassembly

To remove spring from the shock absorber, use the shock/spring remover (P/N 529 036 007).

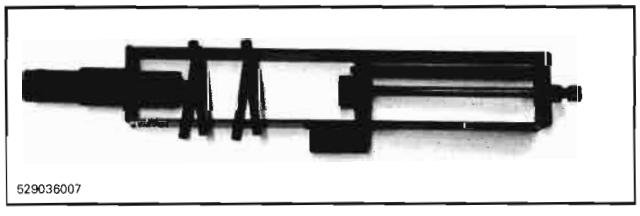


Place the tool in a vise.

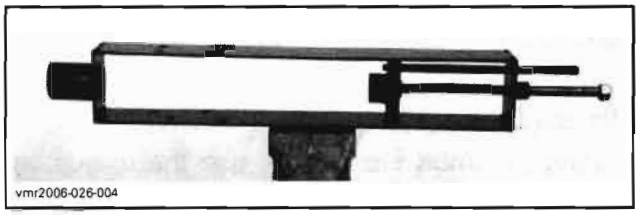


Position the shock absorber in the tool and install the spring compressor pins.

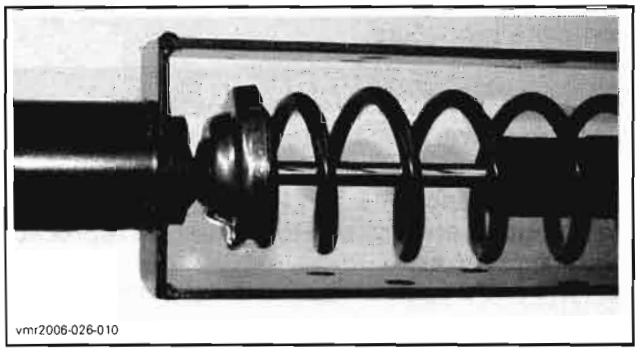


Tighten the shock spring remover screw until the spring is sufficiently compressed to remove spring locking devices.

Remove spring stopper and its cap then release the shock spring remover screw.

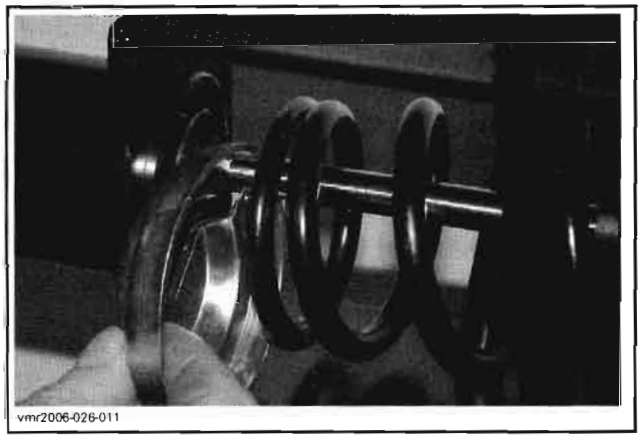


## Inspection

Inspect the spring for damage. Replace if necessary.

Inspect shock for oil leakage. Extend and compress the piston several times over its entire stroke. Check that it moves smoothly and with uniform resistance with rod up. Any of the following conditions will denote a defective shock:

- A skip or hang up when reversing stroke at mid travel.
- Seizing or binding conditions except at extreme end of either stroke.
- A gurgling noise after completing one full compression and extension stroke.

Replace shock if any of these conditions are found.

### Assembly and Installation

For assembly and installation, reverse the disassembly and removal procedures.

#### *Outlander 500 Series*

Apply Loctite 243 (blue) (P/N 293 800 060) on threads of strut nut and tighten it to 55 N•m (41 lbf•ft).

## LOWER SUSPENSION ARM PROTECTOR

### Inspection

Check protector for cracks or other damages. Replace if necessary.

### Removal

#### *Outlander Models*

Remove bolts then the protector.

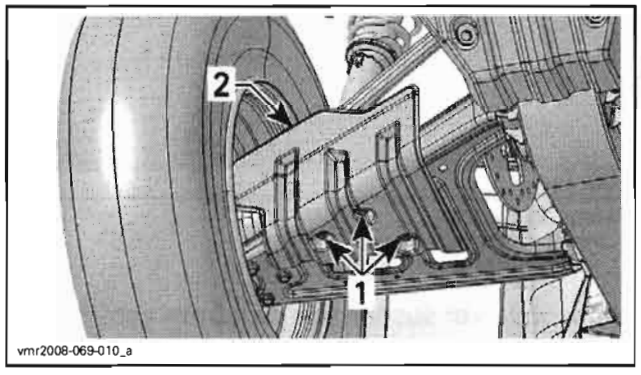


1. *Bolts*
2. *Protector*

#### *Renegade Models*

Using a Supertanium drill bit (P/N 529 031 800), drill rivets securing protector to lower suspension arm.

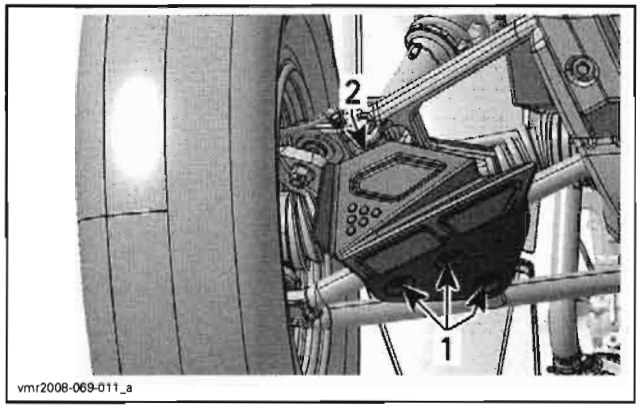


1. *Rivets*
2. *Protector*

Remove the protector.

### Installation

The installation is the reverse of removal procedure.

## LOWER SUSPENSION ARM

### Inspection

Check lower suspension arms for distortion or damage. Replace suspension arms if necessary.

Move lower suspension arm from side to side. There should be no noticeable loose. Replace bushings if necessary.

Move lower suspension arm up and down. There should be no noticeable loose. Replace bushings if necessary.

The following items are performed when the lower suspension arm is removed.

Inspect pivot bushings and cushions for wear or damages. Replace bushings and/or cushions if necessary.

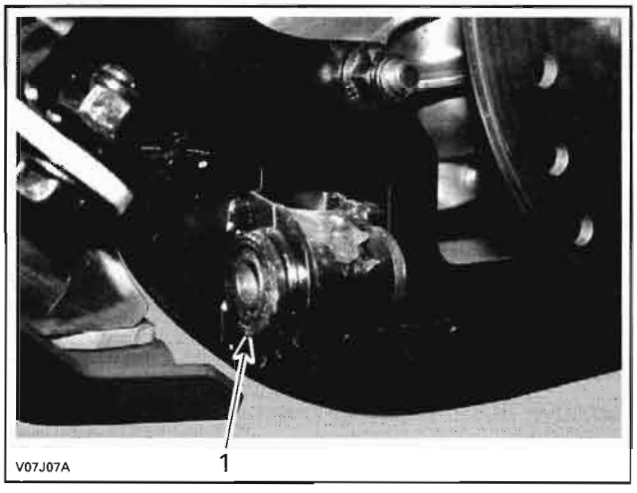


*TYPICAL*
1. *Pivot bushing*

Check ball joint bellows on lower suspension arm for cracks or any other damage. Inspect ball joint end for damage. Ensure it's moving freely. Replace ball joints as required, see below for procedure.

### Removal

Remove wheel.

Remove bolt or nut retaining ball joint to the knuckle.

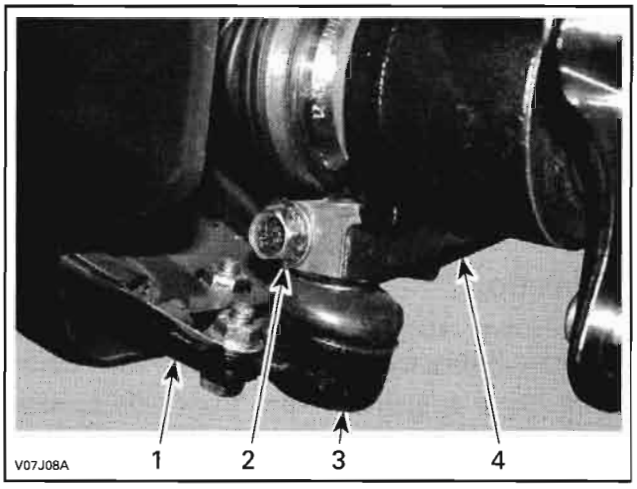


*TYPICAL — OUTLANDER MODELS*
1. *Lower suspension arm*
2. *Ball joint bolt*
3. *Ball joint*
4. *Knuckle*

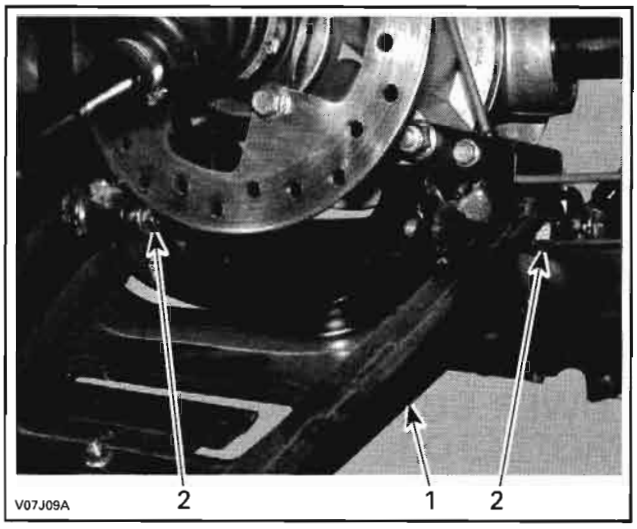


*TYPICAL — ALL OUTLANDER MODELS*
1. *Lower suspension arm*
2. *Remove bolts*

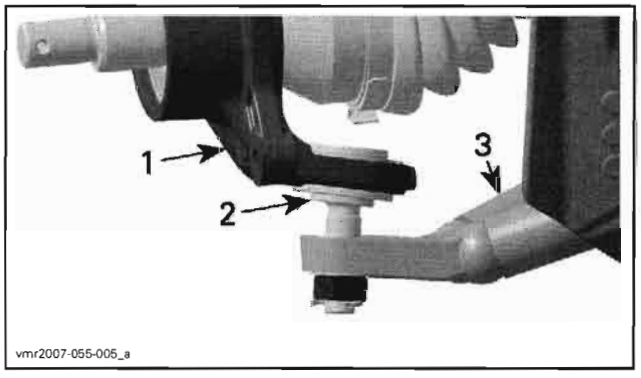


*RENEGADE MODELS*
1. *Knuckle*
2. *Lower ball joint*
3. *Lower suspension arm*

Separate lower suspension arm from knuckle.

Remove bolts retaining lower suspension arm to frame.

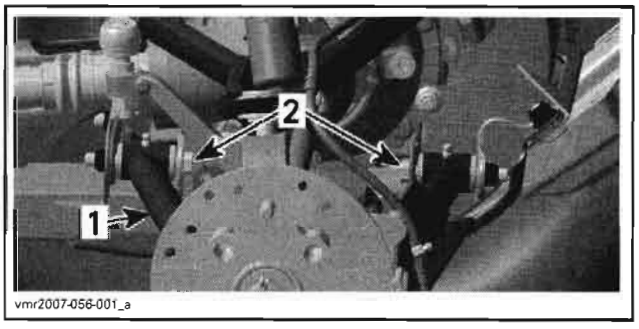


*RENEGADE MODELS*
1. *Lower suspension arm*
2. *Lower suspension arm bolts*

Remove lower suspension arm from vehicle.

## Installation

For assembly, reverse the disassembly procedure. However, pay attention to the following.

Install lower suspension arm to frame.

Install lower suspension arm bolts as per following illustration.

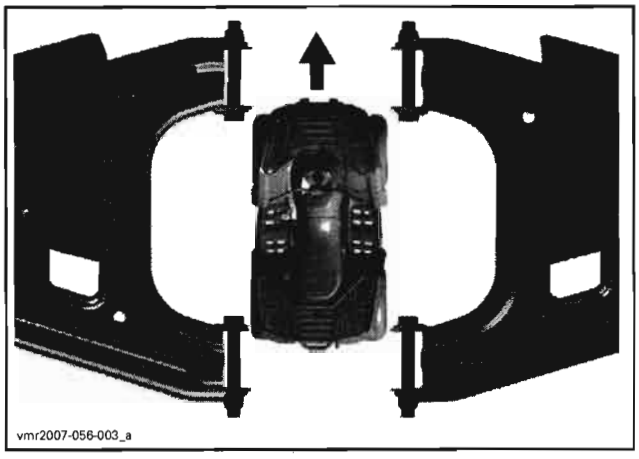


*OUTLANDER SERIES*

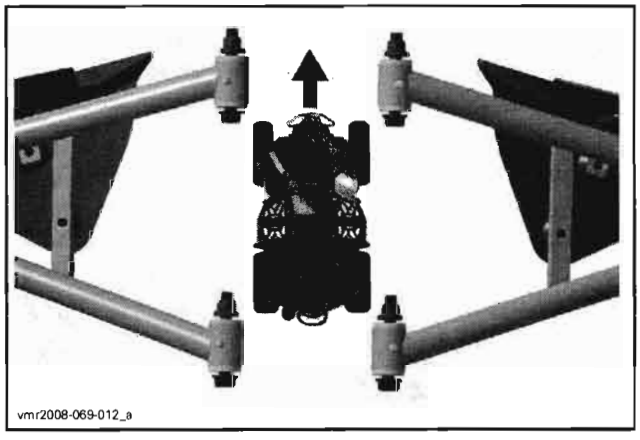


*RENEGADE MODELS*

Torque lower suspension arm bolts to 61 N•m (45 lbf•ft).

Use suspension grease (P/N 293 550 033) to lubricate both lower suspension arms. There are two grease fitting on each arm.

Attach lower suspension arm to knuckle.

Install wheel. Refer to *STEERING SYSTEM* for proper torque.

# LOWER BALL JOINT

## Inspection

Check lower ball joint for damage, pitting, looseness and roughness. If so, replace it.

Check ball joint bellows for cracks. Change if necessary.

## Removal

### *Outlander Series*

Remove appropriate wheel.

Remove bolt securing ball joint to knuckle.

Unscrew bolts retaining ball joint to lower suspension arm.

Extract the ball joint by pulling it out of lower suspension arm.

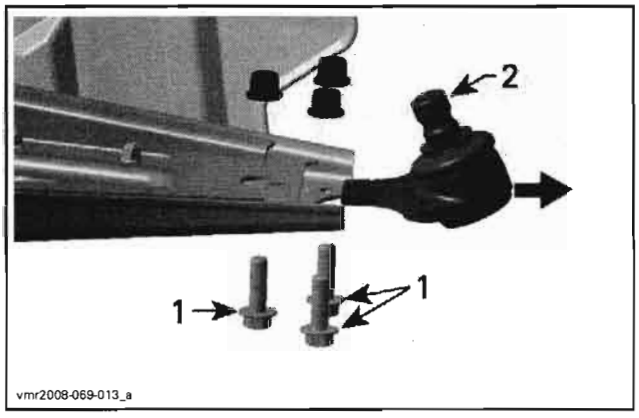


1. *Bolts securing ball joint*
2. *Ball joint*

### *Renegade Models*

Remove knuckle from vehicle. Refer to *STEERING SYSTEM.*

Remove the circlip.

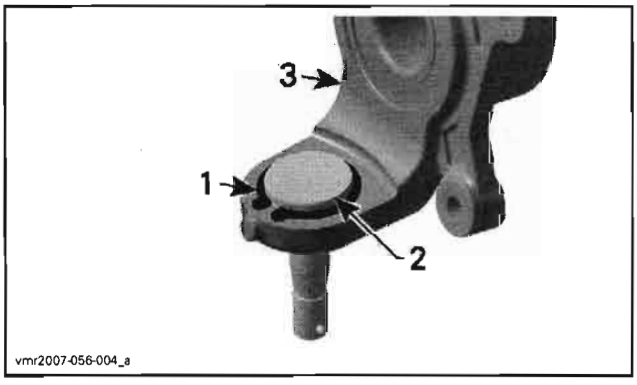


1. *Circlip*
2. *Ball joint*
3. *Knuckle*

Using a press and a small piece of pipe, extract the ball joint. Support the knuckle properly to avoid damaging ball joint location.

## Installation

The installation is the reverse of removal procedure.

### *Renegade Models*

To install the ball joint properly, use the ball joint installer (P/N 529 036 020).

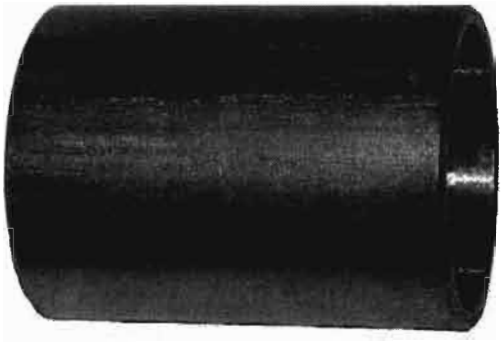


Support the knuckle before pressing the ball joint into its location.

# UPPER SUSPENSION ARM

### *Outlander 650/800 Series and Renegade Models*

## Lubrication

Use suspension grease (P/N 293 550 033) to lubricate both upper suspension arms. There are two grease fitting on each arm.

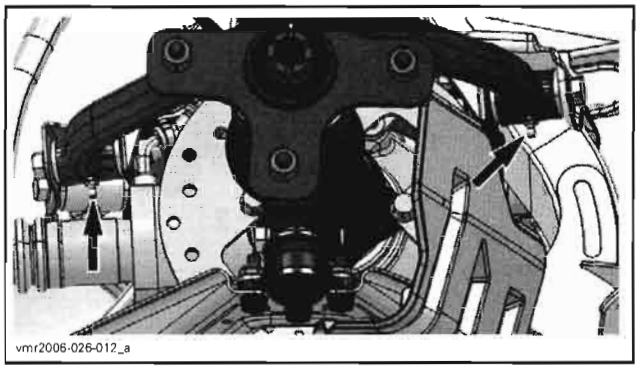


*TYPICAL — OUTLANDER SERIES SHOWN, SAME ON RENEGADE*

## Inspection

Check upper suspension arm for cracks, pitting, distortion or other damages. Replace as required.

Near upper suspension arm bracket, move upper suspension arm up and down then from side to side. There should be no noticeable play. Replace pivot bushings and/or cushions if necessary.

The following items are performed when the upper suspension arm is removed.

- Inspect pivot bushings and cushions for wear.
- Check ball joint bellows for crack or wear.
- Inspect ball joint end for damages. Ensure it is moved freely.

Replace all defective parts.

## Removal

Remove appropriate wheel.

### *Renegade Models*

Unscrew bolts securing brake hose on the suspension arm.

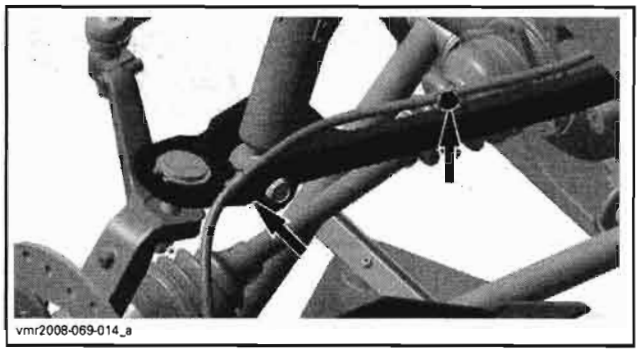


### *All Models*

Remove cotter pin retaining upper ball joint nut. Discard cotter pin.

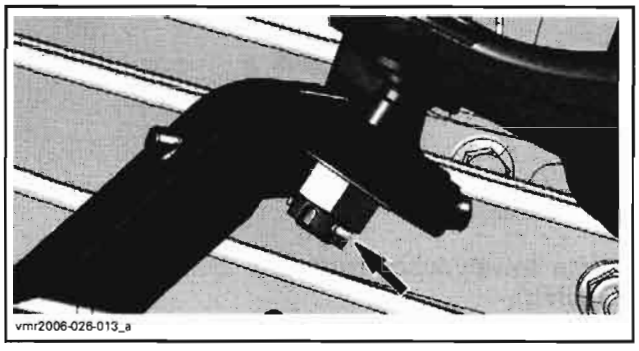


Unscrew upper ball joint nut.

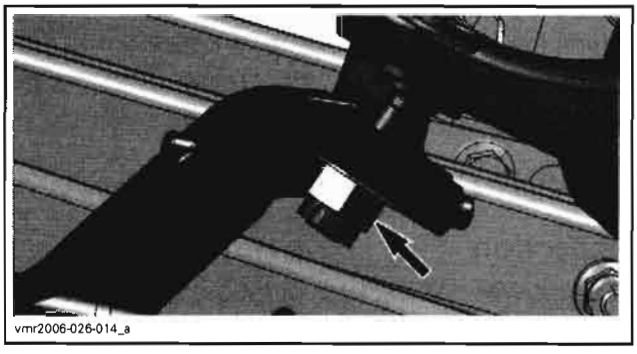


Using a hammer, hit on the knuckle tip to separate ball joint from knuckle.

**NOTE:** A ball joint remover can be used if the ball joint is jammed into knuckle.

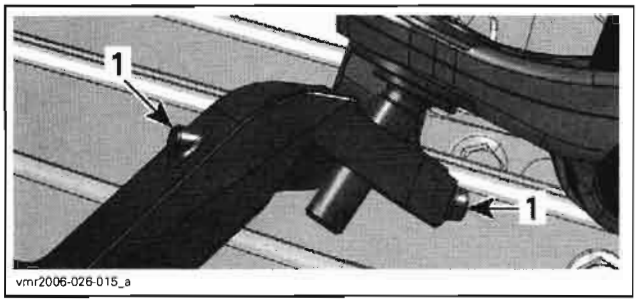


*1. Hit here*

**CAUTION: Never hit on upper suspension arm. Permanent damages could be caused on arm and its replacement will be necessary.**

Remove shock absorber lower bolt from upper suspension arm.

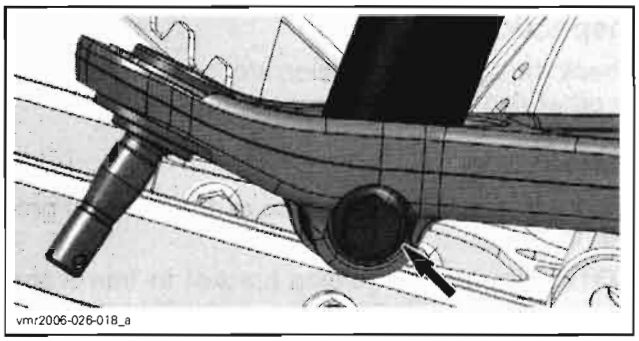


Unscrew bolts that attach upper suspension arm to upper suspension arm bracket.

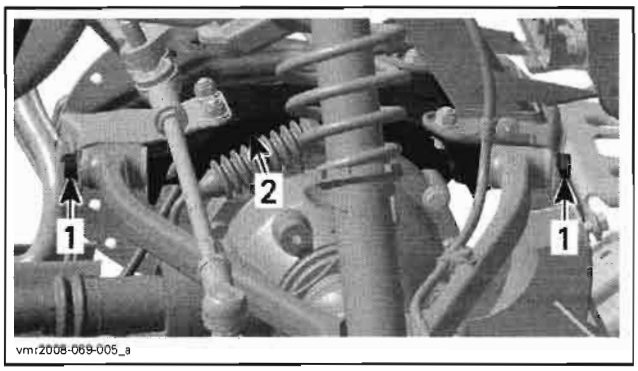


*1. Upper suspension arm bolts*
*2. Suspension arm bracket*

Remove upper suspension arm from vehicle.

## Installation

Position the upper suspension arm and install its bolts. Torque to 61 N•m (45 lbf•ft).

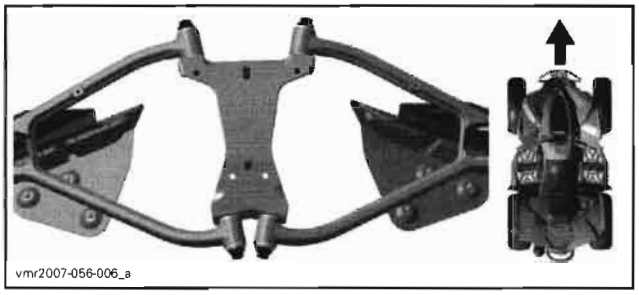


*TYPICAL — RENEGADE SHOWN*

Attach the upper suspension arm to knuckle. When hardened washer and upper ball joint nut are installed, tighten nut to 45 N•m (33 lbf•ft).

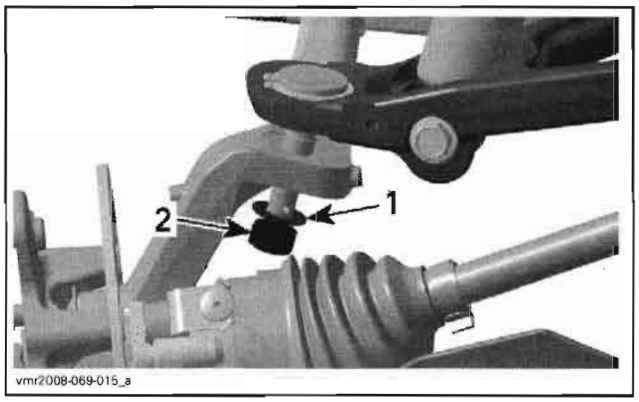


*1. Hardened washer*
*2. Ball joint nut*

Install a NEW cotter pin. Both end of cotter pin must be folded.

Install the shock absorber lower bolt and torque it to 61 N•m (45 lbf•ft).

Install wheel.

# UPPER SUSPENSION ARM BRACKET

## Removal

Remove both front wheels.

### *Outlander 650/800 Series*

Unscrew the left caliper and attach it out of way.

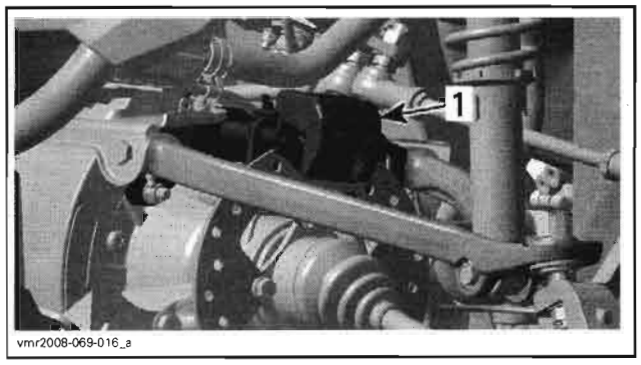


*1. Left caliper*

### *Renegade Models*

Unscrew bolts securing brake hose on the upper suspension arm.

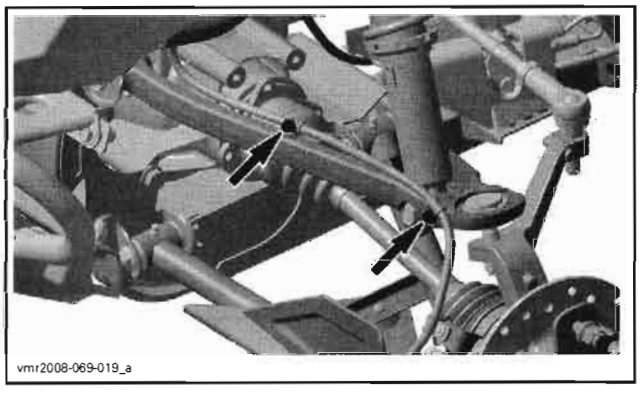


### *All Models*

Unscrew upper suspension arms from the upper suspension arm bracket.

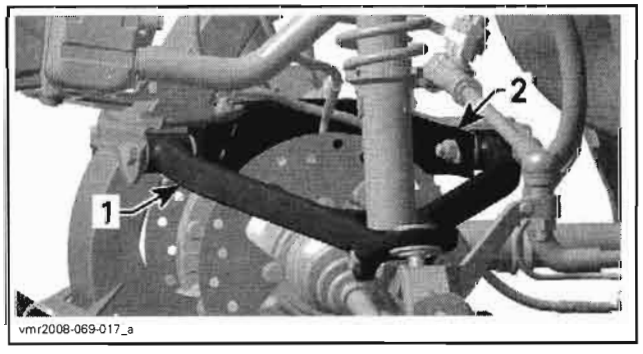


*1. LH upper suspension arm*
*2. Upper suspension arm bracket*

Remove differential upper bolts.

Remove front bolts that attach the upper suspension arm bracket to frame.

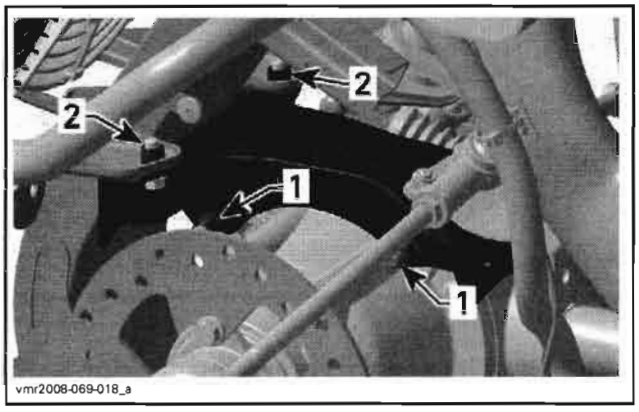


*1. Upper differential bolts*
*2. Front bracket retaining bolts*

Slide bracket backward then pull it by the left side.

## Inspection

Check the upper suspension arm bracket for crack or other damages. Replace as required.

## Installation

The installation is the reverse of the removal procedure.

NOTE: Install bolts holding bracket to frame and upper differential bolts before tightening them.

# UPPER BALL JOINT

### *Outlander 650/800 Series and Renegade Models*

## Inspection

Check upper ball joint for damage, pitting, looseness and roughness. If so, replace it.

Check ball joint bellows for cracks. Replace as required.

## Removal

Remove upper suspension arm.

Remove the circlip.

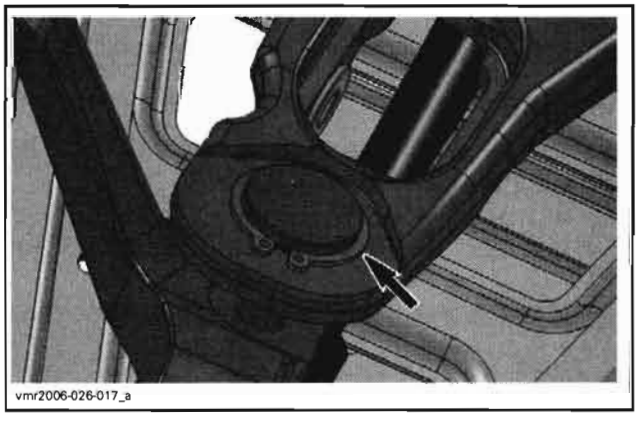

Using a press and a piece of pipe, remove the ball joint.

**CAUTION: Support upper suspension arm properly to avoid damaging ball joint location.**

## Installation

To install the upper ball joint properly, use the ball joint installer (P/N 529 036 020).

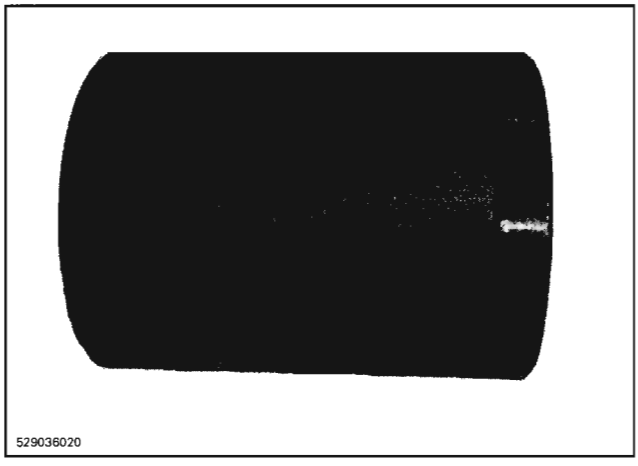


Support the upper suspension arm before pressing the ball joint into its location.

Install the upper suspension arm.

Install wheel.

# REAR SUSPENSION

## SERVICE TOOLS

| Description | Part Number | Page |
|---|---|---|
| Bearing extractor/installer | 529 035 918 | 363 |
| Bearing extractor/installer | 529 035 920 | 363 |
| trailing arm support | 529 035 922 | 363 |
| spanner wrench | 529 035 925 | 362 |
| shock spring remover | 529 036 007 | 359 |

## SERVICE PRODUCTS

| Description | Part Number | Page |
|---|---|---|
| Loctite 243 (blue) | 293 800 060 | 362 |

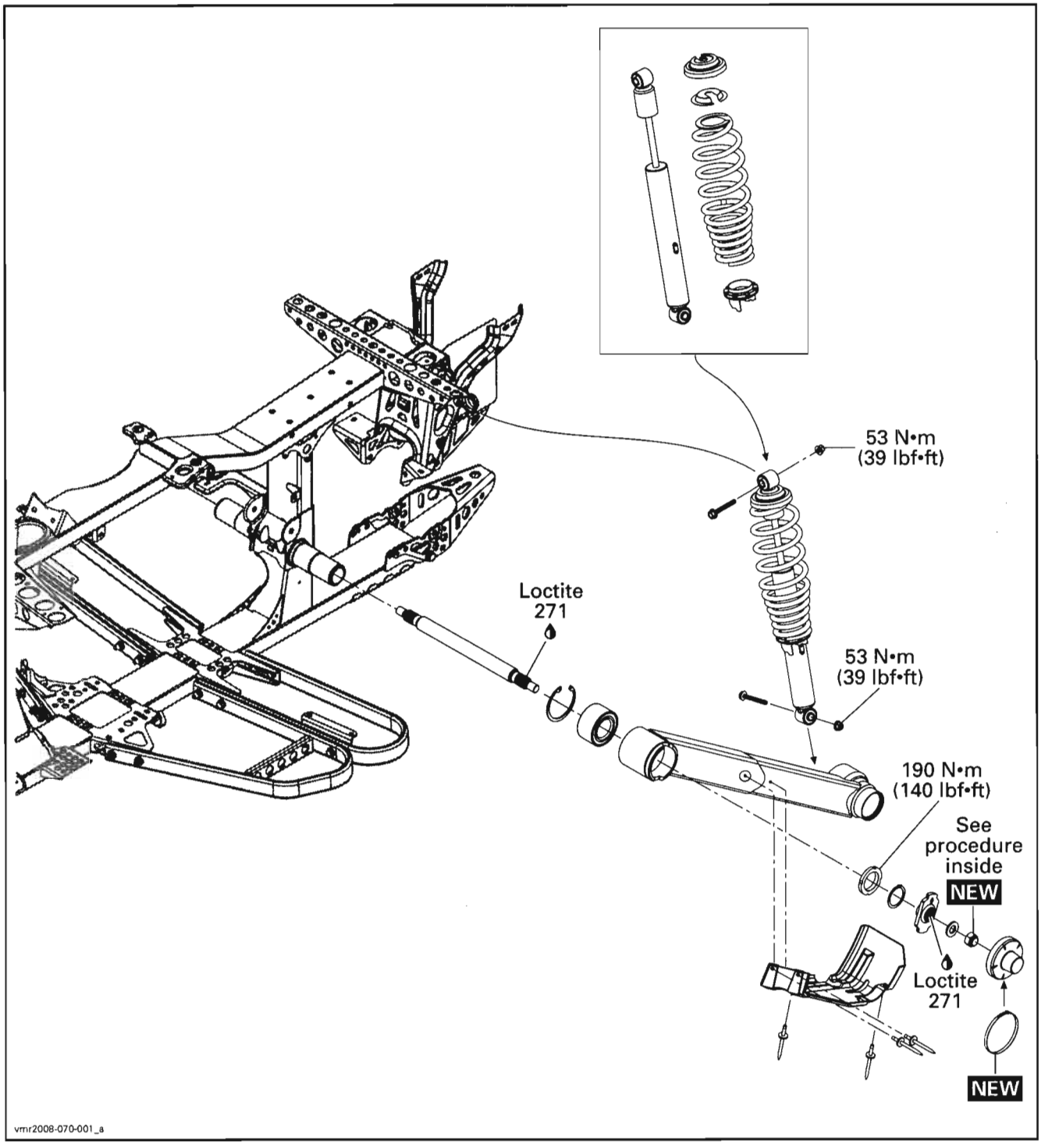
53 N•m
(39 lbf•ft)
Loctite
271
53 N•m
(39 lbf•ft)
190 N•m
(140 lbf•ft)
See
procedure
inside
NEW
Loctite
271
NEW
vmr2008-070-001_a

# GENERAL

The procedure described below is the same for the RH and LH sides, unless otherwise instructed.

During assembly/installation, use the torque values and service products as in the exploded views.

Clean threads before applying a threadlocker. Refer to *SELF-LOCKING FASTENERS* and *LOCTITE APPLICATION* at the beginning of this manual for complete procedure.

**⚠ WARNING**

**Torque wrench tightening specifications must strictly be adhered to.**
**Locking devices (e.g.: locking tabs, elastic stop nuts, cotter pins, etc.) must be replaced with new ones.**

# PROCEDURES

## TIRES AND WHEELS

**⚠ WARNING**

**When the tires are replaced, never install a bias tire with a radial tire. Such a combination could create handling and/or stability problems.**
**Do not mix tires of different size and/or design on the same axle.**
**Front and rear tire pairs must be the identical model and manufacturer.**
**For unidirectional tread pattern, ensure that the tires are installed in the correct direction of rotation.**
**The radial tires must be installed as a complete set.**
**Severe injury or death can result if these instructions are not followed.**

The tires are directional and their rotation must be kept in a specific direction for proper operation.

Torque wheel nuts in accordance with the following illustration.

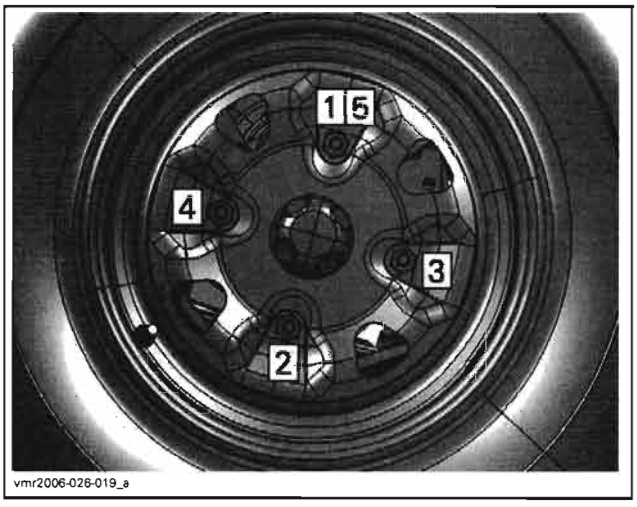

vmr2006-026-019_a

**CAUTION: Always use the recommended wheel nuts. Using a different nut could cause damages to the rim.**

## REAR SHOCK

### Removal

Lift rear of vehicle until rear shock absorbers are fully extended.

Install jack stands or blocks under the frame to support the vehicle.

Remove upper and lower bolts retaining shock absorbers.

### Disassembly

Use the shock spring remover (P/N 529 036 007).

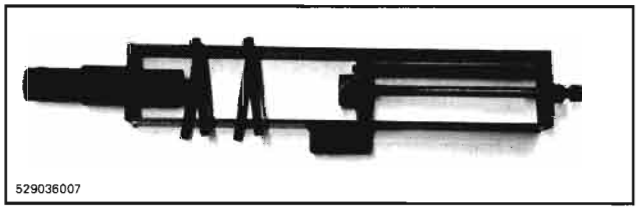
529036007

Place the tool in a vise.

Position the shock absorber in the tool and install the spring compressor pins.

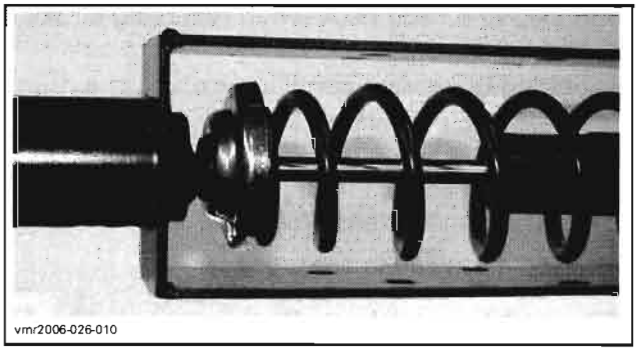
vmr2006-026-010

Tighten the shock spring remover screw until the spring is sufficiently compressed to remove spring locking devices.

Remove spring stopper and its cap then release the shock spring remover screw.

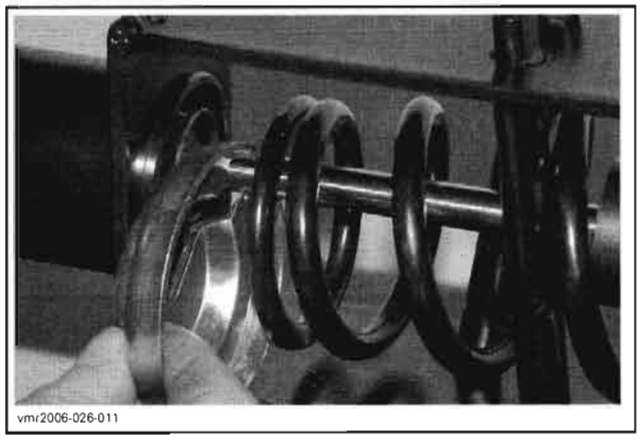


Remove spring from shock.

## Inspection

Secure the end of shock body in a vise with its rod upward.

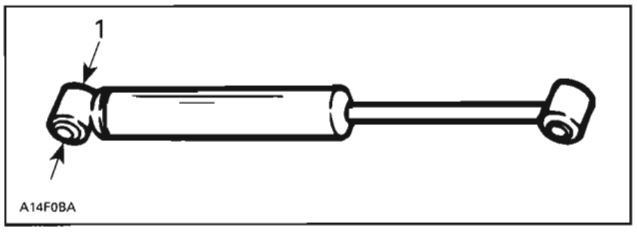


*TYPICAL*
*1. Clamp here*

**CAUTION: Do not clamp directly on shock body.**

Examine each shock for leaks. Extend and compress the piston several times over its entire stroke. Check that it moves smoothly and with uniform resistance with its rod upward.

Pay attention to the following conditions that will denote a defective shock:

- A skip or a hang back when reversing stroke at mid travel.
- Seizing or binding condition except at extreme end of either stroke.
- Oil leakage.
- A gurgling noise, after completing one full compression and extension stroke.

Replace if any faults are present.

## Assembly and Installation

Assembly and installation are essentially the reverse of disassembly and removal procedures.

NOTE: Install cap opening at 180° from spring stopper opening.

# TORSION BAR

## Removal

Apply parking brake and lift rear of vehicle until rear shock absorbers are fully extended.

Install a jack stand or blocks under the frame to safely support the vehicle.

Remove both footrests.

Remove and discard both protective cover clamps.

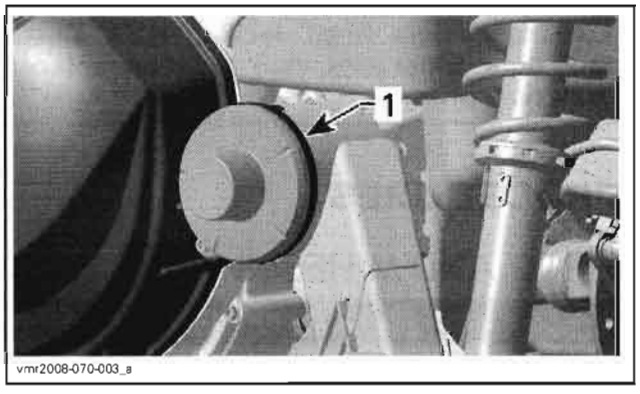


*1. LH protective cover clamp*

Remove protective covers.

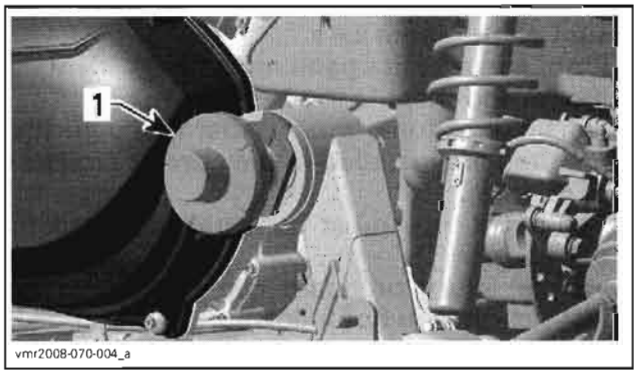


*1. Protective cover*

Remove both elastic nuts (discard them) and both flat washers.

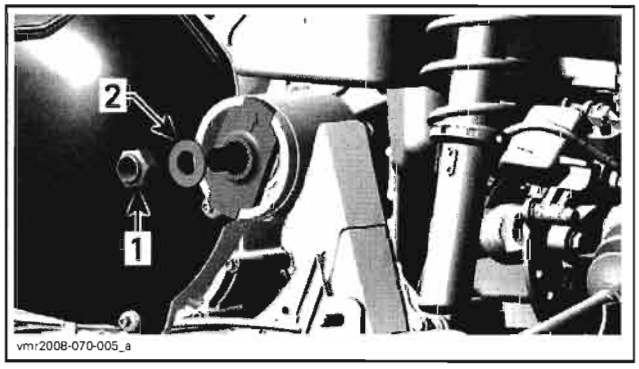


1. *Elastic nut*
2. *Flat washer*

Remove torsion bar levers.

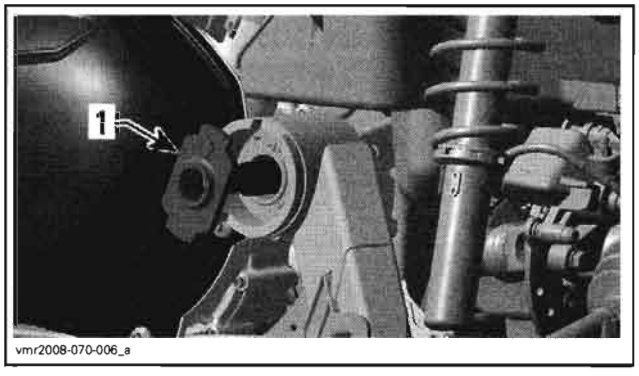


1. *Torsion bar lever*

Remove the torsion bar.

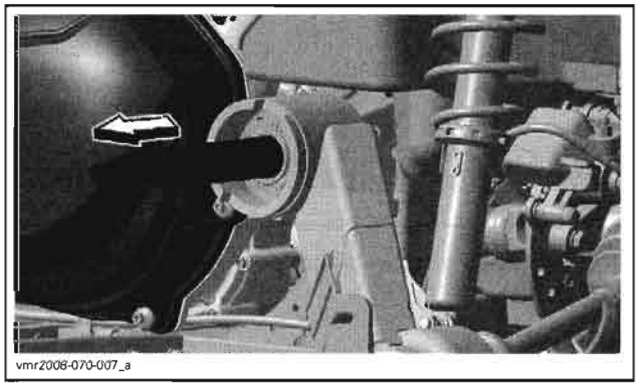


## Inspection

Check torsion bar for cracks, bending or other damages.

Verify splines for damages (torsion bar and torsion bar lever).

Check torsion bar lever tabs for racking, cracks or other damages.

**NOTE:** If a tab is damaged, check the trailing arm for damages.

Replace all damaged parts.

## Installation

Insert the torsion bar into the frame and install the torsion bar lever (one on each side).

**NOTE:** Ensure torsion bar lever is aligned with the cut-outs on the swing arm and arrow is pointing up.

Install the flat washer and a **NEW** elastic nut.

First torque the right hand side elastic nut to 55 N•m (41 lbf•ft), then the left hand side to 120 N•m (89 lbf•ft).

Reinstall both torsion bar covers with **NEW** clamps.

# TRAILING ARM

## Removal

Apply parking brake and lift rear of vehicle until rear shock absorbers are fully extended.

Install a jack stands or a blocks under the frame to safely support the vehicle.

Remove wheel hub (refer to *REAR DRIVE*).

Remove the protective cover, the elastic nut and the flat washer.

Remove the torsion bar lever.

Remove the circlip securing the trailing arm.

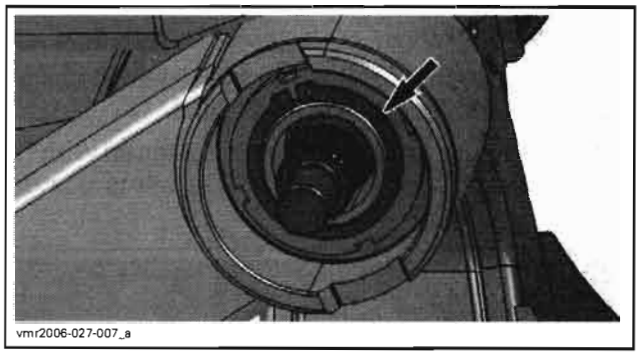
vmr2006-027-007_a

Unscrew the trailing arm nut.

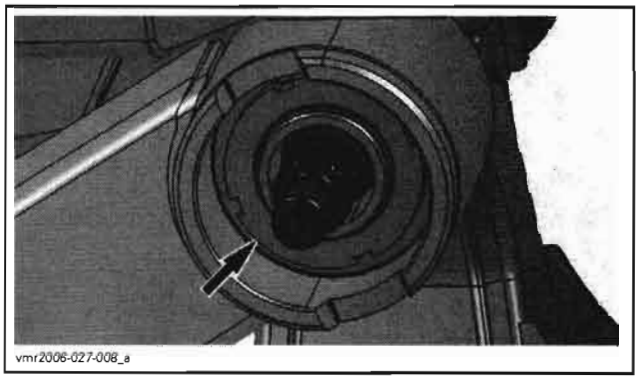
vmr2006-027-008_a

To do this, use the spanner wrench (P/N 529 035 925).

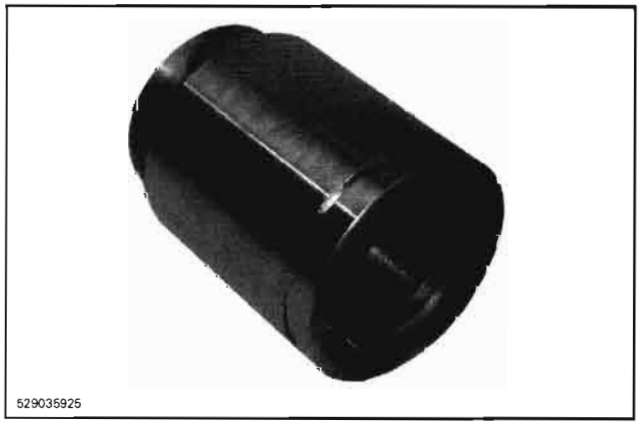
529035925

Unscrew lower bolt of shock absorber.

Remove trailing arm.

## Inspection

Check trailing arms for cracks, bending or other damages.

Verify bearings for smooth and free operation.

Replace all damaged parts.

## Installation

Insert drive shaft end into trailing arm.

Install the trailing arm on frame.

Install the lower shock absorber bolt to support the trailing arm. Do not torque yet.

### Frame Side

Apply Loctite 243 (blue) (P/N 293 800 060) on trailing arm nut threads.

Install the trailing arm nut and torque it to 190 N•m (140 lbf•ft).

Install circlip, torsion bar lever, washer and a **NEW** elastic nut. Torque the left elastic nut to 120 N•m (89 lbf•ft) and the right elastic nut to 55 N•m (41 lbf•ft).

Install protective cover.

### Wheel Side

Install wheel hub, Belleville washer and castellated nut.

Torque castellated nut to 205 N•m (151 lbf•ft) and further tighten until its grooves align with the next cotter pin hole.

Install a **NEW** cotter pin then the wheel cap.

**NOTE:** The longer end of cotter pin must be folded over shaft end.

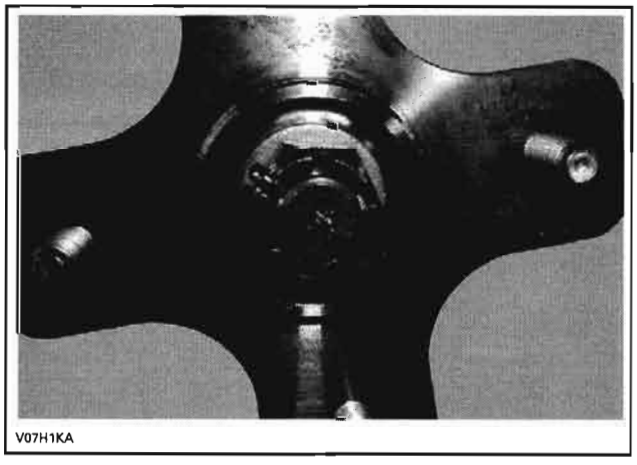
V07H1KA

Torque the shock absorber bolt to 53 N•m (39 lbf•ft).

Install wheel.

# TRAILING ARM BEARINGS

Remove trailing arm. Refer to procedure above.

## Inspection

Check inner race of each trailing arm bearing with your finger. The bearings should turn smoothly and quietly. Remove and discard bearings if race does not turn smoothly or quietly.

## Removal

The same procedure can be used for both bearings.

NOTE: Before extracting the bearing on wheel side, remove the protector by drilling the pop rivets with a 3/16" drill.

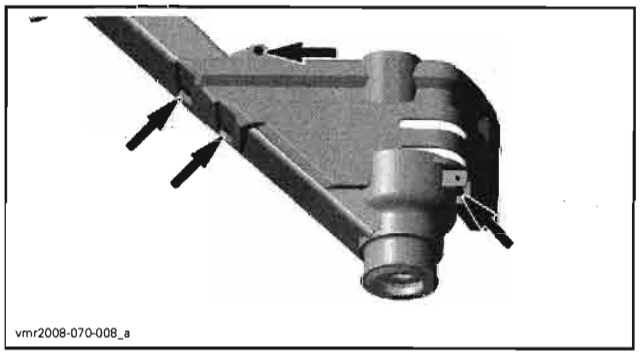


Remove the circlip.

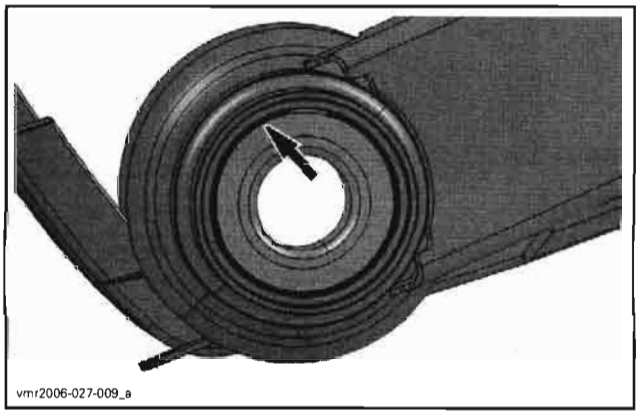


*WHEEL SIDE*

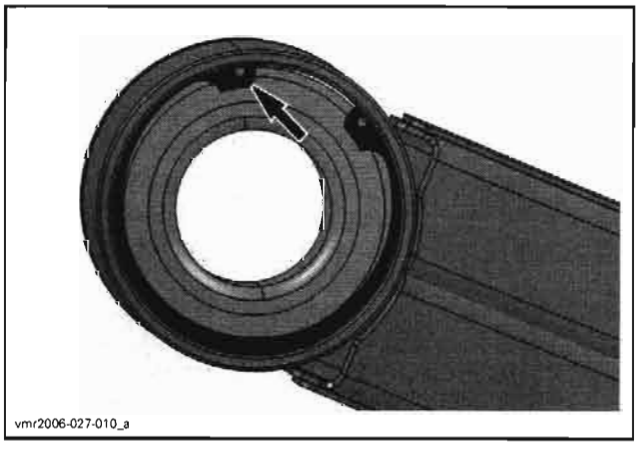


*FRAME SIDE*

Place the trailing arm support (P/N 529 035 922) on the end of trailing arm.

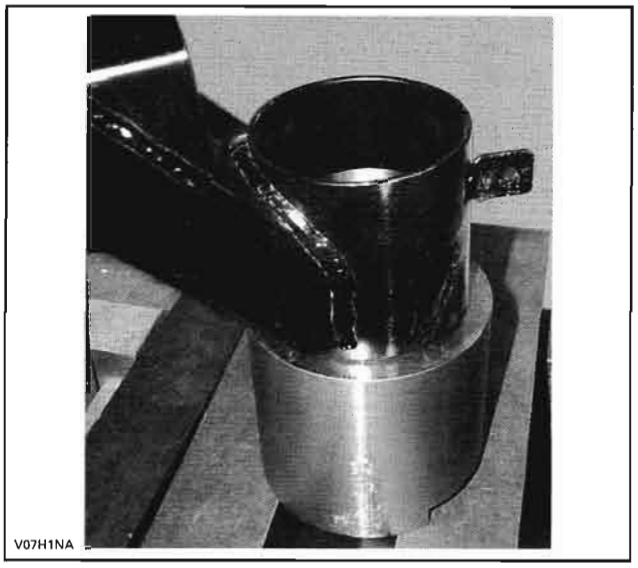


*WHEEL SIDE*

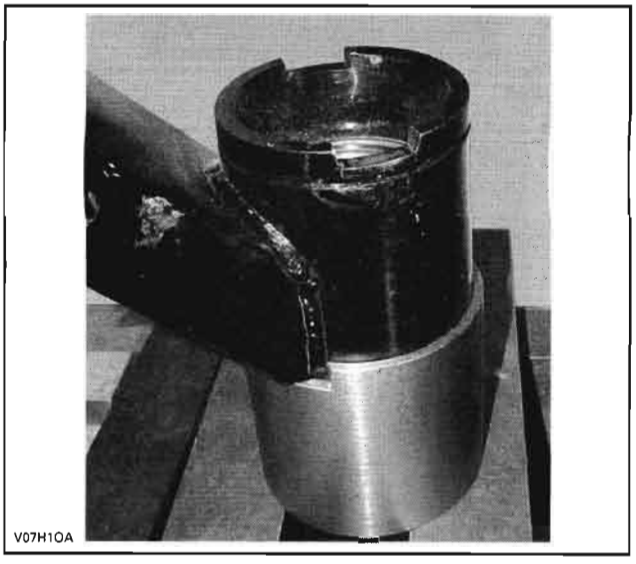


*FRAME SIDE*

Using a press and the proper bearing extractor/installer, remove the bearing.

| LOCATION | TOOL |
|---|---|
| WHEEL SIDE | Bearing extractor/installer (P/N 529 035 918) |
| FRAME SIDE | Bearing extractor/installer (P/N 529 035 920) |

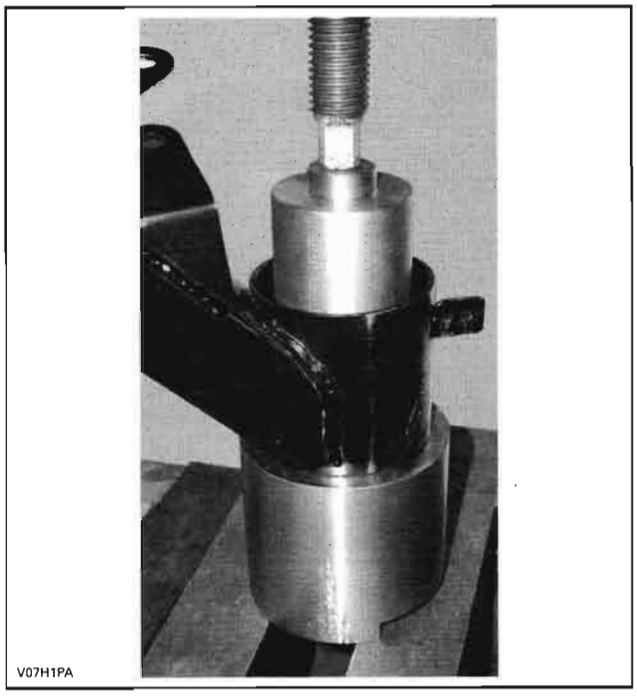


*WHEEL SIDE*

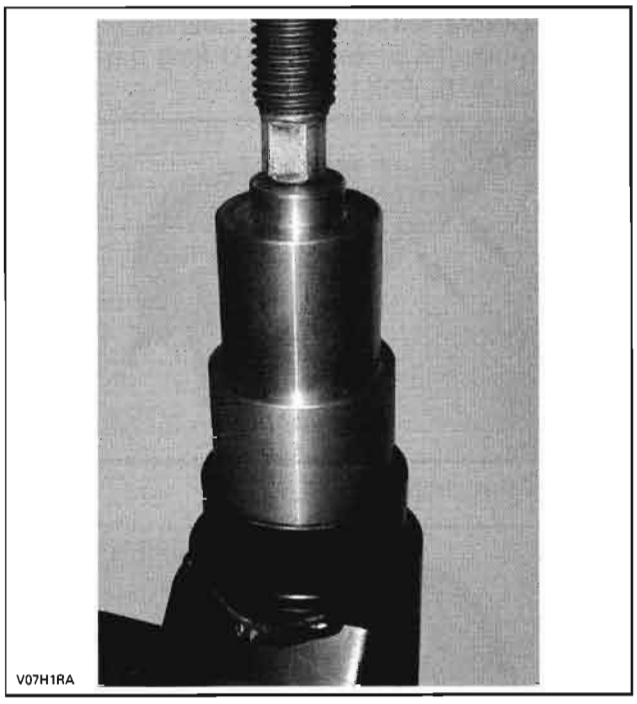


*WHEEL SIDE*

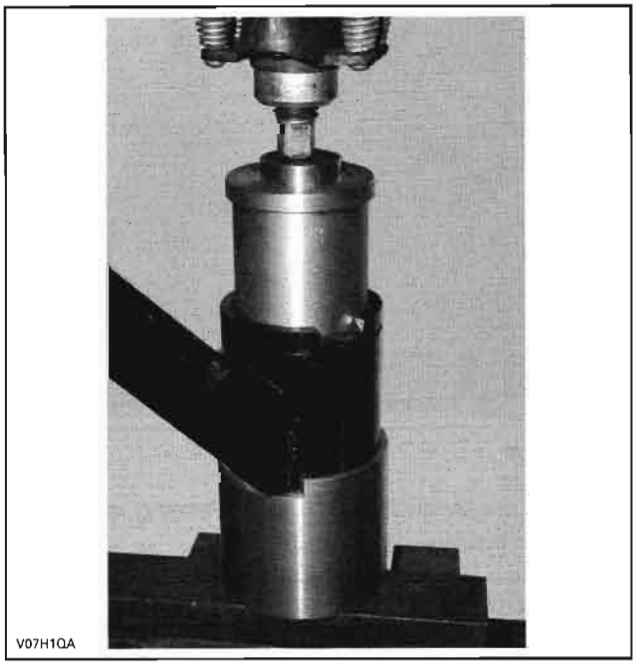


*FRAME SIDE*

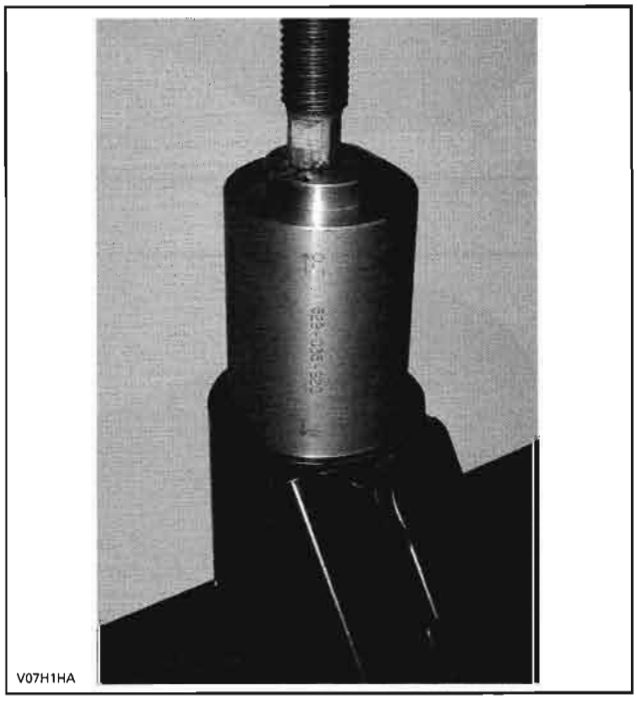


*FRAME SIDE*

## Installation

Clean the bearing housing.

To install the bearing in its location, use the same tool as per removal procedure.

Install the circlip. If the circlip is slacked, replace it with a new.

Install all other removed parts.

# FRONT AND REAR BRAKES

## SERVICE TOOLS

| Description | Part Number | Page |
|---|---|---|
| vacuum/pressure pump | 529 021 800 | 370 |

## SERVICE PRODUCTS

| Description | Part Number | Page |
|---|---|---|
| dielectric grease | 293 550 004 | 374, 377 |
| XP-S synthetic grease | 293 550 010 | 375, 380 |
| GTLMA brake fluid | 293 600 062 | 369 |

### *Outlander Series*

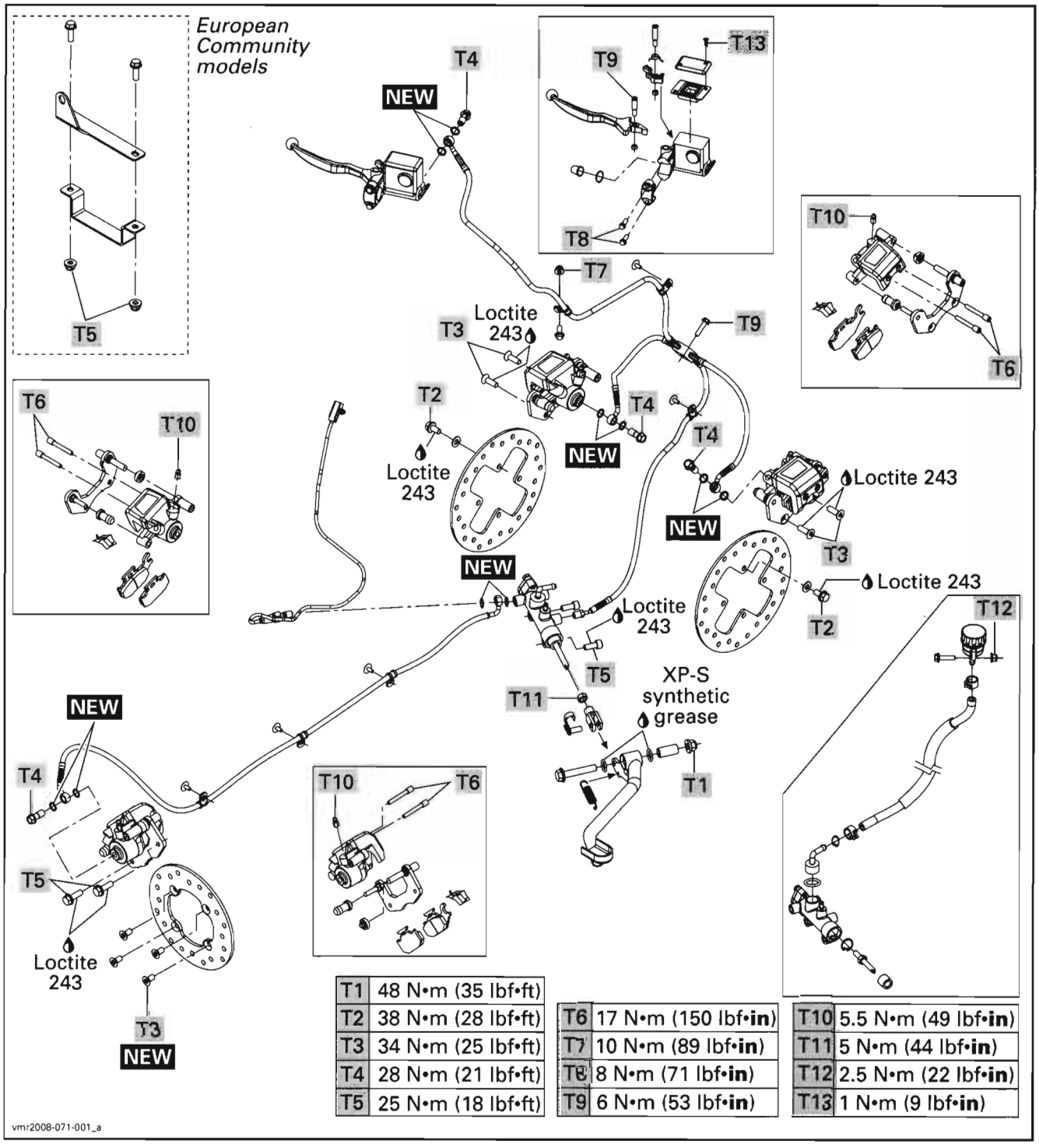


| | |
|---|---|
| T1 | 48 N•m (35 lbf•ft) |
| T2 | 38 N•m (28 lbf•ft) |
| T3 | 34 N•m (25 lbf•ft) |
| T4 | 28 N•m (21 lbf•ft) |
| T5 | 25 N•m (18 lbf•ft) |

| | |
|---|---|
| T6 | 17 N•m (150 lbf•**in**) |
| T7 | 10 N•m (89 lbf•**in**) |
| T8 | 8 N•m (71 lbf•**in**) |
| T9 | 6 N•m (53 lbf•**in**) |

| | |
|---|---|
| T10 | 5.5 N•m (49 lbf•**in**) |
| T11 | 5 N•m (44 lbf•**in**) |
| T12 | 2.5 N•m (22 lbf•**in**) |
| T13 | 1 N•m (9 lbf•**in**) |

***Renegade Models (Front Brakes)***

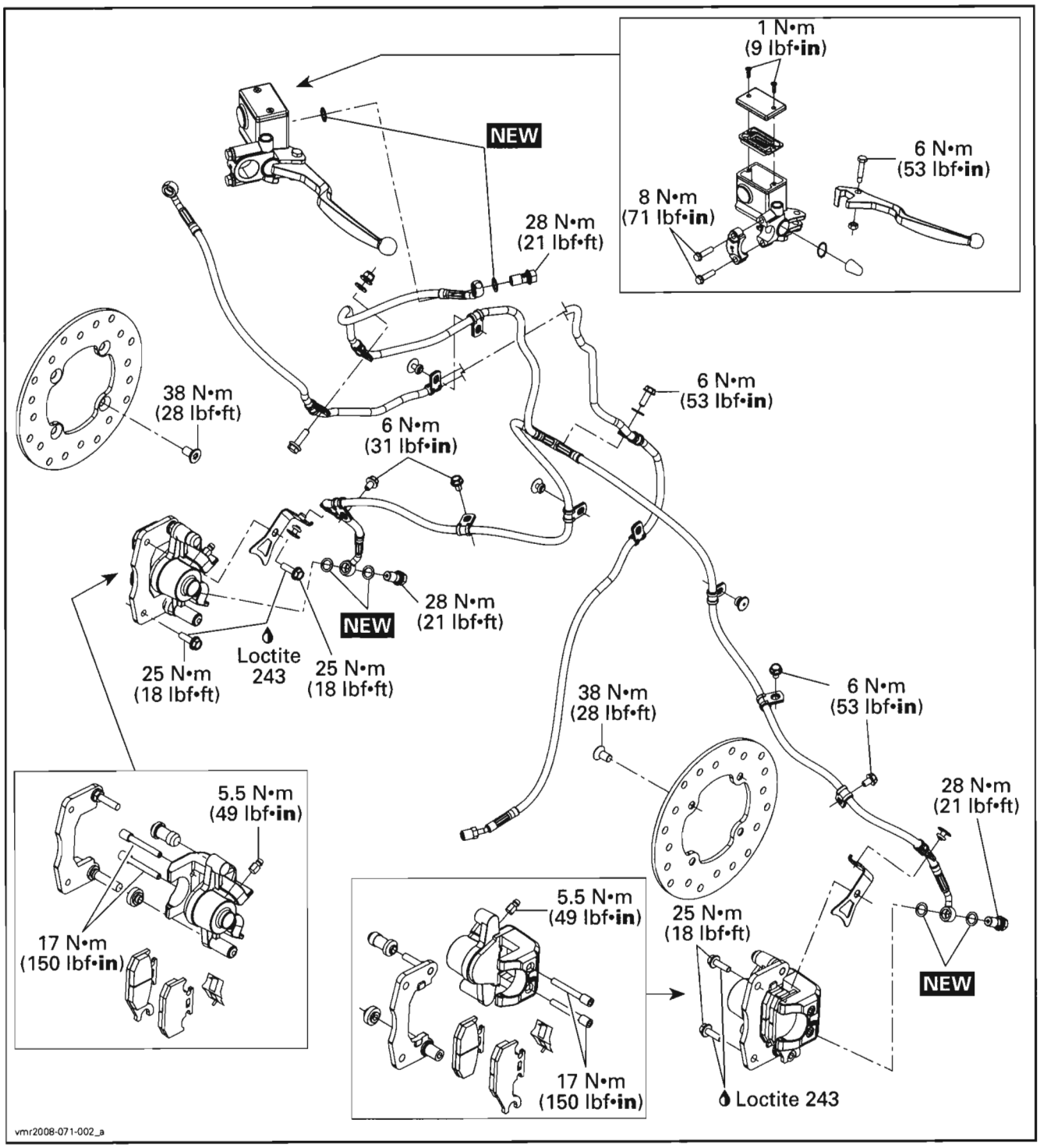

***Renegade Models (Rear Brake)***

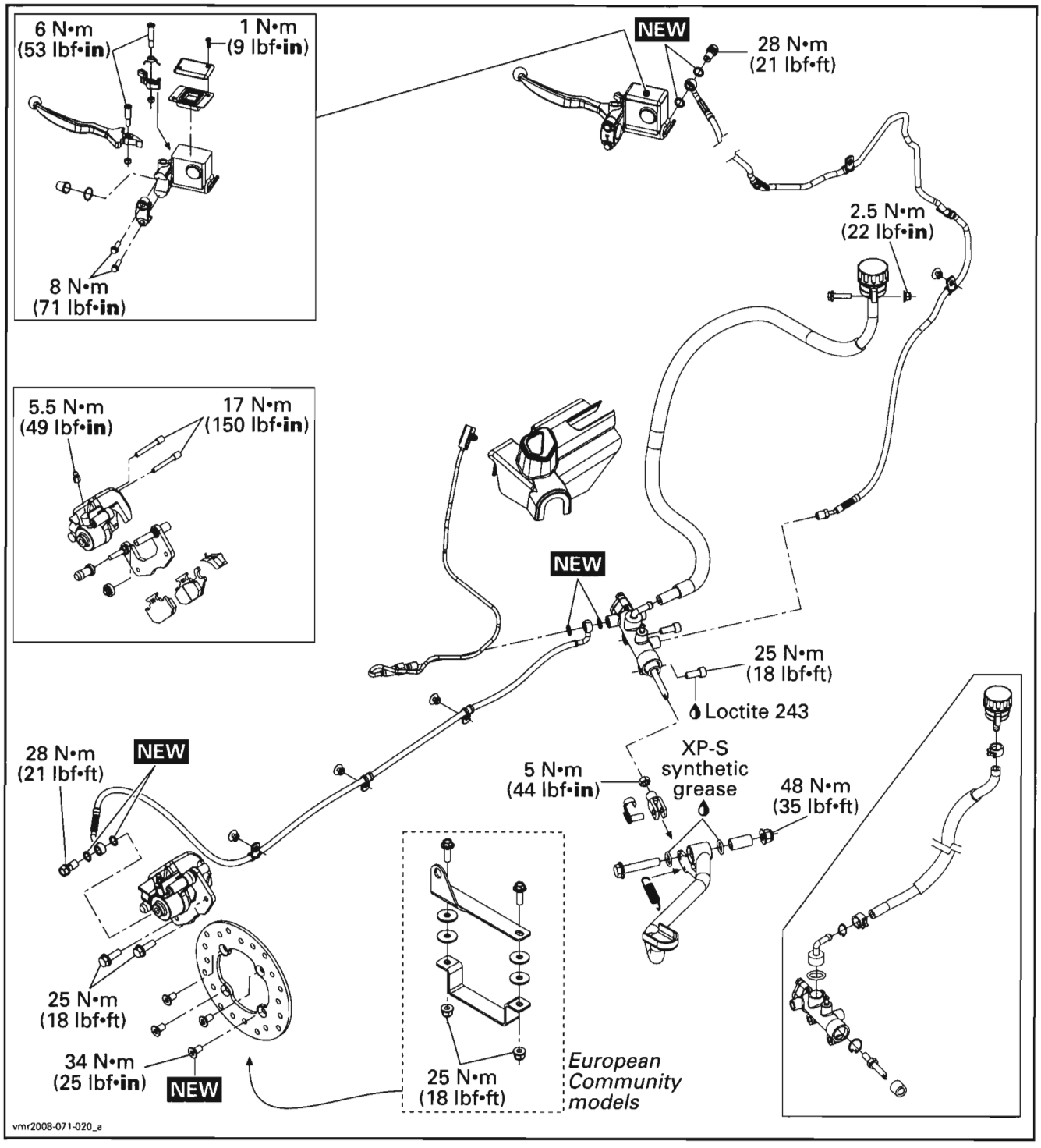

# GENERAL

During assembly/installation, use the torque values and service products as in the exploded view(s).

Clean threads before applying a threadlocker. Refer to *SELF-LOCKING FASTENERS* and *LOCTITE APPLICATION* at the beginning of this manual for complete procedure.

**⚠ WARNING**

**Torque wrench tightening specifications must strictly be adhered to.**
**Locking devices (e.g.: locking tabs, elastic stop nuts, cotter pins, etc.) must be replaced with new ones.**

**CAUTION: Avoid spilling brake fluid on plastic, rubber or painted parts. Protect these parts with a rag when servicing brake system.**

**CAUTION: To avoid serious damage to the brake system, use only DOT 4 brake fluid from a sealed container. Do not use brake fluid taken from old or already opened containers, nor mix different fluids for topping off.**

**CAUTION: Sealing washers must be discarded and replaced with new ones every time a Banjo fitting is unscrewed.**

## Hydraulic Brakes System

The brake system consists of two circuits. Each system has its own master cylinder and reservoir.

Both front and rear brakes are disc type.

**⚠ WARNING**

**Periodically check the brake hoses for damages or leaks. Repair any damage before operating the vehicle.**

## Parking Brake

The parking brake operates all brakes. It is activated by a locking mechanism on LH brake lever.

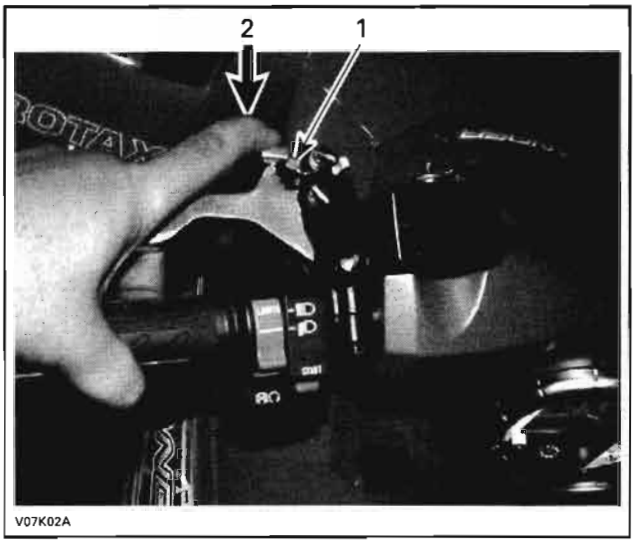


*TYPICAL*
*1. LH brake lever*
*2. Press lever to activate parking brake*

# MAINTENANCE

## BRAKE FLUID

### Recommended Fluid

Always use brake fluid meeting the specification DOT 4 only such as GTLMA brake fluid (P/N 293 600 062) sold by BRP.

### Fluid Level

With vehicle on a level surface, check brake fluid in reservoir for proper level. It should be above MIN. mark.

Clean filler cap before removing.

Add fluid as required. Do not overfill.

NOTE: A low level may indicate leaks or worn brake pads.

#### Front Brake Fluid Reservoir

Turn steering in the straight-ahead position to ensure reservoir is level. Check the brake fluid level, the reservoir is full when the fluid reaches the top of window.

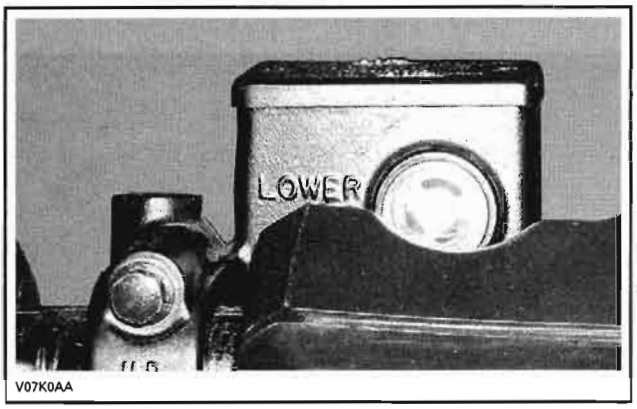

V07K0AA

Visually inspect lever boot condition. Check for cracks, tears, etc. Replace if damaged.

### Rear Brake Fluid Reservoir

***Outlander Series***

vmo2006-007-017_a

*UNDER FRONT ACCESS PANEL*

***Renegade Models***

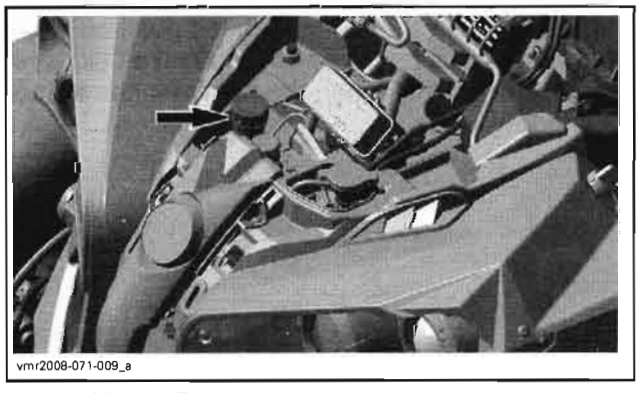
vmr2008-071-009_a

*UNDER CONSOLE*

## Brake Fluid Replacement

**⚠ WARNING**

**A contaminated brake disc or pad reduces stopping power. Discard contaminated pads and clean a contaminated disc with a high quality brake degreasing agent.**

### Brake Fluid Draining

Remove reservoir cover with its diaphragm.

Connect a clear hose to bleeding screw.

Loosen bleeding screw and pump brake lever(s) or brake pedal until no more fluid flows out of bleeding screw.

### Brake Fluid Filling and Bleeding

Close bleeding screws.

Fill reservoirs with DOT 4 brake fluid.

Unscrew the bleeding screw on the top of rear master cylinder until brake fluid comes out then close it.

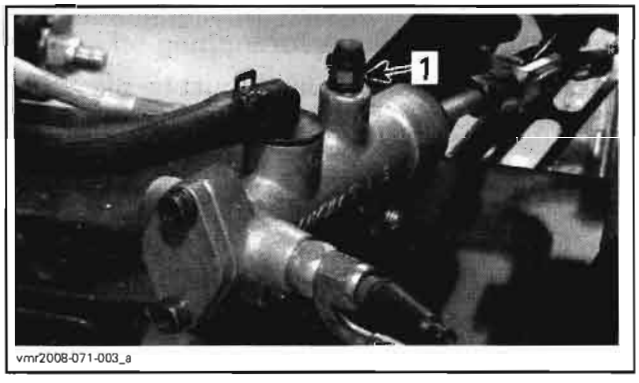

vmr2008-071-003_a

*1. Bleeding screw*

On each caliper, unscrew the bleeding screw until the brake fluid comes out then close it.

Bleed system as per the following procedure.

### With a Vacuum Pump

Using a clear hose, install the vacuum/pressure pump (P/N 529 021 800) to bleeding screw. Place the pump in vacuum position. See the manufacturer's operating instructions.

Pump vacuum pump loosen bleeding screw. Close bleeding screw and refill reservoir when the fluid level is low.

**NOTE:** Check fluid level often to prevent air from being pumped into the system.

Repeat the procedure until no more air bubbles appear in hose.

NOTE: For the front brake system, switch to LH and RH caliper. Turn handlebar to full RH side when bleeding right caliper and turn to the LH side for the left caliper. This helps to reach air into the caliper. On **Outlander series**, the front and the rear brakes must be bled at the same time.

Close bleeding screw and operate brake lever or brake pedal. If it still feels spongy, bleed system again.

Repeat the procedures until air bubbles do not appear in hose and lever or pedal is stiff.

Fill reservoirs to the upper level with DOT 4 brake fluid.

Install diaphragms and covers on reservoirs.

### Without a Vacuum Pump

If vacuum pump is not available, use the following procedure.

Install a clear hose to bleeding screw.

Open bleeding screw. Fill reservoirs and pump brake lever or brake pedal until fluid freely flows out of the hose.

Close bleeding screw.

Pump up system pressure with brake lever or brake pedal until lever or pedal resistance is felt.

Squeeze brake lever or depress brake pedal, open bleeding screw and then close it.

NOTE: Do not release brake lever or brake pedal until bleeding screw has been closed. For the front brake system, switch to LH and RH caliper. Turn handlebar to full RH side when bleeding right caliper and turn to the LH side for the left caliper. This helps to reach air into the caliper. On **Outlander series**, the front and the rear brakes must be bled at the same time.

Release brake lever or brake pedal slowly.

Repeat the procedure until no more air bubbles appear in hose and lever or pedal is stiff.

# PROCEDURES

## REAR BRAKE LIGHT SWITCH

### Inspection

First ensure brake light is good.

Check brake light switch for dirt or corrosion. Make sure it is operating properly.

Depress brake pedal and check for brake light to turn on. Repeat with the brake lever(s).

### Test

#### *Outlander Series*

Remove the LH footrest.

#### *Renegade Models*

Remove the master cylinder cover.

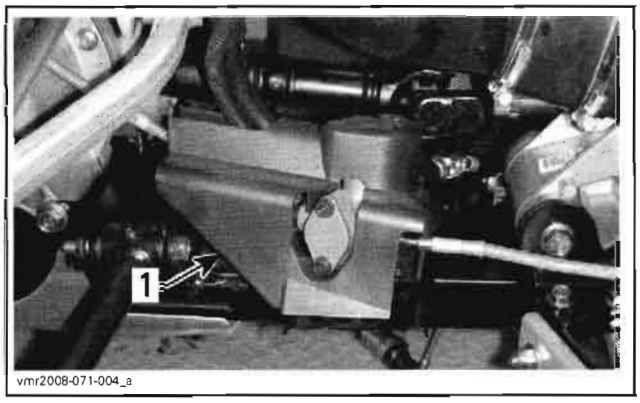


*1. Master cylinder cover*

#### *All Models*

Disconnect switch connector.

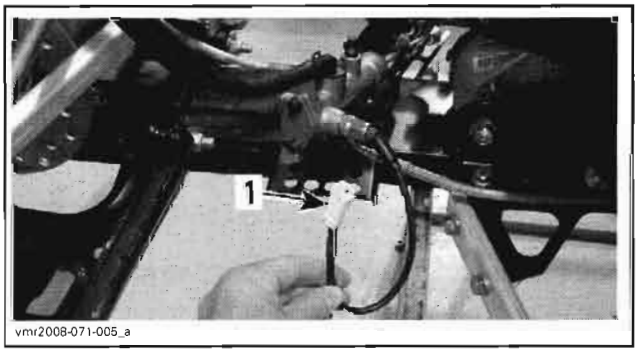


*1. Switch connector*

Check switch operation as follows.

| OUTLANDER SERIES | | | |
|---|---|---|---|
| BRAKE LIGHT SWITCH POSITION | PIN | | RESISTANCE |
| Firmly pushed | 1 | 2 | 0.2 Ω max. |
| Released | | | Infinite (0L) |
| **RENEGADE MODELS** | | | |
| BRAKE LIGHT SWITCH POSITION | PIN | | RESISTANCE |
| Firmly pushed | 1 | 3 | 0.2 Ω max. |
| Released | | | Infinite (0L) |

If switch is defective, replace with a new one.

If the switch tests good, verify wire continuity between harness connector and ECM.

| ECM CONNECTOR PIN | HARNESS CONNECTOR WIRES | RESISTANCE |
|---|---|---|
| B-23 | RED/ORANGE | Close to 0 Ω |

### Removal

The rear brake light switch is located on the rear master cylinder and it cannot be adjusted.

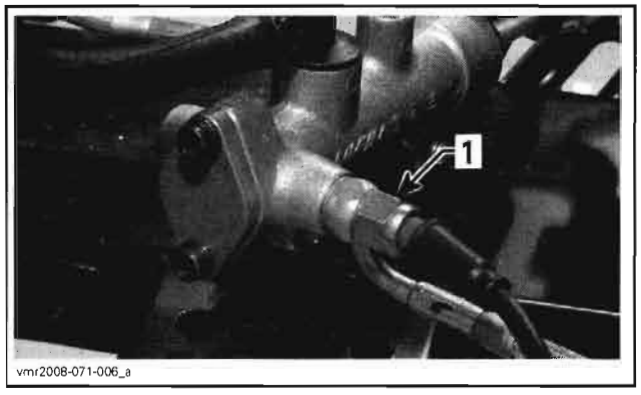


*1. Brake light switch*

Disconnect switch connector.

Drain brake system.

Unscrew brake light switch from master cylinder. Catch spilled fluid with a rag.

Discard sealing washers.

### Installation

For installation, reverse the removal procedure.

Install two **NEW** sealing washers.

## FRONT BRAKE LIGHT SWITCH

***Renegade Models***

### Inspection

First, ensure bulb is not burnt.

Check brake light switch for dirt or corrosion. Make sure it is operating properly.

Depress front brake lever and check for brake light to turn on.

### Test

Disconnect switch connectors.

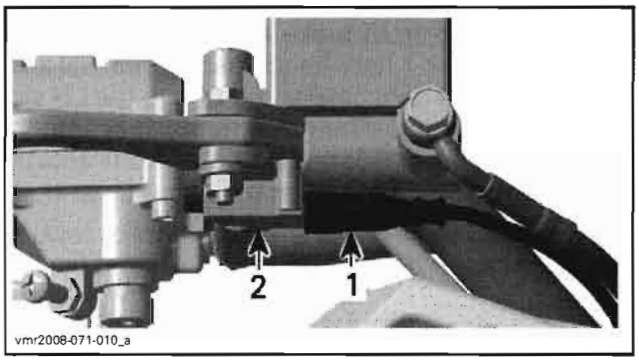


*UNDERNEATH RH BRAKE LEVER*
*1. Switch connectors*
*2. Brake light switch*

Check switch operation as follows.

| BRAKE LIGHT SWITCH POSITION | PIN | RESISTANCE |
|---|---|---|
| Firmly pushed | Switch pins | 0.2 Ω max. |
| Released | | Infinite (OL) |

If switch is defective, replace with a new one.

If the switch test good, verify wire continuity between brake light switch and ECM.

| ECM CONNECTOR PIN | BRAKE LIGHT SWITCH PIN | RESISTANCE |
|---|---|---|
| B-23 | RED/ORANGE | Close to 0 Ω |

### Removal

The front brake light switch is located underneath the RH brake lever and it cannot be adjusted.

Disconnect switch connectors.

Unscrew brake light switch from brake lever then remove it.

### Installation

For installation, reverse the removal procedure.

Tighten switch screw to 1 N•m (9 lbf•**in**).

## PARKING BRAKE MECHANISM

### Removal

NOTE: The parking brake mechanism is located on the LH brake handle.

Unscrew nut under LH brake lever.

Remove screw, spring and brake lever lock.

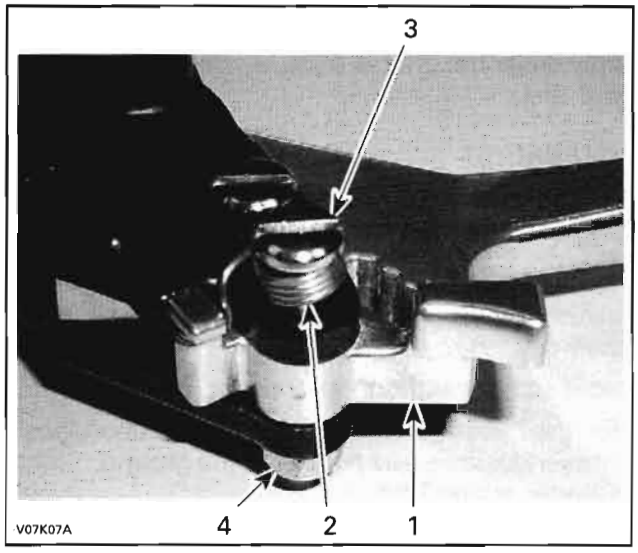


1. *Brake lever lock*
2. *Spring*
3. *Screw*
4. *Nut*

## Installation

For installation, reverse the removal procedure.

See the following illustration to install the spring properly.

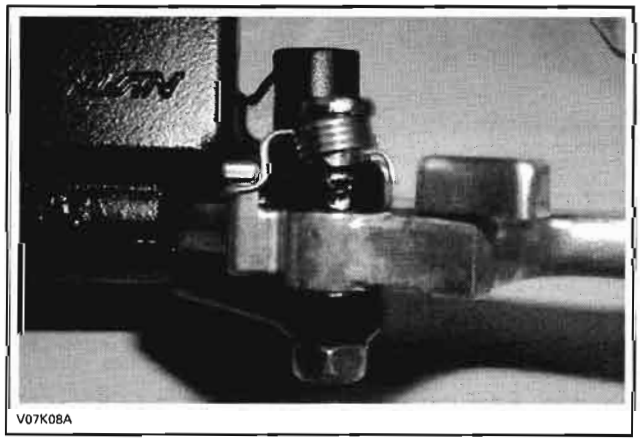


# BRAKE LEVER

## Removal

Remove the parking brake mechanism (LH brake handle only).

Unscrew the brake lever nut.

Remove the screw and the brake lever.

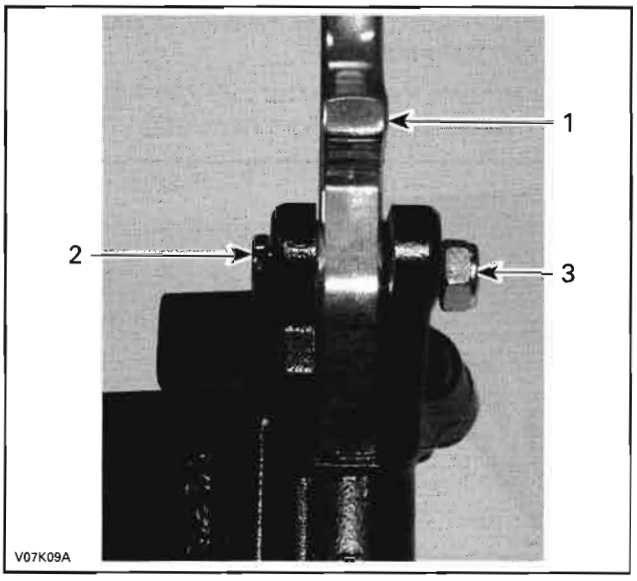


1. *Brake lever*
2. *Screw*
3. *Nut*

## Inspection

Check brake lever for bending, cracks or other damages. Replace if necessary.

## Installation

For installation, reverse the removal procedure.

# FRONT MASTER CYLINDER

## Removal

Remove master cylinder cover and its diaphragm then drain brake fluid until front master cylinder reservoir is empty.

Remove banjo fitting and sealing washers retaining brake hose to front master cylinder. Discard the sealing washers.

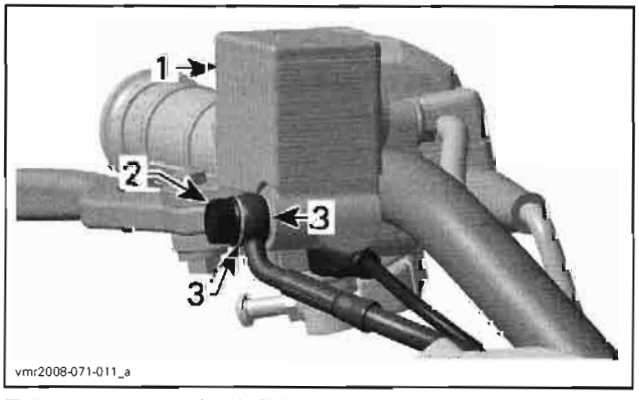


*TYPICAL — RH MASTER CYLINDER SHOWN*
1. *Front master cylinder*
2. *Banjo fitting*
3. *Sealing washers*

When removing RH master cylinder, unplug brake light switch connectors.

Remove screws from master cylinder holder and remove master cylinder from handlebar.

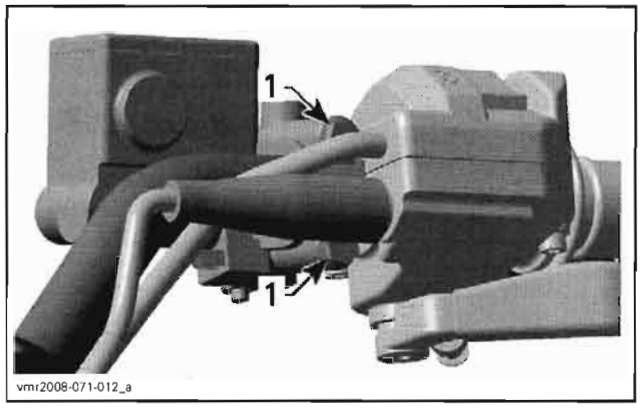


*TYPICAL — RH MASTER CYLINDER SHOWN*
*1. Holder screws*

## Disassembly

Remove brake lever.

Remove piston boot, snap ring, piston and spring.

## Inspection and Lubrication

Discard any remaining fluid inside reservoir.

Clean reservoir, piston and master cylinder thoroughly with clean brake fluid.

Check:
- boot for crack
- spring for damage
- piston cup for wear, deterioration or damages
- master cylinder and piston for scoring, scratches or other damages.

Change part(s) if necessary.

Check if the end cap O-ring is brittle, hard or damaged.

NOTE: If master cylinder housing is damaged or leaking, replace as an assembly.

## Assembly

Coat piston and piston cups with clean brake fluid.

Install spring onto piston.

Install piston into master cylinder.

Install the snap ring into groove in the master cylinder.

Install boot into master cylinder and the groove in piston.

Apply dielectric grease (P/N 293 550 004) to the brake lever contacting surface of the piston.

Install brake lever and locking mechanism.

Apply dielectric grease (P/N 293 550 004) on lever pivot bolt.

## Installation

For the installation, reverse the removal procedure, pay attention to the following details.

Place the brake lever assembly on the handlebar.

Position cylinder holding bracket with the UP mark upward.

Install screws and tighten loosely.

With the handlebar in straight ahead position, position cylinder reservoir parallel to the ground. Tighten upper screw first.

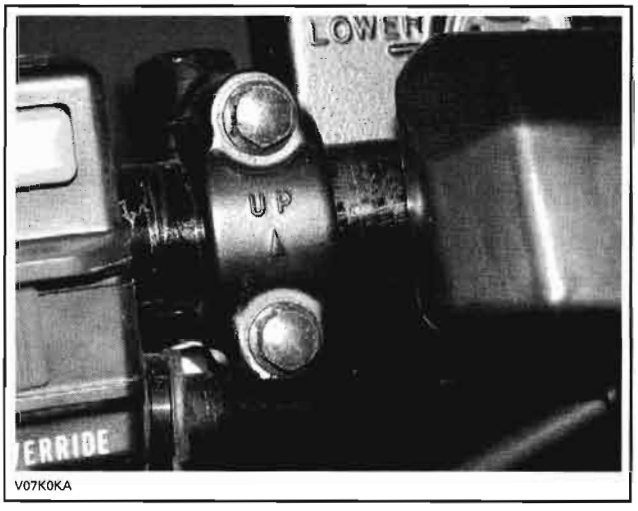


Connect brake hose to master cylinder with a Banjo fitting and NEW sealing washers.

Bleed brake system.

Check for leaks and make sure the brakes operate normally before driving.

# REAR MASTER CYLINDER

## Removal

Drain brake fluid.

### *Outlander Series*

Remove LH and RH footrests.

### *Renegade Models*

Remove the master cylinder cover.

### *All Models*

Unplug brake switch connector.

NOTE: At this time, check hoses and fittings for damages or leaks.

Disconnect reservoir flexible hose and plug the end to avoid brake fluid spillage.

Unscrew brake light switch from master cylinder. Discard sealing washers.

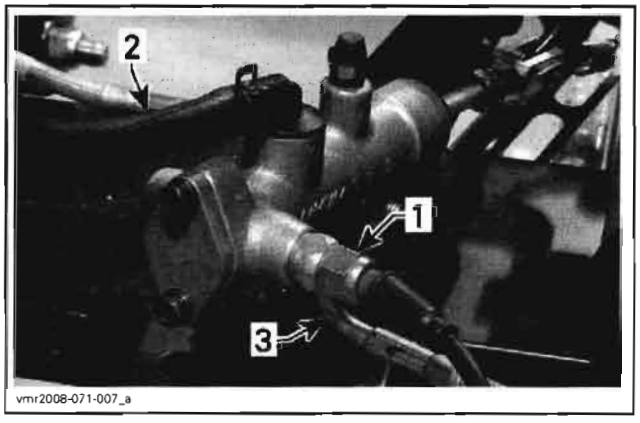


1. *Brake switch*
2. *Reservoir hose*
3. *Rear hose*

Unscrew front hose from master cylinder.

Unhook push rod from brake pedal.

Remove bolts retaining master cylinder to the frame.

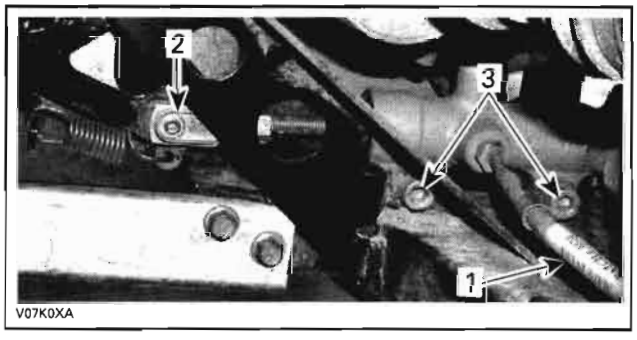


1. *Front hose*
2. *Push rod lock*
3. *Master cylinder bolts*

## Disassembly

Remove the end cap, the spring and the piston.

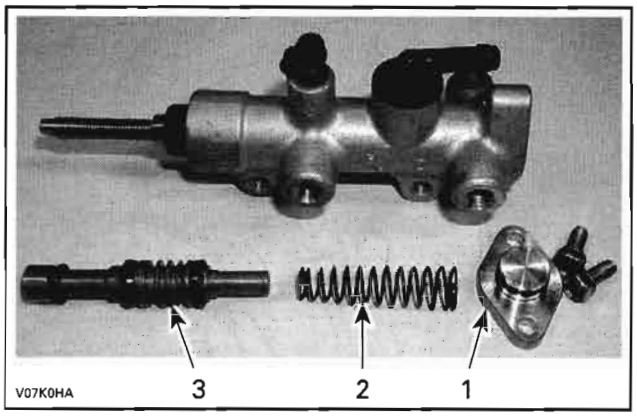


1. *End cap*
2. *Spring*
3. *Piston*

Remove the boot, the snap ring and the push rod.

## Inspection and Lubrication

Discard any remaining fluid inside reservoirs.

Clean reservoirs, pistons and master cylinders thoroughly with clean brake fluid.

Check:
- boots for crack
- springs for damage
- piston cups for wear, deterioration or damages
- master cylinders and pistons for scoring, scratches or other damages.

Change part(s) if necessary.

Check the push rod lock for excessive wear, replace if necessary.

Check if the end cap O-ring is brittle, hard or damaged.

**NOTE:** If master cylinder housing is damaged or leaking, replace as an assembly.

## Assembly

Apply XP-S synthetic grease (P/N 293 550 010) on both ends of push rod.

Install the push rod, the snap ring and the boot.

If push rod yoke has been removed, reinstall it then adjust push rod length, see the following illustration.

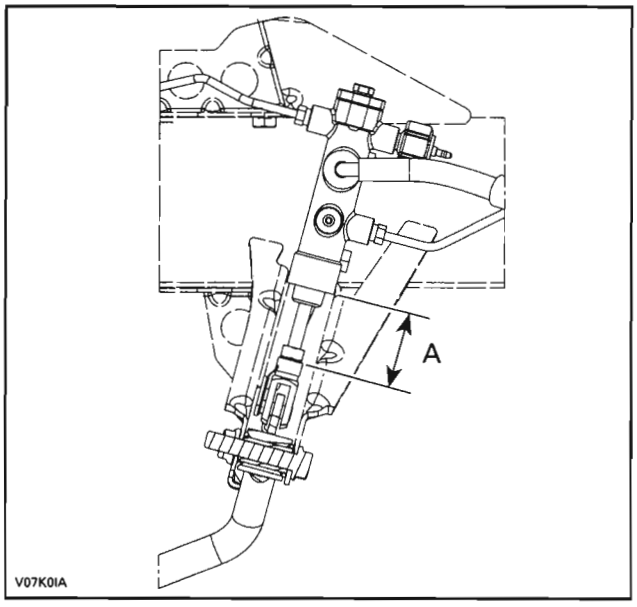


*A. 44 ± 1 mm (1.732 ± .039 in)*

Coat piston and piston cups with clean brake fluid.

The spring is conical. Install the smaller end on piston.

Insert piston in the master cylinder.

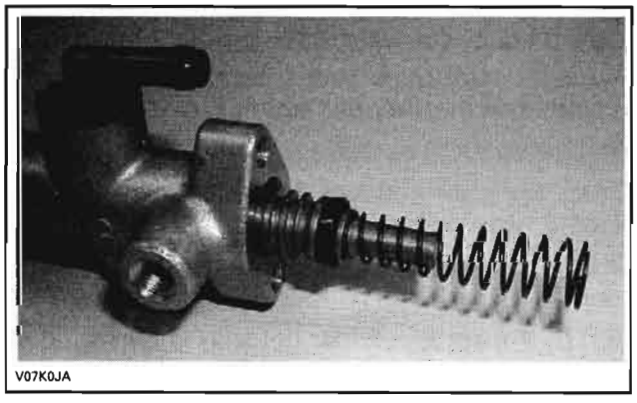


Install the end cap. Do not forget the O-ring.

## Installation

Install master cylinder to frame.

Hook push rod on brake pedal.

Connect front hose on master cylinder.

Connect reservoir flexible hose.

Install the rear hose and the brake light switch with two **NEW** sealing washers.

Connect brake light switch connector.

Fill up reservoir with clean brake fluid.

Bleed brake system.

Check for leaks and make sure the brakes operate normally before driving.

# CALIPER

## Removal

Loosen wheel nuts.

Raise vehicle and support it securely.

Remove appropriate wheel.

Remove the caliper screws then the caliper. If the caliper is not being removed from the vehicle as during brake pad replacement, simply hang the caliper with a piece of wire to take the weight off the brake hose.

**CAUTION: Do not let caliper hangs by the hose and do not stretch or twist the hose.**

If the caliper is being removed for replacement, drain brake system before removing the Banjo fitting and its sealing washers. Remove the caliper from the vehicle.

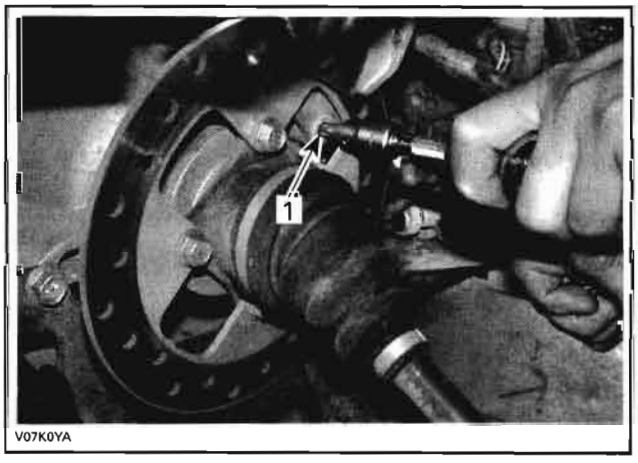


*FRONT CALIPER — OUTLANDER SERIES*
*1. Retaining screw*

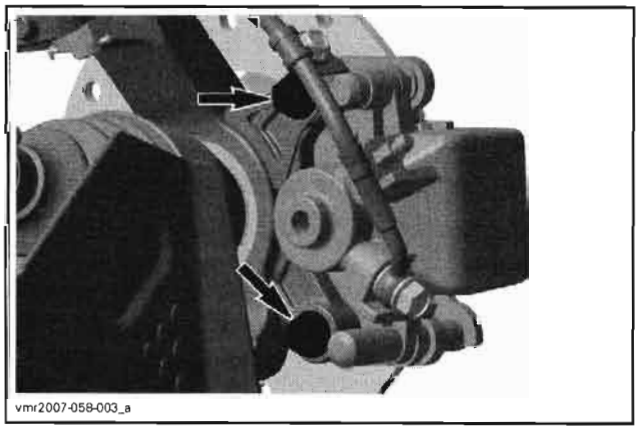


*FRONT CALIPER — RENEGADE MODELS*

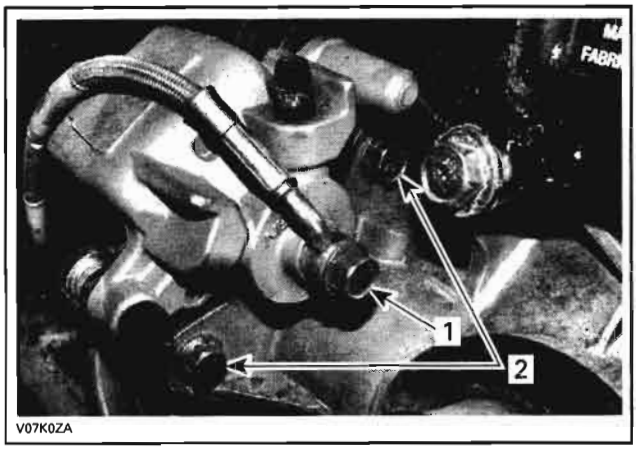


*REAR CALIPER — ALL MODELS*
*1. Remove banjo fitting and sealing washers*
*2. Unscrew bolts*

Catch spilled fluid with a rag. Attach the brake hose in a position to prevent the fluid from flowing out.

Discard all sealing washers.

## Disassembly

Remove brake pads, see further in this section.

Remove slide caliper support and pad spring.

Place rag over piston.

Place caliper body with piston down and apply small squirts of air pressure to the fluid inlet to remove piston.

**⚠ WARNING**

**Do not use high pressure air or bring nozzle too close to inlet.**

Remove piston seal.

**CAUTION: Be careful not to damage piston sliding surface.**

Clean piston grooves, caliper cylinder and piston with clean brake fluid.

Clean slide pins with brake cleaner and a rag.

## Inspection

If boots are deteriorated or hard, replace the caliper.

Check caliper cylinder for scratches, rust or other damages. If so, replace caliper.

Check piston for scratches, rust or other damages. If so, replace caliper.

## Assembly

Coat piston seal with clean brake fluid and install it into piston grooves in caliper.

Coat piston with clean brake fluid and install into cylinder with the closing toward caliper body.

Apply dielectric grease (P/N 293 550 004) into sliding bores and install slide pins.

**NOTE:** Make sure that rubber boots are correctly installed in slide pins grooves.

Install pad spring, caliper bracket and pads.

## Installation

For the installation, reverse the removal procedure, pay attention to the following details.

Use **NEW** sealing washers when installing banjo fitting retaining brake hose to caliper.

Install caliper in its original position.

Torque screws in accordance with the following table.

| MODELS | TORQUE |
|---|---|
| OUTLANDER SERIES | 34 N•m (25 lbf•ft) |
| RENEGADE MODELS | 24 N•m (17 lbf•ft) |

Bleed the brake system.

Check for leaks and make sure the brakes operate normally before driving.

# BRAKE PADS

## Removal

Raise vehicle and support it securely.

Remove appropriate wheel.

Loosen pad pins.

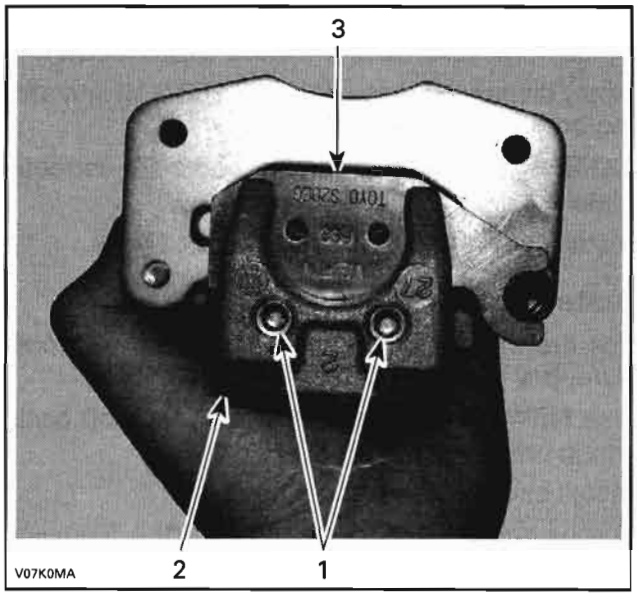


*1. Pad pins*
*2. Caliper*
*3. Pad*

Remove caliper from its support or from knuckle.

Unscrew pad pins then remove pads. Discard pad pins.

**CAUTION: Do not let the caliper hang by the hose and do not stretch or twist the hose.**

## Inspection

**CAUTION: Do not clean brake pads in petroleum based solvent. Use brake system cleaner only. Soiled brake pads must be replaced with new ones.**

Measure brake pad lining thickness.

Brake pads must be replaced when lining is 1 mm (1/32 in) thick or less, or look the hollow places on both sides on the pad lining.

There are four hollow places on one set of brake pads. When the pad wear reaches one of the hollow places, the pad must be changed even if the pad wear does not reach another hollow place.

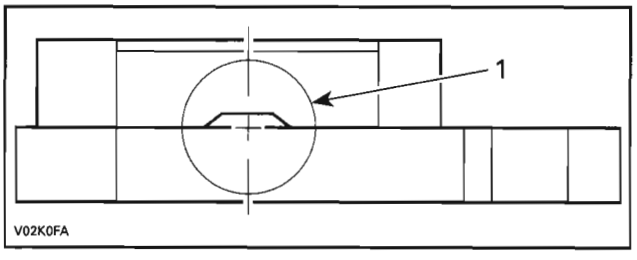


*1. Hollow place*

| | |
|---|---|
| BRAKE PAD MINIMUM THICKNESS | 1 mm (1/32 in) |

**⚠ WARNING**

**Avoid getting oil or grease on brake pads. Contaminated brake pads can affect stopping capacities.**

**CAUTION: Brake pads must always be replaced in pairs.**

## Installation

Clean the visible portion of piston with clean brake fluid.

Push caliper pistons inward before installing brake pads.

**NOTE:** Use a C-clamp or another suitable tool. To avoid damaging the piston, use an old pad to push it into the caliper.

Make sure that pad spring is in position.

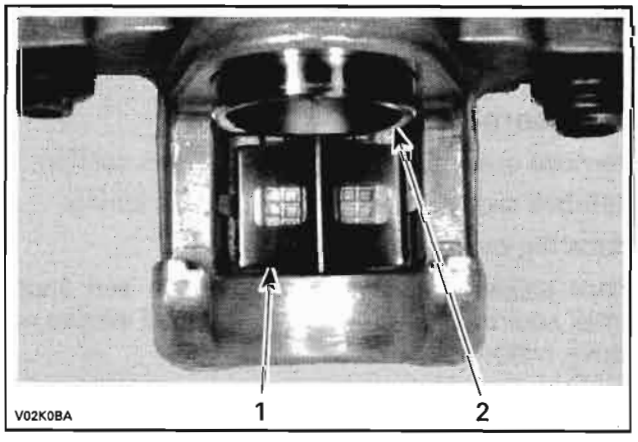


*1. Pad spring*
*2. Piston*

Install new brake pads.

Install **NEW** pad pins by pushing in the pads against pad spring to align pad slots in the pads and caliper body.

Install brake caliper so the disc is positioned between pads.

**NOTE:** Be careful not to damage pads and make sure pads are correctly inserted in their location.

After the job is completed, firmly depress the brake lever a few times to bring the pads in contact with the disc.

Check for leaks and make sure the brakes operate normally before driving. The pads must rest flat on the disk.

# BRAKE DISC

## Inspection

Brake discs can be inspected without removing them from the vehicle.

Raise vehicle and support it securely. Remove wheels and visually inspect disc surfaces for scratches or grooves. Make sure to check both sides of disc.

Measure thickness of the disc.

| DISC MINIMUM THICKNESS | |
|---|---|
| FRONT | 3.5 mm (.138 in) |
| REAR | 4.3 mm (.170 in) |

Replace disc if not within specifications.

**CAUTION: Brake discs should never be machined.**

Turn the disc by hand and check warpage.

| MAXIMUM DISC WARPAGE | |
|---|---|
| FRONT | 0.2 mm (.01 in) |
| REAR | |

## Removal

### Front Brake Disc

***Outlander Series***

Apply parking brake and raise the front of the vehicle.

Remove the appropriate wheel.

Remove wheel hub. Refer to *FRONT DRIVE*.

On **Outlander 650 and 800 series**, remove the shock absorber.

Separate knuckle from lower A-arm.

Remove drive shaft from knuckle.

Attach upper A-arm or strut out of way.

Unscrew brake disc screws.

Keep the Belleville washers.

Release parking brake and remove caliper. Suspend caliper out of the way.

**CAUTION: Do not let the caliper hang by the hose and do not stretch or twist the hose.**

Remove brake disc. Pay attention not to cut the CV boot.

***Renegade Models***

Remove appropriate wheel.

Remove caliper as described previously. Do not disconnect brake hose from caliper.

After removing the caliper, suspend it out of the way.

**CAUTION: Do not let the caliper hang by the hose and do not stretch or twist the hose.**

Remove wheel hub with brake disc. Refer to *FRONT DRIVE*.

Heat up brake disc around screw to break the threadlocker. Remove and discard brake disc screws.

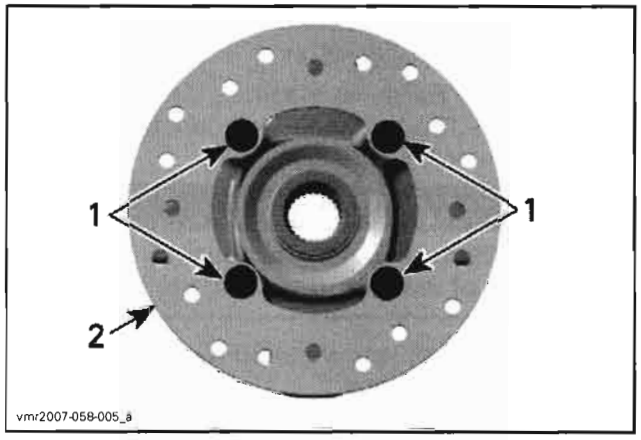


*1. Brake disc screws*
*2. Brake disc*

### Rear Brake Disc

Remove rear wheels.

Remove the caliper and suspend it out of the way.

**CAUTION: Do not let the caliper hang by the hose and do not stretch or twist the hose.**

Unscrew and remove the rear propeller shaft screw from differential.

Remove the differential protector.

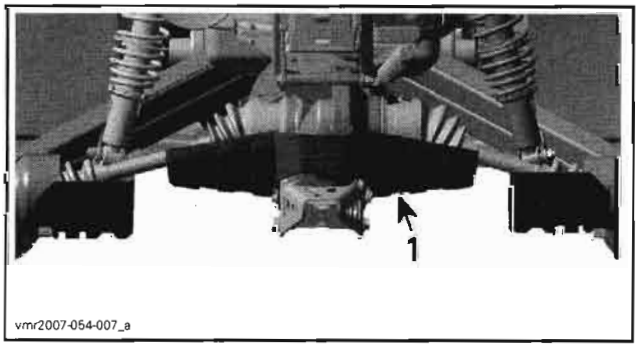


*1. Differential protector*

Remove the differential bolts.

Loosen hitch plate bolts.

Move the differential backward.

Disconnect propeller shaft from differential.

Unscrew brake disc screws. Heat up brake disc around screws to facilitate removal. Discard brake disc screws.

## Installation

### Front Brake Disc

***Renegade Models***

The installation is the reverse of the removal procedure.

***Outlander Series***

The installation is the reverse of removal procedure. However, pay attention to the following details.

Do not forget Belleville washers when installing brake disc screws. Place the concave side of washers towards brake disc.

**⚠ WARNING**

**Never substitute Belleville washer with another type of washer (flat, lock, etc.).**

Tighten brake disc screws to 38 N•m (28 lbf•ft) in a criss-cross sequence.

### Rear Brake Disc

***All Models***

Install brake disc on propeller shaft and tighten NEW screws to 34 N•m (25 lbf•ft) in a criss-cross sequence.

# BRAKE PEDAL

## Removal

Remove RH footwell.

Detach the return spring from the brake pedal.

Open the master cylinder push rod hook.

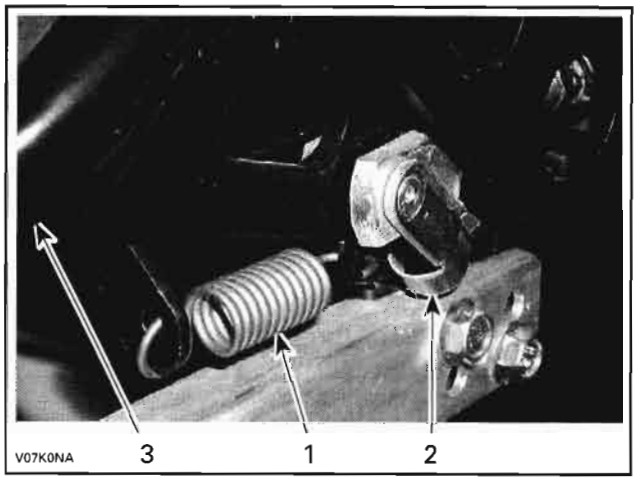


1. *Return spring*
2. *Push rod hook*
3. *Brake pedal*

Remove bolt retaining the brake pedal to frame.

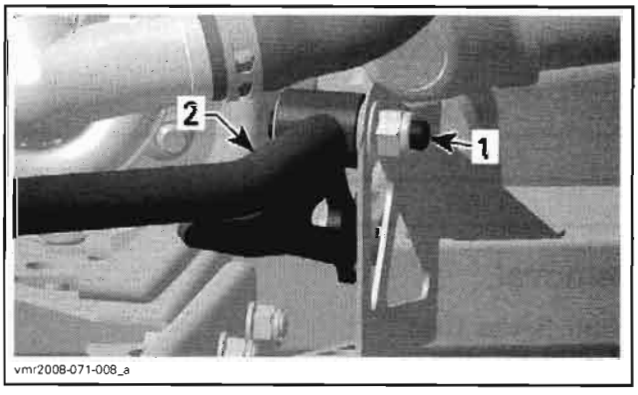


1. *Brake pedal bolt*
2. *Brake pedal*

## Inspection

Check brake pedal for cracks or distortion.

Check if O-rings are brittle, hard or otherwise damaged.

Replace any defective parts.

## Installation

For installation, reverse the removal procedure.

Apply XP-S synthetic grease (P/N 293 550 010) on both O-rings and into brake pedal.

# BRAKE HOSES

## Inspection

Brake hoses should be inspected frequently for leaks and damages.

Check if the hoses are crushed or damaged. Any deformation can restrict the proper flow of fluid and cause braking problems.

Check hoses for cracking or scrapes. This damage can cause hose failure under pressure.

When hoses are removed or disconnected, cleanliness must be observed. Clean all joints and connections before disassembly. New hoses should be cleaned with brake fluid before installation to remove any contamination.

Replace any defective parts.

## Removal

**NOTE:** Before removing any hoses, drain brake system.

Remove all necessary parts to reach the hoses.

Thoroughly clean the area around the joints that will be disconnected.

Place a drain pan under the joint that will be disconnected.

Disconnect any retaining clips or brackets holding the hose and remove the defective part(s).

## Installation

Install the new hose.

Make sure the piece will not rub against any other part.

When there is a banjo fitting securing the hose to the caliper or to the master cylinder, always replace the sealing washers with new ones.

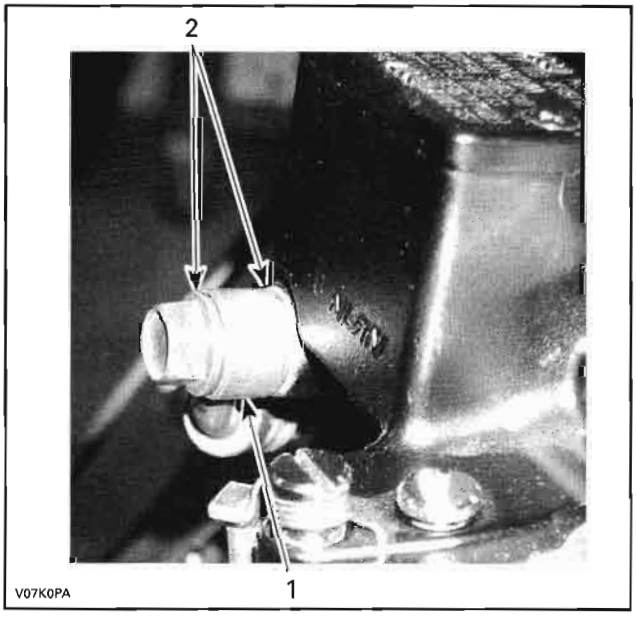


*FRONT MASTER CYLINDER SHOWN*
*1. Banjo fitting*
*2. Sealing washers*

Install any retaining clips or brackets.

Refill and bleed the system.

# BODY

## SERVICE TOOLS

| Description | Part Number | Page |
|---|---|---|
| pliers Oetiker 1099 | 295 000 070 | 393 |

# OUTLANDER SERIES

***Body Parts (Front View)***

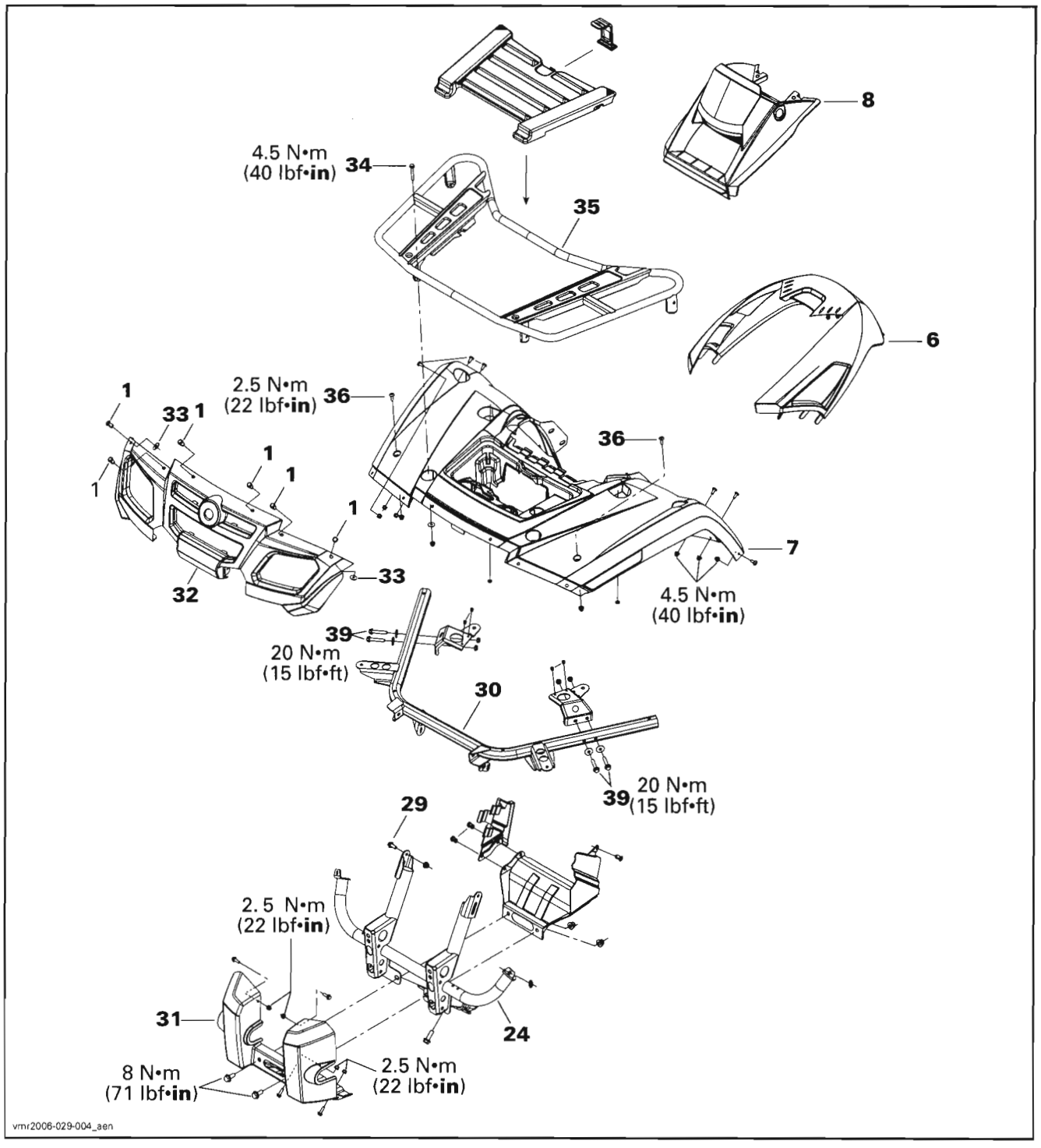

### *Body Parts (Rear View)*

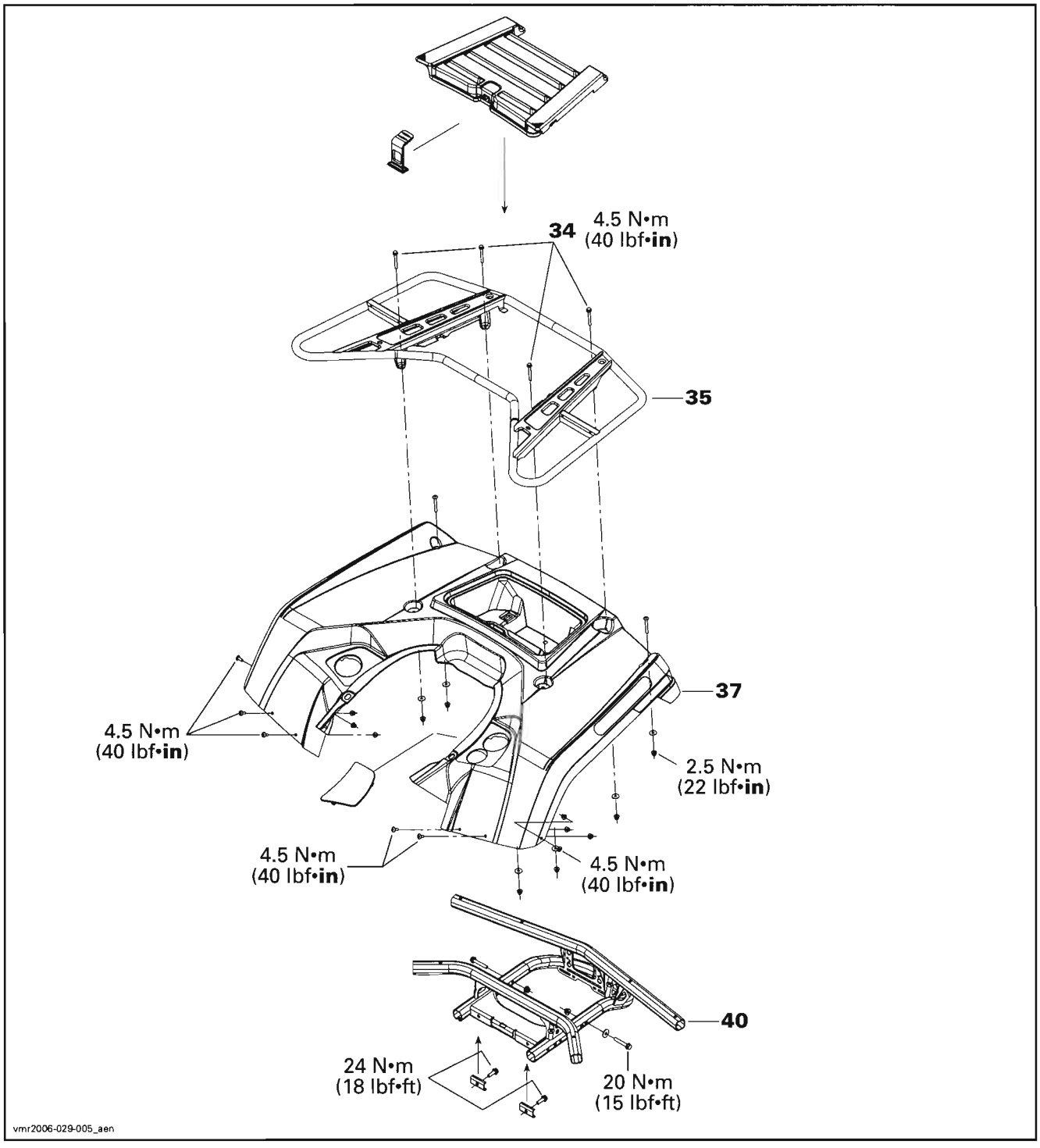

### *Body Parts (Side View)*

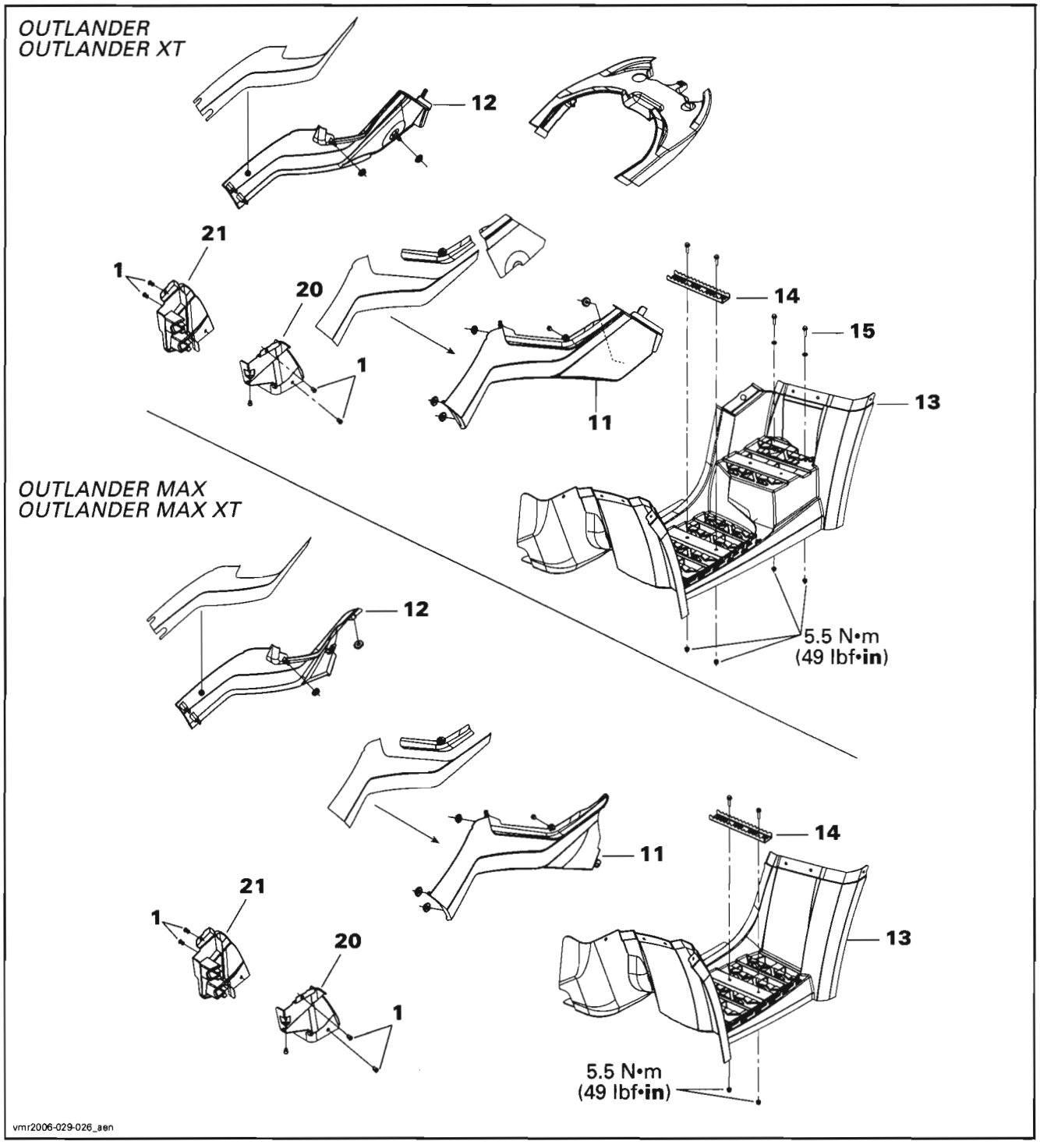

***Seat***

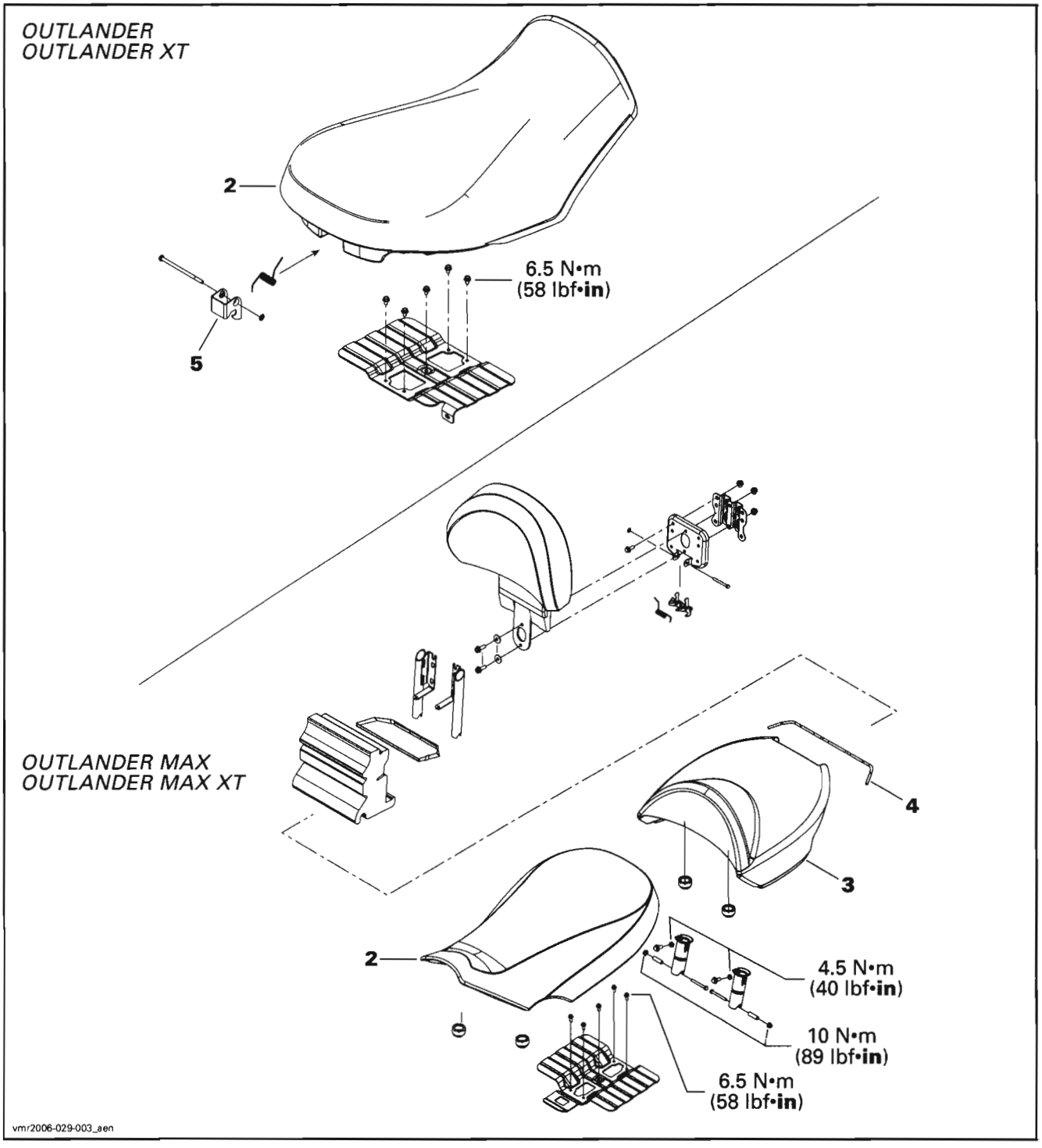
OUTLANDER
OUTLANDER XT
2
6.5 N•m
(58 lbf•in)
5
OUTLANDER MAX
OUTLANDER MAX XT
4
3
2
4.5 N•m
(40 lbf•in)
10 N•m
(89 lbf•in)
6.5 N•m
(58 lbf•in)
vmr2006-029-003_aen

### *XT Package*

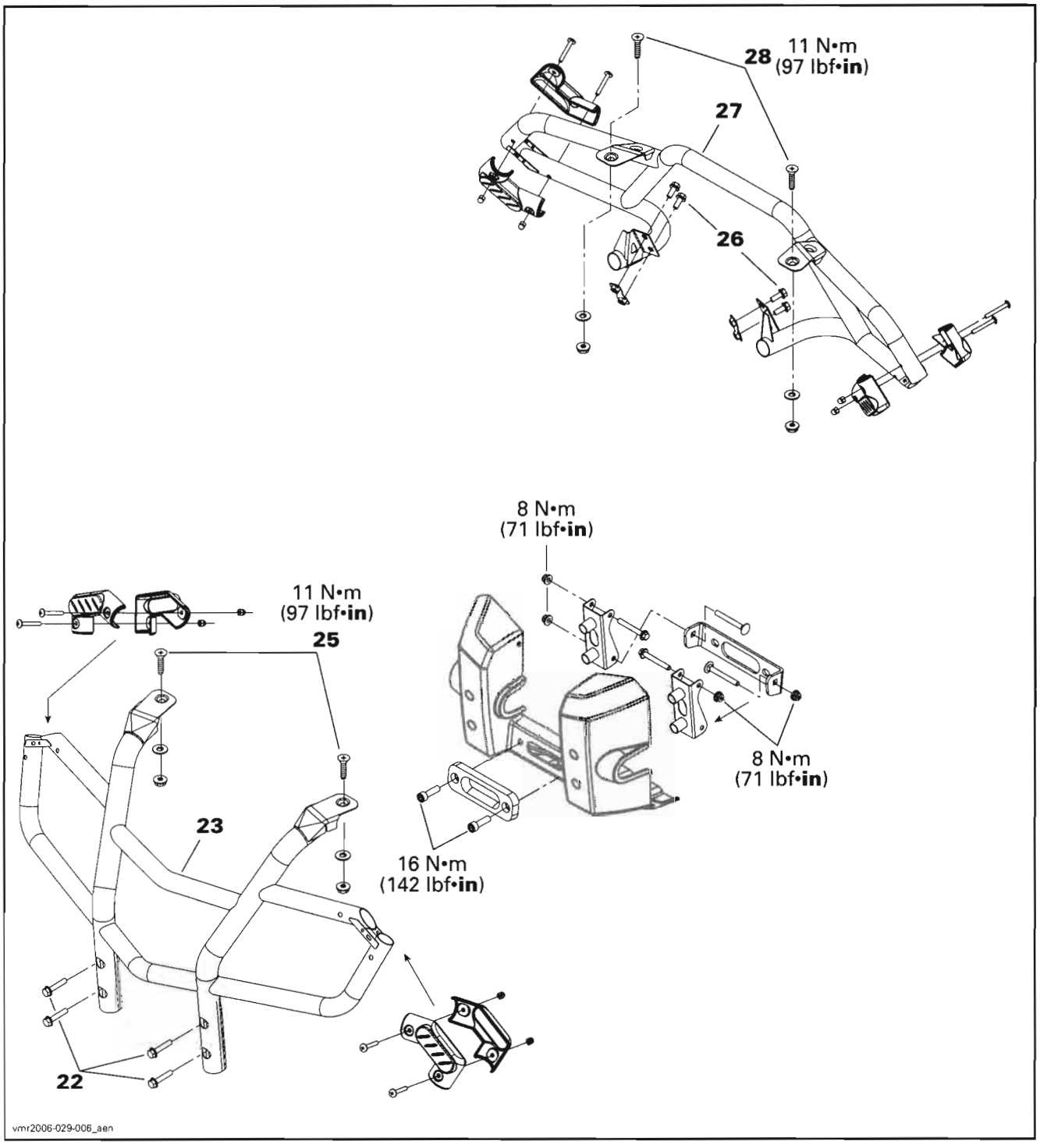
28
11 N•m
(97 lbf•in)
27
26
8 N•m
(71 lbf•in)
11 N•m
(97 lbf•in)
25
8 N•m
(71 lbf•in)
23
16 N•m
(142 lbf•in)
22
vmr2006-029-006_aen

# RENEGADE MODELS

***Body Parts (Front View)***

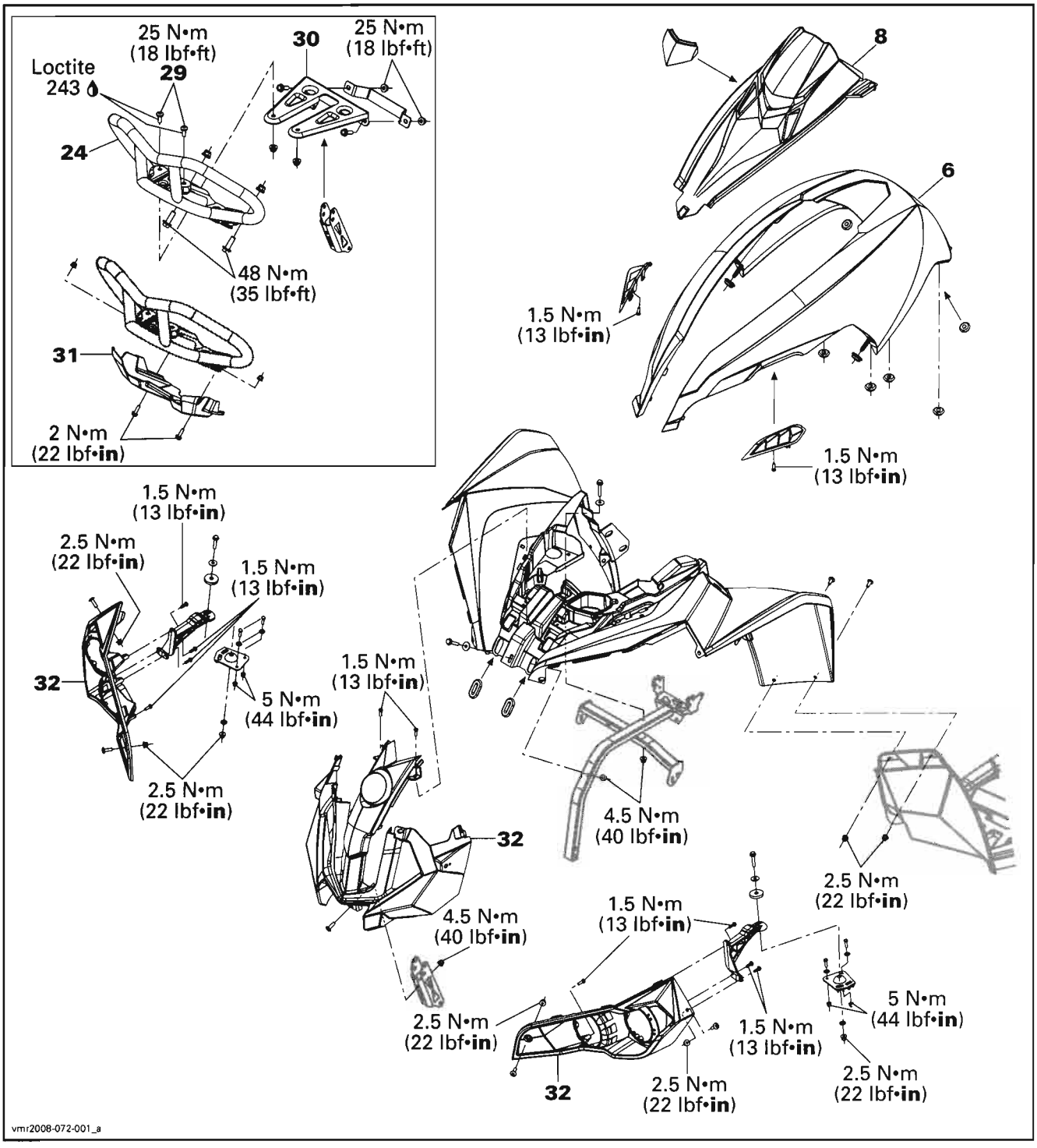

### *Body Parts (Rear View)*

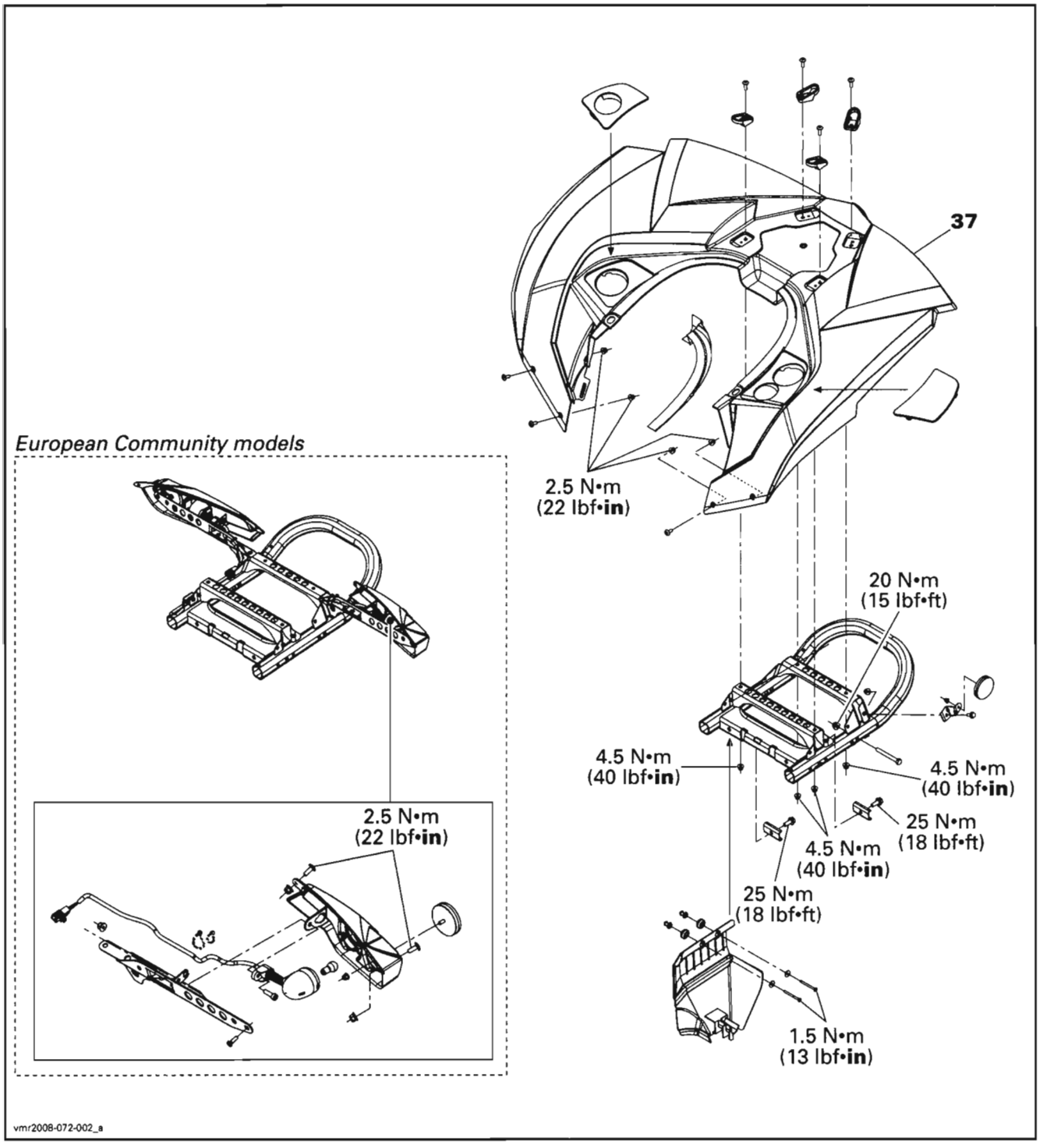

### *Body Parts (Side View)*

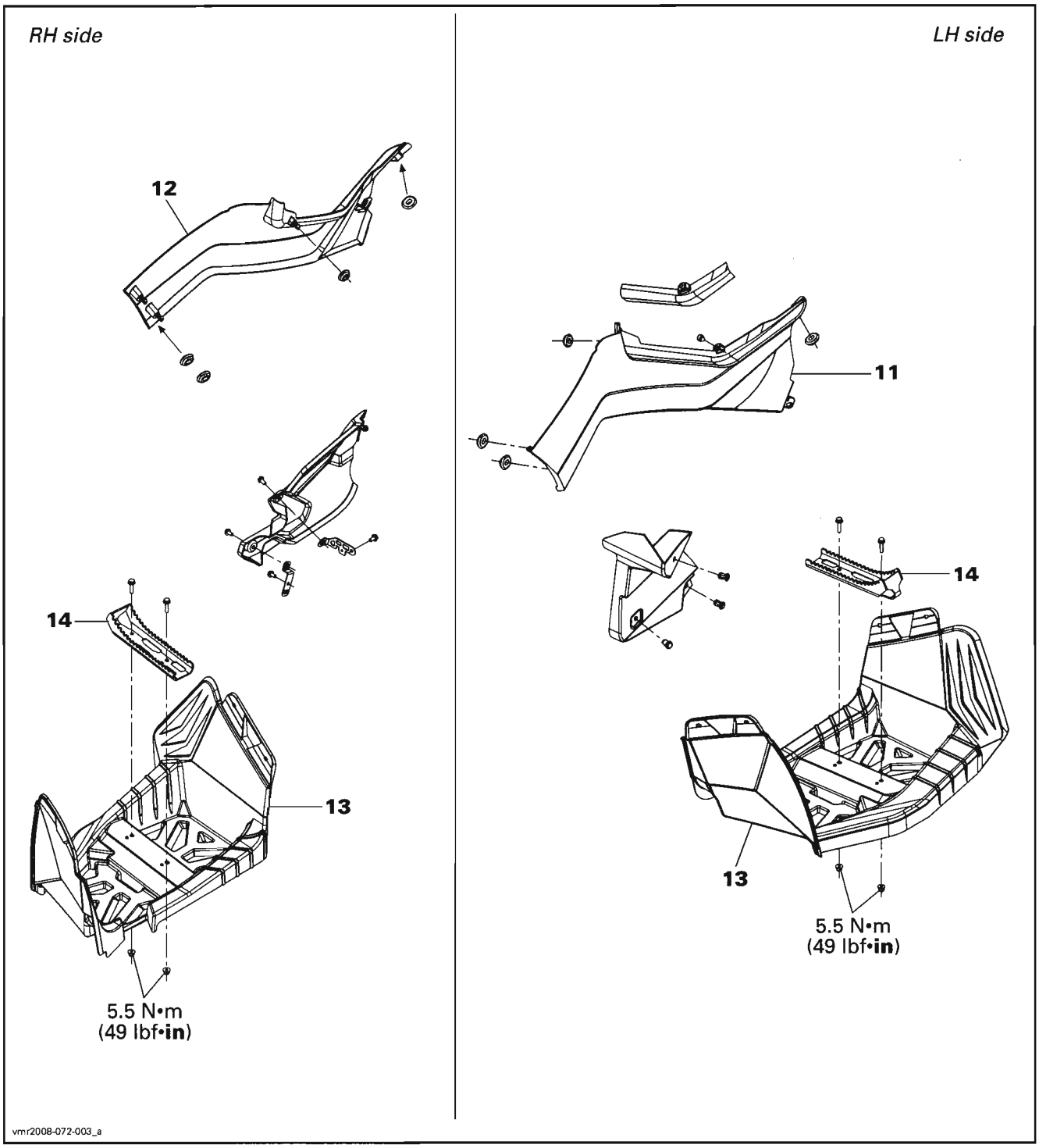

***Seat***

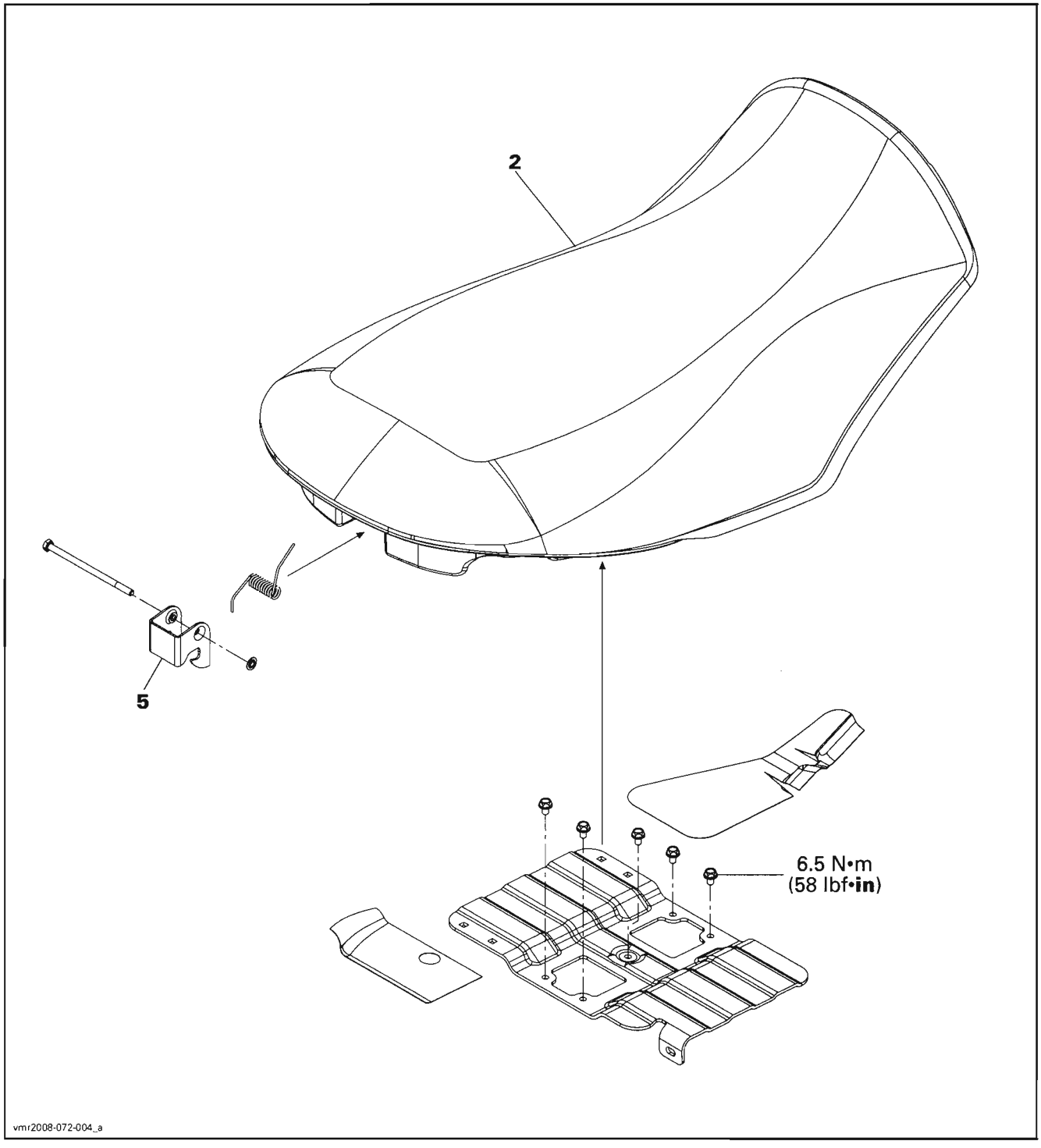

# GENERAL

During assembly/installation, use the torque values and service products as in the exploded views.

Clean threads before applying a threadlocker. Refer to *SELF-LOCKING FASTENERS* and *LOCTITE APPLICATION* at the beginning of this manual for complete procedure.

**⚠ WARNING**

**Torque wrench tightening specifications must strictly be adhered to.**
**Locking devices (e.g.: locking tabs, elastic stop nuts, cotter pins, etc.) must be replaced with new ones.**

## Vehicle Care

Clean the vehicle thoroughly, removing all dirt and grease accumulation.

To clean use a soft clean cloth and either soapy water or isopropyl alcohol.

To remove grease, oil or glue use isopropyl alcohol.

**CAUTION: Do not apply isopropyl alcohol or acetone directly on decals.**

The following products must not be used to clean or wax any of the plastic components used on the vehicles:

- gasoline
- brake fluid
- kerosene
- diesel fuel
- lighter fluid
- varsol
- naphtha
- acetone
- strong detergents
- abrasive cleaners
- waxes containing an abrasive or a cleaning agent in their formula.

## Plastic Rivet

Plastic rivets **no. 1** are used in the riveting of the various body parts. Plastic rivets can be removed carefully with pliers Oetiker 1099 (P/N 295 000 070).

**NOTE:** Reuse the plastic rivets.

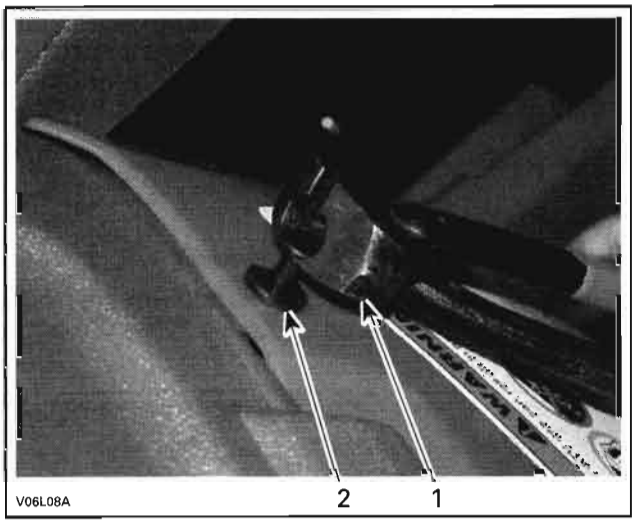


*TYPICAL*
*1. Pliers*
*2. Plastic rivet*

# PROCEDURES

## DECALS

### Decal Removal

Using a heat gun warm up one end of decal for a few seconds until decal can roll off when rubbing with your finger.

Pull decal slowly and when necessary apply more heat to ease removal on the area that has to be peeled off.

If decal tears while pulling off, it has to be heated for a few seconds longer. If decal tends to stretch while pulling off, stop heating and wait a few seconds to let it cool, then peel it off.

### Decal Installation

Using isopropyl alcohol, clean the surface and dry thoroughly.

Apply liquid soap to new decal and carefully position it. Using a sponge or a squeegee, remove the air bubbles and surplus water working from the center toward the edges. Allow to air dry.

**CAUTION: Do not apply isopropyl alcohol or solvent directly on decals. Use these products in a well ventilated area.**

## SEAT

### Seat Cleaning

It is recommended to clean seat(s) with a solution of warm soapy water, using a soft clean cloth.

**CAUTION:** Avoid use of harsh detergents such as strong soaps, degreasing solvents, abrasive cleaners, paint thinners, etc. that may cause damage to the seat cover.

## Seat Removal

### Passenger's Seat

***Outlander MAX/MAX XT Models***

Pull one of the passenger's seat latch levers **no. 4**. Those levers are located underneath the RH or LH rear end of seat.

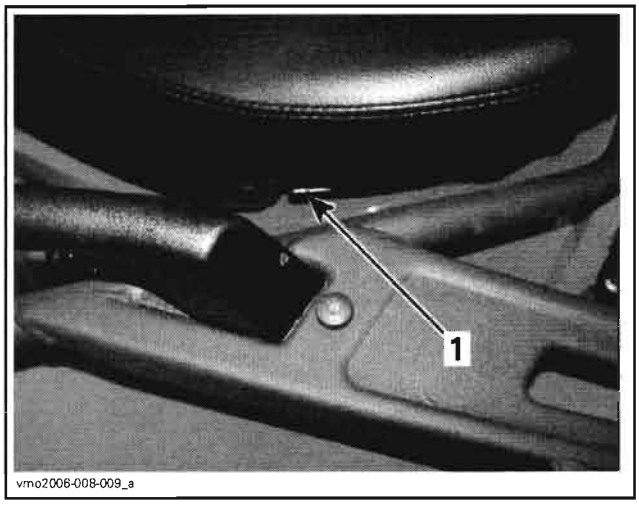


*TYPICAL — LH SIDE*
*1. Seat latch lever*

Gently lift the rear of seat **no. 3**.

Pull seat rearwards.

Continue lifting movement until you can release the front retaining device then completely remove passenger's seat.

### Operator's Seat

***Outlander MAX/MAX XT Models***

Remove passenger's seat **no. 3** as mentioned above.

***All Models***

To remove seat **no. 2**, move latch lever **no. 5** upward while gently lifting rear of seat.

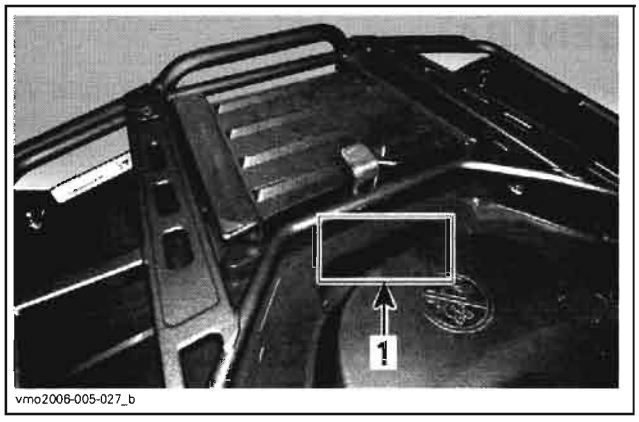


*OUTLANDER/OUTLANDER XT*
*1. Seat latch*

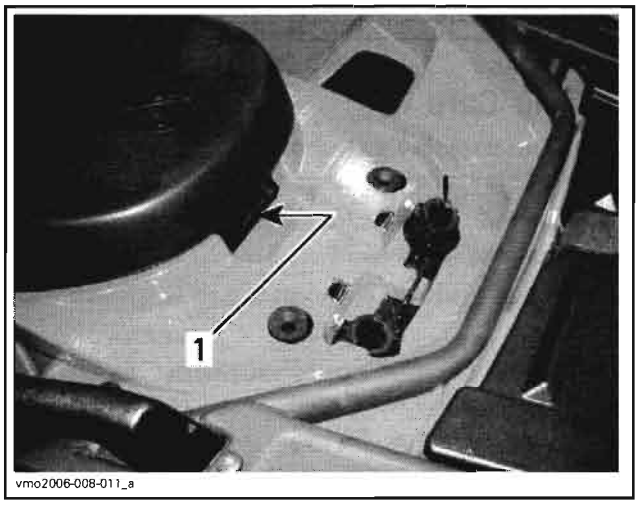


*OUTLANDER MAX/OUTLANDER MAX XT*
*1. Seat latch*

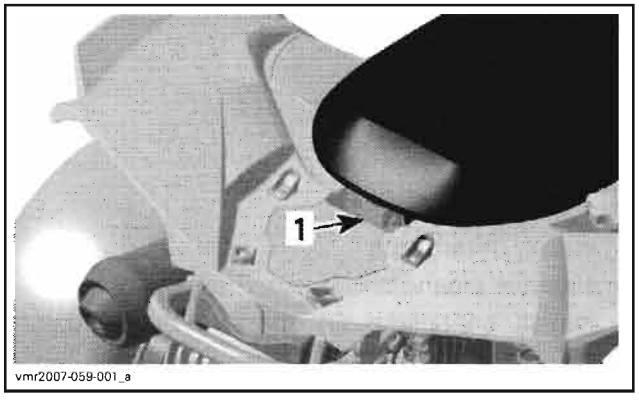


*RENEGADE MODELS*
*1. Seat latch*

Pull seat rearward. Continue lifting movement until you can release the front retaining device then completely remove seat.

## Seat Installation

Insert front tabs of seat into frame hooks. When seat rests in its position, firmly push seat down to latch.

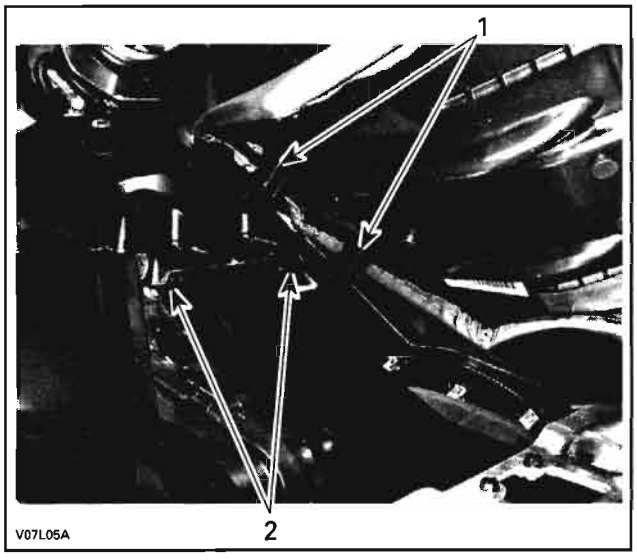


*1. Insert these tabs in hooks*
*2. Hooks*

**NOTE:** A distinctive snap will be felt. Double check that the seat is secure by giving it a tug to confirm proper latching.

**⚠ WARNING**

**Make sure seat is securely latched before riding.**

## Seat Cover Replacement

Remove the old seat cover. Check the foam and replace if necessary.

Install staples with an electric tacker such as Arrow tacker no. ETN-50 or with a manual tacker such as Arrow tacker no. T-50.

**NOTE:** For an easier installation, it's highly recommended to use an electric tacker.

Ensure that the seat rest firmly against a hard surface such as a piece of wood. This is done to get the staples completely pushed in place.

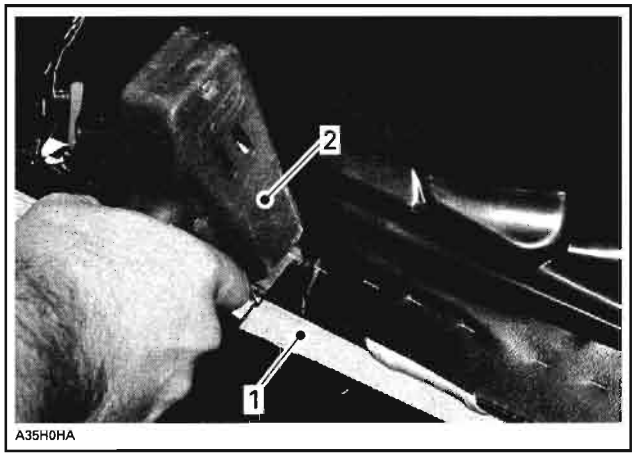


*TYPICAL*
*1. Piece of wood*
*2. ETN-50 (electric)*

After cover installation cut all around the excess of material.

# CENTRAL PANEL

## Central Panel Removal

***Outlander Series***

Remove seat(s).

Come off the plastic studs from the grommets.

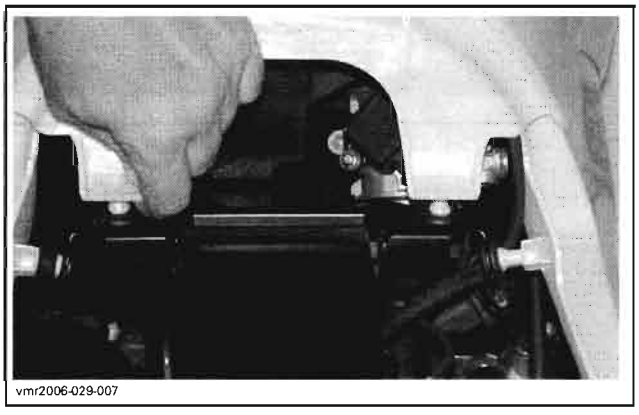


Pull central panel **no. 6** to separate its tabs from front fender **no. 7**.

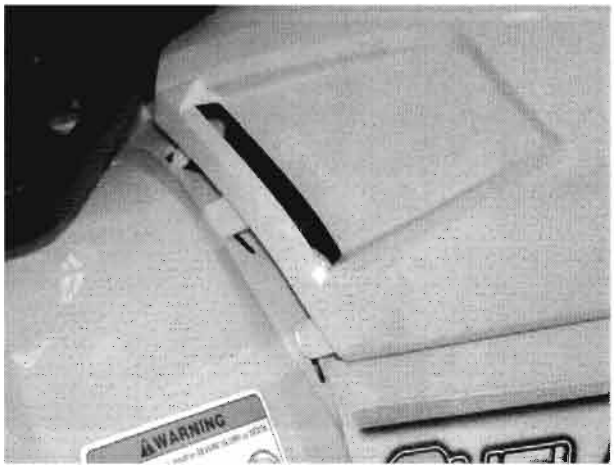

vmr2006-029-008

***Renegade Models***

Remove seat.

Lift the front part of the central panel **no. 6**.

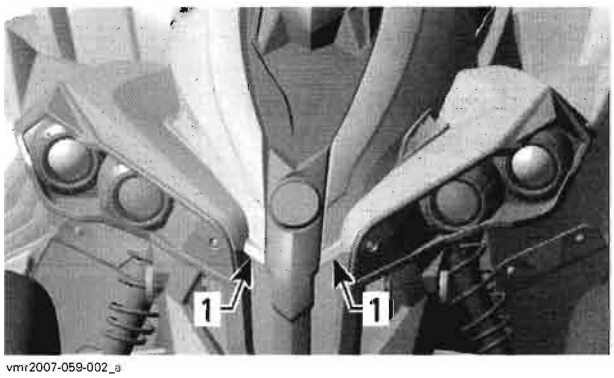

vmr2007-059-002_a

*1. Lift here*

Come off the plastic studs from the grommets.

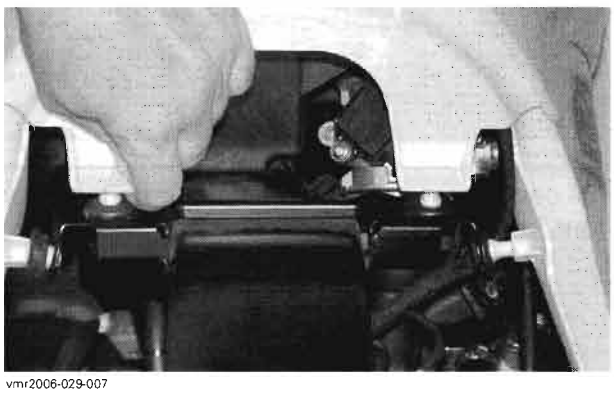
vmr2006-029-007

Remove central panel.

## Central Panel Installation

The installation is the reverse of the removal procedure.

# DASH BOARD

## Dash Board Removal

Remove central panel.

Lift up dash board **no. 8**.

Disconnect speedometer, 12-volt power outlet and ignition switch (**Outlander Series**).

## Dash Board Installation

For installation, reverse the removal procedure.

# SIDE PANEL

## Side Panel Removal

NOTE: Use the same procedure for the LH and RH side panels **no. 11** and **no. 12**.

Remove seat(s) and central panel **no. 6**.

Come off the plastic studs from the grommets.

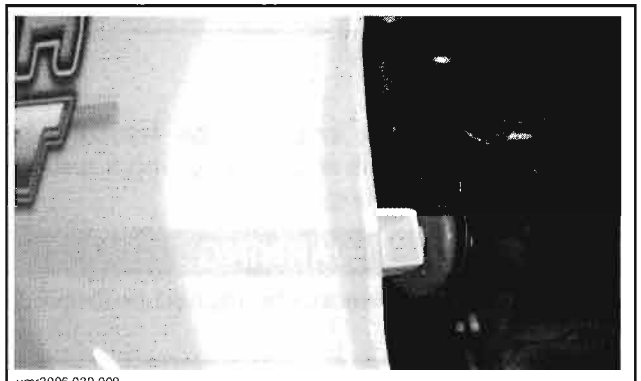
vmr2006-029-009

Unhook the side panel from footrest.

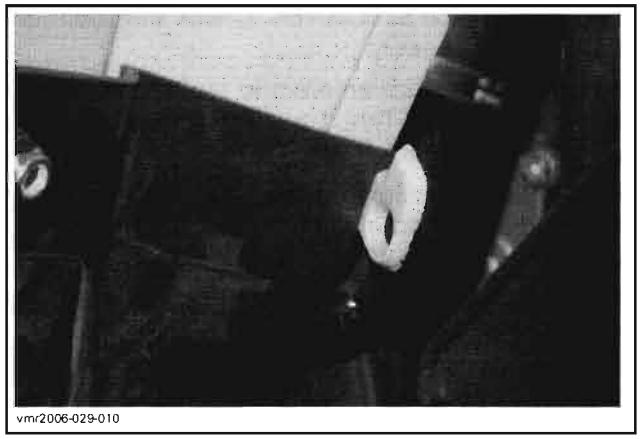
vmr2006-029-010

Remove side panel from vehicle.

## Side Panel Installation

The installation is the reverse of removal procedure.

# FOOTREST

## Footrest Removal

### *Outlander Series*

Remove footpeg(s) **no. 14** and all bolts that attach the footrest **no. 13** to fenders.

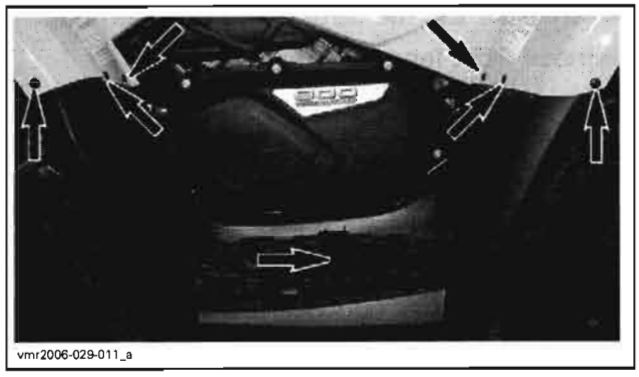
vmr2006-029-011_a

On **MAX** and **MAX XT models**, remove the footrest support retaining screws **no. 15**.

### *Renegade Models*

Remove the footpeg and all bolts securing footrest to front and rear fender.

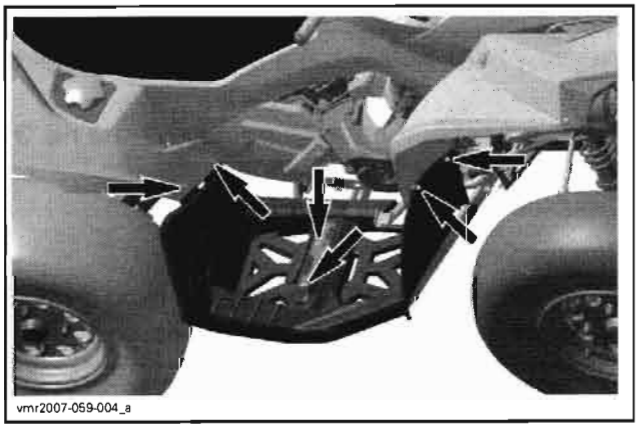
vmr2007-059-004_a

## Footrest Installation

The installation is the reverse of removal procedure.

# INNER FENDER

## Inner Fender Removal

### *Outlander Series*

Remove the plastic rivets that attach inner fenders **no. 20** and **no. 21** to footrest and frame.

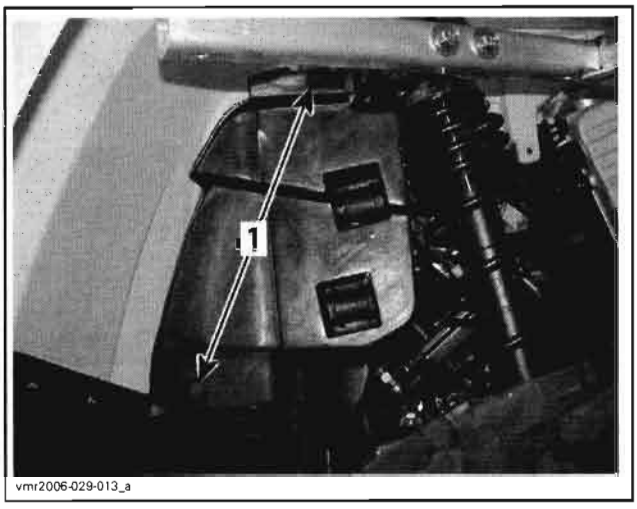

vmr2006-029-013_a

*INNER FENDER ON RH SIDE*
*1. Plastic rivets*

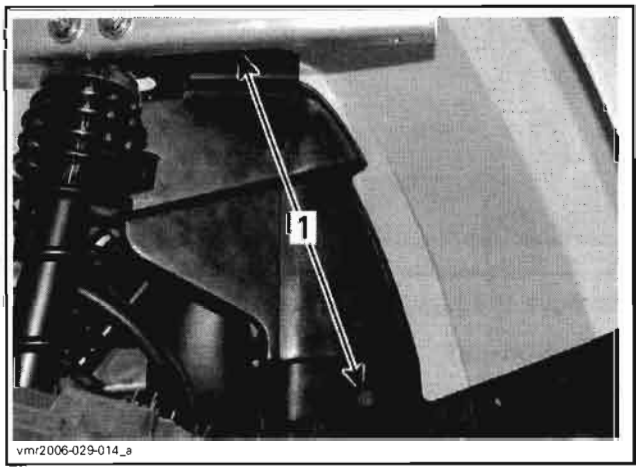

vmr2006-029-014_a

*INNER FENDER ON LH SIDE*
*1. Plastic rivets*

On the RH side, detach coolant hoses from inner fender **no. 21**.

## Inner Fender Installation

The installation is the reverse of removal procedure.

# HEAVY DUTY BUMPER

### *Outlander XT Package*

## Bumper Removal

### Front Bumper

Remove bolts **no. 22** retaining the heavy duty bumper **no. 23** to the front bumper **no. 24**.

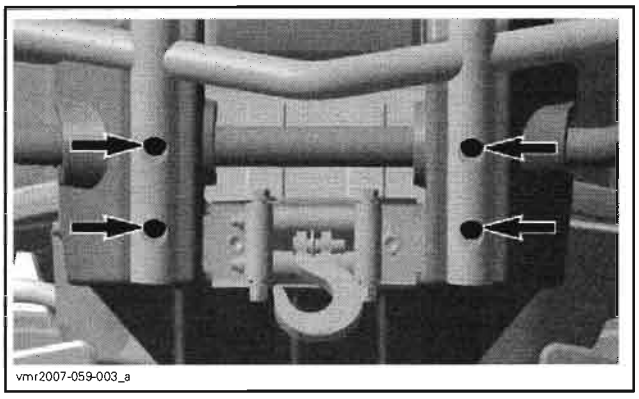
vmr2007-059-003_a

Remove screws **no. 25** that attach the heavy duty bumper to the rack.

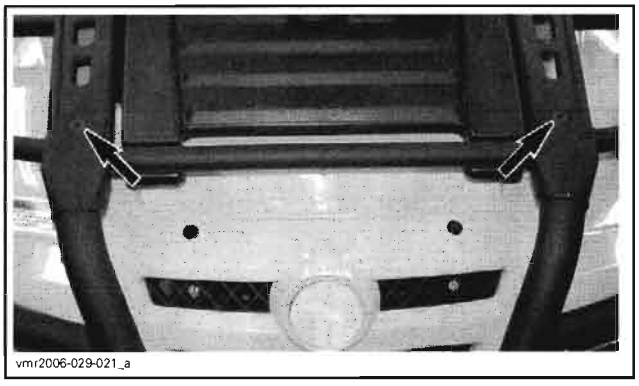
vmr2006-029-021_a

Remove the heavy duty bumper.

### Rear Bumper

Unscrew bolts **no. 26** retaining the rear heavy duty bumper **no. 27** to the rear bumper.

Remove screws **no. 28** that attach the heavy duty bumper to the rack.

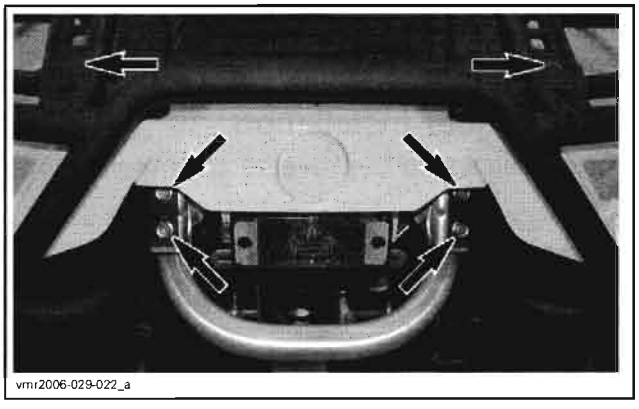
vmr2006-029-022_a

## Bumper Installation

The installation is the reverse of the removal procedure.

# FRONT BUMPER/FRONT SKID PLATE/FRONT FASCIA

## Removal

### *Outlander Series*

NOTE: On **XT models**, remove hook at the end of winch cable and the front heavy duty bumper.

Remove front fender.

Unplug headlamps connectors.

Unscrew bolts **no. 29** that attach front bumper **no. 24** to fender support **no. 30**.

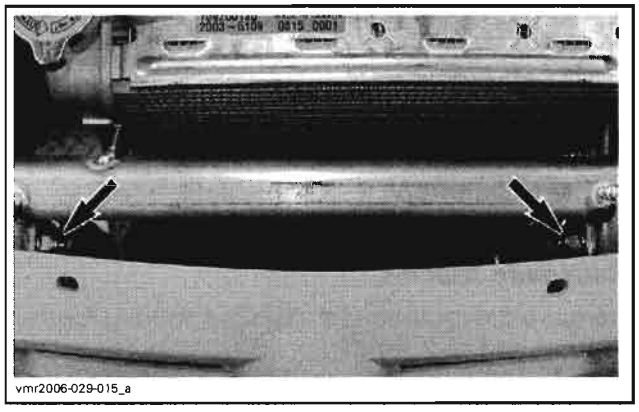
vmr2006-029-015_a

Unscrew bolts retaining the bottom of bumper to frame.

Remove front bumper with front skid plate **no. 31** and front fascia **no. 32** assembly.

Disassemble all parts if necessary.

### *Renegade Models*

Unscrew bolts **no. 29** securing the front bumper **no. 24** to the bumper bracket **no. 30**.

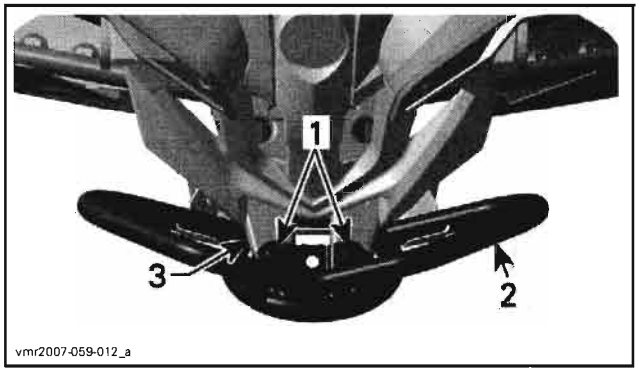

vmr2007-059-012_a

1. *Upper bumper bolts*
2. *Front bumper*
3. *Bumper bracket*

Unscrew bolts retaining the bottom of front bumper to frame.

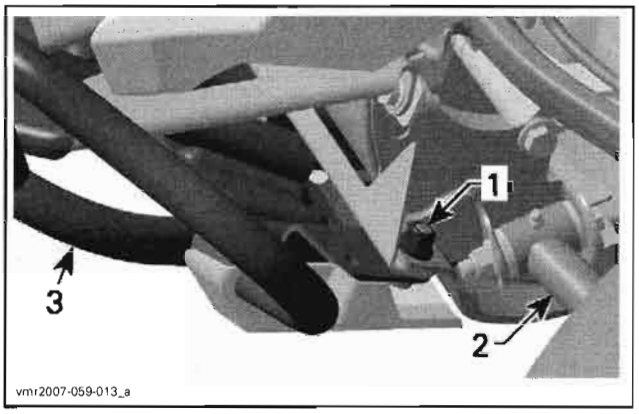


1. *Lower bumper bolt*
2. *LH lower suspension arm*
3. *Front bumper*

Remove front bumper.

## Installation

The installation is the reverse of removal procedure.

### *Outlander Series*

Install a washer **no. 33** under each plastic rivet located at the both ends of fascia.

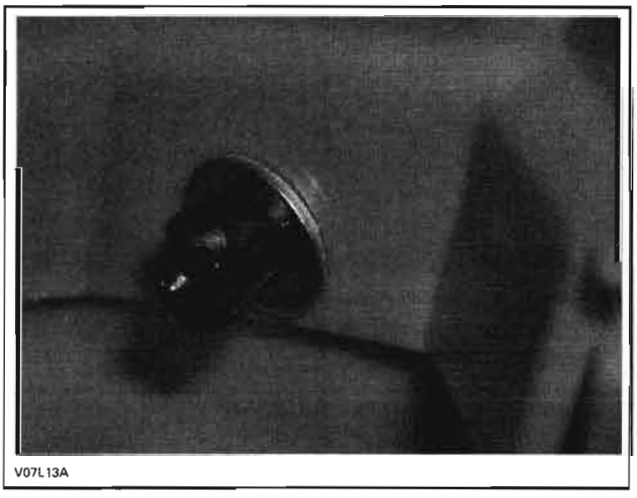


# LUGGAGE RACK

### *Outlander Series*

NOTE: Use the same procedure for front or rear luggage racks.

## Rack Removal

NOTE: On **XT models**, heavy duty bumpers (front and rear) must be removed to allow luggage racks removal.

Remove storage or service compartment cover.

Unscrew the four (4) bolts **no. 34** retaining the rack **no. 35**.

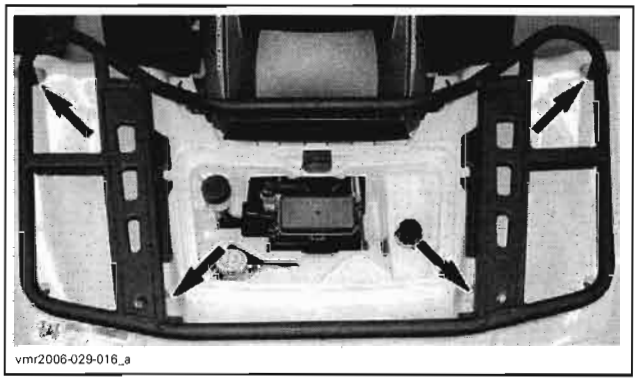


Remove luggage rack.

## Rack Installation

The installation is the reverse of removal procedure.

# FENDER

## Fender Removal

### Front Fender

### *Outlander Series*

Remove both side panels **no. 11** and **no. 12**.

Remove bolts that attach both footrests to the fender.

Remove plastic rivets retaining front fender **no. 7** to front fascia.

Remove luggage rack.

Unscrew and remove fender bolts **no. 36**.

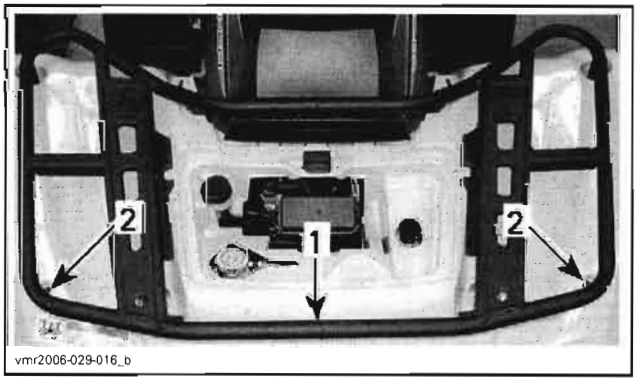


1. *Luggage rack*
2. *Fender bolts*

Unscrew the brake fluid reservoir bolt.

V07L0UA

Remove the coolant reservoir support bolt.

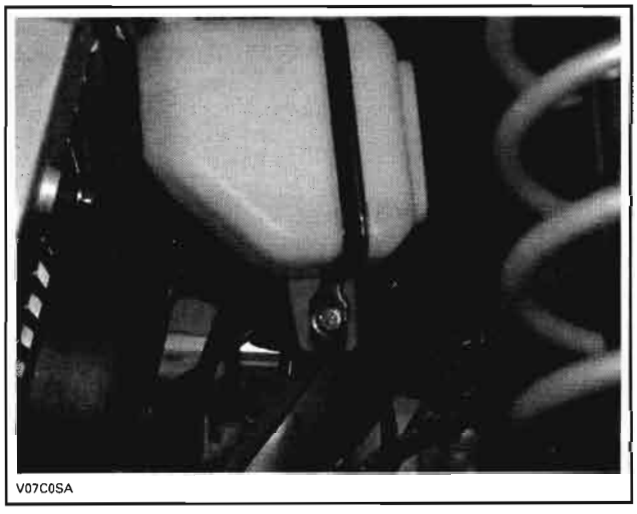
V07C0SA

Remove both inner fenders.

Detach dash board **no. 8** from fender.

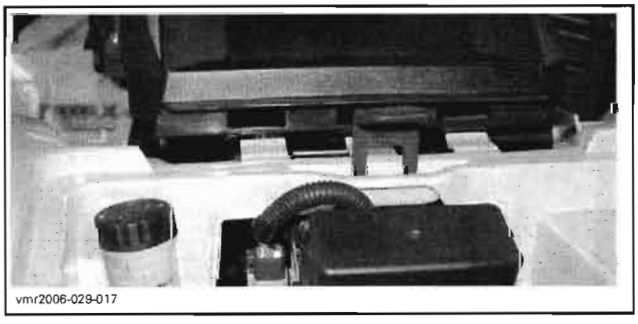
vmr2006-029-017

Remove push nuts retaining fender to frame.

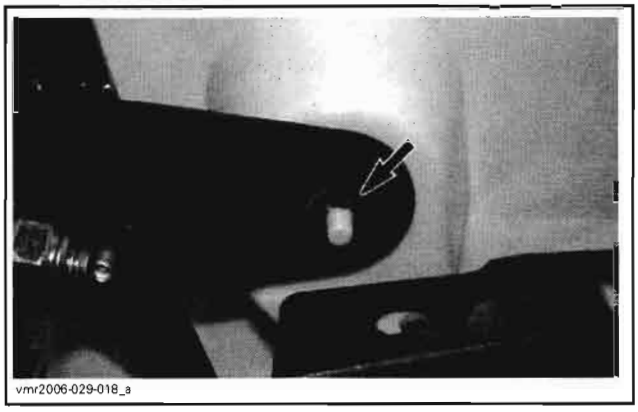
vmr2006-029-018_a

Lift up fender and place it in a safe place to avoid scratches.

***Renegade Models***

Remove central panel, dash board and both side panels.

Remove the screw at the bottom of the front plastic grid.

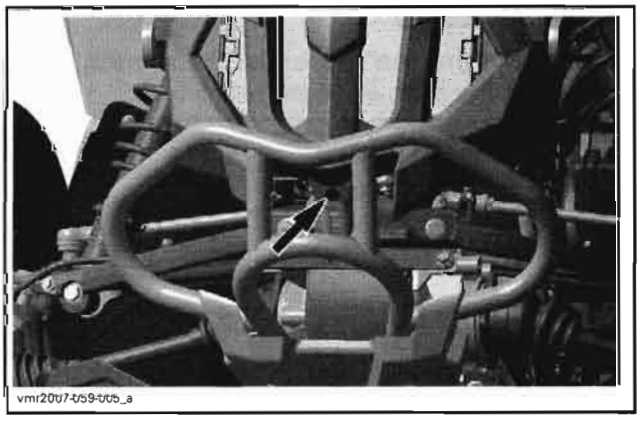
vmr2007-059-005_a

Remove the screw located between radiator cap and coolant tank.

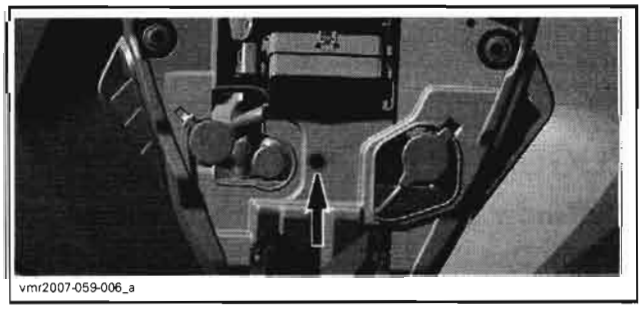
vmr2007-059-006_a

Remove screws attaching front fender to both footrests.

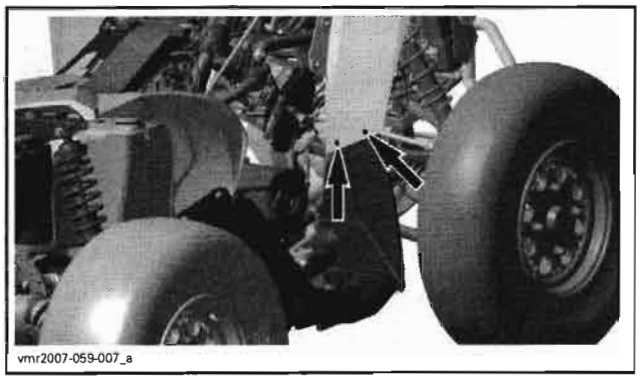
vmr2007-059-007_a

Unplug all headlamps.

Remove fender and store it safely to avoid scratches.

### Rear Fender

#### *Outlander Series*

Remove seat(s).

Remove both side panels.

Remove luggage rack **no. 35**.

Remove all screws retaining the footrests to rear fender **no. 37**.

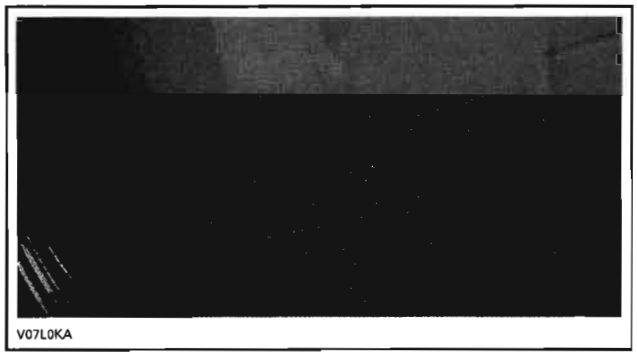
V07L0KA

Unscrew the fuel tank cap.

Lift and remove fender. Place it in a place to avoid scratches.

Reinstall the fuel tank cap.

#### *Renegade Models*

Remove seat and both side panels.

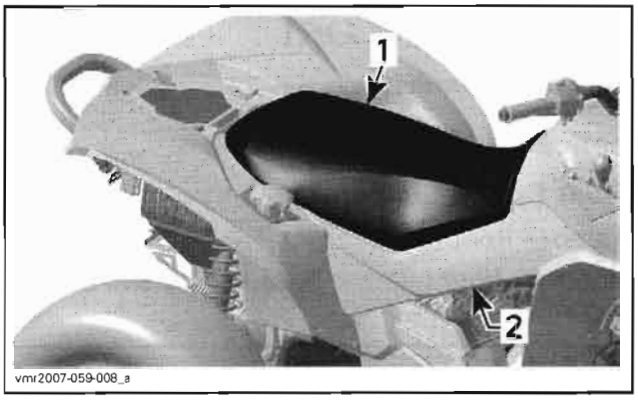

vmr2007-059-008_a

1. *Seat*
2. *RH side panel*

Remove screws attaching the bottom of rear fender **no. 37** to both footrests.

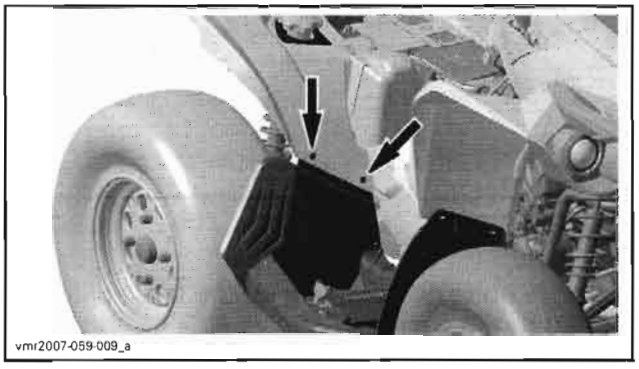
vmr2007-059-009_a

Remove anchorage hooks on the top of rear fender.

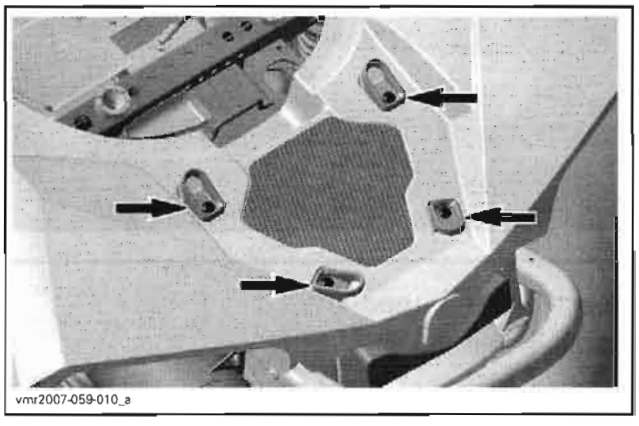
vmr2007-059-010_a

Remove fuel tank cap.

Lift and remove fender. Store it safely to avoid scratches.

Reinstall the fuel tank cap.

## Fender Installation

The installation is the reverse of removal procedure.

# FENDER SUPPORT

***Outlander Series***

## Fender Support Removal

### Front Fender Support

Remove front fender.

Unscrew front bumper bolts **no. 29** and radiator mounting bolts.

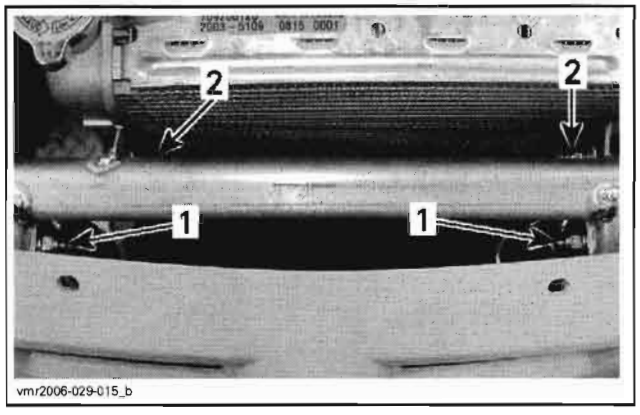

vmr2006-029-015_b

1. *Radiator bolts*
2. *Bumper bolts*

Remove bolts **no. 39** retaining the fender support **no. 30** to the frame.

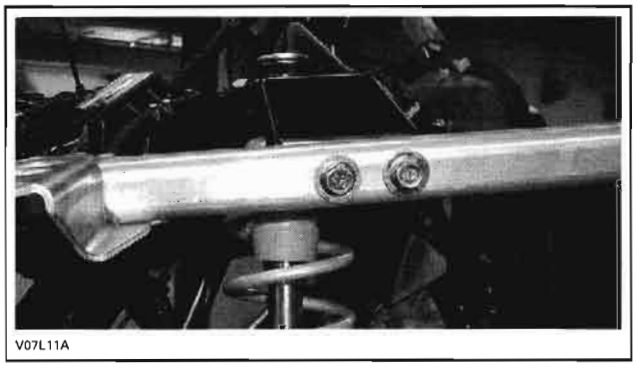
V07L11A

### Rear Fender Support

Remove rear fender.

Remove bolts that attach fender support **no. 40** to frame.

Unscrew the exhaust support bolt.

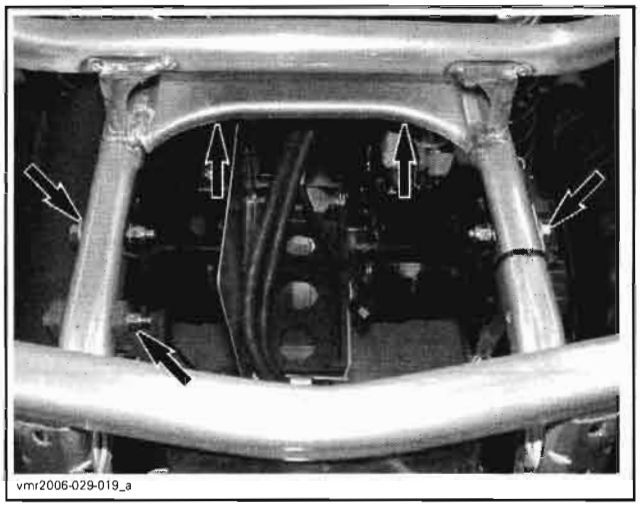
vmr2006-029-019_a

## Fender Support Installation

The installation is the reverse of removal procedure.

# FRAME

***Outlander 500/650/800 Series and Renegade Models***

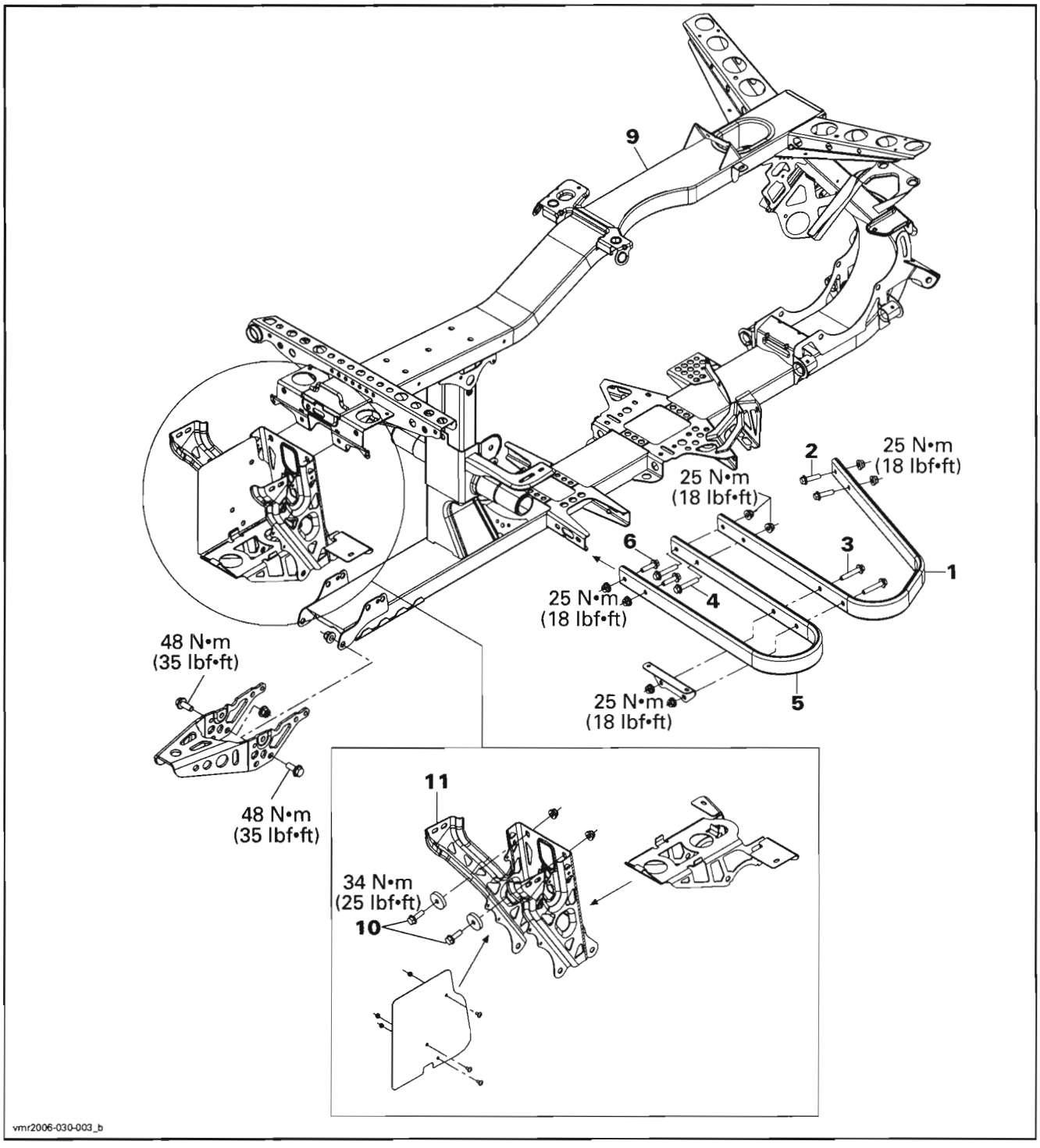

### *Outlander MAX 500/650/800 Series*

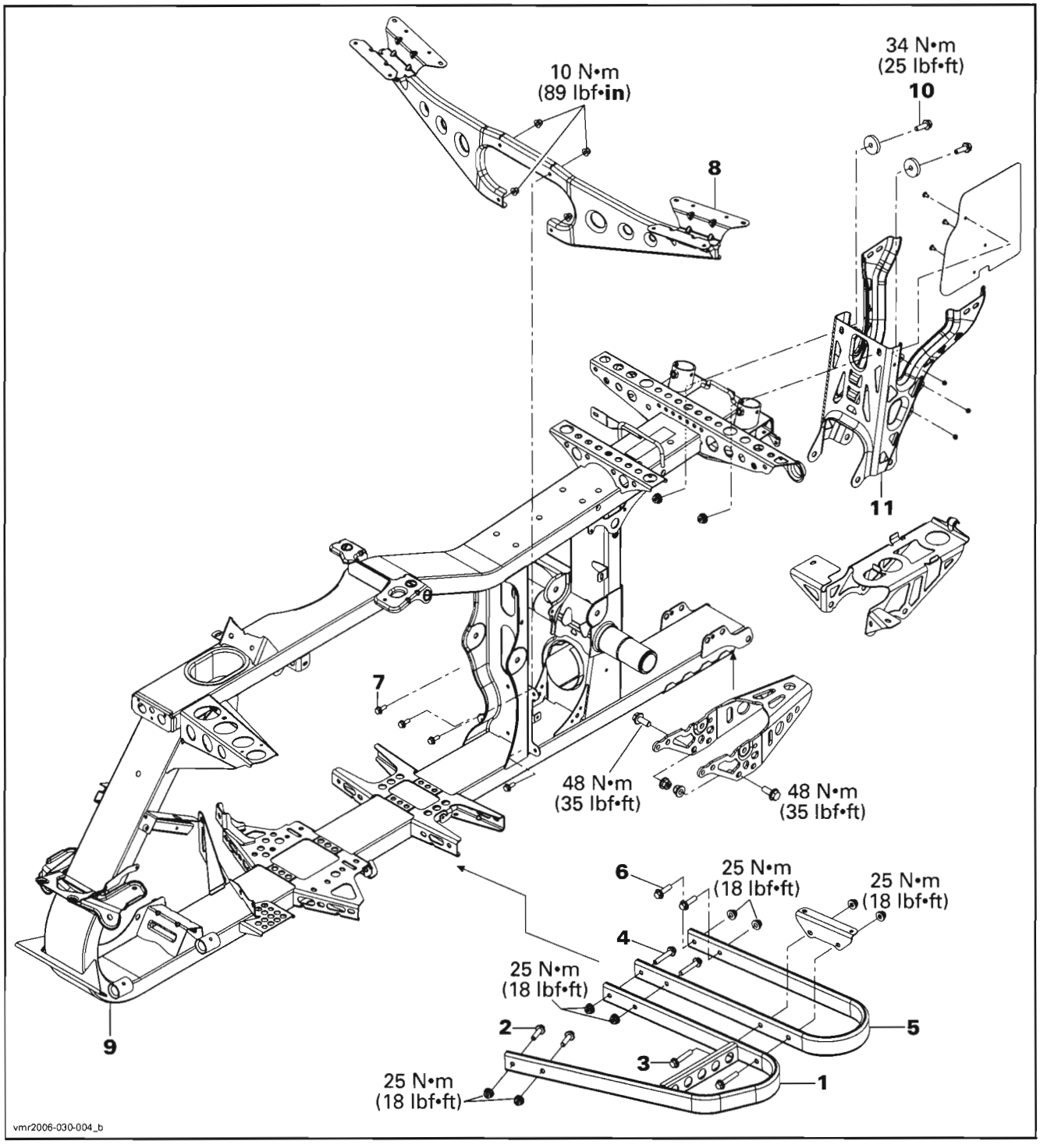

# GENERAL

During assembly/installation, use the torque values and service products as in the exploded views.

Clean threads before applying a threadlocker. Refer to *SELF-LOCKING FASTENERS* and *LOCTITE APPLICATION* at the beginning of this manual for complete procedure.

**⚠ WARNING**

**Torque wrench tightening specifications must strictly be adhered to.**
**Locking devices (e.g.: locking tabs, elastic stop nuts, cotter pins, etc.) must be replaced with new ones.**

# PROCEDURES

## FOOTREST SUPPORT

NOTE: Use the same procedure for RH or LH footrest supports.

### Footrest Support Removal

#### Front Footrest Support

To remove the front support **no. 1**, do the following.

Remove the appropriate footrest.

Unscrew bolts **no. 2**, **no. 3** and **no. 4**.

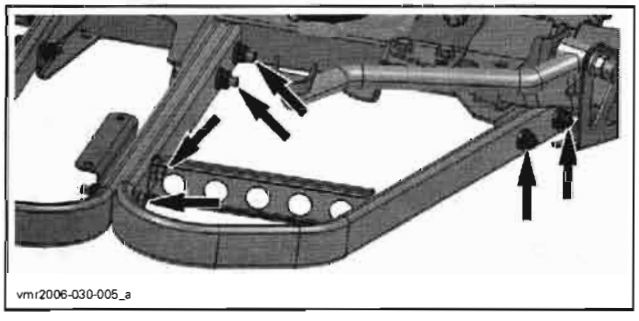


Remove the front footrest support.

#### Rear Footrest Support

To remove the rear footrest support **no. 5**, use same procedure than front footrest support but remove bolts **no. 6** instead of bolts **no. 2**.

#### Passenger Footrest Support

***All MAX/MAX XT Models***

Remove both footrests.

Unscrew bolts **no. 7** then remove passenger footrest support(s) **no. 8**.

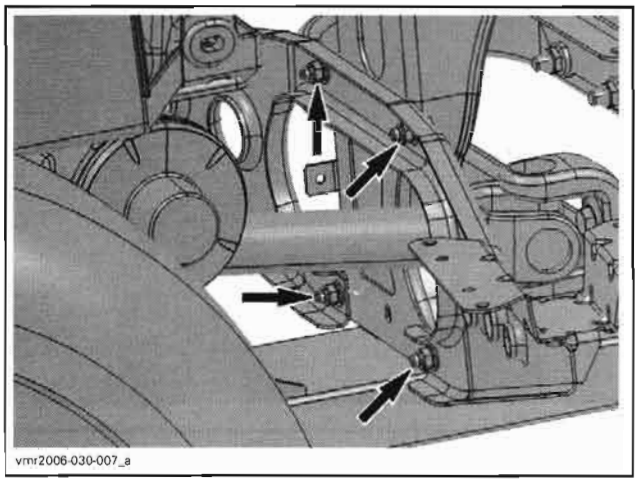


*OUTLANDER MAX*

### Footrest Support Inspection

Check footrest support(s) for cracks, bending or other damages. Replace if necessary.

### Footrest Support Installation

The installation is the reverse of removal procedure.

NOTE: Install all bolts before tightening.

## BATTERY SUPPORT

### Battery Support Removal

Remove battery (refer to *STARTING SYSTEM*).

Remove bolts **no. 10** retaining the battery support **no. 11** to frame **no. 9**.

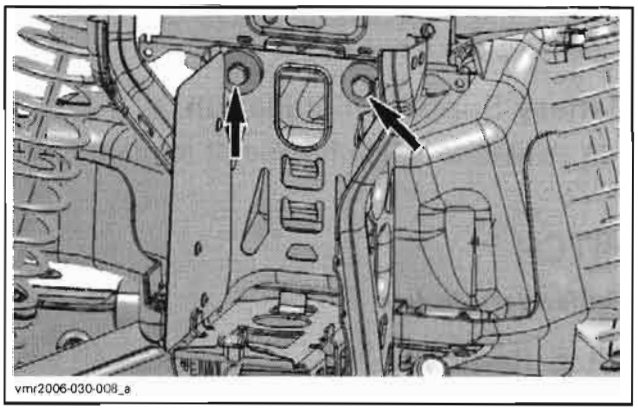


*TYPICAL*

Remove upper differential bolts.

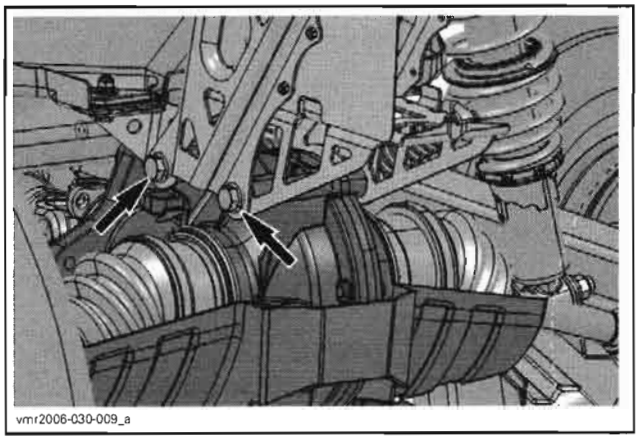


*TYPICAL*

Remove bolts that attach fuel tank and its protector to frame.

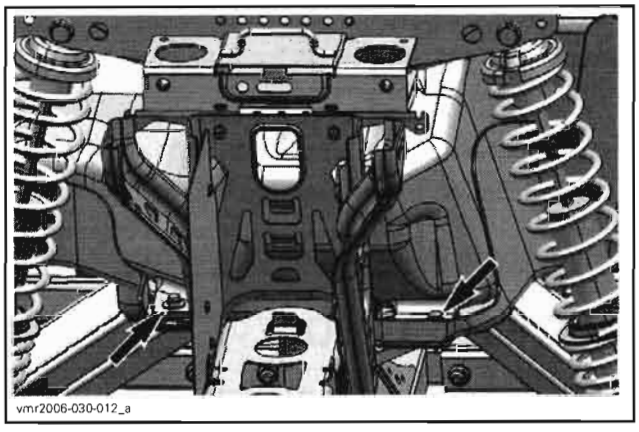


Remove battery support from vehicle.

### Battery Support Inspection

Check battery support for cracks or other damages. Replace if necessary.

### Battery Support Installation

The installation is the reverse of removal procedure.

## HITCH

***Outlander Models***

### Hitch Removal

Remove the differential protector.

Unscrew bolts retaining the hitch to frame.

Remove lower differential bolts.

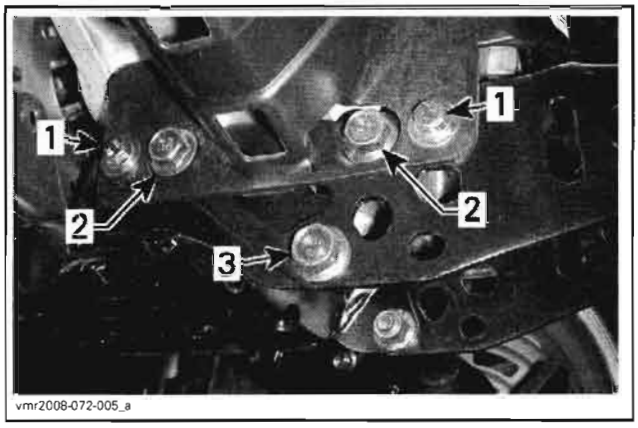


1. *Differential protector bolts*
2. *Lower differential bolts*
3. *Hitch bolt*

Remove hitch from vehicle.

### Hitch Inspection

Check hitch for cracks, bending or other damages. Replace if necessary.

### Hitch Installation

The installation is the reverse of removal procedure.

## RECOVERY HOOK

***Renegade Models***

### Hook Removal

Remove the differential protector.

Unscrew bolts retaining the recovery hook to frame.

Remove lower differential bolts.

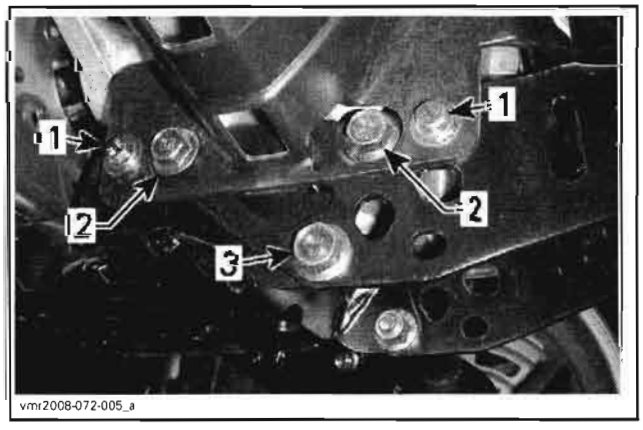


*TYPICAL*
1. *Differential protector bolts*
2. *Lower differential bolts*
3. *Hitch bolt*

Remove recovery hook from vehicle.

### Hook Inspection

Check hitch for cracks, bending or other damages. Replace if necessary.

### Hook Installation

The installation is the reverse of removal procedure.

## FRAME

### Frame Cleaning

Clean frame **no. 9** with appropriate cleaners and rinse with high pressure hose.

**NOTE:** Clean the draining holes under frame. The drain holes are located at the rear of bottom side of frame.

Touch up all metal spots where paint has been scratched off. Spray all bare metal parts of vehicle with metal protector.

### Frame Welding

**CAUTION: Before performing electrical welding anywhere on the vehicle, unplug the multiple connector at the electronic module connector. Also unplug the negative cable and the voltage regulator. This will protect the electronic module and battery against damage caused by flowing current when welding.**

Use the following specifications for electric welding:

- amperage: 70 - 110 A
- voltage: 20 - 24 V
- rod: E-7014 (3/32 in).

**NOTE:** Install the ground as close as possible from the reparation area.

**CAUTION: If welding is to be done near plastic material, it is recommended to either remove the part from the area or to protect it with aluminum foil to prevent damage.**

# OUTLANDER SERIES

| MODEL | | | | OUTLANDER™ 500 | OUTLANDER™ 650 | OUTLANDER™ 800 |
|---|---|---|---|---|---|---|
| **ENGINE** | | | | | | |
| Engine type | | | | ROTAX® V490 | ROTAX® V660 | ROTAX® V810 |
| | | | | 4-stroke, Single Over Head Camshaft (SOHC), liquid cooled | | |
| Number of cylinders | | | | 2 | | |
| Number of valves | | | | 8 valves (mechanical adjustment) | | |
| Bore | | | mm (in) | 82.03 (3.23) | | 91 (3.58) |
| Stroke | | | mm (in) | 47.3 (1.86) | 61.5 (2.42) | |
| Displacement | | | cm³ (in³) | 500 (30.51) | 650 (39.67) | 800 (48.82) |
| Compression ratio | | | | 10.7:1 | 10.3:1 | 10.3:1 |
| Decompressor type | | | | N.A. | | |
| Maximum HP RPM | | | RPM | 7250 | | 6750 |
| Lubrication | Type | | | Wet sump. Replaceable oil filter | | |
| | Oil filter | | | BRP Rotax paper type, replaceable | | |
| | Engine oil pressure | Minimum | | 350 kPa (51 PSI) at 6000 RPM | | |
| | Engine oil | Capacity (oil change with filter) | | 2 L (2.11 quarts) | | |
| | | Recommended | | SAE 5W30 API classification SM, SL or SJ see *OIL VISCOSITY CHART* in *LUBRICATION SYSTEM* | | |
| Intake valve opening | | | | 3° BTDC | 5° BTDC | |
| Intake valve closing | | | | 34° ABDC | 45° ABDC | |
| Exhaust valve opening | | | | 39° BBDC | 50° BBDC | |
| Exhaust valve closing | | | | 2° ATDC | 0° ATDC | |
| Chain tensioner plunger protrusion | | Service limit | mm (in) | 20.0 (.7874) | | |
| Valve clearance | Intake | | mm (in) | 0.06 to 0.14 (.0024 to .0055) | | |
| | Exhaust | | mm (in) | 0.11 to 0.19 (.0043 to .0075) | | |
| Valve stem diameter | Intake | New | mm (in) | 4.966 to 4.980 (.1955 to .1960) | | |
| | | Service limit | mm (in) | 4.930 (.1941) | | |
| | Exhaust | New | mm (in) | 4.956 to 4.970 (.1951 to .1957) | | |
| | | Service limit | mm (in) | 4.930 (.1941) | | |
| Valve out of round | Intake and exhaust | New | mm (in) | 0.005 (.0002) | | |
| | | Service limit | mm (in) | 0.06 (.0024) | | |
| Valve guide diameter | | New | mm (in) | 4.998 to 5.018 (.1968 to .1976) | | |
| | | Service limit | mm (in) | 5.050 (.1988) | | |
| Valve spring free length | | New | mm (in) | 40.81 (1.607) | | |
| | | Service limit | mm (in) | 39.00 (1.535) | | |
| Valve seat contact width | Intake | New | mm (in) | 1.05 to 1.35 (.041 to .053) | | |
| | | Service limit | mm (in) | 1.8 (.070) | | |
| | Exhaust | New | mm (in) | 1.25 to 1.55 (.049 to .061) | | |
| | | Service limit | mm (in) | 2 (.078) | | |

| MODEL | | | | OUTLANDER™ 500 | OUTLANDER™ 650 | OUTLANDER™ 800 |
|---|---|---|---|---|---|---|
| **ENGINE (cont'd)** | | | | | | |
| Rocker arm bore diameter | | New | mm (in) | 12.036 to 12.050 (.4739 to .4744) | | |
| | | Service limit | mm (in) | 12.060 (.4748) | | |
| Rocker arm shaft diameter | | New | mm (in) | 12.000 to 12.018 (.4724 to .4731) | | |
| | | Service limit | mm (in) | 11.990 (.4720) | | |
| Piston measurement | | New | mm (in) | 81.950 to 81.966 (3.2264 to 3.2270) | | 90.950 to 90.966 (3.5807 to 3.5813) |
| | | Service limit | mm (in) | 81.850 (3.2224) | | 90.850 (3.577) |
| Piston/cylinder clearance | | New | mm (in) | 0.057 (.0022) | | 0.027 (.0011) |
| | | Service limit | mm (in) | 0.130 (.0051) | | 0.100 (.0040) |
| Piston ring type | | 1st | | Upper compression ring, rectangular | | |
| | | 2nd | | Lower compression ring, tapered face | | |
| | | 3rd | | Oil scraper ring | | |
| Ring end gap | Rectangular | New | mm (in) | 0.20 to 0.40 (.008 to .016) | | |
| | Tapered face | | | 0.20 to 0.40 (.008 to .016) | | |
| | Oil scraper ring | | | 0.20 to 0.70 (.008 to .028) | | |
| | All | Service limit | mm (in) | 1.5 (.059) | | |
| Ring/piston groove clearance | Rectangular | New | mm (in) | 0.03 to 0.070 (.0012 to .0028) | | |
| | Tapered face | | | 0.02 to 0.060 (.0008 to .0024) | | |
| | Oil scraper ring | | | 0.01 to 0.018 (.0004 to .0007) | | |
| | Rectangular | Service limit | mm (in) | 0.15 (.0059) | | |
| | Tapered face | | | 0.15 (.0059) | | |
| | Oil scraper ring | | | 0.25 (.0098) | | |
| Cylinder bore | | New | mm (in) | 82.023 to 82.037 (3.2292 to 3.2298) | | 90.993 to 91.007 (3.5823 to 3.5829) |
| Cylinder taper | | Maximum New | mm (in) | 0.038 (.0015) | | |
| | | Service limit | mm (in) | 0.090 (.0035) | | |
| Cylinder out of round | | Maximum New | mm (in) | 0.015 (.0006) | | |
| | | Service limit | mm (in) | 0.020 (.0008) | | |
| Camshaft main bearing journal | Timing chain side | New | mm (in) | 34.959 to 34.975 (1.3763 to 1.3770) | | |
| | | Service limit | mm (in) | 34.950 (1.3760) | | |
| | Spark plug side | New | mm (in) | 21.959 to 21.980 (.8645 to .8654) | | |
| | | Service limit | mm (in) | 21.950 (.8642) | | |
| Camshaft main bearing journal bore | Timing chain side | New | mm (in) | 35.000 to 35.025 (1.3780 to 1.3789) | | |
| | | Service limit | mm (in) | 35.040 (1.3795) | | |
| | Spark plug side | New | mm (in) | 22.000 to 22.021 (.8661 to .8670) | | |
| | | Wear limit | mm (in) | 22.040 (.8677) | | |
| Camshaft lobe | Intake valve | New | mm (in) | 31.830 to 32.030 (1.2531 to 1.2610) | 32.11 to 32.31 (1.2642 to 1.2721) | |
| | | Service limit | mm (in) | 31.810 (1.2524) | 32.09 (1.2634) | |
| | Exhaust valve | New | mm (in) | 31.730 to 31.930 (1.2492 to 1.2571) | 31.94 to 32.14 (1.2575 to 1.2654) | |
| | | Service limit | mm (in) | 31.710 (1.2484) | 31.92 (1.2567) | |

| MODEL | | | | OUTLANDER™ 500 | OUTLANDER™ 650 | OUTLANDER™ 800 |
|---|---|---|---|---|---|---|
| **ENGINE (cont'd)** | | | | | | |
| Crankshaft main journal diameter MAG/PTO side | | New | mm (in) | 42.024 to 42.040 (1.6545 to 1.6551) | | |
| | | Service limit | mm (in) | 42.000 (1.6535) | | |
| Crankshaft radial play MAG/PTO side | | Service limit | mm (in) | 0.07 (.0031) | | |
| Crankshaft main journal diameter PTO support bearing | | New | mm (in) | 34.024 to 34.040 (1.3395 to 1.3402) | | |
| | | Service limit | mm (in) | 34.010 (1.3390) | | |
| Crankshaft radial play PTO support bearing | | Service limit | mm (in) | 0.10 (.0039) | | |
| Crankshaft pin diameter | | New | mm (in) | 35.064 to 35.080 (1.3805 to 1.3811) | 40.009 to 40.025 (1.5752 to 1.5758) | |
| | | Service limit | mm (in) | 35.050 (1.3800) | 39.990 (1.5744) | |
| Crankshaft deflection | MAG/PTO side | New | mm (in) | 0.050 (.002) | | |
| Crankcase plain bearing | MAG/PTO side | Service limit | mm (in) | 42.100 (1.6575) | | |
| PTO cover plain bearing | | Service limit | mm (in) | 34.120 (1.3433) | | |
| Connecting rod big end diameter | | Service limit | mm (in) | 35.150 (1.3839) | 40.100 (1.579) | |
| Connecting rod big end radial play | | Service limit | mm (in) | 0.09 (.0035) | | |
| Connecting rod big end axial play | | New | mm (in) | 0.200 to 0.500 (.008 to .020) | | |
| | | Service limit | mm (in) | 0.600 (.024) | | |
| Connecting rod small end diameter | | New | mm (in) | 18.010 to 18.020 (.7091 to .7095) | 20.010 to 20.020 (.7878 to .7882) | |
| | | Service limit | mm (in) | 18.060 (.7110) | 20.060 (.7898) | |
| Piston pin diameter | | New | mm (in) | 17.996 to 18.000 (.7085 to .7087) | 19.996 to 20.000 (.7872 to .7874) | |
| | | Service limit | mm (in) | 17.980 (.7079) | 19.980 (.7866) | |
| Connecting rod/piston pin clearance (radial play) | | Service limit | mm (in) | 0.080 (.0035) | | |
| *GEARBOX* | | | | | | |
| Type | | | | Dual range (HI-LO) with park, neutral and reverse | | |
| Gearbox oil | | Capacity | | 400 mL (14 U.S. oz) | | |
| | | Recommended | | XP-S chaincase oil | | |
| Output shaft backlash | | New | mm (in) | 0.10 to 0.20 (.0039 to .0079) | | |
| | | Service limit | mm (in) | 0.25 (.0098) | | |
| Bevel gear axial play | | New | mm (in) | 0.02 to 0.15 (.0008 to .0059) | | |
| | | Service limit | mm (in) | 0.19 (.0075) | | |
| Shifting sleeve groove width | | New | mm (in) | 5.25 to 5.35 (.207 to .211) | | |
| | | Service limit | mm (in) | 5.50 (.217) | | |
| Shifting fork claw thickness | | New | mm (in) | 4.95 to 5.05 (.195 to .199) | | |
| | | Service limit | mm (in) | 4.80 (.189) | | |
| Shift fork claw thickness (for high gear shifting) | | New | mm (in) | 4.80 to 4.90 (.189 to .193) | | |
| | | Service limit | mm (in) | 4.70 (.185) | | |
| Shift fork claw thickness (for low/reverse gear shifting) | | New | mm (in) | 5.10 to 5.20 (.201 to .205) | | |
| | | Service limit | mm (in) | 5.00 (.197) | | |
| Shift fork pin diameter | | New | mm (in) | 6.920 to 6.970 (.272 to .274) | | |
| | | Service limit | mm (in) | 6.850 (.270) | | |

| MODEL | | | OUTLANDER™ 500 | OUTLANDER™ 650 | OUTLANDER™ 800 |
|---|---|---|---|---|---|
| **ENGINE (cont'd)** | | | | | |
| Gap of shift fork engagement groove (high gear shifting) | | New mm (in) | 5.00 to 5.10 (.197 to .201) | | |
| | | Service limit mm (in) | 5.20 (.205) | | |
| Gap of shift fork engagement groove (low/reverse gear shifting) | | New mm (in) | 5.30 to 5.40 (.209 to 213) | | |
| | | Service limit mm (in) | 5.50 (.217) | | |
| Diameter free pinions | | New mm (in) | 29.000 to 29.013 (1.1417 to 1.1422) | | |
| | | Service limit mm (in) | 29.015 (1.1422) | | |
| Intermediate gear shaft | | New mm (in) | 24.979 to 25.000 (.983 to .984) | | |
| | | Service limit mm (in) | 24.977 (.983) | | |
| Countershaft | Right side | Service limit mm (in) | 17.990 (.708) | | |
| | Free pinion bearing | | 24.970 (.983) | | |
| | CVT side | | 24.970 (.983) | | |
| Bevel gear shaft | Free pinion bearing | Service limit mm (in) | 24.984 (.984) | | |
| **COOLING SYSTEM** | | | | | |
| Coolant | | Type | Ethyl glycol/water mix (50% coolant, 50% water). Use premixed coolant sold by BRP (P/N 219 700 362) or coolant specifically designed for aluminum engines | | |
| | | Capacity | 2.5 L (2.65 quarts) | | |
| Thermostat | | Opening temperature | 65°C (149°F) | | |
| **ELECTRICAL SYSTEM** | | | | | |
| Magneto generator output | | | 400 W @ 6000 RPM | | |
| Ignition system type | | | IDI (Inductive Discharge Ignition) | | |
| Ignition timing | | | Not adjustable | | |
| Spark plug | | Quantity | 2 | | |
| | | Make and type | NGK DCPR8E | | |
| | | Gap mm (in) | 0.6 to 0.7 (.024 to .027) | | |
| Crankshaft position sensor (CPS) | | Ω | 774 to 946 @ 20 °C (68 °F) | | |
| Engine RPM limiter setting | | Forward RPM | 8000 | | |
| | | Reverse RPM | 3200 | | |
| Battery | | Type | Dry battery type | | |
| | | Voltage | 12 volts | | |
| | | Nominal rating | 18 A•h | | |
| | | Power starter output | 0.7 KW | | |
| Headlamp | | W | 2 x 35 | | |
| Taillight | | W | 7/29 | | |
| Director indicator (European Community models) | | W | 10 | | |
| Indicator lights | | | LEDS, 0.7 V approximately (each) | | |

| MODEL | | | OUTLANDER™ 500 | OUTLANDER™ 650 | OUTLANDER™ 800 |
|---|---|---|---|---|---|
| **ELECTRICAL SYSTEM (cont'd)** | | | | | |
| Fuses | Accessories | | 20 A | | |
| | Fan | | 20 A | | |
| | Main | | 30 A | | |
| | Ignition coils | | 5 A | | |
| | Fuel injectors | | 5 A | | |
| | Speedometer/speed sensor/tail lamp | | 7.5 A | | |
| | Fuel pump | | 7.5 A | | |
| | Engine control module (ECM) | | 5 A | | |
| | Main accessories | | 30 A | | |
| **FUEL SYSTEM** | | | | | |
| Fuel delivery | Type | | Electronic Fuel Injection (EFI), DeLorto 46 mm throttle body, 1 injector per cylinder | | |
| Fuel pump | Type | | Bosch | | |
| | Model | | Electrical (in fuel tank) | | |
| Idle speed | RPM ± 50 | | 1250 (not adjustable) | | |
| Fuel | Type | | Regular unleaded gasoline | | |
| | Octane no. | Inside North America (R+M)/2 | 87 or higher | | |
| | | Outside North America RON | 92 or higher | | |
| Fuel tank capacity | | | 20 L (5.3 U.S. gal) | | |
| Remaining fuel in fuel tank when display light turns ON | | | ± 6 L (1.6 U.S. gal) | | |
| **DRIVE TRAIN** | | | | | |
| Front drive | | | Shaft driven/Auto-lock differential (shear pump) | | |
| Front drive ratio | | | 3.6:1 | | |
| Rear drive | | | Shaft driven/locked differential | | |
| Rear drive ratio | | | 3.6:1 | | |
| Differential oil | Capacity | Front | 500 mL (17 U.S. oz) | | |
| | | Rear | 250 mL (8.5 U.S. oz) | | |
| | Recommended | | BRP differential oil (P/N 293 600 043) or synthetic oil 75W90 (API GL5) | | |
| CV joint grease | | | CV joint grease (P/N 293 550 019) | | |
| Propeller shaft grease | | | XP-S synthetic grease (P/N 293 550 010) | | |

| MODEL | | | OUTLANDER™ 500 | OUTLANDER™ 650 | OUTLANDER™ 800 |
|---|---|---|---|---|---|
| **TRANSMISSION** | | | | | |
| Type | | | CVT (Continuously Variable Transmission) | | |
| Engagement RPM | | ± 100 RPM | 1750 | | |
| CVT | | | | | |
| Drive belt width | Service limit | mm (in) | 30.00 (1.181) | | |
| Governor cup roller outer diameter | New | mm (in) | 13.70 to 13.80 (.539 to .543) | | |
| | Service limit | mm (in) | 13.20 (.519) | | |
| Governor cup roller inner diameter | New | mm (in) | 8.05 to 8.15 (.317 to .321) | | |
| | Service limit | mm (in) | 9.00 (.354) | | |
| Centrifugal lever pivot bolt diameter | New | mm (in) | 6.078 to 6.100 (.239 to .240) | | |
| | Service limit | mm (in) | 6.000 (.236) | | |
| Centrifugal lever bore diameter | Service limit | mm (in) | 6.200 (.244) | | |
| Drive pulley sliding half centrifugal lever pivot bolt bore diameter | New | mm (in) | 6.113 to 6.171 (.241 to .243) | | |
| | Service limit | mm (in) | 6.300 (.248) | | |
| Drive pulley sliding half large bushing | New | mm (in) | 55.000 to 55.040 (2.165 to 2.167) | | |
| | Service limit | mm (in) | 55.200 (2.173) | | |
| Drive pulley sliding half small bushing | New | mm (in) | 32.000 to 32.040 (1.260 to 1.261) | | |
| | Service limit | mm (in) | 32.200 (1.268) | | |
| Driven pulley sliding half bushing | New | mm (in) | 30.060 to 30.100 (1.183 to 1.185) | | |
| | Service limit | mm (in) | 30.200 (1.189) | | |
| Driven pulley sliding fixed bushing | New | mm (in) | 30.060 to 30.100 (1.183 to 1.185) | | |
| | Service limit | mm (in) | 30.200 (1.189) | | |
| Torque gear on driven pulley | Service limit | mm (in) | 7.500 (.295) | | |
| **STEERING** | | | | | |
| Turning radius | Standard | | 2.16 m (7 ft) | | |
| | MAX | | 4.80 m (7 ft 9 in) | | |
| Total toe (vehicle on ground) | | mm (in) | 0 (0) | | |
| Camber angle | | | 0° | | |
| Tie-rod maximum length unengaged | | mm (in) | 17.5 ± 5 (11/16 ± 3/16) | | |
| **SUSPENSION** | | | | | |
| *FRONT* | | | | | |
| Suspension type | | | MacPherson | Double A-Arm | |
| Suspension travel | | mm (in) | 178 (7) | 203 (8) | |
| Shock absorber | | Qty | 2 | | |
| | | Type | Oil | | |
| Spring free length | Standard | mm (in) | 372 (14-5/8) | 349 (13-3/4) | |
| | XT | mm (in) | 387 (15-1/4) | 359 (14-1/8) | |
| | MAX | mm (in) | 372 (14-21/32) | 358 (14-3/32) | |
| | MAX XT | mm (in) | 387 (15-15/64) | 369 (14-17/32) | |
| | LTD | mm (in) | — | — | 369 (14-17/32) |

| MODEL | | | OUTLANDER™ 500 | OUTLANDER™ 650 | OUTLANDER™ 800 |
|---|---|---|---|---|---|
| **SUSPENSION (cont'd)** | | | | | |
| Spring color code | Standard | | Silver/Blue/Gold | Green/Gold/Green | |
| | XT | | White/Blue/Gold | White/Red/Gold | |
| | MAX | | Silver/Blue/Gold | Gold/Yellow/Blue | |
| | MAX XT | | White/Blue/Gold | Silver/Red/Gold | |
| | LTD | | — | — | Silver/Red/Gold |
| Front preload adjustment | | | N.A. | 5 settings | |
| *REAR* | | | | | |
| Suspension type | | | TTI™ independent | | |
| Suspension travel | | mm (in) | 229 (9) | | |
| Shock absorber | | Qty | 2 | | |
| | | Type | Oil | | |
| Spring free length | Standard and XT | mm (in) | 354 (13-15/16) | | |
| | MAX and MAX XT | mm (in) | 364 (14-21/64) | | |
| | LTD | mm (in) | — | — | 364 (14-21/64) |
| Spring color code | Standard and XT | | Gold/Blue/Gold | | |
| | MAX and MAX XT | | Gold/Green/Gold | | |
| | LTD | | — | — | Gold/Green/Gold |
| Rear preload adjustment | | | 5 settings | | |
| **BRAKES** | | | | | |
| Front brake | | Qty | 2 | | |
| | | Type | Hydraulic, discs | | |
| Rear brake | | Qty | 1 | | |
| | | Type | Hydraulic, disc | | |
| Brake fluid | Capacity | | 180 mL (6.1 U.S. oz) | | |
| | Type | | DOT 4 | | |
| Parking brake | | | Hydraulic lock-4 wheels | | |
| Caliper | | | Floating | | |
| Brake pad material | | Front | Organic | | |
| | | Rear | Metallic | | |
| Minimum brake pad thickness | | mm (in) | 1 (.04) | | |
| Minimum brake disc thickness | Front | mm (in) | 3.5 (.138) | | |
| | Rear | mm (in) | 4.3 (.17) | | |
| Maximum brake disc warpage | | mm (in) | 0.2 (.01) | | |

| MODEL | | | | OUTLANDER™ 500 | OUTLANDER™ 650 | OUTLANDER™ 800 |
|---|---|---|---|---|---|---|
| **TIRES AND WHEELS** | | | | | | |
| *TIRES* | | | | | | |
| Pressure | 1-UP Models | Front | kPa (PSI) | Maximum: 34.5 (5)<br>Minimum: 31 (4.5) | Maximum: 48 (7)<br>Minimum: 31 (4.5) | |
| | | Rear | kPa (PSI) | Maximum: 34.5 (5)<br>Minimum: 31 (4.5) | Maximum: 48 (7)<br>Minimum: 31 (4.5) | |
| | 2-UP Models | Front | kPa (PSI) | Maximum: 34.5 (5)<br>Minimum: 31 (4.5) | Maximum: 48 (7)<br>Minimum: 31 (4.5) | |
| | | Rear | kPa (PSI) | Maximum: 34.5 (5)<br>Minimum: 31 (4.5) | Maximum: 48 (7)<br>Minimum: 31 (4.5) | |
| Minimum tire thread depth | | | mm (in) | 3 (0.118) | | |
| Size | | | Front | 25 x 8 x 12 | 26 x 8 x 12 | |
| | | | Rear | 25 x 10 x 12<br>XT: 25 x 11 x 12 | 26 x 10 x 12 | |
| *WHEELS* | | | | | | |
| Size | | | Front | 12 x 6 | | |
| | | | Rear | 12 x 7.5 | | |
| **DIMENSION** | | | | | | |
| Overall length | | Standard | m (in) | 2.18 (86) | | |
| | | MAX | m (in) | 2.39 (94) | | |
| Overall width | | | m (in) | 1.17 (46) | | |
| Overall height | | | m (in) | 1.14 (45) | | |
| Dry weight | | Standard | kg (lb) | 287 (634) | 295 (649) | 290 (639) |
| | | MAX | kg (lb) | 310 (684) | 318 (699) | 313 (689) |
| Wheel base | | Standard | m (in) | 1.30 (51) | | |
| | | MAX | m (in) | 1.50 (59) | | |
| Wheel track | | Front | mm (in) | 965 (38) | | |
| | | Rear | mm (in) | 914 (36) | | |
| Ground clearance | | | mm (in) | 279 (11) | | |
| **LOADING CAPACITY** | | | | | | |
| Weight distribution | | Front/rear | % | 51/49<br>MAX: 48/52 | | |
| Rear storage box (included with rear rack weight) | | | kg (lb) | 10 (22) | | |
| Rack | | Front | kg (lb) | 45 (100) | | |
| | | Rear | kg (lb) | 90 (200)<br>(including rear storage box and tongue weight) | | |
| Total vehicle load allowed (including driver, all other loads and added accessories) | | Standard | kg (lb) | 235 (517) | | |
| | | MAX | kg (lb) | 272 (600) | | |
| Gross vehicle weight rating | | Standard | kg (lb) | 553 (1220)<br>XT: 584 (1287) | 584 (1287) | |
| | | MAX | kg (lb) | 558 (1228) | 649 (1430) | |
| Towing capacity | | | kg (lb) | 591 (1300) | | |
| Tongue capacity (included with rear rack weight) | | | kg (lb) | 23 (50) | | |

| MODEL | | | OUTLANDER™ 500 | OUTLANDER™ 650 | OUTLANDER™ 800 |
|---|---|---|---|---|---|
| **MATERIAL** | | | | | |
| Frame | Material | | Steel | | |
| | Color | | Black | | |
| Wheel | Material | All except Camo | Aluminum | | |
| | | Camo/ Camo XT | Steel | | |
| | Color | All except Camo | Aluminum | | |
| | | Camo/ Camo XT | Black | | |
| Front/rear rack | Material | | Steel | | |
| | Color | | Black | | |
| Front bumper | Material | | Aluminum | | |
| | Color | | Aluminum | | |
| Front/rear fender | Material | | High density polyethylene | | |
| | Color | | Yellow/Laurentian green/Viper red/Camo/Steel grey metallic | | |
| Fuel tank protector(s) | Material | | High density polyethylene | | |
| | Color | | Black | | |
| Steering cover | Material | | High density polyethylene | | |
| | Color | | Black | | |
| Storage compartment cover | Material | | Polypropylene (glass fiber-reinforced) | | |
| | Color | | Black | | |
| Front fascia | Material | | High density polyethylene | | |
| | Color | | Yellow/Laurentian green/Viper red/Camo/Steel grey metallic | | |
| Front skid plate | Material | | High density polyethylene | | |
| | Color | | Black | | |
| Side panel | Material | | High density polyethylene | | |
| | Color | | Yellow/Laurentian green/Viper red/Camo/Steel grey metallic | | |
| Foot rest | Material | | High density polyethylene | | |
| | Color | | Black | | |
| Central panel | Material | | High density polyethylene | | |
| | Color | | Yellow/Laurentian green/Viper red/Camo/Steel grey metallic | | |
| Air filter housing cover | Material | | Polypropylene (glass fiber-reinforced) | | |
| | Color | | Black | | |
| Air filter housing | Material | | Polypropylene (glass fiber-reinforced) | | |
| | Color | | Black | | |
| Transmission lever locator | Material | | Polypropylene (glass fiber-reinforced) | | |
| | Color | | Black | | |
| A-arm protector | Material | | Polypropylene | | |
| | Color | | Black | | |

| MODEL | | OUTLANDER™ 500 | OUTLANDER™ 650 | OUTLANDER™ 800 |
|---|---|---|---|---|
| **MATERIAL (cont'd)** | | | | |
| Engine cover | Material | High density polyethylene | | |
| | Color | Black | | |
| Seat base | Material | Polypropylene | | |
| | Color | Black | | |
| Seat cover | Material | Thermoformed vinyl | | |
| | Color | Black<br>LTD models: Steel grey metallic and Black | | |

# RENEGADE MODELS

| MODEL | | | | RENEGADE™ 500 | RENEGADE™ 800 |
|---|---|---|---|---|---|
| **ENGINE** | | | | | |
| Engine type | | | | ROTAX® V490 | ROTAX® V810 |
| | | | | 4-stroke, Single Over Head Camshaft (SOHC), liquid cooled | |
| Number of cylinders | | | | 2 | |
| Number of valves | | | | 8 valves (mechanical adjustment) | |
| Bore | | | mm (in) | 82.03 (3.23) | 91 (3.58) |
| Stroke | | | mm (in) | 47.3 (1.86) | 61.5 (2.42) |
| Displacement | | | $cm^3$ ($in^3$) | 500 (30.51) | 800 (48.82) |
| Compression ratio | | | | 10.7:1 | 10.3:1 |
| Decompressor type | | | | N.A. | |
| Maximum HP RPM | | | RPM | 7250 | 6750 |
| Lubrication | Type | | | Wet sump. Replaceable oil filter | |
| | Oil filter | | | BRP Rotax paper type, replaceable | |
| | Engine oil pressure | Minimum | | 350 kPa (51 PSI) at 6000 RPM | |
| | Engine oil | Capacity (oil change with filter) | | 2 L (2.11 quarts) | |
| | | Recommended | | SAE 5W30 API classification SM, SL or SJ see *OIL VISCOSITY CHART* in *LUBRICATION SYSTEM* | |
| Intake valve opening | | | | 3° BTDC | 5° BTDC |
| Intake valve closing | | | | 34° ABDC | 45° ABDC |
| Exhaust valve opening | | | | 39° BBDC | 50° BBDC |
| Exhaust valve closing | | | | 2° ATDC | 0° ATDC |
| Chain tensioner plunger protrusion | | Service limit | mm (in) | 20.0 (.7874) | |
| Valve clearance | Intake | | mm (in) | 0.06 to 0.14 (.0024 to .0055) | |
| | Exhaust | | mm (in) | 0.11 to 0.19 (.0043 to .0075) | |
| Valve stem diameter | Intake | New | mm (in) | 4.966 to 4.980 (.1955 to .1960) | |
| | | Service limit | mm (in) | 4.930 (.1941) | |
| | Exhaust | New | mm (in) | 4.956 to 4.970 (.1951 to .1957) | |
| | | Service limit | mm (in) | 4.930 (.1941) | |
| Valve out of round | Intake and exhaust | New | mm (in) | 0.005 (.0002) | |
| | | Service limit | mm (in) | 0.06 (.0024) | |
| Valve guide diameter | | New | mm (in) | 5.006 to 5.018 (.1971 to .1976) | |
| | | Service limit | mm (in) | 5.050 (.1988) | |
| Valve spring free length | | New | mm (in) | 40.81 (1.607) | |
| | | Service limit | mm (in) | 39.00 (1.535) | |
| Valve seat contact width | Intake | New | mm (in) | 1.05 to 1.35 (.041 to .053) | |
| | | Service limit | mm (in) | 1.8 (.070) | |
| | Exhaust | New | mm (in) | 1.25 to 1.55 (.049 to .061) | |
| | | Service limit | mm (in) | 2 (.078) | |

| MODEL | | | | RENEGADE™ 500 | RENEGADE™ 800 |
|---|---|---|---|---|---|
| **ENGINE (cont'd)** | | | | | |
| Rocker arm bore diameter | | New | mm (in) | 12.036 to 12.050 (.4739 to .4744) | |
| | | Service limit | mm (in) | 12.060 (.4748) | |
| Rocker arm shaft diameter | | New | mm (in) | 12.000 to 12.018 (.4724 to .4731) | |
| | | Service limit | mm (in) | 11.990 (.4720) | |
| Piston measurement | | New | mm (in) | 81.950 to 81.966 (3.2264 to 3.2270) | 90.950 to 90.966 (3.5807 to 3.5813) |
| | | Service limit | mm (in) | 81.850 (3.2224) | 90.850 (3.577) |
| Piston/cylinder clearance | | New | mm (in) | 0.057 (.0022) | 0.027 (.0011) |
| | | Service limit | mm (in) | 0.130 (.0051) | 0.100 (.0040) |
| Piston ring type | | 1st | | Upper compression ring, rectangular | |
| | | 2nd | | Lower compression ring, tapered face | |
| | | 3rd | | Oil scraper ring | |
| Ring end gap | Rectangular | New | mm (in) | 0.20 to 0.40 (.008 to .016) | |
| | Taper-face | | | 0.20 to 0.40 (.008 to .016) | |
| | Oil scraper ring | | | 0.20 to 0.70 (.008 to .028) | |
| | All | Service limit | mm (in) | 1.5 (.059) | |
| Ring/piston groove clearance | Rectangular | New | mm (in) | 0.03 to 0.070 (.0012 to .0028) | |
| | Taper-face | | | 0.02 to 0.060 (.0008 to .0024) | |
| | Oil scraper ring | | | 0.01 to 0.018 (.0004 to .0007) | |
| | Rectangular | Service limit | mm (in) | 0.15 (.0059) | |
| | Taper-face | | | 0.15 (.0059) | |
| | Oil scraper ring | | | 0.25 (.0098) | |
| Cylinder bore | | New | mm (in) | 82.023 to 82.037 (3.2292 to 3.2298) | 90.993 to 91.007 (3.5823 to 3.5829) |
| Cylinder taper | | Maximum New | mm (in) | 0.038 (.0015) | |
| | | Service limit | mm (in) | 0.090 (.0035) | |
| Cylinder out of round | | Maximum New | mm (in) | 0.015 (.0006) | |
| | | Service limit | mm (in) | 0.020 (.0008) | |
| Camshaft main bearing journal | Timing chain side | New | mm (in) | 34.959 to 34.975 (1.3763 to 1.3770) | |
| | | Service limit | mm (in) | 34.950 (1.3760) | |
| | Spark plug side | New | mm (in) | 21.959 to 21.980 (.8645 to .8654) | |
| | | Service limit | mm (in) | 21.950 (.8642) | |
| Camshaft main bearing journal bore | Timing chain side | New | mm (in) | 35.000 to 35.025 (1.3780 to 1.3789) | |
| | | Service limit | mm (in) | 35.040 (1.3795) | |
| | Spark plug side | New | mm (in) | 22.000 to 22.021 (.8661 to .8670) | |
| | | Wear limit | mm (in) | 22.040 (.8677) | |
| Camshaft lobe | Intake valve | New | mm (in) | 31.830 to 32.030 (1.2531 to 1.2610) | 32.11 to 32.31 (1.2642 to 1.2721) |
| | | Service limit | mm (in) | 31.810 (1.2524) | 32.09 (1.2634) |
| | Exhaust valve | New | mm (in) | 31.730 to 31.930 (1.2492 to 1.2571) | 31.94 to 32.14 (1.2575 to 1.2654) |
| | | Service limit | mm (in) | 31.710 (1.2484) | 31.92 (1.2567) |

| MODEL | | | | RENEGADE™ 500 | RENEGADE™ 800 |
|---|---|---|---|---|---|
| **ENGINE (cont'd)** | | | | | |
| Crankshaft main journal diameter MAG/PTO side | | New | mm (in) | 42.024 to 42.040 (1.6545 to 1.6551) | |
| | | Service limit | mm (in) | 42.000 (1.6535) | |
| Crankshaft radial play MAG/PTO side | | Service limit | mm (in) | 0.07 (.0031) | |
| Crankshaft main journal diameter PTO support bearing | | New | mm (in) | 34.024 to 34.040 (1.3395 to 1.3402) | |
| | | Service limit | mm (in) | 34.010 (1.3390) | |
| Crankshaft radial play PTO support bearing | | Service limit | mm (in) | 0.10 (.0039) | |
| Crankshaft pin diameter | | New | mm (in) | 35.064 to 35.080 (1.3805 to 1.3811) | 40.009 to 40.025 (1.5752 to 1.5758) |
| | | Service limit | mm (in) | 35.050 (1.3800) | 39.990 (1.5744) |
| Crankshaft deflection | MAG/PTO side | New | mm (in) | 0.050 (.002) | |
| Crankcase plain bearing | MAG/PTO side | Service limit | mm (in) | 42.100 (1.6575) | |
| PTO cover plain bearing | | Service limit | mm (in) | 34.120 (1.3433) | |
| Connecting rod big end diameter | | Service limit | mm (in) | 35.150 (1.3839) | 40.100 (1.579) |
| Connecting rod big end radial play | | Service limit | mm (in) | 0.09 (.0035) | |
| Connecting rod big end axial play | | New | mm (in) | 0.200 to 0.500 (.008 to .020) | |
| | | Service limit | mm (in) | 0.600 (.024) | |
| Connecting rod small end diameter | | New | mm (in) | 18.010 to 18.020 (.7091 to .7095) | 20.010 to 20.020 (.7878 to .7882) |
| | | Service limit | mm (in) | 18.060 (.7110) | 20.060 (.7898) |
| Piston pin diameter | | New | mm (in) | 17.996 to 18.000 (.7085 to .7087) | 19.996 to 20.000 (.7872 to .7874) |
| | | Service limit | mm (in) | 17.980 (.7079) | 19.980 (.7866) |
| Connecting rod/piston pin clearance (radial play) | | Service limit | mm (in) | 0.080 (.0035) | |
| *GEARBOX* | | | | | |
| Type | | | | Dual range (HI-LO) with park, neutral and reverse | |
| Gearbox oil | | Capacity | | 400 mL (14 U.S. oz) | |
| | | Recommended | | XP-S chaincase oil | |
| Output shaft backlash | | New | mm (in) | 0.10 to 0.20 (.0039 to .0079) | |
| | | Service limit | mm (in) | 0.25 (.0098) | |
| Bevel gear axial play | | New | mm (in) | 0.02 to 0.15 (.0008 to .0059) | |
| | | Service limit | mm (in) | 0.19 (.0075) | |
| Shifting sleeve groove width | | New | mm (in) | 5.25 to 5.35 (.207 to .211) | |
| | | Service limit | mm (in) | 5.50 (.217) | |
| Shifting fork claw thickness | | New | mm (in) | 4.95 to 5.05 (.195 to .199) | |
| | | Service limit | mm (in) | 4.80 (.189) | |
| Shift fork claw thickness (for high gear shifting) | | New | mm (in) | 4.80 to 4.90 (.189 to .193) | |
| | | Service limit | mm (in) | 4.70 (.185) | |
| Shift fork claw thickness (for low/reverse gear shifting) | | New | mm (in) | 5.10 to 5.20 (.201 to .205) | |
| | | Service limit | mm (in) | 5.00 (.197) | |
| Shift fork pin diameter | | New | mm (in) | 6.920 to 6.970 (.272 to .274) | |
| | | Service limit | mm (in) | 6.850 (.270) | |

| MODEL | | | RENEGADE™ 500 | RENEGADE™ 800 |
|---|---|---|---|---|
| **ENGINE (cont'd)** | | | | |
| Gap of shift fork engagement groove (high gear shifting) | | New mm (in) | 5.00 to 5.10 (.197 to .201) | |
| | | Service limit mm (in) | 5.20 (.205) | |
| Gap of shift fork engagement groove (low/reverse gear shifting) | | New mm (in) | 5.30 to 5.40 (.209 to 213) | |
| | | Service limit mm (in) | 5.50 (.217) | |
| Diameter free pinions | | New mm (in) | 29.000 to 29.013 (1.1417 to 1.1422) | |
| | | Service limit mm (in) | 29.015 (1.1422) | |
| Intermediate gear shaft | | New mm (in) | 24.979 to 25.000 (.983 to .984) | |
| | | Service limit mm (in) | 24.977 (.983) | |
| Countershaft | Right side | Service limit mm (in) | 17.990 (.708) | |
| | Free pinion bearing | | 24.970 (.983) | |
| | CVT side | | 24.970 (.983) | |
| Bevel gear shaft | Free pinion bearing | Service limit mm (in) | 24.984 (.984) | |
| **COOLING SYSTEM** | | | | |
| Coolant | | Type | Ethyl glycol/water mix (50% coolant, 50% water). Use premixed coolant sold by BRP (P/N 219 700 362) or coolant specifically designed for aluminum engines | |
| | | Capacity | 2.5 L (2.65 quarts) | |
| Thermostat | | Opening temperature | 65°C (149°F) | |
| **ELECTRICAL SYSTEM** | | | | |
| Magneto generator output | | | 400 W @ 6000 RPM | |
| Ignition system type | | | IDI (Inductive Discharge Ignition) | |
| Ignition timing | | | Not adjustable | |
| Spark plug | | Quantity | 2 | |
| | | Make and type | NGK DCPR8E | |
| | | Gap mm (in) | 0.6 to 0.7 (.024 to .027) | |
| Crankshaft position sensor (CPS) | | Ω | 774 to 946 @ 20 °C (68 °F) | |
| Engine RPM limiter setting | | Forward RPM | 8000 | |
| | | Reverse RPM | 3200 | |
| Battery | | Type | Dry battery type | |
| | | Voltage | 12 volts | |
| | | Nominal rating | 18 A•h | |
| | | Power starter output | 0.7 KW | |
| Headlamp | | W | 2 x 35 | |
| Taillight | | W | 7/29 | |
| Director indicator (European Community models) | | W | 10 | |
| Indicator lights | | | LEDS, 0.7 V approximately (each) | |

| MODEL | | | RENEGADE™ 500 | RENEGADE™ 800 |
|---|---|---|---|---|
| **ELECTRICAL SYSTEM (cont'd)** | | | | |
| Fuses | Accessories | | 20 A | |
| | Fan | | 20 A | |
| | Main | | 30 A | |
| | Ignition coils | | 5 A | |
| | Fuel injectors | | 5 A | |
| | Speedometer/speed sensor/tail lamp | | 7.5 A | |
| | Fuel pump | | 7.5 A | |
| | Engine control module (ECM) | | 5 A | |
| | Main accessories | | 30 A | |
| **FUEL SYSTEM** | | | | |
| Fuel delivery | | Type | Electronic Fuel Injection (EFI), DeLorto 46 mm throttle body, 1 injector per cylinder | |
| Fuel pump | | Type | Bosch | |
| | | Model | Electrical (in fuel tank) | |
| Idle speed | | RPM ± 50 | 1250 (not adjustable) | |
| Fuel | Type | | Regular unleaded gasoline | |
| | Octane no. | Inside North America (R+M)/2 | 87 or higher | |
| | | Outside North America RON | 92 or higher | |
| Fuel tank capacity | | | 20 L (5.3 U.S. gal) | |
| Remaining fuel in fuel tank when display light turns ON | | | ± 6 L (1.6 U.S. gal) | |
| **DRIVE TRAIN** | | | | |
| Front drive | | | Shaft driven/Auto-lock differential (shear pump) | |
| Front drive ratio | | | 3.6:1 | |
| Rear drive | | | Shaft driven/locked differential | |
| Rear drive ratio | | | 3.6:1 | |
| Differential oil | Capacity | Front | 500 mL (17 U.S. oz) | |
| | | Rear | 250 mL (8.5 U.S. oz) | |
| | Recommended | | BRP differential oil (P/N 293 600 043) or synthetic oil 75W90 (API GL5) | |
| CV joint grease | | | CV joint grease (P/N 293 550 019) | |
| Propeller shaft grease | | | XP-S synthetic grease (P/N 293 550 010) | |

| MODEL | | | RENEGADE™ 500 | RENEGADE™ 800 |
|---|---|---|---|---|
| **TRANSMISSION** | | | | |
| Type | | | CVT (Continuously Variable Transmission) | |
| Engagement RPM | | ± 100 RPM | 1750 | |
| CVT | | | | |
| Drive belt width | Service limit | mm (in) | 30.00 (1.181) | |
| Governor cup roller outer diameter | New | mm (in) | 13.70 to 13.80 (.539 to .543) | |
| | Service limit | mm (in) | 13.20 (.519) | |
| Governor cup roller inner diameter | New | mm (in) | 8.05 to 8.15 (.317 to .321) | |
| | Service limit | mm (in) | 9.00 (.354) | |
| Centrifugal lever pivot bolt diameter | New | mm (in) | 6.078 to 6.100 (.239 to .240) | |
| | Service limit | mm (in) | 6.000 (.236) | |
| Centrifugal lever bore diameter | Service limit | mm (in) | 6.200 (.244) | |
| Drive pulley sliding half centrifugal lever pivot bolt bore diameter | New | mm (in) | 6.113 to 6.171 (.241 to .243) | |
| | Service limit | mm (in) | 6.300 (.248) | |
| Drive pulley sliding half large bushing | New | mm (in) | 55.000 to 55.040 (2.165 to 2.167) | |
| | Service limit | mm (in) | 55.200 (2.173) | |
| Drive pulley sliding half small bushing | New | mm (in) | 32.000 to 32.040 (1.260 to 1.261) | |
| | Service limit | mm (in) | 32.200 (1.268) | |
| Driven pulley sliding half bushing | New | mm (in) | 30.060 to 30.100 (1.183 to 1.185) | |
| | Service limit | mm (in) | 30.200 (1.189) | |
| Driven pulley sliding fixed bushing | New | mm (in) | 30.060 to 30.100 (1.183 to 1.185) | |
| | Service limit | mm (in) | 30.200 (1.189) | |
| Torque gear on driven pulley | Service limit | mm (in) | 7.500 (.295) | |
| **STEERING** | | | | |
| Turning radius | Standard | | 2.16 m (7 ft) | |
| Total toe (vehicle on ground) | | mm (in) | 0 (0) | |
| Camber angle | | | 0° | |
| Tie-rod maximum length unengaged | | mm (in) | 17.5 ± 5 (11/16 ± 3/16) | |
| **SUSPENSION** | | | | |
| *FRONT* | | | | |
| Suspension type | | | Double A-Arm | |
| Suspension travel | | mm (in) | 229 (9) | |
| Shock absorber | | Qty | 2 | |
| | | Type | Oil | Gas |
| Spring free length | | mm (in) | 319 (12-9/16) | |
| Spring color code | | | Silver/White/Green | |
| Front preload adjustment | | | 5 settings | |
| *REAR* | | | | |
| Suspension type | | | TTI™ independent | |
| Suspension travel | | mm (in) | 254 (10) | |

| MODEL | | | RENEGADE™ 500 | RENEGADE™ 800 |
|---|---|---|---|---|
| **SUSPENSION (cont'd)** | | | | |
| Shock absorber | | Qty | 2 | |
| | | Type | Oil | Gas |
| Spring free length | | mm (in) | 381 (15) | 348 (13-45/64) |
| Spring color code | | | Silver/Red/White | Gold/Gold/Green |
| Rear preload adjustment | | | 5 settings | |
| **BRAKES** | | | | |
| Front brake | | Qty | 2 | |
| | | Type | Hydraulic, discs | |
| Rear brake | | Qty | 1 | |
| | | Type | Hydraulic, disc | |
| Brake fluid | Capacity | | 180 mL (6.1 U.S. oz) | |
| | Type | | DOT 4 | |
| Parking brake | | | Hydraulic lock-4 wheels | |
| Caliper | | | Floating | |
| Brake pad material | | Front | Organic | |
| | | Rear | Metallic | |
| Minimum brake pad thickness | | mm (in) | 1 (.04) | |
| Minimum brake disc thickness | Front | mm (in) | 3.5 (.138) | |
| | Rear | mm (in) | 4.3 (.17) | |
| Maximum brake disc warpage | | mm (in) | 0.2 (.01) | |
| **TIRES AND WHEELS** | | | | |
| *TIRES* | | | | |
| Pressure | Front | | Maximum: 48 kPa (7 PSI)<br>Minimum: 34.5 kPa (5 PSI) | |
| | Rear | | Maximum: 48 kPa (7 PSI)<br>Minimum: 38 kPa (5.5 PSI) | |
| Minimum tire thread depth | | mm (in) | 3 (0.118) | |
| Size | | Front | 25 x 8 x 12 | |
| | | Rear | 25 x 10 x 12 | |
| *WHEELS* | | | | |
| Size | | Front | 12 x 6 | |
| | | Rear | 12 x 7.5 | |
| **DIMENSION** | | | | |
| Overall length | | m (in) | 2.18 (86) | |
| Overall width | | m (in) | 1.17 (46) | |
| Overall height | | m (in) | 1.14 (45) | |
| Dry weight | | kg (lb) | 275 (607) | |
| Wheel base | | m (in) | 1.30 (51) | |
| Wheel track | Front | mm (in) | 965 (38) | |
| | Rear | mm (in) | 914 (36) | |
| Ground clearance | | mm (in) | 279 (11) | |

| MODEL | | | RENEGADE™ 500 | RENEGADE™ 800 |
|---|---|---|---|---|
| **LOADING CAPACITY** | | | | |
| Weight distribution | Front/rear | % | 51/49 | |
| Rear storage box | | kg (lb) | 3.7 (1) | |
| Rack | Rear | kg (lb) | 16 (35) | |
| Total vehicle load allowed (including driver, all other loads and added accessories) | | kg (lb) | 141 (310) | |
| Gross vehicle weight rating | | kg (lb) | 476 (1050) | |
| Towing capacity | | kg (lb) | 591 (1300) | |
| **MATERIAL** | | | | |
| Frame | Material | | Steel | |
| | Color | | Black | |
| Wheel | Material | | Aluminum | |
| | Color | | Aluminum | |
| Front bumper | Material | | Aluminum | |
| | Color | | Aluminum | |
| Front/rear fender | Material | | High density polyethylene | |
| | Color | | Yellow | |
| Fuel tank protector(s) | Material | | High density polyethylene | |
| | Color | | Black | |
| Steering cover | Material | | Aluminum | |
| | Color | | Aluminum | |
| Rear storage compartment | Material | | Polypropylene (glass fiber-reinforced) | |
| | Color | | Black | |
| Front grid | Material | | High density polyethylene | |
| | Color | | Black | |
| Front skid plate | Material | | High density polyethylene | |
| | Color | | Black | |
| Side panel | Material | | High density polyethylene | |
| | Color | | Black | |
| Foot rest | Material | | High density polyethylene | |
| | Color | | Black | |
| Central panel | Material | | High density polyethylene | |
| | Color | | Yellow | |
| Air filter housing cover | Material | | Polypropylene (glass fiber-reinforced) | |
| | Color | | Black | |
| Air filter housing | Material | | Polypropylene (glass fiber-reinforced) | |
| | Color | | Black | |
| Transmission lever locator | Material | | Polypropylene (glass fiber-reinforced) | |
| | Color | | Black | |
| A-arm protector | Material | | Polypropylene | |
| | Color | | Black | |

| MODEL | | RENEGADE™ 500 | RENEGADE™ 800 |
|---|---|---|---|
| MATERIAL (cont'd) | | | |
| Engine cover | Material | High density polyethylene | |
| | Color | Black | |
| Seat base | Material | Polypropylene | |
| | Color | Black | |
| Seat cover | Material | Thermoformed vinyl | |
| | Color | Black | |

# ELECTRICAL CONNECTORS

## SERVICE TOOLS

| Description | Part Number | Page |
|---|---|---|
| crimping pliers | 529 035 730 | 435 |
| crimper die | 529 035 906 | 432 |
| crimping tool | 529 035 909 | 432 |

## SERVICE TOOLS – OTHER SUPPLIER

| Description | Part Number | Page |
|---|---|---|
| Snap-on terminal remover | TT600-1 | 432 |

## DEUTSCH CONNECTORS

Deutsch connectors are used on some harnesses.

### Removal from Engine Connector Bracket

To remove Deutsch connectors from engine connector bracket, slide a flat screwdriver between the connector bracket and the Deutsch connector and push out connector.

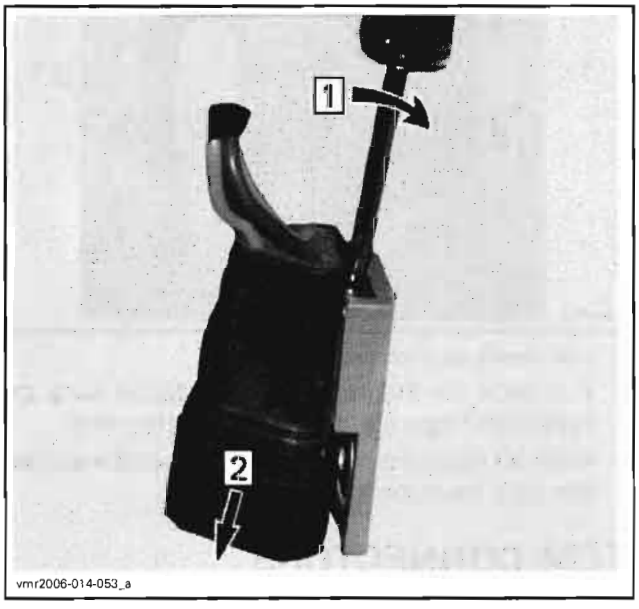


### Connector Disassembly

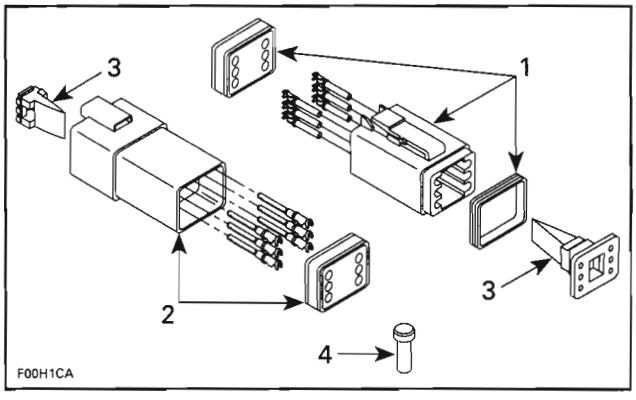


1. *Male connector*
2. *Female connector*
3. *Secondary locks*
4. *Sealing cap*

**CAUTION:** Do not apply dielectric grease on terminal inside connector.

To remove terminals from connector, proceed as follows:

– Using a long nose pliers, pull out the lock.

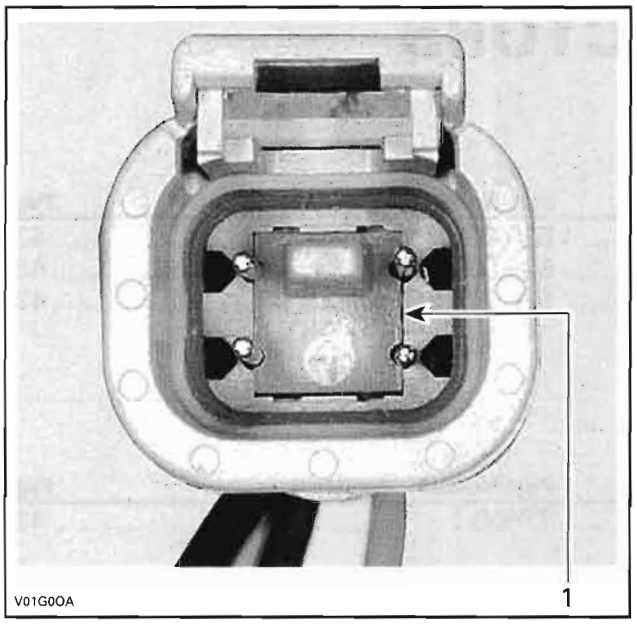


*FEMALE CONNECTOR*
*1. Female lock*

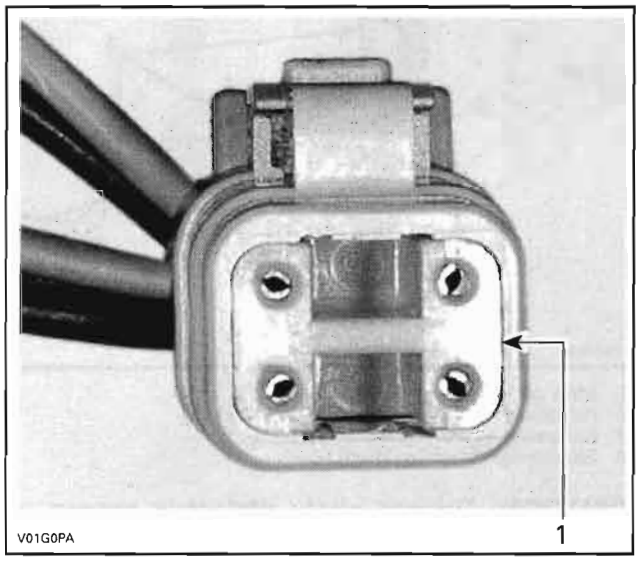


*MALE CONNECTOR*
*1. Male lock*

NOTE: Before extraction, push wire forward to relieve pressure on retaining tab.

- Insert a 4.8 mm (.189 in) wide screwdriver blade inside the front of the terminal cavity.
- Pry back the retaining tab while gently pulling wire back until terminal is removed.

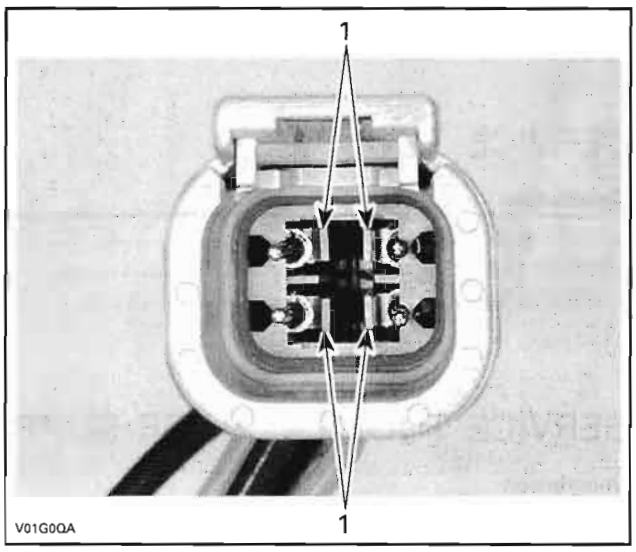


*FEMALE CONNECTOR*
*1. Retaining tabs*

To install:

- For insertion of a terminal, make sure the lock is removed.
- Insert terminal into appropriate cavity and push as far as it will go.

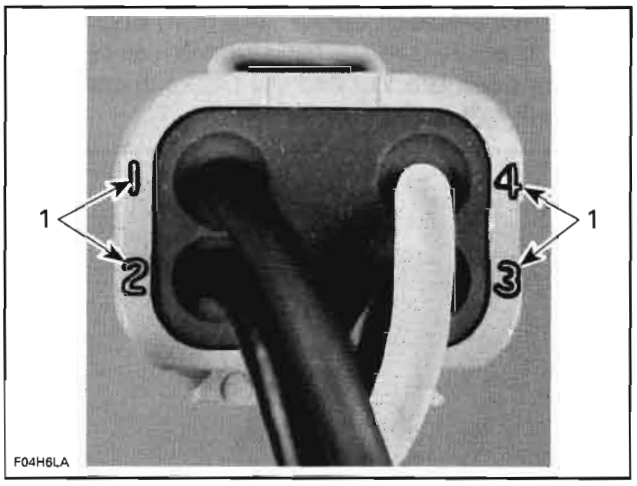


*1. Wire identification numbers*

- Pull back on the terminal wire to be sure the retention fingers are holding the terminal.
- After all required terminals have been inserted, the lock must be installed.

## ECM CONNECTORS

There are two ECM connectors used and they are connected on the ECM. The engine harness female connector is connected on the module male connector "A" and the vehicle system control harness female connector is connected to the module male connector "B". The ECM connectors have 41 pins.

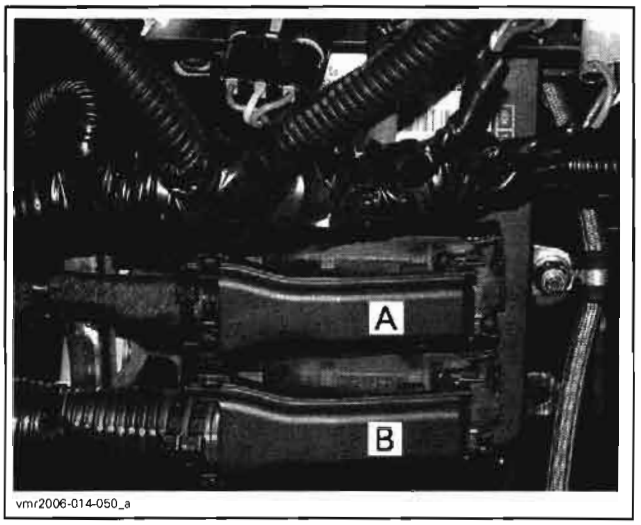


For probing techniques and tool, refer to *ENGINE MANAGEMENT*.

**CAUTION:** Do not disconnect the ECM connectors needlessly. They are not designed to be disconnected/reconnected frequently.

## Terminal Removal

Unlock the connector cover by pushing in the tabs on top of the connector with a flat screwdriver to be able to flip the top cover up.

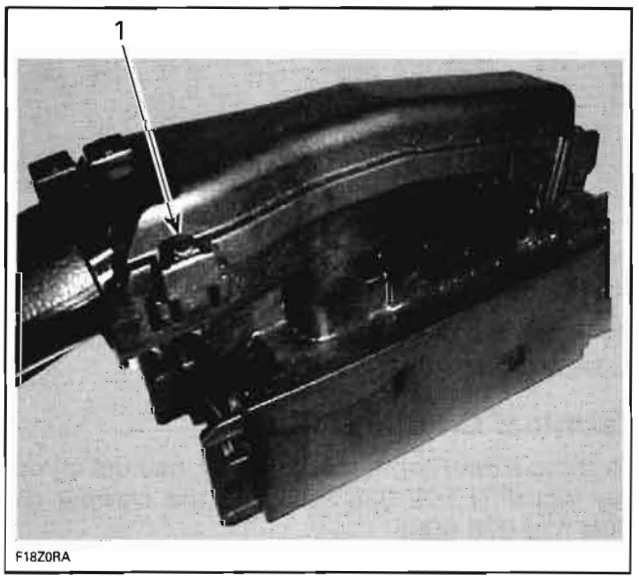


*1. Push in tab*

Lift the cover by pushing it forward.

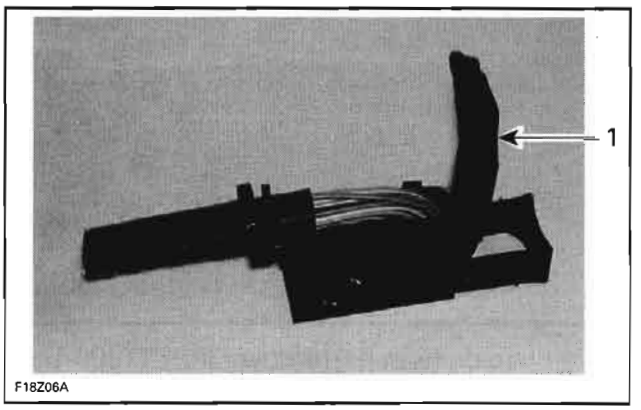


*1. Cover*

Cut both tie raps that secure the harness to the connector.

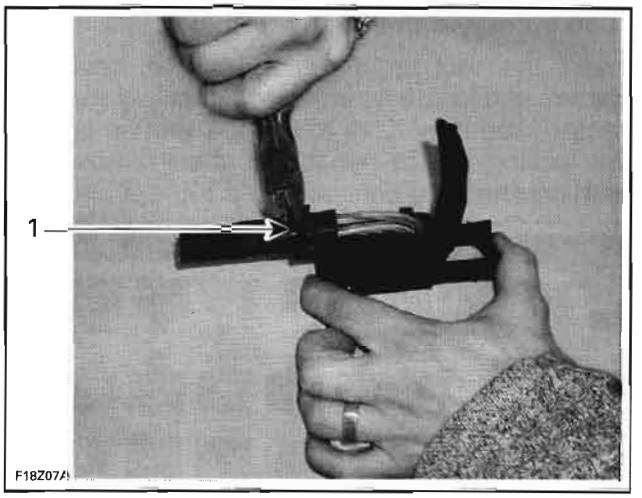


*1. Tie raps*

Turn the connector over and remove the orange locking tab by pushing and then pulling toward the wire harness.

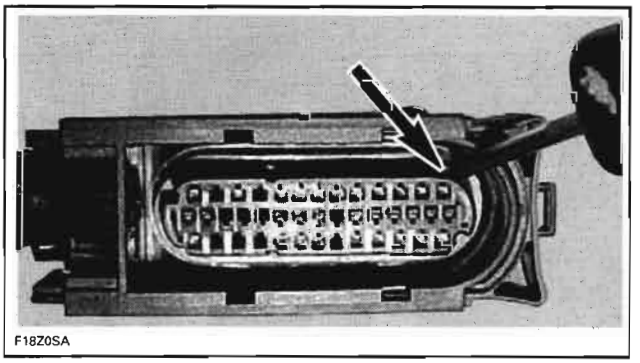

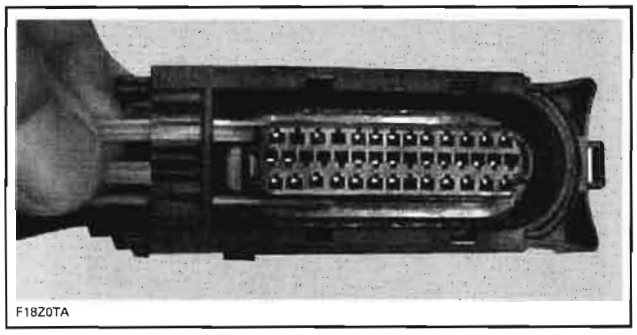
F18Z0TA

Use a Snap-on terminal remover (P/N TT600-1) (or a 0.76 mm (.030 in) oxyacetylene torch tip cleaner or a no. 68 drill bit) must be inserted into the terminal cavity to release the locking tab from the connector.

**CAUTION: Using a tool tip larger than 0.76 mm (.030 in) may damage the terminal.**

Insert the tool tip into the terminal cavity as shown, and locate its wire in the back of the connector. You may have to pry the tool tip against the locking tab to release it, then remove the terminal from the connector.

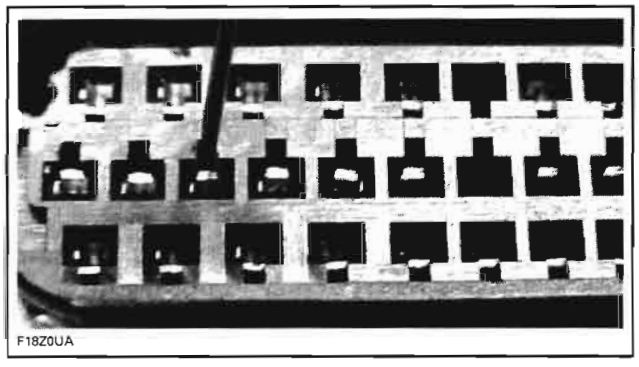
F18Z0UA

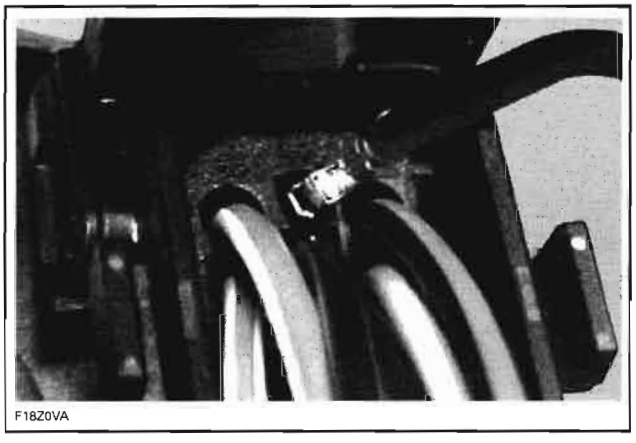
F18Z0VA

Check the locking tab on the terminal, it may have to be bent out a little so it will lock in its cavity when it is re-inserted.

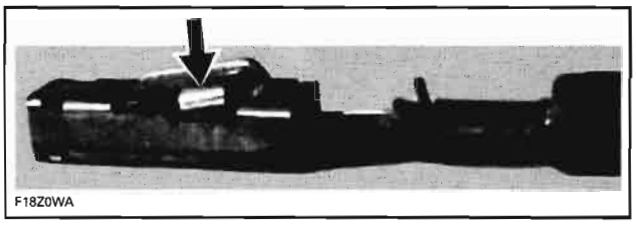
F18Z0WA

If the wire is in good condition but the terminal is rusted or corroded, remove defective terminal and crimp a new one. If wire and terminal are defective, replace with a new genuine wire and new terminal and crimp them together as explained below.

**IMPORTANT:** Use genuine wires only. Otherwise wires will not fit properly.

When re-inserting the terminal, the locking tab must be installed facing the smaller cutout of the terminal cavity.

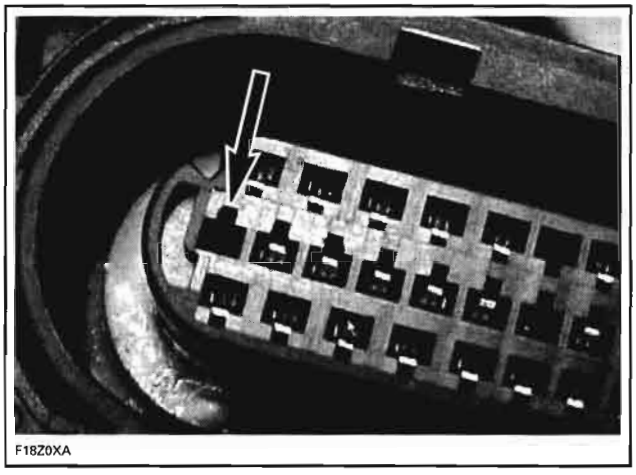
F18Z0XA

Insert the terminal, ensuring the locking tab snaps into its cavity.

Re-install the orange locking tab, attach the 2 tie raps, and close the connector cover.

## Terminal Crimping (Kostal)

To crimp a new connector terminal, use the crimping tool (P/N 529 035 909) and the crimper die (P/N 529 035 906).

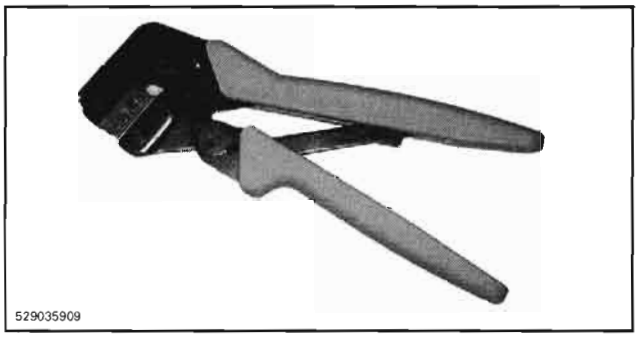
529035909

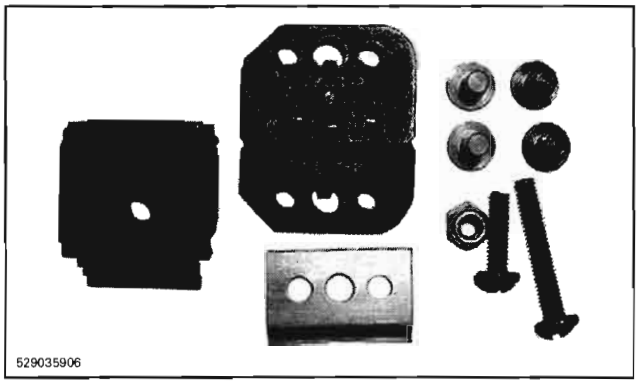


To properly crimp the wires, strictly follow this procedure.

Strip the wire to a maximum of 3 mm (1/8 in).

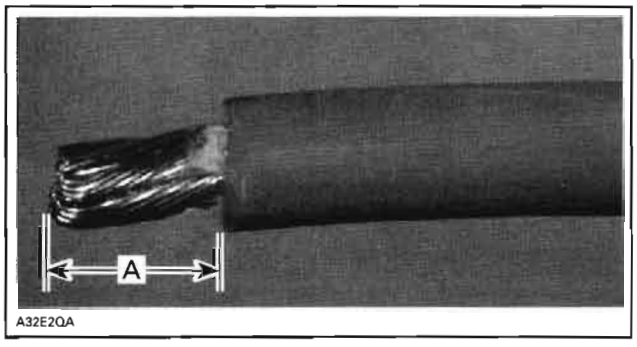


*TYPICAL*
*A. 3 mm (1/8 in) max.*

Position wire in terminal.

Squeeze the terminal tabs with your fingers to temporarily retain terminal in place.

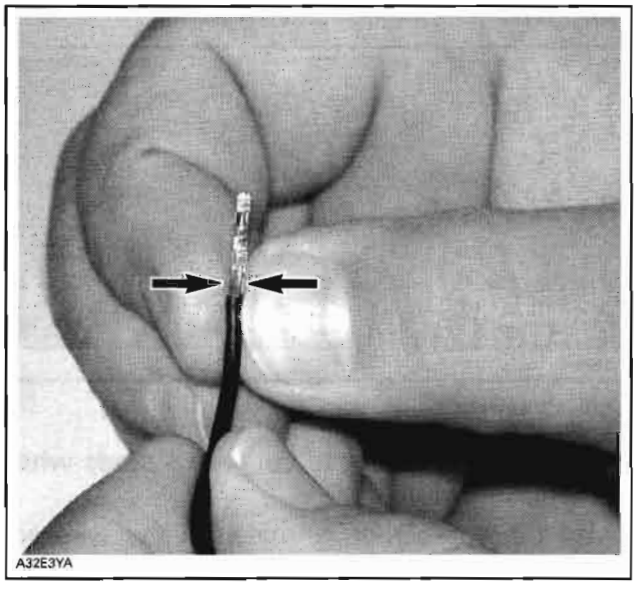


Insert terminal with wire in crimping pliers and position so that top of terminal tabs are flush with pliers edge or a little bit lower as shown.

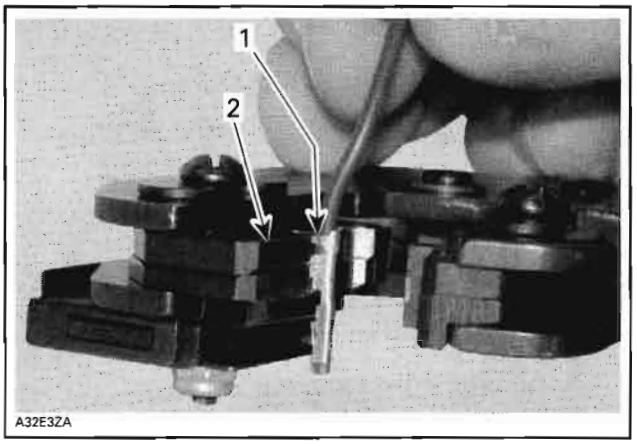


*1. Top of terminal tabs*
*2. Align tabs with pliers edge*

Crimp terminal. Ensure no tiny wire goes out of terminal. This might cause strange problems of the electrical system.

## Lubrication

Do not apply any product to the pins of the connector on the ECM.

# MULTIFUNCTION SPEEDOMETER CONNECTOR

Firmly push down tab and hold to unlock connector while pulling it out.

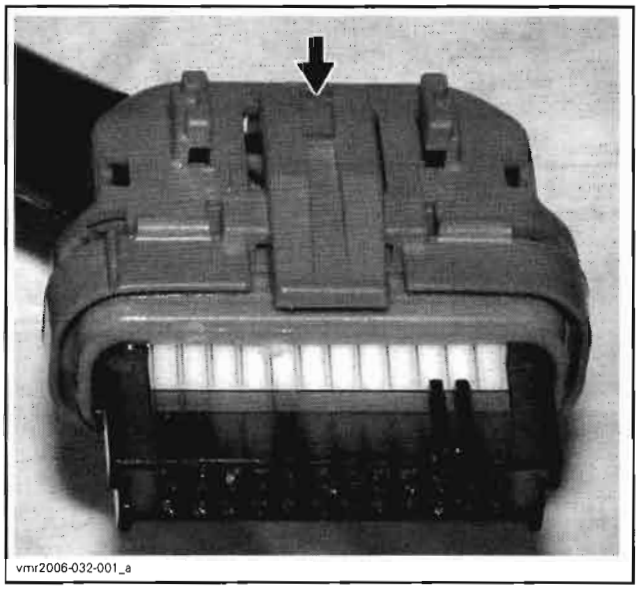

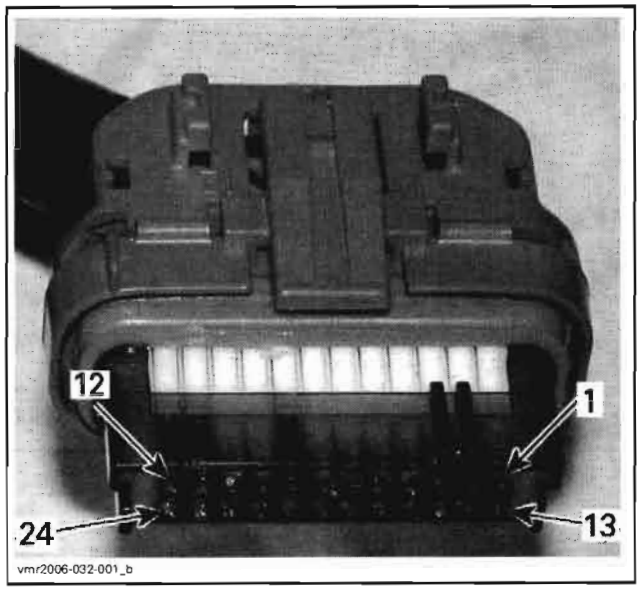


*CONNECTOR PINOUT*

Push on both tabs to remove retainer.

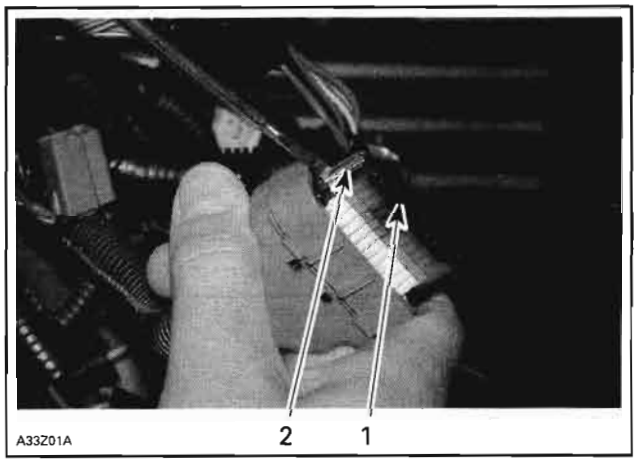


*TYPICAL*
1. *Retainer*
2. *Tab (one on each side)*

Open housing by lifting 4 tabs.

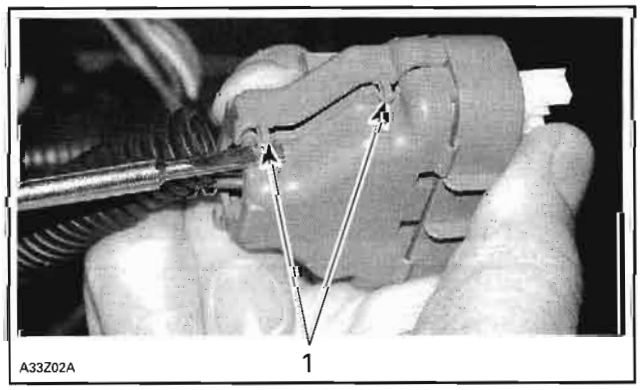


*TYPICAL*
1. *Tabs (2 on each side)*

Lift the top plastic lock of the female terminal to be removed and hold in position. Lift the female terminal to unlock from the housing and push out of housing.

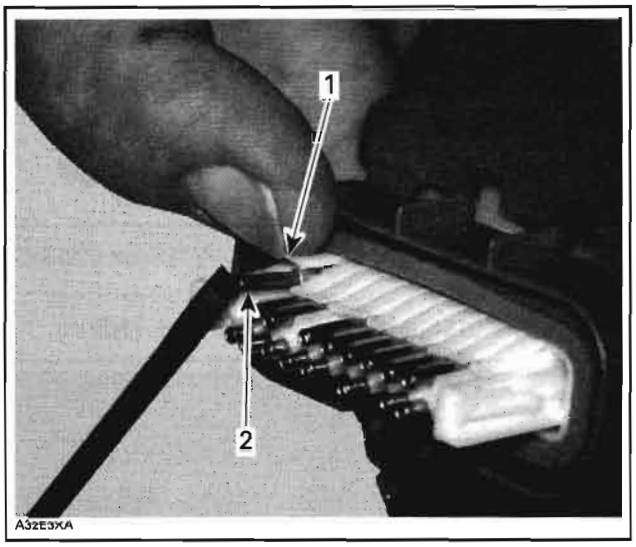


*TYPICAL*
1. *Lift and hold plastic lock*
2. *Lift to unlock and push out*

## BATTERY AND STARTER CABLE TERMINALS

### Crimping

Carefully strip the wire approximately to 10 mm (3/8 in) in length, using a wire stripping tool or sharp blade/knife.

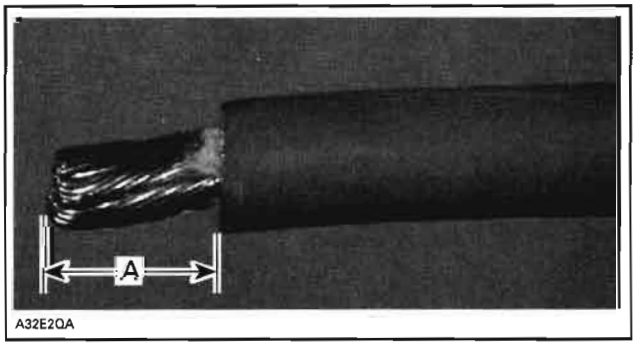


*A. 10 mm (3/8 in)*

**NOTE:** Make sure not to cut wire strands while stripping the wire.

Install the appropriate terminal on the wire according to the requirement. Refer to appropriate *PARTS CATALOG*.

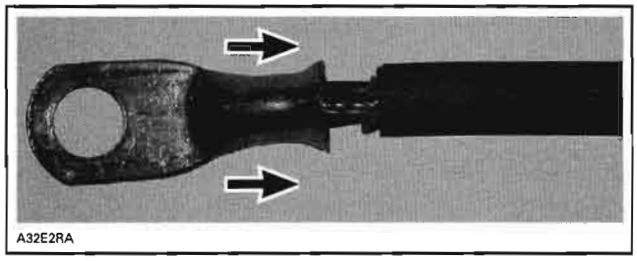
A32E2RA

*INSTALLATION OF TERMINAL*

Follow the instructions provided with the crimping pliers (P/N 529 035 730) to select the proper position of the tool.

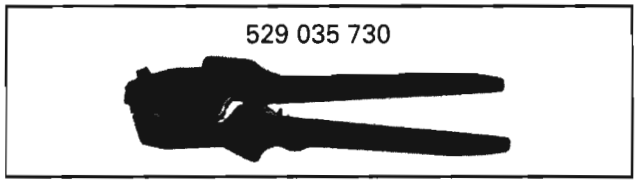


NOTE: Different wires require different crimping pliers settings, so make sure to follow the instruction supplied with the tool.

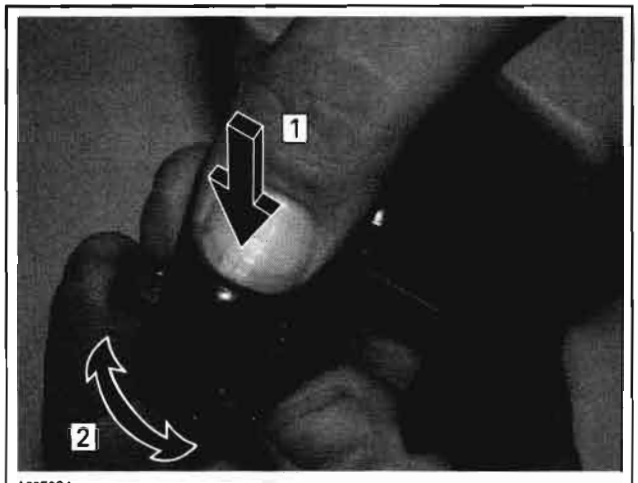

A32E2SA

*POSITIONING THE CRIMPING PLIERS*
*Step 1: Press*
*Step 2: Rotate*

After positioning the crimping pliers, crimp the terminal already installed on wire.

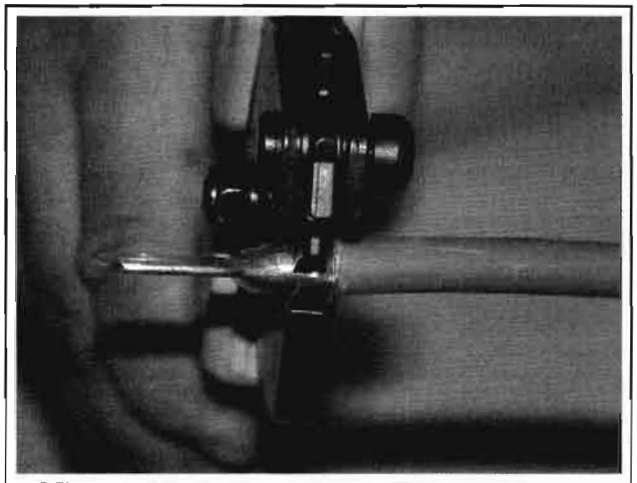
A32E2TA

*CRIMPING OF WIRE*

A32E2UA

*PROPERLY CRIMPED WIRE*

To verify, if the wire is properly crimped, apply some pulling force on wire and the terminal at the same time from both directions.

**CAUTION: Never weld the wire to the terminal. Welding can change the property of the wire and it can become brittle and break.**

Install the protective heat shrink rubber tube on the terminal. Heat the heat shrink rubber tube using the heat gun so that it grasps the wire and the terminal.

**CAUTION: Make sure that the protective heat shrink rubber tube has been properly installed and no part of wire is exposed.**

# WIRING DIAGRAMS

## WIRING CONNECTORS CODING

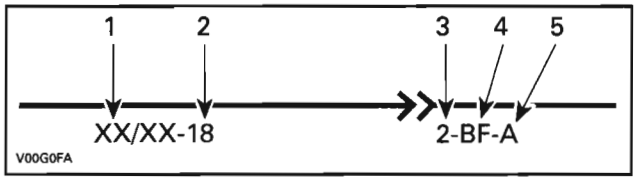


1. *Wire colors*
2. *Wire gauge*
3. *Connector housing area*
4. *Connector identification*
5. *Wire location in connector*

### Wire Colors

It identifies the color of a wire. When a 2-color scheme is used, the first color is the main color while the second color is the tracer color.

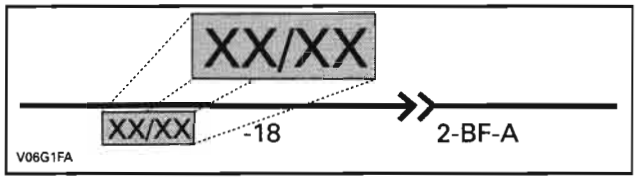


*THE SHADED PART INDICATES THE WIRE COLOR*

Example: YL/BK is a YELLOW wire with a BLACK stripe.

### Wire Gauge

The number after wire color indicates the gauge of a wire.

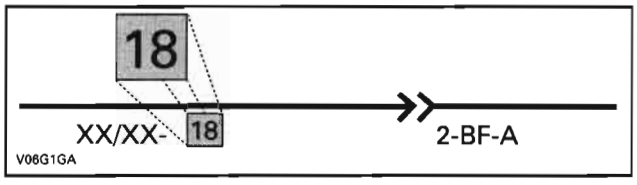


*THE SHADED PART INDICATES THE WIRE GAUGE*

Example: YL/BK is a YELLOW wire with a BLACK stripe.

### Connector Housing Area

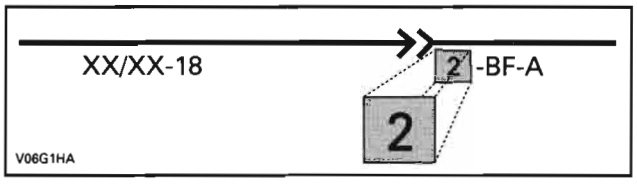


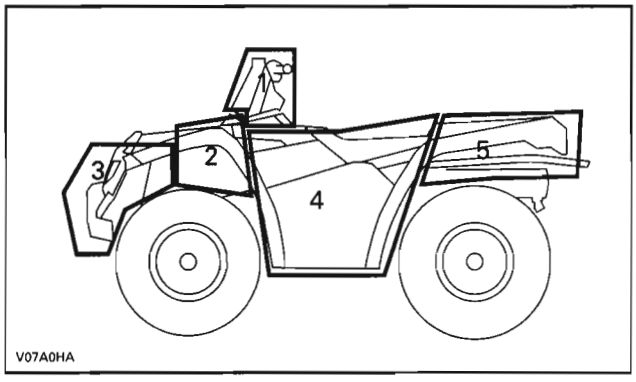


| AREA | LOCATION |
|---|---|
| 1 | Steering area |
| 2 | Service compartment |
| 3 | Front of vehicle |
| 4 | Engine area |
| 5 | Rear of vehicle |

### Connector Identification

Indicates the connector's function. If there are many connectors in the same area, this helps to identify which wire is in which connector.

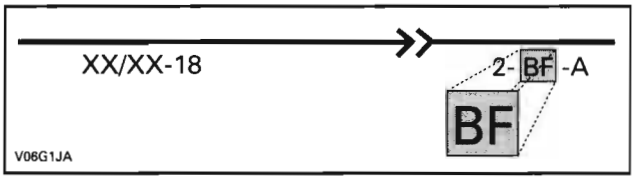


*THE SHADED PART INDICATES A CONNECTOR*

| ABBREVIATION | DESCRIPTION |
|---|---|
| BA | Ignition coil |
| BAT | Battery |
| BD | 2WD/4WD switch |
| CA | Magneto |
| CAPS | Camshaft position sensor |
| CC | Ignition switch |
| CI | Multifunction speedometer |
| CPS | Crankshaft position sensor |
| CTS | Coolant temperature sensor |
| CV | Speed sensor |
| DB | Diagnostic connector |
| DC | DC outlet |
| ECM | Engine control module |
| FP | Fuel pump |
| FRA | Brake light switch |
| FT | Cooling fan |
| HIC | Harness interconnector (engine/vehicle) |
| IDLE | Idle bypass valve |
| INJ1 and INJ2 | Fuel injector |
| MAPTS | Manifold air pressure and temperature sensor |
| MD | 2WD/4WD actuator |
| MG | multifunction switch |
| OPS | Oil pressure switch |
| PD | RH headlight |
| PF1 | Fuse Holder (main) |
| PF2 | Fuse Holder (near battery) |
| PG | LH headlight |
| PRN | Subtransmission switch |
| RD | Voltage regulator/rectifier |
| SD | 2WD/4WD actuator switch |
| SM | Starter motor |
| SPK1 and SPK2 | Spark plug |
| SS | Starter solenoid |
| SW | Winch relay |
| SWW | Winch switch |
| TPS | Throttle position sensor |
| WM | Winch motor |

## Wire Location in Connector

This is the wire position in the connector. The number or letter given refers to the physical identification stamped on the connector.

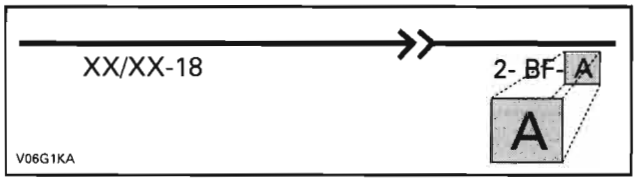


*THE SHADED PART INDICATES THE CONNECTOR LOCATION IN HOUSING*

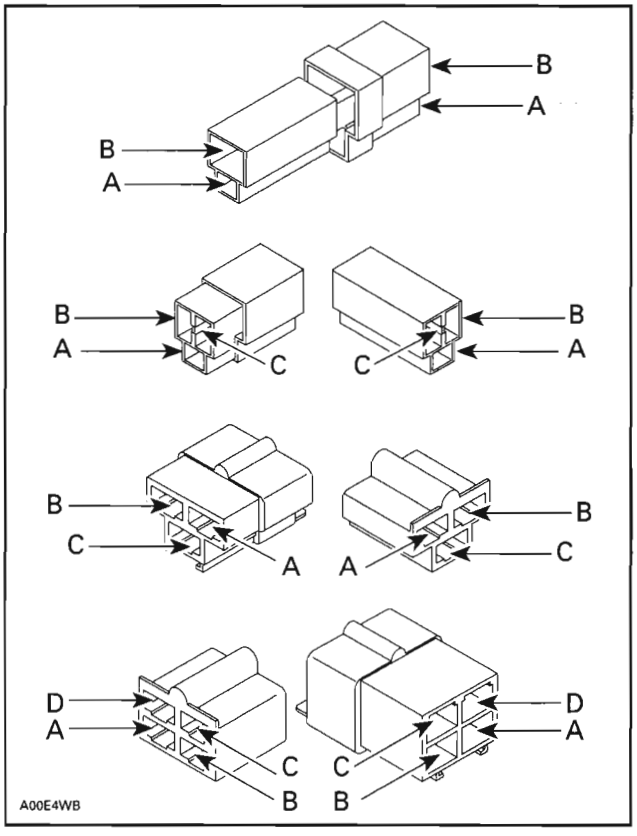


*TYPICAL*

# 2008 RENEGADE 800

# DISTRIBUTION SYSTEM

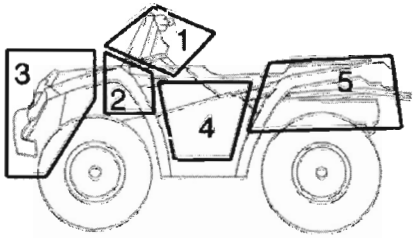


| ZONE # | ZONE DESCRIPTION |
|---|---|
| 1 | STEERING AREA |
| 2 | MODULE AREA |
| 3 | FRONT OF VEHICLE |
| 4 | ENGINE AREA |
| 5 | REAR OF VEHICLE |

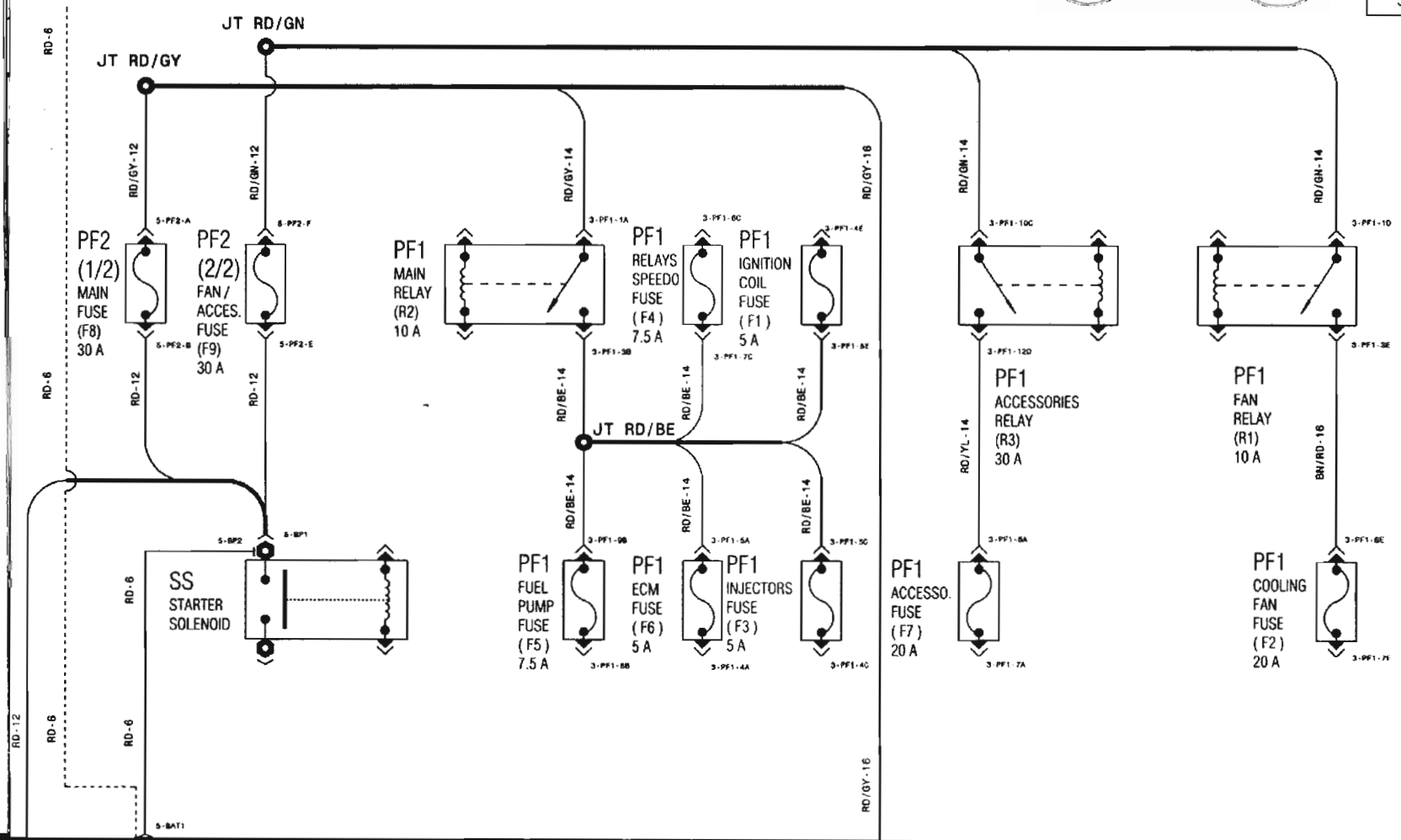

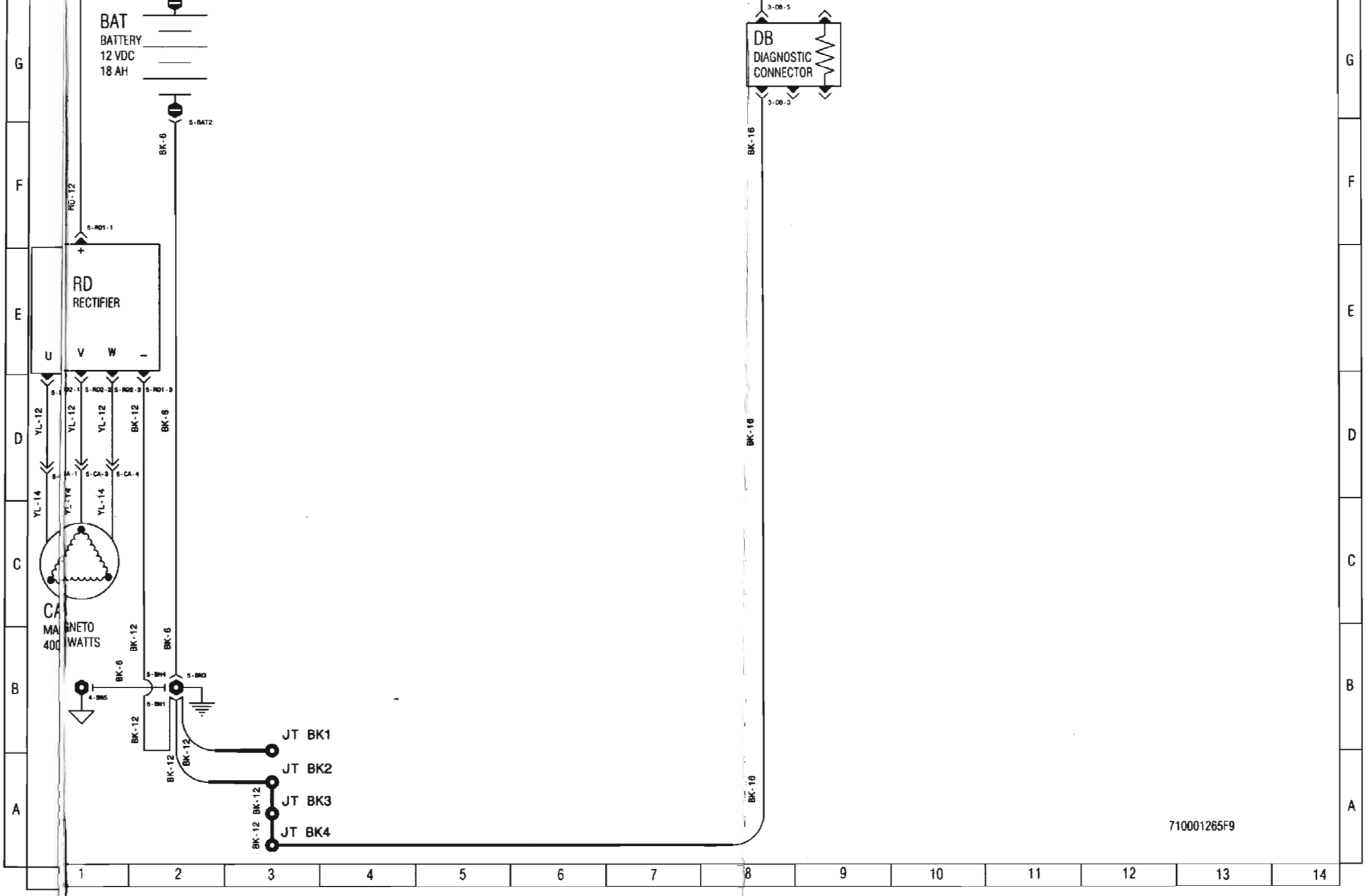
BAT
BATTERY
12 VDC
18 AH
5-BAT2
BK-6
RD-12
5-RD1-1
RD
RECTIFIER
U
V
W
–
YL-12
BK-12
BK-8
YL-14
CA
MAGNETO
400 WATTS
4-BM5
5-BM4
5-BM3
5-BM1
JT BK1
JT BK2
JT BK3
JT BK4
3-DB-5
DB
DIAGNOSTIC
CONNECTOR
3-DB-3
BK-16
710001265F9

# 2008 RENEGADE 800

# INJECTION/IGNITION SYSTEM

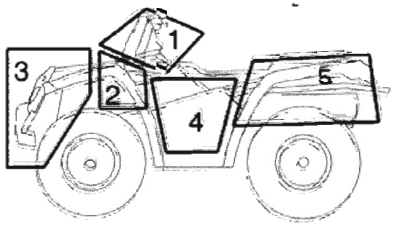


| ZONE # | ZONE DESCRIPTION |
|---|---|
| 1 | STEERING AREA |
| 2 | MODULE AREA |
| 3 | FRONT OF VEHICLE |
| 4 | ENGINE AREA |
| 5 | REAR OF VEHICLE |

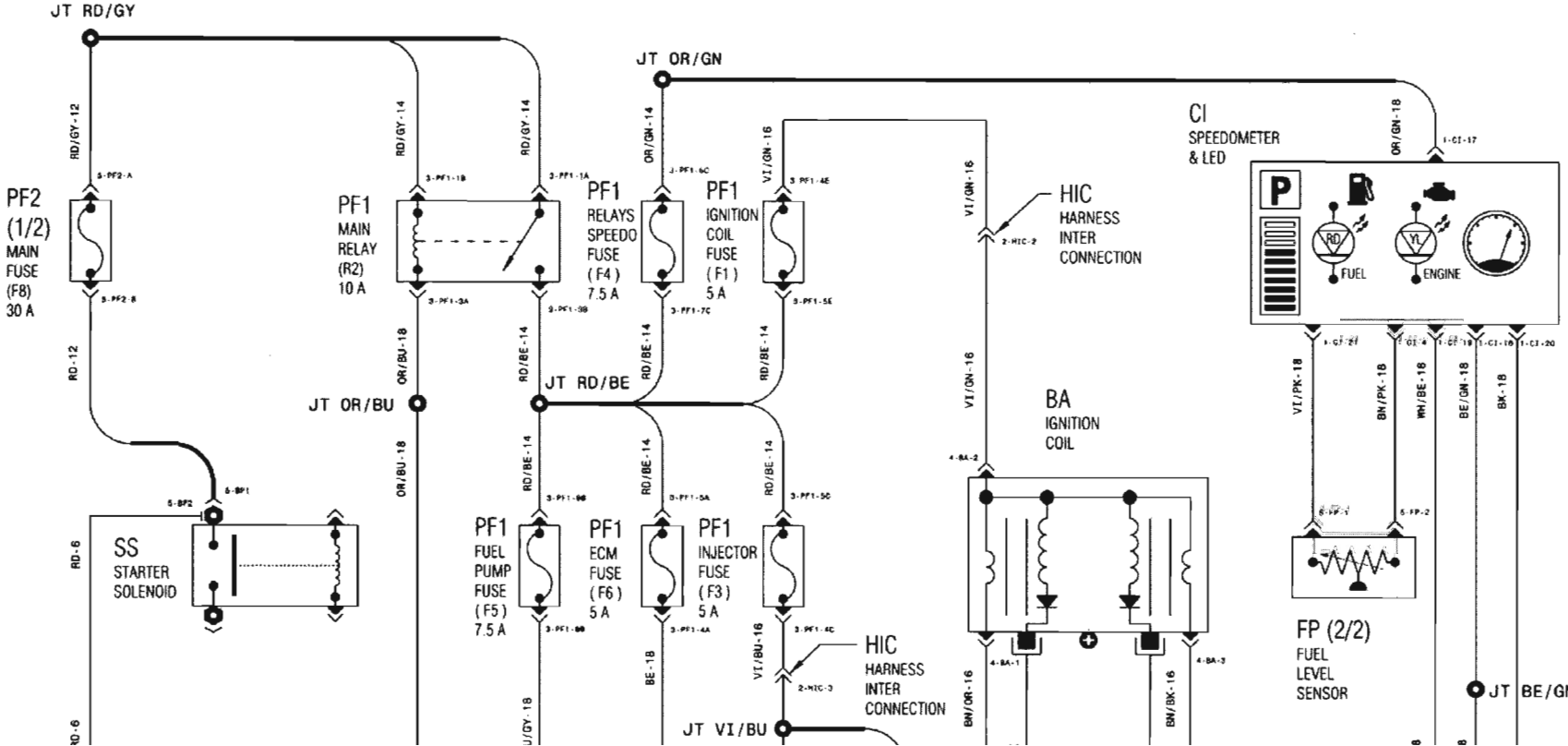

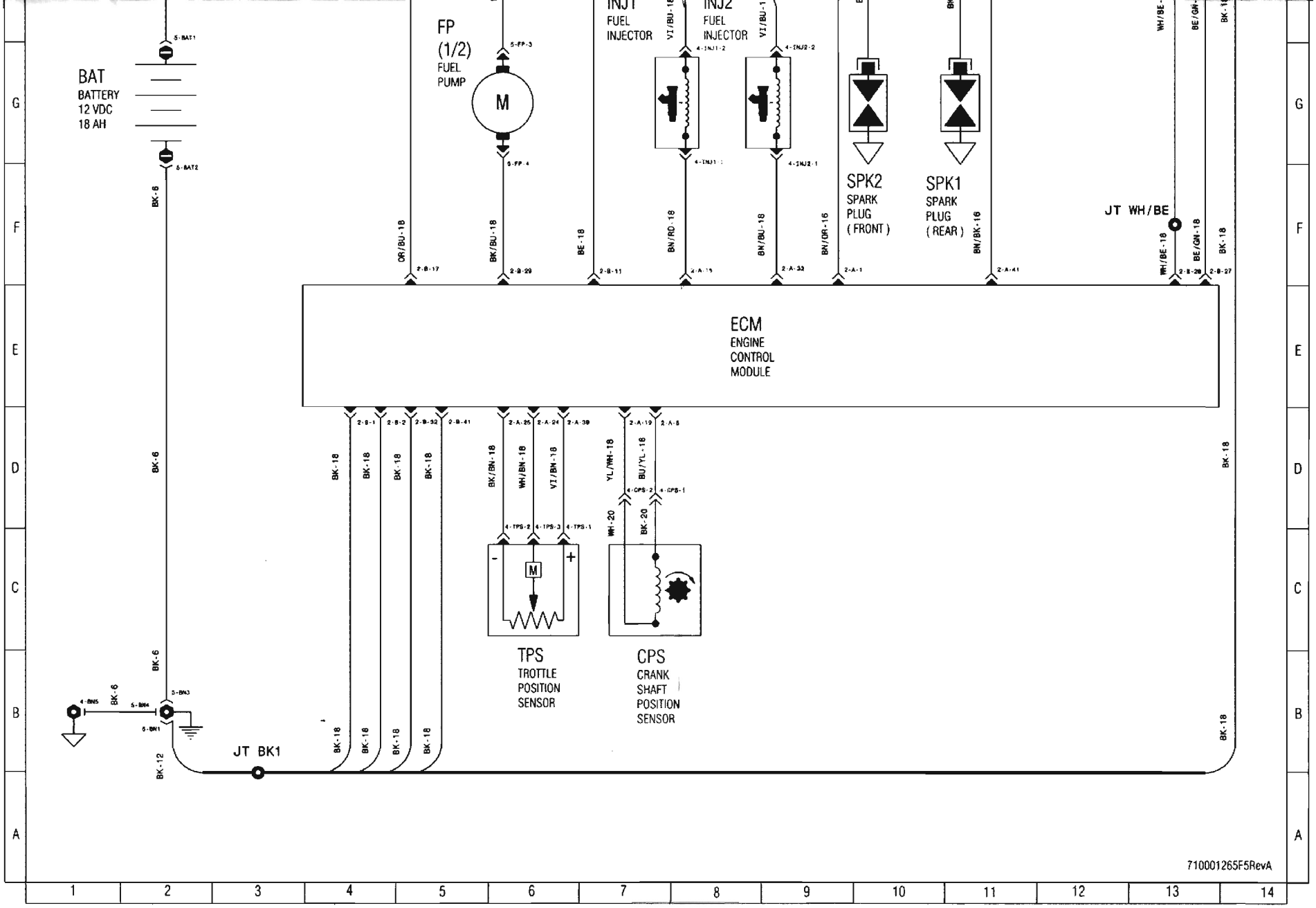
BAT
BATTERY
12 VDC
18 AH
FP
(1/2)
FUEL
PUMP
M
INJ1
FUEL
INJECTOR
INJ2
FUEL
INJECTOR
SPK2
SPARK
PLUG
( FRONT )
SPK1
SPARK
PLUG
( REAR )
JT WH/BE
ECM
ENGINE
CONTROL
MODULE
TPS
TROTTLE
POSITION
SENSOR
CPS
CRANK
SHAFT
POSITION
SENSOR
JT BK1
BK-6
BK-12
BK-18
OR/BU-18
BK/BU-18
BE-18
BN/RD-18
BN/BU-18
BN/OR-16
BN/BK-16
WH/BE-18
BE/GN-18
BK/BN-18
WH/BN-18
VI/BN-18
YL/WH-18
BU/YL-18
WH-20
BK-20
710001265F5RevA

# 2008 RENEGADE 800

# COOLING SYSTEM

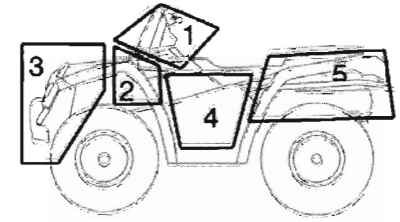


| ZONE # | ZONE DESCRIPTION |
|---|---|
| 1 | STEERING AREA |
| 2 | MODULE AREA |
| 3 | FRONT OF VEHICLE |
| 4 | ENGINE AREA |
| 5 | REAR OF VEHICLE |

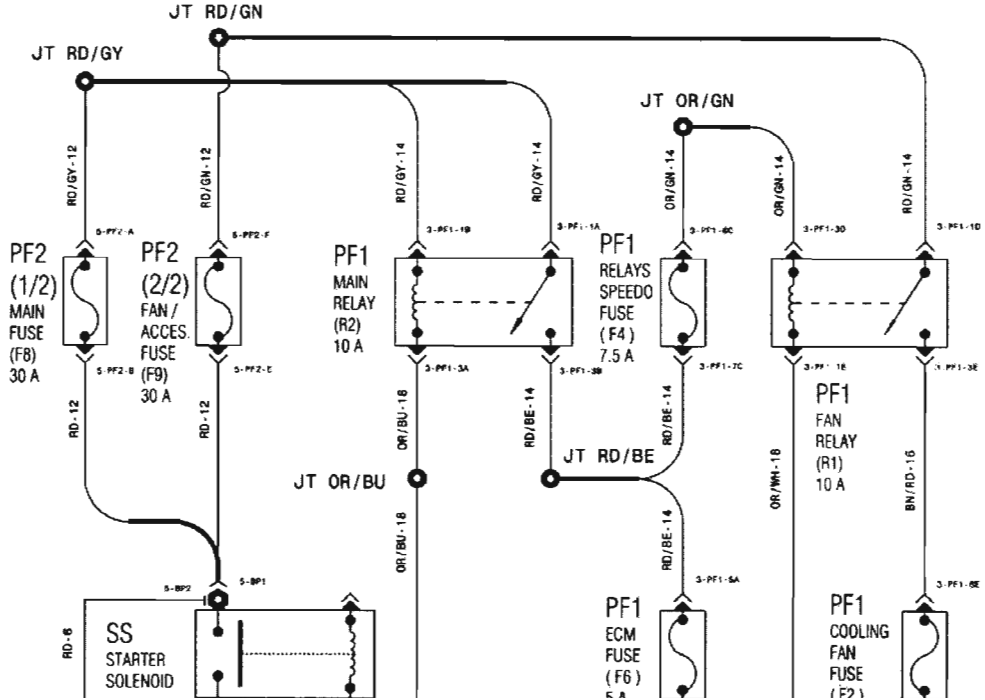

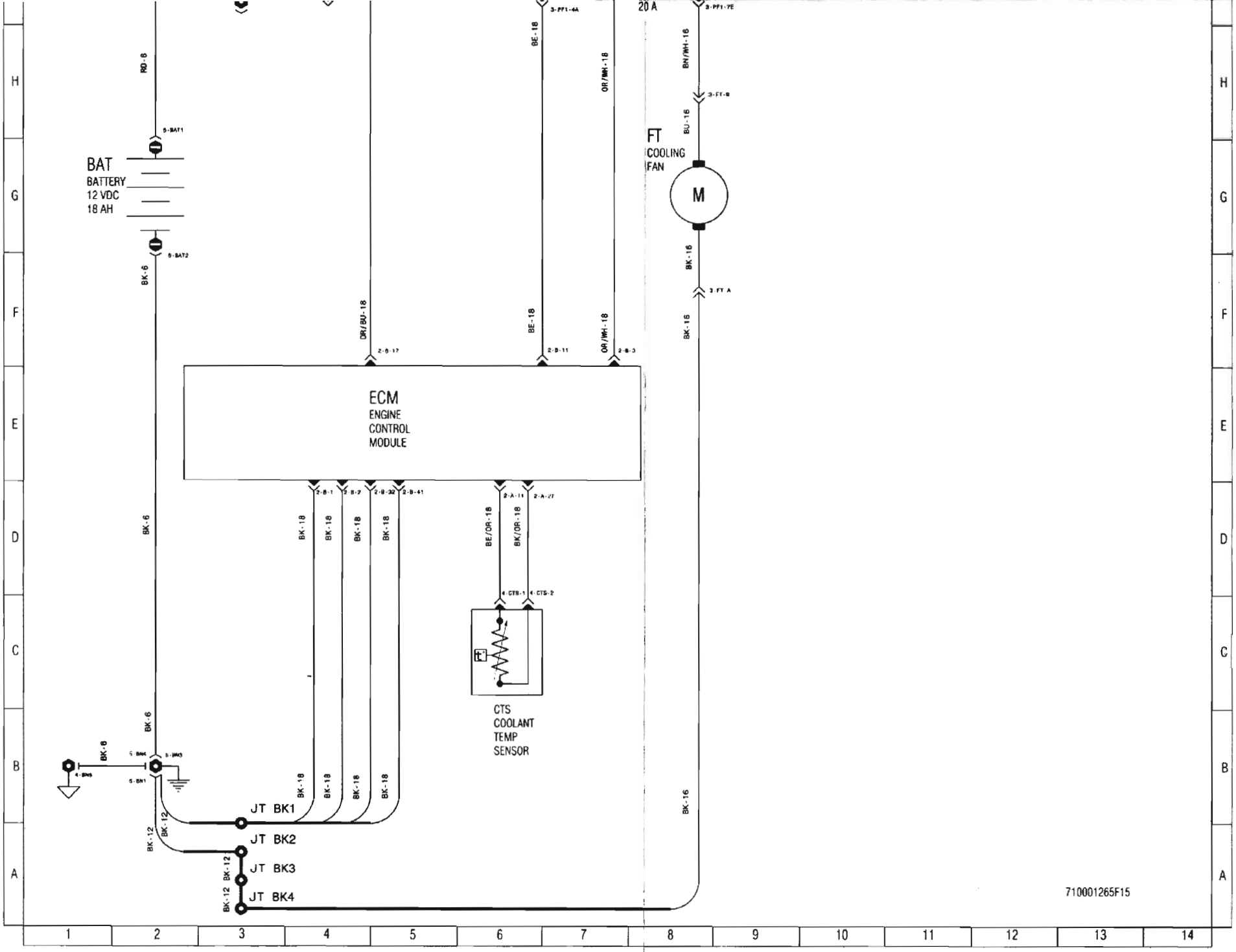
BAT
BATTERY
12 VDC
18 AH
ECM
ENGINE
CONTROL
MODULE
FT
COOLING
FAN
M
20 A
CTS
COOLANT
TEMP
SENSOR
JT BK1
JT BK2
JT BK3
JT BK4
710001265F15

# 2008 RENEGADE 800

# STARTING SYSTEM

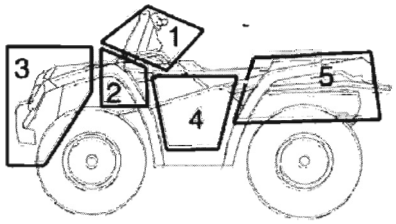


| ZONE # | ZONE DESCRIPTION |
|---|---|
| 1 | STEERING AREA |
| 2 | MODULE AREA |
| 3 | FRONT OF VEHICLE |
| 4 | ENGINE AREA |
| 5 | REAR OF VEHICLE |

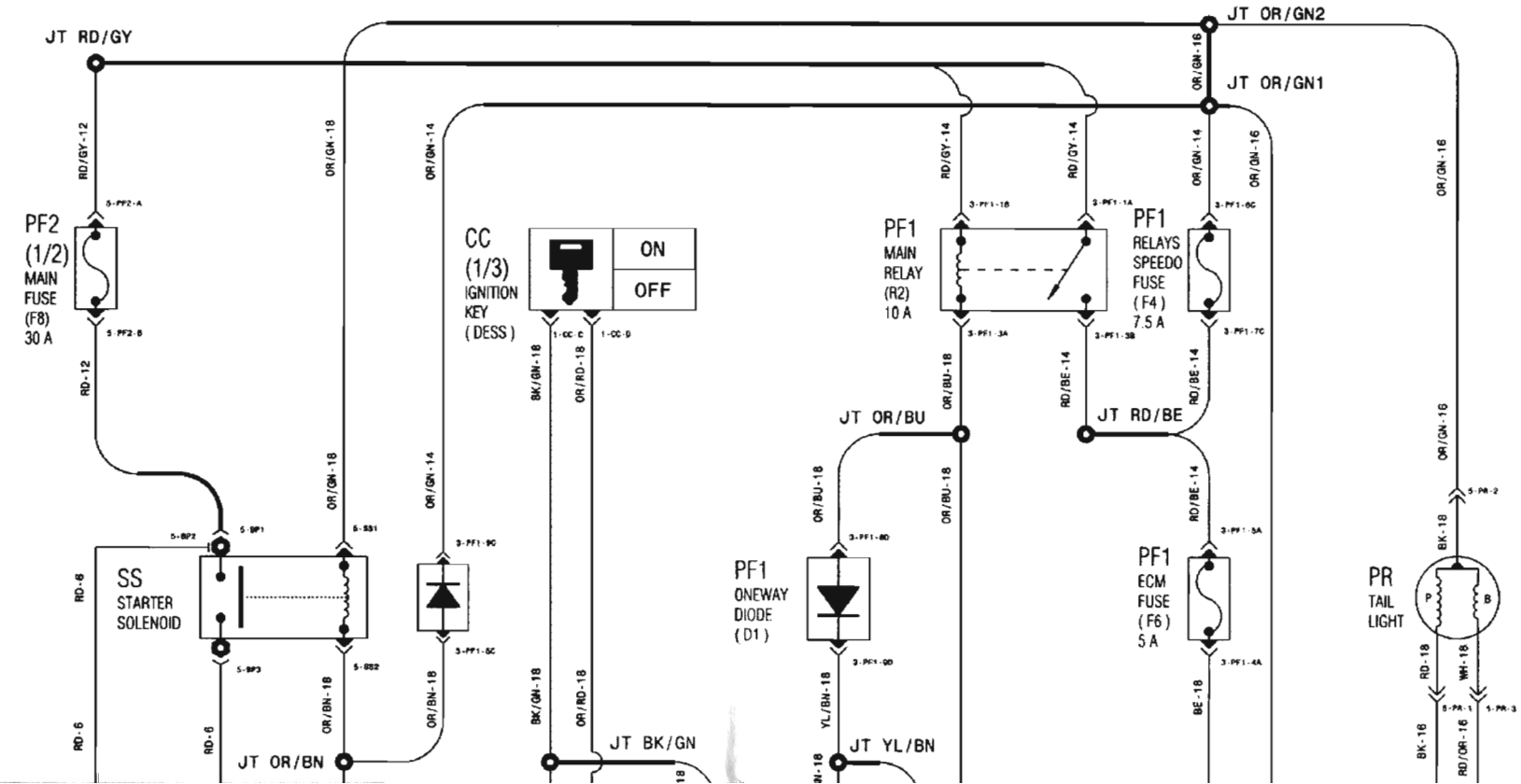

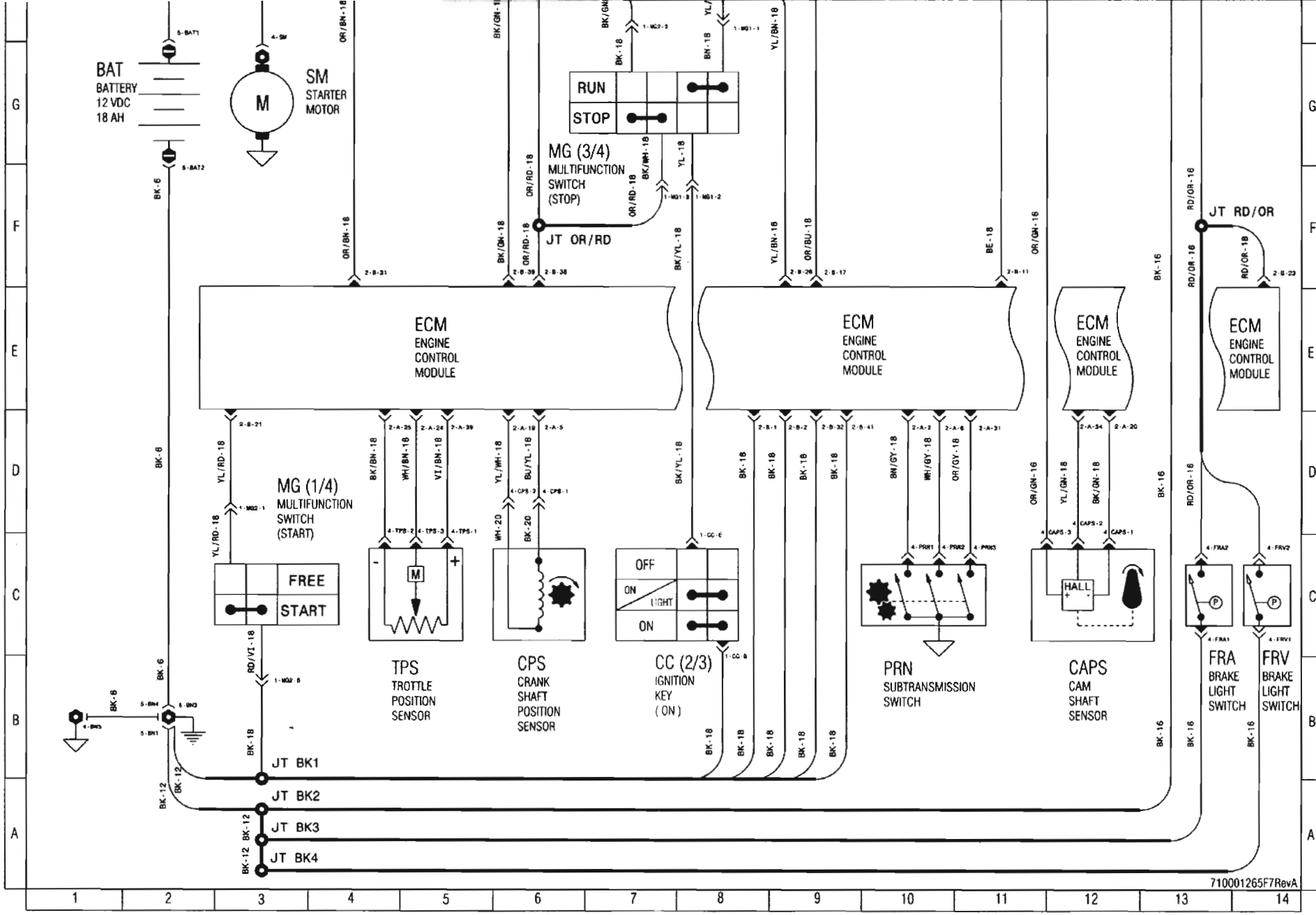
BAT
BATTERY
12 VDC
18 AH
SM
STARTER
MOTOR
M
RUN
STOP
MG (3/4)
MULTIFUNCTION
SWITCH
(STOP)
JT OR/RD
ECM
ENGINE
CONTROL
MODULE
ECM
ENGINE
CONTROL
MODULE
ECM
ENGINE
CONTROL
MODULE
ECM
ENGINE
CONTROL
MODULE
JT RD/OR
MG (1/4)
MULTIFUNCTION
SWITCH
(START)
FREE
START
TPS
TROTTLE
POSITION
SENSOR
CPS
CRANK
SHAFT
POSITION
SENSOR
OFF
ON
LIGHT
ON
CC (2/3)
IGNITION
KEY
(ON)
PRN
SUBTRANSMISSION
SWITCH
HALL
CAPS
CAM
SHAFT
SENSOR
FRA
BRAKE
LIGHT
SWITCH
FRV
BRAKE
LIGHT
SWITCH
JT BK1
JT BK2
JT BK3
JT BK4
710001265F7RevA

# 2008 RENEGADE 800

# CHARGING SYSTEM

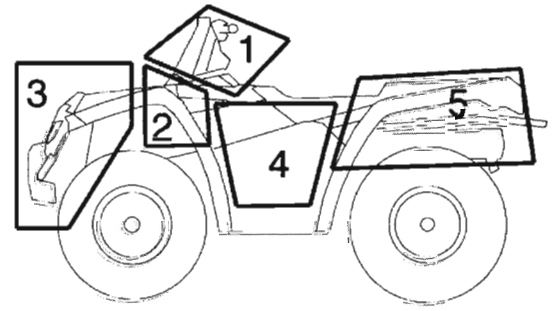


| ZONE # | ZONE DESCRIPTION |
|---|---|
| 1 | STEERING AREA |
| 2 | MODULE AREA |
| 3 | FRONT OF VEHICLE |
| 4 | ENGINE AREA |
| 5 | REAR OF VEHICLE |

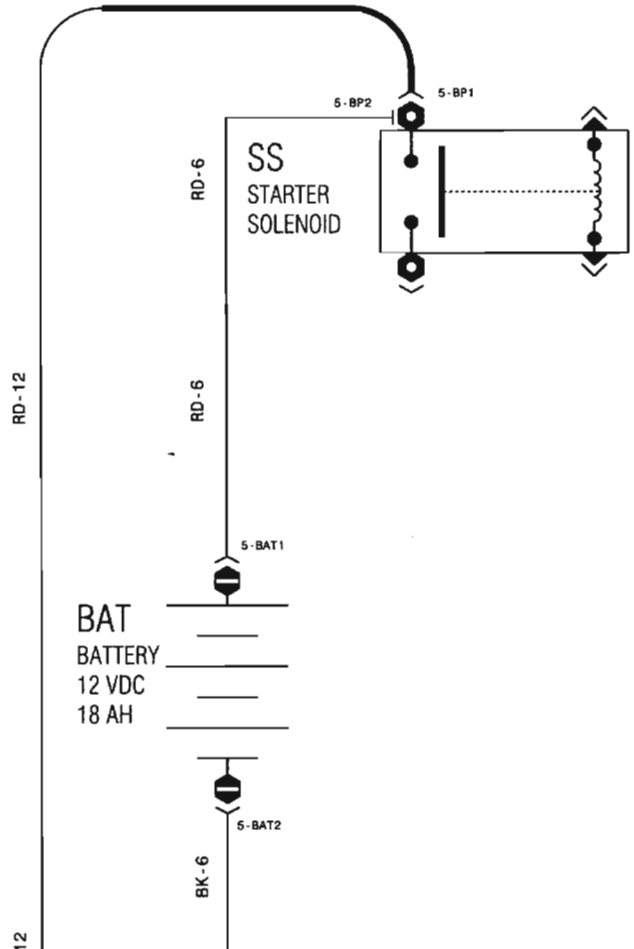

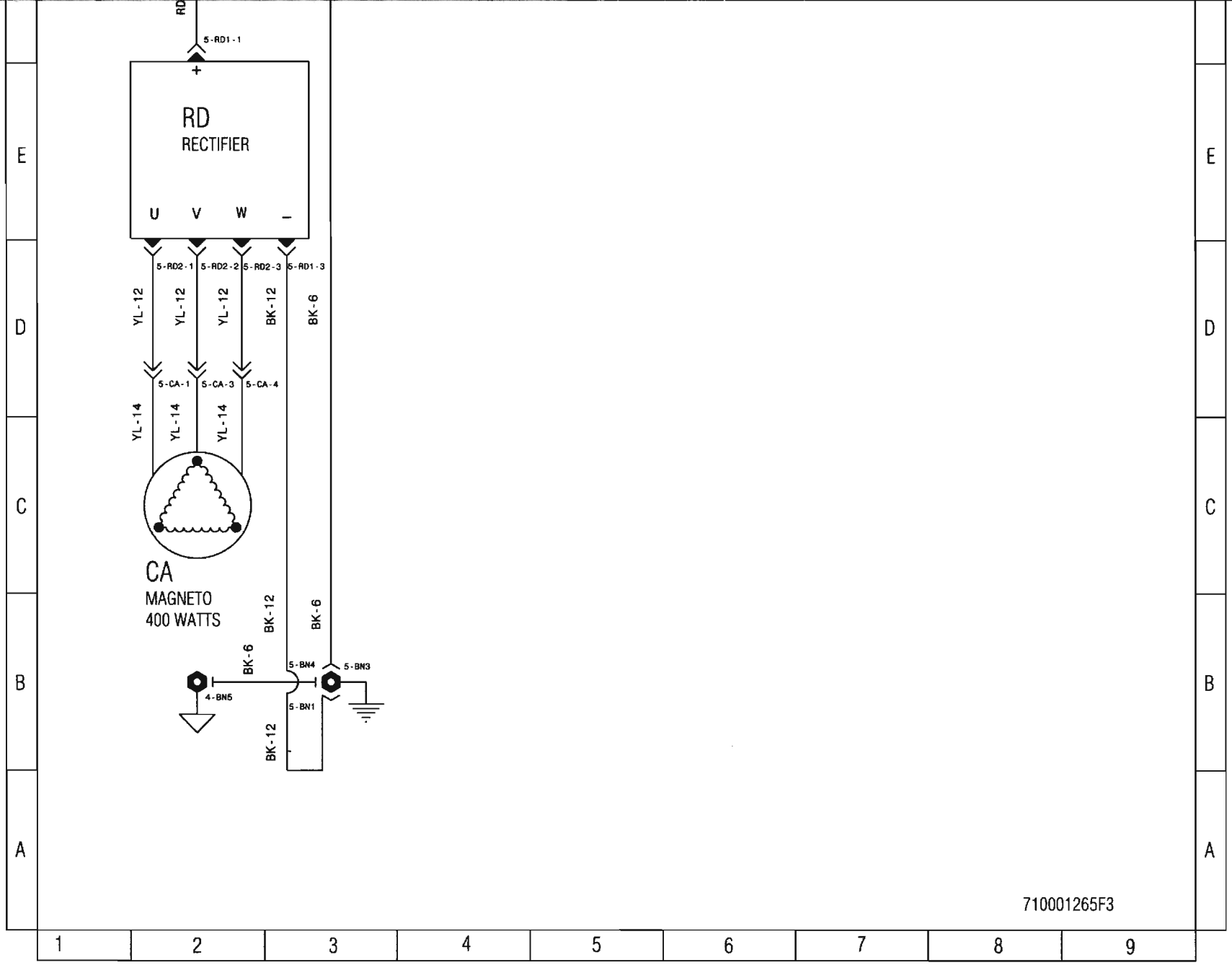
RD
5-RD1-1
+
RD
RECTIFIER
U
V
W
–
5-RD2-1
5-RD2-2
5-RD2-3
5-RD1-3
YL-12
YL-12
YL-12
BK-12
BK-6
5-CA-1
5-CA-3
5-CA-4
YL-14
YL-14
YL-14
CA
MAGNETO
400 WATTS
BK-12
BK-6
BK-6
5-BN4
5-BN3
4-BN5
5-BN1
BK-12
710001265F3

# 2008 RENEGADE 800

# ACCESSORIES SYSTEM

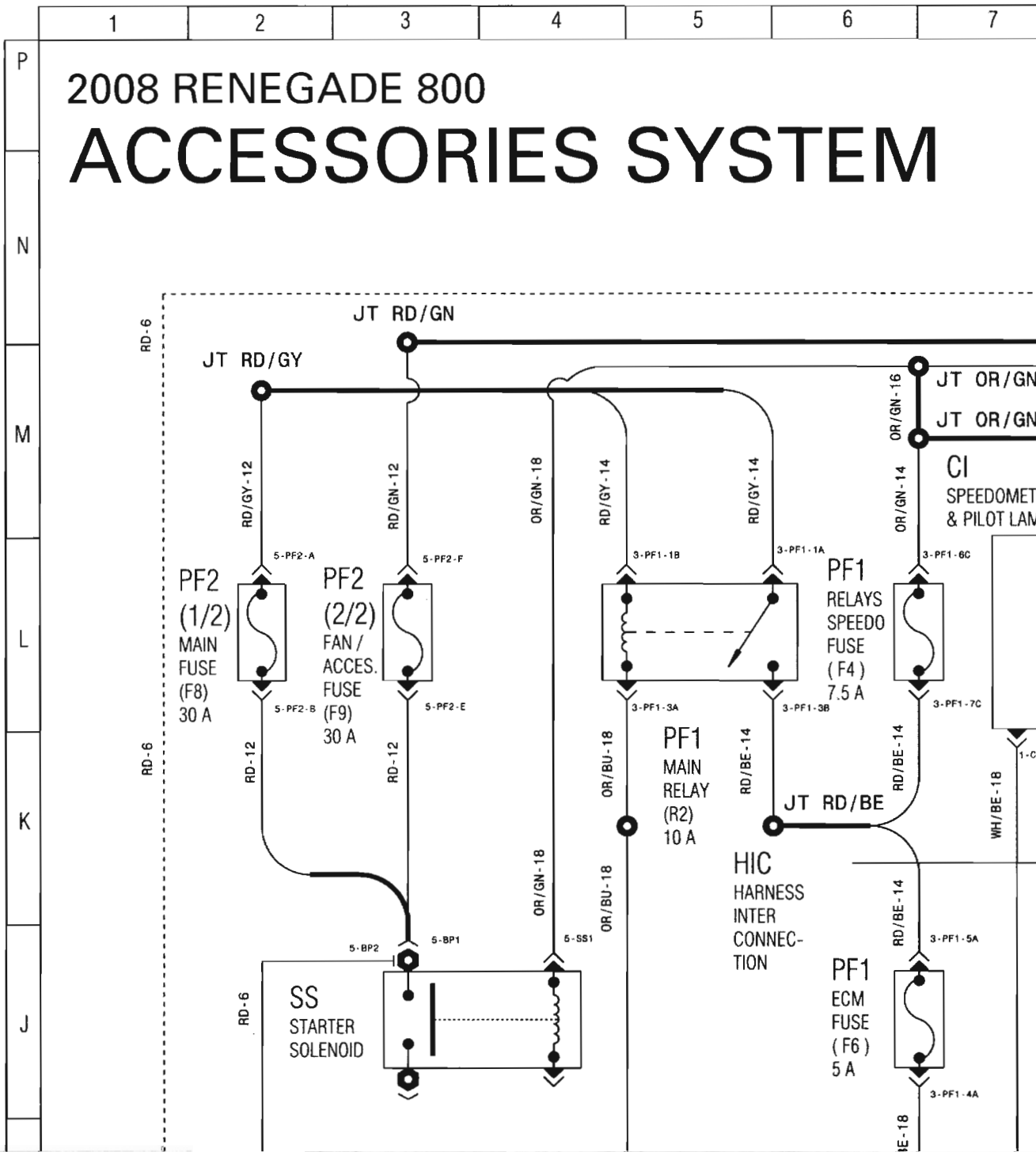

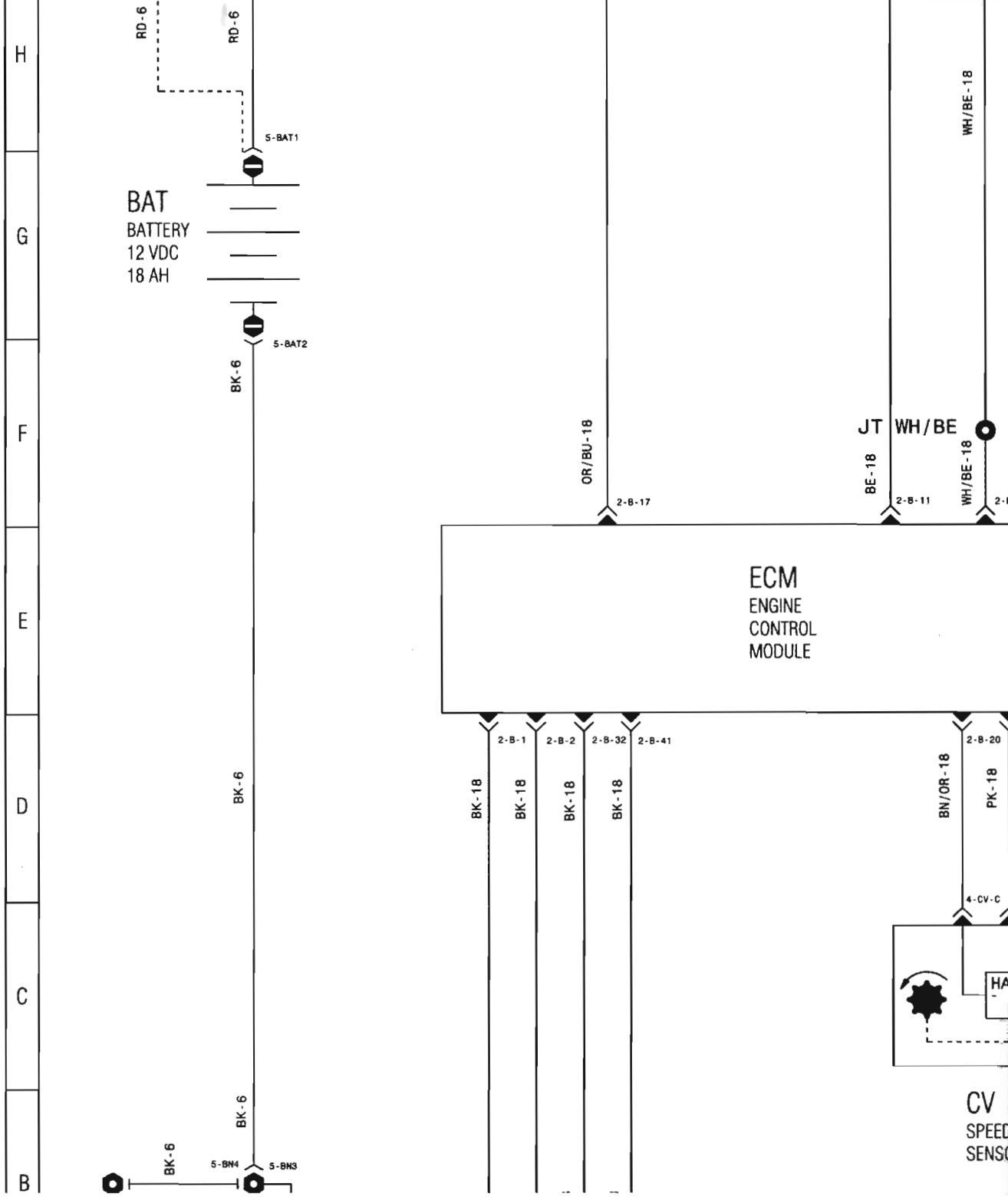
H
G
F
E
D
C
B
RD-6
RD-6
5-BAT1
BAT
BATTERY
12 VDC
18 AH
5-BAT2
BK-6
BK-6
BK-6
BK-6
5-BN4
5-BN3
OR/BU-18
2-B-17
JT
WH/BE
BE-18
2-B-11
WH/BE-18
WH/BE-18
ECM
ENGINE
CONTROL
MODULE
2-B-1
2-B-2
2-B-32
2-B-41
BK-18
BK-18
BK-18
BK-18
2-B-20
BN/OR-18
PK-18
4-CV-C
CV
SPEED
SENSO

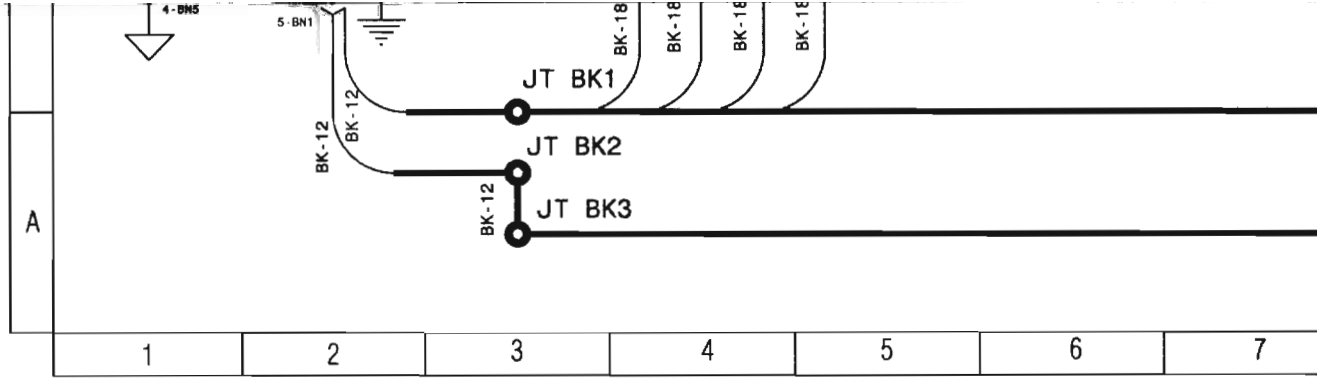
4-BN5
5-BN1
BK-18
BK-18
BK-18
BK-18
JT BK1
BK-12
BK-12
JT BK2
BK-12
JT BK3
A
1
2
3
4
5
6
7

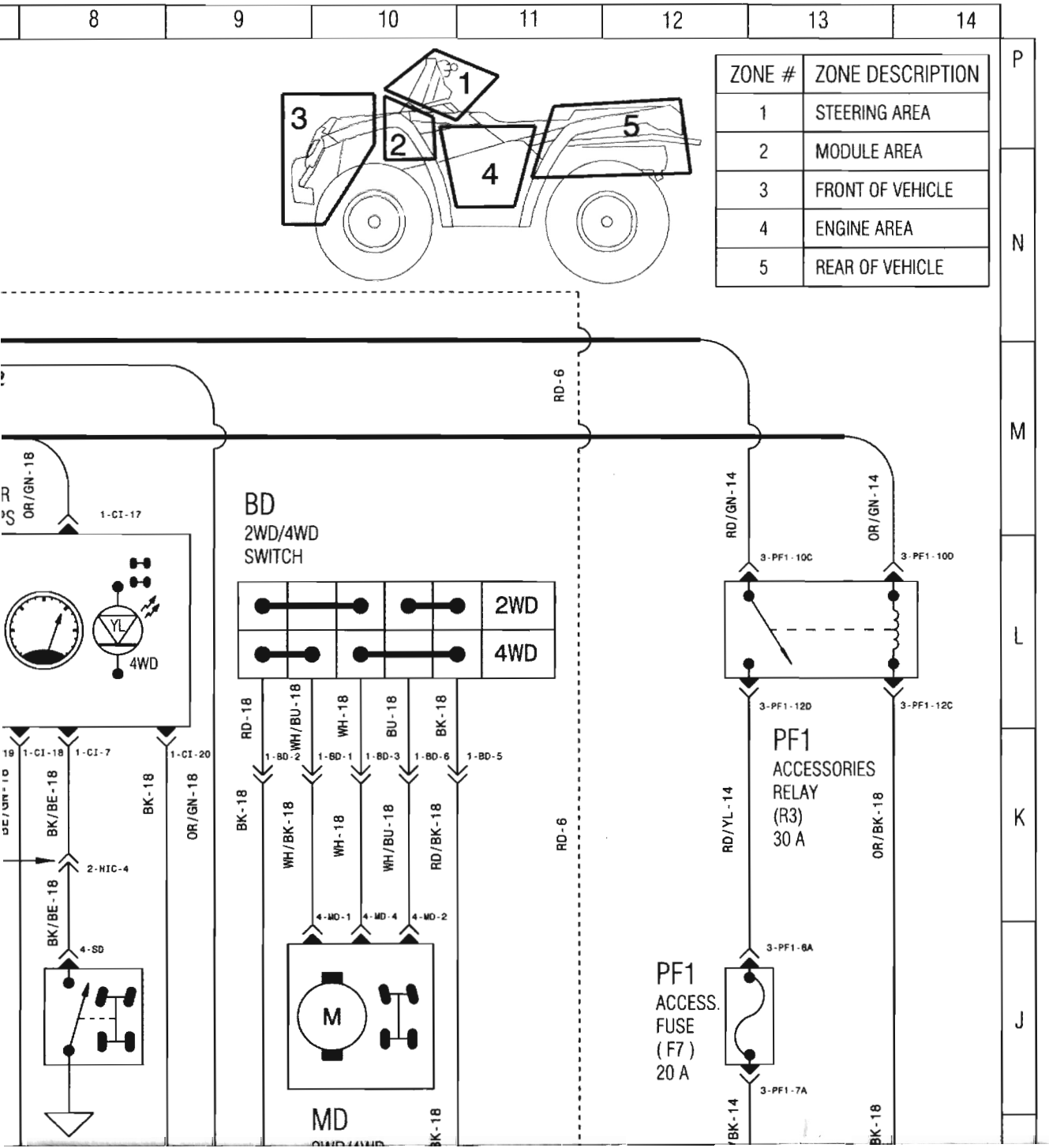


| ZONE # | ZONE DESCRIPTION |
|---|---|
| 1 | STEERING AREA |
| 2 | MODULE AREA |
| 3 | FRONT OF VEHICLE |
| 4 | ENGINE AREA |
| 5 | REAR OF VEHICLE |

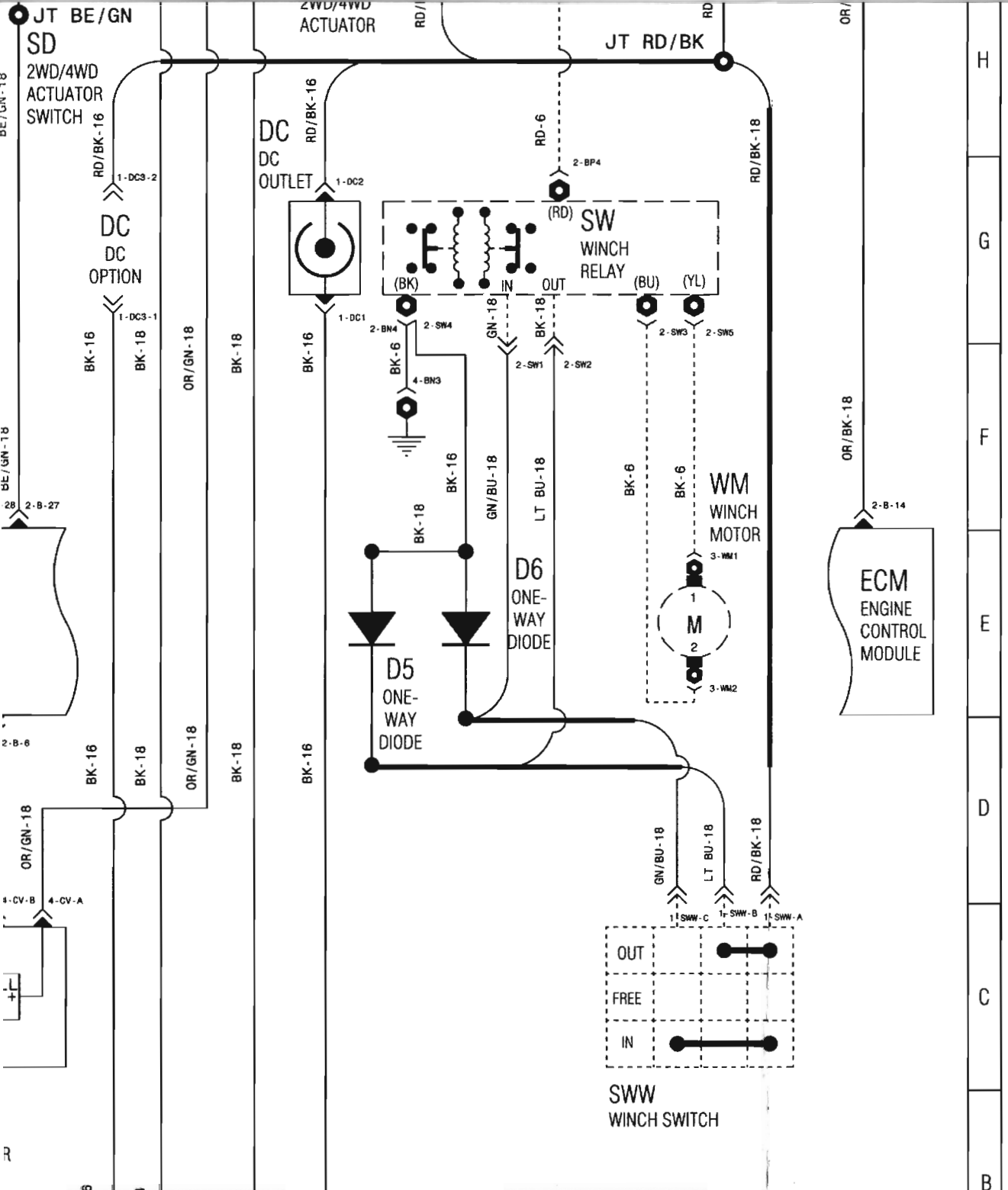
JT BE/GN
SD
2WD/4WD
ACTUATOR
SWITCH
2WD/4WD
ACTUATOR
JT RD/BK
DC
DC
OUTLET
DC
DC
OPTION
SW
WINCH
RELAY
(BK)
IN
OUT
(BU)
(YL)
(RD)
WM
WINCH
MOTOR
D6
ONE-
WAY
DIODE
D5
ONE-
WAY
DIODE
ECM
ENGINE
CONTROL
MODULE
OUT
FREE
IN
SWW
WINCH SWITCH
RD/BK-16
RD-6
RD/BK-18
OR/BK-18
BK-16
BK-18
OR/GN-18
BE/GN-18
BK-6
GN-18
GN/BU-18
LT BU-18
2-BP4
1-DC3-2
1-DC3-1
1-DC2
1-DC1
2-BN4
2-SW4
4-BN3
2-SW1
2-SW2
2-SW3
2-SW5
3-WM1
3-WM2
2-B-27
2-B-6
2-B-14
4-CV-B
4-CV-A
1-SWW-C
1-SWW-B
1-SWW-A
H
G
F
E
D
C
B

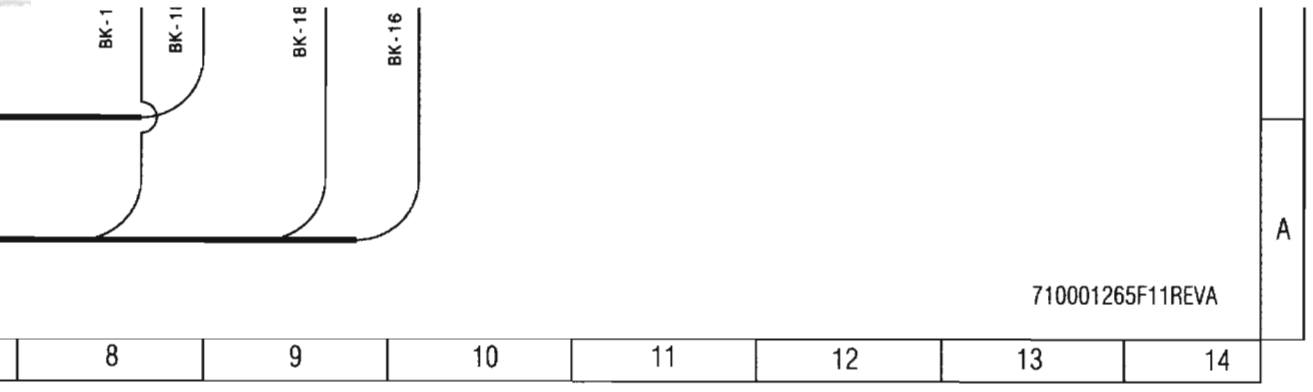
BK-1
BK-11
BK-18
BK-16
A
710001265F11REVA
8
9
10
11
12
13
14

2008 RENEGADE 800

# GENERAL SYSTEM

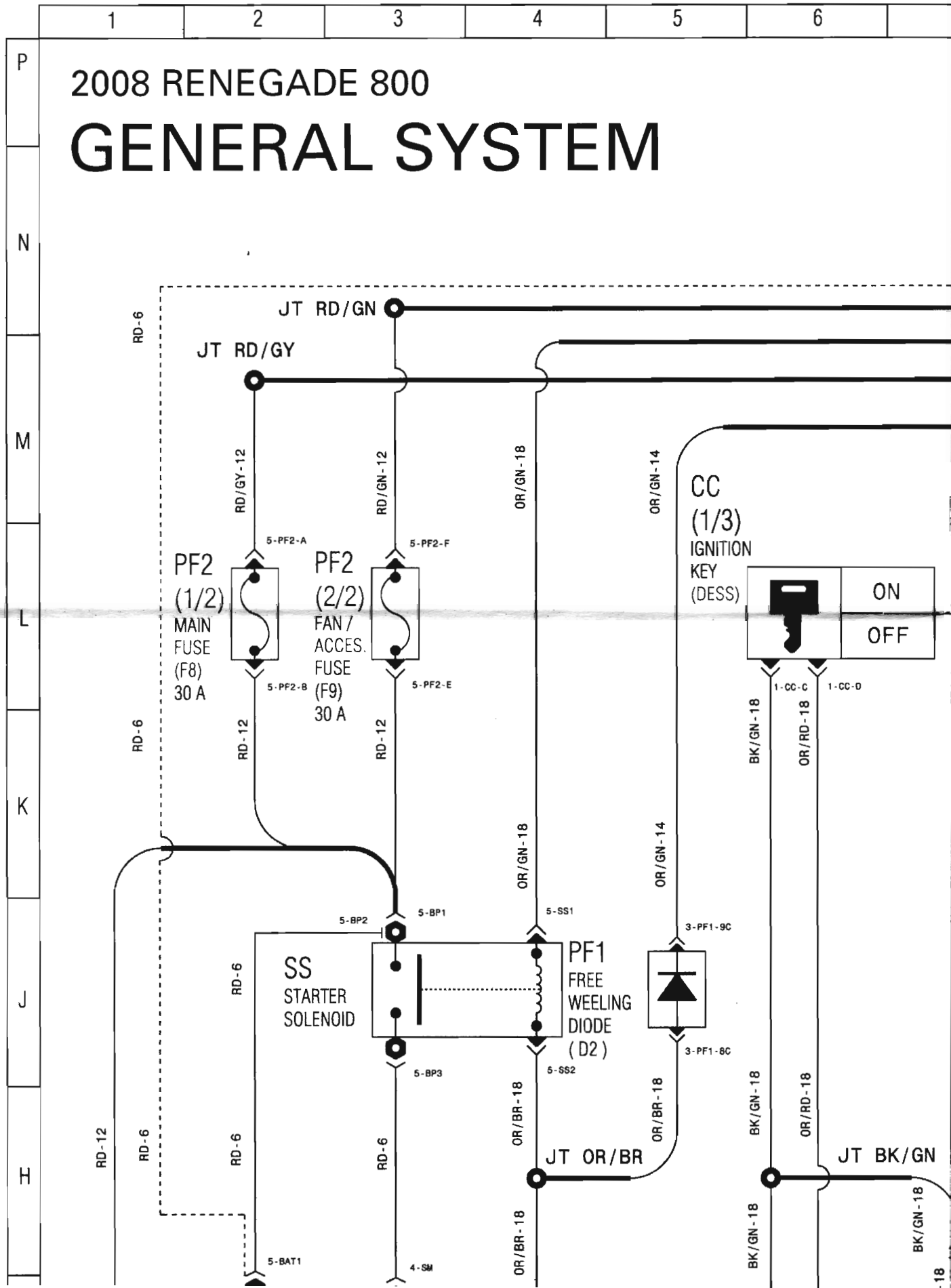

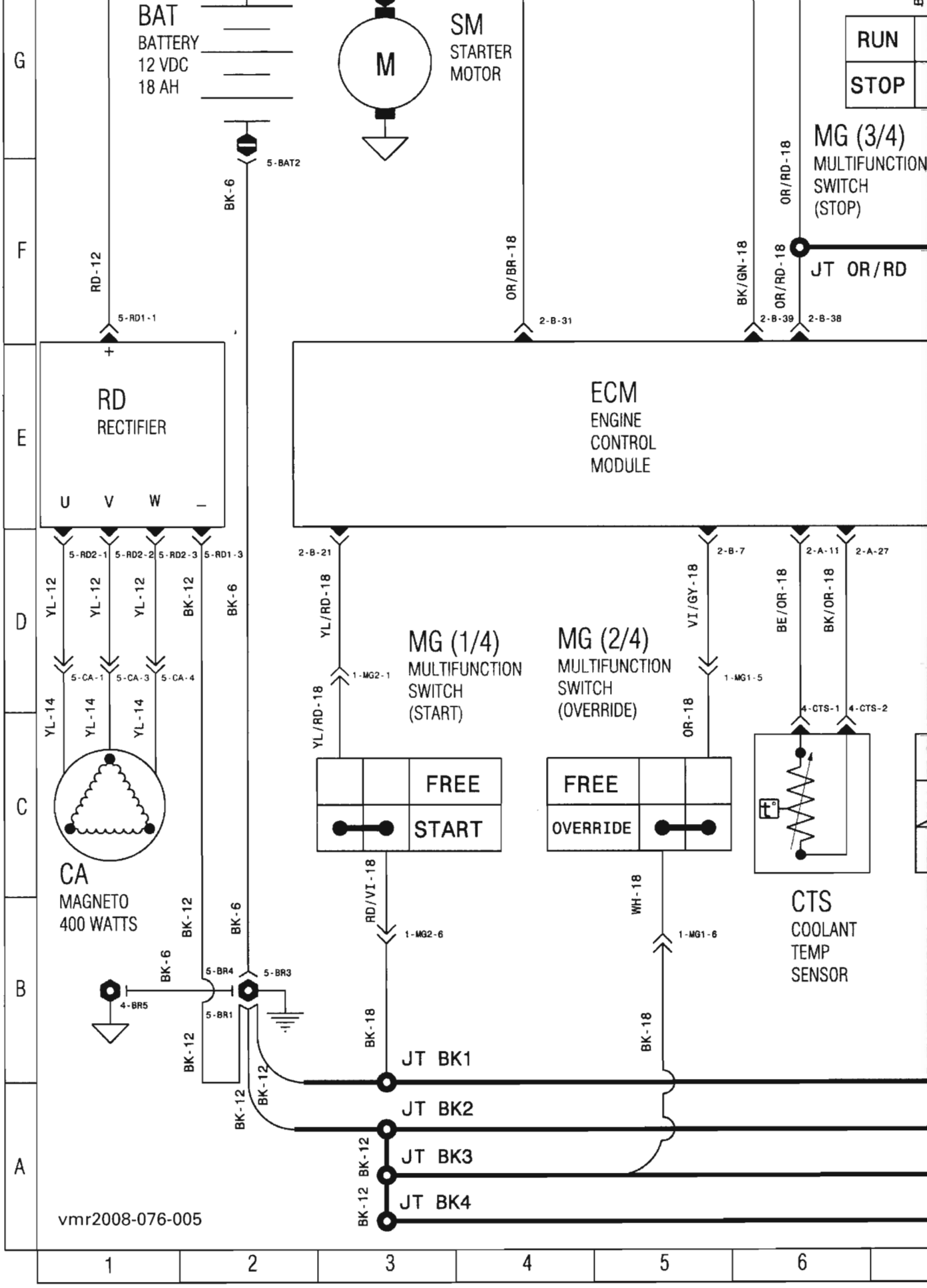
BAT
BATTERY
12 VDC
18 AH
SM
STARTER
MOTOR
M
RUN
STOP
MG (3/4)
MULTIFUNCTION
SWITCH
(STOP)
JT OR/RD
5-BAT2
BK-6
RD-12
5-RD1-1
OR/BR-18
2-B-31
OR/RD-18
BK/GN-18
2-B-39
2-B-38
RD
RECTIFIER
U V W –
ECM
ENGINE
CONTROL
MODULE
5-RD2-1
5-RD2-2
5-RD2-3
5-RD1-3
YL-12
BK-12
2-B-21
YL/RD-18
2-B-7
VI/GY-18
2-A-11
2-A-27
BE/OR-18
BK/OR-18
MG (1/4)
MULTIFUNCTION
SWITCH
(START)
MG (2/4)
MULTIFUNCTION
SWITCH
(OVERRIDE)
1-MG2-1
1-MG1-5
5-CA-1
5-CA-3
5-CA-4
YL-14
OR-18
4-CTS-1
4-CTS-2
FREE
START
FREE
OVERRIDE
CA
MAGNETO
400 WATTS
RD/VI-18
WH-18
1-MG2-6
1-MG1-6
CTS
COOLANT
TEMP
SENSOR
4-BR5
5-BR4
5-BR3
5-BR1
BK-18
JT BK1
JT BK2
JT BK3
JT BK4
vmr2008-076-005
G
F
E
D
C
B
A
1
2
3
4
5
6

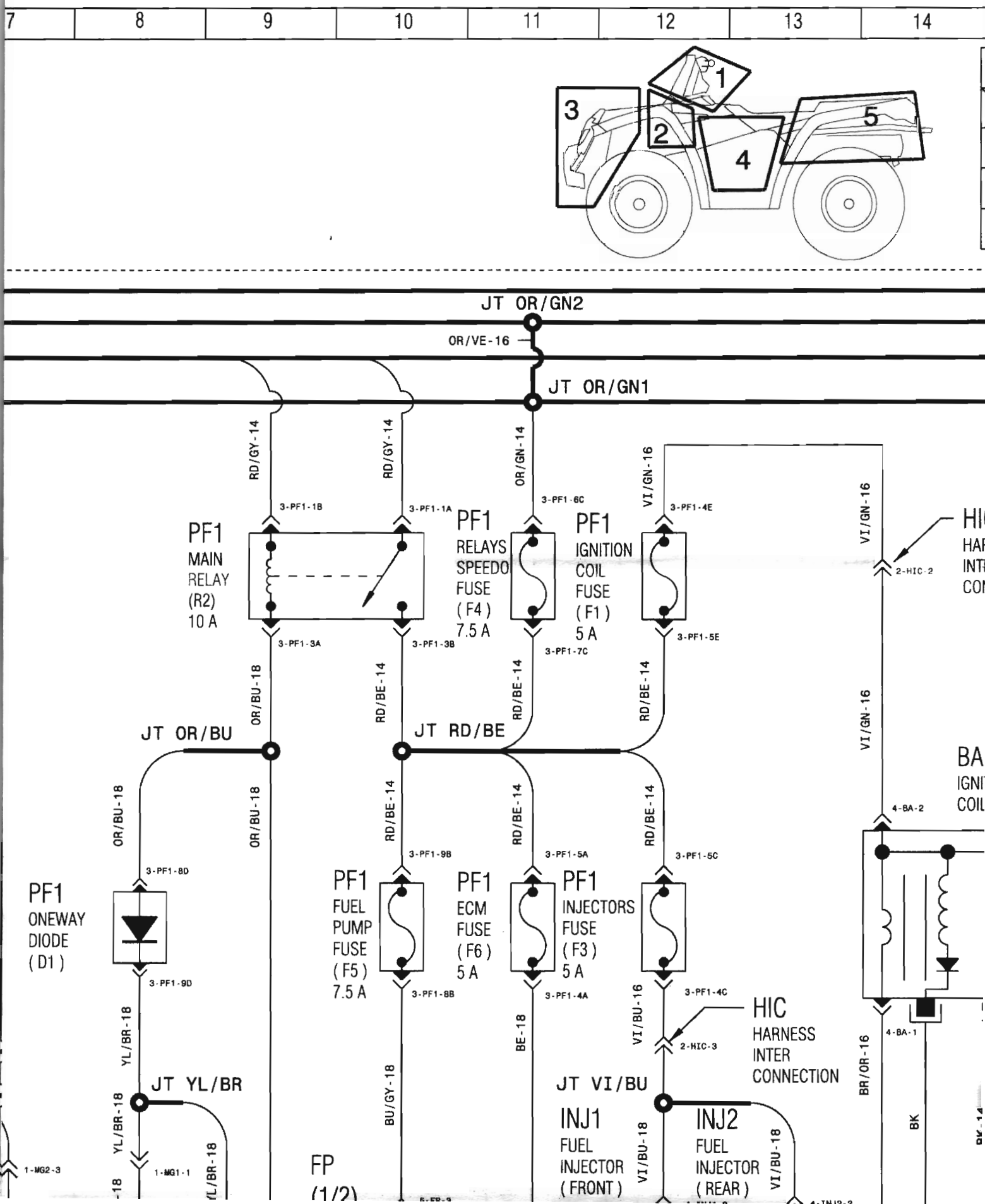
7
8
9
10
11
12
13
14
1
2
3
4
5
JT OR/GN2
OR/VE-16
JT OR/GN1
RD/GY-14
RD/GY-14
OR/GN-14
VI/GN-16
3-PF1-1B
3-PF1-1A
3-PF1-6C
3-PF1-4E
PF1
MAIN
RELAY
(R2)
10 A
PF1
RELAYS
SPEEDO
FUSE
(F4)
7.5 A
PF1
IGNITION
COIL
FUSE
(F1)
5 A
3-PF1-3A
3-PF1-3B
3-PF1-7C
3-PF1-5E
OR/BU-18
RD/BE-14
RD/BE-14
RD/BE-14
VI/GN-16
2-HIC-2
JT OR/BU
JT RD/BE
OR/BU-18
OR/BU-18
RD/BE-14
RD/BE-14
RD/BE-14
4-BA-2
3-PF1-8D
3-PF1-9B
3-PF1-5A
3-PF1-5C
PF1
ONEWAY
DIODE
(D1)
PF1
FUEL
PUMP
FUSE
(F5)
7.5 A
PF1
ECM
FUSE
(F6)
5 A
PF1
INJECTORS
FUSE
(F3)
5 A
3-PF1-9D
3-PF1-8B
3-PF1-4A
3-PF1-4C
VI/BU-16
2-HIC-3
HIC
HARNESS
INTER
CONNECTION
4-BA-1
YL/BR-18
BU/GY-18
BE-18
BR/OR-16
JT YL/BR
JT VI/BU
YL/BR-18
1-MG2-3
1-MG1-1
YL/BR-18
FP
(1/2)
INJ1
FUEL
INJECTOR
(FRONT)
VI/BU-18
INJ2
FUEL
INJECTOR
(REAR)
VI/BU-18
BK

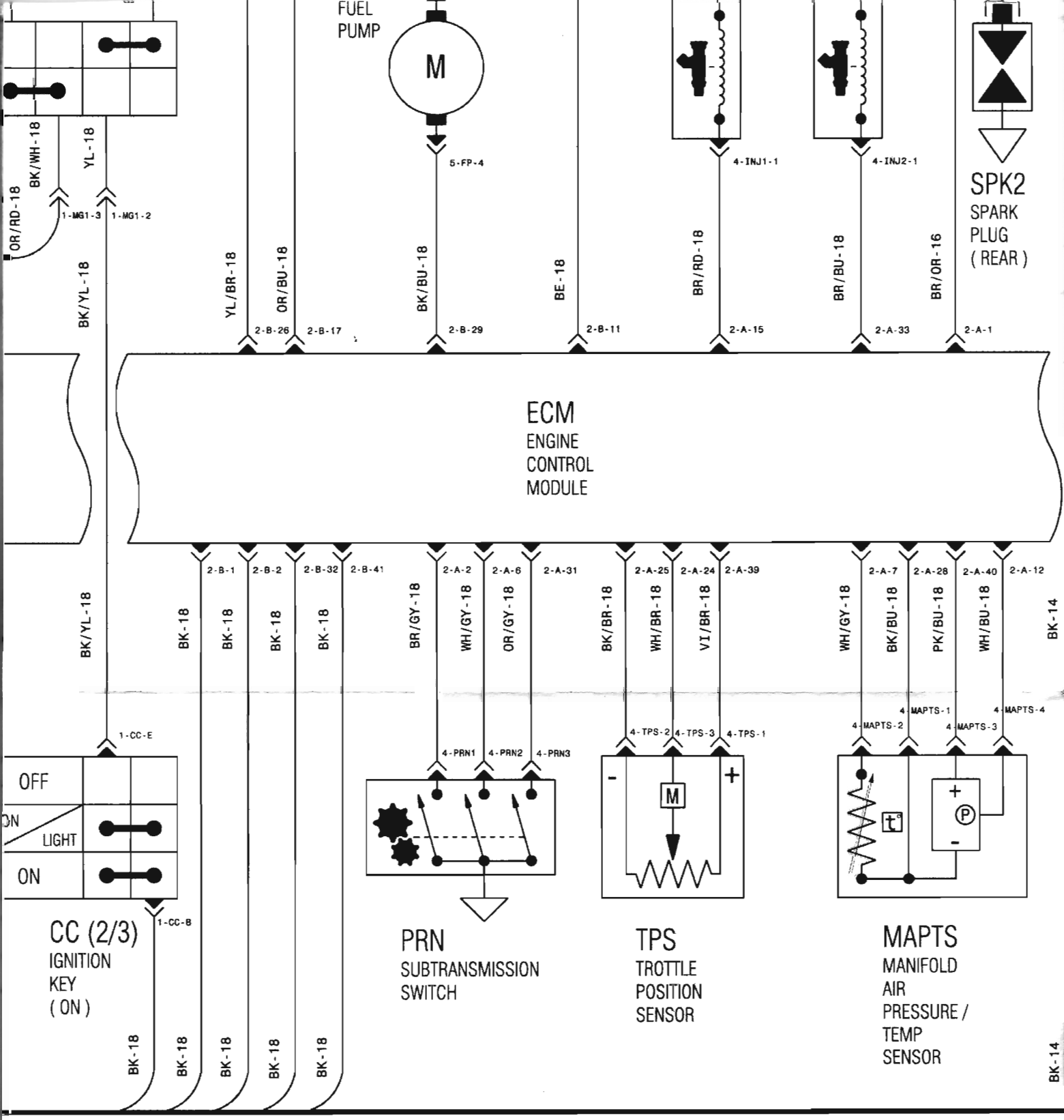


| 7 | 8 | 9 | 10 | 11 | 12 | 13 | 14 |
|---|---|---|---|---|---|---|---|

| 15 | 16 | 17 | 18 | 19 | 20 | 21 | 2 |
|---|---|---|---|---|---|---|---|

## TERMINAL IDENTIFICATION

| | NAME | ZONE-CONNECTOR NAME-TERMINAL #/A |
|---|---|---|
| EX: | CI | 1 - CI - 15 |
| EX: | CV | 4 - CV - A |
| EX: | ME | 2 - ME |

| AWG | MAX. CURRENT | MAX. FUSE CURRENT | MAX. WATT |
|---|---|---|---|
| # 6 | 100 amps | 125 amps | 1450 watts |
| # 8 | 65 amps | 80 amps | 930 watts |
| # 10 | 40 amps | 50 amps | 580 watts |
| # 12 | 25 amps | 30 amps | 365 watts |
| # 14 | 16 amps | 20 amps | 230 watts |
| # 16 | 10 amps | 15 amps | 145 watts |
| # 18 | 6 amps | 7.5 amps | 85 watts |
| * AT | 50°C MAX | | |

| ZONE |
|---|
| 1 |
| 2 |
| 3 |
| 4 |
| 5 |

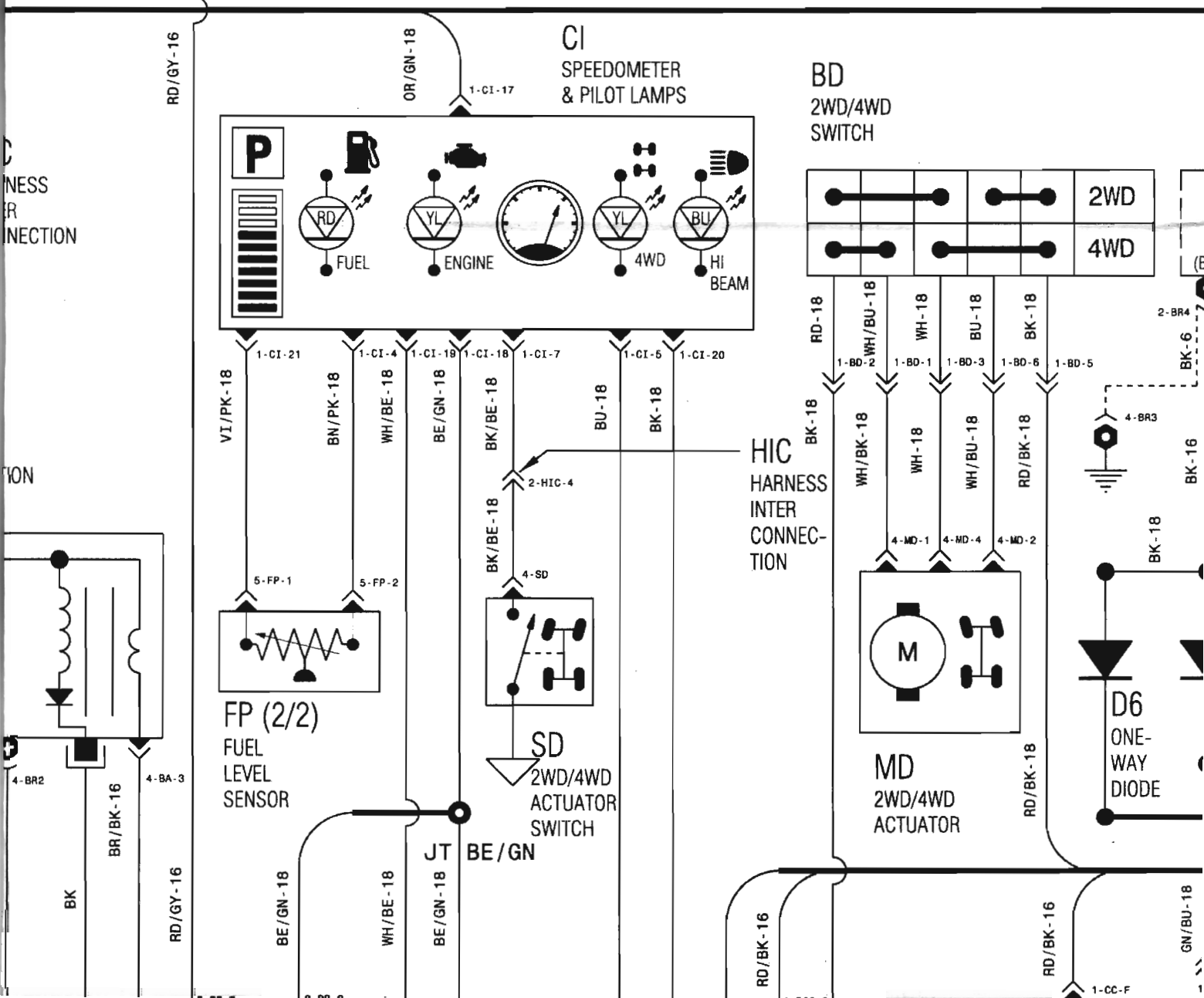

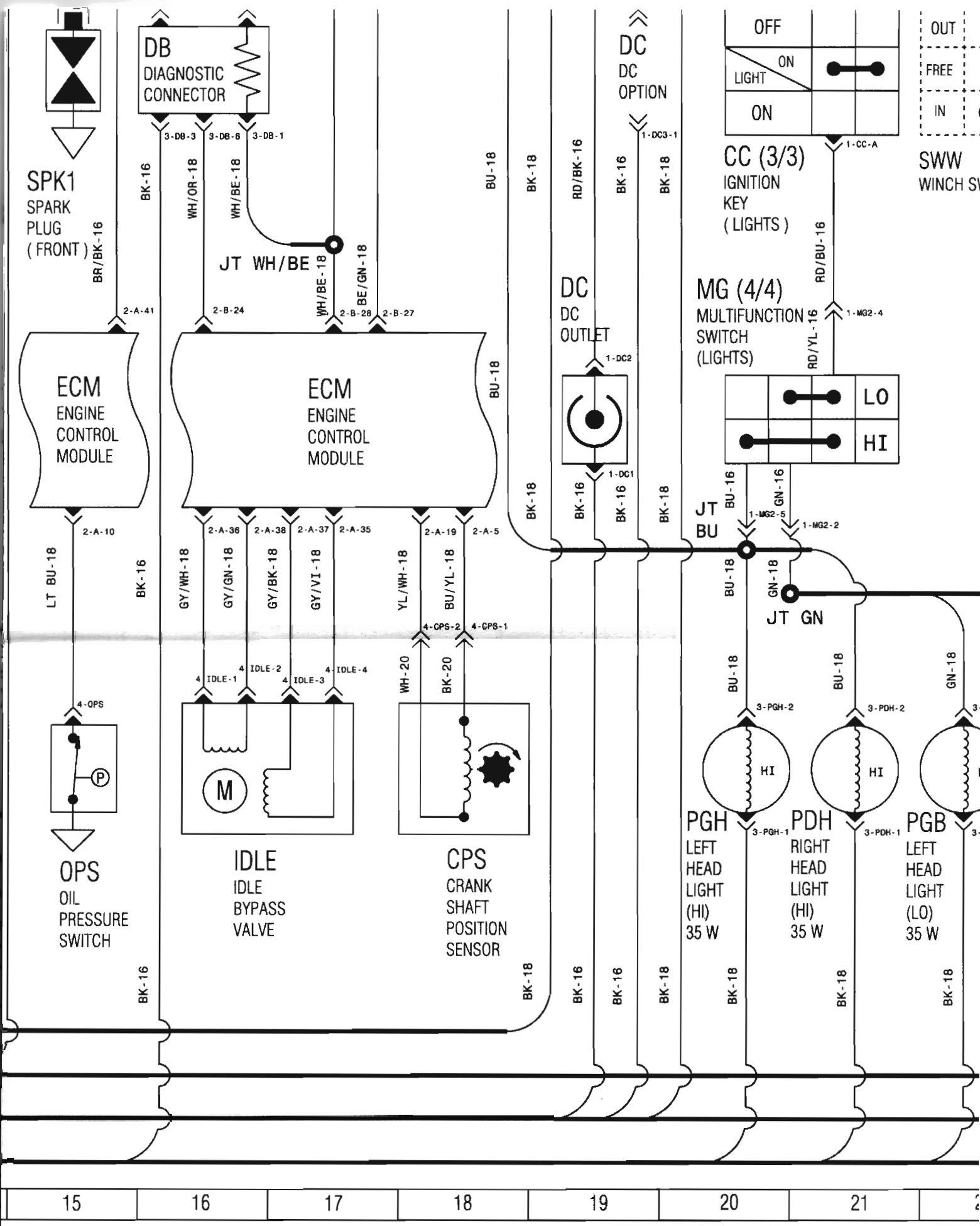
SPK1
SPARK PLUG (FRONT)
DB
DIAGNOSTIC CONNECTOR
3-DB-3
3-DB-6
3-DB-1
BR/BK-16
BK-16
WH/OR-18
WH/BE-18
JT WH/BE
WH/BE-18
BE/GN-18
BU-18
BK-18
RD/BK-16
BK-16
BK-18
DC
DC OPTION
1-DC3-1
OFF
ON
LIGHT
ON
1-CC-A
CC (3/3)
IGNITION KEY (LIGHTS)
RD/BU-16
OUT
FREE
IN
SWW
WINCH SW
2-A-41
2-B-24
2-B-28
2-B-27
ECM
ENGINE CONTROL MODULE
ECM
ENGINE CONTROL MODULE
DC
DC OUTLET
1-DC2
1-DC1
MG (4/4)
MULTIFUNCTION SWITCH (LIGHTS)
RD/YL-16
1-MG2-4
LO
HI
BU-16
GN-16
1-MG2-5
1-MG2-2
JT BU
JT GN
2-A-10
2-A-36
2-A-38
2-A-37
2-A-35
2-A-19
2-A-5
LT BU-18
BK-16
GY/WH-18
GY/GN-18
GY/BK-18
GY/VI-18
YL/WH-18
BU/YL-18
4-CPS-2
4-CPS-1
4 IDLE-1
4 IDLE-2
4 IDLE-3
4 IDLE-4
WH-20
BK-20
4-OPS
P
M
3-PGH-2
3-PDH-2
HI
HI
PGH
LEFT HEAD LIGHT (HI) 35 W
3-PGH-1
PDH
RIGHT HEAD LIGHT (HI) 35 W
3-PDH-1
PGB
LEFT HEAD LIGHT (LO) 35 W
OPS
OIL PRESSURE SWITCH
IDLE
IDLE BYPASS VALVE
CPS
CRANK SHAFT POSITION SENSOR
15
16
17
18
19
20
21

| # | ZONE DESCRIPTION |
|---|---|
| | STEERING AREA |
| | MODULE AREA |
| | FRONT OF VEHICLE |
| | ENGINE AREA |
| | REAR OF VEHICLE |

| | |
|---|---|
| ● | WELDED JOINT |
| — | SHRINKED JOINT |
| | CROSSED WIRE |
| | WIRE BUS |
| — | SIMPLE CONDUCTOR WIRE |
| | FEMALE TERMINAL |
| | MALE TERMINAL |
| | STEEL LINK (FRAME ) |
| | TERMINAL |

| | |
|---|---|
| | FRAME GROUND |
| | EGINE GROUND |
| | PHILLIPS SCREW |
| | NUT CONNECTION |
| | SPLICE CONNECTION |
| | COMPONENT CONNECTION |
| | SECTION OF MODULE |
| | SLOTTED SCREW |
| — — | OPTIONAL |

| COLOR CODE | |
|---|---|
| BE | BEIGE |
| BK | BLACK |
| BU | BLUE |
| BN | BROWN |
| GN | GREEN |
| GY | GREY |
| OR | ORANGE |
| RD | RED |
| VI | VIOLET |
| WH | WHITE |
| YL | YELLOW |
| PK | PINK |
| LT BU | LIGHT BLUE |

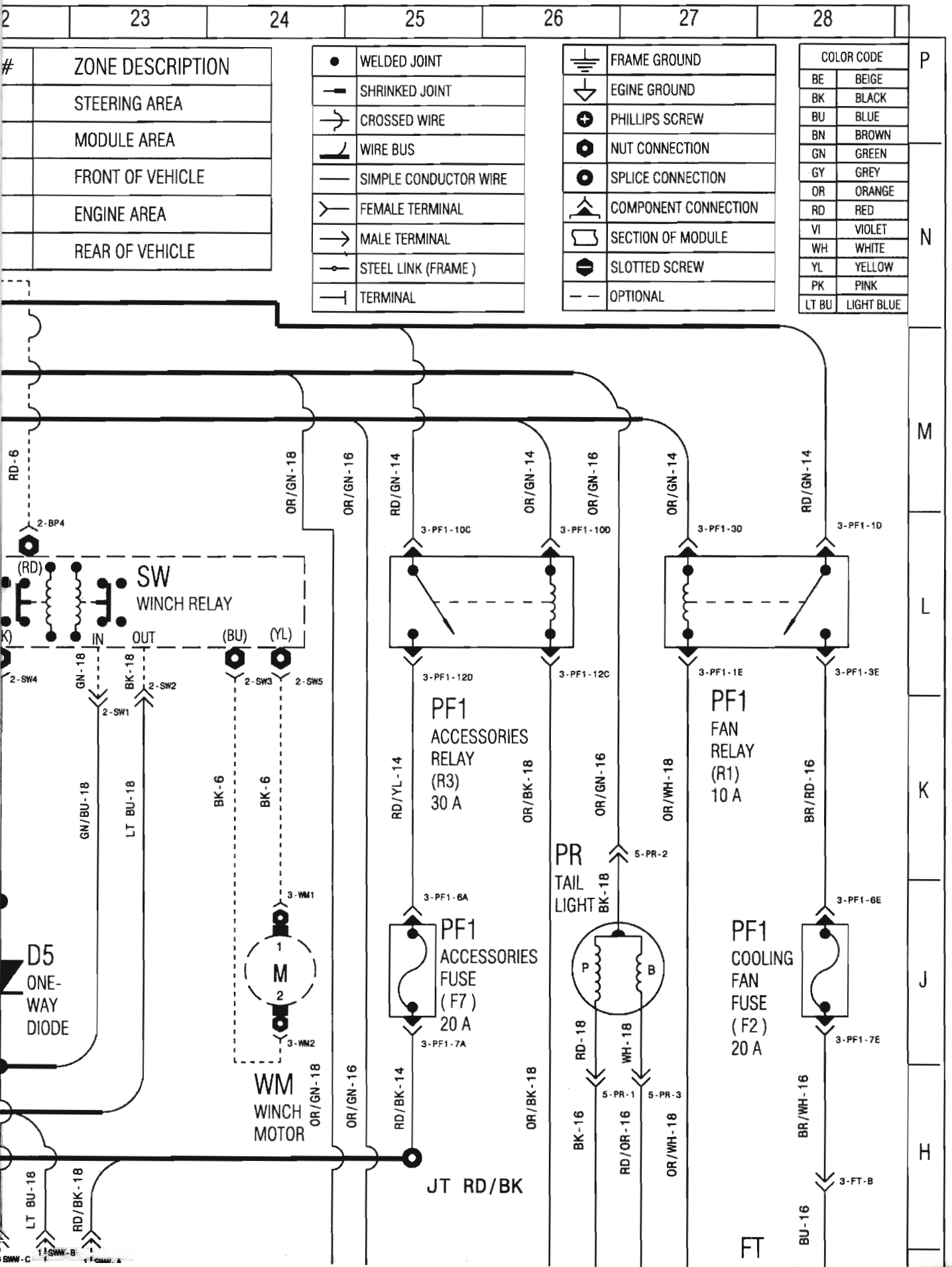

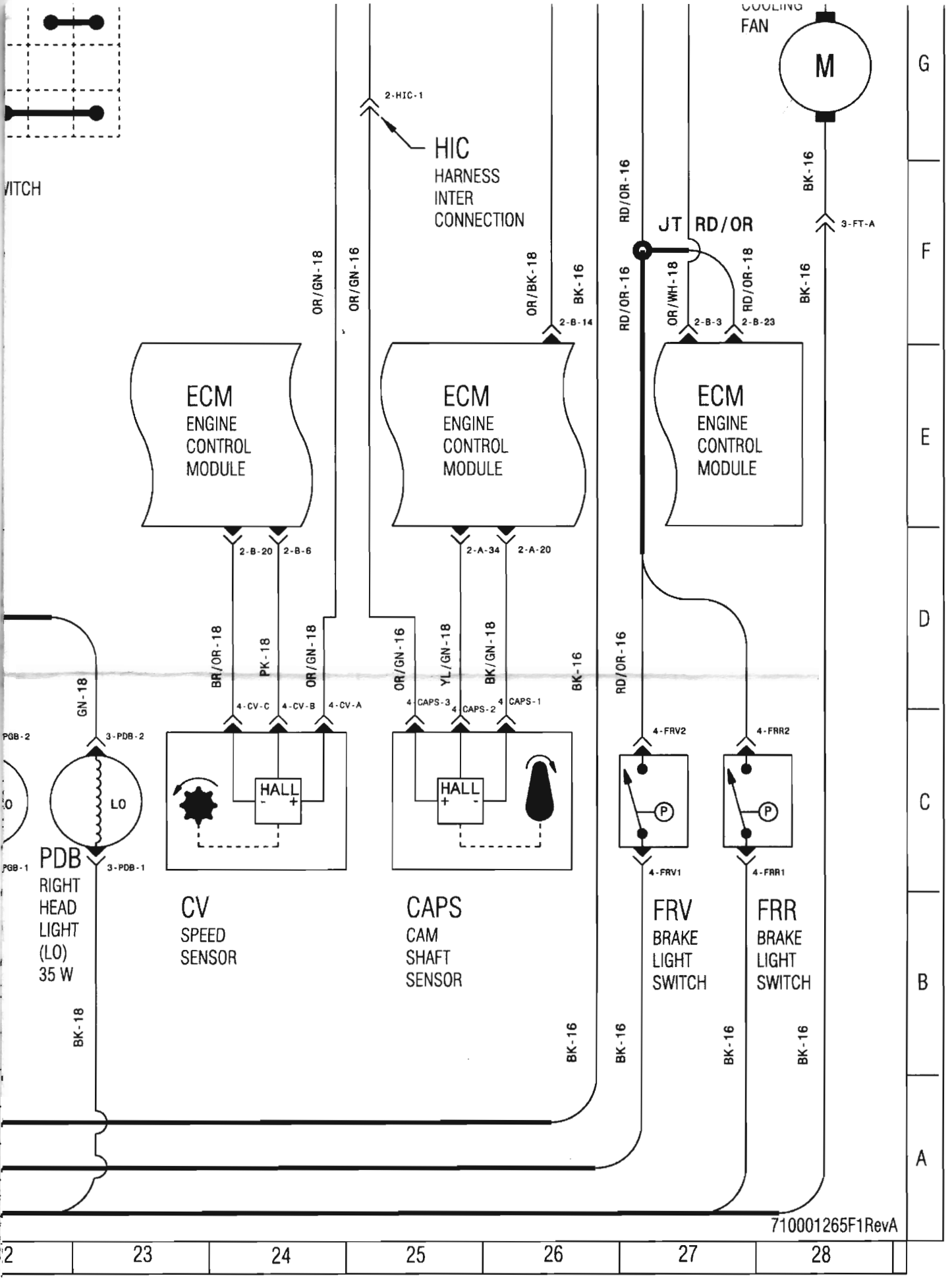
COOLING FAN
M
2-HIC-1
HIC
HARNESS
INTER
CONNECTION
JT
RD/OR
3-FT-A
BK-16
RD/OR-16
OR/GN-18
OR/GN-16
OR/BK-18
2-B-14
OR/WH-18
2-B-3
RD/OR-18
2-B-23
ECM
ENGINE
CONTROL
MODULE
2-B-20
2-B-6
2-A-34
2-A-20
BR/OR-18
PK-18
YL/GN-18
BK/GN-18
GN-18
4-CV-C
4-CV-B
4-CV-A
4-CAPS-3
4-CAPS-2
4-CAPS-1
4-FRV2
4-FRR2
4-FRV1
4-FRR1
3-PDB-2
3-PDB-1
LO
HALL
PDB
RIGHT
HEAD
LIGHT
(LO)
35 W
CV
SPEED
SENSOR
CAPS
CAM
SHAFT
SENSOR
FRV
BRAKE
LIGHT
SWITCH
FRR
BRAKE
LIGHT
SWITCH
BK-18
710001265F1RevA
G
F
E
D
C
B
A
23
24
25
26
27
28

2008 OUTLANDER 800/650/500

# GENERAL SYSTEM

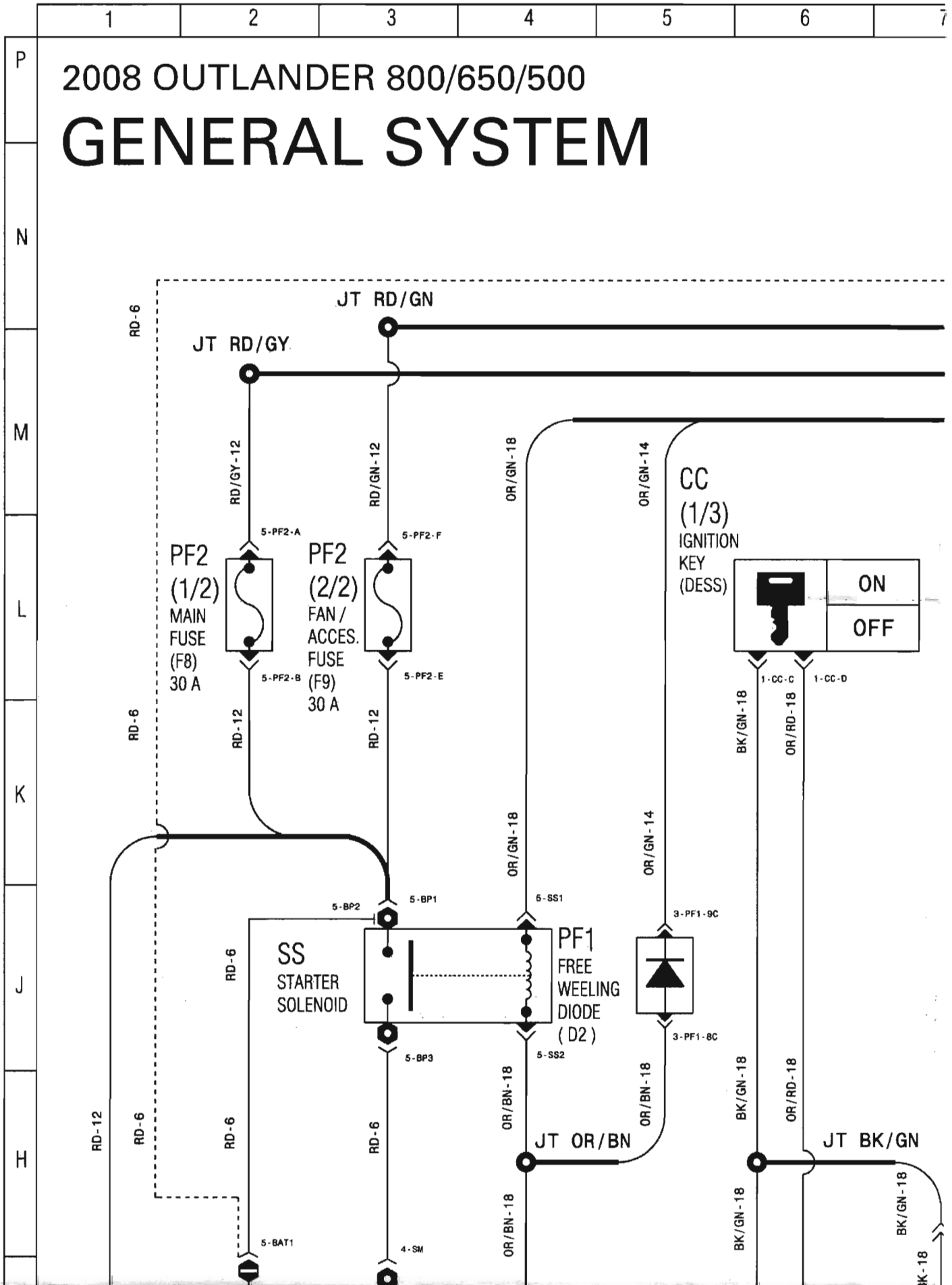

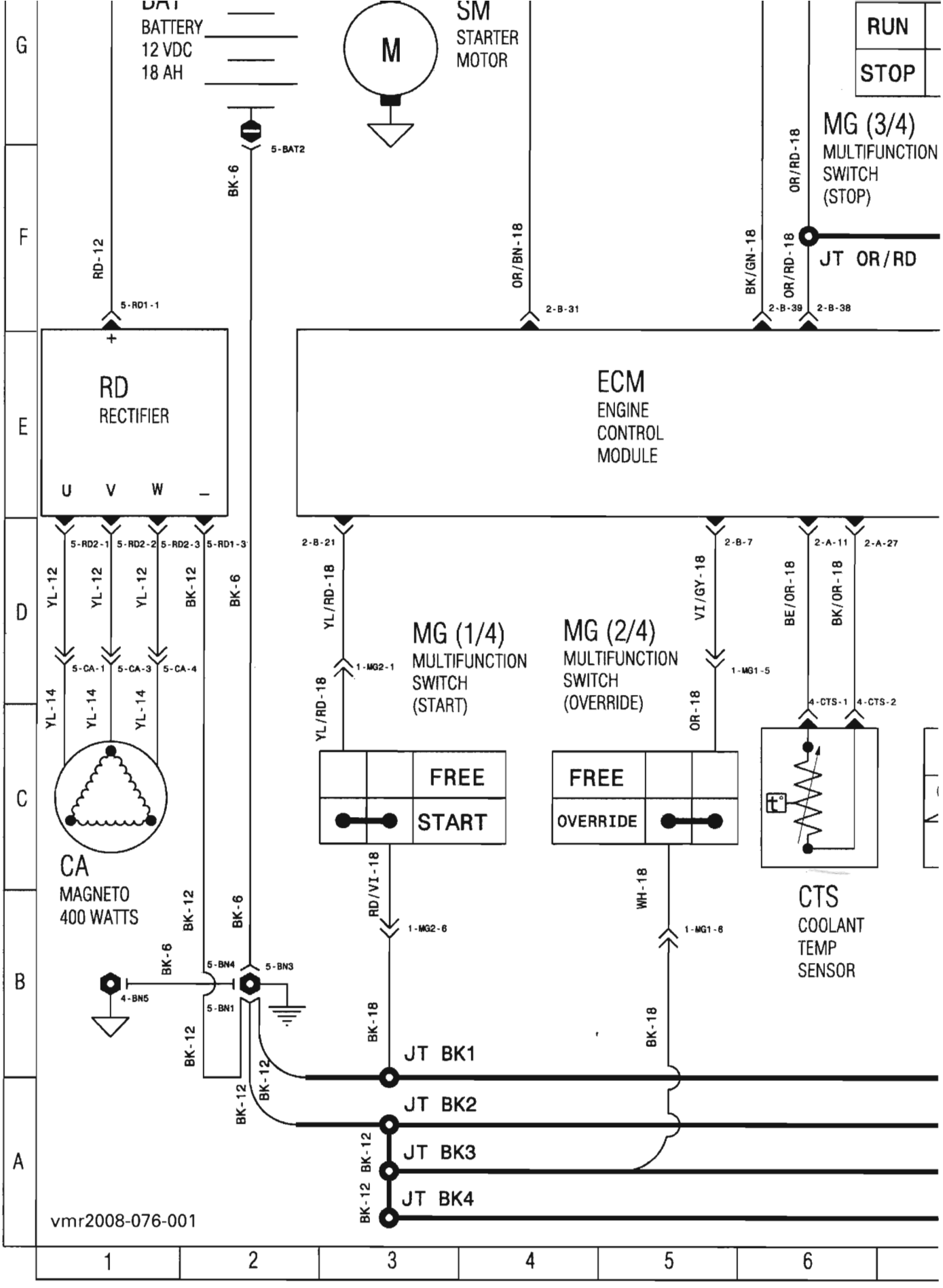
BAT
BATTERY
12 VDC
18 AH
M
SM
STARTER
MOTOR
RUN
STOP
MG (3/4)
MULTIFUNCTION
SWITCH
(STOP)
JT OR/RD
5-BAT2
BK-6
RD-12
5-RD1-1
OR/BN-18
2-B-31
BK/GN-18
OR/RD-18
2-B-39
2-B-38
RD
RECTIFIER
U V W –
ECM
ENGINE
CONTROL
MODULE
5-RD2-1
5-RD2-2
5-RD2-3
5-RD1-3
YL-12
BK-12
BK-6
2-B-21
YL/RD-18
1-MG2-1
2-B-7
VI/GY-18
1-MG1-5
2-A-11
2-A-27
BE/OR-18
BK/OR-18
MG (1/4)
MULTIFUNCTION
SWITCH
(START)
MG (2/4)
MULTIFUNCTION
SWITCH
(OVERRIDE)
5-CA-1
5-CA-3
5-CA-4
YL-14
OR-18
4-CTS-1
4-CTS-2
FREE
START
FREE
OVERRIDE
CA
MAGNETO
400 WATTS
RD/VI-18
1-MG2-6
WH-18
1-MG1-6
CTS
COOLANT
TEMP
SENSOR
5-BN4
5-BN3
4-BN5
5-BN1
BK-18
JT BK1
JT BK2
JT BK3
JT BK4
vmr2008-076-001
G
F
E
D
C
B
A
1
2
3
4
5
6

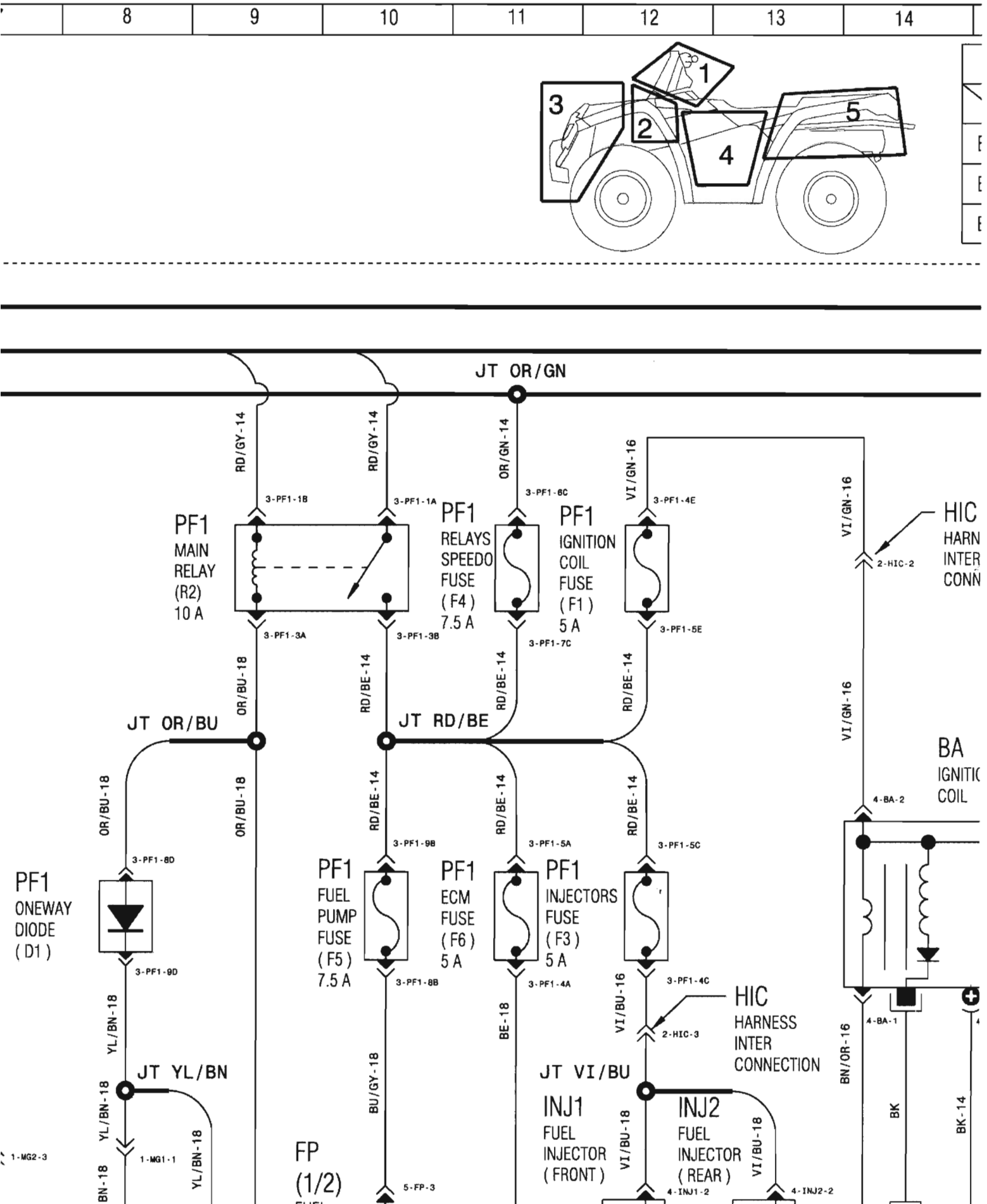
8
9
10
11
12
13
14
1
2
3
4
5
JT OR/GN
RD/GY-14
RD/GY-14
OR/GN-14
VI/GN-16
VI/GN-16
3-PF1-1B
3-PF1-1A
3-PF1-6C
3-PF1-4E
PF1
MAIN
RELAY
(R2)
10 A
PF1
RELAYS
SPEEDO
FUSE
(F4)
7.5 A
PF1
IGNITION
COIL
FUSE
(F1)
5 A
HIC
HARN
INTER
CONN
2-HIC-2
3-PF1-3A
3-PF1-3B
3-PF1-7C
3-PF1-5E
OR/BU-18
RD/BE-14
RD/BE-14
RD/BE-14
VI/GN-16
JT OR/BU
JT RD/BE
BA
IGNITI
COIL
OR/BU-18
OR/BU-18
RD/BE-14
RD/BE-14
RD/BE-14
4-BA-2
3-PF1-8D
3-PF1-9B
3-PF1-5A
3-PF1-5C
PF1
ONEWAY
DIODE
(D1)
PF1
FUEL
PUMP
FUSE
(F5)
7.5 A
PF1
ECM
FUSE
(F6)
5 A
PF1
INJECTORS
FUSE
(F3)
5 A
3-PF1-9D
3-PF1-8B
3-PF1-4A
3-PF1-4C
VI/BU-16
HIC
HARNESS
INTER
CONNECTION
2-HIC-3
4-BA-1
YL/BN-18
BE-18
BN/OR-16
JT YL/BN
BU/GY-18
JT VI/BU
YL/BN-18
1-MG2-3
1-MG1-1
YL/BN-18
FP
(1/2)
INJ1
FUEL
INJECTOR
(FRONT)
VI/BU-18
INJ2
FUEL
INJECTOR
(REAR)
VI/BU-18
BK
BK-14
5-FP-3
4-INJ1-2
4-INJ2-2

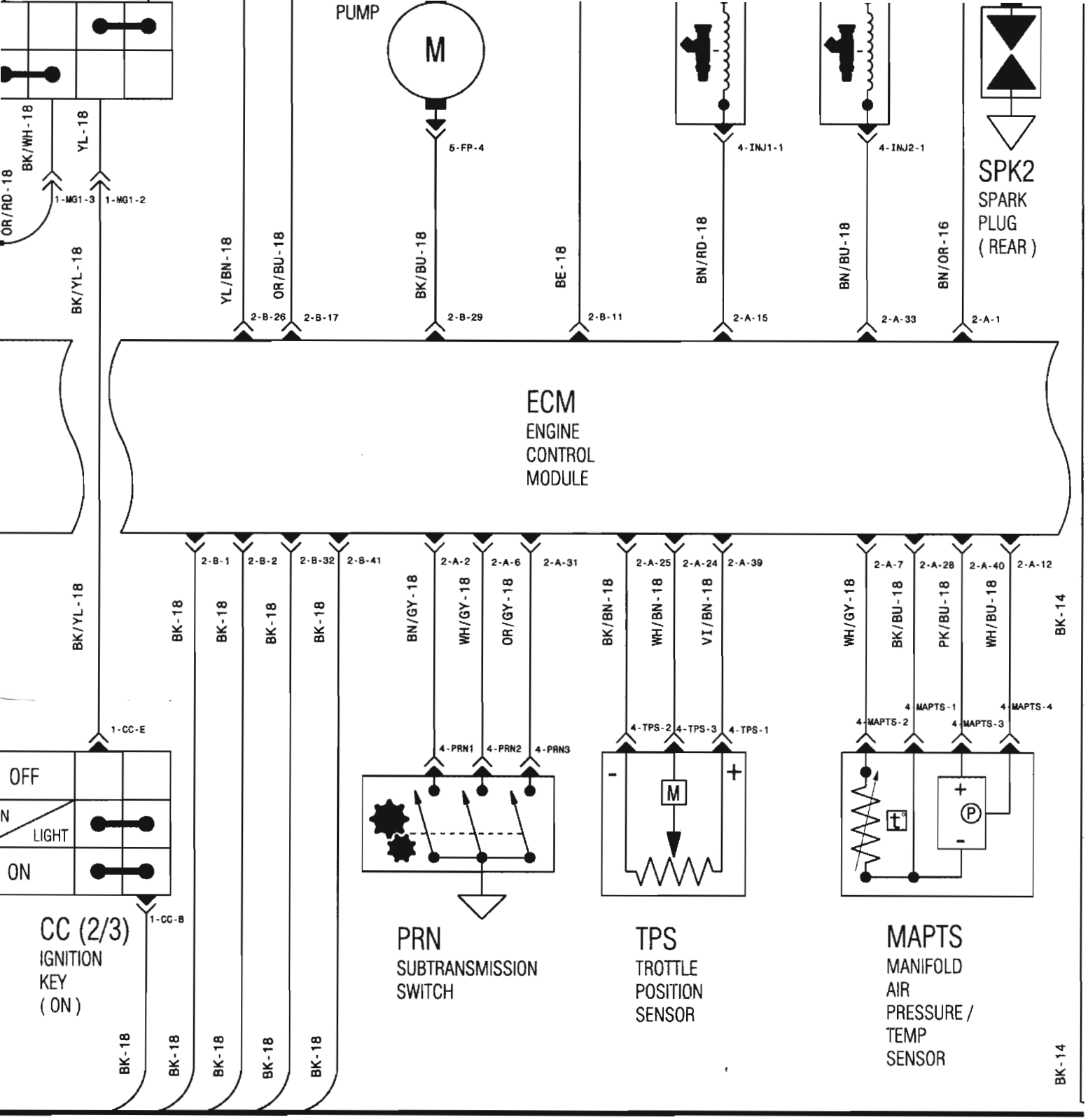


| 7 | 8 | 9 | 10 | 11 | 12 | 13 | 14 |
|---|---|---|---|---|---|---|---|

| 15 | 16 | 17 | 18 | 19 | 20 | 21 | 22 |
|---|---|---|---|---|---|---|---|

| TERMINAL IDENTIFICATION | | |
|---|---|---|
| | NAME | ZONE-CONNECTOR NAME-TERMINAL #/A |
| X: | CI | 1 - CI - 15 |
| X: | CV | 4 - CV - A |
| X: | ME | 2 - ME |

| AWG | MAX. CURRENT | MAX. FUSE CURRENT | MAX. WATT |
|---|---|---|---|
| # 6 | 100 amps | 125 amps | 1450 watts |
| # 8 | 65 amps | 80 amps | 930 watts |
| # 10 | 40 amps | 50 amps | 580 watts |
| # 12 | 25 amps | 30 amps | 365 watts |
| # 14 | 16 amps | 20 amps | 230 watts |
| # 16 | 10 amps | 15 amps | 145 watts |
| # 18 | 6 amps | 7.5 amps | 85 watts |
| * AT | 50°C MAX | | |

| ZONE # |
|---|
| 1 |
| 2 |
| 3 |
| 4 |
| 5 |

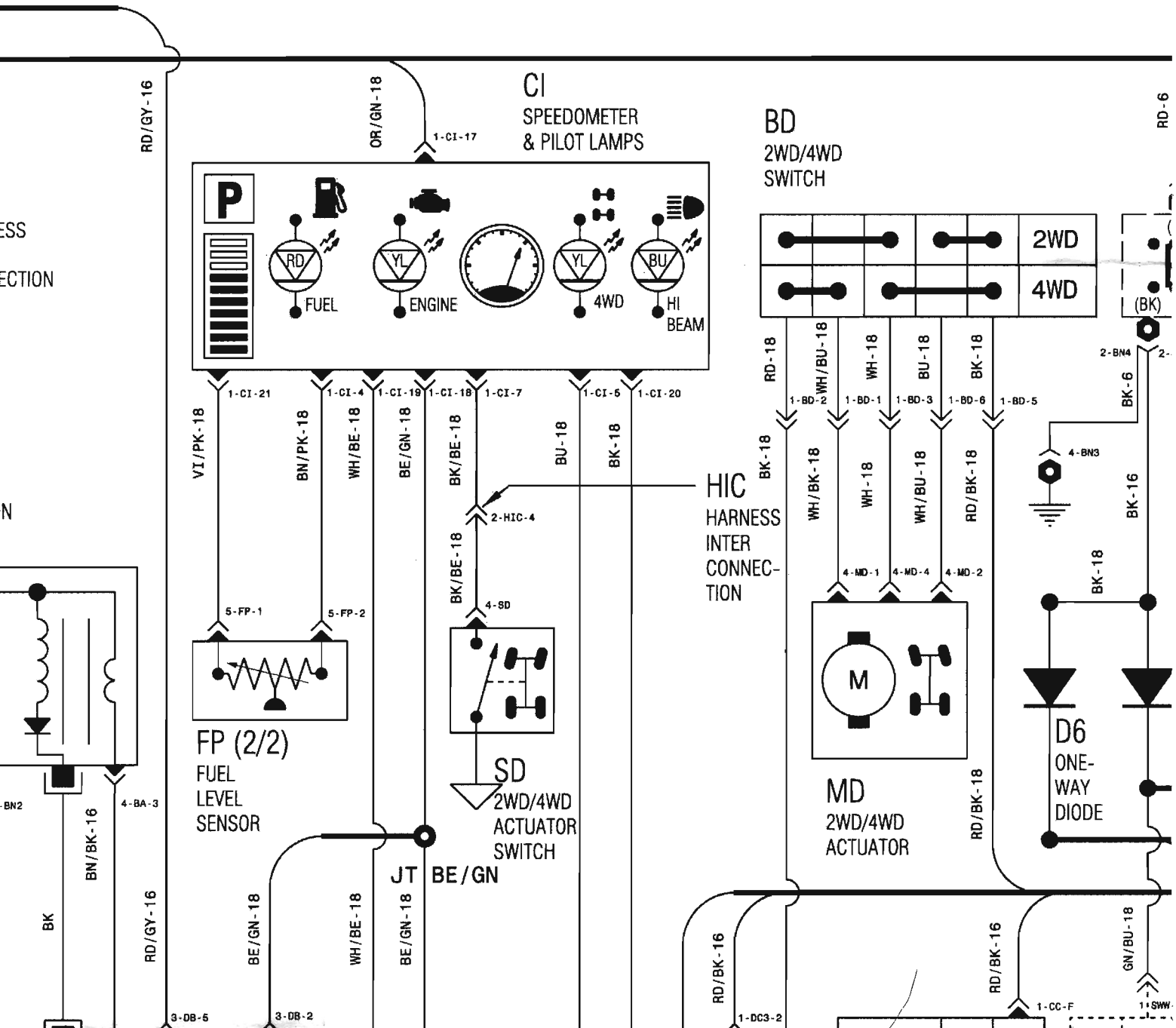

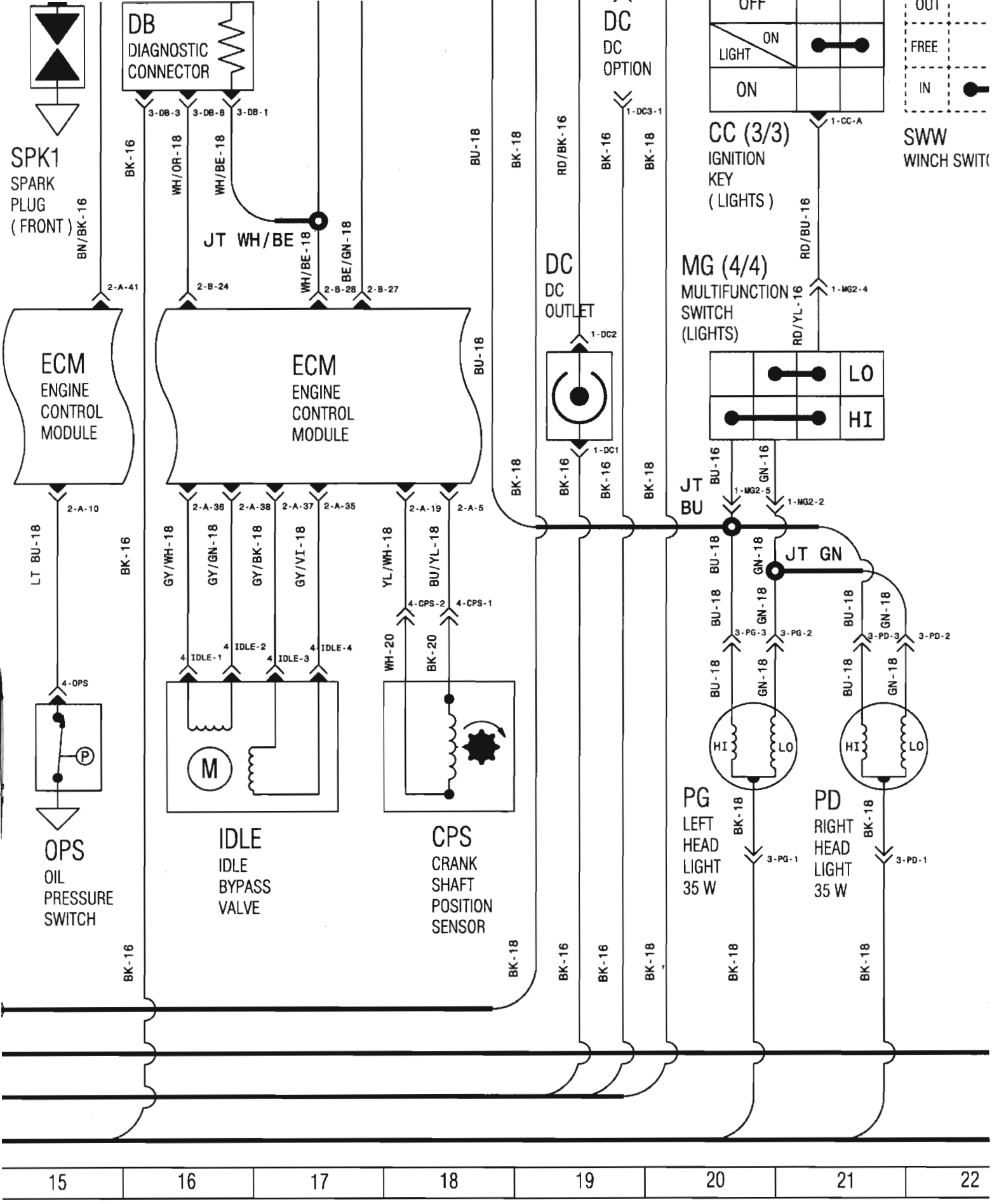
SPK1
SPARK PLUG (FRONT)
DB
DIAGNOSTIC CONNECTOR
3-DB-3
3-DB-6
3-DB-1
BN/BK-16
BK-16
WH/OR-18
WH/BE-18
JT WH/BE
WH/BE-18
BE/GN-18
BU-18
BK-18
RD/BK-16
BK-16
BK-18
DC
DC OPTION
1-DC3-1
OFF
ON
LIGHT
ON
CC (3/3)
IGNITION KEY (LIGHTS)
1-CC-A
OUT
FREE
IN
SWW
WINCH SWITC
RD/BU-16
2-A-41
2-B-24
2-B-28
2-B-27
ECM
ENGINE CONTROL MODULE
ECM
ENGINE CONTROL MODULE
DC
DC OUTLET
1-DC2
1-DC1
MG (4/4)
MULTIFUNCTION SWITCH (LIGHTS)
RD/YL-16
1-MG2-4
LO
HI
BU-16
GN-16
1-MG2-5
1-MG2-2
JT BU
JT GN
2-A-10
LT BU-18
BK-16
2-A-36
2-A-38
2-A-37
2-A-35
2-A-19
2-A-5
GY/WH-18
GY/GN-18
GY/BK-18
GY/VI-18
YL/WH-18
BU/YL-18
4-CPS-2
4-CPS-1
4 IDLE-1
4 IDLE-2
4 IDLE-3
4 IDLE-4
WH-20
BK-20
BU-18
GN-18
3-PG-3
3-PG-2
3-PD-3
3-PD-2
4-OPS
P
M
HI
LO
OPS
OIL PRESSURE SWITCH
IDLE
IDLE BYPASS VALVE
CPS
CRANK SHAFT POSITION SENSOR
PG
LEFT HEAD LIGHT 35 W
PD
RIGHT HEAD LIGHT 35 W
3-PG-1
3-PD-1
15
16
17
18
19
20
21
22

| 23 | 24 | 25 | 26 | 27 | 28 |
|---|---|---|---|---|---|

| ZONE DESCRIPTION |
|---|
| STEERING AREA |
| MODULE AREA |
| FRONT OF VEHICLE |
| ENGINE AREA |
| REAR OF VEHICLE |

| | |
|---|---|
| ● | WELDED JOINT |
| | SHRINKED JOINT |
| | CROSSED WIRE |
| | WIRE BUS |
| | SIMPLE CONDUCTOR WIRE |
| | FEMALE TERMINAL |
| | MALE TERMINAL |
| | STEEL LINK (FRAME ) |
| | TERMINAL |

| | |
|---|---|
| | FRAME GROUND |
| | EGINE GROUND |
| | PHILLIPS SCREW |
| | NUT CONNECTION |
| | SPLICE CONNECTION |
| | COMPONENT CONNECTION |
| | SECTION OF MODULE |
| | SLOTTED SCREW |
| | OPTIONAL |

| COLOR CODE | |
|---|---|
| BE | BEIGE |
| BK | BLACK |
| BU | BLUE |
| BN | BROWN |
| GN | GREEN |
| GY | GREY |
| OR | ORANGE |
| RD | RED |
| VI | VIOLET |
| WH | WHITE |
| YL | YELLOW |
| PK | PINK |
| LT BU | LIGHT BLUE |

P N M L K J H

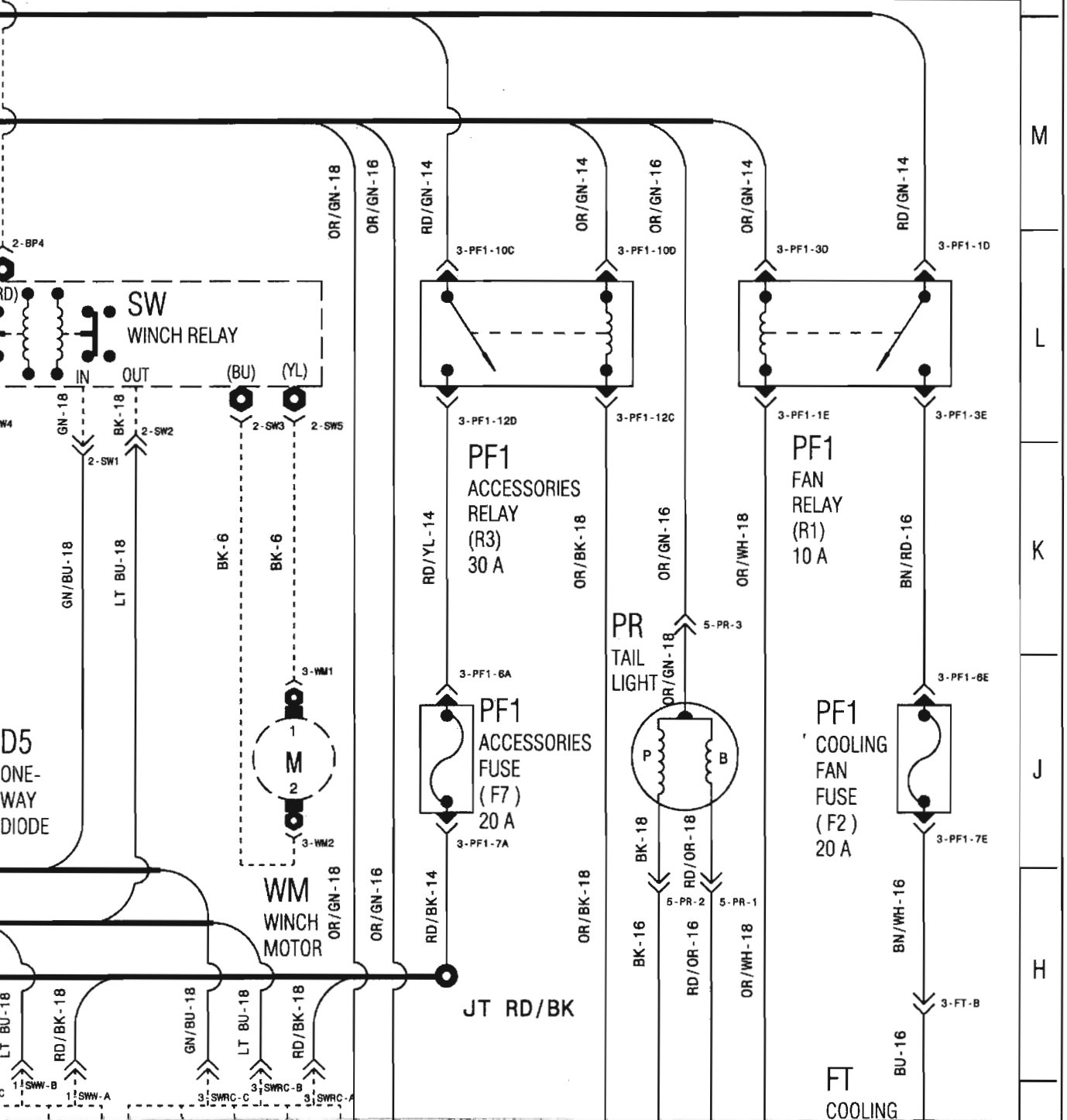

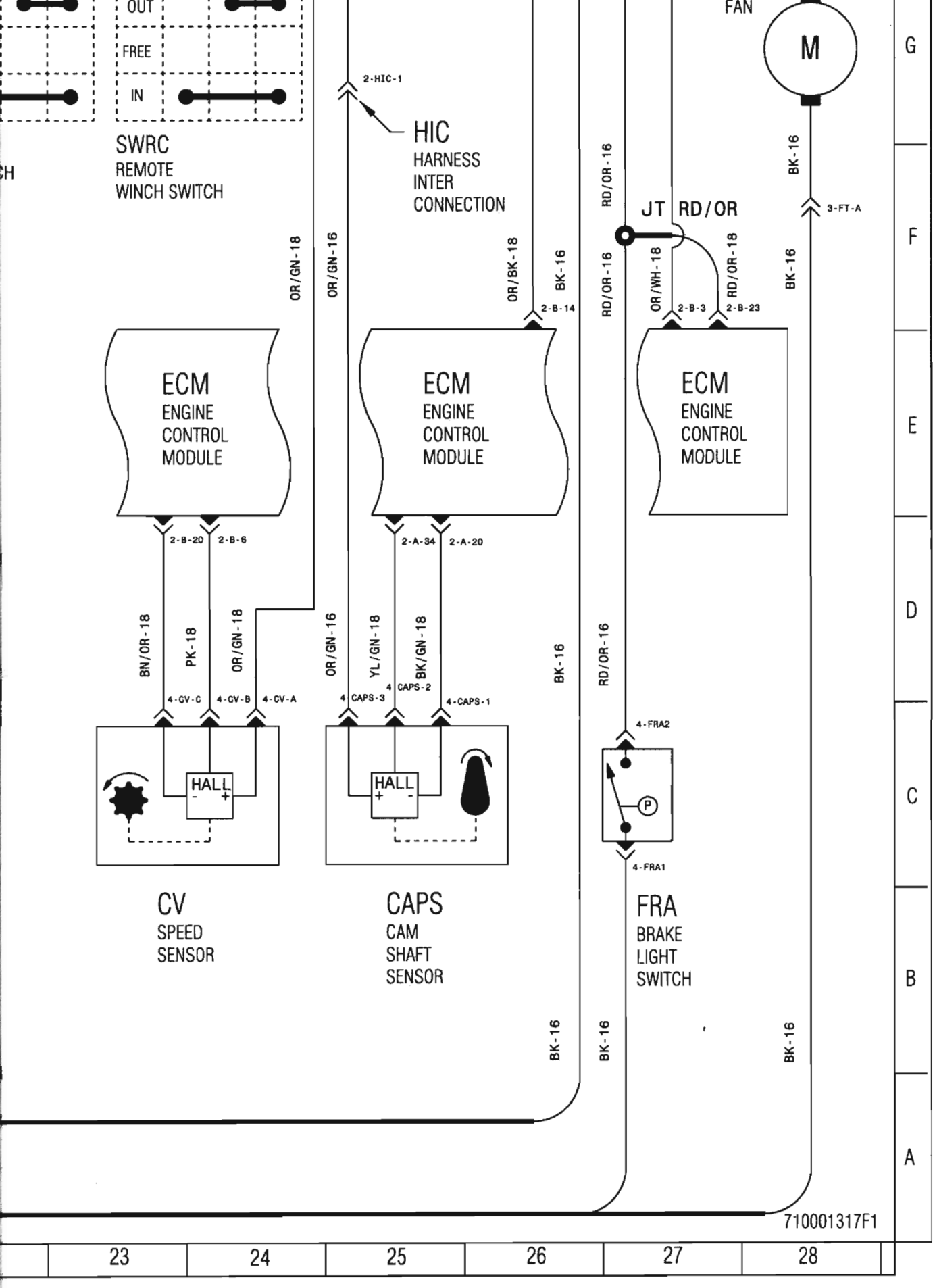
OUT
FREE
IN
SWRC
REMOTE
WINCH SWITCH
2-HIC-1
HIC
HARNESS
INTER
CONNECTION
FAN
M
OR/GN-18
OR/GN-16
OR/BK-18
BK-16
RD/OR-16
JT
RD/OR
OR/WH-18
RD/OR-18
2-B-14
2-B-3
2-B-23
3-FT-A
ECM
ENGINE
CONTROL
MODULE
2-B-20
2-B-6
2-A-34
2-A-20
BN/OR-18
PK-18
YL/GN-18
BK/GN-18
4-CV-C
4-CV-B
4-CV-A
4 CAPS-3
4 CAPS-2
4-CAPS-1
4-FRA2
4-FRA1
HALL
CV
SPEED
SENSOR
CAPS
CAM
SHAFT
SENSOR
FRA
BRAKE
LIGHT
SWITCH
G
F
E
D
C
B
A
710001317F1
23
24
25
26
27
28

# 2008 OUTLANDER 800/650/500

# CHARGING SYSTEM

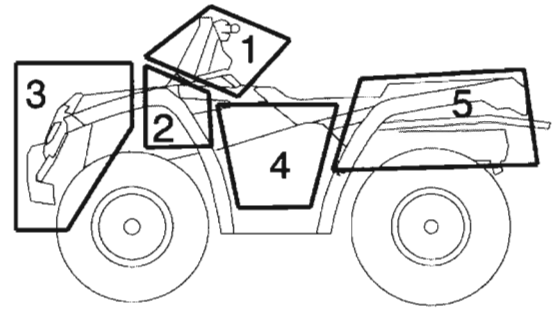


| ZONE # | ZONE DESCRIPTION |
|---|---|
| 1 | STEERING AREA |
| 2 | MODULE AREA |
| 3 | FRONT OF VEHICLE |
| 4 | ENGINE AREA |
| 5 | REAR OF VEHICLE |

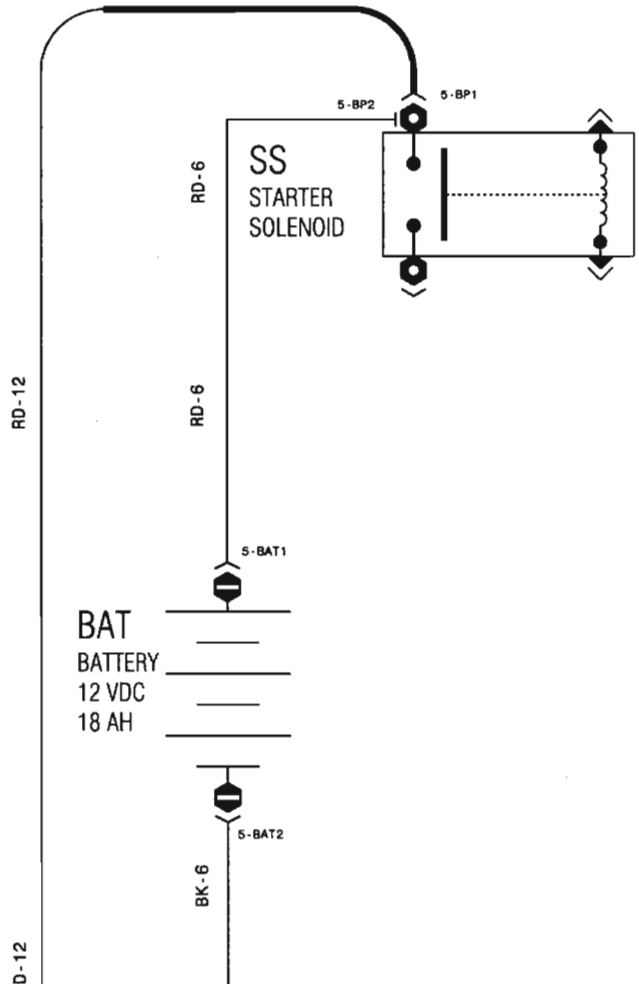

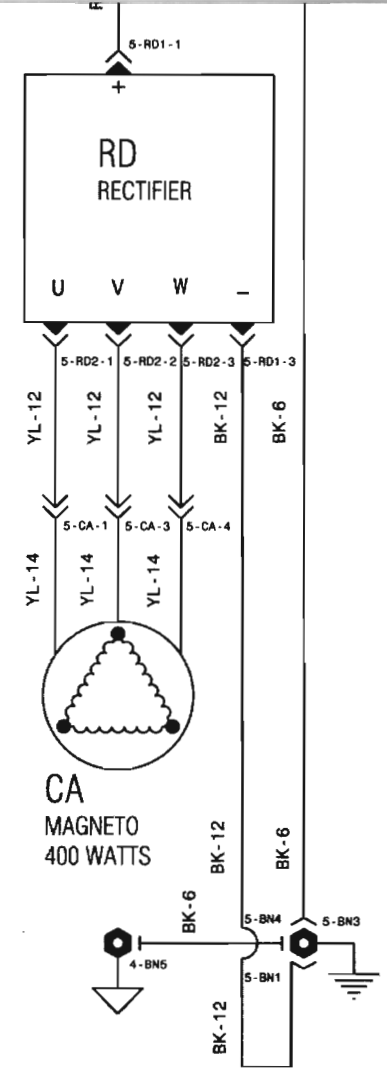


710001317F3

# 2008 OUTLANDER 800/650/500

# STARTING SYSTEM

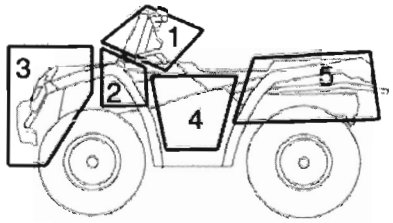


| ZONE # | ZONE DESCRIPTION |
|---|---|
| 1 | STEERING AREA |
| 2 | MODULE AREA |
| 3 | FRONT OF VEHICLE |
| 4 | ENGINE AREA |
| 5 | REAR OF VEHICLE |

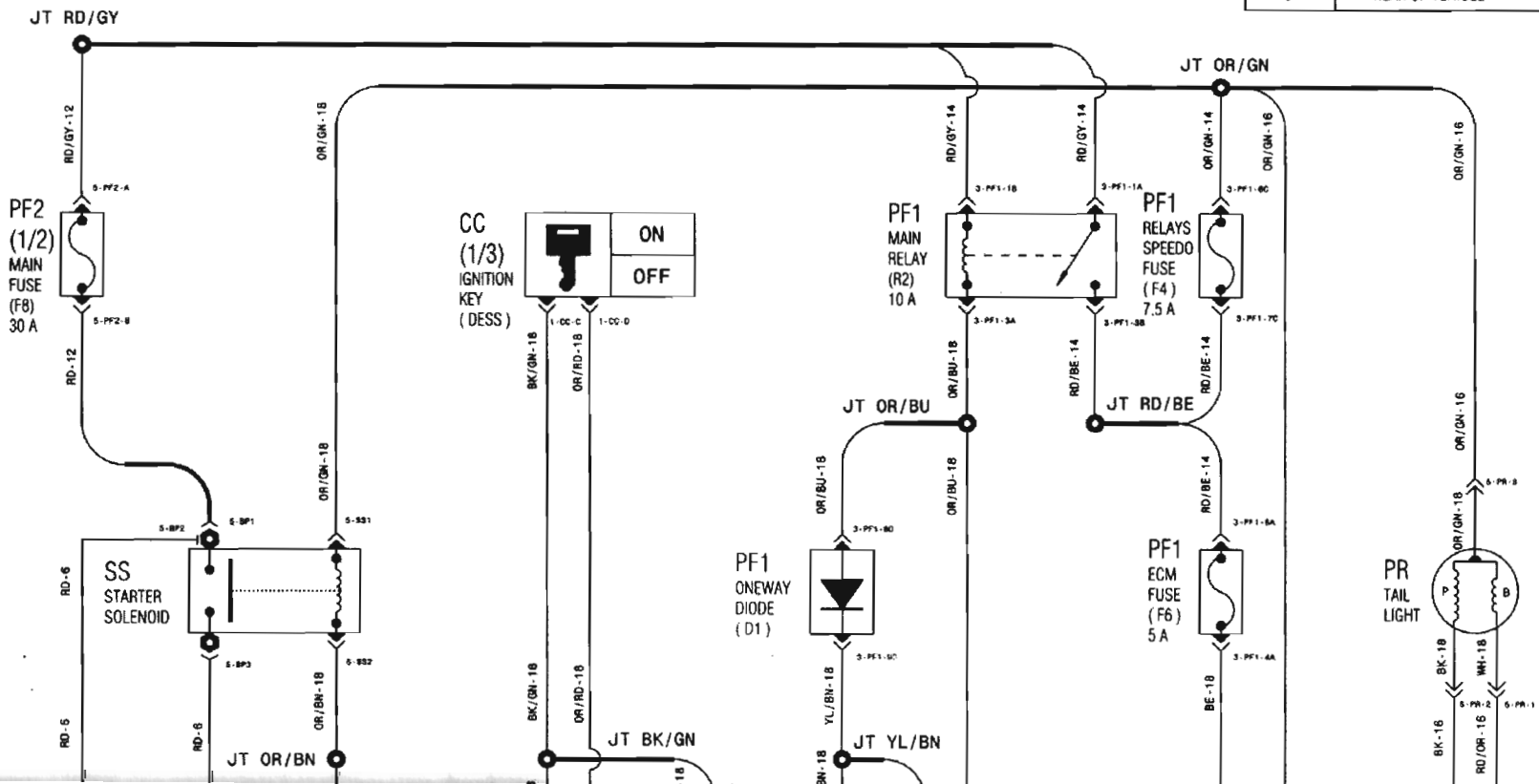

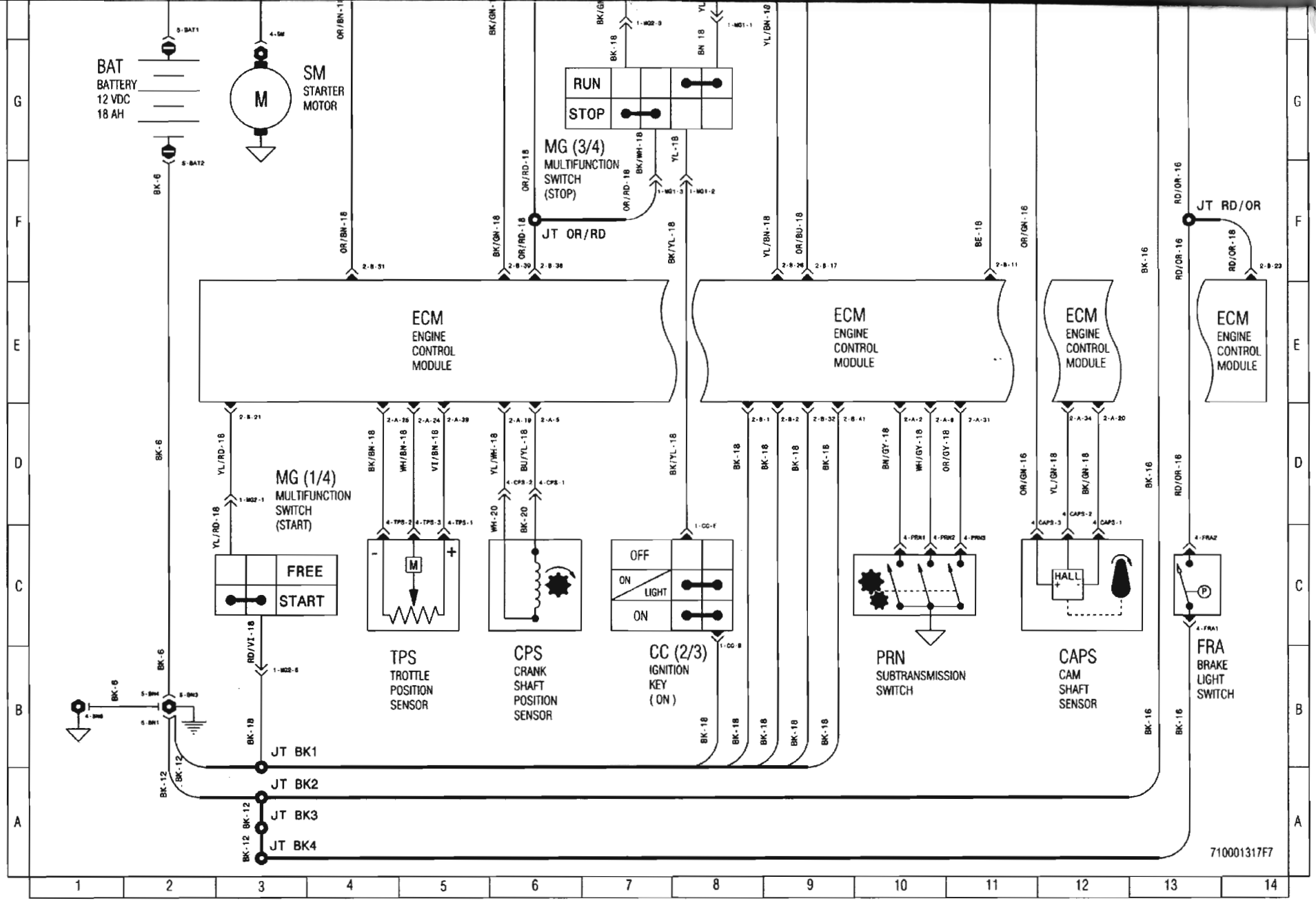
BAT
BATTERY
12 VDC
18 AH
SM
STARTER
MOTOR
M
RUN
STOP
MG (3/4)
MULTIFUNCTION
SWITCH
(STOP)
JT OR/RD
JT RD/OR
ECM
ENGINE
CONTROL
MODULE
ECM
ENGINE
CONTROL
MODULE
ECM
ENGINE
CONTROL
MODULE
ECM
ENGINE
CONTROL
MODULE
MG (1/4)
MULTIFUNCTION
SWITCH
(START)
FREE
START
TPS
TROTTLE
POSITION
SENSOR
CPS
CRANK
SHAFT
POSITION
SENSOR
OFF
ON
LIGHT
ON
CC (2/3)
IGNITION
KEY
( ON )
PRN
SUBTRANSMISSION
SWITCH
HALL
CAPS
CAM
SHAFT
SENSOR
FRA
BRAKE
LIGHT
SWITCH
JT BK1
JT BK2
JT BK3
JT BK4
710001317F7

# 2008 OUTLANDER 800/650/500

# INJECTION/IGNITION SYSTEM

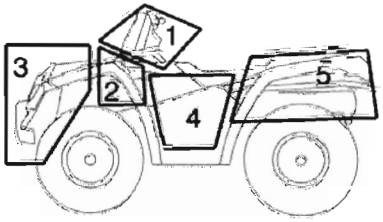


| ZONE # | ZONE DESCRIPTION |
|---|---|
| 1 | STEERING AREA |
| 2 | MODULE AREA |
| 3 | FRONT OF VEHICLE |
| 4 | ENGINE AREA |
| 5 | REAR OF VEHICLE |

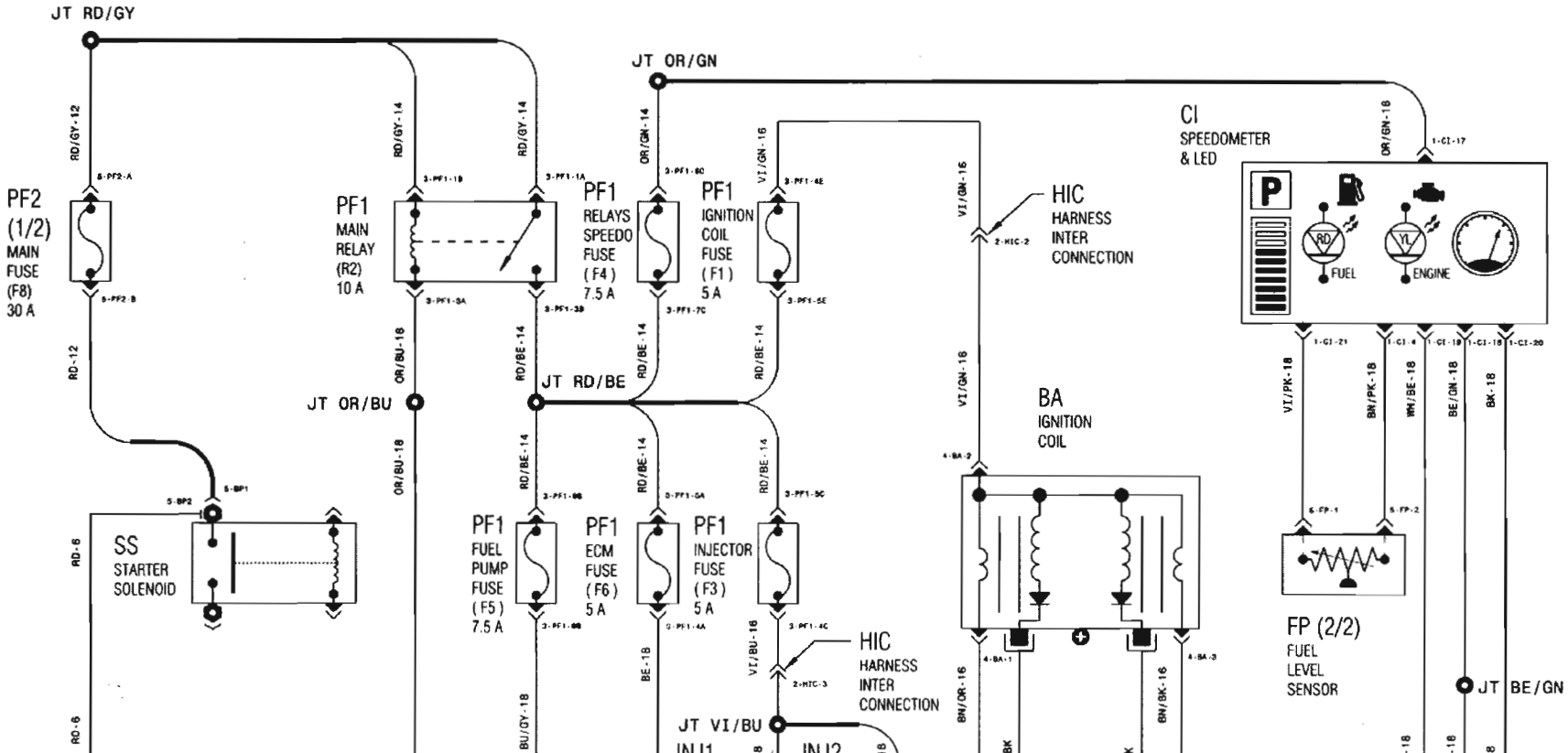

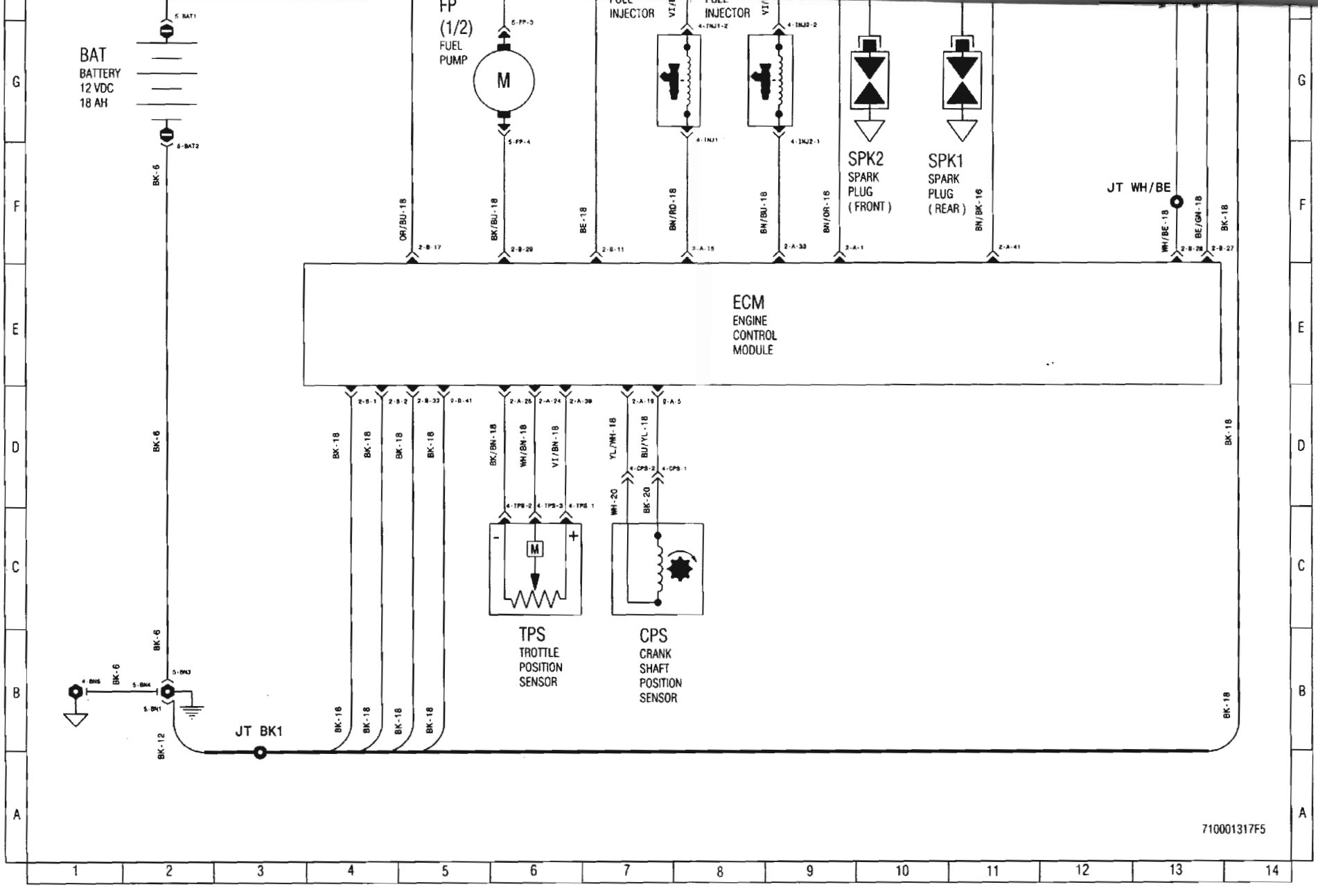
BAT
BATTERY
12 VDC
18 AH
FP
(1/2)
FUEL
PUMP
M
FUEL
INJECTOR
FUEL
INJECTOR
SPK2
SPARK
PLUG
( FRONT )
SPK1
SPARK
PLUG
( REAR )
JT WH/BE
ECM
ENGINE
CONTROL
MODULE
TPS
TROTTLE
POSITION
SENSOR
CPS
CRANK
SHAFT
POSITION
SENSOR
JT BK1
710001317F5

# 2008 OUTLANDER 800/650/500

# DISTRIBUTION SYSTEM

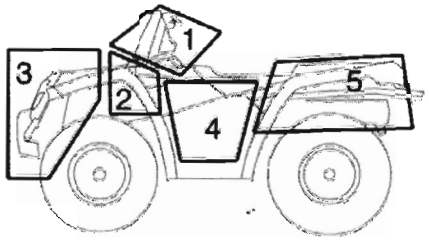


| ZONE # | ZONE DESCRIPTION |
|---|---|
| 1 | STEERING AREA |
| 2 | MODULE AREA |
| 3 | FRONT OF VEHICLE |
| 4 | ENGINE AREA |
| 5 | REAR OF VEHICLE |

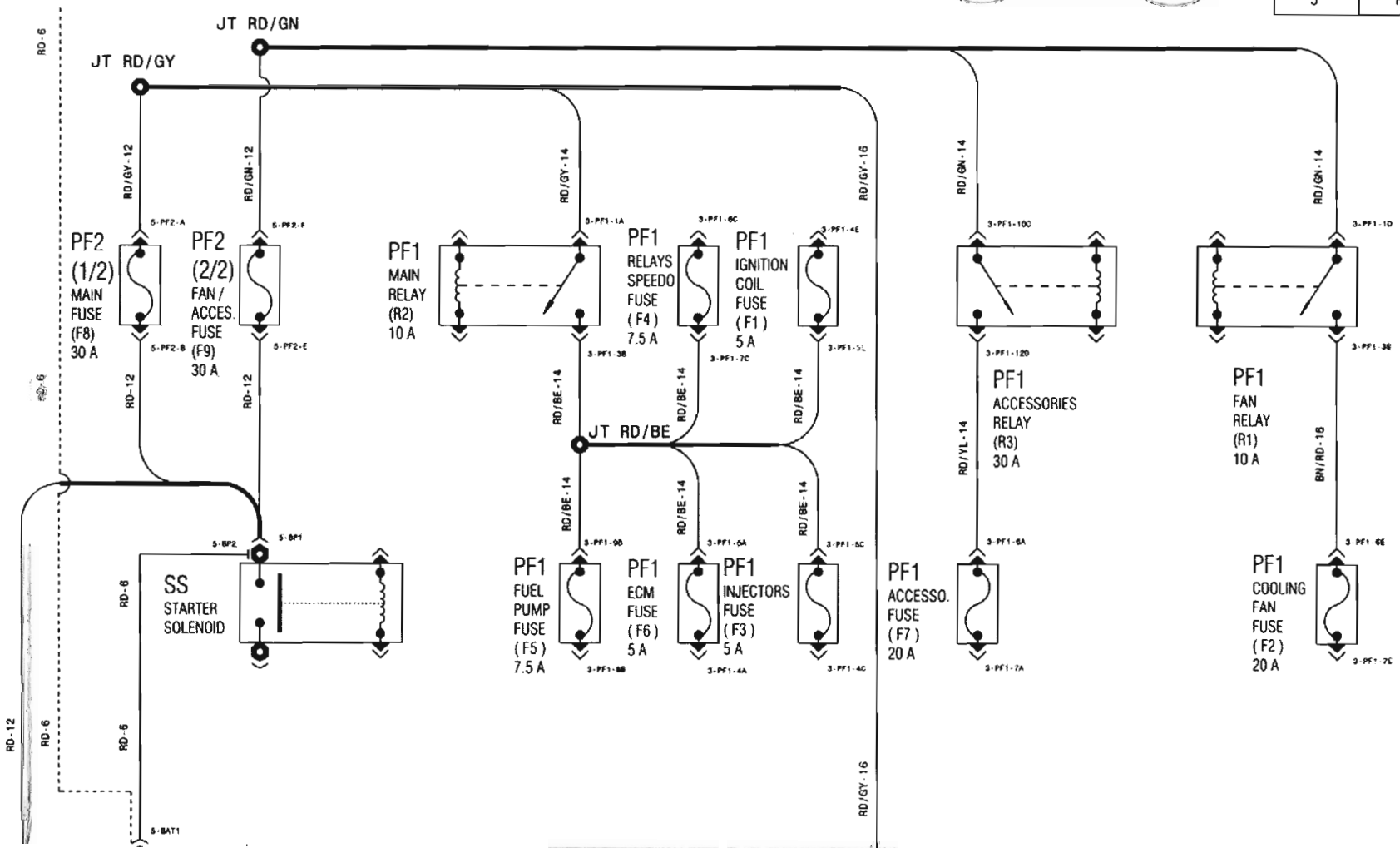

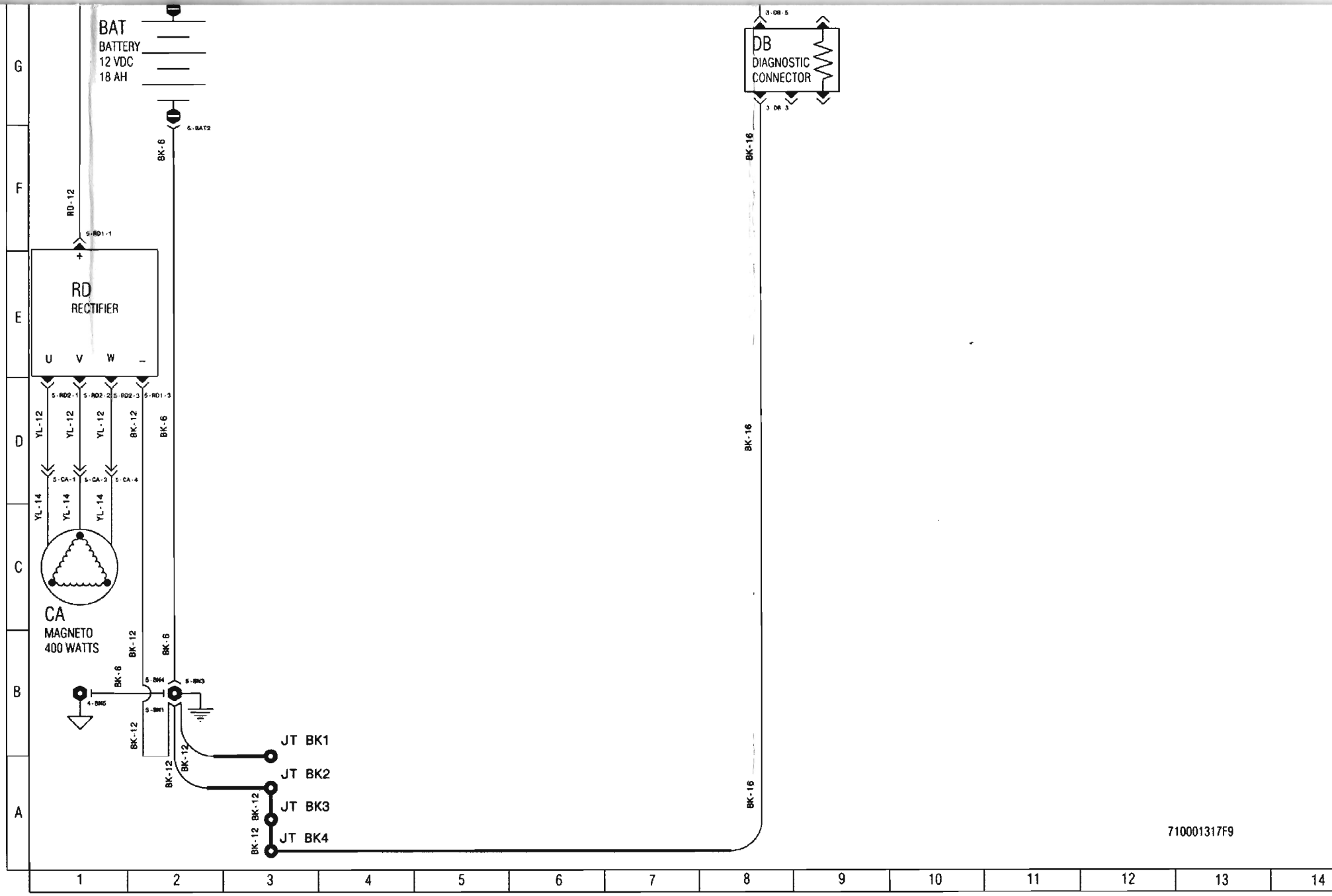
BAT
BATTERY
12 VDC
18 AH
5-BAT2
BK-6
RD-12
5-RD1-1
RD
RECTIFIER
U V W –
5-RD2-1
5-RD2-2
5-RD2-3
5-RD1-3
YL-12
YL-12
YL-12
BK-12
BK-6
5-CA-1
5-CA-3
5-CA-4
YL-14
YL-14
YL-14
CA
MAGNETO
400 WATTS
BK-12
BK-6
BK-6
5-BK4
5-BK3
4-BK5
5-BK1
BK-12
BK-12
BK-12
BK-12
JT BK1
JT BK2
JT BK3
JT BK4
3-OR-5
DB
DIAGNOSTIC
CONNECTOR
3-OR-3
BK-16
BK-16
BK-16
710001317F9

# 2008 OUTLANDER 800/650/500

# ACCESSORIES SYSTEM

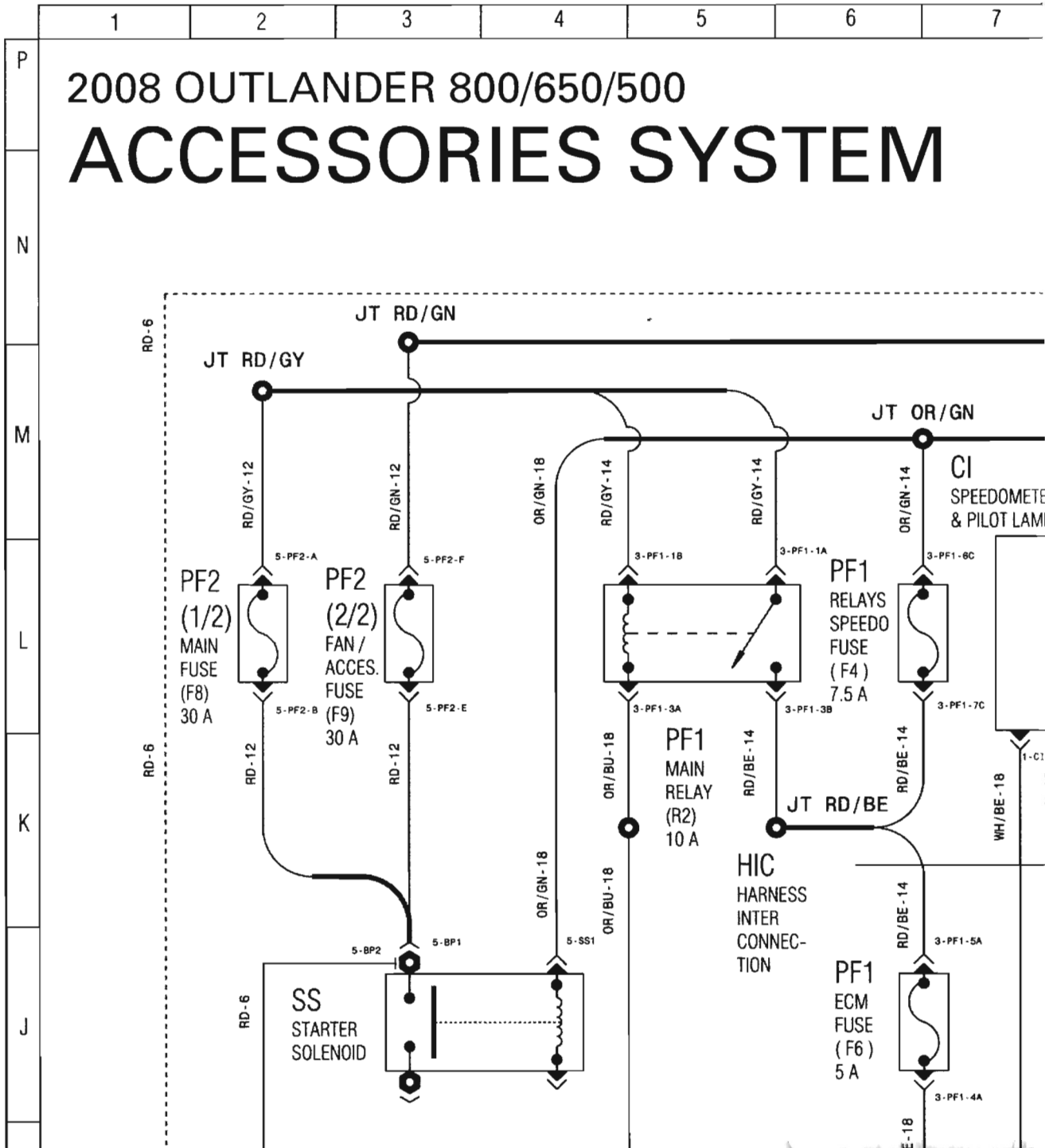

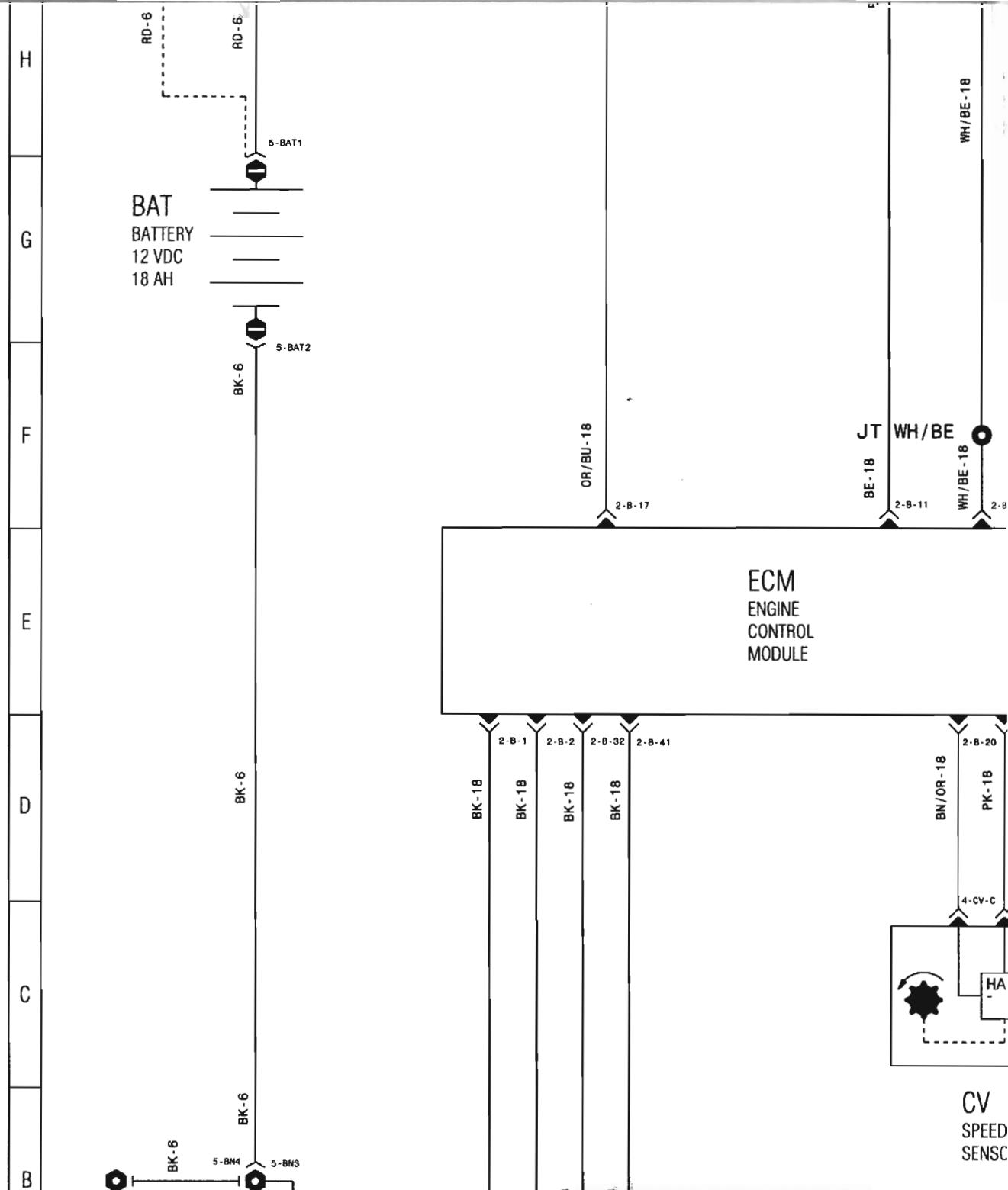
H
G
F
E
D
C
B
RD-6
RD-6
5-BAT1
BAT
BATTERY
12 VDC
18 AH
5-BAT2
BK-6
BK-6
BK-6
BK-6
5-BN4
5-BN3
OR/BU-18
2-B-17
JT
WH/BE
BE-18
2-B-11
WH/BE-18
WH/BE-18
ECM
ENGINE
CONTROL
MODULE
2-B-1
2-B-2
2-B-32
2-B-41
BK-18
BK-18
BK-18
BK-18
2-B-20
BN/OR-18
PK-18
4-CV-C
CV
SPEED
SENSO

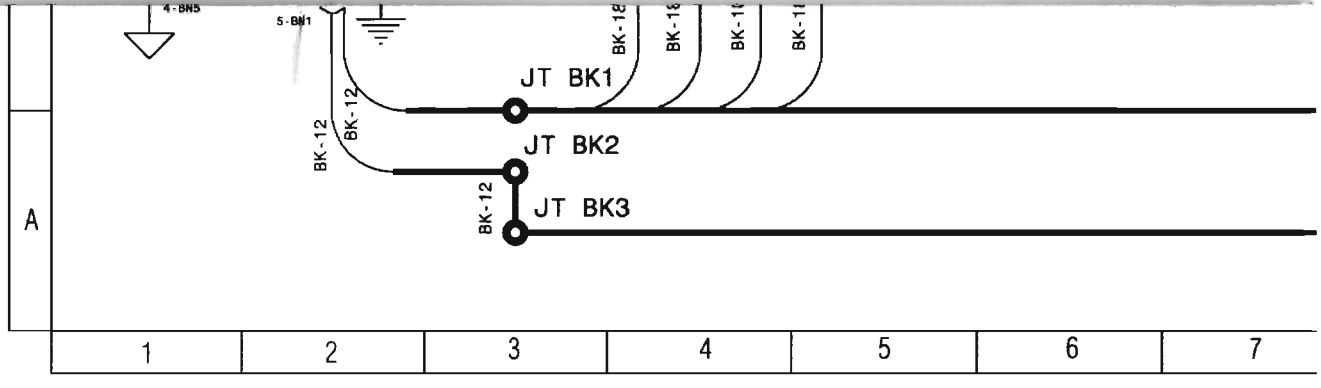
4-BN5
5-BN1
BK-12
BK-12
BK-12
BK-12
JT BK1
JT BK2
JT BK3
A
1
2
3
4
5
6
7

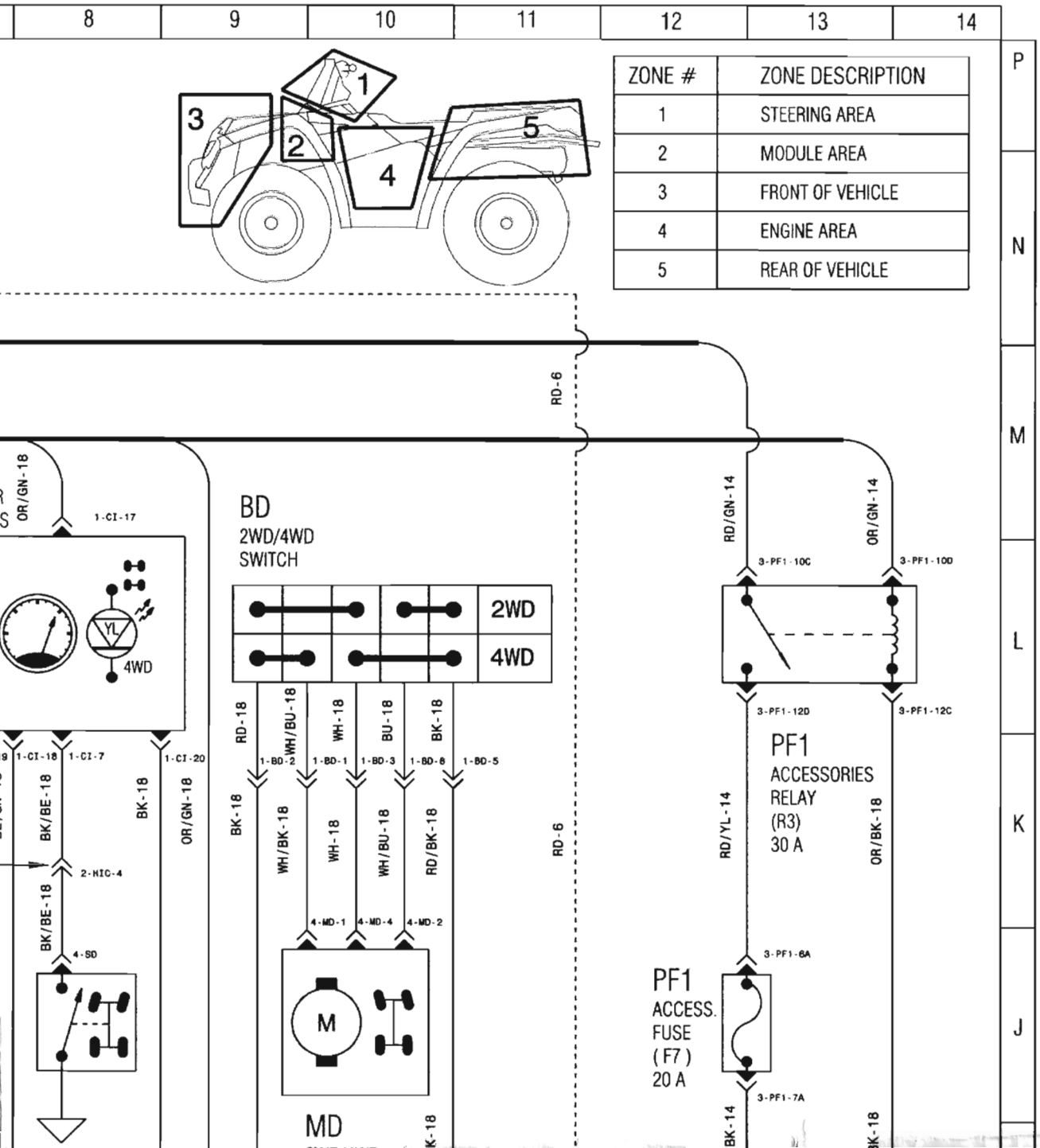


| ZONE # | ZONE DESCRIPTION |
|---|---|
| 1 | STEERING AREA |
| 2 | MODULE AREA |
| 3 | FRONT OF VEHICLE |
| 4 | ENGINE AREA |
| 5 | REAR OF VEHICLE |

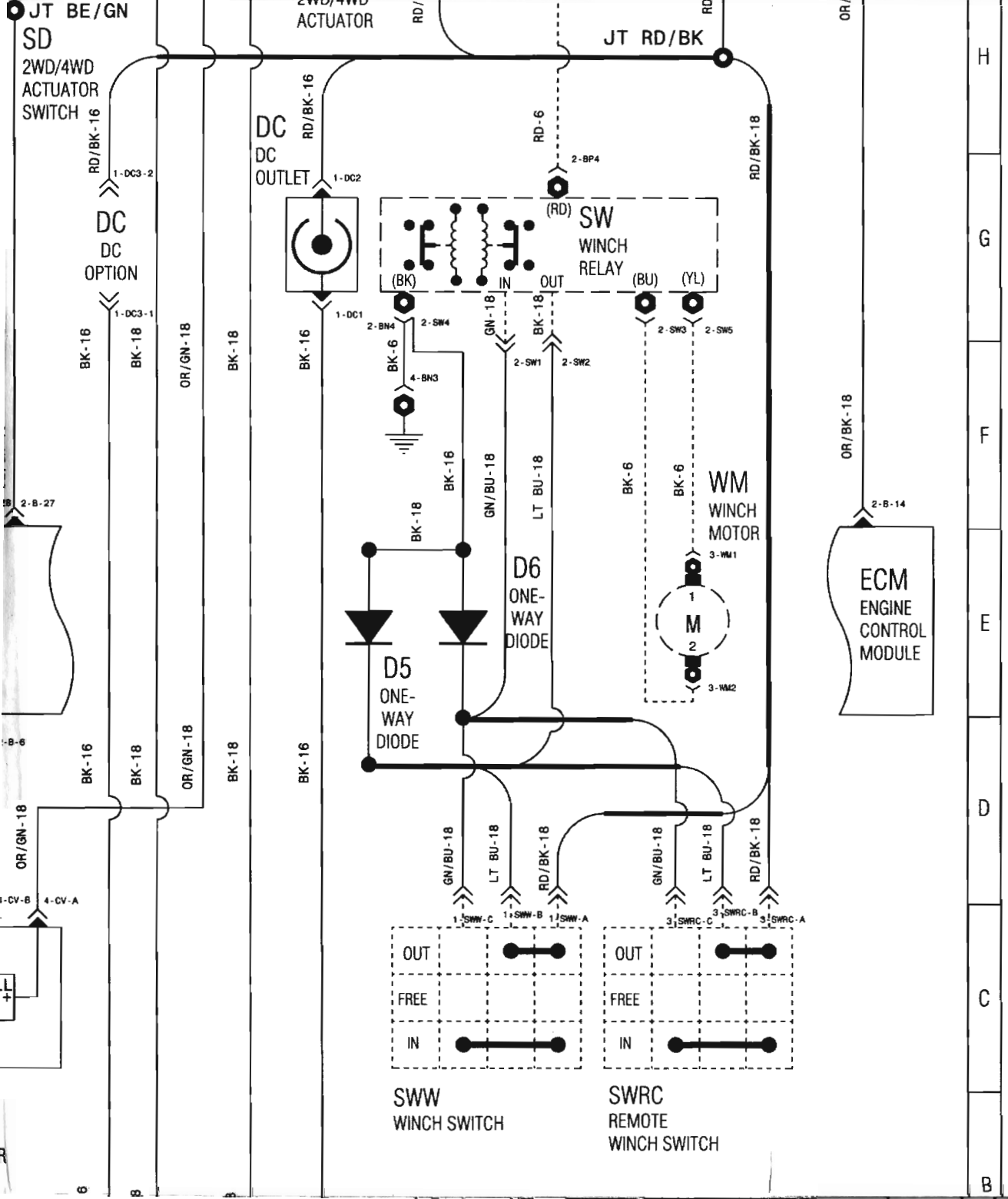
JT BE/GN
SD
2WD/4WD
ACTUATOR
SWITCH
2WD/4WD
ACTUATOR
JT RD/BK
DC
DC
OUTLET
DC
DC
OPTION
SW
WINCH
RELAY
(BK)
IN
OUT
(BU)
(YL)
(RD)
WM
WINCH
MOTOR
M
D6
ONE-
WAY
DIODE
D5
ONE-
WAY
DIODE
ECM
ENGINE
CONTROL
MODULE
OUT
FREE
IN
SWW
WINCH SWITCH
SWRC
REMOTE
WINCH SWITCH
RD/BK-16
RD/BK-18
RD-6
BK-16
BK-18
BK-6
OR/GN-18
OR/BK-18
GN-18
GN/BU-18
LT BU-18
RD/BK-18
1-DC3-2
1-DC3-1
1-DC2
1-DC1
2-BP4
2-BN4
2-SW4
4-BN3
2-SW1
2-SW2
2-SW3
2-SW5
3-WM1
3-WM2
2-B-27
2-B-14
4-CV-A
1-SWW-C
1-SWW-B
1-SWW-A
3-SWRC-C
3-SWRC-B
3-SWRC-A
H
G
F
E
D
C
B

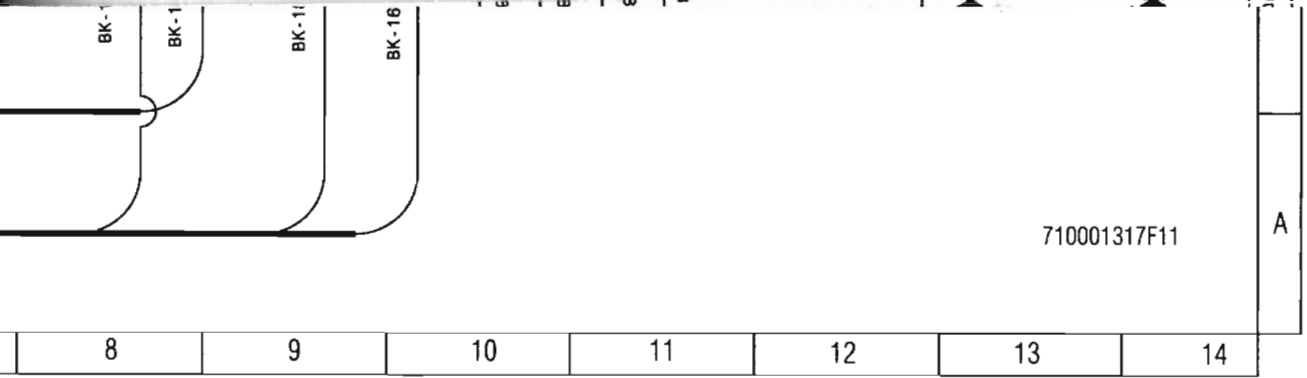
BK-1
BK-1
BK-1
BK-16
710001317F11
A
8
9
10
11
12
13
14

# 2009 Can-Am ATV Service Manual

**Includes 2009 Dealer Only Technical Update Book.**

**Use the 2007/2008 Base manual for everything not contained in the 2009 Service Manual Supplement.**

**Some models may need supplemental manuals which have blue titles. Use the base manual for everything not contained in the supplement if your model or year requires a supplement.**

can-am™

BRP

# SUPPLEMENT

This supplement must be used in conjunction with the 2008 shop manual P/N 219 100 273

# 2009 Shop Manual

## OUTLANDER™ Series 500/650/800

## RENEGADE™ Series 500/800

219 100 336

# 2009
# Shop Manual
# Supplement

## Outlander™ Series
500/650/800R EFI

## Renegade™ Series
500/800R EFI

can-am | BRP

# TABLE OF CONTENTS


**SAFETY NOTICE** ..... III

**INTRODUCTION** ..... IV

**03 ENGINE AND GEARBOX (V490/V660/V810)**

**02 – AIR INTAKE SYSTEM** ..... 1
PROCEDURES ..... 2
AIR FILTER ..... 2
**07 – INTAKE MANIFOLD, CYLINDER HEAD AND CYLINDER** ..... 5
GENERAL ..... 9
PROCEDURES ..... 9
CAMSHAFT ..... 9
**09 – GEARBOX AND 4X4 COUPLING UNIT** ..... 11
GENERAL ..... 13
PROCEDURES ..... 13
GEARBOX POSITION INDICATOR SWITCHES ..... 13
4WD INDICATOR SWITCH ..... 14

**04 ENGINE MANAGEMENT (V490/V660/V810)**

**03 – ADJUSTMENT AND REPAIR PROCEDURES** ..... 17
GENERAL ..... 17
PROCEDURES ..... 17
FUEL INJECTOR ..... 17
THROTTLE CABLE ..... 18

**05 FUEL SYSTEM**

**01 – FUEL TANK AND FUEL PUMP** ..... 21
GENERAL ..... 23
SYSTEM DESCRIPTION ..... 23
INSPECTION ..... 24
FUEL TANK LEAK TEST ..... 24
FUEL PUMP PRESSURE TEST ..... 26
PROCEDURES ..... 27
FUEL HOSE AND OETIKER CLAMPS ..... 27
FUEL TANK ..... 28
FUEL PUMP ..... 31
FUEL LEVEL SENSOR ..... 38

**06 ELECTRICAL SYSTEM**

**03 – CHARGING SYSTEM** ..... 41
GENERAL ..... 41
PROCEDURES ..... 41
STATOR ..... 41

**10 SUSPENSION**

**02 – REAR SUSPENSION** ..... 43
GENERAL ..... 45
PROCEDURES ..... 45
TORSION BAR ..... 45
TRAILING ARM ..... 45

**11 BRAKES**

**01 – FRONT AND REAR BRAKES** ..... 47
GENERAL ..... 53
SYSTEM DESCRIPTION ..... 53

# TABLE OF CONTENTS


**11 BRAKES** (cont'd)

**01 – FRONT AND REAR BRAKES** (cont'd)

MAINTENANCE ..... 54

BRAKE FLUID ..... 54

PROCEDURES ..... 57

REAR BRAKE LIGHT SWITCH ..... 57

FRONT BRAKE LIGHT SWITCH ..... 58

PARKING BRAKE MECHANISM ..... 58

BRAKE LEVER ..... 59

FRONT MASTER CYLINDER ..... 59

REAR MASTER CYLINDER ..... 60

CALIPER ..... 62

BRAKE PADS ..... 63

BRAKE DISC ..... 64

BRAKE PEDAL ..... 65

BRAKE CIRCUIT SPLITTERS (RENEGADE CE MODELS) ..... 66

BRAKE HOSES ..... 67

**12 BODY/FRAME**

**01 – BODY** ..... 69

GENERAL ..... 83

PROCEDURES ..... 83

CENTRAL PANEL ..... 83

HEAVY DUTY BUMPER ..... 84

FRONT BUMPER/FRONT SKID PLATE/FRONT FASCIA ..... 85

**13 TECHNICAL SPECIFICATIONS**

**01 – OUTLANDER** ..... 87

**02 – RENEGADE** ..... 97

# SAFETY NOTICE

This manual has been prepared as a guide to correctly service and repair 2009 Can-Am ATVs as describe in the model list in the *INTRODUCTION*.

This *SHOP MANUAL SUPPLEMENT* must be used in conjunction with the *2008 CAN-AM SHOP MANUAL* (P/N 219 100 273). Refer to this manual when a particular system is not covered in this supplement.

This edition was primarily published to be used by mechanical technicians who are already familiar with all service procedures relating to BRP products. Mechanical technicians should attend training courses given by B.R.P.T.I.

Please note that the instructions will apply only if proper hand tools and special service tools are used.

It is understood that this manual may be translated into another language. In the event of any discrepancy, the English version shall prevail.

The content depicts parts and/or procedures applicable to the particular product at time of writing. Service and Warranty Bulletins may be published to update the content of this manual. Make sure to read and understand these. It does not include dealer modifications, whether authorized or not by BRP, after manufacturing the product.

In addition, the sole purpose of the illustrations throughout the manual, is to assist identification of the general configuration of the parts. They are not to be interpreted as technical drawings or exact replicas of the parts.

The use of BRP parts is most strongly recommended when considering replacement of any component. Dealer and/or distributor assistance should be sought in case of doubt.

The engines and the corresponding components identified in this document should not be utilized on product(s) other than those for which it was designed.

**⚠ WARNING**

Unless otherwise specified, engine should be turned OFF and cold for all maintenance and repair procedures.

This manual emphasizes particular information denoted by the wording and symbols:

**⚠ WARNING**

Identifies an instruction which, if not followed, could cause serious personal injury including possibility of death.

**⚠ CAUTION** Denotes an instruction which, if not followed, could severely damage vehicle components.

NOTE: Indicates supplementary information needed to fully complete an instruction.

Although the mere reading of such information does not eliminate the hazard, your understanding of the information will promote its correct use. Always use common shop safety practice.

BRP disclaims liability for all damages and/or injuries resulting from the improper use of the contents. We strongly recommend that any services be carried out and/or verified by a highly skilled professional mechanic. It is understood that certain modifications may render use of the vehicle illegal under existing federal, provincial and state regulations.

# INTRODUCTION

This shop manual supplement covers the following BRP made 2009 Can-Am ATVs.

| MODEL | COLOR | ENGINE | MODEL NUMBER |
|---|---|---|---|
| Outlander 500 | Red, Yellow | V490 | 2T9A, 2T9B |
| Outlander 500 XT | Black, Camo, Red, Yellow | V490 | 2U9A, 2U9B, 2U9C, 2U9D, 2U9E, 2U9F |
| Outlander MAX 500 | Red | V490 | 2W9A |
| Outlander MAX 500 XT | Black, Camo, Red, Yellow | V490 | 2X9A, 2X9B, 2X9C, 2X9D, 2X9E, 2X9F |
| Outlander 650 | Red, Yellow | V660 | 2N9A, 2N9B, 2N9C |
| Outlander 650 XT | Black, Camo, Red, Yellow | V660 | 2P9A, 2P9B, 2P9C, 2P9D, 2P9E, 2P9F, 2P9G, 2P9H, 2P9J |
| Outlander MAX 650 | Red, Yellow | V660 | 2R9A, 2R9B, 2R9C, 2R9D,9 |
| Outlander MAX 650 XT | Black, Camo, Red, Yellow | V660 | 2S9A, 2S9B, 2S9C, 2S9D, 2S9E, 2S9F, 2S9G, 2S9H, 2S9J |
| Outlander 800 | Yellow | V810 | 2H9E |
| Outlander 800 XT | Black, Camo, Red, Yellow | V810 | 2J9J, 2J9K, 2J9L, 2J9M, 2J9N, 2J9P |
| Outlander Max 800 | Red, Yellow | V810 | 2K9A, 2K89B, 2K9C, 2K9D |
| Outlander MAX 800 XT | Black, Camo, Red, Yellow | V810 | 2L9A, 2L9B, 2L9C, 2L9D, 2l9E, 2L9F, 2L9G, 2L9H, 2L9J |
| Outlander MAX 800 Ltd | Red | V810 | 2M9A, 2M9B, 2M9C, 2M9D |
| Renegade 500 | Red, Yellow | V490 | 4E9A, 4E9B, 4E9C, 4E9D |
| Renegade 800 | Red, Yellow | V810 | 4B9A, 4B9B, 4B9C, 4B9E, 4B9F |
| Renegade 800 X | Black | V810 | 4C8A, 4C8B, 4C8C |

The information and component/system descriptions contained in this manual are correct at time of writing. BRP however, maintains a policy of continuous improvement of its products without imposing upon itself any obligation to install them on products previously manufactured.

Due to late changes, there may be some differences between the manufactured product and the description and/or specifications in this document.

BRP reserves the right at any time to discontinue or change specifications, designs, features, models or equipment without incurring obligation.

# AIR INTAKE SYSTEM

## SERVICE PRODUCTS

| Description | Part Number | Page |
|---|---|---|
| AIR FILTER CLEANER | 219 700 341 | 2 |

*800R Models*

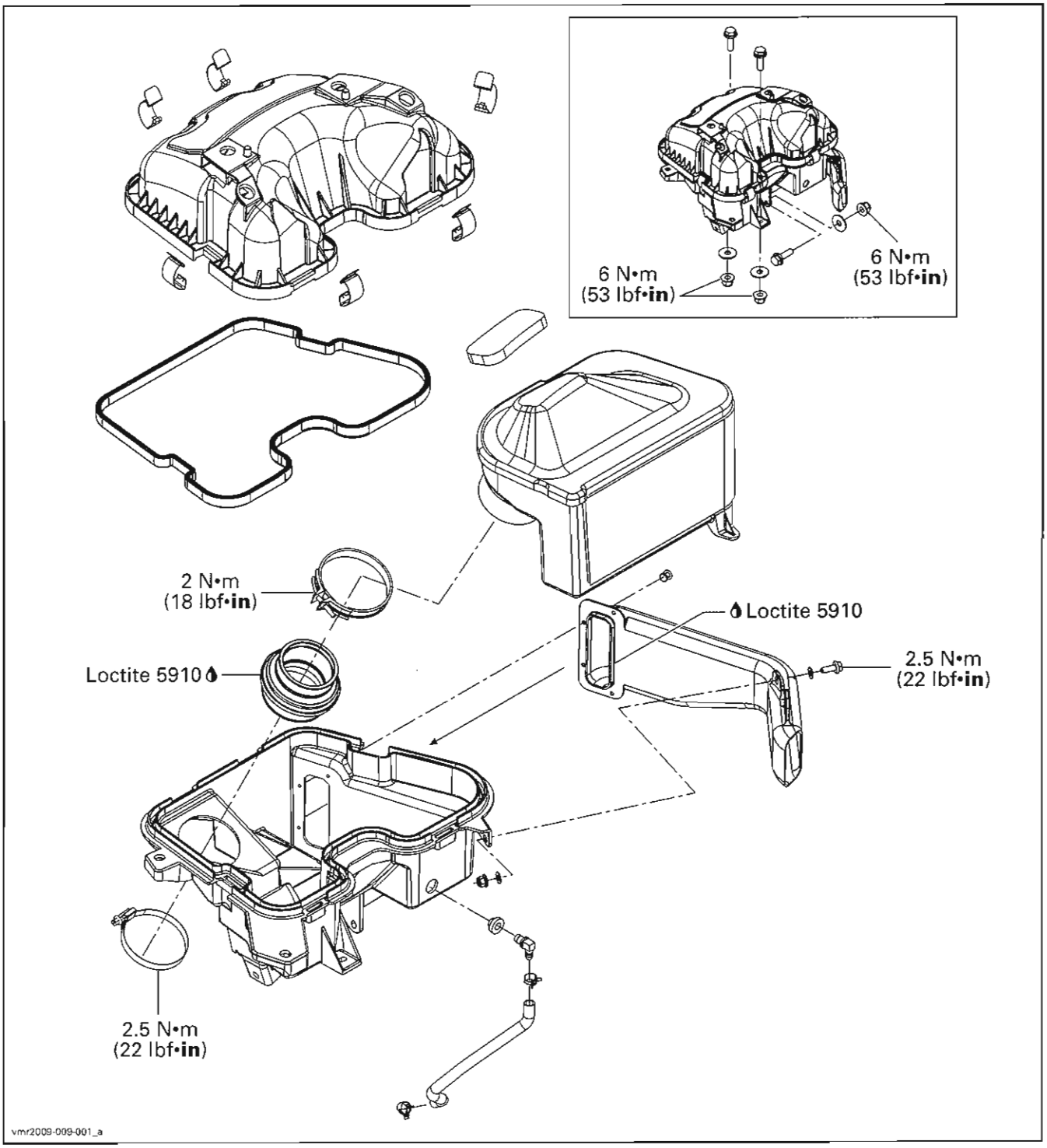

# PROCEDURES

## AIR FILTER

**NOTICE** Never remove or modify any component in the air filter housing. The engine management system is calibrated to operate specifically with these components. Otherwise, engine performance degradation or damage can occur.

If vehicle is used in dusty area, inspect more frequently than specified in *MAINTENANCE CHART*.

If liquid or deposits are found, squeeze and dry the foam filter. Replace filter element if damaged.

**NOTICE** Do not start engine if liquid or deposit are found. If there is oil in the air filter housing, check engine oil level. Oil level may be too high.

### Air Filter Removal

*800R Models*

Remove seat, side panels, central panel and dashboard. Refer to *BODY* section.

Release clamps and remove air filter housing cover.

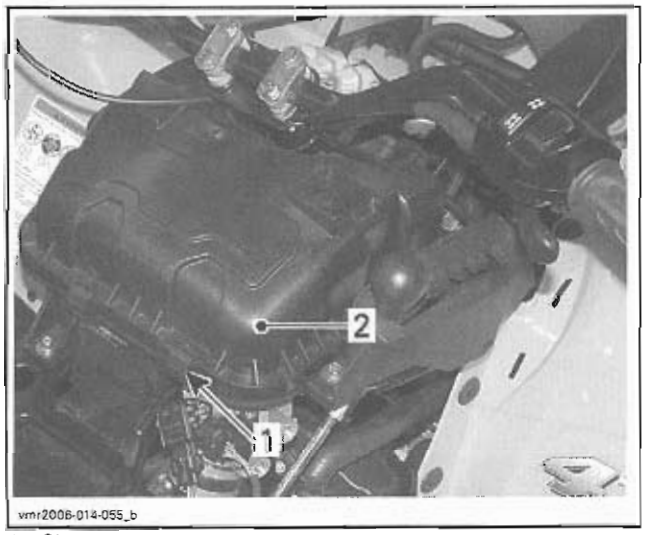


*1. Clamps*
*2. Cover*

Loosen clamp and remove air filter.

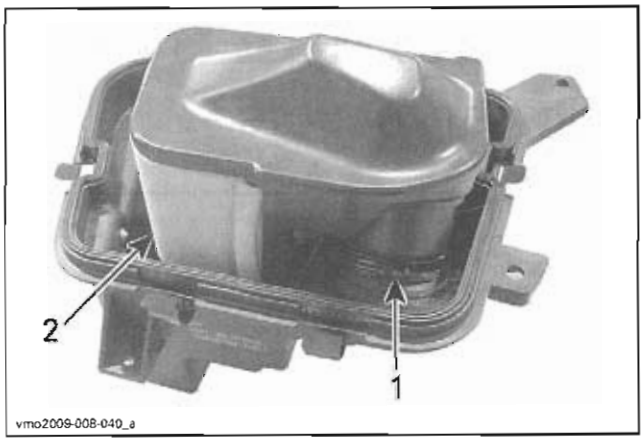


*800R ENGINE AIR FILTER SHOWN*
*1. Clamp*
*2. Air filter*

Remove foam prefilter by carefully pushing the extremities toward the inside.

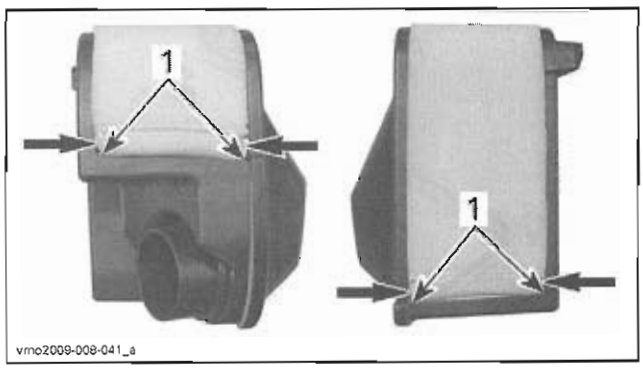


*1. Foam prefilter extremities*

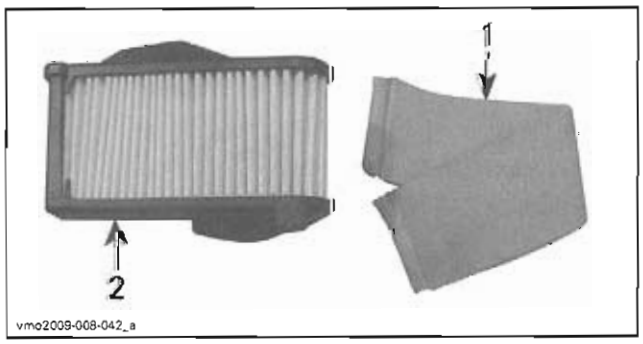


*1. Foam prefilter*
*2. Filter*

### Air Filter Cleaning

#### Foam Prefilter Cleaning

1. Pour AIR FILTER CLEANER (P/N 219 700 341) or an equivalent into a bucket.
2. Put the foam prefilter in to soak.
3. While foam prefilter soaks, clean inside the air filter housing.
4. Rinse the foam prefilter with warm water until all cleaning solution disappears.
5. Let the foam prefilter dry completely.

### Filter Cleaning

1. Shake the filter vigorously to remove dust from air filter.
2. If necessary, blow low pressure compressed air from inside of filter to clean it.

**NOTICE** Do not wash the paper filter with any cleaning solution.

## Air Filter Installation

1. Properly reinstall removed parts in the reverse order of their removal.

# INTAKE MANIFOLD, CYLINDER HEAD AND CYLINDER

## INTAKE MANIFOLD

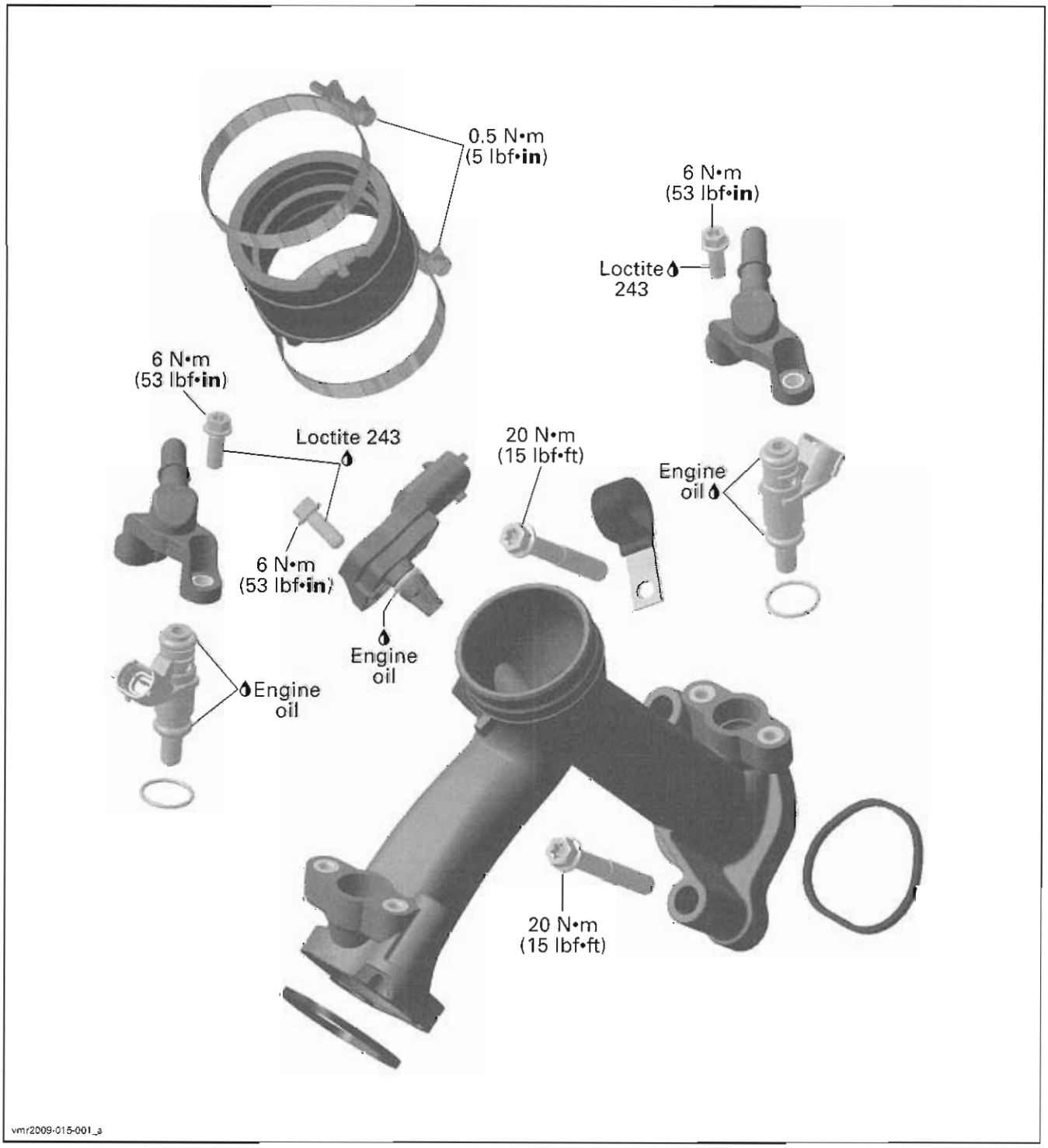

# CYLINDER HEAD NO. 1

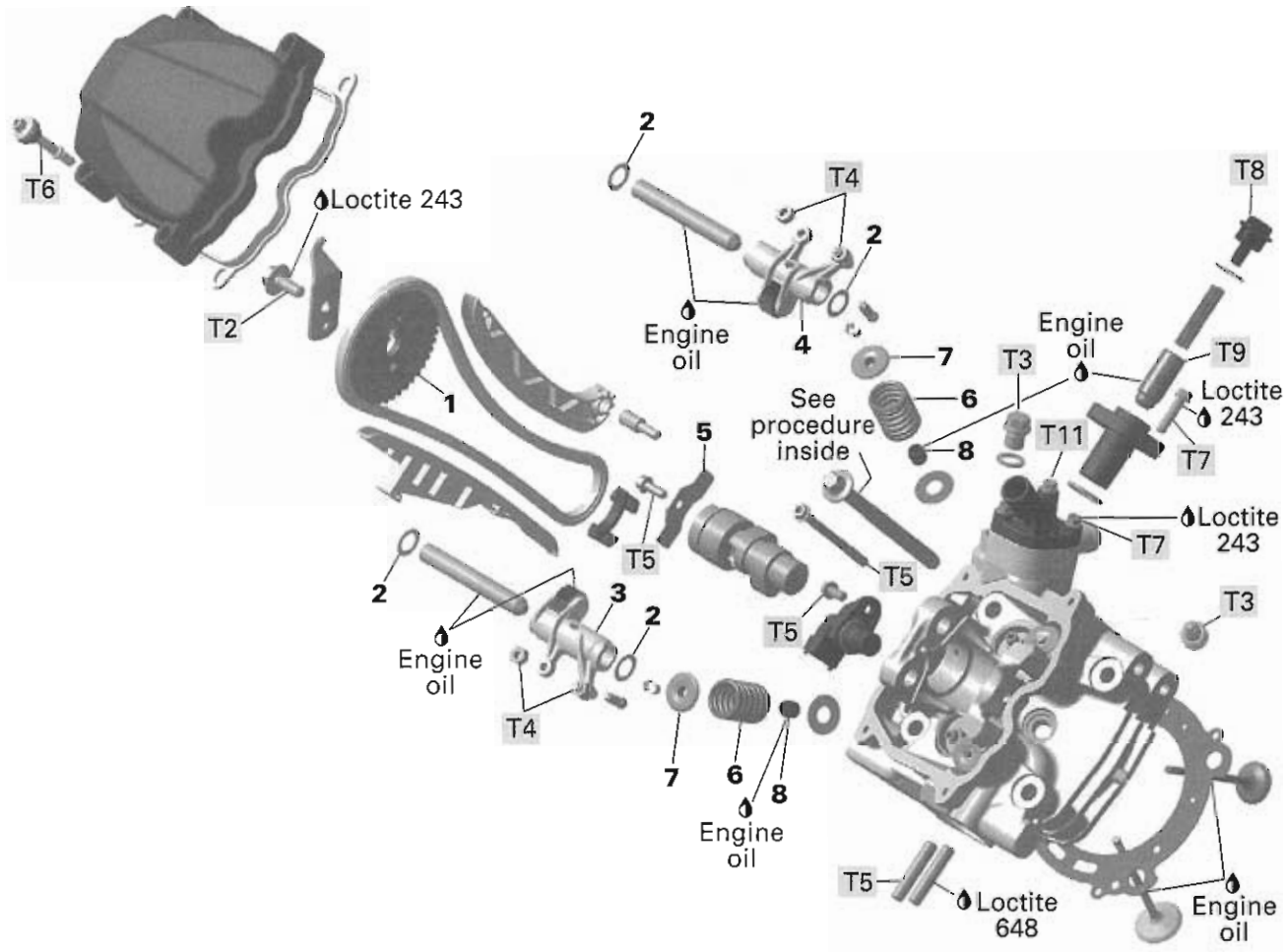


| | |
|---|---|
| T1 | 60 N•m (44 lbf•ft) |
| T2 | 30 N•m (22 lbf•ft) |
| T3 | 20 N•m (15 lbf•ft) |
| T4 | 12 N•m (106 lbf•**in**) |
| T5 | 10 N•m (89 lbf•**in**) |
| T6 | 7 N•m (62 lbf•**in**) |

| | |
|---|---|
| T7 | 6 N•m (53 lbf•**in**) |
| T8 | 4.5 N•m (40 lbf•**in**) |
| T9 | 0.1 N•m (0.89 lbf•**in**) |
| T10 | 16 N•m (141 lbf•**in**) |
| T11 | 5 N•m (44 lbf•**in**) |

vmr2007-036-001_a

# CYLINDER HEAD NO. 2

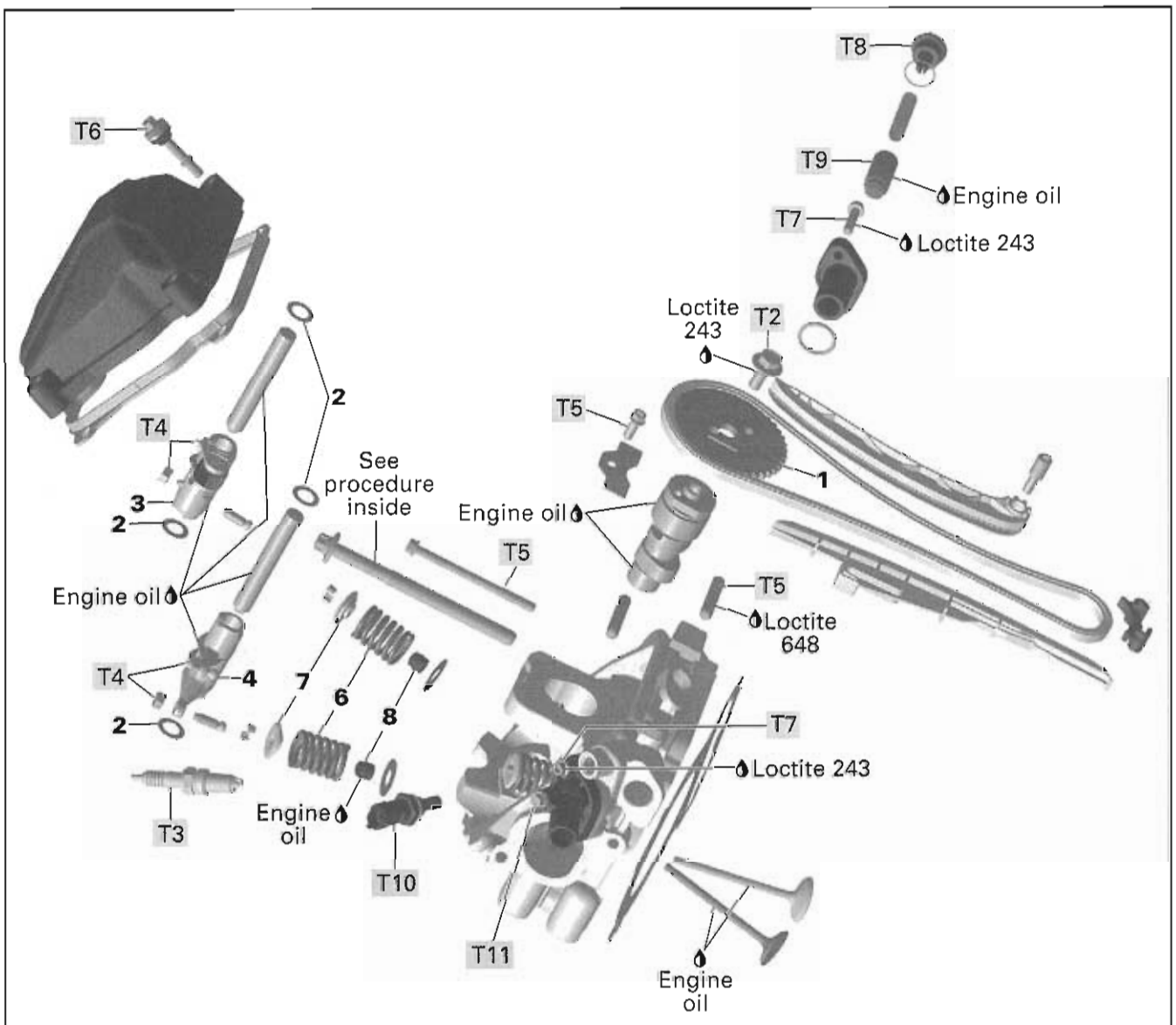


| | |
|---|---|
| T1 | 60 N•m (44 lbf•ft) |
| T2 | 30 N•m (22 lbf•ft) |
| T3 | 20 N•m (15 lbf•ft) |
| T4 | 12 N•m (106 lbf•**in**) |
| T5 | 10 N•m (89 lbf•**in**) |
| T6 | 7 N•m (62 lbf•**in**) |

| | |
|---|---|
| T7 | 6 N•m (53 lbf•**in**) |
| T8 | 4.5 N•m (40 lbf•**in**) |
| T9 | 0.1 N•m (0.89 lbf•**in**) |
| T10 | 16 N•m (141 lbf•**in**) |
| T11 | 5 N•m (44 lbf•**in**) |

vmr2007-036-002_a

# CYLINDERS AND PISTONS

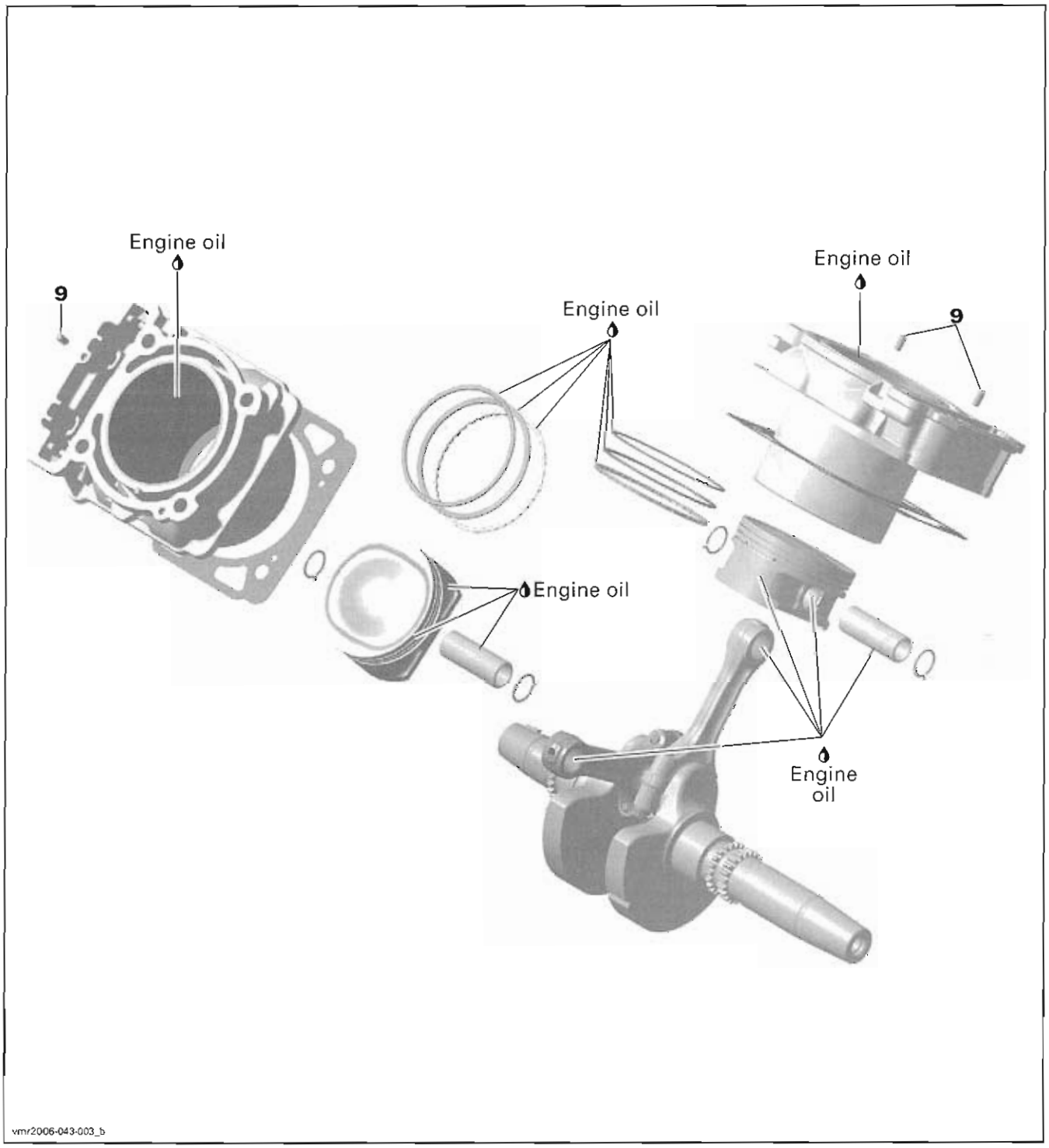

# GENERAL

Refer to the *2008 SHOP MANUAL* (P/N 219 100 273) for topics not covered in this section.

# PROCEDURES

## CAMSHAFT

### Camshaft Inspection

| V490 | |
|---|---|
| **CAMSHAFT LOBE (EXHAUST)** | |
| NEW | 31.730 - 31.930 mm (1.2492 - 1.2571 in) |
| SERVICE LIMIT | 31.710 mm (1.2484 in) |
| **CAMSHAFT LOBE (INTAKE)** | |
| NEW | 31.830 - 32.030 mm (1.2531 - 1.2610 in) |
| SERVICE LIMIT | 31.810 mm (1.2524 in) |

| V660 | |
|---|---|
| **CAMSHAFT LOBE (EXHAUST)** | |
| NEW | 31.940 - 32.140 mm (1.2575 - 1.2654 in) |
| SERVICE LIMIT | 31.920 mm (1.2567 in) |
| **CAMSHAFT LOBE (INTAKE)** | |
| NEW | 32.110 - 32.310 mm (1.2642 - 1.2721 in) |
| SERVICE LIMIT | 32.090 mm (1.2634 in) |

| V810 | |
|---|---|
| **CAMSHAFT LOBE (EXHAUST)** | |
| NEW | 32.950 - 33.150 mm (1.2972- 1.3051 in) |
| SERVICE LIMIT | 32.930 mm (1.2965 in) |
| **CAMSHAFT LOBE (INTAKE)** | |
| NEW | 32.890 - 33.090 mm (1.2949 - 1.3028 in) |
| SERVICE LIMIT | 32.870 mm (1.2941 in) |

# GEARBOX AND 4X4 COUPLING UNIT

## SERVICE PRODUCTS

| Description | Part Number | Page |
|---|---|---|
| LOCTITE 5910 | 293 800 081 | 14–15 |

## GEARBOX COMPONENTS AND 4X4 COUPLING MECHANISM

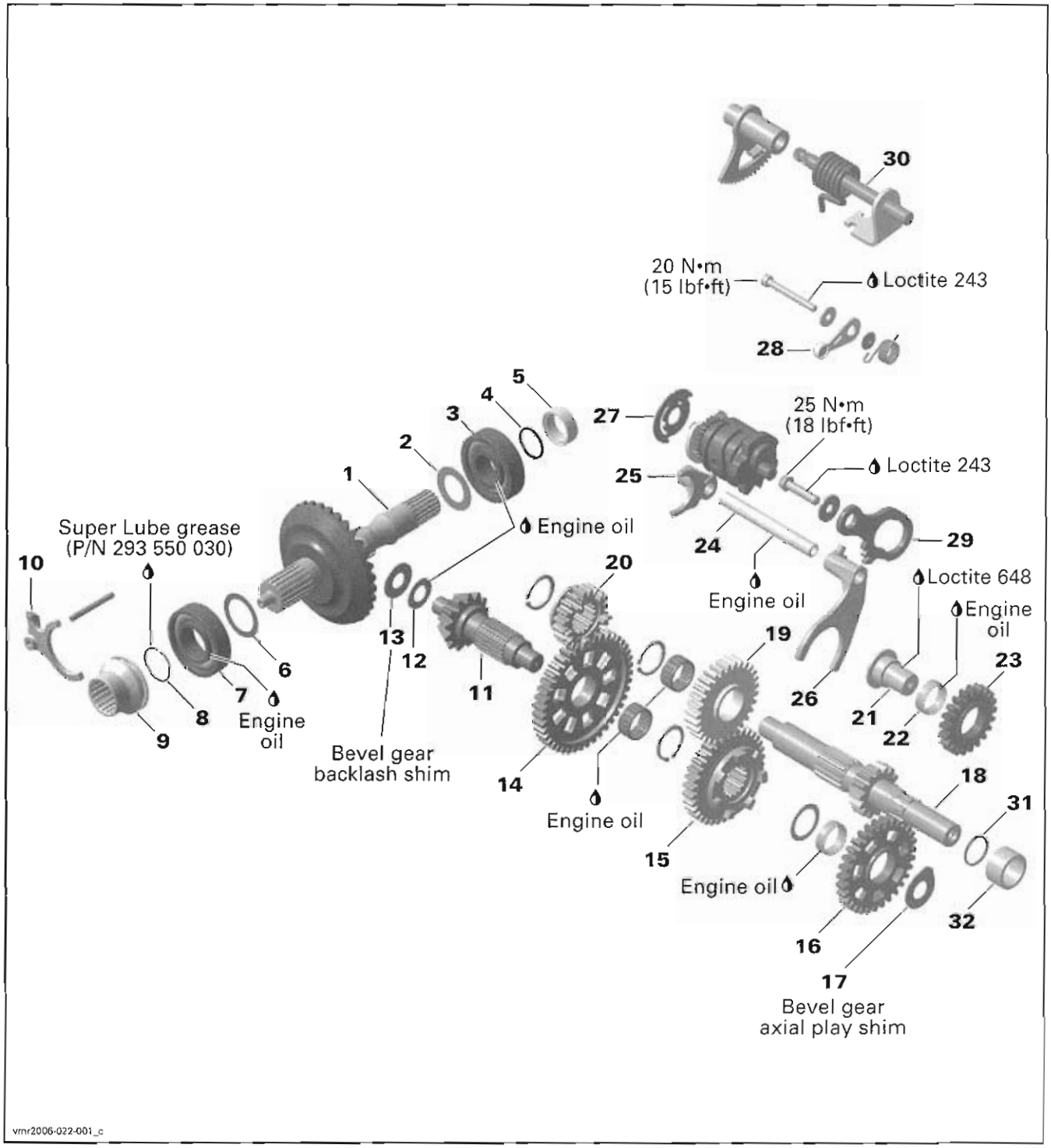

# GEARBOX HOUSING AND 4X4 ACTUATOR UNIT

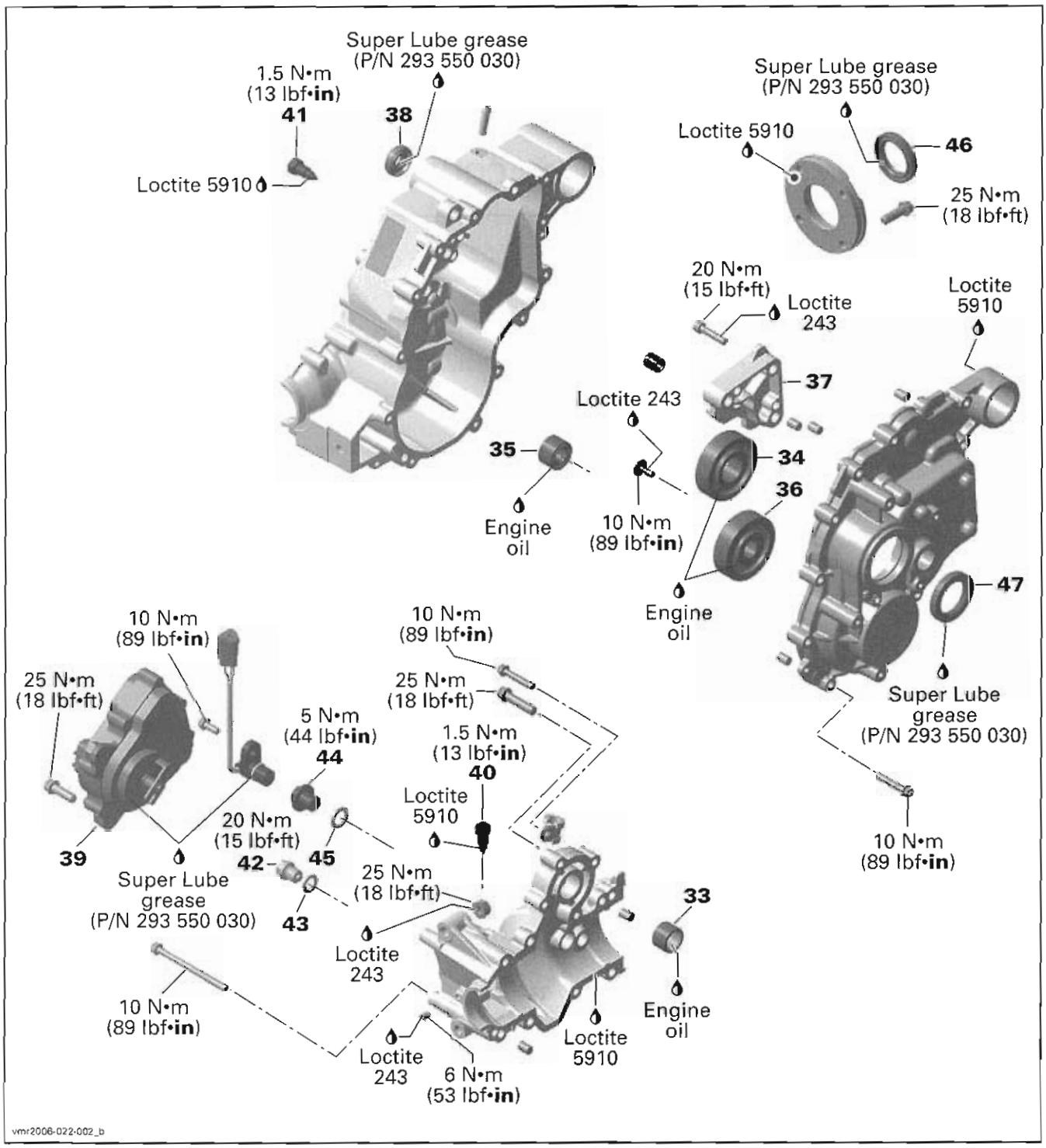

# GENERAL

Refer to the *2008 SHOP MANUAL* (P/N 219 100 273) for topics not covered in this section.

# PROCEDURES

## GEARBOX POSITION INDICATOR SWITCHES

NOTE: The gearbox removal is not necessary to reach the gearbox position indicator switches.

### Indicator Switches Removal

*Outlander 500/650 and Renegade 500*

To reach the gearbox position indicator switches **no. 41**, remove the rear engine cover.

Remove screw retaining indicator switch wire.

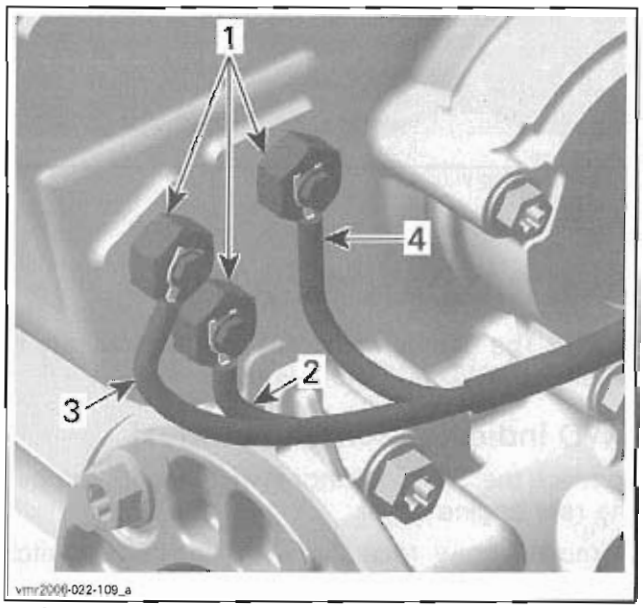


1. *Gearbox position indicator switches*
2. *BROWN/GREY wire*
3. *WHITE/GREY wire*
4. *ORANGE/GREY wire*

Unscrew switch.

*Outlander 800R*

To reach the gearbox position indicator switches **no. 41**, remove the rear engine cover.

Remove and discard Oetiker clamp retaining indicator switch connector to the indicator switch.

Unplug indicator switch connector.

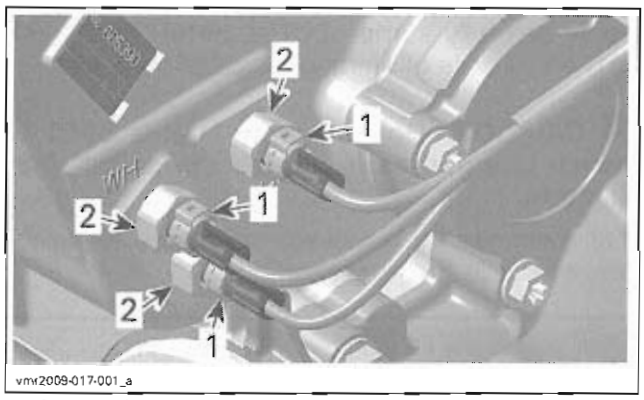


1. *Oetiker clamps*
2. *Gearbox position indicator switches*

Unscrew switch.

### Indicator Switches Test

Check if gearbox position indicator switches work properly as per following procedure:

Disconnect wires from switches.

NOTE: Remove insulating paint to obtain correct readings.

Put gearbox in park, reverse, neutral, high and low position.

Use a multimeter to measure the resistance from the indicator switch to engine ground. Compare results with the logic table below.

| SHIFTER POSITION | CORRESPONDING SWITCH WIRES | | |
|---|---|---|---|
| | BROWN/ GREY | WHITE/ GREY | ORANGE/ GREY |
| L | X | | X |
| H | | | X |
| N | | X | X |
| R | | X | |
| P | X | X | |

An "X" indicates switch is making ground contact, thus there should be continuity (R is close to 0 ohms).

A blank space indicates switch is not making contact, there should be no continuity (R = infinite).

If the indicator switch is good, check the vehicle harness and/or indicator lights.

### Indicator Switches Installation

*Outlander 500/650 and Renegade 500*

For installation, reverse the removal procedure. Pay attention to the following details.

Take care do not damage shifting indicator switches threads during installation.

Apply carefully some LOCTITE 5910 (P/N 293 800 081) on threads of shifting indicator switches.

⚠ **CAUTION** Do not apply Loctite 5910 on switch plunger, as it will lead to switch malfunction.

If all switches are removed, make sure to put the wires back in the right location.

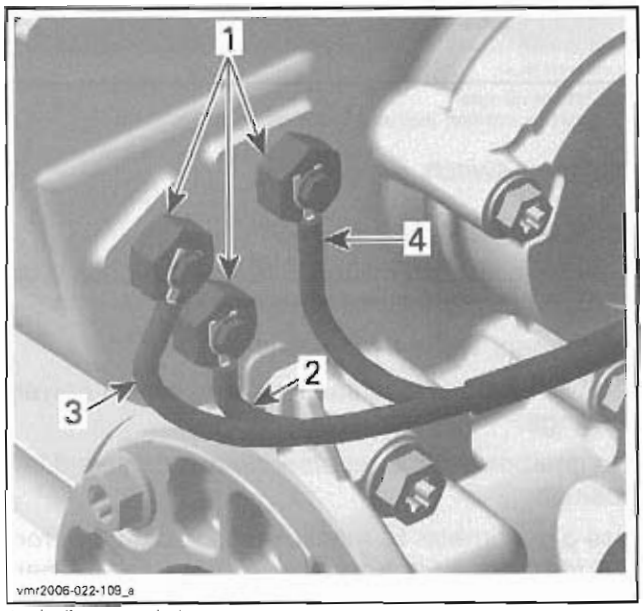


1. *Indicator switches*
2. *BROWN/GREY wire*
3. *WHITE/GREY wire*
4. *ORANGE/GREY wire*

Spray a layer of electrical insulating paint or varnish over switches to prevent shorts and corrosion.

*Outlander 800R*

For installation, reverse the removal procedure. Pay attention to the following details.

Take care do not damage shifting indicator switches threads during installation.

Apply carefully some LOCTITE 5910 (P/N 293 800 081) on threads of shifting indicator switches.

⚠ **CAUTION** Do not apply Loctite 5910 on switch plunger, as it will lead to switch malfunction.

If all switches are removed, make sure to put the wires back in the right location.

Secure connectors with NEW Oetiker clamps.

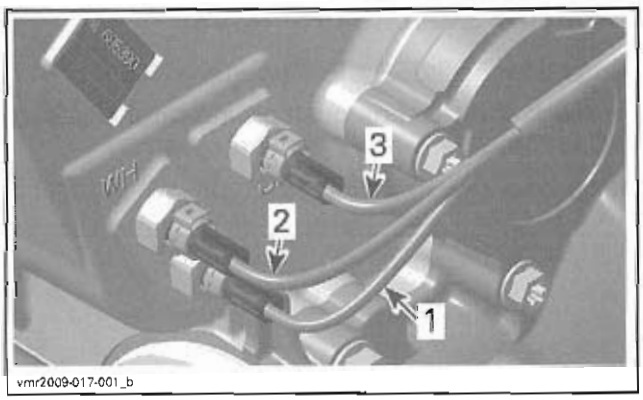


1. *BROWN/GREY wire*
2. *WHITE/GREY wire*
3. *ORANGE/GREY wire*

## 4WD INDICATOR SWITCH

NOTE: The gearbox removal is not necessary to reach the 4WD indicator switch.

### 4WD Indicator Switch Removal

To reach the 4WD indicator switch no. 40, remove the rear engine cover.

Remove screw retaining 4WD indicator switch wire.

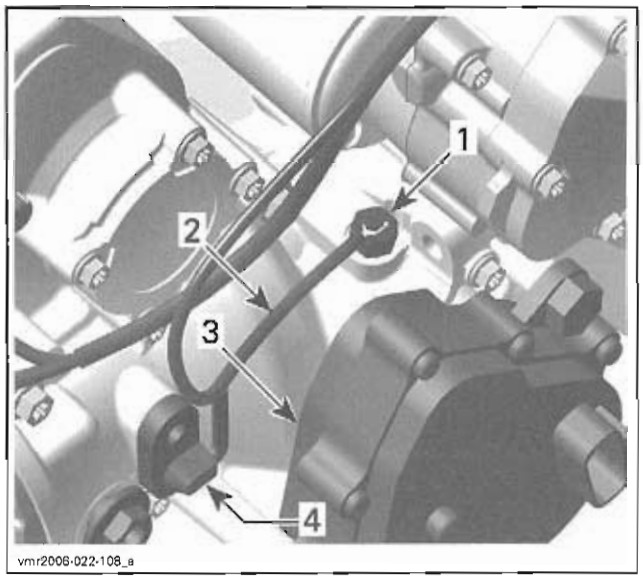


*OUTLANDER 500/650 AND RENEGADE 500*
1. *4 WD indicator switch*
2. *BLACK/YELLOW wire for contact to 4WD*
3. *Actuator*
4. *Speed sensor*

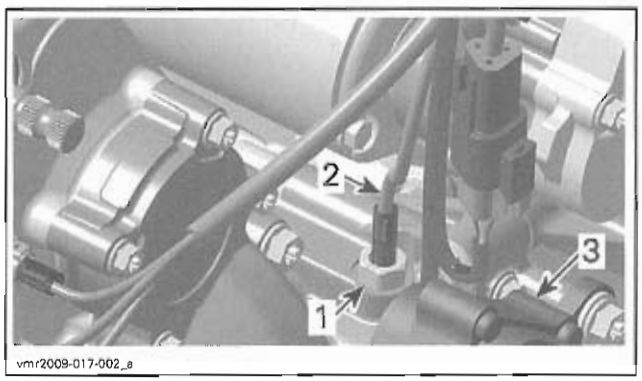


*OUTLANDER 800 R*
1. *4 WD indicator switch*
2. *BLACK/YELLOW wire for contact to 4WD*
3. *Actuator*

## 4WD Indicator Switch Test

Measure switch resistance as follows.

| SWITCH POSITION | SWITCH WIRE | | RESISTANCE |
|---|---|---|---|
| 2WD | BLACK/ YELLOW | Engine ground | Infinite (OL) |

If the resistance is out of specification, replace the 4WD indicator switch.

## 4WD Indicator Switch Installation

For installation, reverse the removal procedure. Pay attention to the following details.

Take care do not damage indicator switch threads during installation.

Apply carefully some LOCTITE 5910 (P/N 293 800 081) on threads of indicator switch.

**CAUTION** Do not apply Loctite 5910 on switch plunger, as it will lead to switch malfunction.

Spray a layer of electrical insulating paint or varnish over switch to prevent shorts and corrosion (Outlander 500/650 and Renegade 500).

# ADJUSTMENT AND REPAIR PROCEDURES

## GENERAL

Refer to the *2008 SHOP MANUAL* (P/N 219 100 273) for topics not covered in this section.

## PROCEDURES

### FUEL INJECTOR

#### Resistance Test

Disconnect the connector "A" from the ECM and the engine connector.

Using a multimeter, check resistance value between terminals as follows.

| INJECTOR | ENGINE CONNECTOR PIN | ECM CONNECTOR "A" | RESISTANCE @ 20°C (68°F) |
|---|---|---|---|
| 500/650 | | | |
| FRONT | 3 | A-15 | 13.8 - 15.2 Ω |
| REAR | | A-33 | |
| 800R | | | |
| FRONT | 3 | A-15 | 11.4 - 12.6 Ω |
| REAR | | A-33 | |

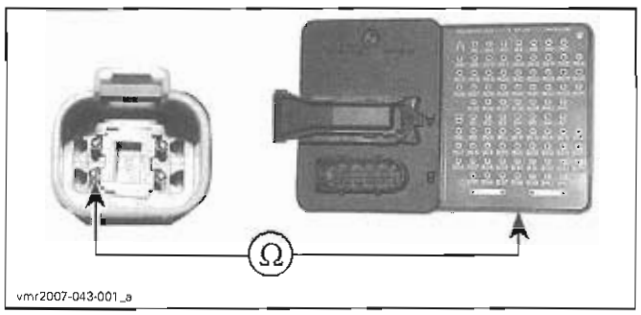


If resistance value is incorrect, remove injector connector and check resistance value between injector pins as follows.

| INJECTOR | INJECTOR PIN | | RESISTANCE @ 20°C (68°F) |
|---|---|---|---|
| 500/650 | | | |
| FRONT | 1 | 2 | 13.8 - 15.2 Ω |
| REAR | | | |
| 800R | | | |
| FRONT | 1 | 2 | 11.4 - 12.6 Ω |
| REAR | | | |

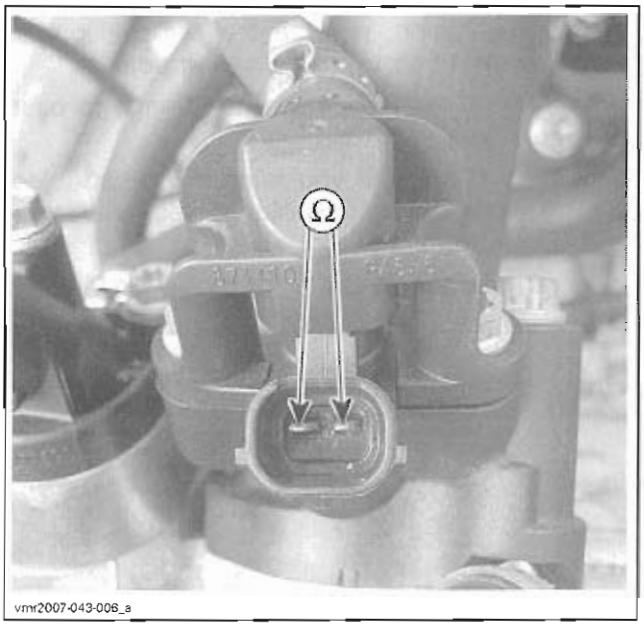


*TYPICAL*

If readings are out of specifications, replace injector.

If readings are good, repair/replace wiring going to injector.

#### Fuel Injector Removal

Before removing the injector, the fuel rail has to be removed from the engine. Refer to *FUEL RAIL* for the procedure.

NOTE: The bottom O-ring of the fuel injector is different between the 800R engine and 500/650 engines.

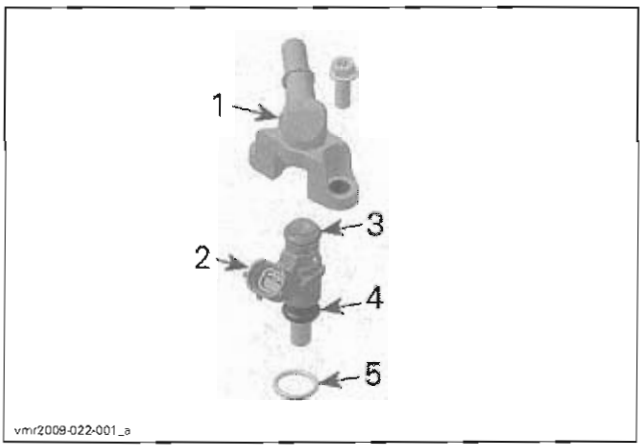


*FUEL RAIL ASS'Y*
1. *Fuel rail*
2. *Fuel injector*
3. *Injector top O-ring*
4. *Injector bottom O-ring*
5. *Manifold O-ring*

The fuel injector can be easily pulled out of the fuel rail.

### Fuel Injector Installation

For the installation, reverse the removal procedure. Pay attention to the following details.

Apply a thin film of engine oil to O-rings to ease insertion in rail.

Install new O-rings, if you reinstall a used injector then insert the fuel injector in place with your hand. Do not use any tool.

Position the manifold O-ring as shown on injector.

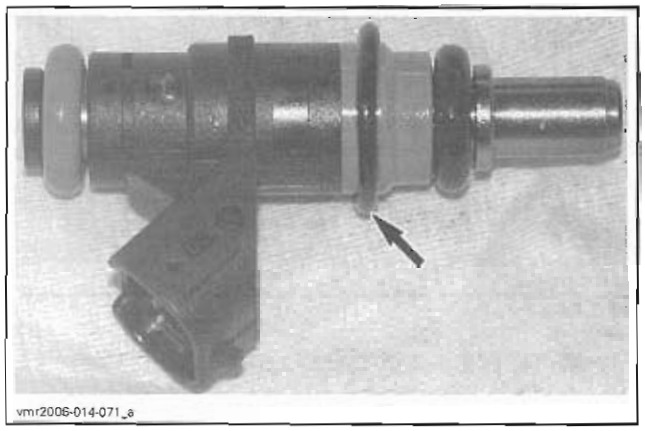


*TYPICAL*

Carefully insert injector in manifold paying attention to the manifold O-ring. Gently push in evenly all around while inserting injector. O-ring must be completely inserted and not visible, before finishing pushing injector.

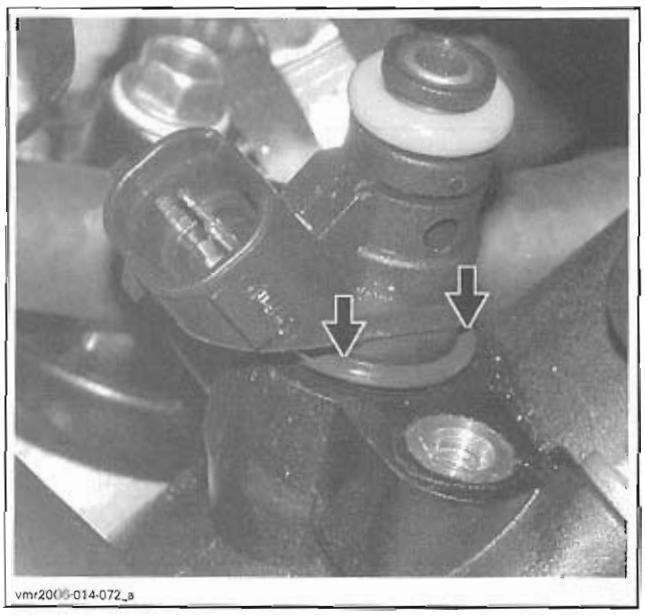


Firmly push injector until it bottoms.

Reinstall fuel rail. See above.

## THROTTLE CABLE

### Throttle Cable Adjustment

#### Throttle Cable Free-Play

Throttle cable routing must be correct.

1. Remove the throttle cam cover on throttle body.
2. Activate throttle lever a few times and release.
3. Make sure throttle cam of throttle body rests against the set screw without any tension or excessive free play on the cable.
   - 3.1 If cam rests against the set screw with a 2 mm (.078 in) cable free-play, go to *THROTTLE LEVER STOPPER SCREW SETTING*.
   - 3.2 If cam does not rest against the set screw or there is tension on the cable, adjust cable free-play as follows.

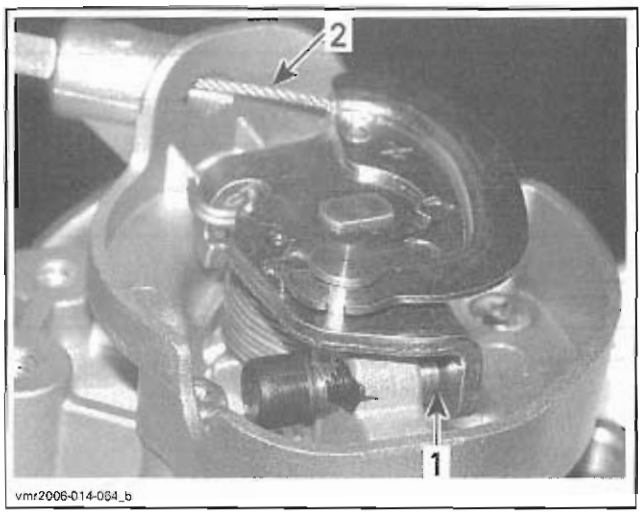


1. *Contact here*
2. *Free-play here*

**NOTICE** Improper cable adjustment will cause strain on the cable or cause damage to the cable bracket or throttle lever.

**⚠ WARNING**

Make sure throttle cam contacts the set screw when throttle lever is fully released at handlebar.

4. Pull the cable protector to expose cable adjuster.
5. Loosen the lock nut.
6. Turn cable adjuster in order to get a 2 mm (.078 in) cable free-play at throttle cam.

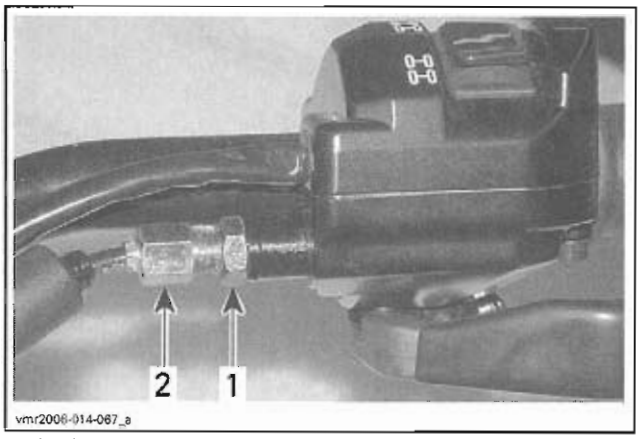


1. *Lock nut*
2. *Cable adjuster*

7. Keep the cable adjuster from turning and tighten lock nut. Slide the cable protector over adjuster.
8. Turn handlebar side to side and ensure there is still free-play in each position.
9. Install throttle cam cover.
10. Go to *THROTTLE LEVER STOPPER SCREW SETTING.*

### Throttle Lever Stopper Screw Setting

1. Loosen the stopper screw lock nut.
2. Fully depress throttle lever (wide open position) and hold.
3. Loosen stopper screw until it just releases throttle lever.

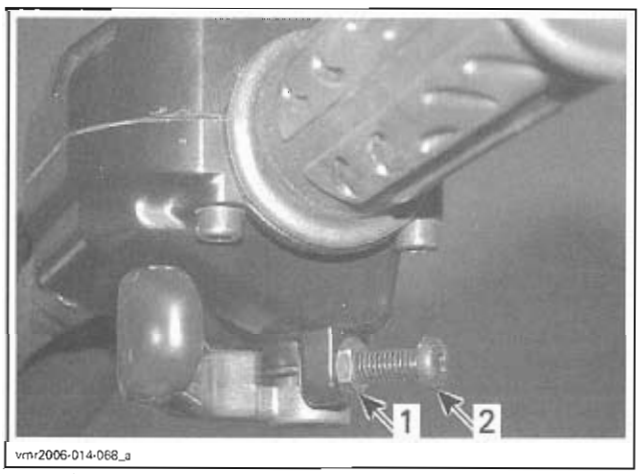


1. *Lock nut*
2. *Stopper screw*

4. Turn stopper screw clockwise until it contacts throttle lever again.
5. From this point, tighten stopper screw 1/2 turn.
6. Keep stopper screw from turning and tighten the lock nut.
7. Using B.U.D.S., verify throttle plate opening.
   7.1 Select **Setting** tab. The display shows the actual throttle opening in degrees.

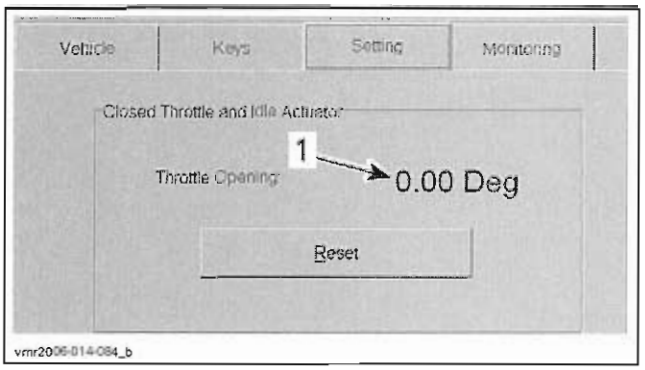


1. *Throttle opening display*

NOTE: Do not click on the **Reset** button.

8. Fully depress throttle lever (wide open position) and hold.
9. Read throttle opening. It should be within the following specification.

| THROTTLE OPENING |
|---|
| 82° to 86° |

# FUEL TANK AND FUEL PUMP

## SERVICE TOOLS

| Description | Part Number | Page |
|---|---|---|
| OETIKER PLIERS | 295 000 070 | 27 |
| SMALL HOSE PINCHER | 295 000 076 | 24 |
| ECM ADAPTER | 420 277 010 | 33 |
| VACUUM/PRESSURE PUMP | 529 021 800 | 24 |
| PRESSURE GAUGE | 529 035 709 | 26 |
| FLUKE 115 MULTIMETER | 529 035 868 | 32 |
| T-FITTING | 529 036 023 | 26 |

## SERVICE TOOLS – OTHER SUPPLIER

| Description | Part Number | Page |
|---|---|---|
| FLUKE RIGID BACK PROBE | TP88 | 32 |

## SERVICE PRODUCTS

| Description | Part Number | Page |
|---|---|---|
| FUEL PUMP NUT TOOL | 529 035 899 | 35 |

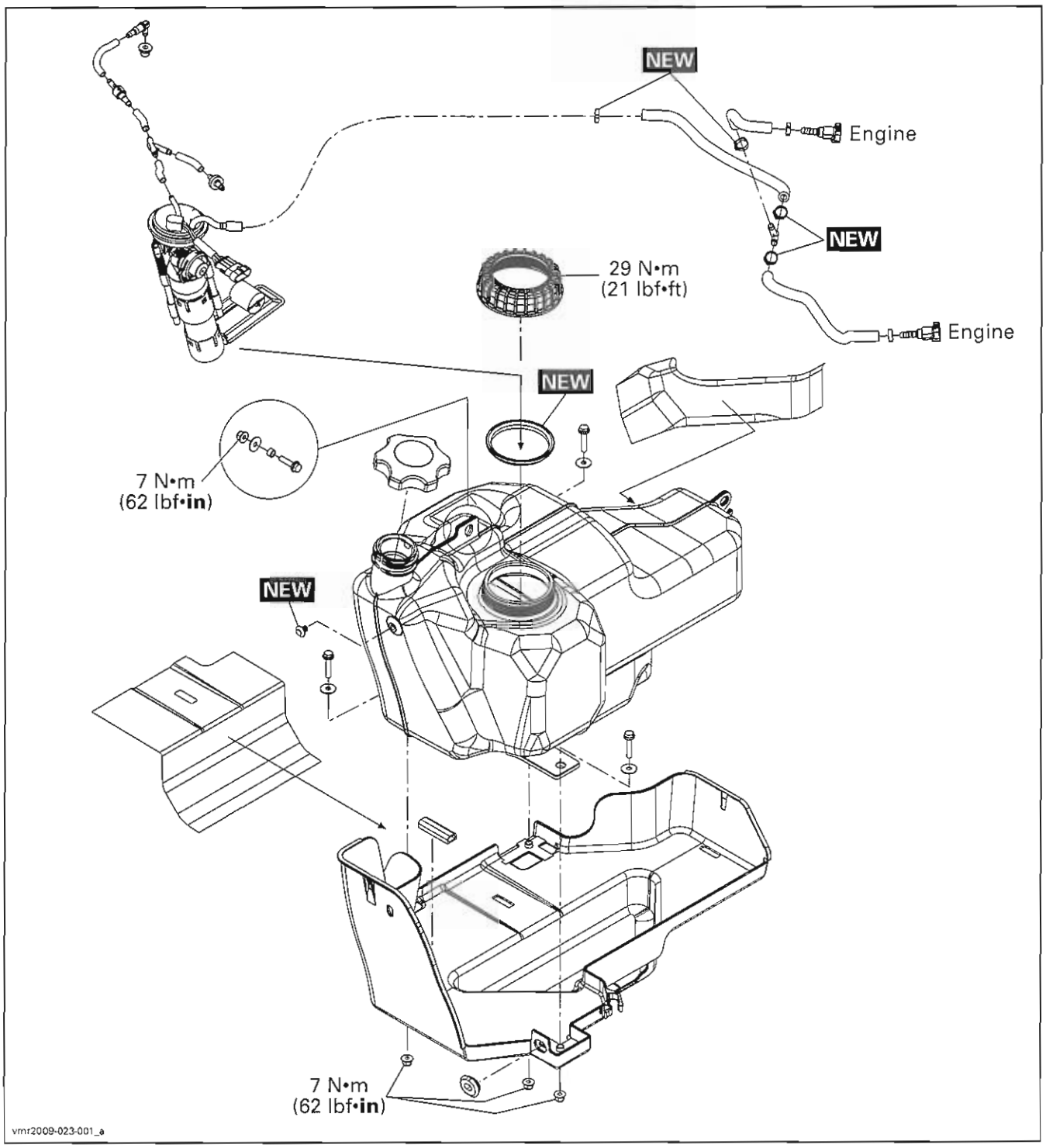
NEW
Engine
NEW
29 N•m
(21 lbf•ft)
Engine
NEW
7 N•m
(62 lbf•in)
NEW
7 N•m
(62 lbf•in)
vmr2009-023-001_a

## GENERAL

**⚠ WARNING**

Fuel is flammable and explosive under certain conditions. Ensure work area is well ventilated. Do not smoke or allow open flames or sparks in the vicinity.

**⚠ WARNING**

Always disconnect battery prior to working on the fuel system. Always disconnect battery exactly in the specified order, BLACK (-) cable first.

Whenever working on fuel system, always verify for water or dust infiltration in reservoir.

During assembly/installation, use the torque values and service products as in the exploded views.

Clean threads before applying a threadlocker. Refer to *SELF-LOCKING FASTENERS* and *LOCTITE APPLICATION* at the beginning of this manual for complete procedure.

**⚠ WARNING**

Torque wrench tightening specifications must be strictly adhered to. Locking devices (e.g.: locking tabs, elastic stop nuts, self-locking fasteners, cotter pin, etc.) must be replaced with new ones.

Hoses or cables removed or disconnected must be installed and routed at the same place.

**⚠ CAUTION** Locking ties removed during a procedure must be replaced and installed at the same location.

**⚠ WARNING**

Fuel lines remain under pressure at all times. Always proceed with caution and use appropriate safety equipment when working on pressurized fuel system. Always wear safety glasses.

Proceed with care when removing/installing pressure test equipment or disconnecting fuel line connections.

Slowly disconnect the fuel hose to minimize spilling. Cover the fuel line connection with an absorbent shop rag. Wipe off any fuel spillage.

**⚠ WARNING**

Do not allow fuel to spill on hot engine parts or electrical connectors. The evaporating fuel on the hot components or on the electrical connectors produce highly inflammable fuel vapors that can easily be ignited by the heat, a spark, electrostatic discharge or stray current resulting in a fire or an explosion.

Never use a hose pincher on injection system high pressure hoses.

Replace any damaged or deteriorated fuel lines.

When the repair is complete, ensure that all hoses are connected and secured. The fuel pump is activated each time electrical power is turned on. A pressure test must be carried out before turning the ignition key to ON and setting the engine run/stop switch to RUN.

**⚠ WARNING**

Always carry out a fuel pump pressure test and/or a fuel tank leak test whenever a related fuel system component has been removed during a maintenance procedure. A missed fuel leak could result in severe injury or death.

After performing a fuel pressure test, use the valve on the fuel pressure gauge to release the pressure (if so equipped).

## SYSTEM DESCRIPTION

### Fuel Tank Vent System

The fuel tank is equipped with a vent system that provides over pressure relief and negative pressure relief of the fuel tank.

Air can enter the fuel tank at all times through the vent system INLET check valve. This prevents negative pressure within the fuel tank which could cause fuel starvation.

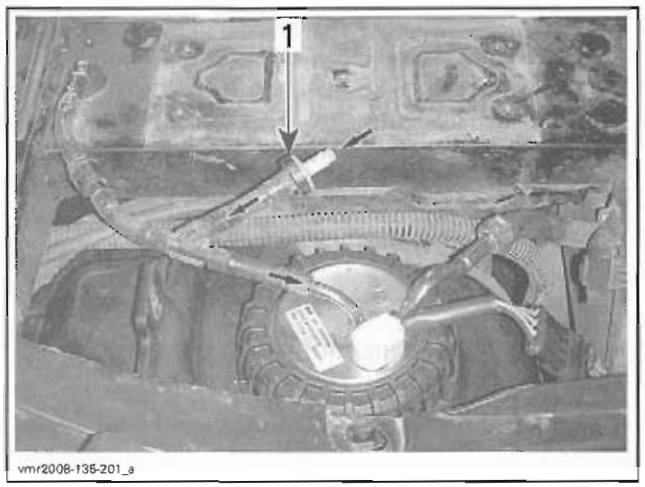


*1. Vent inlet check valve*

The vent inlet check valve also prevents fuel from flowing out through the inlet of the vent system.

If the pressure in the fuel tank builds up and exceeds 2.5 - 7.6 kPa (.36 - 1.1 PSI), the **pressure relief valve** opens and lets the excess pressure evacuate through the vent system OUTLET.

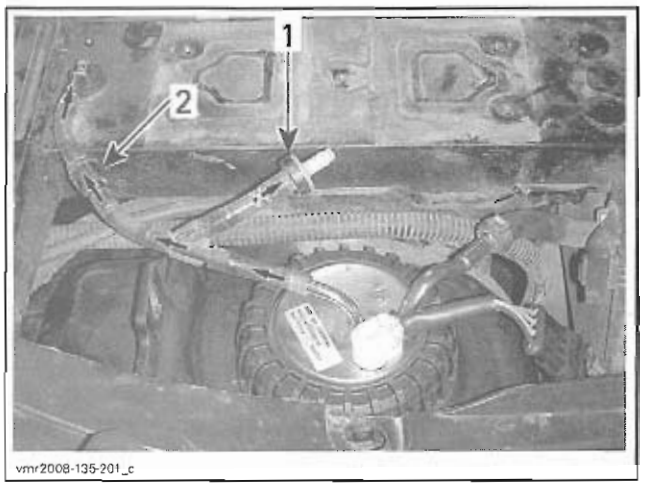


*1. Inlet check valve blocks fuel*
*2. Outlet pressure relief valve allows pressure to go out*

# INSPECTION

## FUEL TANK LEAK TEST

**⚠ WARNING**

Always carry out a fuel tank leak test whenever fuel tank shows signs of wear or damage which may cause a leak, or when the fuel pump has been removed or replaced, or if you suspect a leak. If damage is severe, fuel tank should be replaced even if no leak is present. Do not attempt to repair a plastic fuel tank.

Refill fuel tank.

Remove seat.

*All Models except Outlander MAX*

Remove the seat reinforcement plate.

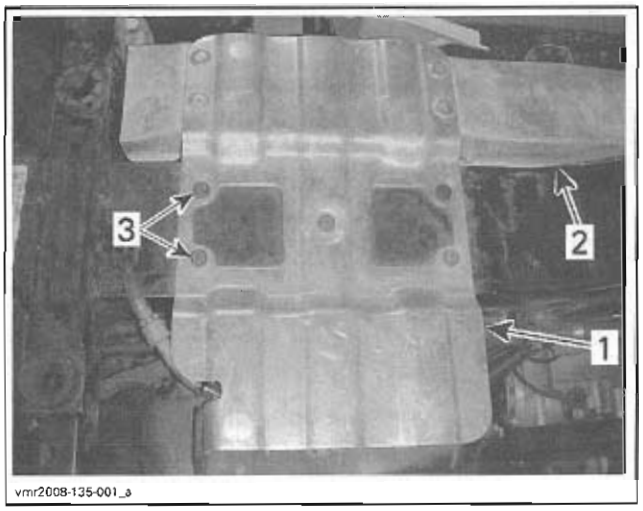


*TYPICAL*
*1. Seat reinforcement plate*
*2. Exhaust heat shield*
*3. Retaining screws (5)*

*All Models*

Install a SMALL HOSE PINCHER (P/N 295 000 076) on vent line (OUTLET side).

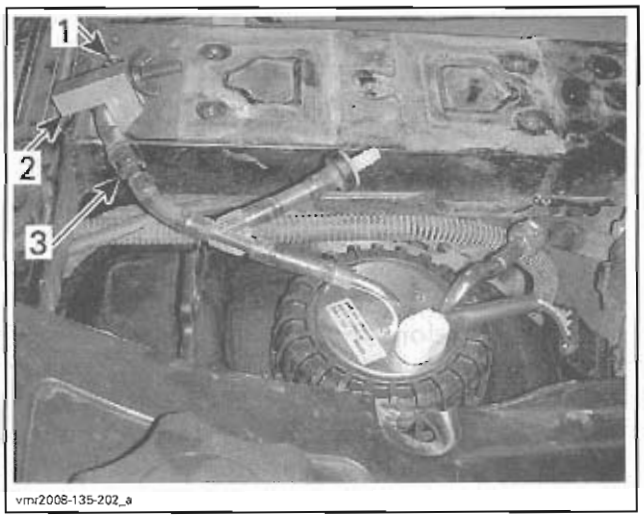


*1. Vent system outlet*
*2. Small hose pincher*
*3. Vent pressure relief valve*

Using the VACUUM/PRESSURE PUMP (P/N 529 021 800), pressurize fuel tank through vent line (INLET side).

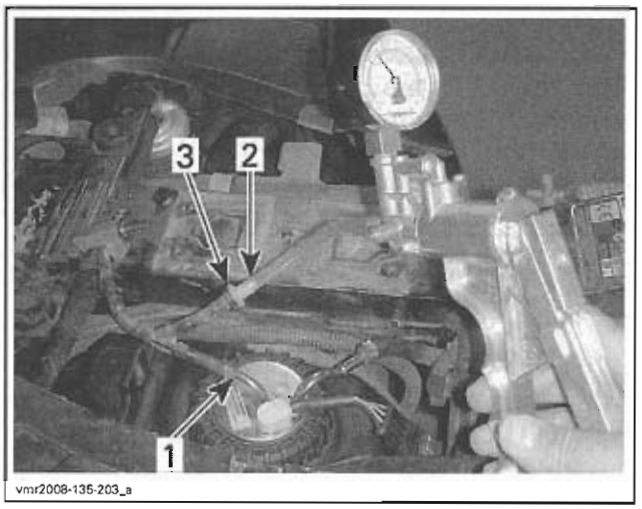


*VACUUM PUMP ON INLET SIDE*
1. *Fuel tank vent*
2. *Vent inlet line*
3. *Vent check valve*

Pressurize fuel tank as follows.

| PRESSURE | TIME WITHOUT PRESSURE DROP |
|---|---|
| 21 kPa (3 PSI) | 3 minutes |

If pressure drops, locate fuel leak(s) and repair or replace leaking component(s).

To locate a leak, check for a fuel smell or leaking fuel.

To ease locating leak(s), spray soapy water on all hose connections and components; bubbles will indicate the leak location(s).

## Fuel Tank Check Valve and Pressure Relief Valve Test

While tank is still pressurized from the previous fuel tank leak test, carry out the following procedure:

Block the vent outlet as you remove the hose pincher.

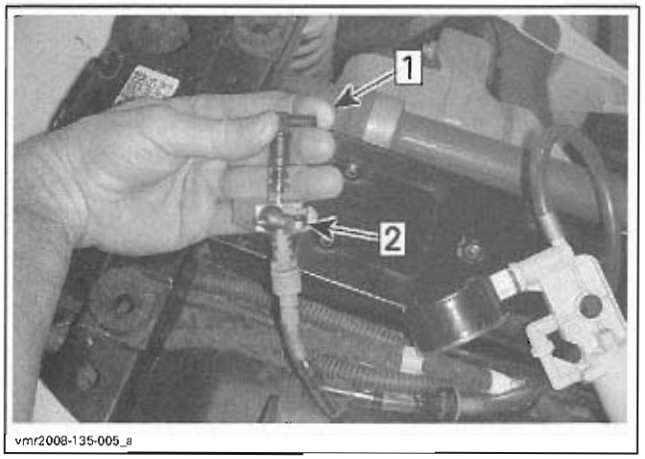


*Step 1: Block vent outlet with finger*
*Step 2: Remove hose pincher*

Alternately touch and release end of pressure relief valve. You should feel pressurized air flowing out indicating relief valve is working.

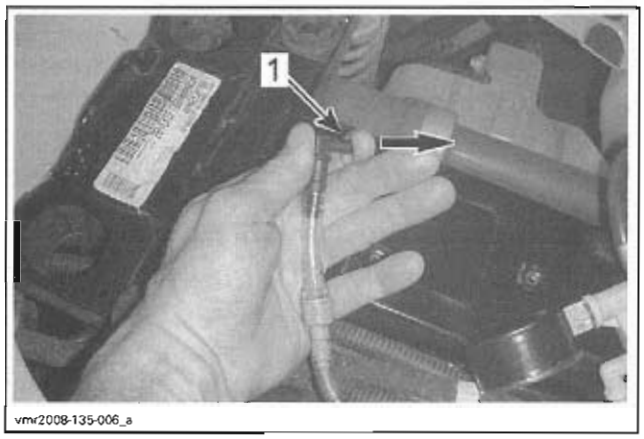


*PRESSURE RELIEF TEST*
1. *Release vent outlet and feel for air flowing out*

Using the pressure/vacuum pump, increase fuel tank pressure until the pressure relief valve opens.

NOTE: Pressure relief valve should open when the fuel tank pressure exceeds 2.5 - 7.6 kPa (.36 - 1.1 PSI) preventing fuel tank overpressure. This validates pressure relief valve operation.

Remove fuel tank cap.

NOTE: You should hear remaining air pressure within fuel tank escape as fuel cap seal is loosened.

Blow air in through vent inlet check valve.

NOTE: Air must flow freely through inlet check valve and out fuel tank filler neck.

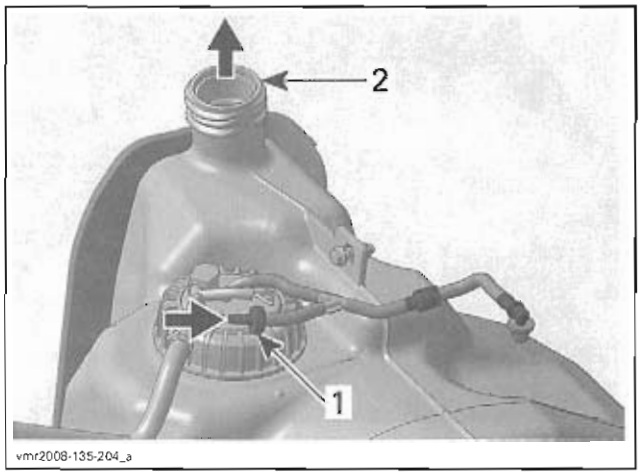


*1. Blow air through vent inlet check valve*
*2. Airflow out of filler neck*

Reinstall removed parts.

## FUEL PUMP PRESSURE TEST

The pressure test will show the available pressure at the fuel pump outlet. It validates the pressure regulator, the fuel pump and tests for leaks in the system.

NOTE: Refer also to the *FUEL SYSTEM DIAGNOSTIC FLOW CHART* at the end of this section to help diagnose a fuel system related problem.

Ensure there are no leaks from hoses and fittings. Repair any leak.

Before proceeding with the pressure test ensure the battery is fully charged. Battery voltage must be over 12 volts.

Disable fuel pump using B.U.D.S. Look in the **Activation** tab and select **Disabled**.

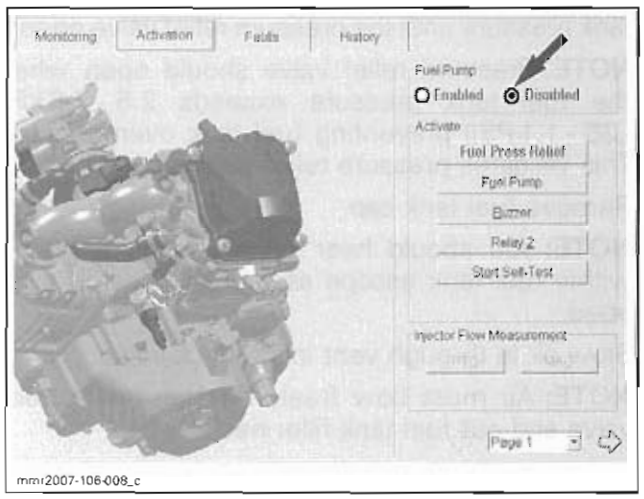


Release fuel pressure by running engine until it runs out of gas.

**⚠ WARNING**

**The fuel hose may be under pressure. Cover the fuel line connection with an absorbent shop rag. Slowly disconnect the fuel hose to release the pressure. Wipe off any fuel spillage inside engine compartment.**

Ensure there is enough gas in fuel tank.

Remove the seat and the RH side body panel, refer to the *BODY* section.

Wrap shop rags around the fuel hose end at the injector. Unplug one injector only.

Carefully disconnect the fuel pump outlet hoses by pressing on the release tab of the quick disconnect fitting.

Install fuel PRESSURE GAUGE (P/N 529 035 709) and T-FITTING (P/N 529 036 023) between disconnected hose and injector (in-line installation).

*PRESSURE GAUGE*

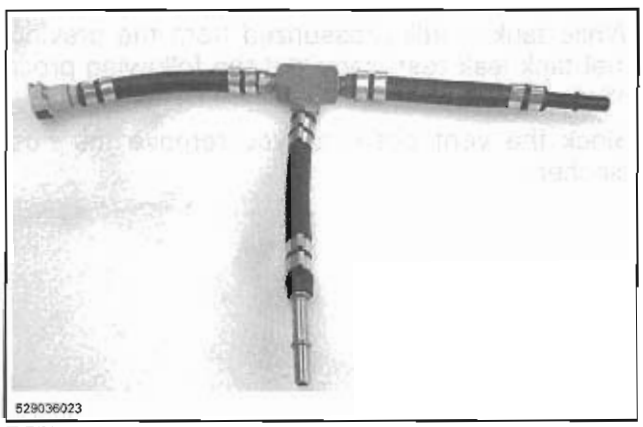


*T-FITTING*

Using B.U.D.S., reactivate fuel pump by selecting **Enabled**.

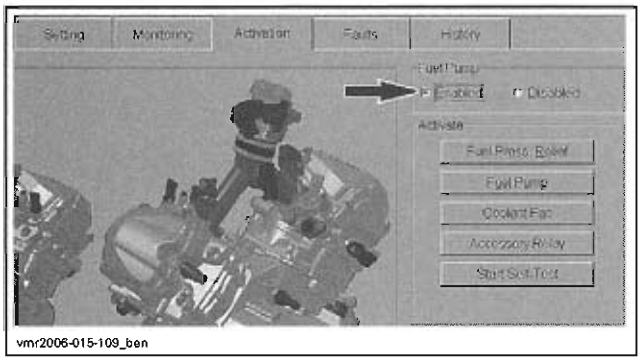


Turn ignition key ON.

Set engine stop switch to RUN and observe fuel pressure.

| | |
|---|---|
| FUEL PRESSURE | 350 kPa (51 PSI) |

Turn ignition key OFF then back ON. Repeat the test.

Remove tool and connect hose on injector.

Disconnect fuel hose from the other injector and install the tool.

Repeat the pressure test.

Remove pressure gauge and T-fitting.

Reconnect fuel hose on injector.

A rapid pressure drop indicates leakage either from the fuel rail or from the fuel pump check valve.

Check fuel hoses and fittings for leaks. If it is not leaking, replace fuel pump.

A slow pressure drop indicates leakage either from the fuel injector or from the fuel pressure regulator.

Check fuel injector for leaks. If it is not leaking, replace fuel pump.

If there is no leakage, **start engine** and observe fuel pressure. The fuel pressure should be the same as above.

If pressure is within limits, fuel pump and pressure regulator are working adequately.

Release fuel pressure in the system using B.U.D.S. Look in the **Activation** tab.

**⚠ WARNING**

**Wipe off any fuel spillage. Fuel is flammable and explosive under certain conditions. Always work in a well ventilated area.**

Reinstall removed parts.

# PROCEDURES

## FUEL HOSE AND OETIKER CLAMPS

### Fuel Hose Replacement

When replacing fuel hoses, be sure to use hoses and clamps as available from BRP parts department. This will ensure continued proper and safe operation.

**⚠ WARNING**

**Use of fuel lines other than those recommended by BRP may compromise fuel system integrity.**

**⚠ WARNING**

**Whenever removing a hose in the fuel system, always use new Oetiker clamps at assembly. Then validate fuel system tightness by performing a fuel pressure test.**

### Oetiker Clamp Replacement

To secure or cut Oetiker clamps on fuel lines, use OETIKER PLIERS (P/N 295 000 070).

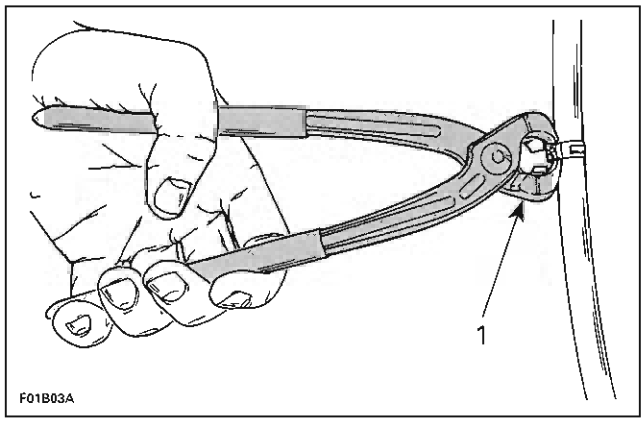


*1. Cutting clamp*

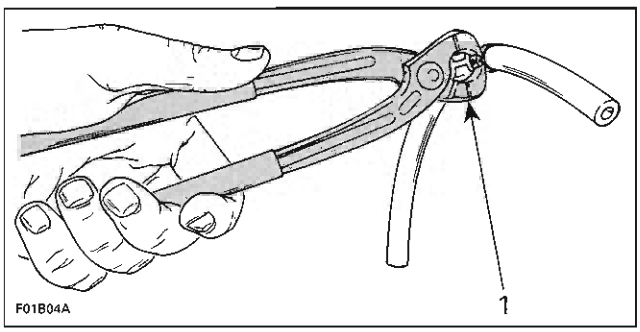


*1. Securing clamp*

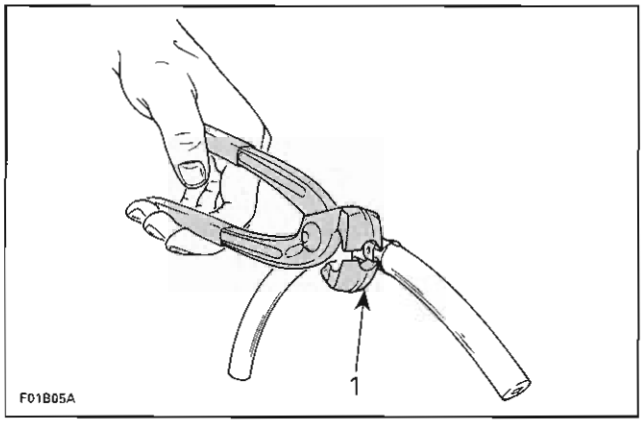


*1. Securing clamp in limited access*

# FUEL TANK

## Fuel Tank Check Valve and Pressure Relief Valve Installation

Always install check valve with the black side connected to vent line.

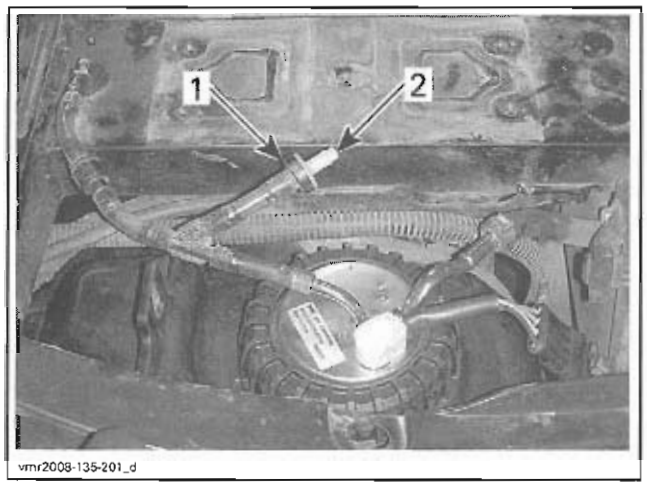


*VENT INLET CHECK VALVE DIRECTION*
*1. Black side here*
*2. White side open to atmosphere*

Always reinstall pressure relief valve according to arrow on valve as shown.

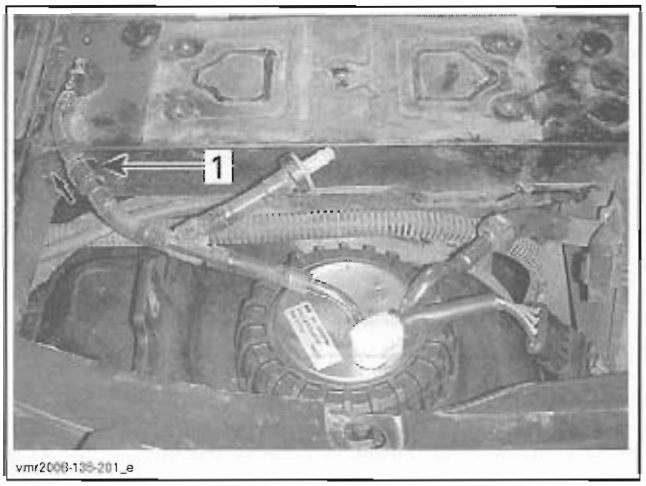


*FLOW DIRECTION*
*1. Pressure relief valve*

## Fuel Tank Draining

**⚠ WARNING**

Never perform this operation when the engine and/or the exhaust system is/are hot. Never use a hose pincher on injection system high pressure hoses.

Remove fuel tank cap and siphon gas into an approved fuel container.

## Fuel Tank Removal

Drain fuel tank. Refer to *FUEL TANK DRAINING* above in this section.

Release fuel pressure by running engine until it runs out of gas.

Disconnect battery, refer to *CHARGING SYSTEM* section.

Remove seat, refer to the *BODY* section.

*All Models except Outlander MAX*

Remove the seat reinforcement plate.

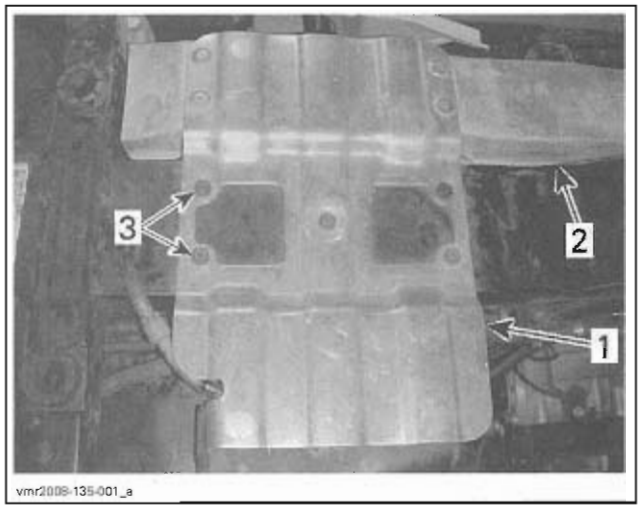


*TYPICAL*
1. *Seat reinforcement plate*
2. *Exhaust heat shield*
3. *Retaining screws (5)*

### *All Models*

Remove side panels and rear fender assembly, refer to *BODY* section.

Disconnect the fuel pump connector.

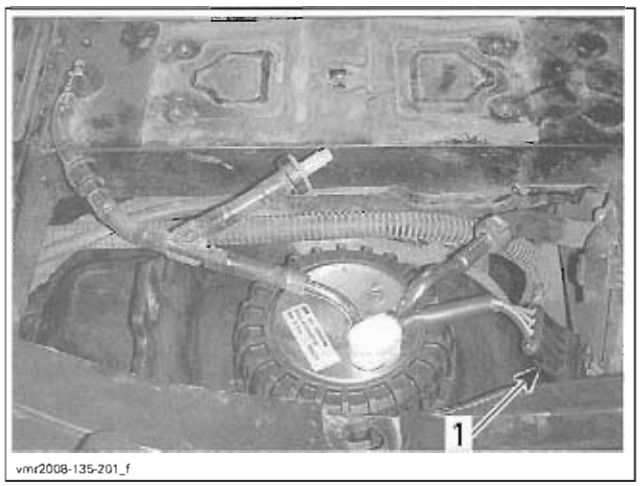


1. *Fuel pump connector*

Pull out vent system OUTLET from frame.

Disconnect fuel hose at fuel pump fitting.

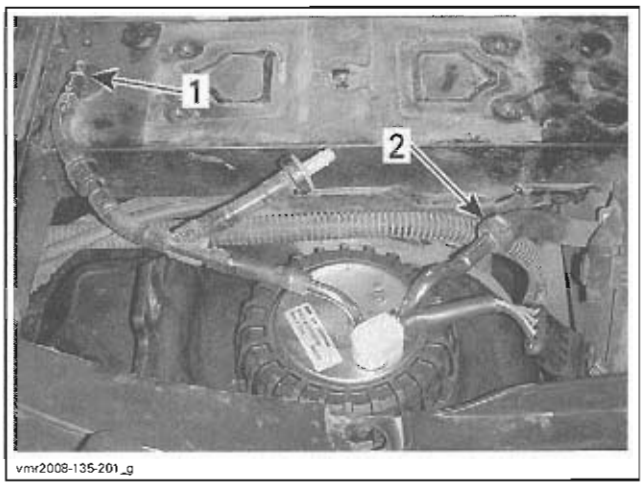


1. *Pullout vent outlet*
2. *Fuel pump fitting*

### *All Models except Outlander MAX*

Remove 2 fuel tank retaining screws on right side of the tank.

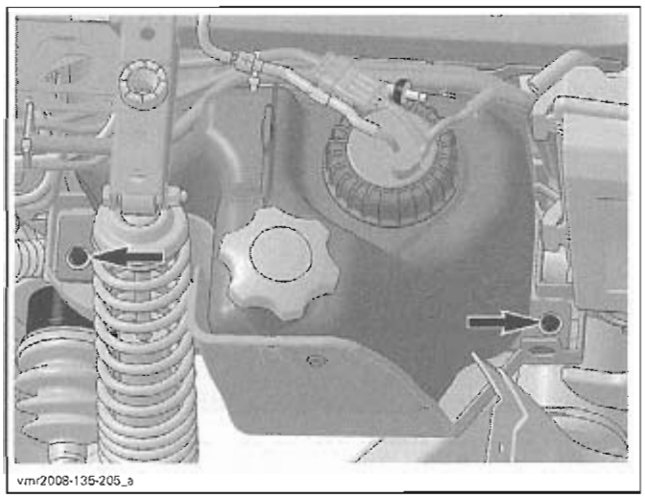


*RH FUEL TANK MOUNTING SCREWS (2)*

### *Outlander MAX Models*

Remove 3 fuel tank retaining screws on right side of the tank.

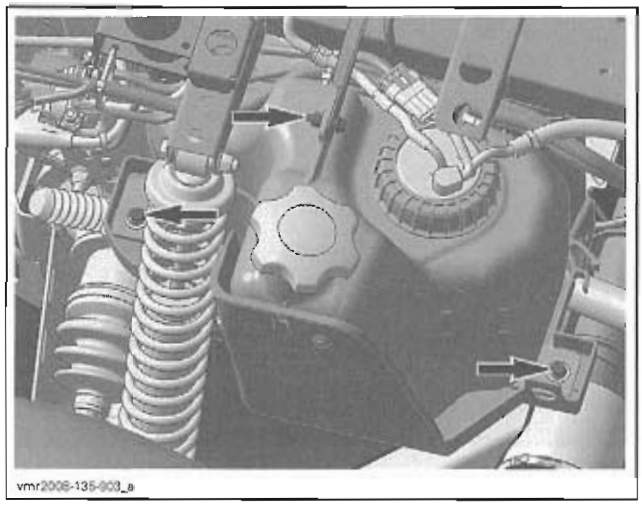


*RH FUEL TANK MOUNTING SCREWS (3)*

*All Models*

Remove the upper and the lower fuel tank retaining screws on the left side of the tank.

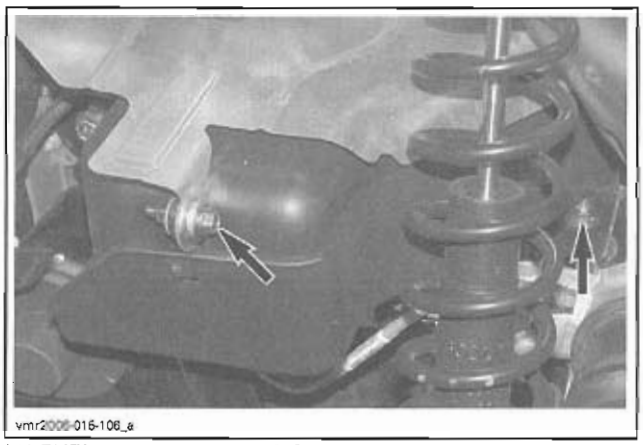


*LH FUEL TANK MOUNTING SCREWS (2)*

Remove voltage regulator/rectifier protector.

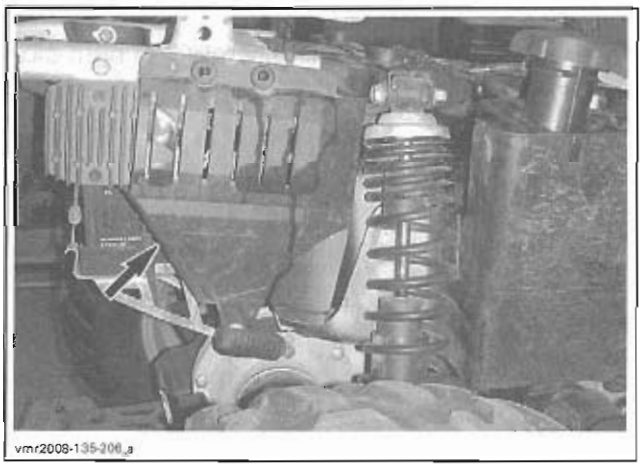


Lift frame sufficiently to extend RH rear shock absorber and remove its upper mounting screw.

Move shock absorber rearwards.

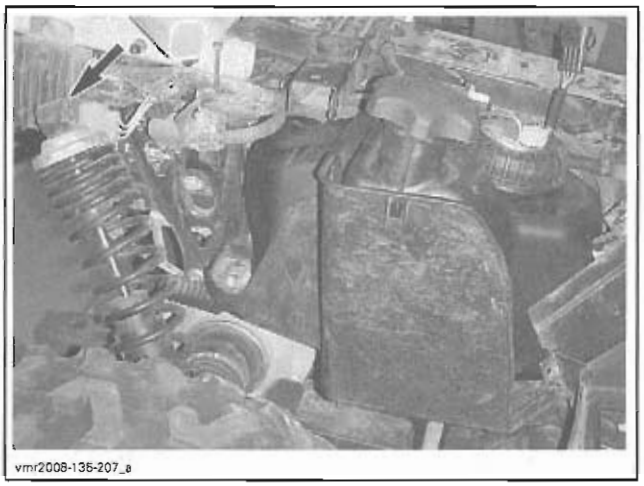


Pull fuel tank out from the RH side of vehicle.

## Fuel Tank Protector Removal

Cut plastic rivet locking protector to tank.

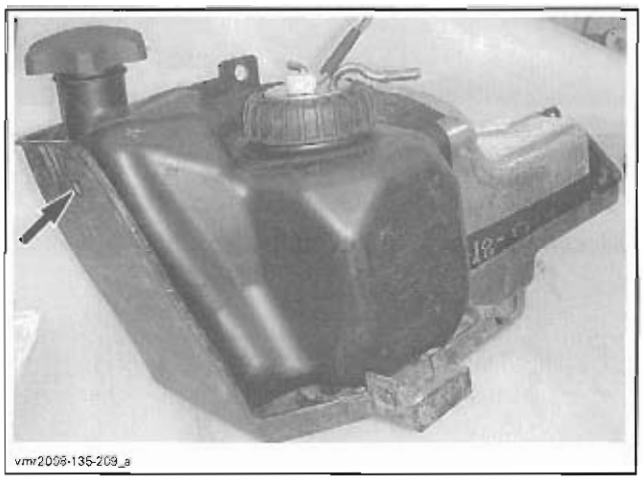


Pull out tank from protector.

## Fuel Tank Inspection

Inspect fuel tank for any damages or cracks which may result in fuel leaks.

Inspect tank and protector attachment points for damages.

Inspect protector for damages.

If cracks, gouges or other damages which may lead to a fuel leak, or damages to attachment points that could prevent the tank from being secure are found, replace fuel tank.

### Fuel Tank Protector Installation

For installation, use a NEW plastic rivet.

### Fuel Tank Installation

The installation is the reverse of the removal procedure. However, pay attention to the following.

Make sure to properly connect and route fuel tank vent tube.

Use a NEW clamp on fuel pump hose.

*All Models except Outlander MAX*

Reinstall the seat reinforcement plate.

Install and torque fuel tank retaining screws to 7 N•m (62 lbf•**in**) as per following sequence.

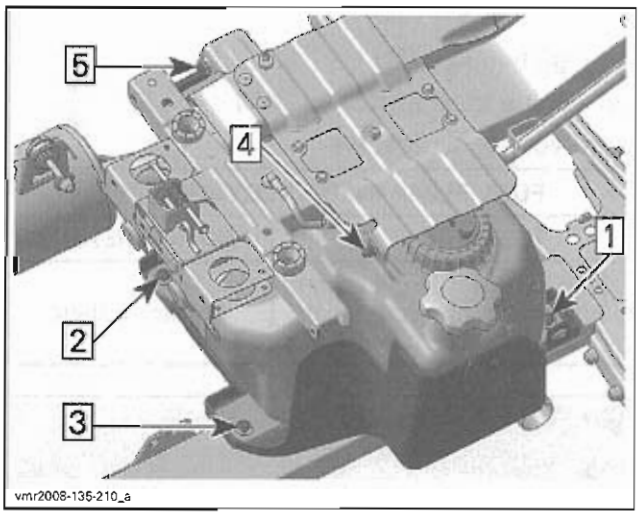


*SCREW INSTALLATION AND TORQUE SEQUENCE*

*Outlander MAX Models*

Reinstall the heat shield.

Install and torque fuel tank retaining screws to 7 N•m (62 lbf•**in**) as per following sequence.

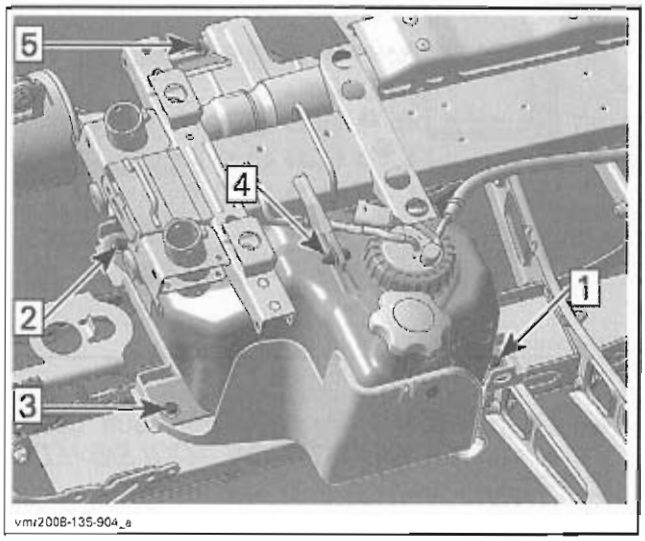


*SCREW INSTALLATION AND TORQUE SEQUENCE*

*All Models*

Refuel tank and ensure there are no leaks by performing a *FUEL TANK LEAK TEST* and a *FUEL PRESSURE TEST* as described in this section.

## FUEL PUMP

### Fuel Pump Quick Test

1. Set engine stop switch to RUN.
2. Turn ignition key to ON.
3. Listen to fuel pump operation.
4. Fuel pump should come ON for for a few seconds, then stop.
5. If so, the fuel pump, ECM, and associated circuits are functioning normally. However, keep in mind this does not validate fuel pump pressure.
6. Otherwise, carry out the following step(s) until the pump works.
7. Check fuel pump fuse.

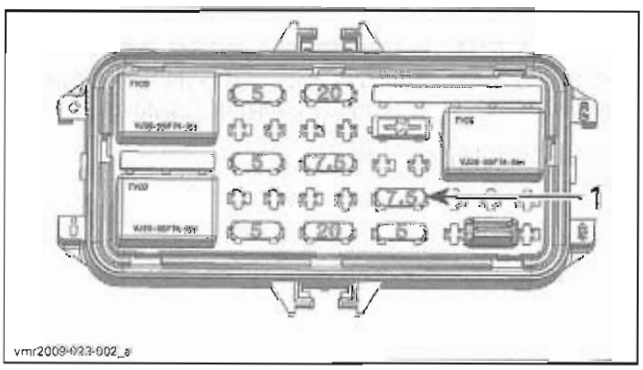


1. *Fuel pump fuse*

8. Substitute fuel pump relay with a known working relay in fuse box.

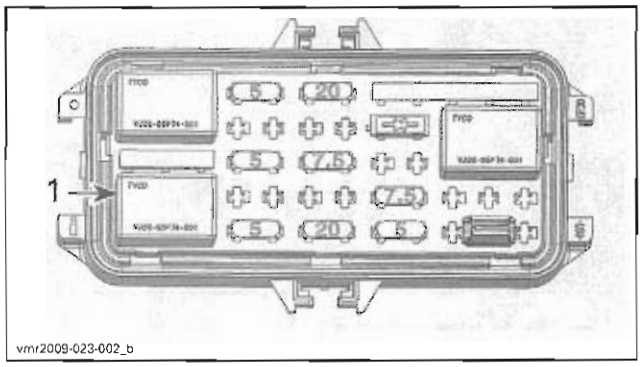


*1. Fuel pump relay*

9. Check in B.U.D.S. for applicable fault codes. Refer to *COMMUNICATION TOOLS/B.U.D.S. SOFTWARE* section.
10. Carry out a fuel pump input voltage test.

Set ignition switch to OFF.

## Fuel Pump Input Voltage Test

Remove seat.

From the RH side of the vehicle, disconnect the fuel pump connector.

NOTE: It may be necessary to remove seat reinforcement plate and/or LH side panel to make room.

Use the FLUKE 115 MULTIMETER (P/N 529 035 868) with the FLUKE RIGID BACK PROBE (P/N TP88).

Set multimeter to Vdc.

*FLUKE 115 MULTIMETER*

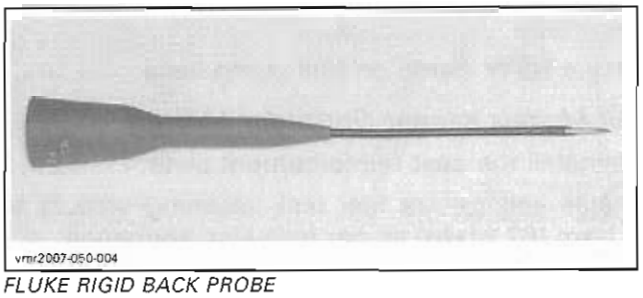


*FLUKE RIGID BACK PROBE*

Turn ignition key ON.

Set engine stop switch to RUN.

Read voltage as follows.

| FUEL PUMP INPUT VOLTAGE TEST | | |
|---|---|---|
| TEST PROBES | | VOLTAGE READING |
| Fuel pump connector Pin 3 | Fuel pump connector Pin 4 | Battery voltage |

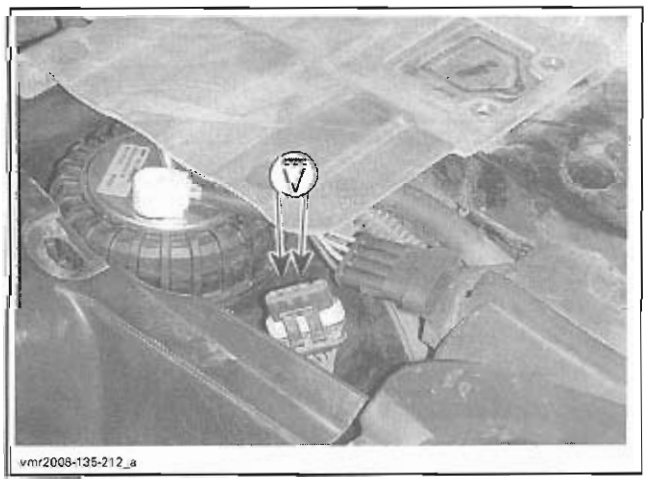


If battery voltage is read, carry out a fuel pump winding resistance test.

If battery voltage is not read carry out this voltage test.

| FUEL PUMP INPUT VOLTAGE TEST | | |
|---|---|---|
| TEST PROBES | | VOLTAGE READING |
| Fuel pump connector Pin 3 | Battery ground | Battery voltage |

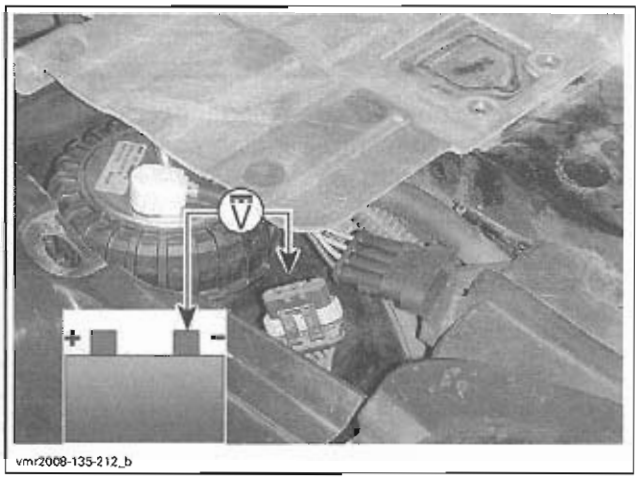


If battery voltage is now read, check fuel pump ground circuit. Refer to *FUEL PUMP WINDING RESISTANCE TEST.*

If battery voltage is still not read, check fuel pump supply circuit. Refer to *FUEL PUMP RELAY INPUT VOLTAGE TEST.*

## Fuel Pump Relay Input Voltage Test

Remove front compartment cover and fuse box cover.

Remove fuel pump relay.

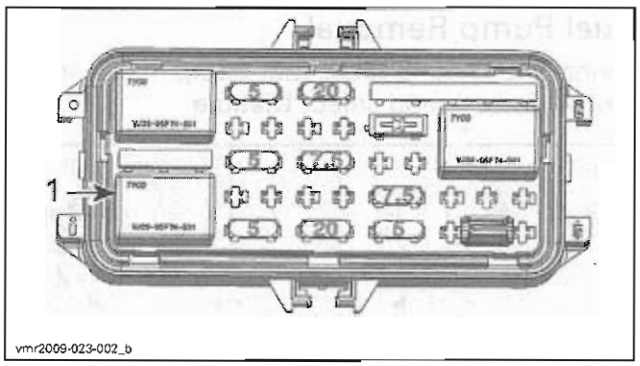


*1. Fuel pump relay*

Turn ignition key ON.

Set engine stop switch to RUN.

Measure fuel pump relay input voltage at fuse box contacts.

| FUEL PUMP RELAY INPUT VOLTAGE TEST | | |
|---|---|---|
| TEST PROBES | | READING |
| Fuse box contact 1 A | Battery ground | Battery voltage |
| Fuse box contact 3 A | | |

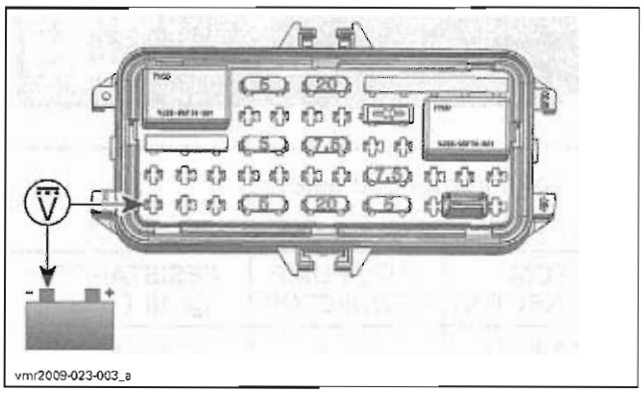


*CONTACT 1 A*

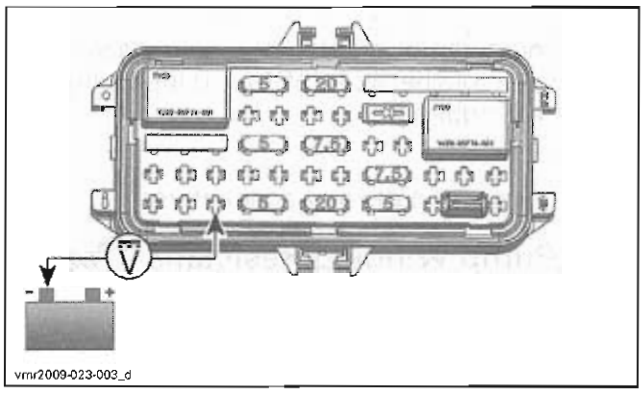


*CONTACT 3 A*

If battery voltage is not read, test wiring for continuity between battery and fuse box.

If battery voltage is read, test wiring for continuity between fuse box (contact 3B) and fuel pump connector (pin 3).

Repair or replace wiring as required.

## Fuel Pump Relay Ground Control Circuit

Remove RH inner fender panel, refer to the *BODY* section.

Disconnect ECM connector B.

Install ECM ADAPTER (P/N 420 277 010) onto ECM connector.

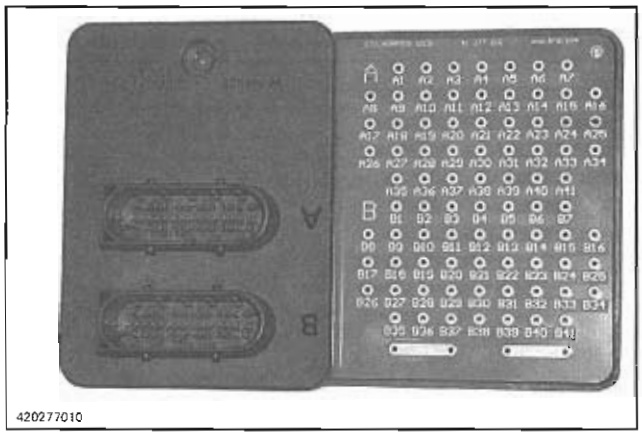


Use a multimeter and select Ω.

Check continuity as follows.

| ECM CONNECTOR | FUEL PUMP CONNECTOR | RESISTANCE Ω @ 20°C (68°F) |
|---|---|---|
| Pin B-29 | Pin 4 | Close to 0 Ω |

If continuity is good, check ECM. Refer to *ENGINE MANAGEMENT SYSTEM* section.

If continuity is not good, repair or replace wiring and connectors between ECM and fuel pump connector as required.

Remove tool.

Install removed parts and connectors.

## Fuel Pump Winding Resistance Test

Remove the fuel pump relay.

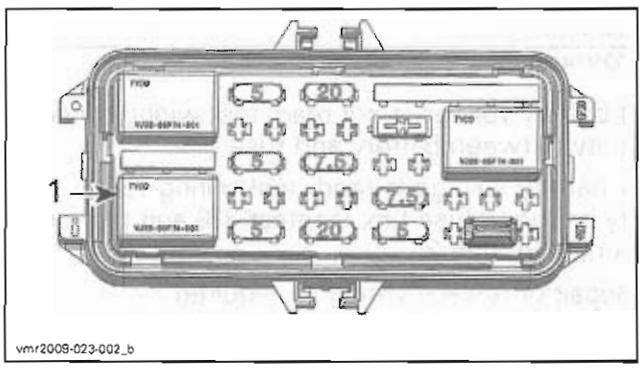


*1. Fuel pump relay*

Set multimeter to Ω.

Measure winding as follows.

| FUEL PUMP WINDING RESISTANCE TEST | | |
|---|---|---|
| TEST PROBES | | RESISTANCE Ω @ 20°C (68°F) |
| Fuse box contact 3B | Battery ground | Approximately 2.5 Ω |

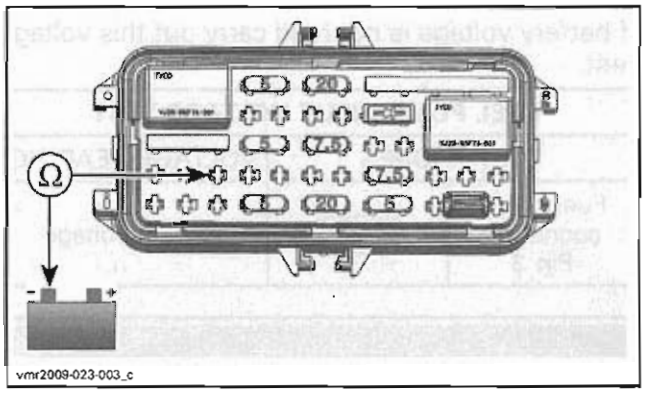


If resistance test failed, disconnect fuel pump connector and measure winding again directly to fuel pump connector.

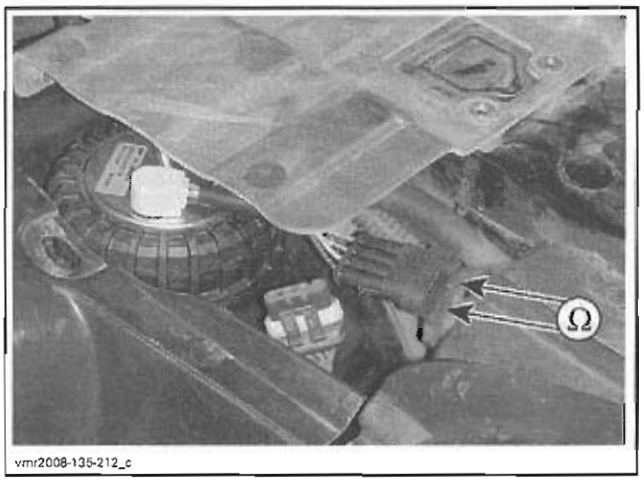


If test failed, check pump wiring and connector and if good, replace fuel pump.

If test succeeded check wiring and connectors from fuse box and to battery ground. Repair or replace as necessary.

## Fuel Pump Removal

Using B.U.D.S., disable fuel pump. Look in the **Activation** tab and select **Disable**.

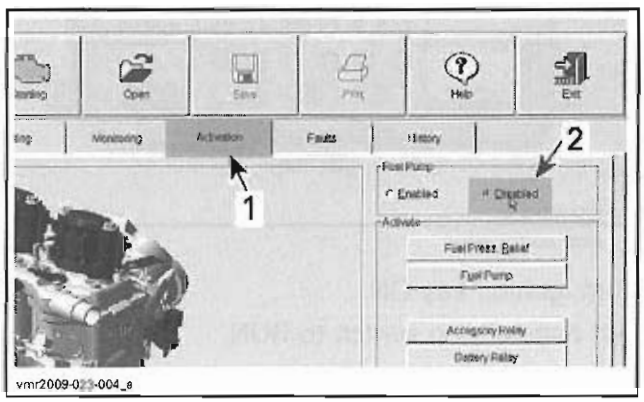


*1. Select the* Activation *tab*
*2. Click here to disable the fuel pump*

Release fuel pressure by running engine until it runs out of gas.

Remove seat.

Remove seat reinforcement plate (except Outlander MAX).

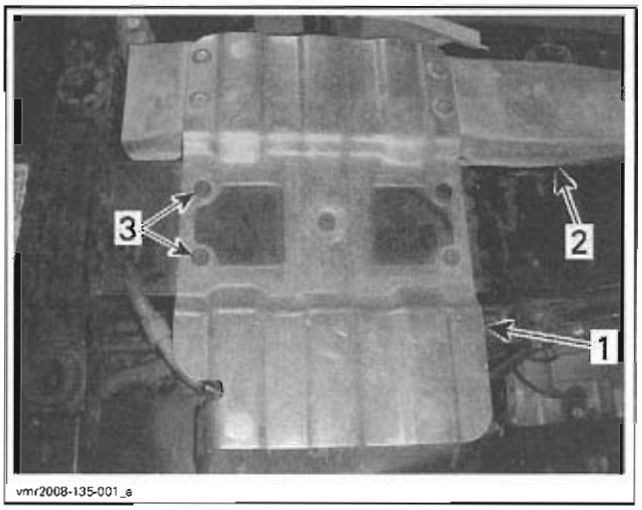


*TYPICAL*
1. *Seat reinforcement plate*
2. *Exhaust heat shield*
3. *Retaining screws (x5)*

Disconnect electric connector, vent line and fuel hose from fuel pump.

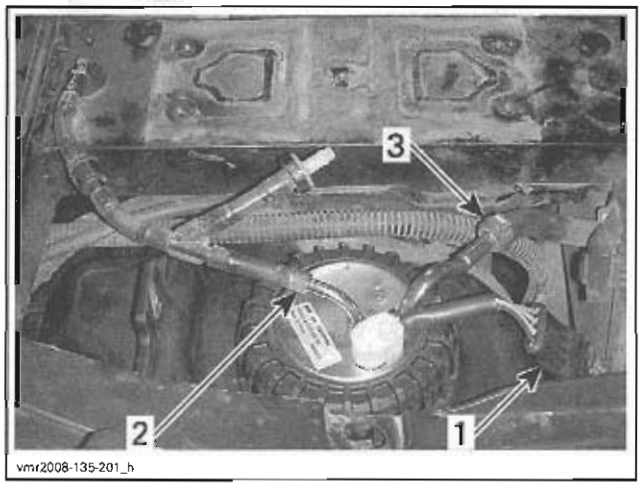


1. *Electric connector*
2. *Vent line*
3. *Fuel hose*

**⚠ CAUTION** Replace fuel pump gasket whenever fuel pump retaining nut is loosen.

Use the FUEL PUMP NUT TOOL (P/N 529 035 899).

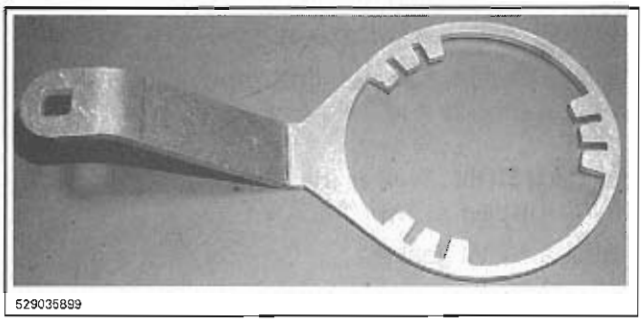


Unscrew fuel pump retaining nut.

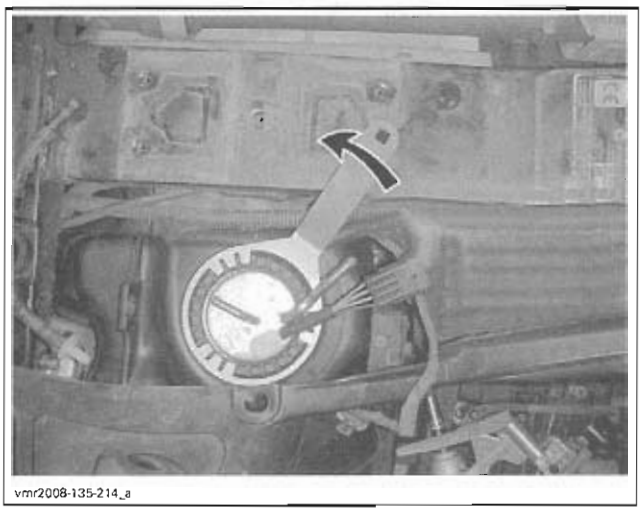


Carefully pull out fuel pump.

**⚠ CAUTION** While pulling out the fuel pump, pay attention to fuel sensor float arm. Float arm can get stuck and bend reducing fuel sensor accuracy.

Discard gasket.

Wipe off any fuel spillage.

## Fuel Pump Installation

For installation, reverse the removal process but pay attention to the following.

**⚠ CAUTION** Never install a damaged pump or a dropped pump.

Install a NEW gasket.

Place gasket so that its flange will be between pump and tank mounting surface.

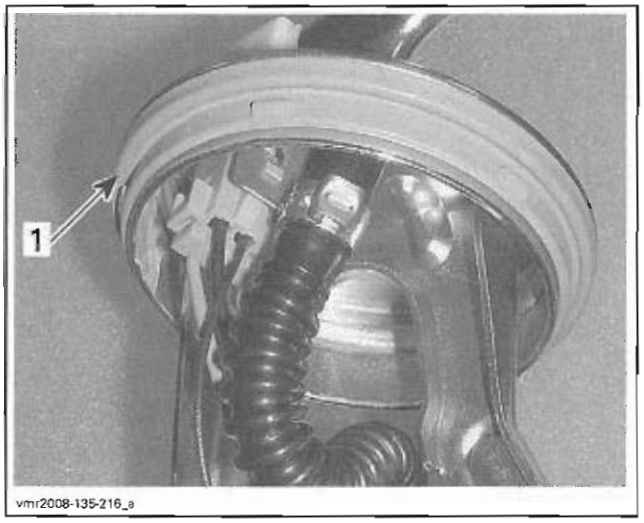


*1. Gasket flange here*

Pay attention to pump orientation as in following illustration.

Firmly push against pump to align its gasket parallel with tank surface (all around).

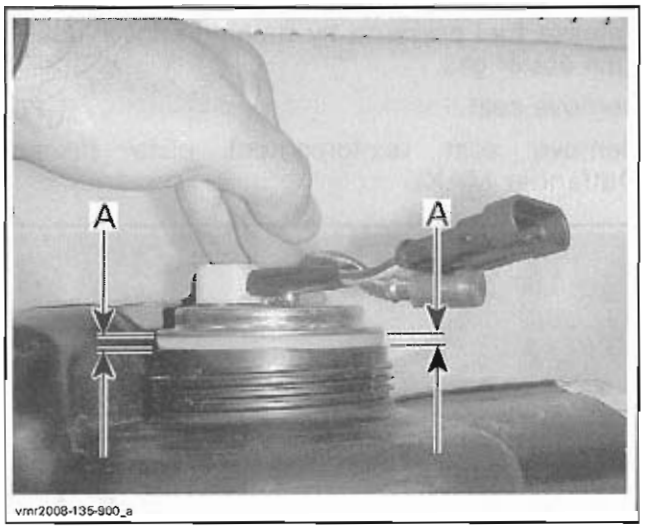


*FUEL TANK REMOVED FROM VEHICLE FOR CLARITY*
*A. Gasket parallel with tank surface (all around)*

While maintaining pump seated, rotate pump to align its mark with the mark on the fuel tank as per the following specification.

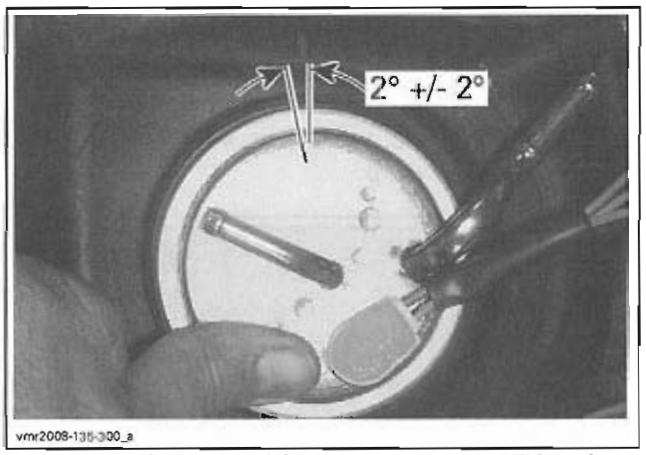


*ANGLE PURPOSELY EXAGGERATED IN ILLUSTRATION FOR CLARITY*

While firmly holding pump against tank, engage fuel pump nut threads. Slightly tighten nut while holding pump to prevent it from turning.

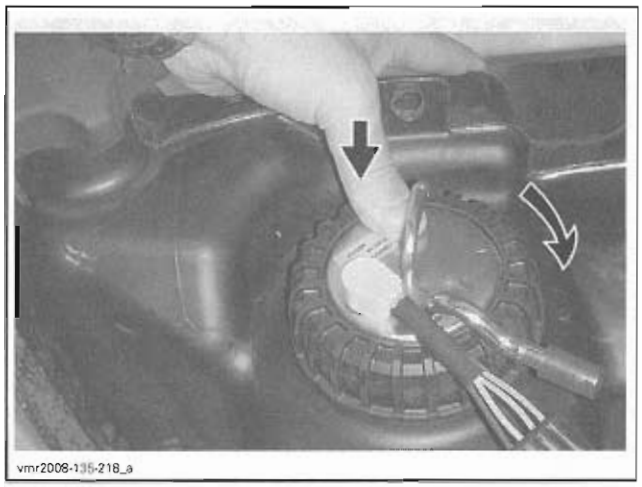


Ensure pump is still aligned as per specification.

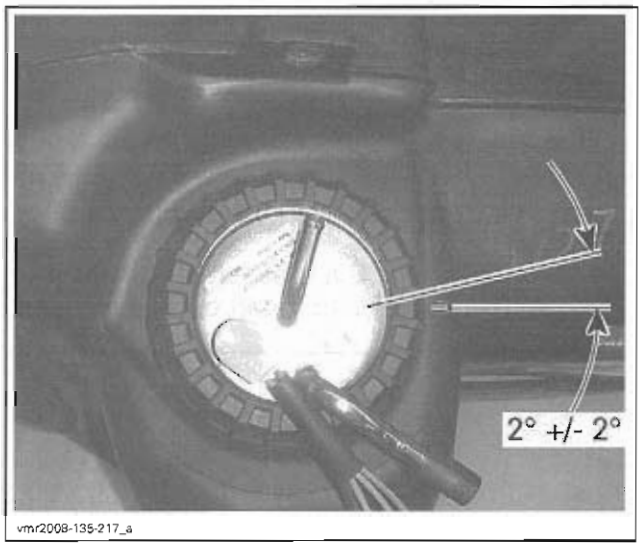


*ANGLE PURPOSELY EXAGGERATED IN ILLUSTRATION FOR CLARITY*

To apply the proper torque to the pump nut, use a torque wrench and install it perpendicularly (90°) to the tool handle.

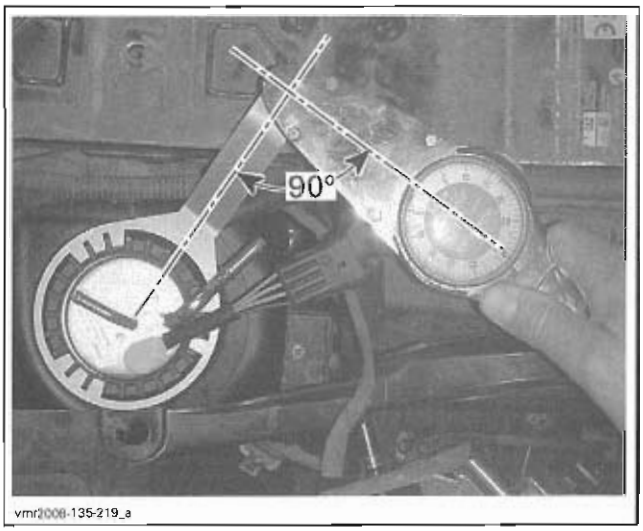


*TORQUE WRENCH PERPENDICULAR TO TOOL HANDLE*

Torque nut while ensuring pump does not rotate as nut is tightened. Reposition as necessary.

Secure fuel hose with a new clamp.

Reinstall remaining removed parts.

Using B.U.D.S., enable the fuel pump. Look in the **Activation** tab and select **Enable**.

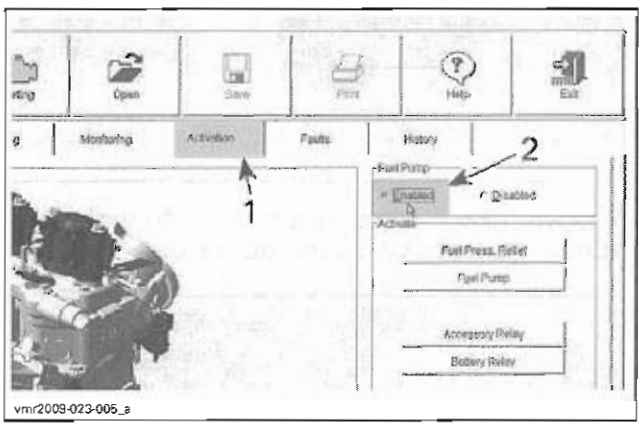


1. *Select the* **Activation** *tab*
2. *Click here to enable the fuel pump*

Refuel tank and ensure there are no leaks by performing a *FUEL TANK LEAK TEST* and a *FUEL PRESSURE TEST* as described in this section.

Check fuel level sensor operation.

## Fuel Pump Strainer Replacement

Remove *FUEL PUMP*, see procedure above in this section.

Unlock 2 tabs of plastic ring on opposite sides.

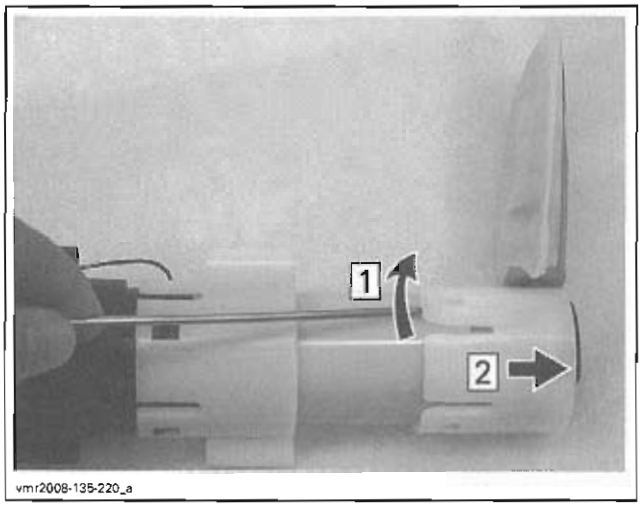


Remove rubber pad.

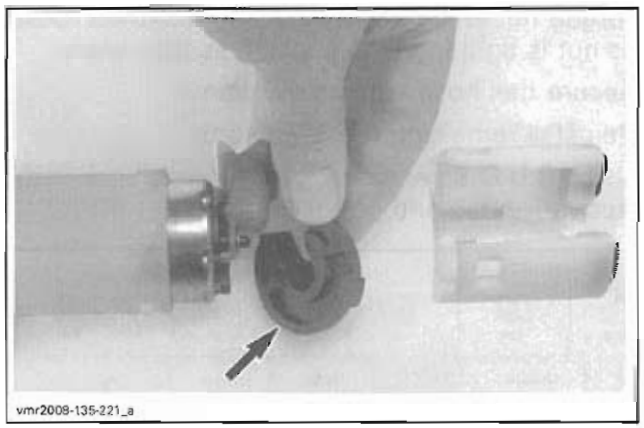


Remove push nut securing strainer to fuel pump. Be careful not to break the plastic pin.

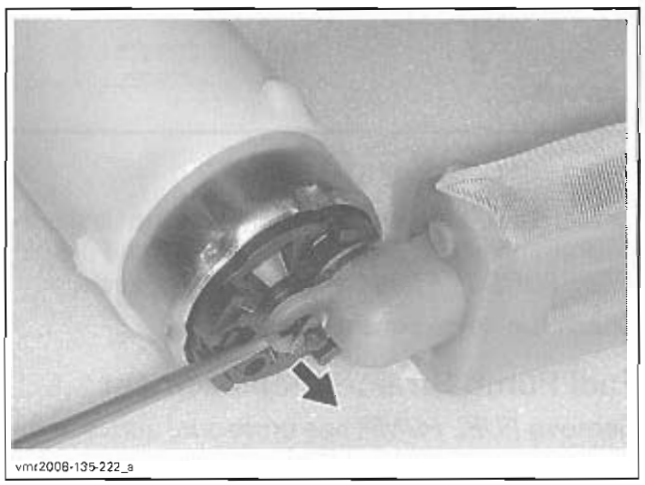


Pull strainer off fuel pump.

NOTE: A non serviceable filter is located in fuel pump. If it is clogged, replace fuel pump.

Insert the new strainer on fuel pump making sure to press it in tightly against pump face.

Press in a NEW push nut to secure strainer.

Reinstall remaining removed parts.

## FUEL LEVEL SENSOR

The fuel level sensor is a float actuated variable resistance type sensor that is part of the fuel pump.

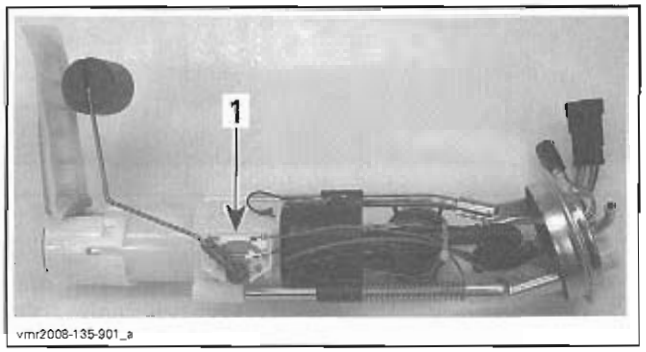


*FUEL PUMP*
*1. Fuel level sensor*

### Fuel Level Sensor Resistance Test

Remove and disconnect multifunction gauge, refer to the *LIGHTS/GAUGE/ACCESSORIES* section.

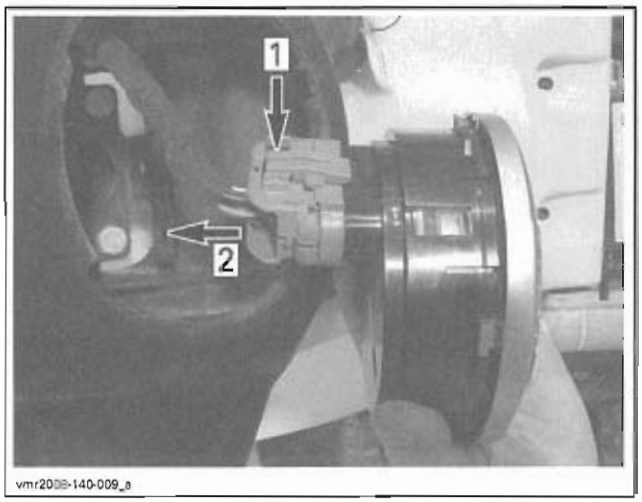


*Step 1: Press to release*
*Step 2: Pull connector off gauge*

Use a multimeter and select Ω.

Measure the resistance of the sensor as follows.

| FUEL LEVEL SENSOR RESISTANCE TEST | | |
|---|---|---|
| FUEL LEVEL | GAUGE CONNECTOR | RESISTANCE Ω @ 20°C (68°F) |
| Full | Pins 4 and 21 | 5 Ω ± 2 |
| Empty | | 100 Ω ± 7 |

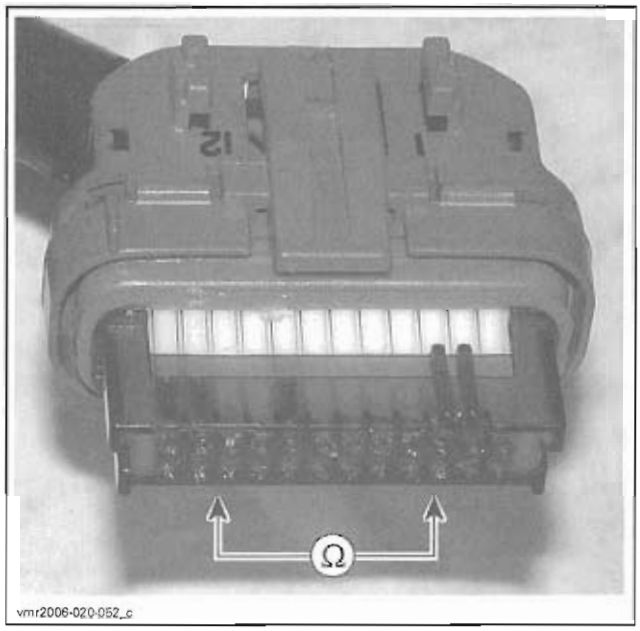


If readings are out of specification check wiring and connectors between multifunction gauge and fuel level sensor. If wiring is good, replace fuel level sensor.

If readings are as per specification, test sensor input voltage from multifunction gauge.

Reconnect the multifunction gauge.

## Fuel Level Sensor Input Voltage Test

Set engine stop switch to RUN.

Set ignition switch to ON.

Disconnect fuel level sensor connector.

Use a multimeter and select Vdc.

Measure the input voltage as follows.

| FUEL LEVEL SENSOR INPUT VOLTAGE TEST | | |
|---|---|---|
| FUEL LEVEL SENSOR CONNECTOR | BATTERY | VOLTAGE |
| Pin 1 | Negative terminal | Battery voltage |

If battery voltage is not read, test wiring continuity between sensor and multifunction gauge.

If wiring was good, replace multifunction gauge.

If continuity was not obtained, repair or replace wiring.

## Fuel Level Sensor Replacement

Replace fuel pump.

# CHARGING SYSTEM

## SERVICE TOOLS

| Description | Part Number | Page |
|---|---|---|
| 4-PIN MAGNETO HARNESS ADAPTER | 529 036 021 | 41 |

## GENERAL

Refer to the *2008 SHOP MANUAL* (P/N 219 100 273) for topics not covered in this section.

## PROCEDURES

### STATOR

Remove seat and RH side panel.

Remove protective plate as necessary.

#### Static Test: Continuity

1. Disconnect the magneto wiring harness connector.

2. Install the 4-PIN MAGNETO HARNESS ADAPTER (P/N 529 036 021) on magneto connector. Leave the other connector unplugged.

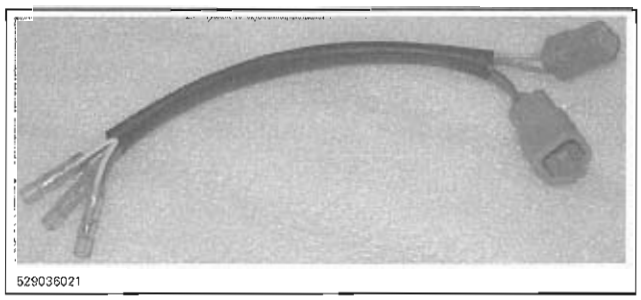


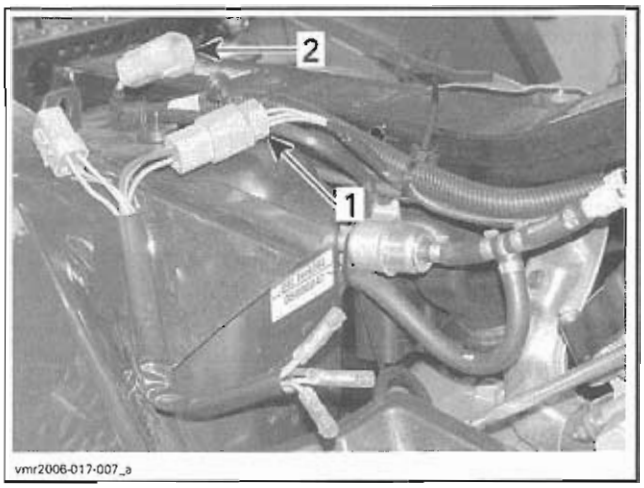


*1. Magneto connector*
*2. Leave this tool connector unplugged*

3. Set multimeter to Ω.
4. Connect multimeter between YELLOW wires.
5. Read resistance.

| TERMINAL | RESISTANCE @ 20°C (69°F) |
|---|---|
| 1 and 2 | 0.15 - 0.30 Ω |
| 1 and 3 | |
| 2 and 3 | |

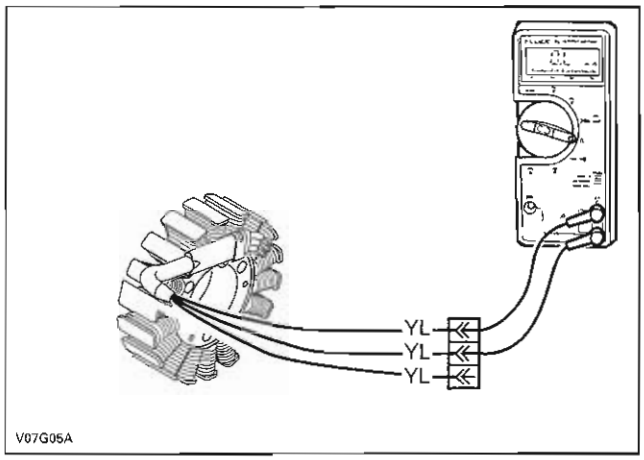


*TYPICAL*

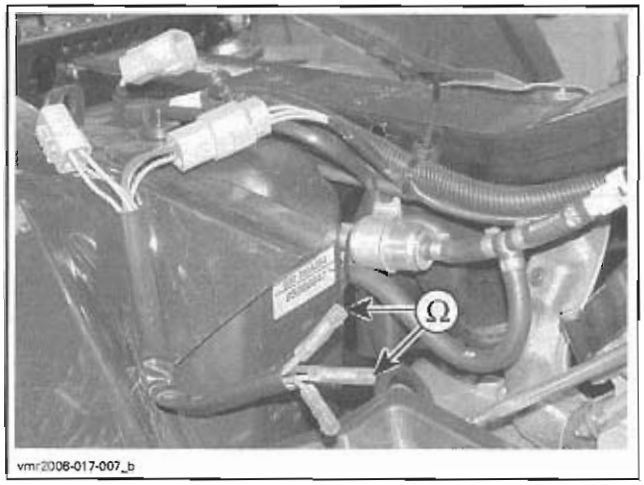


6. If any reading is out of specification, replace stator.
7. Replug connectors properly.

# REAR SUSPENSION

## SERVICE TOOLS

| Description | Part Number | Page |
|---|---|---|
| TRAILING ARM NUT SOCKET | 529 035 925 | 45 |

## SERVICE PRODUCTS

| Description | Part Number | Page |
|---|---|---|
| LOCTITE 271 (RED) | 293 800 005 | 45 |

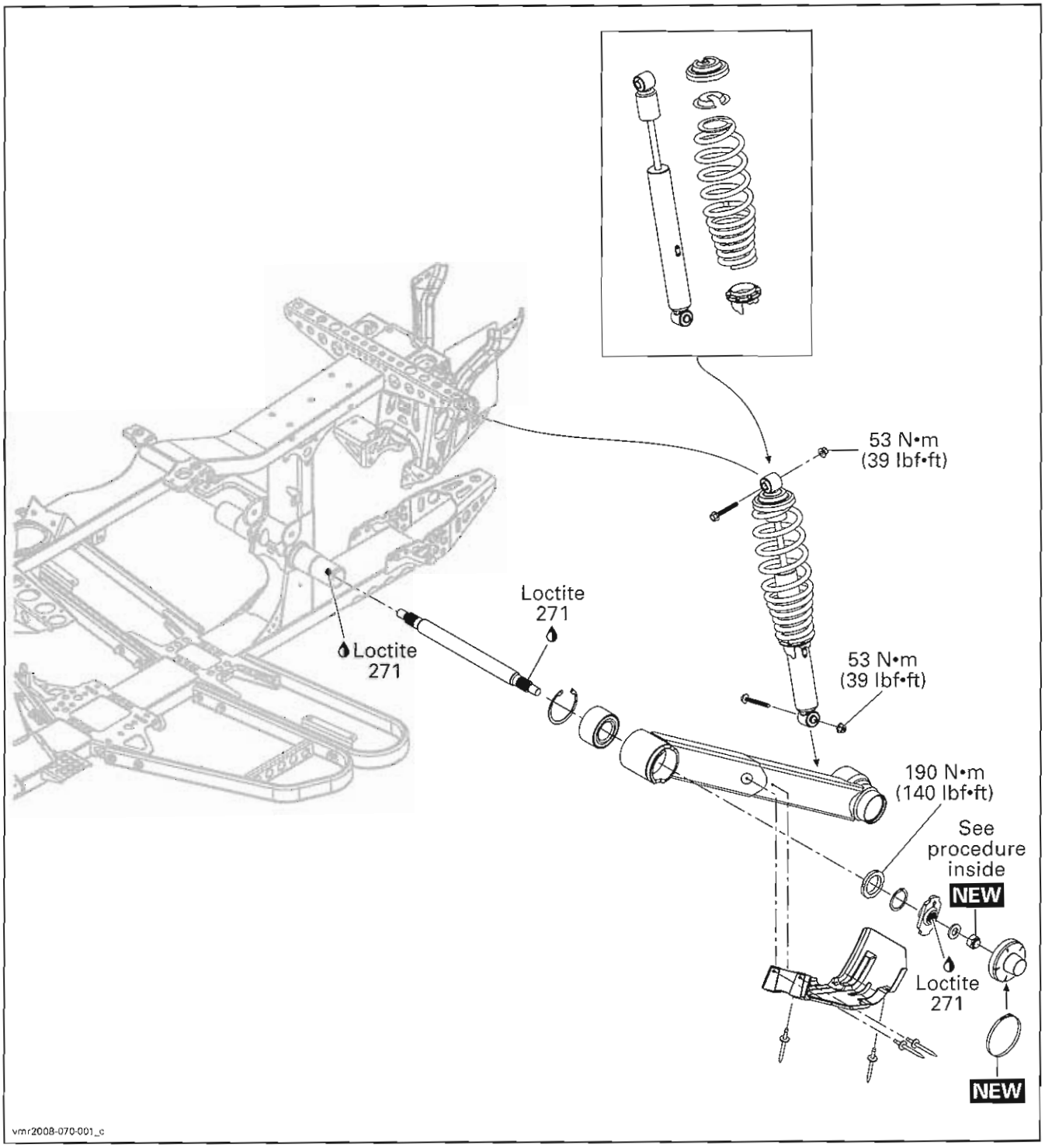
53 N•m
(39 lbf•ft)
Loctite
271
Loctite
271
53 N•m
(39 lbf•ft)
190 N•m
(140 lbf•ft)
See
procedure
inside
NEW
Loctite
271
NEW
vmr2008-070-001_c

# GENERAL

Refer to the *2008 SHOP MANUAL* (P/N 219 100 273) for topics not covered in this section.

# PROCEDURES

## TORSION BAR

### Torsion Bar Installation

Insert the torsion bar into the frame.

Apply a line of LOCTITE 271 (RED) (P/N 293 800 005) on splines of torsion bar and lever.

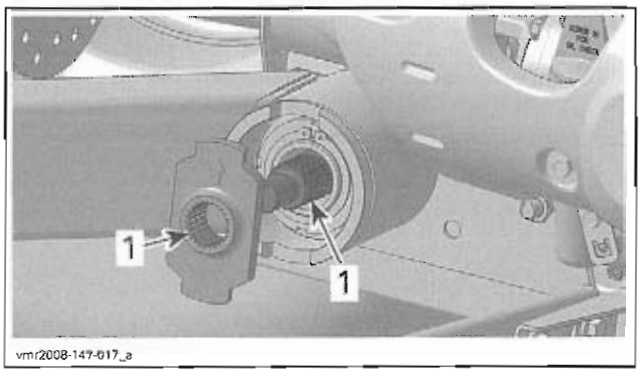


*1. Loctite 271*

Install both torsion bar levers with the arrows upward. Align lever tabs with trailing arm slots.

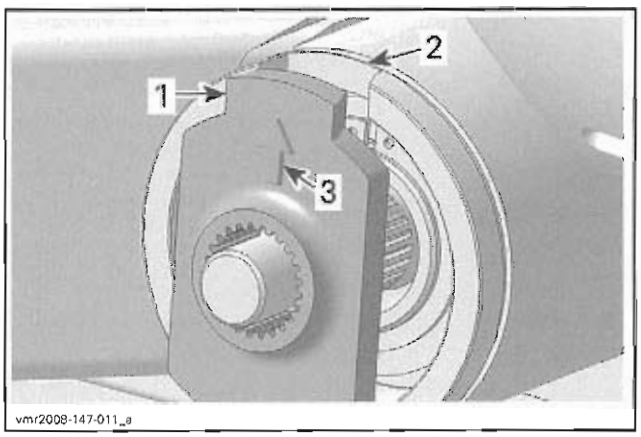


*1. Torsion bar lever tab*
*2. Trailing arm slot*
*3. Arrow upward*

Install the flat washer and a NEW elastic nut.

Tighten **first** the RH elastic nut of torsion bar lever to 55 N•m (41 lbf•ft).

Tighten the LH elastic nut of torsion bar lever to 120 N•m (89 lbf•ft).

Reinstall both protective covers with NEW clamps.

## TRAILING ARM

### Trailing Arm Installation

Insert drive shaft end into trailing arm.

Install the trailing arm on frame.

Install the lower shock absorber bolt to support the trailing arm. Do not torque yet.

#### Frame Side

Apply LOCTITE 271 (RED) (P/N 293 800 005) on threads of frame extensions.

Install the trailing arm nut and torque it to 190 N•m (140 lbf•ft) using the TRAILING ARM NUT SOCKET (P/N 529 035 925).

Install the circlip retaining the trailing arm nut.

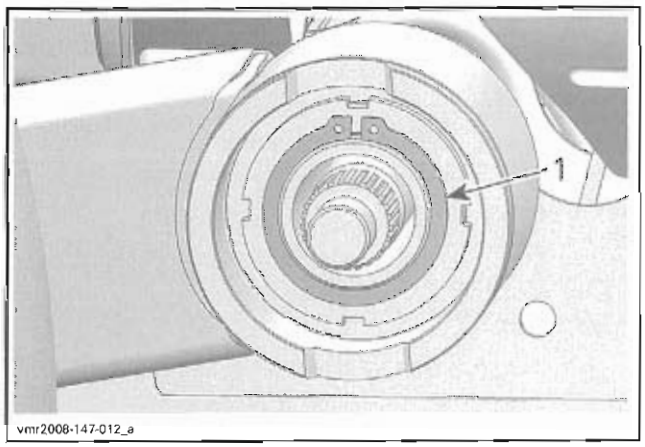


*1. Circlip*

Finalize the torsion bar installation. Refer to *TORSION BAR* in this section.

Torque the shock absorber lower bolt to 53 N•m (39 lbf•ft).

#### Wheel Side

Install wheel hub, Belleville washer and castellated nut.

Torque castellated nut to 205 N•m (151 lbf•ft) and further tighten until its grooves align with the next cotter pin hole.

Install a NEW cotter pin then the wheel cap.

**NOTE:** The longer end of cotter pin must be folded over shaft end.

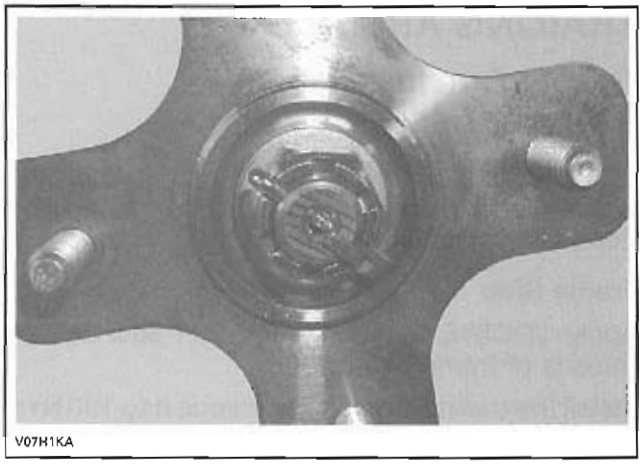
V07H1KA

Install wheel.

# FRONT AND REAR BRAKES

## SERVICE TOOLS

| Description | Part Number | Page |
|---|---|---|
| VACUUM/PRESSURE PUMP | 529 021 800 | 55–56 |

## SERVICE PRODUCTS

| Description | Part Number | Page |
|---|---|---|
| DIELECTRIC GREASE | 293 550 004 | 60, 63 |
| XP-S SYNTHETIC GREASE | 293 550 010 | 61, 66 |
| GTLMA BRAKE FLUID | 293 600 062 | 54 |
| LOCTITE 243 (BLUE) | 293 800 060 | 66 |

# OUTLANDER SERIES (FRONT AND REAR BRAKES)

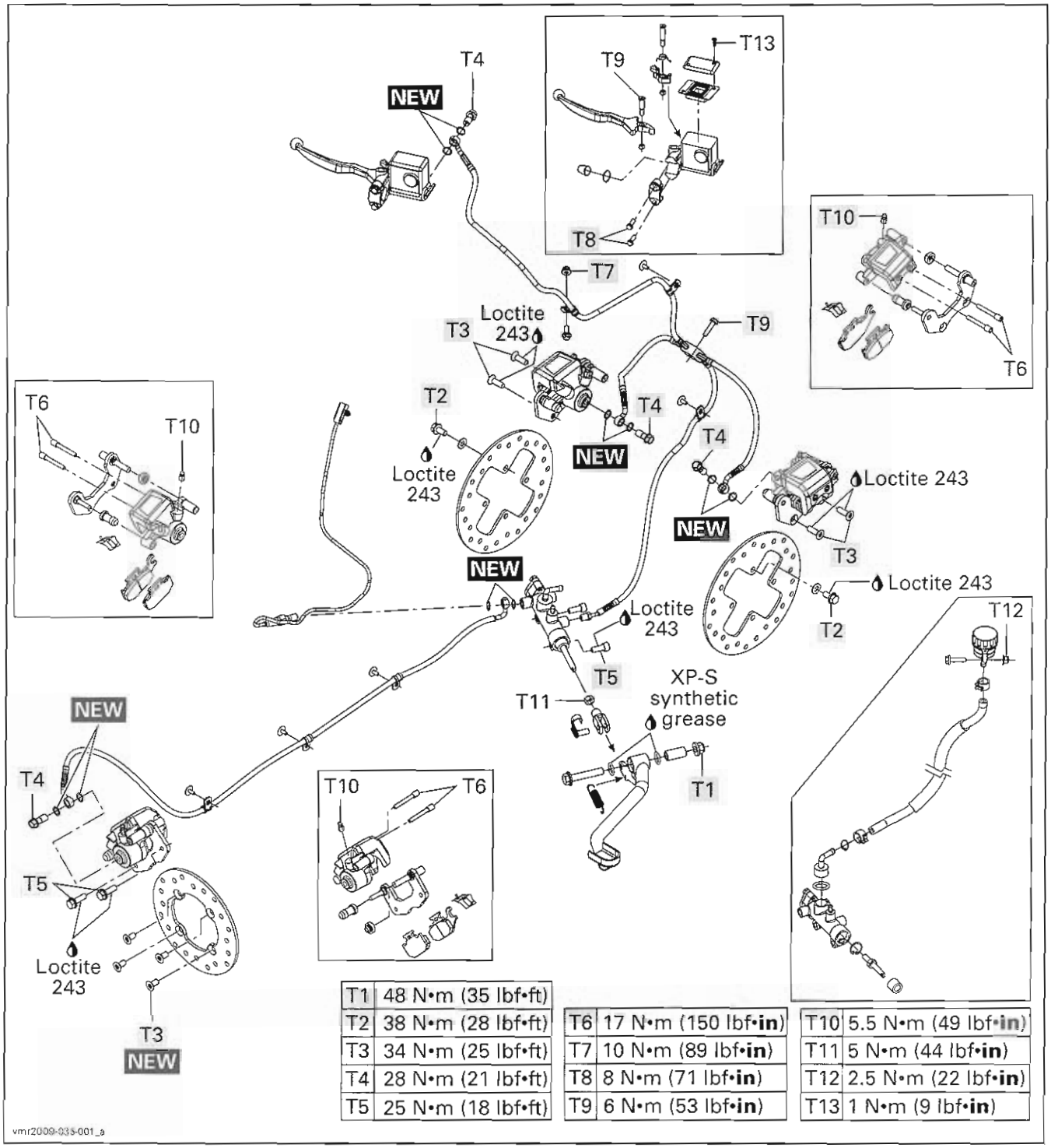


| | | | | | |
|---|---|---|---|---|---|
| T1 | 48 N•m (35 lbf•ft) | | | | |
| T2 | 38 N•m (28 lbf•ft) | T6 | 17 N•m (150 lbf•**in**) | T10 | 5.5 N•m (49 lbf•**in**) |
| T3 | 34 N•m (25 lbf•ft) | T7 | 10 N•m (89 lbf•**in**) | T11 | 5 N•m (44 lbf•**in**) |
| T4 | 28 N•m (21 lbf•ft) | T8 | 8 N•m (71 lbf•**in**) | T12 | 2.5 N•m (22 lbf•**in**) |
| T5 | 25 N•m (18 lbf•ft) | T9 | 6 N•m (53 lbf•**in**) | T13 | 1 N•m (9 lbf•**in**) |

## ALL RENEGADE MODELS EXCEPT CE (FRONT BRAKES)

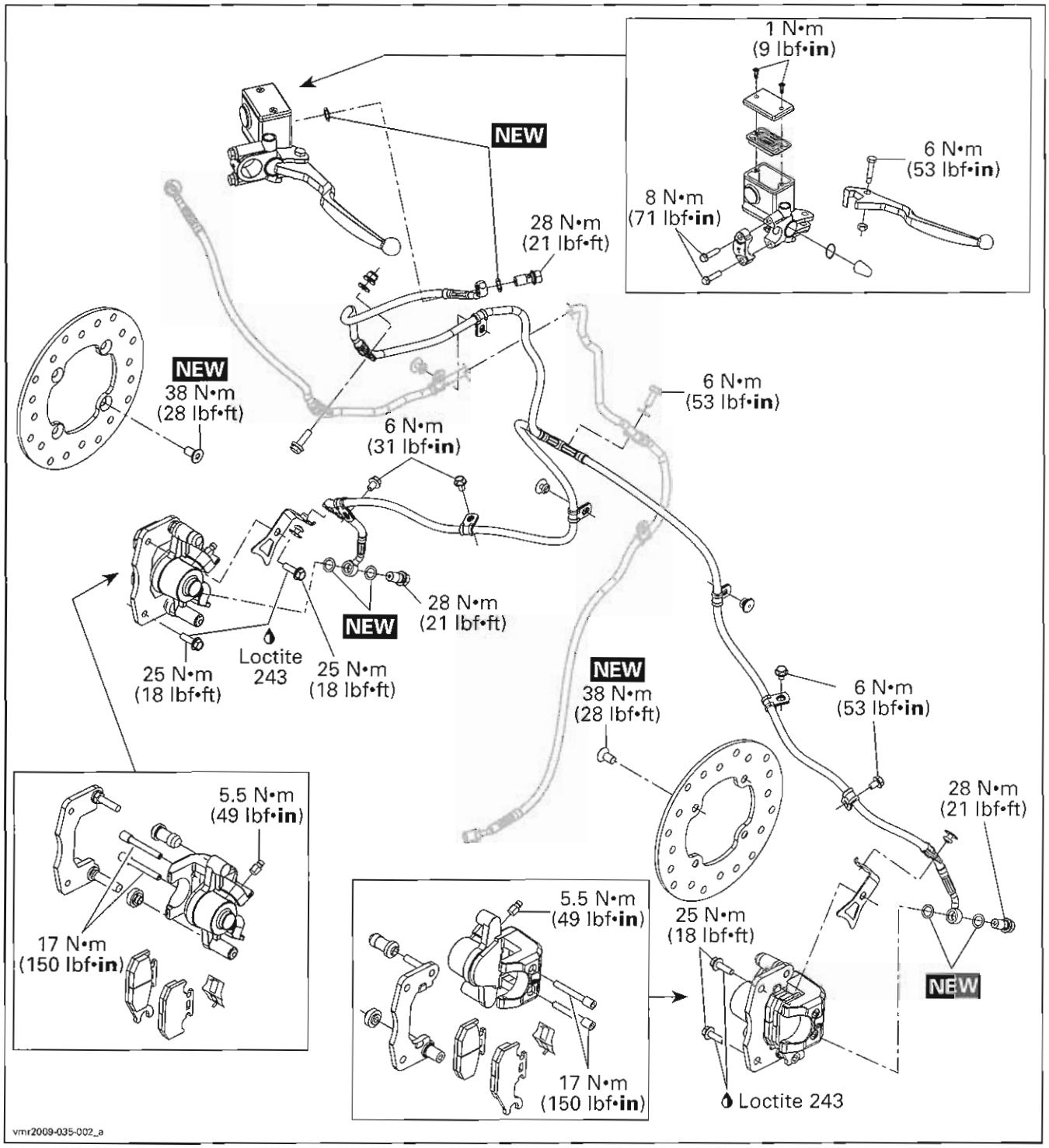

# ALL RENEGADE MODELS EXCEPT CE (REAR BRAKE)

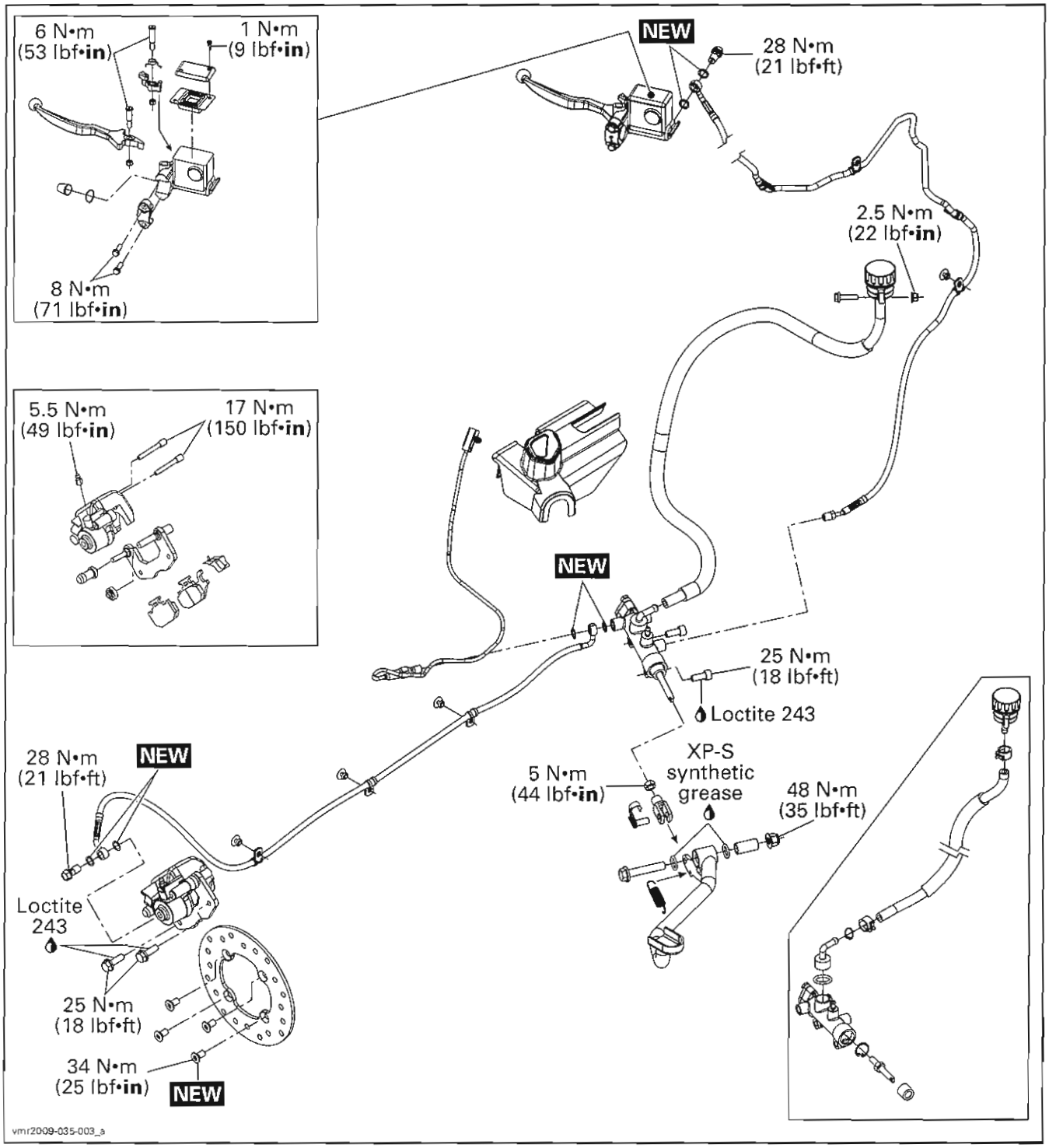

# RENEGADE CE MODELS (FRONT BRAKES)

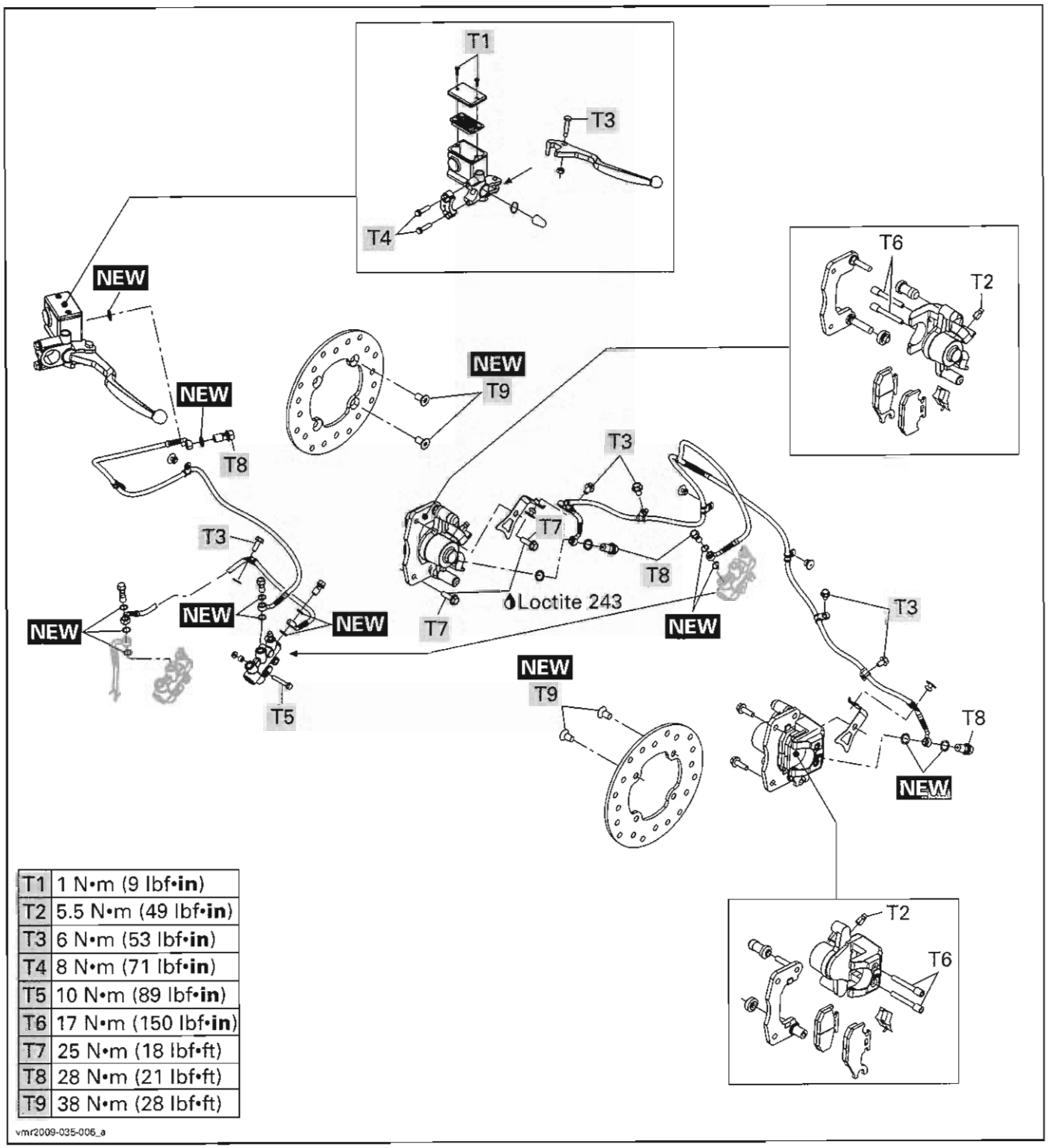


| | |
|---|---|
| T1 | 1 N•m (9 lbf•**in**) |
| T2 | 5.5 N•m (49 lbf•**in**) |
| T3 | 6 N•m (53 lbf•**in**) |
| T4 | 8 N•m (71 lbf•**in**) |
| T5 | 10 N•m (89 lbf•**in**) |
| T6 | 17 N•m (150 lbf•**in**) |
| T7 | 25 N•m (18 lbf•ft) |
| T8 | 28 N•m (21 lbf•ft) |
| T9 | 38 N•m (28 lbf•ft) |

# RENEGADE CE MODELS (REAR BRAKE)

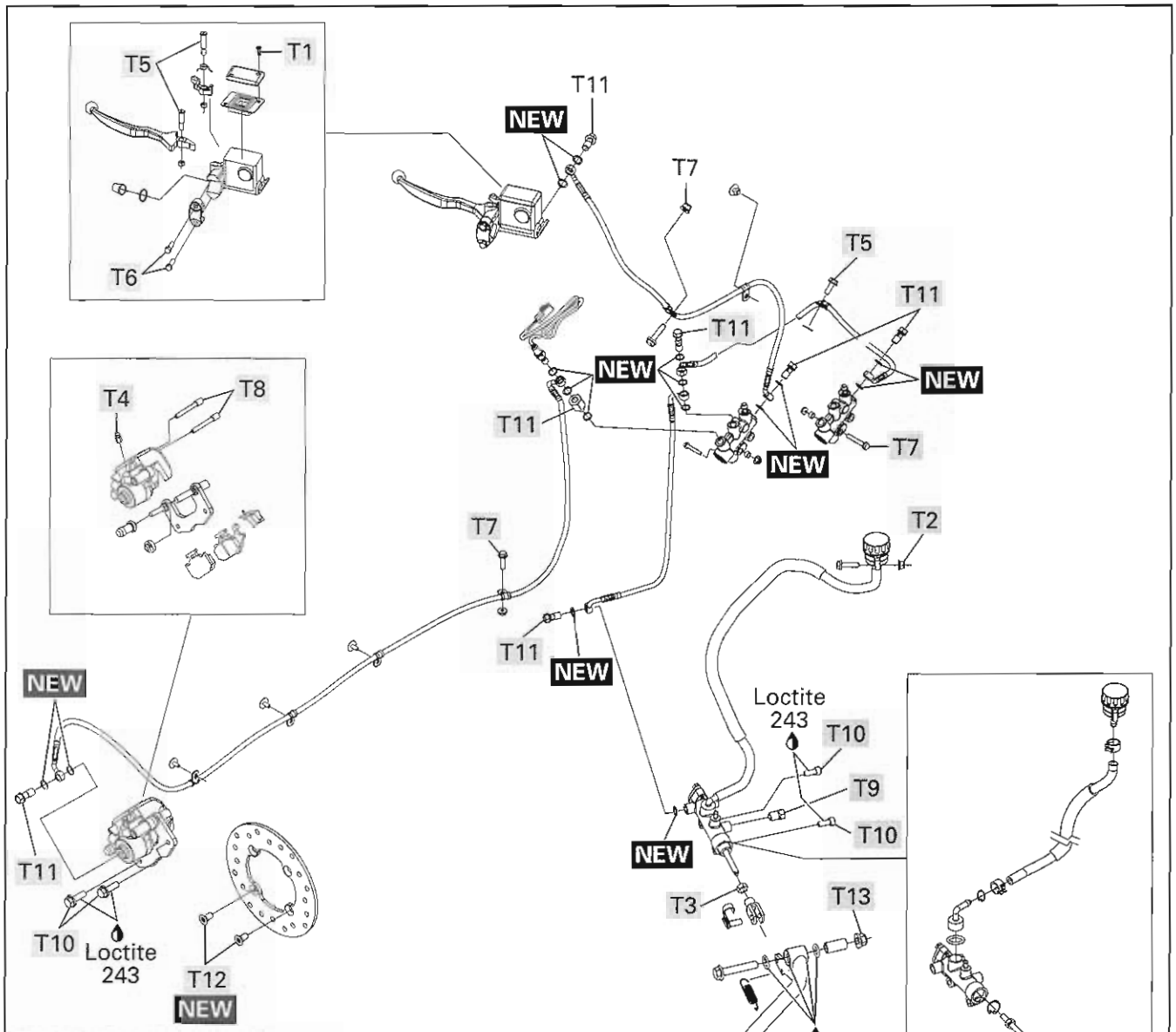


| | |
|---|---|
| T1 | 1 N•m (9 lbf•**in**) |
| T2 | 2.5 N•m (22 lbf•**in**) |
| T3 | 5 N•m (44 lbf•**in**) |
| T4 | 5.5 N•m (49 lbf•**in**) |
| T5 | 6 N•m (53 lbf•**in**) |
| T6 | 8 N•m (71 lbf•**in**) |
| T7 | 10 N•m (89 lbf•**in**) |

| | |
|---|---|
| T8 | 17 N•m (150 lbf•**in**) |
| T9 | 18 N•m (159 lbf•**in**) |
| T10 | 25 N•m (18 lbf•ft) |
| T11 | 28 N•m (21 lbf•ft) |
| T12 | 34 N•m (25 lbf•ft) |
| T13 | 48 N•m (35 lbf•ft) |

vmr2009-035-007_a

## GENERAL

During assembly/installation, use the torque values and service products as in the exploded view(s).

Clean threads before applying a threadlocker. Refer to *SELF-LOCKING FASTENERS* and *LOCTITE APPLICATION* at the beginning of this manual for complete procedure.

**⚠ WARNING**

Torque wrench tightening specifications must strictly be adhered to.
Locking devices (e.g.: locking tabs, elastic stop nuts, cotter pins, etc.) must be replaced with new ones.

Hoses or cables removed or disconnected must be installed and routed at the same place.

**⚠ CAUTION** Locking ties removed during a procedure must be replaced and installed at the same location.

**⚠ WARNING**

Never apply anything to brake fittings, The use of threads sealant or Teflon tape could cause brake system failure. Severe injury or death can occur.

**⚠ CAUTION** Avoid spilling brake fluid on plastic, rubber or painted parts. Protect these parts with a rag when servicing brake system.

**⚠ CAUTION** Wipe up any brake fluid spillage.

**⚠ CAUTION** To avoid serious damage to the brake system, use only DOT 4 brake fluid from a sealed container. Do not use brake fluid taken from old or already opened containers, nor mix different fluids for topping off.

**⚠ CAUTION** Sealing washers must be discarded and replaced with new ones every time a Banjo fitting is loosen.

**⚠ CAUTION** Before opening or working near bleeders, reservoirs or fittings, clean the part and its area to avoid system contamination.

Dispose brake fluid as per your local environmental regulation.

## SYSTEM DESCRIPTION

The brake system consists of two circuits. Each system has its own master cylinder and reservoir.

Both front and rear brakes are disc type.

**⚠ WARNING**

Periodically check the brake hoses for damages or leaks. Repair any damage before operating the vehicle.

### Parking Brake

The parking brake operates rear brakes. It is activated by a locking mechanism on LH brake lever.

To engage mechanism: Squeeze brake lever and maintain while moving lever lock. Brake lever is now compressed and applying rear brakes.

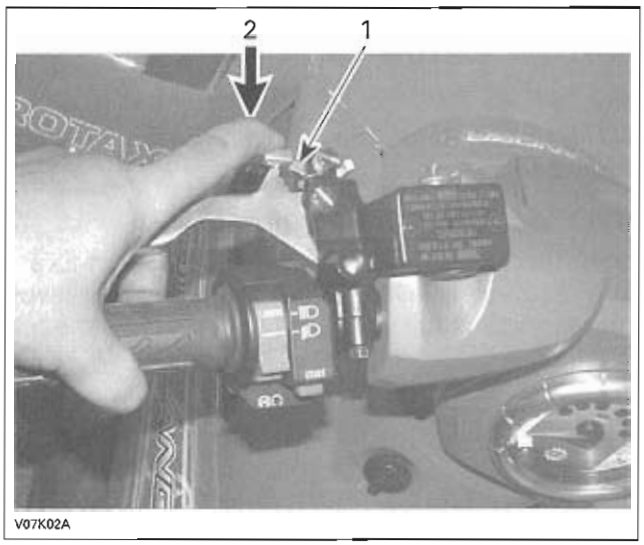


*TYPICAL*
*1. LH brake lever*
*2. Press lever to activate parking brake*

NOTE: Locking lever can be adjusted in several positions.

**NOTICE** Parking brake position can vary depending on brake pads wear. Ensure when the parking brake is applied that the vehicle stays securely in place.

To release mechanism: Squeeze brake lever. Lever lock should automatically return to its original position. Brake lever should return to rest position.

# MAINTENANCE

## BRAKE FLUID

### Recommended Brake Fluid

Always use brake fluid meeting the specification DOT 4 only such as GTLMA BRAKE FLUID (P/N 293 600 062).

**CAUTION** Use only DOT 4 brake fluid from a sealed container. Do not use brake fluid from an old or already opened container. To avoid damage to the braking system, use only the recommended fluid type.

### Brake Fluid Level Verification

With vehicle on a level surface, check brake fluid in reservoir for proper level. It should be above MIN. mark.

Clean reservoir cover before removing.

Add fluid as required. Do not overfill.

NOTE: A low level may indicate leaks or worn brake pads.

#### Brake Lever Fluid Reservoir

Turn steering in the straight-ahead position to ensure reservoir is level. Check the brake fluid level, the reservoir is full when the fluid reaches the top of window.

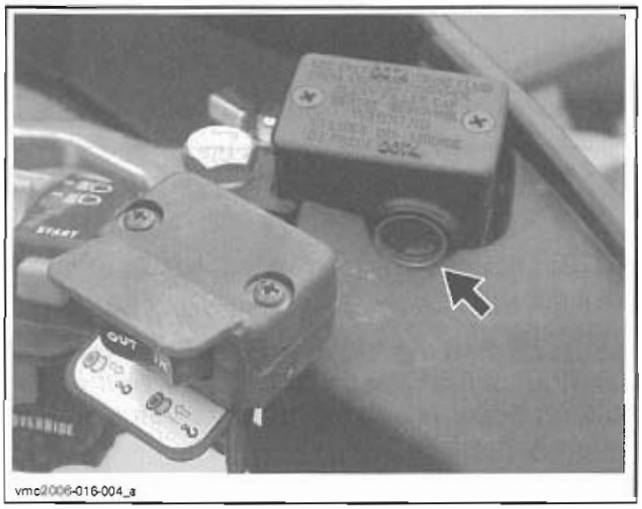


*TYPICAL*

Visually inspect lever boot condition. Check for cracks, tears, etc. Replace if damaged.

#### Brake Pedal Fluid Reservoir

*Outlander Series*

*UNDER FRONT ACCESS PANEL*

*Renegade Models*

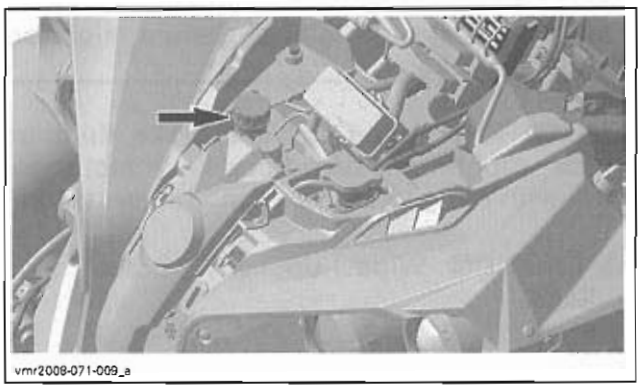


*UNDER CONSOLE*

### Brake Fluid Draining

Clean and remove reservoir cover with its diaphragm.

Connect a clear hose to bleeder.

Loosen bleeder and pump brake lever(s) or brake pedal until no more fluid flows out through the clear hose.

### Brake Fluid Bleeding (except Renegade CE Models)

#### General Recommendations

Fill reservoirs to recommended level using recommended brake fluid only.

Check brake fluid reservoir level often. Do not allow the fluid level to drop below the lower mark during the bleeding process.

For the front brakes, bleed alternately the LH and RH calipers. Turn handlebar to full RH side when bleeding right caliper and turn to the LH side for the left caliper. This helps to bleed the air.

### Preparation

Place vehicle on a level surface.

Loosen front wheel lug nuts.

Secure front of vehicle on jack stands.

Remove front wheels.

**CAUTION** Never use any type of impact wrench for lug nut removal and installation. The use of impact wrench could damage the wheel stud threads and lug nuts.

*Renegade Models*

Remove clips retaining brake hoses on suspension arms (one on each side).

Remove caliper mounting bolts from both front calipers.

**CAUTION** Do not let caliper hang by the hose and do not stretch or twist the hose.

Install each caliper horizontally on the top of its brake disc.

Secure caliper with a locking tie.

*All Models*

Unscrew the bleeder on the top of rear master cylinder until brake fluid comes out then close it.

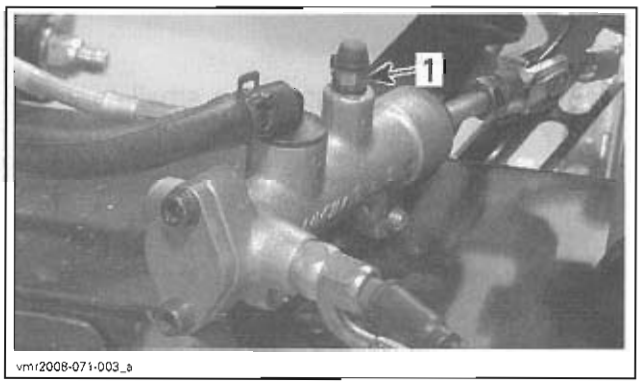


*1. Bleeder*

On each caliper, unscrew the bleeder until the brake fluid comes out then close it.

Bleed system as per one of the following procedures.

### Bleeding Procedure Using a Vacuum Pump

Using a clear hose and the pump reservoir, install the VACUUM/PRESSURE PUMP (P/N 529 021 800) to bleeder.

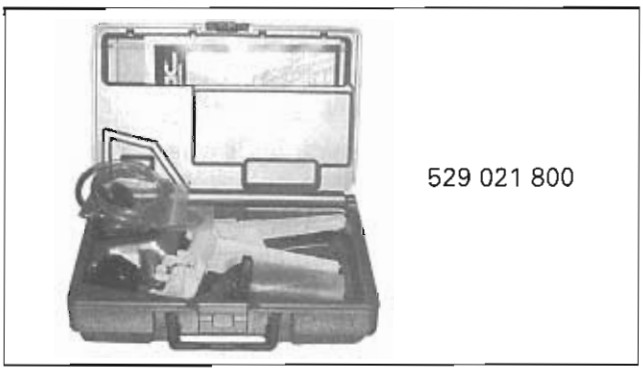


Place the pump in vacuum position.

Pump vacuum pump then loosen bleeder.

Pump until no more air bubbles appear in clear hose.

Close bleeder.

Operate brake lever or brake pedal. If it still feels spongy, bleed system again.

Repeat the procedures until air bubbles do not appear in hose and lever or pedal is stiff.

Top up reservoirs to the upper level with DOT 4 brake fluid.

Install diaphragms and covers on reservoirs.

Check brakes operation before riding the vehicle.

### Manual Bleeding Procedure

Install a clear hose to bleeder.

Place the other end of hose in a small container partially filled with clean brake fluid.

Open bleeder. Fill reservoirs and pump brake lever or brake pedal until fluid freely flows out of the hose.

Pump up system pressure with brake lever or brake pedal until a resistance is felt.

Maintain pressure on lever or pedal while opening the bleeder.

NOTE: When bleeder is opened, brake fluid will flow out from the caliper and brake lever or the brake pedal will move accordingly.

Retighten the bleeder, then release brake lever or brake pedal gradually.

Repeat the procedure until no more air bubbles appear in hose and lever or pedal is stiff.

Top up reservoirs to the appropriate level.

Install diaphragm and covers on reservoirs.

Check brakes operation carefully before riding the vehicle.

## Brake Fluid Bleeding (Renegade CE Models)

### General Recommendations

Fill reservoirs to recommended level using recommended brake fluid only.

Check brake fluid reservoir level often. Do not allow the fluid level to drop below the lower mark during the bleeding process.

For the front brakes, bleed alternately the LH and RH calipers. Turn handlebar to full RH side when bleeding right caliper and turn to the LH side for the left caliper. This helps to bleed the air.

### Preparation

Place vehicle on a level surface.

Loosen front wheel lug nuts.

Secure front of vehicle on jack stands.

Remove front wheels.

**CAUTION** Never use any type of impact wrench for lug nut removal and installation. The use of impact wrench could damage the wheel stud threads and lug nuts.

Remove clips retaining brake hoses on suspension arms (one on each side).

Remove caliper mounting bolts from both front calipers.

**CAUTION** Do not let caliper hang by the hose and do not stretch or twist the hose.

Install each caliper horizontally on the top of its brake disc.

Secure caliper with a locking tie.

On each caliper and both splitters, unscrew the bleeder until the brake fluid comes out then close it.

Top up reservoirs if required.

Bleed system as per one of the following procedures.

### Bleeding Procedure Using a Vacuum Pump

The brake system is bled in the following sequence:

- Front calipers
- LH splitter
- RH splitter and rear caliper.

Using a clear hose and the pump reservoir, install the VACUUM/PRESSURE PUMP (P/N 529 021 800) to LH front caliper bleeder.

Place the pump in vacuum position.

Pump vacuum pump then loosen bleeder.

Pump until no more air bubbles appear in clear hose.

Close bleeder.

Repeat the same procedure following the proper bleeding sequence for the other bleeders.

Top up reservoir to the upper level with DOT 4 brake fluid.

Install diaphragm and cover on RH hand reservoir.

Check brakes operation before riding the vehicle.

### Manual Bleeding Procedure

The brake system is bled in the following sequence:

- Front calipers using the RH brake lever
- LH splitter using the LH brake lever
- RH splitter and rear caliper using the brake pedal.

Install a clear hose to bleeder.

Place the other end of hose in a small container partially filled with clean brake fluid.

Pump brake lever three or four times and hold lever while opening the bleeder.

**NOTE:** When bleeder is opened, brake fluid will flow out from the caliper and the lever will move accordingly.

Retighten the bleeder, then release brake lever or brake pedal gradually.

Repeat the procedure until no more air bubbles appear in hose and lever and pedal are firm.

Top up reservoirs to the appropriate level.

Install diaphragm and covers on reservoirs.

Check brakes operation carefully before riding the vehicle.

# PROCEDURES

## REAR BRAKE LIGHT SWITCH

### Rear Brake Light Switch Inspection

First ensure brake light is good.

Check brake light switch for dirt or corrosion. Make sure it is operating properly.

Depress brake pedal and check for brake light to turn on. Repeat with the brake lever(s).

### Rear Brake Light Switch Test

*Outlander Series*

Remove the LH footrest.

*Renegade Models (except CE)*

Remove the master cylinder cover.

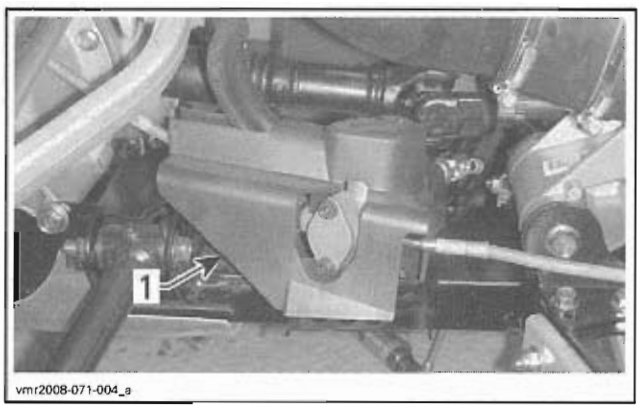


*1. Master cylinder cover*

*Renegade CE*

Remove the LH inner fender.

*All Models*

Disconnect switch connector.

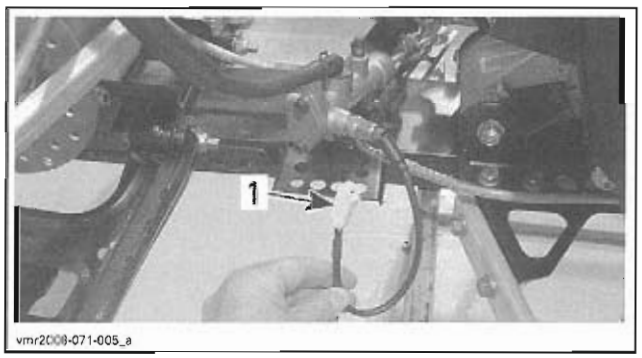


*OUTLANDER MODEL SHOWN*
*1. Switch connector*

Check switch operation as follows.

| OUTLANDER SERIES | | | |
|---|---|---|---|
| BRAKE LIGHT SWITCH POSITION | PIN | | RESISTANCE |
| Firmly pushed | 1 | 2 | 0.2 Ω max. |
| Released | 1 | 2 | Infinite (OL) |

| RENEGADE MODELS | | | |
|---|---|---|---|
| BRAKE LIGHT SWITCH POSITION | PIN | | RESISTANCE |
| Firmly pushed | 1 | 3 | 0.2 Ω max. |
| Released | 1 | 3 | Infinite (OL) |

If switch is defective, replace with a new one.

If the switch tests good, verify wire continuity between harness connector and ECM.

| ECM CONNECTOR PIN | HARNESS CONNECTOR WIRES | RESISTANCE |
|---|---|---|
| B-23 | RED/ORANGE | Close to 0 Ω |

### Rear Brake Light Switch Removal

*All Models except Renegade CE*

The rear brake light switch is located on the rear master cylinder and it cannot be adjusted.

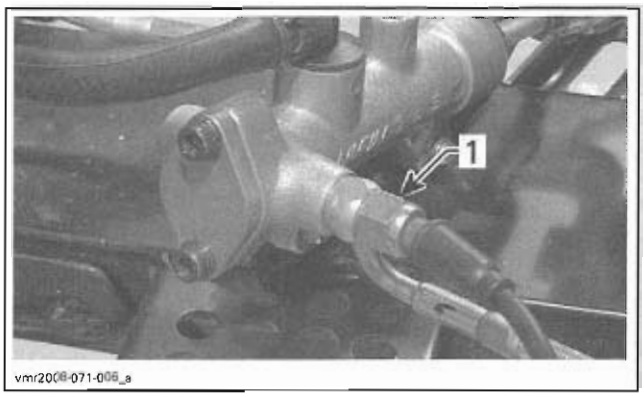


*1. Brake light switch*

*Renegade CE*

The rear brake light switch is located on the LH splitter and cannot be adjusted.

*All Models*

Disconnect switch connector.

Drain brake system.

Unscrew brake light switch from master cylinder or splitter. Catch spilled fluid with a rag.

Discard sealing washers.

### Rear Brake Light Switch Installation

For installation, reverse the removal procedure.

Install two NEW sealing washers.

## FRONT BRAKE LIGHT SWITCH

*Renegade Models*

### Front Brake Light Switch Inspection

First, ensure bulb is not burnt.

Check brake light switch for dirt or corrosion. Make sure it is operating properly.

Depress front brake lever and check for brake light to turn on.

### Front Brake Light Switch Test

Disconnect switch connectors.

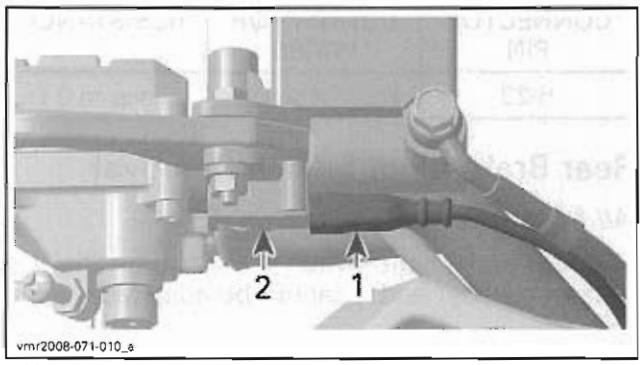


*UNDERNEATH RH BRAKE LEVER*
1. *Switch connectors*
2. *Brake light switch*

Check switch operation as follows.

| BRAKE LIGHT SWITCH POSITION | PIN | RESISTANCE |
|---|---|---|
| Firmly pushed | Switch pins | 0.2 Ω max. |
| Released | | Infinite (OL) |

If switch is defective, replace with a new one.

If the switch test good, verify wire continuity between brake light switch and ECM.

| ECM CONNECTOR PIN | BRAKE LIGHT SWITCH PIN | RESISTANCE |
|---|---|---|
| B-23 | RED/ORANGE | Close to 0 Ω |

### Front Brake Light Switch Removal

The front brake light switch is located underneath the RH brake lever and it cannot be adjusted.

Disconnect switch connectors.

Unscrew brake light switch from brake lever then remove it.

### Front Brake Light Switch Installation

For installation, reverse the removal procedure.

Tighten switch screw to 1 N•m (9 lbf•**in**).

## PARKING BRAKE MECHANISM

### Parking Brake Mechanism Removal

NOTE: The parking brake mechanism is located on the LH brake handle.

Unscrew nut under LH brake lever.

Remove screw, spring and brake lever lock.

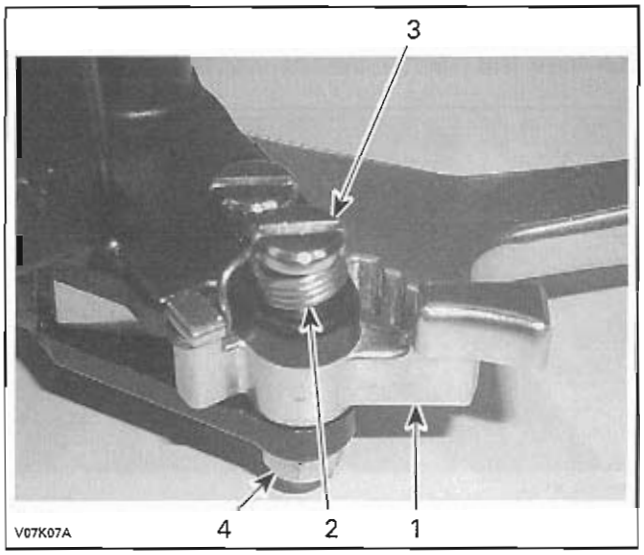


1. *Brake lever lock*
2. *Spring*
3. *Screw*
4. *Nut*

### Parking Brake Mechanism Installation

For installation, reverse the removal procedure.

See the following illustration to install the spring properly.

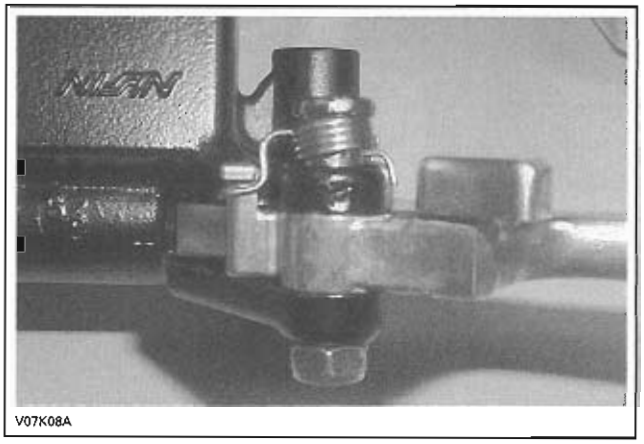


# BRAKE LEVER

## Brake Lever Removal

Remove the parking brake mechanism (LH brake handle only).

Unscrew the brake lever nut.

Remove the screw and the brake lever.

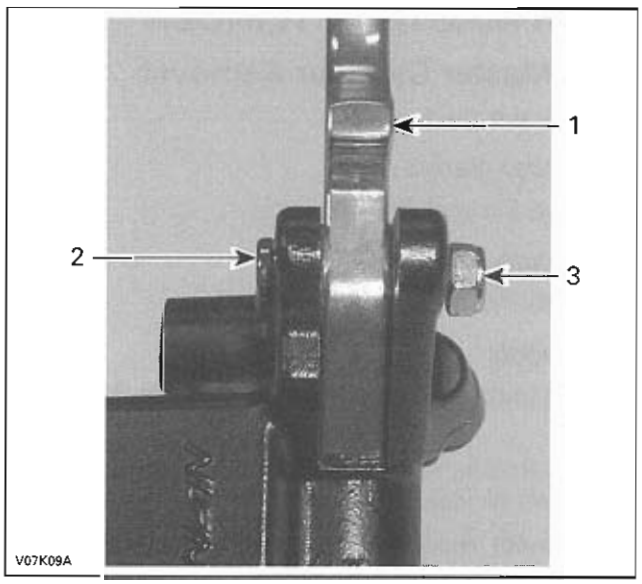


1. *Brake lever*
2. *Screw*
3. *Nut*

## Brake Lever Inspection

Check brake lever for bending, cracks or other damages. Replace if necessary.

## Brake Lever Installation

For installation, reverse the removal procedure.

# FRONT MASTER CYLINDER

## Front Master Cylinder Removal

Remove master cylinder cover and its diaphragm then drain brake fluid until front master cylinder reservoir is empty.

Remove banjo fitting and sealing washers retaining brake hose to front master cylinder. Discard the sealing washers.

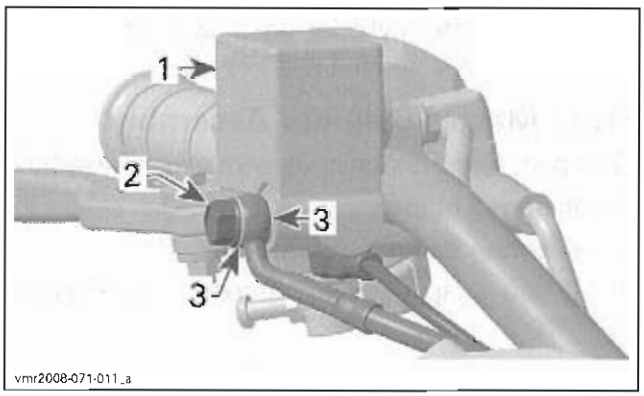


*TYPICAL — RH MASTER CYLINDER SHOWN*
1. *Front master cylinder*
2. *Banjo fitting*
3. *Sealing washers*

When removing RH master cylinder, unplug brake light switch connectors.

Remove screws from master cylinder holder and remove master cylinder from handlebar.

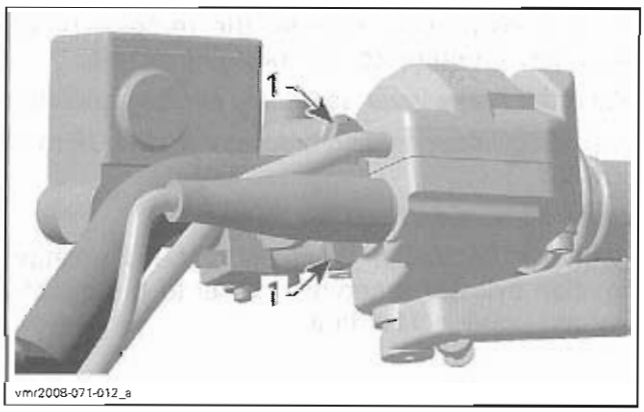


*TYPICAL — RH MASTER CYLINDER SHOWN*
1. *Holder screws*

## Front Master Cylinder Disassembly

Remove brake lever.

Remove piston boot, snap ring, piston and spring.

## Front Master Cylinder Inspection and Lubrication

Discard any remaining fluid inside reservoir.

Clean reservoir, piston and master cylinder thoroughly with clean brake fluid.

Check:
- Boot for crack
- Spring for damage
- Piston cup for wear, deterioration or damages
- Master cylinder and piston for scoring, scratches or other damages.

Change part(s) if necessary.

Check if the end cap O-ring is brittle, hard or damaged.

NOTE: If master cylinder housing is damaged or leaking, replace as an assembly.

### Front Master Cylinder Assembly

Coat piston and piston cups with clean brake fluid.

Install spring onto piston.

Install piston into master cylinder.

Install the snap ring into groove in the master cylinder.

Install boot into master cylinder and the groove in piston.

Apply DIELECTRIC GREASE (P/N 293 550 004) to the brake lever contacting surface of the piston.

Install brake lever and locking mechanism.

Apply DIELECTRIC GREASE (P/N 293 550 004) on lever pivot bolt.

### Front Master Cylinder Installation

For the installation, reverse the removal procedure, pay attention to the following details.

Place the brake lever assembly on the handlebar.

Position cylinder holding bracket with the UP mark upward.

Install screws and tighten loosely.

With the handlebar in straight ahead position, position cylinder reservoir parallel to the ground. Tighten upper screw first.

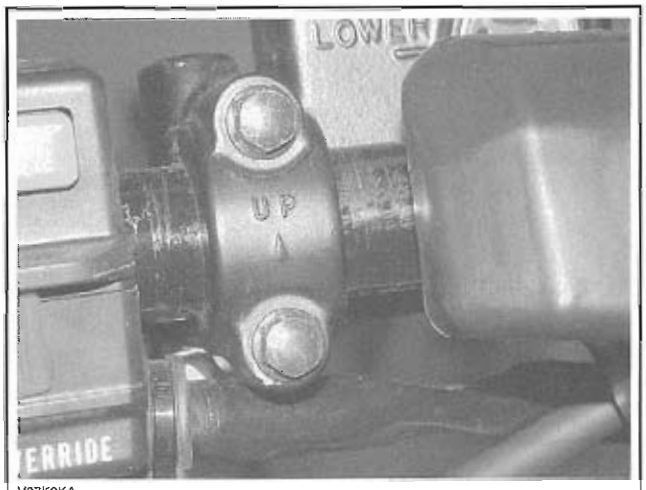

V07K0KA

Connect brake hose to master cylinder with a Banjo fitting and NEW sealing washers.

Bleed brake system.

Check for leaks and make sure the brakes operate normally before driving.

## REAR MASTER CYLINDER

### Rear Master Cylinder Removal

Drain brake fluid.

*Outlander Series*

Remove LH and RH footrests.

*Renegade Models*

Remove the master cylinder cover.

*All Models*

Unplug brake switch connector (except Renegade CE).

NOTE: At this time, check hoses and fittings for damages or leaks.

Disconnect reservoir flexible hose and plug the end to avoid brake fluid spillage.

Unscrew brake light switch from master cylinder (except Renegade CE). Discard sealing washers.

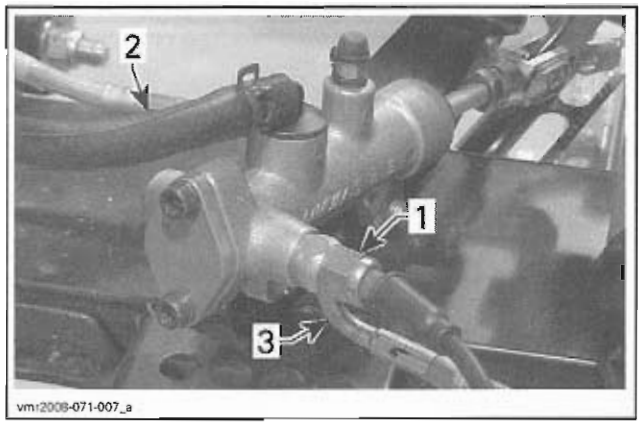


*1. Brake switch*
*2. Reservoir hose*
*3. Rear hose*

Unscrew front hose from master cylinder.

Unhook push rod from brake pedal.

Remove bolts retaining master cylinder to the frame.

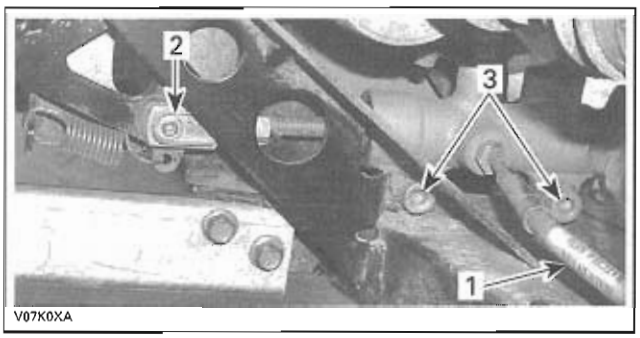


*1. Front hose*
*2. Push rod lock*
*3. Master cylinder bolts*

## Rear Master Cylinder Disassembly

Remove the end cap, the spring and the piston.

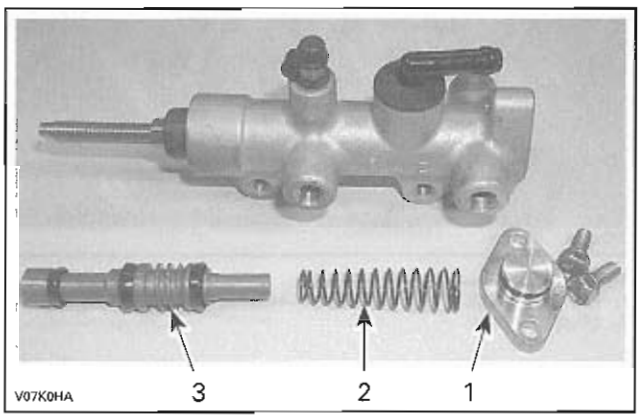


*1. End cap*
*2. Spring*
*3. Piston*

Remove the boot, the snap ring and the push rod.

## Rear Master Cylinder Inspection and Lubrication

Discard any remaining fluid inside reservoir.

Clean reservoir, piston and master cylinder thoroughly with clean brake fluid.

Check:
- Boot for crack
- Spring for damage
- Piston cup for wear, deterioration or damages
- Master cylinder and piston for scoring, scratches or other damages.

Change part(s) if necessary.

Check the push rod lock for excessive wear, replace if necessary.

Check if the end cap O-ring is brittle, hard or damaged.

NOTE: If master cylinder housing is damaged or leaking, replace as an assembly.

## Rear Master Cylinder Assembly

Apply XP-S SYNTHETIC GREASE (P/N 293 550 010) on both ends of push rod.

Install the push rod, the snap ring and the boot.

If push rod yoke has been removed, reinstall it then adjust push rod length, see the following illustration.

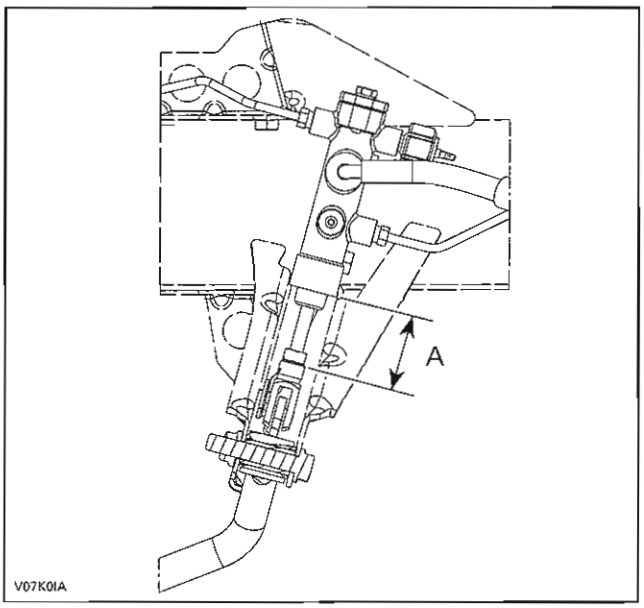


*A. 44 ± 1 mm (1.732 ± .039 in)*

Coat piston and piston cups with clean brake fluid.

The spring is conical. Install the smaller end on piston.

Insert piston in the master cylinder.

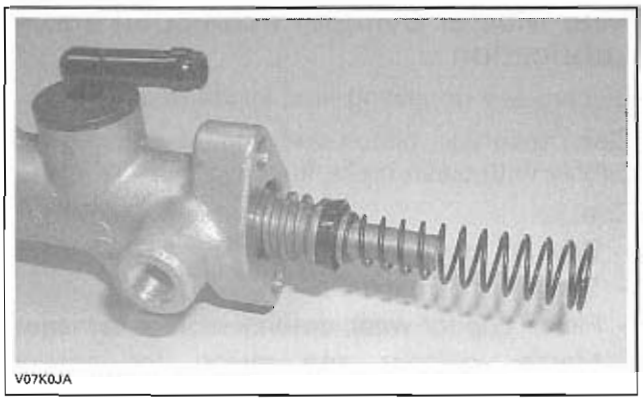


Install the end cap. Do not forget the O-ring.

### Rear Master Cylinder Installation

Install master cylinder to frame.

Hook push rod on brake pedal.

Connect front hose on master cylinder.

Connect reservoir flexible hose.

Install the rear hose and the brake light switch with two NEW sealing washers (except Renegade CE).

Connect brake light switch connector (except Renegade CE).

Fill up reservoir with clean brake fluid.

Bleed brake system.

Check for leaks and make sure the brakes operate normally before driving.

## CALIPER

### Caliper Removal

Loosen wheel lug nuts.

Raise vehicle and support it securely.

Remove appropriate wheel.

Remove the caliper screws then the caliper. If the caliper is not being removed from the vehicle as during brake pad replacement, simply hang the caliper with a piece of wire to take the weight off the brake hose.

**⚠ CAUTION** Do not let caliper hangs by the hose and do not stretch or twist the hose.

If the caliper is being removed for replacement, drain brake system before removing the Banjo fitting and its sealing washers. Remove the caliper from the vehicle.

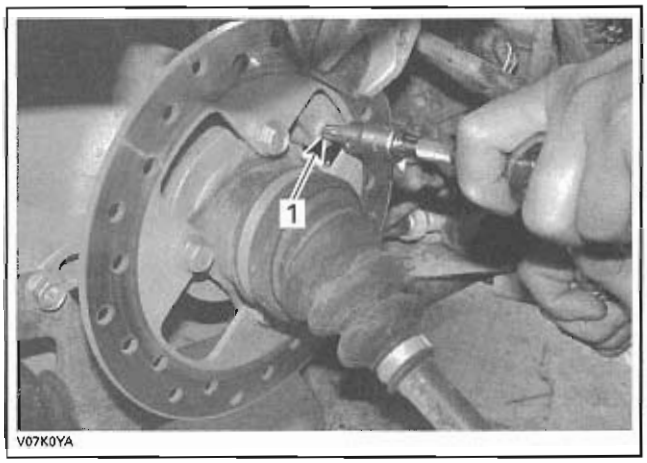


*FRONT CALIPER — OUTLANDER SERIES*
*1. Retaining screw*

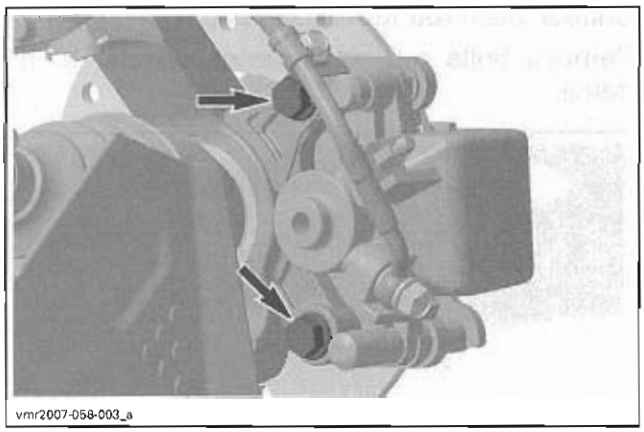


*FRONT CALIPER — RENEGADE MODELS*

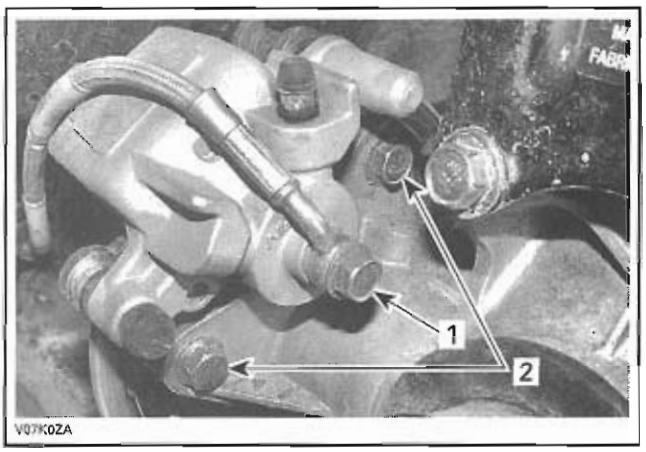


*REAR CALIPER — ALL MODELS*
*1. Remove banjo fitting and sealing washers*
*2. Unscrew bolts*

Catch spilled fluid with a rag. Attach the brake hose in a position to prevent the fluid from flowing out.

Discard all sealing washers.

### Caliper Disassembly

Remove brake pads, see further in this section.

Remove slide caliper support and pad spring.

Place rag over piston.

Place caliper body with piston down and apply small squirts of air pressure to the fluid inlet to remove piston.

**⚠ WARNING**

**Do not use high pressure air or bring nozzle too close to inlet.**

Remove piston seal.

**⚠ CAUTION** **Be careful not to damage piston sliding surface.**

Clean piston grooves, caliper cylinder and piston with clean brake fluid.

Clean slide pins with brake cleaner and a rag.

### Caliper Inspection

If boots are deteriorated or hard, replace the caliper.

Check caliper cylinder for scratches, rust or other damages. If so, replace caliper.

Check piston for scratches, rust or other damages. If so, replace caliper.

### Caliper Assembly

Coat piston seal with clean brake fluid and install it into piston grooves in caliper.

Coat piston with clean brake fluid and install into cylinder with the closing toward caliper body.

Apply DIELECTRIC GREASE (P/N 293 550 004) into sliding bores and install slide pins.

NOTE: Make sure that rubber boots are correctly installed in slide pins grooves.

Install pad spring, caliper bracket and pads.

### Caliper Installation

For the installation, reverse the removal procedure, pay attention to the following details.

Use NEW sealing washers when installing banjo fitting retaining brake hose to caliper.

Install caliper in its original position.

Torque screws in accordance with the following table.

| MODELS | TORQUE |
|---|---|
| OUTLANDER SERIES | 34 N•m (25 lbf•ft) |
| RENEGADE MODELS | 24 N•m (18 lbf•ft) |

Bleed the brake system.

Check for leaks and make sure the brakes operate normally before driving.

## BRAKE PADS

### Brake Pads Removal

Raise vehicle and support it securely.

Remove appropriate wheel.

Loosen pad pins.

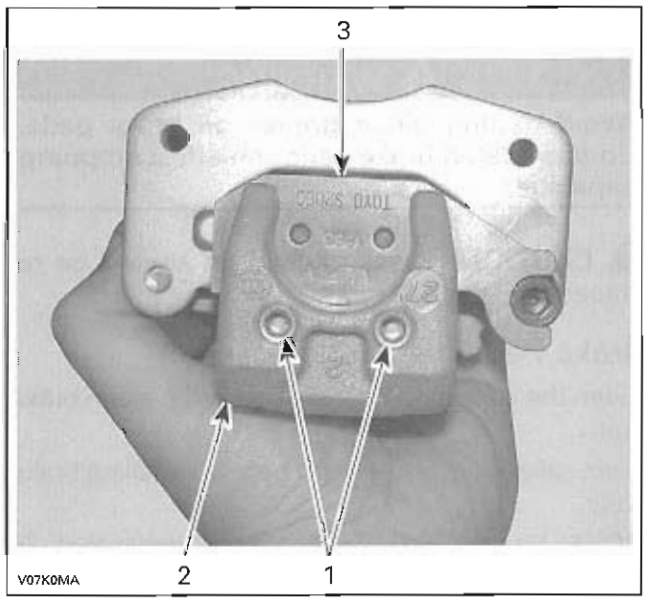


*1. Pad pins*
*2. Caliper*
*3. Pad*

Remove caliper from its support or from knuckle.

Unscrew pad pins then remove pads. Discard pad pins.

**⚠ CAUTION** **Do not let the caliper hang by the hose and do not stretch or twist the hose.**

### Brake Pads Inspection

**⚠ CAUTION** **Do not clean brake pads in petroleum based solvent. Use brake system cleaner only. Soiled brake pads must be replaced with new ones.**

Measure brake pad lining thickness.

Brake pads must be replaced when lining is 1 mm (1/32 in) thick or less, or look the hollow places on both sides on the pad lining.

There are four hollow places on one set of brake pads. When the pad wear reaches one of the hollow places, the pad must be changed even if the pad wear does not reach another hollow place.

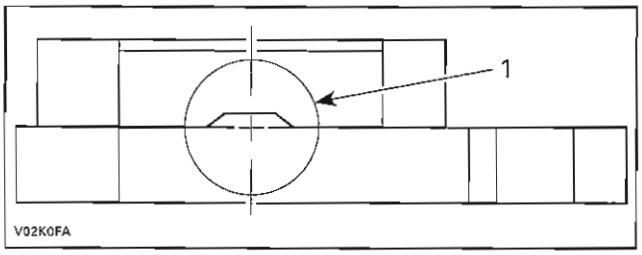


*1. Hollow place*

| BRAKE PAD MINIMUM THICKNESS | 1 mm (1/32 in) |
|---|---|

**WARNING**

Avoid getting oil or grease on brake pads. Contaminated brake pads can affect stopping capacities.

**CAUTION** Brake pads must always be replaced in pairs.

### Brake Pads Installation

Clean the visible portion of piston with clean brake fluid.

Push caliper pistons inward before installing brake pads.

NOTE: Use a C-clamp or another suitable tool. To avoid damaging the piston, use an old pad to push it into the caliper.

Make sure that pad spring is in position.

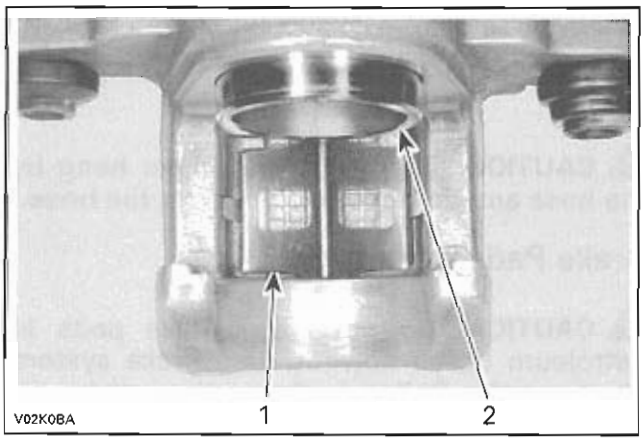


*1. Pad spring*
*2. Piston*

Install new brake pads.

Install NEW pad pins by pushing in the pads against pad spring to align pad slots in the pads and caliper body.

Install brake caliper so the disc is positioned between pads.

NOTE: Be careful not to damage pads and make sure pads are correctly inserted in their location.

After the job is completed, firmly depress the brake lever a few times to bring the pads in contact with the disc.

Check for leaks and make sure the brakes operate normally before driving. The pads must rest flat on the disk.

## BRAKE DISC

### Brake Disc Inspection

Brake discs can be inspected without removing them from the vehicle.

Raise vehicle and support it securely. Remove wheels and visually inspect disc surfaces for scratches or grooves. Make sure to check both sides of disc.

Measure thickness of the disc.

| DISC MINIMUM THICKNESS | |
|---|---|
| FRONT | 3.5 mm (.138 in) |
| REAR | 4.3 mm (.169 in) |

Replace disc if not within specifications.

**CAUTION** Brake discs should never be machined.

Turn the disc by hand and check warpage.

| MAXIMUM DISC WARPAGE | |
|---|---|
| FRONT | 0.2 mm (.01 in) |
| REAR | |

### Brake Disc Removal

#### Front Brake Disc

*Outlander Series*

Apply parking brake and raise the front of the vehicle.

Remove the appropriate wheel.

Remove wheel hub. Refer to *FRONT DRIVE.*

On **Outlander 650** and **800 series**, remove the shock absorber.

Separate knuckle from lower suspension arm.

Remove drive shaft from knuckle.

Attach upper suspension arm or strut out of way.

Unscrew brake disc screws.

Keep the Belleville washers.

Release parking brake and remove caliper. Suspend caliper out of the way.

**CAUTION** Do not let the caliper hang by the hose and do not stretch or twist the hose.

Remove brake disc. Pay attention not to cut the CV boot.

*Renegade Models*

Remove appropriate wheel.

Remove caliper as described previously. Do not disconnect brake hose from caliper.

After removing the caliper, suspend it out of the way.

**CAUTION** Do not let the caliper hang by the hose and do not stretch or twist the hose.

Remove wheel hub with brake disc. Refer to *FRONT DRIVE*.

Heat up brake disc around screw to break the threadlocker. Remove and discard brake disc screws.

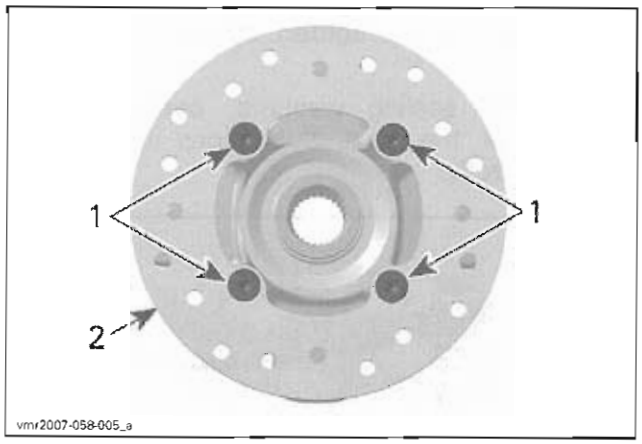


1. *Brake disc screws*
2. *Brake disc*

Rear Brake Disc

Remove rear wheels.

Remove the caliper and suspend it out of the way.

**CAUTION** Do not let the caliper hang by the hose and do not stretch or twist the hose.

Unscrew and remove the rear propeller shaft screw from differential.

Remove the differential protector.

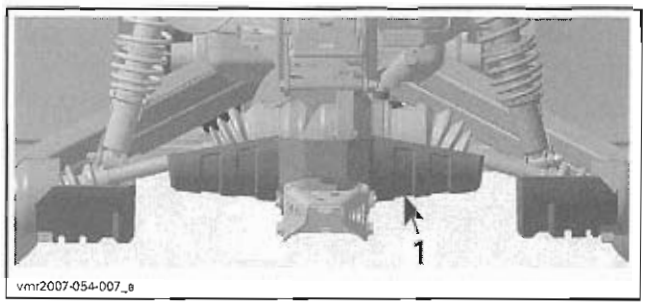


1. *Differential protector*

Remove the differential bolts.

Loosen hitch plate bolts.

Move the differential backward.

Disconnect propeller shaft from differential.

Unscrew brake disc screws. Heat up brake disc around screws to facilitate removal. Discard brake disc screws.

## Brake Disc Installation

Front Brake Disc

*Renegade Models*

The installation is the reverse of the removal procedure.

*Outlander Series*

The installation is the reverse of removal procedure. However, pay attention to the following details.

Do not forget Belleville washers when installing brake disc screws. Place the concave side of washers towards brake disc.

**WARNING**

Never substitute Belleville washer with another type of washer (flat, lock, etc.).

Tighten brake disc screws to 38 N•m (28 lbf•ft) in a criss-cross sequence.

Rear Brake Disc

*All Models*

Install brake disc on propeller shaft and tighten NEW screws to 34 N•m (25 lbf•ft) in a criss-cross sequence.

# BRAKE PEDAL

## Brake Pedal Removal

Remove RH footwell.

Detach the return spring from the brake pedal.

Open the master cylinder push rod hook.

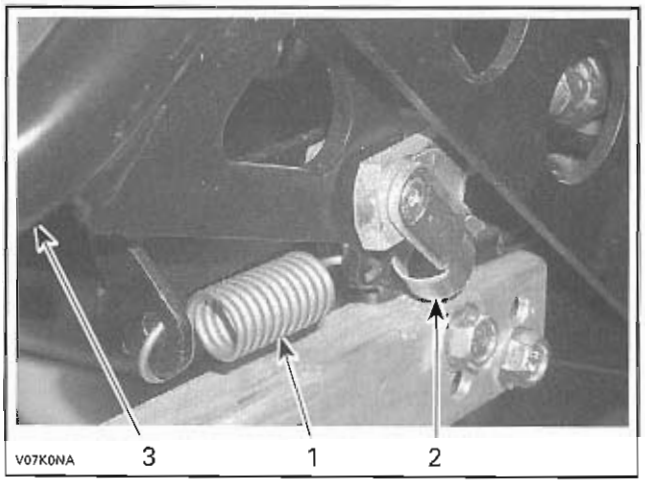


*1. Return spring*
*2. Push rod hook*
*3. Brake pedal*

Remove bolt retaining the brake pedal to frame.

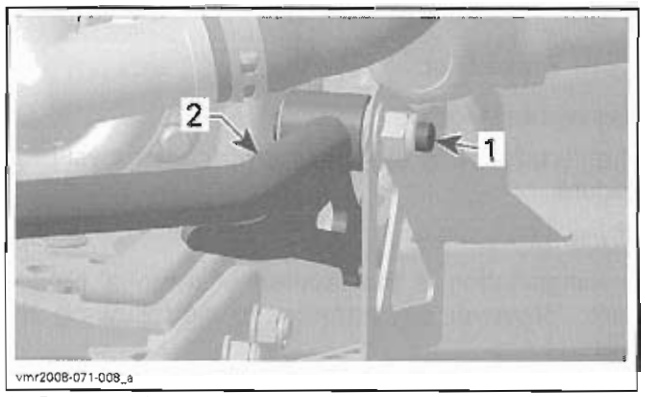


*1. Brake pedal bolt*
*2. Brake pedal*

## Brake Pedal Inspection

Check brake pedal for cracks or distortion.

Check if O-rings are brittle, hard or otherwise damaged.

Replace any defective parts.

## Brake Pedal Installation

For installation, reverse the removal procedure.

Apply XP-S SYNTHETIC GREASE (P/N 293 550 010) on both O-rings and into brake pedal.

# BRAKE CIRCUIT SPLITTERS (RENEGADE CE MODELS)

## Brake Circuit Splitters Removal

Remove LH or RH inner fender. Refer to *BODY* section.

Drain brake fluid. Refer to *BRAKE FLUID DRAINING* at the beginning of this section.

Remove all brake hoses from the splitter and discard sealing washers.

**⚠ CAUTION** When hoses are disconnected, cleanliness must be observed. Clean all parts before disassembly.

To remove the LH splitter, unplug the brake light switch connector.

Unscrew splitter retaining screws. Do not remove screws yet.

Place your hand under the splitter to catch both shims. Shims are located between splitter and frame.

Pull the splitter to remove it.

Wipe up any brake fluid spillages.

## Brake Circuit Splitters Installation

The installation is the reverse of the removal procedure. However, pay attention to the following.

Install shims behind splitters.

Apply LOCTITE 243 (BLUE) (P/N 293 800 060) on threads of splitter screws.

Install splitters and tighten screws to 10 N•m (89 lbf•**in**).

Using NEW sealing washers, connect brake hoses. Use the next illustrations to position hoses correctly.

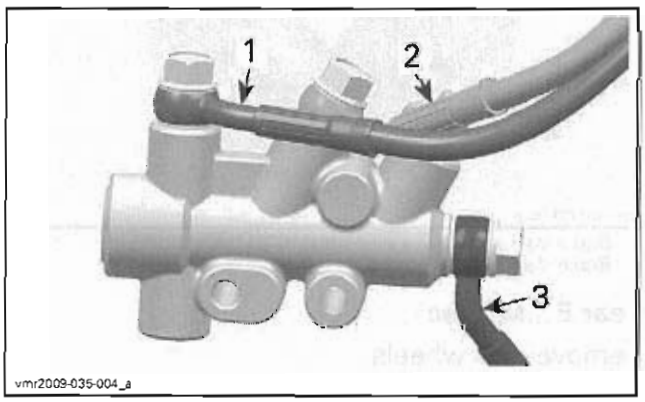


*RH SPLITTER*
*1. Toward front calipers*
*2. From RH lever*
*3. From LH splitter*

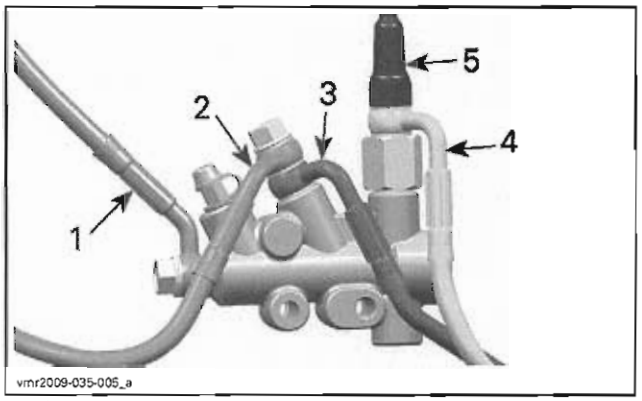


*LH SPLITTER*
1. *From LH lever*
2. *From RH splitter*
3. *From rear master cylinder*
4. *Toward rear caliper*
5. *Brake light switch*

Tighten all Banjo fittings to 28 N•m (21 lbf•ft).

Refill and bleed the system. Refer to *BRAKE FLUID* at the beginning of this section.

Connect the brake light switch.

Install all other removed parts.

# BRAKE HOSES

## Brake Hoses Inspection

Brake hoses should be inspected frequently for leaks and damages.

Check if the hoses are crushed or damaged. Any deformation can restrict the proper flow of fluid and cause braking problems.

Check hoses for cracking or scrapes. This damage can cause hose failure under pressure.

When hoses are removed or disconnected, cleanliness must be observed. Clean all joints and connections before disassembly. New hoses should be cleaned with brake fluid before installation to remove any contamination.

Replace any defective parts.

## Brake Hoses Removal

NOTE: Before removing any hoses, drain brake system.

Remove all necessary parts to reach the hoses.

Thoroughly clean the area around the joints that will be disconnected.

Place a drain pan under the joint that will be disconnected.

Disconnect any retaining clips or brackets holding the hose and remove the defective part(s).

## Brake Hoses Installation

Install the new hose.

Make sure the piece will not rub against any other part.

When there is a banjo fitting securing the hose to the caliper or to the master cylinder, always replace the sealing washers with new ones.

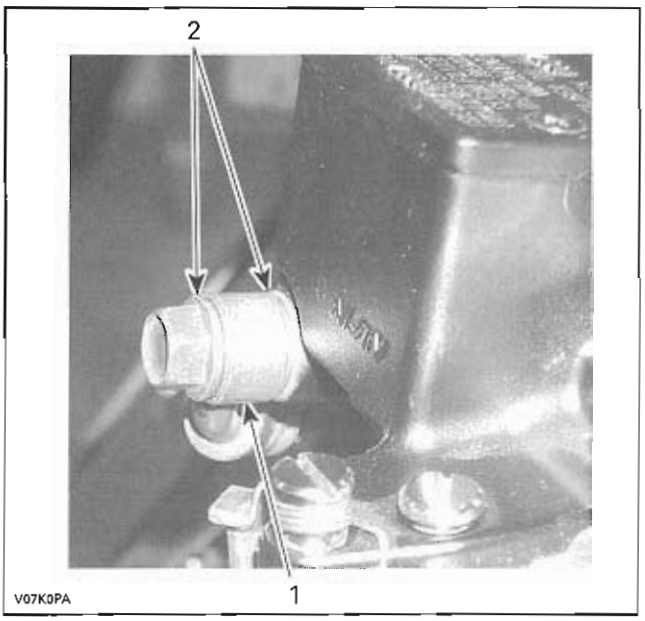


*FRONT MASTER CYLINDER SHOWN*
1. *Banjo fitting*
2. *Sealing washers*

Install any retaining clips or brackets.

Refill and bleed the system.

# BODY

## OUTLANDER (500 AND 650)

*Body Parts (Front View)*

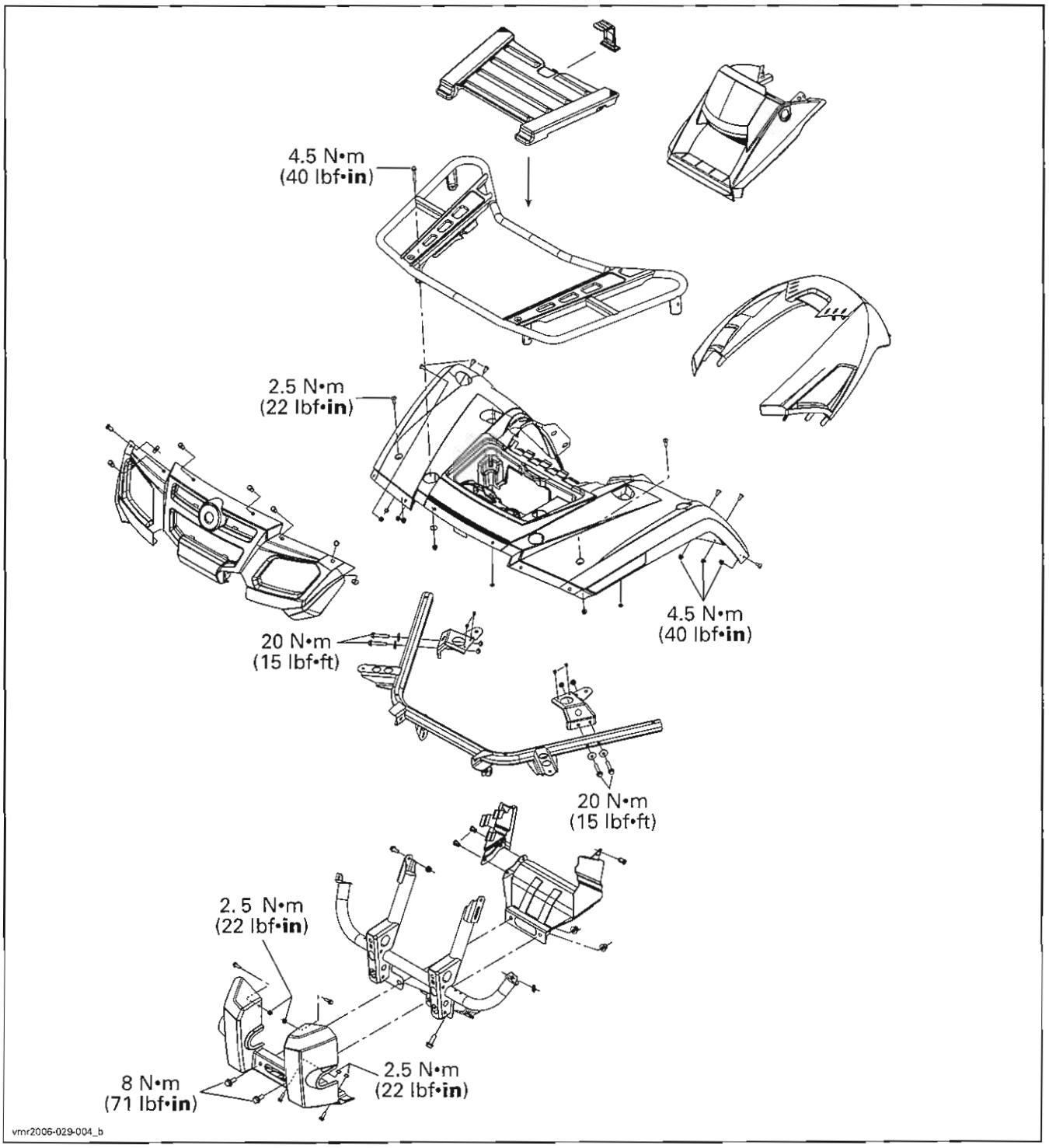

*Body Parts (Rear View)*

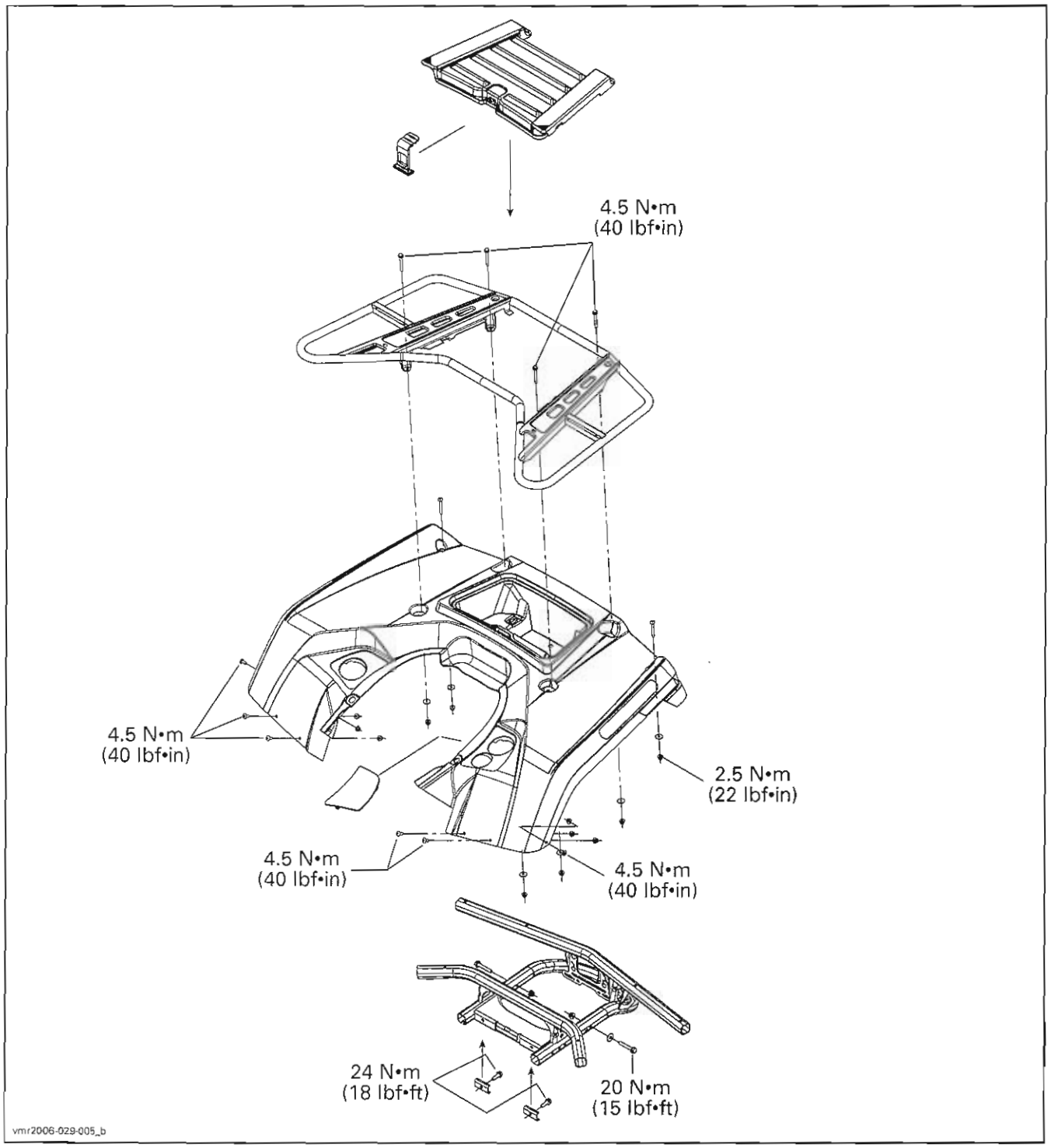

*Body Parts (Side View)*

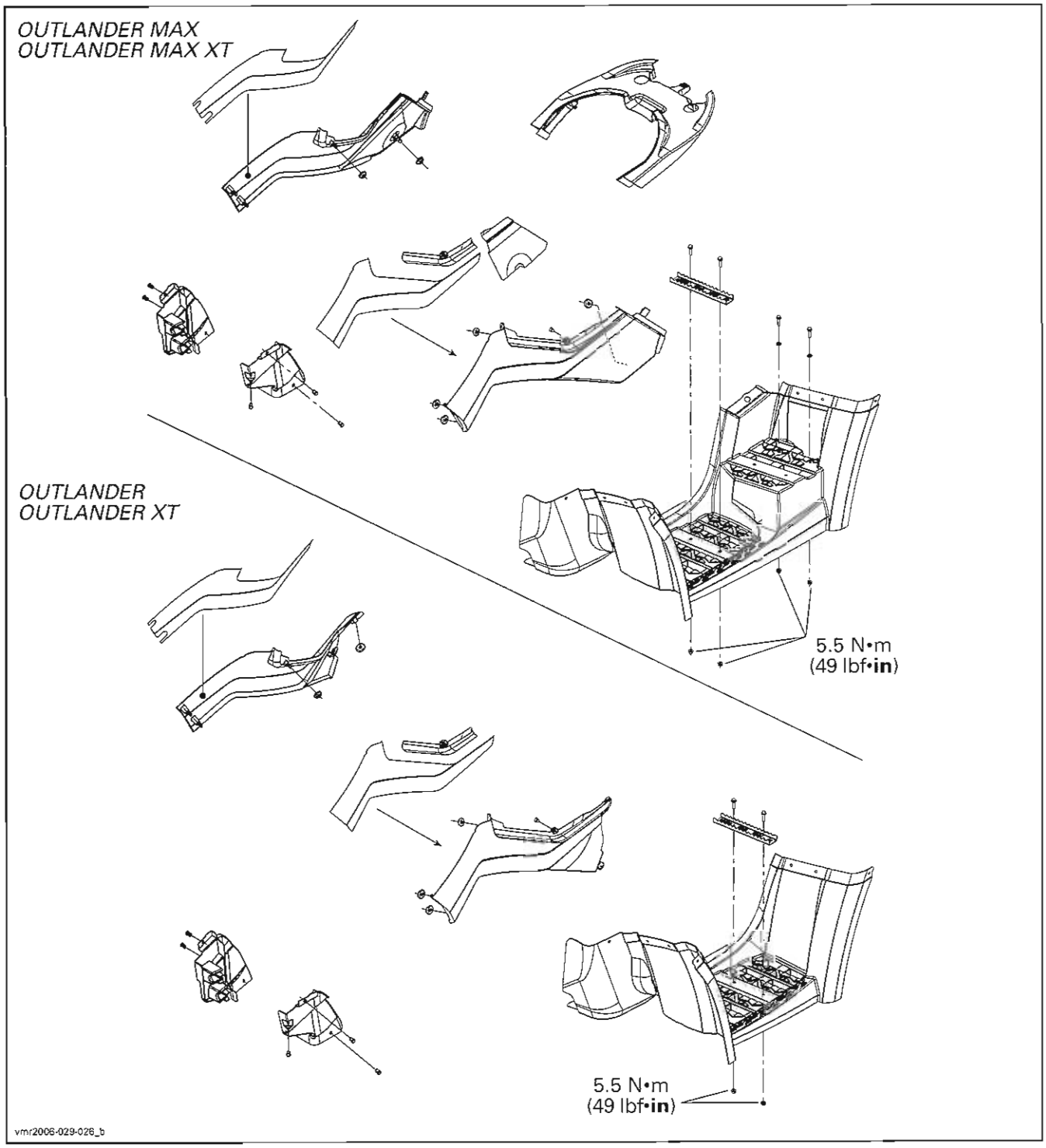

*Seat*

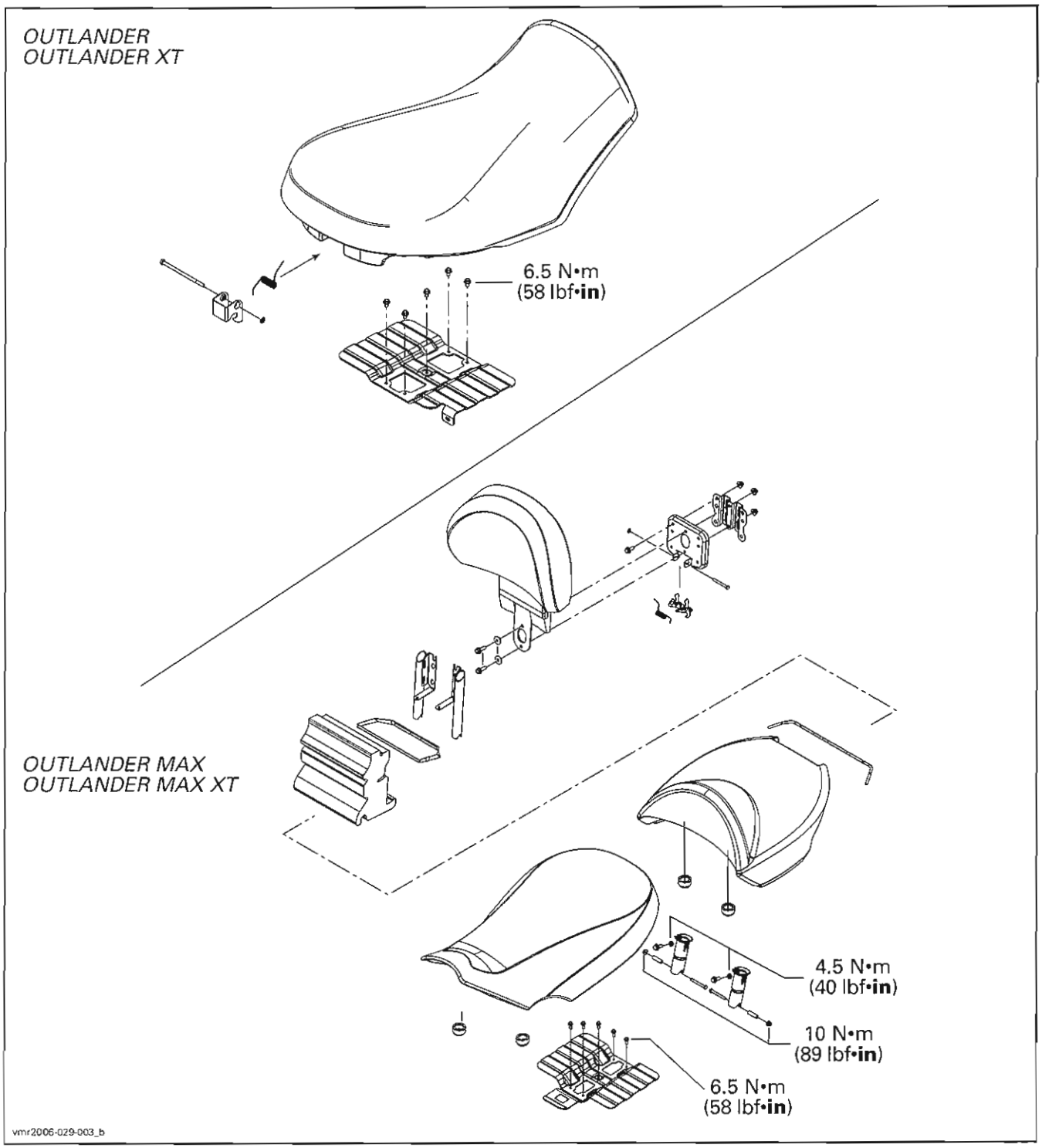
OUTLANDER
OUTLANDER XT
6.5 N•m
(58 lbf•in)
OUTLANDER MAX
OUTLANDER MAX XT
4.5 N•m
(40 lbf•in)
10 N•m
(89 lbf•in)
6.5 N•m
(58 lbf•in)
vmr2006-029-003_b

*XT Package*

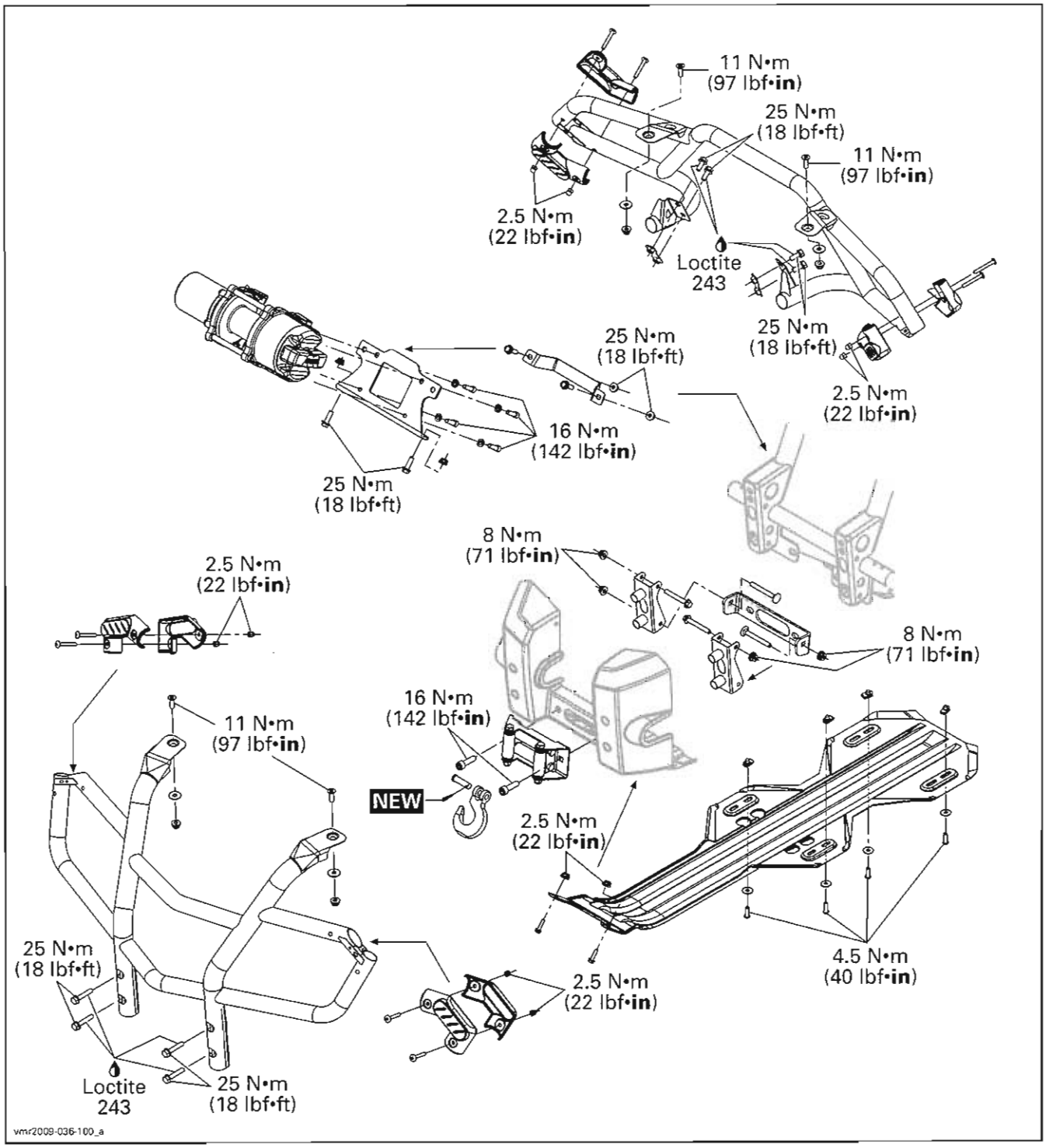
11 N•m
(97 lbf•in)
25 N•m
(18 lbf•ft)
11 N•m
(97 lbf•in)
2.5 N•m
(22 lbf•in)
Loctite
243
25 N•m
(18 lbf•ft)
25 N•m
(18 lbf•ft)
2.5 N•m
(22 lbf•in)
16 N•m
(142 lbf•in)
25 N•m
(18 lbf•ft)
8 N•m
(71 lbf•in)
2.5 N•m
(22 lbf•in)
8 N•m
(71 lbf•in)
16 N•m
(142 lbf•in)
11 N•m
(97 lbf•in)
NEW
2.5 N•m
(22 lbf•in)
25 N•m
(18 lbf•ft)
4.5 N•m
(40 lbf•in)
2.5 N•m
(22 lbf•in)
Loctite
243
25 N•m
(18 lbf•ft)
vmr2009-036-100_a

# OUTLANDER (800R)

*Body Parts (Front View)*

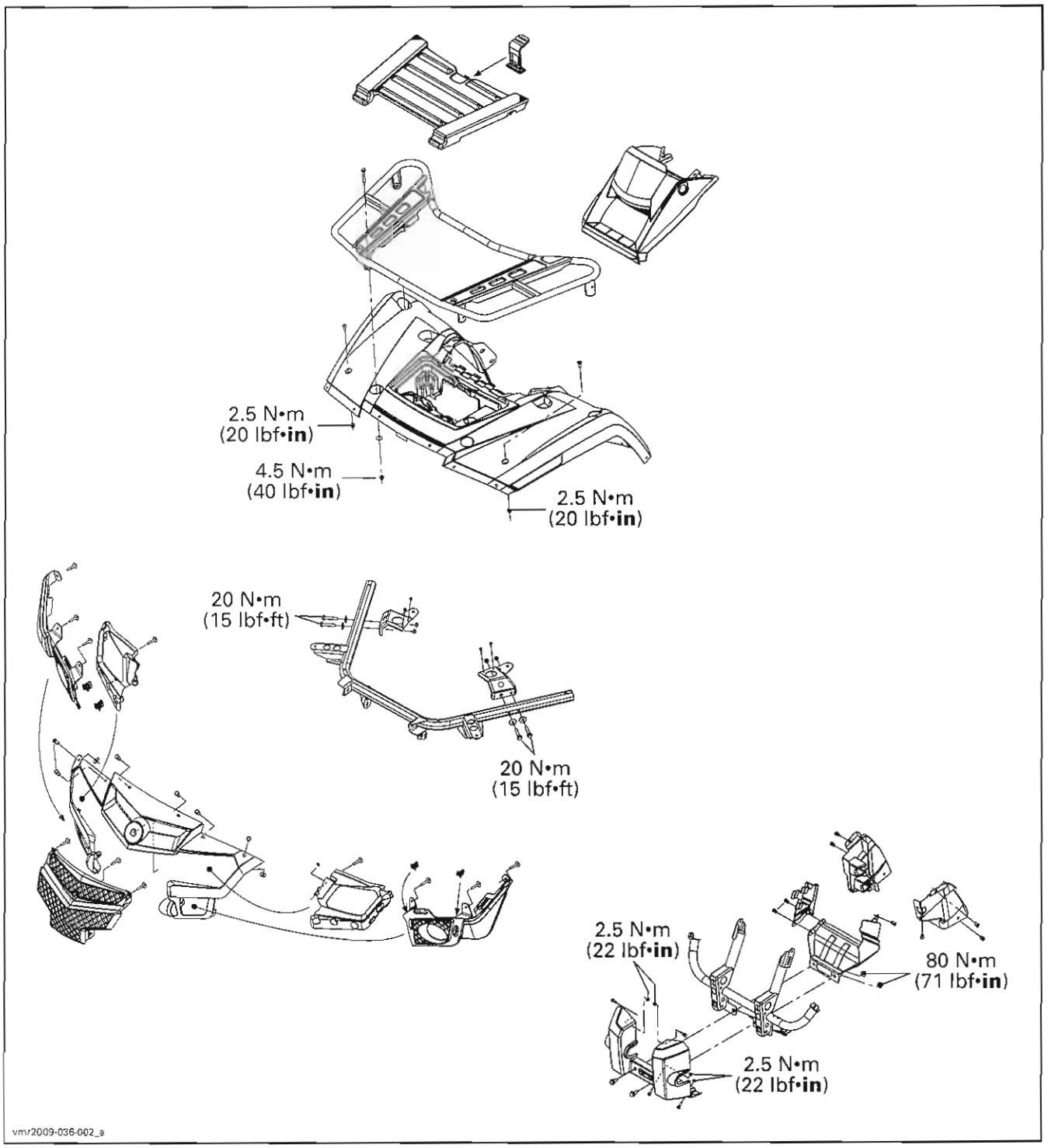

*Body Parts (Rear View)*

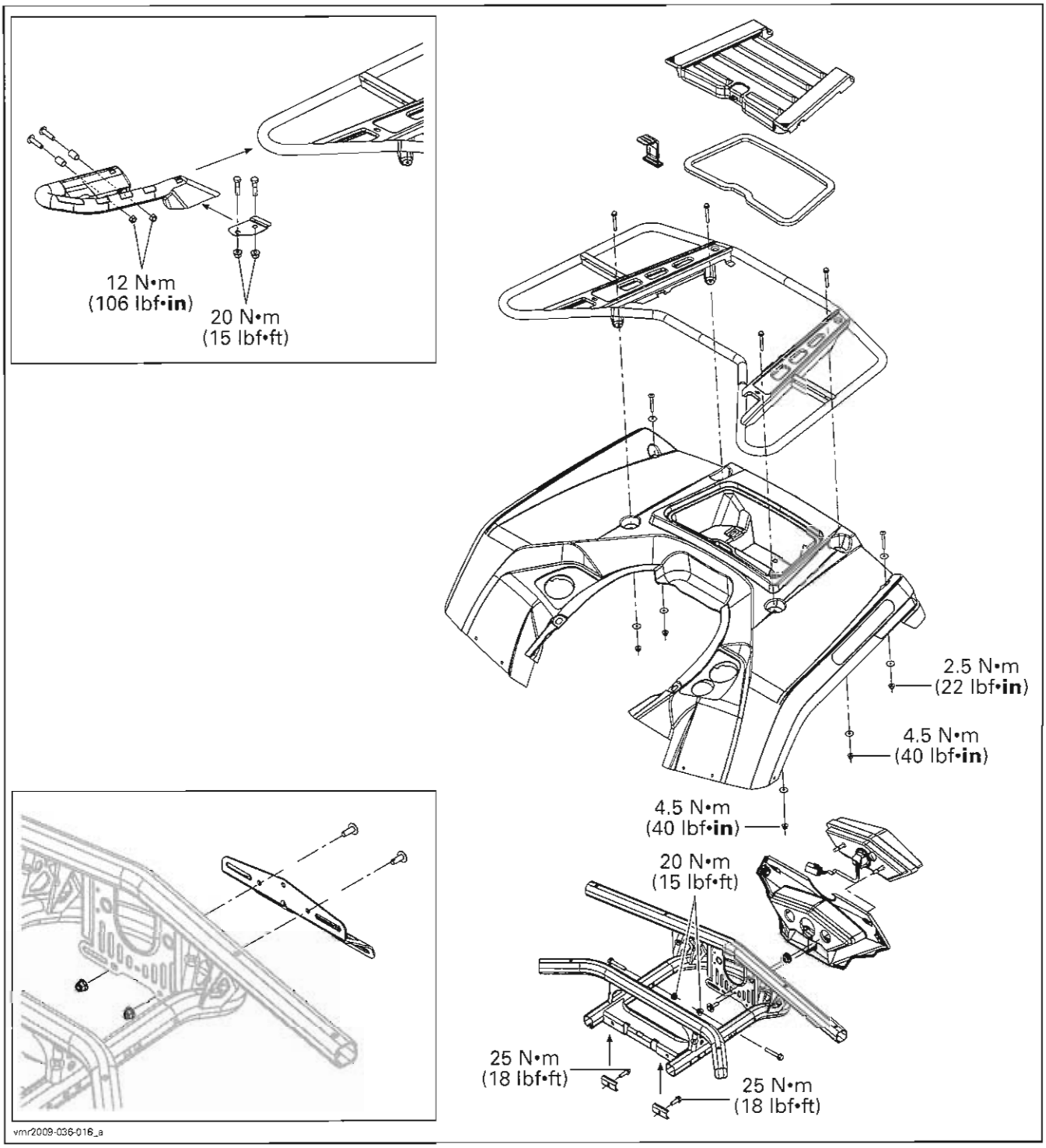

*Body Parts (Side View)*

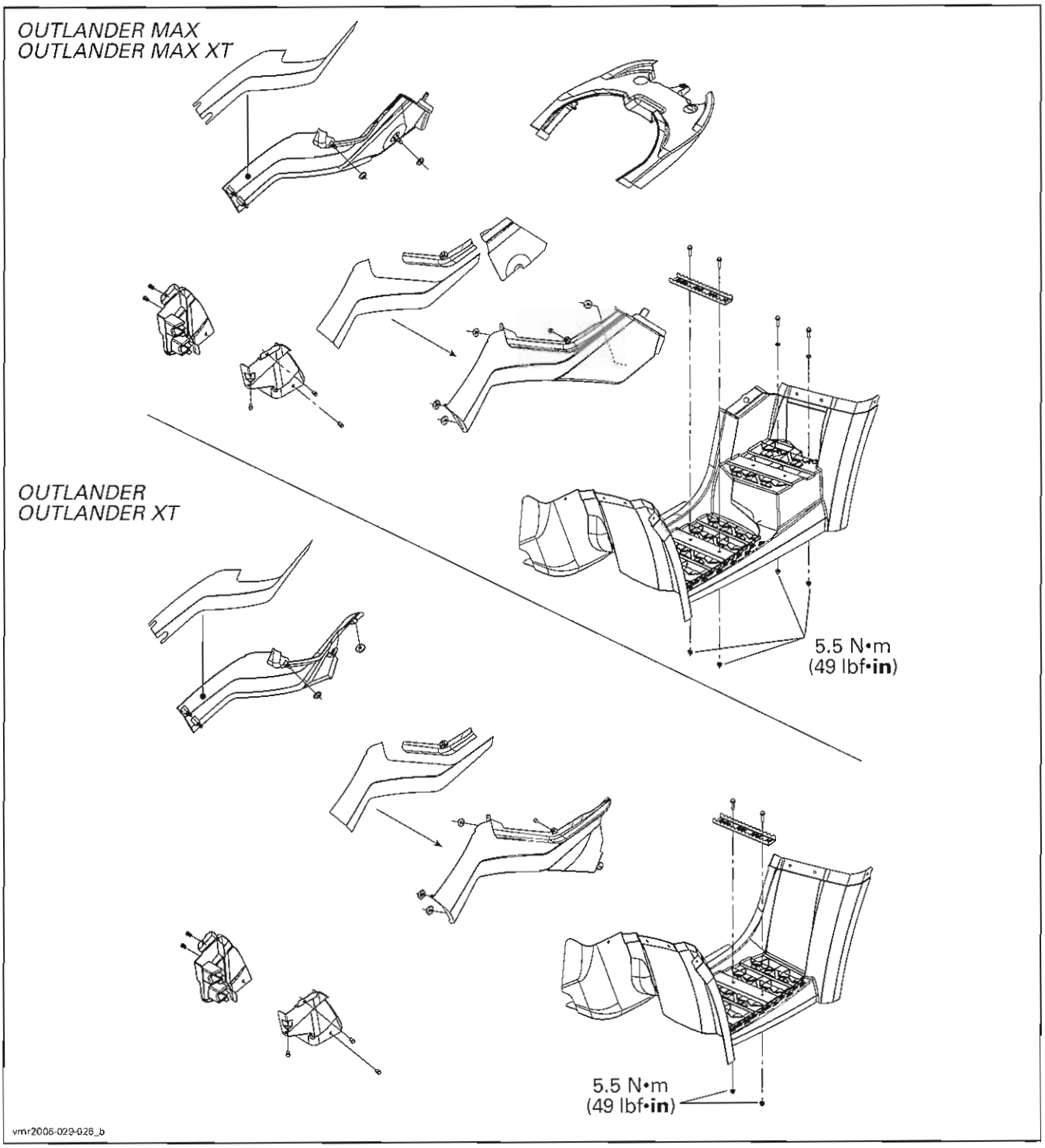

*Seat*

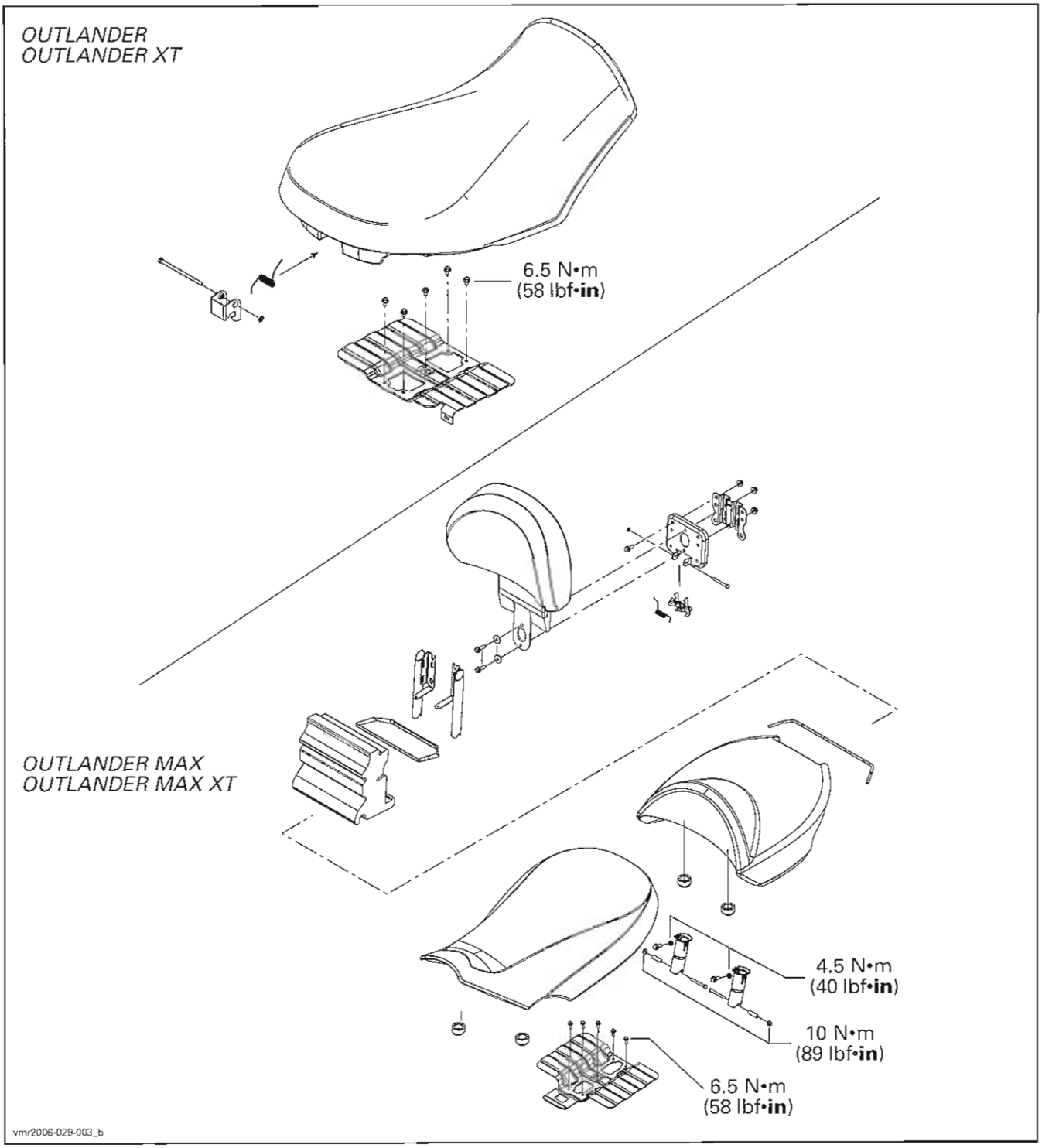
OUTLANDER
OUTLANDER XT
6.5 N•m
(58 lbf•in)
OUTLANDER MAX
OUTLANDER MAX XT
4.5 N•m
(40 lbf•in)
10 N•m
(89 lbf•in)
6.5 N•m
(58 lbf•in)
vmr2006-029-003_b

*XT Package*

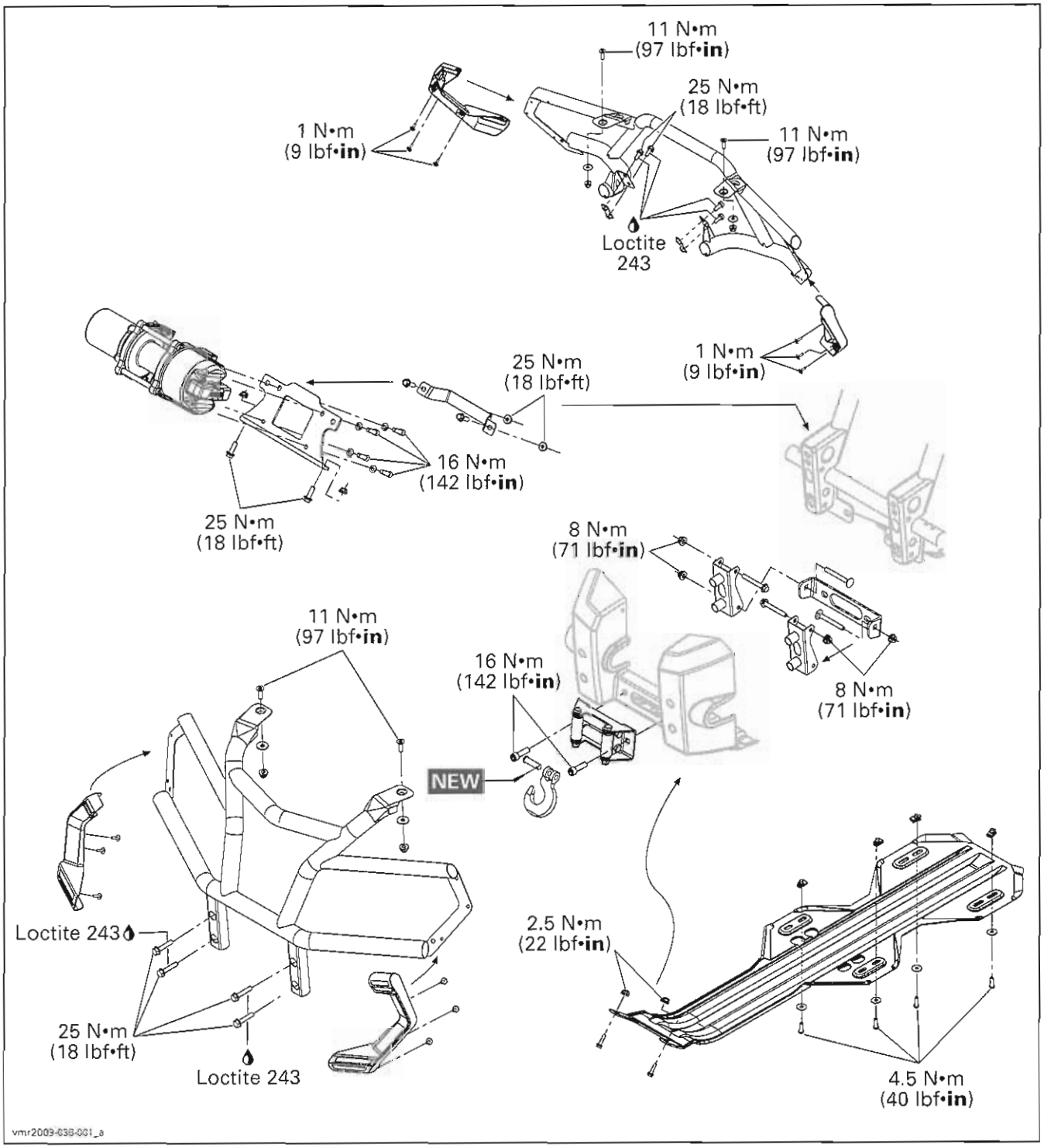
11 N•m
(97 lbf•in)
25 N•m
(18 lbf•ft)
1 N•m
(9 lbf•in)
11 N•m
(97 lbf•in)
Loctite
243
1 N•m
(9 lbf•in)
25 N•m
(18 lbf•ft)
16 N•m
(142 lbf•in)
25 N•m
(18 lbf•ft)
8 N•m
(71 lbf•in)
8 N•m
(71 lbf•in)
11 N•m
(97 lbf•in)
16 N•m
(142 lbf•in)
NEW
Loctite 243
25 N•m
(18 lbf•ft)
Loctite 243
2.5 N•m
(22 lbf•in)
4.5 N•m
(40 lbf•in)
vmr2009-036-001_a

# RENEGADE MODELS

*Body Parts (Front View)*

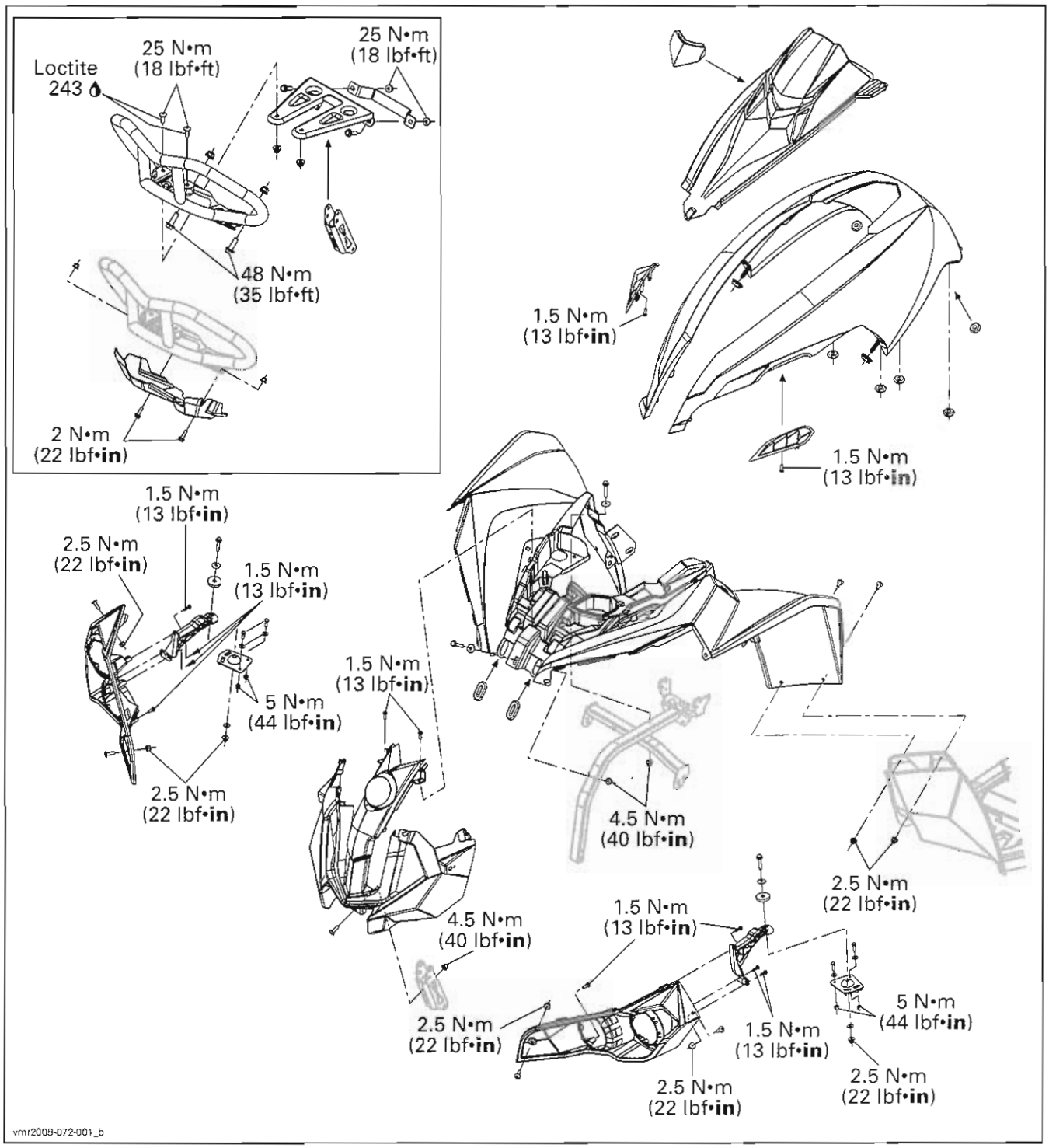

*Body Parts (Rear View)*

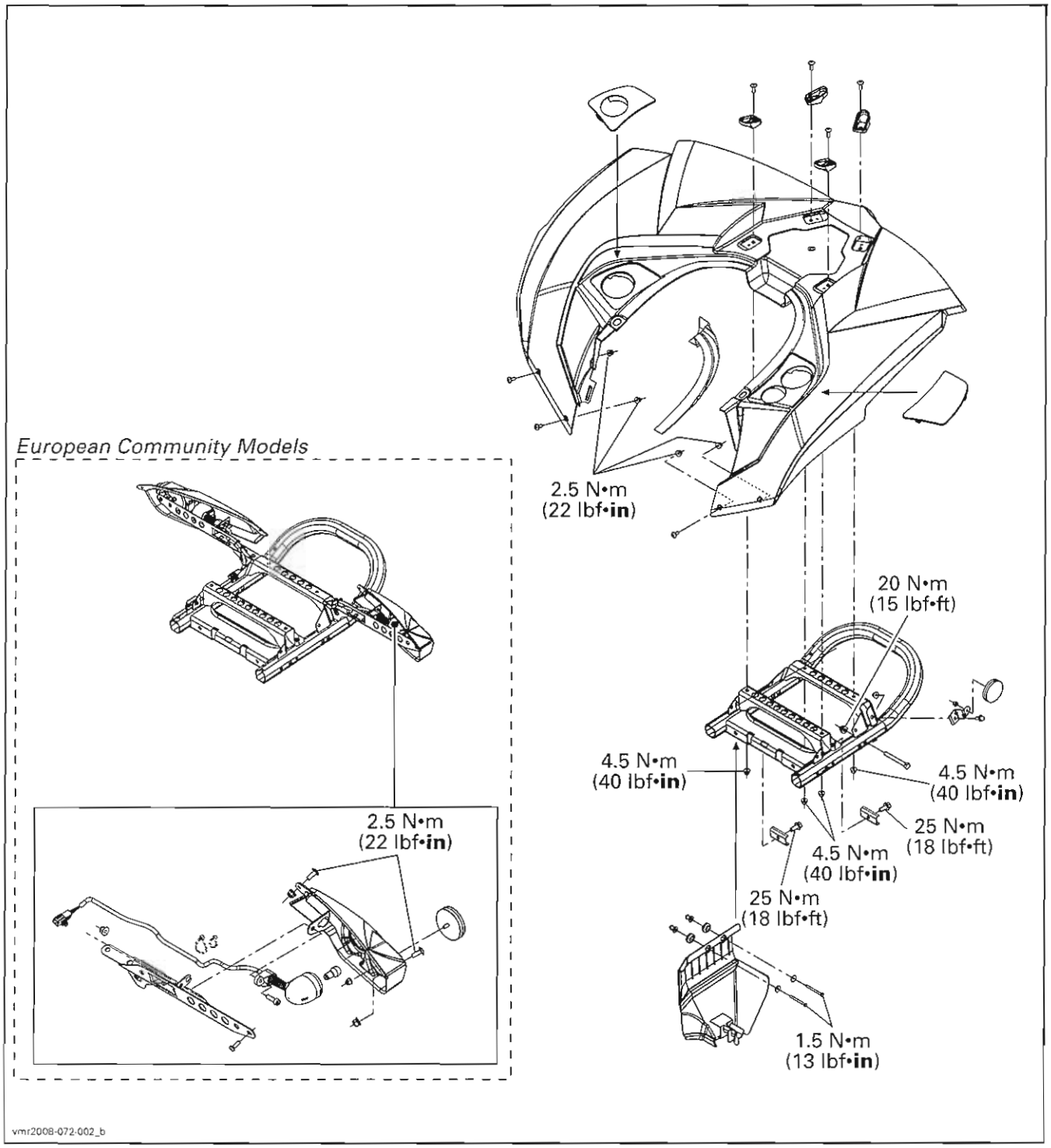

*Body Parts (Side View)*

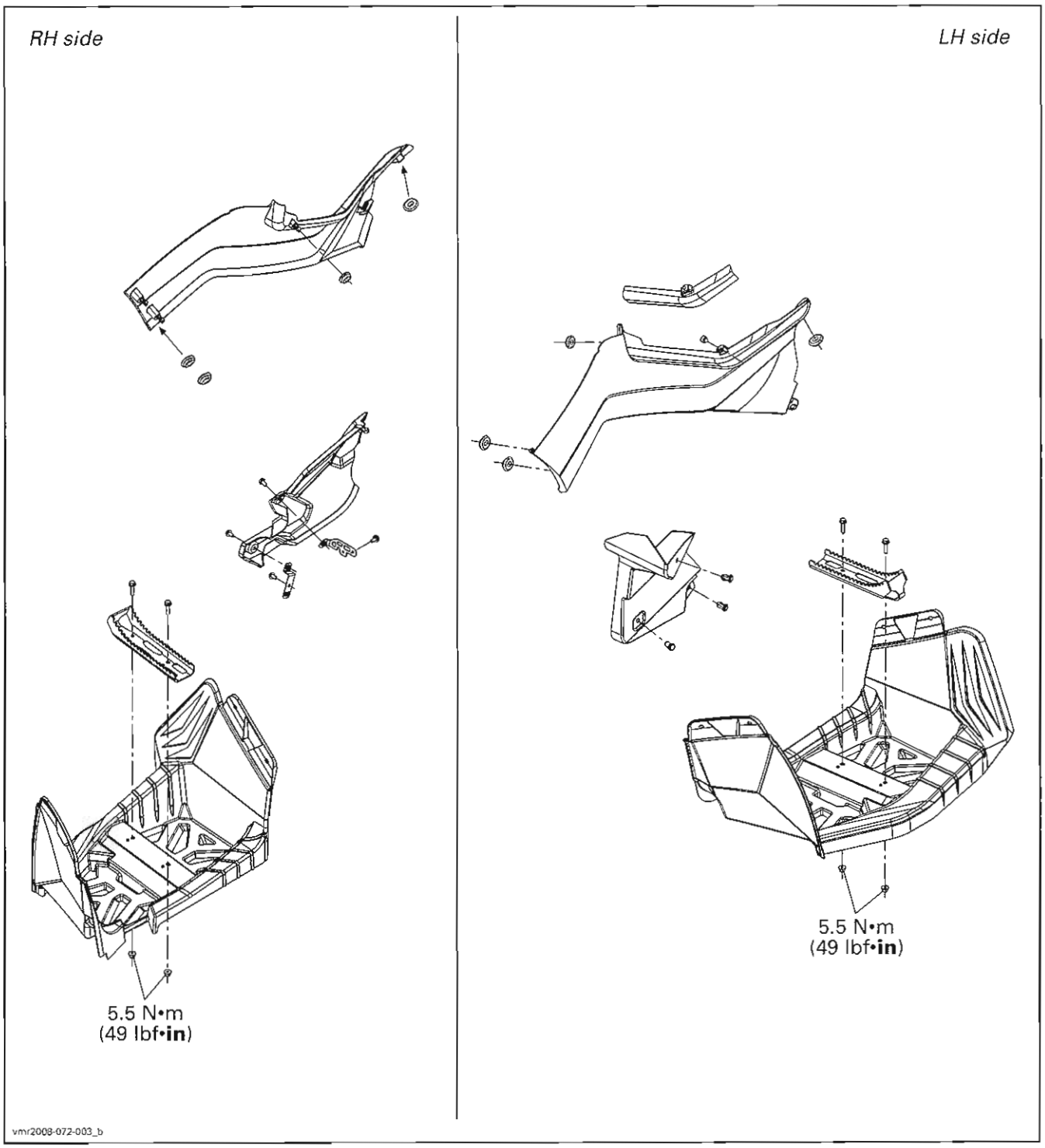

*Seat*

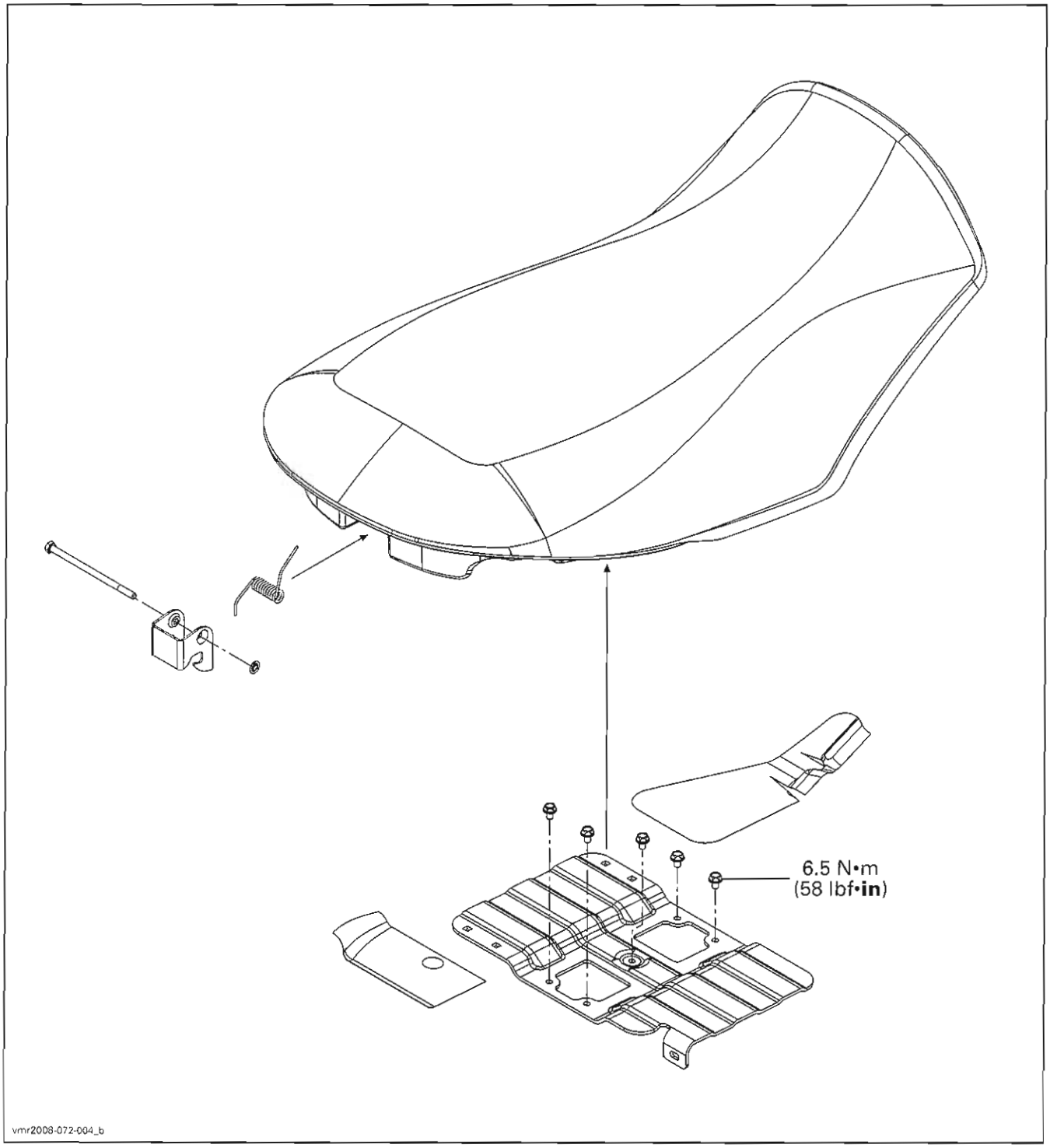

# GENERAL

Refer to the *2008 SHOP MANUAL* (P/N 219 100 273) for topics not covered in this section.

# PROCEDURES

## CENTRAL PANEL

### Central Panel Removal

*Outlander Series*

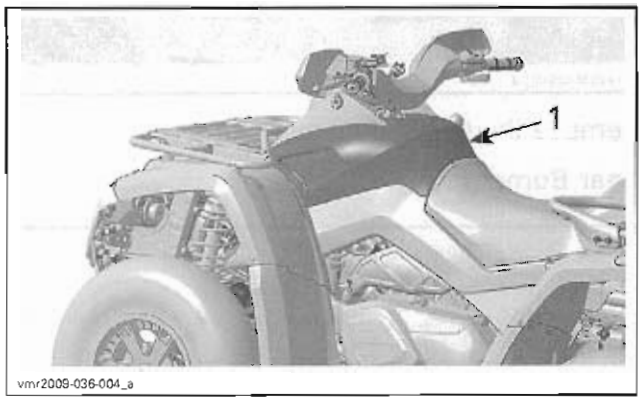


*1. Central panel*

Remove seat(s).

Come off the plastic studs from the grommets.

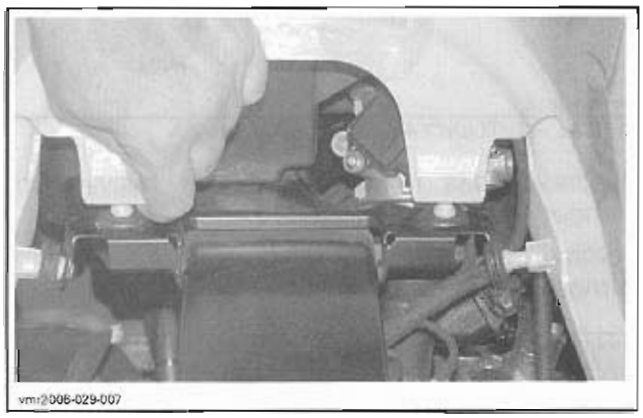


Pull central panel to separate its tabs from front fender.

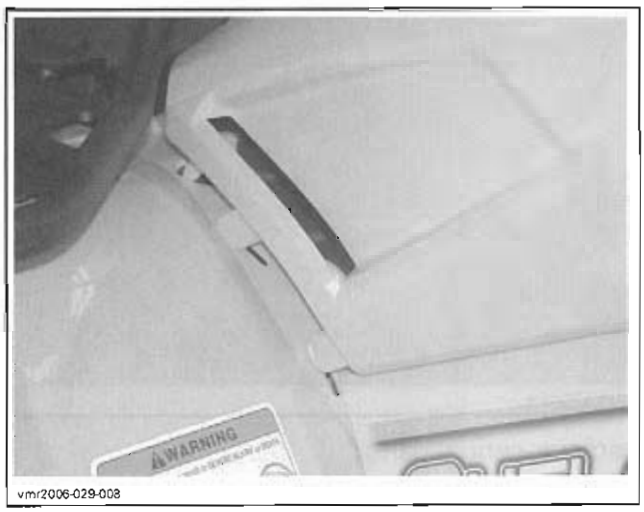


*Renegade Models*

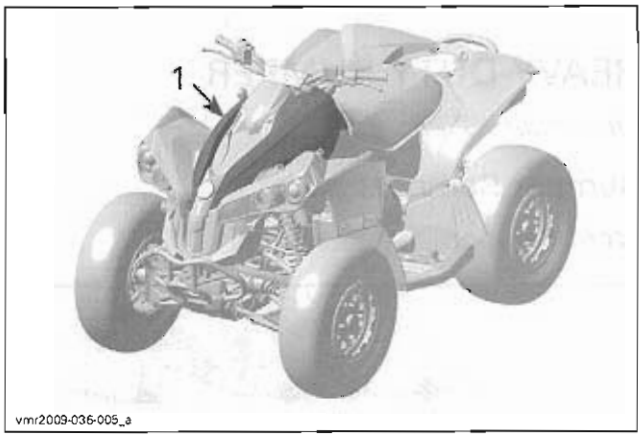


*1. Central panel*

Remove seat.

Lift the front part of the central panel.

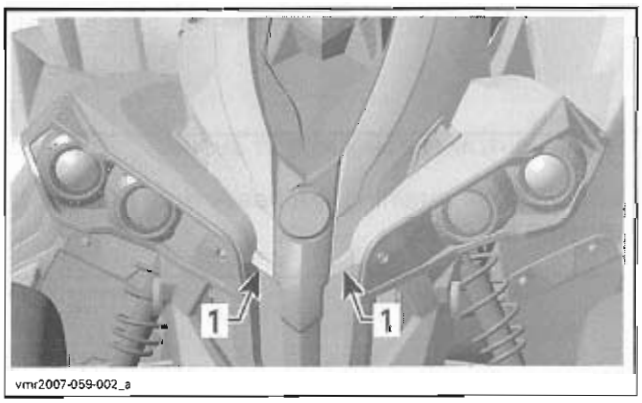


*1. Lift here*

Come off the plastic studs from the grommets.

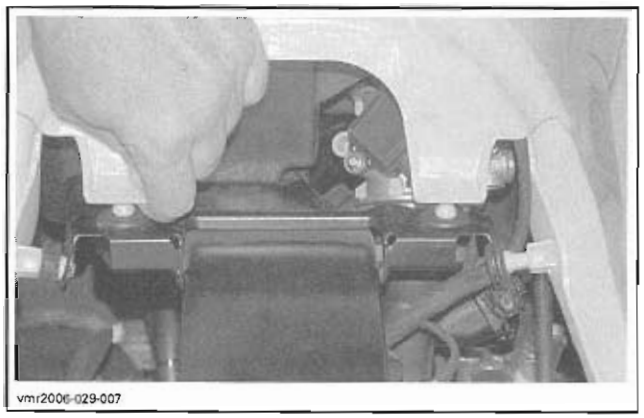
vmr2006-029-007

Remove central panel.

### Central Panel Installation

The installation is the reverse of the removal procedure.

## HEAVY DUTY BUMPER

*Outlander XT Package*

### Bumper Removal

#### Front Bumper

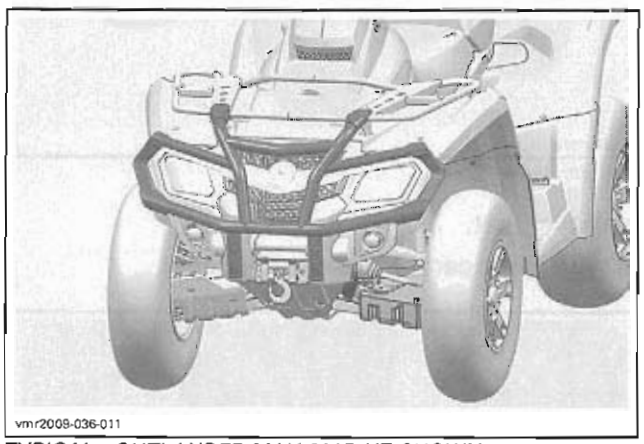
vmr2009-036-011

*TYPICAL - OUTLANDER MAX 800R XT SHOWN*

Remove bolts retaining the heavy duty bumper to the front bumper.

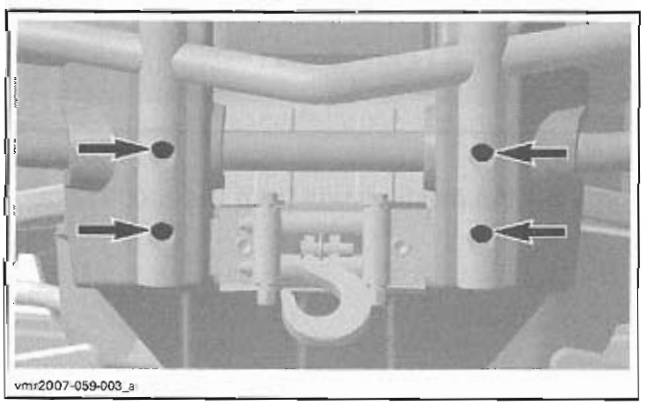
vmr2007-059-003_a

Remove screws that attach the heavy duty bumper to the rack.

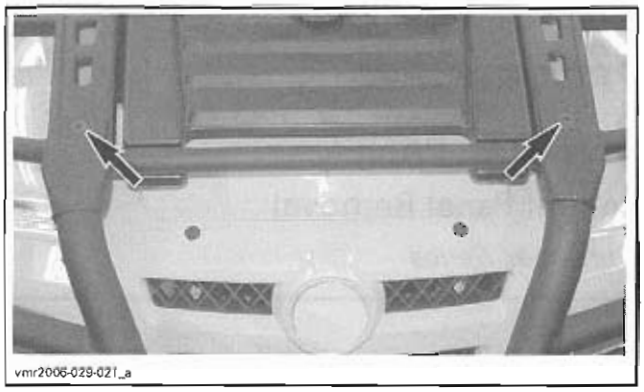
vmr2006-029-021_a

Remove the heavy duty bumper.

#### Rear Bumper

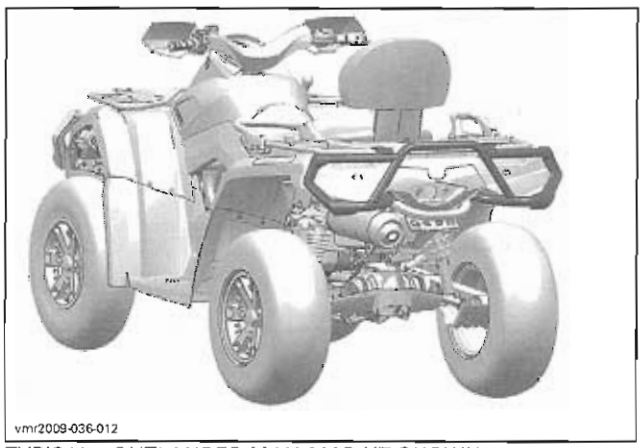
vmr2009-036-012

*TYPICAL - OUTLANDER MAX 800R XT SHOWN*

Unscrew bolts retaining the rear heavy duty bumper to the rear bumper.

Remove screws that attach the heavy duty bumper to the rack.

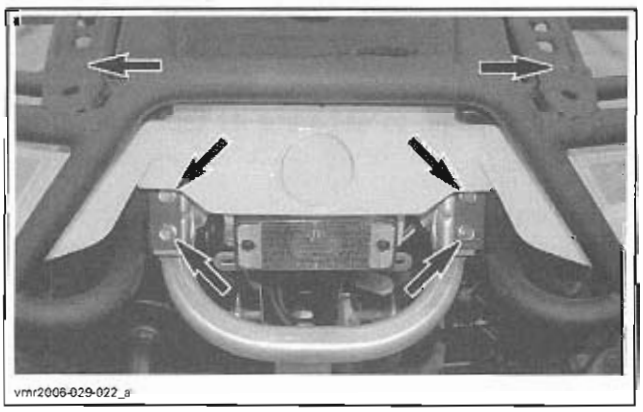
vmr2006-029-022_a

### Bumper Installation

The installation is the reverse of the removal procedure.

# FRONT BUMPER/FRONT SKID PLATE/FRONT FASCIA

## Removal

*Outlander Series*

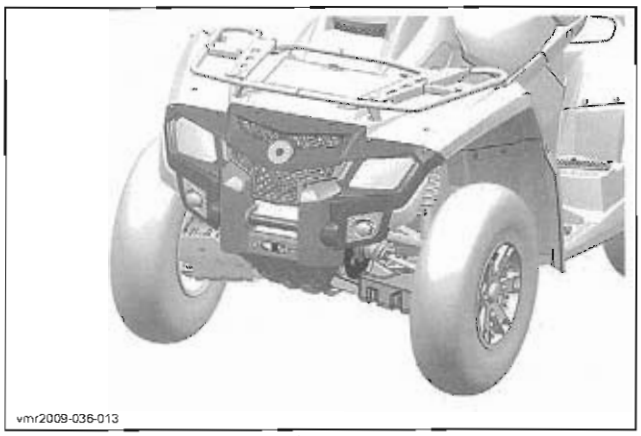


*TYPICAL - OUTLANDER MAX 800R SHOWN*

On **XT models**, remove hook at the end of winch cable and the front heavy duty bumper.

Remove front fender.

Unplug headlamps connectors.

On **CE models**, unplug director indicators connectors.

Unscrew bolts that attach front bumper to fender support.

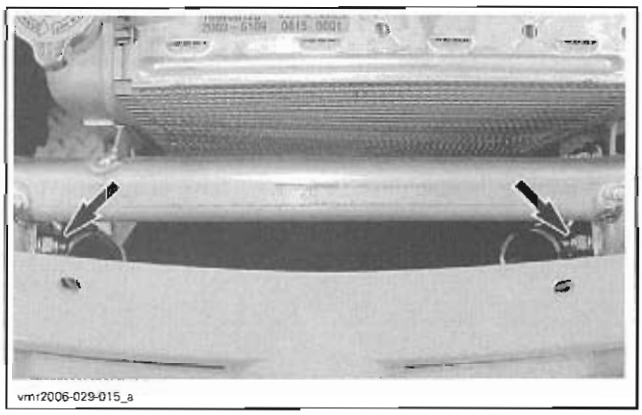


Unscrew bolts retaining the bottom of bumper to frame.

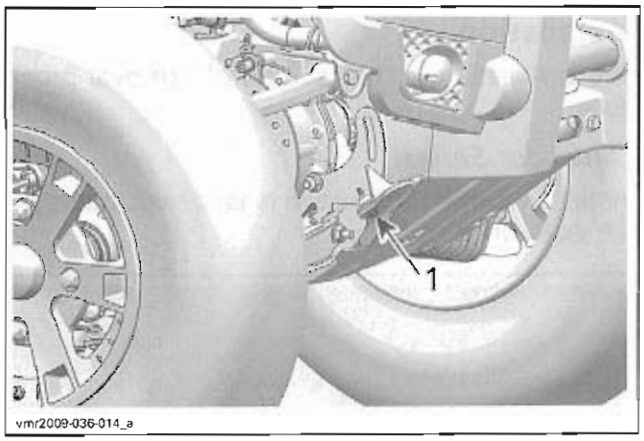


1. *Front bumper screws*

Remove front bumper with front skid plate and front fascia assembly.

Disassemble all parts if necessary.

*Renegade Models*

Unscrew bolts securing the front bumper to the bumper bracket.

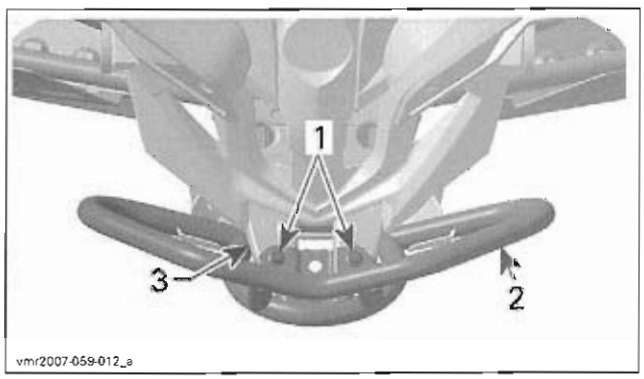


1. *Upper bumper bolts*
2. *Front bumper*
3. *Bumper bracket*

Unscrew bolts retaining the bottom of front bumper to frame.

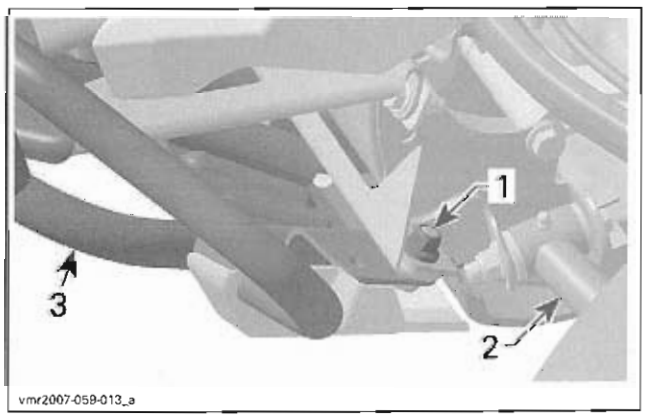


1. *Lower bumper bolt*
2. *LH lower suspension arm*
3. *Front bumper*

Remove front bumper.

## Installation

The installation is the reverse of removal procedure.

*Outlander Series*

Install a washer under each plastic rivet located at the both ends of fascia.

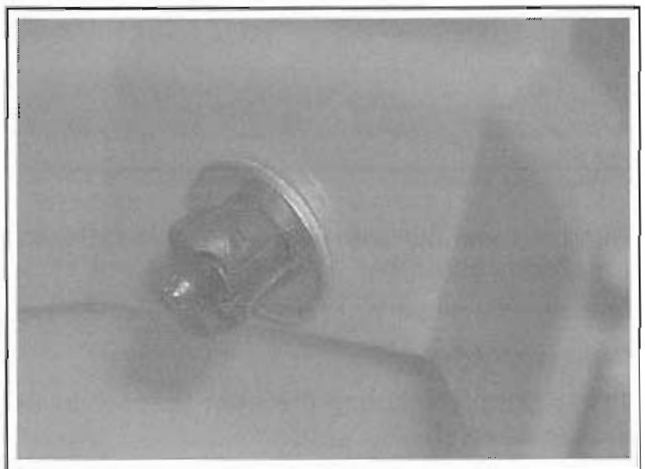

V07L13A

# OUTLANDER

| MODEL | | | | OUTLANDER™ 500 | OUTLANDER™ 650 | OUTLANDER™ 800R |
|---|---|---|---|---|---|---|
| ENGINE | | | | | | |
| Engine type | | | | ROTAX® V490 | ROTAX® V660 | ROTAX® V810 |
| | | | | 4-stroke, Single Over Head Camshaft (SOHC), liquid cooled | | |
| Number of cylinders | | | | 2 | | |
| Number of valves | | | | 8 valves (mechanical adjustment) | | |
| Bore | | | mm (in) | 82.03 (3.23) | | 91 (3.58) |
| Stroke | | | mm (in) | 47.3 (1.86) | 61.5 (2.42) | |
| Displacement | | | cm³ (in³) | 500 (30.51) | 650 (39.67) | 800 (48.82) |
| Compression ratio | | | | 10.7:1 | 10.3:1 | 10.3:1 |
| Decompressor type | | | | N.A. | | |
| Maximum HP RPM | | | RPM | 7250 | | |
| Lubrication | Type | | | Wet sump. Replaceable oil filter | | |
| | Oil filter | | | BRP Rotax paper type, replaceable | | |
| | Engine oil pressure | Minimum | | 350 kPa (51 PSI) at 6000 RPM | | |
| | Engine oil | Capacity (oil change with filter) | | 2 L (2.11 quarts) | | |
| | | Recommended | | SAE 5W30 API classification SM, SL or SJ see *OIL VISCOSITY CHART* in *LUBRICATION SYSTEM* | | |
| Intake valve opening | | | | 3° BTDC | 5° BTDC | 5° BTDC |
| Intake valve closing | | | | 34° ABDC | 45° ABDC | 45° ABDC |
| Exhaust valve opening | | | | 39° BBDC | 50° BBDC | 55° BBDC |
| Exhaust valve closing | | | | 2° ATDC | 0° ATDC | 5° ATDC |
| Chain tensioner plunger protrusion | | Service limit | mm (in) | 20.0 (.7874) | | |
| Valve clearance | Intake | | mm (in) | 0.06 to 0.14 (.0024 to .0055) | | |
| | Exhaust | | mm (in) | 0.11 to 0.19 (.0043 to .0075) | | |
| Valve stem diameter | Intake | New | mm (in) | 4.966 to 4.980 (.1955 to .1960) | | |
| | | Service limit | mm (in) | 4.930 (.1941) | | |
| | Exhaust | New | mm (in) | 4.956 to 4.970 (.1951 to .1957) | | |
| | | Service limit | mm (in) | 4.930 (.1941) | | |
| Valve out of round | Intake and exhaust | New | mm (in) | 0.005 (.0002) | | |
| | | Service limit | mm (in) | 0.06 (.0024) | | |
| Valve guide diameter | | New | mm (in) | 4.998 to 5.018 (.1968 to .1976) | | |
| | | Service limit | mm (in) | 5.050 (.1988) | | |
| Valve spring free length | | New | mm (in) | 40.81 (1.607) | | |
| | | Service limit | mm (in) | 39.00 (1.535) | | |
| Valve seat contact width | Intake | New | mm (in) | 1.05 to 1.35 (.041 to .053) | | |
| | | Service limit | mm (in) | 1.8 (.070) | | |
| | Exhaust | New | mm (in) | 1.25 to 1.55 (.049 to .061) | | |
| | | Service limit | mm (in) | 2 (.078) | | |

| MODEL | | | | OUTLANDER™ 500 | OUTLANDER™ 650 | OUTLANDER™ 800R |
|---|---|---|---|---|---|---|
| ENGINE (cont'd) | | | | | | |
| Rocker arm bore diameter | | New | mm (in) | 12.036 to 12.050 (.4739 to .4744) | | |
| | | Service limit | mm (in) | 12.060 (.4748) | | |
| Rocker arm shaft diameter | | New | mm (in) | 12.000 to 12.018 (.4724 to .4731) | | |
| | | Service limit | mm (in) | 11.990 (.4720) | | |
| Piston measurement | | New | mm (in) | 81.950 to 81.966 (3.2264 to 3.2270) | | 90.950 to 90.966 (3.5807 to 3.5813) |
| | | Service limit | mm (in) | 81.850 (3.2224) | | 90.850 (3.577) |
| Piston/cylinder clearance | | New | mm (in) | 0.057 (.0022) | | 0.027 (.0011) |
| | | Service limit | mm (in) | 0.130 (.0051) | | 0.100 (.0040) |
| Piston ring type | | 1st | | Upper compression ring, rectangular | | |
| | | 2nd | | Lower compression ring, tapered face | | |
| | | 3rd | | Oil scraper ring | | |
| Ring end gap | Rectangular | New | mm (in) | 0.20 to 0.40 (.008 to .016) | | |
| | Tapered face | | | 0.20 to 0.40 (.008 to .016) | | |
| | Oil scraper ring | | | 0.20 to 0.70 (.008 to .028) | | |
| | All | Service limit | mm (in) | 1.5 (.059) | | |
| Ring/piston groove clearance | Rectangular | New | mm (in) | 0.03 to 0.070 (.0012 to .0028) | | |
| | Tapered face | | | 0.02 to 0.060 (.0008 to .0024) | | |
| | Oil scraper ring | | | 0.01 to 0.018 (.0004 to .0007) | | |
| | Rectangular | Service limit | mm (in) | 0.15 (.0059) | | |
| | Tapered face | | | 0.15 (.0059) | | |
| | Oil scraper ring | | | 0.25 (.0098) | | |
| Cylinder bore | | New | mm (in) | 82.023 to 82.037 (3.2292 to 3.2298) | | 90.993 to 91.007 (3.5823 to 3.5829) |
| Cylinder taper | | Maximum New | mm (in) | 0.038 (.0015) | | |
| | | Service limit | mm (in) | 0.090 (.0035) | | |
| Cylinder out of round | | Maximum New | mm (in) | 0.015 (.0006) | | |
| | | Service limit | mm (in) | 0.020 (.0008) | | |
| Camshaft main bearing journal | Timing chain side | New | mm (in) | 34.959 to 34.975 (1.3763 to 1.3770) | | |
| | | Service limit | mm (in) | 34.950 (1.3760) | | |
| | Spark plug side | New | mm (in) | 21.959 to 21.980 (.8645 to .8654) | | |
| | | Service limit | mm (in) | 21.950 (.8642) | | |
| Camshaft main bearing journal bore | Timing chain side | New | mm (in) | 35.000 to 35.025 (1.3780 to 1.3789) | | |
| | | Service limit | mm (in) | 35.040 (1.3795) | | |
| | Spark plug side | New | mm (in) | 22.000 to 22.021 (.8661 to .8670) | | |
| | | Wear limit | mm (in) | 22.040 (.8677) | | |
| Camshaft lobe | Intake valve | New | mm (in) | 31.830 to 32.030 (1.2531 to 1.2610) | 32.11 to 32.31 (1.2642 to 1.2721) | 32.950 - 33.150 (1.2972- 1.3051) |
| | | Service limit | mm (in) | 31.810 (1.2524) | 32.09 (1.2634) | 32.870 (1.2941) |
| | Exhaust valve | New | mm (in) | 31.730 to 31.930 (1.2492 to 1.2571) | 31.94 to 32.14 (1.2575 to 1.2654) | 32.950 - 33.150 (1.2972- 1.3051) |
| | | Service limit | mm (in) | 31.710 (1.2484) | 31.92 (1.2567) | 32.930 (1.2965) |

| MODEL | | | OUTLANDER™ 500 | OUTLANDER™ 650 | OUTLANDER™ 800R |
|---|---|---|---|---|---|
| ENGINE (cont'd) | | | | | |
| Crankshaft main journal diameter MAG/PTO side | | New mm (in) | 42.024 to 42.040 (1.6545 to 1.6551) | | |
| | | Service limit mm (in) | 42.000 (1.6535) | | |
| Crankshaft radial play MAG/PTO side | | Service limit mm (in) | 0.07 (.0031) | | |
| Crankshaft main journal diameter PTO support bearing | | New mm (in) | 34.024 to 34.040 (1.3395 to 1.3402) | | |
| | | Service limit mm (in) | 34.010 (1.3390) | | |
| Crankshaft radial play PTO support bearing | | Service limit mm (in) | 0.10 (.0039) | | |
| Crankshaft pin diameter | | New mm (in) | 35.064 to 35.080 (1.3805 to 1.3811) | 40.009 to 40.025 (1.5752 to 1.5758) | |
| | | Service limit mm (in) | 35.050 (1.3800) | 39.990 (1.5744) | |
| Crankshaft deflection | MAG/PTO side | New mm (in) | 0.050 (.002) | | |
| Crankcase plain bearing | MAG/PTO side | Service limit mm (in) | 42.100 (1.6575) | | |
| PTO cover plain bearing | | Service limit mm (in) | 34.120 (1.3433) | | |
| Connecting rod big end diameter | | Service limit mm (in) | 35.150 (1.3839) | 40.100 (1.579) | |
| Connecting rod big end radial play | | Service limit mm (in) | 0.09 (.0035) | | |
| Connecting rod big end axial play | | New mm (in) | 0.200 to 0.500 (.008 to .020) | | |
| | | Service limit mm (in) | 0.600 (.024) | | |
| Connecting rod small end diameter | | New mm (in) | 18.010 to 18.020 (.7091 to .7095) | 20.010 to 20.020 (.7878 to .7882) | |
| | | Service limit mm (in) | 18.060 (.7110) | 20.060 (.7898) | |
| Piston pin diameter | | New mm (in) | 17.996 to 18.000 (.7085 to .7087) | 19.996 to 20.000 (.7872 to .7874) | |
| | | Service limit mm (in) | 17.980 (.7079) | 19.980 (.7866) | |
| Connecting rod/piston pin clearance (radial play) | | Service limit mm (in) | 0.080 (.0035) | | |
| *GEARBOX* | | | | | |
| Type | | | Dual range (HI-LO) with park, neutral and reverse | | |
| Gearbox oil | | Capacity | 400 ml (14 U.S. oz) | | |
| | | Recommended | XP-S chaincase oil | | |
| Output shaft backlash | | New mm (in) | 0.10 to 0.20 (.0039 to .0079) | | |
| | | Service limit mm (in) | 0.25 (.0098) | | |
| Bevel gear axial play | | New mm (in) | 0.02 to 0.15 (.0008 to .0059) | | |
| | | Service limit mm (in) | 0.19 (.0075) | | |
| Shifting sleeve groove width | | New mm (in) | 5.25 to 5.35 (.207 to .211) | | |
| | | Service limit mm (in) | 5.50 (.217) | | |
| Shifting fork claw thickness | | New mm (in) | 4.95 to 5.05 (.195 to .199) | | |
| | | Service limit mm (in) | 4.80 (.189) | | |
| Shift fork claw thickness (for high gear shifting) | | New mm (in) | 4.80 to 4.90 (.189 to .193) | | |
| | | Service limit mm (in) | 4.70 (.185) | | |
| Shift fork claw thickness (for low/reverse gear shifting) | | New mm (in) | 5.10 to 5.20 (.201 to .205) | | |
| | | Service limit mm (in) | 5.00 (.197) | | |
| Shift fork pin diameter | | New mm (in) | 6.920 to 6.970 (.272 to .274) | | |
| | | Service limit mm (in) | 6.850 (.270) | | |

| MODEL | | | OUTLANDER™ 500 | OUTLANDER™ 650 | OUTLANDER™ 800R |
|---|---|---|---|---|---|
| ENGINE (cont'd) | | | | | |
| Gap of shift fork engagement groove (high gear shifting) | New | mm (in) | 5.00 to 5.10 (.197 to .201) | | |
| | Service limit | mm (in) | 5.20 (.205) | | |
| Gap of shift fork engagement groove (low/reverse gear shifting) | New | mm (in) | 5.30 to 5.40 (.209 to 213) | | |
| | Service limit | mm (in) | 5.50 (.217) | | |
| Diameter free pinions | New | mm (in) | 29.000 to 29.013 (1.1417 to 1.1422) | | |
| | Service limit | mm (in) | 29.015 (1.1422) | | |
| Intermediate gear shaft | New | mm (in) | 24.979 to 25.000 (.983 to .984) | | |
| | Service limit | mm (in) | 24.977 (.983) | | |
| Countershaft | Right side | Service limit mm (in) | 17.990 (.708) | | |
| | Free pinion bearing | Service limit mm (in) | 24.970 (.983) | | |
| | CVT side | Service limit mm (in) | 24.970 (.983) | | |
| Bevel gear shaft | Free pinion bearing | Service limit mm (in) | 24.984 (.984) | | |
| COOLING SYSTEM | | | | | |
| Coolant | Type | | Ethyl glycol/water mix (50% coolant, 50% water). Use premixed coolant sold by BRP (P/N 219 700 362) or coolant specifically designed for aluminum engines | | |
| | Capacity | L (quarts) | 2.9 (3.06) | | |
| Thermostat | Opening temperature | °C (°F) | 65 (149) | | |
| Radiator cap opening pressure | | kPa (PSI) | 110 (16) | | |
| ELECTRICAL SYSTEM | | | | | |
| Magneto generator output | | | 400 W @ 6000 RPM | | |
| Ignition system type | | | IDI (Inductive Discharge Ignition) | | |
| Ignition timing | | | Not adjustable | | |
| Spark plug | Quantity | | 2 | | |
| | Make and type | | NGK DCPR8E | | |
| | Gap | mm (in) | 0.6 to 0.7 (.024 to .027) | | |
| Engine RPM limiter setting | Forward | RPM | 8000 | | 8200 |
| | Reverse | RPM | 3200 | | |
| Battery | Type | | Maintenance free | | |
| | Voltage | | 12 volts | | |
| | Nominal rating | A•h | 18 | | |
| | Power starter output | KW | 0.7 | | |
| Headlamp | | W | 2 x 35 | | |
| Taillight | | W | 8/27 | | |
| Director indicator (European Community models) | | W | 10 | | |
| Indicator lights | | | LEDS, 0.7 V approximately (each) | | |

| MODEL | | | | OUTLANDER™ 500 | OUTLANDER™ 650 | OUTLANDER™ 800R |
|---|---|---|---|---|---|---|
| ELECTRICAL SYSTEM (cont'd) | | | | | | |
| Fuses | Accessories | | A | 20 | | |
| | Fan | | A | 20 | | |
| | Main | | A | 30 | | |
| | Ignition coils | | A | 5 | | |
| | Fuel injectors | | A | 5 | | |
| | Solenoids/speedometer/speed sensor/tail lamp | | A | 7.5 | | |
| | Fuel pump | | A | 7.5 | | |
| | Engine control module (ECM) | | A | 5 | | |
| | Main accessories | | A | 30 | | |
| FUEL SYSTEM | | | | | | |
| Fuel delivery | Type | | | Electronic Fuel Injection (EFI), DeLorto 46 mm throttle body, 1 injector per cylinder | | |
| Fuel pump | Type | | | Bosch | | |
| | Model | | | Electrical (in fuel tank) | | |
| | Operating pressure | | kPa (PSI) | 350 (51) | | |
| Idle speed | | | RPM ± 50 | 1250 (not adjustable) | | |
| Fuel | Type | | | Regular unleaded gasoline | | |
| | Octane rating | Inside North America | (R+M)/2 | 87 or higher | | |
| | | Outside North America | RON | 92 or higher | | |
| Fuel tank capacity | | | L (U.S. gal) | 20 (5.3) | | |
| Remaining fuel in fuel tank when display light turns ON | | | L (U.S. gal) | ± 5 (1.32) | | |
| DRIVE TRAIN | | | | | | |
| Front drive | | | | Shaft driven/Auto-lock differential (shear pump) | | |
| Front drive ratio | | | | 3.6:1 | | |
| Rear drive | | | | Shaft driven/locked differential | | |
| Rear drive ratio | | | | 3.6:1 | | |
| Differential oil | Capacity | Front | | 500 ml (17 U.S. oz) | | |
| | | Rear | | 250 ml (8.5 U.S. oz) | | |
| | Recommended | | | BRP differential oil (P/N 293 600 043) or synthetic oil 75W90 (API GL5) | | |
| CV joint grease | | | | CV joint grease (P/N 293 550 019) | | |
| Propeller shaft grease | | | | XP-S synthetic grease (P/N 293 550 010) | | |

| MODEL | | | OUTLANDER™ 500 | OUTLANDER™ 650 | OUTLANDER™ 800R |
|---|---|---|---|---|---|
| TRANSMISSION | | | | | |
| Type | | | CVT (Continuously Variable Transmission) | | |
| Engagement RPM | | ± 100 RPM | 1800 | | |
| *CVT* | | | | | |
| Drive belt width | Service limit | mm (in) | 30.00 (1.181) | | |
| Governor cup roller outer diameter | New | mm (in) | 13.70 to 13.80 (.539 to .543) | | |
| | Service limit | mm (in) | 13.20 (.519) | | |
| Governor cup roller inner diameter | New | mm (in) | 8.05 to 8.15 (.317 to .321) | | |
| | Service limit | mm (in) | 9.00 (.354) | | |
| Centrifugal lever pivot bolt diameter | New | mm (in) | 6.078 to 6.100 (.239 to .240) | | |
| | Service limit | mm (in) | 6.000 (.236) | | |
| Centrifugal lever bore diameter | Service limit | mm (in) | 6.200 (.244) | | |
| Drive pulley sliding half centrifugal lever pivot bolt bore diameter | New | mm (in) | 6.113 to 6.171 (.241 to .243) | | |
| | Service limit | mm (in) | 6.300 (.248) | | |
| Drive pulley sliding half large bushing | New | mm (in) | 55.000 to 55.040 (2.165 to 2.167) | | |
| | Service limit | mm (in) | 55.200 (2.173) | | |
| Drive pulley sliding half small bushing | New | mm (in) | 32.000 to 32.040 (1.260 to 1.261) | | |
| | Service limit | mm (in) | 32.200 (1.268) | | |
| Driven pulley sliding half bushing | New | mm (in) | 30.060 to 30.100 (1.183 to 1.185) | | |
| | Service limit | mm (in) | 30.200 (1.189) | | |
| Driven pulley sliding fixed bushing | New | mm (in) | 30.060 to 30.100 (1.183 to 1.185) | | |
| | Service limit | mm (in) | 30.200 (1.189) | | |
| Torque gear on driven pulley | Service limit | mm (in) | 7.500 (.295) | | |
| STEERING | | | | | |
| Turning radius | 1-UP Models | | 2.16 m (7 ft) | | |
| | 2-UP Models | | 2.4 m (7 ft 10 in) | | |
| Total toe (vehicle on ground) | | mm (in) | 0 ± 4 (0 ± .157) | | |
| Camber angle | | | 0° | | |
| Tie-rod maximum length unengaged threads | | mm (in) | 17.5 ± 5 (11/16 ± 3/16) | | |
| SUSPENSION | | | | | |
| *FRONT* | | | | | |
| Suspension type | | | Mac Pherson | Double suspension arm | |
| Suspension travel | | mm (in) | 178 (7) | 203 (8) | |
| Shock absorber | Qty | | 2 | | |
| | Type | | Oil | | |
| Spring free length | Standard | mm (in) | 372 (14-5/8) | 349 (13-3/4) | |
| | XT | mm (in) | 387 (15-1/4) | 359 (14-1/8) | |
| | MAX | mm (in) | 372 (14-21/32) | 358 (14-3/32) | |
| | MAX XT | mm (in) | 387 (15-15/64) | 369 (14-17/32) | |
| | LTD | mm (in) | — | | 369 (14-17/32) |

| MODEL | | | OUTLANDER™ 500 | OUTLANDER™ 650 | OUTLANDER™ 800R |
|---|---|---|---|---|---|
| SUSPENSION (cont'd) | | | | | |
| Spring color code | Standard | | Silver/Silver/Silver | Silver/Yellow/Silver | |
| | XT | | White/Blue/Gold | Silver/Gold/Silver | |
| | MAX | | Silver/Silver/Silver | White/Silver/White | |
| | MAX XT | | Red/Gold/Red | Gold/Silver/Gold | |
| | LTD | | — | | Gold/Silver/Gold |
| Front preload adjustment | | | N.A. | 5 settings | |
| *REAR* | | | | | |
| Suspension type | | | TTI™ independent | | |
| Suspension travel | | mm (in) | 229 (9) | | |
| Shock absorber | Qty | | 2 | | |
| | Type | | Oil | | |
| Spring free length | Standard and XT | mm (in) | 354 (13-15/16) | | |
| | MAX and MAX XT | mm (in) | 364 (14-21/64) | | |
| | LTD | mm (in) | — | | 364 (14-21/64) |
| Spring color code | Standard | | Silver/White/Gold | | |
| | XT | | Gold/Blue/Gold | Silver/White/Gold | |
| | MAX and MAX XT | | Silver/Silver/Gold | | |
| | LTD | | — | | Silver/Silver/Gold |
| Rear preload adjustment | | | 5 settings | | |
| BRAKES | | | | | |
| Front brake | | Qty | 2 | | |
| | | Type | Hydraulic, discs | | |
| Rear brake | | Qty | 1 | | |
| | | Type | Hydraulic, disc | | |
| Brake fluid | Capacity | | 180 ml (6.1 U.S. oz) | | |
| | Type | | DOT 4 | | |
| Parking brake | | | Hydraulic lock-4 wheels | | |
| Caliper | | | Floating | | |
| Brake pad material | | Front | Organic<br>CE models: Metallic | | |
| | | Rear | Metallic | | |
| Minimum brake pad thickness | | mm (in) | 1 (.04) | | |
| Minimum brake disc thickness | Front | mm (in) | 3.5 (.138) | | |
| | Rear | mm (in) | 4.3 (.17) | | |
| Maximum brake disc warpage | | mm (in) | 0.2 (.01) | | |

| MODEL | | | | OUTLANDER™ 500 | OUTLANDER™ 650 | OUTLANDER™ 800R |
|---|---|---|---|---|---|---|
| TIRES AND WHEELS | | | | | | |
| *TIRES* | | | | | | |
| Pressure | 1-UP Models | Front | kPa (PSI) | Maximum: 34.5 (5)<br>Minimum: 31 (4.5) | Maximum: 48 (7)<br>Minimum: 31 (4.5) | |
| | | Rear | kPa (PSI) | Maximum: 34.5 (5)<br>Minimum: 31 (4.5) | Maximum: 48 (7)<br>Minimum: 31 (4.5) | |
| | 2-UP Models | Front | kPa (PSI) | Maximum: 34.5 (5)<br>Minimum: 31 (4.5) | Maximum: 48 (7)<br>Minimum: 31 (4.5) | |
| | | Rear | kPa (PSI) | Maximum: 34.5 (5)<br>Minimum: 31 (4.5) | Maximum: 48 (7)<br>Minimum: 34.5 (5) | |
| Minimum tire thread depth | | | mm (in) | 3 (0.118) | | |
| Size | | Front | | 25 x 8 x 12 | 26 x 8 x 12 | |
| | | Rear | | 25 x 10 x 12 | 26 x 10 x 12 | |
| *WHEELS* | | | | | | |
| Size | | Front | | 12 x 6 | | |
| | | Rear | | 12 x 7.5 | | |
| DIMENSION | | | | | | |
| Overall length | | 1-UP Models | m (in) | 2.18 (86) | | |
| | | 2-UP Models | m (in) | 2.39 (94) | | |
| Overall width | | | m (in) | 1.17 (46) | | |
| Overall height | | | m (in) | 1.14 (45) | | |
| Wheel base | | 1-UP Models | m (in) | 1.30 (51) | | |
| | | 2-UP Models | m (in) | 1.50 (59) | | |
| Wheel track | | Front | mm (in) | 965 (38) | | |
| | | Rear | mm (in) | 914 (36) | | |
| Ground clearance | | | mm (in) | 279 (11) | 305 (12) | |
| WEIGHT AND LOADING CAPACITY | | | | | | |
| Dry weight | | 1-UP Models | kg (lb) | 293 (645) | 299 (660) | 301 (663) |
| | | 2-UP Models | kg (lb) | 312 (688) | 322 (710) | 323 (713) |
| Weight distribution | | Front/rear | % | 51/49<br>500 XT and MAX: 48/52 | | |
| Rear storage box (included with rear rack weight) | | | kg (lb) | 10 (22) | | |
| Rack | | Front | kg (lb) | 45 (100) | | |
| | | Rear | kg (lb) | 90 (200)<br>(including rear storage box and tongue weight) | | |
| Total vehicle load allowed (including driver, all other loads and added accessories) | | 1-UP Models | kg (lb) | 235 (517) | | |
| | | 2-UP Models | kg (lb) | 272 (600) | | |

| MODEL | | | OUTLANDER™ 500 | OUTLANDER™ 650 | OUTLANDER™ 800R |
|---|---|---|---|---|---|
| WEIGHT AND LOADING CAPACITY (cont'd) | | | | | |
| Gross vehicle weight rating | 1-UP Models | kg (lb) | 553 (1220) | 584 (1287) | |
| | 2-UP Models | kg (lb) | 558 (1228) | 649 (1430) | |
| Towing capacity | | kg (lb) | 590 (1300)<br>CE models: 135 (298) | | |
| Tongue capacity (included with rear rack weight) | | kg (lb) | 23 (50)<br>CE models: 13 (29) | | |

# RENEGADE

| MODEL | | | | RENEGADE™ 500 | RENEGADE™ 800R | RENEGADE™ 800R X |
|---|---|---|---|---|---|---|
| ENGINE | | | | | | |
| Engine type | | | | ROTAX® V490 | ROTAX® V810 | |
| | | | | 4-stroke, Single Over Head Camshaft (SOHC), liquid cooled | | |
| Number of cylinders | | | | 2 | | |
| Number of valves | | | | 8 valves (mechanical adjustment) | | |
| Bore | | | mm (in) | 82.03 (3.23) | 91 (3.58) | |
| Stroke | | | mm (in) | 47.3 (1.86) | 61.5 (2.42) | |
| Displacement | | | $cm^3$ ($in^3$) | 500 (30.51) | 800 (48.82) | |
| Compression ratio | | | | 10.7:1 | 10.3:1 | |
| Decompressor type | | | | N.A. | | |
| Maximum HP RPM | | | RPM | 7250 | | |
| Lubrication | Type | | | Wet sump. Replaceable oil filter | | |
| | Oil filter | | | BRP Rotax paper type, replaceable | | |
| | Engine oil pressure | Minimum | | 350 kPa (51 PSI) at 6000 RPM | | |
| | Engine oil | Capacity (oil change with filter) | | 2 L (2.11 quarts) | | |
| | | Recommended | | SAE 5W30 API classification SM, SL or SJ see *OIL VISCOSITY CHART* in *LUBRICATION SYSTEM* | | |
| Intake valve opening | | | | 3° BTDC | 5° BTDC | |
| Intake valve closing | | | | 34° ABDC | 45° ABDC | |
| Exhaust valve opening | | | | 39° BBDC | 55° BBDC | |
| Exhaust valve closing | | | | 2° ATDC | 5° ATDC | |
| Chain tensioner plunger protrusion | | Service limit | mm (in) | 20.0 (.7874) | | |
| Valve clearance | Intake | | mm (in) | 0.06 to 0.14 (.0024 to .0055) | | |
| | Exhaust | | mm (in) | 0.11 to 0.19 (.0043 to .0075) | | |
| Valve stem diameter | Intake | New | mm (in) | 4.966 to 4.980 (.1955 to .1960) | | |
| | | Service limit | mm (in) | 4.930 (.1941) | | |
| | Exhaust | New | mm (in) | 4.956 to 4.970 (.1951 to .1957) | | |
| | | Service limit | mm (in) | 4.930 (.1941) | | |
| Valve out of round | Intake and exhaust | New | mm (in) | 0.005 (.0002) | | |
| | | Service limit | mm (in) | 0.06 (.0024) | | |
| Valve guide diameter | | New | mm (in) | 5.006 to 5.018 (.1971 to .1976) | | |
| | | Service limit | mm (in) | 5.050 (.1988) | | |
| Valve spring free length | | New | mm (in) | 40.81 (1.607) | | |
| | | Service limit | mm (in) | 39.00 (1.535) | | |
| Valve seat contact width | Intake | New | mm (in) | 1.05 to 1.35 (.041 to .053) | | |
| | | Service limit | mm (in) | 1.8 (.070) | | |
| | Exhaust | New | mm (in) | 1.25 to 1.55 (.049 to .061) | | |
| | | Service limit | mm (in) | 2 (.078) | | |

| MODEL | | | | RENEGADE™ 500 | RENEGADE™ 800R | RENEGADE™ 800R X |
|---|---|---|---|---|---|---|
| ENGINE (cont'd) | | | | | | |
| Rocker arm bore diameter | | New | mm (in) | 12.036 to 12.050 (.4739 to .4744) | | |
| | | Service limit | mm (in) | 12.060 (.4748) | | |
| Rocker arm shaft diameter | | New | mm (in) | 12.000 to 12.018 (.4724 to .4731) | | |
| | | Service limit | mm (in) | 11.990 (.4720) | | |
| Piston measurement | | New | mm (in) | 81.950 to 81.966 (3.2264 to 3.2270) | 90.950 to 90.966 (3.5807 to 3.5813) | |
| | | Service limit | mm (in) | 81.850 (3.2224) | 90.850 (3.577) | |
| Piston/cylinder clearance | | New | mm (in) | 0.057 (.0022) | 0.027 (.0011) | |
| | | Service limit | mm (in) | 0.130 (.0051) | 0.100 (.0040) | |
| Piston ring type | | 1st | | Upper compression ring, rectangular | | |
| | | 2nd | | Lower compression ring, tapered face | | |
| | | 3rd | | Oil scraper ring | | |
| Ring end gap | Rectangular | New | mm (in) | 0.20 to 0.40 (.008 to .016) | | |
| | Taper-face | | | 0.20 to 0.40 (.008 to .016) | | |
| | Oil scraper ring | | | 0.20 to 0.70 (.008 to .028) | | |
| | All | Service limit | mm (in) | 1.5 (.059) | | |
| Ring/piston groove clearance | Rectangular | New | mm (in) | 0.03 to 0.070 (.0012 to .0028) | | |
| | Taper-face | | | 0.02 to 0.060 (.0008 to .0024) | | |
| | Oil scraper ring | | | 0.01 to 0.018 (.0004 to .0007) | | |
| | Rectangular | Service limit | mm (in) | 0.15 (.0059) | | |
| | Taper-face | | | 0.15 (.0059) | | |
| | Oil scraper ring | | | 0.25 (.0098) | | |
| Cylinder bore | | New | mm (in) | 82.023 to 82.037 (3.2292 to 3.2298) | 90.993 to 91.007 (3.5823 to 3.5829) | |
| Cylinder taper | | Maximum New | mm (in) | 0.038 (.0015) | | |
| | | Service limit | mm (in) | 0.090 (.0035) | | |
| Cylinder out of round | | Maximum New | mm (in) | 0.015 (.0006) | | |
| | | Service limit | mm (in) | 0.020 (.0008) | | |
| Camshaft main bearing journal | Timing chain side | New | mm (in) | 34.959 to 34.975 (1.3763 to 1.3770) | | |
| | | Service limit | mm (in) | 34.950 (1.3760) | | |
| | Spark plug side | New | mm (in) | 21.959 to 21.980 (.8645 to .8654) | | |
| | | Service limit | mm (in) | 21.950 (.8642) | | |
| Camshaft main bearing journal bore | Timing chain side | New | mm (in) | 35.000 to 35.025 (1.3780 to 1.3789) | | |
| | | Service limit | mm (in) | 35.040 (1.3795) | | |
| | Spark plug side | New | mm (in) | 22.000 to 22.021 (.8661 to .8670) | | |
| | | Wear limit | mm (in) | 22.040 (.8677) | | |
| Camshaft lobe | Intake valve | New | mm (in) | 31.830 to 32.030 (1.2531 to 1.2610) | 32.950 - 33.150 (1.2972- 1.3051) | |
| | | Service limit | mm (in) | 31.810 (1.2524) | 32.870 (1.2941) | |
| | Exhaust valve | New | mm (in) | 31.730 to 31.930 (1.2492 to 1.2571) | 32.950 - 33.150 (1.2972- 1.3051) | |
| | | Service limit | mm (in) | 31.710 (1.2484) | 32.930 (1.2965) | |

| MODEL | | | RENEGADE™ 500 | RENEGADE™ 800R | RENEGADE™ 800R X |
|---|---|---|---|---|---|
| ENGINE (cont'd) | | | | | |
| Crankshaft main journal diameter MAG/PTO side | | New mm (in) | 42.024 to 42.040 (1.6545 to 1.6551) | | |
| | | Service limit mm (in) | 42.000 (1.6535) | | |
| Crankshaft radial play MAG/PTO side | | Service limit mm (in) | 0.07 (.0031) | | |
| Crankshaft main journal diameter PTO support bearing | | New mm (in) | 34.024 to 34.040 (1.3395 to 1.3402) | | |
| | | Service limit mm (in) | 34.010 (1.3390) | | |
| Crankshaft radial play PTO support bearing | | Service limit mm (in) | 0.10 (.0039) | | |
| Crankshaft pin diameter | | New mm (in) | 35.064 to 35.080 (1.3805 to 1.3811) | 40.009 to 40.025 (1.5752 to 1.5758) | |
| | | Service limit mm (in) | 35.050 (1.3800) | 39.990 (1.5744) | |
| Crankshaft deflection | MAG/PTO side | New mm (in) | 0.050 (.002) | | |
| Crankcase plain bearing | MAG/PTO side | Service limit mm (in) | 42.100 (1.6575) | | |
| PTO cover plain bearing | | Service limit mm (in) | 34.120 (1.3433) | | |
| Connecting rod big end diameter | | Service limit mm (in) | 35.150 (1.3839) | 40.100 (1.579) | |
| Connecting rod big end radial play | | Service limit mm (in) | 0.09 (.0035) | | |
| Connecting rod big end axial play | | New mm (in) | 0.200 to 0.500 (.008 to .020) | | |
| | | Service limit mm (in) | 0.600 (.024) | | |
| Connecting rod small end diameter | | New mm (in) | 18.010 to 18.020 (.7091 to .7095) | 20.010 to 20.020 (.7878 to .7882) | |
| | | Service limit mm (in) | 18.060 (.7110) | 20.060 (.7898) | |
| Piston pin diameter | | New mm (in) | 17.996 to 18.000 (.7085 to .7087) | 19.996 to 20.000 (.7872 to .7874) | |
| | | Service limit mm (in) | 17.980 (.7079) | 19.980 (.7866) | |
| Connecting rod/piston pin clearance (radial play) | | Service limit mm (in) | 0.080 (.0035) | | |
| *GEARBOX* | | | | | |
| Type | | | Dual range (HI-LO) with park, neutral and reverse | | |
| Gearbox oil | | Capacity | 400 ml (14 U.S. oz) | | |
| | | Recommended | XP-S chaincase oil | | |
| Output shaft backlash | | New mm (in) | 0.10 to 0.20 (.0039 to .0079) | | |
| | | Service limit mm (in) | 0.25 (.0098) | | |
| Bevel gear axial play | | New mm (in) | 0.02 to 0.15 (.0008 to .0059) | | |
| | | Service limit mm (in) | 0.19 (.0075) | | |
| Shifting sleeve groove width | | New mm (in) | 5.25 to 5.35 (.207 to .211) | | |
| | | Service limit mm (in) | 5.50 (.217) | | |
| Shifting fork claw thickness | | New mm (in) | 4.95 to 5.05 (.195 to .199) | | |
| | | Service limit mm (in) | 4.80 (.189) | | |
| Shift fork claw thickness (for high gear shifting) | | New mm (in) | 4.80 to 4.90 (.189 to .193) | | |
| | | Service limit mm (in) | 4.70 (.185) | | |
| Shift fork claw thickness (for low/reverse gear shifting) | | New mm (in) | 5.10 to 5.20 (.201 to .205) | | |
| | | Service limit mm (in) | 5.00 (.197) | | |
| Shift fork pin diameter | | New mm (in) | 6.920 to 6.970 (.272 to .274) | | |
| | | Service limit mm (in) | 6.850 (.270) | | |

| MODEL | | | RENEGADE™ 500 | RENEGADE™ 800R | RENEGADE™ 800R X |
|---|---|---|---|---|---|
| ENGINE (cont'd) | | | | | |
| Gap of shift fork engagement groove (high gear shifting) | | New mm (in) | 5.00 to 5.10 (.197 to .201) | | |
| | | Service limit mm (in) | 5.20 (.205) | | |
| Gap of shift fork engagement groove (low/reverse gear shifting) | | New mm (in) | 5.30 to 5.40 (.209 to 213) | | |
| | | Service limit mm (in) | 5.50 (.217) | | |
| Diameter free pinions | | New mm (in) | 29.000 to 29.013 (1.1417 to 1.1422) | | |
| | | Service limit mm (in) | 29.015 (1.1422) | | |
| Intermediate gear shaft | | New mm (in) | 24.979 to 25.000 (.983 to .984) | | |
| | | Service limit mm (in) | 24.977 (.983) | | |
| Countershaft | Right side | Service limit mm (in) | 17.990 (.708) | | |
| | Free pinion bearing | | 24.970 (.983) | | |
| | CVT side | | 24.970 (.983) | | |
| Bevel gear shaft | Free pinion bearing | Service limit mm (in) | 24.984 (.984) | | |
| COOLING SYSTEM | | | | | |
| Coolant | Type | | Ethyl glycol/water mix (50% coolant, 50% water). Use premixed coolant sold by BRP (P/N 219 700 362) or coolant specifically designed for aluminum engines | | |
| | Capacity | L (quarts) | 2.9 (3.06) | | |
| Thermostat | Opening temperature | °C (°F) | 65 (149) | | |
| Radiator cap opening pressure | | kPa (PSI) | 110 (16) | | |
| ELECTRICAL SYSTEM | | | | | |
| Magneto generator output | | | 400 W @ 6000 RPM | | |
| Ignition system type | | | IDI (Inductive Discharge Ignition) | | |
| Ignition timing | | | Not adjustable | | |
| Spark plug | Quantity | | 2 | | |
| | Make and type | | NGK DCPR8E | | |
| | Gap | mm (in) | 0.6 to 0.7 (.024 to .027) | | |
| Engine RPM limiter setting | Forward | RPM | 8000 | 8200 | |
| | Reverse | RPM | 3200 | | |
| Battery | Type | | Maintenance free | | |
| | Voltage | | 12 volts | | |
| | Nominal rating | A•h | 18 | | |
| | Power starter output | KW | 0.7 | | |
| Headlamp | | W | 2 x 35 | | |
| Taillight | | W | 8/27 | | |
| Director indicator (European Community models) | | W | 10 | | |
| Indicator lights | | | LEDS, 0.7 V approximately (each) | | |

| MODEL | | | | RENEGADE™ 500 | RENEGADE™ 800R | RENEGADE™ 800R X |
|---|---|---|---|---|---|---|
| ELECTRICAL SYSTEM (cont'd) | | | | | | |
| Fuses | Accessories | | A | 20 | | |
| | Fan | | A | 20 | | |
| | Main | | A | 30 | | |
| | Ignition coils | | A | 5 | | |
| | Fuel injectors | | A | 5 | | |
| | Solenoids/speedometer/speed sensor/tail lamp | | A | 7.5 | | |
| | Fuel pump | | A | 7.5 | | |
| | Engine control module (ECM) | | A | 5 | | |
| | Main accessories | | A | 30 | | |
| FUEL SYSTEM | | | | | | |
| Fuel delivery | Type | | | Electronic Fuel Injection (EFI), Dell'Orto 46 mm throttle body, 1 injector per cylinder | | |
| Fuel pump | Type | | | Bosch | | |
| | Model | | | Electrical (in fuel tank) | | |
| | Operating pressure | | kPa (PSI) | 350 (51) | | |
| Idle speed | | | RPM ± 50 | 1250 (not adjustable) | | |
| Fuel | Type | | | Regular unleaded gasoline | | |
| | Octane rating | Inside North America | (R+M)/2 | 87 or higher | | |
| | | Outside North America | RON | 92 or higher | | |
| Fuel tank capacity | | | L (U.S. gal) | 20 (5.3) | | |
| Remaining fuel in fuel tank when display light turns ON | | | L (U.S. gal) | ± 5 (1.32) | | |
| DRIVE TRAIN | | | | | | |
| Front drive | | | | Shaft driven/Auto-lock differential (shear pump) | | |
| Front drive ratio | | | | 3.6:1 | | |
| Rear drive | | | | Shaft driven/locked differential | | |
| Rear drive ratio | | | | 3.6:1 | | |
| Differential oil | Capacity | Front | | 500 ml (17 U.S. oz) | | |
| | | Rear | | 250 ml (8.5 U.S. oz) | | |
| | Recommended | | | BRP differential oil (P/N 293 600 043) or synthetic oil 75W90 (API GL5) | | |
| CV joint grease | | | | CV joint grease (P/N 293 550 019) | | |
| Propeller shaft grease | | | | XP-S synthetic grease (P/N 293 550 010) | | |

| MODEL | | | RENEGADE™ 500 | RENEGADE™ 800R | RENEGADE™ 800R X |
|---|---|---|---|---|---|
| TRANSMISSION | | | | | |
| Type | | | CVT (Continuously Variable Transmission) | | |
| Engagement RPM | | ± 100 RPM | 1800 | 1600 | |
| *CVT* | | | | | |
| Drive belt width | Service limit | mm (in) | 30.00 (1.181) | | |
| Governor cup roller outer diameter | New | mm (in) | 13.70 to 13.80 (.539 to .543) | | |
| | Service limit | mm (in) | 13.20 (.519) | | |
| Governor cup roller inner diameter | New | mm (in) | 8.05 to 8.15 (.317 to .321) | | |
| | Service limit | mm (in) | 9.00 (.354) | | |
| Centrifugal lever pivot bolt diameter | New | mm (in) | 6.078 to 6.100 (.239 to .240) | | |
| | Service limit | mm (in) | 6.000 (.236) | | |
| Centrifugal lever bore diameter | Service limit | mm (in) | 6.200 (.244) | | |
| Drive pulley sliding half centrifugal lever pivot bolt bore diameter | New | mm (in) | 6.113 to 6.171 (.241 to .243) | | |
| | Service limit | mm (in) | 6.300 (.248) | | |
| Drive pulley sliding half large bushing | New | mm (in) | 55.000 to 55.040 (2.165 to 2.167) | | |
| | Service limit | mm (in) | 55.200 (2.173) | | |
| Drive pulley sliding half small bushing | New | mm (in) | 32.000 to 32.040 (1.260 to 1.261) | | |
| | Service limit | mm (in) | 32.200 (1.268) | | |
| Driven pulley sliding half bushing | New | mm (in) | 30.060 to 30.100 (1.183 to 1.185) | | |
| | Service limit | mm (in) | 30.200 (1.189) | | |
| Driven pulley sliding fixed bushing | New | mm (in) | 30.060 to 30.100 (1.183 to 1.185) | | |
| | Service limit | mm (in) | 30.200 (1.189) | | |
| Torque gear on driven pulley | Service limit | mm (in) | 7.500 (.295) | | |
| STEERING | | | | | |
| Turning radius | | | 2.16 m (7 ft) | | |
| Total toe (vehicle on ground) | | mm (in) | 0 ± 4 (0 ± .157) | | |
| Camber angle | | | 0° | | |
| Tie-rod maximum length unengaged | | mm (in) | 17.5 ± 5 (11/16 ± 3/16) | | |
| SUSPENSION | | | | | |
| *FRONT* | | | | | |
| Suspension type | | | Double suspension arm | | |
| Suspension travel | | mm (in) | 216 (8.5) | | |
| Shock absorber | | Qty | 2 | | |
| | | Type | Oil | Gas | |
| Spring free length | | mm (in) | 319 (12-9/16) | | 329 (12-61/64) |
| Spring color code | | | Silver/White/Green | | Silver/Green/Silver |
| Front preload adjustment | | | 5 settings | | |

| MODEL | | | RENEGADE™ 500 | RENEGADE™ 800R | RENEGADE™ 800R X |
|---|---|---|---|---|---|
| SUSPENSION (cont'd) | | | | | |
| *REAR* | | | | | |
| Suspension type | | | TTI™ independent | | |
| Suspension travel | | mm (in) | 229 (9) | | |
| Shock absorber | | Qty | 2 | | |
| | | Type | Oil | Gas | |
| Spring free length | | mm (in) | 381 (15) | 348 (13-45/64) | 384 (15-1/8) |
| Spring color code | | | White/Silver/Gold | Silver/Red/Silver | Silver/Blue/Silver |
| Rear preload adjustment | | | 5 settings | | |
| BRAKES | | | | | |
| Front brake | | Qty | 2 | | |
| | | Type | Hydraulic, discs | | |
| Rear brake | | Qty | 1 | | |
| | | Type | Hydraulic, disc | | |
| Brake fluid | Capacity | | 250 ml (8.5 U.S. oz) | | |
| | Type | | DOT 4 | | |
| Parking brake | | | Hydraulic lock/2 rear wheels | | |
| Caliper | | | Floating | | |
| Brake pad material | Front | | Metallic | | |
| | Rear | | Metallic | | |
| Minimum brake pad thickness | | mm (in) | 1 (.04) | | |
| Minimum brake disc thickness | Front | mm (in) | 3.5 (.138) | | |
| | Rear | mm (in) | 4.3 (.17) | | |
| Maximum brake disc warpage | | mm (in) | 0.2 (.01) | | |
| TIRES AND WHEELS | | | | | |
| *TIRES* | | | | | |
| Pressure | Front | | Maximum: 48 kPa (7 PSI)<br>Minimum: 34.5 kPa (5 PSI) | | |
| | Rear | | Maximum: 48 kPa (7 PSI)<br>Minimum: 38 kPa (5.5 PSI) | | |
| Minimum tire thread depth | | mm (in) | 3 (0.118) | | |
| Size | Front | | 25 x 8 x 12 | | |
| | Rear | | 25 x 10 x 12 | | |
| *WHEELS* | | | | | |
| Size | Front | | 12 x 6 | | |
| | Rear | | 12 x 7.5 | | |

| MODEL | | | RENEGADE™ 500 | RENEGADE™ 800R | RENEGADE™ 800R X |
|---|---|---|---|---|---|
| DIMENSION | | | | | |
| Overall length | | m (in) | 2.18 (86) | | |
| Overall width | | m (in) | 1.17 (46) | | |
| Overall height | | m (in) | 1.14 (45) | | |
| Wheel base | | m (in) | 1.30 (51) | | |
| Wheel track | Front | mm (in) | 965 (38) | | |
| | Rear | mm (in) | 914 (36) | | |
| Ground clearance | | mm (in) | 279 (11) | | |
| WEIGHT AND LOADING CAPACITY | | | | | |
| Dry weight | | kg (lb) | 275 (607) | | |
| Weight distribution | Front/rear | % | 51/49 | | |
| Rear storage box | | kg (lb) | 3.7 (1) | | |
| Rack | Rear | kg (lb) | 16 (35) | | |
| Total vehicle load allowed (including driver, all other loads and added accessories) | | kg (lb) | 141 (310) | | |
| Gross vehicle weight rating | | kg (lb) | 476 (1050) | | |
| Towing capacity | | kg (lb) | 590 (1300)<br>CE models: 135(298) | | |
| Tongue capacity (included with rear rack weight) | | kg (lb) | 23 (50)<br>CE models: 13 (29) | | |

# NOTES

## NOTES

219 100 336 CA

SHOP MANUAL SUPPLEMENT, OUTLANDER SERIES, RENEGADE SERIES / ENGLISH
SUPPLÉMENT MANUEL DE RÉP., SÉRIE OUTLANDER , SÉRIE RENEGADE / ANGLAIS

FAIT AU / MADE IN CANADA U/M:P.C.

®™ AND THE BRP LOGO ARE TRADEMARKS OF BOMBARDIER RECREATIONAL PRODUCTS INC. OR ITS AFFILIATES.
©2008 BOMBARDIER RECREATIONAL PRODUCTS INC. ALL RIGHTS RESERVED. PRINTED IN CANADA.

# 2009 Can-Am ATV Service Manual

**Includes 2009 Dealer Only Technical Update Book.**

**Use the 2007/2008 Base manual for everything not contained in the 2009 Service Manual Supplement.**

**Some models may need supplemental manuals which have blue titles. Use the base manual for everything not contained in the supplement if your model or year requires a supplement.**

can-am MC

BRP

# 2009 Technical Update Book

This must be read by all technicians!

219 100 309

# 2009 Technical Update Book

**TECHNICAL UPDATE BOOK and the DEALER CERTIFICATION PROGRAM (for North American dealer only):**

**The Technician Level Training is mandatory for your dealership to achieve the Platinum Certified status.**

**ATTENTION:** "Technician Level Training" is described as one technician (with a BRPTI profile and access) who has completed the Technical DVD exams 1-5 (6=Sea-Doo dealers) PLUS the most current Technical Update Book exam in BRPTI. To complete this criteria in the Dealer Certification Program, this Technical Update Book exam must be completed with a passing score of 75% or better in BRPTI within 60 days of receipt of this manual.

**Technician Level Training:** Each technician that has completed their Can-Am Technician Level must complete the annual Technical Update Book exam in BRPTI to maintain their individual status as a BRP Technician and to be eligible for their Certified Technician Level.

LEGAL DEPOSIT:
NATIONAL LIBRARY OF QUEBEC
NATIONAL LIBRARY OF CANADA 2008
ALL RIGHTS RESERVED. NO PARTS OF THIS MANUAL MAY BE REPRODUCED IN ANY FORM WITHOUT THE PRIOR WRITTEN PERMISSION OF BOMBARDIER RECREATIONAL PRODUCTS INC. (BRP)
© BOMBARDIER RECREATIONAL PRODUCTS INC. (BRP) 2008
© BOMBARDIER RECREATIONAL PRODUCTS INC. (BRP) 2008
PRINTED IN CANADA
TECHNICAL PUBLICATIONS
BOMBARDIER RECREATIONAL PRODUCTS INC. (BRP)
VALCOURT (QUEBEC) CANADA
®™ TRADEMARKS OF BOMBARDIER RECREATIONAL PRODUCTS INC. (BRP) OR ITS AFFILIATES.
* TRADEMARKS OF BOMBARDIER INC., USED UNDER LICENSE.
ROTAX ®

## STEP BY STEP INSTRUCTIONS ON HOW TO DO THE EXAMS ON BRPTI :

(for North American dealer only)

**If you are new to BOSSWeb and BRPTI OR you have a BRPTI login but not set up as a user in BOSSWeb:**

- Ask your dealership's BOSSWeb administrator to create your personal profile in BOSSWeb by making sure that all the fields identified with *, $ and T are completed and the BRP Dealer Employee BRPTI responsibility is added in your profile.
- **If you have a BRPTI login**, your BOSSWeb administrator must make sure your first name, last name, date of birth and gender are the same in BOSSWeb as they are in BRPTI.

**If you already have a personal login to BOSSWeb and have the right BRPTI accesses:**

1. Access BRPTI via BOSSWeb / Training / BRPTI.
2. In the "Resources" box, click on "Courses".
3. Check "English", click on "Start search — GO".
4. Find **2009 Can-Am Technical Update** in the list of courses.
5. Click on the blue icon at the right of the course name.
6. Click on "Enroll" at the bottom right of the screen.
7. Click on "OK" in the pop-up box to enroll to this course.
8. Click on "updated learning plan" in the confirmation paragraph or click on "Home" in the "Resources" box. This will take you back to your home page where you will see the course (exam) is now in your "Training Activities TO COMPLETE" section.
9. In the "Training Activities TO COMPLETE" section, click on the **2009 Can-Am Technical Update** course title to start your exam.

- To pass the Technical Update Exam a technician must pass with a **75% or greater** score.
- To achieve or maintain Technician Level status a technician must have completed all applicable Technician Level Exams after viewing the DVD series, and pass all Update exams for the appropriate products carried by the dealership.
- To qualify for the Certified Technician Level course, a technician must first achieve and maintain Technician Level Status.
- To maintain Certified Technician Status a technician must stay current by passing all subsequent Technical Update Exams for the product lines that apply to his certification.
- To qualify for Master Level Status a technician must meet the criteria below.

**Master Technician Level criteria:**

- Minimum of 5 years as a Powersports Industry mechanic.
- Minimum of 2 years at your current BRP dealership.
- Maintain Certified Technician Level for at least one year.
- 90% or higher, on 1st completed score, on Technical Update exam(s) (also used to maintain your Master Level every year for every product line).

**If you need assistance, contact:**

| For accesses and logins contact the BOSSWeb help desk: | | If you need assistance with the exams or use of the BRPTI application, contact: | |
|---|---|---|---|
| USA | 800 366-6992 (4-1) | USA | 800 366-6992 (5-5) |
| Canada | 800 361-9980 (4-1) | Canada | 800 361-9980 (5-5) |

Page

# General Information ..... 1

## IT'S EASY TO REACH US ..... 2
North American Service Toll-Free Number ..... 2
Before You Call the Service Department ..... 3

## DEALER TECHNICAL SUPPORT ..... 4
Canada and USA ..... 4
Other Country Distributor After Sales Support (SWA) ..... 4
BRP Australia ..... 4
BRPED Distributors Europe, Middle East and Africa ..... 4
BRP Brazil, Caribbean and Latin America ..... 5
BRP Japan ..... 5
BRP Scandinavia ..... 5
BRP Benelux ..... 5
BRP France ..... 5
BRP Spain ..... 5
BRP Germany ..... 5
BRP UK Ireland ..... 5

## CUSTOMER ASSISTANCE CENTERS ..... 6
Call the Customer Assistance Center ..... 6
Customer Assistance Center for North America ..... 6
Customer Assistance for Countries within Europe, Middle East, Africa, Russia & CIS ..... 6
Customer Assistance for Scandinavian Countries ..... 6
Customer Assistance for All Other Country ..... 7
Legal Coordinator ..... 7

## WARRANTY ..... 8
Tips ..... 8
Parts Return ..... 9
B.E.S.T. (BRP EXTENDED SERVICE TERMS) ..... 9

## SUPPLIERS INFORMATIONS ..... 11
GPS Warranty and Repair for North American Dealer ..... 11
GPS Warranty and Repair for All Other Country Dealers ..... 11
Tires Warranty and Repair for North American Dealers ..... 11
Tires Warranty and Repair for All Other Country Dealers ..... 11
Winch Warranty and Repair for North American Dealers ..... 12
Winch Warranty and Repair for All Other Country Dealers ..... 12

## "WHAT'S NEWS" LETTER ..... 13
Hot Tips and Tricks From Your After Sales Group, Posted Weekly ..... 13

## REPORTS ON PERFORMANCE AND QUALITY ..... 14
RPQ ..... 14

## IMPORTANCE OF PDI ..... 15
Was the PDI Check List properly filled and filed? ..... 15

## BRP ELECTRONIC PARTS CATALOG ..... 16
PartSmart version 8.7.24 ..... 16

## BOSSWEB TIPS AND TRICKS: E.T.A. ..... 18
Parts Availability Screen ..... 18

BOMBARDIER RECREATIONAL PRODUCTS TRAINING INSTITUTE ..... 19
The four steps to technician training ..... 20
BOOK AND DVD QUICK P/N REFERENCE ..... 21
Technical Update Books, Competitive Edge DVDs, Technical DVDs, Dealer Development Training DVDs ..... 21
IN THE EVENT OF FATALITY OR SERIOUS ACCIDENT: ..... 22
Accident Procedure ..... 22
In The Event Of Fatality Or Serious Accident: ..... 22

**What's New** ..... 23

**Troubleshooting and Tech Tips** ..... 35

**New Technologies** ..... 61
OUTLANDER™ 400 EFI ..... 62
NEW OUTLANDER™ 800R ..... 65

**Special Tools** ..... 69

**Specifications** ..... 89

**Annexes** ..... 105
BRP REBUILD CENTER ..... 106
BRP OILS AND LUBRICANTS ..... 114
REPORT ON PERFORMANCE / QUALITY (RPQ REPORT) ..... 115
APPLICATION FOR BRP "MASTER TECHNICIAN LEVEL" ..... 116
BRP ACCIDENT / INCIDENT REPORT ..... 117

# General Information

The objective of Section 1 is to make contacts between dealers and BRP as easy as possible.

In this section you will find the most important phone numbers, key contact names and the latest update procedures to help you being more efficient.

# WARRANTY

## TIPS

NOTE: **Please, do not forget :**
- You have 21 days from the repair date to submit a claim.
- You have 45 days from the credit date to ask for a claim resubmission.
- North American dealers have 21 days to return your parts (please keep tracking number) and documents to BRP from the date your claim is accepted.

NOTE: For other countries dealers, please contact your local distributor or BRP Regional Office.
- You must keep the parts that are not requested to be returned to BRP 90 days after the credit date.
- You must register all vehicles within 10 calendar days from the date of delivery to the customer.

NOTE: **You must keep on file all the following information about a vehicle.**
- Signed PDI checklist (keep for 10 years)
- Signed rider form (ATV only)
- Warranty registration form
- Work / repair order (keep for 3 years from the credit date)
- Warranty claims (keep for 3 years from the credit date)
- Sublet work / repair receipts (keep for 3 years from the credit date)
- Notes on customer calls...

NOTE: **Your work orders must be able to provide key elements which describe and justify the warranty claim:**

The 3 C's
- Condition or Complaint: Description of customer complaint(s).
- Cause: The determination of which component(s) failed.
- Cure: The corrective action taken to fix the problem (repair and / or replace).

And
- Vehicle serial number.
- Reported date of failure / date of repairs completed.
- Mileage or hours on the vehicle.
- If applicable, authorization number issued by a service representative.
- Punched timecards of mechanics.
- Customer's signed authorization to perform the work (signature).

## PARTS RETURN

| Canadian Dealers | USA Dealers | International Dealers |
|---|---|---|
| Use label (P/N 484 500 001) | Use label (P/N 480 901 601) | All requested Warranty Parts must be returned to your distributor or BRP Regional office. Contact them for complete address and shipping information. |
| BRP C/O Warranty Parts Center<br>565 De La Montagne Valcourt<br>Qc J0E 2L0 | BRP C/O Warranty Department<br>7575 Bombardier Court Wausau<br>WI 54401 | |

Make sure that the correct copy of the BOSSWeb claim is included with the exact part returned and properly tagged, otherwise this may cause a delay in processing your claim.

Dealers dealing with North West Co. Inc. must forward the parts, warranty claim and documents to their respective distributor's office.

NOTE: For complete details concerning returning warranty parts, please refer to the Warranty Service Guide on BOSSWeb.

## B.E.S.T. (BRP EXTENDED SERVICE TERMS)

NOTE: OFFERED TO THE NORTH AMERICAN DEALER

B.E.S.T. is an extended service plan designed to create a new income opportunity for BRP's authorized dealers. A true peace of mind for your customers, B.E.S.T. can be included in every new vehicle sale or sold at retail to existing customers. It offers a valuable additional extended service plan and also has a customer retention focus with its annual maintenance plan, which brings customers back to your dealership for services.

Features

- Two plans to choose from:
  - B.E.S.T. Plus: extended service coverage + 10-hour check (off road vehicles) / 600 mile inspection (Spyder roadster) and annual maintenance
  - Regular B.E.S.T.: extended service coverage only
- Covers eligible Ski-Doo snowmobiles, Sea-Doo PWCs, Can-Am ATVs and roadsters and Rotax Powered Sea-Doo Sport Boats.

- Coverage available for a full 3-year extended period beyond the manufacturer's warranty. Customers can purchase in 12, 24, 36 month's blocks.
- Unlimited mileage / hours protection
- Coverage is fully transferable but non-cancelable, at no charge
- Repairs are subject to a deductible of only $50 for each repair order (except for Emergency Roadside Assistance offered on Spyder roadsters where there is no deductible)
- Personalized welcome letter and card sent to customers.

For detailed information on BRP's B.E.S.T. coverage, please refer to the B.E.S.T. contract form. For any other inquiry or to order marketing documents, you may go to *BOSSWEB (COMCENTER / DOCUMENT / B.E.S.T.GUIDE)* or call our Sales Administration team at 1-800-361-6992 (USA) or at 1-800-361-9980 (Canada).

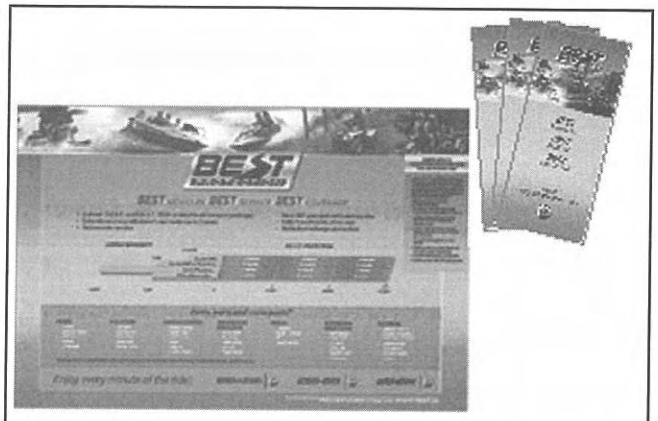


vdd2009-001-104

| | USA | CANADA |
|---|---|---|
| Contract forms | (P/N 484 800 210)<br>Florida: (P/N 484 800 536) | (P/N 484 800 212) |
| Counter mats | (P/N 219 701 170) | (P/N 219 700 535) |
| Customer brochures | (P/N 219 700 533)<br>Florida: (P/N 219 700 603) | (P/N 219 700 709) |

# SUPPLIERS INFORMATIONS

## GPS WARRANTY AND REPAIR FOR NORTH AMERICAN DEALER

| | IN CANADA | IN THE USA | OTHER COUNTRY DEALERS |
|---|---|---|---|
| | Raytech Électronique<br>1451 Boul. des Laurentides,<br>Vimont, Laval, Qc, H7M-2Y3 | Garmin International Inc.<br>1200 East 151st Street Olathe,<br>Kansas City 66062<br>(Kansas City metro area) | All requested Warranty Parts must be returned to your distributor or BRP Regional office. Contact them for complete address and shipping information. |
| **Phone** | 450 975-1015 | 1-800-800-1020 (US citizen only) | |
| **Fax** | 800 975-0025 / 450 975-0817 | 913 397-8282 | |
| Contact: | raytech@raytech.qc.ca | | |
| Web site: | www.raytech.qc.ca | www.garmin.com | |
| | Coord. GPS: N45o35.25' - W73o42.95' | N/A | |

## GPS WARRANTY AND REPAIR FOR ALL OTHER COUNTRY DEALERS

All Warranty request must be done to your distributor or BRP Regional office. Please contact them for complete address and shipping information.

## TIRES WARRANTY AND REPAIR FOR NORTH AMERICAN DEALERS

Some ATV models are originally equipped with Carlisle† tires. These tires are warranted by the tire manufacturer. For warranty coverage and assistance, please contact the tire manufacturer.

| | |
|---|---|
| Carlisle† Tire & Wheel Company<br>23 Windham Boulevard, Aiken,<br>SC 29805. | USA 800 260-7959 |
| | Canada 800 265-6155 |
| | Quebec 877 997-4999 |
| †Carlisle is a trademark of Carlisle Tire & Wheel Company | |

If an ATV is equipped with other tires than Carlisle tires, they are warranted directly by BRP and not by the tire manufacturer.

## TIRES WARRANTY AND REPAIR FOR ALL OTHER COUNTRY DEALERS

All Warranty request must be done to your distributor or BRP Regional office. Please contact them for complete address and shipping information.

**NOTE:** ITP tires which are found on Renegades are also made by Carlisle.

## WINCH WARRANTY AND REPAIR FOR NORTH AMERICAN DEALERS

BRP branded winches are covered by BRP. Refer to the vehicle's warranty for all the details.

Warn branded winch installed as original equipment on Can Am ATV's, are warranted separately by the winches manufacturer. Contact the manufacturer for warranty coverage and assistance. BRP will cover the specific labour rates to remove and re-install the winch assembly, the winch solenoid and the winch switch. Refer to the model year flat rate book for allowed flat rate time.

| | |
|---|---|
| Warn† Industries inc,<br>12900 SE Capps Road,<br>Clackamas, Oregon<br>97015-8903 | USA 800 543-9276 |
| | Can 800 668-6012 |
| | Que 800 361-9291 |
| †Warn is a trademark of Warn Industries Inc. | |

## WINCH WARRANTY AND REPAIR FOR ALL OTHER COUNTRY DEALERS

All Warranty requests must be done to your distributor or BRP Regional office. Please contact them for complete address and shipping information.

# "WHAT'S NEWS" LETTER

## HOT TIPS AND TRICKS FROM YOUR AFTER SALES GROUP, POSTED WEEKLY

Once a week, the "What's News" letter is published on BOSSWeb. It provides the latest news from the After Sales Department.

Go to BOSSWeb (www.bossweb.brp.com). On the home page, select the "What's News"

**NOTE:** BOSSWeb is the only place you will find this letter.

This is an example of the What's New letter.

**NOTE:** All archived What's News publications are available though the *COMCENTER* section of BOSSWeb. It can be found under *COMCENTER DOCUMENT* and by choosing "What's News" in the document type drop down box.

sdd2007-001-512-en

# REPORTS ON PERFORMANCE AND QUALITY

## RPQ

RPQ is the method BRP uses to know what is happening in the network.

By calling or faxing the **R**eports on **P**erformance and **Q**uality you are helping speed up the investigation process.

### Quantity Counts

The quantity of RPQs we receive on issues helps determining priorities; an issue that is happening on many units will most likely be put in priority. Especially on the current model year do not hesitate to report the same issue on different vehicles.

This is an example of the data base fields the Service Representative will fill up:

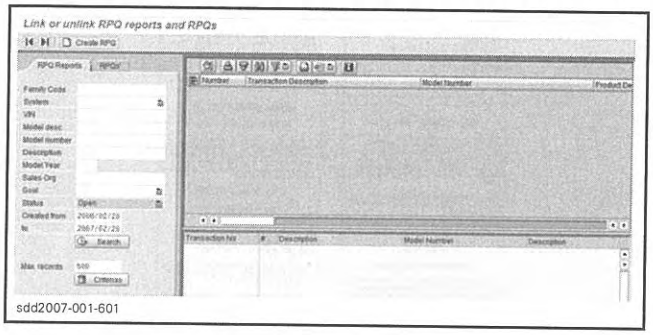


sdd2007-001-601

You will be asked:

- Dealer number
- Vehicle model / year
- Serial number
- Mileage / hours
- Possible digital pictures
- B.U.D.S. report
- Riding conditions when the failure occurred.

You will also be asked if there is already a call identification number logged and a detailed description of the issue.

A form is also available in the Annexes Section; it can be filled out and faxed to a Service Representative.

It is important that you tell us about your concerns: Report on Performance and Quality.

# IMPORTANCE OF PDI

## WAS THE PDI CHECK LIST PROPERLY FILLED AND FILED?

### Was the PDI Check List properly filled and filed? Was it signed by the customer?

### Legal protection

Documented proof that you have reviewed with the customer the operation and maintenance procedures for the vehicle.

### Sell Value for the money

Give the customer assurance that a proper pre-delivery inspection has been performed on the vehicle. As well as the ability to show all the steps required to justify the expense of "set-up charges".

### Professionalism

In today's market place, customers have come to expect nothing but the best from a well trained service department. With the PDI sheet completed and signatures from each person involved you can show your commitment to excellence. When a customer leaves your dealership he should be aware of and have:

- all operators and safety guides
- his sales information
- the PDI sheet
- proof of registration

### Where do I find this document?

It is included with every BRP recreational vehicle or in BOSSWeb (www.bossweb.brp.com) ComCenter tab Technical Publications.

### To know more about it!

An easy way to learn more about the delivery process is to view the DVD: Introduction to Dealer Development Training DVD Volume 1; (P/N 219 700 256) from the BRPTI (Bombardier Recreational Products Training Institute) DVD series.

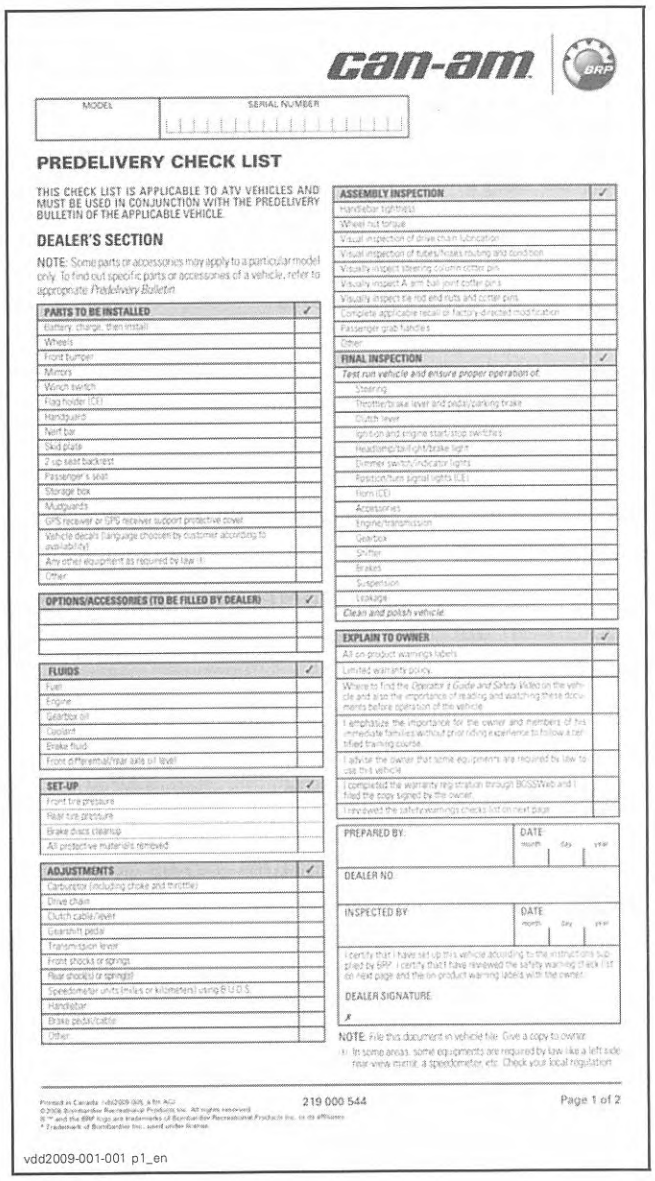

can-am

| MODEL | SERIAL NUMBER |
|---|---|
| | |

**PREDELIVERY CHECK LIST**

THIS CHECK LIST IS APPLICABLE TO ATV VEHICLES AND MUST BE USED IN CONJUNCTION WITH THE PREDELIVERY BULLETIN OF THE APPLICABLE VEHICLE.

**DEALER'S SECTION**

NOTE: Some parts or accessories may apply to a particular model only. To find out specific parts or accessories of a vehicle, refer to appropriate *Predelivery Bulletin*.

| PARTS TO BE INSTALLED | ✓ |
|---|---|
| Battery charge, then install | |
| Wheels | |
| Front bumper | |
| Mirrors | |
| Winch switch | |
| Flag holder (CE) | |
| Handguards | |
| Nerf bar | |
| Skid plate | |
| 2 up seat backrest | |
| Passenger's seat | |
| Storage box | |
| Mudguards | |
| GPS receiver or GPS receiver support protective cover | |
| Vehicle decals (language chosen by customer according to availability) | |
| Any other equipment as required by law [1] | |
| Other | |

| OPTIONS/ACCESSORIES (TO BE FILLED BY DEALER) | ✓ |
|---|---|
| | |
| | |
| | |

| FLUIDS | ✓ |
|---|---|
| Fuel | |
| Engine | |
| Gearbox oil | |
| Coolant | |
| Brake fluid | |
| Front differential/rear axle oil level | |

| SET-UP | ✓ |
|---|---|
| Front tire pressure | |
| Rear tire pressure | |
| Brake discs cleanup | |
| All protective materials removed | |

| ADJUSTMENTS | ✓ |
|---|---|
| Carburetor (including choke and throttle) | |
| Drive chain | |
| Clutch cable/lever | |
| Gearshift pedal | |
| Transmission lever | |
| Front shocks or springs | |
| Rear shock(s) or spring(s) | |
| Speedometer units (miles or kilometers) using B.U.D.S. | |
| Handlebar | |
| Brake pedal/cable | |
| Other | |

| ASSEMBLY INSPECTION | ✓ |
|---|---|
| Handlebar tightness | |
| Wheel nut torque | |
| Visual inspection of drive chain lubrication | |
| Visual inspection of fuels/fluids routing and condition | |
| Visually inspect steering column cotter pin | |
| Visually inspect A arm ball joint cotter pin | |
| Visually inspect tie rod end nuts and cotter pins | |
| Complete applicable recall or factory directed modification | |
| Passenger grab handles | |
| Other | |

| FINAL INSPECTION | ✓ |
|---|---|
| *Test run vehicle and ensure proper operation of:* | |
| Steering | |
| Throttle/brake lever and pedal/parking brake | |
| Clutch lever | |
| Ignition and engine start/stop switches | |
| Headlamp/tail light/brake light | |
| Dimmer switch/indicator lights | |
| Position/turn signal lights (LE) | |
| Horn (LE) | |
| Accessories | |
| Engine/transmission | |
| Gearbox | |
| Shifter | |
| Brakes | |
| Suspension | |
| Leakage | |
| *Clean and polish vehicle* | |

| EXPLAIN TO OWNER | ✓ |
|---|---|
| All on product warnings labels | |
| Limited warranty policy | |
| Where to find the *Operator's Guide and Safety Video* on the vehicle and also the importance of reading and watching these documents before operation of the vehicle | |
| I emphasize the importance for the owner and members of his immediate families without prior riding experience to follow a certified training course | |
| I advise the owner that some equipments are required by law to use this vehicle | |
| I completed the warranty registration through BOSSWeb and I filed the copy signed by the owner | |
| I provided the safety warnings checklist on next page | |

| PREPARED BY: | DATE: month day year |
|---|---|
| DEALER NO: | |
| INSPECTED BY: | DATE: month day year |

I certify that I have set up this vehicle according to the instructions supplied by BRP. I certify that I have reviewed the safety warning check list on next page and the on product warning labels with the owner.

DEALER SIGNATURE:

✗

NOTE: File this document in vehicle file. Give a copy to owner.

[1] In some areas, some equipments are required by law like a left side rear view mirror, a speedometer, etc. Check your local regulation.

219 000 544 Page 1 of 2

vdd2009-001-001 p1_en

# BRP ELECTRONIC PARTS CATALOG

## PARTSMART VERSION 8.7.24

You have already received you new electronic *PARTS CATALOG PART SMART* version 8.7.24!

If you need detailed instructions (including pictures of example screens) or for network install instructions, access a file called instructions pdf on the *PART SMART CD*.

### License Keys

A license key is required for new installations of PartSmart 8.7.24, or if a new license key has been issued for some other reason.

### Installation Improvements

Server-only Installations. When 8.7.24 is installed on the Server, the client work stations will get the newest application without any additional action required. All Client work stations must exit PartSmart before running the update on the server.

NOTE: If you are using the PartSmart Updater feature, when you have completed installing PartSmart 8.7.24, you will need to reset the schedule you have in place. To update, click on Start ALL Programs ARI PartSmartUpdate Choose the tab to review and or set up your preferred schedule.

### Overall Install

You will be prompted to enter your license key after you launch PartSmart and select a catalog which requires an updated key.

### Catalog Install

The catalog data installation has been re-engineered to ensure that catalog updates do not "hang" during the install and complete successfully regardless of size.

### New Feature: Thumbnails

With this release, you will have the option of viewing "previews" of assembly diagrams using the new Thumbnail feature. This feature allows you to see small preview pictures of the model before you open the full diagram. This will streamline the diagram selection process significantly.

The availability of Thumbnails is limited to models that have fewer than 100 diagrams by default to maintain peak performance levels. For models that have more than 100 diagrams, the Thumbnail option has been turned off.

### How to use Thumbnails:

Select the model, then open Thumbnails from the Diagrams list.

To view the full assembly diagram, with the Parts List, double click on the Thumbnail image.

To change the size of Thumbnails, right click on Thumbnail image and select small, medium or large.

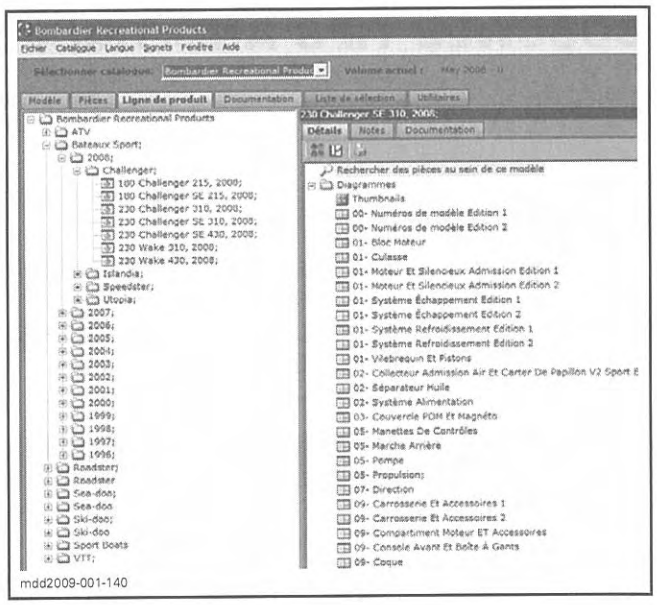

mdd2009-001-140

To return to the Thumbnail screen from an assembly diagram, click on the Thumbnail Icon.

To move from one Thumbnail to the next, you can use:

- the toolbar NEXT and Previous buttons or
- the keyboard Up, Down, Left, Right arrow keys or,
- the mouse and click on the Thumbnail.

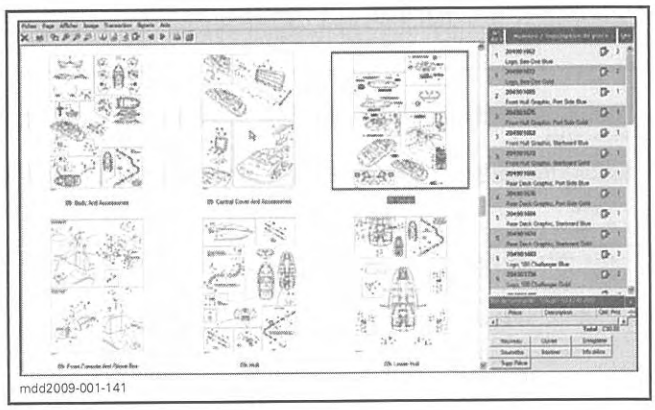
mdd2009-001-141

### Search Speed Improvements

Response times have been improved for parts searches in catalogs with large data sets. The most noticeable increase in speed is on Client work stations.

The license key can be found on BOSSWeb.

For assistance in obtaining a license key please communicate with our technology support group at 1 800 361-9980 (4-2).

BRP Electronic Parts Catalogs (PartSmart and Empart ) are included in the monthly fee so there is **NO extra billing**.

| For assistance contact Technology Support | Canada | USA |
|---|---|---|
| **Phone** | 800 361-9980 (4-2) | 800 361-9980 (4-2) |

# BOSSWEB TIPS AND TRICKS: E.T.A.

## PARTS AVAILABILITY SCREEN

You can now see on various BOSSWeb screens, Estimated Time of Arrival (E.T.A.'s) for some our your critical back ordered items:

TIP: When looking up ETAs on the Parts Availability and Prices screen, it is important to select the appropriate product line of the part number. If the product line chosen does not match the product line of the part, an error message such as Material not saleable call a PAC analyst will be generated. Adjusting the product line will help in a situation like this.

Parts - Parts Availability & Prices

Search Results

| Ex. | Part Number | Description | Competitive | Year | B/O | Avail.Qty. | Sales Unit | MOQ | Price Unit | Gross Price | Program Discounts | Other Discounts | Net Price | Currency | Retail | Net Margin |
|---|---|---|---|---|---|---|---|---|---|---|---|---|---|---|---|---|
| | | | | | Expected Availability Date | | | | | | | | | | | |
| | 861002700 | KIT-SEAT 1+1 BLACK | COM | 2009 | 60 | 90 | PC | 1 PC | PC | $ 444.98 | 0% | 0% | $ 444.98 | CAD | $ 684.99 | 35% |
| | | | | | Expected availability date : 2008/10/22 Quantity : 60 | | | | | | | | | | | |

vdd2009-001-107

Parts - Regular Order Entry

Select Product Line

Product Line: Snowmobiles Pool Parts Only

Order Amounts

| | |
|---|---|
| - Parts | $ 66747.00 |
| - Clothing | - |
| - Handling Fees | - |
| - Handling Fees Oil | - |
| - 4% Freight Charges PAC | - |
| - COD | - |
| Order Total | $ 66747.00 |

| Ex. | Line No. | *Part Number | *Req. Qty | B/O | Default Warehouse | Alternate Warehouse | MOQ | Competitive | | | | Del. UOM |
|---|---|---|---|---|---|---|---|---|---|---|---|---|
| | | Description | | Memo | | | Retail | Gross Price | Program Discounts | Other Discounts | Net Price | Net Margin |
| | | | | Expected Availability Date | | | | | | | | |
| | 1.0 | 861002700 | 150 PC | 60 | 88 | 2 | 1 PC | COM | | | | PC |
| | | KIT-SEAT 1+1 BLACK | | Expected availability date : 2008/10/22 Quantity : 60 | | | | $ 684.99 | $ 444.98 | 0 % | 0 % | $ 444.98 | 35 % |

vdd2009-001-108

Parts - Back Order List

Search Results

| Part Number - Description | Order Qty | B/O Qty | BRP Order Number | item | Your Order Number | Order Type | Order Date | Memo | Cancel item |
|---|---|---|---|---|---|---|---|---|---|
| | | Expected Availability Date | | | | | | | |
| 219200561 - DEMO HANDBOOK CDA ENGLISH | 1 | 1 | 1005902304 | 10 | ,SPYDER HANDBOOK | Regular | 2008/07/16 | | ☐ |
| | | No availability date at the present time. Quantity: 1 | | | | | | | |
| 415129424 - ENS BOULON* FASTENER KIT | 20 | 20 | 1005998535 | 10 | S/O | Regular | 2008/09/11 | | ☐ |
| | | Stock delayed. Quantity: 20 | | | | | | | |
| 417300383 - DRIVE BELT | 25 | 25 | 1005767249 | 250 | IO PARTS SKI 2009 | Initial | 2008/05/01 | | ☐ |
| | | Stock delayed. Quantity: 25 | | | | | | | |
| 420620011 - CAMSHAFT | 1 | 1 | 1006009600 | 30 | 19511 | Regular | 2008/09/18 | 01577500 | ☐ |
| | | Expected availability date : 2008/10/15 Quantity : 1 | | | | | | | |
| 504152912 - AXLE-DRIVE ASSY | 20 | 20 | 1005998535 | 40 | S/O | Regular | 2008/09/11 | | ☐ |
| | | Expected availability date : 2008/10/29 Quantity : 20 | | | | | | | |
| 705500824 - 1/2 OZ WEIGHT | 10 | 10 | 1006002188 | 10 | 19509 | Regular | 2008/09/15 | STOCK | ☐ |
| | | Stock delayed. Quantity: 10 | | | | | | | |
| 707600546 - SLIP JOINT | 1 | 1 | 1005987971 | 40 | S/O | Regular | 2008/09/06 | | ☐ |
| | | Stock delayed. Quantity: 1 | | | | | | | |
| 707600546 - SLIP JOINT | 1 | 1 | 1006007034 | 40 | 19510 | Regular | 2008/09/17 | 01734301 | ☐ |
| | | Stock delayed. Quantity: 1 | | | | | | | |

vdd2009-001-109

## BOMBARDIER RECREATIONAL PRODUCTS TRAINING INSTITUTE

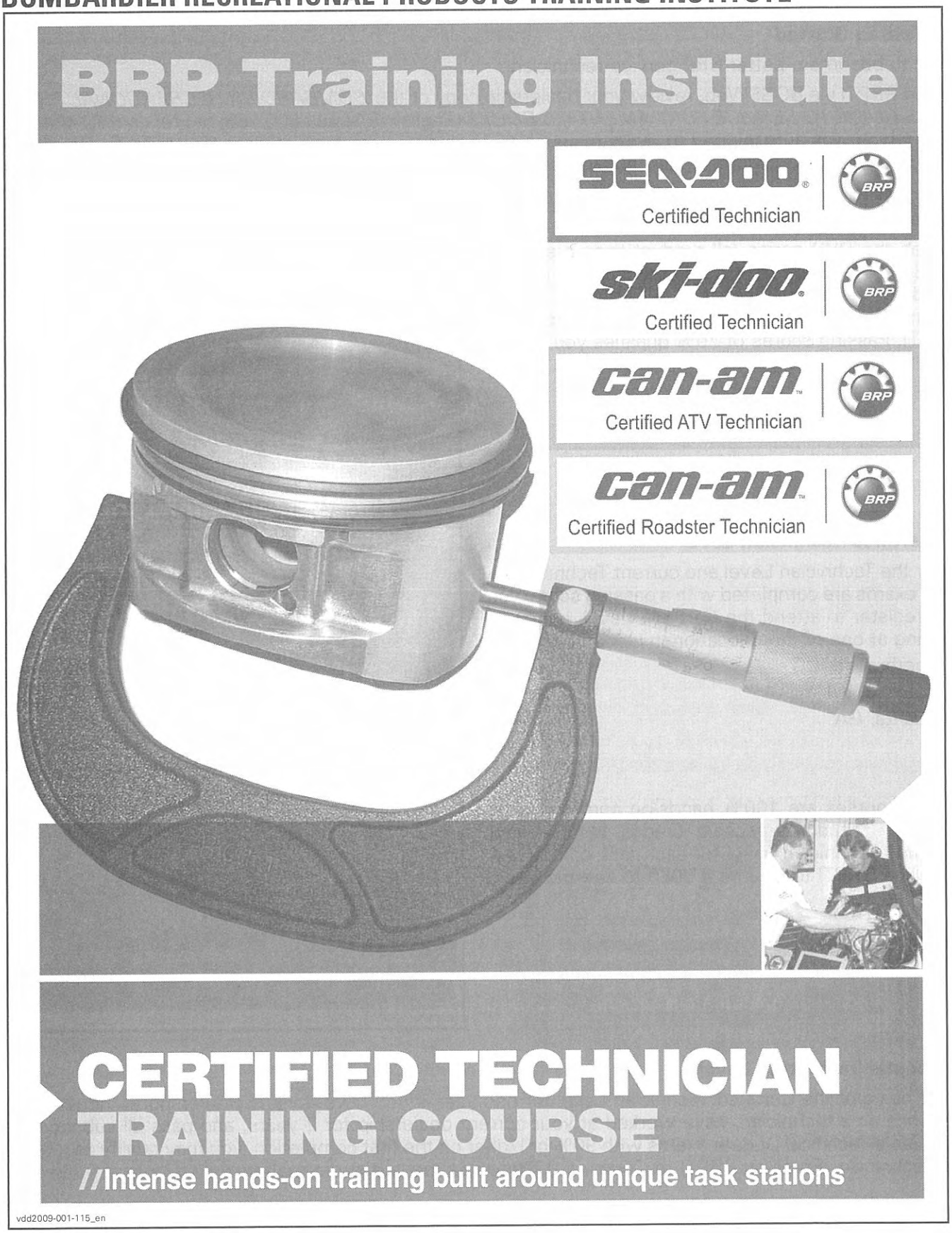

## THE FOUR STEPS TO TECHNICIAN TRAINING

### 1. Getting Started

How to become a better BRP service technician

GO to BRPTI via BOSSWeb, review your dealership copy of the *BOMBARDIER RECREATIONAL PRODUCTS GUIDE TO SERVICE FUNDAMENTALS BOOKS* (English (P/N 484 800 168) or French (P/N 484 800 167) which was autoshipped to every dealership. Then complete the Entrance (Qualifier) Exam on the web site. A passing score of 75% allows you to proceed to the Technician level.

### 2. Technician Level Training

Watch the DVD series (all product lines are DVDs 1-2-3-4-5, DVD 6 Sea-Doo Supercharger, DVD 7 Roadster Technical Overview). Complete all the exams in the Technician Level of your choice on BRPTI. Passing scores of 75% qualifies you for the BRP Technician Level.

vdd2009-001-105

### 3. Certified Technician Level

After the Technician Level and current Technical Update exams are completed with a passing score, you can register to attend the Certified Level, hands-on training at one of three locations:

- Sherbrooke, QC
- Wausau, WI
- Atlanta, GA

vdd2008-001-053

These courses are 100% hands-on and very challenging. Students receive credits toward their Certified Technician Level for each task completed. Enroll on BRPTI to Course # 0060 to see the latest information.

vdd2008-001-054

### 4. Master Technician Level

After being at the Certified Technician Level for one year, if you have 5 years Powersports Industry experience as a technician, have worked at your current dealership for 2 years, and pass all subsequent applicable Technical Update exams with 90% or higher on the first completion, you may qualify as a Master Technician. Enroll on BRPTI to Course # 0070 to see the latest information.

# BOOK AND DVD QUICK P/N REFERENCE

## TECHNICAL UPDATE BOOKS, COMPETITIVE EDGE DVDS, TECHNICAL DVDS, DEALER DEVELOPMENT TRAINING DVDS

| | English | French |
|---|---|---|
| **Technical Update Books** | | |
| 2009 ATV Technical Update Book | 219 100 309 | 219 100 308 |
| 2008 ATV Technical Update Book | 219 100 271 | 219 100 270 |
| 2007 ATV Technical Update Book | 219 100 252 | 219 100 251 |
| 2006 ATV Technical Update Book | 210 100 226 | 219 100 227 |
| **Technical Book** | | |
| BRP Guide to Service Fundamentals and Principles | 484 800 168 | 484 800 167 |
| **Competitive Edge DVDs** | | |
| 2009 ATV Competitive Edge DVD | 716 000 563 | |
| 2008 ATV Competitive Edge DVD | 484 800 458 | |
| **Technical DVDs** | | |
| DVD Series Training Kit (includes a DVD player, Tech DVDs Vol 1 to 5 Intro to BRPTI DVD) | 295 500 954 | |
| Intro to BRPTI DVD | 219 700 196 | |
| DVD 1 Engines | 219 700 197 | |
| DVD 2 Electrical Systems | 219 700 198 | |
| DVD 3 Fuel Systems | 219 700 199 | |
| DVD 4 Suspensions / Chassis / Steering | 219 700 200 | |
| DVD 5 Transmissions / Drive Lines | 219 700 201 | |
| DVD 6 Supercharger (Sea-Doo) | 219 700 273 | |
| **Dealer Development Training DVDs** | | |
| Introduction to Dealer Development Training DVD 1 | 219 700 256 | |
| Dealer Development Training - CSI DVD 2 | 219 700 325 | |
| Dealer Development Training - Service Department Operation DVD 3 | 219 700 329 | |
| Dealer Development Training - Parts Accessories Management DVD 4 | 219 700 403 | |
| Dealer Development Training Selling Skills DVD 5 | 219 700 518 | |
| Dealer Development Training Merchandising DVD 6 | 219 700 519 | |
| Dealer Support/How to do Business w/BRP DVD 7 | 219 700 655 | |
| **2-Up ATV Training Materials (Optional)** | | |
| 2-Up ATV Safety Training Kit | 703 500 434 | |
| Bombardier 2-Up ATV Instructor Safety Training DVD and Guide | 219 700 360 | |
| 2-Up ATV Safety Video (Consumer) | 704 700 076 | 704 700 085 |
| 2-Up ATV Safety Training Instructor's Checklist Pad | 716 000 262 | |

# IN THE EVENT OF FATALITY OR SERIOUS ACCIDENT:

## ACCIDENT PROCEDURE

Since BRP wants to monitor all aspects of accidents involving any BRP product, please call our toll free hotline to report the accident and communicate to us any relevant information.

NOTE: In general, if you are aware that a BRP product is involved in an accident, which has the potential to be related to product quality, or you or BRP are being accused as being responsible, listen and report all the facts (names, addresses, serial numbers, circumstances, etc.).

THE BRP ACCIDENT REPORT FORM IS AVAILABLE FROM BOSSWEB (COMCENTER WARRANTY GUIDE FORMS) OR IN THE ANNEXES SECTION OF THIS BOOK.

- The accident report should be completed and signed by the owner operator; then sent to the BRP Wausau office. (fax: 715 847-6879; Mail: 7575 Bombardier Court, Wausau, WI 54401). Ensure the date of the narrative is filled in.
- Call a Service Representative to open a file you will be advised what to do next.
- Report facts only. Do not investigate or commit yourself, BRP, or others.
- The owner should bring the vehicle to you in order to facilitate the investigation. Isolate and cover the vehicle. Do not make any repairs pending further investigation.
- Take photographs of the damaged product, as verification of the damages, and to avoid any potential claim that the product was destroyed, modified or the evidence was lost.
- In case of PERSONAL INJURIES - DO NOT REPAIR THE PRODUCT. Contact one of the below contact persons.
- Make no admissions, or assumptions on the cause. Keep BRP informed of any further developments.

## IN THE EVENT OF FATALITY OR SERIOUS ACCIDENT:

If a fatality or serious injury occurs in your area involving any BRP product, we ask dealers to adhere to the following procedure. Immediately contact one of the following:

| | Phone | Fax |
|---|---|---|
| Nancy Larsen (English) Coordinator Legal Support | 800 366-6992 ext. 4967 | 715 847-6879 |
| Rich Klein (English) Technical Support Coordinator | 800 366-6992 ext. 6836 | 715 847-6879 |
| Ghislain Cossette (French) After Sales Service Manager | 450 532-2211 | 450 532-6313 |

# What's New

The objective of this section is to give the opportunity to dealers and technicians to learn and understand the differences between this year and last year models on a technical standpoint. **If there are no technical differences, nothing will be shown.**

## What's New:

New set of calibrated springs in the driven clutch.

## Why:

For MY 2009, the DS 70 will be fitted with a different set of calibrated springs in the driven clutch and a 50 tooth rear sprocket. This will allow a lower engagement RPM as well as more low end power on difficult terrain.

These parts can be fitted on a MY2008 DS 70, but in order to do that the following things must be done:

- 88 link chain must be used
- Different rear chain cover and chain protector must be used to make room for the larger sprocket
- Rear chain adjuster must be installed to prevent the chain from rubbing on the frame.

| NEW (P/N ) | |
|---|---|
| V15238DGE000 | SPROCKET RR. 50T- 428 |
| V14428MAB010 | CHAIN 428H -88L |
| V50268DGE000 | CHAIN COVER ASS'Y |
| V50240DGE000 | CHAIN PROTECTOR |
| V22401DGE000 | SPRING CLUTCH 1.6 |

NOTE: The chain adjuster can be used on All mini's to minimize chain adjustment frequency.

## DS 70

INSTRUCTIONS
All-Terrain Vehicles

can-am

**Chain Tensioner (Kit P/N V72301 DGF 000)**

**The following symbols may be used in this document:**

**WARNING**
Indicates a hazardous situation which, if not avoided, could result in death or serious injury.

**CAUTION** Indicates a hazard situation which, if not avoided, could result in minor or moderate injury.

**NOTICE** Indicates an instruction which, if not followed, could severely damage vehicle components or other property.

**WARNING**
- For safety reasons, this kit must be installed by an authorized BRP dealer.
- This kit is designed for specific applicable models only (authorized BRP dealers will confirm model(s)). It is not recommended for units other than the one (those) for which it was sold.
- This instruction sheet MUST be given to the purchaser.

**WARNING**
- Should removal of a locking device (e.g. lock tabs, self-locking fasteners, etc.) be required when undergoing disassembly/assembly, always replace with a new one.
- Torque wrench tightening specifications must strictly be adhered to.
- Always wear EYE PROTECTION AND APPROPRIATE GLOVES when using power tools.
- Unless otherwise specified, engine must be OFF when performing any operation on the vehicle.
- Always be aware of parts that can move, such as wheels, transmission components, etc.
- Some components may be HOT. Always wait for engine to cool down before performing work.

NOTE: The illustrations in this document show typical construction of the different assemblies and may not reproduce the full detail or exact shape of the parts; however, they represent parts that have the same or similar function.

NOTE: Installation time is approximately **0.3** hour.

**PARTS TO BE INSTALLED**

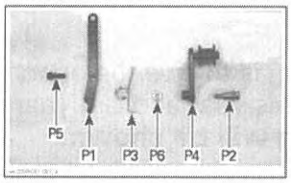


| ITEM | P/N | DESCRIPTION | QTY |
|---|---|---|---|
| P1 | V50300 DGF 000 | Support | 1 |
| P2 | V96000 08033 | M8 x 33 screw | 1 |
| P3 | V50166 CEK 000 ZB0 | Spring | 1 |
| P4 | V50162 DGF 01H | Chain Tensioner | 1 |
| | V60015 CEK 010 | Roller | 1 |
| | V90609 CEK 000 | C-Clip | 2 |
| P5 | V96000 08025 | M8 x 25 screw | 1 |
| P6 | V94101 081 7030 | Washer | 1 |

Printed in Vietnam
©2008 Bombardier Recreational Products Inc. and BRP US Inc. All rights reserved.
®,™ and the BRP logo are trademarks of Bombardier Recreational Products Inc. or its affiliates.
Instruction Sheet P/N 715 900 064 1/2

vdd2009-001-098_en_1

## DS 90

vdd2009-001-012

## What's New:

DS 90 X

## Why:

- 43" wide Double A-arm
- Front HPG shocks with 7" of travel
- 41" rear width
- Rear HPG shock with 9" of travel
- Front and Rear Hydraulic disc brakes
- Nerf bars
- Black Aluminum rims
- Square race-style handle bar pad
- Front bumper with number plate
- X package graphics and seat cover.

## What's New:

New gearbox and shift drum.

## Why:

The original design was to include a reverse gear which never came to be.

The following parts are new for this design and will all be included in a kit which can be installed on a MY 2008 500 engine in the event of a major failure to the gear box or crankcase.

NOTE: At time of publishing kit part number is (P/N 703 500 737).

| Qty | Part Number | Part Description |
|---|---|---|
| 1 | (P/N 420 685 083) | crankcase assembly |
| 1 | (P/N 420 250 130) | oil seal (balance shaft) |
| 2 | (P/N 420 232 855) | ball bearing (balance shaft) |
| 2 | (P/N 420 832 526) | roller bearing (crankshaft) |
| 1 | (P/N 420 232 765) | ball bearing (counter shaft) |
| 1 | (P/N 420 232 291) | ball bearing (counter shaft) |
| 1 | (P/N 420 932 032) | ball bearing (main shaft) |
| 1 | (P/N 420 932 825) | ball bearing (main shaft) |
| 1 | (P/N 420 281 499) | gearbox assembly |
| 1 | (P/N 420 257 808) | shift drum assembly |
| 1 | (P/N 420 685 380) | gasket set |

### 450 EFI

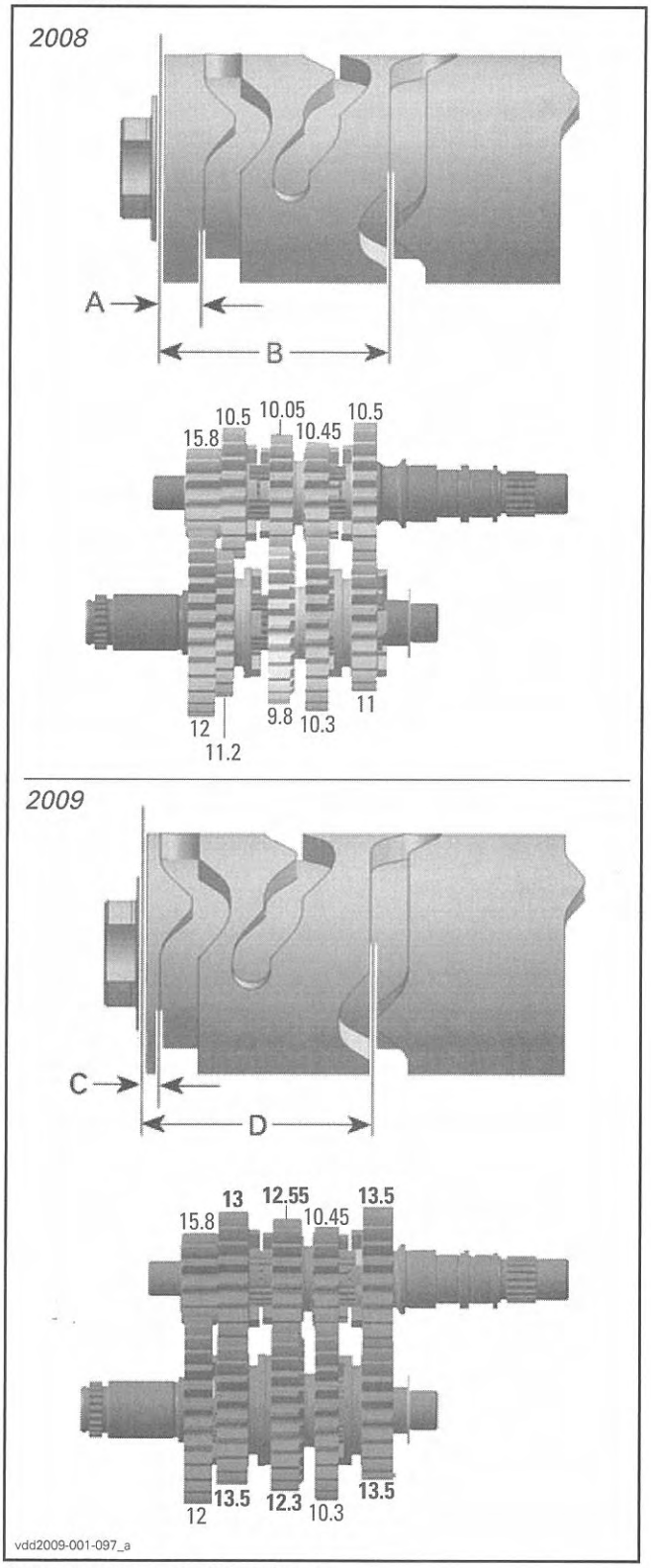


*SHIFT DRUM MEASUREMENTS*
*A. 8.55*
*B. 39.1*
*C. 3.55*
*D. 36.6*

## 450 EFI

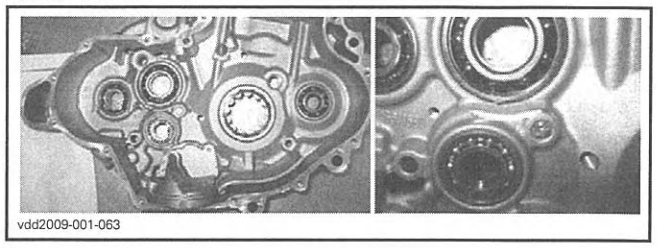
vdd2009-001-063

## What's New:

New crankcase.

## Why:

To accommodate the new gearbox and shift drum.

## What's New:

New long block for 450 EFI.

## Why:

New gear box, shift drum and crankcase.

Retro-fits MY 2008 and will be the only long block available when the old long block is sold out of stock.

## 450 EFI

### What's New:

Additional thrust washer under the valve spring shim.

### Why:

Standardization with the V-991 engine.

NOTE: thrust washer goes under shim.

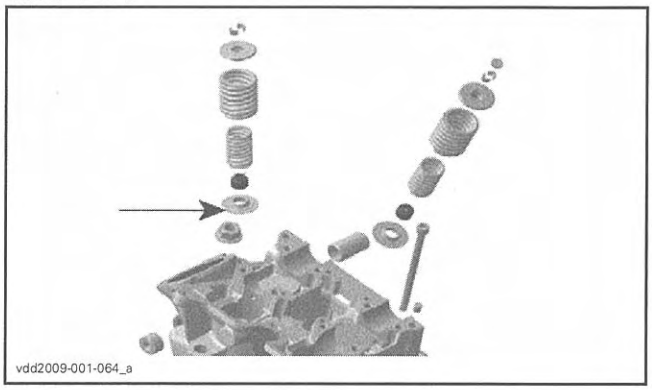
vdd2009-001-064_a

## 800R

### What's New:

New front and rear cylinder heads with additional machining required for new camshafts.

Retrofit on previous engines.

### Why:

More engine output.

NOTE: Additional machining is needed in the area where the arrow is pointing.

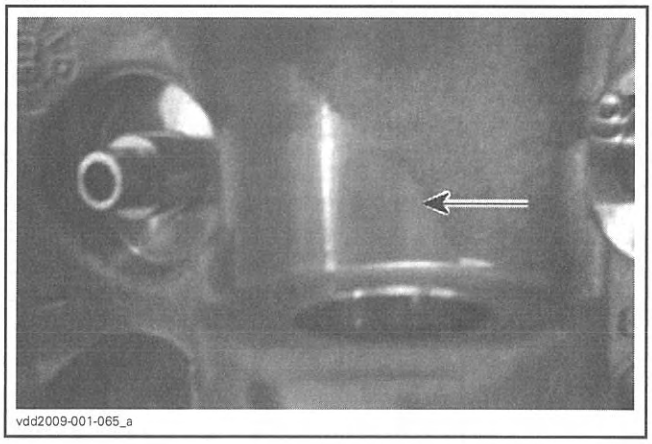
vdd2009-001-065_a

## What's New:

New cam shafts with higher lobes.
Intake: 32,99 mm + / - 0,1 mm
Exhaust: 33,05 mm + / - 0,1 mm
**Not retrofitable on previous engines.**

## Why:

More engine output.

800R

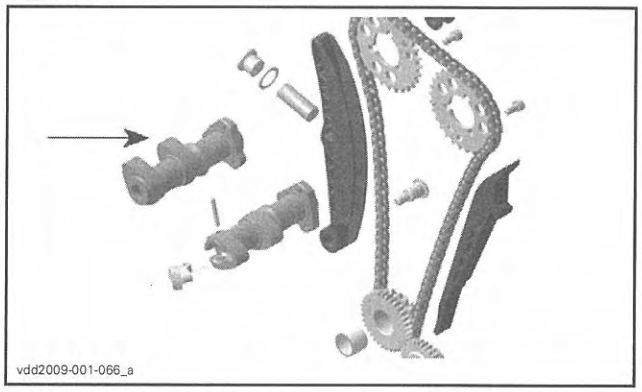
vdd2009-001-066_a

## What's New:

New intake manifold.
Does not retrofit on previous engines.

## Why:

To accommodate new air box design.

800R

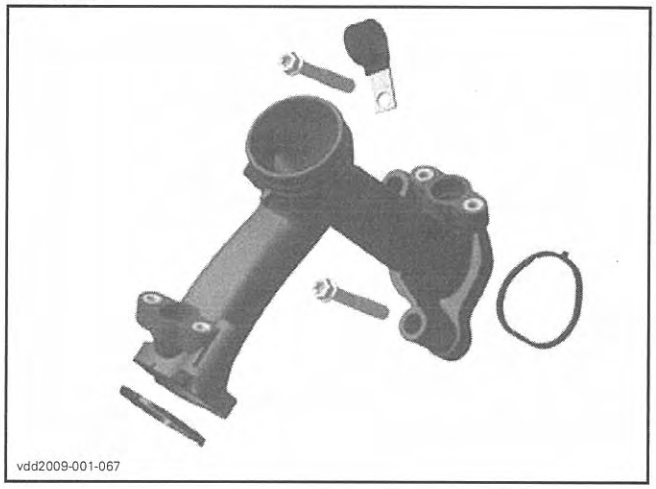
vdd2009-001-067

## What's New:

Fuel injectors.
Does not retrofit on previous engines.

## Why:

Required for higher output engine.
NOTE: The bottom O-ring is also different. The same gasket kit will work on both the 800R and previous 800 engines, the fuel injector O-rings will not be included in the kit.

800R

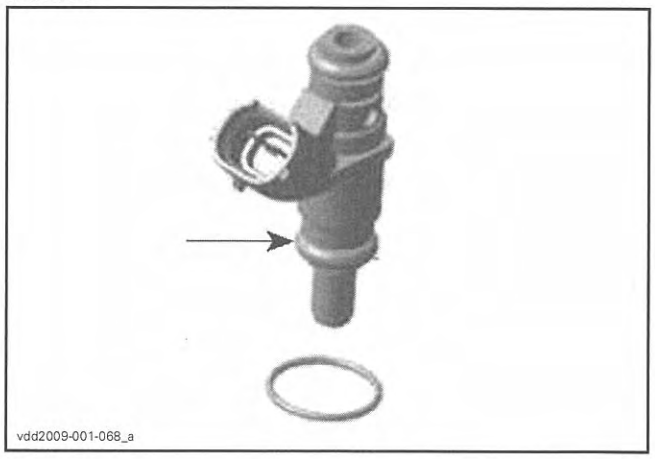
vdd2009-001-068_a

## What's New:

Primary clutch outer half will have electroless nickel plating.

## Why:

Better durability for higher output engine.

800R

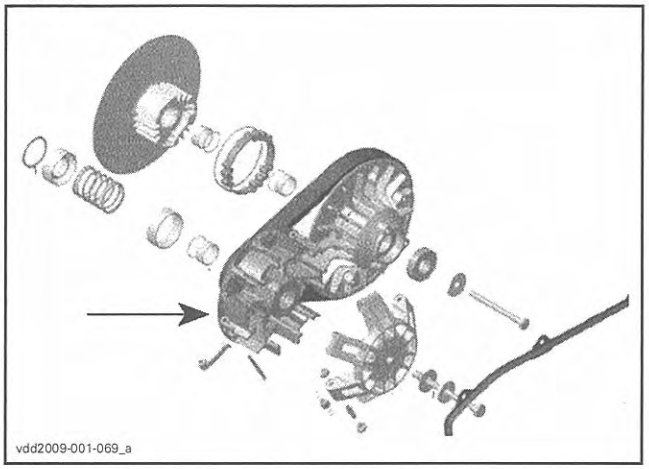


## What's New:

New radius on driven clutch sliding half cam surface along with a new cam.

## Why:

Better durability for higher output engine.

800R

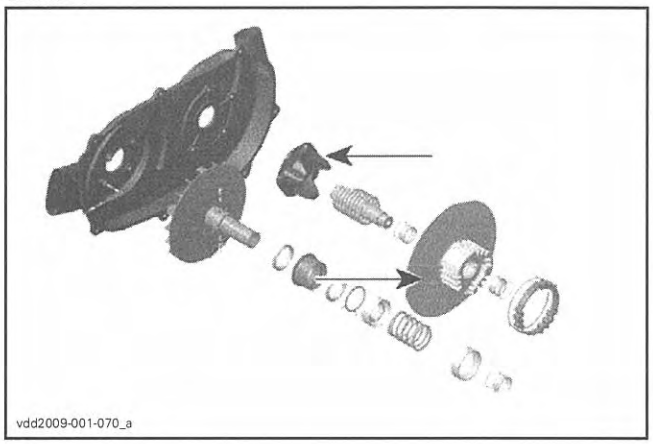


## What's New:

Gearbox contact screws have plug connections instead of M3 hex screw connections.

This will also require a new wire harness.

## Why:

Improved parts.

800R

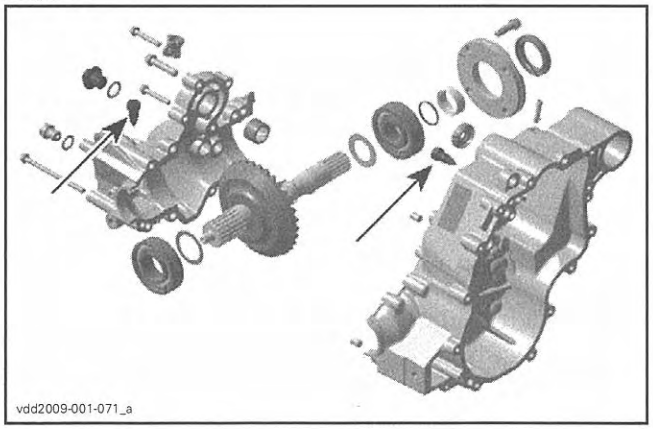

## What's New:

The bevel gearbox gear now has M12 threads to fasten the prop shaft on instead of M10 threads.

## Why:

Improved parts.

**800R**

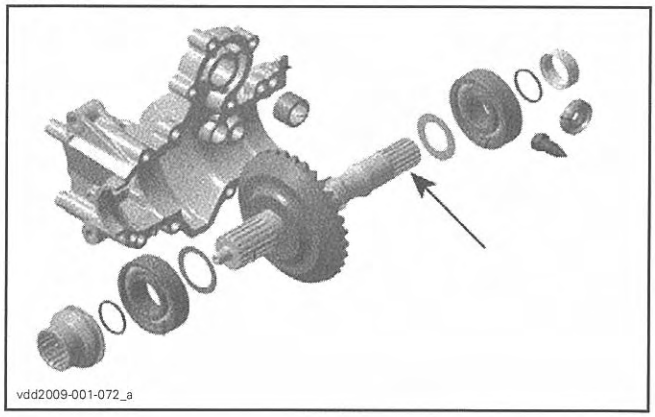
vdd2009-001-072_a

## What's New:

New 4WD shifting fork.
Retrofit on previous engines.

## Why:

Improved ramp for 4WD contact switch.

**800R**

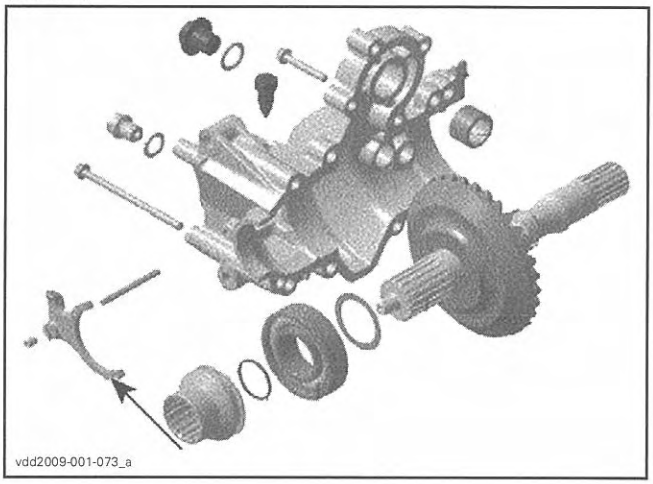
vdd2009-001-073_a

## 800R

## What's New:

ECM

## Why:

Different mapping.

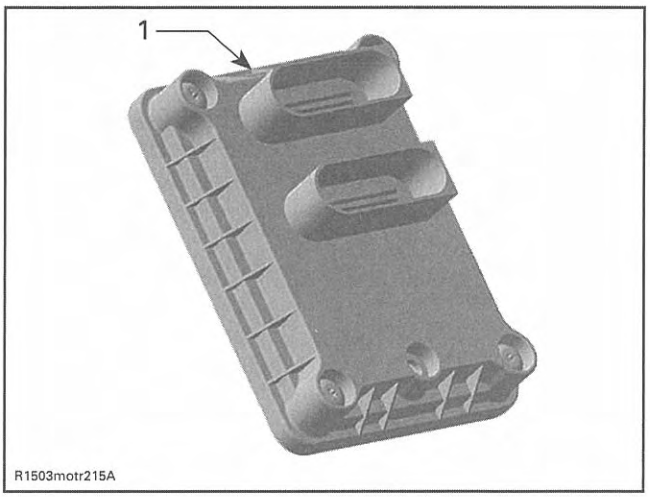


## What's New:

Differences in the EFI 400 versus the carbureted 400.

## Why:

- Basic same fuel injection system as V-twins.
- New CVT cover.
- New magneto with trigger wheel and stator.
- Spring of the driven pulley is different, (P/N 420 280 173) (same spring used for the Outlander 500).
- Governor cup (P/N 420 280 157) the same used for the V-twins (improved roller) needed due to increased engine performance.
- New electric starter (different supplier) plus new brush set.
- New gasket set (including gaskets of intake system).
- New wiring harness and ECU (M3C ECM, same as on the DS 450. Two executions, one for North America and the other for CE).

## ALL V-TWIN AND 400

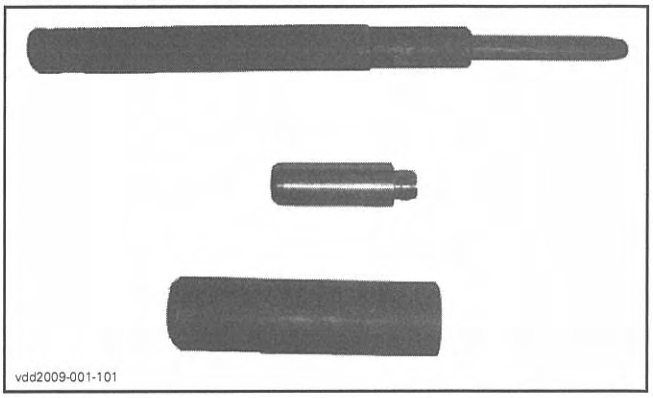


## What's New:

Valve Guides

## Why:

Valve guides that are 'cut to size' for all V-twin models will soon be available. After installation, a 5 mm reamer that is available at various tool suppliers must still be used to ensure the correct size is maintained. The valve guide remover that is listed in the *SHOP MANUAL* (P/N 529 035 924) is already in stock.

NOTE: The valve guide installer listed in the *SERVICE MANUAL* is incorrect, the correct is (P/N 529 036 140).

# Troubleshooting and Tech Tips

In this section you will find the most current tips and solutions concerning situations that occurred during last season, as well as the latest updated procedures information concerning the latest technologies used by BRP. All the troubleshooting procedures should be used in conjunction with the shop manual and other BRP service publications.

## TROUBLESHOOTING AND TECH TIPS INDEX FROM TECH UPDATE BOOKS-2002 THROUGH 2009

| PLATFORM | SUBJECT | YEAR BOOK | DISCUSSED |
|---|---|---|---|
| Quest | Oil pressure switch | 2002/2003 | Different connectors for switch replacement |
| Quest | Transmission index lever | 2002/2003 | New spring and how to connect it |
| Quest | Output shaft | 2002/2003 | Adjusting axial clearance |
| Quest | CDI box | 2002/2003 | Water in connector causing loss of spark |
| Quest | Bendix kick-out in cold weather | 2004 | Reasons why, ways to improve. |
| Quest | Muffler | 2004 | Muffler P/N to help prevent backfires |
| Quest | Solution bendix | 2004 | Explanation, kit P/N's and pictures |
| Quest | Hard shifting | 2004 | Theory and reasons why |
| Quest | Oil pressure | 2004 | New pressure specs |
| Quest | Decompressor | 2005 | Bendix kick outs caused by a faulty decompressor |
| Quest | One way bearing | 2005 | Different executions of the one way bearing |
| Quest and Traxter | Backfires | 2002/2003 | Adjustments and checks to prevent backfiring |
| Quest and Traxter | Carburetor heat elements | 2002/2003 | Part numbers and availability |
| Quest and Traxter | Idle mixture screw tool | 2002/2003 | Picture and P/N of the tool |
| Traxter | Fuel pressure | 2002/2003 | Troubleshooting & proper fuel pressure |
| Traxter | Choke plunger | 2002/2003 | New choke plunger |
| Traxter | Rear axle, differential and brake combination | 2002/2003 | What combinations fit with what. |
| Traxter | Heated grips | 2002/2003 | How to correctly wire heated grips |
| Traxter | XL speedometer | 2004 | Speedo connector and location |
| Traxter | Shifting | 2004 | Detailed information of how the hydraulic shift system works |
| Traxter | Stator connector | 2005 | Electrical issues caused by the stator connector |
| Traxter | Sub transmission shifting | 2005 | Index gear bolt loosening up |
| Traxter | Frame sub transmission pattern | 2005 | Picture and Part Number |
| Traxter | Centrifugal clutch | 2006 | Bushing deformed causing clutch hub not to turn |
| Traxter CVT | Flashing park light | 2006 | Reason why park light flashes |
| Traxter CVT | Pistons | 2006 | Piston change and differences |
| Quest and Traxter CVT | Stick coil wire | 2005 | Routing and loss of spark |
| Quest and Traxter CVT | Rewind | 2006 | Rewind starter kit |
| DS 650 | Wheel nut torque | 2004 | Correct wheel nut torque |
| DS 650 | Jack nuts | 2004 | Tools to install Jack Nuts |
| DS 650 | Clutch springs | 2005 | Stiffer clutch spring P/N's |
| Rally | Valve train noise | 2004 | Low oil pressure causing noise |

| PLATFORM | SUBJECT | YEAR BOOK | DISCUSSED |
|---|---|---|---|
| Rally | Carburetor heater | 2004 | Correct reassembly of carburetor heater |
| Rally | Intake manifold clamp | 2006 | New clamp being used |
| Rally | Voltage regulator | 2006 | Regulator and stator update kit |
| Rally | Sprag clutch | 2006 | Sprag clutch update |
| Mini's | Hard starts when cold | 2004 | Cold start discussion |
| Outlander & Traxter CVT | FAIL and SCALE message | 2005/2006 | Reasons for SCALE and FAIL messages displayed on speedometer |
| Outlander 330 | Clutch engagement | 2005 | How to smooth out clutch engagement |
| Outlander 330 | Decompressor | 2005 | Decompressor removed |
| Outlander 400/330 | Front brakes | 2005 | Rapid brake wear options |
| Outander 400/330 | Heat shields | 2005 | Optional exhaust heat shield kits |
| Outlander 400/330 | Oil in air box | 2005 | Crankcase vent theory and reasons for oil in air box |
| Outlander 400/330 | Crankcase coolant leak | 2005 | Explanation and repair of coolant leak between the CVT clutches |
| Outlander 400/330 | Hard shifting when warm | 2005 | Shift drums seizing in crankcase when engine gets warm |
| Outlander 400/330 | Rear accessory wires | 2005 | Only on 2003 Outlander |
| Outlander 400/330 | Oversize pistons | 2006 | P/N's of 1st oversize pistons |
| Outlander 400/330 | Bendix cover | 2006 | New execution cover with metal sleeves |
| Outlander 400/330 | Prop shaft | 2006 | Proper indexing |
| Outlander 400/330 | New struts | 2006 | New struts, must replace as a set |
| Outlander 400/330 | Voltage regulators | 2006 | Info on new regulators and relocation kit |
| Outlander 400/330 | Speedo lens fogging | 2006 | Replace lens only as per SB 2005-3 |
| Outlander 400/330 | Speedo wires | 2006 | Location of wires to change MPH to KM or vise versa |
| Outlander 400/330 | Frames | 2006 | Frame improvements and 2003-4 frames subbing up to 2005 frames |
| Outlander 400/330 | 4 wheel drive selector | 2006 | Operation and theory |
| Outlander 400/330 | CVT maintenance | 2006 | Extra maintenance for severe usage |
| All Models | Wheel bolt patterns | 2004 | Wheel bolt patterns |
| All Models | Tire ratings | 2006 | Info on how tires are rated |
| All Models | Wheel bolt patterns | 2006 | Wheel bolt patterns |
| CVT Only models | Ramps for CVT's | 2005 | Ramp identification |
| DS 250 | Transmission oil level | 2007 | Checking transmission oil level |
| DS 250 | Starter switch | 2007 | Repairing the starter switch |
| Outlander 400/330 | Cylinder head | 2007 | New execution head |
| Outlander 400/330 | Prop shaft | 2007 | Retro-fitable prop shafts |
| Outlander 400/330 | Cold starting | 2007 | Cold start discussion |
| Outlander 400/330 | Gauge zeroing | 2007 | Procedure on how to zero the gauge |
| Outlander 800 | Cold start and P0600 | 2007 | Explanation of cold start and P0600 |
| Outlander 800 | Bearing cover oil leak | 2007 | Repair with old and new bearing covers |
| Outlander 800 | PTO seal | 2007 | Early production seal vs later production |
| Outlander 800/650 | Winch diode | 2007 | Winch diode harness on 2006 XT's |

| PLATFORM | SUBJECT | YEAR BOOK | DISCUSSED |
|---|---|---|---|
| All V-twin's | CVT cover drain | 2007 | Location of CVT cover drain |
| All V-twin's | Air filter | 2007 | Air filter tips |
| All V-twin's | ECM adapter tool | 2007 | ECM pin out tool |
| All V-twin's | Brake message | 2007 | Reason's for the brake message |
| All V-twin's | Onboard diagnois | 2007 | How to access onboard diagnois |
| All V-twin's | Hi speed displayed | 2007 | Why Hi Speed is displayed |
| All V-twin's | Ground & Battery | 2007 | Ground checks and correct battery installation |
| All V-twin's | Speedometer and speed sensor | 2007 | Discussion on speedometer theory and issues |
| All V-twin's | Start up & shut down | 2007 | Theory and operation on engine start up & shut down, fuse box and diodes |
| All V-twin's | Security exchange | 2007 | Security exchange program |
| All V-twin's | Fuel pump | 2007 | Fuel pump power up |
| All V-twin's | Cooling fan | 2007 | Fan operation and temperature settings |
| All V-twin's | Drowned engine model | 2007 | Theory and access |
| All V-twin's | Limp home | 2007 | Various limp home RPM's |
| All V-twin's | Hour and RPM info | 2007 | Recorded hour and RPM info |
| All V-twin's | Maintenance message | 2007 | When it's displayed |
| All V-twin's | Oil in air box | 2007 | Theory of operation and reasons why |
| All V-twin's | Centrifugal lever chart | 2007 | V-twin's centrifugal lever chart |
| All V-twin's | Recorded info | 2008 | Where recorded info originates from |
| All V-twin's | Cylinder shutdown | 2008 | Theory of operation |
| All V-twin's | Calibration update | 2008 | Reminder to change the cluster coding |
| All V-twin's | Cold starts | 2008 | Detailed discussion of what may happen when the weather gets cold. |
| All V-twin's | Heat shields | 2008 | Heat shield bulletin |
| All V-twin's | Foam air filter | 2008 | Foam air filter kit |
| All V-twin's | Rear half shafts and boot kit | 2009 | New generation |
| All V-twin's | Crankcase oil groove | 2009 | Need for more oil |
| All V-twin's | Engine CVT lever chart | 2009 | Chart of ramps |
| All V-twin's | Muffler mounting | 2009 | 2 bolts and fastening the muffler directly to the frame |
| All Models | Wheel bolt patterns | 2004 | Wheel bolt patterns |
| All Models | Wheel bolt patterns | 2007 | Wheel bolt patterns |
| All Models | Tire ratings | 2006 | Info on how tires are rated |
| All Models | Wheel bolt patterns | 2006 | Wheel bolt patterns |
| All Models | Differential casting marks | 2008 | What they are |
| All Models | Servicing half shafts | 2009 | Running change |
| All Models | Wheel bolt patterns | 2009 | General information |
| All Models | Positioning of the rear hub during chain adjustment. | 2009 | Chassis may bottom out |
| All Models | Battery and winch | 2009 | When using the winch "low battery" scrolls across the display |
| All Models | First 10 Hour Maintenance Message | 2009 | 10 hour maintenance message is a one time |

| PLATFORM | SUBJECT | YEAR BOOK | DISCUSSED |
|---|---|---|---|
| Outlandre 400 EFI | Gear position display | 2009 | Owner manual correction |
| Outlandre 400 EFI | Countershaft 400 and 400 EFI parts | 2009 | New execution distance sleeve and O-ring used on the countershaft |
| Outlandre 400 EFI | 400 EFI encoder wheel marks | 2009 | 400 EFI uses the same encoder wheel as the V-twin engines |
| CVT Only models | Ramps for CVT's | 2005 | Ramp identification |
| 800R | Gasket kit for engine | 2009 | The 800R engine utilizes different fuel injectors |
| All Outlander | Differential shimming | 2007 | New shimming procedure |
| All Outlander | Auxiliary power supply | 2007 | Auxiliary power supply |
| All Outlander | Prop shaft grease fitting | 2007 | New grease fitting and needle point fitting |
| All Outlander | Front half shaft | 2007 | New clip used in front half shafts |
| All Outlander | MY 2008 Outlander speedometer button | 2009 | The speedometer mode button's magnet was coming out |
| All Outlander | Racing swing arms | 2009 | Swing arms bending |
| Outlander and Renegade | Wires | 2009 | Wire splices under the fuse box. |
| DS 450 | DS 450 engine overheat limp home re calibration | 2009 | New calibration for the engine overheat limp home in B.U.D.S. 2.3.19. |
| DS 450 | DS headlight regulator | 2009 | DS 450 employed a headlight regulator |
| DS 70 | DS 70 performance | 2009 | Different calibrated springs in the driven clutch |
| B.U.D.S. Stuff | Cluster country | 2008 | Explanation of cluster country |
| B.U.D.S. Stuff | Idle By-pass Valve | 2008 | What IBV is in BUDS |
| B.U.D.S. Stuff | Communication with the 400 EFI and DS450 | 2009 | The 400 EFI and DS 450 are using the new M3C ECM. |

## WIRE SPLICES UNDER THE FUSE BOX OUTLANDERS AND RENEGADES

Under the fuse box there are several groups of wires that are spliced together by a process called electro sonic welding.

There is a remote possibility that if these splices are continually subjected to water some corrosion may occur.

If that happens you may experience some strange electrical problems which would depend on what splices are affected. There may or may not be any **Fault Codes activated**.

So if you have an intermittent electrical problem, this is one area you may want to investigate. Simply remove the fuse box, inspect the splices and repair as needed.

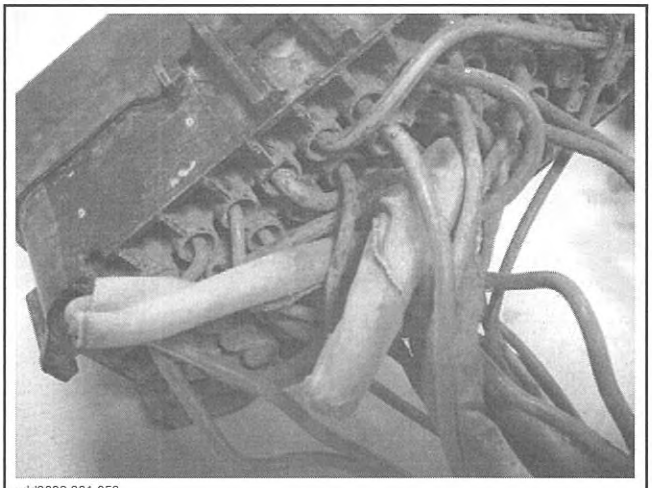

vdd2009-001-052

## SERVICING HALF SHAFTS

In 2006 we made a running change regarding the way the CV joint (wheel side) and plunging joint (differential side) are secured to the inner shaft on the front half shaft assemblies.

Instead of using a an external clip that must be removed before disassembling these joints, we are now using an internal circlip that is located in a groove at both ends of the shaft.

In 2008 we also made a change on the rear half shaft assemblies in that they are now also using the internal circlip as well.

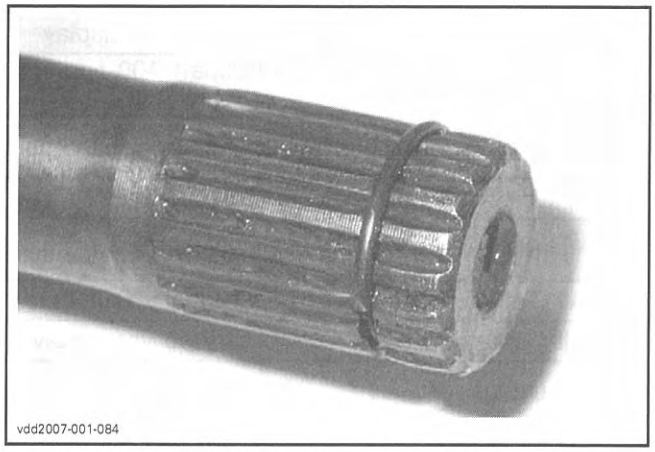

vdd2007-001-084

Disassembly:

To separate the joints from the shaft the *SHOP MANUAL* speaks of a special tool that may or may not work so good. We have found that the best way to separate the joints was to mount the assembly securely in a vise, then with an aluminum or brass drift against the inner race, forcefully impact the joint off the shaft.

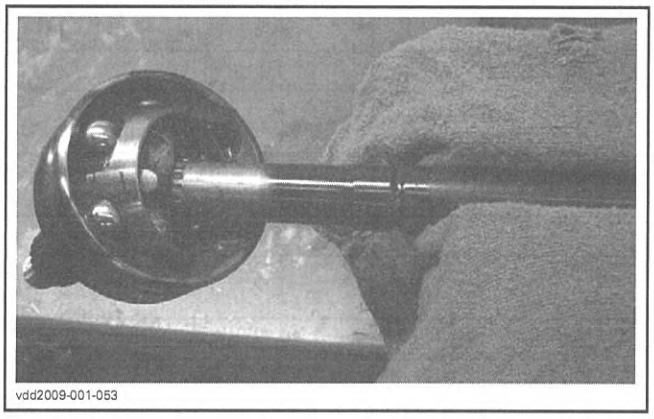

vdd2009-001-053

In some cases you may have to hit one side, then move the assembly 180 degrees in the vise and hit the other side until the joint is off.

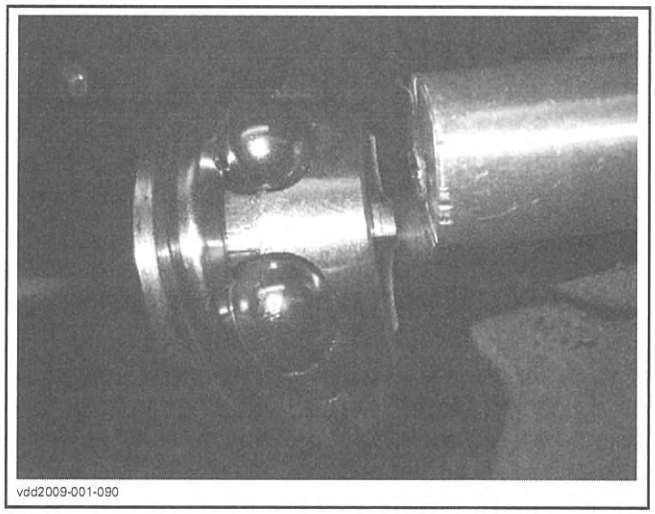

vdd2009-001-090

Re-assembly

[1] New

[2] Modified New

[3] Old take-off from shaft.

For re-assembly care must be taken so the internal circlip stays in it's groove when the inner race is installed back onto the shaft. We have found that if the circlip is bent so it's a bit smaller for a tighter fit [2] in the groove it helps on re-assembly.

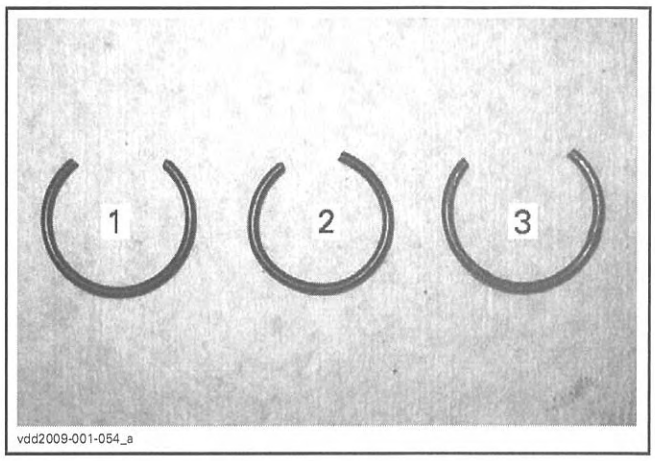

vdd2009-001-054_a

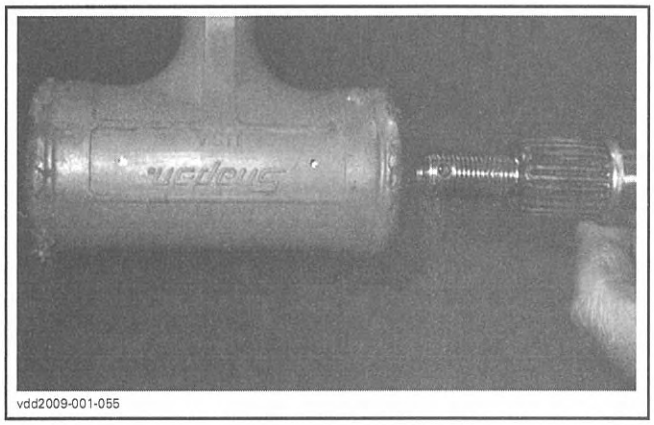
vdd2009-001-055

Slide the boot and the clamps onto the shaft. With the circlip in place, align the inner race squarely with the shaft splines, then using a dead blow hammer, strike the end of the joint. The joint should slip over the shaft until it bottoms out. If the joint doesn't slide on, there is a good chance that the circlip came out of it's groove. Check, and if it did, try again with a new circlip, that fits tightly in the groove.

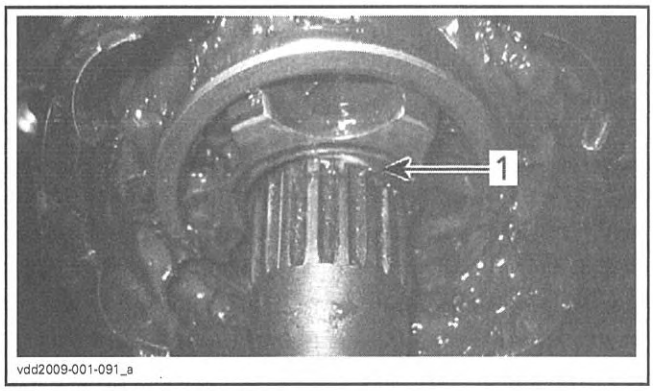

vdd2009-001-091_a

*CIRCLIP OUT OF GROOVE*

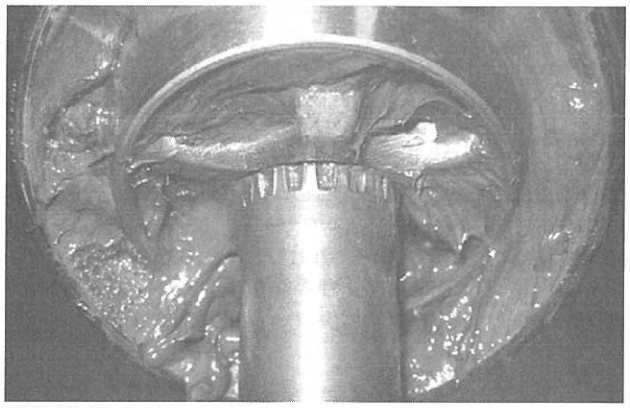
vdd2009-001-092

*PLUNGING JOINT SIDE SEATED*

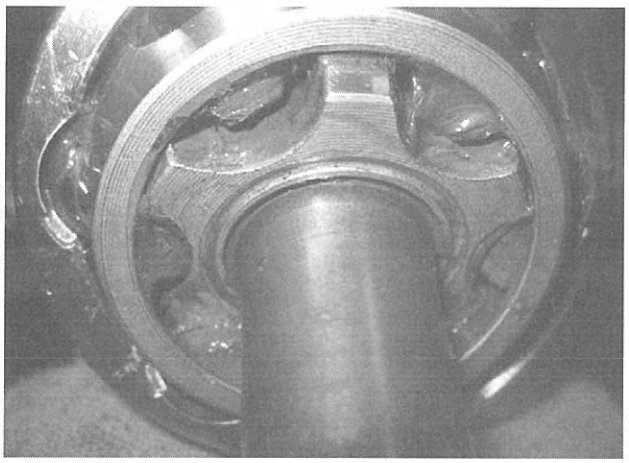
vdd2009-001-093

*WHEEL SIDE JOINT SEATED*

Lastly grease the joint liberally, fit the boot in place, then install the clamps on the boot. Most boots are now made of a harder material that make the clamp more difficult to install then previous executions.

Service Bulletin 2008-10 tells us of a new tool that makes clamp installation much easier. Use this new tool (P/N 529 036 120) to install the clamps to complete the job.

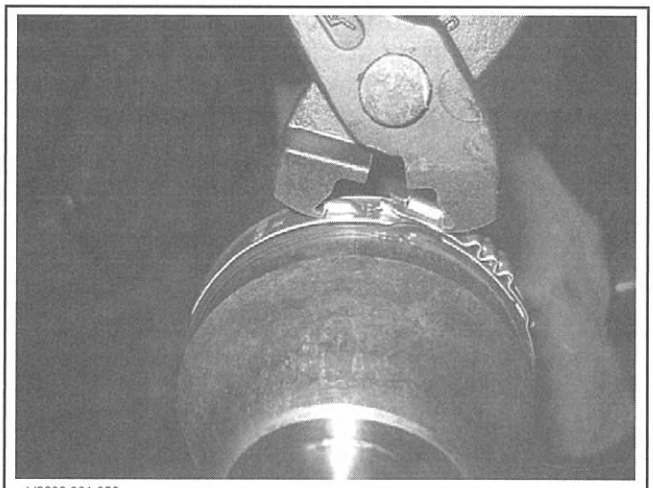
vdd2009-001-056

## REAR HALF SHAFTS AND BOOT KITS

Since the introduction of the V-twins (Outlander 800, 650 and 500; Renegade 800 and 500) we have used three generations of rear half shafts and boot kits. The half shaft assemblies can be used with any model and model year, however the individual parts for those assemblies are not interchangeable.

History:

2006-2007 V-twin models use half shaft assemblies (P/N 705 500 726) (L/H) and (P/N 705 500 727) (R/H). These assemblies employ an external removal clip that hold the joints on the inner shaft. These assemblies require boot kit (P/N 705 500 855). The boots used in these kits are made out of a rubber compound.

vdd2009-001-076

In the beginning of MY 2008 production V-twin models used rear half shaft assemblies (P/N 705 500 867) (L/H) and (P/N 705 500 868) (R/H). These assemblies employ an internal circlip that hold the joints on the inner shaft. These assemblies require boot kit (P/N 705 500 953) which is exactly the same as the above boot kit (P/N 705 500 855) with the exception that it includes the internal circlip.

vdd2009-001-074

Late production MY 2008 and all present and future production (until further notice) V-twin models use rear half shaft assemblies (P/N 705 500 979) (L/H) and (P/N 705 500 983) (R/H).

These assemblies also employ the internal circlip and are identical to the previous versions with the exception of the machined grooves where the boot clamp is secured to the joint (the grooves are wider). These assemblies require boot kit (P/N 705 500 870). This boot is made of a harder material (TPE) which is the latest technology in boots and are expected to provide improved durability.

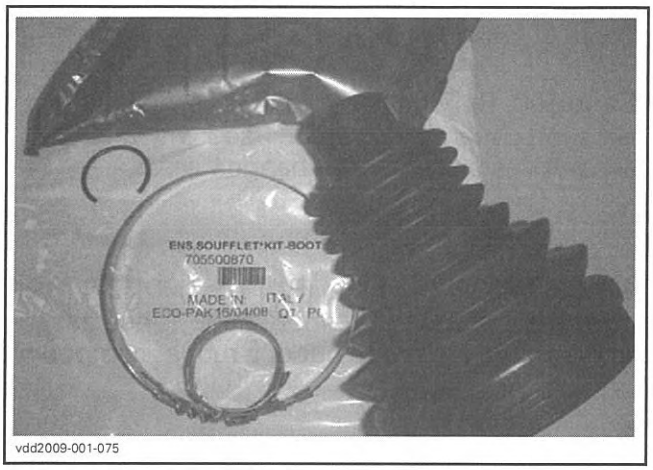

vdd2009-001-075

Note on Boot Kits:

The rubber type boot kits and TPE type boot kits are not interchangeable. The clamps used on the rubber boot kits are narrower (7 mm) then the clamps used on the TPE boot kits (10 mm).

To be able to tell the difference between the shafts:

- Half shaft assemblies (P/N 705 500 726) and (P/N 705 500 727) use an external clip to hold the joints on to the inner shaft and use a rubber boot.
- Half shaft assemblies (P/N 705 500 867) and (P/N 705 500 868) use an internal circlip to hold the joints on to the inner shaft and use a rubber boot.
- Half shaft assemblies (P/N 705 500 979) and (P/N 705 500 983) use an internal circlip to hold the joints in to the inner shaft and use the harder TPE boot.

## EFI 400 GEAR POSITION DISPLAY

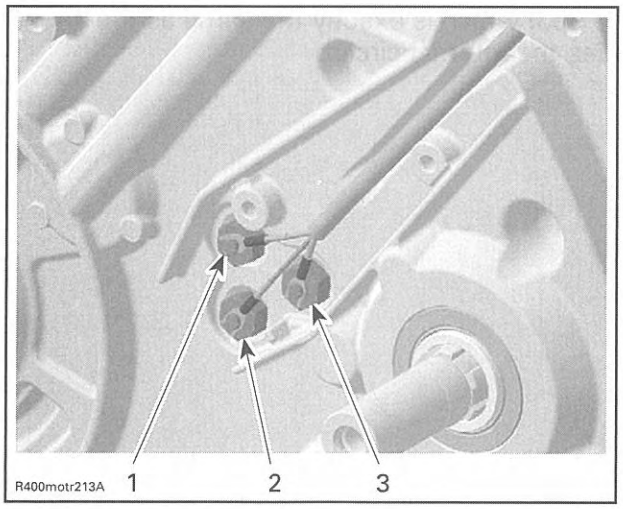

R400motr213A

1. *Parking switch (Blue wire)*
2. *Reverse switch (Brown wire)*
3. *Neutral switch (Green / Yellow wire)*

The EFI 400 owners manual states that all gear positions P R N H L will be displayed on the gauge cluster. This is not correct as the EFI 400 is equipped with the same gear position switches as the carbureted 400 and thus is not capable of displaying H and L. So only P R and H will be displayed. The owners manual are corrected for MY 2009.

## B.U.D.S. COMMUNICATION WITH THE 400 EFI AND DS 450

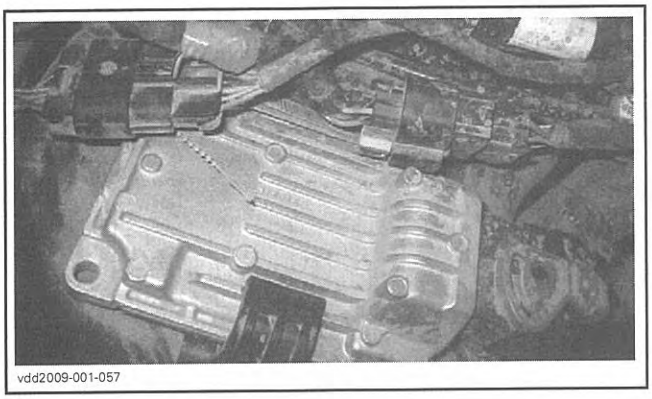
vdd2009-001-057

The 400 EFI and DS 450 are using the new M3C ECM. This new ECM is smaller and uses different connectors.

For BUDS communication:
- Use the MPI-2- (the MPI-1 will not work)
- Choose KW 2000 (500k) protocol
- Must NOT use the DESS post interface
- Must NOT have an MPI-1 and MPI-2 connected to your computer at the same time
- Use at least 2.3.19 software.

**NOTE:** The 400 EFI or the DS 450 are NOT DESS capable for MY2008 and MY2009, therefore the key does not have to be programmed.

**NOTE:** Exclusive for the DS 450, the P 1600 code will always be active unless a gauge cluster is connected to it.

## DS 450 ENGINE OVERHEAT LIMP HOME RE-CALIBRATION

We recently came out with a new calibration for the engine overheat limp home in B.U.D.S. 2.3.19. (See ATV Competition Bulletin 2008-002). It's important to understand that all this does is change what temperature the engine goes into limp home and the limp home RPM's. It does not change any engine management calibration that could possibly make the engine run cooler. If an engine was overheating before the calibration update, and all that was done was the calibration update, the engine will still overheat. That said, we are getting a few reports on engine overheating and the complaint is that the calibration update did not remedy the problem.

If an engine is overheating, it has to be troubleshot like any other engine that overheats, coolant level low, thermostat stuck, water pump not tuning, radiator issues, etc. Special note on this is that the radiator is out in front of the unit. If a number plate partially covers the radiator, or if the radiator is partially clogged it could contribute to an engine overheat.

| NEW CALIBRATION CHANGES | STEP 1 | STEP 2 | STEP 3 |
|---|---|---|---|
| Old calibration | 110c (230 F) Blinking RED Lamp, rev limiter @ 5000 | | |
| New calibration | 110c (230 F) Blinking RED Lamp, normal Rev Limiter @ 10250 | 119c (246 F) Blinking RED Lamp, rev limiter @ 8750 | 130c (266 F) Blinking RED Lamp, rev limiter @ 7000 |

**NOTE:** the fan also turns on 2c (3.6 F) earlier @ 96c (205 F) vs 98c (208 F) and shuts off 1c (1.8 F) later @ 94c (201 F) vs 95c (203 F).

## DS HEADLIGHT REGULATOR

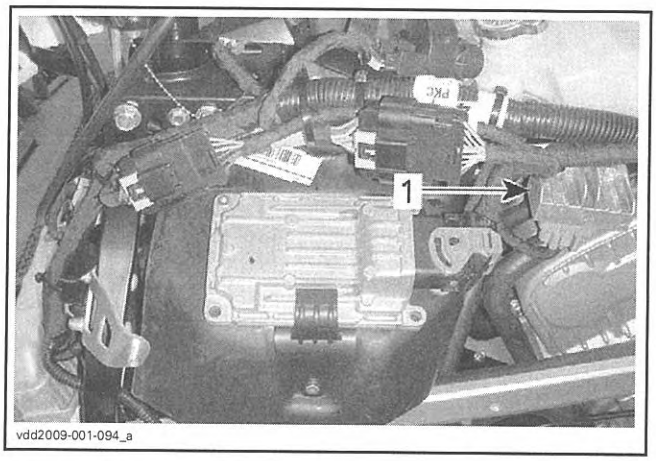

vdd2009-001-094_a

For MY 2008 the DS 450 employed a headlight regulator **[1]** that regulated power to the head and tail lights. It was mounted in series with the voltage regulator and it's function was to compensate for the lack of stator output at lower RPM's to get the necessary power to the ECM and engine components so the engine will run correctly.

At idle and low RPM's there is not enough stator output for the ECM, engine components, head and tail lights. The head light regulator **[1]** reduces the power to the head and tail lights by a process called *PULSE WIDTH MODULATION* which simply switches on and off the power to these components keeping the battery voltage high enough to power the ECM and engine components.

At the same time the head light regulator **[1]** was working, the ECM also senses lower power and compensated for it by raising the engine RPM to produce more.

During further testing of the electrical system later in 2008, it was found that the ECM's raising of the RPM's was enough to compensate the power loss, thus the head light regulator **[1]** was eliminated for MY 2009. Therefore this regulator is not produced anymore and once this part (P/N 710 001 028) is out of inventory it will no longer be available.

If in the future the head light regulator fails and no more parts are available, simply cut the red black and red violet off the regulator and wire them together.

## 400 EFI ENCODER WHEEL MARKS

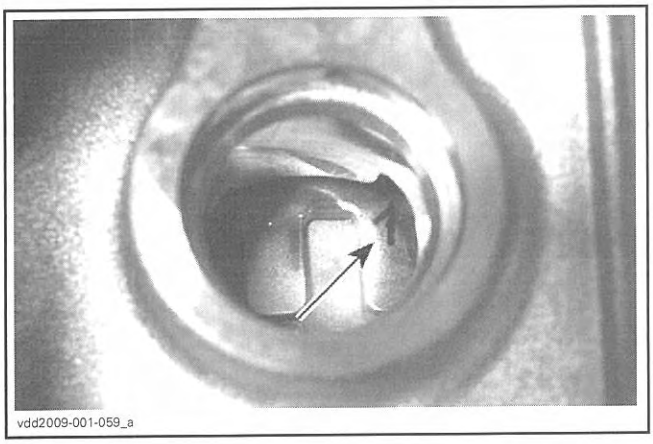
vdd2009-001-059_a

For standardization the 400 EFI uses the same encoder wheel as the V-twin engines. This encoder wheel has a '1' and a '2' stamped on it to denote TDC on the number one and number two cylinder respectively when it is aligned with the notch on the generator cover.

The 400 EFI does not have a notch on the generator cover and even if it did neither the '1' or '2' mark on the encoder wheel would align with it at TDC.

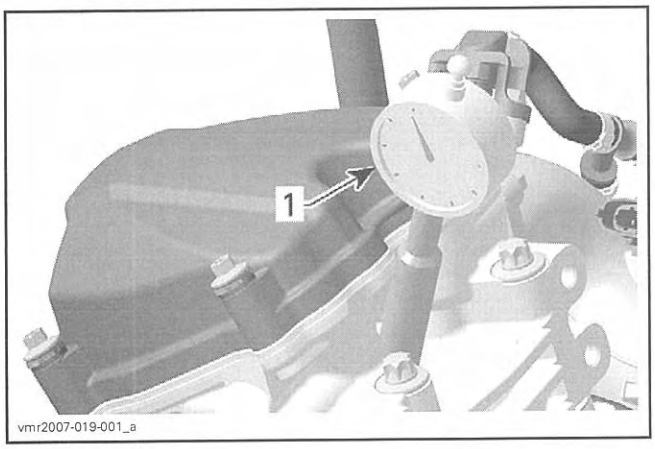

vmr2007-019-001_a

The best way to find TDC compression stroke when the engine is assembled is remove the spark plug, turn the engine in the direction of rotation, and watch the intake valve open. Keep turning the engine and when it's about closed, install a dial gauge **[1]** and find TDC (or install a zip tie or straw into the spark plug hole and "feel" for TDC). Now remove the crankcase screw in front of the engine, find the notch in the crankshaft with a screwdriver, then install the crankshaft locking bolt (P/N 529 035 617).

You can also get close to TDC compression stroke by using the above method (TDC compression right after the intake valve closes) and watching for the number '1' on the encoder wheel through the CPS hole. This picture shows approximately where the number 1 mark will be at TDC. Use it as a reference only, as the sure way to know when the engine is at TDC is with the crank locking tool installed.

## GASKET KIT FOR 800R ENGINE

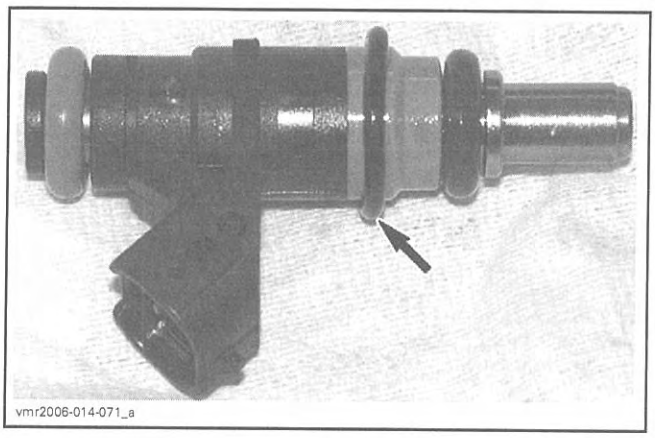
vmr2006-014-071_a

The 800R engine utilizes different fuel injectors versus the previous 800 engine and these new injectors use a different O-ring going into the fuel rail. In order to have just one gasket kit that will be standard for both engines, it was decided that the fuel injector O-rings be omitted altogether from it.

This new gasket kit will have a new part number and as soon as the old kits are out of stock it will be the only one available. Therefore, if new fuel injector O-rings are required, they must be ordered separately from the kit.

## MY 2008 OUTLANDER SPEEDOMETER BUTTON

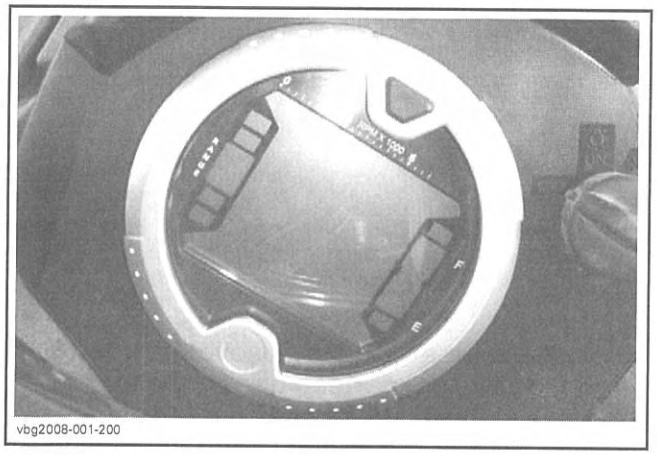
vbg2008-001-200

On MY 2008 Outlanders the speedometer mode button's magnet was coming out which would not allow scrolling of the different modes. We came up with 2 new buttons, one that was glued in better then the original button, and then we came out with the magnet that was encapsulated inside the button. The encapsulated button is the only one available now and it's part number is (P/N 710 001 473). *WARRANTY BULLETIN 2008-1* goes into more details, but the only number that was listed in the bulletin was the button that was glued better which again is no longer available.

## RACING SWING ARMS FOR OUTLANDER

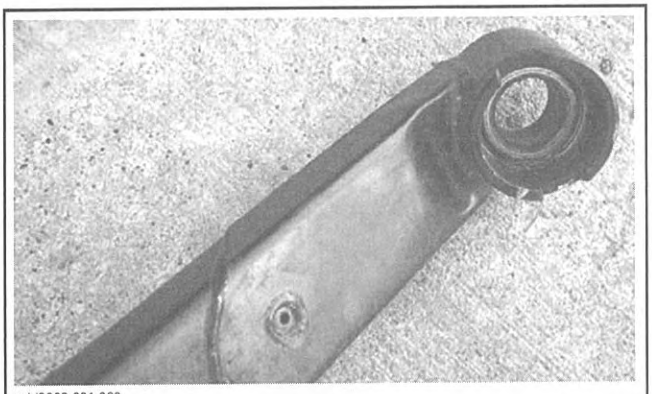

vdd2009-001-060

We had several reports of swing arms bending on Outlanders. We know that if the ATV is being jumped and the operator does not let off on the throttle when it's airborne there is a tremendous amount of torque that is transferred from the tire to the swing arm upon landing. In some extreme cases this force exceeds the design limits and it will bend. In this situation, the swing arm is the fuse, if it did not bend, something else would. Swing arms that are bent because of this are not considered a manufacturer's defect, therefore warranty will not apply.

We have come out with a "Racing swing arm" for the Outlander which is basically the same design as the Renegade swing arm. The only real difference is the shock mount, which is in a different location on a Renegade. A single swing arm can be replaced however it is recommended to replace them as a set. Renegade torsion bar spline levers must also be used.

Installing these racing swing arms will allow the rider to put more force in that area but will not guarantee that they won't bend again. If an operator continues not letting off the throttle in jumps, there may be a time when it lands in a certain fashion where it may bend again.

The below numbers are also in the *ELECTRONIC PARTS CATALOGUE*:

- Left swing arm (P/N 706 000 584)
- Right swing arm (P/N 706 000 586)
- Lever (P/N 706 000 519).

## V-TWIN CRANKCASE OIL GROOVE

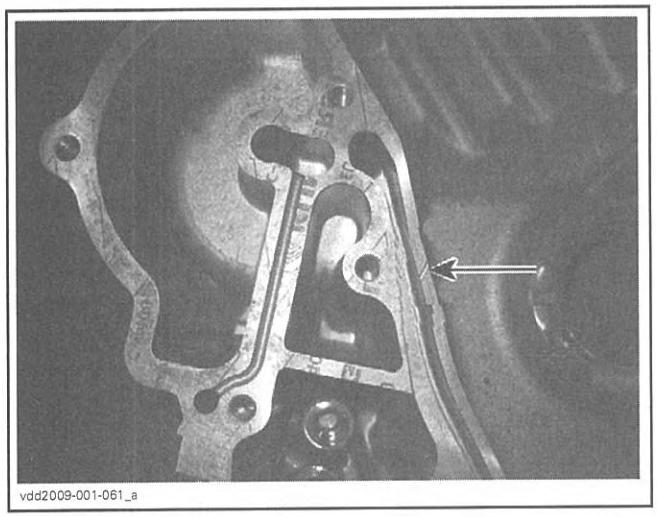

vdd2009-001-061_a

When the V-500 engine was being developed it was found that there was a need for more oil on the skirt on the front piston. Rotax remedied the situation by machining a groove in the crankcase at an oil channel to allow oil to be sprayed on the piston. Now, since all V-twins use the same crankcase, this groove will be found on all production engines, and as well on replacement crankcases.

Be sure that upon assembly sealant doesn't cover that groove up, as if it does, the groove can't do it's job.

## WHEEL BOLT PATTERNS

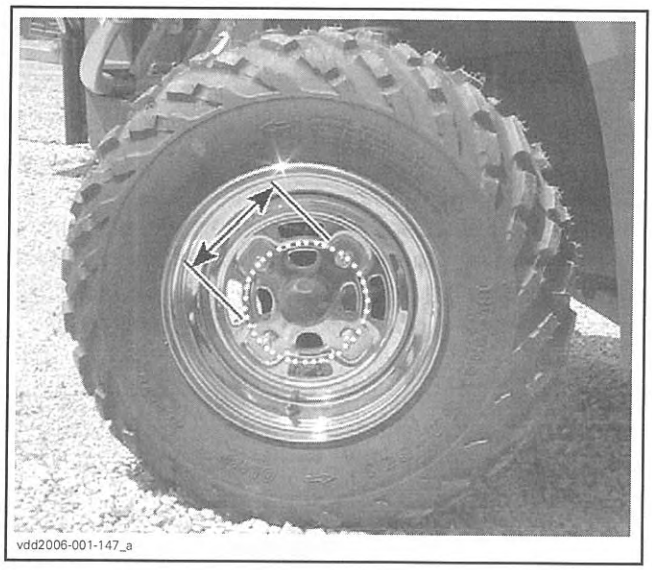
vdd2006-001-147_a

| | |
|---|---|
| Outlander and Renegade series | 4 holes on a 136 mm diameter bolt circle |
| Traxter (5 speed and CVT) and Quest | 4 holes on a 110 mm diameter bolt circle |
| DS 650 | 4 holes on a 144 mm diameter bolt circle |
| DS 450 | Front: 4 holes on a 144 mm diameter bolt circle |
| | Rear: 4 holes on a 110 mm diameter bolt circle |
| Rally | 4 holes on a 110 mm diameter bolt circle |
| DS 250 | 4 holes on a 110 mm diameter bolt circle |
| Mini series | 4 holes on a 110 mm diameter bolt circle |

## POSITIONING OF THE REAR HUB DURING CHAIN ADJUSTMENT

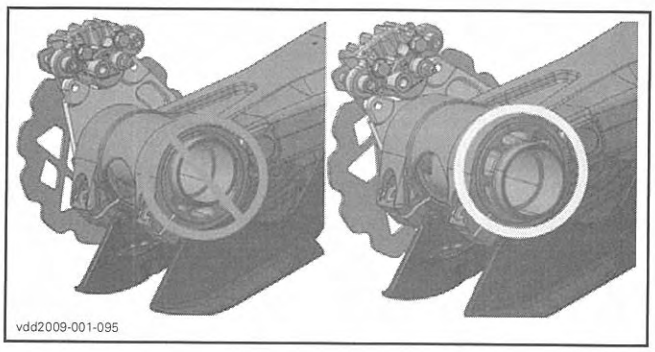
vdd2009-001-095

It has been determined that incorrect positioning of the bearing carrier can result in inconsistent ride height adjustments and the chassis may bottom out and cause a major frame failure.

Please be sure that when installing the carrier or when performing a chain adjustment that the carrier is indexed as per the illustrations. For a more consistent ride height adjustment and to protect the frame from unnecessary bottoming always position the carrier with the thin side down.

## BATTERY AND WINCH

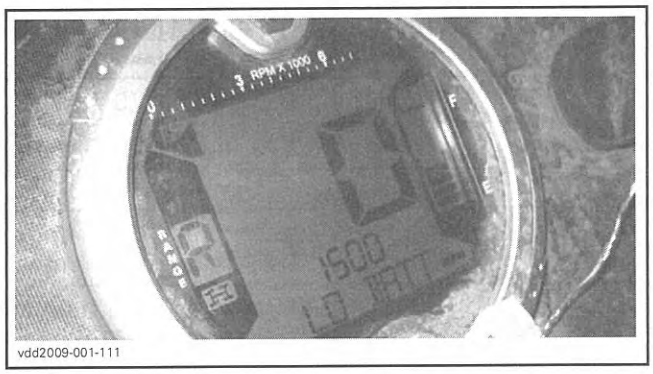

vdd2009-001-111

We have received reports that at times when using the winch "low battery" scrolls across the display and in continued usage the check engine light comes on and the engine goes into a limp mode. An EFI model needs a certain amount of voltage to maintain it components, and if it falls below this 'threshold' the above scenario will occur.

The winch requires a lot of power. It's not unusual to see a 40 amp draw when lifting a snow plow and if it's used to say pull the ATV out of a ditch or mud hole, the winch can draw over 200 amps! (by comparison the starter will normally draw 50-80 amps) The charging system on a V-twin is able to put 25-30 amps to the battery above 4000 RPM's , but that's a lot less then the winch is demanding.

Extended usage of the winch when lifting a blade may eventually wear down the battery, especially if lifting the blade often and the engine is at idle. Ensure the battery has a full charge before extended use and try to keep the RPM's up some. Extended severe usage of the winch will wear down the battery in a short period of time. Ensure to keep the RPM's up on the engine, and use the winch as efficiently as possible.

## V-TWIN ENGINES CVT LEVER CHART

The following is a chart of ramps used on all V-twins. Note that we give the width of the ramps for sea level as well as for 4000 and 8000 feet. The ramp profile remains the same for high altitude applications, the only difference is the reduced width. All V-twin engine management self compensates for high altitude with the exception of MY 2006 and 2007 Outlander 800's, where a high altitude map must be selected in B.U.D.S.

| | OUTLANDER 800 MY2006 2009 | RENEGADE 800 MY 2007 2008 2009 | OUTLANDER 650 MY2006 | OUTLANDER 650 MY2007 | OUTLANDER 650 MY 2008 2009 | OUTLANDER 500 MY2007 2008 2009 | RENEGADE 500 MY2008 MY2009 |
|---|---|---|---|---|---|---|---|
| Qty | 6 | 6 | 6 | 6 | 6 | 4 | 4 |
| Number | 490 | 492 | 493 | 553 | 553 | 550 | 550 |
| Weight | 40 gr | 32.9 gr | 32 gr | 31 gr | 31 gr | 31 gr | 31 gr |
| Sea Level Width | 11.7 mm | 12 mm | 9.4 mm | 12 mm (August and later prod) | 12 mm | 12 mm | 12 mm |
| Width 4000 ft | 10.2 mm | 10.2 mm | 8.7 mm | 8.7 mm | 8.7 mm | 10.75 mm | 10.75 mm |
| Width 8000 ft | 9 mm | 9 mm | 8.7 mm | 8.7 mm | 8.7 mm | 9.75 mm | 9.75 mm |
| | | | | | | | |
| Primary Spring | 240 N•m at 63.70 mm | | | | | 156 N•m at 63.69 mm | 156 N•m at 63.69 mm |
| | 490 N•m at 32.60 mm | | | | | 384 N•m at 32.54 mm | 156 N•m at 63.69 mm |

## V-TWIN OUTLANDER MUFFLER MOUNTING

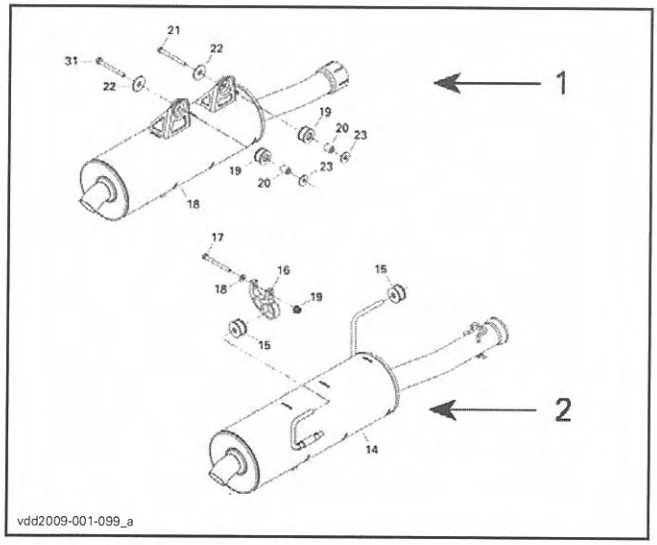


*1. New set up*
*2. Old set up*

This is just a reminder that there was a running change last year in the way the muffler is mounted on V-twin Outlanders. In Mid-December 2007 production started using 2 bolts and fastening the muffler directly to the frame via rubber mounts like the Renegades, instead of using hangers that were inserted into rubber supports used on previous models.

## FIRST 10 HOUR MAINTENANCE MESSAGE

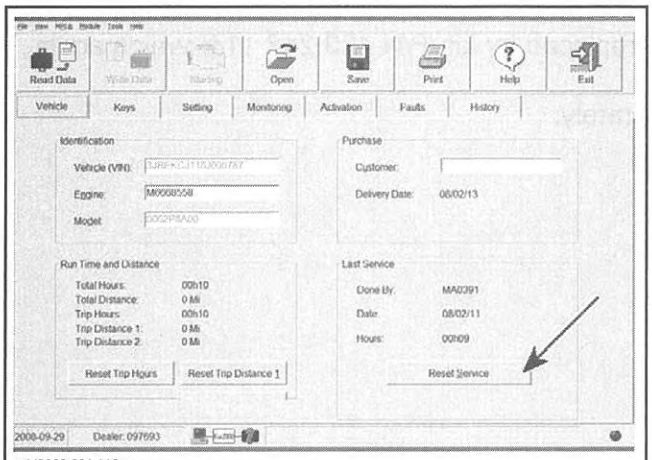

vdd2009-001-112_a

It is important to understand that the initial 10 hour maintenance message is a one time only message and is triggered by the ECM.

Once the *RESET SERVICE BUTTON* is pressed in *BUDS*, the function is disabled and the maintenance message will only be displayed after 50 hours. So at PDI do not press the *RESET SERVICE BUTTON* even if there is some time recorded, because doing so de-activates the 10 hour maintenance message. Furthermore, every time the *RESET SERVICE BUTTON* is pressed after that, it re-sets the timer and maintenance message will not appear until 50 hours have elapsed.

## COUNTERSHAFT 400 AND 400 EFI PARTS

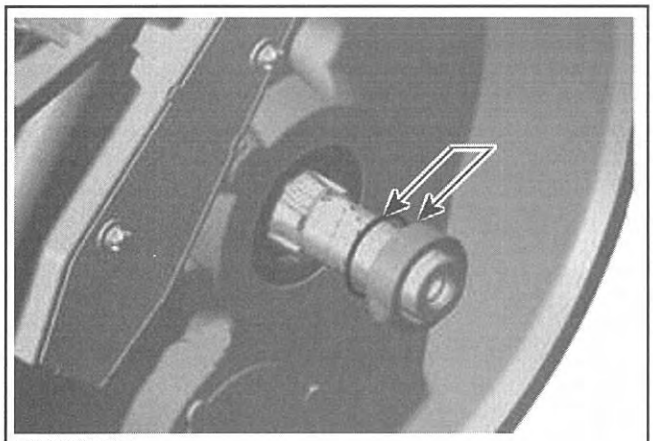
vdd2009-001-113_a

There is a new execution distance sleeve and O-ring used on the countershaft assembly introduced as a running change on the 400 EFI, and will be used for spare parts on the 400 carbureted models. These are the same parts that are used on the V-twin models and are not interchangeable with one another. EFI engines up to serial number M6767699 will have the old execution, engines from 6767700 and later have the new execution.

Spare parts strategy:

- Old countershaft assembly (P/N 420 620 440) after used up will be replaced by new countershaft assembly (P/N 420 620 441).
- Old distance sleeve (P/N 420 247 110) after used up will be replaced by kit (P/N 420 247 114) which includes the new distance sleeve (P/N 420 247 111) and O-ring (P/N 420 631 615).

- Old O-ring (P/N 420 630 040) will still be available.
- Original gasket kit (P/N 420 685 129) will now include the new O-ring (P/N 420 631 615) and will still contain the old O-ring (P/N 420 630 040).
- Once the new distance sleeve is used up, it will be replaced by kit (P/N 420 247 114) which again includes the new distance sleeve and O-ring.
- New O-ring (P/N 420 631 615) will be available separately.

can-am BRP ATV SERVICE Bulletin

**May 5, 2008** Subject: **V-Twin Engines Coolant Reservoir Vent** No. **2008-14**

| YEAR | MODEL | MODEL NUMBER | SERIAL NUMBER |
|---|---|---|---|
| 2006 - 2008 | All Outlander™ & Renegade™ V-Twin | All | All |

A new radiator venting system located in the cap of the coolant expansion reservoir is being introduced on Outlanders and Renegades starting May 2008.

The new venting design can retrofit Outlander and Renegade models built with the original design.

If a radiator needs replacement, it is recommended to install this new venting system.

NOTE: The inner cap is no longer used and needs to be removed when the new venting design is installed.

## PARTS TO BE INSTALLED

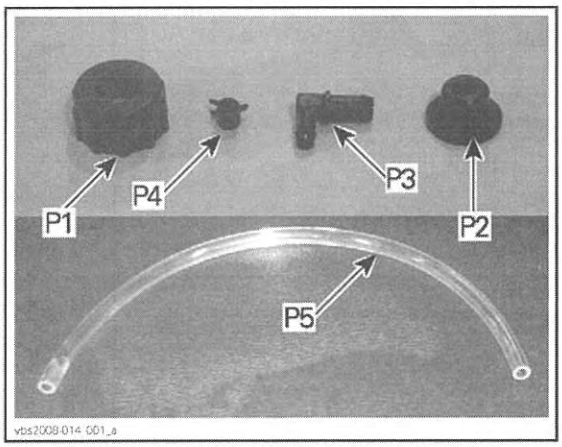


| ITEM | PART NUMBER | DESCRIPTION | QTY |
|---|---|---|---|
| P1 | 548 872 589 | Cap | 1 |
| P2 | 293 830 136 | Grommet | 1 |
| P3 | 414 580 700 | 90° elbow fitting | 1 |
| P4 | 414 554 800 | Clip | 1 |
| P5 | 415 080 200 | Tube * | 14" |

* Tube is sold in length of 10M (32.8').

## NEW COOLANT EXPANSION RESERVOIR CAP ASSEMBLY

Insert grommet in cap as shown.

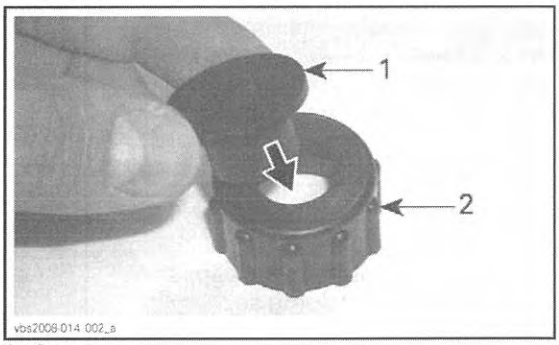


1. *Grommet*
2. *Cap*

Attach clear hose to 90° elbow fitting, on small end of fitting as shown.

Secure with clip.

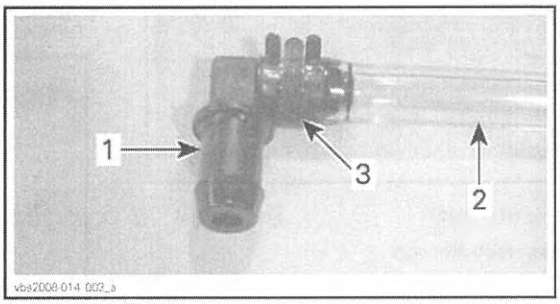


1. *90° elbow fitting*
2. *Tube*
3. *Clip*

Insert 90° elbow fitting into grommet as shown.

Printed in Canada (vbs2008-014 en JPM)
©2008 Bombardier Recreational Products Inc. and BRP US Inc. All rights reserved.
®™ and the BRP logo are trademarks of Bombardier Recreational Products Inc. or its affiliates.



vdd2009-001-096_en_1

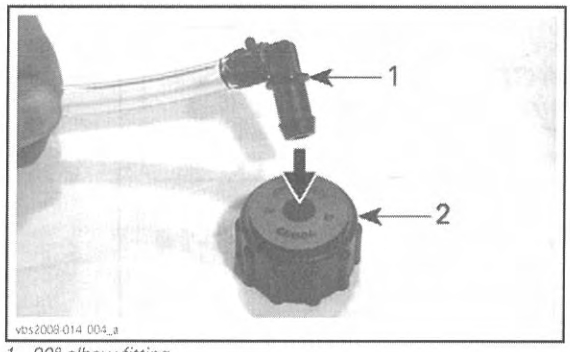


1. 90° elbow fitting
2. Grommet

# NEW COOLANT EXPANSION RESERVOIR CAP INSTALLATION

Remove and discard coolant expansion reservoir cap.

**⚠ WARNING**

When opening the coolant expansion reservoir, the coolant can be very hot and spray out if the engine is hot. Make sure engine is cold before removing cap.

Remove and discard inner cap.

**CAUTION:** Make sure to remove inner cap; severe damage could occur if not doing so.

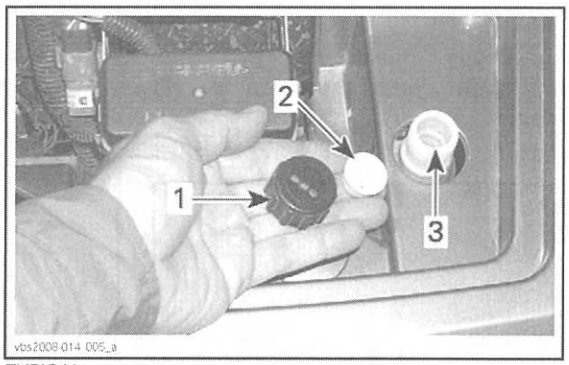


*TYPICAL*
1. Coolant bottle expansion cap
2. Inner cap
3. Coolant bottle expansion filler neck

Screw the new cap assembly on the coolant expansion reservoir.

Route tube as shown.

**CAUTION:** Make sure to keep end of tube away from any part that could be affected; such as brake disc, etc.

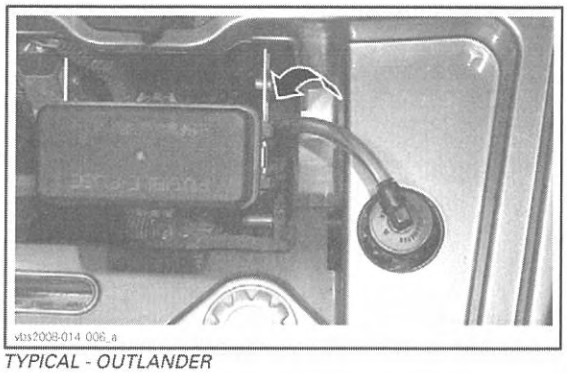


*TYPICAL - OUTLANDER*

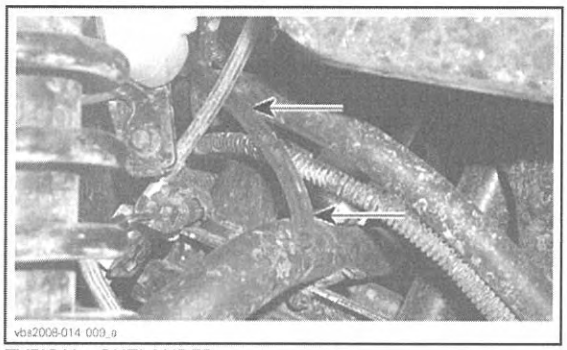


*TYPICAL - OUTLANDER*

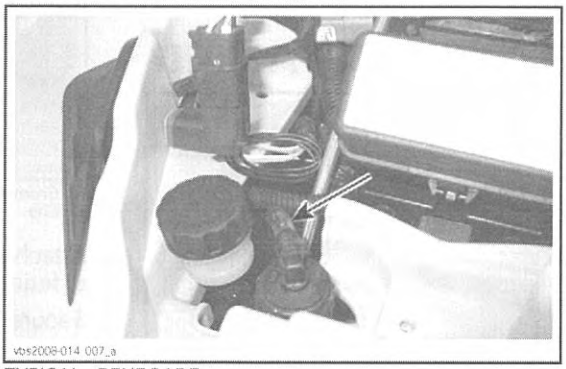


*TYPICAL - RENEGADE*

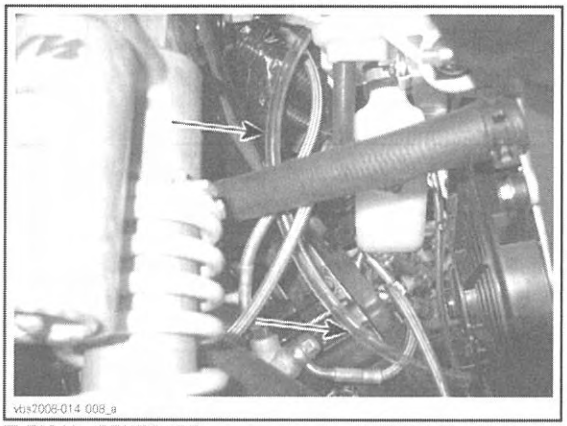


*TYPICAL - RENEGADE*

can-am BRP

ATV SERVICE Bulletin

**August 29, 2008** Subject: **Outlander XT and LTD Radiator Expansion Bottle Vent Tube Routing** No. **2009-7**

| YEAR | MODEL | PACKAGE | MODEL NUMBER | SERIAL NUMBER |
|---|---|---|---|---|
| 2009 | Outlander™ | XT™ and LTD | All | All |

When servicing the above-mentioned vehicles, it is important to pay special attention to the radiator expansion bottle vent tube routing.

Located in the front maintenance compartment, this vent tube needs to be routed **between the routings** shown in the following pictures.

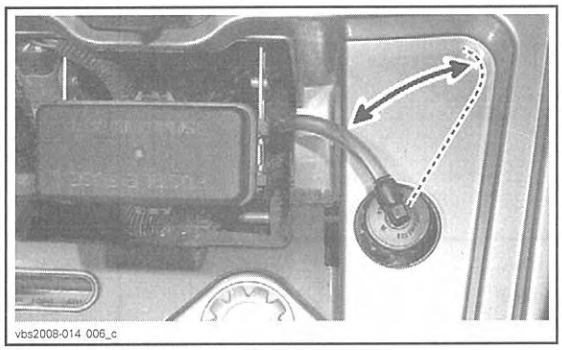


*SHORT ROUTING*

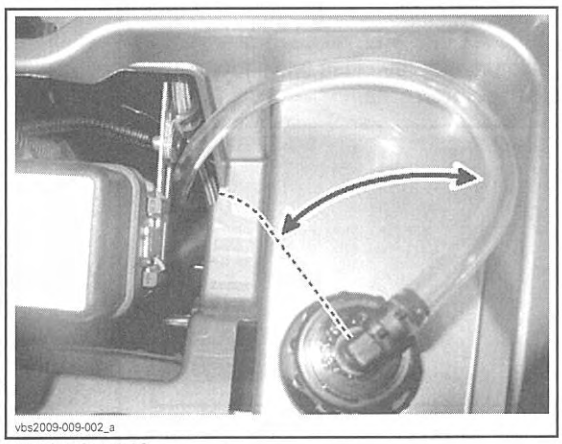


*LONG ROUTING*

This action is to avoid any interference, when closing cover, with the winch remote control storage compartment located under the cover.

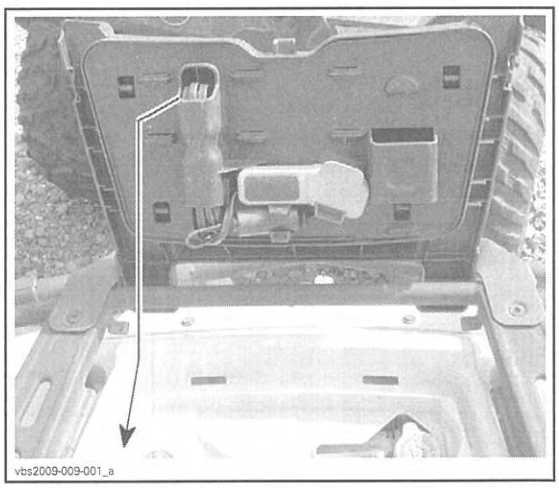


**NOTICE** Not doing so could cause a restriction to the vent tube which may lead to over pressure in the engine cooling system.

NOTE: It is not recommended to store articles such as a rain coat, ropes or other objects in the front service compartment; such items could interfere with components normal operation.

**NOTICE** Make sure to keep end of tube away from any component that could be affected should antifreeze drip on it, such as brake disc, etc.

NOTE: This special attention also applies when servicing vehicles modified as per *SERVICE BULLETIN 2008-14*, dated May 5, 2008.

Please notify all involved personnel.

vbs2009-009 en MD 1/1

©2008 Bombardier Recreational Products Inc. and BRP US Inc. All rights reserved.
®™ and the BRP logo are trademarks of Bombardier Recreational Products Inc. or its affiliates.

vdd2009-001-116_en

can-am BRP ATV SERVICE Bulletin

**September 26, 2008** Subject: **Can-Am™ DS 450™ New Clutch Parts** No. **2009-9**

| YEAR | MODEL | MODEL NUMBER | SERIAL NUMBER |
|---|---|---|---|
| 2008 | DS 450 | All | All |
| 2009 | DS 450 | All | All |

# NEW CLUTCH PARTS

There was a running change, starting from engine number M6748166, on the clutch hub and clutch cover on MY2009 DS 450.

## New Clutch Hub

The new clutch hub has different machining and requires an extra clutch plate (9 instead of 8) that is seated against the clutch hub itself.

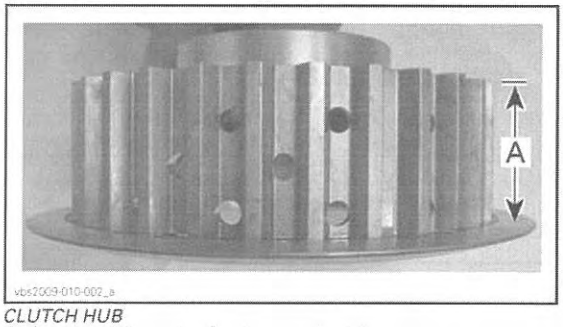


*CLUTCH HUB*
*A. Increased dimension for the new clutch hub*

The extra clutch plate is the same as the other clutch plates and is to be seated with the rounded edge toward the clutch hub. It is also recommended that the other clutch plates be inverted and installed toward the clutch drum.

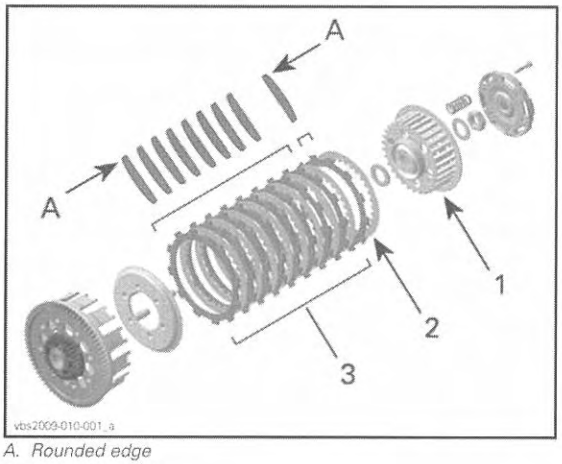


*A. Rounded edge*
*1. New clutch hub*
*2. Additional clutch plate*
*3. Other clutch plates*

## New Clutch Cover

The new clutch cover has a small calibrated hole drilled into an oil passageway. This will allow oil to fog the inside of the clutch area.

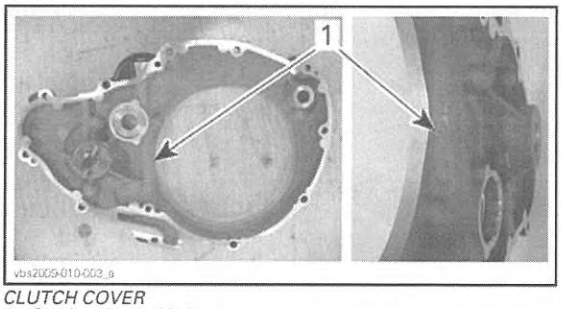


*CLUTCH COVER*
*1. Small calibrated hole*

Printed in Canada. (vbs2009-010 en DM)
©2008 Bombardier Recreational Products Inc. and BRP US Inc. All rights reserved.
®™ and the BRP logo are trademarks of Bombardier Recreational Products Inc. or its affiliates.
vdd2009-001-114_en_1

## NEW PARTS NUMBER

| DESCRIPTION | P/N |
|---|---|
| New Clutch Hub | 420 259 873 |
| New Clutch Cover | 420 611 666 |
| Additional Clutch Plate | 420 259 910 |

## INSTALLATION NOTE

These parts are interchangeable with one another, but it is recommended to use the new clutch hub and new clutch cover in conjunction with one another for better clutch performance.

Always refer to the appropriate *ATV SHOP MANUAL* for proper installation procedure.

When the old parts are out of stock, they will be replaced with the new parts. If the old hub is ordered and it is out of stock, the new hub will be shipped along with a clutch plate.

# New Technologies

In this section you will find the most current information concerning the latest technologies used by BRP.

# Outlander™ 400 EFI

vdd2009-001-048

## OUTLANDER 400 H.O. EFI

Introduced late last year the Can-Am Outlander 400 H.O. comes standard with fuel injection, this gives every recreational-utility model in the Can-Am line up fuel injection! BRP is the first among its competitors to reach this milestone.

The Outlander 400 H.O. EFI rules the 400 cc class in horsepower and even dominates some 450 cc competitors.

The recreation-utility category is a crowded one, but the Can-Am Outlander stands out with more standard adrenaline than any other competitor. That's because each Outlander model features the most powerful engine in its class, electronic fuel injection, race-bred suspensions, the exclusive Visco-Lok‡ front differential and other trick features.

Outlander MAX models are designed specifically for riding with a passenger. The longer vehicle wheelbase not only delivers rock-solid stability and super predictable handling with a passenger, but one-up, too. Ability to swap seat and rack extension box without tools makes the MAX model extremely versatile.

The Outlander XT models include popular aftermarket additions, including winch with remote control and cast aluminum wheels. Carlisle ACT radial tires, bumpers and more are installed at the factory. Buyers opting for the XT model save money over purchasing and installing all these features separately. Plus, these items are covered by the factory.

Features:

- Electronic Fuel Injection: Now the Outlander 400 H.O. comes standard with EFI. large 46 mm throttle body gives the 400 H.O. the most power in its class, even to some machines in the class with larger engine displacements.
- Visco-Lok Front Differential: Progressively transfers power from a slipping front wheel to the gripping one automatically with no buttons to push or levers to pull. Plus, there's no wheel hop or driveline wind-up so the system is totally transparent to the driver and extremely easy to steer. Can lock up to 100% with no rev or speed limiter.
- Trailing Torsional Independent (TTI) Rear Suspension: Trailing arm design provides more control and stability, especially in rough terrain, by eliminating scrub. Wheels move rearward as they move up and down, producing a smoother ride than the competition, and does not steer from the rear. Plus, TTI has 75% fewer parts than competitive designs and significantly decreases tire wear.
- MacPherson strut front suspension: Compact design is lightweight, and provides precise handling and a plush ride.
- Surrounding Spar Technology (SST) frame: Rather than the common tubular box, the SST frame is a single spar that is lightweight, yet strong. It contributes to the Outlander's benchmark power-to-weight ratio and low centre of gravity.
- Multi function digital gauge is easy to read with even more functions, including:

Digital speedometer, Engine hour meter, Digital tachometer, 4x4 indicator, Bar graph RPM, Temperature / Engine lights, Numerical RPM, Electronic fuel gauge, Odometer, Low fuel light, Trip meter, Auto shut off after 15 minutes, Diagnostic centre, P N R (Packing, Neutral, Rear) Gear position , High / low beam indicator.

- Painted steel rims for a more high-tech style.
- 25 inch (63 cm) Ohtsu H-track tire lightweight, great handling on base model 400.
- Rear fascia, tail light and regulator cover for a more finished appearance; protects rear wire harness, connectors.
- Inboard disc brake unique design reduces unsprung weight and helps centralize masses for more responsive handling. Also better protects against mud and debris.
- Front and rear steel racks 100 pound (45 kg) capacity in front, 200 pounds (90 kg) in back.

Outlander MAX Features:

- Longer vehicle wheelbase. The passenger rides well in front of the rear axle for rock-solid stability and super predictable handling

- Stadium style seating. The passenger rides above the driver, stadium-style, so they can see down the trail
- Passenger comfort features a well-padded active backrest moves with rider. Raised footrests and multi-position handhold add comfort
- Convertible Rack System (CRS). The passenger seat can be removed and replaced with a rack-extension cargo box in just seconds, without tools. BRP offers several accessories, such as a cargo box and touring box that interface seamlessly with the CRS system.

vdd2009-001-050

Outlander XT Model features:
- BRP XL 3000 winch manufactured by Warn‡. At 3,000 pounds (1,360 kg) capacity, 500 more pounds (227 kg) than 2007 model. Roller fairlead. Remote control stows in front storage compartment.
- Cast aluminum wheels lightweight and a premium look
- Carlisle ACT radial tires great lightweight traction
- Steel front and rear bumpers. Heavy duty and a tough look
- Handguards: premium look and protection from brush, cold.

Most component come from the 400 carb version but some component were redesing or relocated especially for the 400 EFI:
- New ECU
- New throttle body
- Upgrade driven spring
- New exhaust system
- New cooling system
- New air intake system
- New electric harness
- Upgrade frame.

# New Outlander™ 800R

vdd2009-001-045

## IMPROVED 799.9CC V-TWIN ENGINE: THE 800R

**NOTE:** The 800R engine replaces the 800 HO engine in the line-up.

Features:

- New larger air filter with shorter and larger intake tube to increase power at high RPM
- New optimized intake runner to increase power at high RPM
- New camshaft (with increased valve lift from 8,6 mm to 9,9 mm (+15%) to improve volumetric efficiency and 10 degrees more duration on exhaust valve opening to improve scavenging).

New ECU calibration.

- Manageable low RPM power delivery for tight technical situations and high horsepower for when you can stretch your legs
- Smoother torque ramp-up below 6000 RPM, and 9% more top end horsepower
- Outlander 800R 0 60 mph in 6.3 seconds, almost one second quicker than the 800HO.

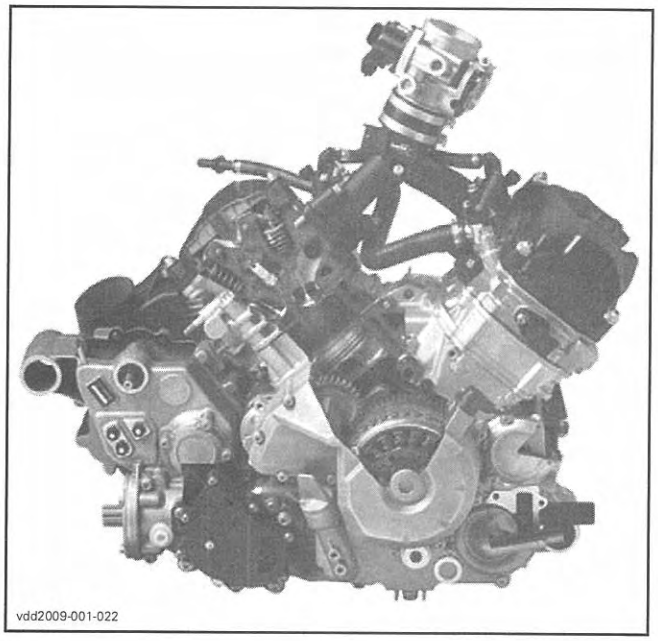
vdd2009-001-022

Exclusive to 800R models:

- A little extra for higher-end model
- New front fascia design, with strong Can-Am DNA cues!
- New fascia cuts edge of headlight to give an aggressive look
- It gives a more dynamic look and increases air flow to the radiator.

vdd2009-001-023

- New front and rear XT bumpers
- Headlight side beam no longer restricted with XT bumpers.

vdd2009-001-024

The most powerful engines in their respective classes.

Powerful because of the use of state-of-the-art technologies.

4 valves SOHC cylinder heads.

Optimized intake runners with one VDO Siemens injector per cylinder.

46 mm throttle body with progression system (non linear opening).

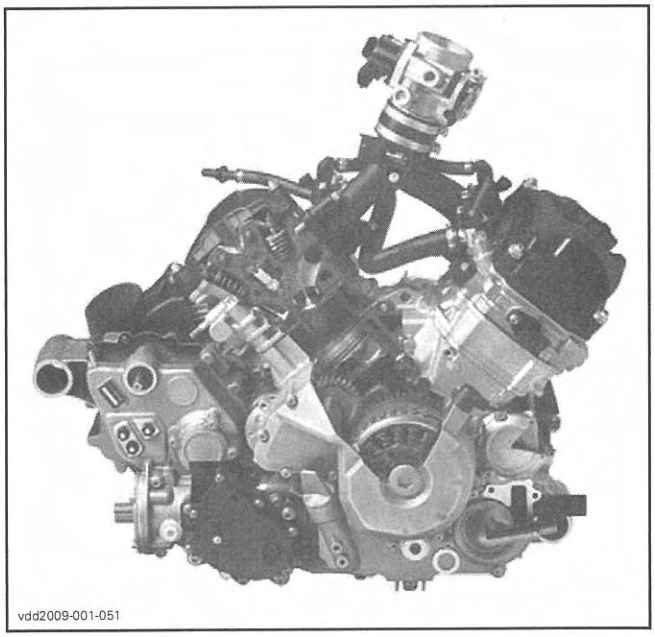

vdd2009-001-051

New Skid Plate Standard on all models.

Made of 5 mm thick impact and scratch resistant high-density polyethylene injection molded.

Better frame protection for aggressive riding in rough terrain.

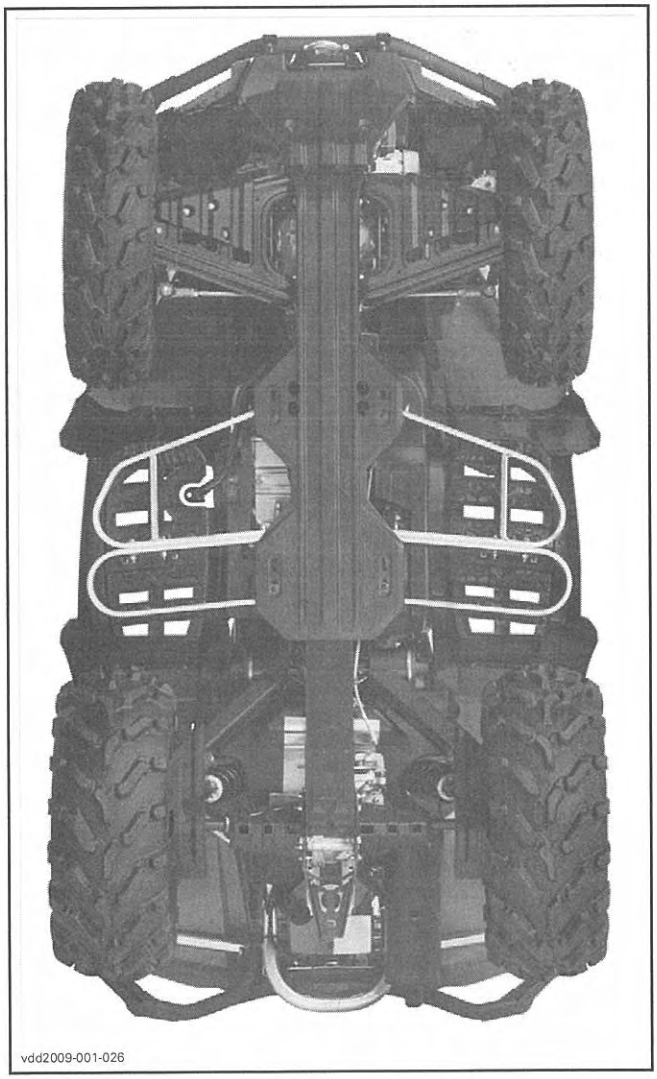

vdd2009-001-026

XT the ultimate added value package:
- Aggressive 26" Carlisle ACT Radials
- Cast Aluminum Rims
- Heavy duty front and rear bumpers
- Hand guards
- BRP XL 3000 winch, packaged with wired remote and roller fairlead plus remote storage under front cover.

vdd2009-001-032

Outlander MAX 800R EFI Limited:
- Integrated and removable GPS
- New radiant red metallic paint coloration
- BRP XL 3000 winch, packaged with wired remote and roller fairlead plus remote storage under front cover
- Limited cast aluminum rims
- Aggressive 26" Carlisle ACT radials
- Heavy Duty front and rear bumpers
- Hand guards
- Mud guards
- 2 tone seat.

vdd2009-001-033

# Special Tools

In this section you will find the most current special tools to service efficiently service BRP vehicles. All mandatory tools will be shipped automatically.

can-am BRP

ATV SERVICE Bulletin

Subject : Service Tools

| Year | Model |
|---|---|
| All | All |

BRP is proud to introduce its latest Service Tools Bulletin. These special tools were designed to help you efficiently service BRP vehicles.
Please always make sure to use special tools along with the appropriate Shop Manual(s) and respect all safety measures.

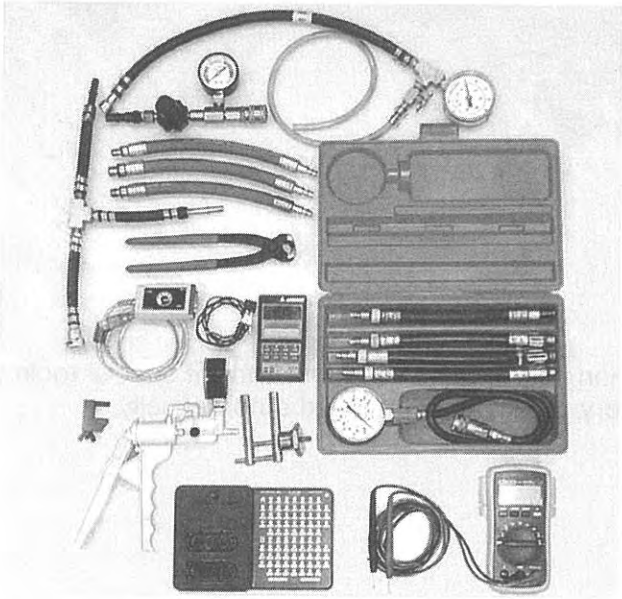

Mandatory Tools: These tools are absolutely needed to perform certain service procedures. They will be automatically shipped to dealerships. They do not need to be ordered separately.

Recommended Tools: These tools will facilitate the Technicians work. They will not be automatically shipped to dealerships. They need to be ordered separately.

## Table of contents

Tools by System:

Engine ..... P 2
Fuel ..... P 7
Cooling ..... P 8
Electrical ..... P 8
Lubrication ..... P 10
Propulsion / Transmission ..... P 11
Steering ..... P 14
Suspension ..... P 14
Various ..... P 16

Index of tools by Part Number: ..... P 18

Printed in Canada (1)
©2008 Bombardier Recreational Products inc. and BRP US inc. All rights reserved.
®™ and the BRP logo are trademarks of Bombardier Recreational Products inc. or its affiliates.
vdd2009-001-102_en_1

## Engine

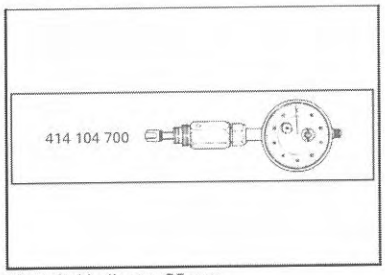


TDC dial indicator 25 mm
P/N 414 104 700 Recommended
For ignition timing static measurement

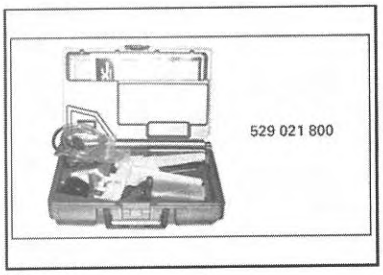


Vacuum pressure pump
P/N 529 021 800 Recommended
All models

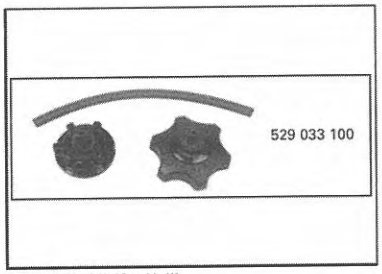


Leak test kit (fuel/oil)
P/N 529 033 100 Mandatory
All models

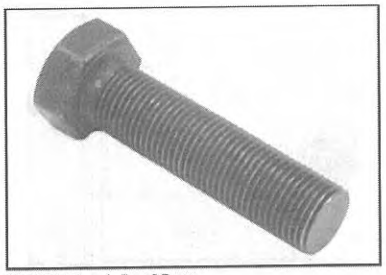

Bolt M16 x 1,5 x 65mm
P/N 529 035 549 Recommended
DS 450
Goes with 529 035 547 & 420 976 235.

Spring installer remover
P/N 529 035 559 Recommended
Replaced by 529035983 or 529035989

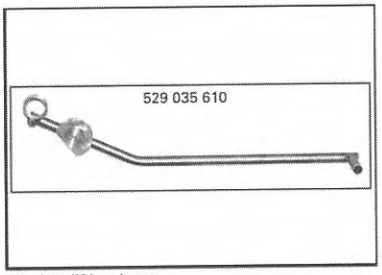


Engine lifting bar
P/N 529 035 610 Recommended
Traxter 500

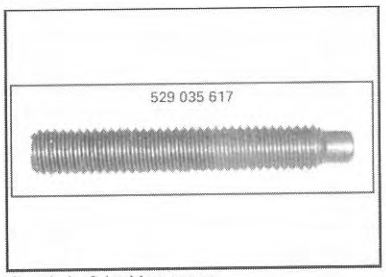


Crankshaft locking screw
P/N 529 035 617 Mandatory
Quest 500/610,
DS650/Outlander/Renegade

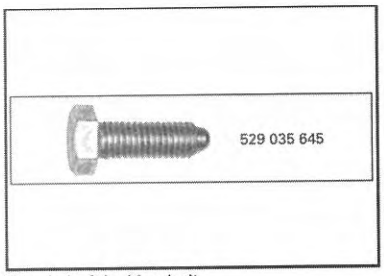


Crankshaft locking bolt
P/N 529 035 645 Recommended
Traxter 500

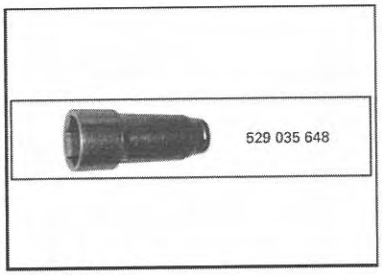


Socket 46 mm
P/N 529 035 648 Recommended
Traxter
Crankshaft nut

Engine leak down test kit
P/N 529 035 661 Recommended
All 4-stroke engines
To perform a leak down test on engine.

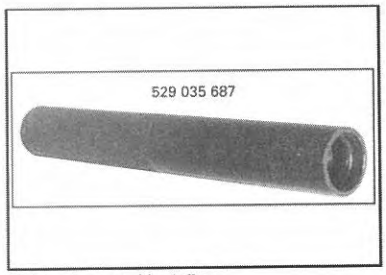


Valve stem seal installer
P/N 529 035 687 Recommended
1503 engine

Valve spring compressor
P/N 529 035 724 Recommended
4-TEC engines
To be used with valve spring compressor cup 529 035 764 and 529 036 073

Service
vdd2009-001-102_en_2

## Engine

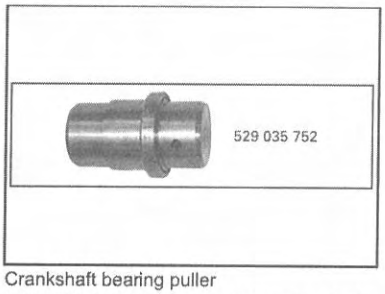


Crankshaft bearing puller
P/N 529 035 752 Recommended
610/500 engines

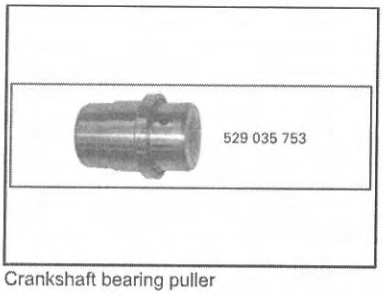


Crankshaft bearing puller
P/N 529 035 753 Recommended
610/500 engines

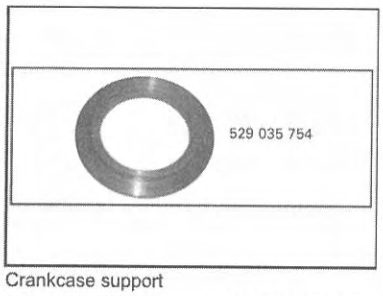


Crankcase support
P/N 529 035 754 Recommended
Outlander 330/400, Quest 500/610

Valve spring compressor cup
P/N 529 035 764 Recommended
V-1000/ V-1300/330/400/490/660/810
To be used with valve spring compressor 519 035 724.

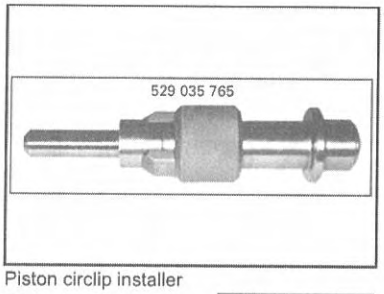


Piston circlip installer
P/N 529 035 765 Mandatory
610/500/1503/V-1000 engines

Ceramic seal installer
P/N 529 035 766 Recommended
All V-twin, 330/400, 610/500, 500 eng.
Use with 529 036 130

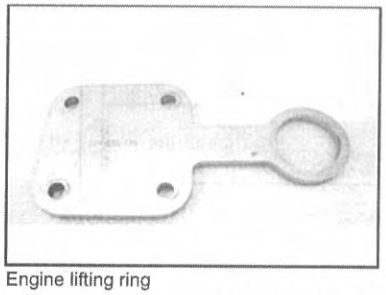

Engine lifting ring
P/N 529 035 770 Recommended
Quest 610/500

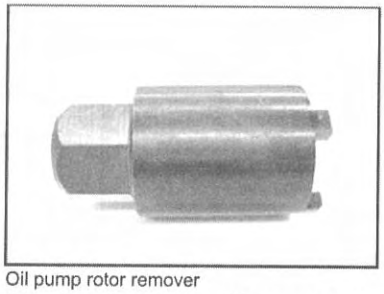

Oil pump rotor remover
P/N 529 035 795 Recommended
DS 50, DS 90 2002/07

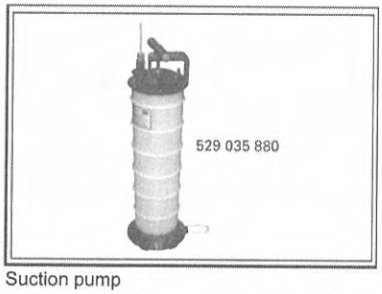


Suction pump
P/N 529 035 880 Recommended

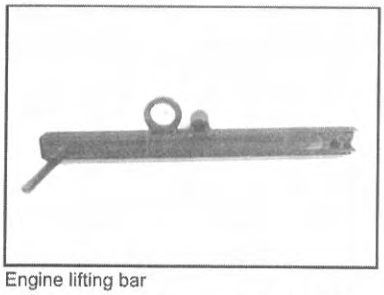

Engine lifting bar
P/N 529 035 898 Recommended
Outlander 330 & 400

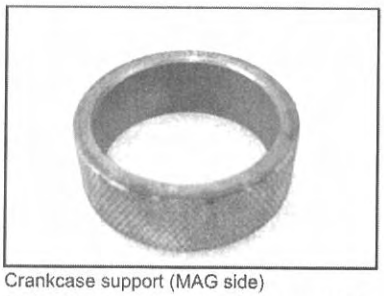

Crankcase support (MAG side)
P/N 529 035 916 Recommended
330/400 engine

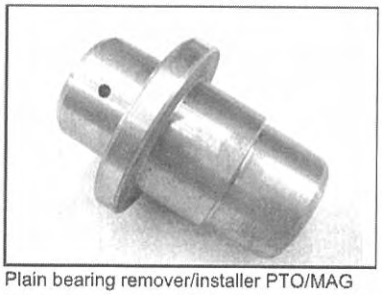

Plain bearing remover/installer PTO/MAG
P/N 529 035 917 Recommended
610, 500, 650, 800 engines

Service
vdd2009-001-102_en_3

## Engine

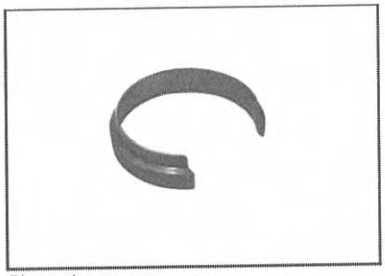

Piston ring compressor
P/N 529 035 919 Recommended
V-800 engine

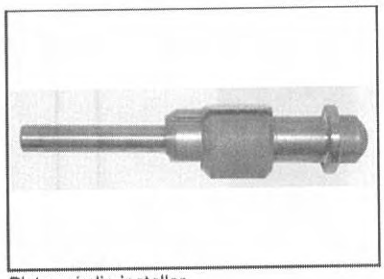

Piston circlip installer
P/N 529 035 921 Mandatory
330, 400, 500, 650, 800 engines

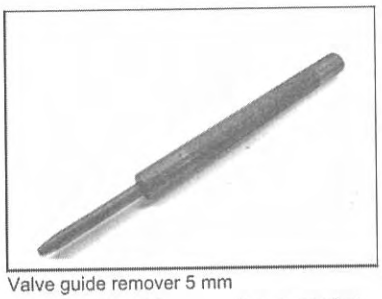

Valve guide remover 5 mm
P/N 529 035 924 Recommended
400, 500, 650, 800 engines

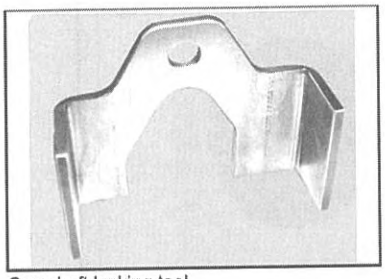

Camshaft locking tool
P/N 529 035 926 Mandatory
400, 500, 650, 800 engines

Oil seal installer
P/N 529 035 933 Recommended
449/991 engines, Outlander 330/400
Use with handle 420 877 650 Same usage as 529 036 069.

Starter drive needle installer
P/N 529 035 934 Recommended
330/400 engine
Use with handle 420 877 650

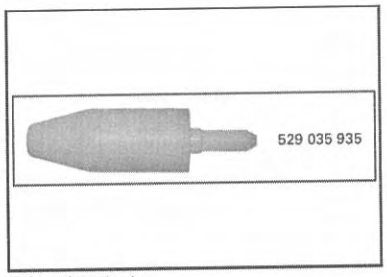


Oil seal protector
P/N 529 035 935 Mandatory
330/400 engine
Use on crankshaft MAG side

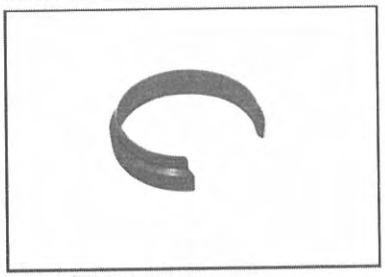

Piston ring compressor
P/N 529 035 977 Recommended
330 engine

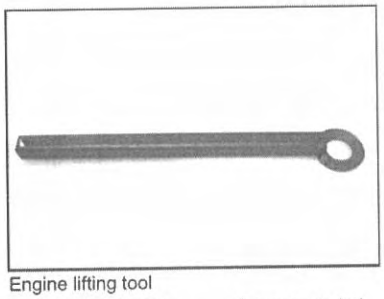

Engine lifting tool
P/N 529 036 022 Recommended
V-490, V-660 & V-810 engines

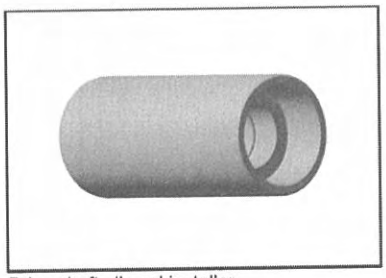

Drive shaft oil seal installer
P/N 529 036 028 Recommended
V-490, V-660 & V-810 engines

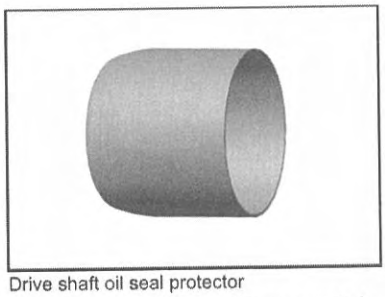

Drive shaft oil seal protector
P/N 529 036 029 Recommended
V-490, V-660 & V-810 engines

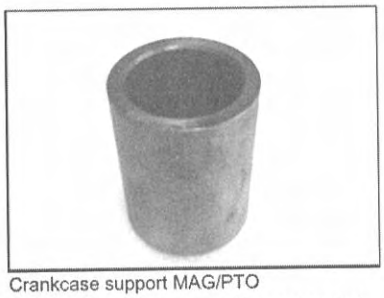

Crankcase support MAG/PTO
P/N 529 036 031 Recommended
V-490, V-660 & V-810 engines

Service

vdd2009-001-102_en_4

## Engine

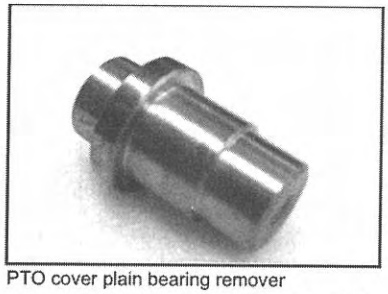

PTO cover plain bearing remover
P/N 529 036 032 Recommended
V-490, V-660 & V-810 engines

PTO cover oil seal installer
P/N 529 036 033 Recommended
V-490, V-660 & V-810 engines

Crankshaft protector
P/N 529 036 034 Recommended
V-490, V-660 & V-810 engines

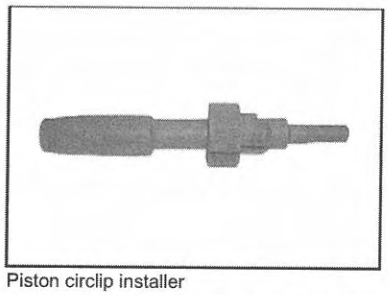

Piston circlip installer
P/N 529 036 048 Recommended
DS 250

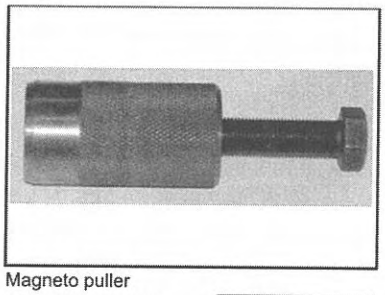

Magneto puller
P/N 529 036 049 Mandatory
DS 250

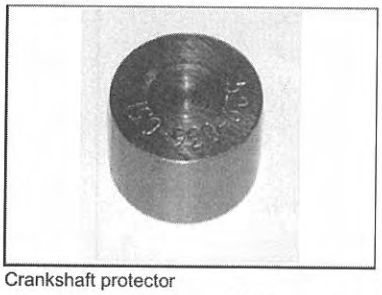

Crankshaft protector
P/N 529 036 051 Recommended
DS 250

Camshaft locking tool
P/N 529 036 055 Mandatory
DS 250

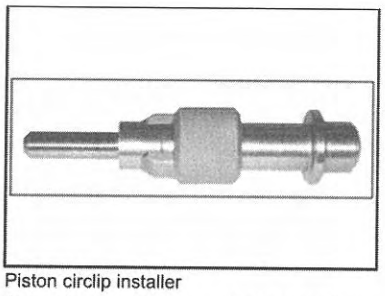

Piston circlip installer
P/N 529 036 058 Recommended
V-490 engine

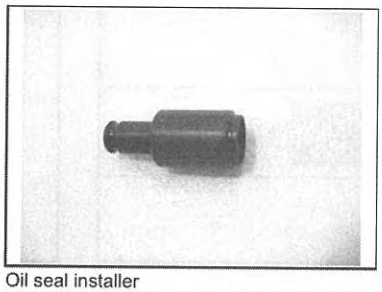

Oil seal installer
P/N 529 036 069 Recommended
449/991 engines, Outlander 330/400
Use with handle 420 877 650
Same usage as 529 035 933.

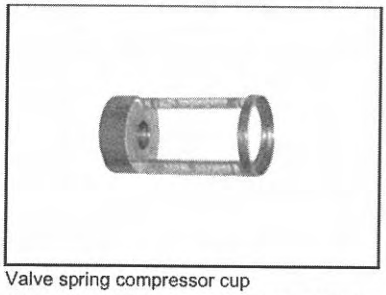

Valve spring compressor cup
P/N 529 036 073 Recommended
449, 991, 1503, 610/500, Traxter 500
To be used with 529 035 724

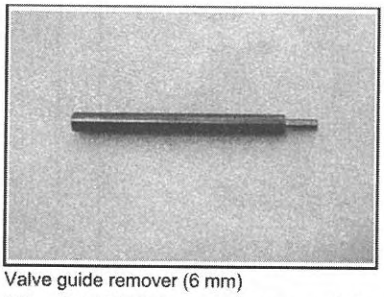

Valve guide remover (6 mm)
P/N 529 036 074 Recommended
449, 991 engines
valve guide pusher

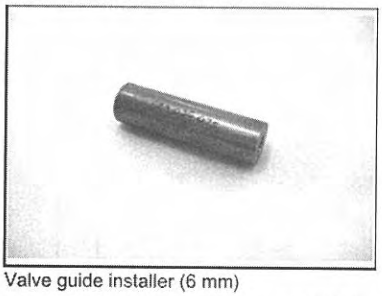

Valve guide installer (6 mm)
P/N 529 036 075 Recommended
449, 991 engines
Valve guide insertion jig

Service

vdd2009-001-102_en_5

## Engine

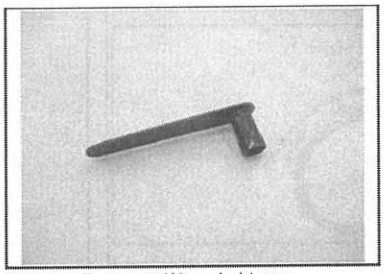

Clutch adjustment Wrench 11 mm
P/N 529 036 076 **Mandatory**
449 engine
Clutch

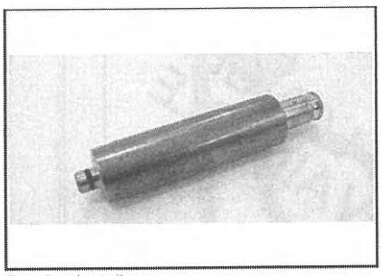

Bearing installer
P/N 529 036 078 Recommended
449 engine
Use with handle 420 877 650

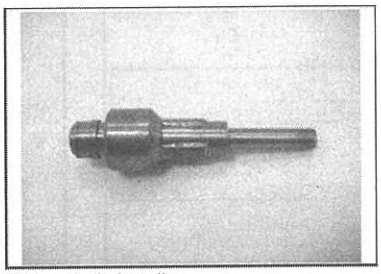

Piston circlip installer
P/N 529 036 083 **Mandatory**
449 engine

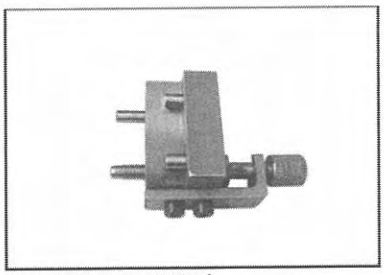

Camshaft ajustment tool
P/N 529 036 084 Recommended
449 engine

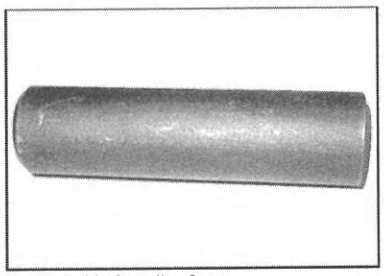

Valve Guide Installer 6 mm
P/N 529 036 087 Recommended
1503,Traxter 500, Quest 610/500

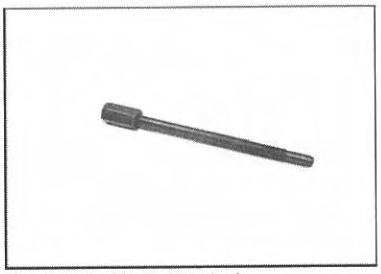

Crank lock, driven open tool
P/N 529 036 098 **Mandatory**
610/500, 991, V-490, V-660, V-810

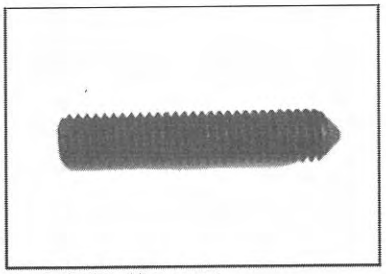

Crankshaft locking screw
P/N 529 036 107 **Mandatory**
449 engine

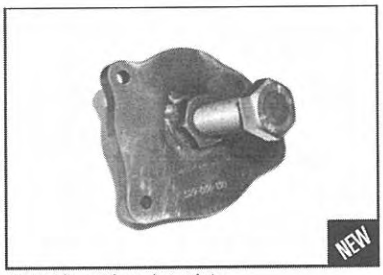


Ceramic seal pusher plate
P/N 529 036 130 Recommended
V-490, V-660 & V-810 engines
Use with ceramic seal installer 529035766

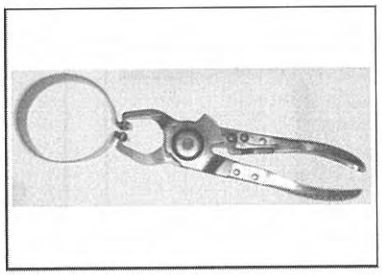

Piston ring compressor
P/N Snap-on RC 980 Recommended
4-TEC
Not sold by BRP

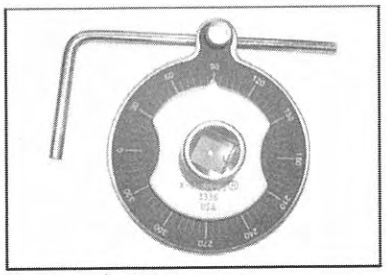

Torque angle gauge
P/N Snap-on TA362 Recommended
Used on most 4-stroke engines.
Not sold by BRP

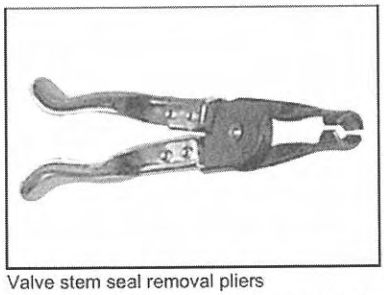

Valve stem seal removal pliers
P/N Snap-on YA 8230 Recommended
1503, 991 engines, DS650
Not sold by BRP

Service
vdd2009-001-102_en_6

## Fuel

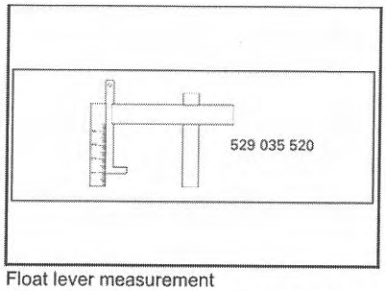


Float lever measurement
P/N 529 035 520 Recommended
Carburetor-equipped vehicles

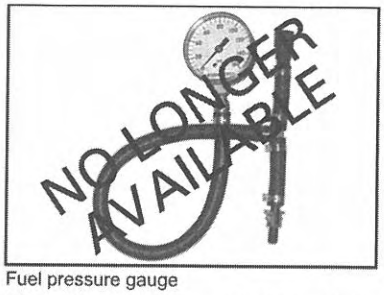


Fuel pressure gauge
P/N 529 035 591 Recommended
787 RFI, 793 SDI & 4-TEC engines
Replaced by 529 035 709. Spare plastic clip P/N 275500429

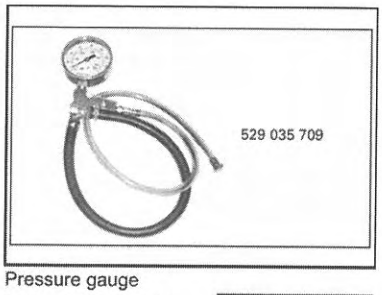


Pressure gauge
P/N 529 035 709 Mandatory
Injection type engines
Use with 529035652, 529035714 & 529036023

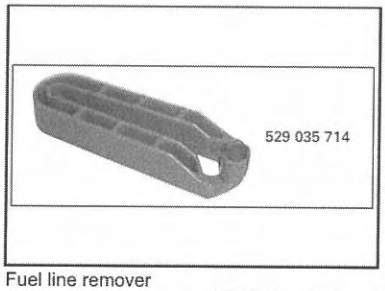


Fuel line remover
P/N 529 035 714 Mandatory
Injection models
Used also with gauge P/N 529 035 709, 529 035 652 & 529 036 023

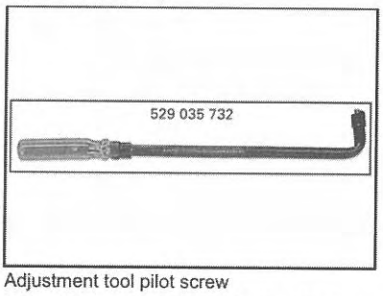


Adjustment tool pilot screw
P/N 529 035 732 Recommended

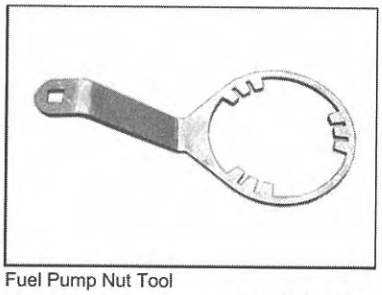

Fuel Pump Nut Tool
P/N 529 035 899 Recommended
2-TEC SDI & 4-TEC engines

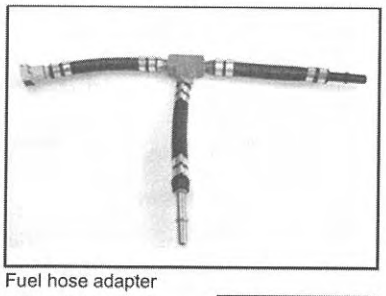

Fuel hose adapter
P/N 529 036 023 Mandatory
Injection type vehicles
To be used with 529 035 709.
Replacement clip 513 033 135

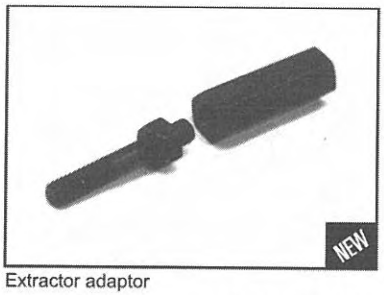


Extractor adaptor
P/N 529 036 136 Recommended
E-TEC, V-twin

Service

vdd2009-001-102_en_7

## Cooling

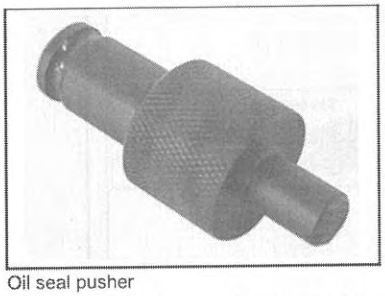

Oil seal pusher
P/N 529 035 757 Recommended
Outlander 330/400

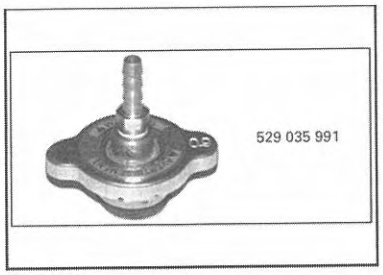


Test cap
P/N 529 035 991 Recommended
All models
To be used with Vacuum/Pressure Pump 529 021 800.

Coolant pump oil seal installer
P/N 529 036 052 Recommended
DS 250

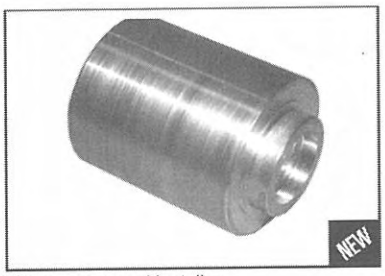


Water pump seal installer
P/N 529 036 139 Recommended
449 engine

## Electrical

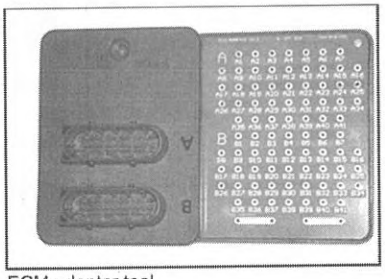

ECM adapter tool
P/N 420 277 010 Mandatory
All models
All injected 2-TEC & 4-TEC with VDO ECM

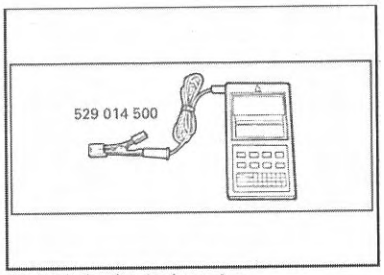


Digital induction tachometer
P/N 529 014 500 Recommended
All models

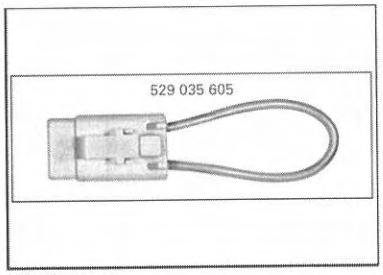


Wire jumper
P/N 529 035 605 Recommended
Traxter

## Electrical

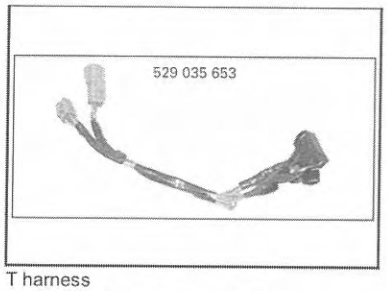


T harness
P/N 529 035 653 Recommended
Traxter
To check shifting.

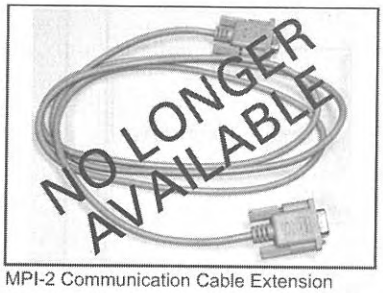


MPI-2 Communication Cable Extension
P/N 529 035 697 Recommended
Male/female DB9 extension can be purchassed at any PC store; max. 25 ft lg.

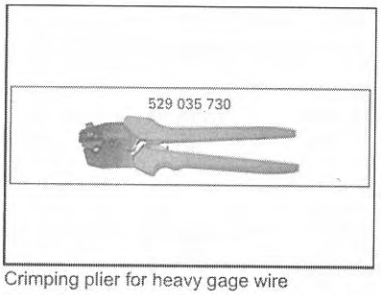


Crimping plier for heavy gage wire
P/N 529 035 730 Recommended
All models
Ex.: To crimp battery cable terminals.

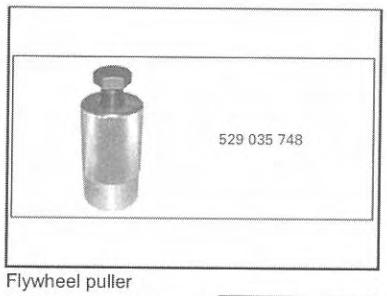


Flywheel puller
P/N 529 035 748 Mandatory
All V-twin

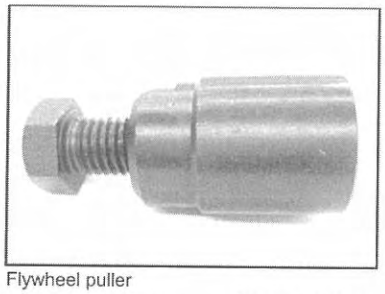

Flywheel puller
P/N 529 035 792 Recommended
DS 50/90, MY 2002-7

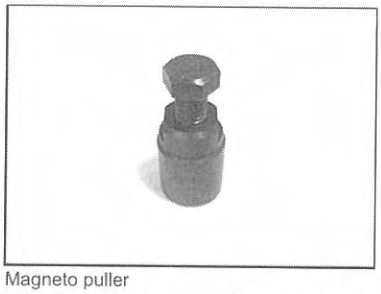

Magneto puller
P/N 529 035 798 Recommended
DS 50, DS 90 2002/07

Fluke 115 digital multimeter
P/N 529 035 868 Recommended
All models

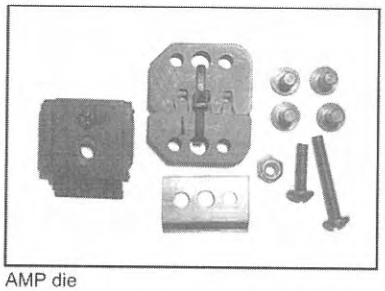

AMP die
P/N 529 035 908 Recommended
All models with AMP connectors
To use with crimping tool 529 035 909 to crimp Deutsch connectors.

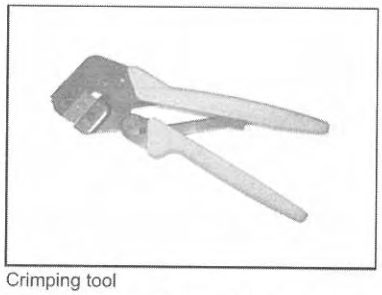

Crimping tool
P/N 529 035 909 Recommended
To use with compatible die to crimp different connectors

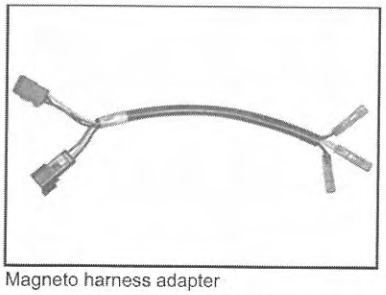

Magneto harness adapter
P/N 529 036 016 Recommended
1503, 449
To test the magneto.

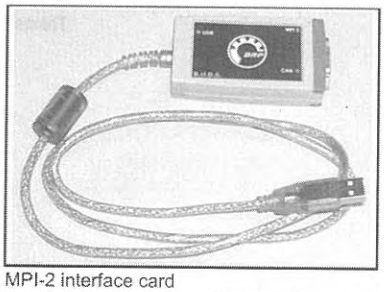

MPI-2 interface card
P/N 529 036 018 Mandatory
Replaces the MPI.

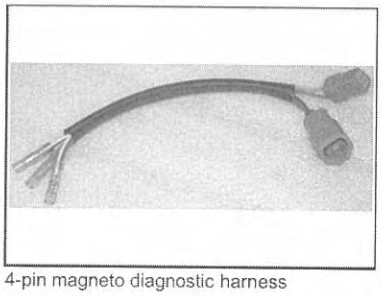

4-pin magneto diagnostic harness
P/N 529 036 021 Recommended
V-490, V-660 & V-810 engines

Service

vdd2009-001-102_en_9

## Electrical

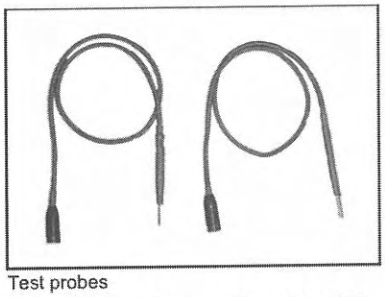

Test probes
P/N 529 036 063 Recommended
All models
To back probe various connectors.

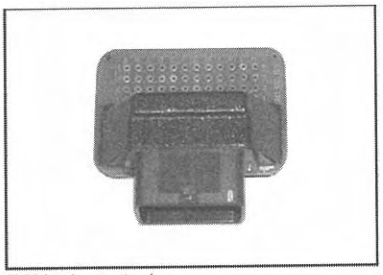

ECM adapter tool
P/N 529 036 085 Mandatory
449, 400 EFI engines

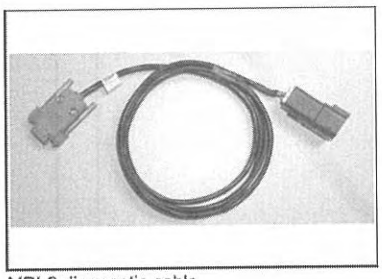

MPI-2 diagnostic cable
P/N 710 000 851 Mandatory
All DESS-equipped vehicles

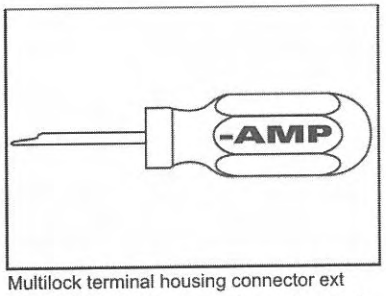


Multilock terminal housing connector ext
P/N AMP 755430-2 Recommended
Not sold by BRP

## Lubrication

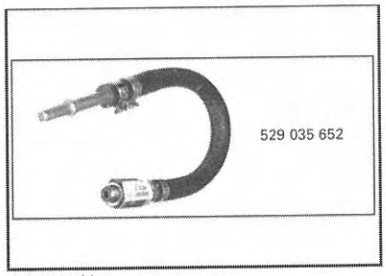


Adapter Hose
P/N 529 035 652 Mandatory
4-TEC engines
Used with 529 035 709.

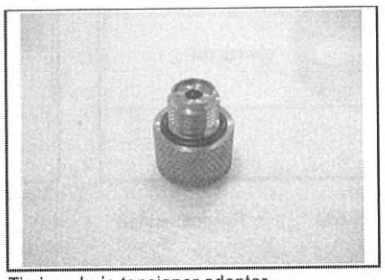

Timing chain tensioner adapter
P/N 529 036 079 Mandatory
449 engine
To be used with 529 035 652.

## Propulsion / Transmission

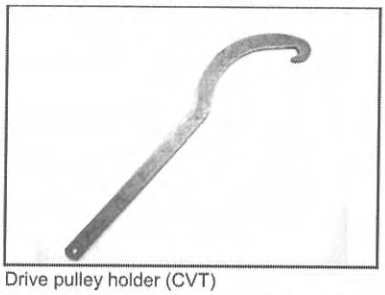

Drive pulley holder (CVT)
P/N 529 006 400 Recommended

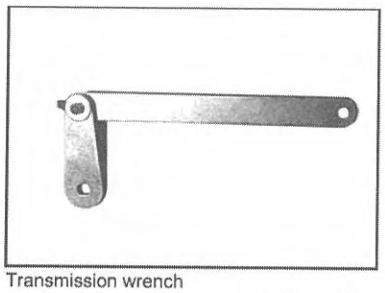

Transmission wrench
P/N 529 035 599 Recommended
Traxter

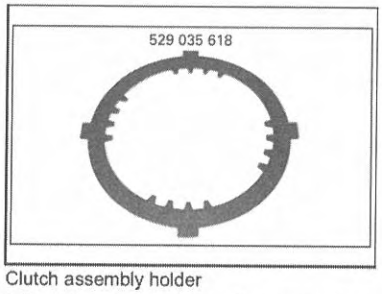


Clutch assembly holder
P/N 529 035 618 Recommended
Traxter

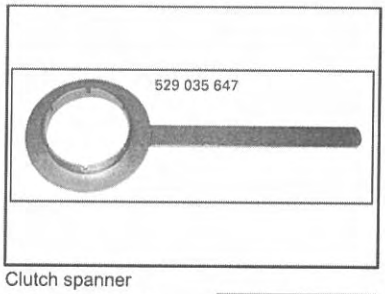


Clutch spanner
P/N 529 035 647 Mandatory
Traxter, 449 engine

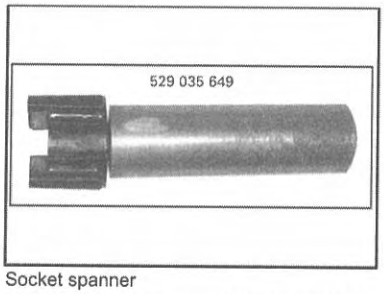


Socket spanner
P/N 529 035 649 Recommended
Outlander, Traxter & Quest
To remove the pinion screw in the differential.

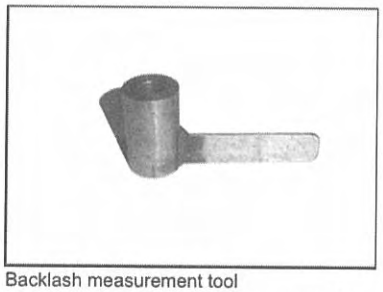

Backlash measurement tool
P/N 529 035 665 Recommended
Outlander, Renegade

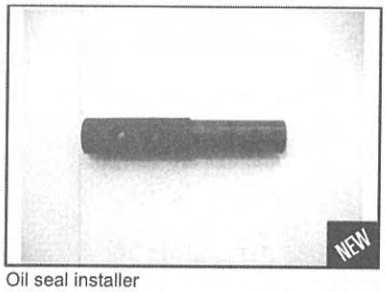


Oil seal installer
P/N 529 035 693 Recommended
449 engine

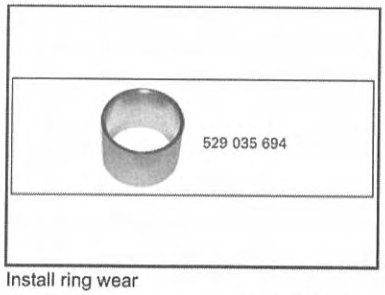


Install ring wear
P/N 529 035 694 Recommended
DS 650
Rear axle

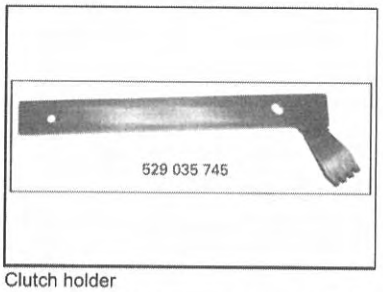


Clutch holder
P/N 529 035 745 Recommended
610/500 engines

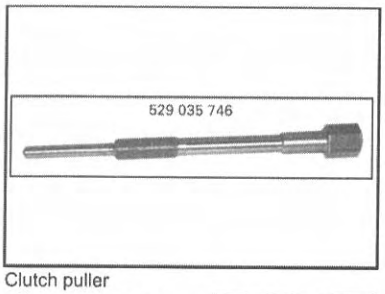


Clutch puller
P/N 529 035 746 Mandatory
610/500, V-490, V-660, V-810 engines

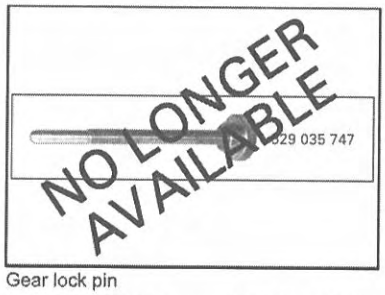


Gear lock pin
P/N 529 035 747 Recommended
610/500, V-490, V-660, V-810 engines
Replaced by 529036098

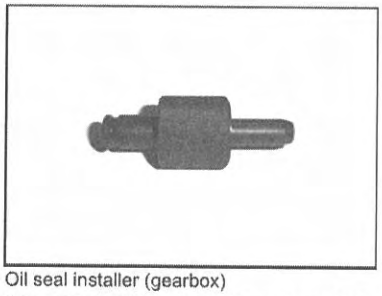

Oil seal installer (gearbox)
P/N 529 035 758 Recommended
V-490, V-660, V-810 engines
Use with handle 420 877 650

Service
vdd2009-001-102_en_11

## Propulsion / Transmission

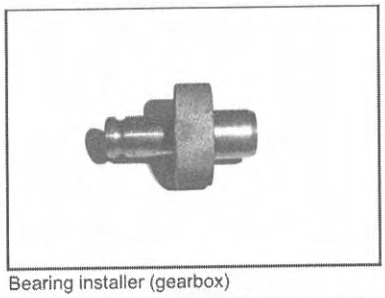

Bearing installer (gearbox)
P/N 529 035 762 Recommended
V-490, V-660, V-810 engines
Use with handle 420 877 650

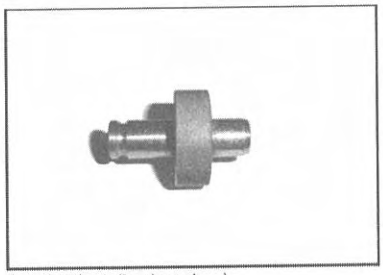

Bearing installer (gearbox)
P/N 529 035 763 Recommended
V-490, V-660, V-810 engines
Use with handle 420 877 650

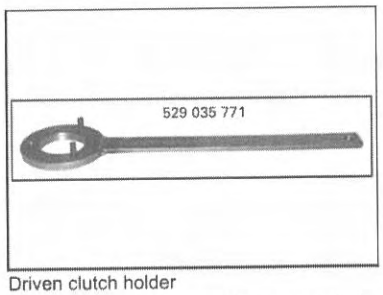


Driven clutch holder
P/N 529 035 771 Recommended
330/400, 610/500, V-490, V-660, V-810

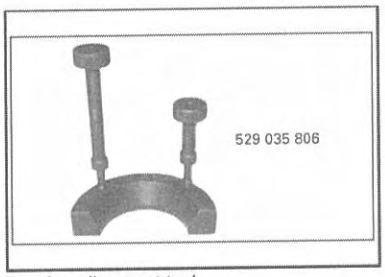


Bearing alignment tool
P/N 529 035 806 Recommended
Quest 500 & 650

Oil seal installer
P/N 529 035 854 Recommended
449 engine

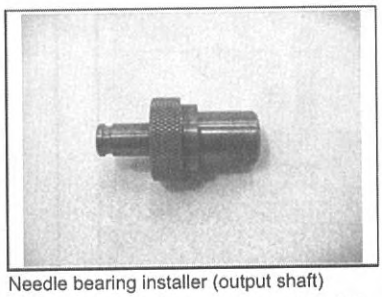

Needle bearing installer (output shaft)
P/N 529 035 858 Recommended
DS 70, DS 90
Use with handle 420 877 650

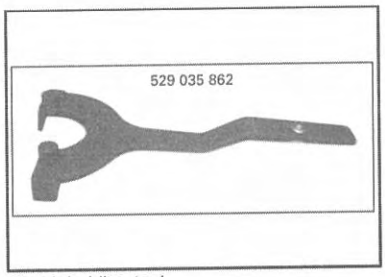


Clutch holding tool
P/N 529 035 862 Recommended
Rally 200

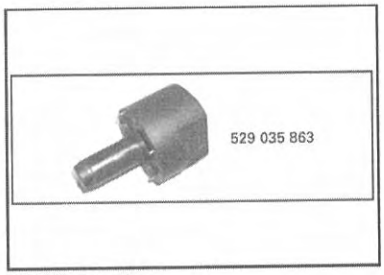


Clutch support
P/N 529 035 863 Recommended
Rally 200

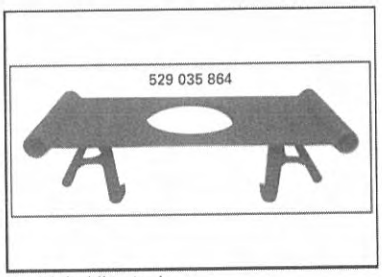


Clutch holding tool
P/N 529 035 864 Recommended
Rally 200 & DS 250

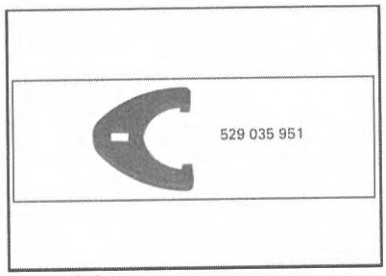


Rear axle key
P/N 529 035 951 Recommended
DS 650

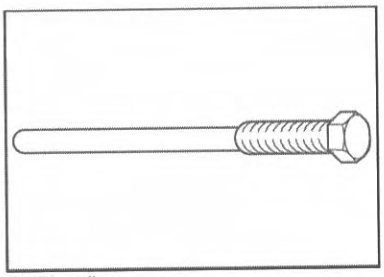

Clutch puller
P/N 529 035 992 Recommended
Sarasota

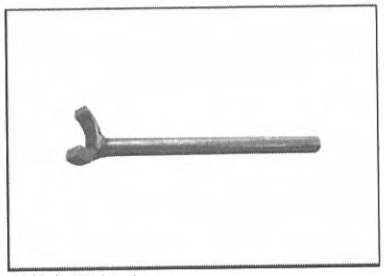

CV joint extractor
P/N 529 036 005 Recommended
Outlander/Renegade V-660 & V-810

Service
vdd2009-001-102_en_12

## Propulsion / Transmission

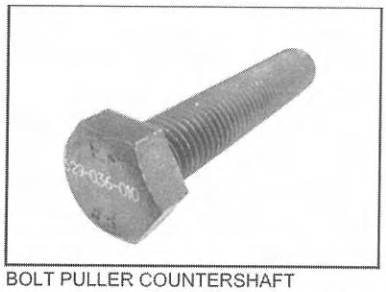

BOLT PULLER COUNTERSHAFT
P/N 529 036 010 Recommended
RT, DS 450

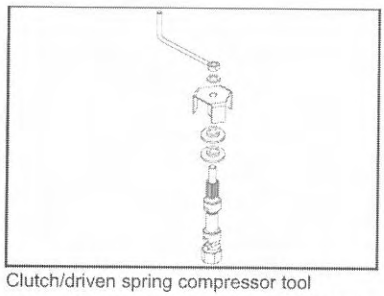

Clutch/driven spring compressor tool
P/N 529 036 012 Recommended
Most drive & driven pulleys

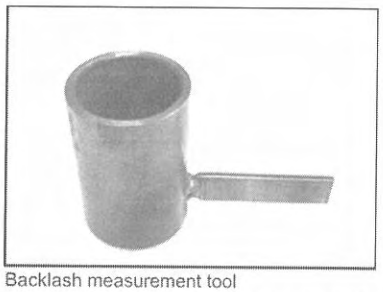

Backlash measurement tool
P/N 529 036 030 Recommended
Outlander/Renegade

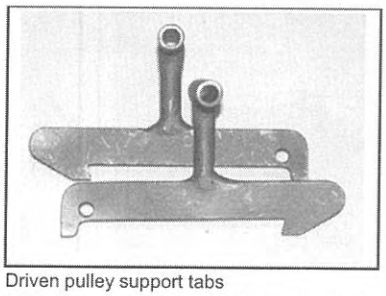

Driven pulley support tabs
P/N 529 036 047 Recommended
DS 250

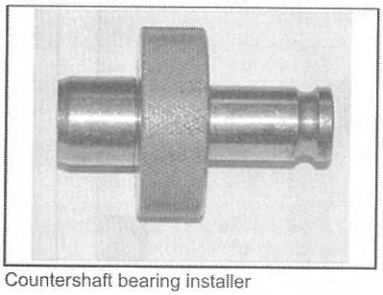

Countershaft bearing installer
P/N 529 036 053 Recommended
DS 250
Use with handle 420 877 650

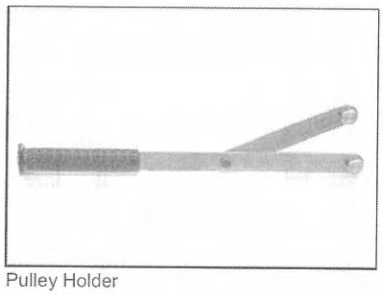

Pulley Holder
P/N 529 036 054 Recommended
Rally, DS 250, DS 70/90

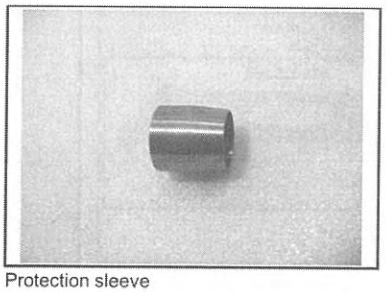

Protection sleeve
P/N 529 036 068 Recommended
449 engine

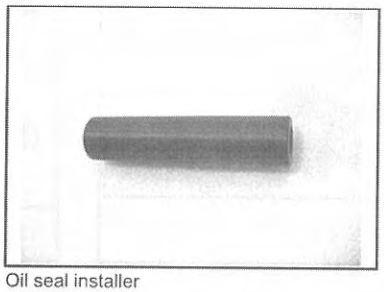

Oil seal installer
P/N 529 036 070 Recommended
449 engine
insertion jig for gearshift shaft

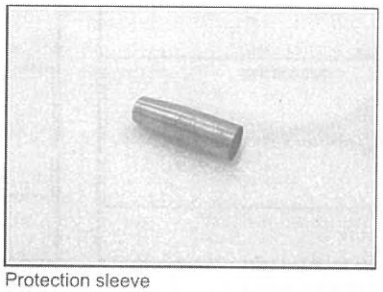

Protection sleeve
P/N 529 036 071 Recommended
449 engine
Gearshift shaft

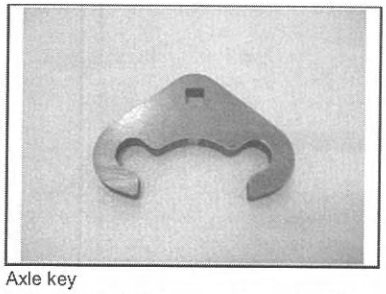

Axle key
P/N 529 036 082 Recommended
DS 450

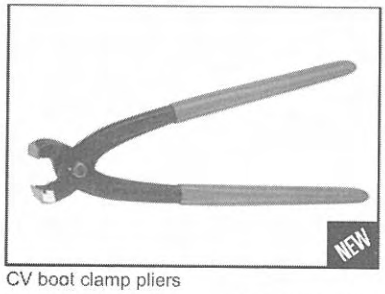


CV boot clamp pliers
P/N 529 036 120 Recommended
All models
For Stepless Low Profile Clamps 192
Clamp pincer with special jaw form

Service

vdd2009-001-102_en_13

## Steering

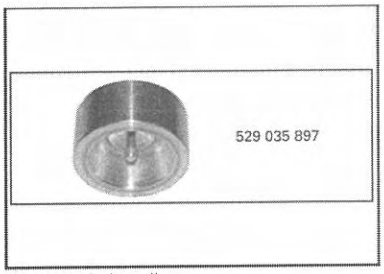


Heated grip installer
P/N 529 035 897 Recommended
Straight grips

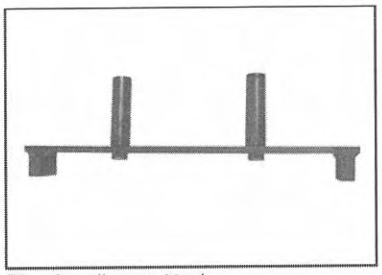

Direction alignment tool
P/N 529 036 059 Recommended
All except DS 450

## Suspension

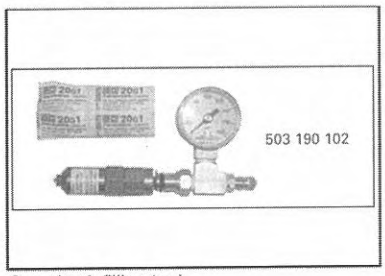


Gas shock filling tool
P/N 503 190 102 Recommended
T/A shocks
To be used with P/N 529035570. Spare needle P/N 529035930.

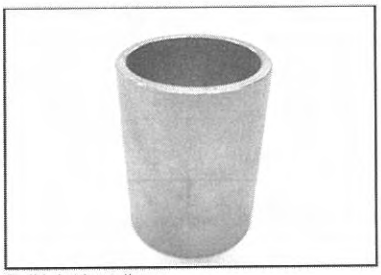

Ball joint installer
P/N 529 000 012 Recommended
REV, RT, DS 650, DS 450

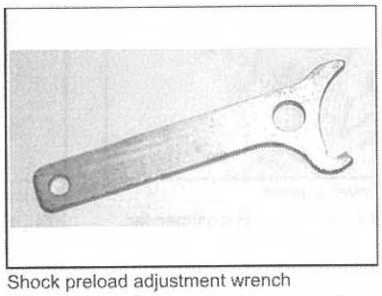

Shock preload adjustment wrench
P/N 529 032 900 Recommended

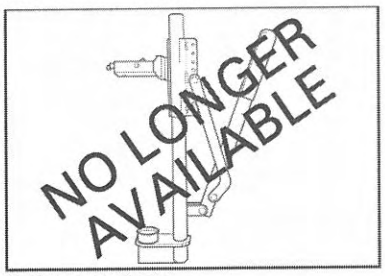


Spring compressor
P/N 529 035 504 Recommended
No longer sold, replaced by P/N 529 036 007.

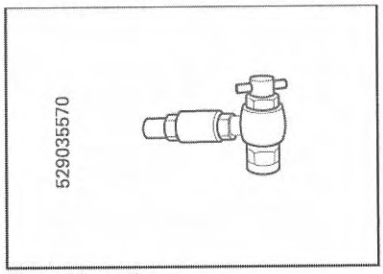


Shock filling valve
P/N 529 035 570 Recommended
T/A shocks

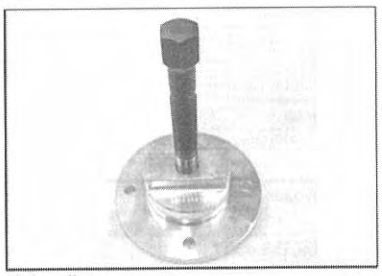

Hub puller
P/N 529 035 612 Recommended

## Suspension

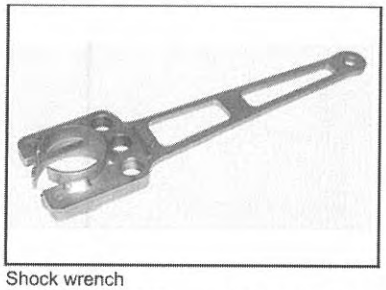

Shock wrench
P/N 529 035 727 Recommended
All T/A shocks

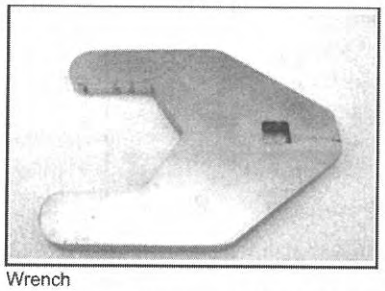

Wrench
P/N 529 035 729 Recommended
DS 650

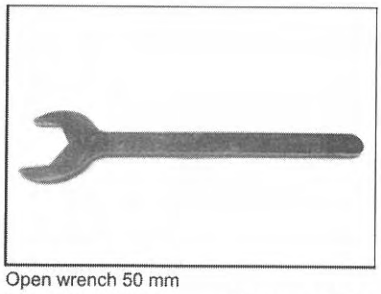

Open wrench 50 mm
P/N 529 035 866 Recommended
Rally
Rally axle nut

Ball joint remover support
P/N 529 035 873 Recommended
REV, RT
Replaced by 529036121

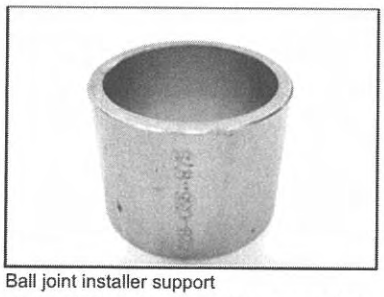

Ball joint installer support
P/N 529 035 875 Recommended
REV, RT, Outlander

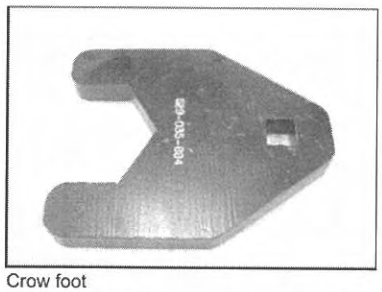

Crow foot
P/N 529 035 884 Recommended
Rally 200
Rear axle nut

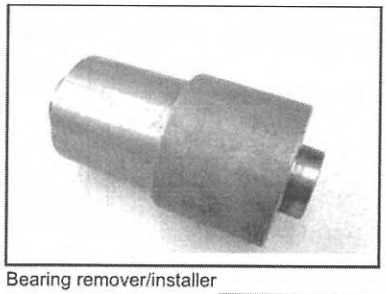

Bearing remover/installer
P/N 529 035 918 Mandatory
Outlander, Renegade, DS 450

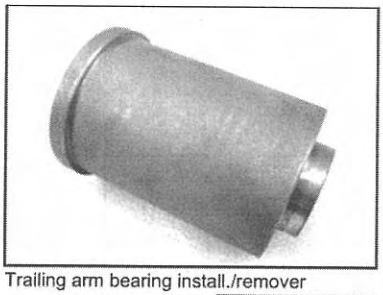

Trailing arm bearing install./remover
P/N 529 035 920 Mandatory
Outlander, Renegade

Bearing remover trailing arm support
P/N 529 035 922 Mandatory
Outlander, Renegade

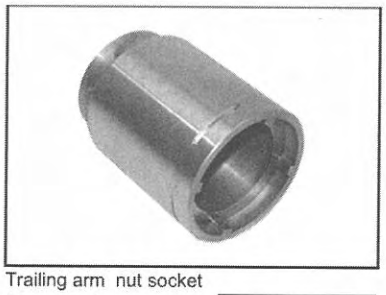

Trailing arm nut socket
P/N 529 035 925 Mandatory
Outlander, Renegade

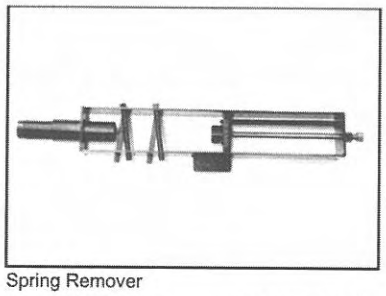

Spring Remover
P/N 529 036 007 Recommended
All models
To remove coil spring from shock.

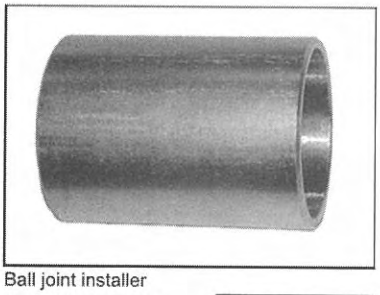

Ball joint installer
P/N 529 036 020 Mandatory
Outlander/Renegade

Service

vdd2009-001-102_en_15

## Suspension

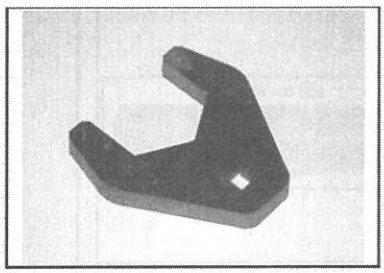

Rear axle key
P/N 529 036 046 Recommended
DS 250

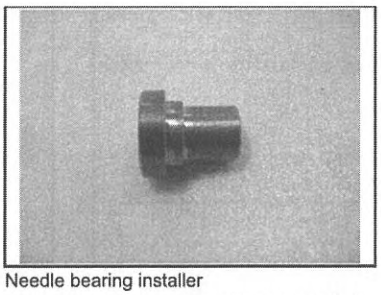

Needle bearing installer
P/N 529 036 109 Recommended
DS 450

Ball joint remover support
P/N 529 036 121 Recommended
REV, RT, Outlander, roadsters

## Various

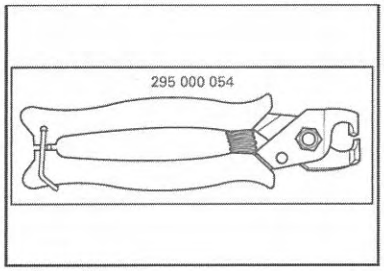


Caillau pliers
P/N 295 000 054 Recommended
All models

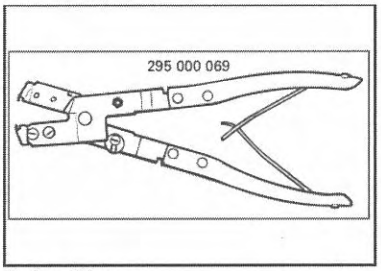


Oetiker Pliers
P/N 295 000 069 Recommended
All models

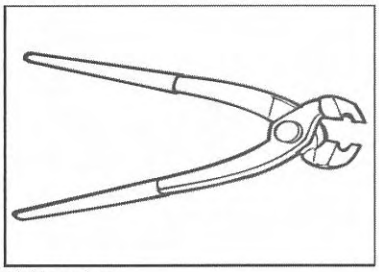

Oetiker pliers
P/N 295 000 070 Recommended
All models

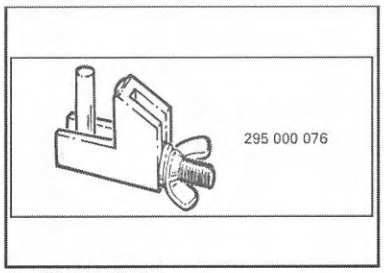


Small hose pincher
P/N 295 000 076 Recommended
All models

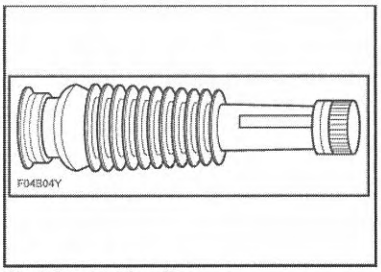


Flexible spout for oil
P/N 414 837 300 Recommended
All models

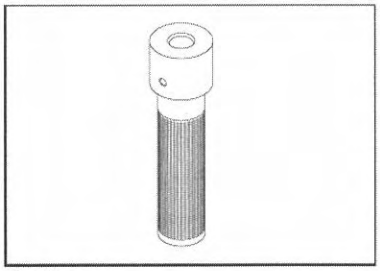

Handle
P/N 420 877 650 Recommended
All models
To be used with many pushers.

Service

vdd2009-001-102_en_16

## Various

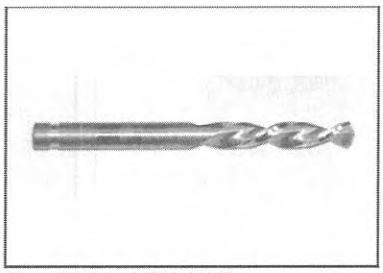

Supertitanium drill bit 3/16"
P/N 529 031 800 Recommended
To drill/remove many kinds of rivet.

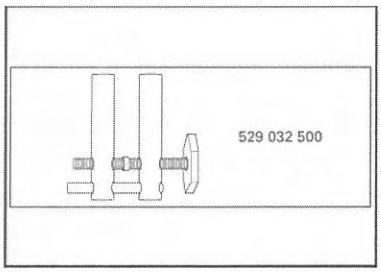


Large hose pincher
P/N 529 032 500 Recommended
All models

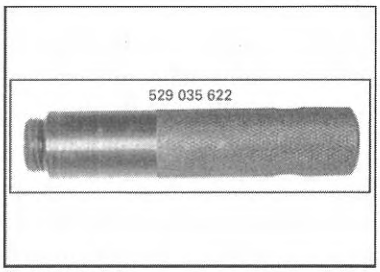


Cover remover
P/N 529 035 622 Recommended
DS 650

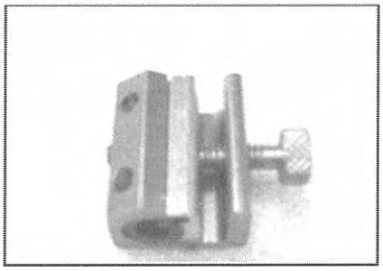

Cable luber
P/N 529 035 738 Mandatory
All cables

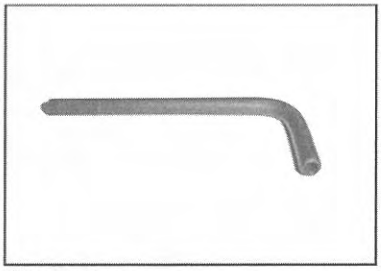

Allen key 3 mm
P/N 529 035 781 Recommended
DS 50, DS 90 2002/07

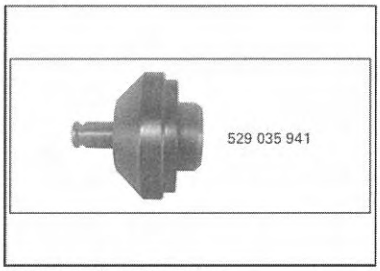


Output shaft seal installer
P/N 529 035 941 Mandatory
400 engines
Use with handle 420 877 650

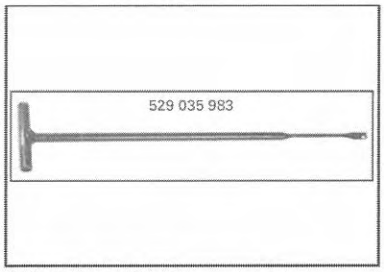


Spring removal tool
P/N 529 035 983 Recommended
All models

Blind hole bearing puller set
P/N 529 036 117 Recommended
All models
Replaced by 529036056

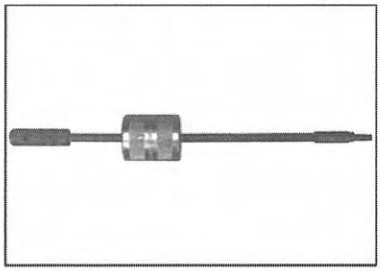

Slide hammer
P/N Snap-on CJ125-6 Recommended
All
No sold by BRP

Service
vdd2009-001-102_en_17

## Index

Tool Part Numbers ... Page

These tools are mandatory


295000054 ..... 16
295000069 ..... 16
295000070 ..... 16
295000076 ..... 16
414104700 ..... 2
414837300 ..... 16
420277010 ..... 8
420877650 ..... 16
503190102 ..... 14
529000012 ..... 14
529006400 ..... 11
529014500 ..... 8
529021800 ..... 2
529031800 ..... 17
529032500 ..... 17
529032900 ..... 14
529033100 ..... 2
529035504 ..... 14
529035520 ..... 7
529035549 ..... 2
529035559 ..... 2
529035570 ..... 14
529035591 ..... 7
529035599 ..... 11
529035605 ..... 8
529035610 ..... 2
529035612 ..... 14
529035617 ..... 2
529035618 ..... 11
529035622 ..... 17
529035645 ..... 2
529035647 ..... 11
529035648 ..... 2
529035649 ..... 11
529035652 ..... 10
529035653 ..... 9
529035661 ..... 2
529035665 ..... 11
529035687 ..... 2
529035693 ..... 11
529035694 ..... 11
529035697 ..... 9
529035709 ..... 7
529035714 ..... 7
529035724 ..... 2
529035727 ..... 15
529035729 ..... 15
529035730 ..... 9
529035732 ..... 7
529035738 ..... 17
529035745 ..... 11
529035746 ..... 11
529035747 ..... 11
529035748 ..... 9
529035752 ..... 3
529035753 ..... 3
529035754 ..... 3
529035757 ..... 8
529035758 ..... 11
529035762 ..... 12
529035763 ..... 12
529035764 ..... 3
529035765 ..... 3
529035766 ..... 3
529035770 ..... 3
529035771 ..... 12
529035781 ..... 17
529035792 ..... 9
529035795 ..... 3
529035798 ..... 9
529035806 ..... 12
529035854 ..... 12
529035858 ..... 12
529035862 ..... 12
529035863 ..... 12
529035864 ..... 12
529035866 ..... 15
529035868 ..... 9
529035873 ..... 15
529035875 ..... 15
529035880 ..... 3
529035884 ..... 15
529035897 ..... 14
529035898 ..... 3
529035899 ..... 7
529035908 ..... 9
529035909 ..... 9
529035916 ..... 3
529035917 ..... 3
529035918 ..... 15
529035919 ..... 4
529035920 ..... 15
529035921 ..... 4
529035922 ..... 15
529035924 ..... 4
529035925 ..... 15
529035926 ..... 4
529035933 ..... 4
529035934 ..... 4
529035935 ..... 4
529035941 ..... 17
529035951 ..... 12
529035977 ..... 4
529035983 ..... 17
529035991 ..... 8
529035992 ..... 12
529036005 ..... 12
529036007 ..... 15
529036010 ..... 13
529036012 ..... 13
529036016 ..... 9
529036018 ..... 9
529036020 ..... 15
529036021 ..... 9
529036022 ..... 4
529036023 ..... 7
529036028 ..... 4
529036029 ..... 4
529036030 ..... 13
529036031 ..... 4
529036032 ..... 5
529036033 ..... 5
529036034 ..... 5
529036046 ..... 16
529036047 ..... 13
529036048 ..... 5
529036049 ..... 5
529036051 ..... 5
529036052 ..... 8
529036053 ..... 13
529036054 ..... 13
529036055 ..... 5
529036058 ..... 5
529036059 ..... 14
529036063 ..... 10
529036068 ..... 13
529036069 ..... 5
529036070 ..... 13
529036071 ..... 13
529036073 ..... 5
529036074 ..... 5
529036075 ..... 5
529036076 ..... 6
529036078 ..... 6
529036079 ..... 10
529036082 ..... 13
529036083 ..... 6
529036084 ..... 6
529036085 ..... 10
529036087 ..... 6
529036098 ..... 6
529036107 ..... 6
529036109 ..... 16
529036117 ..... 17
529036120 ..... 13
529036121 ..... 16
529036130 ..... 6
529036136 ..... 7
529036139 ..... 8
710000851 ..... 10
AMP 755430-2 ..... 10
Snap-on CJ125-6 .... 17
Snap-on RC 980 ..... 6
Snap-on TA362 ..... 6
Snap-on YA 8230 .... 6


Service

vdd2009-001-102_en_18

# DS 250®

## SPECIFICATIONS

| ENGINE | |
|---|---|
| Type | 249.4cc, single cylinder, liquid-cooled, SOHC, 4-valve |
| Bore & Stroke | 71 x 63 mm |
| EFI System/ Carburetor | Keihin® PTG 23 |
| Starting System | Electric |
| Transmission | Automatic CVT, sub-transmission w/forward, neutral & reverse |
| Drive Train | Chain driven/solid axle |

| DIMENSIONS | |
|---|---|
| L x W x H (in) | 72 x 40.5 x 43.5 in |
| L x W x H (mm) | 1,830 x 1,030 x 1,105 mm |
| Wheelbase | 47 in (1,187 mm) |
| Seat Height | 31.5 in (800 mm) |
| Ground Clearance | 10.2 in (260 mm) Center of ATV |
| Dry Weight | 429 lbs (195 kg) |
| Fuel Capacity | 3.3 US gal (12L) |

| WARRANTY | |
|---|---|
| Basic | 6 months limited factory warranty |
| Extended | B.E.S.T. available from 12 to 36 months |

| CHASSIS | |
|---|---|
| Frame | DS 250 |
| Front Suspension Type/Shocks | Double A-arm 5-position adjustable pre-load |
| Front Suspension Travel | 5.5 in (140 mm) |
| Rear Suspension Type/Shocks | Swingarm 5-position adjustable pre-load |
| Rear Suspension Travel | 6.7 in (170 mm) |
| Front Brake | 2 hydraulic discs |
| Rear Brake | 1 hydraulic disc |
| Front Tires | 22 x 7 x 10 in 559 x 178 x 254 mm |
| Rear Tires | 20 x 11 x 9 in 508 x 279 x 229 mm |
| Wheels | Steel |

| FEATURES | |
|---|---|
| Instrumentation | Neutral light, reverse light & oil/temperature light |
| Lighting | 2 headlamps (35W) with tail light/brake light |
| DC Outlet | Yes |
| Colors Available | Yellow Can-Am Red |

BEST PROTECTION

©2008 Bombardier Recreational Products Inc (BRP). All rights reserved. ™,® and the BRP logo are registered trademarks of Bombardier Recreational Products Inc. or its affiliates. Products are distributed in the USA by BRP US Inc. Because of our ongoing commitment to product quality and innovation, BRP reserves the right at anytime to discontinue or change specifications, price, design, features, models or equipment without incurring any obligation. Ride responsibly. BRP highly recommends that all ATV drivers take a training course. For safety and training information, see your dealer or, in U.S. call the ATV Safety Institute at 1(800) 887-2887. In Canada, call the Canadian Safety Council at 1(613) 739-1535 ext 227. ATVs can be hazardous to operate. For your safety: the operator and passenger should wear a helmet, eye protection and other protective clothing. Always remember that riding and alcohol/drugs don't mix. Never ride on paved surfaces or public roads. Never engage in stunt driving. Avoid excessive speeds and be particularly careful on difficult terrain. ATVs with engine sizes of greater then 90cc are recommended for use only by those age 16 and older. Never carry passengers on any ATV not specifically designated for such use. Can-Am™ Outlander MAX ATVs: These ATVs are recommended for drivers aged 16 and older, and passengers aged 12 and older only.

can-am
THE ULTIMATE RIDE™

vdd2009-001-077_en

# DS 90™ / DS 70™

## SPECIFICATIONS

| ENGINE | |
|---|---|
| Type | 89.5cc, single, air-cooled, SOHC, 2-valve (DS 90)<br>69cc, single, air-cooled, SOHC, 2-valve (DS 70) |
| Bore & Stroke | 49.5 x 48 mm (DS 90)<br>47 x 40 mm (DS 70) |
| EFI System/ Carburetor | Carburetion, Keihin® |
| Starting System | Electric & kick start |
| Transmission | Automatic CVT w/forward, neutral & reverse |
| Drive Train | Chain driven/solid axle |

| DIMENSIONS | |
|---|---|
| L x W x H (in) | 59.8 x 35.6 x 36.8 in |
| L x W x H (mm) | 1,520 x 905 x 935 mm |
| Wheelbase | 39 in (1,000 mm) |
| Seat Height | 27 in (685 mm) |
| Ground Clearance | 8.3 in under frame/ 4.5 in under rear axle |
| Dry Weight | 245 lbs (111 kg) |
| Front Storage | 0.7 US gal (2.7L) |
| Fuel Capacity | 1.6 US gal (6L) |

| WARRANTY | |
|---|---|
| Basic | 6 months limited factory warranty |

| CHASSIS | |
|---|---|
| Frame | DS 90/DS 70 |
| Front Suspension Type/Shocks | Independent A-arm |
| Front Suspension Travel | 3.4 in (86 mm) |
| Rear Suspension Type/Shocks | Swingarm |
| Rear Suspension Travel | 6.3 in (160 mm) |
| Front Brake | Double drum |
| Rear Brake | Drum |
| Front Tires | 19 x 7 x 8 in<br>483 x 178 x 203 mm |
| Rear Tires | 18 x 9.5 x 8 in<br>457 x 241 x 203 mm |
| Wheels | Steel |

| FEATURES | |
|---|---|
| Instrumentation | Reverse, neutral |
| Lighting | Day lights |
| Color Available | Yellow |

## DS 90 X PACKAGE

- 43 inch-wide Double A-arm with HPG piggyback shocks, with 7" of travel
- Swingarm with 41 inch-wide and HPG piggyback shock, with 9" of travel
- Black aluminum rims
- Hydraulic front & rear disc brakes
- Tether engine-shut-off switch
- Square race-style handlebar pad
- Handlebar riser block (+ 1-inch)
- Aluminum front bumper with number plate
- Nerf bars
- Racing kick-up pegs
- Sport-look exhaust
- X package graphics
- X package seat cover
- Color: Black with X package graphics

BEST PROTECTION ©2008 Bombardier Recreational Products Inc (BRP). All rights reserved. ™ ® and the BRP logo are registered trademarks of Bombardier Recreational Products Inc. or its affiliates. Products are distributed in the USA by BRP US Inc. Because of our ongoing commitment to product quality and innovation, BRP reserves the right at anytime to discontinue or change specifications, price, design, features, models or equipment without incurring any obligation. Ride responsibly. BRP highly recommends that all ATV drivers take a training course. For safety and training information, see your dealer or, in U.S. call the ATV Safety Institute at 1(800) 887-2887. In Canada, call the Canadian Safety Council at 1(613) 739-1535 ext 227. ATVs can be hazardous to operate. For your safety: the operator and passenger should wear a helmet, eye protection and other protective clothing. Always remember that riding and alcohol/drugs don't mix. Never ride on paved surfaces or public roads. Never engage in stunt driving. Avoid excessive speeds and be particularly careful on difficult terrain. ATVs with engine sizes of greater then 90cc are recommended for use only by those age 16 and older. Never carry passengers on any ATV not specifically designated for such use. Can-Am™ Outlander MAX ATVs: These ATVs are recommended for drivers aged 16 and older, and passengers aged 12 and older only.

can-am THE ULTIMATE RIDE™

vdd2009-001-078_en

# OUTLANDER™ 400 EFI

## SPECIFICATIONS

| ENGINE | |
|---|---|
| Type | 400cc, single cylinder, liquid-cooled, SOHC, 4-valve |
| Bore & Stroke | 91 x 61.5 mm |
| EFI System/ Carburetor | 46mm Throttle Body, Siemens VDO injector |
| Starting System | Electric w/auxiliary recoil |
| Transmission | CVT, sub-transmission with high, low, park, neutral & reverse, standard engine braking |
| Drive Train | Selectable 2w/4w shaft driven with Visco-Lok† front differential |

| DIMENSIONS | |
|---|---|
| L x W x H (in) | 86 x 46 x 45 in |
| L x W x H (mm) | 2,184 x 1,168 x 1,143 mm |
| Wheelbase | 49 in (1,244 mm) |
| Seat Height | 35 in (889 mm) |
| Ground Clearance | 9.3 in (236 mm) |
| Dry Weight | 618 lbs (280 kg) |
| Towing Capacity | 1,100 lbs (500 kg) |
| Rack Capacity | Front: 100 lbs (45 kg) Rear: 200 lbs (90 kg) |
| Rear Storage | 5.3 US gal (20L) |
| Fuel Capacity | 5.3 US gal (20L) |

| WARRANTY | |
|---|---|
| Basic | 6 months limited factory warranty |
| Extended | B.E.S.T. available from 12 to 36 months |

| CHASSIS | |
|---|---|
| Frame | SST |
| Front Suspension Type/Shocks | MacPherson |
| Front Suspension Travel | 7 in (178 mm) |
| Rear Suspension Type/Shocks | TTI independent |
| Rear Suspension Travel | 8 in (203 mm) |
| Front Brake | 2 inboard hydraulic discs |
| Rear Brake | 1 inboard hydraulic disc |
| Front Tires | 25 x 8 x 12 in 635 x 203 x 305 mm |
| Rear Tires | 25 x 10 x 12 in 635 x 254 x 305 mm |
| Wheels | Steel |

| FEATURES | |
|---|---|
| Instrumentation | Multi-function digital LCD gauge: Speedometer, tachometer (bar graph RPM, bottom bar numerical RPM), odometer, trip & hour meters, diagnostic center, gear position, engine hour meter, 4x4 indicator, temperature & engine lights, fuel gauge, auto shut off after 15 minutes |
| Electrical | Prewired for winch |
| Lighting | 2 fender mounted headlamps (35W) with tail light/brake light |
| DC Outlet | Lighter type in console, standard connector in the back (15A) |
| Colors Available | Yellow Viper Red |

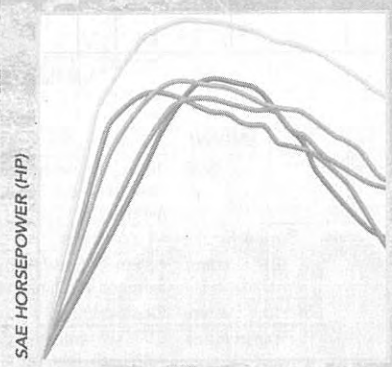


- Can-Am™ Outlander 400 EFI
- Suzuki King Quad® 400 AS
- Honda Rancher® 420 AT
- Polaris Sportsman® 400
- Arctic Cat® 400 auto

## XT PACKAGE

- BRP XL3000 winch with roller fairlead and wired remote controls
- Cast aluminum rims
- Aggressive Carlisle ACT Radial tires
- Heavy-duty front & rear bumpers
- Handlebar wind deflectors
- Colors: Black, Viper Red, Yellow

BEST PROTECTION

©2008 Bombardier Recreational Products Inc (BRP). All rights reserved. ™ ® and the BRP logo are registered trademarks of Bombardier Recreational Products Inc. or its affiliates. †Visco-Lok is a trademark of GKN Viscodrive GmbH. ®All other trademarks are the property of their respective owners. Products are distributed in the USA by BRP US Inc. Because of our ongoing commitment to product quality and innovation, BRP reserves the right at anytime to discontinue or change specifications, price, design, features, models or equipment without incurring any obligation. Ride responsibly. BRP highly recommends that all ATV drivers take a training course. For safety and training information, see your dealer or, in U.S. call the ATV Safety Institute at 1(800) 887-2887. In Canada, call the Canadian Safety Council at 1(613) 739-1535 ext 227. ATVs can be hazardous to operate. For your safety: the operator and passenger should wear a helmet, eye protection and other protective clothing. Always remember that riding and alcohol/drugs don't mix. Never ride on paved surfaces or public roads. Never engage in stunt driving. Avoid excessive speeds and be particularly careful on difficult terrain. ATVs with engine sizes of greater then 90cc are recommended for use only by those age 16 and older. Never carry passengers on any ATV not specifically designated for such use. Can-Am™ Outlander MAX ATVs: These ATVs are recommended for drivers aged 16 and older, and passengers aged 12 and older only.

can-am THE ULTIMATE RIDE™

vdd2009-001-079_en

# OUTLANDER™ MAX 400 EFI

## SPECIFICATIONS

| ENGINE | |
|---|---|
| Type | 400cc, single cylinder, liquid-cooled, SOHC, 4-valve |
| Bore & Stroke | 91 x 61.5 mm |
| EFI System/ Carburetor | 46mm Throttle Body, Siemens VDO injector |
| Starting System | Electric w/auxiliary recoil |
| Transmission | CVT, sub-transmission with high, low, park, neutral & reverse, standard engine braking |
| Drive Train | Selectable 2w/4w shaft driven with Visco-Lok† front differential |

| DIMENSIONS | |
|---|---|
| L x W x H (in) | 94 x 46 x 45 in |
| L x W x H (mm) | 2,387 x 1,168 x 1,143 mm |
| Wheelbase | 57 in (1,447 mm) |
| Seat Height | 35 in (889 mm) |
| Ground Clearance | 9.3 in (236 mm) |
| Dry Weight | 668 lbs (303 kg) |
| Towing Capacity | 1,100 lbs (500 kg) |
| Rack Capacity | Front: 100 lbs (45 kg) Rear: 200 lbs (90 kg) |
| Storage | Rear: 5.3 US gal (20L) CRS (Convertible Rack System) |
| Fuel Capacity | 5.3 US gal (20L) |

| WARRANTY | |
|---|---|
| Basic | 6 months limited factory warranty |
| Extended | B.E.S.T. available from 12 to 36 months |

| CHASSIS | |
|---|---|
| Frame | SST |
| Front Suspension Type/Shocks | MacPherson |
| Front Suspension Travel | 7 in (178 mm) |
| Rear Suspension Type/Shocks | TTI independent |
| Rear Suspension Travel | 8 in (203 mm) |
| Front Brake | 2 inboard hydraulic discs |
| Rear Brake | 1 inboard hydraulic disc |
| Front Tires | 25 x 8 x 12 in 635 x 203 x 305 mm |
| Rear Tires | 25 x 10 x 12 in 635 x 254 x 305 mm |
| Wheels | Steel |

| FEATURES | |
|---|---|
| Instrumentation | Multi-function digital LCD gauge: Speedometer, tachometer (bar graph RPM, bottom bar numerical RPM), odometer, trip & hour meters, diagnostic center, gear position, engine hour meter, 4x4 indicator, temperature & engine lights, fuel gauge, auto shut off after 15 minutes |
| Electrical | Prewired for winch |
| Lighting | 2 fender mounted headlamps (35W) with tail light/brake light |
| DC Outlet | Lighter type in console, standard connector in the back (15A) |
| Color Available | Viper Red |

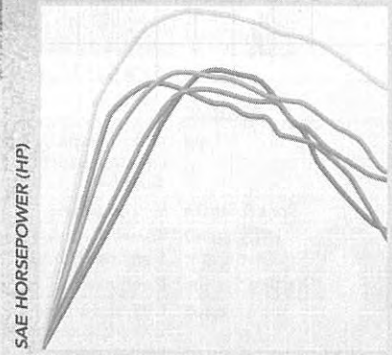


- Can-Am™ Outlander 400 EFI
- Suzuki King Quad® 400 AS
- Honda Rancher® 420 AT
- Polaris Sportsman® 400
- Arctic Cat® 400 auto

## XT PACKAGE

- BRP XL3000 winch with roller fairlead and wired remote controls
- Cast aluminum rims
- Aggressive Carlisle ACT Radial tires
- Heavy-duty front & rear bumpers
- Handlebar wind deflectors
- Colors: Black, Viper Red, Yellow

BEST PROTECTION

©2008 Bombardier Recreational Products Inc (BRP). All rights reserved. ™,® and the BRP logo are registered trademarks of Bombardier Recreational Products Inc. or its affiliates. †Visco-Lok is a trademark of GKN Viscodrive GmbH. ®All other trademarks are the property of their respective owners. Products are distributed in the USA by BRP US Inc. Because of our ongoing commitment to product quality and innovation, BRP reserves the right at anytime to discontinue or change specifications, price, design, features, models or equipment without incurring any obligation. Ride responsibly. BRP highly recommends that all ATV drivers take a training course. For safety and training information, see your dealer or, in U.S. call the ATV Safety Institute at 1(800) 887-2887. In Canada, call the Canadian Safety Council at 1(613) 739-1535 ext 227. ATVs can be hazardous to operate. For your safety: the operator and passenger should wear a helmet, eye protection and other protective clothing. Always remember that riding and alcohol/drugs don't mix. Never ride on paved surfaces or public roads. Never engage in stunt driving. Avoid excessive speeds and be particularly careful on difficult terrain. ATVs with engine sizes of greater than 90cc are recommended for use only by those age 16 and older. Never carry passengers on any ATV not specifically designated for such use. Can-Am™ Outlander MAX ATVs: These ATVs are recommended for drivers aged 16 and older, and passengers aged 12 and older only.

can-am THE ULTIMATE RIDE™

vdd2009-001-080_en

# OUTLANDER™ 500 EFI

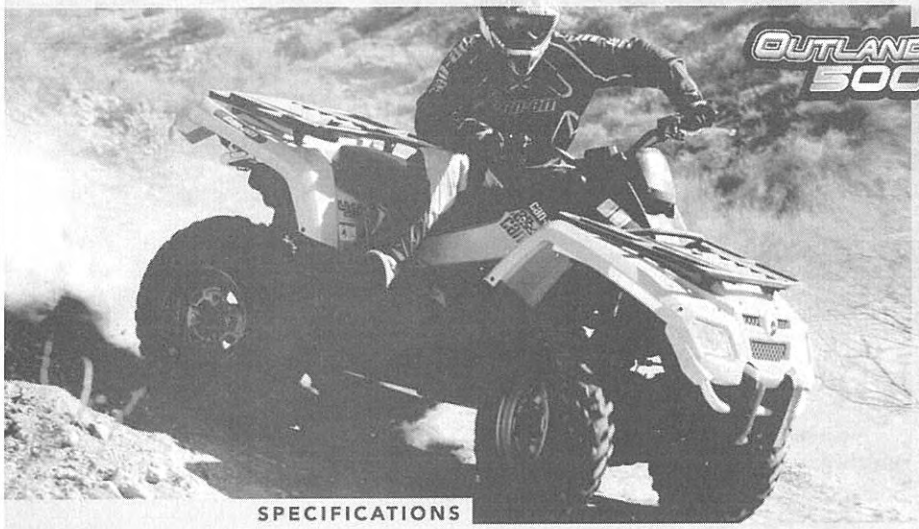

## SPECIFICATIONS

| ENGINE | |
|---|---|
| Type | 499.6cc, V-twin, liquid-cooled, SOHC, 8-valve (4-valve/cyl) |
| Bore & Stroke | 82 x 47 mm |
| EFI System/ Carburetor | 46mm Throttle Body, 2 Siemens VDO injectors |
| Starting System | Electric |
| Transmission | CVT, sub-transmission with high, low, park, neutral & reverse, standard engine braking |
| Drive Train | Selectable 2w/4w shaft driven with Visco-Lok† front differential |

| DIMENSIONS | |
|---|---|
| L x W x H (in) | 86 x 46 x 45 in |
| L x W x H (mm) | 2,184 x 1,168 x 1,143 mm |
| Wheelbase | 51 in (1,295 mm) |
| Seat Height | 34.5 in (877 mm) |
| Ground Clearance | 11 in (279 mm) |
| Dry Weight | 645 lbs (293 kg) |
| Towing Capacity | 1,300 lbs (590 kg) |
| Rack Capacity | Front: 100 lbs (45 kg) Rear: 200 lbs (90 kg) |
| Rear Storage | 5.3 US gal (20L) |
| Fuel Capacity | 5.3 US gal (20L) |

| WARRANTY | |
|---|---|
| Basic | 6 months limited factory warranty |
| Extended | B.E.S.T. available from 12 to 36 months |

| CHASSIS | |
|---|---|
| Frame | SST |
| Front Suspension Type/Shocks | MacPherson |
| Front Suspension Travel | 7 in (178 mm) |
| Rear Suspension Type/Shocks | TTI independent |
| Rear Suspension Travel | 9 in (229 mm) |
| Front Brake | 2 inboard hydraulic discs |
| Rear Brake | 1 inboard hydraulic disc |
| Front Tires | 25 x 8 x 12 in 635 x 203 x 305 mm |
| Rear Tires | 25 x 10 x 12 in 635 x 254 x 305 mm |
| Wheels | Steel |

| FEATURES | |
|---|---|
| Instrumentation | Multi-function digital LCD gauge: Speedometer, tachometer (bar graph RPM, bottom bar numerical RPM), odometer, trip & hour meters, diagnostic center, gear position, engine hour meter, 4x4 indicator, temperature & engine lights, fuel gauge, auto shut off after 15 minutes |
| Anti-theft System | D.E.S.S. (Digital Encoded Security System) |
| Electrical | Prewired for winch |
| Lighting | 2 fender mounted headlamps (35W) with tail light/brake light |
| DC Outlet | Lighter type in console, standard connector in the back (15A) |
| Colors Available | Yellow<br>Viper Red |

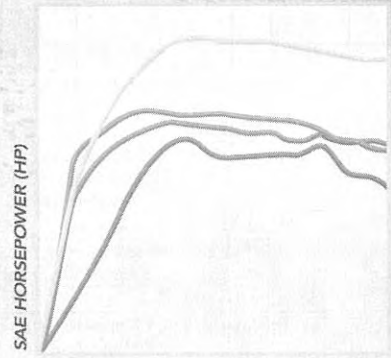


- Can-Am™ Outlander 500 EFI
- Polaris Sportsman® 500 EFI
- Arctic Cat® 500 auto
- Honda Rubicon® 500

## XT PACKAGE

- BRP XL3000 winch with roller fairlead and wired remote controls
- Cast aluminum rims (except Camo)
- Aggressive Carlisle ACT Radial tires
- Heavy-duty front & rear bumpers
- Handlebar wind deflectors
- Colors: Black, Viper Red, Yellow, Camo

BEST PROTECTION

©2008 Bombardier Recreational Products Inc (BRP). All rights reserved. ™,® and the BRP logo are registered trademarks of Bombardier Recreational Products Inc. or its affiliates. †Visco-Lok is a trademark of GKN Viscodrive GmbH. ®All other trademarks are the property of their respective owners. Products are distributed in the USA by BRP US Inc. Because of our ongoing commitment to product quality and innovation, BRP reserves the right at anytime to discontinue or change specifications, price, design, features, models or equipment without incurring any obligation. Ride responsibly. BRP highly recommends that all ATV drivers take a training course. For safety and training information, see your dealer or, in U.S. call the ATV Safety Institute at 1(800) 887-2887. In Canada, call the Canadian Safety Council at 1(613) 739-1535 ext 227. ATVs can be hazardous to operate. For your safety: the operator and passenger should wear a helmet, eye protection and other protective clothing. Always remember that riding and alcohol/drugs don't mix. Never ride on paved surfaces or public roads. Never engage in stunt driving. Avoid excessive speeds and be particularly careful on difficult terrain. ATVs with engine sizes of greater then 90cc are recommended for use only by those age 16 and older. Never carry passengers on any ATV not specifically designated for such use. Can-Am™ Outlander MAX ATVs: These ATVs are recommended for drivers aged 16 and older, and passengers aged 12 and older only.

can-am
THE ULTIMATE RIDE™

vdd2009-001-081_en

# OUTLANDER™ MAX 500 EFI

## SPECIFICATIONS

| ENGINE | |
|---|---|
| Type | 499.6cc, V-twin, liquid-cooled, SOHC, 8-valve (4-valve/cyl) |
| Bore & Stroke | 82 x 47 mm |
| EFI System/ Carburetor | 46mm Throttle Body, 2 Siemens VDO injectors |
| Starting System | Electric |
| Transmission | CVT, sub-transmission with high, low, park, neutral & reverse, standard engine braking |
| Drive Train | Selectable 2w/4w shaft driven with Visco-Lok† front differential |

| DIMENSIONS | |
|---|---|
| L x W x H (in) | 94 x 46 x 45 in |
| L x W x H (mm) | 2,387 x 1,168 x 1,143 mm |
| Wheelbase | 59 in (1,499 mm) |
| Seat Height | 34.5 in (877 mm) |
| Ground Clearance | 11 in (279 mm) |
| Dry Weight | 688 lbs (312 kg) |
| Towing Capacity | 1,300 lbs (590 kg) |
| Rack Capacity | Front: 100 lbs (45 kg) Rear: 200 lbs (90 kg) |
| Storage | Rear: 5.3 US gal (20L) CRS (Convertible Rack System) |
| Fuel Capacity | 5.3 US gal (20L) |

| WARRANTY | |
|---|---|
| Basic | 6 months limited factory warranty |
| Extended | B.E.S.T. available from 12 to 36 months |

| CHASSIS | |
|---|---|
| Frame | SST |
| Front Suspension Type/Shocks | MacPherson |
| Front Suspension Travel | 7 in (178 mm) |
| Rear Suspension Type/Shocks | TTI independent |
| Rear Suspension Travel | 9 in (229 mm) |
| Front Brake | 2 inboard hydraulic discs |
| Rear Brake | 1 inboard hydraulic disc |
| Front Tires | 25 x 8 x 12 in 635 x 203 x 305 mm |
| Rear Tires | 25 x 10 x 12 in 635 x 254 x 305 mm |
| Wheels | Steel |

| FEATURES | |
|---|---|
| Instrumentation | Multi-function digital LCD gauge: Speedometer, tachometer (bar graph RPM, bottom bar numerical RPM), odometer, trip & hour meters, diagnostic center, gear position, engine hour meter, 4x4 indicator, temperature & engine lights, fuel gauge, auto shut off after 15 minutes |
| Anti-theft System | D.E.S.S. (Digital Encoded Security System) |
| Electrical | Prewired for winch |
| Lighting | 2 fender mounted headlamps (35W) with tail light/brake light |
| DC Outlet | Lighter type in console, standard connector in the back (15A) |
| Color Available | Viper Red |

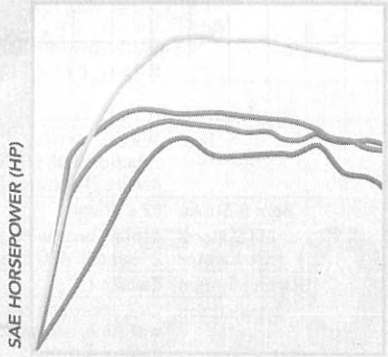


- Can-Am™ Outlander 500 EFI
- Polaris Sportsman® 500 EFI
- Arctic Cat® 500 auto
- Honda Rubicon® 500

## XT PACKAGE

- BRP XL3000 winch with roller fairlead and wired remote controls
- Cast aluminum rims (except Camo)
- Aggressive Carlisle ACT Radial tires
- Heavy-duty front & rear bumpers
- Handlebar wind deflectors
- Colors: Black, Viper Red, Yellow, Camo

BEST PROTECTION ©2008 Bombardier Recreational Products Inc (BRP). All rights reserved. ™,® and the BRP logo are registered trademarks of Bombardier Recreational Products Inc. or its affiliates. †Visco-Lok is a trademark of GKN Viscodrive GmbH. ®All other trademarks are the property of their respective owners. Products are distributed in the USA by BRP US Inc. Because of our ongoing commitment to product quality and innovation, BRP reserves the right at anytime to discontinue or change specifications, price, design, features, models or equipment without incurring any obligation. Ride responsibly. BRP highly recommends that all ATV drivers take a training course. For safety and training information, see your dealer or, in U.S. call the ATV Safety Institute at 1(800) 887-2887. In Canada, call the Canadian Safety Council at 1(613) 739-1535 ext 227. ATVs can be hazardous to operate. For your safety: the operator and passenger should wear a helmet, eye protection and other protective clothing. Always remember that riding and alcohol/drugs don't mix. Never ride on paved surfaces or public roads. Never engage in stunt driving. Avoid excessive speeds and be particularly careful on difficult terrain. ATVs with engine sizes of greater then 90cc are recommended for use only by those age 16 and older. Never carry passengers on any ATV not specifically designated for such use. Can-Am™ Outlander MAX ATVs: These ATVs are recommended for drivers aged 16 and older, and passengers aged 12 and older only.

can-am THE ULTIMATE RIDE™

vdd2009-001-082_en

# OUTLANDER™ 650 EFI

## SPECIFICATIONS

| ENGINE | |
|---|---|
| Type | 649.6cc, V-twin, liquid-cooled, SOHC, 8-valve (4-valve/cyl) |
| Bore & Stroke | 82 x 62 mm |
| EFI System/ Carburetor | 46mm Throttle Body, 2 Siemens VDO injectors |
| Starting System | Electric |
| Transmission | CVT, sub-transmission with high, low, park, neutral & reverse, standard engine braking |
| Drive Train | Selectable 2w/4w shaft driven with Visco-Lok† front differential |

| DIMENSIONS | |
|---|---|
| L x W x H (in) | 86 x 46 x 45 in |
| L x W x H (mm) | 2,184 x 1,168 x 1,143 mm |
| Wheelbase | 51 in (1,295 mm) |
| Seat Height | 34.5 in (877 mm) |
| Ground Clearance | 12 in (305 mm) |
| Dry Weight | 660 lbs (299 kg) |
| Towing Capacity | 1,300 lbs (590 kg) |
| Rack Capacity | Front: 100 lbs (45 kg) Rear: 200 lbs (90 kg) |
| Rear Storage | 5.3 US gal (20L) |
| Fuel Capacity | 5.3 US gal (20L) |

| WARRANTY | |
|---|---|
| Basic | 6 months limited factory warranty |
| Extended | B.E.S.T. available from 12 to 36 months |

| CHASSIS | |
|---|---|
| Frame | SST |
| Front Suspension Type/Shocks | Double A-arm, forged aluminum upper arm |
| Front Suspension Travel | 8 in (203 mm) |
| Rear Suspension Type/Shocks | TTI independent |
| Rear Suspension Travel | 9 in (229 mm) |
| Front Brake | 2 inboard hydraulic discs |
| Rear Brake | 1 inboard hydraulic disc |
| Front Tires | 26 x 8 x 12 in 660 x 203 x 305 mm |
| Rear Tires | 26 x 10 x 12 in 660 x 254 x 305 mm |
| Wheels | Steel |

| FEATURES | |
|---|---|
| Instrumentation | Multi-function digital LCD gauge: Speedometer, tachometer (bar graph RPM, bottom bar numerical RPM), odometer, trip & hour meters, diagnostic center, gear position, engine hour meter, 4x4 indicator, temperature & engine lights, fuel gauge, auto shut off after 15 minutes |
| Anti-theft System | D.E.S.S. (Digital Encoded Security System) |
| Electrical | Prewired for winch |
| Lighting | 2 fender mounted headlamps (35W) with tail light/brake light |
| DC Outlet | Lighter type in console, standard connector in the back (15A) |
| Colors Available | Yellow Viper Red |

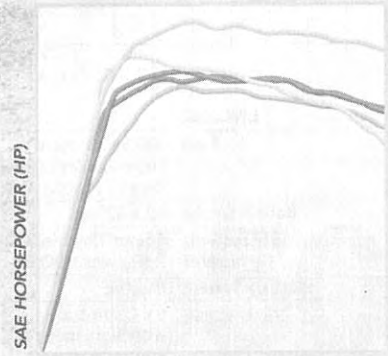


- Can-Am™ Outlander 650 EFI
- Kawasaki Brute Force® 650i
- Polaris Sportsman® 700
- Arctic Cat® 700
- Yamaha Grizzly® 700

## XT PACKAGE

- BRP XL3000 winch with roller fairlead and wired remote controls
- Cast aluminum rims (except Camo)
- Aggressive Carlisle ACT Radial tires
- Heavy-duty front & rear bumpers
- Handlebar wind deflectors
- Colors: Black, Viper Red, Yellow, Camo

BEST PROTECTION ©2008 Bombardier Recreational Products Inc (BRP). All rights reserved. ™,® and the BRP logo are registered trademarks of Bombardier Recreational Products Inc. or its affiliates. †Visco-Lok is a trademark of GKN Viscodrive GmbH. ®All other trademarks are the property of their respective owners. Products are distributed in the USA by BRP US Inc. Because of our ongoing commitment to product quality and innovation, BRP reserves the right at anytime to discontinue or change specifications, price, design, features, models or equipment without incurring any obligation. Ride responsibly. BRP highly recommends that all ATV drivers take a training course. For safety and training information, see your dealer or, in U.S. call the ATV Safety Institute at 1(800) 887-2887. In Canada, call the Canadian Safety Council at 1(613) 739-1535 ext 227. ATVs can be hazardous to operate. For your safety: the operator and passenger should wear a helmet, eye protection and other protective clothing. Always remember that riding and alcohol/drugs don't mix. Never ride on paved surfaces or public roads. Never engage in stunt driving. Avoid excessive speeds and be particularly careful on difficult terrain. ATVs with engine sizes of greater then 90cc are recommended for use only by those age 16 and older. Never carry passengers on any ATV not specifically designated for such use. Can-Am™ Outlander MAX ATVs: These ATVs are recommended for drivers aged 16 and older, and passengers aged 12 and older only.

can-am THE ULTIMATE RIDE™

vdd2009-001-083_en

# OUTLANDER™ MAX 650 EFI

## SPECIFICATIONS

| ENGINE | |
|---|---|
| Type | 649.6cc, V-twin, liquid-cooled, SOHC, 8-valve (4-valve/cyl) |
| Bore & Stroke | 82 x 62 mm |
| EFI System/ Carburetor | 46mm Throttle Body, 2 Siemens VDO injectors |
| Starting System | Electric |
| Transmission | CVT, sub-transmission with high, low, park, neutral & reverse, standard engine braking |
| Drive Train | Selectable 2w/4w shaft driven with Visco-Lok† front differential |

| DIMENSIONS | |
|---|---|
| L x W x H (in) | 94 x 46 x 45 in |
| L x W x H (mm) | 2,387 x 1,168 x 1,143 mm |
| Wheelbase | 59 in (1,499 mm) |
| Seat Height | 34.5 in (877 mm) |
| Ground Clearance | 12 in (305 mm) |
| Dry Weight | 710 lbs (322 kg) |
| Towing Capacity | 1,300 lbs (590 kg) |
| Rack Capacity | Front: 100 lbs (45 kg) Rear: 200 lbs (90 kg) |
| Storage | Rear: 5.3 US gal (20L) CRS (Convertible Rack System) |
| Fuel Capacity | 5.3 US gal (20L) |

| WARRANTY | |
|---|---|
| Basic | 6 months limited factory warranty |
| Extended | B.E.S.T. available from 12 to 36 months |

| CHASSIS | |
|---|---|
| Frame | SST |
| Front Suspension Type/Shocks | Double A-arm, forged aluminum upper arm |
| Front Suspension Travel | 8 in (203 mm) |
| Rear Suspension Type/Shocks | TTI independent |
| Rear Suspension Travel | 9 in (229 mm) |
| Front Brake | 2 inboard hydraulic discs |
| Rear Brake | 1 inboard hydraulic disc |
| Front Tires | 26 x 8 x 12 in 660 x 203 x 305 mm |
| Rear Tires | 26 x 10 x 12 in 660 x 254 x 305 mm |
| Wheels | Steel |

| FEATURES | |
|---|---|
| Instrumentation | Multi-function digital LCD gauge: Speedometer, tachometer (bar graph RPM, bottom bar numerical RPM), odometer, trip & hour meters, diagnostic center, gear position, engine hour meter, 4x4 indicator, temperature & engine lights, fuel gauge, auto shut off after 15 minutes |
| Anti-theft System | D.E.S.S. (Digital Encoded Security System) |
| Electrical | Prewired for winch |
| Lighting | 2 fender mounted headlamps (35W) with tail light/brake light |
| DC Outlet | Lighter type in console, standard connector in the back (15A) |
| Colors Available | Yellow, Viper Red |

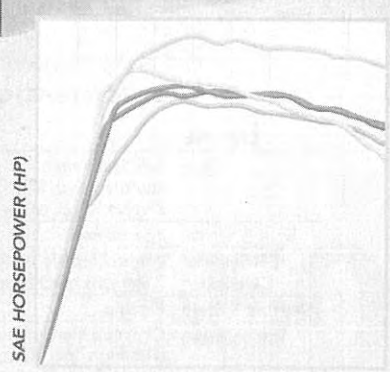


- Can-Am™ Outlander 650 EFI
- Kawasaki Brute Force® 650i
- Polaris Sportsman® 700
- Arctic Cat® 700
- Yamaha Grizzly® 700

## XT PACKAGE

- BRP XL3000 winch with roller fairlead and wired remote controls
- Cast aluminum rims (except Camo)
- Aggressive Carlisle ACT Radial tires
- Heavy-duty front & rear bumpers
- Handlebar wind deflectors
- Colors: Black, Viper Red, Yellow, Camo

BEST PROTECTION ©2008 Bombardier Recreational Products Inc (BRP). All rights reserved. ™,® and the BRP logo are registered trademarks of Bombardier Recreational Products Inc. or its affiliates. †Visco-Lok is a trademark of GKN Viscodrive GmbH. ®All other trademarks are the property of their respective owners. Products are distributed in the USA by BRP US Inc. Because of our ongoing commitment to product quality and innovation, BRP reserves the right at anytime to discontinue or change specifications, price, design, features, models or equipment without incurring any obligation. Ride responsibly. BRP highly recommends that all ATV drivers take a training course. For safety and training information, see your dealer or, in U.S. call the ATV Safety Institute at 1(800) 887-2887. In Canada, call the Canadian Safety Council at 1(613) 739-1535 ext 227. ATVs can be hazardous to operate. For your safety: the operator and passenger should wear a helmet, eye protection and other protective clothing. Always remember that riding and alcohol/drugs don't mix. Never ride on paved surfaces or public roads. Never engage in stunt driving. Avoid excessive speeds and be particularly careful on difficult terrain. ATVs with engine sizes of greater than 90cc are recommended for use only by those age 16 and older. Never carry passengers on any ATV not specifically designated for such use. Can-Am™ Outlander MAX ATVs: These ATVs are recommended for drivers aged 16 and older, and passengers aged 12 and older only.

can-am™ THE ULTIMATE RIDE™

vdd2009-001-084_en

# OUTLANDER™ 800R EFI

## SPECIFICATIONS

| ENGINE | |
|---|---|
| Type | 799.9cc, V-twin, liquid-cooled, SOHC, 8-valve (4-valve/cyl) |
| Bore & Stroke | 91 x 62 mm |
| EFI System/ Carburetor | 46mm Throttle Body, 2 Siemens VDO injectors |
| Starting System | Electric |
| Transmission | CVT, sub-transmission with high, low, park, neutral & reverse, standard engine braking |
| Drive Train | Selectable 2w/4w shaft driven with Visco-Lok† front differential |

| DIMENSIONS | |
|---|---|
| L x W x H (in) | 86 x 46 x 45 in |
| L x W x H (mm) | 2,184 x 1,168 x 1,143 mm |
| Wheelbase | 51 in (1,295 mm) |
| Seat Height | 34.5 in (877 mm) |
| Ground Clearance | 12 in (305 mm) |
| Dry Weight | 663 lbs (301 kg) |
| Towing Capacity | 1,300 lbs (590 kg) |
| Rack Capacity | Front: 100 lbs (45 kg) Rear: 200 lbs (90 kg) |
| Rear Storage | 5.3 US gal (20L) |
| Fuel Capacity | 5.3 US gal (20L) |

| WARRANTY | |
|---|---|
| Basic | 6 months limited factory warranty |
| Extended | B.E.S.T. available from 12 to 36 months |

| CHASSIS | |
|---|---|
| Frame | SST |
| Front Suspension Type/Shocks | Double A-arm, forged aluminum upper arm |
| Front Suspension Travel | 8 in (203 mm) |
| Rear Suspension Type/Shocks | TTI independent |
| Rear Suspension Travel | 9 in (229 mm) |
| Front Brake | 2 inboard hydraulic discs |
| Rear Brake | 1 inboard hydraulic disc |
| Front Tires | 26 x 8 x 12 in 660 x 203 x 305 mm |
| Rear Tires | 26 x 10 x 12 in 660 x 254 x 305 mm |
| Wheels | Steel |

| FEATURES | |
|---|---|
| Instrumentation | Multi-function digital LCD gauge: Speedometer, tachometer (bar graph RPM, bottom bar numerical RPM), odometer, trip & hour meters, diagnostic center, gear position, engine hour meter, 4x4 indicator, temperature & engine lights, fuel gauge, auto shut off after 15 minutes |
| Anti-theft System | D.E.S.S. (Digital Encoded Security System) |
| Electrical | Prewired for winch |
| Lighting | 2 fender mounted headlamps (35W) with tail light/brake light |
| DC Outlet | Lighter type in console, standard connector in the back (15A) |
| Colors Available | Yellow, Viper Red |

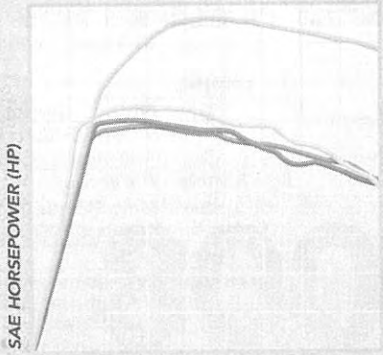


- Can-Am™ Outlander 800R EFI
- Kawasaki Brute Force® 750
- Polaris Sportsman® 800
- Suzuki King Quad® 750

## XT PACKAGE

- BRP XL3000 winch with roller fairlead and wired remote controls
- Cast aluminum rims (except Camo)
- Aggressive Carlisle ACT Radial tires
- Heavy-duty front & rear bumpers
- Handlebar wind deflectors
- Colors: Black, Viper Red, Yellow, Camo

BEST PROTECTION ©2008 Bombardier Recreational Products Inc (BRP). All rights reserved. ™,® and the BRP logo are registered trademarks of Bombardier Recreational Products Inc. or its affiliates. †Visco-Lok is a trademark of GKN Viscodrive GmbH. ®All other trademarks are the property of their respective owners. Products are distributed in the USA by BRP US Inc. Because of our ongoing commitment to product quality and innovation, BRP reserves the right at anytime to discontinue or change specifications, price, design, features, models or equipment without incurring any obligation. Ride responsibly. BRP highly recommends that all ATV drivers take a training course. For safety and training information, see your dealer or, in U.S. call the ATV Safety Institute at 1(800) 887-2887. In Canada, call the Canadian Safety Council at 1(613) 739-1535 ext 227. ATVs can be hazardous to operate. For your safety: the operator and passenger should wear a helmet, eye protection and other protective clothing. Always remember that riding and alcohol/drugs don't mix. Never ride on paved surfaces or public roads. Never engage in stunt driving. Avoid excessive speeds and be particularly careful on difficult terrain. ATVs with engine sizes of greater then 90cc are recommended for use only by those age 16 and older. Never carry passengers on any ATV not specifically designated for such use. Can-Am™ Outlander MAX ATVs: These ATVs are recommended for drivers aged 16 and older, and passengers aged 12 and older only.

can-am THE ULTIMATE RIDE™ BRP

vdd2009-001-085_en

# OUTLANDER™ MAX 800R EFI

## SPECIFICATIONS

| ENGINE | |
|---|---|
| Type | 799.9cc, V-twin, liquid-cooled, SOHC, 8-valve (4-valve/cyl) |
| Bore & Stroke | 91 x 62 mm |
| EFI System/ Carburetor | 46mm Throttle Body, 2 Siemens VDO injectors |
| Starting System | Electric |
| Transmission | CVT, sub-transmission with high, low, park, neutral & reverse, standard engine braking |
| Drive Train | Selectable 2w/4w shaft driven with Visco-Lok† front differential |

| DIMENSIONS | |
|---|---|
| L x W x H (in) | 94 x 46 x 45 in |
| L x W x H (mm) | 2,387 x 1,168 x 1,143 mm |
| Wheelbase | 59 in (1,499 mm) |
| Seat Height | 34.5 in (877 mm) |
| Ground Clearance | 12 in (305 mm) |
| Dry Weight | 713 lbs (323 kg) |
| Towing Capacity | 1,300 lbs (590 kg) |
| Rack Capacity | Front: 100 lbs (45 kg) Rear: 200 lbs (90 kg) |
| Storage | Rear: 5.3 US gal (20L) CRS (Convertible Rack System) |
| Fuel Capacity | 5.3 US gal (20L) |

| WARRANTY | |
|---|---|
| Basic | 6 months limited factory warranty |
| Extended | B.E.S.T. available from 12 to 36 months |

| CHASSIS | |
|---|---|
| Frame | SST |
| Front Suspension Type/Shocks | Double A-arm, forged aluminum upper arm |
| Front Suspension Travel | 8 in (203 mm) |
| Rear Suspension Type/Shocks | TTI independent |
| Rear Suspension Travel | 9 in (229 mm) |
| Front Brake | 2 inboard hydraulic discs |
| Rear Brake | 1 inboard hydraulic disc |
| Front Tires | 26 x 8 x 12 in 660 x 203 x 305 mm |
| Rear Tires | 26 x 10 x 12 in 660 x 254 x 305 mm |
| Wheels | Steel |

| FEATURES | |
|---|---|
| Instrumentation | Multi-function digital LCD gauge: Speedometer, tachometer (bar graph RPM, bottom bar numerical RPM), odometer, trip & hour meters, diagnostic center, gear position, engine hour meter, 4x4 indicator, temperature & engine lights, fuel gauge, auto shut off after 15 minutes |
| Anti-theft System | D.E.S.S. (Digital Encoded Security System) |
| Electrical | Prewired for winch |
| Lighting | 2 fender mounted headlamps (35W) with tail light/brake light |
| DC Outlet | Lighter type in console, standard connector in the back (15A) |
| Colors Available | Yellow<br>Viper Red |

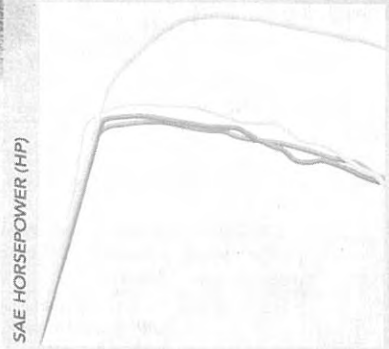


## XT PACKAGE

- BRP XL3000 winch with roller fairlead and wired remote controls
- Cast aluminum rims (except Camo)
- Aggressive Carlisle ACT Radial tires
- Heavy-duty front & rear bumpers
- Handlebar wind deflectors
- Colors: Black, Viper Red, Yellow, Camo

BEST PROTECTION ©2008 Bombardier Recreational Products Inc (BRP). All rights reserved. ™,® and the BRP logo are registered trademarks of Bombardier Recreational Products Inc. or its affiliates. †Visco-Lok is a trademark of GKN Viscodrive GmbH. ®All other trademarks are the property of their respective owners. Products are distributed in the USA by BRP US Inc. Because of our ongoing commitment to product quality and innovation, BRP reserves the right at anytime to discontinue or change specifications, price, design, features, models or equipment without incurring any obligation. Ride responsibly. BRP highly recommends that all ATV drivers take a training course. For safety and training information, see your dealer or, in U.S. call the ATV Safety Institute at 1(800) 887-2887. In Canada, call the Canadian Safety Council at 1(613) 739-1535 ext 227. ATVs can be hazardous to operate. For your safety: the operator and passenger should wear a helmet, eye protection and other protective clothing. Always remember that riding and alcohol/drugs don't mix. Never ride on paved surfaces or public roads. Never engage in stunt driving. Avoid excessive speeds and be particularly careful on difficult terrain. ATVs with engine sizes of greater than 90cc are recommended for use only by those age 16 and older. Never carry passengers on any ATV not specifically designated for such use. Can-Am™ Outlander MAX ATVs: These ATVs are recommended for drivers aged 16 and older, and passengers aged 12 and older only.

can-am THE ULTIMATE RIDE™

vdd2009-001-086_en

# OUTLANDER™ MAX 800R EFI LTD

LTD PACKAGE

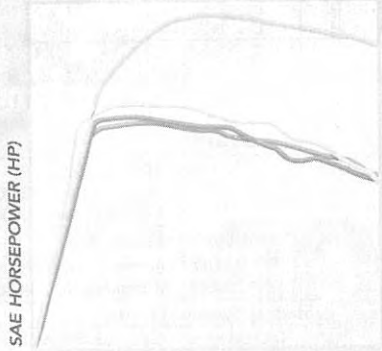


- Can-Am™ Outlander 800R EFI
- Kawasaki Brute Force® 750
- Polaris Sportsman® 800
- Suzuki King Quad® 750

## SPECIFICATIONS

| ENGINE | |
|---|---|
| Type | 799.9cc, V-twin, liquid-cooled, SOHC, 8-valve (4-valve/cyl) |
| Bore & Stroke | 91 x 62 mm |
| EFI System/ Carburetor | 46mm Throttle Body, 2 Siemens VDO injectors |
| Starting System | Electric |
| Transmission | CVT, sub-transmission with high, low, park, neutral & reverse, standard engine braking |
| Drive Train | Selectable 2w/4w shaft driven with Visco-Lok† front differential |

| DIMENSIONS | |
|---|---|
| L x W x H (in) | 94 x 46 x 45 in |
| L x W x H (mm) | 2,387 x 1,168 x 1,143 mm |
| Wheelbase | 59 in (1,499 mm) |
| Seat Height | 34.5 in (877 mm) |
| Ground Clearance | 12 in (305 mm) |
| Dry Weight | 713 lbs (323 kg) |
| Towing Capacity | 1,300 lbs (590 kg) |
| Rack Capacity | Front: 100 lbs (45 kg) Rear: 200 lbs (90 kg) |
| Storage | Rear: 5.3 US gal (20L) CRS (Convertible Rack System) |
| Fuel Capacity | 5.3 US gal (20L) |

| WARRANTY | |
|---|---|
| Basic | 6 months limited factory warranty |
| Extended | B.E.S.T. available from 12 to 36 months |

| CHASSIS | |
|---|---|
| Frame | SST |
| Front Suspension Type/Shocks | Double A-arm, forged aluminum upper arm |
| Front Suspension Travel | 8 in (203 mm) |
| Rear Suspension Type/Shocks | TTI independent |
| Rear Suspension Travel | 9 in (229 mm) |
| Front Brake | 2 inboard hydraulic discs |
| Rear Brake | 1 inboard hydraulic disc |
| Front Tires | 26 x 8 x 12 in 660 x 203 x 305 mm |
| Rear Tires | 26 x 10 x 12 in 660 x 254 x 305 mm |
| Wheels | Steel |

| FEATURES | |
|---|---|
| Instrumentation | Multi-function digital LCD gauge: Speedometer, tachometer (bar graph RPM, bottom bar numerical RPM), odometer, trip & hour meters, diagnostic center, gear position, engine hour meter, 4x4 indicator, temperature & engine lights, fuel gauge, auto shut off after 15 minutes |
| Anti-theft System | D.E.S.S. (Digital Encoded Security System) |
| Electrical | Prewired for winch |
| Lighting | 2 fender mounted headlamps (35W) with tail light/brake light |
| DC Outlet | Lighter type in console, standard connector in the back (15A) |
| Colors Available | Radiant Red Metallic, Metallic Grey |

## LTD PACKAGE ADDITIONS

- BRP XL3000 winch with roller fairlead and wired remote controls
- Integrated/removable Garmin Quest GPS
- Painted plastics
- Exclusive Ltd 6-spoke cast aluminum wheels
- Aggressive Carlisle ACT radial tires
- New heavy-duty front & rear bumpers
- Mudguards
- Handlebar wind deflectors
- Premium 2-tone seat
- Comfort grips
- Chrome muffler trim
- New front fascia

BEST PROTECTION

©2008 Bombardier Recreational Products Inc (BRP). All rights reserved. ™,® and the BRP logo are registered trademarks of Bombardier Recreational Products Inc. or its affiliates. †Visco-Lok is a trademark of GKN Viscodrive GmbH. ®All other trademarks are the property of their respective owners. Products are distributed in the USA by BRP US Inc. Because of our ongoing commitment to product quality and innovation, BRP reserves the right at anytime to discontinue or change specifications, price, design, features, models or equipment without incurring any obligation. Ride responsibly. BRP highly recommends that all ATV drivers take a training course. For safety and training information, see your dealer or, in U.S. call the ATV Safety Institute at 1(800) 887-2887. In Canada, call the Canadian Safety Council at 1(613) 739-1535 ext 227. ATVs can be hazardous to operate. For your safety: the operator and passenger should wear a helmet, eye protection and other protective clothing. Always remember that riding and alcohol/drugs don't mix. Never ride on paved surfaces or public roads. Never engage in stunt driving. Avoid excessive speeds and be particularly careful on difficult terrain. ATVs with engine sizes of greater then 90cc are recommended for use only by those age 16 and older. Never carry passengers on any ATV not specifically designated for such use. Can-Am™ Outlander MAX ATVs: These ATVs are recommended for drivers aged 16 and older, and passengers aged 12 and older only.

can-am THE ULTIMATE RIDE™ BRP

vdd2009-001-087_en

# RENEGADE™ 500 EFI

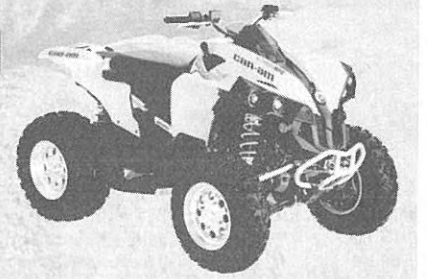

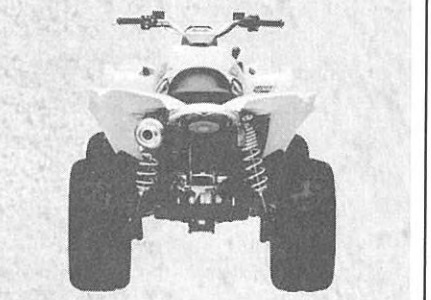

## SPECIFICATIONS

| ENGINE | |
|---|---|
| Type | 499.6cc, V-twin, liquid-cooled, SOHC, 8-valve (4-valve/cyl) |
| Bore & Stroke | 82 x 47 mm |
| EFI System/ Carburetor | 46mm Throttle Body, 2 Siemens VDO injectors |
| Starting System | Electric |
| Transmission | CVT, sub-transmission with high, low, park, neutral & reverse, standard engine braking |
| Drive Train | Selectable 2w/4w shaft driven with Visco-Lok† front differential |

| DIMENSIONS | |
|---|---|
| L x W x H (in) | 86 x 46 x 45 in |
| L x W x H (mm) | 2,184 x 1,168 x 1,143 mm |
| Wheelbase | 51 in (1,295 mm) |
| Seat Height | 34.5 in (877 mm) |
| Ground Clearance | 11 in (279 mm) |
| Dry Weight | 607 lbs (275 kg) |
| Towing Capacity | 1,300 lbs (590 kg) |
| Rack Capacity | 35 lbs (16 kg) |
| Rear Storage | 1 US gal (3.7L) |
| Fuel Capacity | 5.3 US gal (20L) |

| WARRANTY | |
|---|---|
| Basic | 6 months limited factory warranty |
| Extended | B.E.S.T. available from 12 to 36 months |

| CHASSIS | |
|---|---|
| Frame | SST |
| Front Suspension Type/Shocks | RS-Type Double A-arm, forged aluminum upper arm/Motion Control shocks |
| Front Suspension Travel | 8.5 in (216 mm) |
| Rear Suspension Type/Shocks | RS-Type TTI independent/ Motion Control shocks |
| Rear Suspension Travel | 9 in (229 mm) |
| Front Brake | 2 hydraulic discs |
| Rear Brake | 1 inboard hydraulic disc |
| Front Tires | ITP Holeshot ATR 25 x 8 x 12 in 635 x 203 x 305 mm |
| Rear Tires | ITP Holeshot ATR 25 x 10 x 12 in 635 x 254 x 305 mm |
| Wheels | Center cast aluminum |

| FEATURES | |
|---|---|
| Instrumentation | Multi-function gauge: Speedometer, tachometer, odometer, trip & hour meters, fuel, gear position, 4x4 indicator, diagnostics, auto shut off |
| Anti-theft System | D.E.S.S. (Digital Encoded Security System) |
| Electrical | Prewired for winch |
| Lighting | 4 fender mounted Protector Beam headlamps (60W) with tail light/brake light |
| DC Outlet | Lighter type in console, standard connector in the back (15A) |
| Colors Available | Yellow<br>Viper Red |

BEST PROTECTION ©2008 Bombardier Recreational Products Inc (BRP). All rights reserved. ™,® and the BRP logo are registered trademarks of Bombardier Recreational Products Inc. or its affiliates. †Visco-Lok is a trademark of GKN Viscodrive GmbH. ®All other trademarks are the property of their respective owners. Products are distributed in the USA by BRP US Inc. Because of our ongoing commitment to product quality and innovation, BRP reserves the right at anytime to discontinue or change specifications, price, design, features, models or equipment without incurring any obligation. Ride responsibly. BRP highly recommends that all ATV drivers take a training course. For safety and training information, see your dealer or, in U.S. call the ATV Safety Institute at 1(800) 887-2887. In Canada, call the Canadian Safety Council at 1(613) 739-1535 ext 227. ATVs can be hazardous to operate. For your safety: the operator and passenger should wear a helmet, eye protection and other protective clothing. Always remember that riding and alcohol/drugs don't mix. Never ride on paved surfaces or public roads. Never engage in stunt driving. Avoid excessive speeds and be particularly careful on difficult terrain. ATVs with engine sizes of greater than 90cc are recommended for use only by those age 16 and older. Never carry passengers on any ATV not specifically designated for such use. Can-Am™ Outlander MAX ATVs: These ATVs are recommended for drivers aged 16 and older, and passengers aged 12 and older only.

can-am THE ULTIMATE RIDE™

vdd2009-001-088_en

# RENEGADE™ 800R EFI

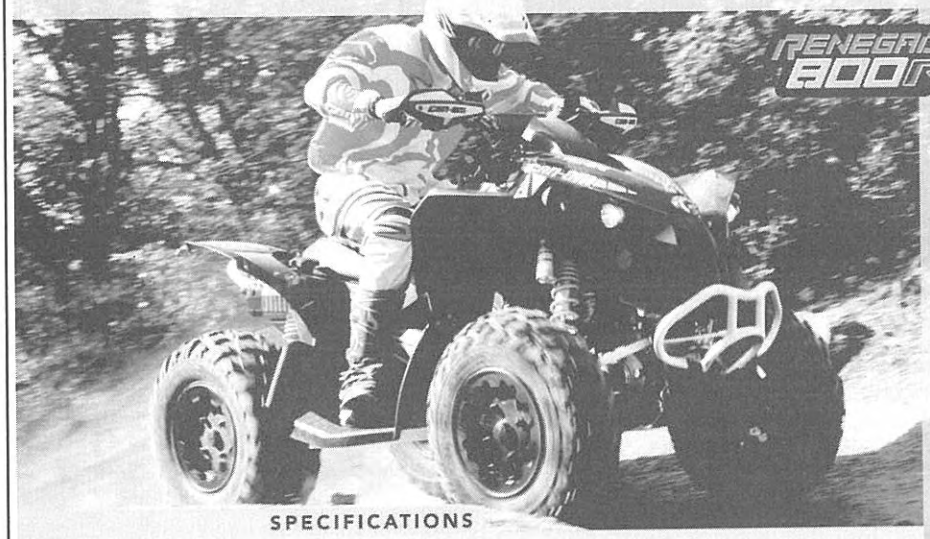

X PACKAGE

## SPECIFICATIONS

| ENGINE | |
|---|---|
| Type | 799.9cc, V-twin, liquid-cooled, SOHC, 8-valve (4-valve/cyl) |
| Bore & Stroke | 91 x 62 mm |
| EFI System/ Carburetor | 46mm Throttle Body, 2 Siemens VDO injectors |
| Starting System | Electric |
| Transmission | CVT, sub-transmission with high, low, park, neutral & reverse, standard engine braking |
| Drive Train | Selectable 2w/4w shaft driven with Visco-Lok† front differential |

| DIMENSIONS | |
|---|---|
| L x W x H (in) | 86 x 46 x 45 in |
| L x W x H (mm) | 2,184 x 1,168 x 1,143 mm |
| Wheelbase | 51 in (1,295 mm) |
| Seat Height | 34.5 in (877 mm) |
| Ground Clearance | 11 in (279 mm) |
| Dry Weight | 607 lbs (275 kg) |
| Towing Capacity | 1,300 lbs (590 kg) |
| Rack Capacity | 35 lbs (16 kg) |
| Rear Storage | 1 US gal (3.7L) |
| Fuel Capacity | 5.3 US gal (20L) |

| WARRANTY | |
|---|---|
| Basic | 6 months limited factory warranty |
| Extended | B.E.S.T. available from 12 to 36 months |

| CHASSIS | |
|---|---|
| Frame | SST |
| Front Suspension Type/Shocks | RS-Type Double A-arm, forged aluminum upper arm/HPG shocks |
| Front Suspension Travel | 8.5 in (216 mm) |
| Rear Suspension Type/Shocks | RS-Type TTI independent/ HPG shocks |
| Rear Suspension Travel | 9 in (229 mm) |
| Front Brake | 2 hydraulic discs |
| Rear Brake | 1 inboard hydraulic disc |
| Front Tires | ITP Holeshot ATR 25 x 8 x 12 in 635 x 203 x 305 mm |
| Rear Tires | ITP Holeshot ATR 25 x 10 x 12 in 635 x 254 x 305 mm |
| Wheels | Center cast aluminum |

| FEATURES | |
|---|---|
| Instrumentation | Multi-function gauge: Speedometer, tachometer, odometer, trip & hour meters, fuel, gear position, 4x4 indicator, diagnostics, auto shut off |
| Anti-theft System | D.E.S.S. (Digital Encoded Security System) |
| Electrical | Prewired for winch |
| Lighting | 4 fender mounted Protector Beam headlamps (60W) with tail light/brake light |
| DC Outlet | Lighter type in console, standard connector in the back (15A) |
| Colors Available | Yellow<br>Viper Red |

## X PACKAGE

- Front KYB HPG aluminum piggyback shocks with dual speed compression, rebound and preload adjustments
- Rear KYB HPG with remote reservoir shocks with dual speed compression, rebound and preload adjustments
- Black, center-cast aluminum wheels with reinforcement ring
- Aluminum skid plate
- Handlebar wind deflectors
- Aluminum taper-profile handlebar with square pad
- X package graphics
- X package seat cover
- Color: Black with X package graphics

BEST Protection ©2008 Bombardier Recreational Products Inc (BRP). All rights reserved. ™,® and the BRP logo are registered trademarks of Bombardier Recreational Products Inc. or its affiliates. †Visco-Lok is a trademark of GKN Viscodrive GmbH. ©All other trademarks are the property of their respective owners. Products are distributed in the USA by BRP US Inc. Because of our ongoing commitment to product quality and innovation, BRP reserves the right at anytime to discontinue or change specifications, price, design, features, models or equipment without incurring any obligation. Ride responsibly. BRP highly recommends that all ATV drivers take a training course. For safety and training information, see your dealer or, in U.S. call the ATV Safety Institute at 1(800) 887-2887. In Canada, call the Canadian Safety Council at 1(613) 739-1535 ext 227. ATVs can be hazardous to operate. For your safety: the operator and passenger should wear a helmet, eye protection and other protective clothing. Always remember that riding and alcohol/drugs don't mix. Never ride on paved surfaces or public roads. Never engage in stunt driving. Avoid excessive speeds and be particularly careful on difficult terrain. ATVs with engine sizes of greater than 90cc are recommended for use only by those age 16 and older. Never carry passengers on any ATV not specifically designated for such use. Can-Am™ Outlander MAX ATVs: These ATVs are recommended for drivers aged 16 and older, and passengers aged 12 and older only.

can-am THE ULTIMATE RIDE™

vdd2009-001-089_en

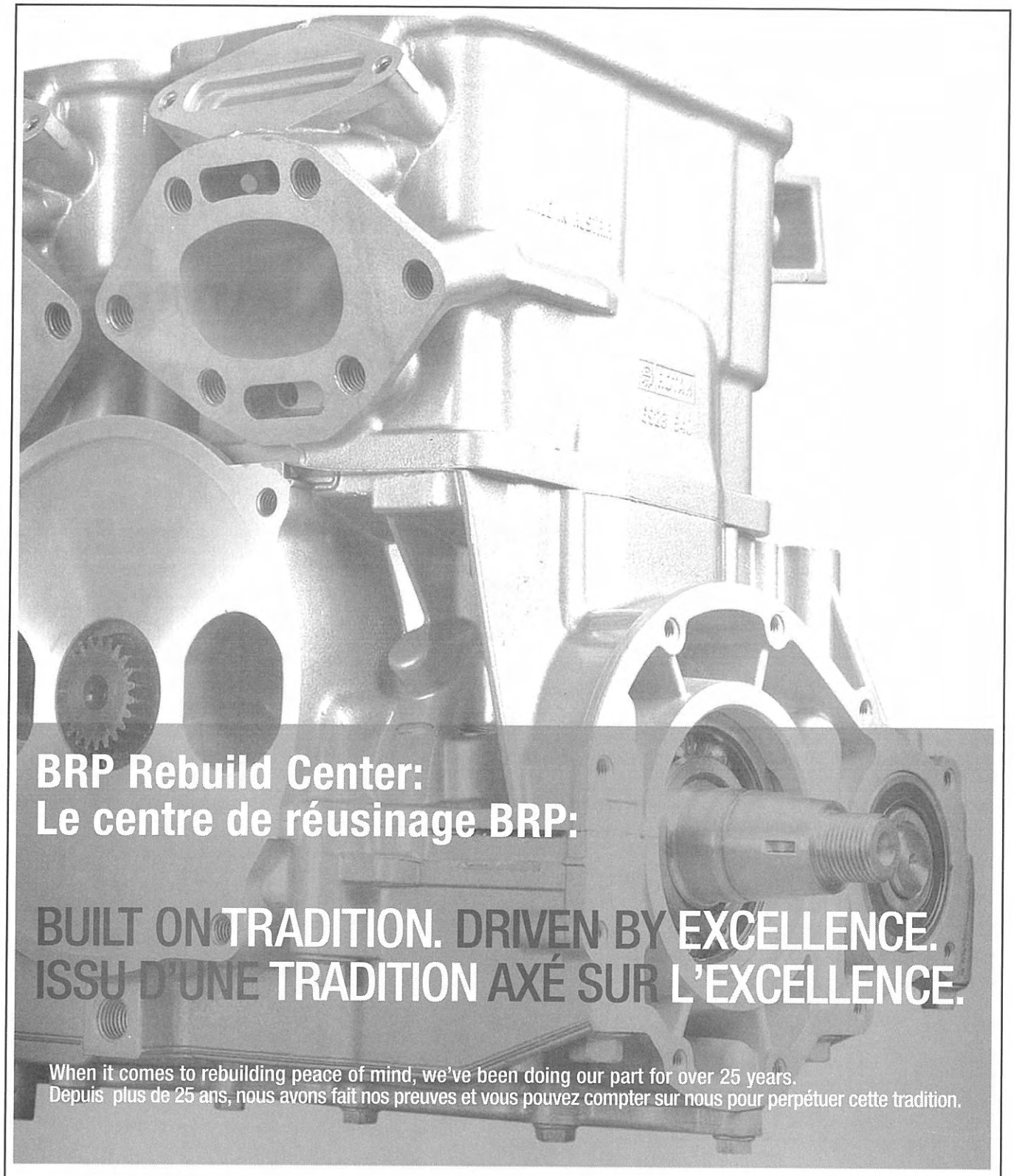


rebuilt-components

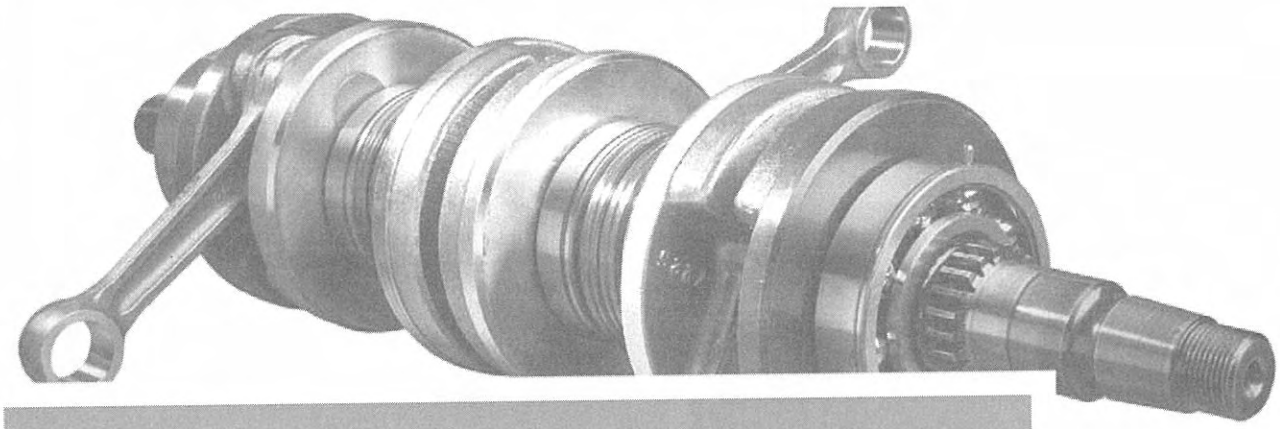

**There's a lot of experience and know-how that goes into every rebuilt part we handle.** BRP's commitment to quality is legendary and we really hate to break with tradition. We guarantee that each and every rebuilt part leaves our center matching or altogether eclipsing Rotax's most demanding standards, I guess you could say we're making history every day.

Also, unlike aftermarket suppliers, we do not compete with our dealer network by selling directly to consumers. On the contrary, we take pride in helping you generate more business. And that's the best part.

**A day in the life of a part at our state-of-the-art center** The BRP remanufacturing crew in Sherbrooke, Quebec, works in a multi-million dollar facility tooled and staffed for one purpose only: making sure that Rotax's trademark durability and performance are alive and kicking in every BRP-rebuilt short block, crankshaft and cylinder. Just how do they accomplish this? Read on and take the tour.

There are 4 rebuilding steps: Disassembly/Inspection & Cleaning, Remanufacturing, Reassembly, Testing & Warranty.

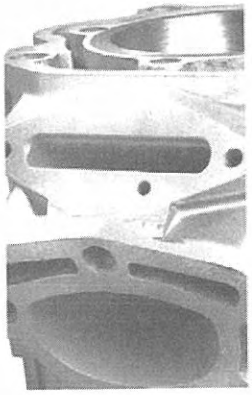

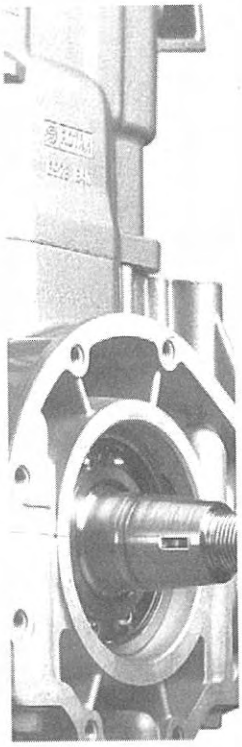

## 01 Disassembly/Inspection & Cleaning

Short block components that can be remanufactured to original specifications are saved. The rest are discarded.

Reusable parts are cleaned to remove oil and castings are sandblasted.

After further inspection, reusable parts are repainted.

## 02 Remanufacturing

Nicacil cylinders are replated by Rotax and piston fit is matched.

For steel sleeved cylinders, sleeves are replaced with new Rotax parts and line-bored. Then piston fit is matched.

Crankshaft webs are the only component of the crank even considered for reuse as a rebuilt part.

Whenever a reusable component is not available for replacement, a new Rotax part is used. Only the components that meet our strict standards ever make it past this point.

## 03 Reassembly

Crankshaft wheels are pressed together with all new Rotax bearings, seals and rod assemblies. They are balanced and blueprinted to within .001".

Crankshafts are set, crankcases are sealed and torqued to OEM specifications.

All short block assemblies are completed with new Rotax standard size pistons, rings, bearings and gaskets.

## 04 Testing & Warranty

After reassembly, all short blocks are run through a battery of tests, including pressure testing.

Our quality-tested and – controlled products are backed by a comprehensive **one-year limited warranty that covers parts and labor**.

Replacement rebuilt crankshafts and cylinders are also warranted **for one year parts only**.

blue_rebuilt_3

## Putting a reasonable price on premium quality is something only BRP can do

The math is simple: **1.** We've lowered our Sea-Doo® rebuilt short block prices; **2.** Dealers who placed a qualified pre-season order **are also** entitled to their repeat order discount on every new rebuilt parts order. **3. We are shipping to our dealers freight free – Saving up to $150.** See how quickly value adds up?

To learn just how much you can save, simply consult your Sales Program for the available discount percentages.

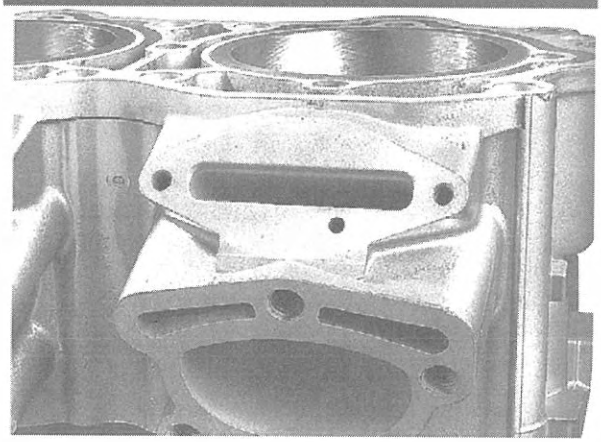

### Simply return to the core, and you'll be the center of easy money

Cores are a critical part of the rebuilding process. So we made some changes to the amounts we credit your parts account for approved returned cores. Here how it works.

| PARTS | THEN | NOW |
|---|---|---|
| Cylinders | $50.00 | $75.00 |
| Crankshafts | $200.00 | $200.00 |
| Short blocks | $300.00 | $700.00 |

### New Sea-Doo® Core Return & Credit Policy*: Hassle-free + Free money

Chances are you have short block, crankshaft and cylinder cores lying around in your service shop. You don't know what to do with them and don't have the right 'rebuilt credit' return forms.

No problem, your BRP Rebuild Center now takes them off your hands hassle-free and hands you some free cash in return.

| PARTS | THEN | NOW |
|---|---|---|
| Cylinders | $0.00 | $50.00 |
| Crankshafts | $0.00 | $100.00 |
| Short blocks | $0.00 | $300.00 |

*Program is not applicable to Ski-Doo® and Bombardier ATV® cores.

### Credit amounts may be reduced or altogether refused if any returned core casting are:

Broken, cracked or damaged – Modified in any way (welding of crankshaft, porting of cylinder or crankcase, etc.) – With broken bolts inside the threads – Showing wear around the mounting bolts to the frame – Damaged during transportation due to poor packing – Disassembled or incomplete

## The better shape your cores are in, the more we pay out

| Condition | Cylinder deduction | Crankshaft deduction | Short block deduction |
|---|---|---|---|
| Broken or cracked casting | $75/50* | NA | $200 |
| Welding | NA | $200/100* | NA |
| Porting of cylinder & crankcase | $75/50* | NA | $200 |
| Broken bolts inside threads | $75/50* | NA | Up to $200 – depending on location & quantity of broken bolts |
| Incomplete core | NA | NA | Value of missing parts |
| Wear around the mounting bolts to the frame | NA | NA | $200 |
| Damaged during transportation due to poor packing | $75/50* | $200/100* | Value of damaged parts Damaged parts |

*$75 represents value with Return Core Form, and $50 represents value without Return Core Form.

blue_rebuilt_5

## Whether placing an order or returning a core, it's a simple procedure

| To do | What to do |
|---|---|
| **Place an order** | Simply use BOSSWeb™. |
| **Return a core without a "Rebuilt Credit Form"** | • Identify each core as much as possible. Tag them and indicate the engine type as reference.<br>• Fill out and enclose a copy of the enclosed 'Universal' BRP Rebuild Center Core Credit Request Form with the cores in your shipping box (for additional forms go on BOSSWeb™.) |
| **Return a core with a "Rebuild Credit Form"** | • Return the white copy of the "Rebuild Credit Form", included with every rebuilt part shipped by the Rebuild Center, along with the core.<br>• Cores received with the yellow copy or with a photocopy will be considered as core returns without the Rebuilt Credit Form. The white copy is, therefore, required in order to receive the proper credit amount. |

## Shipping core returns: Must be freight prepaid

| Who/What | Where |
|---|---|
| **US Dealers** | BRP<br>7575 Bombardier Court<br>Wausau WI, 54401<br>(Please use Rebuild / Warranty Return Label # 480901601) |
| **Canadian Dealers** | BRP<br>75 J.A. Bombardier Street<br>Sherbrooke, QC J1L 1W3<br>(Please use Rebuild / Warranty Return Label # 480901500) |
| **For defective parts replaced with rebuilt parts and in connection with a warranty claim (Canadian dealers only)** | BRP<br>Warranty Part Inspection Center<br>565 de la Montagne<br>Valcourt, QC CANADA, J0E 2L0<br>(Please use Rebuild / Warranty Return Label # 484500001, and include copy of claim and core credit form) |

## IMPORTANT

If only the short block has been changed, the old engine plate must be applied to the new short block. Do not ship the plate.

| Who needs to know | Who knows |
|---|---|
| **US Dealers** | PAC Analyst: 1 800 366-6992 |
| **Canadian Dealers** | PAC Analyst: 1 800 361-9980 |

© 2004 Bombardier Recreational Products Inc. All rights reserved. TM ® Trademarks and registered trademarks of Bombardier Recreational Products Inc. or its affiliates. Bombardier is a trademark of Bombardier Inc. used under license. Because of our ongoing commitment to product quality and innovation, we reserve the right, at any time, to discontinue or change specifications, prices, designs, features, models or equipment without incurring obligation. Printed in Canada.

blue_rebuilt_7

| PRODUCT | REBUILT PART | PART | ENGINE | COOLING SYSTEM | AMOUNT | YEAR | DESCRIPTION | Original Part |
|---|---|---|---|---|---|---|---|---|
| | | | TYPE | F/C - L/C | CYL. | | | # |
| SKI-DOO | 421000635 | REP | GEARBOX REPAIR REQUEST | | | N/A | Dealer completes form from boss web | N/A |
| | 421000031 | CRANKSHAFT | 277 | F/C | 1 | 1993 to 2005 | | 420995301 |
| | 421000639 | | 277 | F/C | 1 | 2006 to 2008 | | 420995307 |
| | 421000009 | | 377 - 443 | F/C | 2 | 1992 to 1996 | | 420887245 / 420996332 |
| | 421000154 | | 377 - 443 | F/C | 2 | 1997 to 2006 | | 420889630 |
| | 421000151 | | 494 | L/C | 2 | 1996 to 2000 | | 420886933 |
| | 421000567 | | 493 | L/C | 2 | 2000 to 2002 | | 420888462 |
| | 421000599 | | 493 | L/C | 2 | 2003 | | 420888465 |
| | 421000011 | | 503 | F/C | 2 | 1990 to 1996 | Keyway at 3 o'clock | 420996445 |
| | 421000155 | | 503 | F/C | 2 | 1997 to 2003 | | 420888390 / 420888391 |
| | 421000601 | | 552 | F/C | 2 | 2003 to 2008 | | 420 889 062 |
| | 421000021 | | 532-536-537-582 | L/C | 2 | 1985 to 1996 | | 420996628 |
| | | | 583 | | | 1990 to 1993 | | |
| | 421000044 | | 583 | L/C | 2 | 1994 to 1999 | | 420 887 355 |
| | 421000553 | | 593 | L/C | 2 | 1999 | | 420888250 |
| | 421000563 | | 593 | L/C | 2 | 2000 to 2002 | | 420888252 / 420888751 |
| | 421000611 | | 593 | L/C | 2 | 2003 to 2008 | | 420888757 |
| | 421000622 | | 593SDI | L/C | 2 | 2004 to 2008 | 593 SDI ONLY | 420889098 / 420890950 |
| | 421000574 | | 693 | L/C | 2 | 2000 to 2002 | DIECAST ENGINE ONLY | 420888286 |
| | 421000609 | | 693 593HO | L/C | 2 | 2003 to 2007 | 693 AND 593 HO ONLY | 420889091 |
| | 421000152 | | 599 | L/C | 3 | 1996 & 1997 | | 420887970 |
| | 421000310 | | 599 - 699 CK3 | L/C | 3 | 1998 to 2000 | New modified part for 1999-2000 | 420888030 / 420888034 |
| | 421000153 | | 699 | L/C | 3 | 1997 | | 420887605 |
| | 421000573 | | 793 | L/C | 2 | 2000 to 2002 | | 420888402 |
| | 421000608 | | 793 | L/C | 2 | 2003 | 2003 ONLY | 420889101 |
| | 421000607 | | 793HO | L/C | 2 | 2003 to 2007 | HO ONLY | 420889671 |
| | 421000606 | | 793SDI | L/C | 2 | 2003 & 2004 | SDI ONLY | 420889106 |
| | 421000156 | | 809 | L/C | 3 | 1997 to 2003 | New modified part for 1999-2002 | 420887667 / 420887668 420887662 |
| | 421000634 | | 995SDI | L/C | 2 | 2005 & 2006 | | 420889217 |
| | 421000200 | CYLINDER | 277 | F/C | 1 | 1993 to 2004 | | 420913218 / 420913219 |
| | 421000559 | | 377 | F/C | 2 | 1999 to 2004 | Pto | 420923403 |
| | 421000560 | | 377 | F/C | 2 | 1999 to 2004 | Mag | 420923408 |
| | 421000568 | | 493 | L/C | 2 | 2001 to 2003 | | 420923855 / 420613605 |
| | 421000500 | | 503 | F/C | 2 | 1983 to 2003 | | 420923417 |
| | 421000600 | | 552 | F/C | 2 | 2003 to 2006 | | 420923975 |
| | 421000120 | | 583 | L/C | 2 | 1995 to 1999 | | 420923670 |
| | 421000578 | | 593 | L/C | 2 | 1999 to 2004 | All models | 420613620 / 420613625 |
| | 421000550 | | 670 | L/C | 2 | 1993 to 1999 | HO cylinder fits all except Mach 95 & 96 | 420923700 / 420923193 |
| | 421000605 | NIC. CYL. | 593HO | L/C | 2 | 2003 to 2006 | H.O. ONLY | 420613711 |
| | 421000624 | | 593SDI | L/C | 2 | 2004 to 2006 | 593 SDI ONLY | 420613940 / 420613944 |
| | 421000067 | | 599 | L/C | 3 | 1996 to 1999 | | 420923112 |
| | 421000555 | | 693 | L/C | 2 | 2000 | SANDCAST Cylinder bolts M8 | 420923691 |
| | 421000566 | | 693 | L/C | 2 | 2000 to 2004 | | 420923692 / *923693 / *923695 |
| | 421000064 | | 699 | L/C | 3 | 1997 to 2000 | | 420923420 |
| | 421000579 | | 793 | L/C | 2 | 2000 to 2004 | WITH OUT DEKO SLOTS | 420923811 / 420923817 |
| | 421000597 | | 793 | L/C | 2 | 2002 | | 420923810 / 420923815 |
| | 421000604 | | 793HO | L/C | 2 | 2003 to 2006 | H.O. ONLY | 420613852 |
| | 421000068 | | 809 | L/C | 3 | 1997 to 2003 | | 420923480 |
| | 421000636 | | 995SDI | L/C | 2 | 2005 & 2006 | CYLINDER BLOCK | 420613746 |

Bombardier Rebuilt Center Rebuilt Center 1

vdd2009-001-047 p1_en

| PRODUCT | REBUILT PART | PART | ENGINE TYPE | COOLING SYSTEM F/C - L/C | AMOUNT CYL. | YEAR | DESCRIPTION | Original Part # |
|---|---|---|---|---|---|---|---|---|
| SKI-DOO | 421000625 | SHORTBLOCK | 377 | F/C | 2 | 2004 to 2006 | New 377 with oil check valves | |
| | 421000575 | | 493 | L/C | 2 | 2000 to 2002 | | 420049302 |
| | 421000617 | | 493 | L/C | 2 | 2003 | | |
| | 421000410 | | 503 | F/C | 2 | 1994 to 1999 | | N/A |
| | 421000602 | | 552 | F/C | 2 | 2003 to 2006 | Except REV, RF and Exped. Models | 420055201 |
| | 421000638 | | 552 | F/C | 2 | 2005 & 2006 | REV and Expedition Models | 420055206 |
| | 421000616 | | 593 | L/C | 2 | 2001 to 2007 | | |
| | 421000615 | | 593HO | L/C | 2 | 2003 to 2007 | H.O. ONLY | |
| | 421000623 | | 593SDI | L/C | 2 | 2004 to 2007 | 593 SDI ONLY | |
| | 421000414 | | 670 | L/C | 2 | 1998 & 1999 | 1 exhaust pipe | N/A |
| | 421000415 | | 670 | L/C | 2 | 1998 & 1999 | Summit X & MXZ H.O. | N/A |
| | 421000614 | | 693 | L/C | 2 | 2001 to 2004 | | |
| | 421000613 | | 793 | L/C | 2 | 2001 to 2003 | | |
| | 421000612 | | 793HO | L/C | 2 | 2003 to 2007 | H.O. ONLY | |
| | 421000645 | | 797 | L/C | 2 | 2006 & 2007 | NOT FOR XP MODEL | 420079703 / 420079704 |
| | 421000637 | | 995SDI | L/C | 2 | 2005 & 2006 | | 420099502 |
| CAN-AM | 421000628 | | 175 | L/C | 1 | 2003 to 2005 | RALLY-175 | 420296420 |
| | 421000157 | CRANKSHAFT | 511 | L/C | 1 | all | Traxter | 420295893 |
| | 421000577 | | 654 | L/C | 1 | all | DS650 | 711295192 |
| | 421000594 | 4-tec Engine | 650 | L/C | 1 | Quest 650 all | QUEST 650 only | |

Bombardier Rebuilt Center Rebuilt Center 2

vdd2009-001-047 p2_en

| PRODUCT | REBUILT PART | PART | ENGINE TYPE | COOLING SYSTEM F/C - L/C | AMOUNT CYL. | YEAR | DESCRIPTION | Original Part # |
|---|---|---|---|---|---|---|---|---|
| SEA-DOO | 421000071 | CRANKSHAFT | 587 | L/C | 2 | 1988 to 1993 | Labyrinthe Seal | 290886797 |
| | 421000072 | | 587 | L/C | 2 | 1994 to 1996 | | 290886797 |
| | 421000074 | | 717 | L/C | 2 | 1995 to 2003 | | 290887867 |
| | 421000076 | | 787 | L/C | 2 | 1996 to 1999 | Carb. | 290888103 |
| | 421000712 | | 787RFI | L/C | 2 | 1998 to 2005 | RFI | 290887890 / 420887891 |
| | 421000571 | | 947DI | L/C | 2 | all | D.I. | 290887767 |
| | 421000711 | | 947 | L/C | 2 | 1998 to 2003 | Except D.I. | 290887762 |
| | 421000056 | CYLINDER | 717 | L/C | 2 | 1995 to 2003 | | 290923805 |
| | 421000057 | | 787 | L/C | 2 | 1995 | USE 421 000 059 | 290923500 |
| | 421000059 | | 787 | L/C | 2 | 1996 to 1999 | Carb. | 290923503 |
| | 421000813 | | 787RFI | L/C | 2 | 1998 to 2003 | RFI | 290923846 |
| | 421000626 | | 787RFI | L/C | 2 | 2004 to 2005 | RFI | 420623086 |
| | 421000561 | | 947 | L/C | 2 | 1998 to 2002 | Except D.I. | 290613561 |
| | 421000570 | | 947DI | L/C | 2 | 2001 | D.I. | 290923718 |
| | 421000205 | | 947DI | L/C | 2 | 2002 & 2003 | D.I. | 420613576 |
| | 421000094 | SHORT BLOCK | 587 | L/C | 2 | 1992 to 1996 | White | 290881444 |
| | 421000096 | | 657X | L/C | 2 | 1994 | XP White | 290881449 |
| | | | | | | 1995 | White SPX -GTX | |
| | 421000097 | | 717 | L/C | 2 | 1995 to 2005 | | 290071703 |
| | 421000098 | | 787 | L/C | 2 | 1995 | USE 421 000 100 + 290 958 057 | 290881527 / 290881528 |
| | 421000100 | | 787 | L/C | 2 | 1996 to 1999 | Carb. | 290078704 |
| | 421000913 | | 787RFI | L/C | 2 | 1998 to 2003 | RFI | 290078703 |
| | 421000627 | | 787RFI | L/C | 2 | 2004 & 2005 | RFI | 420078707 |
| | 421000562 | | 947 | L/C | 2 | 1998 to 2002 | Except D.I. | 290094703 |
| | 421000572 | | 947DI | L/C | 2 | 2001 | D.I. | 290094705 |
| | 421000416 | | 947DI | L/C | 2 | 2002 to 2005 | D.I. | 420094706 |
| | 421 000 582 | BAL. SHAFT | 947 | L/C | 2 | 1998 to 2002 | BALANCING SHAFT | 290837387 |
| | 421000647 | longblock 4 tec | 1503 N/A | L/C | 3 | 2002 to 2005 | Long Block | 270000645 |
| | 421000648 | | 1503 B/V | L/C | 3 | 2003 to 2005 | Long Block | 270000644 |
| | 421000649 | | 1503 I/C | L/C | 3 | 2004 & 2005 | Long Block | 270000643 |
| | 421000640 | | 1503 DT | L/C | 3 | 2006 & 2007 | 1st Oversize Long Block | 420150345 |
| | 421000641 | | 1503 N/A | L/C | 3 | 2006 & 2007 | 1st Oversize Long Block | 420150315 |
| | 421000642 | | 1503 I/C | L/C | 3 | 2006 & 2007 | 1st Oversize Long Block | 420150335 |

Bombardier Rebuilt Center Rebuilt Center 3

vdd2009-001-047 p3_en

| PRODUCT | REBUILT PART | PART | ENGINE TYPE | COOLING SYSTEM F/C - L/C | AMOUNT CYL. | YEAR | DESCRIPTION | Original Part # |
|---|---|---|---|---|---|---|---|---|
| To be discontinued when out of stock | | | | | | | | |
| SKI-DOO | 421000103 | CYLINDERS | 377 | F/C | 2 | 1995 & 1996 | Pto | 420823799 |
| | 421000104 | | 377 | F/C | 2 | 1984 to 1994 | Mag | 420823805 |
| | 421000105 | | 377 | F/C | 2 | 1995 & 1996 | Mag | 420823809 |
| | 421000202 | | 377 | F/C | 2 | 1997 & 1998 | Mag | 420923405 |
| | 421000107 | | 443 | F/C | 2 | 1996 | Mag | 420923356 |
| | 421000203 | | 443 | F/C | 2 | 1997 to 2004 | Pto | 420923348 / 420923790 |
| | 421000113 | | 467 | L/C | 2 | 1985 to 1995 | | 420823699 |
| | 421000115 | | 494 | L/C | 2 | 1996 & 1997 | # 420 887 553 at 69,39 mm | 420923148 |
| | 421000551 | | 494 | L/C | 2 | 1998 to 2000 | All models except Skandic | 420923617 |
| | 421000552 | | 494 | L/C | 2 | 1998 to 2000 | Skandic only | 420923619 |
| | 421000121 | | 643 | L/C | 2 | 1991 & 1992 | | 420913077 |
| | 421000124 | | 670 | L/C | 2 | 1995 & 1996 | Mach 1 only | 420923199 |
| | 421000175 | SHORT BLOCK | 377 | F/C | 2 | 1995 to 2003 | | N/A |
| | 421000150 | CRANKSHAFT | 454 | L/C | 2 | 1995 to 1998 | | 420887962 / 420887966 |
| | 421000610 | NIC. CYL. | 454 | L/C | 2 | 1997 & 1998 | | 420923172 |
| | 421000066 | | 599 | L/C | 3 | 1995 | | 420923110 |
| SEA-DOO | 421000075 | CRANKSHAFT | 787 | L/C | 2 | 1995 | XP 800 | 290888103 |
| | 421000053 | CYLINDERS | 587 | L/C | 2 | 1992 to 1996 | White | 290913376 |
| | 421000054 | | 657 | L/C | 2 | 1993 & 1994 | Except White XP 1994 | 290913386 |
| | 421000093 | SHORT BLOCK | 587 | L/C | 2 | 1989 to 1991 | Yellow | 290881440 |
| | 421000632 | Supercharger | 1503 B/V | L/C | 3 | 2003 to 2005 | with ceramic shims | 420881931 |
| | 421000633 | | 1503 I/C | L/C | 3 | 2004 & 2005 | with ceramic shims | 420881933 |

Note: Old core will be completely refunded only if :

- Core is returned within 30 days with the filled-out rebuilt confirmation form
- Core is same model as the one shipped
- Core casting is not broken
- Core is complete and fully assembled
- Core is shipped prepaid to BRP
- Core is returned in original packaging to avoid freight damages

Not respecting those requirements could result in a refused or reduced core credit

| LEGEND | |
|---|---|
| CR | CRANKSHAFT |
| CY | CYLINDER |
| | |
| CY N | CYLINDER (NICASIL) |
| REP | REPAIR ONLY |
| SB | SHORT BLOCK |

Bombardier Rebuilt Center Rebuilt Center 4

vdd2009-001-047 p4_en

# BRP Oils and Lubricants / Huiles et lubrifiants BRP

| Part # | Product Description | Size | Ski-Doo | Sea-Doo | ATV | |
|---|---|---|---|---|---|---|
| 293 600 011 | Synthetic jet pump oil 75W90<br>Huile synthétique 75W90 pour turbine | 177 ml<br>(6 oz). | - | X | - | |
| 293 600 043 | Synthetic gear oil 75W90<br>Huile synthétique 75W90 pour engrenage | 946 ml<br>(32 oz) | - | - | X | Same as 293 600 011<br>but 946 ml (32 oz) |
| 413 801 900 | XP-S chaincase oil<br>Huile XP-S pour carter de chaîne | 250 ml<br>(8.4 oz) | X | - | X | |
| 413 803 300 | XP-S synthetic chaincase oil<br>Huile synthétique XP-S pour carter de chaîne | 355 ml<br>(12 oz) | X | - | X | |
| 413 711 600 | XP-S storage oil / Huile de remisage XP-S | spray 473 ml<br>(16 oz) | X | X | X | |
| 293 600 016 | XP-S lubricant / Lubrifiant XP-S | Spray 473 ml<br>(16 oz) | X | X | X | General use<br>Usage générale |
| 293 550 010 | XP-S synthetic grease<br>Graisse synthétique XP-S | 400 g tube<br>(14 oz) | - | X | - | High rev marine application<br>Utilisation marine, revolution élevée |
| 293 550 033 | XP-S synthetic grease<br>Graisse synthétique XP-S | 400 g tube<br>(14 oz) | X | - | X | For suspension<br>Pour suspension |
| 413 408 600 | Fuel stabilizer / Stabilisateur de carburant | 236 ml (8 oz) | X | X | X | |
| 413 803 100 | XP-S premix oil / Huile prémélangée XP-S | 500 ml<br>(17 oz) | X | X | X | For carbureted 2-stroke<br>Pour moteur deux-temps à carburateur. |
| 413 802 900 | XP-S 2-stroke mineral injection oil<br>Huile minéral XP-S pour moteur deux-temps | 1 U.S. Quart /<br>946 ml | X | X | X | For carbureted 2-stroke and ATV: Mini DS 2-stroke only |
| 413 803 000 | XP-S 2-stroke mineral injection oil<br>Huile minéral XP-S pour moteur deux-temps | 1 U.S. Gallon<br>/ 3.785 L | X | X | X | Pour moteur deux-temps DI, SDI et à carburateur. |
| 413 803 200 | XP-S 2-stroke mineral injection oil<br>Huile minéral XP-S pour moteur deux-temps | Drum 205 L /<br>54 US gallons | X | X | X | VTT: Mini DS à moteur deux-temps seulement VTT: Mini DS à moteur deux-temps seulement |
| 293 600 071 | XP-S Semi-Synthetic 2-stroke oil<br>Huile Semi-Synthétique XP-S pour moteur deux-temps | 1 U.S. Quart /<br>946 ml | X | X | X | For DI, SDI and Carbureted 2-stroke.<br>ATV: Mini DS 2-stroke only |
| 293 600 072 | XP-S Semi-Synthetic 2-stroke oil<br>Huile Semi-Synthétique XP-S pour moteur deux-temps | 1 U.S. Gallon<br>/ 3.785 L | X | X | X | Pour moteur deux-temps DI, SDI et à carburateur. |
| 293 600 073 | XP-S Semi-Synthetic 2-stroke oil<br>Huile Semi-Synthétique XP-S pour moteur deux-temps | Drum 205 L /<br>54 US gallons | X | X | X | VTT: Mini DS à moteur deux-temps seulement |
| 293 600 045 | XP-S Synthetic 2-stroke oil<br>Huile Synthétique XP-S pour moteur deux-temps | 1 U.S. Quart /<br>946 ml | X | X | X | For DI, SDI and Carbureted 2-stroke.<br>ATV: Mini DS 2-stroke only |
| 293 600 046 | XP-S Synthetic 2-stroke oil<br>Huile Synthétique XP-S pour moteur deux-temps | 1 U.S. Gallon<br>/ 3.785 L | X | X | X | Pour moteur deux-temps DI, SDI et à carburateur. |
| 293 600 047 | XP-S Synthetic 2-stroke oil<br>Huile Synthétique XP-S pour moteur deux-temps | Drum 205 L /<br>54 US gallons | X | X | X | VTT: Mini DS à moteur deux-temps seulement |
| 293 600 054 | XP-S 4-stroke Synthetic oil 0W40<br>Huile XP-S Synthétique 0W40 pour moteur quatre-temps | 1 U.S. Quart /<br>946 ml | X | - | - | Recommended for V-1000<br>Recommandé pour V-1000 |
| 293 600 039 | XP-S 4-stroke Synthetic oil 5W40<br>Huile XP-S Synthétique 5W40 pour moteur quatre-temps | 1 U.S. Quart /<br>946 ml | - | X | X | Not recommended for the supercharged engines. |
| 219 700 359 | XP-S 4-stroke Synthetic oil 5W40<br>Huile XP-S Synthétique 5W40 pour moteur quatre-temps | Drum 205 L /<br>54 US gallons | - | X | X | Non recommandé pour moteur à surcompresseur. |
| 219 700 706 | XP-S 4-stroke Mineral oil 5W30<br>Huile minéral XP-S 5W30 pour moteur quatre-temps | 1 U.S. Quart /<br>946 ml | | | X | New |
| 219 700 702 | XP-S 4-stroke Mineral oil 5W30<br>Huile minéral XP-S 5W30 pour moteur quatre-temps | Drum 205 L /<br>54 US gallons | | | X | New |
| 219 700 346 | XP-S 4-stroke Mineral oil 10W40<br>Huile minéral XP-S 10W40 pour moteur quatre-temps | 1 U.S. Quart /<br>946 ml | - | X | - | See Oil Application Chart in Operator's Guide for ATV's / Recommended for the supercharged engines, Sea-Doo<br>Pour VTT, se référrer à la charte d'utilisation des huiles du Guide de l'opérateur. / Recommandé pour moteur à surcompresseur, Sea-Doo |
| 219 700 433 | XP-S 4-stroke oil 10W40<br>Huile minéral XP-S 10W40 pour moteur quatre-temps | Drum 205 L /<br>54 US gallons | - | X | - | |

mdd2008-002-505

vdd2008-001-204_en_RPQ

can-am BRP

# REPORT ON PERFORMANCE/QUALITY (FROM DEALER)

**N.B.** If fields with grey headings are not completed, the report **can not be processed!**

| Date (Year-Month-Day) | Reported by | Dealer's Number (999999) | Contact: |
|---|---|---|---|
| | *Fist name:*<br>*Last Name:* | | *First Name:*<br>*Last Name:* |

**Circle the applicable condition**

| Environment | Type of usage | Terrain condition | Throttle opening |
|---|---|---|---|
| *1.1 During PDI*<br>*1.2 Freight Damage*<br>*1.3 Open Fields*<br>*1.4 Trails*<br>*1.5 Trail not maintained*<br>*1.6 Water Crossing*<br>*1.7 Mountains*<br>*1.8 Race Track*<br>*N/A** | *3.1 Touring*<br>*3.2 Sport Riding*<br>*3.3 Logging/Towing*<br>*3.4 Utility*<br>*3.5 Racing*<br>*3.6 Hill Climbing*<br>*3.7 Unused - New*<br>*N/A** | *2.1 Snow/Ice*<br>*2.2 Hard Surface*<br>*2.3 Sand*<br>*2.4 Rocky*<br>*2.5 mud*<br>*N/A** | *1/4*<br>*1/2*<br>*3/4*<br>*4/4*<br>*N/A** |

**Circle the applicable System**

*N/A if not applicable*

*01 Engine/Manual Starter*
*02 Fuel System/Oil System*
*03 Exhaust System*
*04 Electrical/Engine Ignition/ Electric Starter*
*05 Transmission*
*06 Brake*
*07 Steering*
*08 Suspension*
*09 Body*
*10 Crate/Accessories/ Special Tools*

| Outside Temp. | Gear Selection | Speed | RPM | Part Number (999 999 999) |
|---|---|---|---|---|
| *Select Measure*<br>☐F ☐C | ☐P ☐R ☐N ☐1 ☐2 ☐3<br>☐H ☐L ☐4 ☐5 | *Select Measure*<br>☐Km/h ☐ MPH | | - - |

| Model/Serial number (17 digits) | Mileage |
|---|---|
| | *Select Measure*<br>☐Km ☐Mile |

**Problem Description**

**Corrective Action Taken**

**Comments / Other Observations**

704 600 000 **N/A Info Unavailable* RPQ_ATV_a.rtf

| BRP ACCIDENT / INCIDENT REPORT | DATE OF ACCIDENT / INCIDENT | Year | Month | Day |
|---|---|---|---|---|

| DEALER NUMBER : | | NAME OF DEALER / DISTRIBUTOR : | |
|---|---|---|---|
| Contact person at dealership : | | | Town/City: |
| Date of Report: | am | pm | State/Prov.: |

PLEASE REPRESENT SITUATION BY DRAWING AND IDENTIFYING VEHICLE 1 AND/OR VEHICLE 2 - MAKE SURE TO COMPLETE NARRATIVE ON PAGE 5

## VEHICLE NO. 1

| | | | |
|---|---|---|---|
| Owner's Name: | | Product Experience: | Hours ☐ 0-50 ☐ 50-100 ☐ 100-150 ☐ 150-200 ☐ 200+ |
| Owner's Address: | | Completed State/ Prov. Product Safety Course: ☐ Yes ☐ No ☐ N.A. | |
| Town/City: | State/ Prov.: | Year Taken: | Certificate No.: |
| Zip/ Postal Code: | Tel. No.: | Member of Product Club/ Association: ☐ Yes ☐ No | If Yes name? |
| Operator's Name: (unless same as owner) | | Occupation: | Employer: |
| Operator's Address: | | Passenger's Name: | |
| Town/ City: | State/ Prov.: | Passenger's Address: | |
| Zip/ Postal Code: | Tel. No.: | Town/ City: | State/ Prov.: |
| Driver's License No.: | Coded Restrictions: | Zip/ Postal Code: | Tel. No.: |
| Years Licensed as Driver: ☐ 1-3 ☐ 3-6 ☐ 6-10 ☐ 10+ | | Date of Birth: Year | Month / Day |
| Date of Birth: Year / Month / Day | | Age: | Sex: ☐ Male ☐ Female |
| Age: | Sex: ☐ Male ☐ Female | Product Experience Hours ☐ 0-50 ☐ 50-100 ☐ 100-150 ☐ 150-200 ☐ 200+ | |

| | | | |
|---|---|---|---|
| Make: | Model: | Year: | Safety Devices Present: ☐ Yes ☐ No |
| License No.: | Serial No.: | | Safety Device in Use: ☐ Yes ☐ No |
| ☐ Owned ☐ Borrowed ☐ Rent | | | Warning or Caution Statement Present: ☐ Yes ☐ No |
| Date of Predelivery: | Date of 1st Recommended Inspection: | | Proper Operating Instructions Present: ☐ Yes ☐ No |
| Date of Recent Service: | Mileage/Hours : | | Had Product Undergone Modification/ Recall Approved by Manufacturer? : ☐ Yes ☐ No |
| Dealer's Name: | | | Had Product Undergone Modification by Former Owner? : ☐ Yes ☐ No |
| Dealer's Address: | | | Were All Components on Product Original? : ☐ Yes ☐ No |
| Town/City: | State/Prov.: | | If no, what was changed? |
| Zip/Postal Code: | Tel. No.: | | Were Replacement Components Sold by Product Manufacturer or Representative? : ☐ Yes ☐ No |
| Product Registration No.: | Year of Registration: | | Were All Components on Any Security Item Fastened to the Product? : ☐ Yes ☐ No |
| Insured: ☐ Yes ☐ No | | | Were All Scheduled Maintenance Procedures Performed by an Authorized BRP Dealer? ☐ Yes ☐ No |
| Policy No.: | Expiracy Date: | | Was Routine Lubrication and Maintenance Given to the Products as Specified by the Manufacturer? ☐ Yes ☐ No |
| Name of Ins. Company: | | | |

October 2008 BRP 1

vdd2008-001_120_Accident_report_

| | | | |
|---|---|---|---|
| ACTIVITY: | Unknown ☐ | Transportation ☐ | Racing ☐ |
| | Recreation ☐ | Work ☐ | Other ☐ |
| Witnesses' Name: (if more than one please join another page / witness) | | | |
| Witnesses' Address: | | | |
| | | | Phone: |
| Did the operator perform a pre-start check of the product before the accident? ☐ Yes ☐ No | | | |
| Was the operator familiar with the area being traveled? ☐ Yes ☐ No | | | |
| Did the operator complete any appropriate safety training courses relative to product (i.e. SVIA)? ☐ Yes ☐ No<br>If so what type? | | | |
| Did the operator review the product safety video or DVD supplied with the vehicle? ☐ Yes ☐ No | | | |

## VEHICLE NO. 2

| | | | |
|---|---|---|---|
| Owner's Name: | | Product Experience: | Hours ☐ 0-50 ☐ 50-100 ☐ 100-150 ☐ 150-200 ☐ 200+ |
| Owner's Address: | | Completed State/ Prov. Product Safety Course: ☐ Yes ☐ No ☐ N.A. | |
| Town/City: | State/ Prov.: | Year Taken: | Certificate No.: |
| Zip/ Postal Code: | Tel. No.: | Member of Product Club/ Association: ☐ Yes ☐ No | If yes name? |
| **Operator's Name:** (unless same as owner) | | Occupation: | Employer: |
| Operator's Address: | | Passenger's Name: | |
| Town/ City: | State/ Prov.: | Passenger's Address: | |
| Zip/ Postal Code: | Tel. No.: | Town/ City: | State/ Prov.: |
| Driver's License No.: | Coded Restrictions: | Zip/ Postal Code: | Tel. No.: |
| Years Licensed as Driver: ☐ 1-3 ☐ 3-6 ☐ 6-10 ☐ 10+ | | Date of Birth: Year | Month / Day |
| Date of Birth: Year / Month / Day | | Age: | Sex: ☐ Male ☐ Female |
| Age: | Sex: ☐ Male ☐ Female | Product Experience : Hours ☐ 0-50 ☐ 50-100 ☐ 100-150 ☐ 150-200 ☐ 200+ | |

| | | | |
|---|---|---|---|
| Make: | Model: | Year: | Safety Devices Present: ☐ Yes ☐ No If Yes specify |
| License No.: | Serial No.: | | Safety Device in Use: ☐ Yes ☐ No If Yes specify |
| ☐ Owned ☐ Borrowed ☐ Rent | | | Warning or Caution Statement Present: ☐ Yes ☐ No If Yes specify |
| Date of Predelivery: | Date of 1st Recommended Inspection | | Proper Operating Instructions Present: ☐ Yes ☐ No If Yes specify |
| Date of Recent Service: | Mileage/Hours : | | Had Product Undergone Modification/ Recall Approved by Manufacturer? : ☐ Yes ☐ No |
| Dealer's Name: | | | Had Product Undergone Modification by Former Owner? : ☐ Yes ☐ No |
| Dealer's Address: | | | Were All Components on Product Original? : ☐ Yes ☐ No |
| Town/City: | State/Prov.: | | Were All Components on Any Security Item Fastened to the Product? : ☐ Yes ☐ No |
| Zip/Postal Code: | Tel. No.: | | Were Replacement Components Sold by Product Manufacturer or Representative? : ☐ Yes ☐ No |
| Product Registration No.: | Year of Registration: | | If no, what was changed? |
| Insured: ☐ Yes ☐ No | | | Were all scheduled maintenance procedures performed by an Authorized BRP dealer? ☐ Yes ☐ No |
| Policy No.: | Expiracy Date: | | Was Routine Lubrication and Maintenance Given to the Products as Specified by the Manufacturer? ☐ Yes ☐ No |
| Name of Ins. Company: | | | |

October 2008 BRP 2

vdd2008-001_120_Accident_report_

| | | | |
|---|---|---|---|
| ACTIVITY: | Unknown ☐ | Transportation ☐ | Racing ☐ |
| | Recreation ☐ | Work ☐ | Other ☐ |
| Witnesses' Name: (if more than one please add a page) | | | |
| Witnesses' Address: | | | |
| | | | Phone: |
| Did the operator perform a pre-start check of the product before the accident? | ☐ Yes ☐ No | | |
| Was the operator familiar with the area being traveled? | ☐ Yes ☐ No | | |
| Did the operator complete any appropriate safety training courses relative to product (i.e. SVIA)? ☐ Yes ☐ No<br>If so what type? | | | |
| Did the operator review the product safety video or DVD supplied with the vehicle? ☐ Yes ☐ No | | | |

| PROPERTY DAMAGE VEHICLE 1 | |
|---|---|
| Vehicle/Components: | ESTIMATED COST OF REPAIR : |
| | Vehicle: $ |
| Environment/Private: | Property: $ |
| | Total: $ |

| PROPERTY DAMAGE VEHICLE 2 | |
|---|---|
| Vehicle/Components: | ESTIMATED COST OF REPAIR : |
| | Vehicle: $ |
| Environment/Private: | Property: $ |
| IF OTHER VEHICLE INVOLED, ADD ANOTHER SHEET | Total: $ |

## ACCIDENT / INCIDENT DATA

### Type of Terrain

| | | | | | | |
|---|---|---|---|---|---|---|
| Road, Right of way ☐ | River ☐ | Private Trail ☐ | Railroad ☐ | Sea ☐ | Open Field ☐ | Hilly Mountains ☐ |
| Ditch ☐ | Public Trail ☐ | Stream ☐ | Lake ☐ | Wooded ☐ | Other ☐ | |

### Type of Topography

| | | | | |
|---|---|---|---|---|
| Unknown ☐ | Crest Cover ☐ | Slope Up ☐ | Side Slope ☐ | Straight ☐ |
| Level ☐ | Bottom of Hill ☐ | Slope Down ☐ | Curve ☐ | Other ☐ |

| Surface Cover (Type) | | | Precipitation | | Visibility | | Ambient Temperature |
|---|---|---|---|---|---|---|---|
| Bare Ground ☐ | Ice ☐ | Complete Cover ☐ | None ☐ | Snow ☐ | None ☐ | Precipitation ☐ | Actual Temperature : |
| Soft Snow ☐ | Calm Water ☐ | Partial Cover ☐ | Rain ☐ | Sleet ☐ | Darkness ☐ | Fog-Smoke-Dust ☐ | ____ ☐ °C |
| Hard Pack Snow ☐ | Rough Water ☐ | Asphalt ☐ | | Hail ☐ | Other ☐ | | ____ ☐ °F |
| Other ☐ | | | Other ☐ | | | | |

| | | | |
|---|---|---|---|
| Location of Accident: | | | Estimated Speed: Vehicle 1 :<br>Vehicle 2 : |
| TIME OF ACCIDENT / INCIDENT: | Morning ☐ | Afternoon ☐ | Night ☐ |

October 2008 BRP 3
vdd2008-001_120_Accident_report_

## INJURY DATA

| | | | | | |
|---|---|---|---|---|---|
| Person Involved | TYPE OF INJURY | Death | Exposure | Bruise | Burns |
| Address: | | Fracture | Sprain | Lacerations | Internal |
| | PART OF BODY INJURED | Head | Back | Abdomen | Lower Limb |
| | | Face/Neck | Chest | Upper Limp | Other |

If more than one person was injured, please join another page per person

| | | | |
|---|---|---|---|
| Was the person injured in? ☐ Vehicle 1 | ☐ Operators | ☐ Passenger | ☐ Other Please specify : |
| ☐ Vehicle 2 | ☐ Operators | ☐ Passenger | ☐ Other Please specify : |
| CLOTHING: | Suit ☐ | Boots/Deck Shoes ☐ | Visor/Goggles ☐ |
| Wetsuit ☐ | Helmet ☐ | Gloves/Mitts ☐ | Life Jacket ☐ |

Doctor's Name:

Doctor's Address:

Length of Stay Hospital:

Accident Reported to:

| | |
|---|---|
| Was the person injured aware that what he was doing might result in injury? | ☐ Yes ☐ No |
| Was there anything to distract the injured person's attention from what he was doing? | ☐ Yes ☐ No What? |
| Had anything happened to upset the person injured that day or at the time of accident? | ☐ Yes ☐ No What? |
| Was the person injured unusually tired or fatigued that day, or at the time of accident | ☐ Yes ☐ No |
| Was the person injured ejected from product? | ☐ Yes ☐ No If so How? |
| Was the person injured entrapped by product? | ☐ Yes ☐ No If so by What? |
| Was the person injured in a hurry at the time of the accident? | ☐ Yes ☐ No |
| Has the person injured or any member of his family had injury, accident or close call from this previous activity? | ☐ Yes ☐ No If so What? |
| Had the person injured taken any precautions to prevent an accident? | ☐ Yes ☐ No If so What? |
| Was the person injured familiar with the proper operation of the product? | ☐ Yes ☐ No |
| Was the person injured informed of proper driving position/techniques before riding the product? | ☐ Yes ☐ No |
| Was passenger wearing adequate clothing/helmet/lifejacket | ☐ Yes ☐ No |
| How often had the person injured performed this specific activity before? | |

Describe activities of person injured leading up to and at time of injury:

Describe physical condition of person injured at time injury (consider: wearing glasses, handicapped or disabled, influenced by alcohol or drugs, mentally ill, chronically ill) :

| | |
|---|---|
| Had the operating literature been read and understood by the person injured? | ☐ Yes ☐ No |
| If no Why? | |
| Had victim ever been involved in another accident other than with this product? (Motor vehicle, Marine, Occupational, Recreation, Other): | ☐ Yes ☐ No |
| If so When? | |
| Was the person injured informed of proper driving position/techniques before riding the product? | ☐ Yes ☐ No |
| Was passenger wearing adequate clothing/helmet/lifejacket? | ☐ Yes ☐ No |

October 2008 BRP 4

vdd2008-001_120_Accident_report_

## NARRATION REPORT BY PERSON INVOLVED

**If narration is done by someone else than the person involved, please identify yourself and sign the Narration report:**

☐ Attach Police or Fire Department reports

Include photographs of : ☐ Vehicle ☐ Scene ☐ Injuries

Signature: _____

Narration date: _____

## NOTES

## NOTES

## NOTES

219 100 309 CA

TECHNICAL UPDATE BOOK CAN-AM / ENGLISH
MISE À JOUR TECHNIQUE CAN-AM / ANGLAIS

FAIT AU / MADE IN CANADA U/M:P.C.

©™ AND THE BRP LOGO ARE TRADEMARKS OF BOMBARDIER RECREATIONAL PRODUCTS INC. OR ITS AFFILIATES.
©2008 BOMBARDIER RECREATIONAL PRODUCTS INC. ALL RIGHTS RESERVED. PRINTED IN CANADA.