2020 Can-Am Outlander 450 & 570 Series (Including T3 EU models)

If you're on a computer and don't see the clickable index on the left, please see the directions that were sent in the email with the download link, please check your junk mail if you don't see it.

This manual is made up of the base manual with all needed supplements organized into one easy to use manual.

If you bought this manual from any other seller, they are reselling our work. Please leave them negative feedback & email me at bestshopmanuals@gmail.com.

Our goal is to be one of the BEST sellers on eBay and the internet by providing you with the BEST customer service and the BEST manuals on the market.

Thank you for choosing us.

Green-Manuals
Paperless Manuals
For a Better Tomorrow

Hi-Definition Manual
Midwest Manuals

SAFETY NOTICE

This manual has been prepared as a guide to correctly service and repair the Can-Am® Outlander™ and Renegade™ Series ATV.

This edition was primarily published to be used by mechanics and technicians who are already familiar with all service procedures relating to BRP products. Technicians should attend training courses given by BRPTI.

Please note that the instructions in this manual will apply only if proper hand tools and special service tools are used.

The contents of this manual depicts parts and procedures applicable to the particular product at the time of writing. Service and warranty bulletins may be published to update the content of this manual. Dealer modifications that were carried out after manufacturing of the product, whether or not authorized by BRP, are not included.

In addition, the sole purpose of the illustrations throughout the manual, is to assist identification of the general configuration of the parts. They are not to be interpreted as technical drawings or exact replicas of the parts.

The use of BRP parts is most strongly recommended when considering replacement of any component. Dealer and/or distributor assistance should be sought in case of doubt.

The engines and the corresponding components identified in this document should not be utilized on product(s) other than those mentioned in this document.

It is understood that certain modifications may render use of the vehicle illegal under existing federal, provincial and state regulations.

This manual emphasizes particular information denoted by the following wording and symbols:

⚠ WARNING

Indicates a potential hazard that, if not avoided, could result in serious injury or death.

⚠ CAUTION **Indicates a hazardous situation which, if not avoided, could result in minor or moderate injury.**

NOTICE **Indicates an instruction which, if not followed, could result in severe damage to vehicle components or other property.**

NOTE: Indicates supplementary information required to fully complete an instruction.

Although the mere reading of such information does not eliminate the hazard, your understanding of the information will promote its correct use.

Unless otherwise noted, the engine must be stopped and the key must be removed prior to performing any services.

Torque wrench tightening specifications must be strictly adhered to. Use the torque values and service products as in the exploded views or in the procedures when noted.

Locking devices when removed must be replaced (e.g.: locking tabs, elastic stop nuts, self-locking fasteners, cotter pins, etc.).

Hoses, cables and locking ties removed during a procedure must be reinstalled as per factory standards.

When ordering parts always refer to the specific model *PARTS CATALOGS*.

We strongly recommend that any services be carried out and/or verified by a highly skilled professional mechanic.

It is understood that this manual may be translated into another language. In the event of any discrepancy, the English version shall prevail.

BRP disclaims liability for all damages and/or injuries resulting from the improper use of the contents of this publication.

IMPORTANT SAFETY PRECAUTIONS

We do not provide warnings about many basic shop safety practices (e.g.: Use Grinding Wheel – wear safety glasses). If you have not received shop safety training or do not feel confident about your knowledge of safe servicing practices, we recommend that you do not attempt to perform the procedures described in BRP shop manuals.

You should have a clear understanding of all basic shop safety practices. You should be wearing the appropriate clothing, using appropriate safety equipment and taking all necessary safety precautions. Please be especially careful of the following:

– Read and understand all instructions before you begin a procedure or repair.

- Ensure you have the proper tools, any necessary replacement parts and the skills to perform the tasks safely and completely.
- Protect your eyes by using approved and properly fitted safety glasses.
- Use other protective wear when necessary, for example safety shoes and gloves.
- Unless the service procedure requires that the engine remain running, make sure the engine is off **before** beginning service.
- Be sure there is adequate ventilation whenever you run the engine, to avoid the risk of Carbon Monoxide poisoning.
- To avoid injury from moving parts, make sure your hands, fingers and clothing are out of the way when the engine is running.
- Gasoline vapors and hydrogen gases from batteries are explosive. Keep all cigarettes, sparks and flames away from the battery, fuel-related components and other enclosed compartments.
- Never use gasoline to clean parts, always use an approved nonflammable solvent.
- Never drain or store gasoline in an open container.

⚠ WARNING

The foregoing list represents general safety practices. For details on workplace health and safety requirements in your area, consult your local workplace health and safety agency or association.

We have provided you with some of the most important general service safety precautions, above. We cannot, however, warn you of every conceivable hazard that can arise in performing the service and repair procedures depicted in BRP manuals. Only you can decide whether or not you should perform a given task.

Midwest Manuals
Green Manuals
Paperless Manuals
For a Better Tomorrow
www.green-manuals.com
If you bought this manual from any other seller please leave them
NEGATIVE feedback and notify me at bestshopmanuals@gmail.com

INTRODUCTION

The information and component/system descriptions contained in this manual are correct at time of publication. BRP however, maintains a policy of continuous improvement of its products without imposing upon itself any obligation to install them on products previously manufactured.

Due to late changes, it may have some differences between the manufactured product and the description and/or specifications in this document.

BRP reserves the right at any time to discontinue or change specifications, designs, features, models or equipment without incurring obligation.

VEHICLE INFORMATION

VEHICLE IDENTIFICATION NUMBER (VIN) LOCATIONS

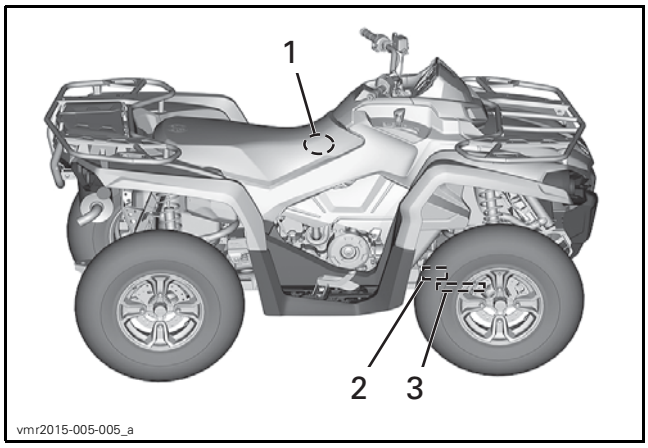

VIN LOCATIONS
1. *VIN decal under seat*
2. *VIN decal on lower frame member, RH side*
3. *VIN stamped on lower frame member, RH side*

VIN Decal Description

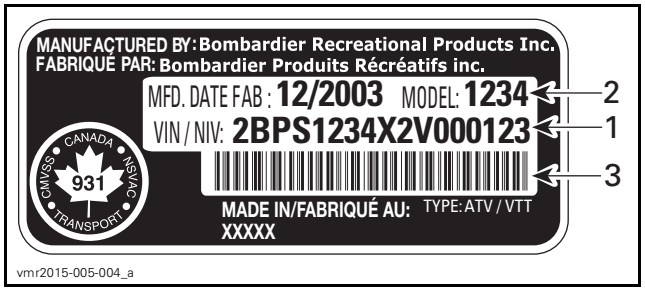

TYPICAL — VEHICLE SERIAL NUMBER DECAL UNDER SEAT
1. *VIN (Vehicle Identification Number)*
2. *Vehicle manufacturing date and model number*
3. *VIN bar code*

TYPICAL — VEHICLE SERIAL NUMBER DECAL ON RH SIDE OF FRAME
1. *VIN (Vehicle Identification Number)*
2. *Vehicle manufacturing date and model number*

ENGINE IDENTIFICATION NUMBER (EIN)

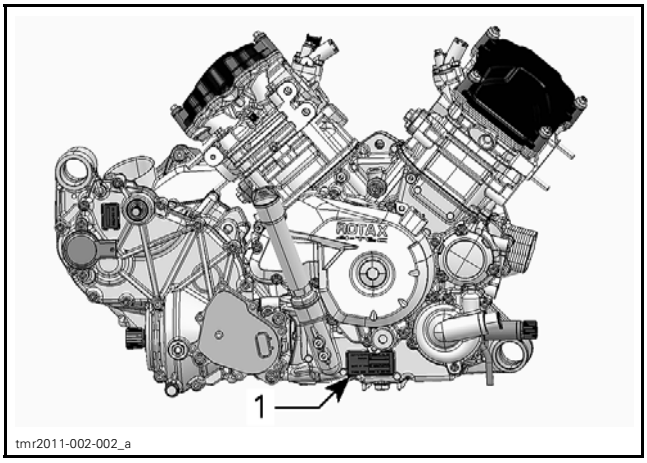

1. *Engine Identification Number (EIN)*

COMPLIANCE LABEL

Regulation (EU) 2016/1628 applicable for Non-Road Mobile Machineries

Vehicles who comply to Regulation (EU) 2016/1628 (NRMM) are identified on the engine valve cover.

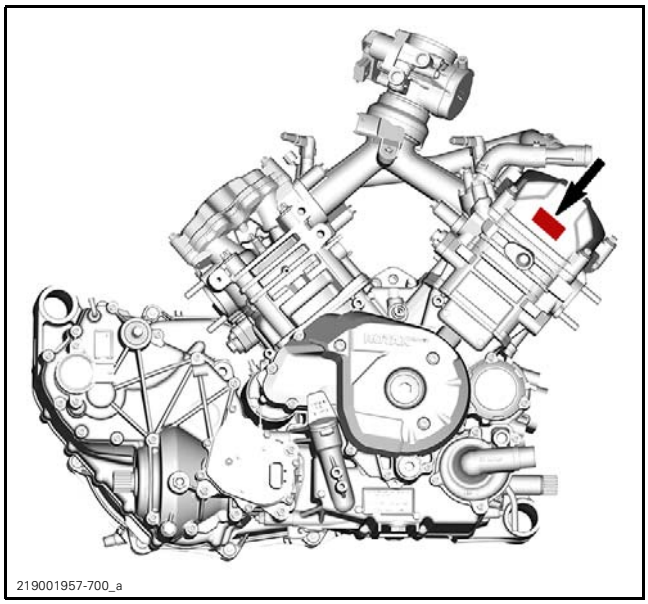

TYPICAL

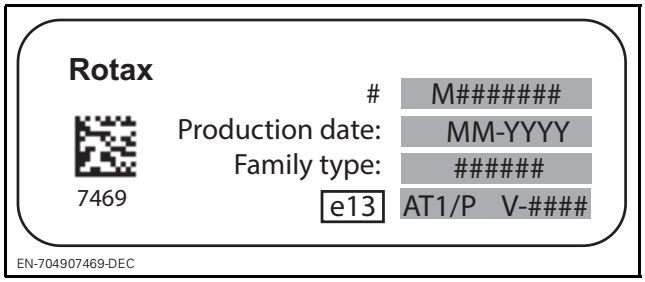

TYPICAL NRMM IDENTIFICATION

NOTE: Any tampering with the engine or its components will void the EU type-approval of the vehicle.

ENGINE EMISSIONS INFORMATION

MANUFACTURER'S RESPONSIBILITY

Manufacturers of engines must determine the exhaust emission levels for each engine horsepower family and certify these engines with the United States of America Environmental Protection Agency (EPA). An emissions control information label, showing emission levels and engine specifications, must be placed on each vehicle at the time of manufacture.

DEALER RESPONSIBILITY

When servicing any vehicle that carry an emissions control information label, adjustments must be kept within published factory specifications.

Replacement or repair of any emission related component must be executed in a manner that maintains emission levels within the prescribed certification standards.

Dealers are not to modify the engine in any manner that would alter the horsepower or allow emission levels to exceed their predetermined factory specifications.

Exceptions include manufacturer's prescribed changes.

OWNER RESPONSIBILITY

The owner/operator is required to have engine maintenance performed to maintain emission levels within prescribed certification standards.

The owner/operator is not to, and should not allow anyone else to modify the engine in any manner that would alter the horsepower or allow emissions levels to exceed their predetermined factory specifications.

EMISSION REGULATIONS

The vehicle you are servicing may have been certified to applicable emission regulations in your country or state. Not as an exhaustive list; this may include standards for engine exhaust emissions, crankcase emissions, permeation emissions and evaporative emissions. Servicing procedures in this manual must be strictly followed in order to keep the vehicle within the factory specifications. Failure to follow servicing procedures in this manual may lead a vehicle to be out of compliance with applicable emission regulations.

When servicing any vehicle; adjustments must be kept within published factory specifications. Replacement or repair of any emission related component must be executed in a manner that maintains emission levels within the applicable certification standards. Nobody is allowed to modify the engine in any manner that would alter the horsepower or allow emission levels to exceed their predetermined factory specifications. Exceptions include manufacturer’s prescribed changes.

The owner/operator is required to have engine maintenance performed to maintain emission levels within the prescribed certification standards. The owner/operator is allowed and should not allow anyone else to modify the engine in any manner that would alter the horsepower or allow emissions levels to exceed their predetermined factory specifications.

MANUAL INFORMATION

MANUAL PROCEDURES

Many of the procedures in this manual are interrelated. Before undertaking any task, you should read and thoroughly understand the entire section or subsection in which the procedure is contained.

⚠ WARNING

Unless otherwise specified, the engine should be turned OFF and cold for all maintenance and repair procedures.

A number of procedures throughout the book require the use of special tools. Before starting any procedure, be sure that you have on hand all required tools, or their approved equivalents.

The use of RIGHT and LEFT indications in the text are always referenced to the driving position (sitting on the vehicle).

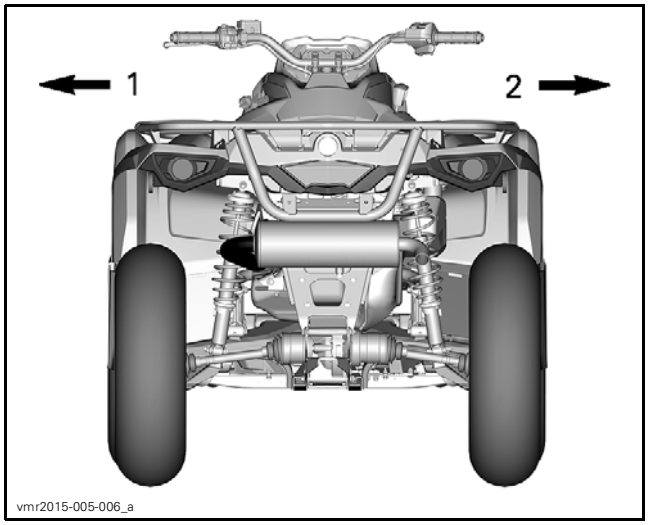

TYPICAL
1. Left
2. Right

This manual uses technical terms which may be different from the ones of the parts catalogs.

When ordering parts always refer to the specific model *PARTS CATALOGS*.

NOTICE **Most fasteners are metric, and most components are built with parts dimensioned using the metric system. Consult the appropriate *PARTS CATALOG* to obtain and use the correct parts and fasteners. Mismatched or incorrect fasteners could cause damage to the vehicle.**

MANUAL LAYOUT

This manual is divided into many major sections as can be seen in the main table of contents at the beginning of the manual.

Each section is divided into various subsections, and again, each subsection has one or more divisions.

Illustrations and photos show the typical construction of various assemblies and, in all cases, may not reproduce the full detail or exact shape of the parts used in a particular model vehicle. However, they represent parts which have the same or a similar function.

TYPICAL PAGE

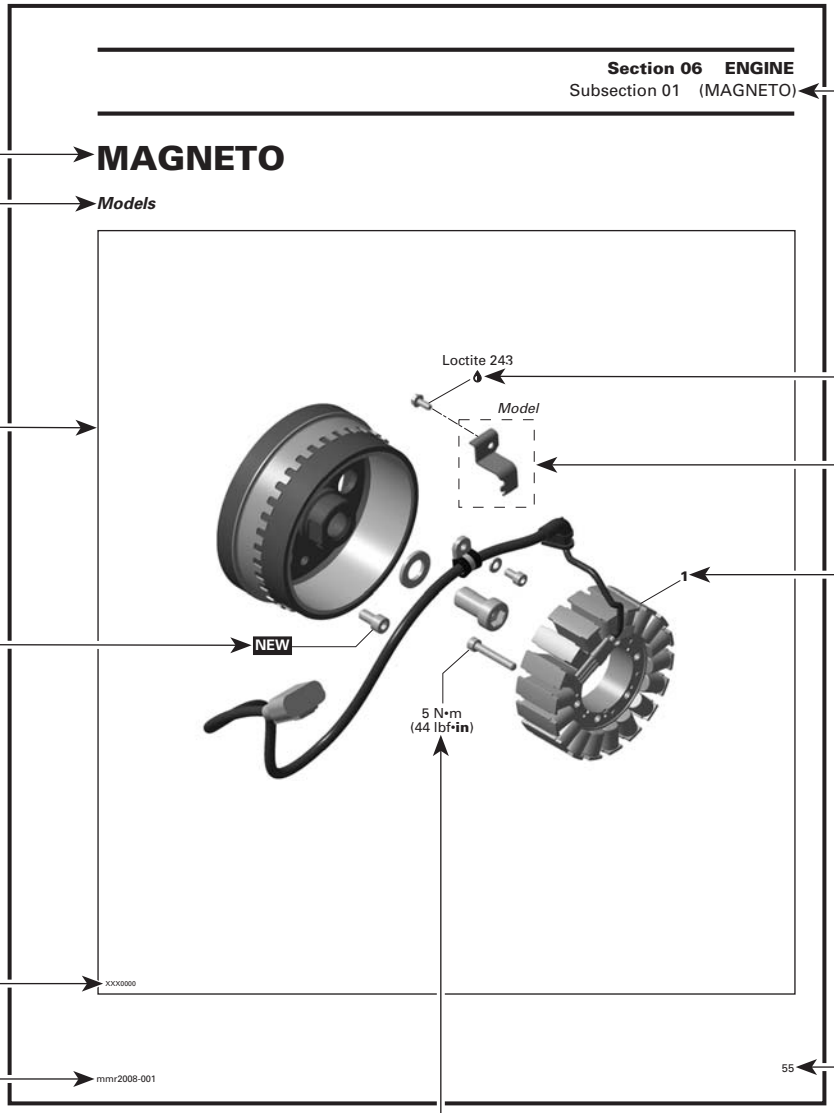

Page heading indicates section and subsection.

Subsection title

Indicates applicable models.

Exploded view assists you in identifying parts and their related positions.

Drop represents a service product to be applied.

Dotted box contains parts applicable to a specific model.

Bold face number is used to identify a part referred to the text.

NEW indicates that the part must be replaced with a new one.

Illustration number for publishing process.

Document number for publishing process.

Page number

Specific torque applicable to this installation.

NOTICE Pay attention to torque specifications.
Some of these are in lbf•**in** instead of lbf•ft.
Use appropriate torque wrench.

Typical_iso_2008_en

TYPICAL PAGE

Section 03 ENGINE
Subsection 09 (MAGNETO SYSTEM)

Tittle in bold indicates category of information to be carried out.

GENERAL

NOTE: The following procedures can be done without removing the engine.

During assembly/installation, use the torque values and service products as in the exploded views.

Clean threads before applying a threadlocker. Refer to *SELF-LOCKING FASTENERS* and *LOCTITE APPLICATION* sections at the beginning of this manual for complete procedure.

Reference to a specific section or subsection.

⚠ WARNING

Torque wrench tightening specifications must be strictly adhered to.
Locking devices (e.g.: locking tabs, elastic stop nuts, self-locking fasteners, etc.) must be replaced with new ones.

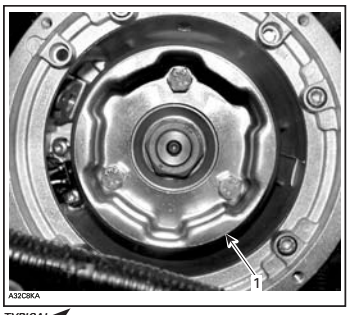

TYPICAL
1. Starting pulley

"TYPICAL" indicates a general view which may not represent exact details.

Call-outs pertaining to above illustration.

PROCEDURES

Indicates component procedures apply to.

MAGNETO FLYWHEEL

Magneto Flywheel Cleaning

Clean all metal components in a non-ferrous metal cleaner.

CAUTION: Clean magneto flywheel using only a clean cloth.

Indicates specific procedure to be carried out.

Magneto Flywheel Removal

Remove muffler, refer to the *EXHAUST SYSTEM* section.

Remove acoustic panel.

Remove rewind starter.

Remove starting pulley **no. 2**.

Bold face number following part name refers to exploded view at beginning of subsection.

NOTE: To remove starting pulley bolts, hold magneto flywheel with a socket as shown.

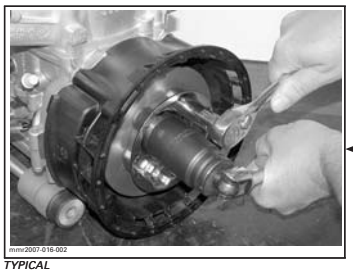

TYPICAL

Illustration always follows text to which it applies.

Models

Remove the connecting flange retaining the rewind starter to the engine housing.

Italic bold face typesetting indicates a procedure applicable to a specific model(s).

mmr2008-001 57

typical_txt_2008_en

TIGHTENING TORQUE

Tighten fasteners to the torque specified in the exploded view(s) and/or in the written procedure. When a torque is not specified, refer to the following table.

⚠ WARNING

Torque wrench tightening specifications must be strictly adhered to.
Locking devices must be replaced when removed (e.g.: locking tabs, elastic stop nuts, self-locking fasteners, cotter pins, etc.).

In order to avoid a poor assembly, tighten screws, bolts, or nuts in accordance with the following procedure:

1. Manually screw in all screws, bolts and/or nuts.
2. Apply half the recommended torque value.
3. Tighten fastener to the recommended torque value.

NOTICE **Be sure to use the recommended tightening torque for the specified fastener used.**

Whenever possible, always apply torque on the nut.

Always torque screws, bolts and/or nuts using a crisscross pattern when multiple fasteners are used to secure a part (eg. a cylinder head). Some parts must be torqued according to a specific sequence and torque pattern as detailed in the installation procedure.

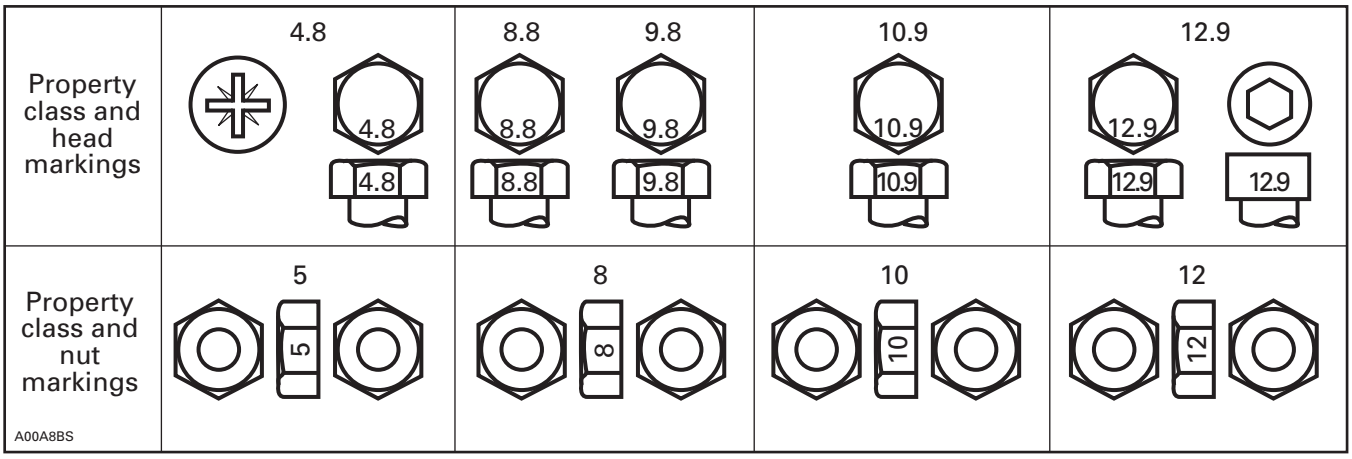

FASTENER SIZE	FASTENER GRADE/TORQUE			
	5.8 Grade	**8.8 Grade**	**10.9 Grade**	**12.9 Grade**
M4	1.5 – 2 N•m (13 – 18 lbf•**in**)	2.5 – 3 N•m (22 – 27 lbf•**in**)	3.5 N•m - 4 N•m (31 lbf•**in** - 35 lbf•**in**)	4 N•m - 5 N•m (35 lbf•**in** - 44 lbf•**in**)
M5	3 N•m - 3.5 N•m (27 lbf•**in** - 31 lbf•**in**)	4.5 N•m - 5.5 N•m (40 lbf•**in** - 49 lbf•**in**)	7 N•m - 8.5 N•m (62 lbf•**in** - 75 lbf•**in**)	8 N•m - 10 N•m (71 lbf•**in** - 89 lbf•**in**)
M6	6.5 N•m - 8.5 N•m (58 lbf•**in** - 75 lbf•**in**)	8 N•m - 12 N•m (71 lbf•**in** - 106 lbf•**in**)	10.5 – 15 N•m (93 – 133 lbf•**in**)	16 N•m (142 lbf•**in**)
M8	15 N•m (133 lbf•**in**)	25 N•m (18 lbf•ft)	32 N•m (24 lbf•ft)	40 N•m (30 lbf•ft)
M10	29 N•m (21 lbf•ft)	48 N•m (35 lbf•ft)	61 N•m (45 lbf•ft)	73 N•m (54 lbf•ft)
M12	52 N•m (38 lbf•ft)	85 N•m (63 lbf•ft)	105 N•m (77 lbf•ft)	128 N•m (94 lbf•ft)
M14	85 N•m (63 lbf•ft)	135 N•m (100 lbf•ft)	170 N•m (125 lbf•ft)	200 N•m (148 lbf•ft)

FASTENER INFORMATION

NOTICE Most components in the vehicles are built with parts dimensioned in the metric system. Most fasteners are metric and must not be replaced by customary fasteners or vice-versa. Mismatched or incorrect fasteners could cause damage to the vehicle or possible personal injury.

SELF-LOCKING FASTENER PROCEDURE

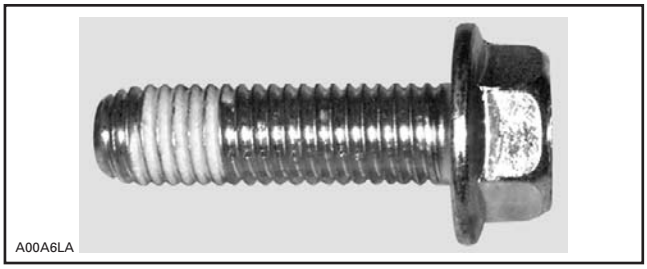

TYPICAL — SELF-LOCKING FASTENER

The following describes common procedures used when working with self-locking fasteners.

Use a metal brush or a tap to properly clean a threaded hole, then use a solvent. Allow the solvent time to act, approximately 30 minutes, then wipe off. Solvent utilization is to ensure proper adhesion of the product used for locking the fastener.

LOCTITE® THREADLOCKER APPLICATION PROCEDURE

The following describes common procedures used when working with Loctite products.

NOTE: Always use proper strength Loctite product as recommended in this Shop Manual.

Threadlocker Application for Uncovered Holes (Bolts and Nuts)

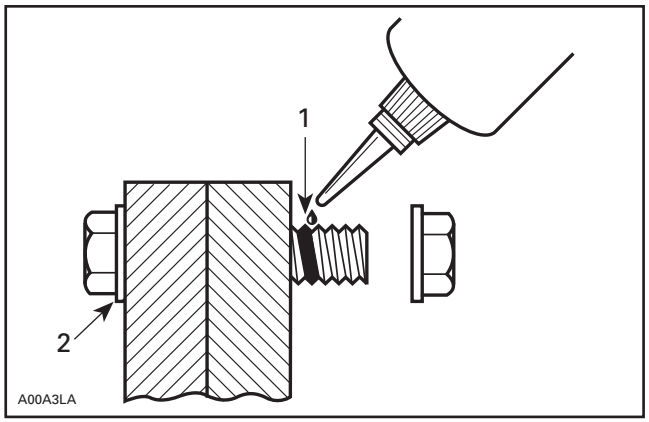

1. Apply here
2. Do not apply

1. Clean threads (bolt and nut) with solvent.
2. Apply LOCTITE 7649 (PRIMER) (P/N 293 800 041) on threads and allow to dry.
3. Choose proper strength Loctite threadlocker.
4. Fit bolt in the hole.
5. Apply a few drops of threadlocker at proposed tightened nut engagement area.
6. Position nut and tighten as required.

Threadlocker Application for Blind Holes

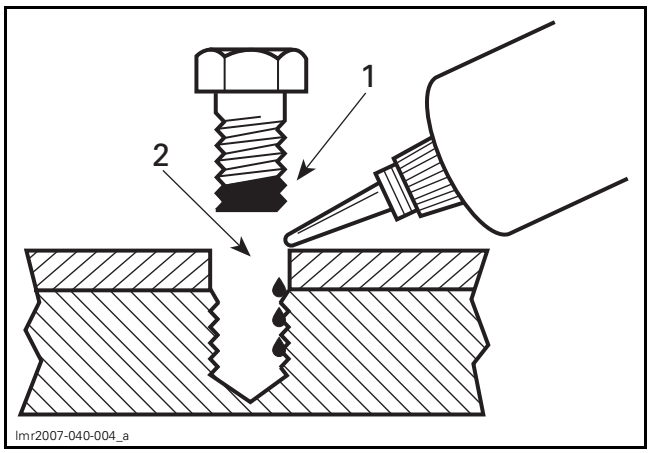

1. On fastener threads
2. On threads and at the bottom of hole

1. Clean threads (bolt and hole) with solvent.
2. Apply LOCTITE 7649 (PRIMER) (P/N 293 800 041) on threads (bolt and nut) and allow to dry for 30 seconds.
3. Choose proper strength Loctite threadlocker.

4. Apply several drops along the threaded hole and at the bottom of the hole.
5. Apply several drops on bolt threads.
6. Tighten as required.

Threadlocker Application for Stud Installation in Blind Holes

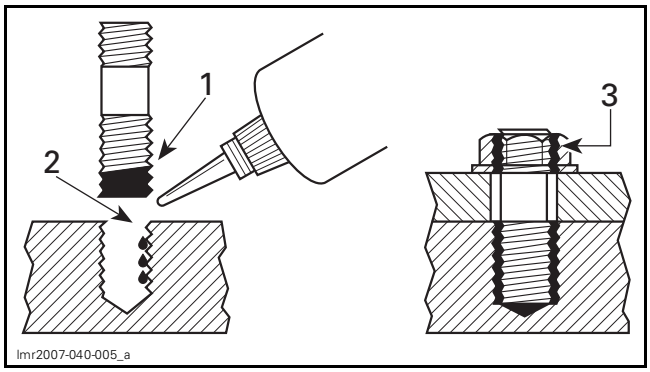

1. On stud threads
2. On threads and in the hole
3. On retaining nut threads

1. Clean threads (stud and hole) with solvent.
2. Apply LOCTITE 7649 (PRIMER) (P/N 293 800 041) on threads and allow to dry.
3. Apply 2 or 3 drops of proper strength Loctite threadlocker on female threads and in hole.

NOTE: To avoid a hydro lock situation, do not apply too much Loctite.

4. Apply several drops of proper strength Loctite on stud threads.
5. Install stud.
6. Install cover, part, etc.
7. Apply a few drops of proper strength Loctite on uncovered stud threads.
8. Install and tighten retaining nut(s) as required.

Threadlocker Application for Pre-Assembled Parts

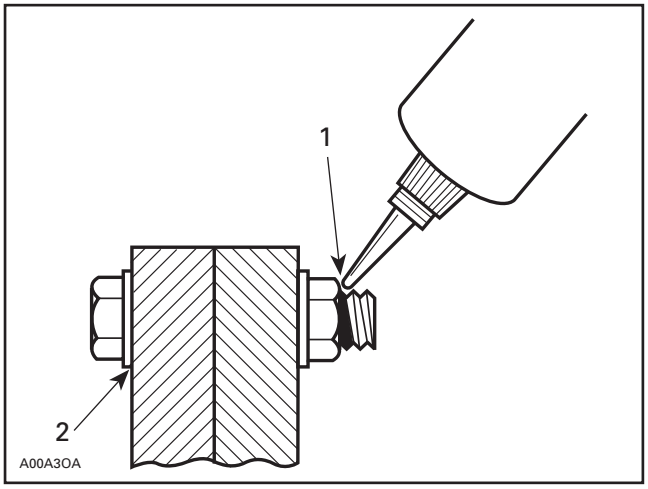

1. Apply here
2. Do not apply

1. Clean bolts and nuts with solvent.
2. Assemble components.
3. Tighten nuts.
4. Apply a few drops of proper strength Loctite on bolt/nut contact surfaces.
5. Avoid touching metal with tip of flask.

NOTE: For preventive maintenance on existing equipment, retighten nuts and apply proper strength Loctite on bolt/nut contact surfaces.

Threadlocker Application for an Adjustment Screw

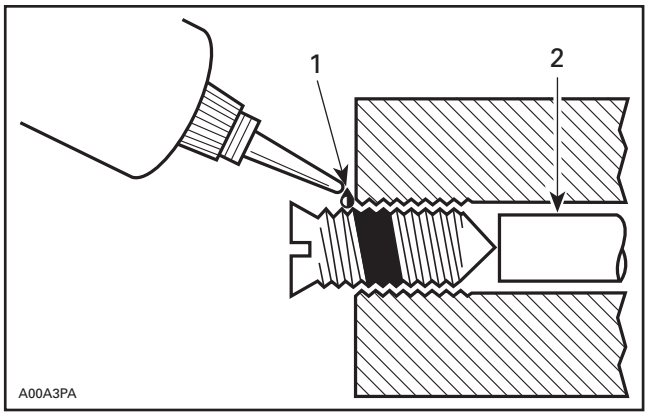

1. Apply here
2. Plunger

1. Adjust screw to proper setting.
2. Apply a few drops of proper strength Loctite threadlocker on screw/body contact surfaces.
3. Avoid touching metal with tip of flask.

NOTE: If it is difficult to readjust, heat screw with a soldering iron (232°C (450°F)).

Application for Stripped Thread Repair

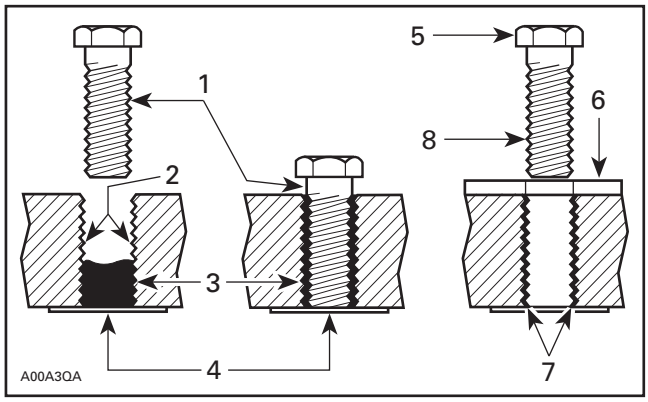

1. *Release agent*
2. *Stripped threads*
3. *Form-A-Thread*
4. *Tape*
5. *Cleaned bolt*
6. *Plate*
7. *New threads*
8. *Threadlocker*

Standard Thread Repair

Follow instructions on Loctite FORM-A-THREAD 81668 package.

If a plate is used to align bolt:

1. Apply release agent on mating surfaces.
2. Put waxed paper or similar film on the surfaces.
3. Twist bolt when inserting it to improve thread conformation.

NOTE: NOT intended for engine stud repairs.

Repair of Small Holes/Fine Threads

Option 1: Enlarge damaged hole, then follow *STANDARD THREAD REPAIR* procedure.

Option 2: Apply FORM-A-THREAD on the screw and insert in damaged hole.

Permanent Stud Installation (Light Duty)

1. Use a stud of the desired thread length.

NOTE: DO NOT apply release agent on stud.

2. Follow Standard Thread Repair procedure.
3. Allow 30 minutes for Loctite FORM-A-THREAD to cure.
4. Complete part assembly.

Gasket Compound Application

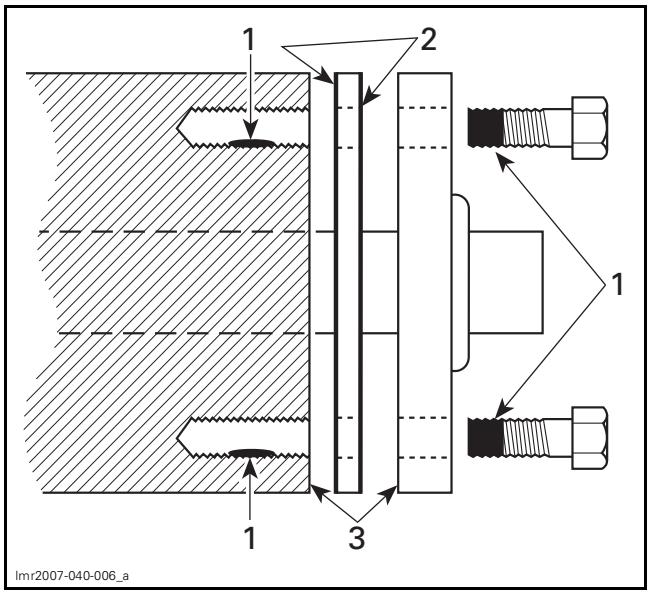

1. *Proper strength Loctite*
2. *Loctite Primer N (P/N 293 800 041) and Gasket Eliminator 518 (P/N 293 800 038) on both sides of gasket*
3. *Loctite Primer N only*

1. Remove old gasket and other contaminants using LOCTITE CHISEL (GASKET REMOVER) (P/N 413 708 500). Use a mechanical means only if necessary.

NOTE: Avoid grinding.

2. Clean both mating surfaces with solvent.
3. Spray Loctite Primer N on both mating surfaces and on both sides of gasket and allow to dry 1 or 2 minutes.
4. Apply LOCTITE 518 (P/N 293 800 038) on both sides of gasket, using a clean applicator.
5. Place gasket on mating surfaces and assemble parts immediately.

NOTE: If the cover is bolted to blind holes, apply proper strength Loctite in the hole and on threads. Tighten fastener.

NOTE: If holes are sunken, apply proper strength Loctite on bolt threads.

6. Tighten as usual.

Threadlocker Application for Mounting on a Shaft

Mounting with a Press

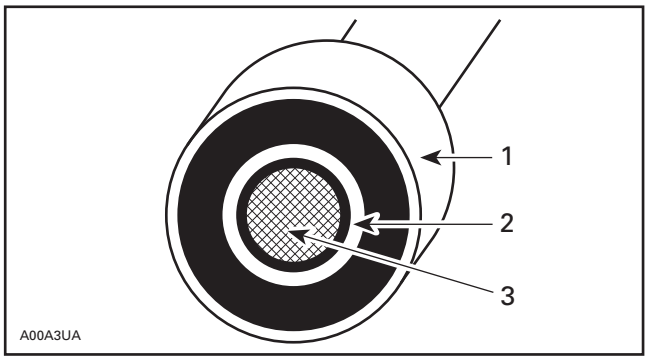

1. Bearing
2. Proper strength Loctite
3. Shaft

1. Clean shaft external contact surface.
2. Clean internal contact surface of part to be installed on shaft.
3. Apply a strip of proper strength Loctite on circumference of shaft contact surface at insertion or engagement point.

NOTE: Retaining compound is always forced out when applied on shaft. DO NOT use Loctite antiseize or any similar product. No curing period is required.

Mounting in Tandem

1. Apply retaining compound on internal contact surface (bore) of parts to be installed.
2. Continue parts assembly in the prescribed order.

Threadlocker Application for Case-In Components (Metallic Gaskets)

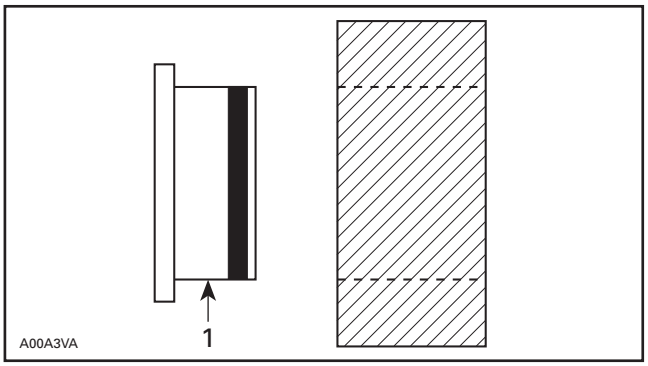

1. Proper strength Loctite

1. Clean inner housing diameter and outer gasket diameter.
2. Spray housing and gasket with LOCTITE 7649 (PRIMER) (P/N 293 800 041).
3. Apply a strip of proper strength Loctite on leading edge of outer metallic gasket diameter.

NOTE: Any Loctite product can be used here. A low strength liquid is recommended as normal strength and gap are required.

4. Install according to standard procedure.
5. Wipe off excess product.
6. Allow 30 minutes for product to cure.

NOTE: Normally used on worn-out housings to prevent leaking or sliding.

It is generally not necessary to remove gasket compound applied on outer gasket diameter.

PERIODIC MAINTENANCE SCHEDULE

GENERAL

Maintenance is very important for keeping your vehicle in safe operating condition. The vehicle should be serviced as per the maintenance schedule.

⚠ WARNING

Failure to properly maintain the vehicle according to the maintenance schedule and procedures can make it unsafe to operate.

EPA Regulation - Canadian and USA Vehicles

A repair shop or person of the owner's choosing may maintain, replace, or repair emission control devices and systems. These instructions do not require components or service by BRP or authorized Can-Am Off-Road dealers.

Although an authorized Can-Am Off-Road dealer has an in-depth technical knowledge and tools to service your vehicle, the emission-related warranty is not conditioned on the use of an authorized Can-Am Off-Road dealer or any other establishment with which BRP has a commercial relationship.

Proper maintenance is the owner's responsibility. A warranty claim may be denied if, among other things, the owner or operator caused the problem through improper maintenance or use.

You must follow the instructions for fuel requirements in the fueling section of this manual. Even if gasoline containing greater than ten volume percent ethanol is readily available, the US EPA issued a prohibition against the use of gasoline containing greater than 10 vol% ethanol that applies to this vehicle. The use of gasoline containing greater than 10 vol% ethanol with this engine may harm the emission control system.

SEVERE DUSTY CONDITIONS

Engine Air Filter Maintenance Guideline

Air filter maintenance should be adjusted according to riding conditions.

Air filter maintenance must be increased in frequency in the following dusty conditions:

- Riding on dry sand
- Riding on dry dirt covered surfaces
- Riding on dry gravel roads or similar conditions.

NOTE: Riding in a group in these conditions would increase even more the air filter maintenance.

MAINTENANCE SCHEDULE LEGEND

Operation in trail riding conditions
Operation in severe riding conditions (dusty or muddy) or carrying heavy loads condition

MAINTENANCE SCHEDULE

Make sure to perform proper maintenance at recommended intervals as indicated in the tables. Some items of the maintenance schedule must be performed in function of the calendar, regardless of the distance or time of operation.

EVERY 1 500 KM (1,000 MI) OR 50 HOURS (whichever comes first)
EVERY 750 KM (500 MI) OR 25 HOURS (whichever comes first)
Verify and clean engine air filter. Replace as needed
Verify battery connections
Inspect front differential, middle differential (6x6 models) and rear final drive oil level and look for contamination. Replace if necessary (X mr models)
Lubricate rear propeller shaft joint
Inspect tie rod ends and ball joints for play and boots condition
Lubricate front suspension arm bushings
Lubricate front (if equipped) and rear stabilizer bar bushings
Inspect the drive shaft boots and protectors
Inspect brake pads. Replace as needed
Inspect wheel bearings for abnormal play
Inspect and clean CVT air filter. Replace as needed. (If equipped)
Tighten wheel beadlock bolts (If equipped)
Lubricate lower shock absorber spherical bearings (Outlander Limited, XT-P and X xc models)
Lubricate upper shock absorber spherical bearings (Outlander Limited and X mr 1000R)

EVERY 3 000 KM (2,000 MI) OR 100 HOURS (whichever comes first)
EVERY 1 500 KM (1,000 MI) OR 50 HOURS (whichever comes first)
Adjust valve clearance
Clean muffler spark arrester
Verify and clean throttle body
Replace fuel vent breather filter
Verify CVT drive belt and clean CVT pulleys
Lubricate the one way bearing of the drive pulley
The following must be performed at least once a year:
Change engine oil and filter
Lubricate throttle cable
Inspect and clean brake system
Inspect battery condition
Verify steering system for abnormal play
Verify front differential and rear final drive oil level and look for contamination
Verify gearbox oil level and look for contamination (except 450)

Midwest Manuals
Green Manuals
Paperless Manuals
For a Better Tomorrow
If you bought this manual from any other seller please leave them
NEGATIVE feedback and notify me at bestshopmanuals@gmail.com

PERFORM AT THE FIRST 3 000 KM (2,000 MI)AND AT 6 000 KM (4,000 MI) THEN FOLLOW THE REGULAR SCHEDULE
PERFORM AT THE FIRST 1 500 KM (1,000 MI) AND AT 3 000 KM (2,000 MI) THEN FOLLOW THE REGULAR SCHEDULE
Replace gearbox oil (except 450)
Clean the vehicle speed sensor (VSS) (except 450)

EVERY 6 000 KM (4,000 MI) OR 200 HOURS (whichever comes first)
EVERY 3 000 KM (2,000 MI) OR 100 HOURS (whichever comes first)
Verify the cooling system
Test engine coolant strength
Verify fuel system for leaks
Verify fuel pump pressure
Replace spark plugs
Replace front differential oil
Replace middle drive unit oil (6x6 models) and rear final drive oil
Replace gearbox oil (except 450)
Inspect input and output shaft seals (gearbox, differential and final drive)
Clean vehicle speed sensor
Clean and lubricate lower and upper steering column half bushings
The following must be performed every 2 years:
Replace the brake fluid

EVERY 12 000 KM (8,000 MI) OR 5 YEARS (whichever comes first)
EVERY 6 000 KM (4,000 MI) OR 5 YEARS (whichever comes first)
Replace engine coolant

PERIODIC MAINTENANCE PROCEDURES

SERVICE TOOLS

Description	Part Number	Page
TEST CAP	529 035 991	10
VACUUM/PRESSURE PUMP	529 021 800	10

SERVICE PRODUCTS

Description	Part Number	Page
4T 0W40 SYNTHETIC OIL (EUR)	779286	5
4T 0W40 SYNTHETIC OIL	779139	5
4T 10W50 SYNTHETIC OIL (EUR)	779240	6
4T 10W50 SYNTHETIC OIL	779234	6
4T 5W40 SYNTHETIC BLEND OIL (EUR)	779290	5
4T 5W40 SYNTHETIC BLEND OIL	779133	5
75W140 SYNTHETIC GEAR OIL (EUR)	779215	12, 19
75W140 SYNTHETIC GEAR OIL	779160	12, 19
75W90 SYNTHETIC GEAR OIL (EUR)	779212	18
75W90 SYNTHETIC GEAR OIL	779158	18
AIR FILTER OIL	219 700 340	3
BRAKE FLUID DOT 4 (EUR)	779207	22
BRAKE FLUID DOT 4	779151	22
EXTENDED LIFE PRE-MIXED COOLANT (EUR)	779223	8
EXTENDED LIFE PRE-MIXED COOLANT	779150	8
LOCTITE 767 (ANTISEIZE LUBRICANT)	293 800 070	17
PROPELLER SHAFT GREASE	293 550 063	19
SYNTHETIC GREASE (EUR)	779231	23
SYNTHETIC GREASE	779162	23
SYNTHETIC SUSPENSION GREASE (EUR)	779226	20–21
SYNTHETIC SUSPENSION GREASE	779163	20–21
XPS BRAKES AND PARTS CLEANER (USA)	219 701 705	23
XPS BRAKES AND PARTS CLEANER	219 701 776	23

GENERAL

This subsection provides:

– Fluid level verifications

– Maintenance procedures.

The following systems should be serviced according to the appropriate *PERIODIC MAINTENANCE SCHEDULE*.

PROCEDURES

AIR INTAKE SYSTEM

Engine Air Filter Maintenance Guideline

As with any ATV, air filter maintenance is critical to ensure proper engine performance and life span.

Air filter maintenance should be adjusted according to riding conditions.

Air filter maintenance must be increased in frequency and oil must be added to the foam filter for the following dusty conditions:

– Riding on dry sand

– Riding on dry dirt covered surfaces
– Riding on dry gravel trails or similar conditions.

NOTE: Riding in a group in these conditions would increase even more the air filter maintenance.

Air Intake Prefilter (X mr)

See *CLEANING THE CVT AIR FILTER* in this subsection.

Removing the Engine Air Filter

NOTICE **Never remove or modify any component in the air filter housing. Otherwise, engine performance degradation or damage can occur. The engine is calibrated to operate specifically with these components.**

1. Remove seat.
2. Remove console. Refer to *BODY* subsection.
3. Rotate air filter cover counterclockwise to remove it.

NOTE: A socket wrench may be used to ease removal of the air filter cover.

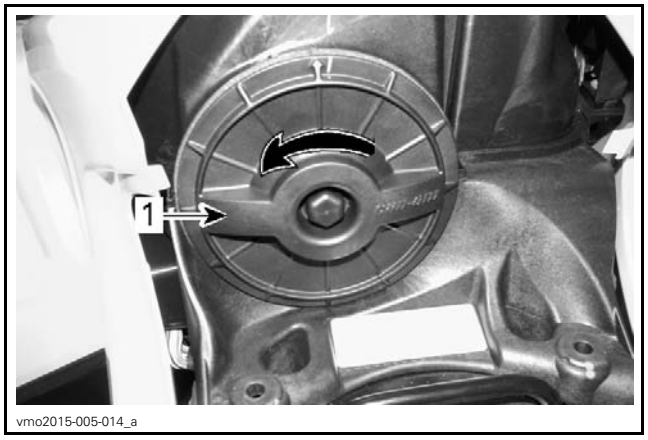

vmo2015-005-014_a

1. Air filter cover

4. Remove air filter.

vmo2015-005-015_a

AIR FILTER REMOVAL

Inspecting and Draining the Engine Air Filter Housing

1. Remove LH side panel and extension. Refer to *BODY* subsection.
2. Drain air filter housing drain tube.

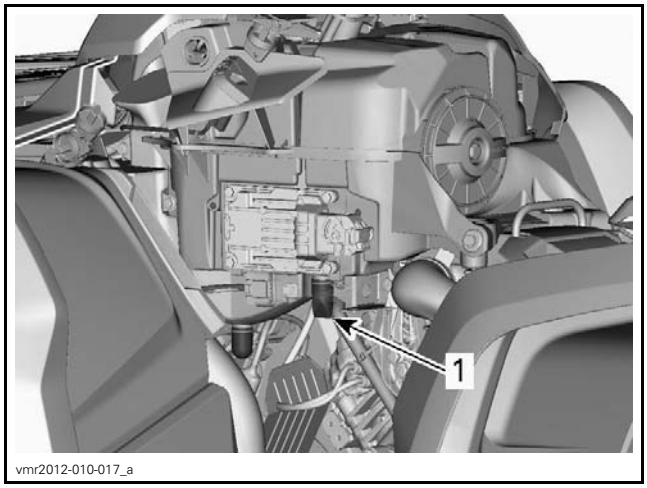

vmr2012-010-017_a

TYPICAL - SOME PARTS REMOVED FOR CLARITY
1. Air filter housing drain tube

3. Check air filter dirty chamber for cleanliness.
   – If any debris or water are found, clean air filter chamber using a vacuum cleaner.

NOTICE **Do not blow compressed air into air filter chamber.**

4. Check air filter housing drain tube (clean chamber).
   – If any debris or water are found, refer to *SPECIAL PROCEDURES* subsection.
   – Investigate for contamination source.

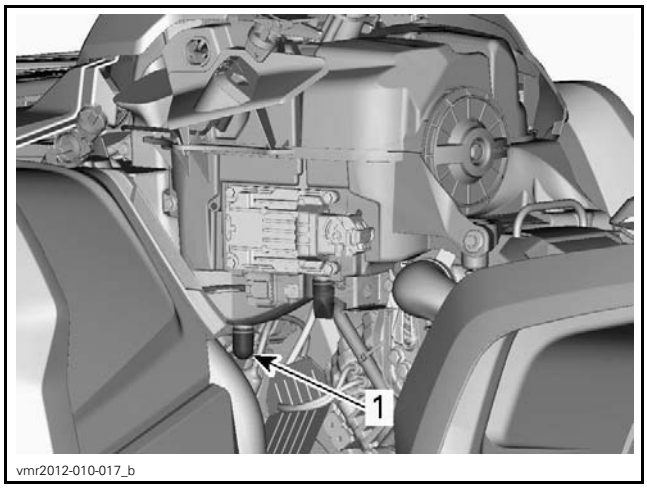

TYPICAL - SOME PARTS REMOVED FOR CLARITY
1. Air filter drain tube

Cleaning the Paper Filter

1. Ensure that the foam filter is removed from paper filter.
2. Tap out heavy dust from the paper filter.

This will allow dirt and dust to get out of the paper filter.

NOTE: Paper filter have a limited life span; replace filter if too dirty or clogged.

NOTICE **It is not recommended to blow compressed air on the paper filter; this could damage the paper fibers and reduce its filtration ability when used in dusty environments.**

NOTICE **Do not wash the paper filter with any cleaning solution.**

Cleaning the Foam Filter

1. Spray the foam filter inside and out with air filter cleaner and follow manufacturer's instructions.
2. Dry the foam filter completely.

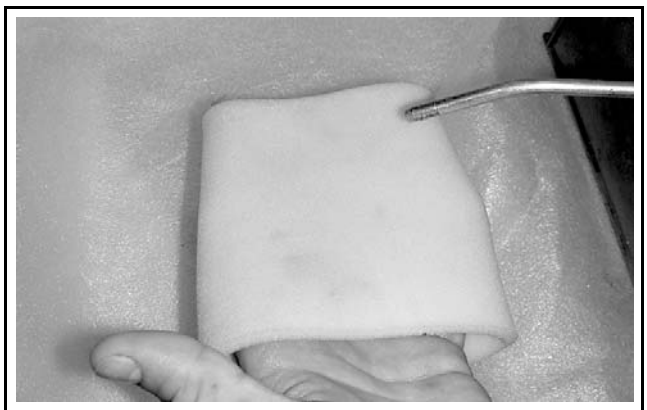

TYPICAL - DRY

NOTE: A second application may be necessary for heavily soiled elements.

Oiling the Foam Filter

1. Spray the recommended air filter oil on the foam filter previously cleaned and dried. Follow manufacturer's informations.

SERVICE PRODUCT	
AIR FILTER OIL (P/N 219 700 340)	

TYPICAL - OIL THE FOAM FILTER

Reinstall oiled foam filter over the paper filter.

Installing the Engine Air Filter

Slightly grease O-ring seal and plastic body of air filter. Refer to *AIR INTAKE SYSTEM* exploded view.

Install filter assembly in air filter housing.

Ensure air filter cover is properly locked onto the air filter housing. See indications on filter cover and housing.

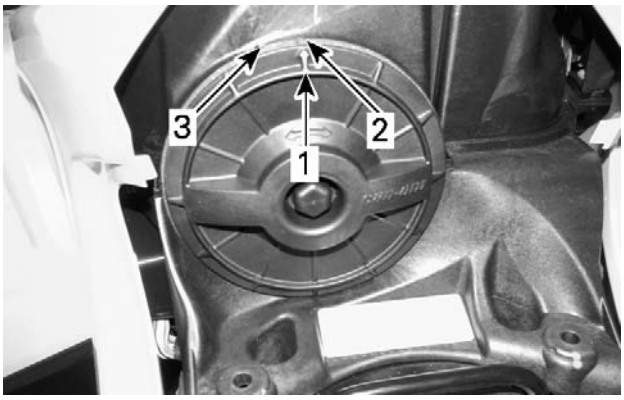

vmo2015-005-014_b

1. *Cover position arrow*
2. *Locked*
3. *Unlocked*

Reinstall the console.

EXHAUST SYSTEM

Cleaning and Inspecting the Muffler Spark Arrester

The muffler must be periodically purged of accumulated carbon.

⚠ WARNING

Never run engine in an enclosed area. Never perform this operation immediately after the engine has been run because exhaust system is very hot. Make sure that there are no combustible materials in the area. Wear eye protection and gloves. Never stand behind the vehicle while purging exhaust system. Respect all applicable laws and regulations.

Select a well-ventilated area and make sure the muffler is cool.

⚠ CAUTION Never perform this operation immediately after the engine has been running as exhaust system is very hot.

Muffler (Transversal Mounting)

1. Place transmission on PARK position.
2. Remove the clean out plug of the muffler.

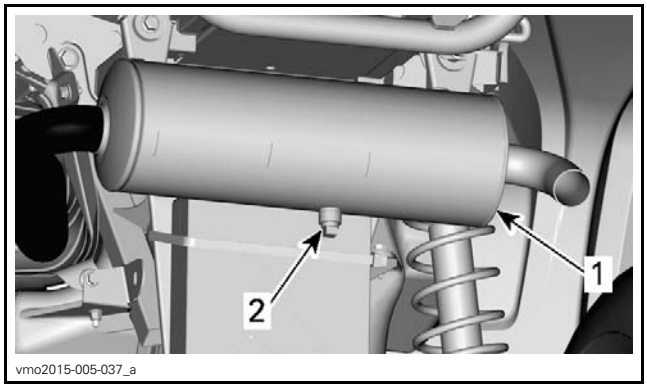

vmo2015-005-037_a

TYPICAL
1. *Muffler*
2. *Clean out plug*

3. Block the end of the muffler with a shop rag and start engine.
4. Momentarily increase engine RPM several times to purge accumulated carbon out of the muffler.
5. Stop engine and allow muffler to cool.
6. Reinstall the clean out plug.

Muffler (Longitudinal Mounting)

1. Remove the muffler cover and discard the screws.

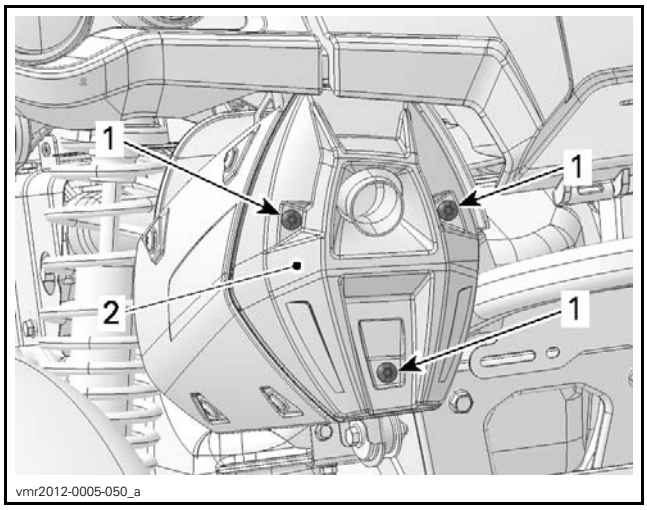

vmr2012-0005-050_a

TYPICAL
1. *Remove and discard screws*
2. *Cover*

2. Remove and discard the tail pipe retaining screws.

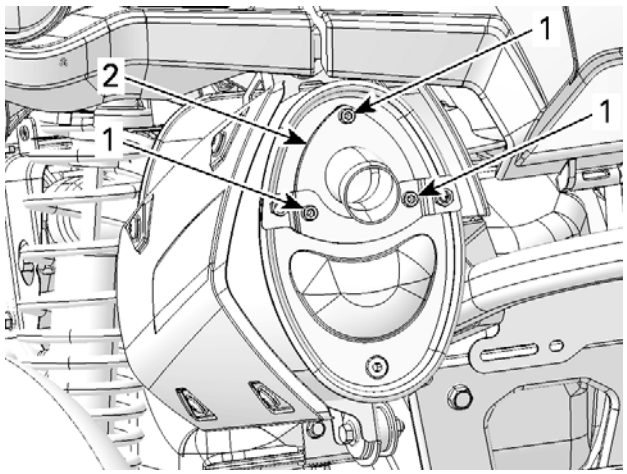

TYPICAL — ALL MODELS
1. *Screws*
2. *Tail pipe*

3. Remove exhaust tail pipe, gasket (discard) and spark arrester.

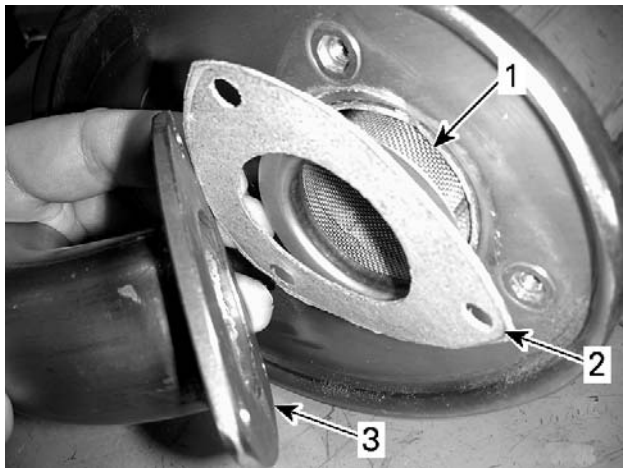

1. *Spark arrester*
2. *Gasket*
3. *Exhaust tail pipe*

4. Remove carbon deposits from the spark arrester using a brush.

NOTICE **Use a soft brush and be careful to avoid damaging spark arrester mesh.**

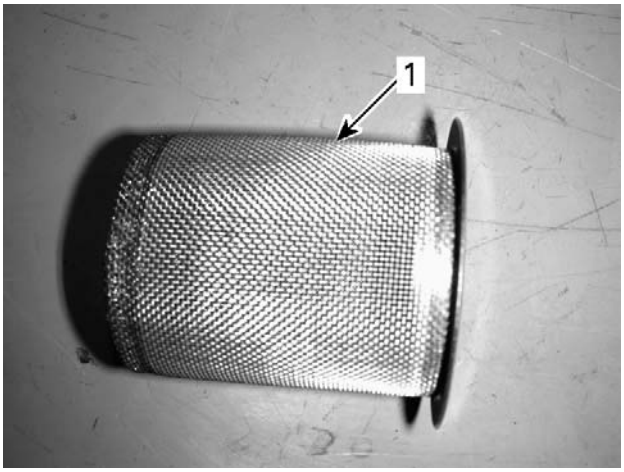

1. *Clean spark arrester*

5. Inspect mesh of spark arrester for any damage. Replace as required.
6. Inspect spark arrester chamber in muffler. Clean as required.

For installation, reverse the removal procedure. However pay attention to the following.

Install new gasket and new retaining screws.

TIGHTENING TORQUE	
Tail pipe retaining screws	11 N•m ± 1 N•m (97 lbf•**in** ± 9 lbf•**in**)

LUBRICATION SYSTEM

Recommended Engine Oil

Rotax® engines were developed and validated using the XPS™ oil. BRP recommends the use of its XPS engine oil or an equivalent at all time. Damages caused by the use of an oil not suitable for the engine may not be covered by the BRP Limited Warranty.

XPS RECOMMENDED ENGINE OIL	
General purpose	**Scandinavia:** 4T 5W40 SYNTHETIC BLEND OIL (EUR) (P/N 779290) **Other Countries:** 4T 5W40 SYNTHETIC BLEND OIL (P/N 779133)
Cold temperature	**Scandinavia:** 4T 0W40 SYNTHETIC OIL (EUR) (P/N 779286) **Other Countries:** 4T 0W40 SYNTHETIC OIL (P/N 779139)

XPS RECOMMENDED ENGINE OIL	
Warm temperature	**Scandinavia:** 4T 10W50 SYNTHETIC OIL (EUR) (P/N 779240) **Other Countries:** 4T 10W50 SYNTHETIC OIL (P/N 779234)
IF THE RECOMMENDED XPS ENGINE OIL IS NOT AVAILABLE	
Use a 4-stroke SAE engine oil meeting or exceeding the following lubricant industry specifications. Always check the API service label certification on the oil container, it must contain at least one of the indicated standards. – **API service classification SJ, SL, SM or SN**	

Verifying the Engine Oil Level

NOTICE **Operating the engine with an improper level may severely damage engine.**

NOTE: While checking the oil level, visually inspect engine area for leaks.

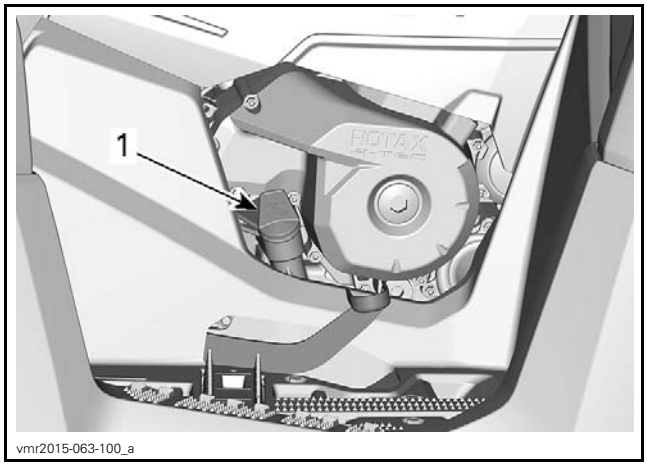

vmr2015-063-100_a

TYPICAL - RH SIDE OF ENGINE
1. Dipstick

NOTE: Do not lose the O-ring placed on the dipstick.

With vehicle on a level surface and engine cold, not running, check the oil level as follows:

1. Unscrew dipstick then remove it and wipe clean.
2. Reinstall dipstick, screw in it completely.
3. Remove and check oil level. It should be near or equal to the upper mark.

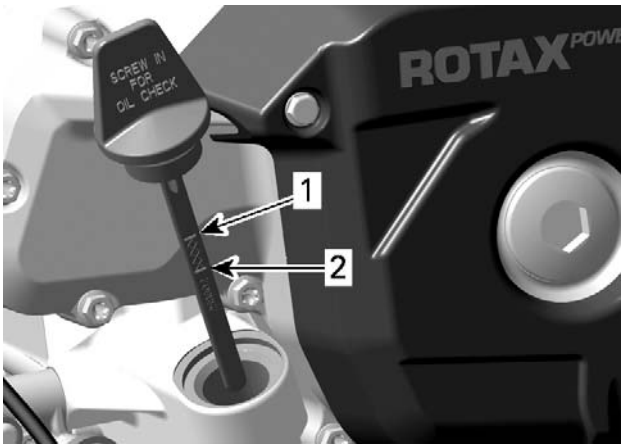

vmr2015-063-001_a

1. Full
2. Add

To add oil, remove the dipstick. Place a funnel into the dipstick orifice.

Add a small amount of recommended oil and recheck oil level.

Repeat the above procedures until oil level reaches the dipstick's upper mark. **Do not overfill. Wipe off any spillage.**

Properly tighten dipstick.

Changing the Engine Oil

1. Start and warm-up engine.
2. Stop engine.
3. Ensure vehicle is on a level surface.
4. Remove dipstick.
5. Place a drain pan under the engine drain plug area.
6. Clean the magnetic drain plug area.
7. Unscrew magnetic drain plug and discard the gasket ring.

⚠ **CAUTION** **The engine oil can be very hot.**

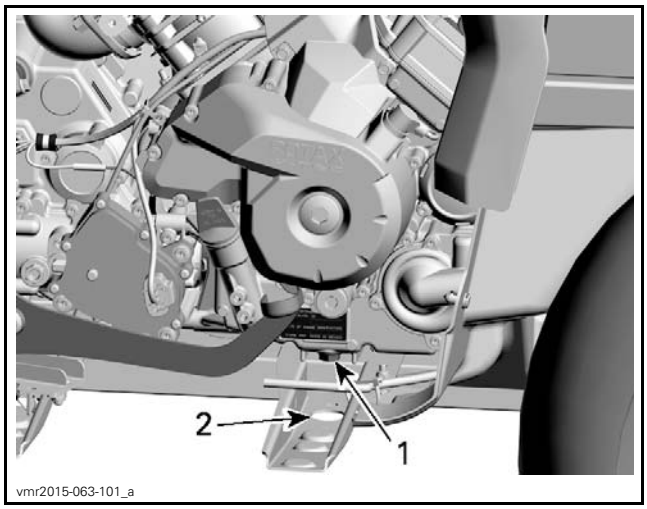

TYPICAL - SOME PARTS REMOVED FOR CLARITY
1. *Magnetic drain plug*
2. *Access through frame*

Allow oil to drain completely from the crankcase.

8. Clean the magnetic drain plug from metal shavings and residue. Presence of debris gives an indication of internal engine damage.
9. Install a **NEW** gasket ring on the magnetic drain plug.

NOTICE **Never use the gasket ring a second time. Always replace by a new one.**

10. Install and tighten magnetic drain plug to the recommended torque.

TIGHTENING TORQUE	
M12	20 N•m ± 2 N•m (15 lbf•ft ± 1 lbf•ft)
M18	30 N•m ± 2 N•m (22 lbf•ft ± 1 lbf•ft)

11. Replace oil filter. Refer to *REPLACING THE ENGINE OIL FILTER* in this subsection.
12. Refill engine with recommended engine oil.

MODEL	ENGINE OIL CAPACITY
450 engines	3 L (3.2 qt (U.S. liq.))
All other engines	2 L (2.1 qt (U.S. liq.))

13. After filling, check the oil level, refer to *VERIFYING THE ENGINE OIL LEVEL* in this subsection.
14. Start engine and let it idle for a few minutes.
15. Ensure oil filter and drain plug areas are not leaking.
16. Stop engine.
17. Wait a while to allow oil to flow down to crankcase, then check oil level again.
18. Refill as necessary.
19. Dispose oil and filter as per your local environmental regulations.

Replacing the Engine Oil Filter

Engine Oil Filter Access

To reach oil filter, refer to *BODY* subsection and remove the following parts:

– Seat
– Console
– RH side panel and extension
– RH inner fender panel.

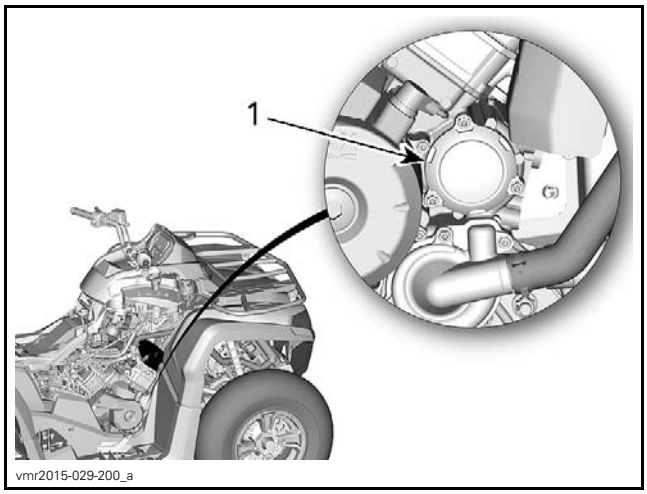

1. *Oil filter cover*

Removing the Engine Oil Filter

1. Clean oil filter area.
2. Remove oil filter cover.
3. Remove oil filter.

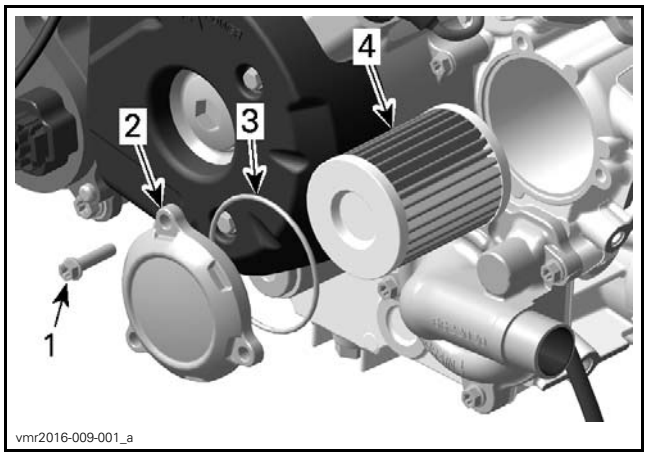

1. *Oil filter screw*
2. *Oil filter cover*
3. *O-ring*
4. *Oil filter*

Installing the Engine Oil Filter

1. Check and clean the oil filter inlet and outlet area of dirt and other contaminations.

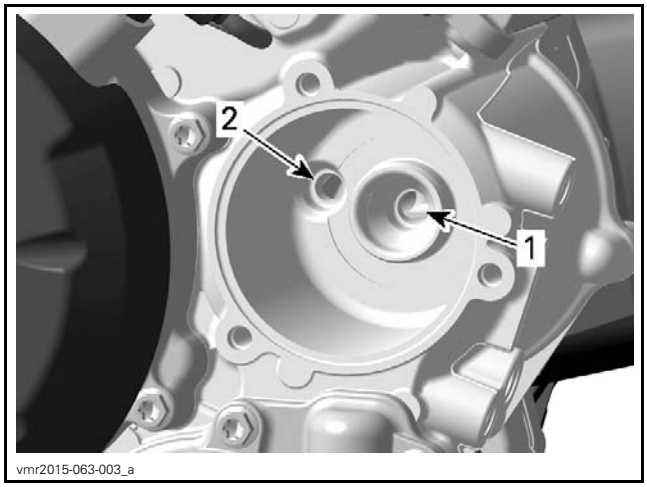

1. Outlet bore to the engine oil providing system
2. Inlet bore from the oil pump to the oil filter

2. Install a NEW O-ring on oil filter cover.
3. Install the new filter into the cover.
4. Apply engine oil on O-ring and on end of filter.

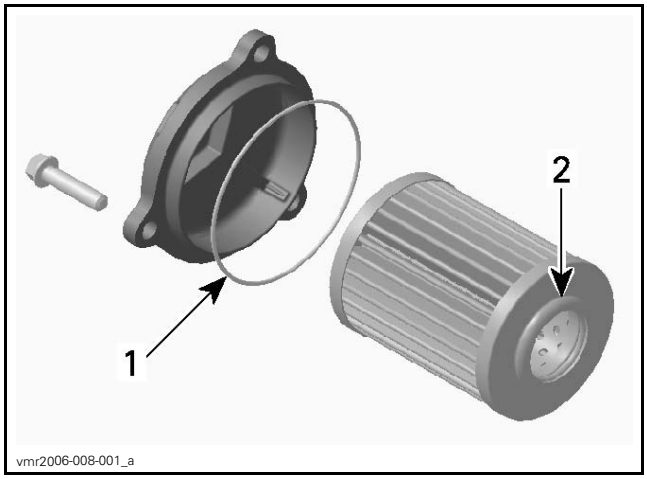

1. O-ring - slightly oil
2. End of filter - slightly oil

5. Install the cover on the engine.

NOTICE **Pay attention to avoid pinching the O-ring during filter and cover installation.**

6. Tighten oil filter cover screws to specification.

TIGHTENING TORQUE	
Oil filter cover screws	10 N•m ± 1 N•m (89 lbf•**in** ± 9 lbf•**in**)

7. Reinstall remaining parts if applicable.
8. Wipe off any oil spillage on engine.

COOLING SYSTEM

Recommended Engine Coolant

XPS RECOMMENDED COOLANT	
Scandinavia	EXTENDED LIFE PRE-MIXED COOLANT (EUR) (P/N 779223)
Other Countries	EXTENDED LIFE PRE-MIXED COOLANT (P/N 779150)
IF THE RECOMMENDED XPS COOLANT IS NOT AVAILABLE	
Use distilled water and antifreeze solution (50% distilled water, 50% antifreeze)	

NOTICE **Always use ethylene-glycol antifreeze containing corrosion inhibitors specifically formulated for internal combustion aluminum engines.**

To prevent antifreeze deterioration, always use the same brand. Never mix different brands or type of antifreeze. Always use the same antifreeze unless cooling system is completely flushed and refilled.

Do not use tap water, straight antifreeze or straight water in the system. Tap water contains minerals and impurities which build up in the system. During cold weather, straight water causes the system to freeze while straight antifreeze thickens and does not have the same efficiency.

Verifying the Engine Coolant Level

⚠ WARNING

In order to avoid potential burns, check coolant level with engine cold. Do not remove the radiator cap if the engine is hot.

1. Place vehicle on a level surface.
2. Remove gauge support. Refer to *BODY* subsection.

With the vehicle on a level surface, coolant level should be between the MIN. and MAX. marks of the reservoir.

TYPICAL
1. Engine coolant reservoir

NOTE: When checking level at temperature lower than 20°C (68°F), it may be slightly lower than MIN. mark.

3. Add coolant up to MAX. mark if required.
4. Use a funnel to avoid spillage. **Do not overfill.**
5. Properly reinstall and tighten reservoir cap.
6. Reinstall gauge support.

NOTICE **Do not store any objects under the gauge support.**

Checking the Engine Coolant Specific Gravity

1. Remove gauge support. Refer to *BODY* subsection.
2. Remove pressure cap.

⚠ WARNING

To avoid potential burns, do not remove the pressure cap if the engine is hot.

3. Using an antifreeze tester, test coolant strength.

MINIMUM RECOMMENDED COOLANT STRENGTH
-30°C (-22°F)

Inspecting the Engine Cooling System

1. Check general condition of hoses and clamps for tightness.
2. Check the leak indicator hose for oil or coolant.

Leaking coolant indicates a defective rotary seal. Leaking oil indicates a defective oil seal. If either seal is leaking, both seals must be replaced at the same time. Refer to *WATER PUMP SHAFT AND SEALS* in the *COOLING SYSTEM* subsection.

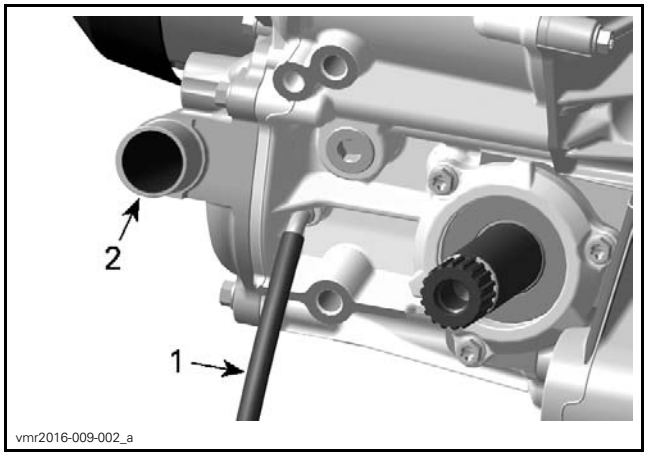

1. Leak indicator hose
2. Water pump

Another leak indicator hole is visible on the PTO side. It provides an indication of the PTO gasket condition. If a liquid leaks from this hole, PTO gasket replacement is necessary.

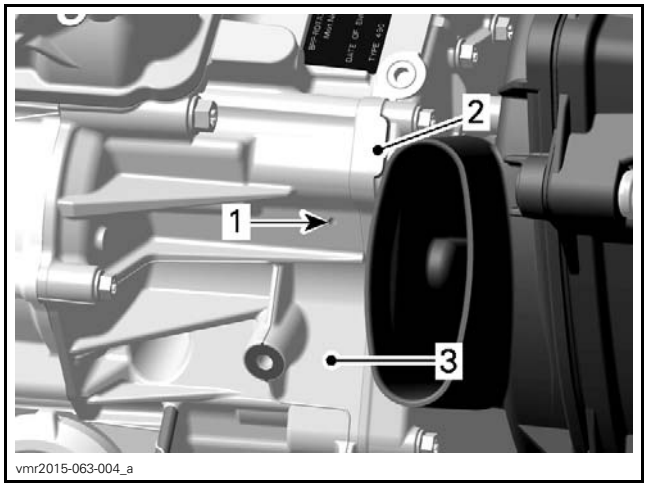

TYPICAL
1. Leak indicator hole
2. PTO cover
3. Crankcase PTO, front side

3. Ensure vent hose on coolant expansion tank is not obstructed.

Testing the Engine Cooling System Pressure Cap

1. Remove gauge support. Refer to *BODY* subsection.
2. Remove pressure cap.

⚠ WARNING

To avoid potential burns, do not remove the pressure cap if the engine is hot.

3. Test the pressure cap using a cooling system tester.
4. Replace the cap if it does not hold the pressure, or if it opens at a relief pressure that is too low or too high.

PRESSURE CAP RELIEF PRESSURE
Approximately 110 kPa (16 PSI)

Testing the Engine Cooling System Leak

1. Remove gauge support. Refer to *BODY* subsection.
2. Remove pressure cap.

⚠ WARNING

To avoid potential burns, do not remove the pressure cap if the engine is hot.

3. Pressurize cooling system as follows.

REQUIRED TOOLS	
TEST CAP (P/N 529 035 991)	
VACUUM/PRESSURE PUMP (P/N 529 021 800)	

COOLING SYSTEM LEAK TEST
110 kPa (16 PSI)

If there is no pressure drop after 10 minutes, there is no leak in the cooling system.

If the pressure drops, check all hoses, radiator, cylinders and engine base for coolant leaks or air bubbles.

Replacing the Engine Coolant

Draining the Engine Cooling System

⚠ CAUTION **Engine coolant can be very hot. Coolant draining should be carried out on a cold engine.**

1. Remove gauge support. Refer to *BODY* subsection.
2. Remove cooling system pressure cap.

vmo2012-012-042_a

TYPICAL
1. Cooling system pressure cap

3. Unscrew coolant drain plug.

NOTE: Coolant drain plug is accessible from underneath RH footrest panel.

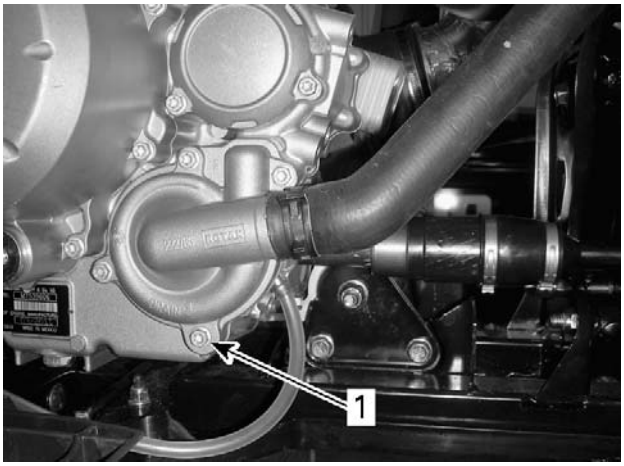

vmr2012-013-010_a

TYPICAL - SOME PARTS REMOVED FOR CLARITY
1. Coolant drain plug

4. Drain cooling system into a suitable container.
5. Disconnect the lower radiator hose and drain the remaining coolant.

NOTE: Take note of the hose clamp position before it is loosened for hose removal.

6. Reinstall coolant drain plug with a **NEW** sealing washer.
7. Tighten coolant drain plug to specification.

TIGHTENING TORQUE	
Coolant drain plug	10 N•m ± 1 N•m (89 lbf•**in** ± 9 lbf•**in**)

8. Fill cooling system with recommended coolant, refer to *FILLING AND BLEEDING THE COOLING SYSTEM* procedure.

Filling and Bleeding the Engine Cooling System

1. Remove cooling system pressure cap.
2. Remove RH and LH side panels. Refer to *BODY* subsection.
3. On LH side of engine, remove outer exhaust heat shield. Refer to *EXHAUST SYSTEM* subsection.

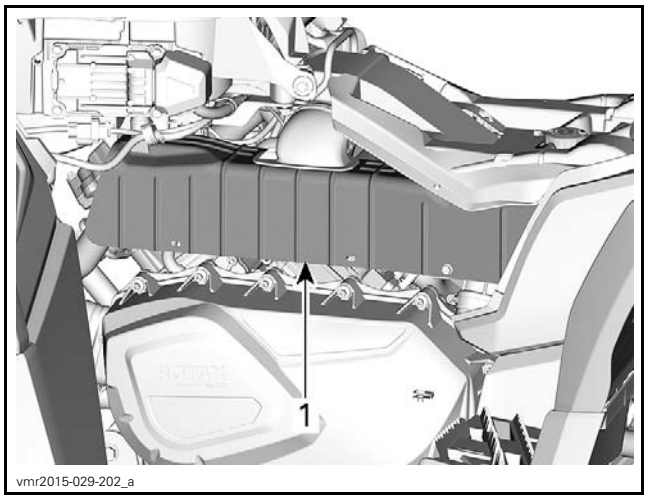

vmr2015-029-202_a

1. Outer exhaust heat shield

4. Remove CVT duct outlet.

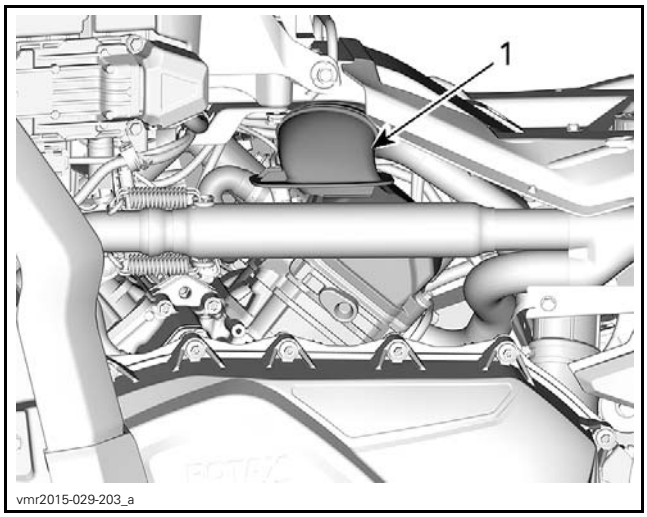

vmr2015-029-203_a

1. CVT duct outlet

5. Unscrew bleed screws on thermostat housing covers of both front and rear cylinders.

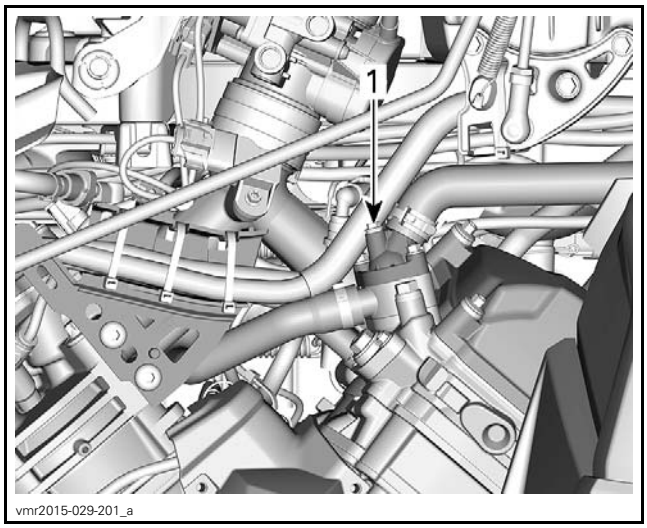

vmr2015-029-201_a

RH SIDE
1. Front cylinder bleed screw

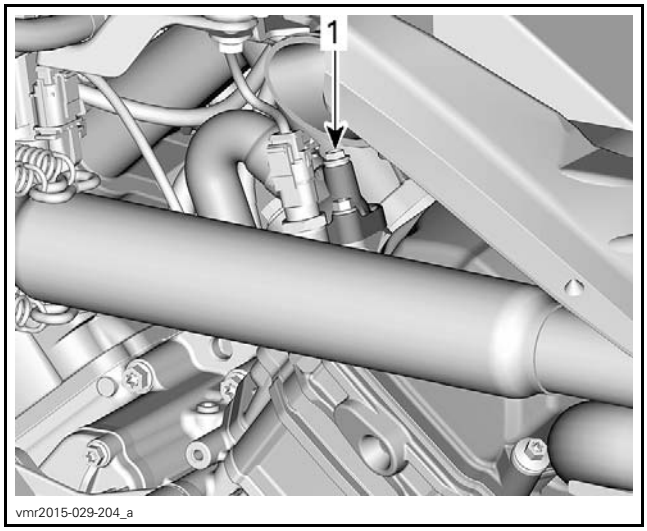

vmr2015-029-204_a

LH SIDE
1. Rear cylinder bleed screw

6. Fill cooling system until coolant comes out of bleed screws.
7. Squeeze the top of the coolant hose between the radiator and coolant pump several times to bleed all air from the highest point of the hose.
8. Install bleed screws using **NEW** gasket rings.
9. Tighten bleed screws.

TIGHTENING TORQUE	
Bleed screws	5.0 N•m ± 0.6 N•m (44 lbf•**in** ± 5 lbf•**in**)

10. Refill coolant tank up to MAX level mark.
11. Install cooling system pressure cap.
12. Run engine at idle until the cooling fan cycles on for a second time.
13. Stop the engine and let it cool down.

⚠ WARNING

Do not remove the pressure cap if the engine is hot.

14. Check coolant level in the coolant tank. Refer to *VERIFYING THE ENGINE COOLANT LEVEL* in this subsection.
15. Add coolant if required.

CYLINDER HEAD

Inspecting and Adjusting the Engine Valve Clearance

NOTE: Check and adjust valve clearance only when engine is cold.

1. Remove valve covers, refer to *TOP END* subsection.
2. Before checking or adjusting the valve clearance, turn crankshaft clockwise to TDC ignition of the respective cylinder, refer to *CAMSHAFT TIMING GEAR* in the *TIMING CHAIN* subsection.

NOTICE **Crankshaft must be turned clockwise only to avoid loosening the magneto retaining bolt.**

3. Using a feeler gauge, check the valve clearance.

VALVE CLEARANCE	
EXHAUST	0.11 mm to 0.19 mm (.0043 in to .0075 in)
INTAKE	0.06 mm to 0.14 mm (.0024 in to .0055 in)

If the valve clearance is out of specification, adjust valves as follows.

NOTE: Use the center value of exhaust/intake specification to ensure a proper valve adjustment.

4. Hold the adjustment screw at the proper position and torque the locking nut.

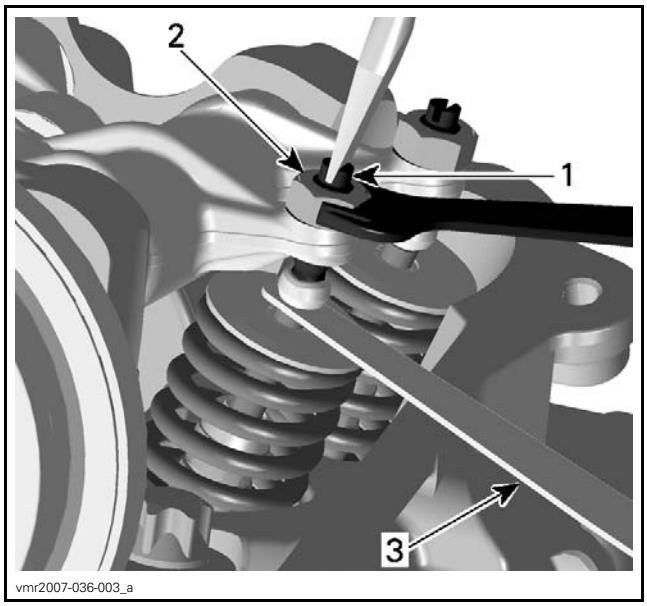

1. Adjustment screw
2. Locking nut
3. Feeler gauge

5. Repeat the procedure for each valve.
6. Before installing valve covers, recheck valve clearance.

GEARBOX

Recommended Gearbox Oil (Except 450 Engines)

XPS RECOMMENDED GEARBOX OIL	
Scandinavia	75W140 SYNTHETIC GEAR OIL (EUR) (P/N 779215)
Other Countries	75W140 SYNTHETIC GEAR OIL (P/N 779160)
IF THE RECOMMENDED XPS GEARBOX OIL IS NOT AVAILABLE	
Use a 75W140 gearbox oil that meets the API GL-5 specification	

Verifying the Gearbox Oil Level

NOTE: Prior checking the gearbox oil level, ensure vehicle is on a level surface.

1. To access gearbox oil level plug, refer to *BODY* subsection and remove the following parts:
   - Seat
   - Console
   - RH side panel and extension(s)
   - RH footrest panel.

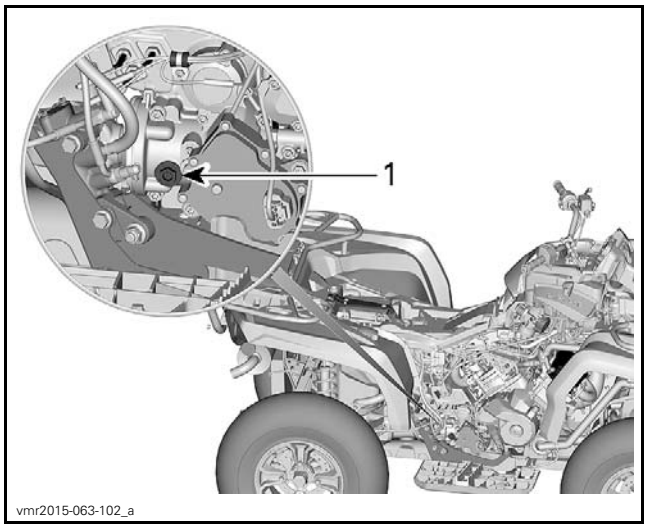

TYPICAL
1. Oil level plug

2. Remove the gearbox oil level plug.

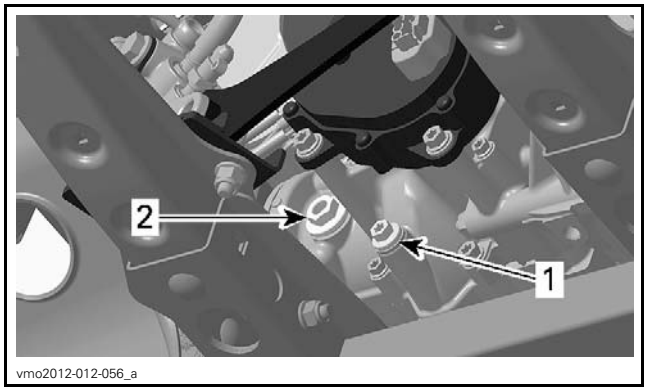

TYPICAL
1. Drain plug
2. Oil level plug

3. Check oil level.

The oil should be level with the bottom of the oil level hole.

NOTICE **Operating the gearbox with an improper oil level may severely damage gearbox.**

4. Install the oil level plug with its O-ring. Tighten plug as per table.

TIGHTENING TORQUE	
Oil level plug	5 N•m ± 0.6 N•m (44 lbf•**in** ± 5 lbf•**in**)

Replacing the Gearbox Oil

Draining the Gearbox Oil

1. Start engine and operate vehicle to warm-up the gearbox oil.

NOTE: Running engine at idle is not sufficient, vehicle transmission must be operated.

2. Position vehicle on a level surface.
3. Place a drain pan under the gearbox drain plug area.
4. Clean drain plug area.
5. Remove magnetic drain plug and sealing washer. Discard sealing washer.

⚠ WARNING

The gearbox oil can be very hot.

6. Remove oil level plug and its O-ring.

NOTE: Allow oil to completely flow out of gearbox.

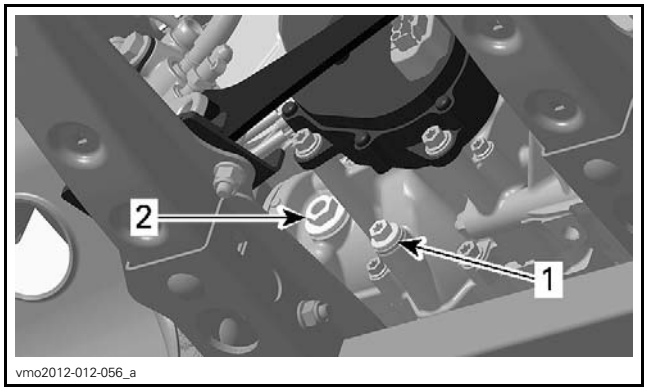

TYPICAL
1. Magnetic drain plug
2. Oil level plug

7. Clean magnetic drain plug and pay attention to any debris present on drain plug.

NOTE: Presence of excessive debris provides an indication of a gearbox problem.

8. Reinstall magnetic drain plug with a NEW sealing washer.

TIGHTENING TORQUE	
Magnetic drain plug	20 N•m ± 2 N•m (15 lbf•ft ± 1 lbf•ft)

9. Dispose gearbox oil as per your local environmental regulations.

Filling the Gearbox Oil

1. Fill the gearbox through the oil level hole until the oil reaches the bottom of the oil level hole.
2. Install the oil level plug with its O-ring.

TIGHTENING TORQUE	
Oil level plug	5 N•m ± 0.6 N•m (44 lbf•**in** ± 5 lbf•**in**)

Inspecting the Gearbox Input and Output Shafts Oil Seals

Remove driven pulley. Refer to *CONTINUOUSLY VARIABLE TRANSMISSION (CVT)* subsection.

Visually inspect gearbox oil seals for leaks. Replace if required.

Cleaning the Vehicle Speed Sensor (VSS)

Remove the VSS. Refer to *GEARBOX AND 4X4 COUPLING UNIT* subsection.

Remove all metal particles and oil from the VSS magnet.

NOTE: A dirty VSS will cause erratic speedometer readings.

CONTINUOUSLY VARIABLE TRANSMISSION (CVT)

Cleaning the CVT Air Inlet/Outlet

1. Remove CVT cover, refer to *CONTINUOUSLY VARIABLE TRANSMISSION (CVT)* subsection.
2. Inspect and clean the air inlet and outlet openings from inside the CVT cover.
3. Inspect and clean the air outlet duct connected to the exhaust system heat shield under the seat.

NOTE: If a lot of debris or grime are found in the CVT system, it may be necessary to remove the ducts and thoroughly clean them.

4. Reinstall CVT cover.

Cleaning the CVT Air Filter

Removing the CVT Air Filter

1. Remove gauge support, refer to the *BODY* subsection.
2. Remove air filter from CVT air inlet by stretching its sides.

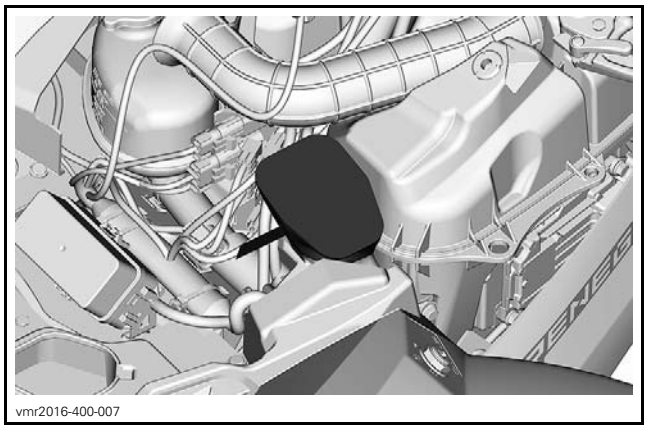
vmr2016-400-007

Cleaning the CVT Air Filter

1. Remove CVT air filter.
2. Inspect filter and replace if damaged.
3. Gently clean filter using a solution of soft soap and tap water, then rinse thoroughly.
4. Dry filter completely.
5. Clean inside the CVT air inlet duct.

Installation the CVT Air Filter

The installation is the reverse of the removal procedure.

Inspecting the Drive Belt

1. Inspect belt for cracks, fraying or abnormal wear. Replace if necessary.
2. Check drive belt width at cord level. Replace if it is out of specification.

DRIVE BELT WIDTH	
SERVICE LIMIT	30 mm (1.181 in)

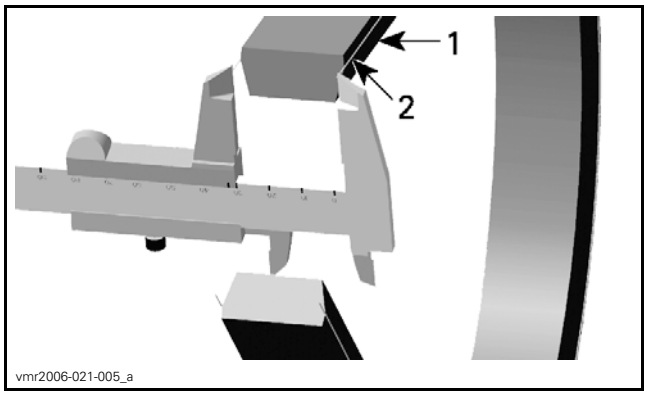

vmr2006-021-005_a

1. Drive belt
2. Cord in drive belt

Drive Pulley, Driven Pulley and One-Way Bearing Maintenance

Refer to *CONTINUOUSLY VARIABLE TRANSMISSION (CVT)* subsection.

FUEL SYSTEM

Inspecting and Cleaning the Throttle Body

1. Remove the air intake housing, refer to *AIR INTAKE SYSTEM* subsection.
2. Visually inspect throttle plate and throttle body venturi for cleanliness.
3. Clean inside throttle body if necessary. Refer to *ELECTRONIC FUEL INJECTION (EFI)* subsection.

Lubricating the Throttle Cable

The throttle cable must be lubricated with a silicone based lubricant.

⚠ WARNING

Always use a silicone-based lubricant. Using another lubricant (like a water-based lubricant) could cause the throttle lever/cable to become sticky and stiff.

Open the throttle lever housing.

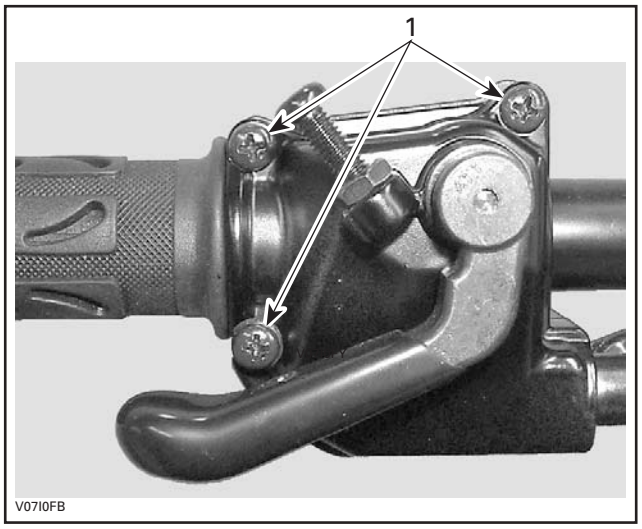

1. Remove these screws

Separate the housing.

Slide rubber protector back to expose throttle cable adjuster.

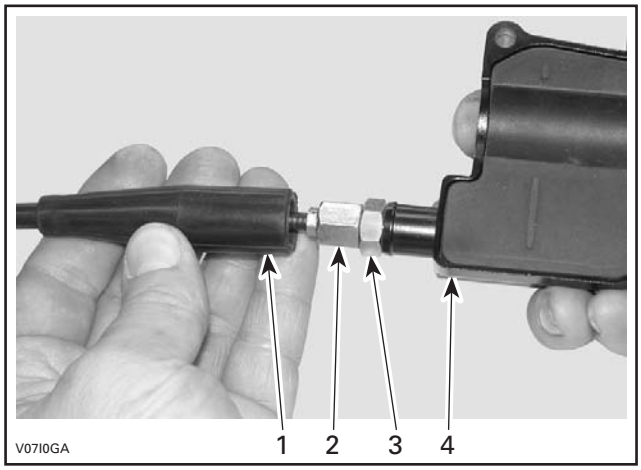

1. Cable protector
2. Throttle cable adjuster
3. Lock nut
4. Throttle lever housing

Screw in the throttle cable adjuster.

Remove inner housing protector.

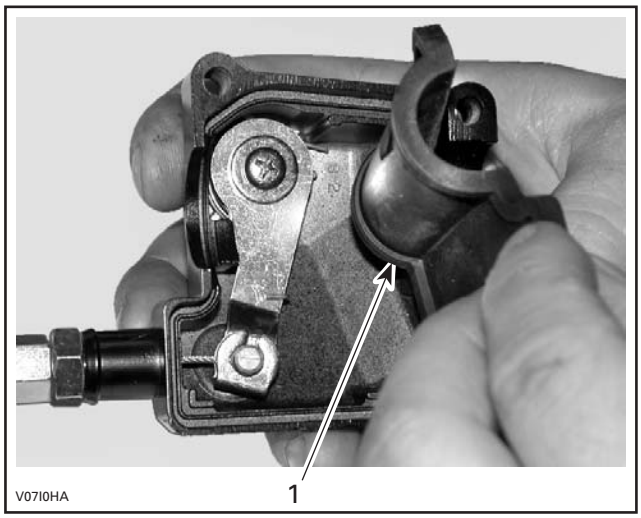

1. Inner housing protector

Remove the cable from the throttle lever housing.

NOTE: Slide cable in clip slot and remove the end of cable from clip.

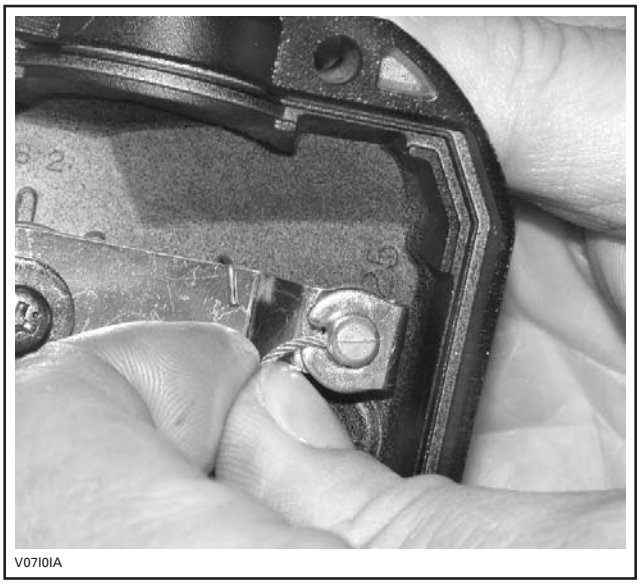
V07I0IA

Remove the throttle body side cover.

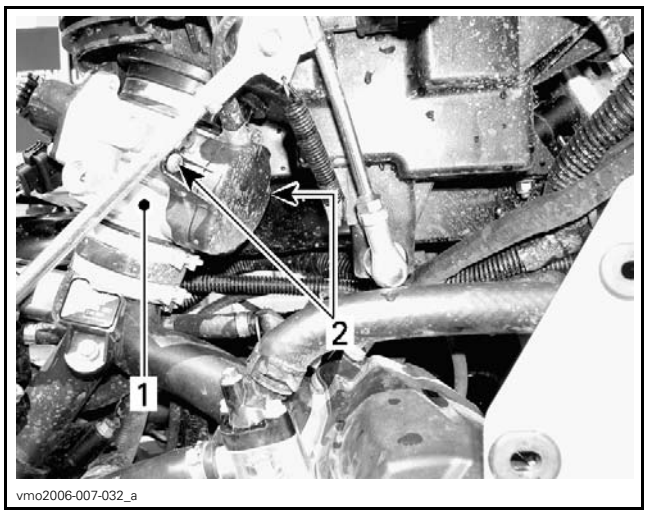

vmo2006-007-032_a

1. *Throttle body*
2. *Side cover screws*

Insert the needle of the lubricant can in the end of throttle cable adjuster.

V07I0JA

TYPICAL

NOTE: Place a rag around the throttle cable adjuster to prevent the lubricant from splashing.

Add lubricant until it runs out at throttle body end of the throttle cable.

Reinstall and adjust the cable. Refer to *ELECTRONIC FUEL INJECTION* subsection.

Replacing the Fuel Tank Vent Breather Filter

Ensure breather filter is installed with the flow arrow pointing towards the vent inlet check valve.

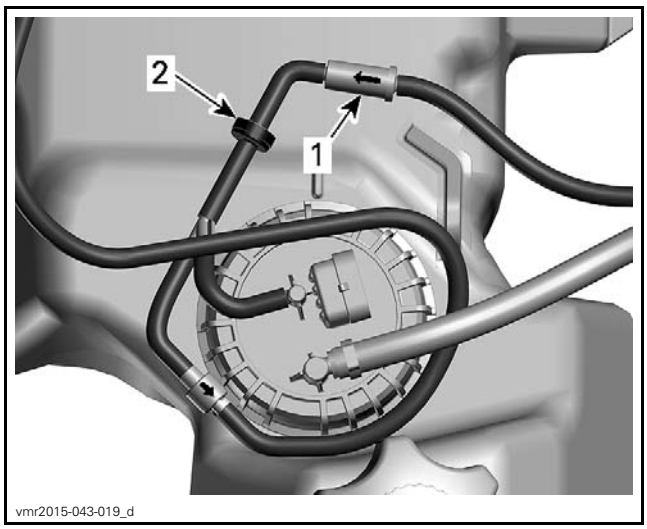

vmr2015-043-019_d

1. *Vent breather filter*
2. *Vent inlet check valve*

Inspecting the Fuel System

1. Visually inspect fuel tank for cracks, wear marks, signs of leakage or any other damages.
2. Visually inspect fuel system hoses for proper rooting, cracking, wear marks, signs of leakage or any other damages.

3. Carry out a *FUEL TANK LEAK TEST*, refer to *FUEL TANK AND FUEL PUMP* subsection.

⚠ WARNING

All fuel system leaks must be repaired. Damaged, worn or leaking fuel system components should be replaced to ensure fuel system tightness.

Testing the Fuel Pump Pressure

Refer to *FUEL TANK AND FUEL PUMP* subsection for procedure.

ELECTRICAL SYSTEM

Inspecting the Battery

Visually inspect battery casing for cracks or other damage. If casing is damaged, replace battery and thoroughly clean battery rack with water and sodium bicarbonate (baking soda).

Inspect battery posts condition and battery retainer plate.

For battery testing, refer to *CHARGING SYSTEM* subsection.

Replacing the Spark Plug

Spark Plug Access

For access to the LH spark plug, remove the LH inner fender panel.

For access to the RH spark plug, remove the RH side panel and extension(s).

Removing the Spark Plug

1. Remove spark plug cable from spark plug.
2. Clean the spark plug area using pressurized air.
3. Remove spark plug.

Installing the Spark Plug

Prior to installation, ensure that contact surfaces of the cylinder head and spark plug are free of grime.

1. Using a wire feeler gauge, set electrode gap as specified in *TECHNICAL SPECIFICATIONS*.
2. Apply lubricant over the spark plug threads to prevent possible seizure.

SERVICE PRODUCT
LOCTITE 767 (ANTISEIZE LUBRICANT) (P/N 293 800 070)

NOTICE **Do not apply antiseize lubricant on the first 2 spark plug threads.**

3. Hand screw spark plug into cylinder head, then tighten to specification using a torque wrench and an appropriate socket.

450, 570 and 650 Engines

TIGHTENING TORQUE	
Spark plug	20 N•m ± 2 N•m (15 lbf•ft ± 1 lbf•ft)

850 and 1000R Engines

TIGHTENING TORQUE	
Spark plug	11 N•m ± 1 N•m (97 lbf•**in** ± 9 lbf•**in**)

DRIVE SYSTEM

Verifying the Front Differential Oil Level

1. Clean filler plug prior to checking oil level.

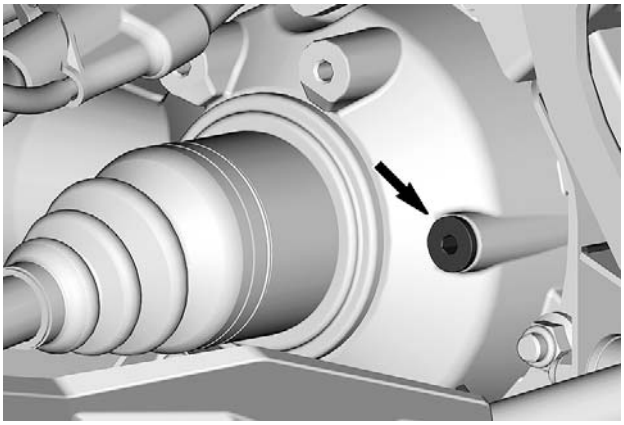

RH SIDE OF VEHICLE

2. With vehicle on a level surface, check oil level by removing filler plug. Oil level must reach the lower edge.
3. Reinstall filler plug with a **NEW** sealing washer.

TIGHTENING TORQUE	
Filler plug	22.5 N•m ± 2.5 N•m (17 lbf•ft ± 2 lbf•ft)

Replacing the Front Differential Oil

1. Place vehicle on a level surface. Set transmission in park position.
2. Clean filler and drain plug areas.
3. Place a drain pan under the front differential.
4. Remove filler plug.
5. Remove drain plug.

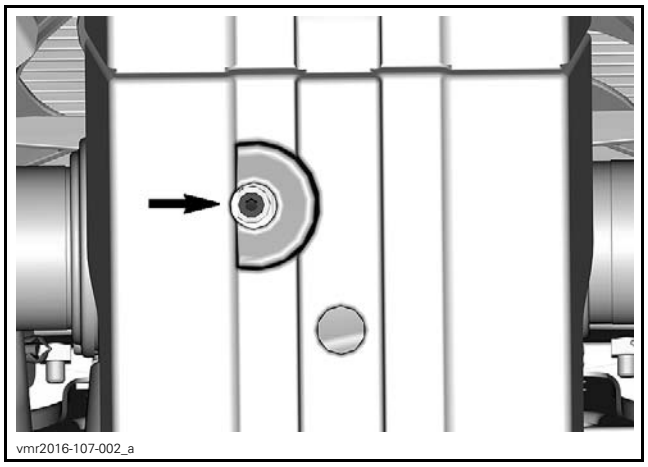

BOTTOM VIEW OF VEHICLE

NOTE: Allow enough time for oil to flow out.

6. Install and tighten drain plug to specification.

TIGHTENING TORQUE	
Drain plug	7.5 N•m ± 0.5 N•m (66 lbf•**in** ± 4 lbf•**in**)

7. Refill front differential with recommended oil.

XPS RECOMMENDED DIFFERENTIAL OIL	
Scandinavia	75W90 SYNTHETIC GEAR OIL (EUR) (P/N 779212)
Other Countries	75W90 SYNTHETIC GEAR OIL (P/N 779158)
IF THE RECOMMENDED XPS DIFFERENTIAL OIL IS NOT AVAILABLE	
Use a 75W90 gearbox oil that meets the API GL-5 specification	

8. Reinstall filler plug with a NEW sealing washer.
9. Tighten filler plug to specification.

TIGHTENING TORQUE	
Filler plug	22.5 N•m ± 2.5 N•m (17 lbf•ft ± 2 lbf•ft)

Inspecting the Front Differential Oil Seals

Visually inspect oil seals for leak. Replace if required.

Verifying the Rear Final Drive Oil Level

1. Ensure vehicle is on a level surface.
2. Clean filler plug area.
3. Remove filler plug.

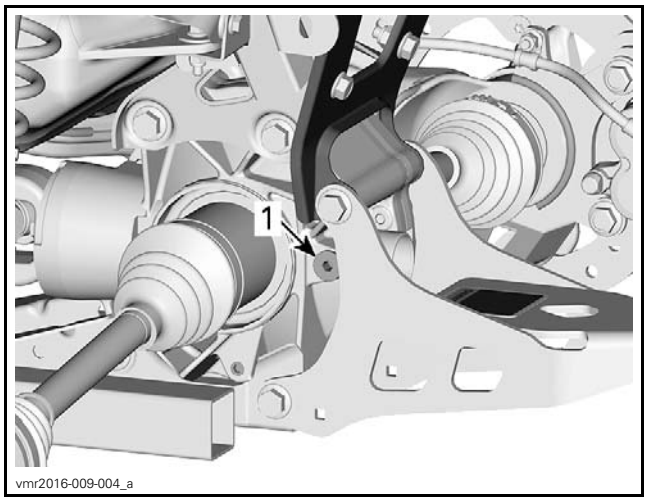

LH REAR SIDE OF VEHICLE
1. Filler plug

4. Verify the oil level by inserting a wire with a 90° bend through the oil filler hole.
5. Oil level must be within the following specification from the bottom of oil filler hole.

OIL LEVEL
20 mm ± 5 mm (9/16 in ± 3/16 in)

6. Reinstall filler plug with a NEW sealing washer.

TIGHTENING TORQUE	
Filler plug	22.5 N•m ± 2.5 N•m (17 lbf•ft ± 2 lbf•ft)

Replacing the Rear Final Drive Oil

1. Ensure vehicle is on a level surface.
2. Clean filler and drain plug areas.
3. Place a drain pan under rear final drive.
4. Unscrew filler plug.
5. Remove drain plug.

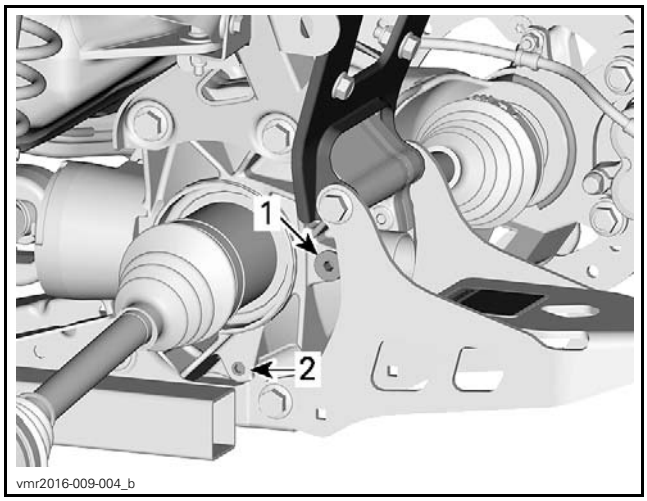

LH REAR SIDE OF VEHICLE
1. *Filler plug*
2. *Drain plug*

NOTE: Allow enough time for oil to flow out.

6. Install drain plug.

TIGHTENING TORQUE	
Drain plug	7.5 N•m ± 0.5 N•m (66 lbf•**in** ± 4 lbf•**in**)

7. Refill the rear final drive.

XPS RECOMMENDED FINAL DRIVE OIL	
Scandinavia	75W140 SYNTHETIC GEAR OIL (EUR) (P/N 779215)
Other Countries	75W140 SYNTHETIC GEAR OIL (P/N 779160)
IF THE RECOMMENDED XPS FINAL DRIVE OIL IS NOT AVAILABLE	
Use a 75W140 gearbox oil that meets the API GL-5 specification	

8. Reinstall filler plug with a NEW sealing washer.

TIGHTENING TORQUE	
Filler plug	22.5 N•m ± 2.5 N•m (17 lbf•ft ± 2 lbf•ft)

Inspecting the Rear Final Drive Oil Seals

Visually inspect final drive oil seals for leaks. Replace if required.

Inspecting Drive Shaft Boot and Protector

1. Visually inspect each drive shaft boot for grease leak, cracks or opening.
2. Check if the drive shaft boot protectors are fixed firmly, not torn or otherwise damaged.
3. Replace if necessary.

Inspecting Drive Shaft Joint

Turn and move drive shaft back and forth to detect excessive play.

Inspecting Rear Propeller Shaft U-Joint

Check yoke U-joints for wear, backlash or axial play. Replace if necessary.

Lubricating Rear Propeller Shaft U-Joint

RECOMMENDED PROPELLER SHAFT U-JOINT GREASE
PROPELLER SHAFT GREASE (P/N 293 550 063)
IF THE RECOMMENDED PROPELLER SHAFT U-JOINT GREASE IS NOT AVAILABLE
Hi-temp bearing grease NLGI-2 or an equivalent

WHEELS AND TIRES

Checking the Wheel Lug Nut Torque

Tighten wheel lug nuts to the specified torque using the illustrated sequence.

TIGHTENING TORQUE	
Wheel lug nuts	80 N•m ± 5 N•m (59 lbf•ft ± 4 lbf•ft)

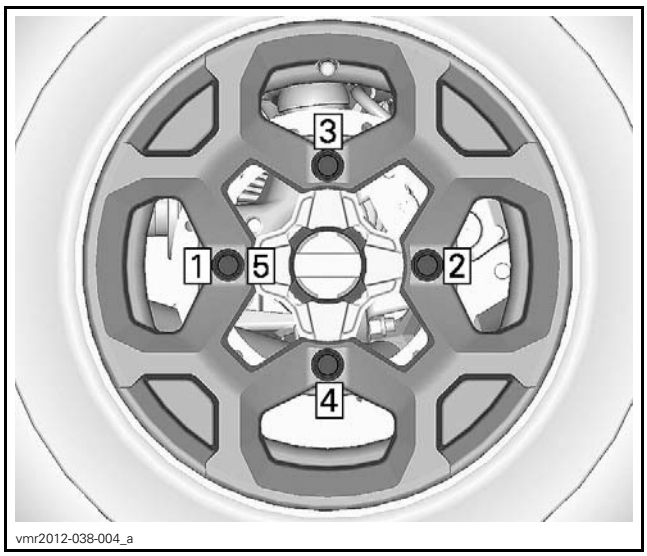

TIGHTENING SEQUENCE

Wheel Beadlocks (On applicable models)

Tighten beadlock screws as per specification and following sequence.

TIGHTENING TORQUE	
Beadlock screws	11 N•m ± 1 N•m (97 lbf•**in** ± 9 lbf•**in**)

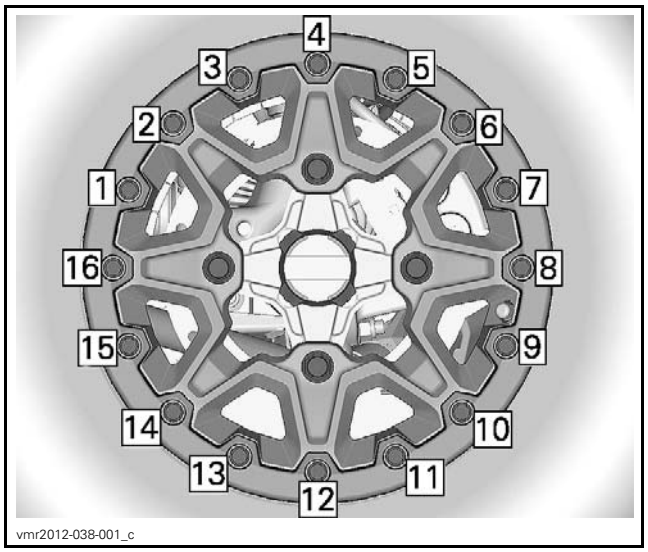

TIGHTENING SEQUENCE

Inspecting Wheel Bearing

1. Safely lift and support the vehicle.
2. Hold wheel by the top and the bottom and try to move it by pulling and push alternately with both hands. Check for any play.
3. If there is any looseness detected, replace the wheel bearing. refer to *STEERING SYSTEM* subsection.

NOTE: To properly locate play during this inspection, be sure to check other components for wear or looseness (ball joints, suspension pivots, etc). If necessary repair or replace all defective parts before checking the wheel bearing condition. Be careful not to misinterpret a loose ball joint as a loose wheel bearing.

STEERING SYSTEM

Inspecting the Steering System

Steering Column

Turn and move steering column back and forth to detect any abnormal play.

If abnormal play is detected, inspect upper and lower steering column half bushings. Replace halve bushings and O-rings as necessary, refer to *STEERING SYSTEM* subsection.

If steering column feels stiff, refer to *STEERING COLUMN HALF BUSHING CLEANING AND LUBRICATION* in this subsection.

Tie-Rod End

Check tie-rod end ball joint for:
- Damage
- Pitting
- Abnormal play.

Replace if necessary.

Cleaning and Lubricating Steering Column Half Bushing

Clean, inspect and lubricate upper and lower steering column half bushings and O-rings. Refer to *STEERING SYSTEM* subsection.

SUSPENSION

Inspecting Shock Absorber

Check shock absorber for any leaks, replace if necessary.

HPG Shock Absorber (without Remote Reservoir)

Check shock absorber for abnormal play:
- Front to back
- Up and down.

If any play is detected, replace shock absorber bushings. Refer to *REAR SUSPENSION* subsection.

Lubricating Front Suspension Arm

Lubricate suspension arm at grease fittings.

SERVICE PRODUCT	
Scandinavia	SYNTHETIC SUSPENSION GREASE (EUR) (P/N 779226)
Other Countries	SYNTHETIC SUSPENSION GREASE (P/N 779163)

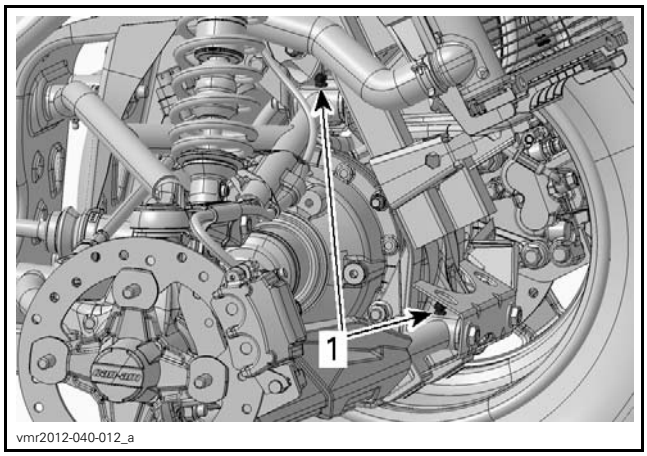

TYPICAL
1. Grease fittings

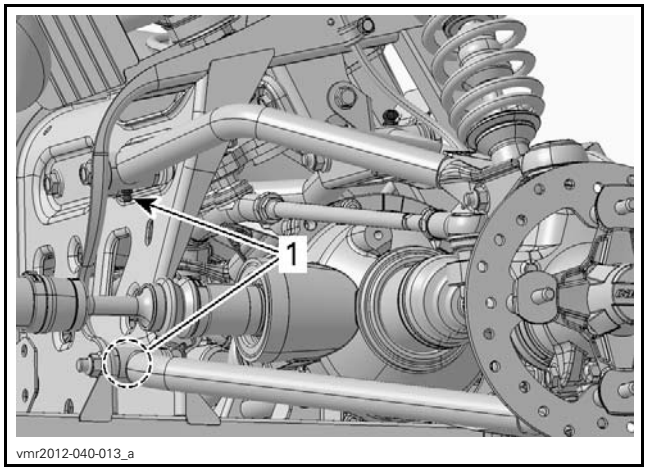

TYPICAL
1. Grease fittings

Inspecting Front Suspension Arm

1. Check suspension arm for:
   – Cracks
   – Pitting
   – Bending
   – Distortion.
2. Check suspension arm for abnormal play:
   – Side to side
   – Up and down.
3. If any play is detected, inspect:
   – Wear plates
   – Bushings
   – Sleeves.
4. Check ball joint for:
   – Damage
   – Pitting
   – Play.
5. Check ball joint bellows for:
   – Damage
   – Cracks.

Inspecting Rear Suspension Trailing Arm

1. Check trailing arms for:
   – Cracks
   – Pitting
   – Bending
   – Distortion.
2. Check trailing arm for abnormal play:
   – Side to side
   – Up and down.
3. If any play is detected, inspect:
   – Spacers
   – Bearings
   – Inner spacers.

Inspecting and Lubricating Rear Stabilizer Bar Bushing

Rear Stabilizer Bar Bushing Inspection

Inspect bushings for:
– Cracks
– Damage
– Abnormal wear.

Lubricating Rear Stabilizer Bar Bushing

Lubricate bushings at grease fittings.

SERVICE PRODUCT	
Scandinavia	SYNTHETIC SUSPENSION GREASE (EUR) (P/N 779226)
Other Countries	SYNTHETIC SUSPENSION GREASE (P/N 779163)

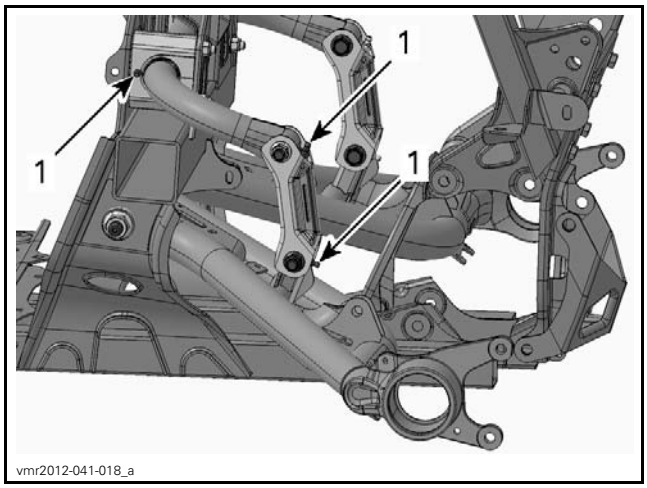

TYPICAL
1. Grease fittings

BRAKES

Recommended Brake Fluid

Always use brake fluid meeting the specification DOT 4 only.

SERVICE PRODUCT	
Scandinavia	BRAKE FLUID DOT 4 (EUR) (P/N 779207)
Other Countries	BRAKE FLUID DOT 4 (P/N 779151)

⚠ WARNING

To avoid damage to the braking system, do not use other brake fluid types.

Verifying the Brake Fluid Reservoir Level

With vehicle on a level surface, check brake fluid in reservoirs for proper level.

NOTE: A low level may indicate leaks or worn brake pads.

Front Brake Reservoir

Turn steering in the straight-ahead position to ensure reservoir is level.

Check the brake fluid level, the reservoir is full when the fluid reaches of the top of window.

Visually inspect lever boot condition.

Check for cracks, tears, etc. Replace if damaged.

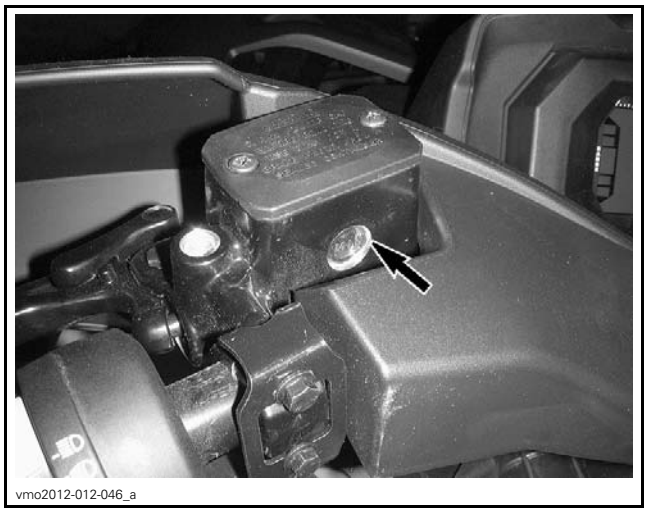

TYPICAL

Rear Brake Reservoir

Remove the seat.

With vehicle on a level surface, liquid should be between MIN. and MAX. level marks of brake pedal fluid reservoir.

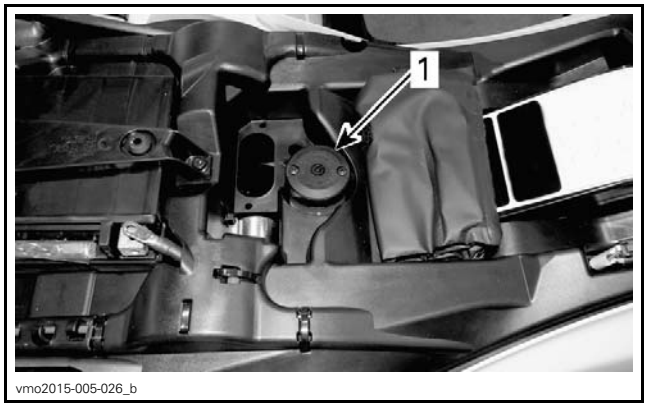

1. Rear brake fluid reservoir

Adding Brake Fluid

Clean filler cap.

⚠ WARNING

Clean filler cap before removing.

Remove screws retaining the reservoir cap.

Remove reservoir cap.

Add fluid as required using a clean funnel. **Do not overfill.**

NOTICE **Brake fluid can damage plastic and painted surface. Wipe off and clean any spillage.**

Reinstall reservoir cap and tighten screws.

NOTE: Ensure filler cap diaphragm is pushed inside the cap before closing the brake fluid reservoir.

Inspecting and Cleaning Brake System

NOTICE Do not clean brake components in petroleum based solvent. Use brake system cleaner only. Soiled brake pads must be replaced with new ones.

To clean parts from the brake system, use the following recommended products or an equivalent.

SERVICE PRODUCT	
United States of America	XPS BRAKES AND PARTS CLEANER (USA) (P/N 219 701 705)
Other countries	XPS BRAKES AND PARTS CLEANER (P/N 219 701 776)

Brake Pads

1. Measure brake pad lining thickness.

BRAKE PAD MINIMUM THICKNESS
1 mm (1/32 in)

NOTE: The brake pad grooves are wear indicators.

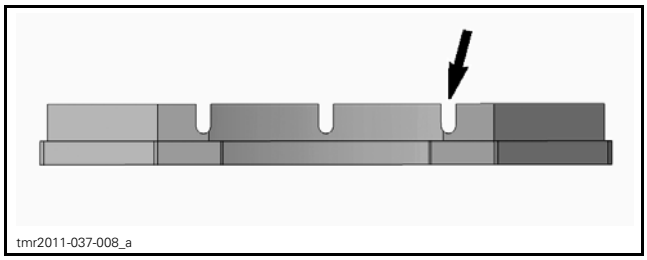

BRAKE PAD GROOVE

NOTICE Brake pads must always be replaced in pairs.

Brake Caliper

1. Remove caliper then check the following components:
   – Check brake pad pin
   – Check caliper boots for cracks
   – Check caliper movement on its support
   – Check pistons movement
   – Check pistons for scratches, rust or other damages.
2. Clean the following components using the recommended product or an equivalent:
   – Brake pads
   – Caliper support and slider
   – Caliper pistons and pin.

NOTE: Do not remove pistons from caliper for cleaning them.

3. Lubricate caliper slider using an appropriate *BRAKE CALIPER SYNTHETIC GREASE*.

Brake Disc

1. Check brake disc as follows:
   – Check disc thickness
   – Check disc surfaces
   – Check disc warpage.

NOTE: Refer to *BRAKE DISC INSPECTION* in *BRAKES* subsection for details.

2. Clean brake disc using the recommended product or an equivalent.

Master Cylinder

1. Check master cylinder as follows:
   – Leaks or damages.
   – Brake fluid level.
   – Check cleanliness of master cylinder rod and boot.
   – Check master cylinder boot for cracks or damage. Replace as necessary.

Hand Lever

Check hand lever as follows:
– Lever pivot bolt cleanliness
– Lever pivot bolt movement.

Brake Pedal

1. Check brake pedal as follows:
   – Brake pedal pivot movement
   – Brake pedal pivot cleanliness.
2. If required, clean then lubricate brake pedal pivot using a recommended grease.

SERVICE PRODUCT	
Scandinavia	SYNTHETIC GREASE (EUR) (P/N 779231)
Other Countries	SYNTHETIC GREASE (P/N 779162)

Brake Hoses

1. Check hoses for leaks, crushed, deformations, cracking or scrapes.

NOTE: Any deformation can restrict the proper flow of fluid and cause braking problems.

Replacing the Brake Fluid

Draining the Brake Fluid

1. Clean and remove reservoir cover with its diaphragm.
2. Connect a clear hose onto bleeder.

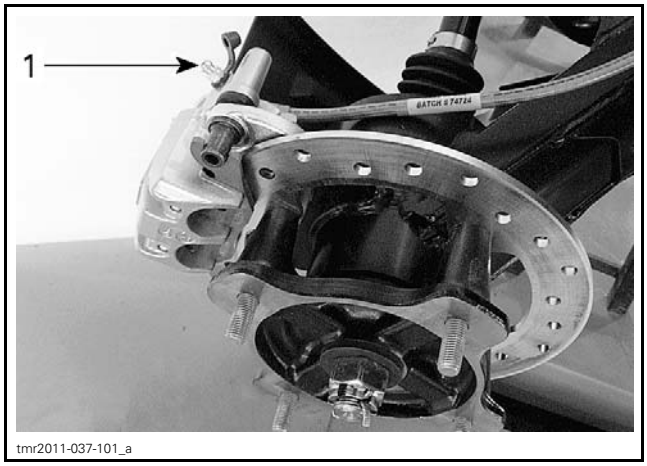

TYPICAL
1. Caliper bleeder

3. Loosen bleeder.
4. Pump brake lever(s) and/or brake pedal until no more fluid flows out.
5. Repeat draining procedure for the other bleeders.

NOTE: To locate all bleeders according to vehicle configuration, refer to *EXPLODED VIEW* and *BRAKE CIRCUIT CONFIGURATIONS*. See *BRAKES* subsection.

Filling the Brake Fluid

1. Add recommended brake fluid to MAX. mark. Do not overfill.

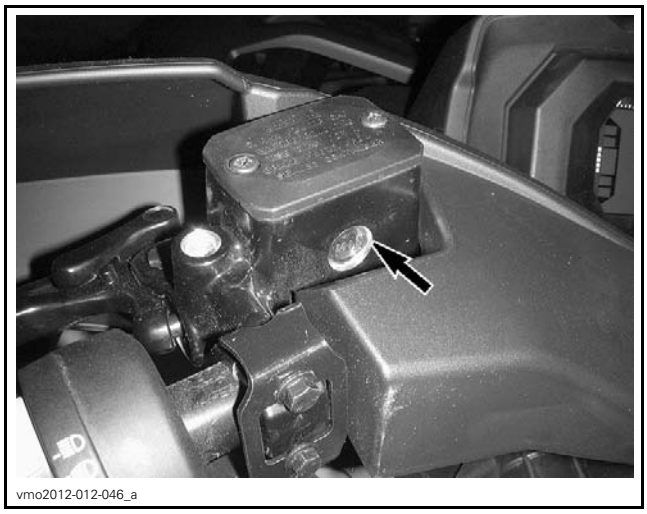

TYPICAL - BRAKE FLUID RESERVOIR

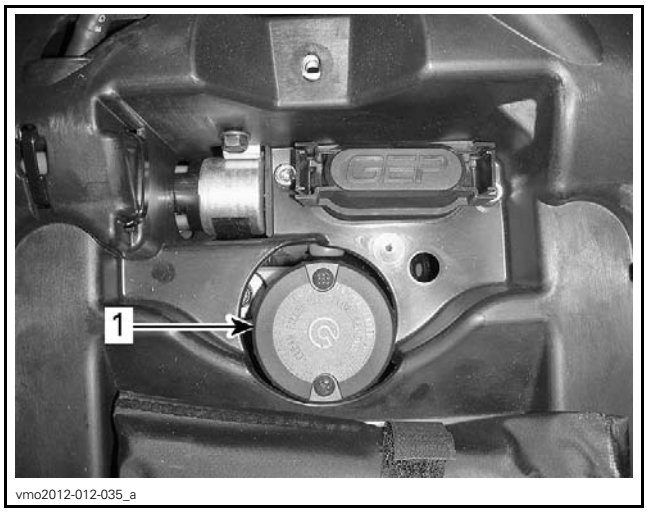

TYPICAL - UNDER THE SEAT
1. Brake fluid reservoir

NOTE: If applicable, ensure filler cap diaphragm is fully retracted before closing the cap.

⚠ WARNING

Use only DOT 4 brake fluid from a sealed container.
Do not use brake fluid from an old or already opened container.

Bleed the brake system. Refer to the *BRAKE* subsection.

BODY

Inspecting Seat Latch Operation

Ensure seat latch functions properly and that seat is properly secured when latched.

FRAME

Inspecting the Frame

Inspect frame for damages such as:
– Cracks
– Dents
– Twisting
– Deformation
– Corrosion
– Loose fasteners.

Pay particular attention to:
– Front and rear frame extensions (body modules)
– Underside of frame
– Suspension attachment points
– Engine attachment points.

Inspecting the Tow Hitch

1. Ensure tow hitch receptacle module is solidly mounted.
2. Inspect hitch for cracks and other damages.
3. Repair or replace if necessary.

STORAGE PROCEDURE

SERVICE PRODUCTS

Description	Part Number	Page
BRP HEAVY DUTY CLEANER	293 110 001	3
CLEANER AND DEGREASER PRO C1	779262	3
FUEL STABILIZER	779171	1
LUB. & ANTI-CORROSIVE	779168	2–3
OIL STORAGE (EXCEPT USA)	779173	1
OIL STORAGE (USA)	779182	1
XPS ATV CLEANING KIT	219 701 713	3
XPS ATV FINISHING SPRAY	219 701 704	3
XPS ATV WASH	219 701 702	2

GENERAL

If the ATV is not used or is to be stored for an extended period of time, more than 4 months, be sure to perform the storage procedures described below.

Where applicable, refer to the appropriate subsections in this manual for details of the required tasks as outlined in these procedures.

PROCEDURES

NOTE: To facilitate the inspection and ensure adequate lubrication of components, it is recommended to clean the entire vehicle. Refer to *CLEANING THE VEHICLE* in this subsection.

FUEL SYSTEM

Fuel System Protection

Pour fuel stabilizer in fuel tank and fill up fuel tank.

Start vehicle to allow for fuel stabilizer to spread through the fuel system.

Follow the manufacturer's instructions for proper use.

RECOMMENDED FUEL SYSTEM PROTECTION
FUEL STABILIZER (P/N 779171)

NOTICE **Fuel stabilizer should be added prior to engine lubrication to ensure fuel system components protection against varnish deposits.**

ENGINE

Engine Internal Lubrication

Engine internal parts must be lubricated to protect them from rust formation during the storage period.

Proceed as follows:

1. Remove side body panels.
2. Remove spark plugs.
3. Spray storage oil into each cylinder (see following table).

NOTE: Use the storage oil as per country availability.

RECOMMENDED PRODUCTS
OIL STORAGE (EXCEPT USA) (P/N 779173)
OIL STORAGE (USA) (P/N 779182)

4. Press start button, 1 or 2 seconds maximum, to lubricate cylinders.
5. Reinstall spark plugs.

NOTE: Do not run engine during storage period.

Engine Air Intake System

Remove parts required for access to engine air inlet hose, refer to *AIR INTAKE SYSTEM* subsection.

Block engine air inlet hose using a rag to prevent intrusion of small animals.

CVT Protection

1. Remove drive belt. Refer to *CONTINUOUSLY VARIABLE TRANSMISSION (CVT)*.
2. Inspect and clean pulleys.

3. Protect pulleys by spraying LUB. & ANTI-CORROSIVE (P/N 779168) on pulley faces.

NOTE: Do not reinstall drive belt.

4. Close CVT cover.
5. Remove CVT outlet from exhaust system heat shield and from CVT outlet hose.

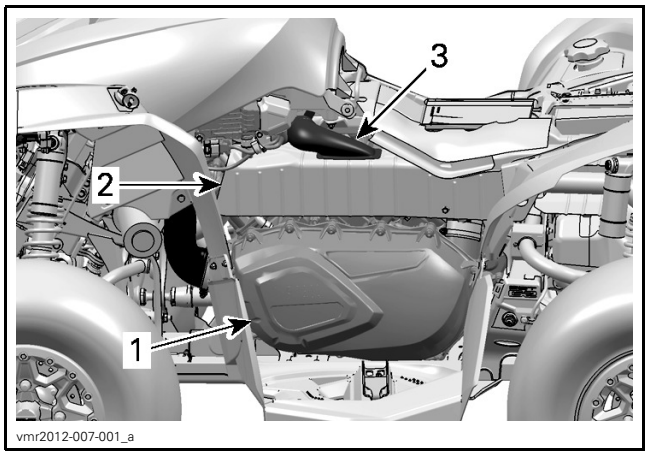

TYPICAL
1. *CVT cover*
2. *Exhaust system heat shield*
3. *CVT outlet*

6. Block CVT outlet hose using a rag.

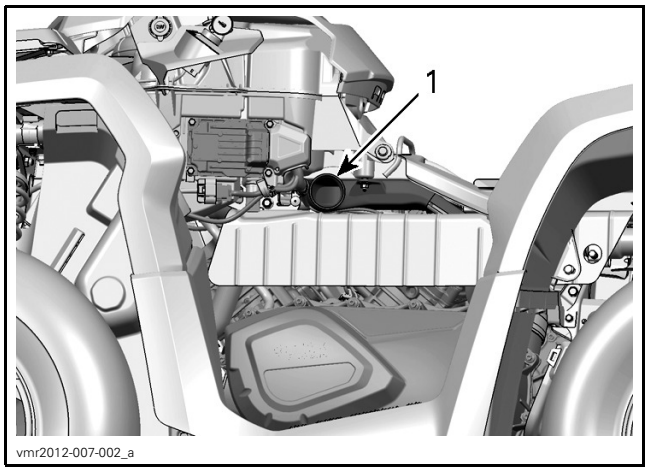

TYPICAL
1. *CVT outlet hose*

Exhaust System

Block muffler outlet using a rag to avoid intrusion of small animals.

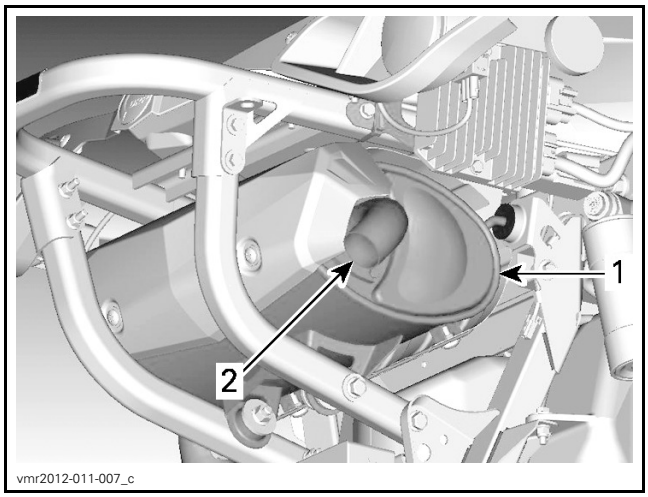

TYPICAL - RENEGADE MODEL ILLUSTRATED
1. *Muffler*
2. *Block with rag here*

ELECTRICAL SYSTEM

Removing the Battery

Remove battery from ATV.

Store and charge battery as per battery manufacturer's recommendations.

DRIVE SYSTEM

Lubricate rear propeller shaft U-joints.

CHASSIS

Lubrication

Lubricate front and rear suspension.

Tire Pressure

Inflate tires to recommended pressure.

Cleaning the Vehicle

Wash and dry the vehicle.

NOTICE **Never use a high pressure washer to clean the vehicle. USE LOW PRESSURE ONLY (such as a garden hose). The high pressure can cause electrical or mechanical damages.**

Remove any dirt or rust.

To clean plastic parts, use only flannel cloths and XPS ATV WASH (P/N 219 701 702) or soapy water.

To clean vinyl parts, use only flannel cloths and a mild non abrasive multipurpose cleaner.

RECOMMENDED PRODUCT FOR PLASTIC PARTS
XPS ATV Wash (P/N 219 701 702)
Soapy water

NOTICE It is necessary to use flannel cloths on plastic parts to avoid damaging surfaces. Never clean plastic parts with strong detergent, degreasing agent, paint thinner, acetone, products containing chlorine, etc. To avoid damaging the glossy finish on Polypropylene body parts, never use:

- Petroleum based cleaning products
- XPS ATV FINISHING SPRAY (P/N 219 701 704)
- XPS ATV CLEANING KIT (P/N 219 701 713).

RECOMMENDED PRODUCT FOR VINYL PARTS
CLEANER AND DEGREASER PRO C1 (P/N 779262)

To clean heavily soiled parts of the vehicle, including metallic parts use the following.

RECOMMENDED PRODUCT FOR HEAVILY SOILED PARTS
BRP HEAVY DUTY CLEANER (P/N 293 110 001)

Inspect the vehicle and repair any damage. Touch up all metal spots where paint has been scratched off.

Spray all metal parts with an appropriate lubricant for rust protection.

RECOMMENDED RUST PROTECTION
LUB. & ANTI-CORROSIVE (P/N 779168)

Vehicle Protection

Protect the vehicle with a cover to prevent dust accumulation during storage.

NOTICE The vehicle has to be stored in a cool and dry place, and covered with an opaque tarpaulin. This will prevent sun rays and grime from affecting plastic components and vehicle finish.

PRESEASON PREPARATION

Proper vehicle preparation is required after a storage period.

Any worn, broken or damaged parts found must be replaced.

Remove rags that were installed for storage: engine air inlet hose, CVT outlet hose and muffler.

Clean drive and driven pulleys to remove storage protective lubricant, then reinstall drive belt. Refer to *CONTINUOUSLY VARIABLE TRANSMISSION (CVT)*.

Remove parts required to allow inspection of entire engine air inlet system. Check for animal nests and other foreign material. Reinstall removed parts.

Drain fuel tank and fill with fresh fuel if a fuel stabilizer was not used for storage.

Reinstall battery. Refer to *CHARGING SYSTEM* subsection.

Inflate tires to the recommended pressure.

Using the *MAINTENANCE SCHEDULE*, perform the items titled EVERY 3 000 km (2,000 mi) OR 100 HOURS OF OPERATION OR 1 YEAR.

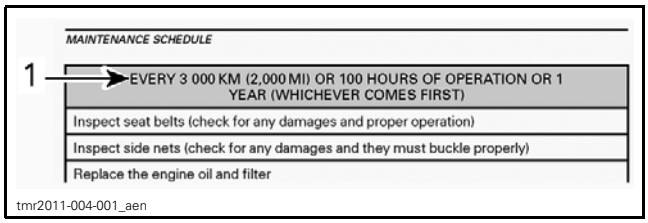

MAINTENANCE SCHEDULE	
1	EVERY 3 000 KM (2,000 MI) OR 100 HOURS OF OPERATION OR 1 YEAR (WHICHEVER COMES FIRST)
	Inspect seat belts (check for any damages and proper operation)
	Inspect side nets (check for any damages and they must buckle properly)
	Replace the engine oil and filter

tmr2011-004-001_aen

TYPICAL
1. Use this schedule

NOTE: If the EVERY 6 000 km (4,000 mi) OR 200 HOURS OF OPERATION OR 2 YEARS maintenance service is due, also perform the related items as per the *MAINTENANCE SCHEDULE*.

Test drive vehicle.

PRESEASON PREPARATION

Proper vehicle preparation is required after a storage period.

Any worn, broken or damaged parts found must be replaced.

Remove rags that were installed for storage: engine air inlet hose, CVT outlet hose and muffler.

Clean drive and driven pulleys to remove storage protective lubricant, then reinstall drive belt. Refer to *CONTINUOUSLY VARIABLE TRANSMISSION (CVT)*.

Remove parts required to allow inspection of entire engine air inlet system. Check for animal nests and other foreign material. Reinstall removed parts.

Drain fuel tank and fill with fresh fuel if a fuel stabilizer was not used for storage.

Reinstall battery. Refer to *CHARGING SYSTEM* subsection.

Inflate tires to the recommended pressure.

Using the *MAINTENANCE SCHEDULE*, perform the items titled EVERY 3 000 km (2,000 mi) OR 100 HOURS OF OPERATION OR 1 YEAR.

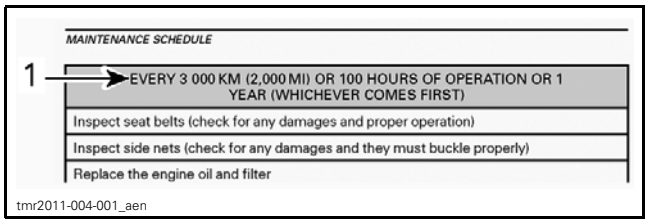

MAINTENANCE SCHEDULE	
1	EVERY 3 000 KM (2,000 MI) OR 100 HOURS OF OPERATION OR 1 YEAR (WHICHEVER COMES FIRST)
	Inspect seat belts (check for any damages and proper operation)
	Inspect side nets (check for any damages and they must buckle properly)
	Replace the engine oil and filter

tmr2011-004-001_aen

TYPICAL
1. Use this schedule

NOTE: If the EVERY 6 000 km (4,000 mi) OR 200 HOURS OF OPERATION OR 2 YEARS maintenance service is due, also perform the related items as per the *MAINTENANCE SCHEDULE*.

Test drive vehicle.

ENGINE REMOVAL AND INSTALLATION

SERVICE TOOLS

Description	Part Number	Page
ENGINE LIFTING TOOL	529 035 898	68

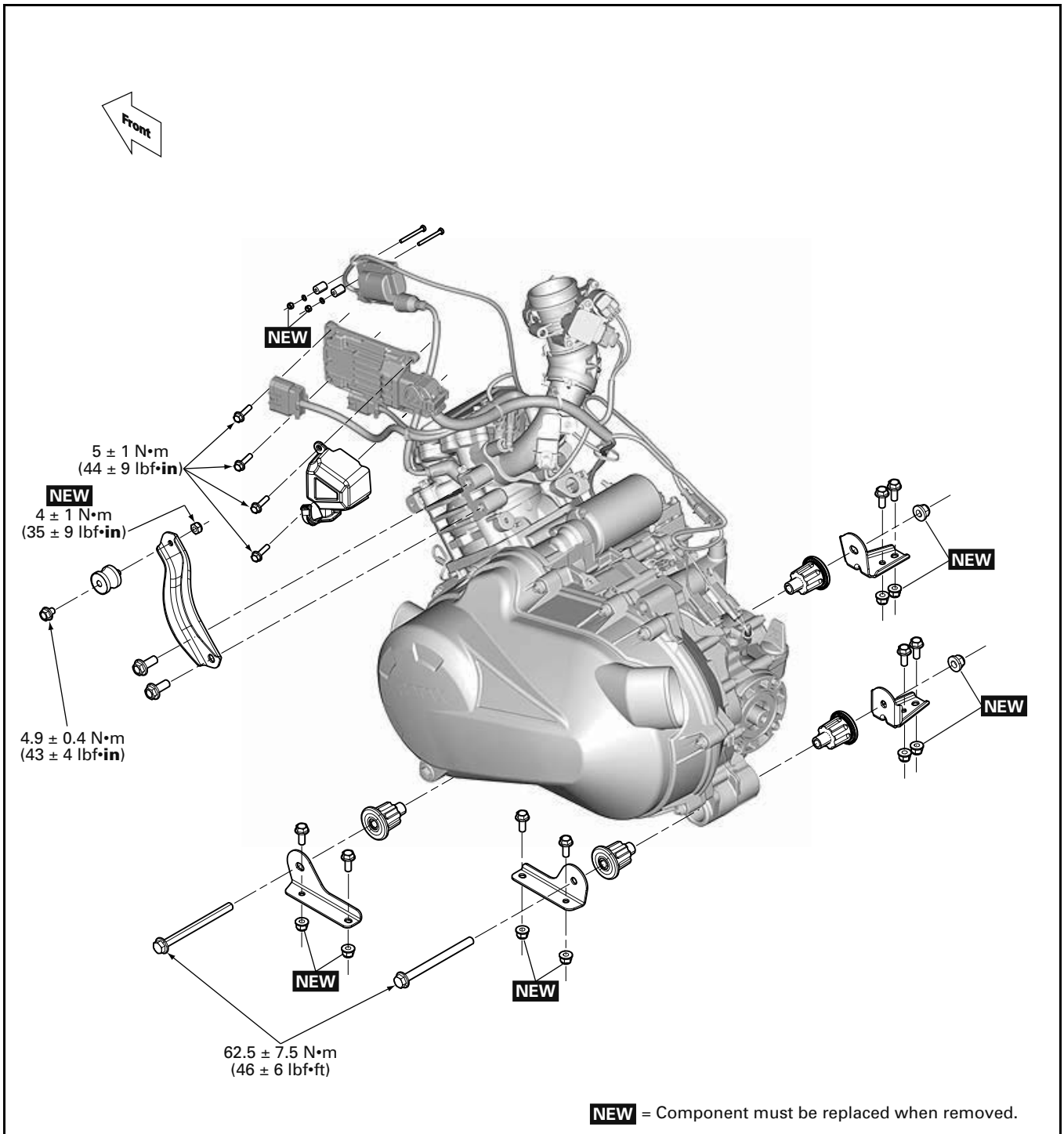

NEW = Component must be replaced when removed.

vmr2015-012-001_a

PROCEDURES

ENGINE REMOVAL

1. Place vehicle on a workstation equipped with an engine-lifting hoist.
2. Set transmission to park "P" and engage parking brake.
3. Carry out procedures in following table.

OPERATIONS	REFERENCES (SUBSECTION)
Disconnect and remove battery from vehicle	*CHARGING SYSTEM*
Release fuel pressure	*FUEL TANK AND FUEL PUMP*
Drain engine coolant	*PERIODIC MAINTENANCE PROCEDURES*
Remove LH and RH inner fender panels	*BODY*
Remove front body module	
Remove LH and RH footrest panels	
Remove LH footrest support	
Remove muffler	*EXHAUST SYSTEM*
Remove exhaust pipe	

4. Secure throttle body towards front of vehicle to make room for engine removal.

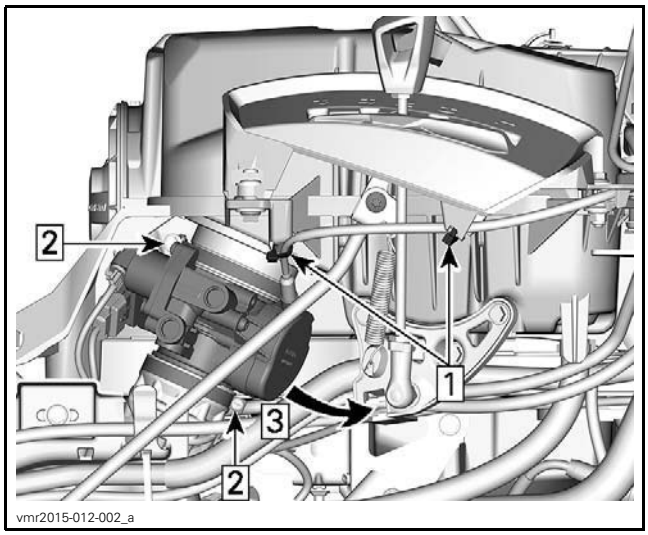

Step 1: Cut locking ties
Step 2: Loosen clamps
Step 3: Move throttle body

5. Carry out procedures in following illustrations.

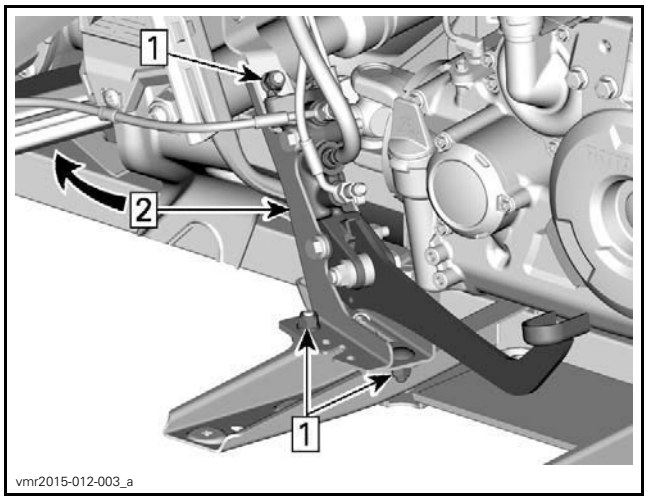

MASTER BRAKE CYLINDER
Step 1: Remove these fasteners
Step 2: Move master cylinder assembly back

1. Master cylinder assembly moved back

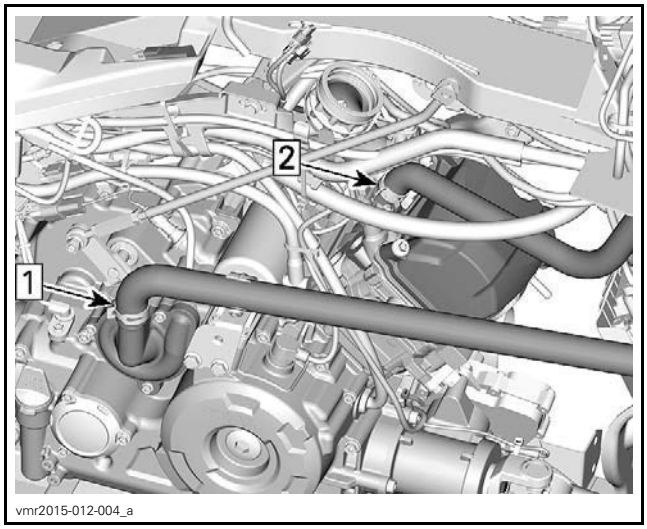

COOLING SYSTEM HOSE DISCONNECT
Step 1: Disconnect radiator hose at water pump
Step 2: Disconnect return hose at thermostat

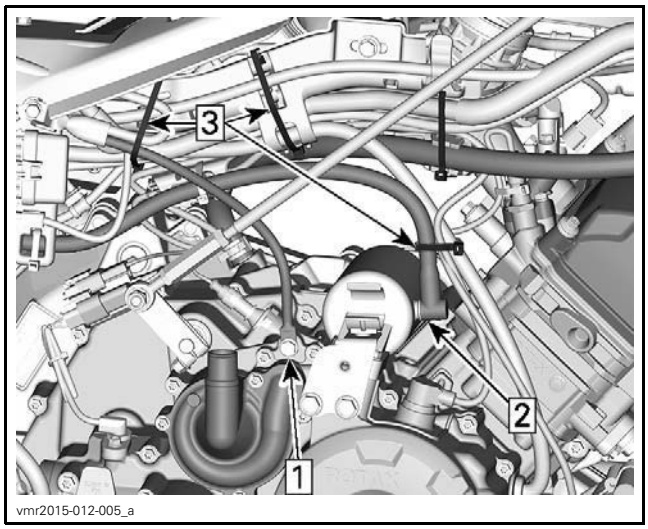

ENGINE GROUND AND STARTER CABLE DISCONNECT
Step 1: Disconnect engine ground wire
Step 2: Disconnect starter power wire
Step 3: Cut locking ties (3)

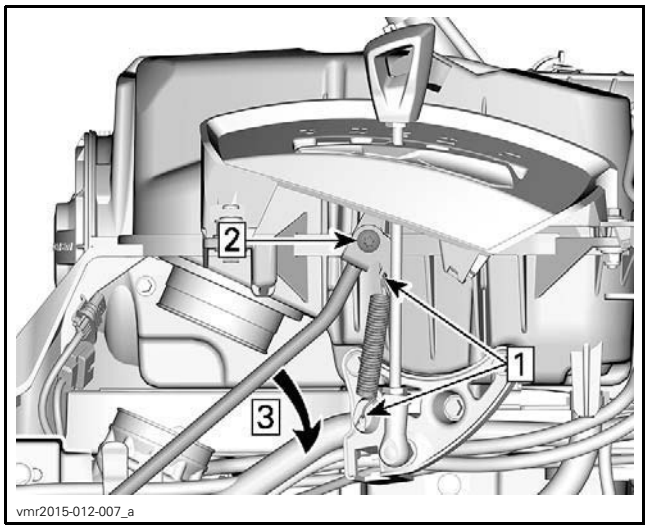

SHIFT ROD DISCONNECT
Step 1: Remove spring
Step 2: Remove fasteners and bushing
Step 3: Move shift rod

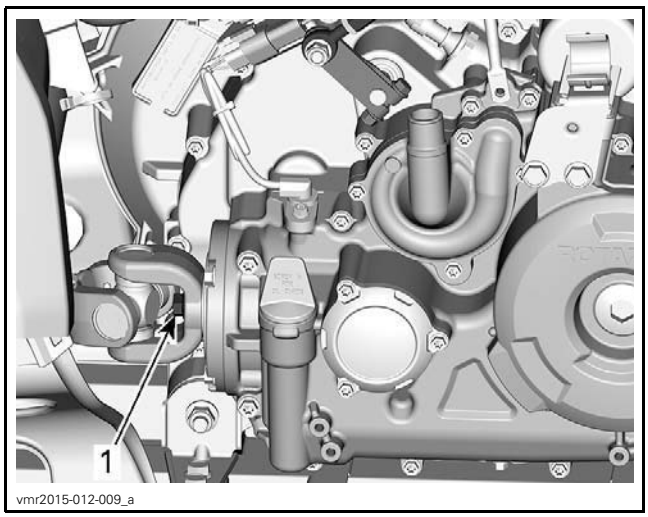

1. Remove rear propeller shaft bolt

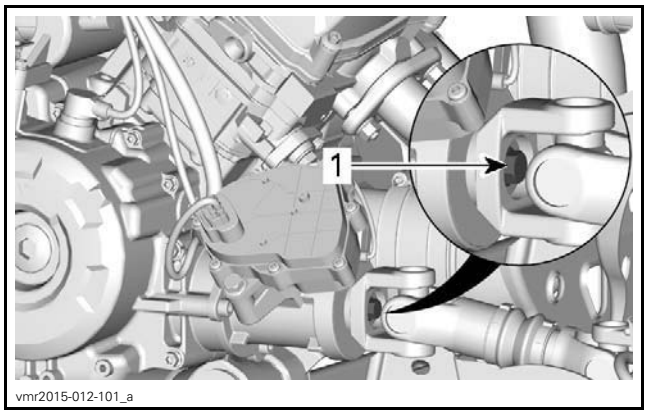

1. Remove front propeller shaft bolt and washer

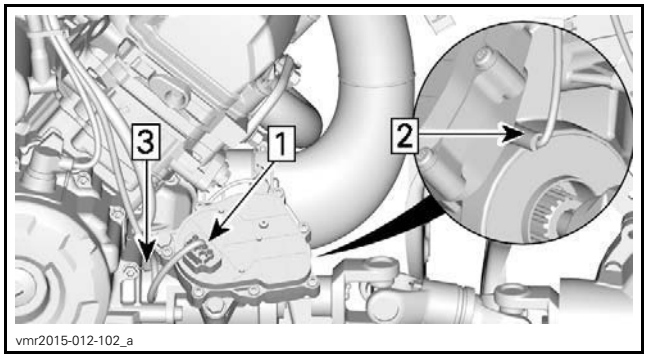

4 X 4 COUPLING UNIT DISCONNECT
1. Disconnect motor connector
2. Disconnect light switch connector
3. Remove locking tie

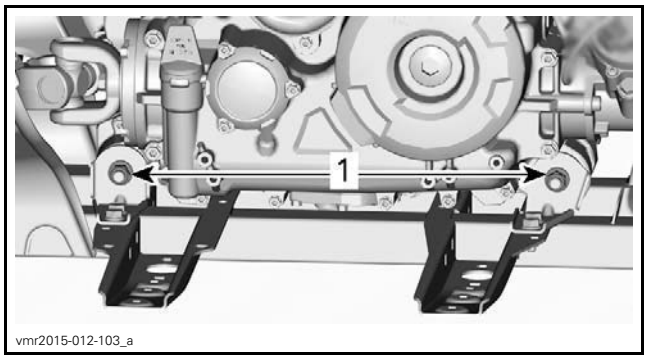

ENGINE MOUNT NUT REMOVAL, RH SIDE
1. Remove nuts

NOTE: Do not remove engine mount bolts at this time.

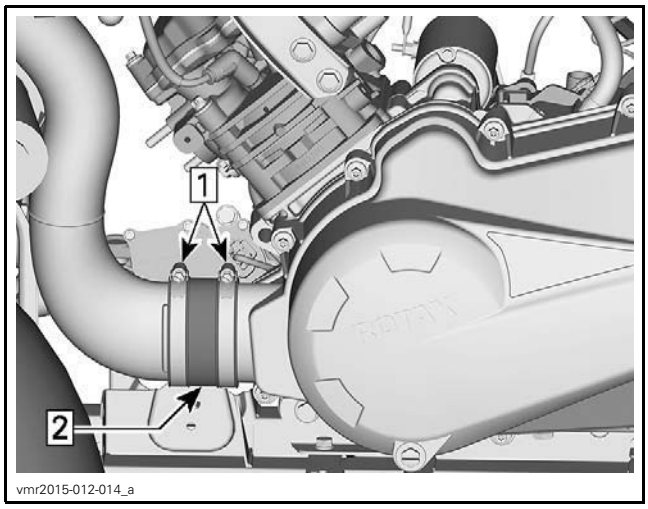

CVT AIR INLET DUCT DISCONNECT
1. *Loosen clamps*
2. *Remove CVT air inlet adapter*

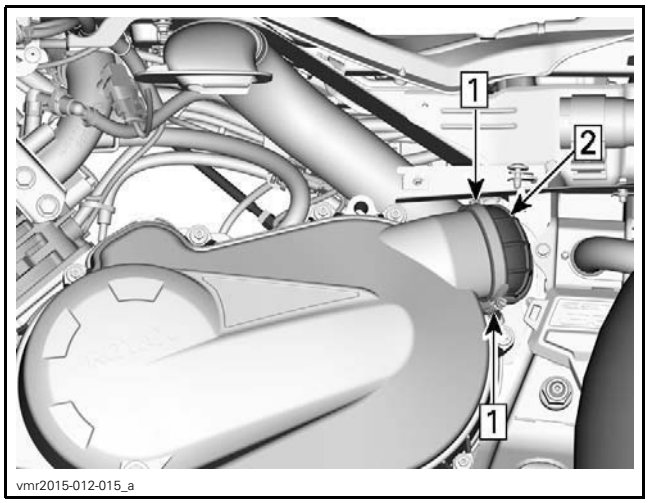

CVT AIR OUTLET DUCT DISCONNECT
Step 1: Loosen clamps
Step 2: Remove CVT air outlet adapter

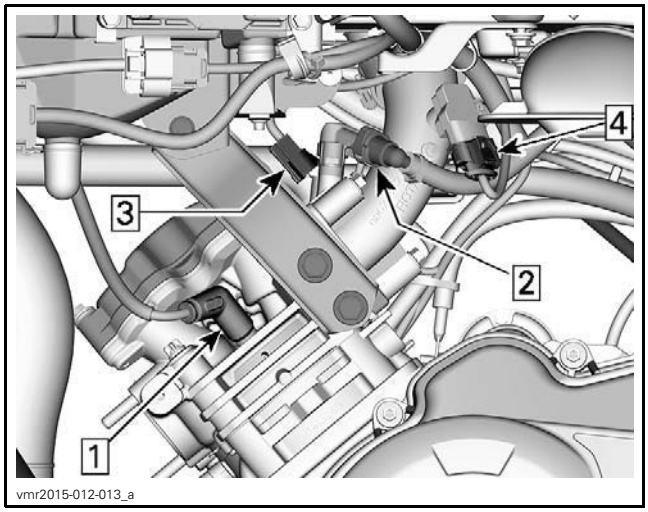

FUEL AND IGNITION DISCONNECT
Step 1: Disconnect spark plug wire
Step 2: Disconnect fuel injector hose
Step 3: Disconnect fuel injector connector
Step 4: Disconnect MAPTS sensor

NOTE: Refer to *ELECTRONIC FUEL INJECTION (EFI)* subsection for fuel injector disconnect.

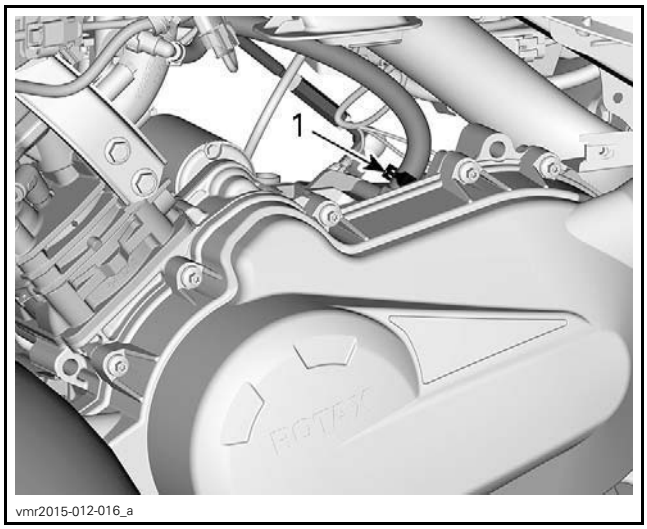

CRANKCASE VENT DISCONNECT
1. *Disconnect crankcase vent hose from engine*

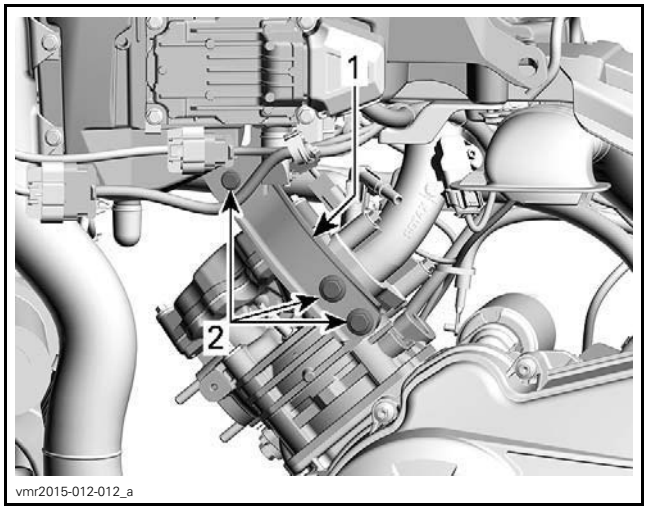

FRONT ENGINE MOUNT REMOVAL
1. *Upper engine mount*
2. *Remove these screws*

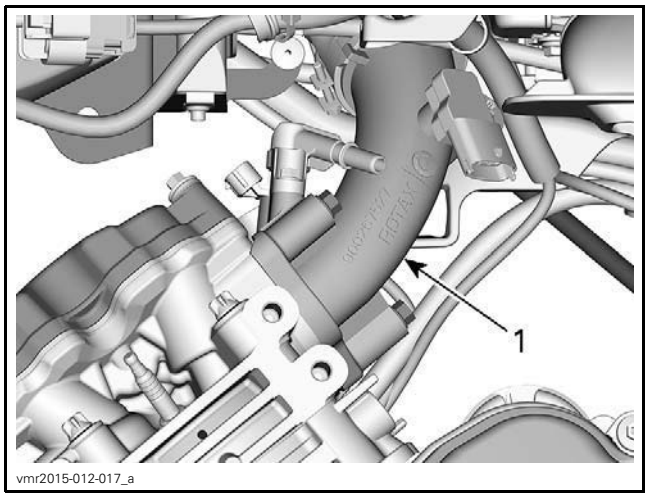

AIR INTAKE MANIFOLD REMOVAL
1. Remove air intake manifold

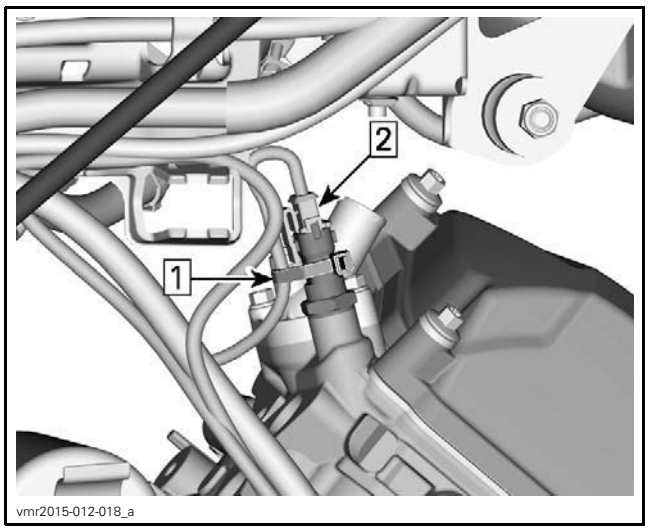

COOLANT TEMPERATURE SENSOR REMOVAL
Step 1: Cut this locking tie
Step 2: Disconnect coolant temp sensor

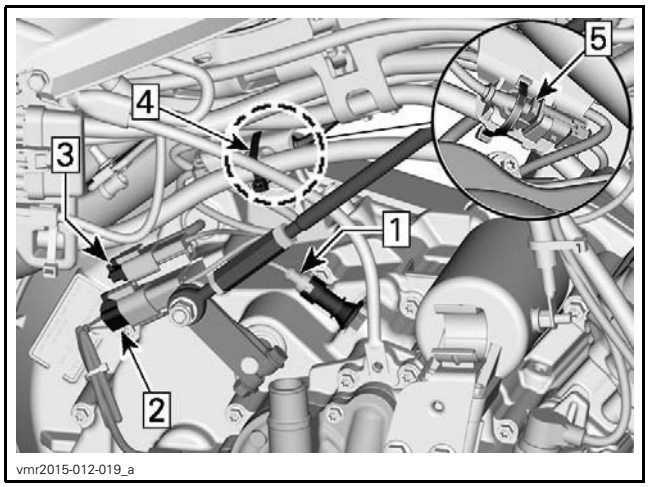

ELECTRICAL DISCONNECTS
Step 1: Disconnect OPS connector
Step 2: Disconnect VSS connector
Step 3: Disconnect Gear Switch connector
Step 4: Cut this locking tie
Step 5: Disconnect CPS connector (rear view)

6. Remove the gear switch connector and VSS connectors from their support.
7. Disconnect magneto connector from voltage regulator rectifier.

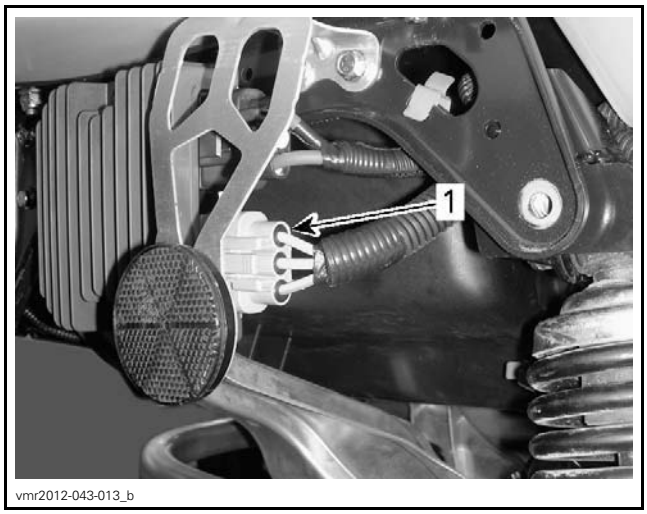

TYPICAL
1. Magneto connector

8. Remove magneto harness from its location along vehicle and gather it in a bundle near engine.

NOTE: It may be necessary to slightly lift the rear body module to ease magneto harness removal. Refer to *BODY* subsection.

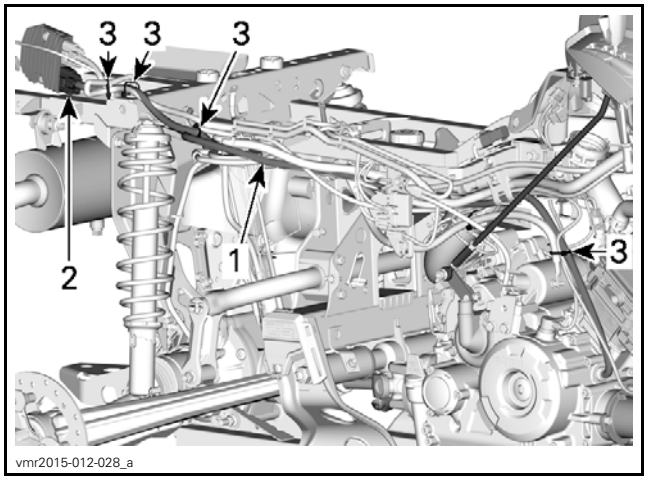

MAGNETO HARNESS ROUTING (SOME PARTS REMOVED FOR CLARITY)
1. Magneto harness
2. Voltage regulator connector to disconnect (gray)
3. Locking ties to remove

Engine Lifting

REQUIRED TOOL
ENGINE LIFTING TOOL (P/N 529 035 898)

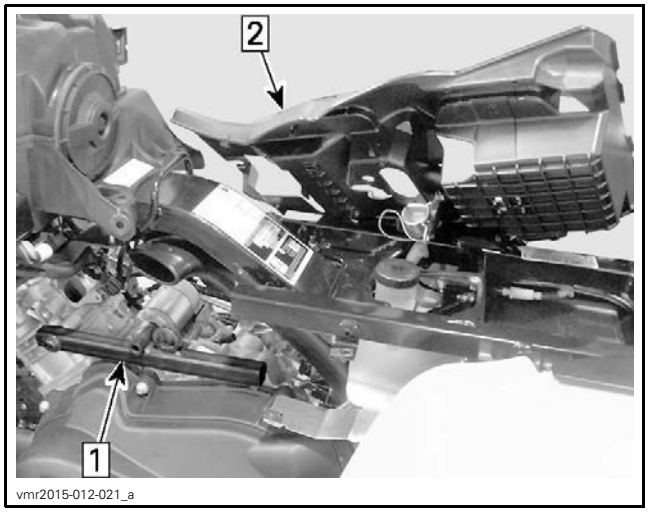

1. Install engine lifting tool
2. Move battery tray to make room

1. Install extension tool (P/N 529 035 619) onto engine lifting tool to ease engine manoeuvring.
2. Attach hoist to extension tool and slightly pick up some engine weight with the hoist.

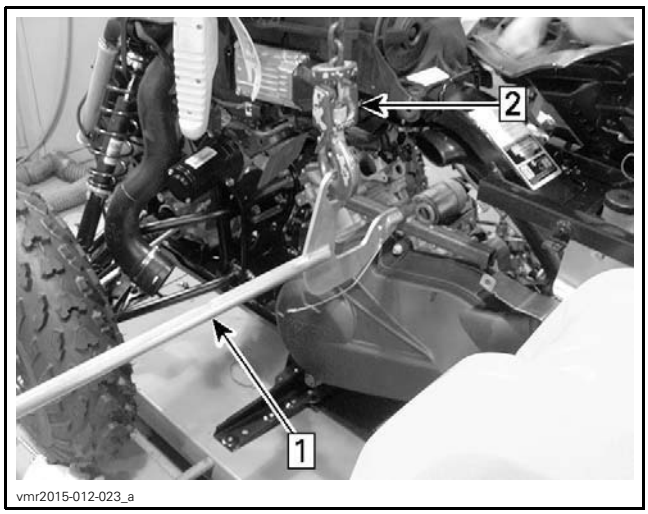

1. Install extension tool
2. Hoist attached to extension tool

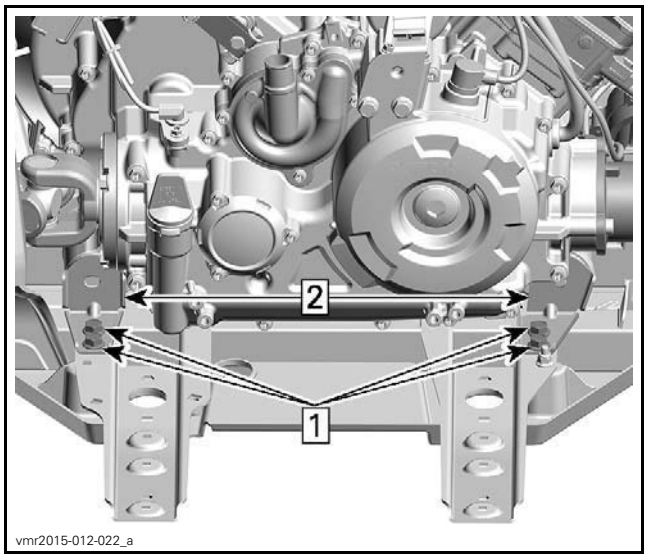

RH SIDE, ENGINE MOUNTING PLATE REMOVAL
1. Remove these fasteners
2. Remove right side engine mounting plates

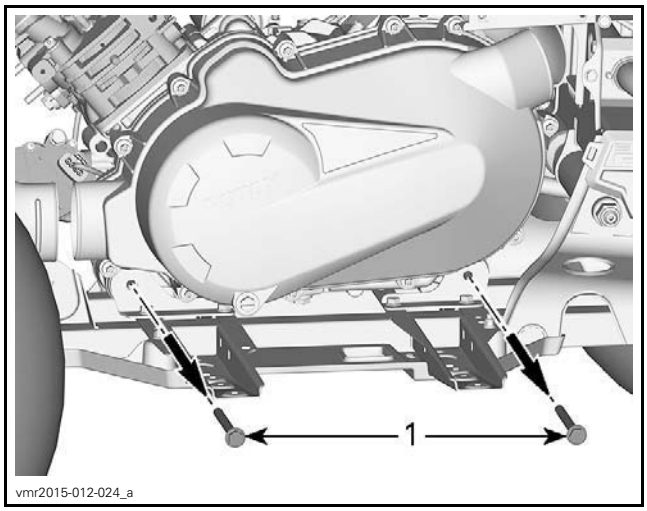

LH SIDE, ENGINE MOUNTING BOLT REMOVAL
1. Engine mounting bolts

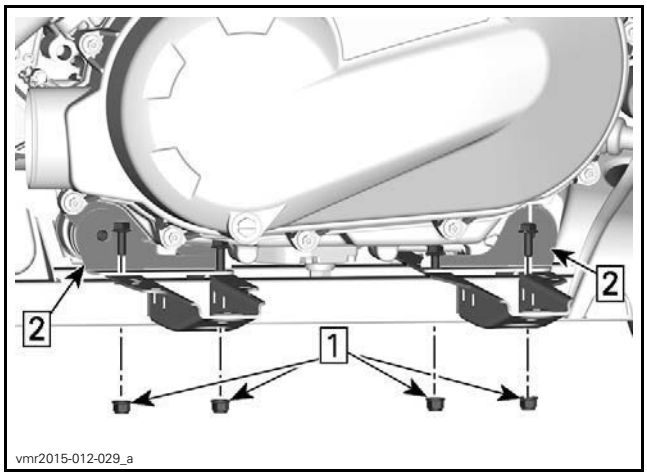

LH SIDE, ENGINE MOUNT BRACKET REMOVAL
Step 1: Remove engine mount bracket bolts
Step 2: Remove engine mounts

Remove the engine mount brackets on the right hand side.

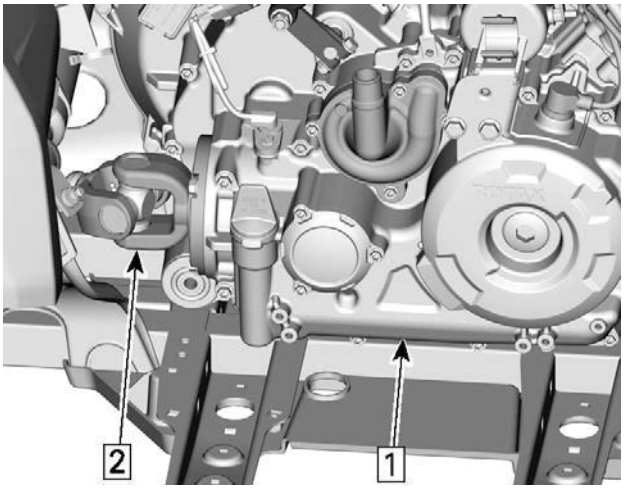

vmr2015-012-026_a

REAR PROPELLER SHAFT DISCONNECT
1. *Slightly lift engine and move forward*
2. *Disconnect rear propeller shaft*

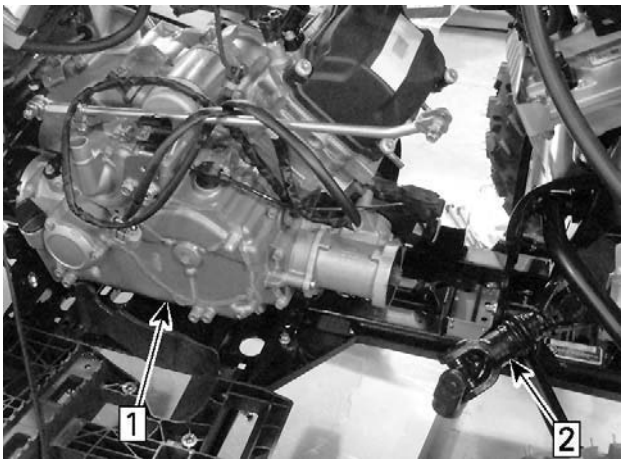

vmr2015-012-025_a

TYPICAL FRONT PROPELLER SHAFT DISCONNECT
1. *Move engine rearward*
2. *Disconnect front propeller shaft*

vmr2015-012-027_a

ENGINE INSTALLATION

Reverse the removal procedure. However, pay attention to the following.

When installing a part, refer to its applicable subsection for tightening torques and products required.

Inspect condition of engine mounts.

Install engine on vehicle.

Install all engine retaining bolts loosely.

Install front and rear propeller shafts. Tighten retaining screws to specification.

Tighten engine mounting bolts to specification.

TIGHTENING TORQUE	
Engine retaining bolts	62.5 N•m ± 7.5 N•m (46 lbf•ft ± 6 lbf•ft)

Reconnect all hoses, adapters and electrical connections.

If applicable, fill engine as per specification with engine oil. Refer to *LUBRICATION SYSTEM* subsection.

Fill and bleed cooling system. Refer to *PERIODIC MAINTENANCE PROCEDURE* subsection.

Check for any leaks.

Install all remaining removed parts.

Test drive vehicle to confirm proper operation.

ENGINE MOUNTS REPLACEMENT

NOTE: Use the same procedure for the front and rear engine mounts.

Engine Mount Removal

Insert a punch into one engine mount bushing and push the opposite bushing out.

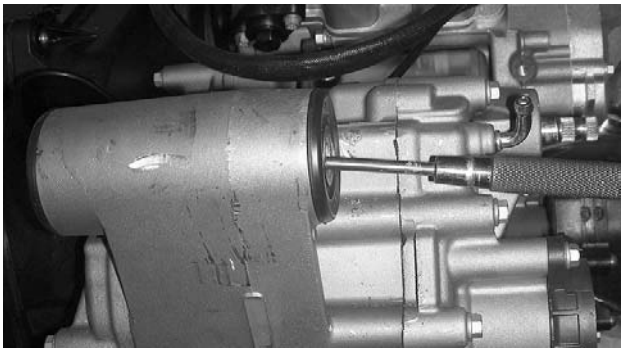

tmr2011-007-011

TYPICAL

Engine Mount Installation

Push in each mount bushing until it bottoms out.

ENGINE REMOVAL AND INSTALLATION

SERVICE TOOLS

Description	Part Number	Page
ENGINE LIFTING TOOL	529 036 022	5

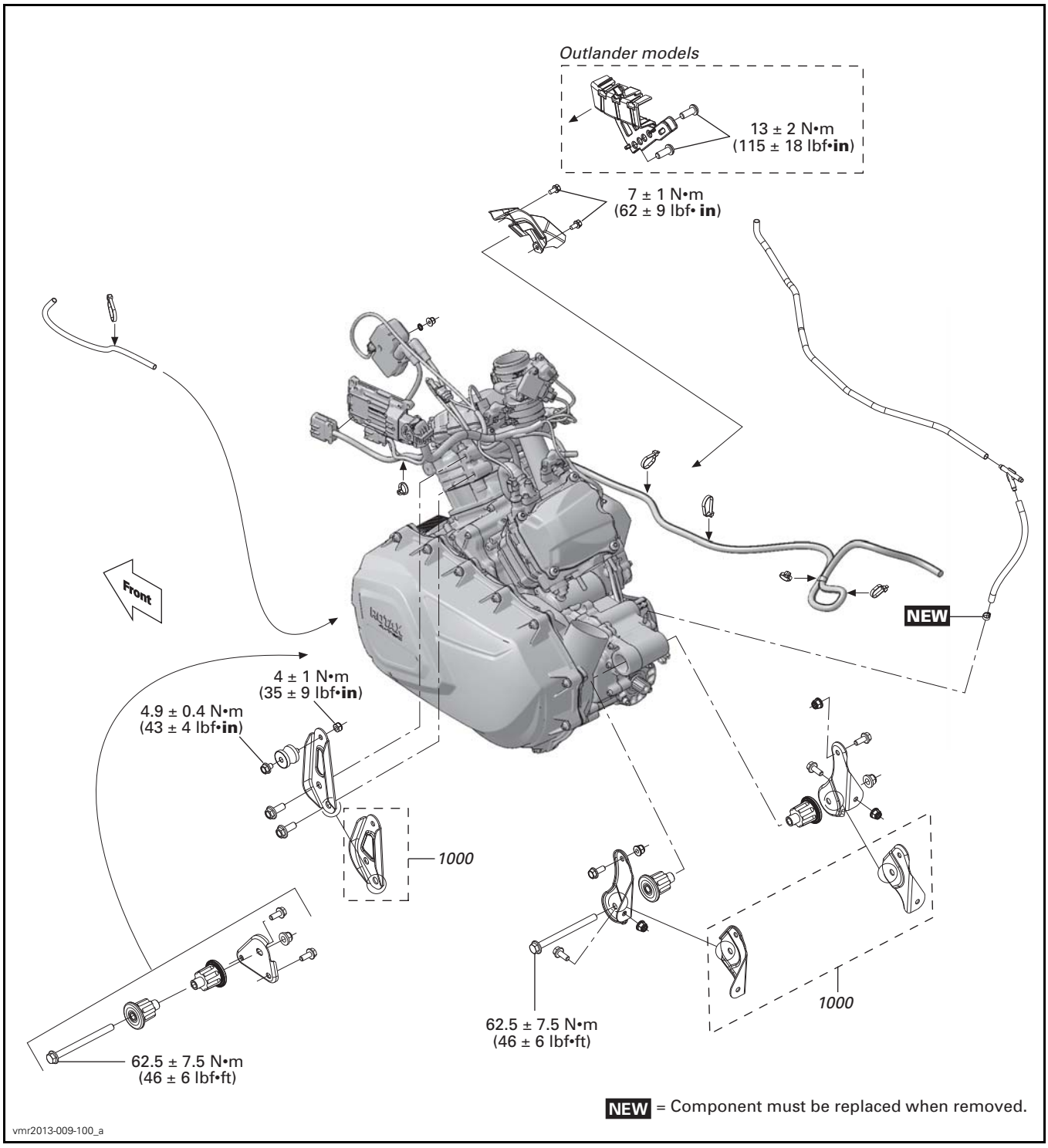

PROCEDURES

ENGINE REMOVAL

1. Place vehicle on a workstation equipped with an engine-lifting hoist.
2. Disconnect negative (-) cable from battery.
3. Carry out the following operations. Refer to table.

OPERATIONS	REFERENCES (SUBSECTION)
Safely lift and support the vehicle	*INTRODUCTION*
Release fuel pressure	*FUEL TANK AND FUEL PUMP*
Drain engine coolant	*PERIODIC MAINTENANCE PROCEDURES*
Remove front body module	*BODY*
Remove RH footrest panel	
Remove air filter housing	*AIR INTAKE SYSTEM*
Remove muffler	*EXHAUST SYSTEM*
Remove exhaust pipes	
Remove CVT air inlet	*CONTINUOUSLY VARIABLE TRANSMISSION (CVT)*
Remove CVT air outlet	
Disconnect positive (+) starter cable	*STARTING SYSTEM*
Disconnect TPS connector	*ELECTRONIC FUEL INJECTION (EFI)*
Disconnect MAPTS connector	
Remove intake manifold	*INTAKE MANIFOLD*
Remove spark plug cables	*IGNITION SYSTEM*

4. Remove RH footrest support.

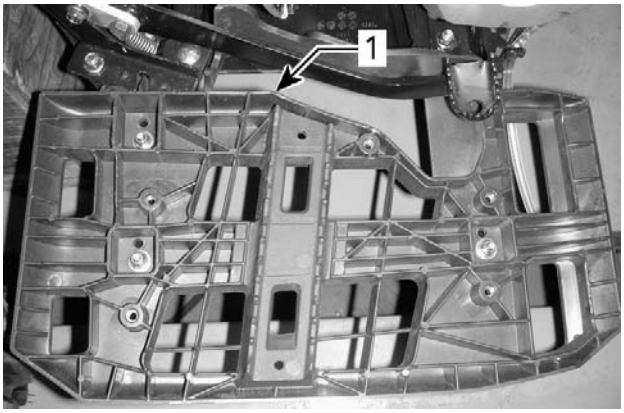

vmr2012-009-003_a

TYPICAL - OUTLANDER SHOWN
1. RH footrest support

5. Move throttle body aside to make room.

vmr2012-009-001

TYPICAL - THROTTLE BODY ATTACHED ON FRAME

6. Move master cylinder aside to make room.

vmr2012-009-002

TYPICAL - MASTER CYLINDER ATTACHED ON REAR FENDER

7. Move crankcase vent hose as illustrated.

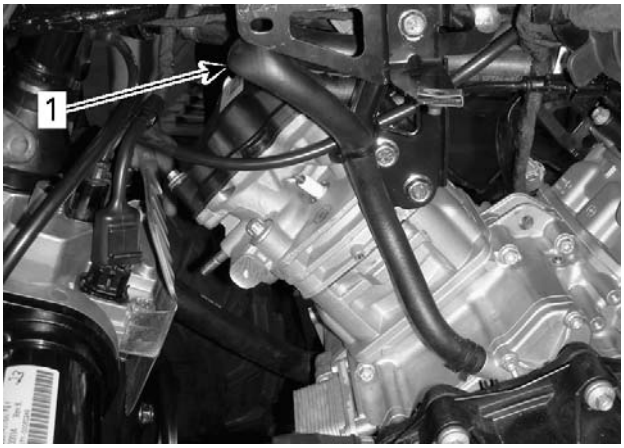

vmr2012-009-004_a

TYPICAL
1. Crankcase vent hose

8. Disconnect both engine harness connectors (HIC).

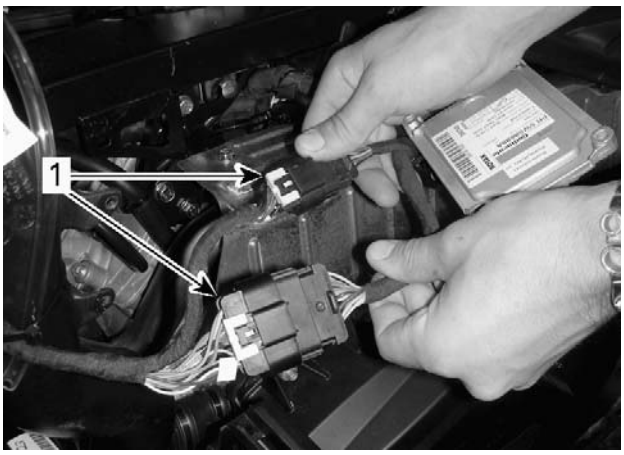

vmr2012-009-005_a

TYPICAL
1. Engine harness connectors (HIC)

9. Move ECM as illustrated.

vmr2012-009-006

TYPICAL

10. Cut locking ties from ignition coil harness.

11. Disconnect ignition coil connector.

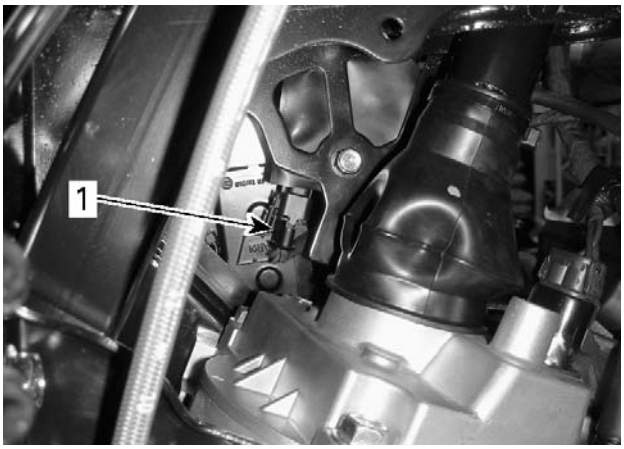

vmr2012-009-007_a

TYPICAL - FROM LH SIDE
1. Ignition coil connector

12. Remove the following locking ties.

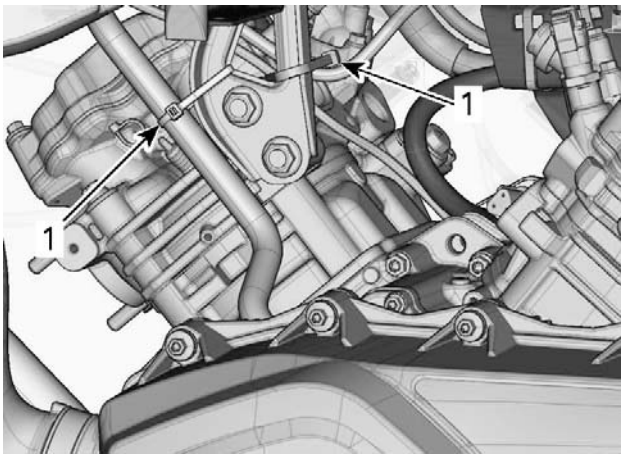

vmr2012-009-008_a

TYPICAL
1. Locking ties

13. Remove plastic cover from engine.

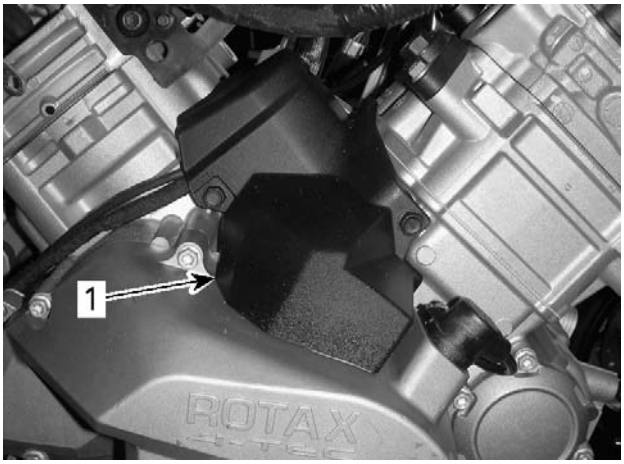

vmr2012-009-009_a

TYPICAL
1. Plastic cover

14. Remove harnesses support from engine.

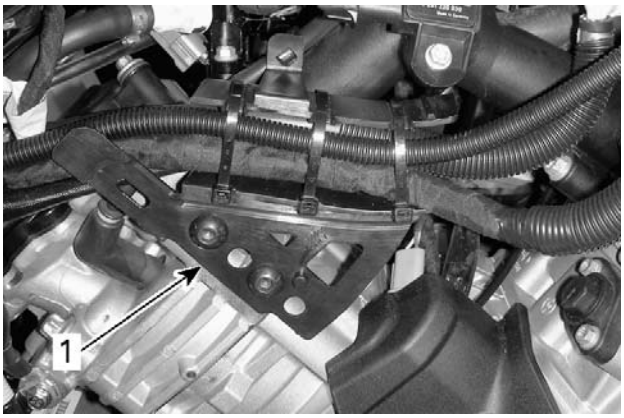

vmr2012-009-010_a

TYPICAL
1. Harnesses support

15. Disconnect magneto connector from voltage regulator rectifier.

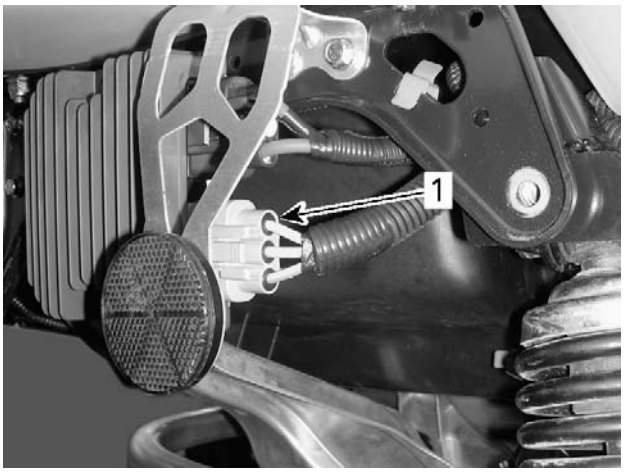

vmr2012-043-013_b

TYPICAL - OUTLANDER SHOWN
1. Magneto connector

16. Remove magneto harness from its location along vehicle and gather it in a bundle near engine.

NOTE: It may be necessary to slightly lift the rear body module to ease magneto harness removal. Refer to *BODY* subsection.

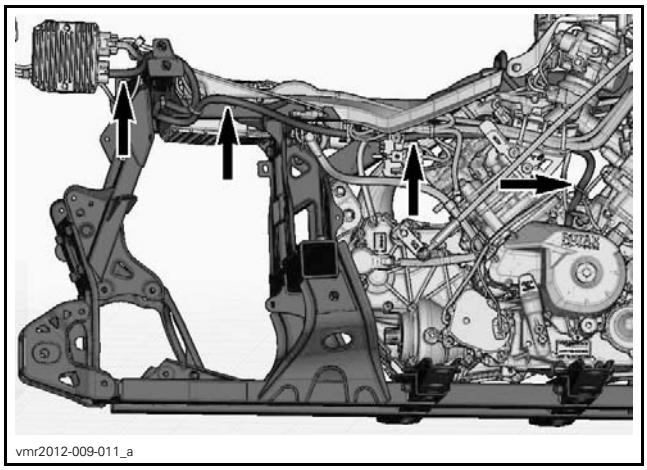

vmr2012-009-011_a

MAGNETO HARNESS (SOME PARTS REMOVED FOR CLARITY)

17. Disconnect vent hose from gearbox.

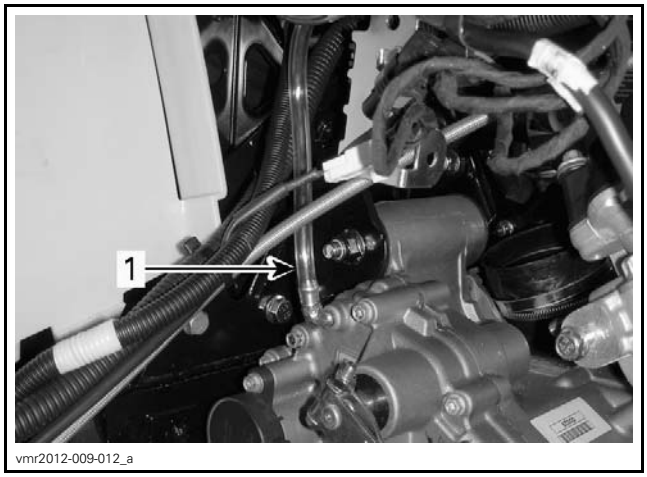

vmr2012-009-012_a

TYPICAL - OUTLANDER SHOWN
1. Vent hose

18. Disconnect coolant hoses as illustrated.

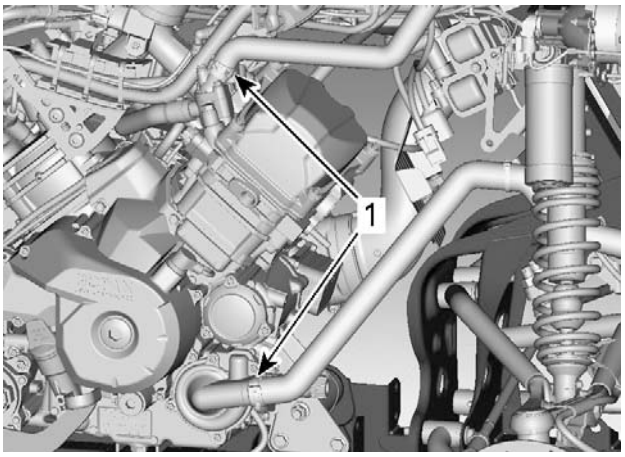

500/650/800R ENGINES - SOME PARTS REMOVED FOR CLARITY
1. Disconnect the following coolant hoses

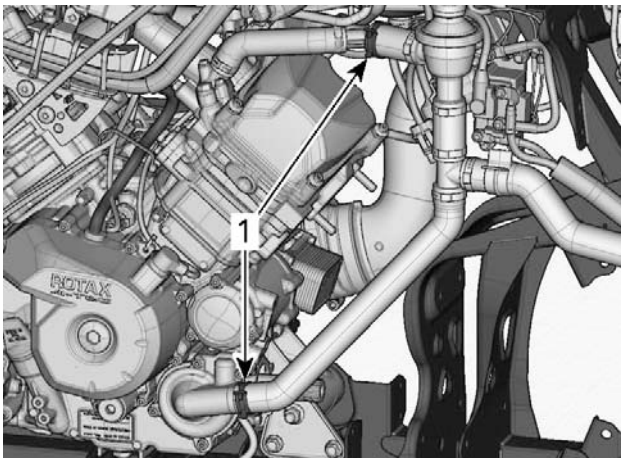

1000 ENGINE - SOME PARTS REMOVED FOR CLARITY
1. Disconnect the following coolant hoses

19. Remove main ground wire from engine.

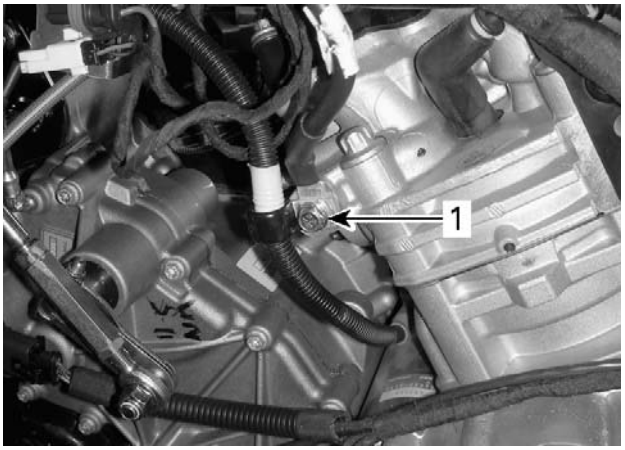

TYPICAL - OUTLANDER SHOWN
1. Main ground wire

Engine Lifting

1. Install the ENGINE LIFTING TOOL (P/N 529 036 022) on engine.

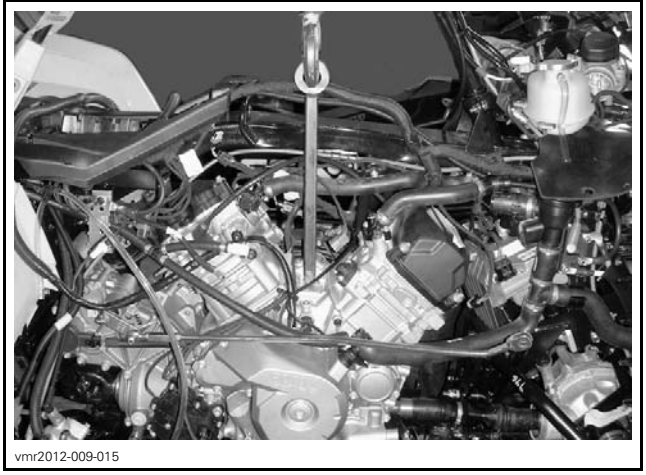

TYPICAL

2. Remove upper retaining screws from engine.

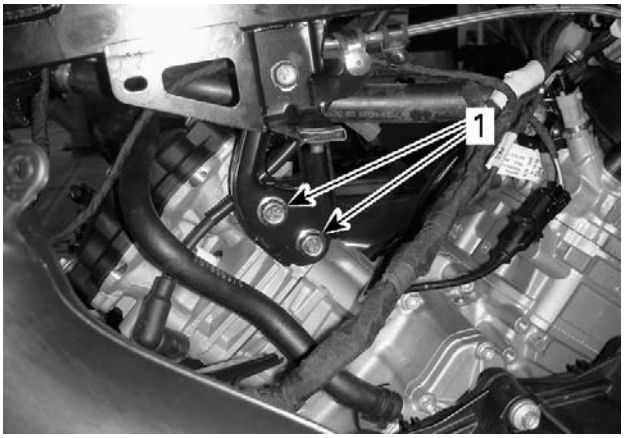

LH SIDE
1. Upper retaining screws

3. Remove rear retaining bolt from engine.

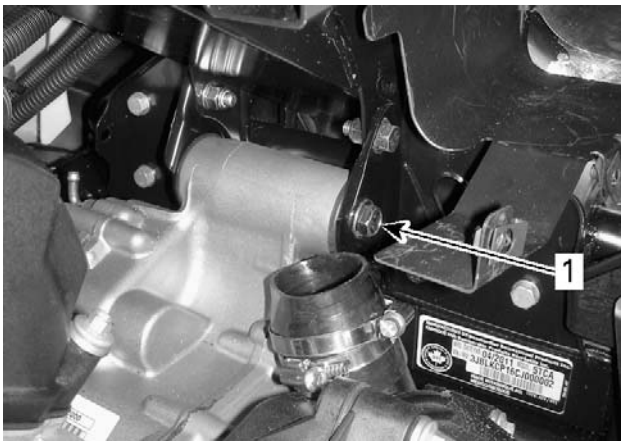

vmr2012-009-017_a

LH SIDE
1. *Rear retaining bolt*

4. Remove front retaining bolt from engine.

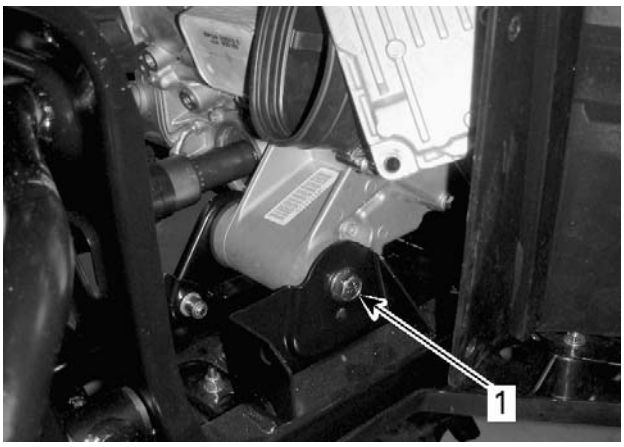

vmr2012-009-018_a

LH SIDE
1. *Front retaining bolt*

5. Remove engine support plate from frame.

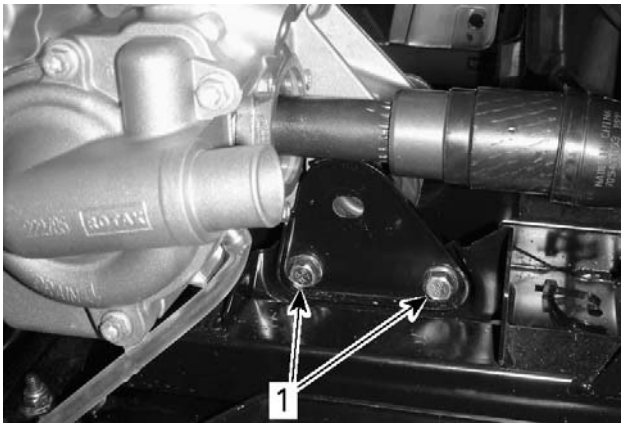

vmr2012-009-019_a

RH SIDE
1. *Engine support plate screws*

6. Remove the following Oetiker clamps from front propeller shaft.

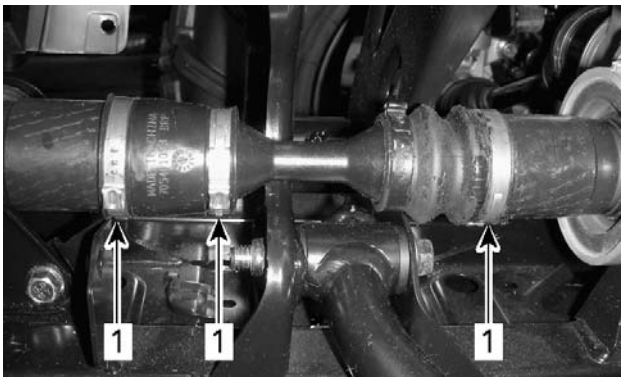

vmr2012-009-020_a

1. *Oetiker clamps*

7. Move front propeller shaft bellows forward.

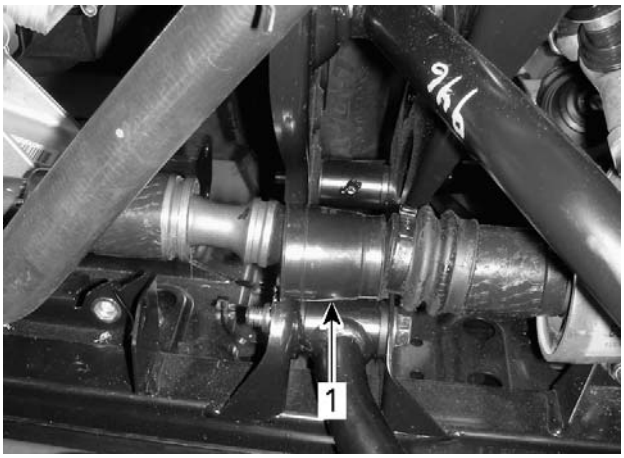

vmr2012-009-021_a

1. *Front propeller shaft bellows*

8. Remove propeller shaft screw from gearbox output shaft.

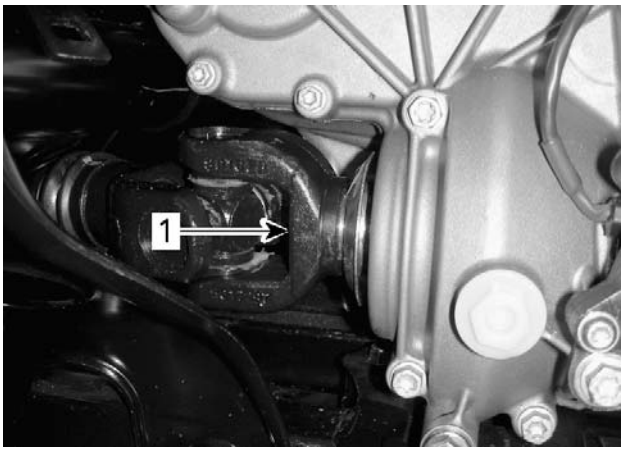

vmr2012-009-022_a

1. *Rear propeller shaft screw*

9. Slightly lift engine and move it forward to disconnect rear propeller shaft from engine.

10. Move propeller shaft yoke downwards to make room.

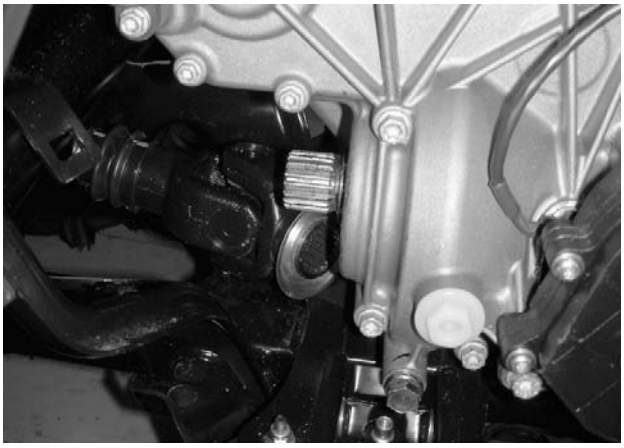

vmr2012-009-023

TYPICAL

11. Move engine rearward to disconnect front propeller shaft from engine.
12. Remove engine by the RH side.

vmr2012-009-024

TYPICAL

ENGINE INSTALLATION

The installation is the reverse of the removal procedure. However, pay attention to the following.

1. Inspect condition of engine mounts.
2. Install engine on vehicle.
3. Install all engine retaining bolts loosely.
4. Install and tighten propeller shaft screw. Refer to *REAR DRIVE* subsection.
5. Tighten engine retaining bolts to specification.

TORQUE	
Engine retaining bolts	62.5 N•m ± 7.5 N•m (46 lbf•ft ± 6 lbf•ft)

6. If applicable, fill engine as per specification. Refer to *LUBRICATION SYSTEM* subsection.
7. Fill and bleed cooling system. Refer to *PERIODIC MAINTENANCE PROCEDURE* subsection.
8. Check for any leaks.
9. Reinstall all the remaining parts as the reverse of removal procedure. Refer to exploded views and proper subsections.
10. Test drive vehicle to confirm proper operation.

ENGINE MOUNTS REPLACEMENT

NOTE: Use the same procedure for the front and rear engine mounts.

Engine Mount Removal

Insert a punch into engine mount bushing and push the opposite engine mount out.

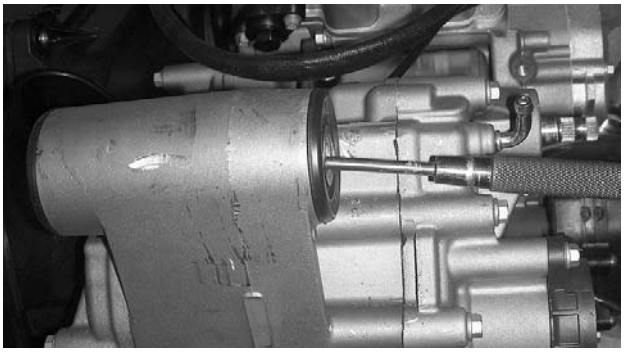

tmr2011-007-011

TYPICAL

Engine Mount Installation

The installation is the reverse of the removal procedure.

AIR INTAKE SYSTEM

AIR FILTER HOUSING

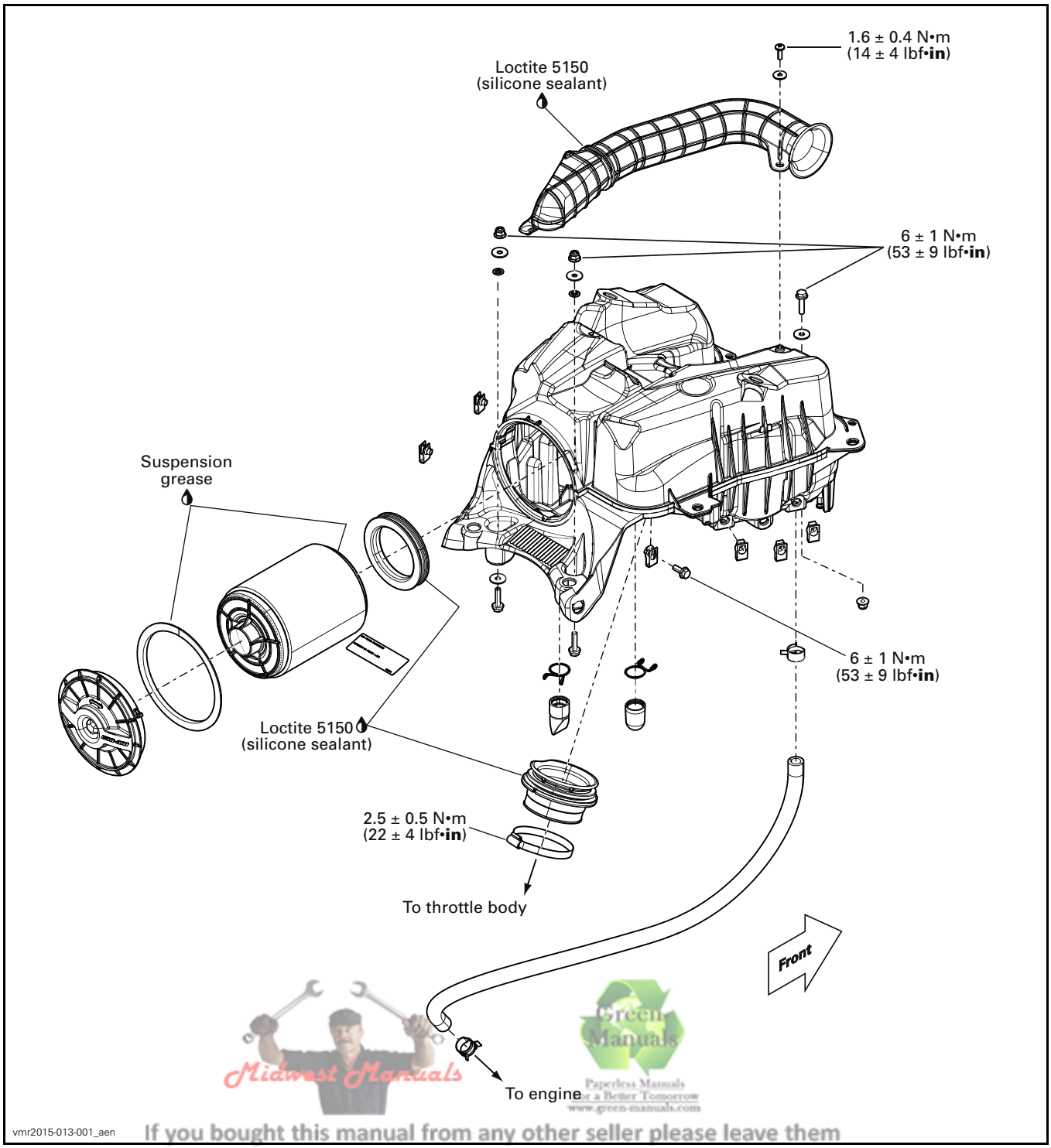

If you bought this manual from any other seller please leave them
NEGATIVE feedback and notify me at bestshopmanuals@gmail.com

GENERAL

NOTICE Never modify the air intake system. Otherwise, engine performance degradation or damage can occur. The engine is calibrated to operate specifically with these components.

PROCEDURES

AIR FILTER

For air filter servicing, refer to *PERIODIC MAINTENANCE PROCEDURES* subsection.

AIR FILTER HOUSING

Air Filter Housing Removal

1. Remove front body module. Refer to *BODY* subsection.
2. Remove dashboard support retaining screws. Pull aft pins from grommets and move support toward front.

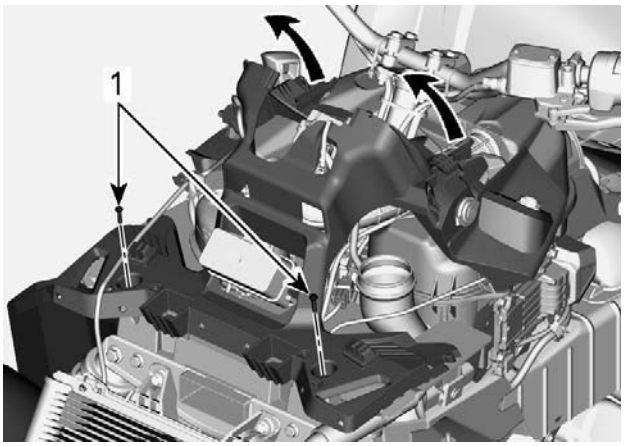

vmr2015-013-006_a

DASHBOARD SUPPORT REMOVAL
1. Screws to remove

3. On LH side, remove screws securing CVT air inlet to air filter housing.

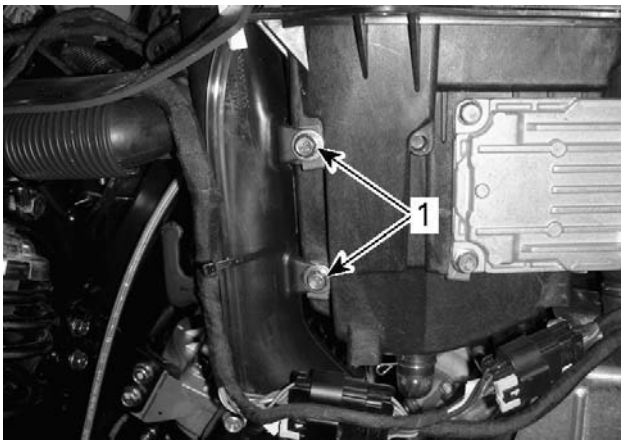

vmr2012-010-002_a

TYPICAL
1. CVT air inlet screws

4. Remove ECM retaining screws.

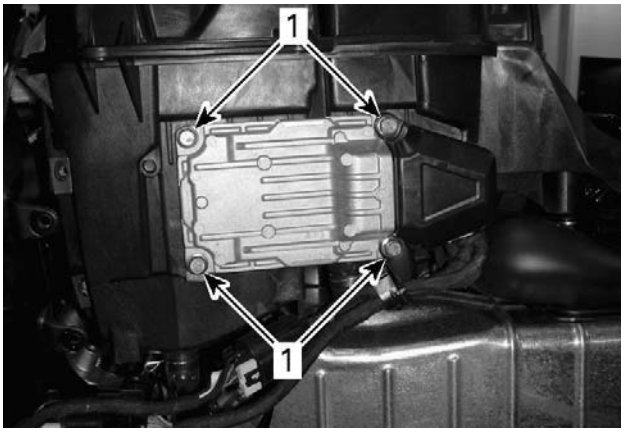

vmr2012-010-001_a

1. ECM retaining screws

5. Remove engine harness connectors (HIC) from air filter housing.
6. Move ECM aside.

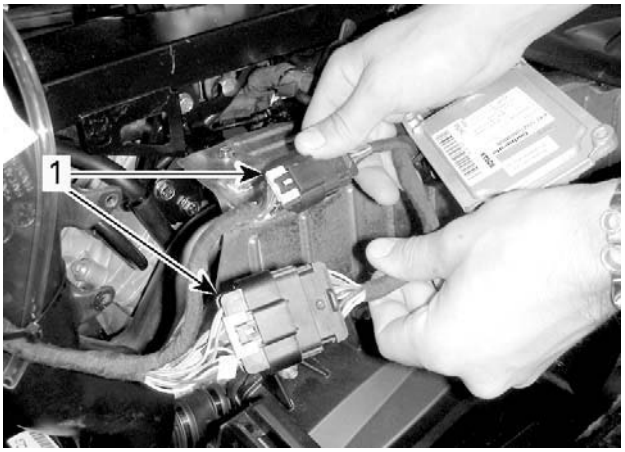

vmr2012-009-005_a

TYPICAL
1. Engine harness connectors (HIC)

7. Remove air intake tube retaining screw.

vmr2012-010-003_a

1. Air intake tube retaining screw

8. Move air intake tube forward for access to LH coolant tank screw.
9. Remove coolant tank retaining screws.

vmr2012-010-004_a

AIR INTAKE TUBE MOVED FOR ACCESS
1. LH coolant tank retaining screw

vmr2012-010-005_a

1. RH coolant tank retaining screw

10. Remove link rod from shift lever.

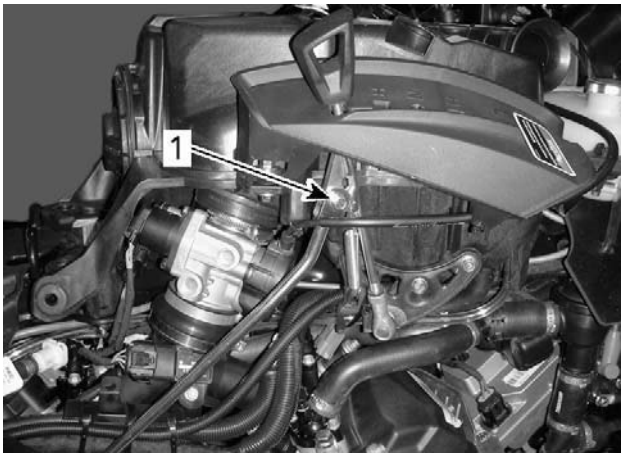

vmr2012-010-006_a

TYPICAL
1. Link rod retaining bolt

11. Carefully move link rod downward.
12. Remove the following locking ties.

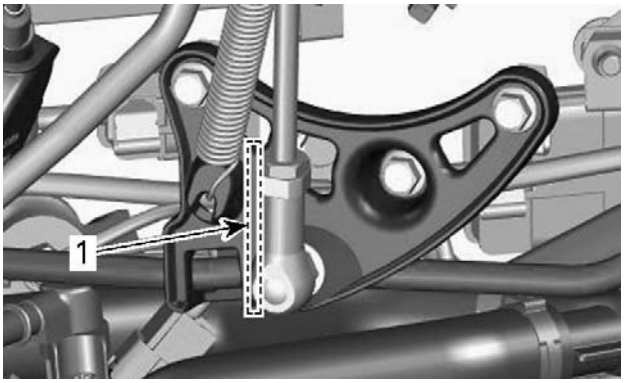

vmr2013-010-001_a

1. Locking tie to remove - location shown

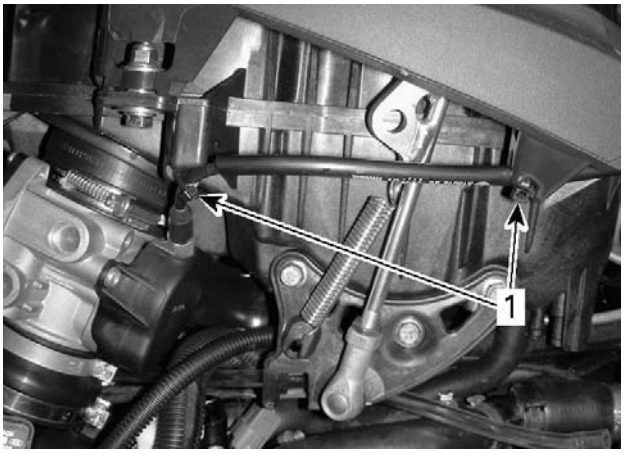

vmr2012-010-009_a

1. Locking ties to remove

13. Remove crankcase vent hose from air filter housing.

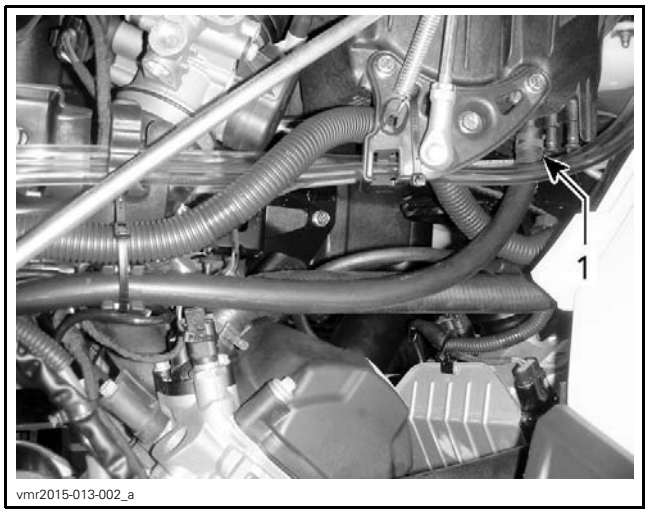

1. Remove crankcase vent hose here

14. Remove fasteners retaining aft end of air filter housing.

FASTENERS LOCATED NEAR FORWARD SEAT ANCHORAGE
1. Nuts (2)

SCREW LOCATED UNDER COOLANT TANK
1. Screw

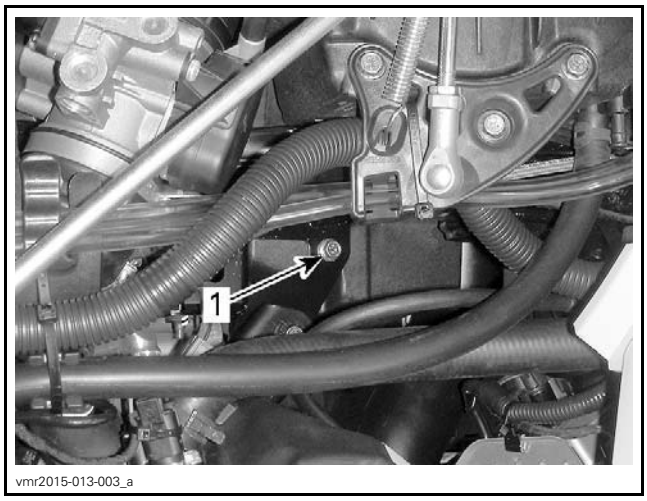

SCREW ACCESSED FROM UNDER SHIFT LEVER
1. Screw

15. Detach throttle body from intake adapter and air filter housing.

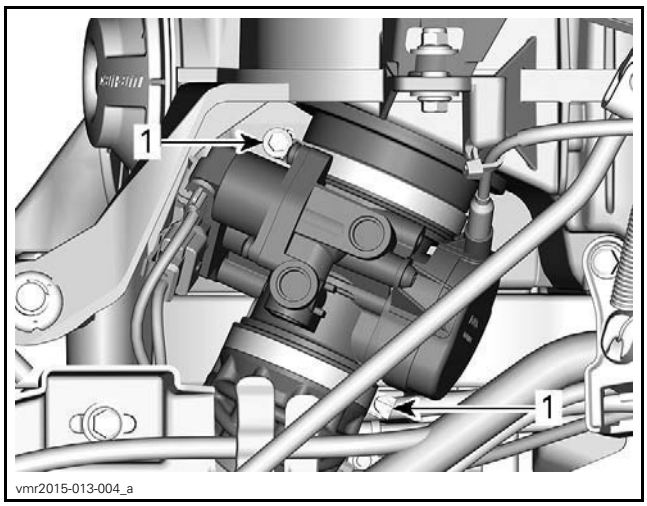

1. Clamp screws to loosen

16. Slightly lift air filter housing upward.
17. Move throttle body aside to make room.

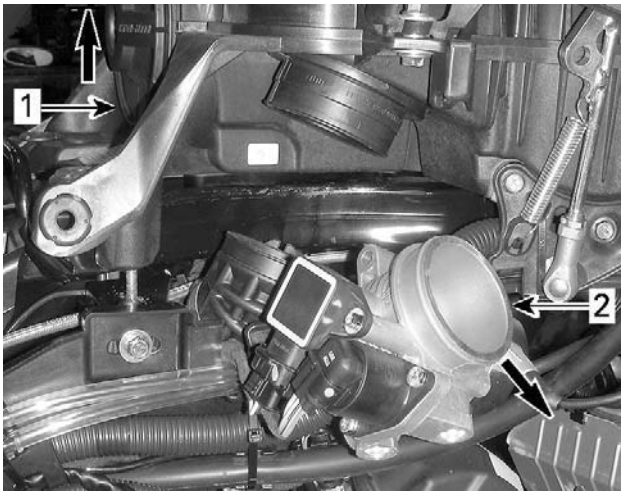

vmr2015-013-005 _a

1. Air filter housing
2. Throttle body

18. Remove air filter housing by pulling it towards rear.

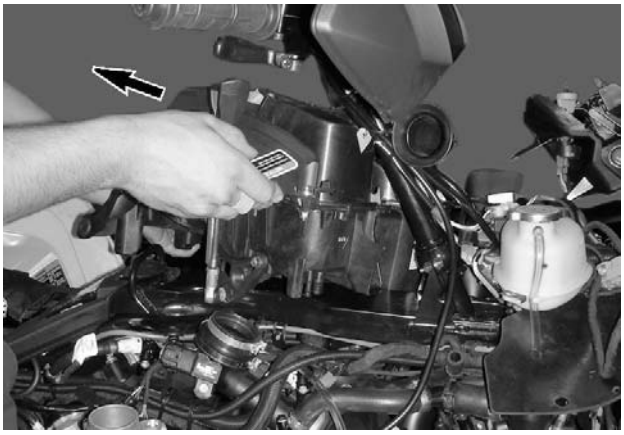
vmr2012-010-016_a

AIR FILTER HOUSING REMOVAL

19. Remove remaining components from air filter housing.

Air Filter Housing Inspection

Check air filter housing for cracks or other damage. Replace if necessary.

Air Filter Housing Installation

The installation is the reverse of the removal procedure. However, pay attention to the following.

Refer to applicable exploded views for tightening torque.

AIR INTAKE SYSTEM

AIR FILTER HOUSING

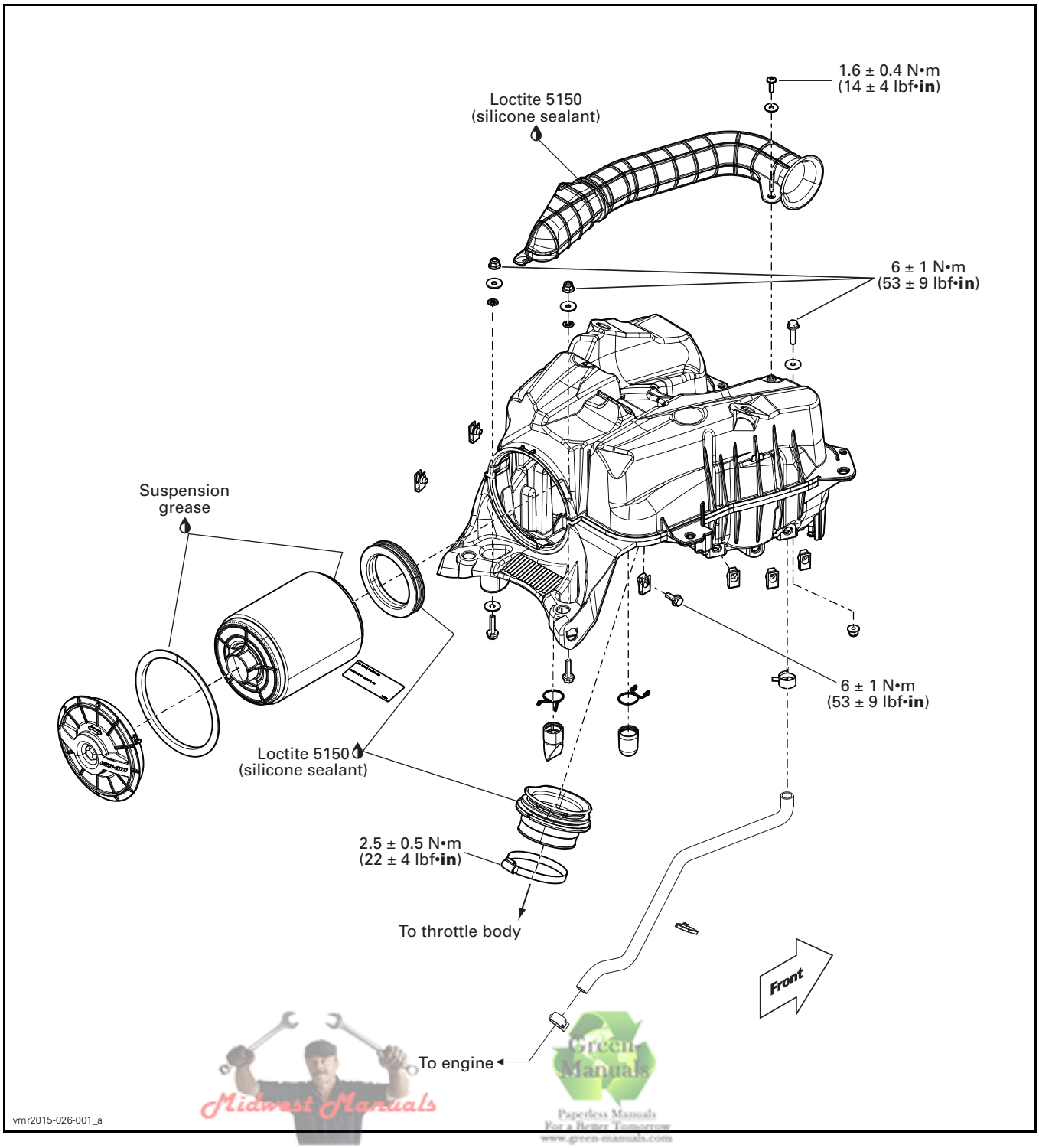

Midwest Manuals
Green Manuals
Paperless Manuals
For a Better Tomorrow
www.green-manuals.com
If you bought this manual from any other seller please leave them
NEGATIVE feedback and notify me at bestshopmanuals@gmail.com

GENERAL

NOTICE Never modify the air intake system. Otherwise, engine performance degradation or damage can occur. The engine is calibrated to operate specifically with these components.

PROCEDURES

AIR FILTER

For air filter servicing, refer to *PERIODIC MAINTENANCE PROCEDURES* subsection.

AIR FILTER HOUSING

Air Filter Housing Removal

1. Remove front body module. Refer to *BODY* subsection.
2. Remove dashboard support retaining screws. Pull aft retaining pins from grommets and move support toward front.

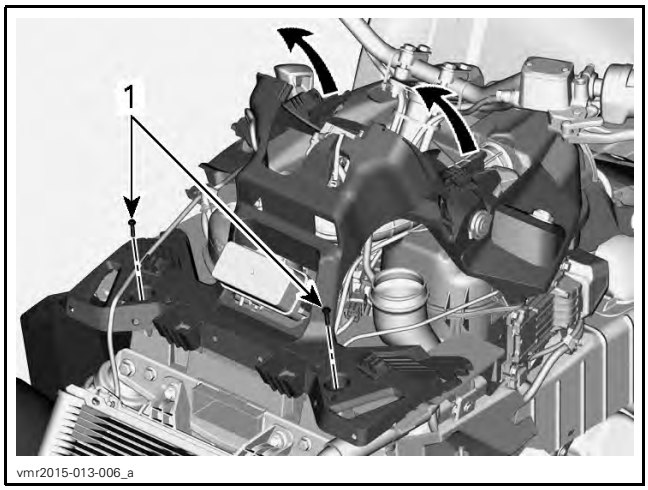

DASHBOARD SUPPORT REMOVAL
1. Screws to remove

3. On LH side, remove screws securing CVT air inlet to air filter housing.

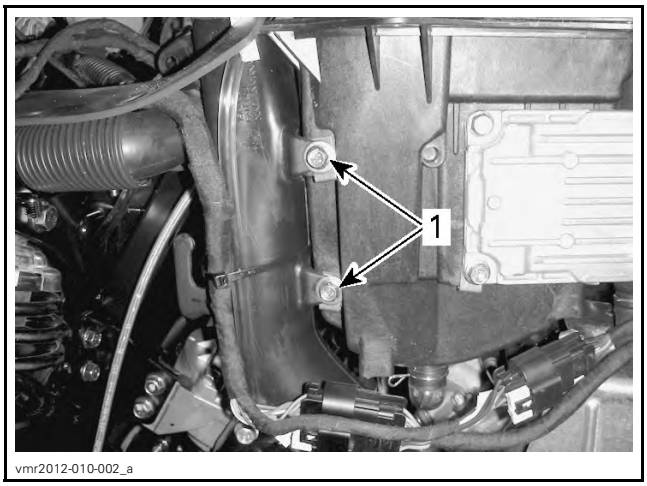

TYPICAL
1. CVT air inlet screws

4. Remove ECM retaining screws.

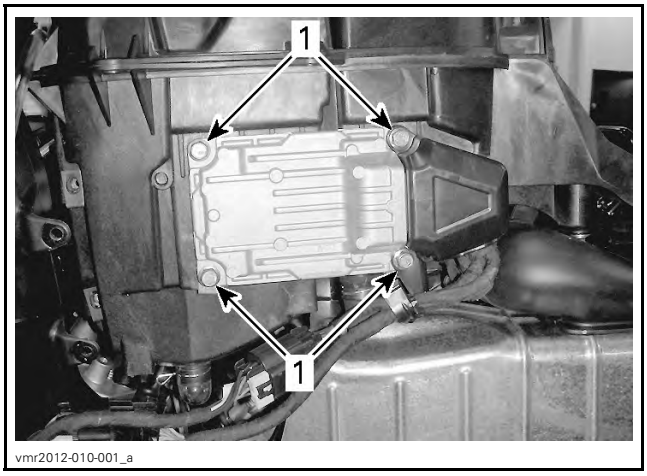

1. ECM retaining screws

5. Remove engine harness connectors (HIC) from air filter housing.
6. Move ECM aside.

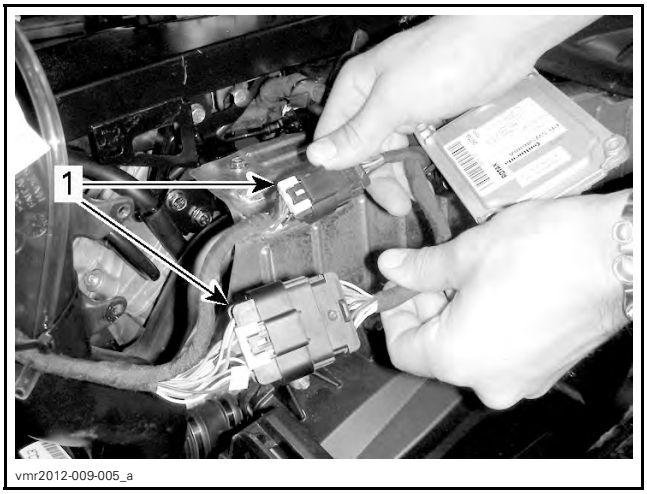

TYPICAL
1. Engine harness connectors (HIC)

7. Remove air intake tube retaining screw.

vmr2012-010-003_a

1. Air intake tube retaining screw

8. Move air intake tube forward for access to coolant tank screw.
9. Remove coolant tank retaining screws.

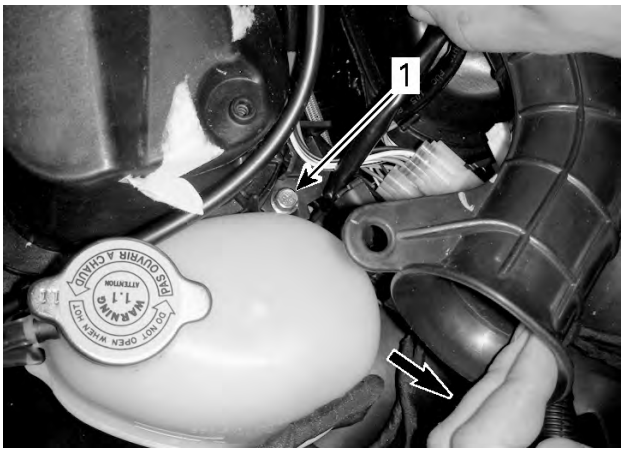

vmr2012-010-004_a

AIR INTAKE TUBE MOVED FOR ACCESS
1. Left side coolant tank retaining screw

vmr2012-010-005_a

1. Right side coolant tank retaining screw

10. Remove link rod from shift lever.

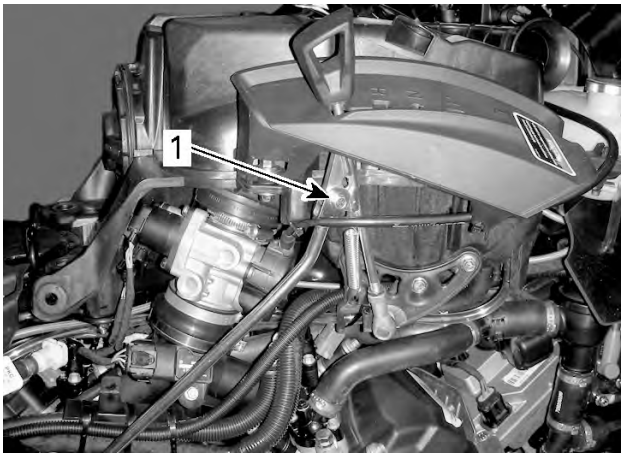

vmr2012-010-006_a

1. Disconnect link rod r here

11. Carefully move link rod downward.

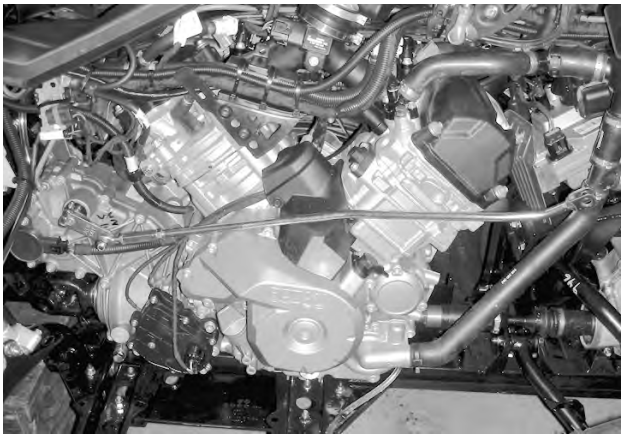

vmr2012-010-007

TYPICAL

12. Remove the following locking ties.

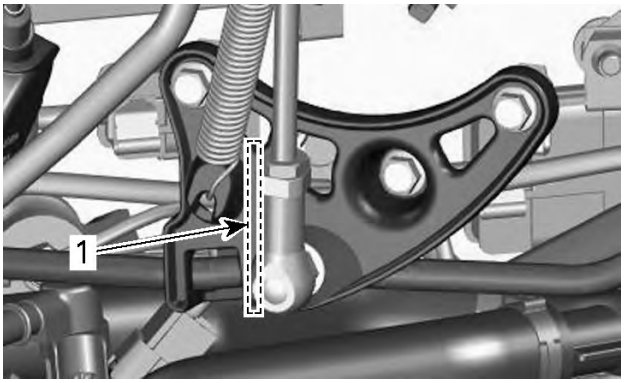

vmr2013-010-001_a

1. Locking tie to remove - location shown

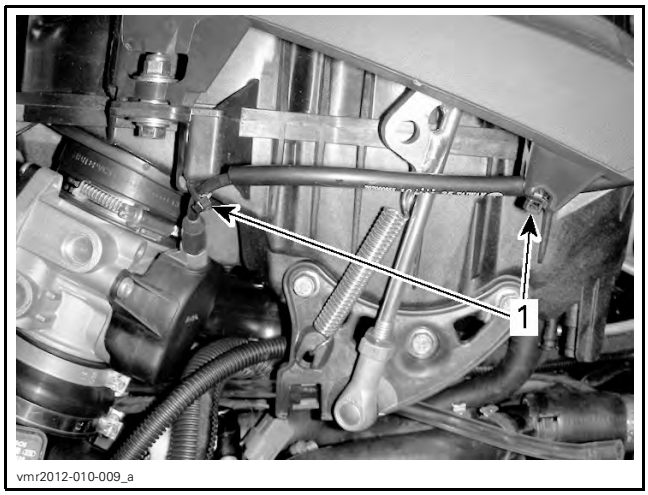

1. Locking ties to remove

13. Remove crankcase vent hose from air filter housing.

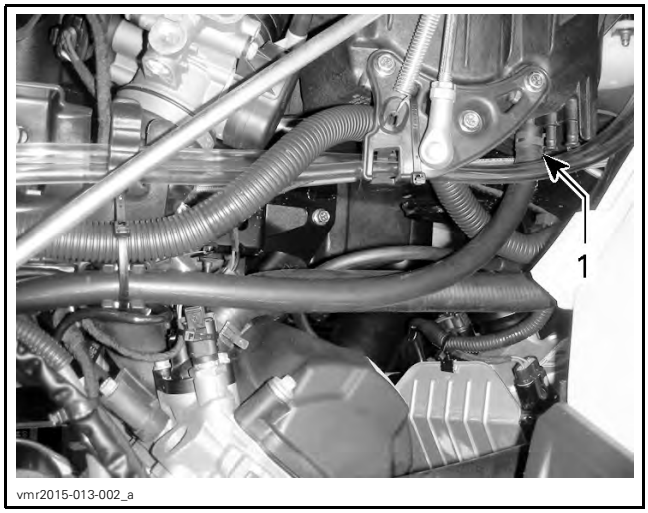

TYPICAL
1. Crankcase vent hose

14. Remove fasteners retaining aft end of air filter housing.

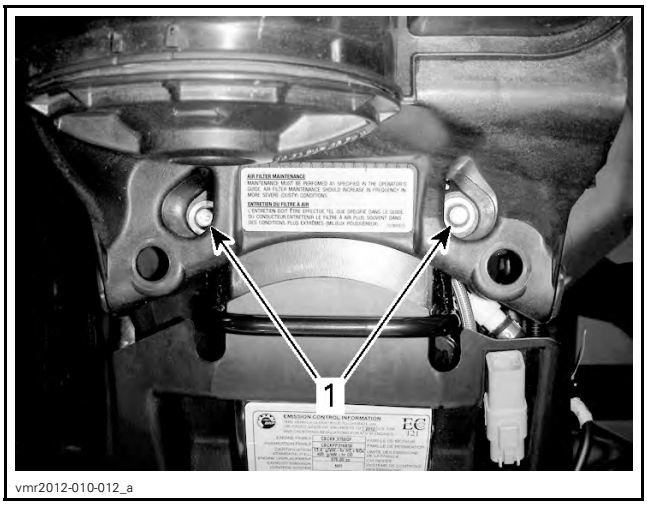

FASTENERS LOCATED NEAR FORWARD SEAT ANCHOR
1. Nuts and washers (2x)

SCREW LOCATED UNDER COOLANT TANK
1. Air filter housing retaining screw

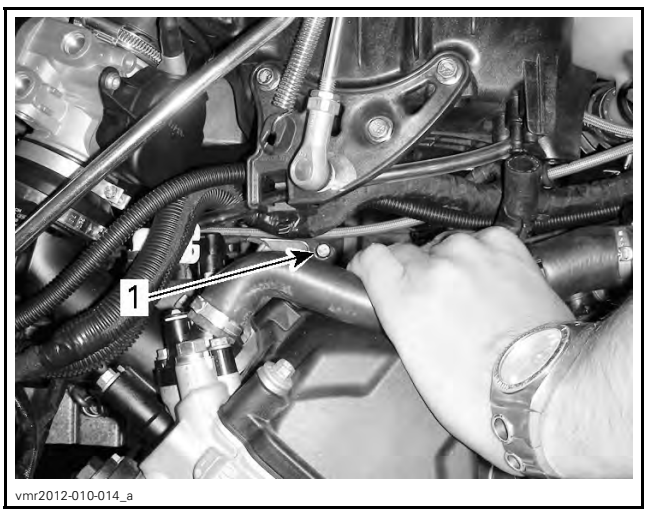

SCREW ACCESSED FROM UNDER SHIFT LEVER
1. Air filter housing retaining screw

15. Detach throttle body from intake adapter and air filter housing.
16. Slightly lift air filter housing upward.

17. Move throttle body aside to make room.

vmr2012-010-015_a

1. Throttle body

18. Remove air filter housing by pulling it towards rear.

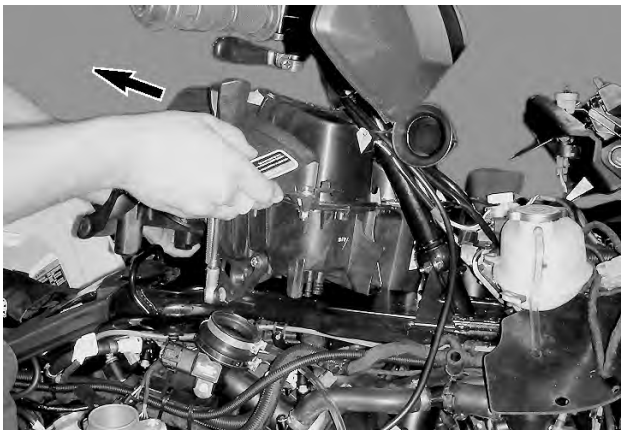

vmr2012-010-016_a

AIR FILTER HOUSING REMOVAL

19. Remove remaining components from air filter housing.

Air Filter Housing Inspection

Check air filter housing for cracks or other damage. Replace if necessary.

Air Filter Housing Installation

Reverse the removal procedure. However, pay attention to the following.

Refer to exploded view for tightening torque.

EXHAUST SYSTEM (TRANSVERSAL MOUNTING)

Single Cylinder Models

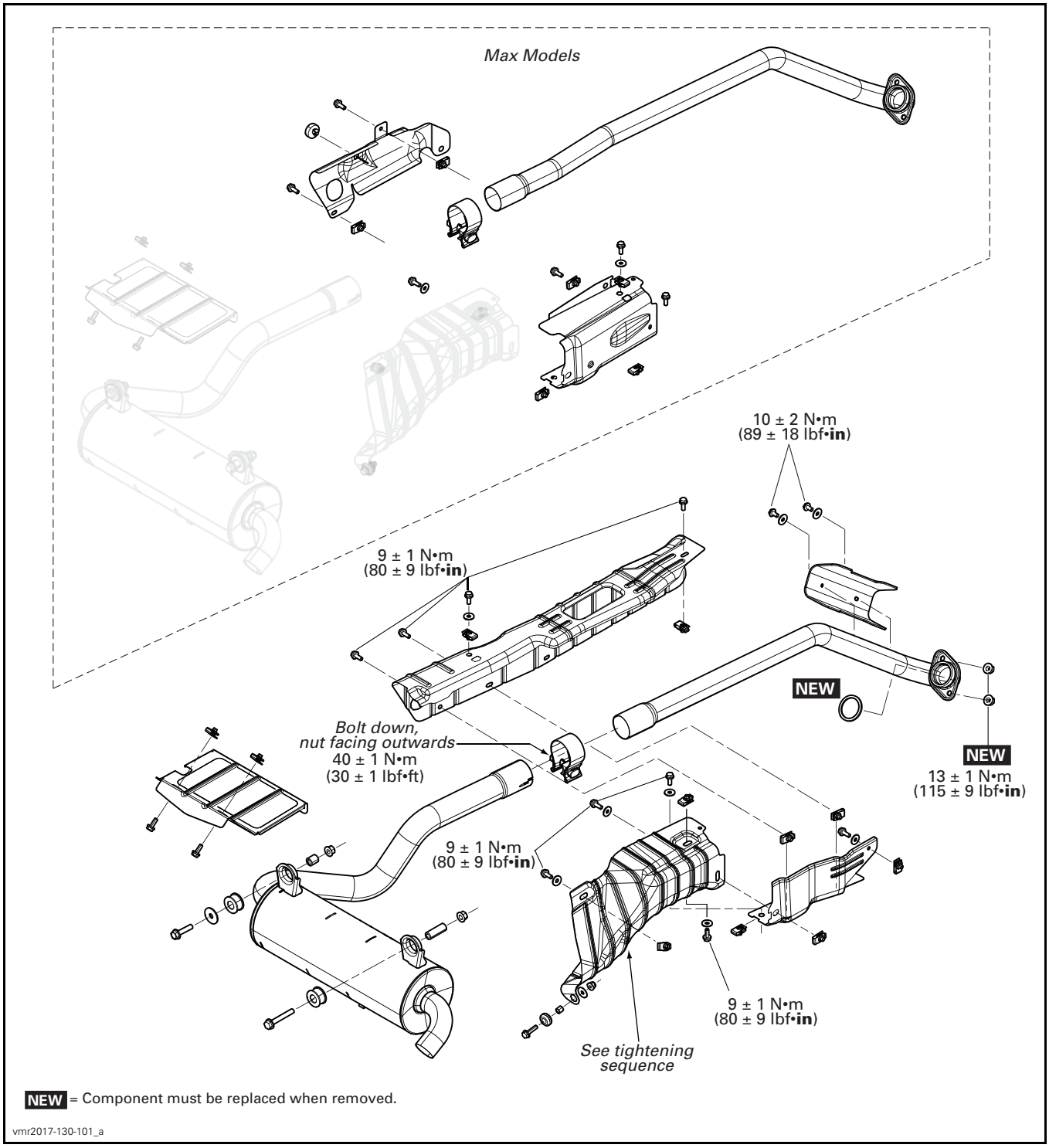

NEW = Component must be replaced when removed.

vmr2017-130-101_a

Twin Cylinder Models

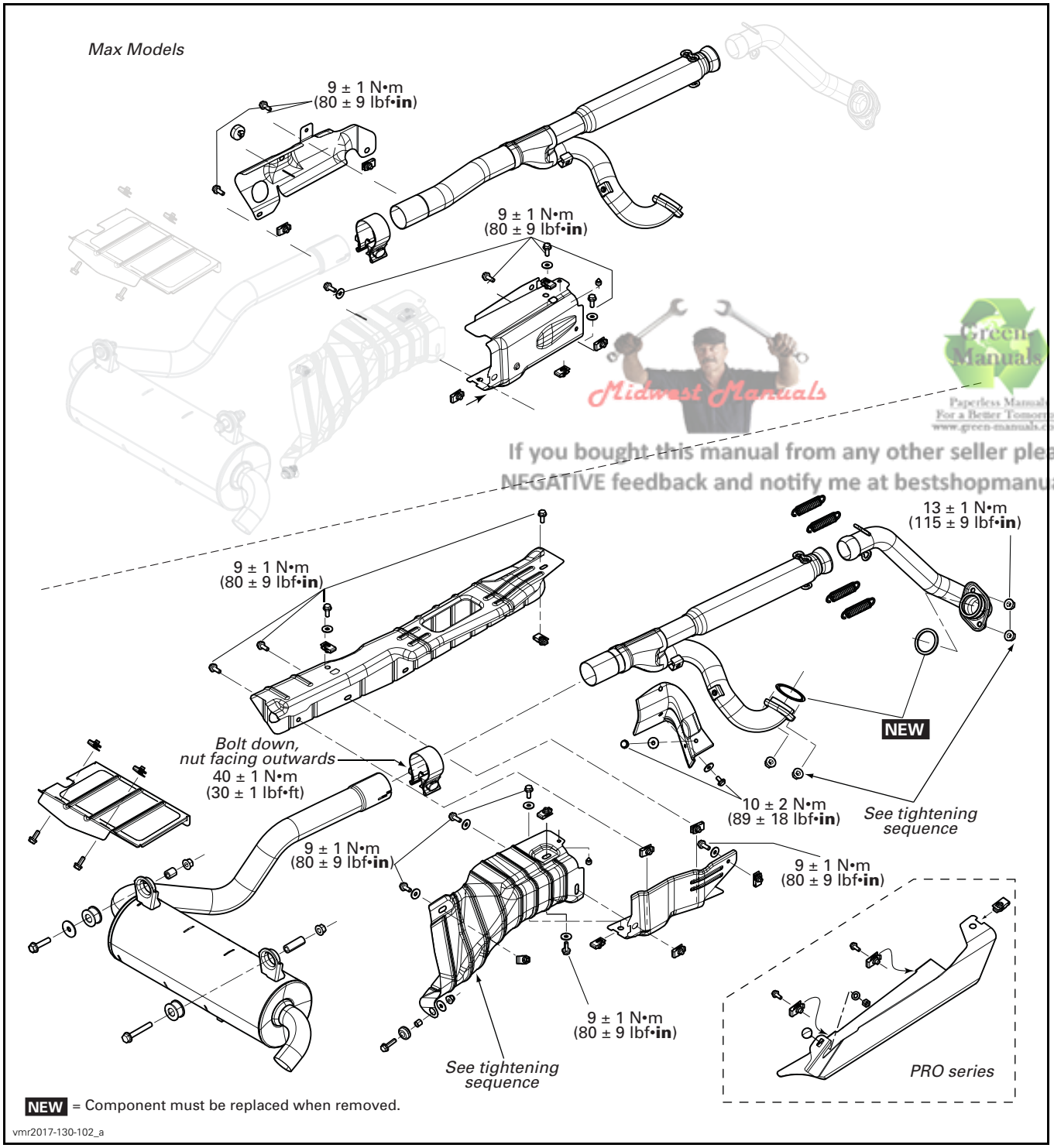

Midwest Manuals
Green Manuals
Paperless Manuals For a Better Tomorrow www.green-manuals.com
If you bought this manual from any other seller please leave them NEGATIVE feedback and notify me at bestshopmanuals@gmail.com

GENERAL

⚠ WARNING

Never touch exhaust system components immediately after the engine has run.

PROCEDURES

MUFFLER

Removing the Muffler

1. Loosen exhaust pipe clamp.

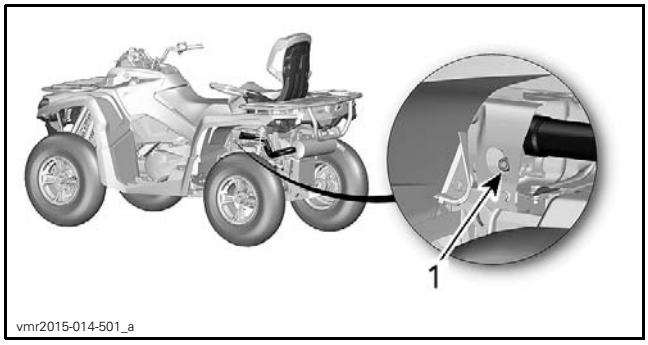

1. Clamp nut

2. Remove muffler retaining bolts.

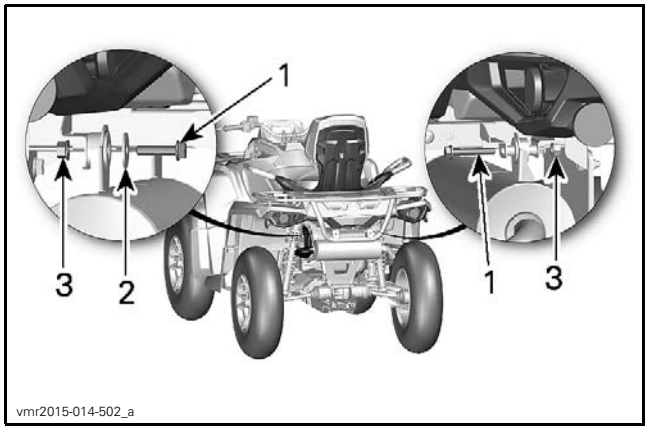

1. Bolt
2. Washer
3. Nut

3. Remove the muffler.

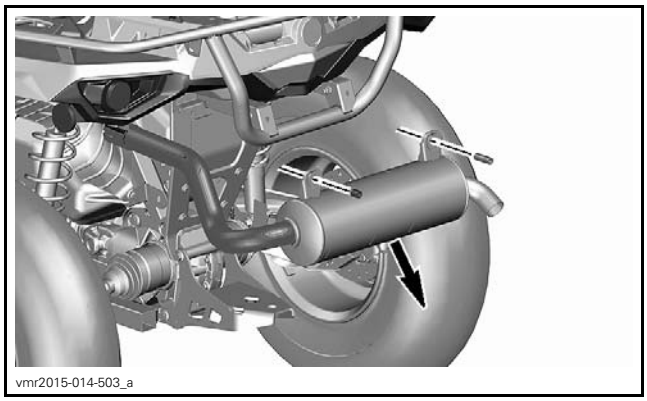

Inspecting the Muffler

Check muffler and cover for cracks or other damages. Replace if necessary.

Check if the rubbers support are brittle, hard or otherwise damaged. Replace if needed.

Installing the Muffler

Reverse the removal procedure.

HEAT SHIELD

Removing the Heat Shield

1. Refer to *BODY* and remove following LH body panels.

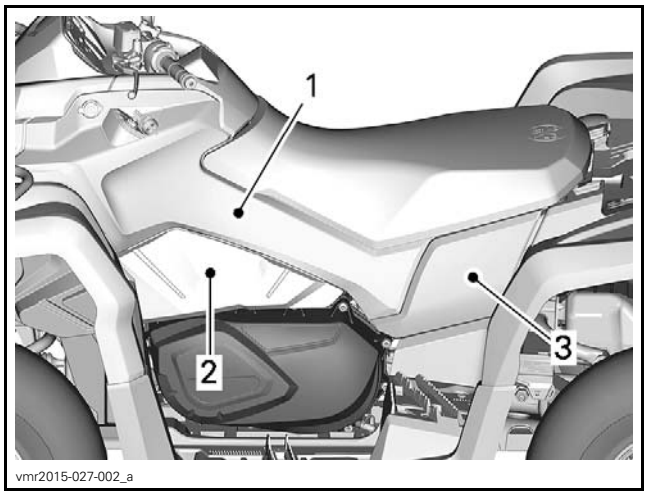

LH SIDE
1. Side panel
2. Side panel extension
3. Rear panel extension (Max models)

2. Remove outer heat shield retaining bolts.

NOTICE **Do not use an impact tool to remove or install heat shield bolts.**

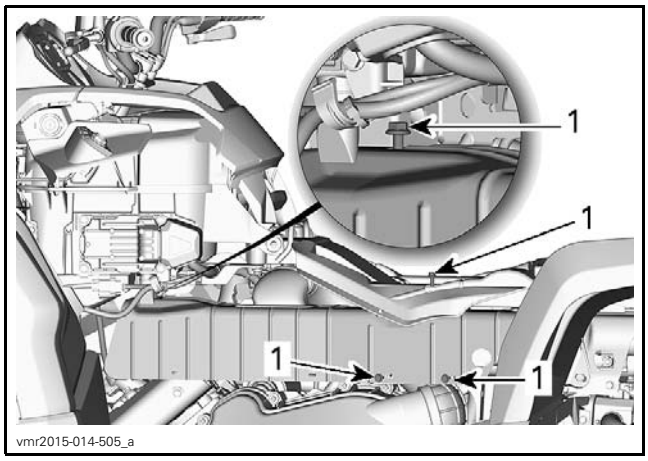

TYPICAL - OUTER HEAT SHIELD - SHORT MODEL SHOWN
1. Heat shield bolts

3. Remove muffler for rear and inner heat shield removal.

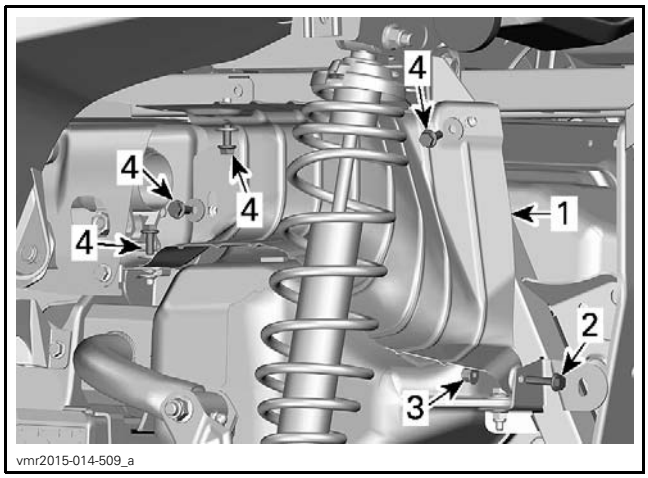

TYPICAL - REAR HEAT SHIELD REMOVAL
1. Rear heat shield
2. M6 x 25 bolt
3. M6 elastic nut
4. M6 x 16 bolts with washers

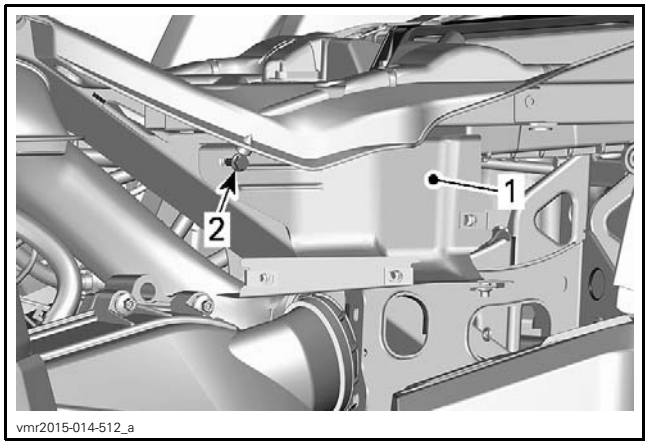

TYPICAL - INNER HEAT SHIELD REMOVAL
1. Inner heat shield
2. M6 x 16 bolts

MAX Models

4. Remove heat shield extension retaining bolts.

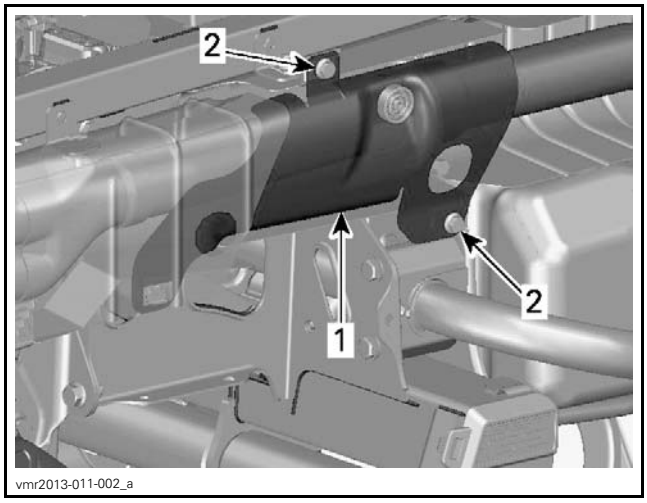

1. Outer heat shield extension
2. M6 x 16 bolts

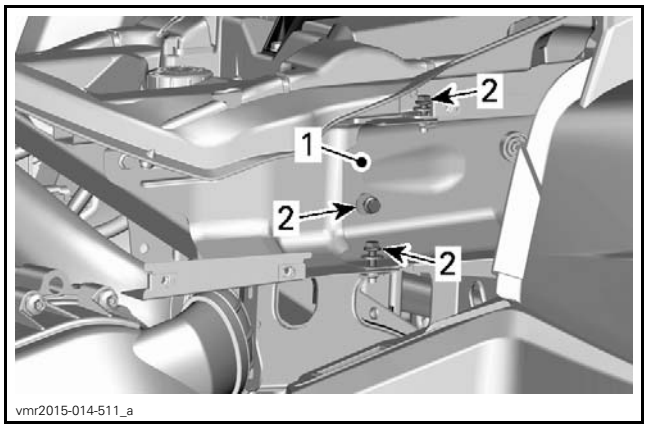

TYPICAL
1. Inner heat shield extension
2. M6 x 16 bolts

Installing the Heat Shield

Reverse the removal procedure. However, pay attention to the following.

Refer to exploded view for torque specifications, and following illustration for rear heat shield tightening sequence.

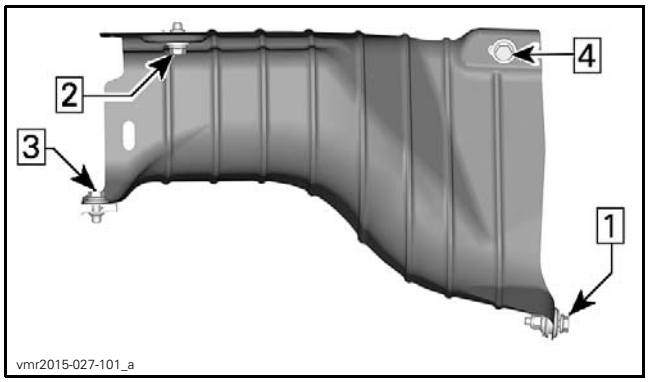

REAR HEAT SHIELD TIGHTENING SEQUENCE

HEAD PIPE (SINGLE CYLINDER MODELS)

Removing the Head Pipe

1. Remove *MUFFLER* See procedure in this subsection.
2. Refer to *BODY* and remove RH and LH inner fender panels.

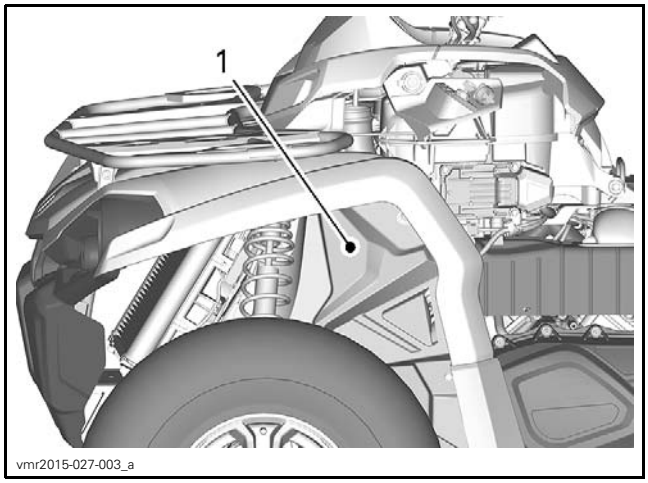

LH ILLUSTRATED, RH SIMILAR
1. Remove inner fender panel (both sides)

3. From RH side of vehicle, remove head pipe retaining nuts.

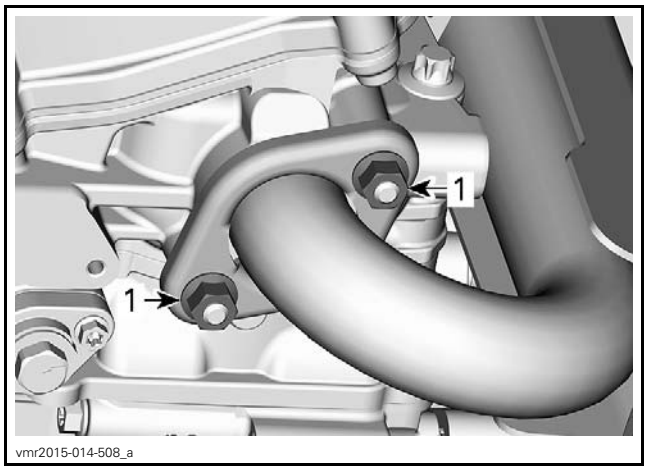

1. Retaining nuts

4. Remove front head pipe from vehicle.

NOTE: The space to remove the front head pipe is limited. Remove it without forcing it.

Inspecting the Head Pipe

Check head pipe for cracks, bending or other damages. Replace if needed.

Installing the Head Pipe

Reverse the removal procedure. However, pay attention to the following.

Install NEW exhaust gasket and pipe exhaust retaining nuts.

TIGHTENING TORQUE	
Head pipe nuts	13 N•m ± 1 N•m (115 lbf•**in** ± 9 lbf•**in**)

Exhaust System Tightening Sequence

Install all nuts and bolts loosely.

Install springs.

Tighten all fasteners as per following tightening sequence. Refer to exploded view for torque specifications.

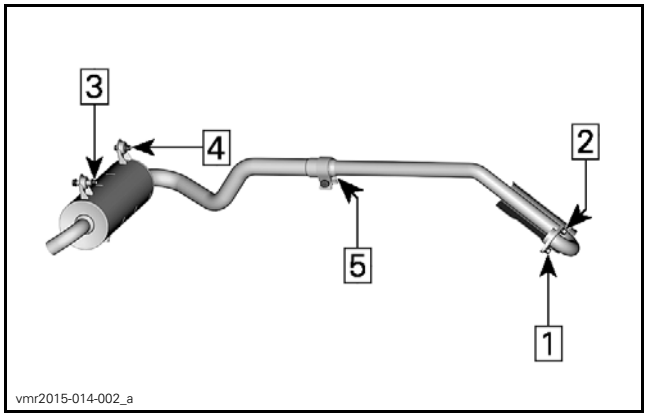

EXHAUST SYSTEM TIGHTENING SYSTEM SEQUENCE

Y-PIPE (TWIN CYLINDER MODELS)

Removing the Y-Pipe

1. Remove *MUFFLER*. See procedure in this subsection.
2. Remove *OUTER HEAT SHIELD*. See procedure in this subsection.
3. Remove the following parts:
   – Springs from head pipe
   – Y-pipe retaining nuts on rear cylinder
   – Y-pipe from vehicle.

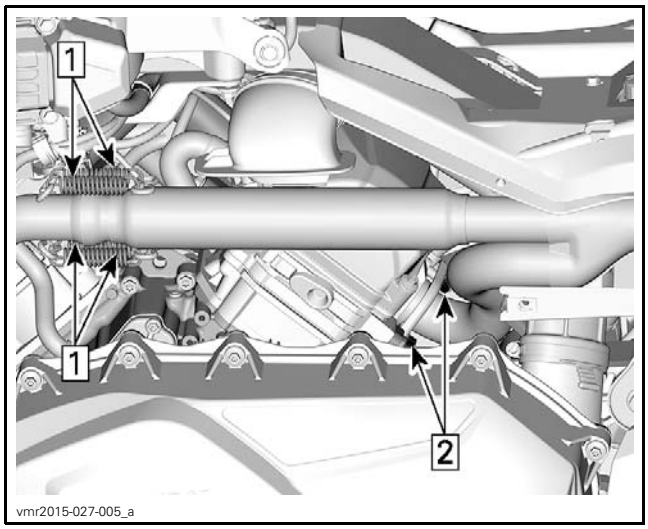

1. Springs (4)
2. Y-pipe retaining nuts on rear cylinder (2)

Inspecting the Y-Pipe

Check Y-pipe for cracks, bending or other damages. Replace if needed.

Installing the Y-Pipe

Reverse the removal procedure. However, pay attention to the following.

Install NEW exhaust gasket and exhaust pipe retaining nuts.

Properly position exhaust pipe before tightening.

Refer to *EXHAUST SYSTEM TIGHTENING SEQUENCE*.

TIGHTENING TORQUE	
Head pipe nuts (rear cylinder)	13 N•m ± 1 N•m (115 lbf•**in** ± 9 lbf•**in**)

HEAD PIPE (TWIN CYLINDER MODELS - FRONT CYLINDER)

Removing the Front Head Pipe

1. Remove *Y-PIPE* See procedure in this subsection.
2. Refer to *BODY* and remove LH and RH inner fenders.

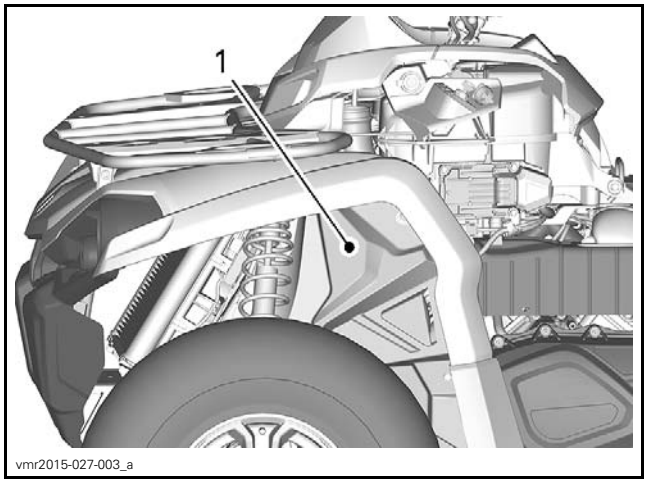

1. Remove inner fender panel (both sides)

3. From RH side of vehicle, remove head pipe retaining nuts.

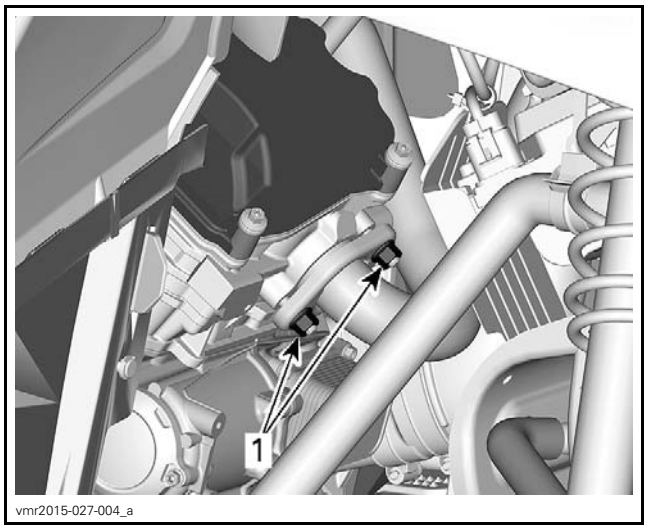

1. Head pipe retaining nuts

4. Remove front head pipe from vehicle.

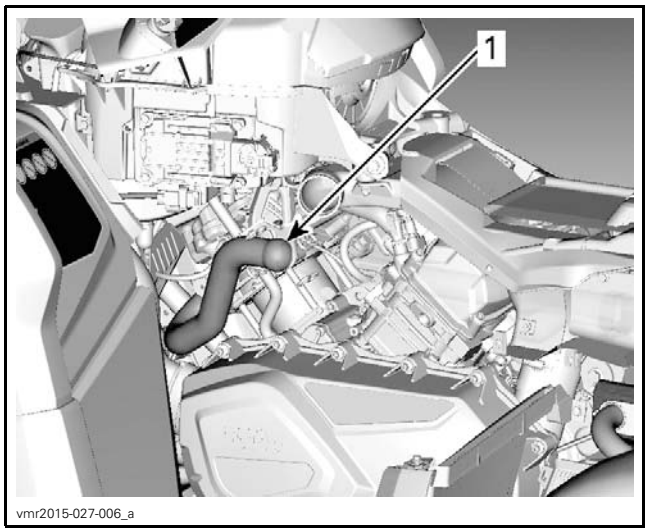

1. Head pipe

NOTE: The space to remove the front head pipe is limited. Remove it without forcing it.

Inspecting the Front Head Pipe

Check head pipe for cracks, bending or other damages. Replace if needed.

Installing the Front Head Pipe

Reverse the removal procedure. However, pay attention to the following.

Install NEW exhaust gaskets and nuts.

Refer to *EXHAUST SYSTEM TIGHTENING SEQUENCE*.

TIGHTENING TORQUE	
Head pipe nuts	13 N•m ± 1 N•m (115 lbf•**in** ± 9 lbf•**in**)

Exhaust System Tightening Sequence

Install all nuts and bolts loosely.

Install springs.

Tighten all fasteners as per following tightening sequence. Refer to exploded view for torque specifications.

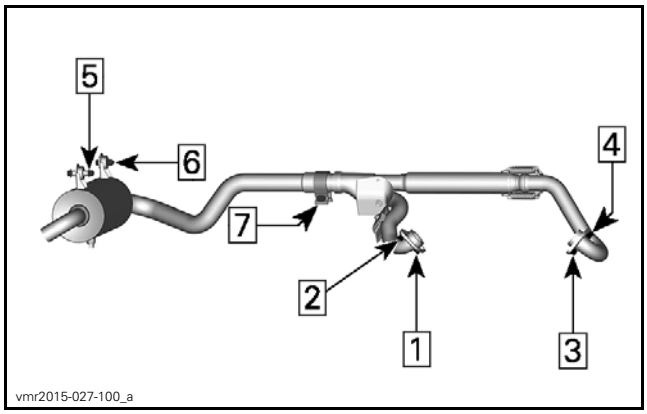

EXHAUST SYSTEM TIGHTENING SYSTEM SEQUENCE

EXHAUST SYSTEM (OUTLANDER XMR)

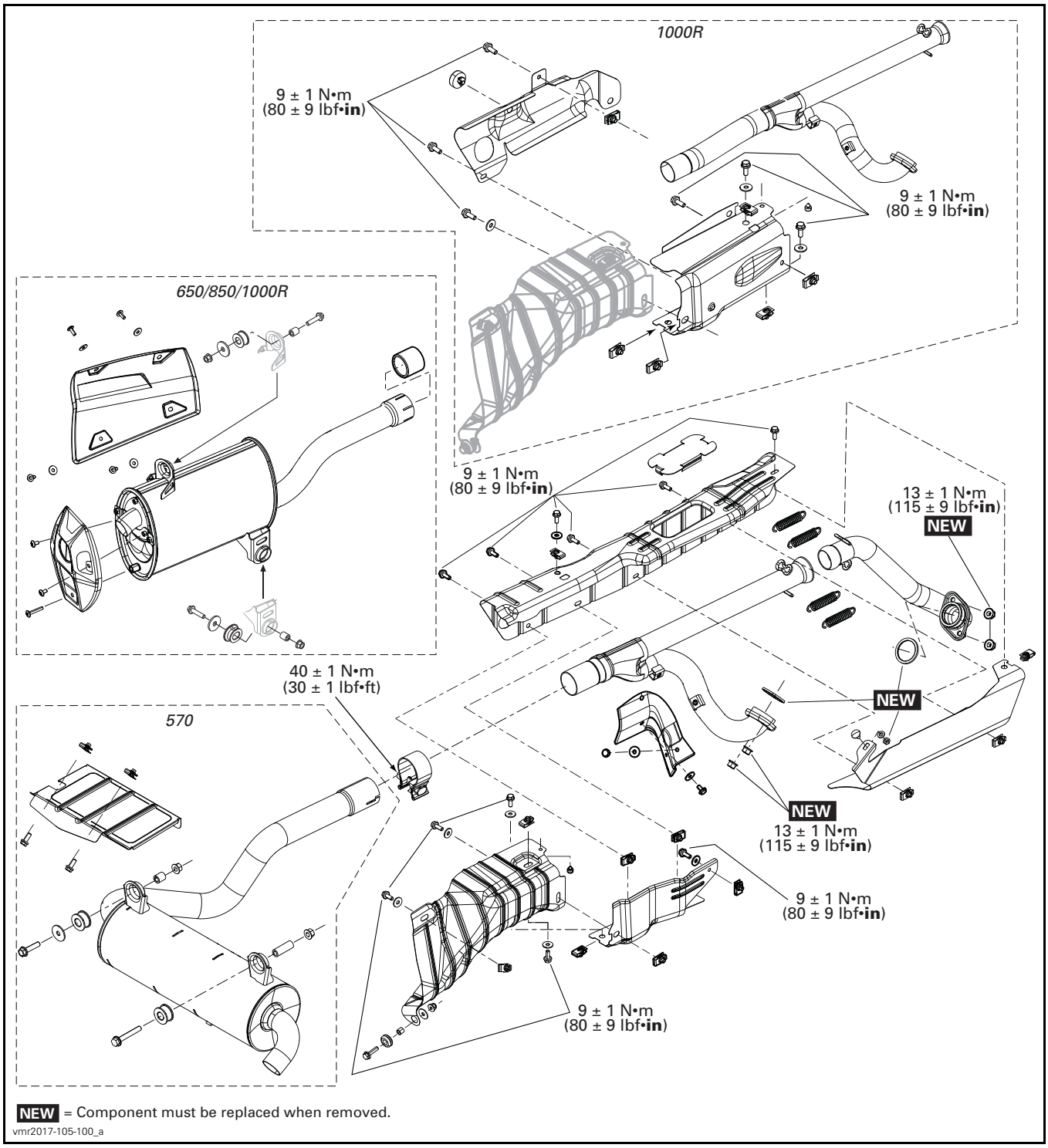

GENERAL

⚠ WARNING

Never touch exhaust system components immediately after the engine has run.

PROCEDURES

MUFFLER

Removing the Muffler

570 Model

1. Loosen exhaust pipe clamp.

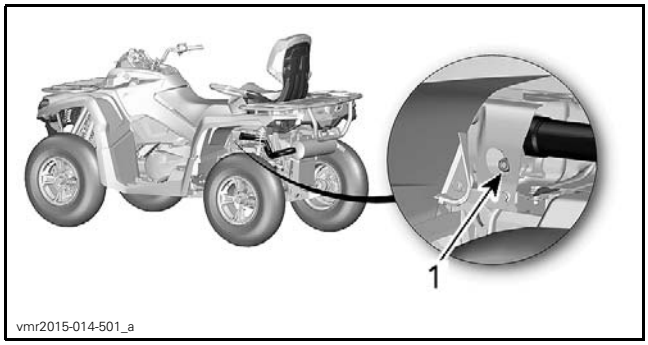

1. Clamp nut

2. Remove muffler retaining bolts.

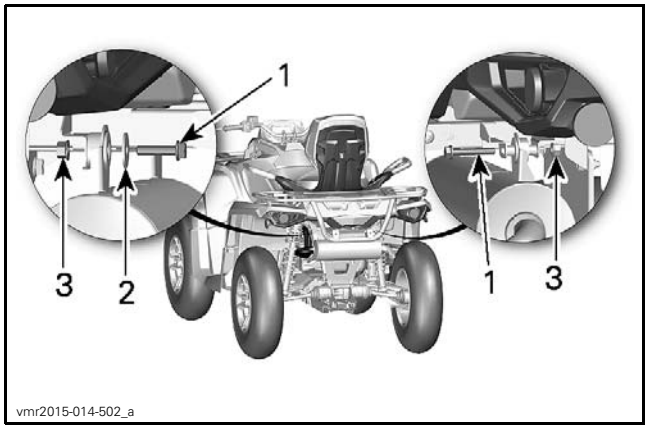

1. Bolt
2. Washer
3. Nut

3. Remove the muffler.

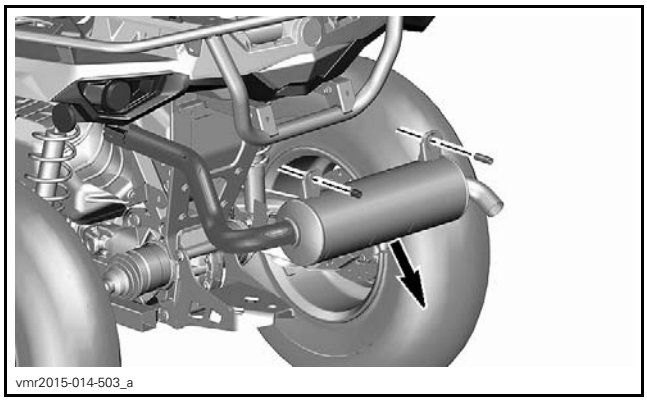

650, 850 and 1000R Models

1. Loosen exhaust pipe clamp.

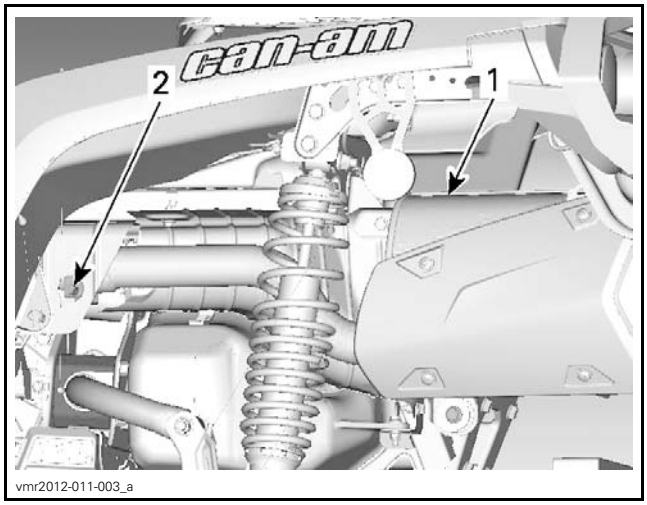

LH SIDE — PARTS REMOVED FOR CLARITY
1. Muffler
2. Loosen clamp

2. Remove muffler retaining bolts.

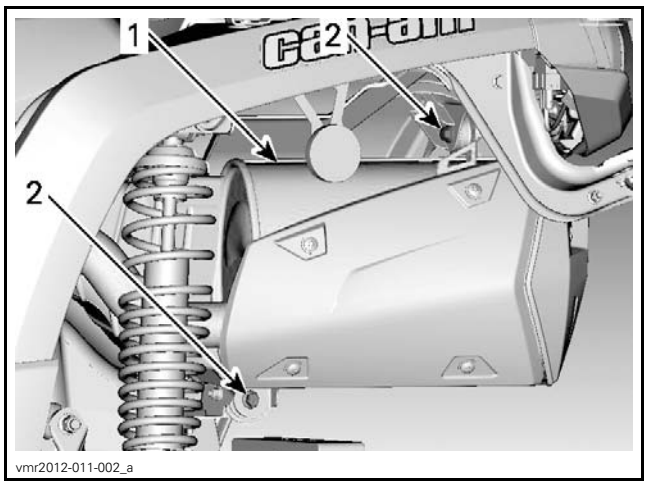

LH SIDE — PARTS REMOVED FOR CLARITY
1. Muffler
2. Remove bolts

3. Remove the muffler.

Inspecting the Muffler

Check muffler and cover for cracks or other damages. Replace if necessary.

Check if the rubbers supports are brittle, hard or otherwise damaged. Replace if needed.

Installing the Muffler

The installation is the reverse of the removal procedure. However, pay attention to the following.

Install a **NEW** exhaust gasket (all models except 570).

TIGHTENING TORQUE	
Exhaust pipe clamp	40 N•m ± 1 N•m (30 lbf•ft ± 1 lbf•ft)

HEAT SHIELD

Removing the Heat Shield

1. Refer to *BODY* and remove following LH body panels.

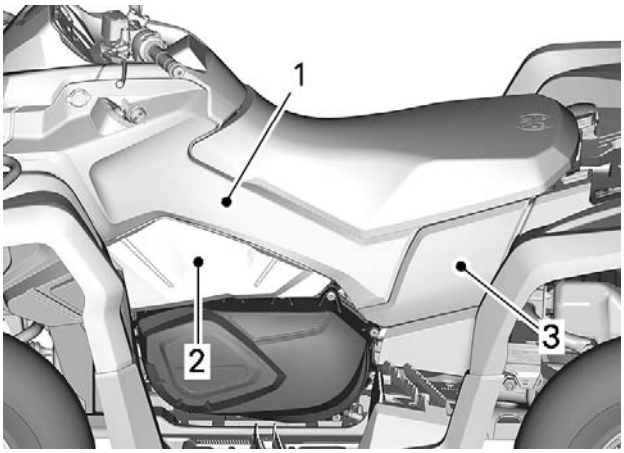

vmr2015-027-002_a

LH SIDE
1. *Side panel*
2. *Side panel extension*
3. *Rear panel extension (Max models)*

2. Remove outer heat shield retaining bolts.

NOTICE **Do not use impact tool to remove or install heat shield bolts.**

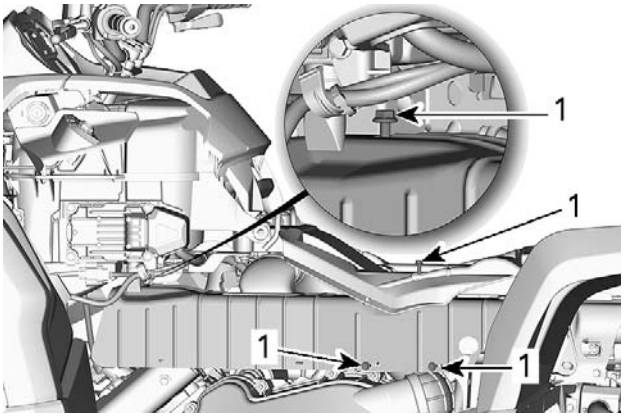

vmr2015-014-505_a

OUTER HEAT SHIELD
1. *Heat shield bolts*

3. Remove muffler for rear and inner heat shield removal.

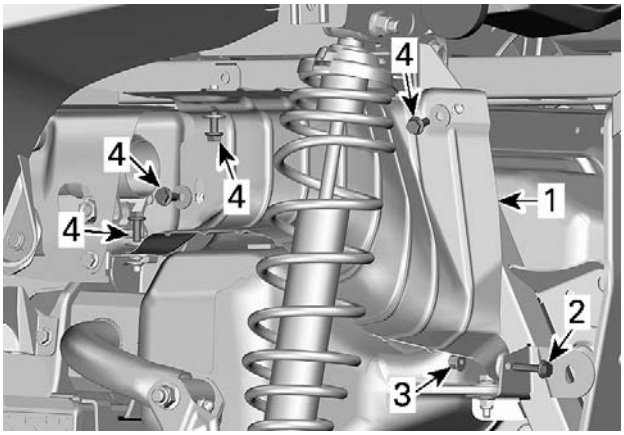

vmr2015-014-509_a

REAR HEAT SHIELD REMOVAL
1. *Rear heat shield*
2. *M6 x 25 bolt*
3. *M6 elastic nut*
4. *M6 x 16 bolts with washers*

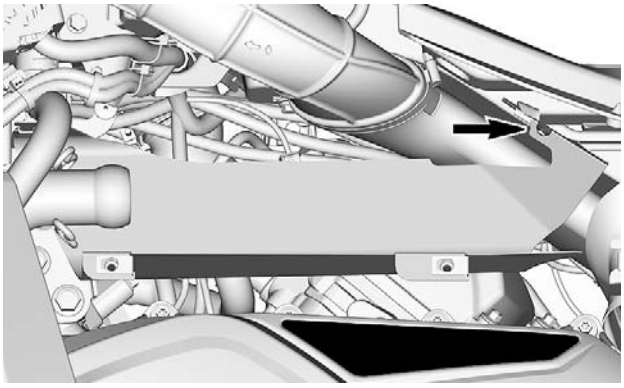
vmr2016-308-001_a

FRONT INNER HEAT SHIELD

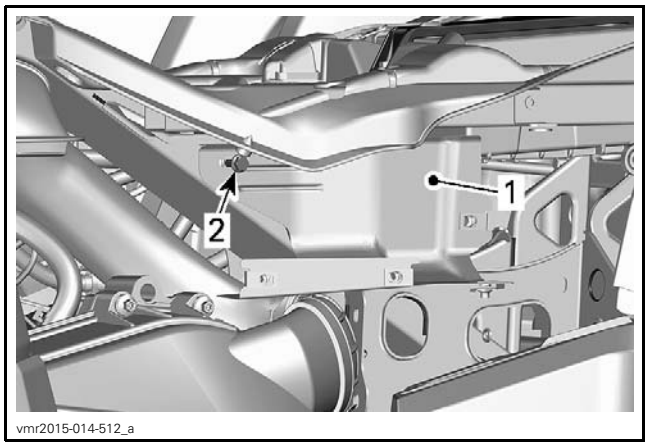

INNER HEAT SHIELD
1. *Inner heat shield*
2. *M6 x 16 bolts*

1000R model

4. Remove heat shield extension retaining bolts.

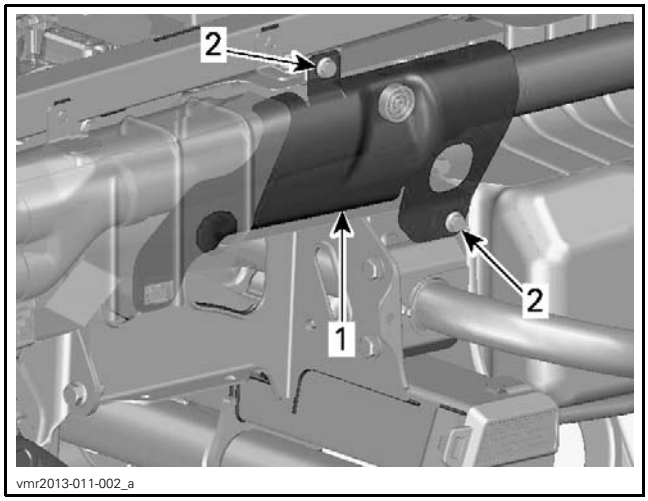

1. *Outer heat shield extension*
2. *M6 x 16 bolts*

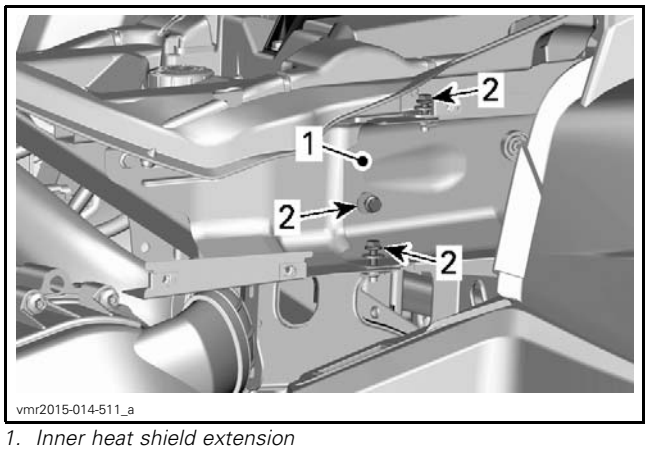

1. *Inner heat shield extension*
2. *M6 x 16 bolts*

Installing the Heat Shield

Reverse the removal procedure. However, pay attention to the following.

Refer to exploded view for torque specifications, and following illustration for rear heat shield tightening sequence.

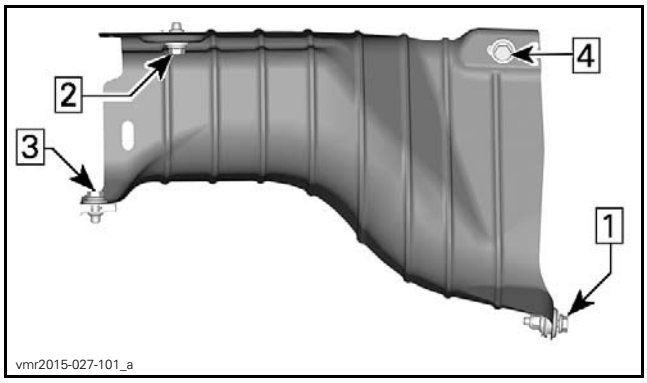

REAR HEAT SHIELD TIGHTENING SEQUENCE

Y-PIPE

Removing the Y-Pipe

1. Remove *MUFFLER*. See procedure in this subsection.
2. Remove *OUTER HEAT SHIELD*. See procedure in this subsection.
3. Remove the following parts:
   - Springs from head pipe
   - Y-pipe retaining nuts on rear cylinder
   - Y-pipe from vehicle.

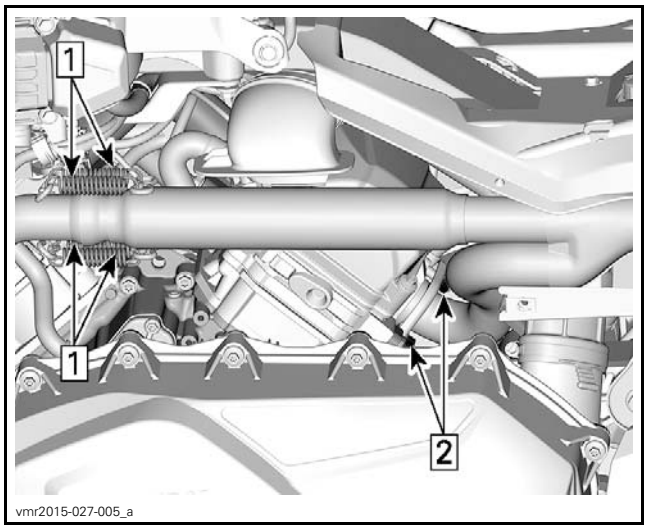

TYPICAL
1. *Springs (4)*
2. *Y-pipe retaining nuts on rear cylinder (2)*

Inspecting the Y-Pipe

Check Y-pipe for cracks, bending or other damages. Replace if needed.

Installing the Y-Pipe

Reverse the removal procedure. However, pay attention to the following.

Install **NEW** exhaust gasket and exhaust pipe retaining nuts.

Properly position exhaust pipe before tightening.

Refer to *EXHAUST SYSTEM TIGHTENING SEQUENCE*.

TIGHTENING TORQUE	
Head pipe nuts (rear cylinder)	13 N•m ± 1 N•m (115 lbf•**in** ± 9 lbf•**in**)

HEAD PIPE (FRONT CYLINDER)

Removing the Front Head Pipe

1. Remove *Y-PIPE* See procedure in this subsection.
2. Refer to *BODY* and remove LH and RH inner fenders.

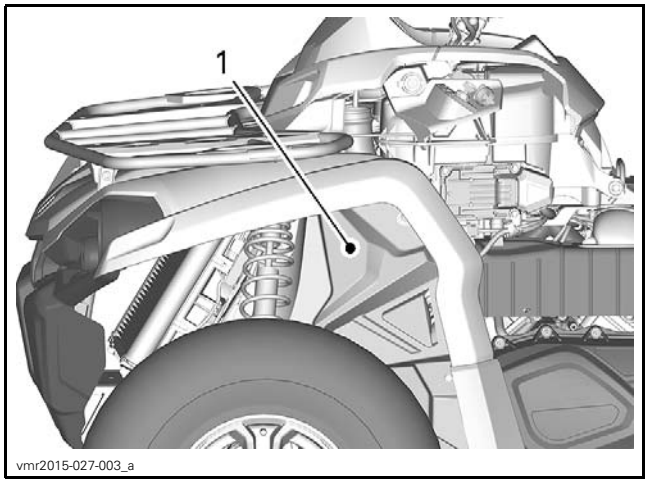

1. Remove inner fender panel (both sides)

3. From RH side of vehicle, remove head pipe retaining nuts.

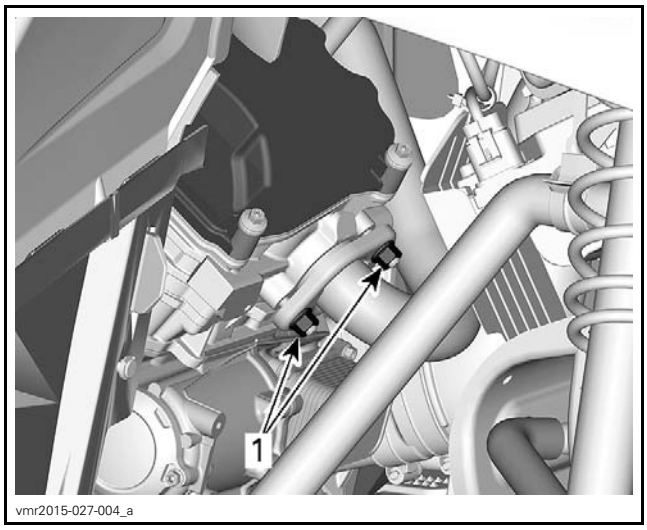

1. Head pipe retaining nuts

4. Remove front head pipe from vehicle.

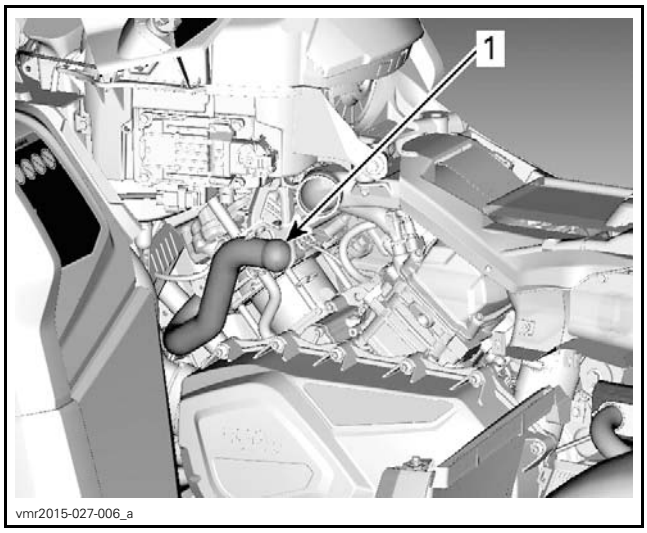

1. Head pipe

NOTE: The space to remove the front head pipe is limited. Remove it without forcing it.

Inspecting the Front Head Pipe

Check head pipe for cracks, bending or other damages. Replace if needed.

Installing the Front Head Pipe

Reverse the removal procedure. However, pay attention to the following.

Install **NEW** exhaust gaskets and nuts.

Refer to *EXHAUST SYSTEM TIGHTENING SEQUENCE*.

TIGHTENING TORQUE	
Head pipe nuts	13 N•m ± 1 N•m (115 lbf•**in** ± 9 lbf•**in**)

Exhaust System Tightening Sequence

Install all nuts and bolts loosely.

Install springs.

Tighten all fasteners as per following tightening sequence. Refer to exploded view for torque specifications.

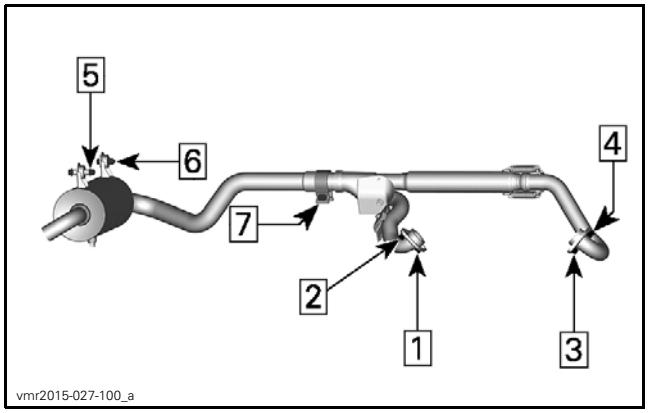

570 - TIGHTENING SEQUENCE

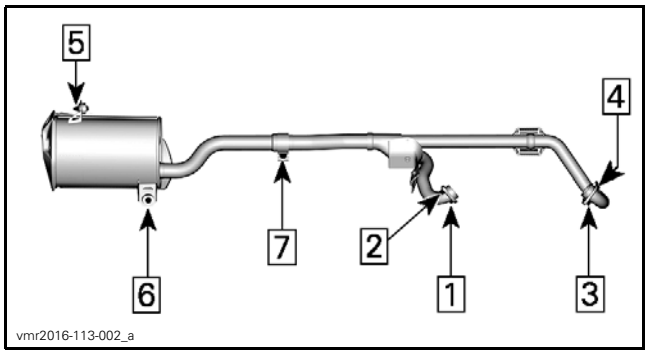

650, 850 AND 1000R - TIGHTENING SEQUENCE

LUBRICATION SYSTEM

SERVICE TOOLS

Description	Part Number	Page
ADAPTER HOSE	529 035 652	85
DISCONNECT TOOL	529 035 714	85
PRESSURE GAUGE	529 035 709	85

SERVICE PRODUCTS

Description	Part Number	Page
LOCTITE 243 (BLUE)	293 800 060	87

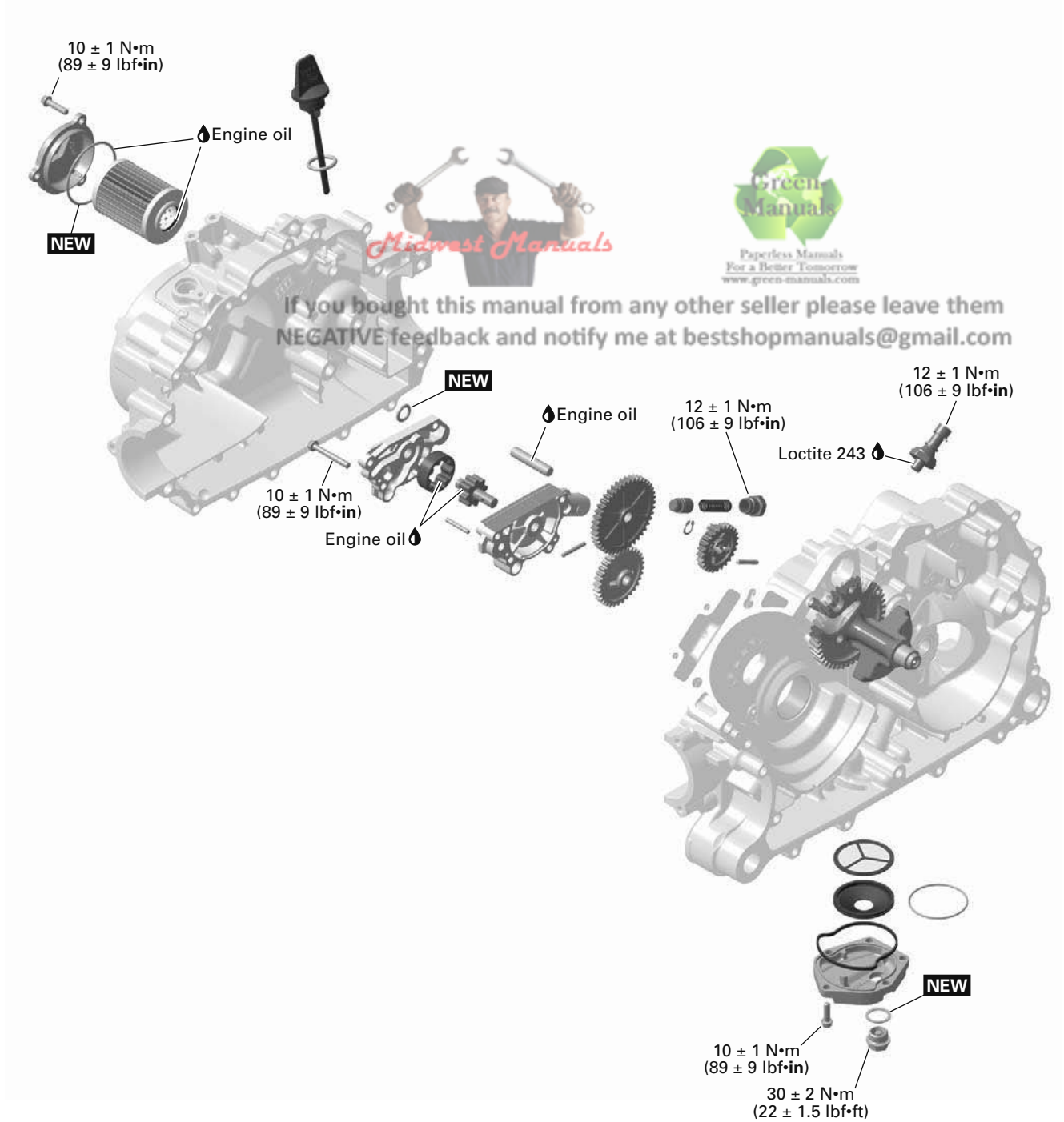

Midwest Manuals
Green Manuals
Paperless Manuals
For a Better Tomorrow
www.green-manuals.com
If you bought this manual from any other seller please leave them NEGATIVE feedback and notify me at bestshopmanuals@gmail.com

NEW = Component must be replaced when removed.

vmr2015-015-001_a

INSPECTION

ENGINE OIL PRESSURE

NOTE: The engine oil pressure test should be done with a warm engine (100°C (212°F)) and the recommended oil.

Remove the oil pressure switch, refer to *OIL PRESSURE SWITCH* in this subsection.

Install the pressure test gauge with the proper adapter hose in the oil pressure switch bore.

REQUIRED TOOL	
PRESSURE GAUGE (P/N 529 035 709)	
ADAPTER HOSE (P/N 529 035 652)	

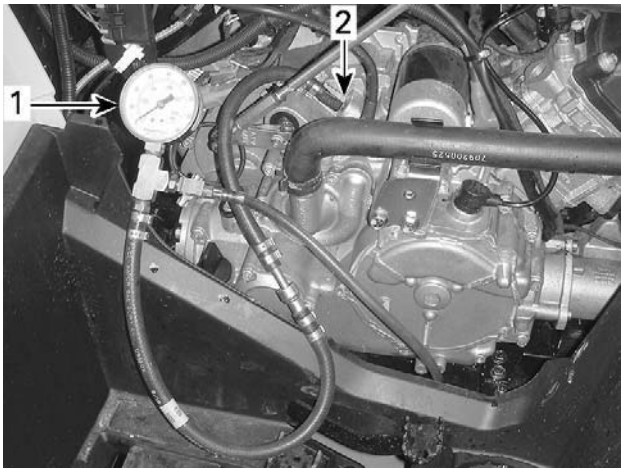

vmr2015-015-101_a

1. *Pressure test gauge assembly*
2. *Hose adapter installed in oil pressure switch bore*

Start engine and measure oil pressure as per following table.

The engine oil pressure should be within the following values.

PRESSURE	1300 RPM	6000 RPM
Minimal	70 kPa (10 PSI)	350 kPa (51 PSI)
Nominal	300 kPa (44 PSI)	450 kPa (65 PSI)
Maximal	550 kPa (80 PSI)	700 kPa (102 PSI)

If the engine oil pressure is out of specifications, check the points described in *TROUBLESHOOTING* in this subsection.

Remove oil pressure gauge and adapter hose.

NOTE: To remove adapter hose from oil pressure gauge, use the disconnect tool.

REQUIRED TOOL	
DISCONNECT TOOL (P/N 529 035 714)	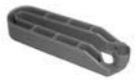

Reinstall the oil pressure switch.

TROUBLESHOOTING

LOW OR NO OIL PRESSURE

1. **Oil level is too low**
   - *Refill engine with recommended engine oil. Refer to OIL LEVEL VERIFICATION in the PERIODIC MAINTENANCE PROCEDURES subsection.*
   - *Check for high oil consumption, refer to HIGH OIL CONSUMPTION in the TROUBLESHOOTING subsection.*
   - *Check for engine oil leaks. For leak indicator hole, refer to COOLING SYSTEM INSPECTION in the PERIODIC MAINTENANCE PROCEDURES subsection. Repair if necessary.*
2. **Use of unsuitable engine oil type.**
   - *Replace engine oil by the recommended engine oil.*
3. **Clogged oil filter.**
   - *Replace oil and oil filter at the same time.*
4. **Defective oil pressure switch.**
   - *Test oil pressure switch, see procedure in this subsection.*
5. **Defective or worn oil pump.**
   - *Check oil pump, see procedure in this subsection.*
6. **Defective engine oil pressure regulator.**
   - *Check engine oil pressure regulator, see procedure in this subsection.*
7. **Worn plain bearings in crankcase.**
   - *Check plain bearings clearance, refer to BOTTOM END subsection.*
8. **Clogged engine oil strainer.**
   - *Clean engine oil strainer, see procedure in this subsection.*

OIL CONTAMINATION

1. **Defective water pump seal ring or rotary seal.**
   - *Check for oil or coolant leak from indicator hole near water pump, refer to COOLING SYSTEM INSPECTION in the PERIODIC MAINTENANCE PROCEDURES subsection. Replace seals if necessary.*

2. Cylinder head or cylinder base gasket leak.
   - *Retighten cylinder head to specified torque, refer to TOP END subsection. Replace gasket if tightening does not solve the problem.*
3. Engine internal damage.
   - *Repair engine.*

HIGH OIL CONSUMPTION

1. Leaking breather oil seal.
   - *Check if the oil seal of the breather (underneath PTO side ball bearing of balancer shaft) is brittle, hard or damaged. Refer to BOTTOM END subsection.*
2. Valve stem seals worn or damaged.
   - *Replace valve stem seals. Refer to TOP END subsection.*
3. Worn piston rings (blue exhaust smoke).
   - *Replace piston rings. Refer to TOP END subsection.*

PROCEDURES

OIL PRESSURE SWITCH (OPS)

Oil Pressure Switch Location

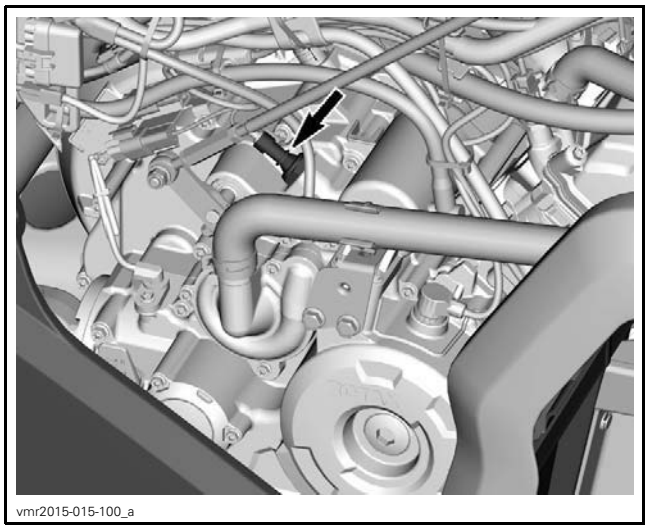

OPS LOCATION - RIGHT SIDE OF ENGINE

Oil Pressure Switch Access

Refer to *BODY* subsection and remove the following components:

– Seat
– Console
– RH side panel and extension.

Oil Pressure Switch Activation

The oil pressure switch activates when the engine oil pressure is lower than following specified pressure range.

OIL PRESSURE SWITCH ACTIVATION RANGE
30 kPa ± 10 kPa (4.35 PSI ± 1.45 PSI)

To check the function of the oil pressure switch, an oil pressure test has to be performed. Refer to *ENGINE OIL PRESSURE* in this subsection.

If the engine oil pressure is good, perform the oil pressure switch resistance test.

Oil Pressure Switch Resistance Test

Disconnect the connector from the oil pressure switch.

Using a multimeter set to Ω, check the OPS resistance as per following table.

OPS CONNECTOR		ENGINE NOT RUNNING	ENGINE NOT RUNNING
PIN		RESISTANCE (Ω)	
1	Engine ground	Close to 0 Ω (normally closed switch)	Close to 0 Ω (normal closed switch

OPS CONNECTOR		ENGINE NOT RUNNING	ENGINE RUNNING
PIN		RESISTANCE (Ω)	
1	Engine ground	Close to 0 Ω (normally closed switch)	Infinitely high when pressure reaches 30 kPa ± 10 kPa (4.35 PSI ± 1.45 PSI)

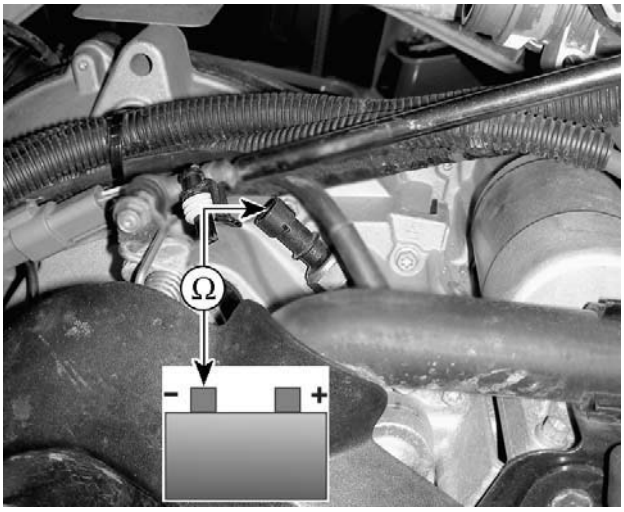

vmr2008-124-104_a

TYPICAL

If resistance values are incorrect, replace the oil pressure switch.

If the values are correct, check the continuity of the wiring harness.

Disconnect the ECM connector and check continuity of circuit between switch and ECM.

OPS CIRCUIT		**MEASUREMENT**
OPS PIN	ECM pin	Resistance (Ω) @ 20°C (68°F)
1	E2	Close to 0 Ω

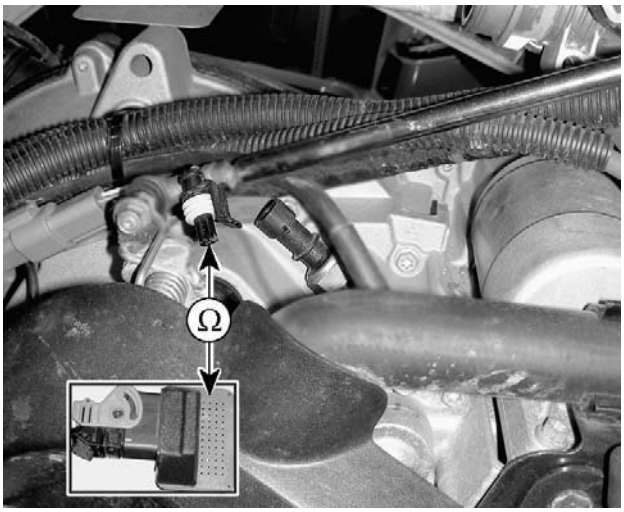

vmr2008-124-104_b

TYPICAL

Oil Pressure Switch Removal

Disconnect and unscrew oil pressure switch.

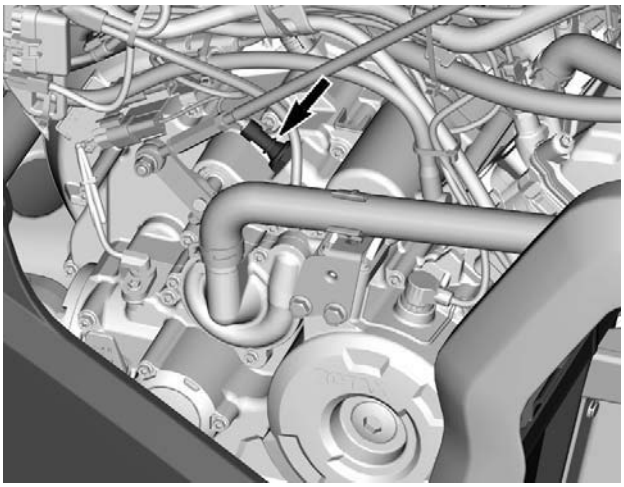
vmr2015-015-100_a

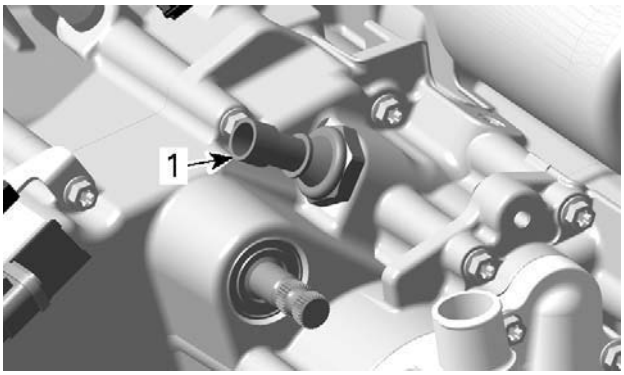

vmr2015-015-002_a

1. *Oil pressure switch*

Oil Pressure Switch Installation

Tighten oil pressure switch to specification.

OIL PRESSURE SWITCH	
Service product	LOCTITE 243 (BLUE) (P/N 293 800 060)
Tightening torque	12 N•m ± 1 N•m (106 lbf•**in** ± 9 lbf•**in**)

Plug switch connector.

OIL STRAINER

Oil Strainer Access

Engine must be lifted or removed to access the oil strainer. Refer to the *ENGINE REMOVAL AND INSTALLATION* subsection.

Oil Strainer Removal

Drain engine oil, refer to *ENGINE OIL CHANGE* in the *PERIODIC MAINTENANCE PROCEDURES* subsection.

Remove:
- Retaining screws
- Oil strainer cover
- Gasket.

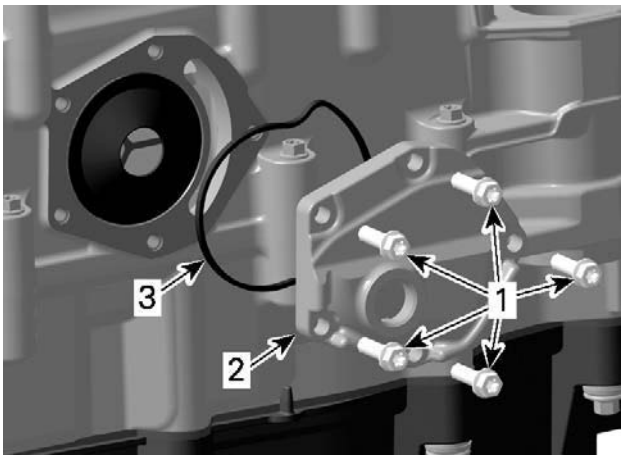

vmr2015-015-018_a

1. *Retaining screws*
2. *Oil strainer cover*
3. *Gasket*

Remove:
- Oil collector with O-ring
- Oil strainer.

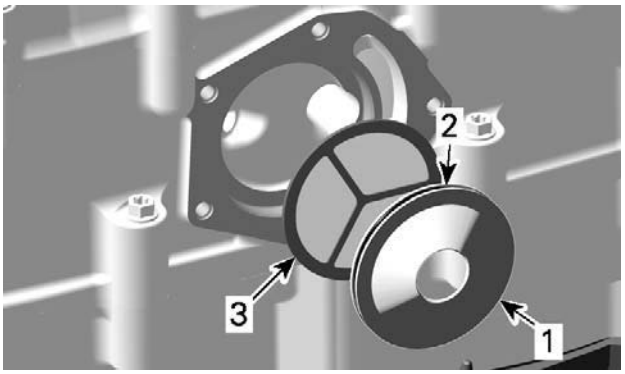

vmr2015-015-004_a

1. *Oil collector*
2. *O-ring*
3. *Oil strainer*

Oil Strainer Cleaning and Inspection

Clean oil strainer with a part cleaner then use an air gun to dry it.

⚠ WARNING

Always wear eye protector. Chemicals can cause a rash break out in and an injury to your eyes.

Check engine oil strainer for cracks or other damage. Replace if damaged.

Inspect O-ring on the oil collector and rubber ring on the oil strainer cover if brittle, cracked or hard. Replace the defective parts.

Clean both contact surfaces of oil strainer cover.

Check and clean the oil inlet and outlet area for dirt and other contaminations.

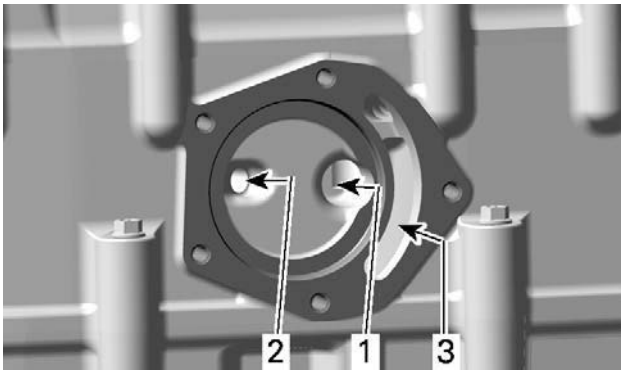

vmr2015-015-005_a

1. *Oil inlet to the oil pump*
2. *Oil return from the oil pressure regulator system*
3. *Oil return from the engine oil circulation*

Oil Strainer Installation

For installation, reverse the removal procedure.

Tighten oil strainer cover screws as per following sequence.

OIL STRAINER COVER SCREWS	
Tightening torque	10 N•m ± 1 N•m (89 lbf•**in** ± 9 lbf•**in**)

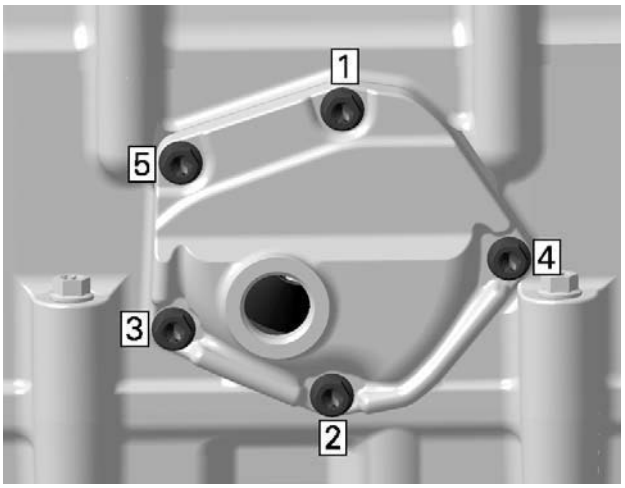

vmr2015-015-003_a

TIGHTENING SEQUENCE

Tighten magnetic drain plug to specification.

MAGNETIC DRAIN PLUG	
Gasket ring	NEW
Tightening torque	30 N•m ± 2 N•m (22 lbf•ft ± 1 lbf•ft)

Reinstall engine in vehicle, refer to *ENGINES REMOVAL AND INSTALLATION* subsection.

Refill engine at the proper level with the recommended oil, refer to *PERIODIC MAINTENANCE PROCEDURES* subsection.

Start engine and let idle for a few minutes.

Ensure oil filter and magnetic drain plug areas are not leaking.

Stop engine.

Wait a while to allow oil to flow down to crankcase then check oil level. Refill as necessary.

ENGINE OIL PRESSURE REGULATOR

Oil Pressure Regulator Location

The oil pressure regulator is located in the oil pump housing (engine MAG side, behind magneto cover).

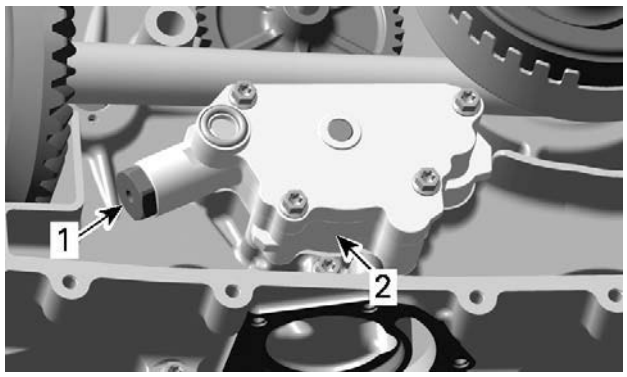

1. *Oil pressure regulator plug*
2. *Oil pump housing*

NOTE: The oil pressure regulator system works when the oil pressure exceeds 500 kPa (73 PSI).

Oil Pressure Regulator Removal

Remove:

– Engine from vehicle (refer to *ENGINE REMOVAL/INSTALLATION* subsection)
– Water pump cover (refer to *COOLING SYSTEM* subsection)
– Magneto cover (refer to *MAGNETO AND STARTER* subsection).

Remove:

– Oil pressure regulator plug
– Compression spring
– Valve piston.

NOTE: Oil pressure regulator plug on oil pump housing is spring loaded.

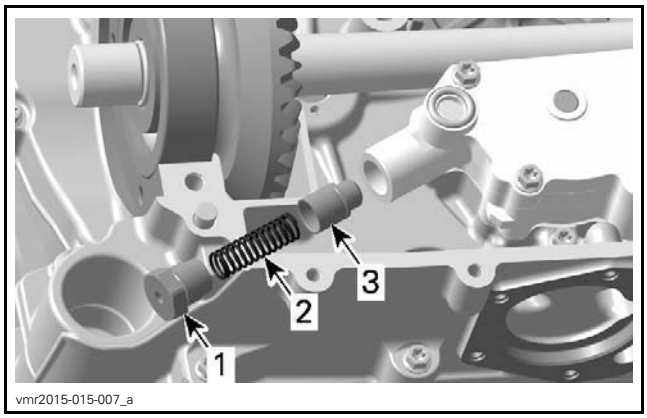

1. *Oil pressure regulator plug*
2. *Compression spring*
3. *Valve piston*

Oil Pressure Regulator Inspection

Inspect valve piston for scoring or other damages.

Check compression spring for free length.

COMPRESSION SPRING FREE LENGTH	
NEW NOMINAL	64 mm (2.52 in)
SERVICE LIMIT	62 mm (2.441 in)

Replace both parts if important wear or damage are present.

Clean bore and threads in the oil pump housing from metal shavings and other contaminations.

Oil Pressure Regulator Installation

For installation, reverse the removal procedure.

Tighten oil pressure regulator plug screw to specification.

OIL PRESSURE REGULATOR PLUG SCREW	
Tightening torque	12 N•m ± 1 N•m (106 lbf•**in** ± 9 lbf•**in**)

OIL PUMP

The oil pump is located on the engine MAG side (refer to *ENGINE OIL PRESSURE REGULATOR*).

Oil Pump Removal

Remove:
- Engine from vehicle (refer to *ENGINE REMOVAL AND INSTALLATION* subsection)
- Water pump cover (refer to *COOLING SYSTEM* subsection)
- Magneto cover (refer to *MAGNETO AND STARTER* subsection).

Remove only if necessary:
- Retaining ring (discard it)
- Drive gear
- Needle pin.

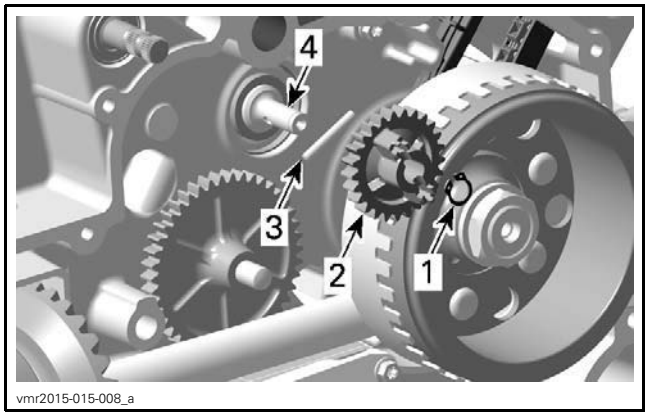

1. *Retaining ring (discard)*
2. *Drive gear*
3. *Needle pin*
4. *Balancer shaft*

NOTICE **Never use the retaining ring a second time. Always replace by a NEW one.**

Remove only if necessary:
- Pin
- Intermediate gear.

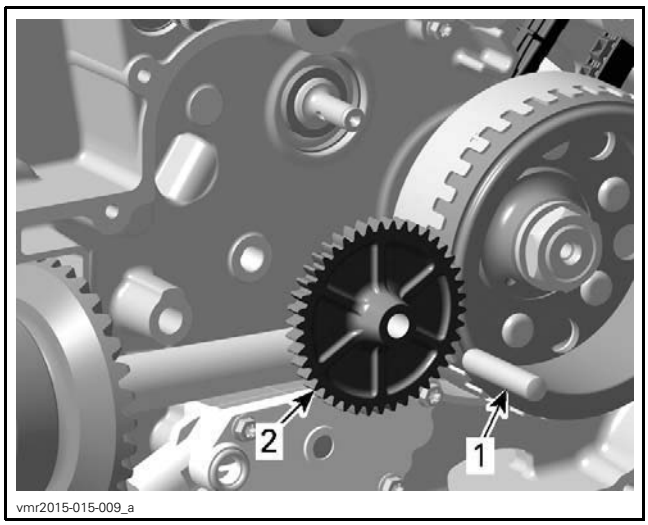

1. *Pin*
2. *Intermediate gear*

Remove:
- Oil pump cover screws
- Oil pump module with O-ring.

NOTICE **Do not loose oil pump cover O-ring.**

NOTICE **Pay attention not to drop the dowel pins inside the engine.**

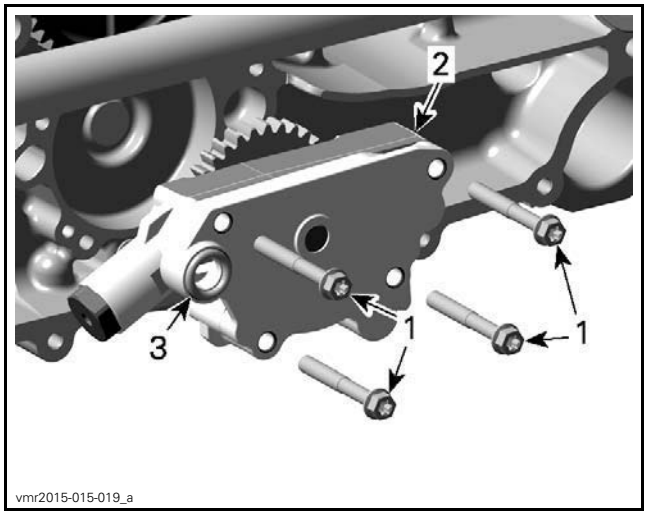

1. *Oil pump cover screws*
2. *Oil pump module*
3. *O-ring, sealing to crankcase MAG side*

Remove:
- O-ring
- Oil pump cover
- Dowel pins.

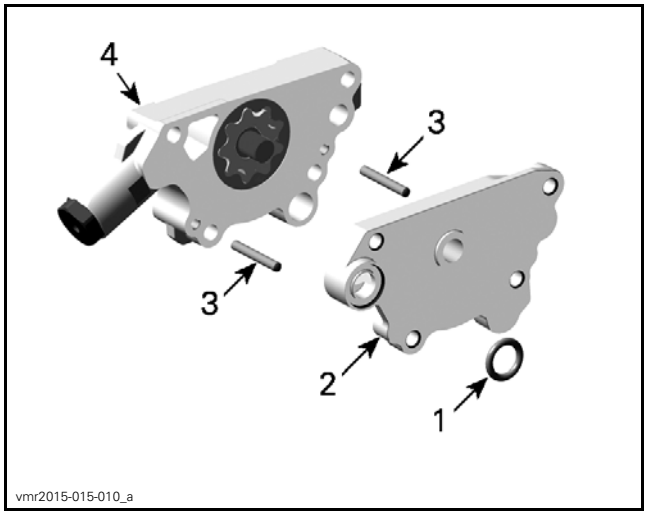

1. *O-ring*
2. *Oil pump cover*
3. *Dowel pins*
4. *Oil pump housing*

Use screwdrivers to remove oil pump gear.

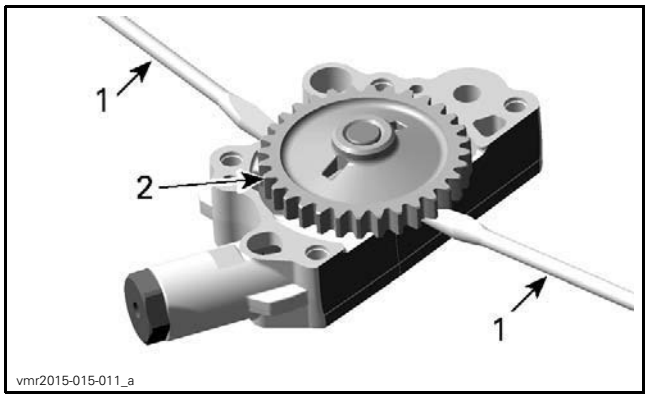

1. Flat screwdrivers
2. Oil pump gear

Remove:
– Needle pin

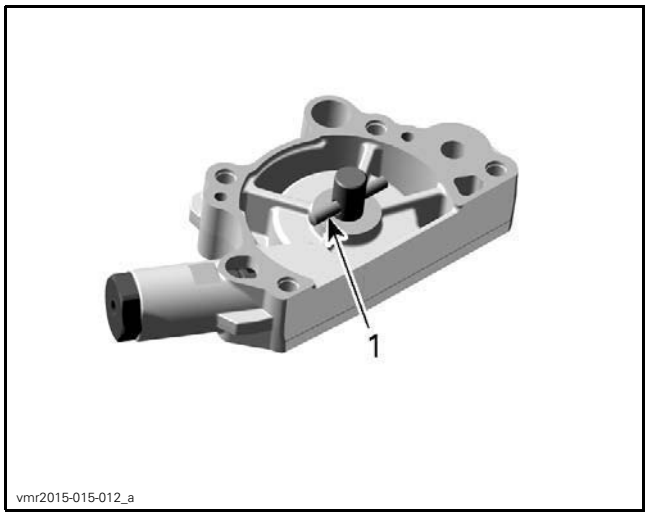

1. Needle pin

Remove:
– Oil pump shaft assembly
– Outer rotor.

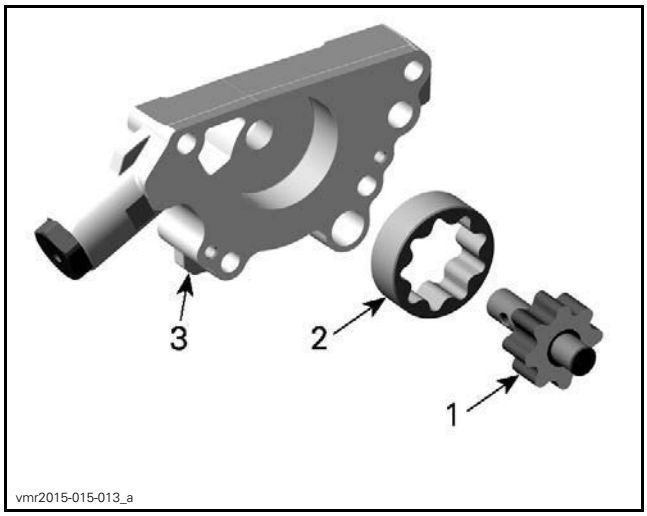

1. Oil pump shaft assembly
2. Outer rotor
3. Oil pump housing

Oil Pump Inspection

Inspect oil pump shaft assembly, housing and cover for marks or other damages.

Replace O-ring if damaged, brittle or hard.

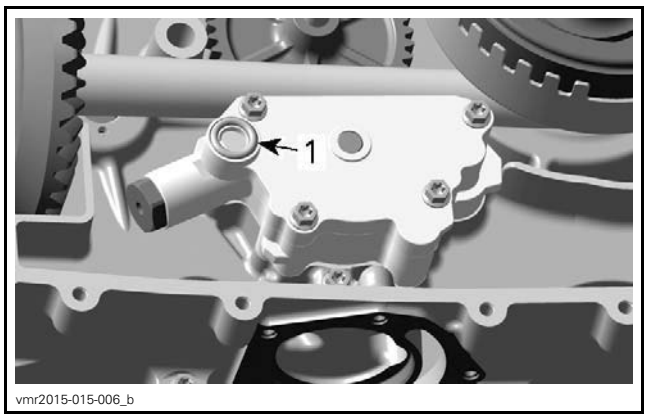

1. O-ring

Check inner rotor for corroded pin holes or other damages. If so, replace oil pump shaft assembly.

Check the inside of oil pump housing and its cover for scoring or other damages. If so, change the complete oil pump assembly.

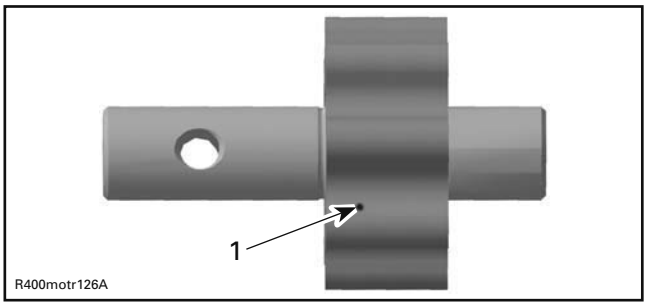

1. Pittings on the teeth

Clean oil passages and make sure they are not clogged.

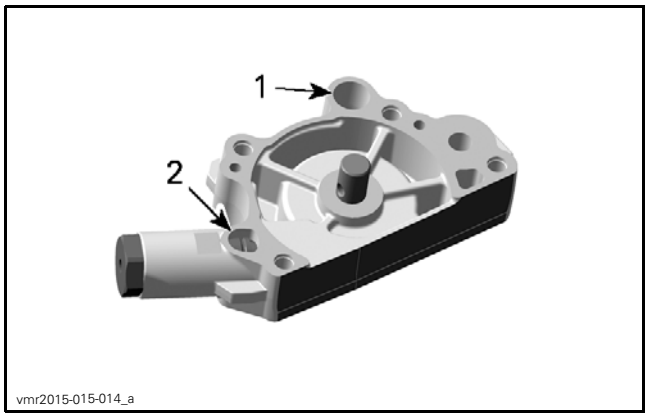

OIL PUMP HOUSING
1. *Suction side of the oil pump*
2. *Outlet from the engine oil pressure regulator valve*

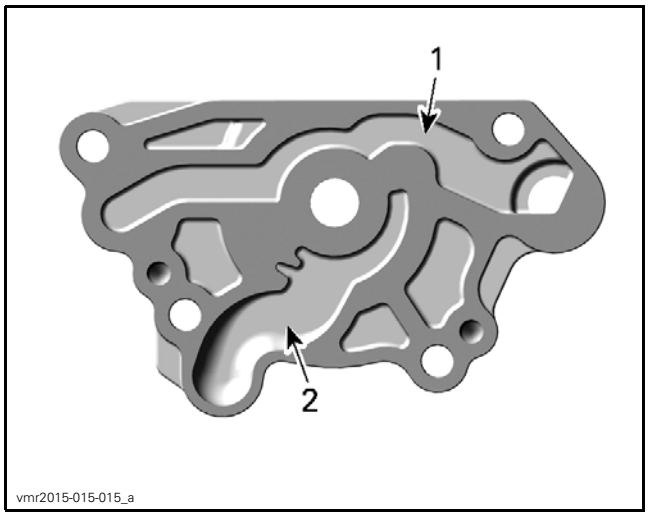

OIL PUMP COVER
1. *Oil from the pump to the oil filter in the magneto cover*
2. *Oil from the pump suction side to the oil pump*

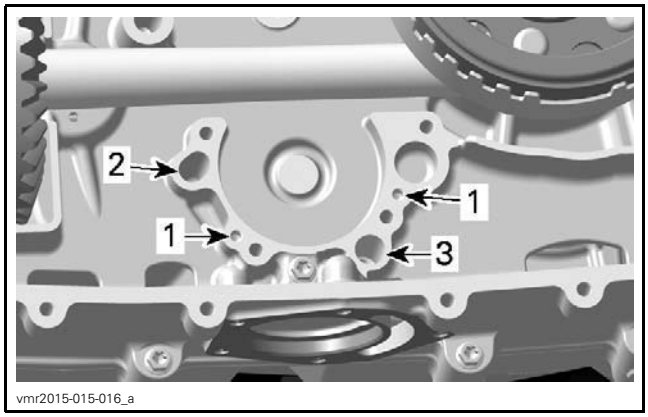

CRANKCASE MAG SIDE
1. *Bores for dowel pins*
2. *Oil return from the oil pressure regulator system*
3. *Oil inlet to the oil pump (leads to strainer on engine bottom)*

Using a feeler gauge, measure the clearance between inner and outer rotor.

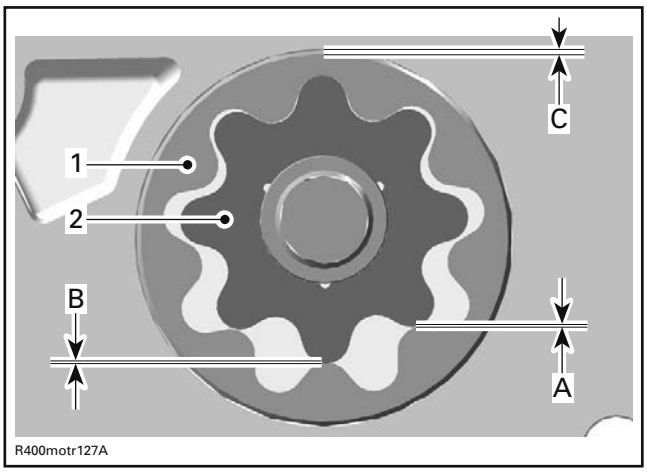

1. *Outer rotor*
2. *Inner rotor*

OUTER AND INNER ROTOR CLEARANCE	
SERVICE LIMIT	
A	0.25 mm (.0098 in)
B	
C	

If clearance between inner and outer rotor exceeds the tolerance, replace oil pump shaft assembly. Ensure to also check oil pump housing and cover. If damaged, replace the complete oil pump assembly.

If clearance between outer rotor and its bore in oil pump exceeds the tolerance, replace the complete oil pump assembly.

Measure the axial clearance of the oil pump as shown.

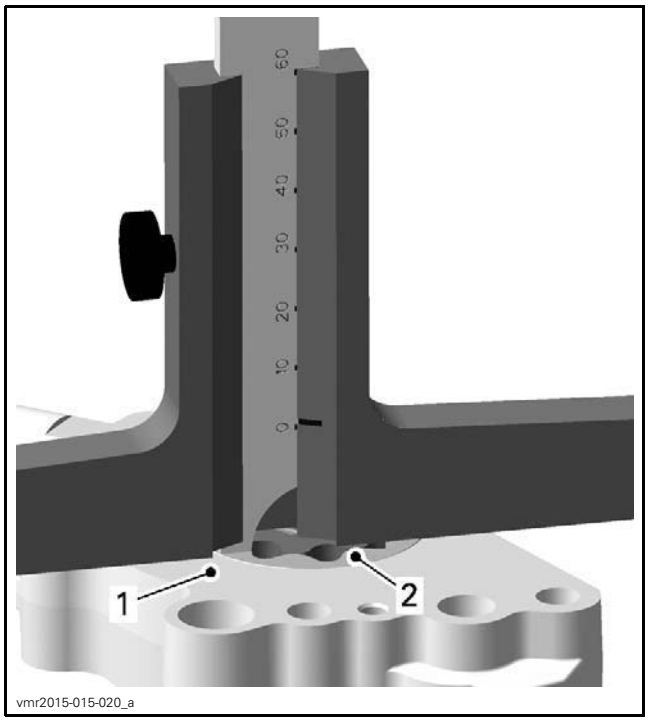

MEASUREMENT "A"
1. *Oil pump housing surface*
2. *Oil pump rotor surface*

Check oil pump cover for damages and for surface straightness with a straight edge and a feeler gauge.

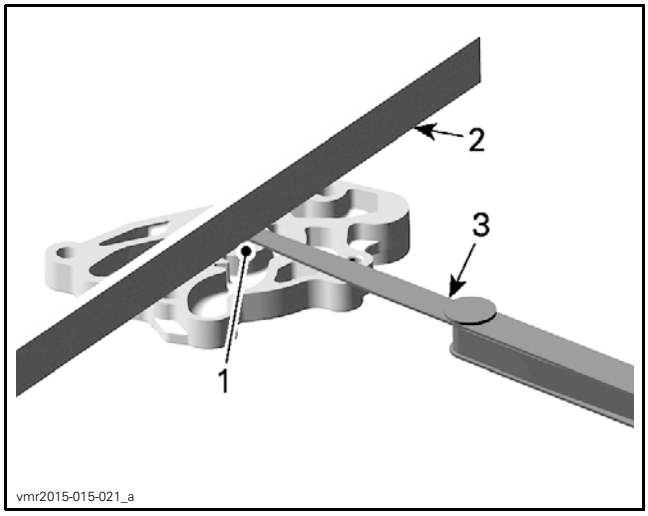

MEASUREMENT "B"
1. *Oil pump cover surface*
2. *Straight edge*
3. *Feeler gauge*

Add measurement A to measurement B to obtain axial clearance.

OIL PUMP AXIAL CLEARANCE	
SERVICE LIMIT	0.10 mm (.0039 in)

NOTE: When the axial clearance of the oil pump shaft assembly increases, the oil pressure decreases.

Oil Pump Installation

For installation, reverse the removal procedure.

When installing the oil pump rotors, make sure both markings are on the same side.

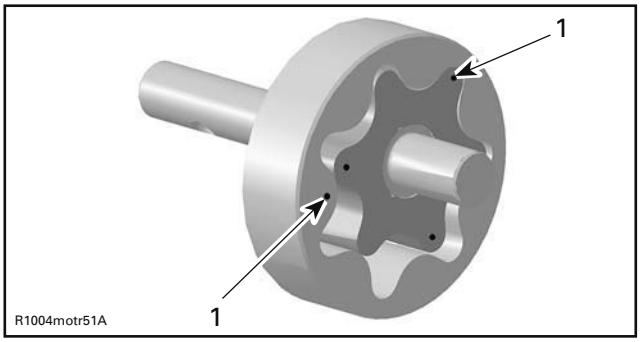

1. *Markings on inner and outer rotor*

NOTICE **Never apply any sealing compound on split surfaces of oil pump.**

Tightening oil pump cover screws as per following sequence.

OIL PUMP COVER SCREWS	
Tightening torque	10 N•m ± 1 N•m (89 lbf•**in** ± 9 lbf•**in**)

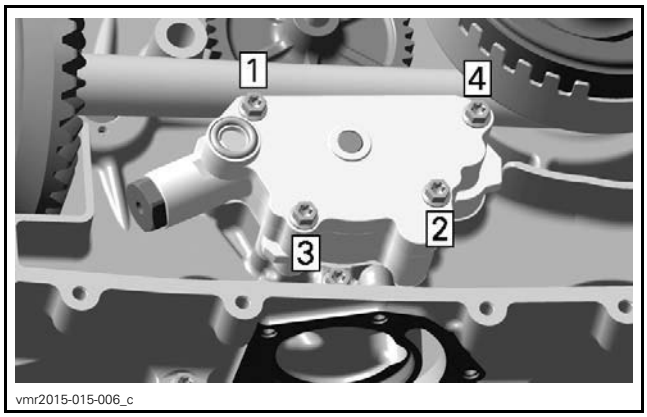

TIGHTENING SEQUENCE

NOTE: After tightening the oil pump cover screws check for smooth operation of the oil pump assembly.

Install the O-ring on oil pump cover.

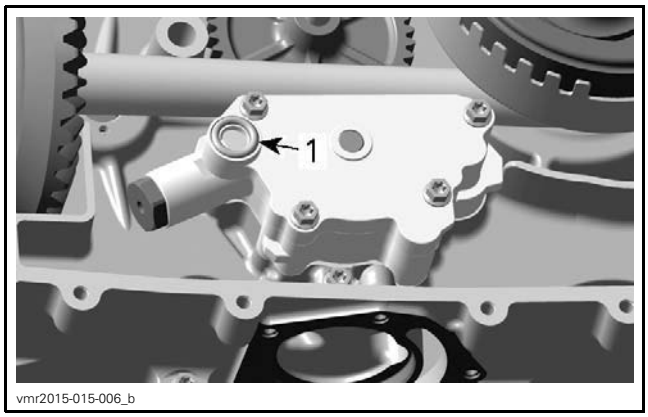

1. O-ring

After engine is completely reassembled, start engine and make sure oil pressure is within specifications (refer to *ENGINE OIL PRESSURE TEST* in this subsection).

LUBRICATION SYSTEM

SERVICE TOOLS

Description	Part Number	Page
ADAPTER HOSE	529 035 652	46
DISCONNECT TOOL	529 035 714	46
PRESSURE GAUGE	529 035 709	46

SERVICE PRODUCTS

Description	Part Number	Page
LOCTITE 243 (BLUE)	293 800 060	48, 52

COMPONENTS

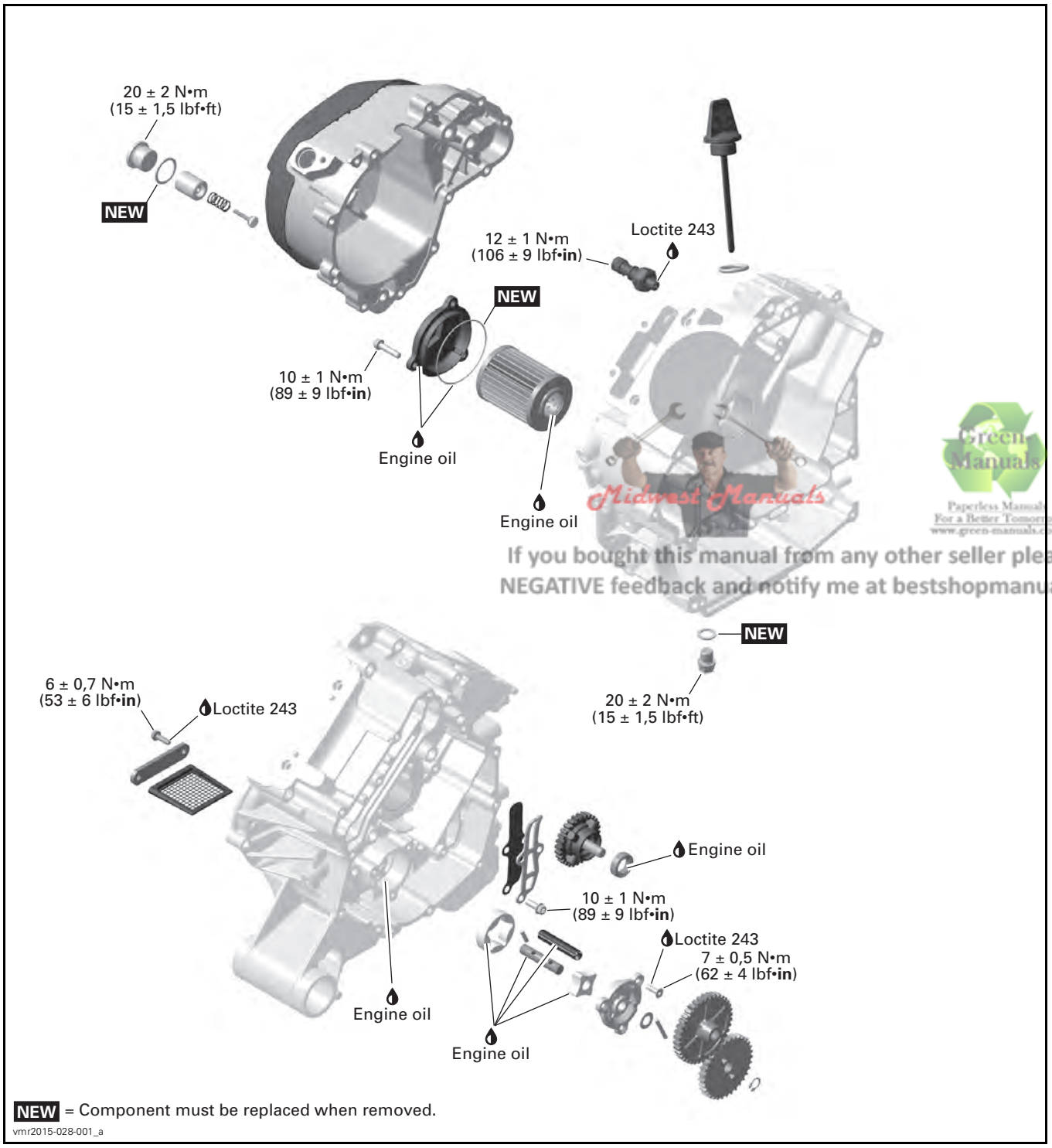

Midwest Manuals
Green Manuals
Paperless Manuals For a Better Tomorrow www.green-manuals.com
If you bought this manual from any other seller please leave them NEGATIVE feedback and notify me at bestshopmanuals@gmail.com

ENGINE LUBRICATION CIRCUIT

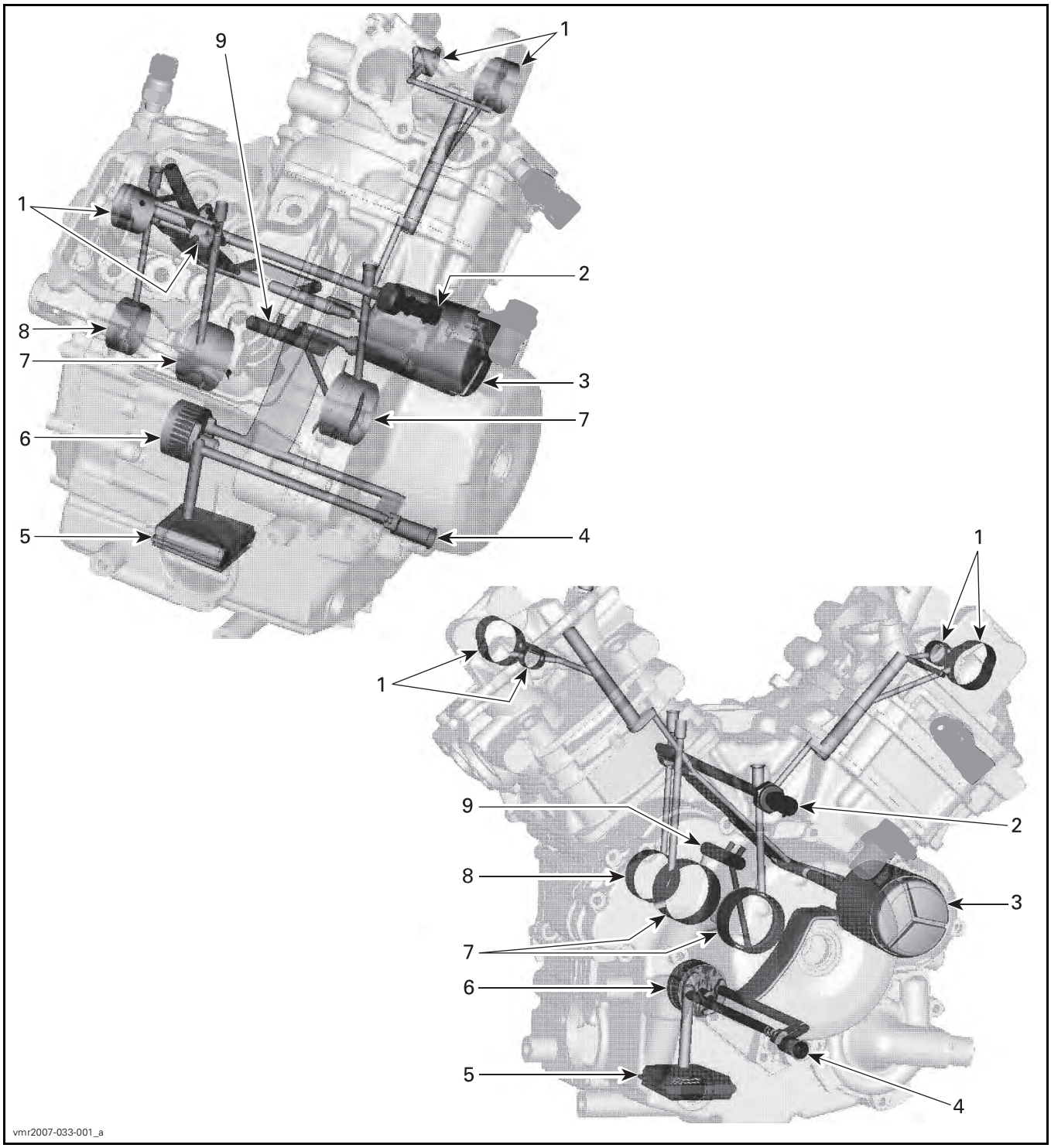

1. *Camshaft bearings*
2. *Oil pressure switch*
3. *Oil filter*
4. *Oil pressure regulator valve*
5. *Oil strainer*
6. *Oil pump*
7. *Crankshaft main bearings*
8. *Crankshaft support bearing*
9. *Connecting rod bearings*

INSPECTION

ENGINE OIL PRESSURE

NOTE: The engine oil pressure test should be done with a warm engine 100°C (212°F) and the recommended oil.

Remove the oil pressure switch. Refer to *OIL PRESSURE SWITCH* in this subsection.

Install the pressure test gauge with the proper adapter hose in the OPS engine bore.

REQUIRED TOOL	
PRESSURE GAUGE (P/N 529 035 709)	
ADAPTER HOSE (P/N 529 035 652)	

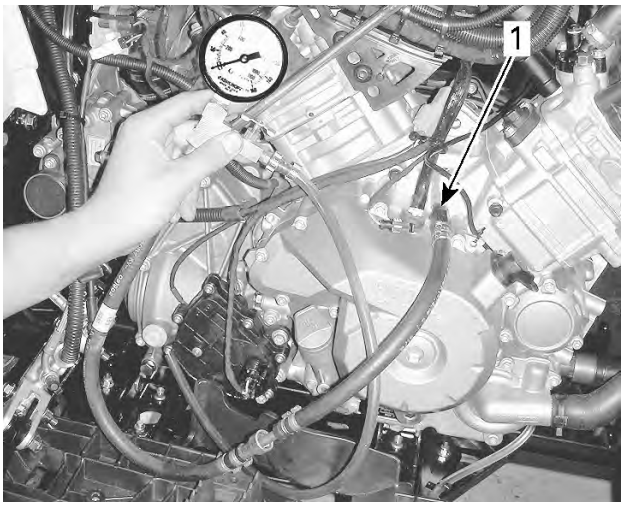

vmr2015-028-100_a

TYPICAL
1. *Gauge connected in OPS engine bore*

The engine oil pressure should be within the following values.

OIL PRESSURE	1250 RPM	6000 RPM
MINIMAL	70 kPa (10 PSI)	300 kPa (44 PSI)
NOMINAL	150 kPa (22 PSI)	350 kPa (51 PSI)
MAXIMAL	250 kPa (36 PSI)	450 kPa (65 PSI)

If the engine oil pressure is out of specifications, check the points described in *TROUBLESHOOTING* in this subsection.

Remove oil pressure gauge and adapter hose.

NOTE: To remove adapter hose from oil pressure gauge, use the disconnect tool.

REQUIRED TOOL	
DISCONNECT TOOL (P/N 529 035 714)	

Reinstall the oil pressure switch and remaining components.

TROUBLESHOOTING

LOW OR NO OIL PRESSURE

1. **Oil level is too low.**
   - *Refill engine with recommended engine oil. Refer to OIL LEVEL VERIFICATION in the PERIODIC MAINTENANCE PROCEDURES subsection.*
   - *Check for high oil consumption, refer to HIGH OIL CONSUMPTION in thisTROUBLESHOOTING.*
   - *Check for engine oil leaks. For leak indicator hose and leak indicator hole, refer to COOLING SYSTEM INSPECTION in the PERIODIC MAINTENANCE PROCEDURES subsection. Repair if necessary.*
2. **Use of unsuitable engine oil type.**
   - *Replace engine oil by the recommended engine oil.*
3. **Clogged oil filter.**
   - *Replace oil and oil filter at the same time.*
4. **Defective oil pressure switch.**
   - *Test oil pressure switch, see procedure in this subsection.*
5. **Defective or worn oil pump.**
   - *Check oil pump, see procedure in this subsection.*
6. **Defective engine oil pressure regulator.**
   - *Check engine oil pressure regulator, see procedure in this subsection.*
7. **Worn plain bearings in crankcase.**
   - *Check plain bearing clearance, refer to BOTTOM END subsection.*
8. **Clogged engine oil strainer.**
   - *Clean engine oil strainer, see procedure in this subsection.*

OIL CONTAMINATION

1. **Defective water pump seal ring or rotary seal.**
   - *Check for oil or coolant leak from indicator near water pump, refer to COOLING SYSTEM INSPECTION in the PERIODIC MAINTENANCE PROCEDURES subsection. Replace seal if necessary.*

2. Cylinder head or cylinder base gasket leak.
   - *Retighten cylinder head to specified torque, refer to TOP END subsection. Replace gasket if tightening does not solve the problem.*
3. Engine internal damage.
   - *Repair engine.*
4. Oil cooler gasket leak.
   - *Replace oil cooler gasket and change engine oil.*

HIGH OIL CONSUMPTION

1. Leaking breather oil seal.
   - *Check if the oil seal of the breather is brittle, hard or damaged. Refer to BOTTOM END subsection.*
2. Valve stem seals worn or damaged.
   - *Replace valve stem seals.*
3. Worn piston rings (blue exhaust smoke).
   - *Replace piston rings.*

PROCEDURES

OIL PRESSURE SWITCH (OPS)

Oil Pressure Switch Location

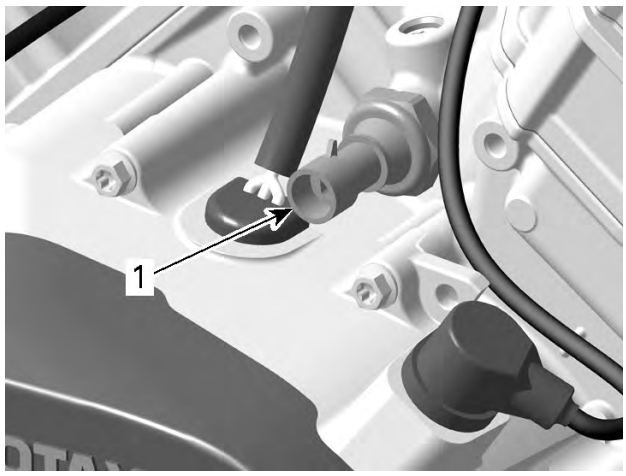

1. Oil pressure switch

Oil Pressure Switch Access

Refer to *BODY* subsection and remove the following
– Seat
– Console
– RH side panel and extension.

Remove OPS cover.

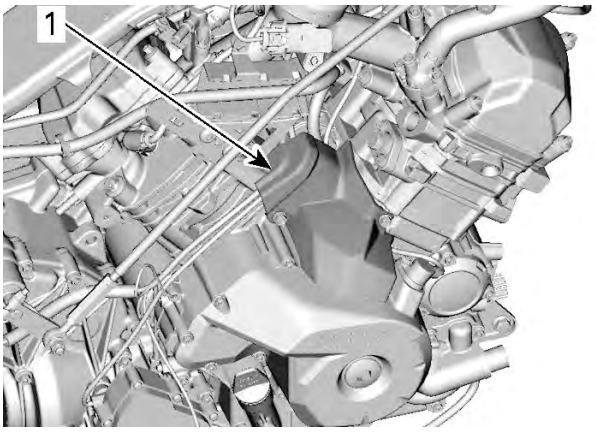

TYPICAL
1. Remove

Oil Pressure Switch Activation

The oil pressure switch activates when the engine oil pressure is lower than following specified pressure range.

OIL PRESSURE SWITCH ACTIVATION RANGE
30 kPa ± 10 kPa (4.35 PSI ± 1.45 PSI)

To check the function of the oil pressure switch, an oil pressure test has to be performed. Refer to *ENGINE OIL PRESSURE* in this subsection.

If the engine oil pressure is good, perform the oil pressure switch resistance test.

Testing the Oil Pressure Switch Resistance

Disconnect the connector from the oil pressure switch.

Check resistance as per following tables.

OPS CONNECTOR	ENGINE	ENGINE NOT RUNNING
PIN		RESISTANCE (Ω)
1	Engine ground	Close to 0 Ω (normally closed switch)

OPS CONNECTOR	ENGINE	ENGINE RUNNING
PIN		RESISTANCE (Ω)
1	Engine ground	Infinite (open) when pressure reaches 30 kPa ± 10 kPa (4.35 PSI ± 1.45 PSI)

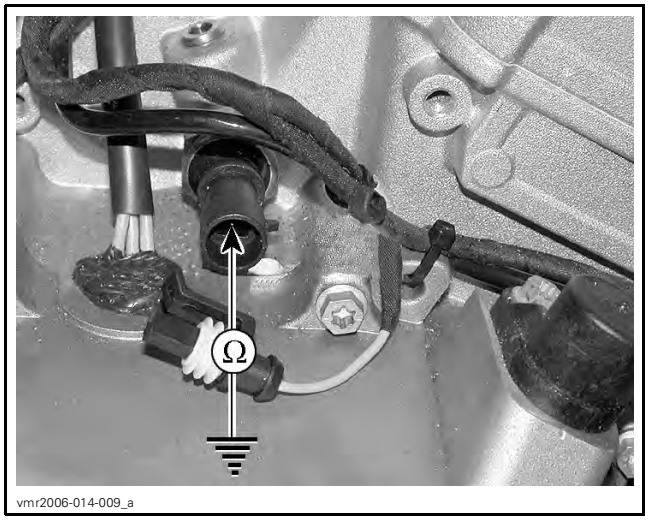

vmr2006-014-009_a

If resistance values are incorrect, replace the oil pressure switch.

If the values are correct, check wiring.

Removing the Oil Pressure Switch

Unplug the oil pressure switch connector.

Unscrew and remove oil pressure switch.

Installing the Oil Pressure Switch

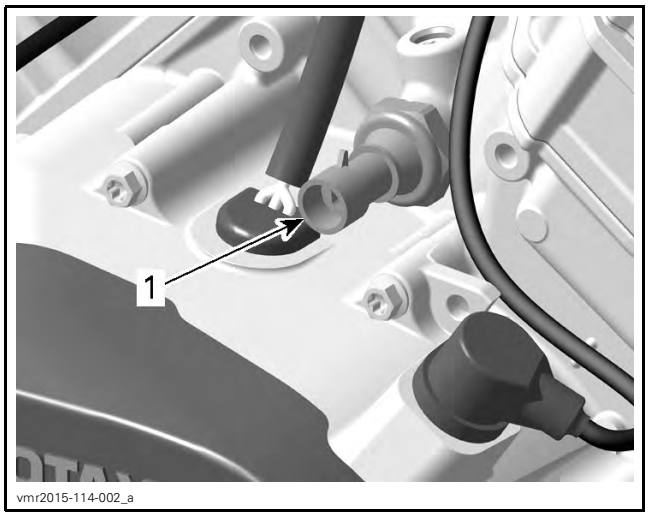

vmr2015-114-002_a

1. Oil pressure switch

Apply required service product on threads of oil pressure switch.

Tighten oil pressure switch to specification.

SERVICE PRODUCT	
Oil pressure switch	LOCTITE 243 (BLUE) (P/N 293 800 060)

TIGHTENING TORQUE	
Oil pressure switch	12 N•m ± 1 N•m (106 lbf•**in** ± 9 lbf•**in**)

ENGINE OIL PRESSURE REGULATOR

Oil Pressure Regulator Location

The oil pressure regulator is located on the engine magneto side, integrated in the magneto cover.

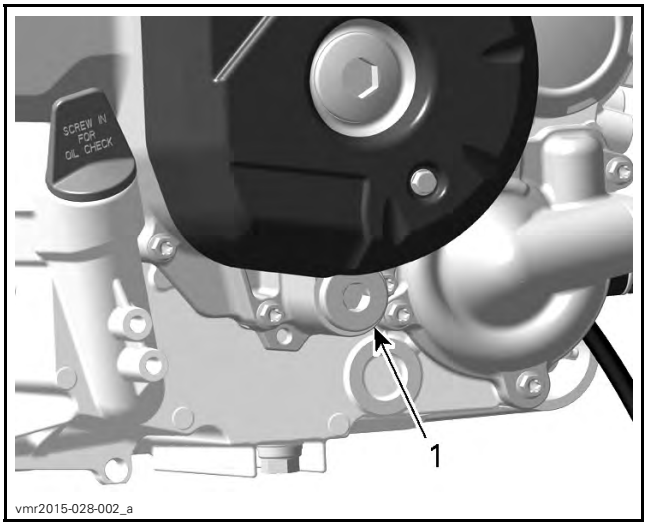

vmr2015-028-002_a

1. Engine oil pressure regulator

NOTE: The oil pressure regulator system works when the oil pressure exceeds 400 kPa (58 PSI).

Oil Pressure Regulator Access

Refer to *BODY* subsection and remove the following:

- Seat
- Console
- RH side panel and extension
- RH footboard panel.

Removing the Oil Pressure Regulator

Remove plug screw and pull oil pressure regulator out.

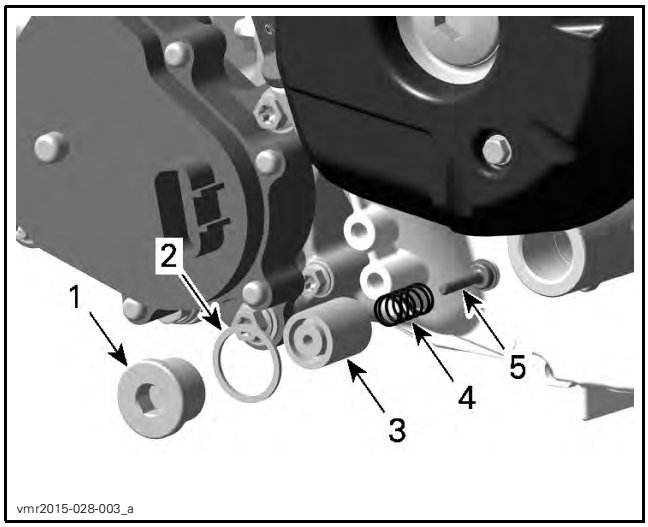

1. *Plug screw*
2. *Gasket ring*
3. *Pressure regulator housing*
4. *Spring*
5. *Pressure regulator valve*

Inspecting the Oil Pressure Regulator

Inspect pressure regulator housing and valve for scoring or other damages.

Check spring for free length.

SPRING FREE LENGTH	
NEW NOMINAL	39 mm (1.535 in)
SERVICE LIMIT	37 mm (1.457 in)

NOTE: Replace worn or damaged components.

Clean bore and thread in the magneto housing from metal shavings and other contaminations.

Installing the Oil Pressure Regulator

For installation, reverse the removal procedure. Pay attention to the following details.

NOTE: At installation always replace the gasket ring of the plug screw by a NEW one.

OIL PUMP

Oil Pump Location

The oil pump is located on the engine PTO side (behind PTO cover).

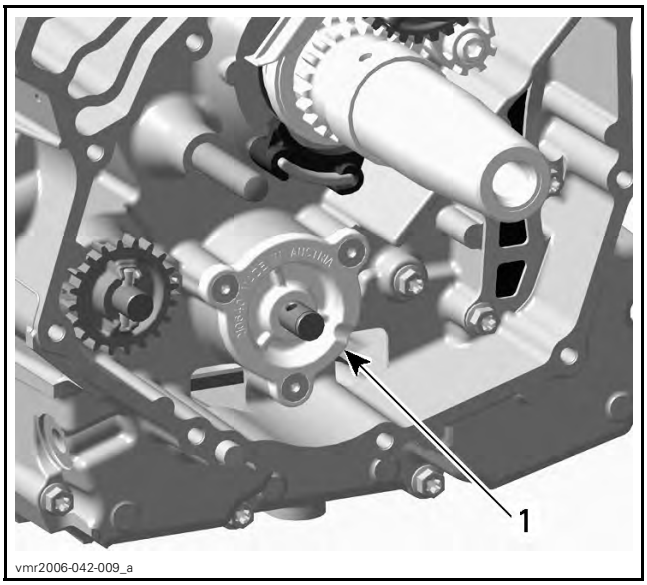

1. *Oil pump*

Removing the Oil Pump

Remove the PTO cover. Refer to *PTO COVER* in the *BOTTOM END* subsection.

1. Remove:
   - Retaining ring
   - Oil pump gear
   - Needle pin
   - Thrust washer.

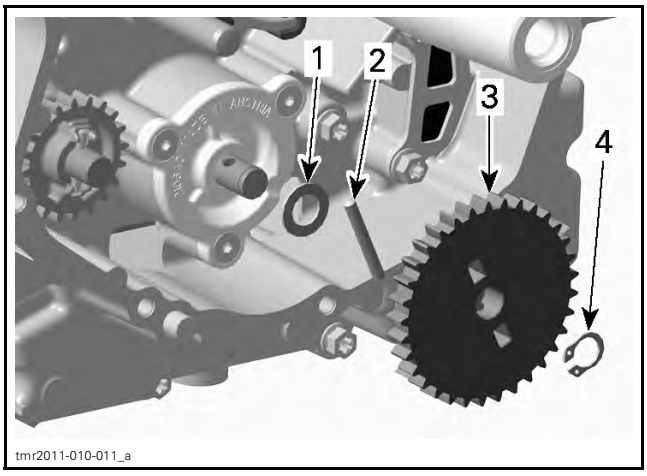

1. *Thrust washer*
2. *Needle pin*
3. *Oil pump gear*
4. *Retaining ring*

2. Remove oil pump cover screws and pull oil pump cover out.

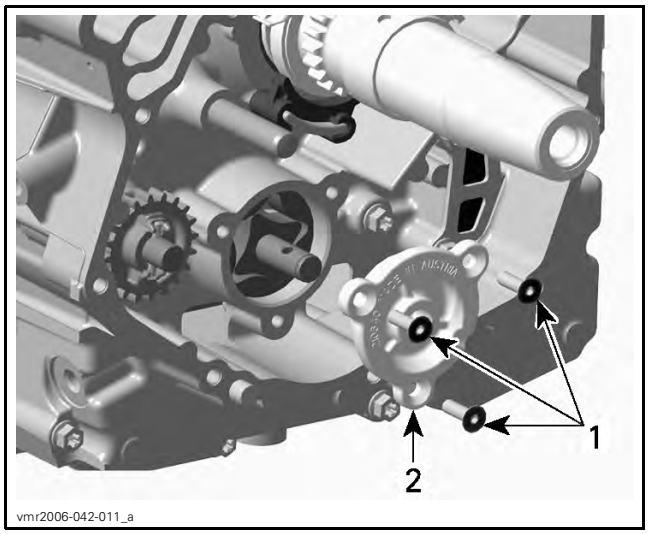

1. Retaining screws
2. Oil pump cover

3. Remove oil pump shaft with needle pin and inner rotor.
4. Remove outer rotor.

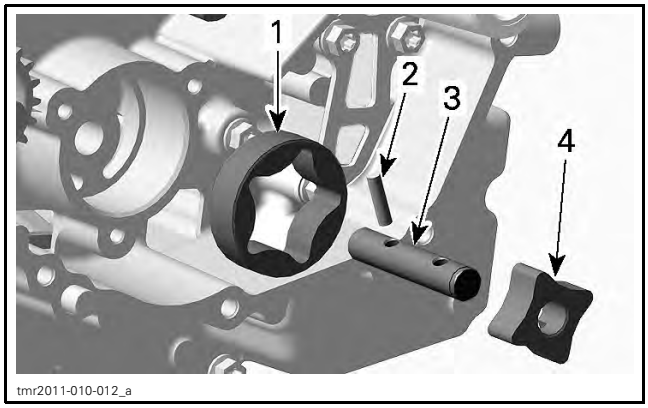

1. Outer rotor
2. Needle pin
3. Oil pump shaft
4. Inner rotor

Inspecting the Oil Pump

Inspect oil pump and oil pump cover bore for marks, scratches or other damages. Check for scratches in crankcase between outer rotor and oil pump bore. If so, replace damaged parts.

Check oil pump cover for damages and for surface straightness with a straightedge.

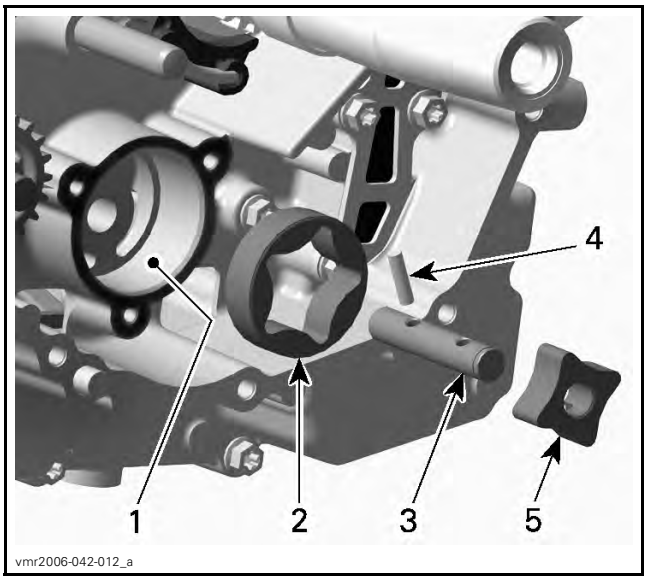

1. Oil pump bore
2. Outer rotor
3. Oil pump shaft
4. Needle pin
5. Inner rotor

Check inner rotor for corrosion pin holes or other damages. If so, replace oil pump shaft assembly.

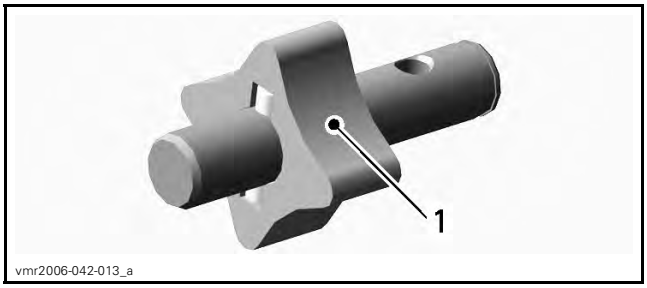

1. Pittings on the teeth

Using a feeler gauge, measure the clearance of inner and outer rotors as shown.

CLEARANCE OF INNER AND OUTER ROTOR	
SERVICE LIMIT	0.25 mm (.0098 in)

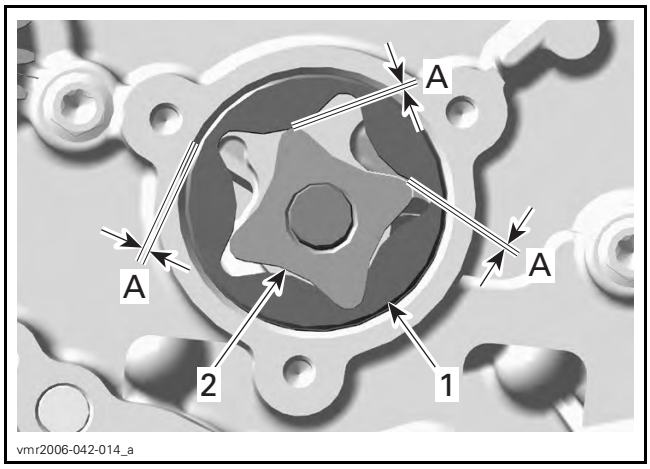

1. *Outer rotor*
2. *Inner rotor*

A. *0.25 mm (.0098 in)*

If clearance of inner and outer rotors exceeds the tolerance, replace oil pump rotors. Ensure to also check oil pump cover. If damaged, replace the complete oil pump assembly.

If clearance between outer rotor and its bore in crankcase exceeds the tolerance, replace the complete oil pump rotors and/or the crankcase.

Using a depth gauge, measure the axial clearance of the oil pump as shown.

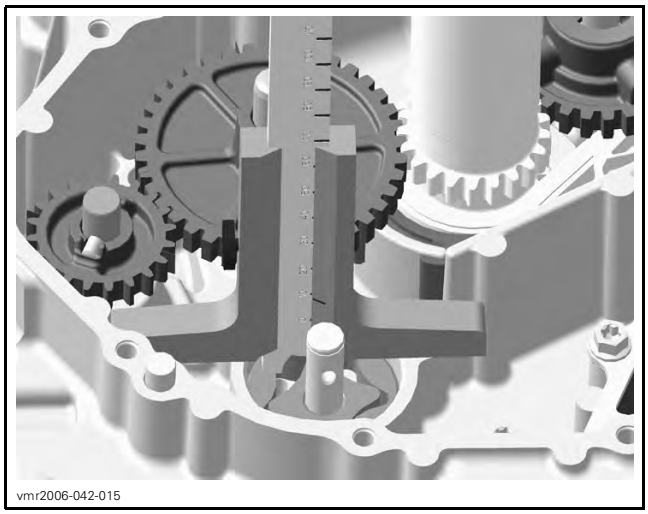

OIL PUMP — MEASUREMENT "A"

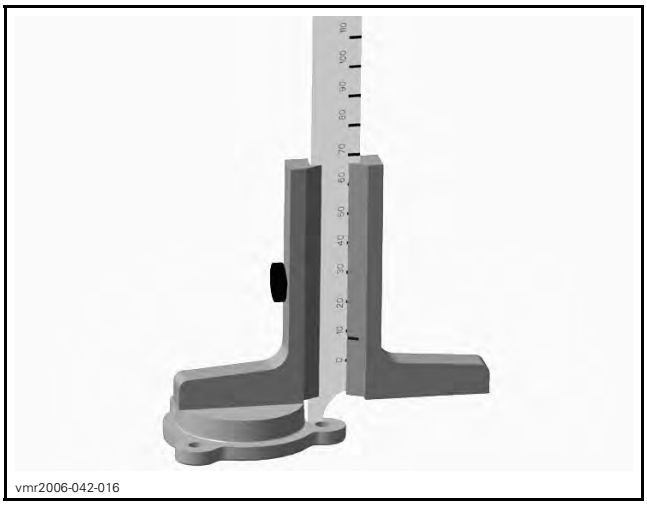

OIL PUMP COVER — MEASUREMENT "B"

Substract measurement B from measurement A to obtain axial clearance.

OIL PUMP AXIAL CLEARANCE	
SERVICE LIMIT	0.20 mm (.008 in)

NOTE: When the axial clearance of the oil pump assembly increases, the oil pressure decreases.

Installing the Oil Pump

For installation, reverse the removal procedure.

Pay attention to the following details.

NOTE: When installing the oil pump rotors, make sure both markings are on the outer side.

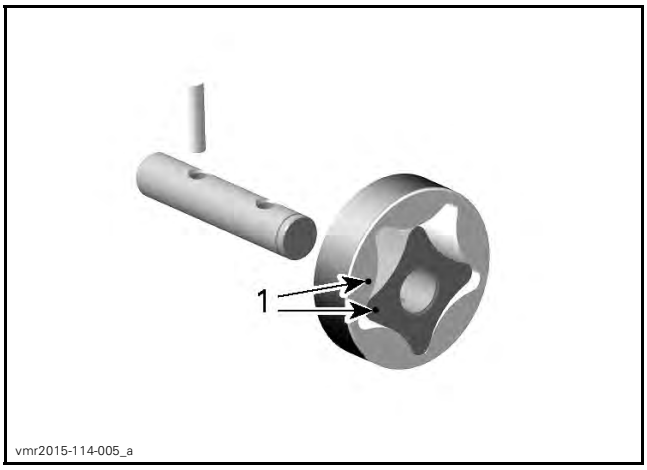

1. *Markings*

After reinstallation of the remaining parts, check for smooth operation of the oil pump assembly.

Testing the Oil Pump Function

After engine is completely reassembled, start engine and make sure oil pressure is within specifications (refer to *ENGINE OIL PRESSURE* in this subsection).

ENGINE OIL STRAINER

Oil Strainer Location

The engine oil strainer is located between both crankcase halves.

Removing the Oil Strainer

Remove engine from vehicle.

Separate crankcase halves. Refer to *BOTTOM END* subsection.

Remove screws and retaining plate.

Pull out engine oil strainer.

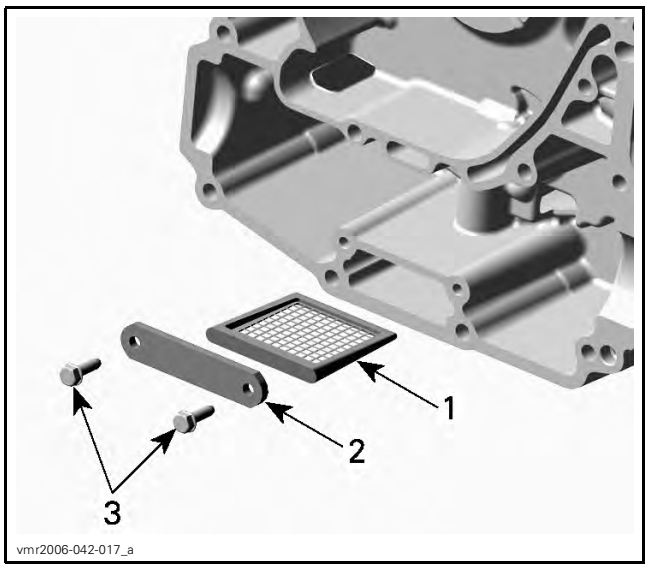

1. *Engine oil strainer*
2. *Retaining plate*
3. *Screws*

Cleaning and Inspecting the Oil Strainer

Clean engine oil strainer with a part cleaner then use an air gun to dry it.

⚠ WARNING

Always wear eye protector. Chemicals can cause a rash break out and injure your eyes.

Check engine oil strainer for cracks or other damage. Replace if damaged.

Installing the Oil Strainer

The installation is the reverse of the removal procedure.

SERVICE PRODUCT	
Oil Strainer screws	LOCTITE 243 (BLUE) (P/N 293 800 060)

TIGHTENING TORQUE	
Oil strainer screws	6 N•m ± 0.7 N•m (53 lbf•**in** ± 6 lbf•**in**)

REED VALVE

The engine is equipped with a reed valve which prevents accumulation of larger oil quantities in the crankcase. The reed valve is fitted into the crankcase.

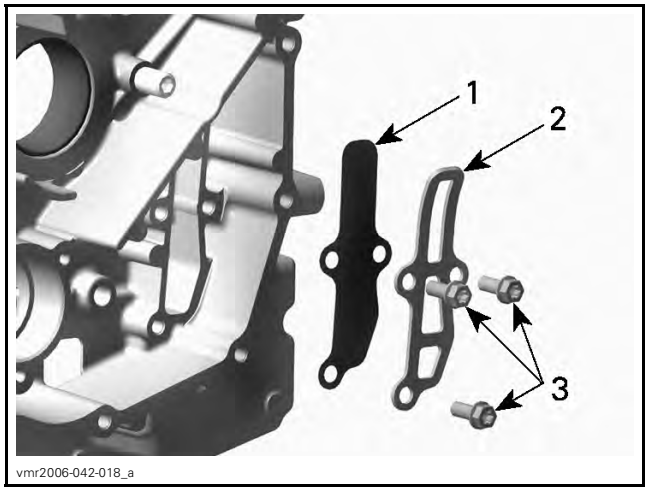

1. *Reed valve*
2. *Stopper*
3. *Screws*

Removing the Reed Valve

Remove:

- Engine from vehicle
- PTO cover (refer to *PTO COVER* in the *BOTTOM END* subsection)
- Reed valve retaining screws
- Stopper plate
- Reed valve.

Inspecting the Reed Valve

Check reed valve for cracks or other damage.

Replace reed valve if damaged.

Installing the Reed Valve

The installation is the reverse of the removal procedure.

COOLING SYSTEM - ENGINE COMPONENTS (450)

SERVICE TOOLS

Description	Part Number	Page
HANDLE	420 877 650	7
OIL SEAL PUSHER	529 035 757	7
SEAL PUSHER	529 035 766	7

SERVICE PRODUCTS

Description	Part Number	Page
DOW CORNING 111	413 707 000	7
LOCTITE 243 (BLUE)	293 800 060	4

WATER PUMP AND THERMOSTAT

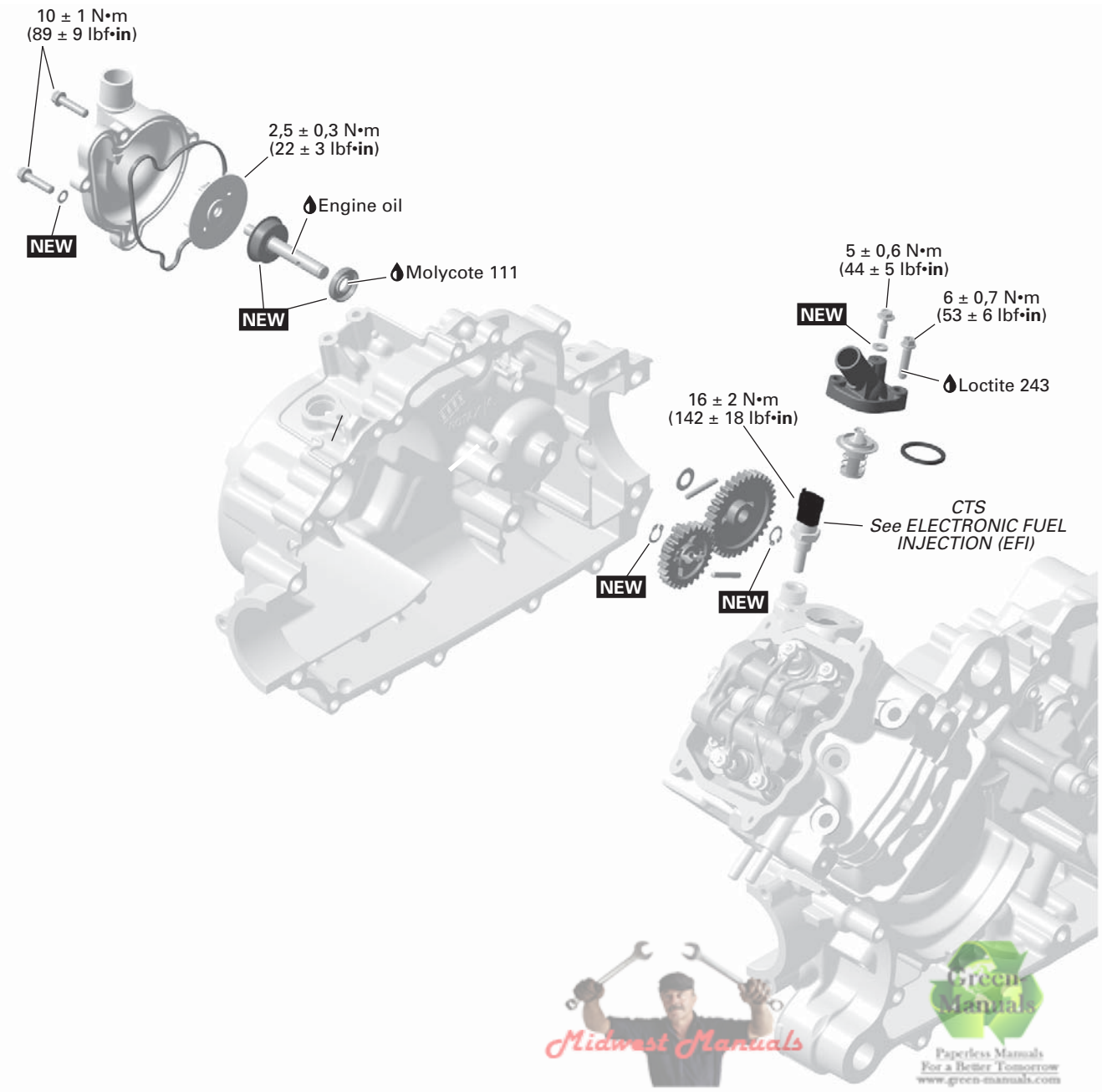

NEW = Component must be replaced when removed.

vmr2015-016-001_a

If you bought this manual from any other seller please leave them NEGATIVE feedback and notify me at bestshopmanuals@gmail.com

GENERAL

NOTICE **Never start engine without coolant. Engine parts and ceramic seal on water pump shaft can be damaged.**

During assembly/installation, use the torque values and service products as in the exploded view.

Clean threads before applying a threadlocker. Refer to *SELF-LOCKING FASTENERS* and *LOCTITE APPLICATION* at the beginning of this manual for complete procedure.

⚠ WARNING

Torque wrench tightening specifications must be strictly adhered to.
Locking devices when removed (e.g.: locking tabs, elastic stop nuts, self-locking fasteners, etc.) must be installed or replaced with new ones where specified. If the efficiency of a locking device is impaired, it must be renewed.

PROCEDURES

THERMOSTAT

The thermostat is a single action type, located on the RH rear side of the cylinder head.

Thermostat Access

Remove the RH side body panel.

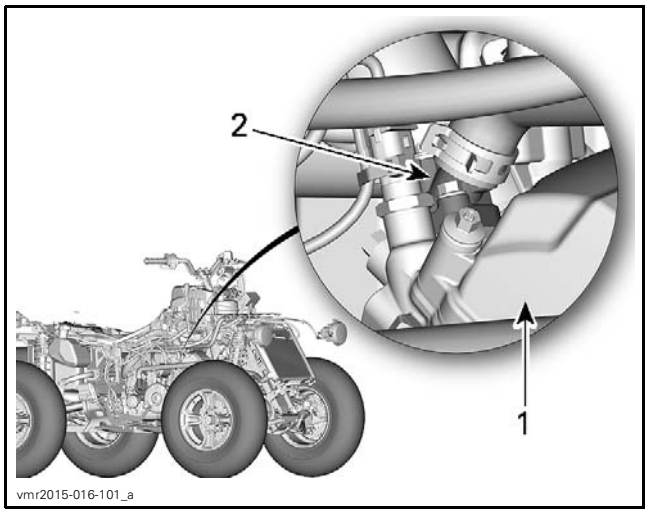

vmr2015-016-101_a

1. *Valve cover*
2. *Thermostat housing*

Removing the Thermostat

Install a hose pincher on both radiator hoses.

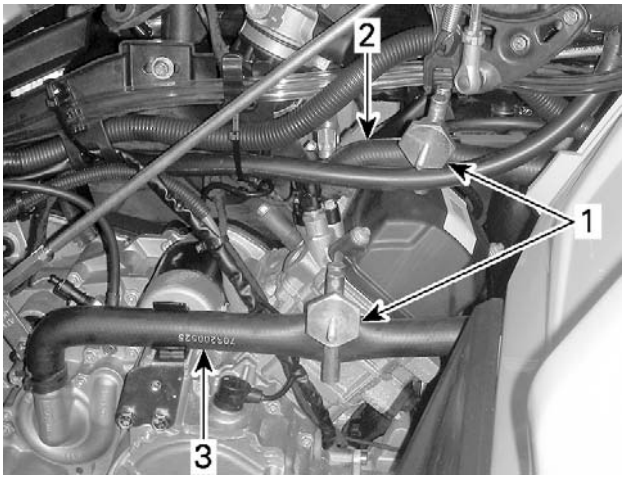

vmr2015-016-102_a

1. *Hose pinchers*
2. *Coolant return hose from thermostat*
3. *Radiator coolant outlet hose*

Remove thermostat housing screws and pull thermostat housing off cylinder head.

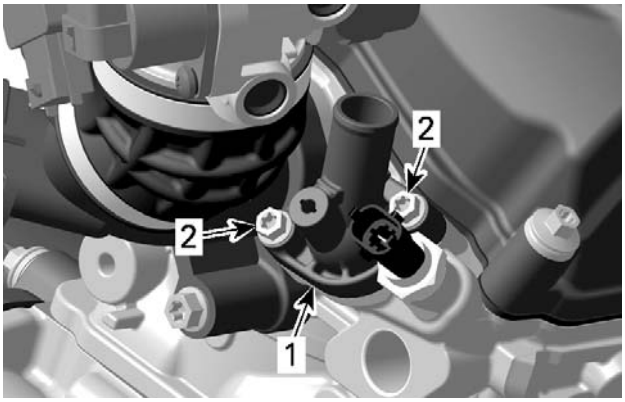

vmr2015-016-003_a

1. *Thermostat housing*
2. *Screws*

Remove thermostat with gasket.

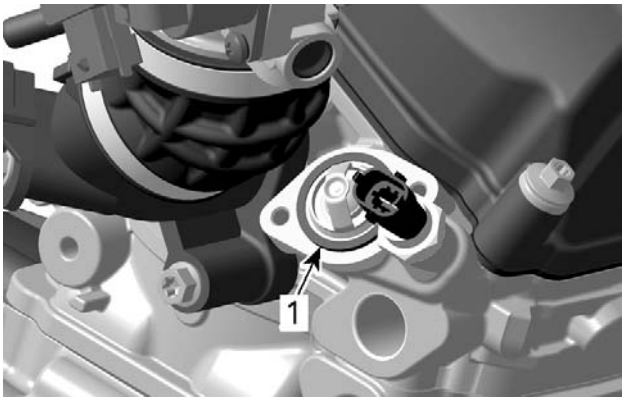

vmr2015-016-004_a

1. *Thermostat with gasket*

Testing the Thermostat

To test thermostat, put it in water and heat the water.

THERMOSTAT OPENING TEMPERATURE	
STARTS TO OPEN	FULLY OPEN
65°C (149°F)	75°C (167°F)

Replace thermostat if it does not begin to open at specified temperature.

Check gasket to see if it is brittle, hard or damaged. If so, replace gasket.

Installing the Thermostat

The installation is the reverse the removal procedure. However, pay attention to the following.

TIGHTENING TORQUE	
Thermostat cover screws	6 N•m ± 0.7 N•m (53 lbf•**in** ± 6 lbf•**in**) + LOCTITE 243 (BLUE) (P/N 293 800 060)

Refill and bleed cooling system, refer to *PERIODIC MAINTENANCE PROCEDURES* subsection.

Check cooling system for leaks.

COOLANT TEMPERATURE SENSOR (CTS)

The coolant temperature sensor is located next to the thermostat housing on the RH rear side of the cylinder head.

Refer to *ELECTRONIC FUEL INJECTION* subsection.

WATER PUMP HOUSING

Water Pump Housing Location

The water pump housing is located on the RH side of the engine.

Removing the Water Pump Housing

Drain cooling system. Refer to *PERIODIC MAINTENANCE PROCEDURES* subsection.

Remove radiator outlet hose from water pump housing.

Remove screws retaining water pump housing.

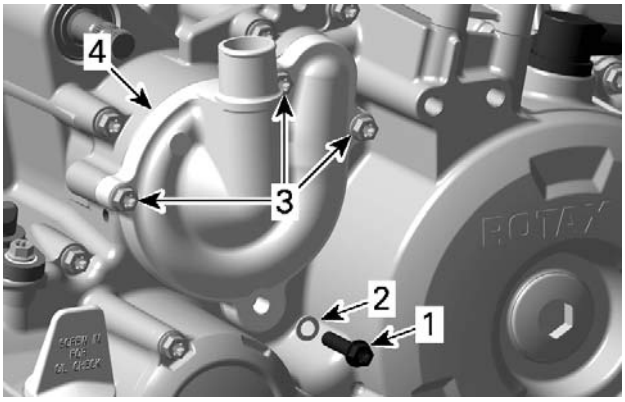

vmr2015-016-005_a

1. *Coolant drain plug*
2. *Sealing ring*
3. *Screws*
4. *Water pump housing*

Pull on water pump housing to remove it.

Inspecting the Water Pump Housing

Check if gasket is brittle, hard or damaged.

Replace as required.

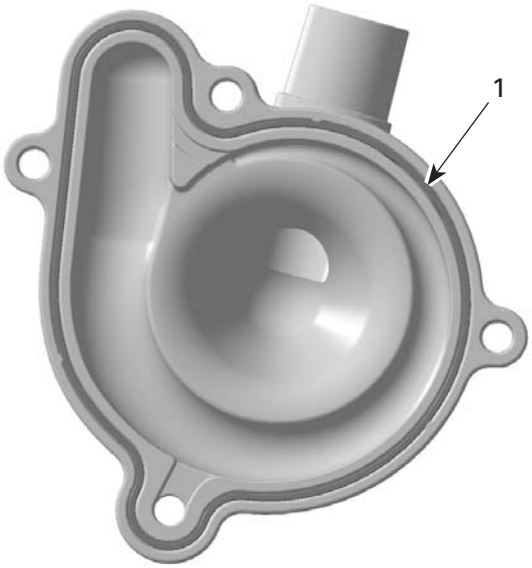

R400motr138A

WATER PUMP COVER
1. *Gasket*

Installing the Water Pump Housing

The installation is the reverse of the removal procedure. However, pay attention to the following.

NOTICE **To prevent leaking, make sure the gasket is properly inserted in the water pump housing groove when you reinstall the water pump cover.**

Install a NEW gasket ring on water pump housing screw.

Tighten water pump cover screws as per the following illustration.

TIGHTENING TORQUE	
Water pump housing screws	10 N•m ± 1 N•m (89 lbf•**in** ± 9 lbf•**in**)

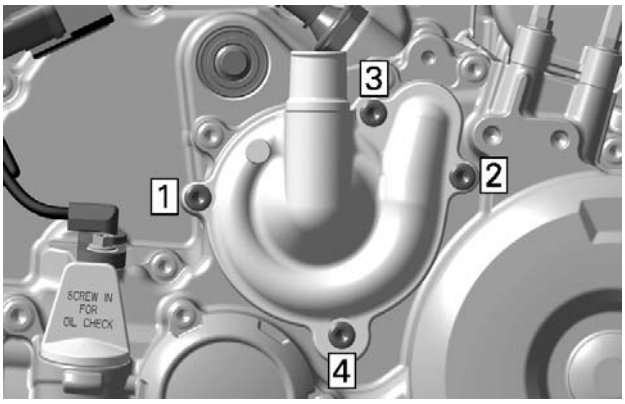

vmr2015-016-006_a

TIGHTENING SEQUENCE

WATER PUMP IMPELLER

Removing the Water Pump Impeller

Remove water pump housing. Refer to procedure in this subsection.

Unscrew impeller from water pump shaft.

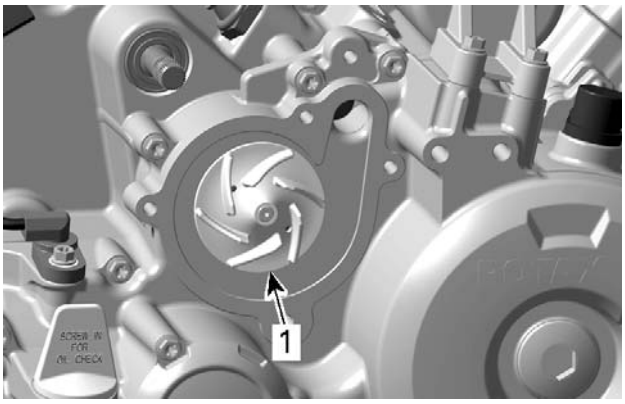

vmr2015-016-007_a

1. *Impeller*

Inspecting the Water Pump Impeller

Check impeller for cracks or other damages. Replace impeller if damaged.

Installing the Water Pump Impeller

The installation is the reverse of the removal procedure.

WATER PUMP SHAFT AND SEALS

Removing the Water Pump Shaft and Seal

Remove water pump housing. Refer to *WATER PUMP HOUSING* in this subsection.

Remove impeller.

Remove magneto cover. Refer to the appropriate *MAGNETO AND STARTER* subsection.

Remove circlip from the water pump gear using the appropriate pliers. Discard the circlip.

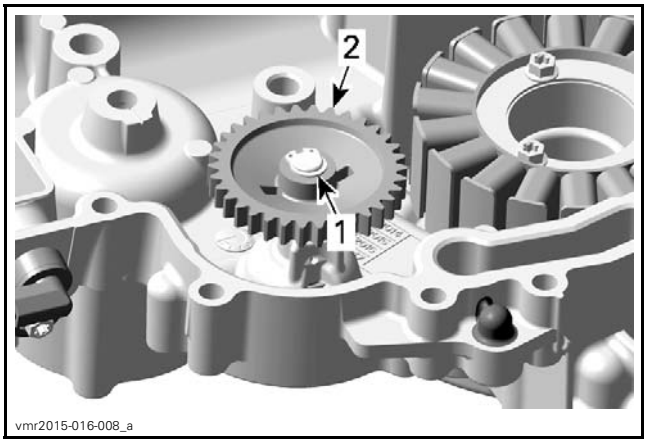

vmr2015-016-008_a

1. *Circlip*
2. *Water pump gear*

Remove:
- Water pump gear
- Needle pin
- Thrust washer.

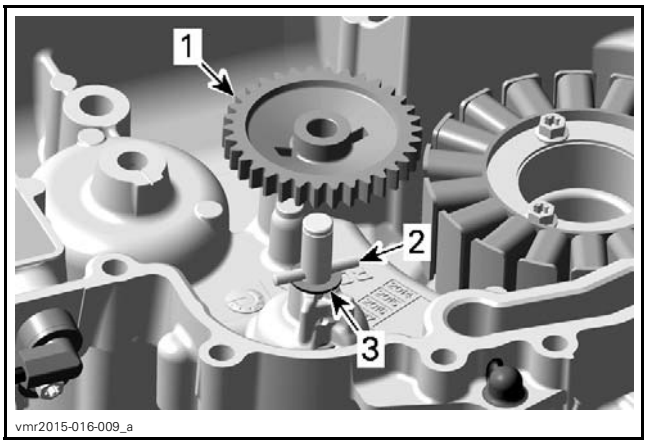

vmr2015-016-009_a

1. *Water pump gear*
2. *Needle pin*
3. *Thrust washer*

Push the water pump shaft with inner portion of the rotary seal from inside of magneto cover.

REQUIRED TOOL
Soft hammer

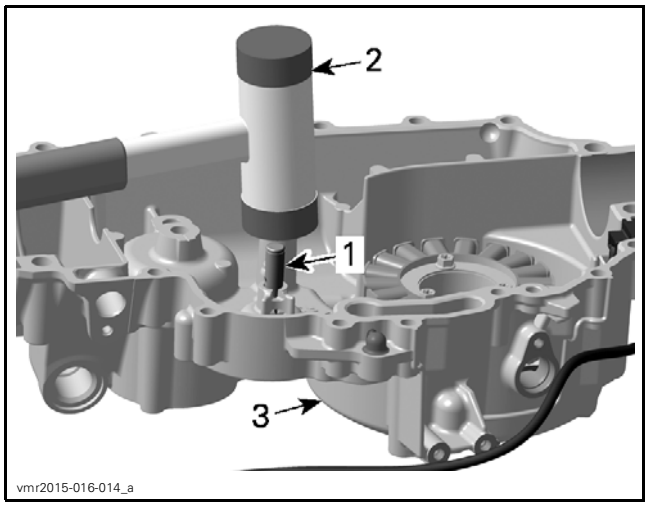

1. *Water pump shaft*
2. *Soft hammer*
3. *Magneto cover*

Install blind hole puller snugly against outer part of rotary seal.

Pull outer part of rotary seal out.

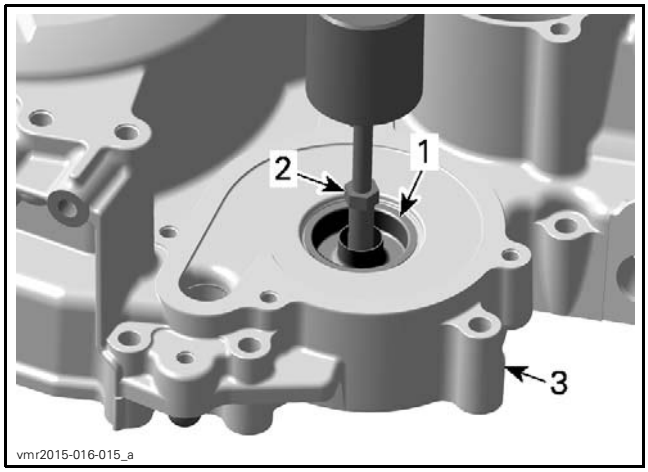

1. *Outer part of rotary seal*
2. *Expander*
3. *Magneto cover*

NOTICE Always replace rotary seal and water pump shaft together. Also install a NEW oil seal at the same time.

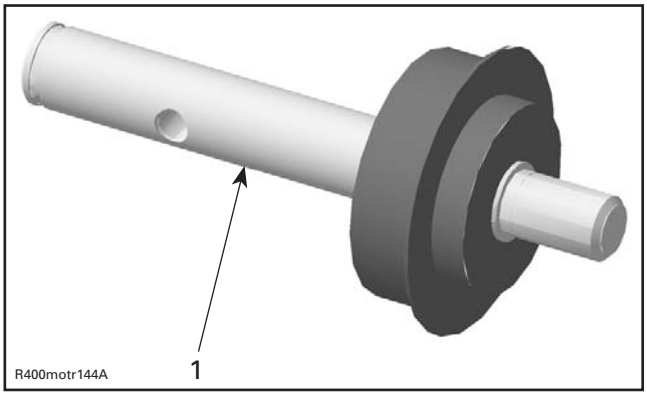

1. *Water pump shaft with rotary seal*

Remove oil seal from inside magneto cover using an appropriate pusher.

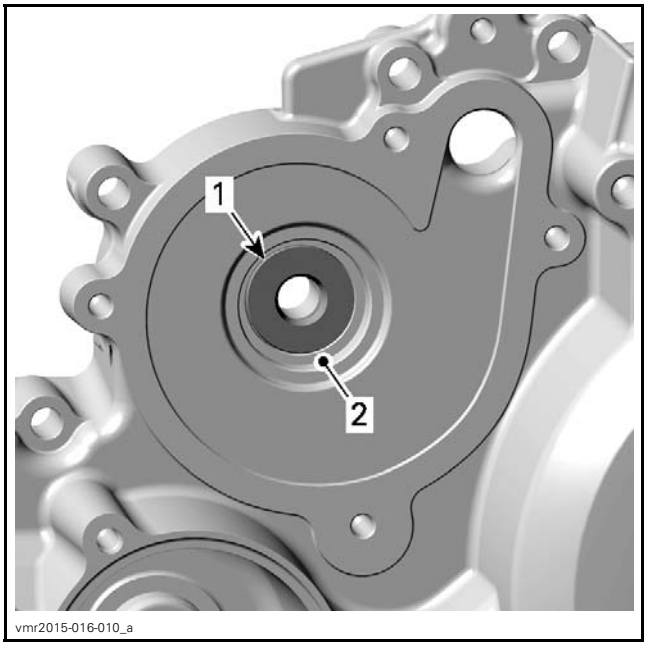

1. *Oil seal behind the rotary seal*
2. *Rotary seal bore*

NOTICE Be careful not to damage the surface of the rotary seal bore in magneto cover.

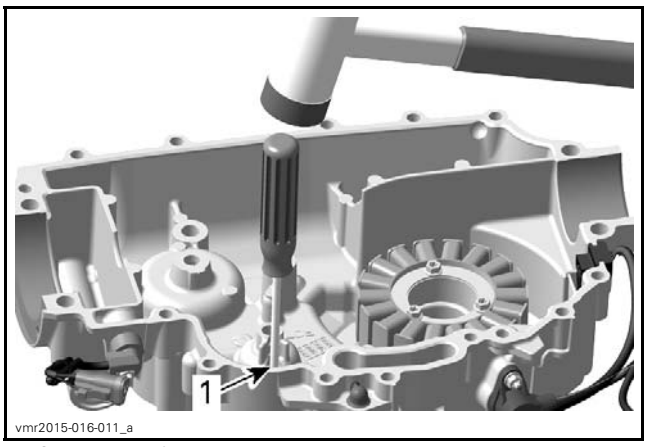

1. *Special area for oil seal removal*

Inspecting the Water Pump Shaft and Gear

Inspect water pump gear for:

- Wear
- Cracks
- Broken teeth
- Damage on snap mechanism to the needle pin.

Replace if damaged.

Inspect shaft and rotary seal for wear or damages.

Installing the Water Pump Shaft and Seal

The installation is the reverse of the removal procedure. However, pay attention to the following.

NOTICE **When replacing water pump shaft, always replace circlip, oil seal, water pump shaft and rotary seal with new parts.**

Install the water pump shaft oil seal.

REQUIRED TOOLS	
HANDLE (P/N 420 877 650)	
OIL SEAL PUSHER (P/N 529 035 757)	

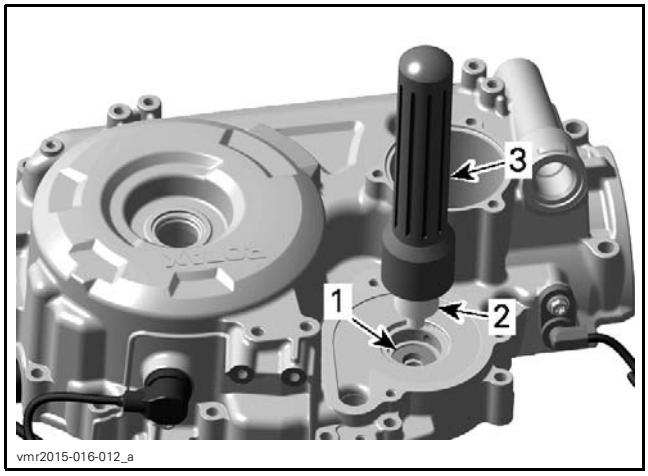

1. *Oil seal for water pump shaft*
2. *Oil seal pusher*
3. *Handle*

Install the water pump shaft assembly.

REQUIRED TOOL	
SEAL PUSHER (P/N 529 035 766)	

NOTE: Never use oil or grease in the press fit area of the oil seal and rotary seal bores.

Lubricate the sealing lip of the oil seal.

SERVICE PRODUCT	
Oil seal sealing lip	DOW CORNING 111 (P/N 413 707 000)

Apply a light coat of engine oil on the water pump shaft.

Press the water pump shaft assembly into the magneto cover using the outside area of the rotary seal.

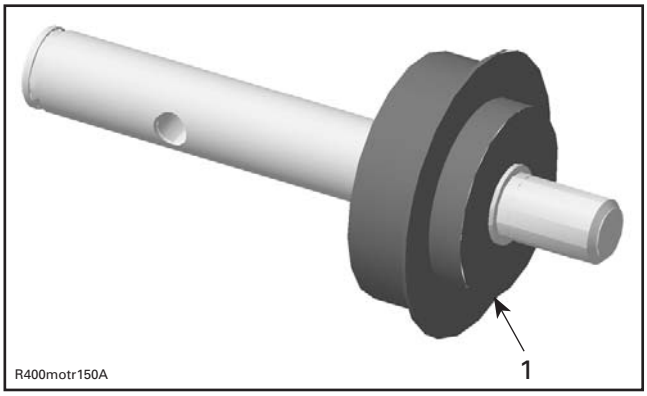

1. *Surface used to press water pump shaft assembly in place*

NOTICE **Never use a hammer for rotary seal installation. To avoid damaging the ceramic component, seal must be installed using a press.**

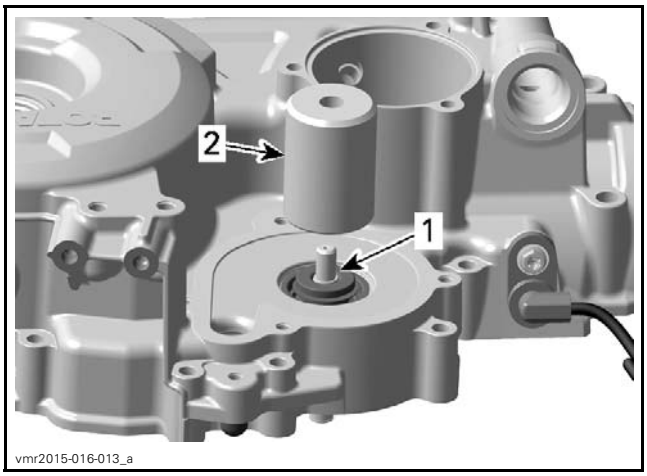

1. *Water pump shaft with rotary seal*
2. *Water pump ceramic seal installer*

NOTE: After installation water pump shaft with rotary seal must rotate freely.

Install magneto cover. Refer to *MAGNETO AND STARTER* subsection.

Install all other removed parts.

COOLING SYSTEM - ENGINE COMPONENTS (570, 650, 850, 1000 AND 1000R)

SERVICE TOOLS

Description	Part Number	Page
HANDLE	420 877 650	12
OIL SEAL PUSHER	529 035 757	12
ROTARY SEAL PUSHER PLATE	529 036 130	9
SEAL PUSHER	529 035 766	9, 13

SERVICE PRODUCTS

Description	Part Number	Page
DOW CORNING 111	413 707 000	12
LOCTITE 243 (BLUE)	293 800 060	5

WATER PUMP AND THERMOSTAT

570 and 650 Engines

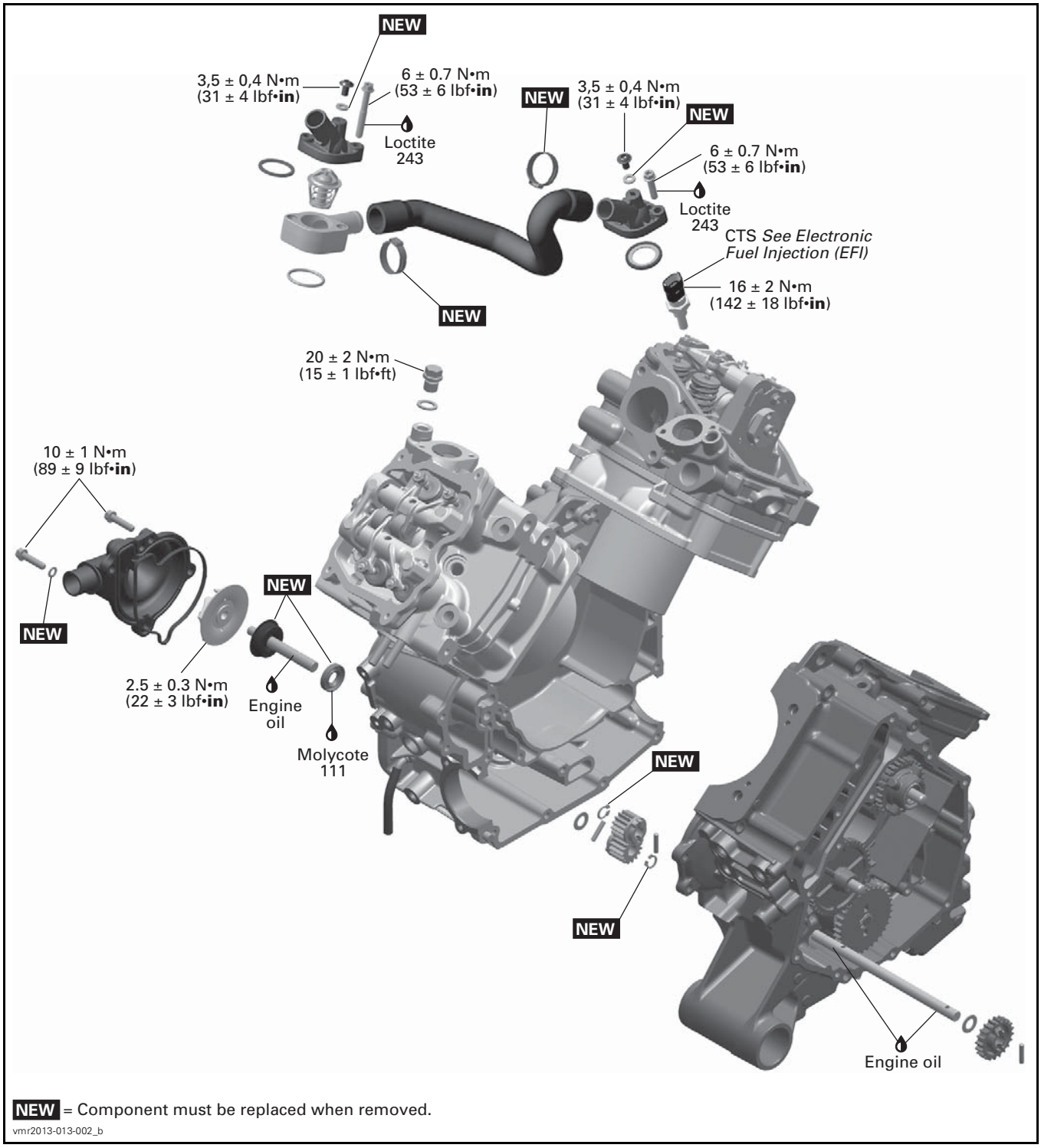

NEW = Component must be replaced when removed.

vmr2013-013-002_b

WATER PUMP

850, 1000 and 1000R Engines

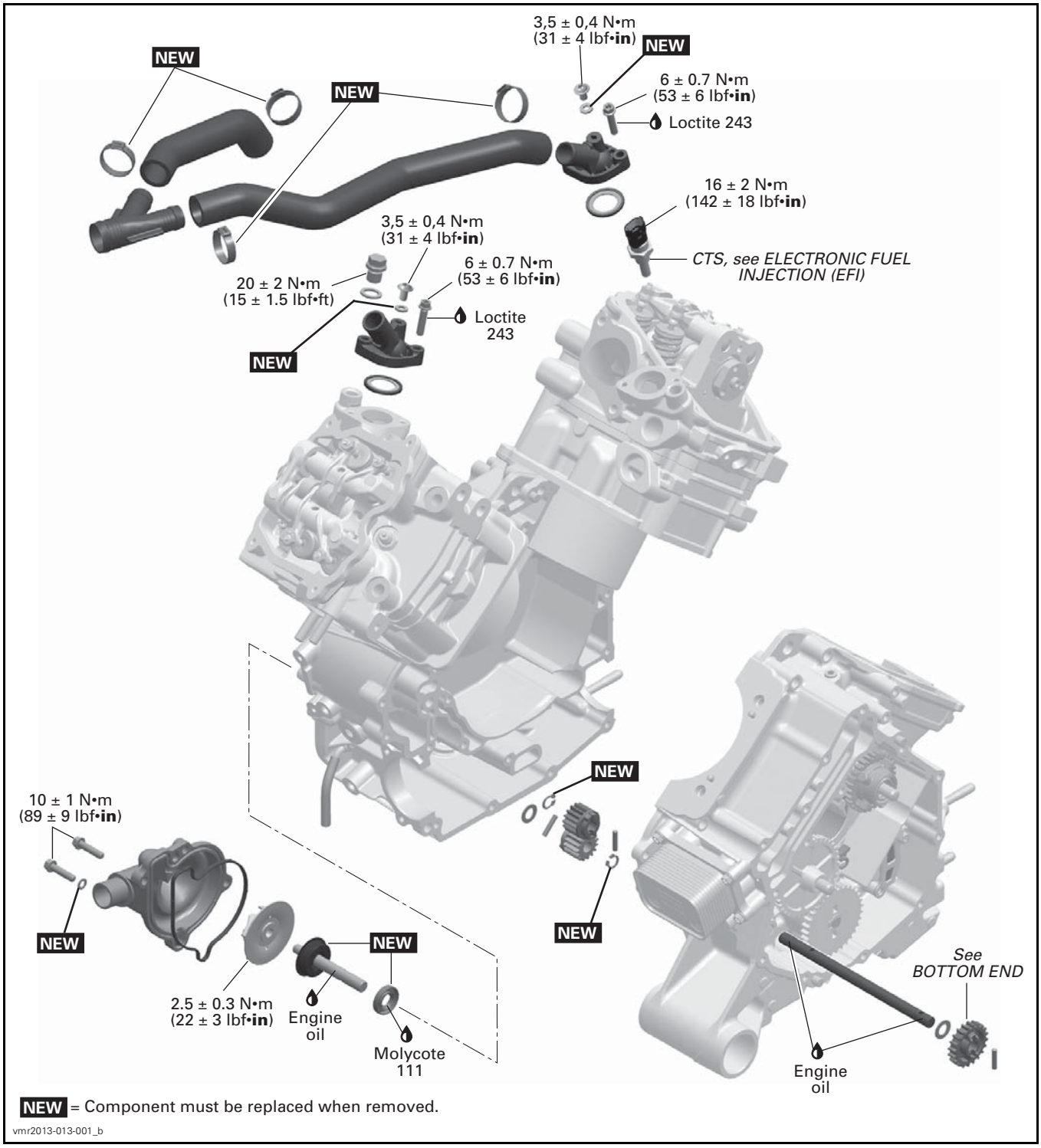

GENERAL

NOTICE **Never start engine without coolant. Some engine parts such as the rotary seal on the water pump shaft can be damaged.**

PROCEDURES

THERMOSTAT

Thermostat Location

570 and 650 Engines

The thermostat is located in the thermostat housing at the top of the front cylinder (RH side).

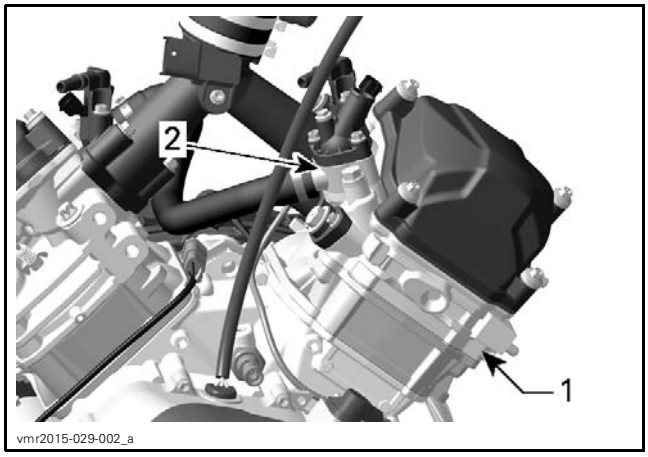

vmr2015-029-002_a

1. *Front cylinder*
2. *Thermostat housing*

850, 1000 and 1000R Engines

The thermostat is located between the front cylinder and the radiator, behind the RH front inner fender.

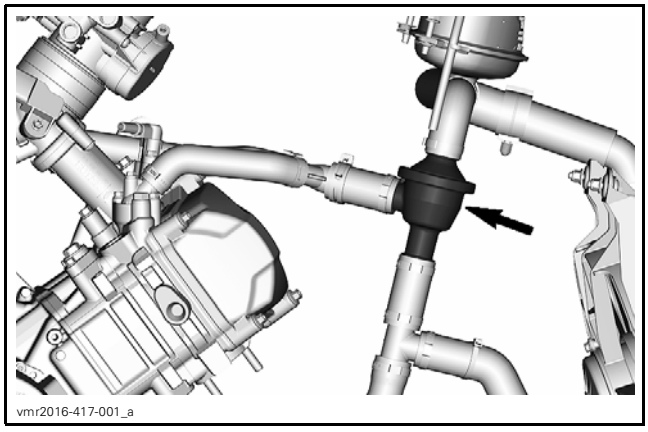

vmr2016-417-001_a

Removing the Thermostat

Drain engine coolant, refer to *PERIODIC MAINTENANCE PROCEDURES* subsection.

570 and 650 Engines

1. Remove thermostat housing screws and remove thermostat cover.

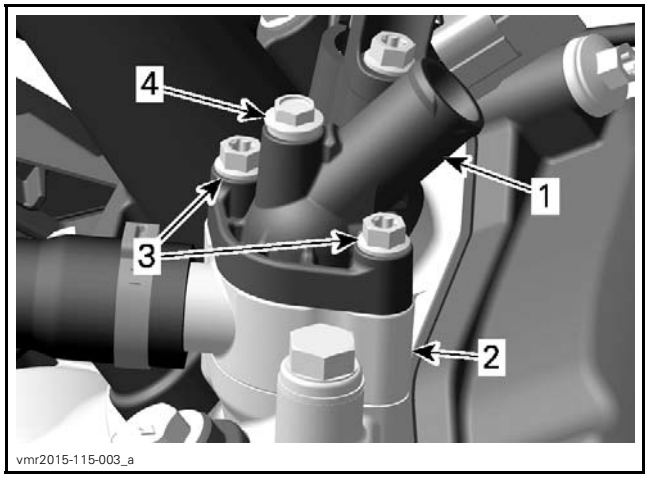

vmr2015-115-003_a

1. *Thermostat cover*
2. *Thermostat housing*
3. *Cover screws*
4. *Bleed screw*

2. Pull thermostat and gasket.

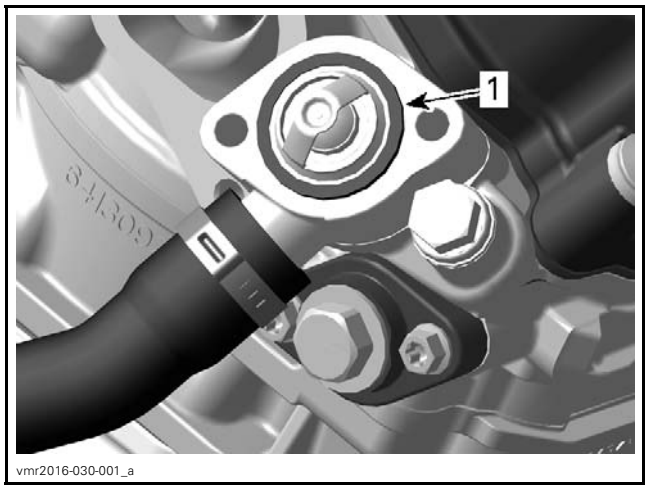

vmr2016-030-001_a

1. *Thermostat with gasket*

850, 1000 and 1000R Engines

1. Remove the RH front inner fender.
2. Remove Oetiker clamps.

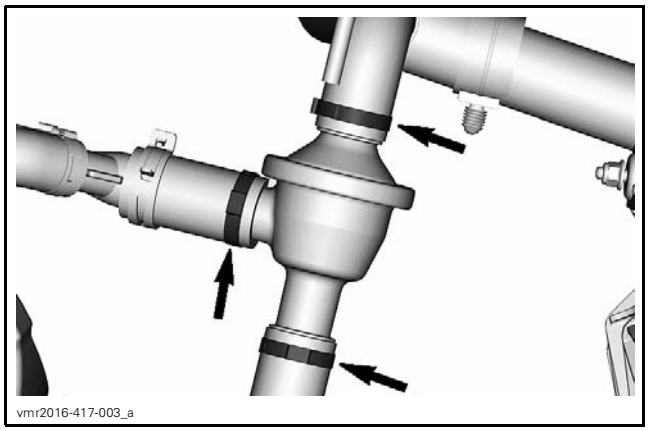
vmr2016-417-003_a

3. Remove the thermostat and its housing as a unit.

Testing the Thermostat

To check thermostat, put it in water and heat the water.

THERMOSTAT OPENING TEMPERATURE	
STARTS TO OPEN	FULLY OPEN
65°C (149°F)	75°C (167°F)

Replace thermostat if it does not begin to open at specified temperature.

Check if gasket is brittle, hard or damaged. If so, replace gasket.

Installing the Thermostat

The installation is the reverse of the removal procedure. However, pay attention to the following.

570 and 650 Engines

SERVICE PRODUCT	
Thermostat cover retaining screws	LOCTITE 243 (BLUE) (P/N 293 800 060)

TIGHTENING TORQUE	
Thermostat cover retaining screws	6 N•m ± 0.7 N•m (53 lbf•**in** ± 6 lbf•**in**)

850, 1000 and 1000R Engines

Install **NEW** Oetiker clamps.

All Models

Refill and bleed cooling system, refer to *PERIODIC MAINTENANCE PROCEDURES* subsection.

Check cooling system for leaks.

COOLANT TEMPERATURE SENSOR (CTS)

Refer to *ELECTRONIC FUEL INJECTION (EFI)* subsection.

WATER PUMP HOUSING

Water Pump Housing Location

The water pump housing is located on the engine MAG side.

Removing the Water Pump Housing

CAUTION To avoid potential burns, do not remove the radiator cap or loosen the coolant drain plug if the engine is hot.

1. Drain engine coolant. Refer to *PERIODIC MAINTENANCE PROCEDURES* subsection.
2. Remove radiator outlet hose from water pump housing.
3. Remove screws retaining water pump housing.

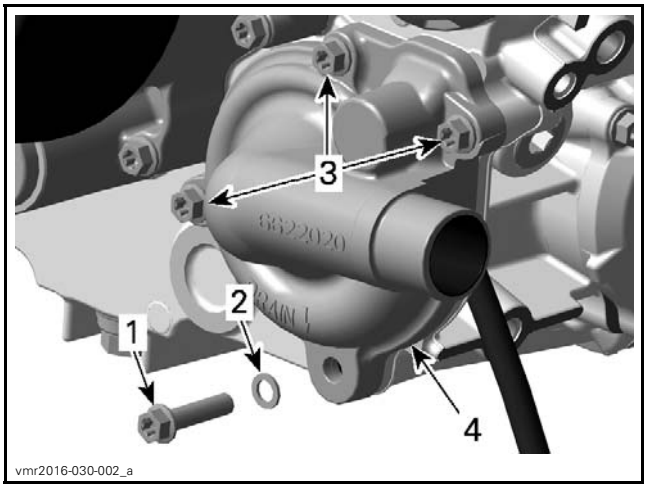

vmr2016-030-002_a

1. *Coolant drain plug*
2. *Sealing ring*
3. *Screws*
4. *Water pump housing*

4. Pull water pump housing to remove it.

Inspecting the Water Pump Housing

Check if gasket is brittle, hard or damaged and replace as necessary.

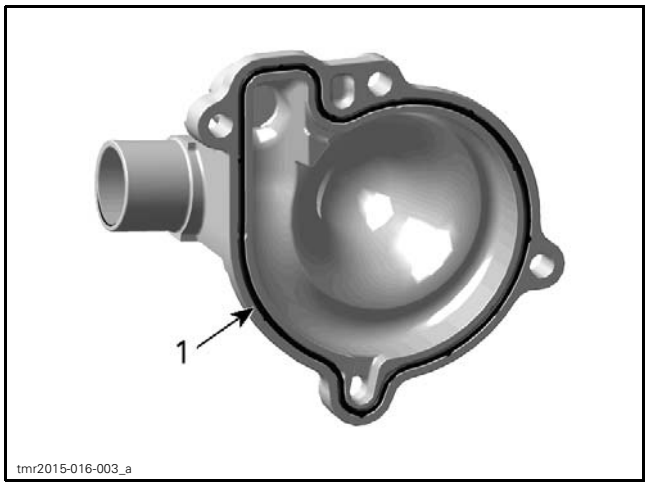

1. Gasket

Installing the Water Pump Housing

The installation is the reverse of the removal procedure. However, pay attention to the following.

NOTICE **To prevent leaking, take care that the gasket is exactly in groove when you reinstall the water pump housing.**

Tighten screws of water pump housing in a criss-cross sequence to specification.

TIGHTENING TORQUE	
Water pump housing screws	10 N•m ± 1 N•m (89 lbf•**in** ± 9 lbf•**in**)

WATER PUMP IMPELLER

Removing the Water Pump Impeller

1. Proceed with *REMOVING THE WATER PUMP HOUSING*. See procedure in this subsection.
2. Remove impeller by unscrewing it counter-clockwise.

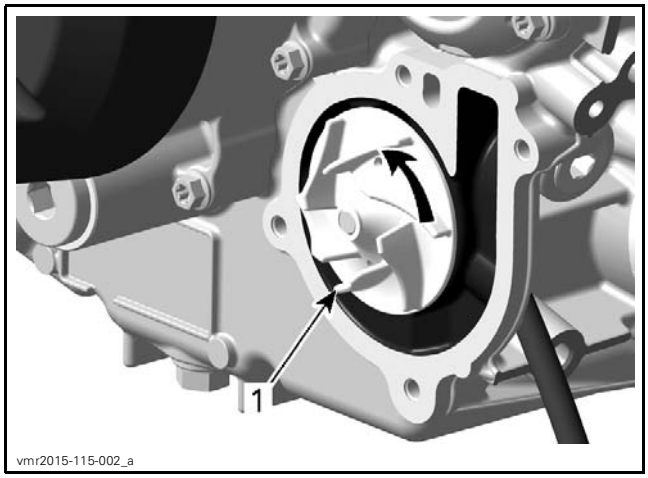

1. Turn counterclockwise to unscrew

NOTICE **Water pump shaft and impeller have right-hand threads.**

Inspecting the Water Pump Impeller

Check impeller for cracks or other damage. Replace impeller if damaged.

Installing the Water Pump Impeller

The installation is the reverse of the removal procedure. However, pay attention to the following.

NOTICE **Be careful not to damage impeller fins during installation.**

TIGHTENING TORQUE	
Water pump impeller	2.5 N•m ± 0.3 N•m (22 lbf•**in** ± 3 lbf•**in**)

WATER PUMP SHAFT AND SEALS

Use these guidelines to service these parts.

DEFECTIVE PART	ACTION
Rotary seal	Replace: - Rotary seal - Oil seal (assembled engine)
Oil seal	Replace: - Rotary seal - Oil seal (assembled engine)
Water pump shaft	Replace: - Water pump shaft assembly (including rotary seal) - Oil seal (engine disassembled)

Water Pump Seals Replacement (Assembled Engine)

NOTE: Read and thoroughly understand the entire procedure before starting it.

Removing the Seals

1. Remove the following parts, see procedure in this subsection.
   – *WATER PUMP HOUSING*
   – *WATER PUMP IMPELLER*.
2. Carefully pry out inner part of the rotary seal using 2 screwdrivers.

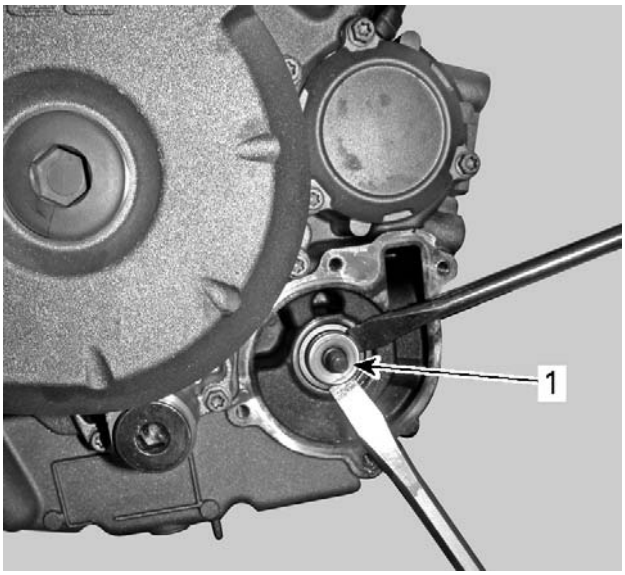

tmr2011-011-050_a

1. *Inner part of rotary seal*

vbs2008-011-005

TYPICAL - INNER PART OF ROTARY SEAL REMOVED

3. Carefully bend down the outer part of rotary seal lip using a small chisel.

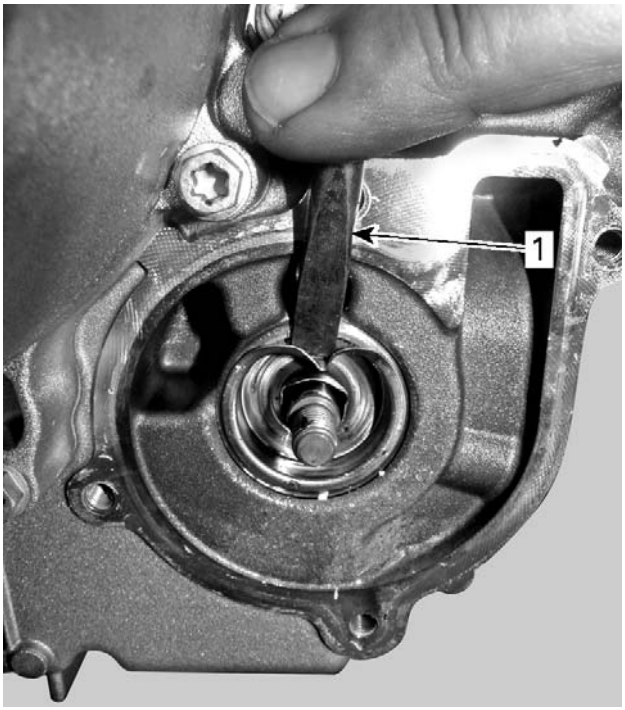

tmr2011-011-051_a

1. *Small chisel*

4. Use 2 screwdrivers and carefully remove the outer part of the rotary seal.

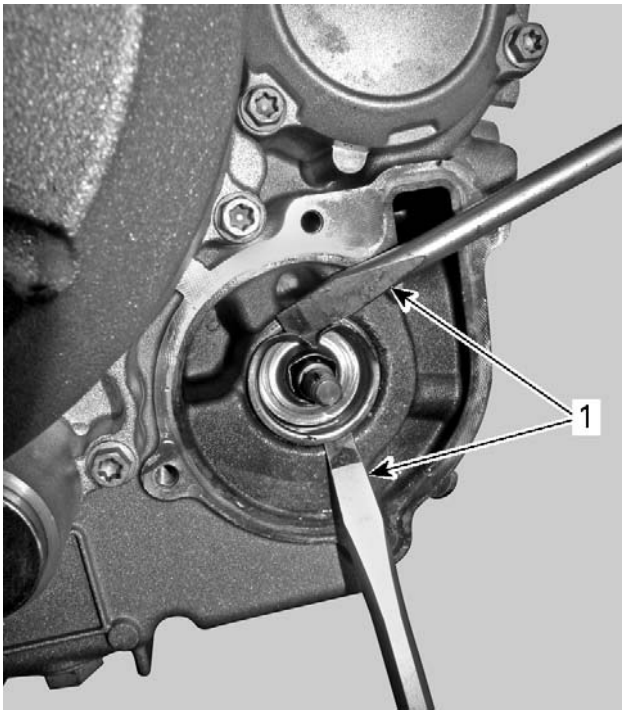

tmr2011-011-052_a

1. *Screwdrivers*

NOTICE Be careful not to damage the crankcase while removing outer part of the rotary seal.

5. Thoroughly remove sealing residue and burr of rotary seal using a scraper.

NOTICE Be careful not to damage water pump shaft.

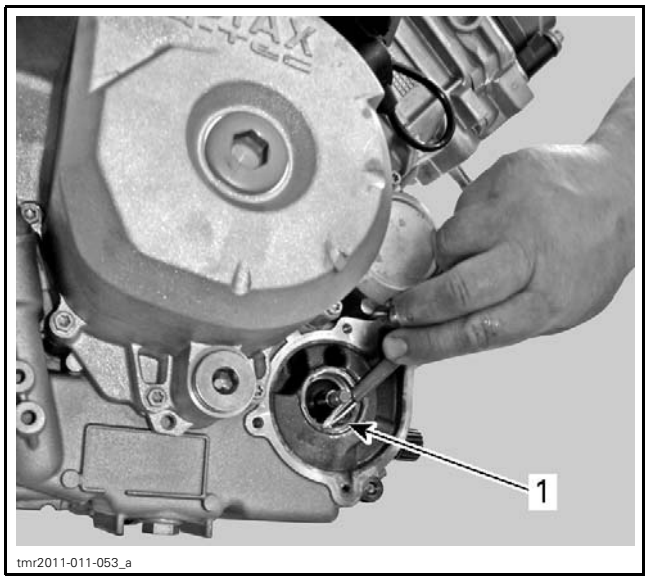

1. Scraper

6. Install 2 wooden screws in the seal.

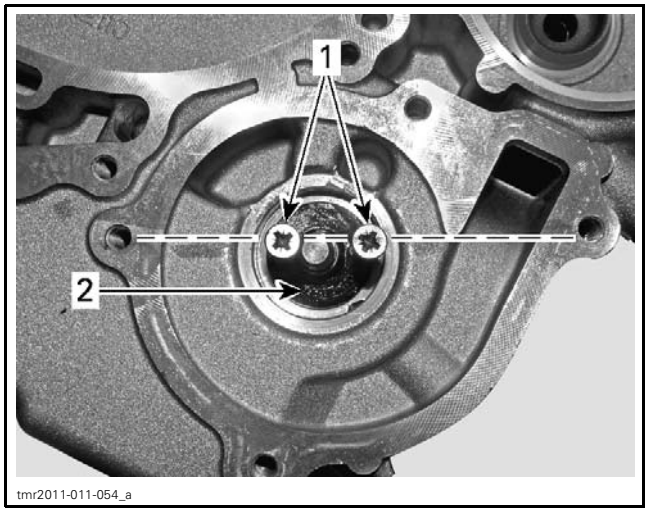

1. Wooden screws
2. Oil seal

7. Remove oil seal from crankcase by pulling screws with pliers.

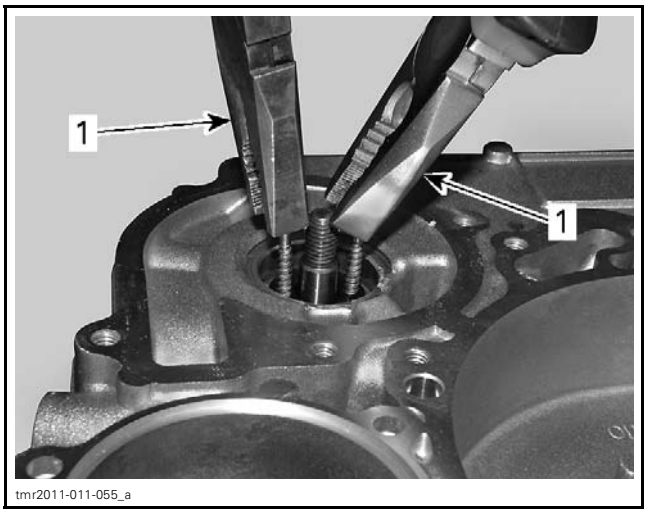

1. Pull on screws to remove seal

8. Check water pump shaft axial play.

NOTE: If axial play is not adequate, engine must be disassembled to replace water pump shaft.

9. Clean oil seal seat.

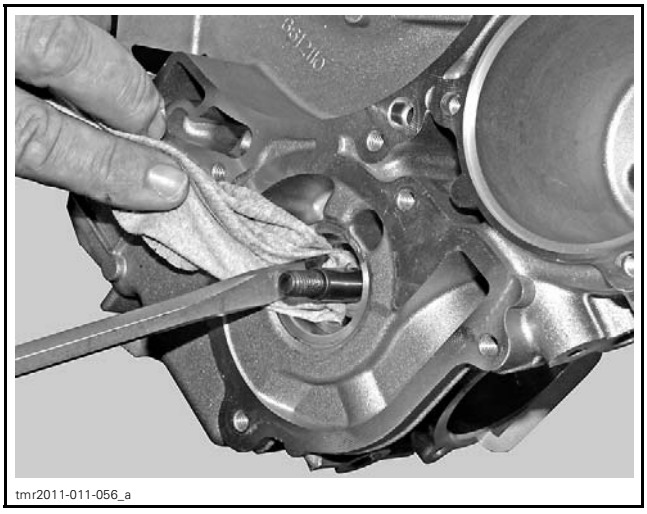

Installing the Seals

1. Apply engine oil on water pump shaft.
2. Apply grease on the lips of the oil seal.
3. Carefully install oil seal over the water pump shaft.
4. Push oil seal into the water pump cavity.

REQUIRED TOOL
17 mm (11/16 in) deep socket

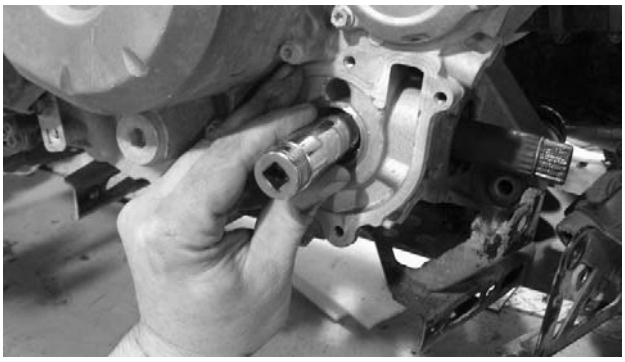

OIL SEAL INSTALLATION

5. Ensure that the oil seal is properly seated in water pump cavity.

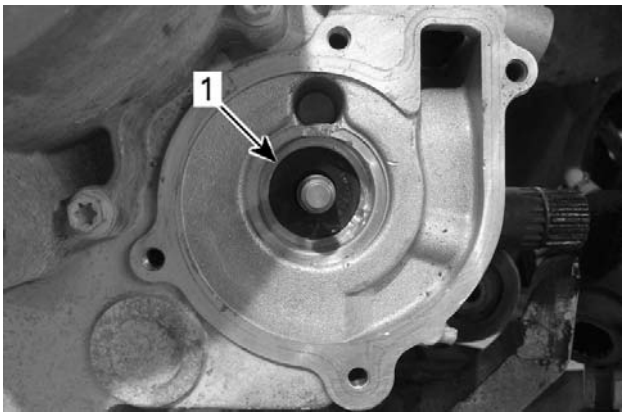

TYPICAL
1. Oil seal properly seated

6. Apply engine oil on water pump shaft.
7. Place rotary seal onto water pump shaft and pull out water pump shaft by hand.

NOTICE **Do not install the rotary seal completely into the crankcase to prevent the water pump shaft plastic gear from breaking. Push it partially in, then pull the shaft.**

8. Place a robust M8 flat washer (P/N 420 227 935) onto water pump shaft.
9. Install a M8 x 1.25 nut (P/N 233 281 414) onto water pump shaft by hand.
10. Thread nut **1-1/2 turns** to pull the shaft into rotary seal.

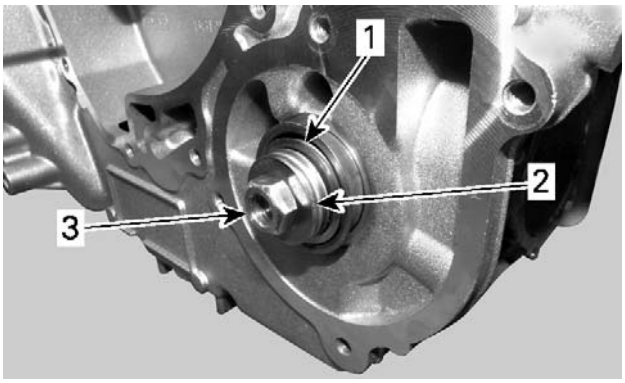

1. Rotary seal
2. M8 robust flat washer (P/N 420 227 935)
3. M8 x 1.25 nut (P/N 233 281 414)

11. Remove M8 nut.

NOTE: The robust M8 flat washer must remain on water pump shaft.

12. Assemble the rotary seal installation tools.

REQUIRED TOOLS
ROTARY SEAL PUSHER PLATE (P/N 529 036 130)
4x M6 x 85 screws (P/N 420 440 347)
4x tubes 70 mm (2.75 in)
SEAL PUSHER (P/N 529 035 766)

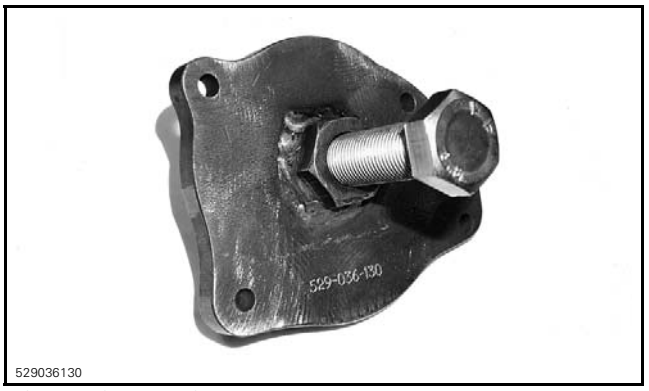

ROTARY SEAL PUSHER PLATE (P/N 529 036 130)

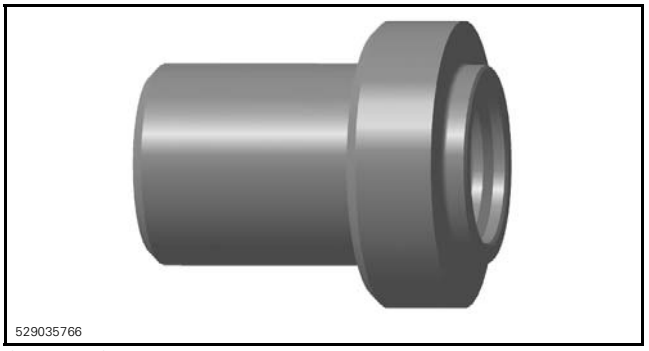

SEAL PUSHER (P/N 529 035 766)

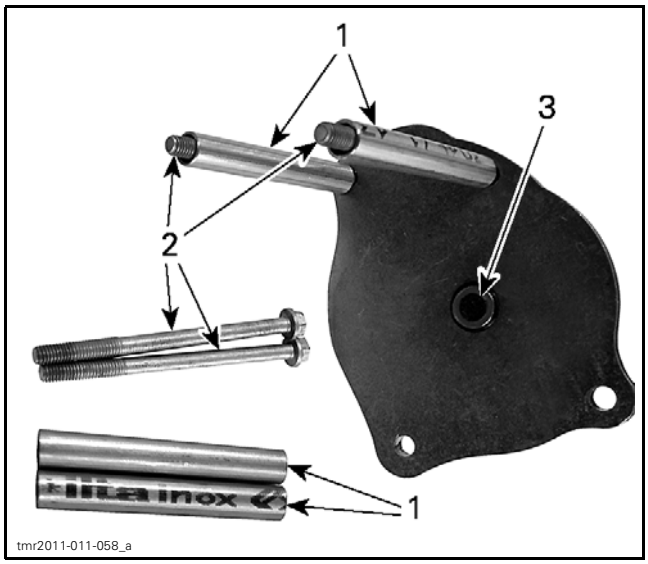

ROTARY SEAL PUSHER PLATE ASSEMBLY
1. *4 x tubes (70 mm (2.75 in) length)*
2. *4 x screws M6 x 85*
3. *Plane surface on pusher bolt*

13. Install rotary seal installation tools on crankcase as follows.

    NOTE: Make sure pusher bolt has a plane surface.

    13.1 Apply a little grease at the end of tool pusher bolt.

    13.2 Ensure that pusher bolt is completely unscrewed.

    13.3 Install rotary seal pusher plate on crankcase by tightening M6 screws.

    NOTICE **Do not use pneumatic or electric tools for tightening screws.**

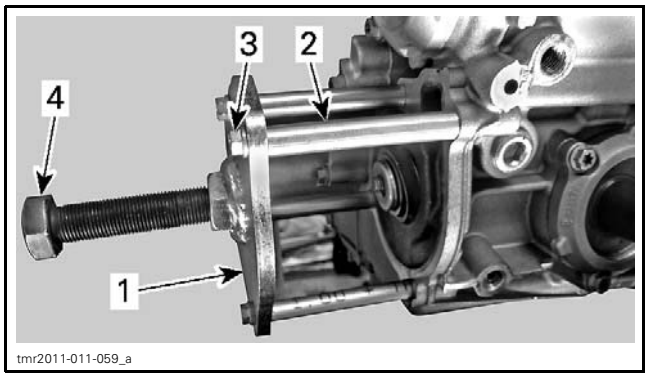

ROTARY SEAL PUSHER PLATE INSTALLATION
1. *Rotary seal pusher plate*
2. *Tube (70 mm (2.75 in) length)*
3. *M6 x 85 screw*
4. *Pusher bolt*

    13.4 Install seal pusher between rotary seal pusher plate and water pump shaft.

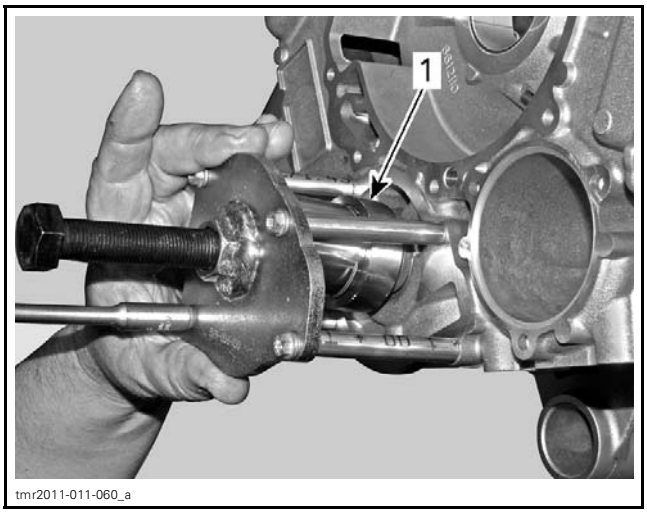

SEAL PUSHER INSTALLATION
1. *Seal pusher aligned with pusher bolt*

    13.5 Tighten the pusher bolt by hand until it stops against the seal pusher.

14. Carefully thread the pusher bolt **1-1/2 turns**.
15. Ensure that the rotary seal is going straight into crankcase.
16. Remove rotary seal installation tools from crankcase.
17. Repeat steps *9 TO 16* until rotary seal is completely seated in the crankcase.

NOTICE **Repeating the points 9 to 16 is absolutely necessary. If the rotary seal is pressed in at once, the water pump gears will be damaged.**

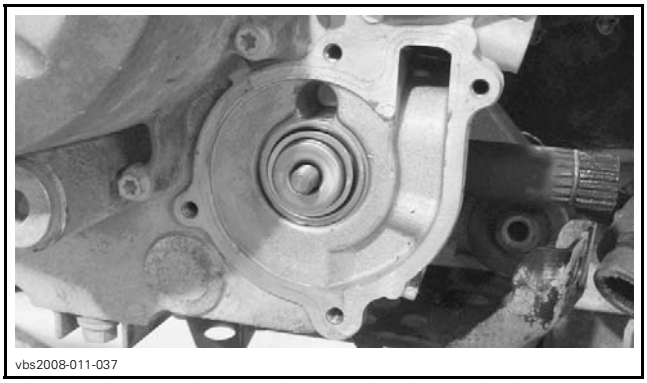

ROTARY SEAL PROPERLY SEATED ON CRANKCASE

18. Carry out the final adjustment of the water pump shaft as follows.

    18.1 Install M8 x 1.25 nut (P/N 233 281 414) onto water pump shaft.

    18.2 Carefully thread M8 nut until the rotary seal is flush with the end of water pump shaft threads.

vbs2008-011-040

WATER PUMP SHAFT PROPERLY ADJUSTED WITH ROTARY SEAL

NOTICE **The water pump shaft must be properly adjusted with rotary seal. The water pump shaft must move freely while pushing it toward the crankcase.**

19. Install the following parts, see procedure in this subsection.
    - *WATER PUMP IMPELLER*
    - *WATER PUMP HOUSING*.
20. Refill and bleed cooling system. Refer to *PERIODIC MAINTENANCE PROCEDURES* subsection.
21. Check cooling system for leaks.

Water Pump Shaft and Seals Replacement (Disassembled Engine)

Removing the Water Pump Shaft and Seals

1. Remove the following parts, see procedure in this subsection:
    - *WATER PUMP HOUSING*
    - *WATER PUMP IMPELLER*
    - *WATER PUMP GEARS*.
2. Push out water pump shaft with inner portion of rotary seal from inside of crankcase MAG side.

REQUIRED TOOL
Soft hammer

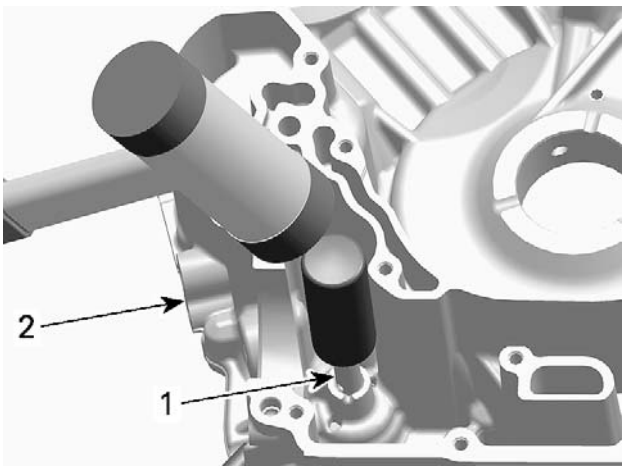

tmr2011-011-010_a

1. *Water pump shaft*
2. *Crankcase MAG side*

3. Install a blind hole puller expander snugly against outer part of rotary seal and pull seal out.

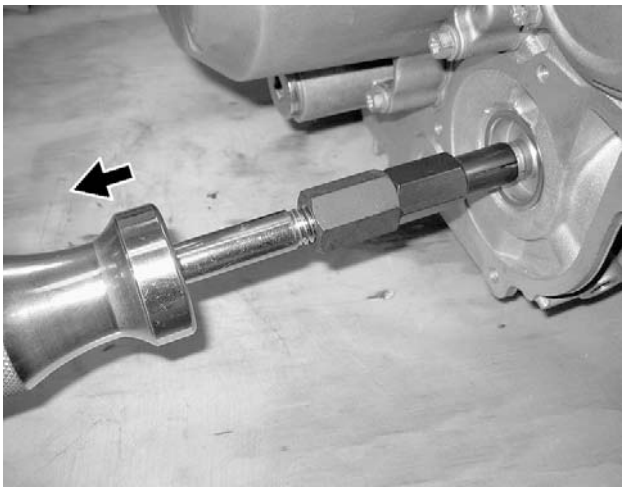
vmr2007-034-105_a

4. Remove oil seal from inside of crankcase MAG side using a pusher tool.

NOTICE **Be careful not to damage the rotary seal surface in crankcase.**

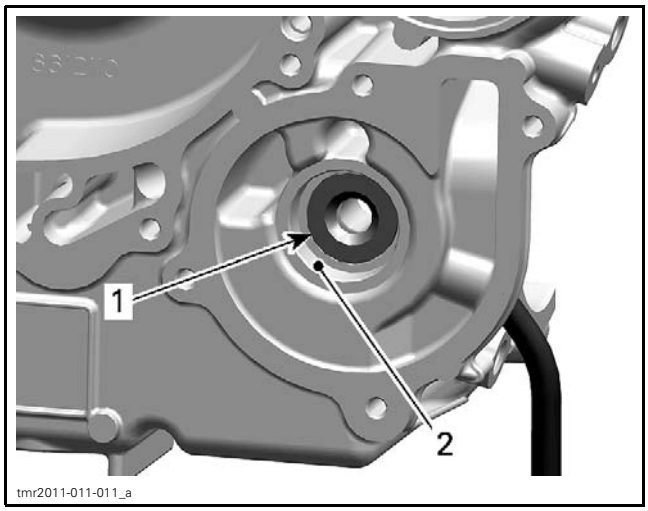

1. *Oil seal*
2. *Machined surface for rotary seal*

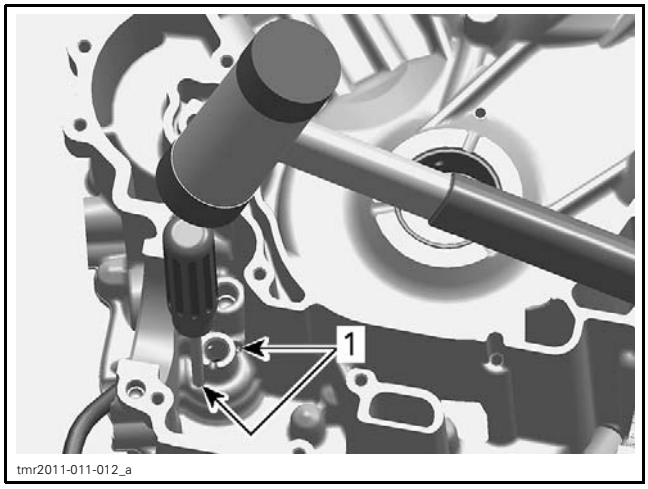

OIL SEAL REMOVAL - VIEW FROM INSIDE CRANKCASE MAG SIDE
1. *Orifices for oil seal removal*

Installing the Water Pump Shaft and Seals

The installation is the reverse of the removal procedure. However, pay attention to the following.

Use tightening torque values specified in the exploded view.

NOTICE **Never apply oil on the press fit area of the oil seal and rotary seal.**

Clean rotary seal surface of any old sealant.

Install oil seal.

REQUIRED TOOL	
OIL SEAL PUSHER (P/N 529 035 757)	
HANDLE (P/N 420 877 650)	

When installing the oil seal on the pusher, make sure the sealing lip points outwards.

Push **NEW** oil seal in place.

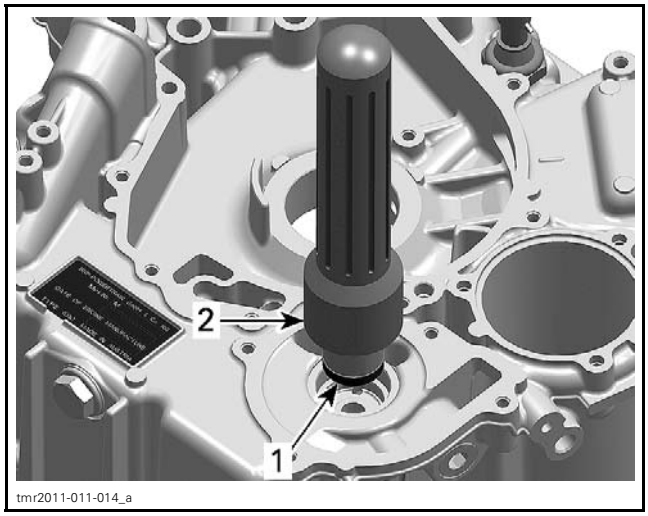

1. *Oil seal*
2. *Installer handle with oil seal pusher*

Lubricate sealing lip of the oil seal.

SERVICE PRODUCT	
Sealing lip of the oil seal	DOW CORNING 111 (P/N 413 707 000)

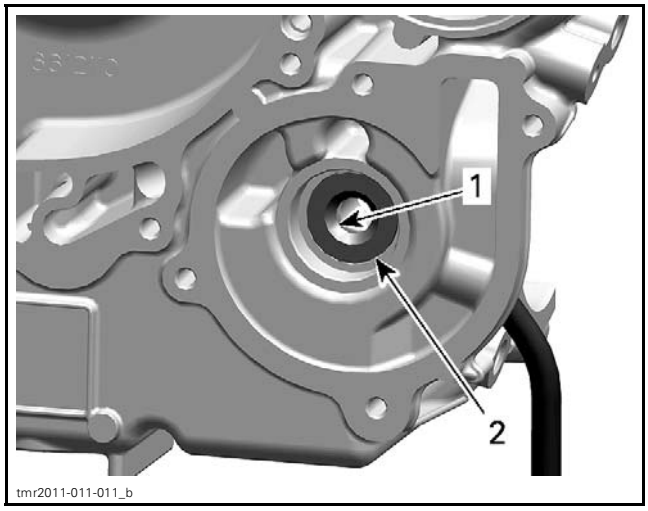

1. *Sealing lip*
2. *Oil seal properly installed*

Apply engine oil on the water pump shaft and intermediate shaft.

Slide **NEW** water pump shaft assembly into crankcase.

REQUIRED TOOL	
SEAL PUSHER (P/N 529 035 766)	

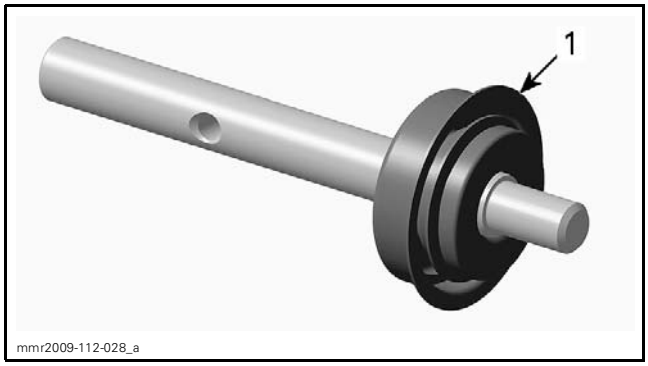

WATER PUMP SHAFT ASSEMBLY
1. *Surface where rotary seal is pushed by tool*

NOTICE Never use a hammer for rotary seal installation. Only use a press to avoid damaging the ceramic component.

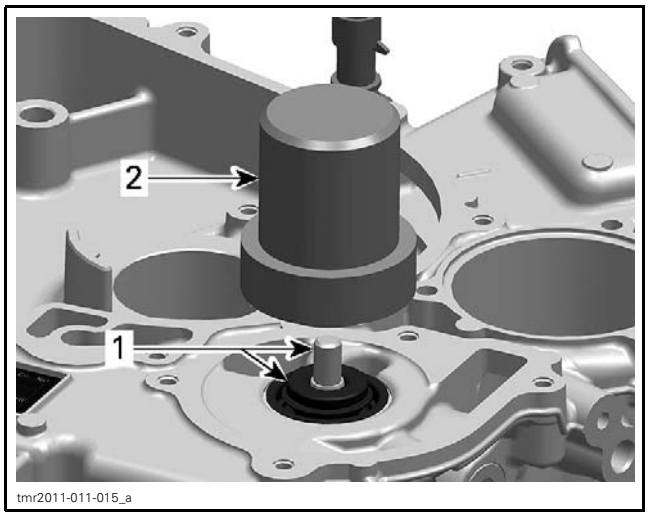

1. *Water pump shaft with rotary seal*
2. *Water pump seal installer*

NOTICE After installation, water pump shaft with rotary seal must rotate freely.

WATER PUMP GEARS

Water Pump Gears Identification

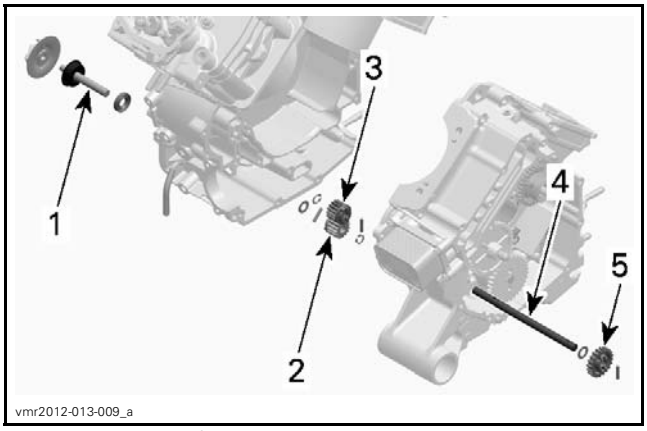

1. *Water pump shaft*
2. *Water pump gear*
3. *Water pump* **intermediate drive** *gear*
4. *Water pump* **intermediate** *shaft*
5. *Water pump* **drive** *gear (See BOTTOM END subsection)*

Inspecting the Water Pump Gears

Water Pump Gear

Inspect water pump gear for wear and damage on the snap mechanism to the needle pin. Replace if damaged.

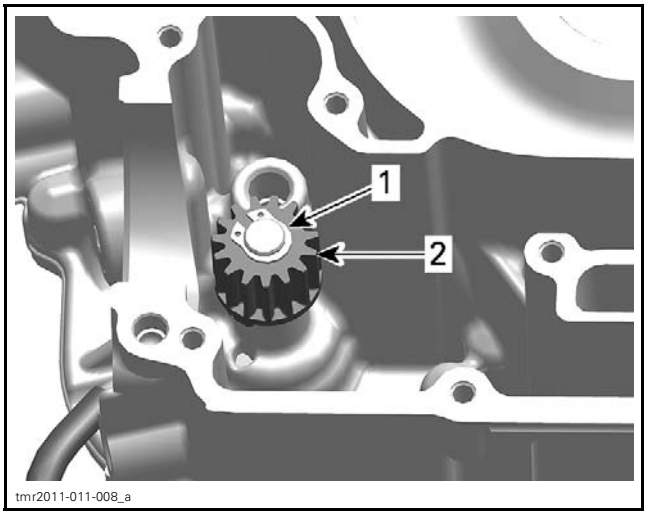

CRANKCASE MAG SIDE
1. *Circlip*
2. *Water pump gear*

Water Pump Intermediate Drive Gear

Check water pump intermediate drive gear for wear or broken teeth. Replace if damaged.

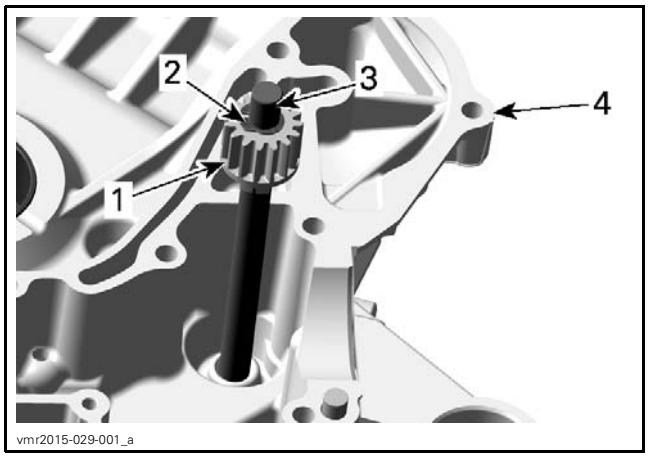

CRANKCASE PTO SIDE
1. *Water pump intermediate drive gear*
2. *Circlip*
3. *Water pump intermediate shaft*
4. *Crankcase PTO side*

Water Pump Drive Gear

See *BOTTOM END* subsection.

Removing the Water Pump Gears

Water Pump Gear

1. Remove circlip retaining water pump gear and discard it.

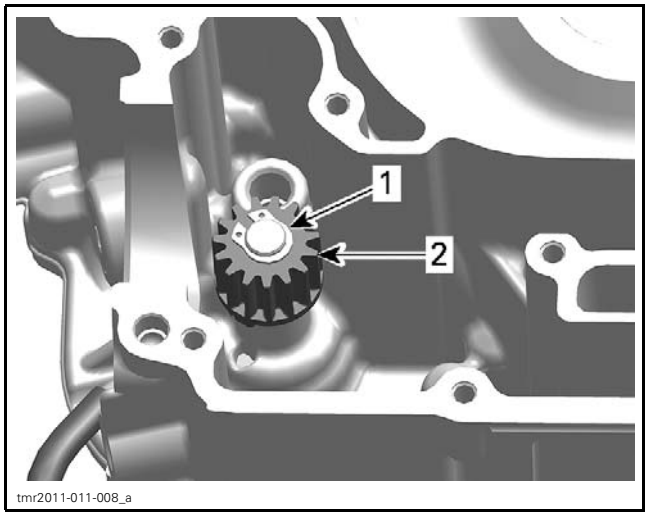

CRANKCASE MAG SIDE
1. *Circlip*
2. *Water pump gear*

2. Remove the following parts:
   – Water pump gear
   – Needle pin
   – Thrust washer.

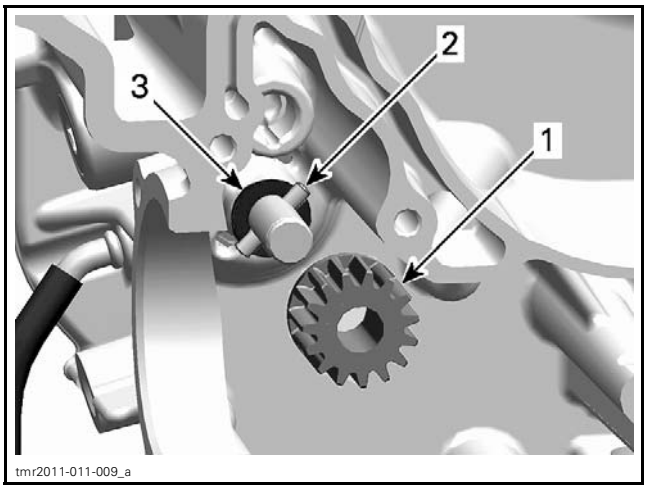

CRANKCASE MAG SIDE
1. *Water pump gear*
2. *Needle pin*
3. *Thrust washer*

Water Pump Intermediate Drive Gear

1. Remove circlip retaining water pump intermediate drive gear and discard it.

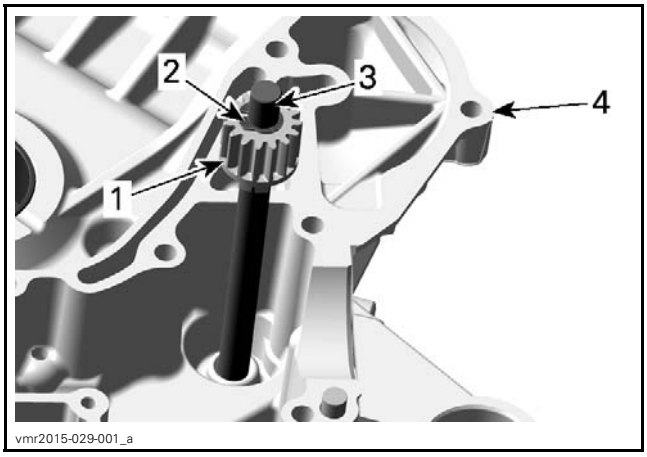

CRANKCASE PTO SIDE
1. *Water pump intermediate drive gear*
2. *Circlip*
3. *Water pump intermediate shaft*
4. *Crankcase PTO side*

2. Remove the following parts:
   – Water pump intermediate drive gear
   – Needle pin.

Water Pump Drive Gear

See *BOTTOM END* subsection.

Installing the Water Pump Gears

Water Pump Gear

Install the following parts on water pump shaft.
– Thrust washer
– Needle pin
– Water pump gear.

NOTICE A missing thrust washer will cause a leaking rotary seal.

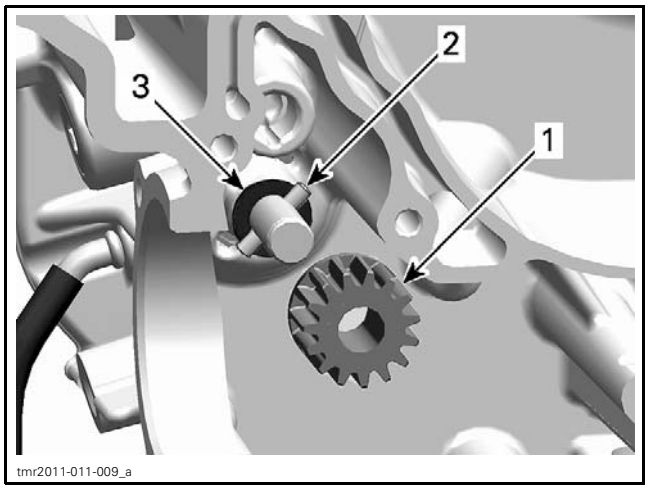

1. *Water pump gear*
2. *Needle pin*
3. *Thrust washer*

NOTE: Ensure water pump gear snaps properly onto needle pin.

Install NEW circlip to retain water pump gear.

NOTICE Never use the circlip a second time. Always install a NEW one.

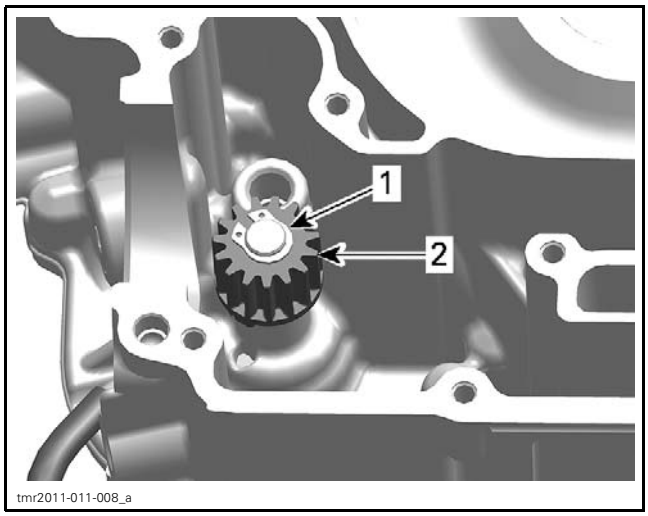

1. *Circlip*
2. *Water pump gear*

Water Pump Intermediate Drive Gear

Install the following parts on water pump intermediate shaft.

– Needle pin
– Water pump intermediate drive gear.

Install NEW circlip to retain water pump intermediate drive gear.

NOTICE Never use the circlip a second time. Always install a NEW one.

Water Pump Drive Gear

See *BOTTOM END* subsection.

COOLING SYSTEM - VEHICLE COMPONENTS

450 Engines

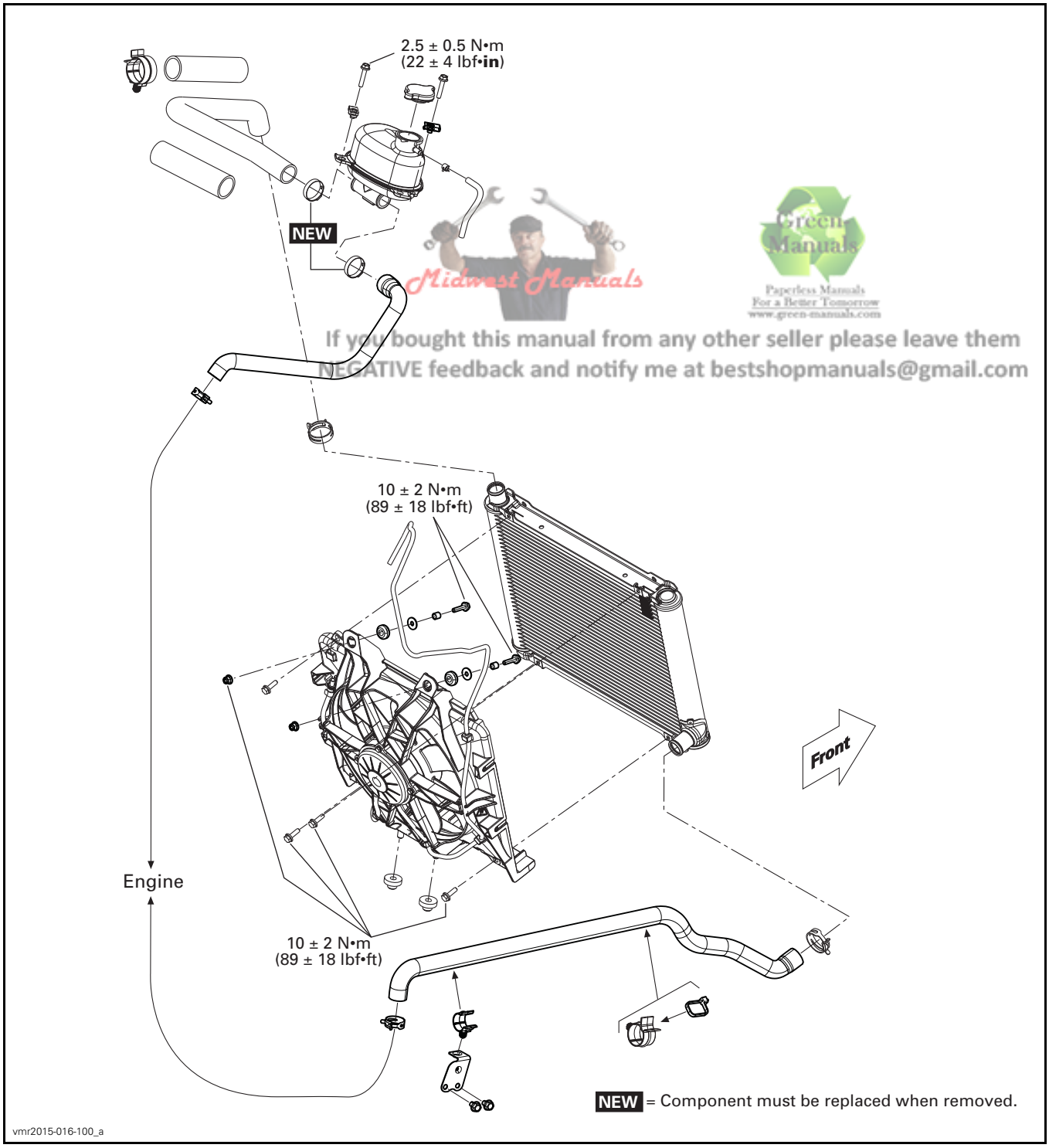

Midwest Manuals
Green Manuals
Paperless Manuals
For a Better Tomorrow
www.green-manuals.com
If you bought this manual from any other seller please leave them NEGATIVE feedback and notify me at bestshopmanuals@gmail.com

570 and 650 Engines

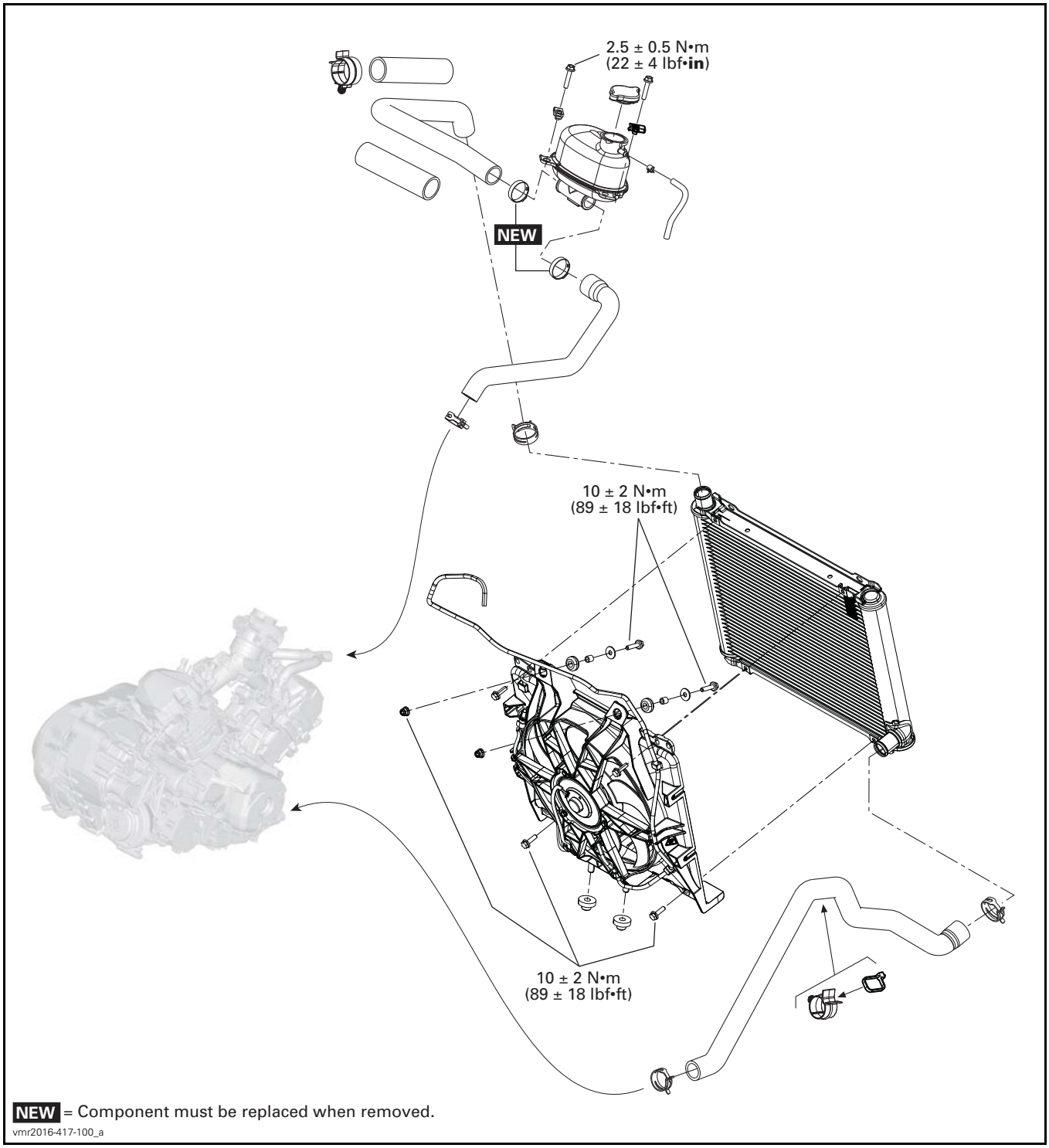

850, 1000 and 1000R Engines

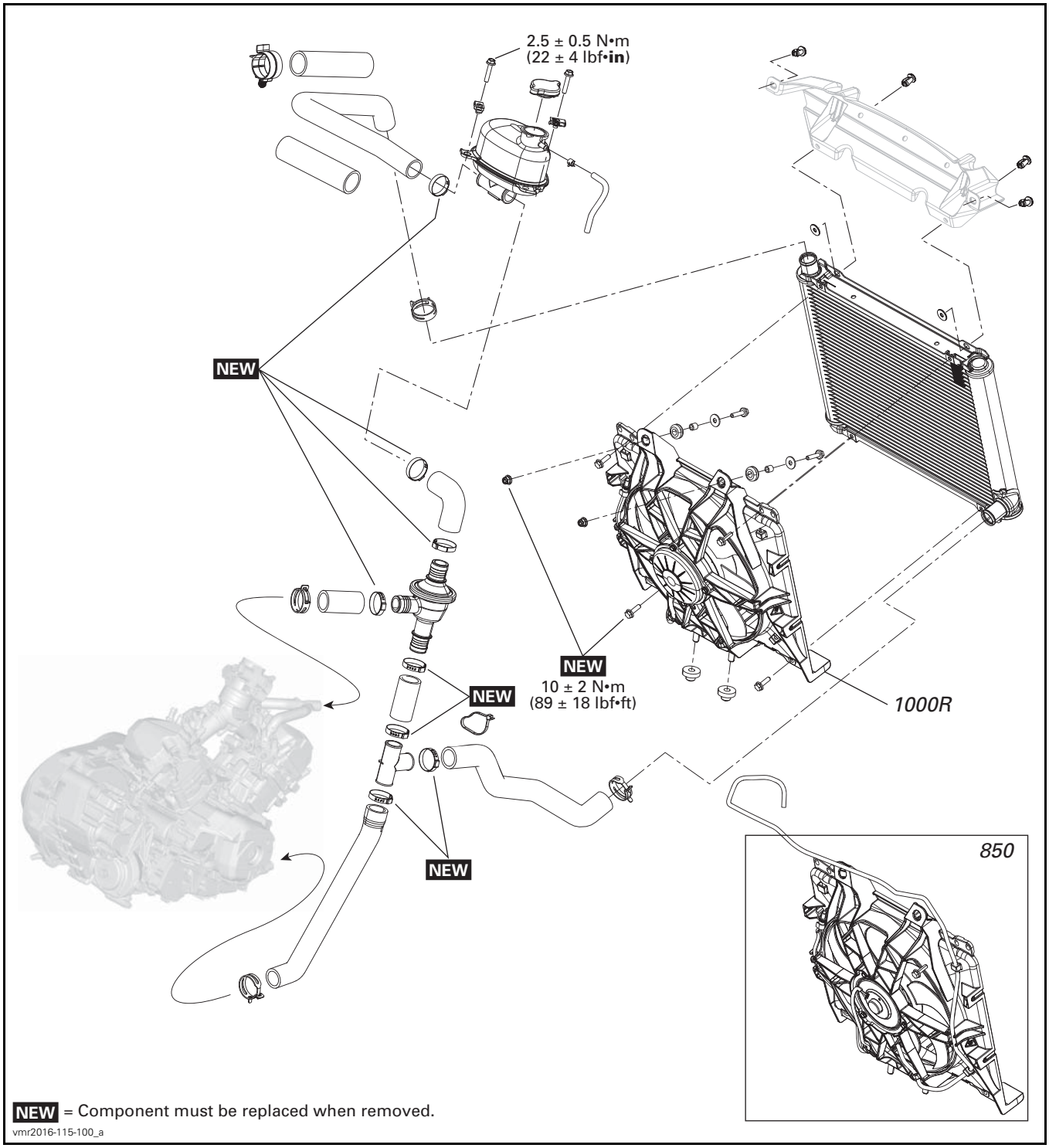

GENERAL

NOTICE Never start engine without coolant. Some engine parts such as the rotary seal on the water pump shaft can be damaged.

PROCEDURES

RADIATOR

Inspecting the Radiator

Check radiator fins for clogging or damage.

Remove insects, mud or other obstructions with compressed air or low pressure water.

Removing the Radiator

1. Drain engine coolant. Refer to *PERIODIC MAINTENANCE PROCEDURES* subsection.
2. Remove front body module. Refer to *BODY* subsection.
3. Disconnect radiator and fan assembly.

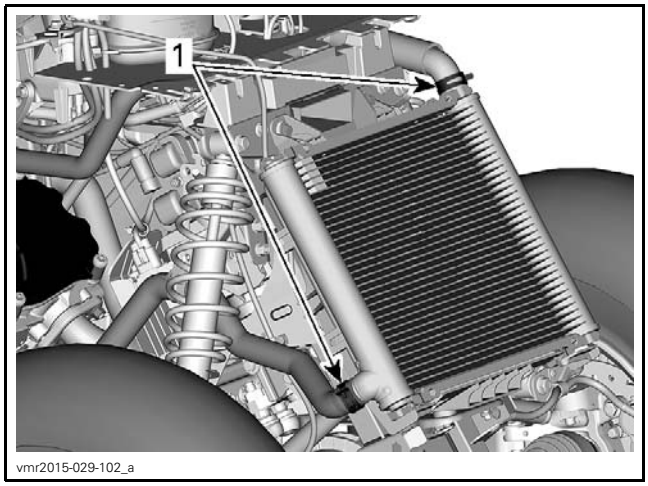

1. Radiator hoses

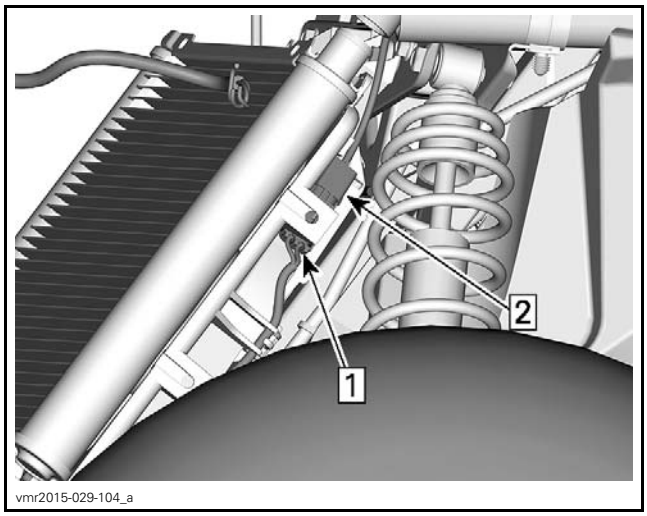

Step 1: Disconnect cooling fan connector
Step 2: Remove the harness connector from the fan shroud

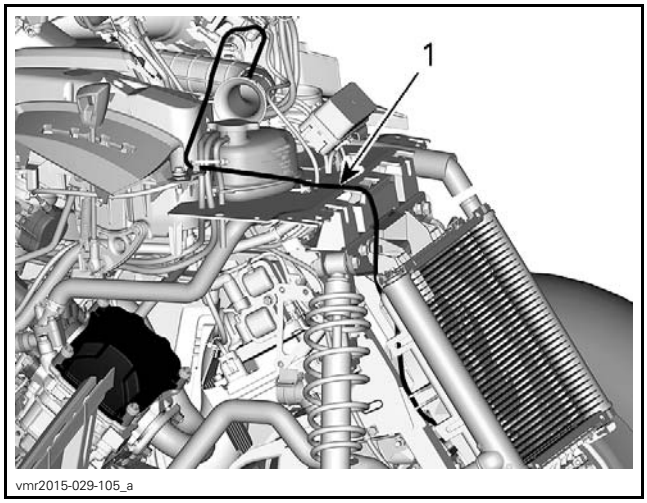

1. Remove fan motor vent hose (if equipped)

NOTE: Take note of the rooting of vent hose on vehicle to ease reinstallation.

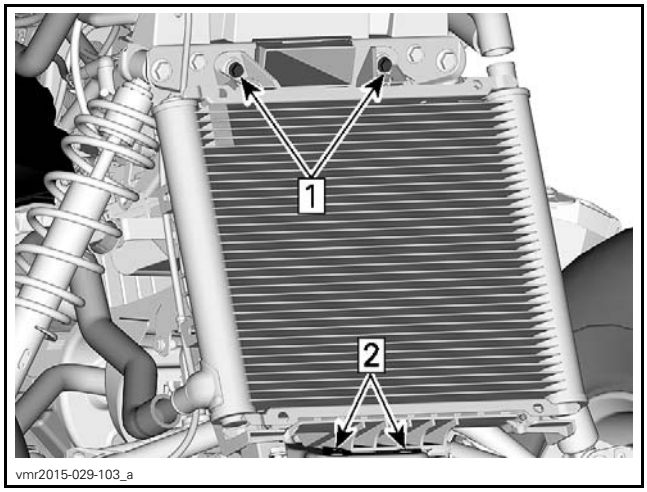

Step 1: Remove upper retaining bolts
Step 2: Remove radiator from bushings

Installing the Radiator

The installation is the reverse of the removal procedure. However, pay attention to the following.

Ensure that rubber bushings are properly installed between frame and fan shroud.

Ensure that vent hose of the cooling fan motor is properly rooted as prior to removal (if so equipped).

NOTICE **If the vent hose of the cooling fan motor is not properly rooted, the fan motor may be damaged due to improper venting.**

Tighten radiator upper retaining bolts to specification.

TIGHTENING TORQUE	
Radiator upper retaining bolts	10 N•m ± 2 N•m (89 lbf•**in** ± 18 lbf•**in**)

Refill and bleed cooling system, refer to *PERIODIC MAINTENANCE PROCEDURES* subsection.

Check cooling system for leaks.

RADIATOR COOLING FAN

Radiator Cooling Fan Operation

The ECM controls the radiator cooling fan via the input of the coolant temperature sensor (CTS). Refer to the following table.

ENGINE TEMP.	COOLING FAN	CHECK ENGINE LIGHT	GAUGE MESSAGE
95°C (203°F)	Turns ON	—	—
93°C (199°F)	Turn OFF	—	—
115°C (239°F)	ON	Turns ON	Check engine Hi Temp
118°C (244°F)	ON	Flashes	Limp Home

Radiator Cooling Fan Fuse Location

The radiator cooling fan fuse is located in the front fuse box, under the gauge support. Refer to fuse box cover or *WIRING DIAGRAM*.

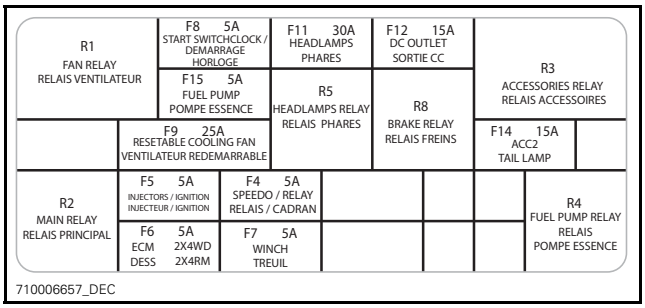

Testing the Radiator Cooling Fan

1. Disconnect radiator cooling fan connector.

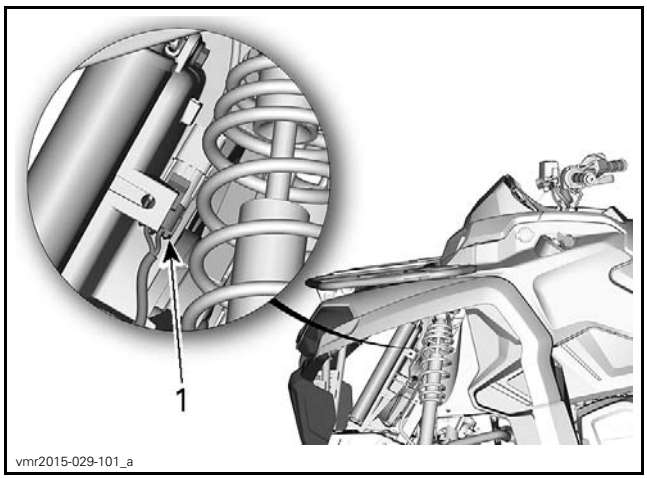

1. Cooling fan connector

2. Connect cooling fan connector pin B to a suitable 20 A fuse jumper and then directly to the positive battery post.
3. Connect cooling fan connector pin A (BK wire) directly to the negative battery post.
4. Check if cooling fan works properly.
   – If cooling fan does not work, replace it.
   – If cooling fan works properly, refer to *RADIATOR COOLING FAN TROUBLESHOOTING CHART*.
5. Reconnect radiator cooling fan connector.

Troubleshooting the Radiator Cooling Fan

NOTE: The following troubleshooting chart assumes that the engine is operating in the fan activation temperature range. Refer to *RADIATOR COOLING FAN OPERATION*.

COOLING FAN TROUBLESHOOTING CHART		
Is fan working?	YES →	Everything is OK
NO ↓		
Check FAN fuse Is fuse burnt?	YES →	Replace fuse Is fan working?
NO ↓		
Bypass fan relay RY1 (refer to *RELAY OPERATION TEST*)		
↓		
Fan turns?	YES →	Replace relay Is fan working?
NO ↓		
Apply 12 Vdc and a ground to fan connector (refer to *RADIATOR COOLING FAN TEST*)		
↓		
Fan turns?	NO →	Replace fan Is fan working?
YES ↓		
Check CTS (refer to *ELECTRONIC FUEL INJECTION (EFI)* subsection)		
↓		
CTS works?	NO →	Replace CTS Is fan working?
YES ↓		
Check wiring harness and connectors (refer to *WIRING DIAGRAM*)		
↓		
Harness and connectors good?	NO →	Repair or replace defective part(s)
YES ↓		
Try a new ECM	→	Is fan working?

Removing the Radiator Cooling Fan

1. Proceed with *REMOVING THE RADIATOR*. See procedure in this subsection.
2. Remove radiator cooling fan retaining screws.

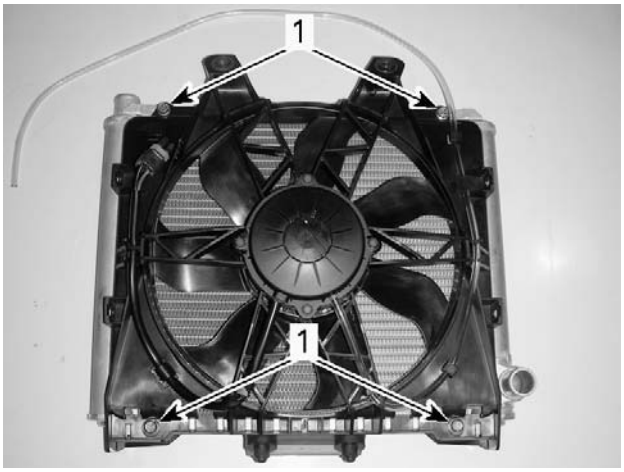

vmr2012-013-008_a

1. Cooling fan retaining screws

3. Remove radiator cooling fan.

Installing the Radiator Cooling Fan

The installation is the reverse of the removal procedure. However, pay attention to the following.

Tighten cooling fan retaining screws to specification.

TIGHTENING TORQUE	
Radiator cooling fan screws	10 N•m ± 2 N•m (89 lbf•**in** ± 18 lbf•**in**)

RADIATOR COOLING FAN RELAY (RY1)

Relay Location (Radiator Cooling Fan)

The radiator cooling fan relay (RY1) is located in the front fuse box, under the gauge support.

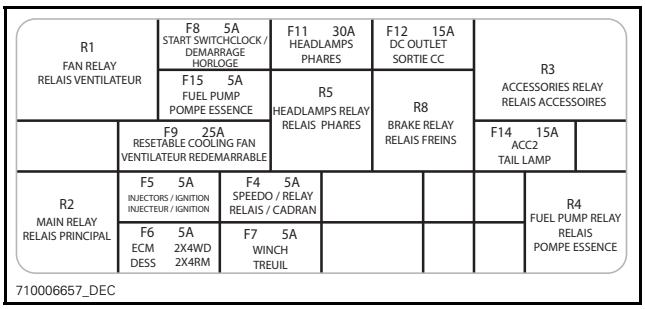

Testing the Radiator Cooling Fan Relay

Relay Operation Test

1. Remove relay (RY1).
2. Bypass relay using a jumper. Refer to *WIRING DIAGRAM* to locate proper terminals.

3. If the radiator cooling fan is activated, replace the relay.

Relay Continuity Test

Refer to *POWER DISTRIBUTION AND GROUNDS* subsection.

MAGNETO AND STARTER

SERVICE TOOLS

Description	Part Number	Page
CRANKSHAFT PROTECTOR (MAG)	420 876 557	9
FLUKE 115 MULTIMETER	529 035 868	4
HANDLE	420 877 650	13
MAGNETO PULLER	529 035 748	9
STARTER DRIVE NEEDLE INSTALLER	529 035 934	13

SERVICE PRODUCTS

Description	Part Number	Page
CLUTCH AND PULLEY FLANGE CLEANER PRO S1	779244	9
DIELECTRIC GREASE	293 550 004	12
ISOFLEX GREASE TOPAS NB 52	293 550 021	15
LOCTITE 243 (BLUE)	293 800 060	10
LOCTITE 5910	293 800 081	5
LOCTITE CHISEL (GASKET REMOVER)	413 708 500	5
SUPER LUBE GREASE	293 550 030	12

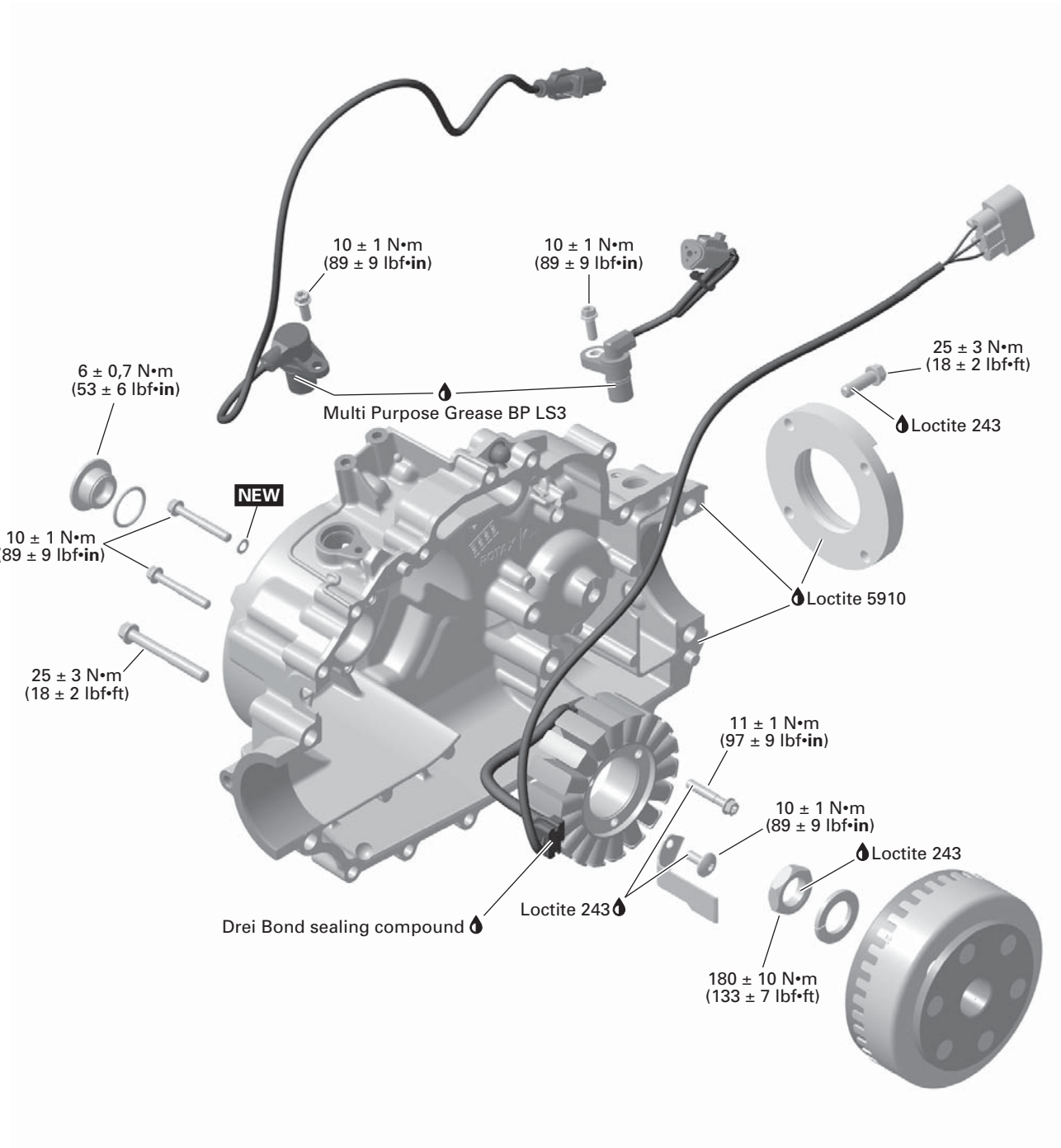

NEW = Component must be replaced when removed.

vmr2015-017-001_a

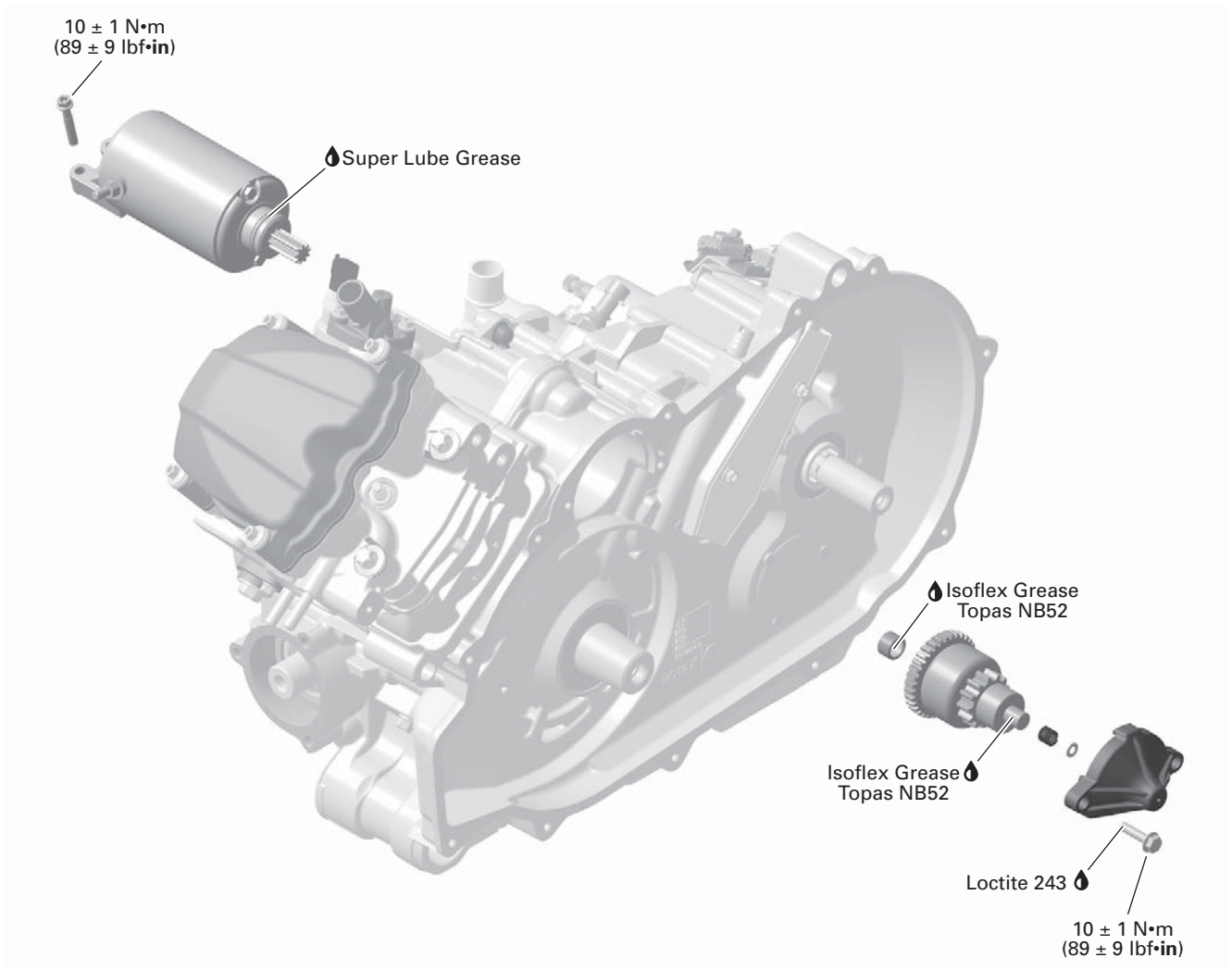

NEW = Component must be replaced when removed.

vmr2015-017-023_a

GENERAL

The following tool is required to test most of the electrical parts.

REQUIRED TOOL	
FLUKE 115 MULTIMETER (P/N 529 035 868)	

PROCEDURES

MAGNETO COVER

Removing the Magneto Cover

1. Remove engine from vehicle.
2. Remove 4WD coupling unit.
3. Lock crankshaft at TDC (refer to *BOTTOM END*) subsection.
4. Disconnect stator, CPS and vehicle speed sensor connectors.
5. Remove:
   - Water pump cover, refer to *COOLING SYSTEM* subsection
   - Starter, refer to procedure in this subsection.
6. Remove bearing cover screws.
7. Remove bearing cover.

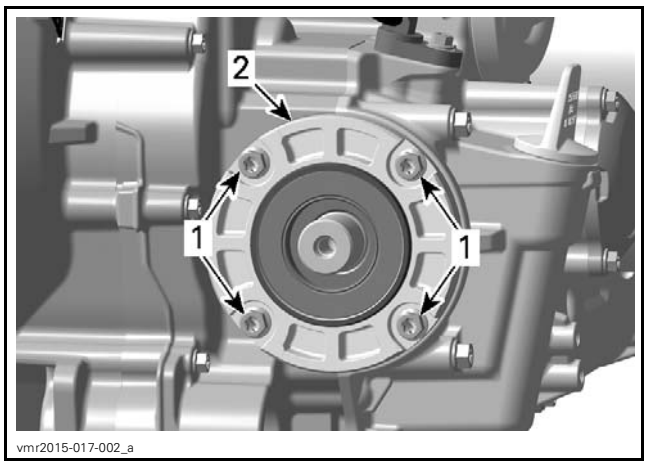

1. Screws
2. Bearing cover

8. Remove magneto cover screws:
   8.1 Start removing M6 screws.
   8.2 Then remove the M8 screws.

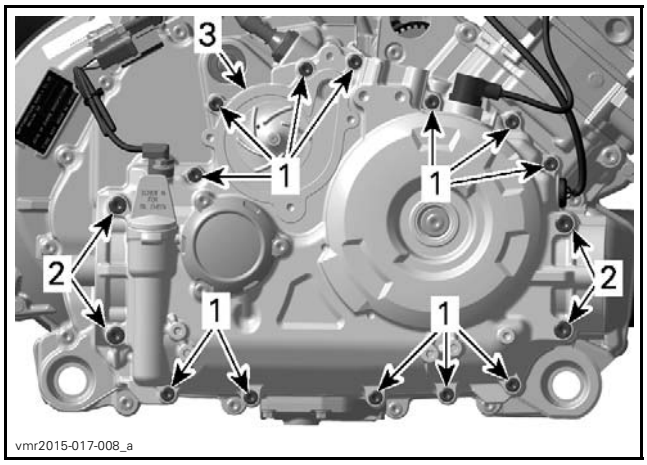

1. M6 screws
2. M8 screws
3. Magneto cover

9. Remove magneto cover.

NOTE: Lift the magneto cover from the provided area using two flat screwdrivers prying equally at the same time.

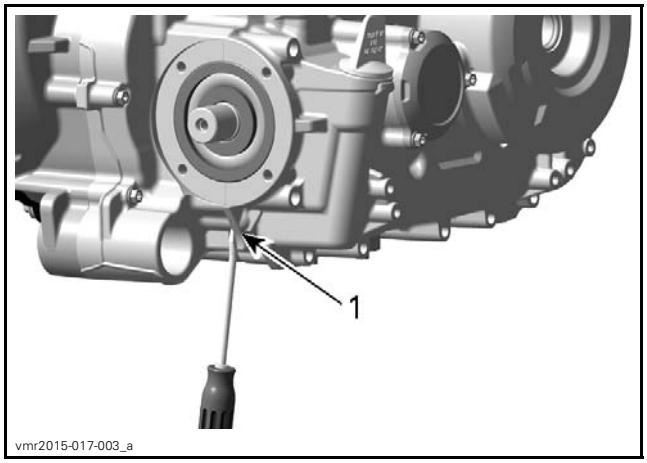

1. Special area for removal of magneto cover

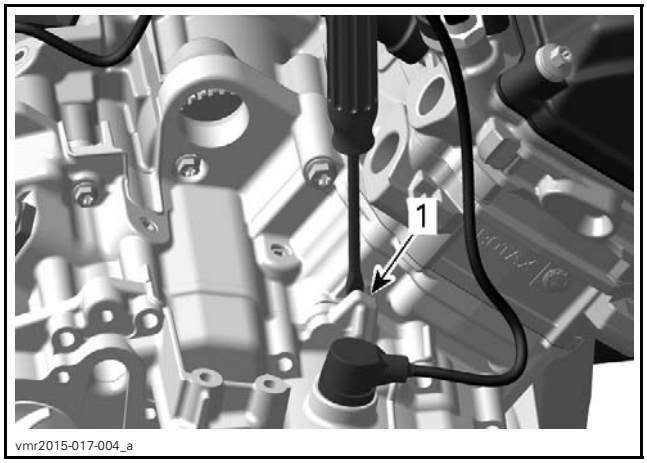

1. Special area for removal of magneto cover

NOTE: Do not loose oil pump cover O-ring when removing the magneto cover.

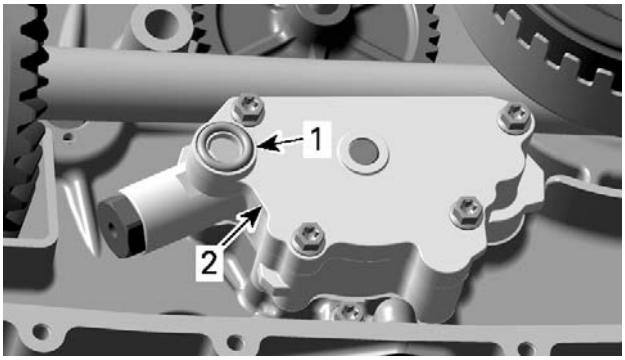

vmr2015-017-022_a

1. *O-ring*
2. *Oil pump cover*

Cleaning and Inspecting the Magneto Cover

Check magneto cover and bearing cover for cracks or other damages. Replace if necessary.

Clean all metal component in a solvent.

Clean magneto cover, crankcase and bearing cover sealing surfaces.

SERVICE PRODUCT
LOCTITE CHISEL (GASKET REMOVER) (P/N 413 708 500)

REQUIRED TOOL
Brass brush

First, brush in one direction, then make the final brushing perpendicularly (90°) to the first pass.

NOTICE **Do not wipe with rags. Use a new clean hand towel only.**

Installing the Magneto Cover

Reverse the removal procedure. However, pay attention to the following.

Put ball bearings of output shaft exactly in place, refer to *OUTPUT SHAFT* in the *GEARBOX AND 4X4 COUPLING UNIT* subsection.

Apply sealant on mating surfaces.

SERVICE PRODUCT
LOCTITE 5910 (P/N 293 800 081)

IMPORTANT: When beginning the application of the sealant, the assembly and the first torquing should be done within 10 minutes. It is suggested to have all you need on hand to save time.

Use a plexyglass plate and apply some sealant on it. Use a soft rubber roller50 mm to 75 mm (2 in to 3 in), available in arts products suppliers for printing, and roll the sealant to get a thin uniform coat on the plate (spread as necessary). When ready, apply the sealant on magneto cover and bearing cover mating surfaces.

NOTE: It is recommended to apply this specific sealant as described here to get an uniform application without lumps. If you do not use the roller method, you may use your finger to uniformly distribute the sealant (using a finger will not affect the adhesion).

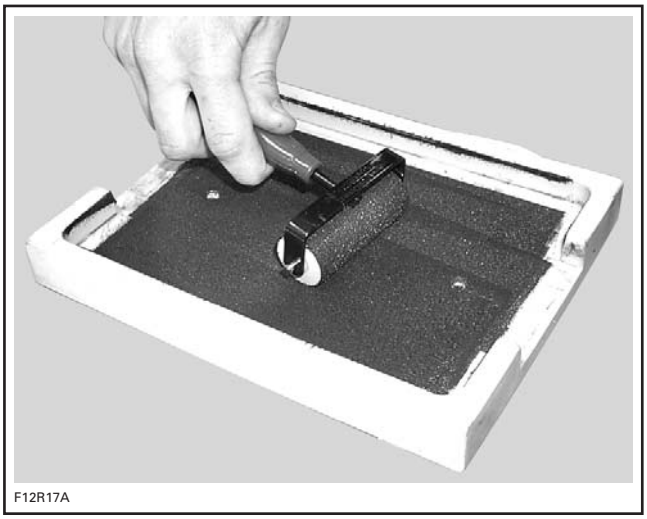
F12R17A

Apply sealant all around the magneto cover mating surface except the areas described below.

NOTE: Do not apply in excess as it will spread out inside cover.

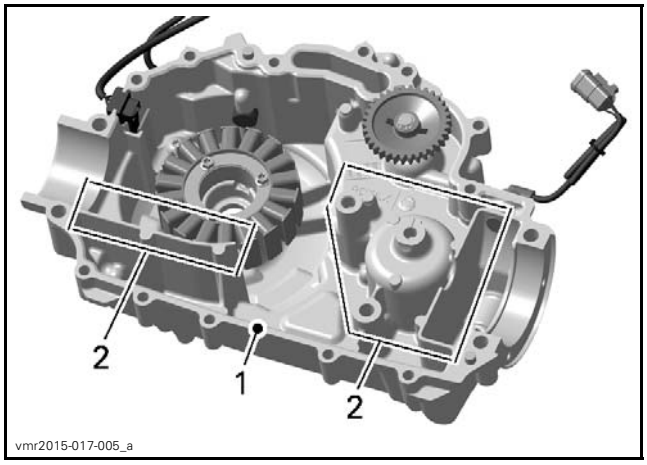

vmr2015-017-005_a

1. *Mating surface on the magneto cover*
2. *No sealant required*

NOTE: Ensure that oil pump cover O-ring is in place before installing the magneto cover.

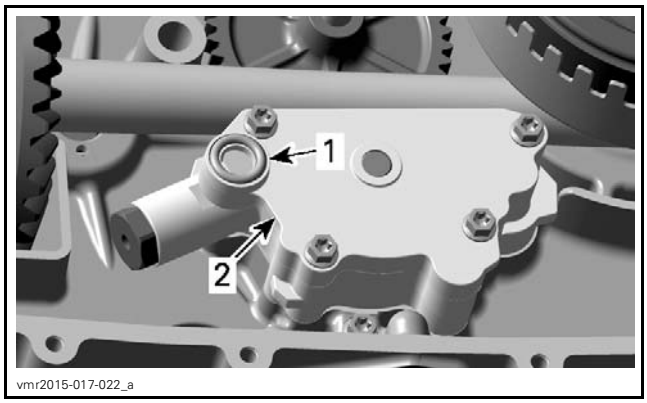

1. *O-ring*
2. *Oil pump cover*

Install the magneto cover.

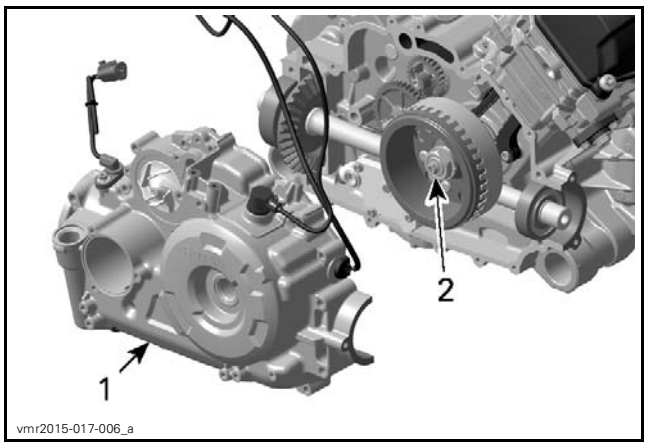

1. *Magneto cover*
2. *Crankshaft MAG side*

Tighten the M8 magneto cover screws as per following sequence.

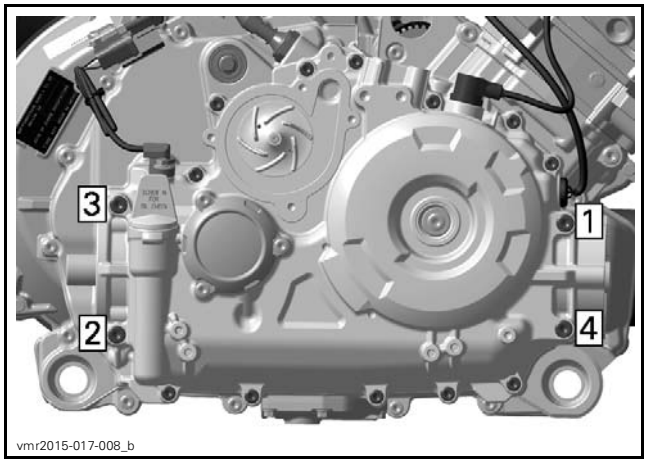

M8 SCREWS TIGHTENING SEQUENCE

TIGHTENING TORQUE	
M8 magneto cover screws	25 N•m ± 3 N•m (18 lbf•ft ± 2 lbf•ft)

Install a **NEW** gasket ring on M6 magneto cover screw beside the CPS.

NOTICE **Always install a new gasket ring.**

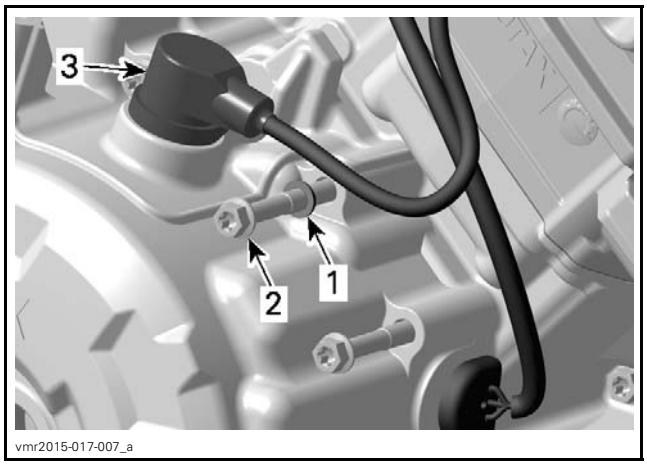

1. *Gasket ring*
2. *Screw M6*
3. *CPS (Crankshaft Position Sensor)*

Tighten the M6 magneto cover screws as per following sequence.

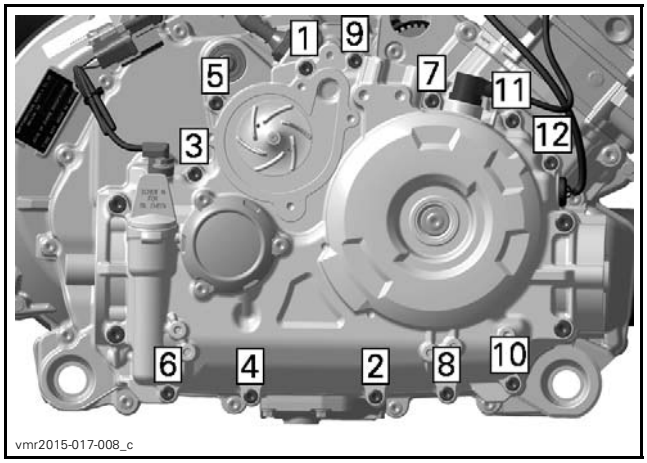

M6 SCREWS TIGHTENING SEQUENCE

TIGHTENING TORQUE	
M6 magneto cover screws	10 N•m ± 1 N•m (89 lbf•**in** ± 9 lbf•**in**)

Install the bearing cover.

Tighten bearing cover screws in a criss-cross sequence to specification.

TIGHTENING TORQUE	
Bearing cover screws	25 N•m ± 3 N•m (18 lbf•ft ± 2 lbf•ft)

Let the sealant dry before starting engine. Refer to the manufacturer's label for the sealant curing time.

STATOR

Stator Connector Access

NOTE: The stator is directly connected to the voltage regulator/rectifier.

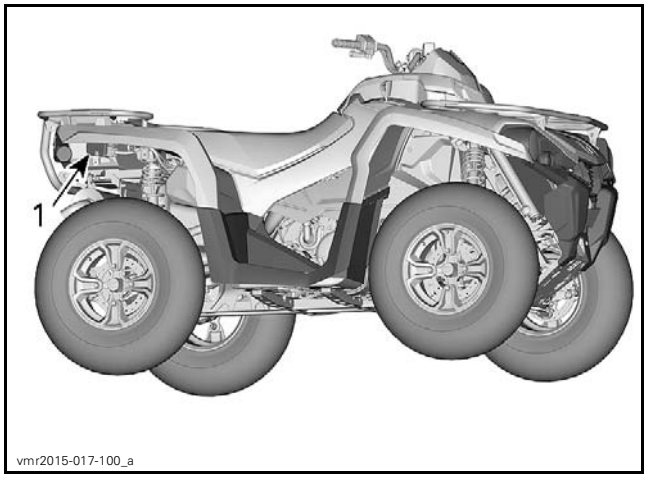

TYPICAL
1. Voltage regulator/rectifier location

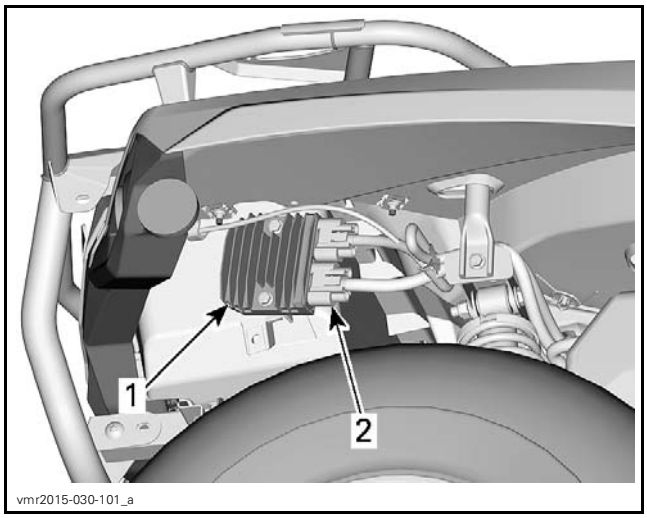

1. Voltage regulator/rectifier
2. Three YELLOW wires

Testing the Stator Continuity (Static)

1. Disconnect the stator connector on the voltage regulator/rectifier.
2. Set a multimeter to Ω and measure resistance as following.

TERMINAL	RESISTANCE @ 20°C (68°F)
1 and 2	0.15 - 0.30 Ω
1 and 3	
2 and 3	

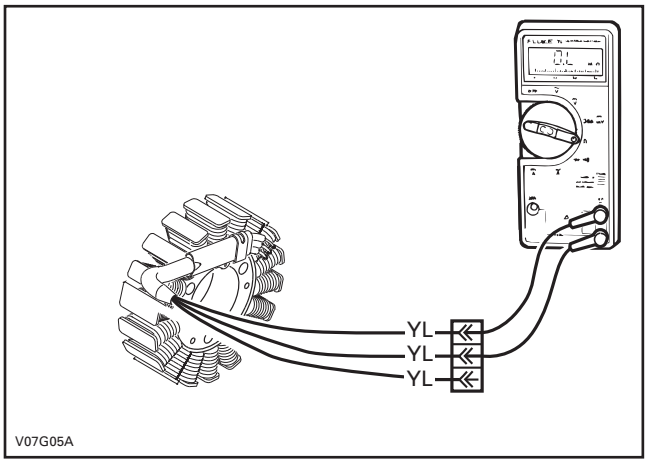

TYPICAL

3. If any reading is out of specification, replace stator.
4. Re-plug connectors properly.

Testing the Stator Insulation (Static)

1. Set multimeter to Ω.
2. Connect multimeter between any YELLOW wire (on stator connector) and engine ground.
3. Read resistance.

TEST PROBES	RESISTANCE @ 20°C (68°F)
Any YELLOW wire and engine ground	Infinite (open circuit)

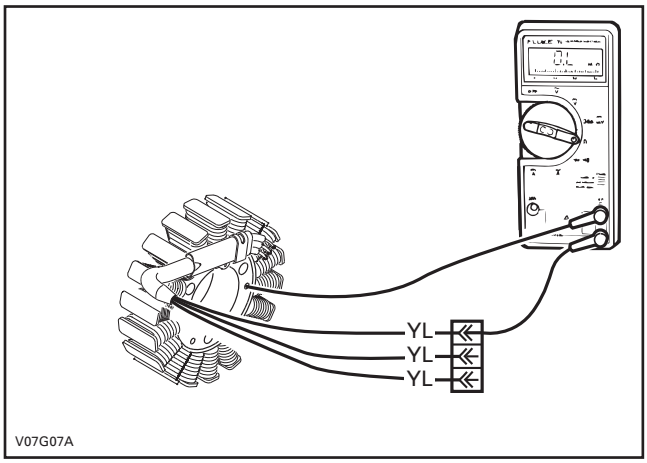

TYPICAL

4. If there is a resistance or continuity, the stator coils and/or the wiring is shorted to ground and needs to be repaired or replaced.
5. Re-plug connectors properly.

Removing the Stator

Remove magneto cover, refer to procedure in this subsection.

Remove:
- Holding strip screw
- Holding strip
- Stator screws
- Stator.

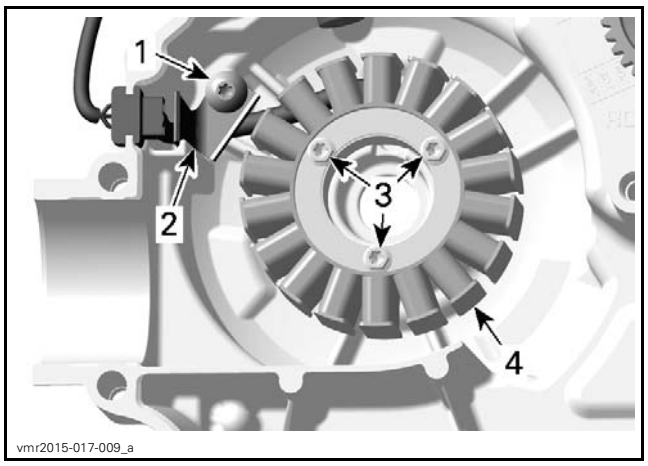

1. *Holding strip screw*
2. *Holding strip*
3. *Stator screws*
4. *Stator*

Inspecting the Stator

Check stator windings and insulation for cracks or other damages. If damaged replace it.

Check if stator wires are brittle, hard or otherwise damaged.

Installing the Stator

The installation is the reverse of the removal procedure. However, pay attention to the following.

NOTICE **When installing the stator take care to route wires properly and install holding strip.**

There is only one position for the stator (notch in the magneto cover).

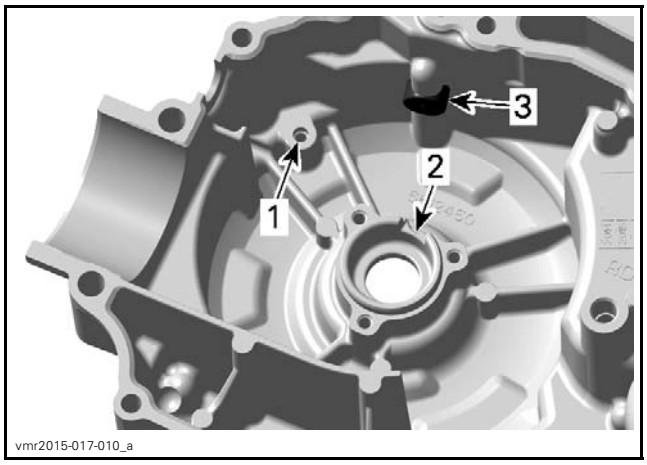

1. *Thread for holding strip*
2. *Notch for stator*
3. *Crank position sensor*

ROTOR

Removing the Rotor

Remove magneto cover, refer to procedure in this subsection.

Lock crankshaft. Refer to *BOTTOM END* subsection.

Remove:
- Nut retaining rotor
- Lock washer.

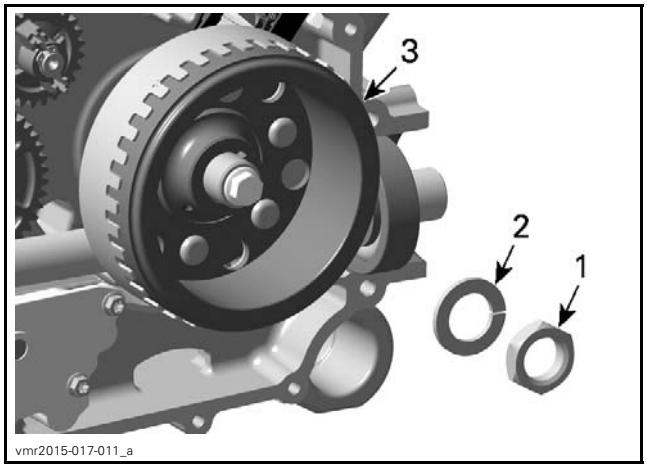

1. *Nut*
2. *Lock washer*
3. *Rotor*

Remove crankshaft plug screw.

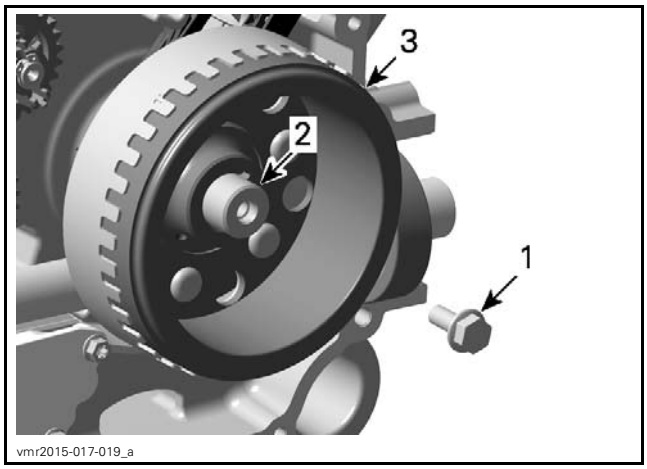

1. *Crankshaft plug screw*
2. *Crankshaft MAG side*
3. *Rotor*

Remove rotor.

REQUIRED TOOL	
CRANKSHAFT PROTECTOR (MAG) (P/N 420 876 557)	
MAGNETO PULLER (P/N 529 035 748)	

NOTE: Use grease to place protector on crankshaft end prior to screw on the magneto puller.

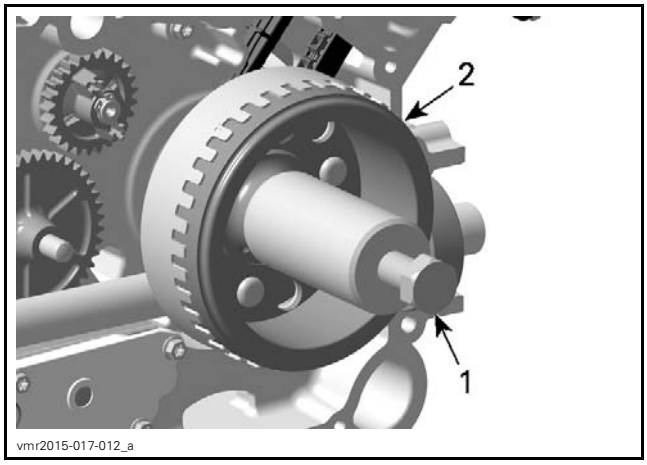

1. *Rotor*
2. *Magneto puller*

Screw magneto puller bolt to remove rotor.

Inspecting the Rotor

Check inner side of rotor for scratches or other damage.

Blow pressurized air in the rotor oil bore and make sure it is not clogged.

Check keyway of the rotor for wear or damages.

Check if trigger wheel teeth are bent or otherwise damaged.

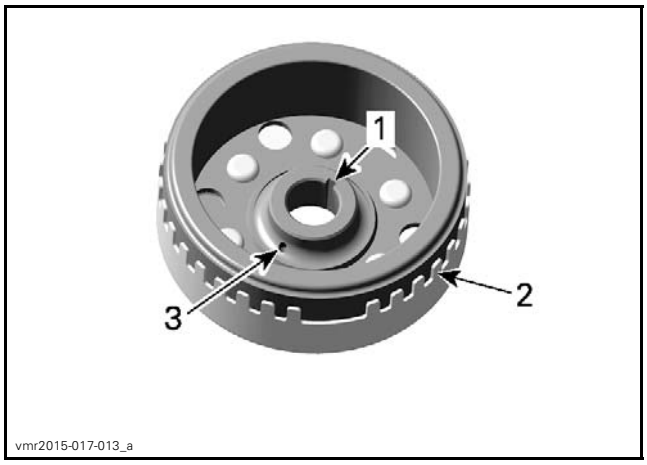

ROTOR
1. *Keyway*
2. *Trigger wheel*
3. *Oil bore*

Check woodruff key and keyway on the crankshaft for wear or damages.

Replace parts as necessary.

Installing the Rotor

The installation is the reverse of the removal procedure. However, pay attention to the following.

Clean the following parts:
- Crankshaft taper
- Oil passage in crankshaft taper
- Thread on crankshaft
- Oil bore in rotor
- Rotor taper.

SERVICE PRODUCT
CLUTCH AND PULLEY FLANGE CLEANER PRO S1 (P/N 779244)

NOTICE **Taper on crankshaft and rotor must be free of grease.**

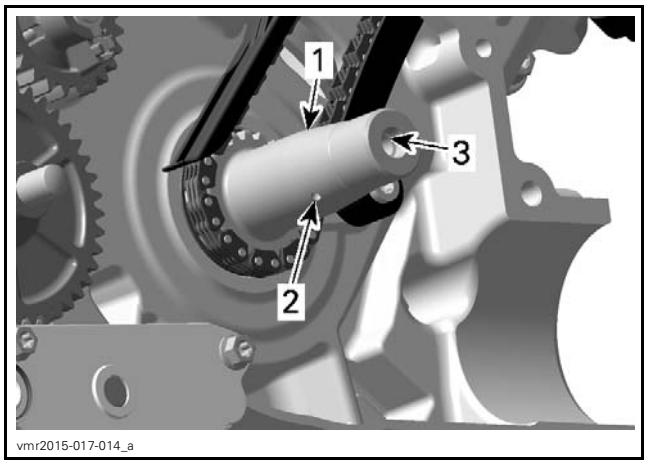

CRANKSHAFT MAG SIDE
1. *Keyway*
2. *Oil passage*
3. *Threads*

Install crankshaft plug screw.

TIGHTENING TORQUE	
Crankshaft plug screw	35 N•m ± 4 N•m (26 lbf•ft ± 3 lbf•ft) + LOCTITE 243 (BLUE) (P/N 293 800 060)

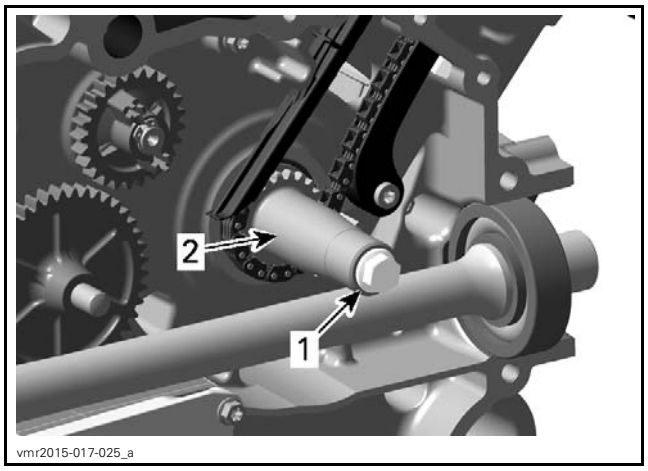

1. *Crankshaft plug screw*
2. *Crankshaft MAG side*

Slide rotor onto crankshaft. The woodruff key and the keyway must be aligned.

Tighten rotor retaining nut to specification.

TIGHTENING TORQUE	
Rotor nut	180 N•m ± 10 N•m (133 lbf•ft ± 7 lbf•ft) + LOCTITE 243 (BLUE) (P/N 293 800 060)

STARTER

Starter Access

To access starter, refer to *BODY* subsection and remove the following:

– Seat
– Console
– RH side panel and extension panel
– RH footboard panel.

Testing the Starter

1. Disconnect starter power cable from starter solenoid and pull cable out to RH side of vehicle.

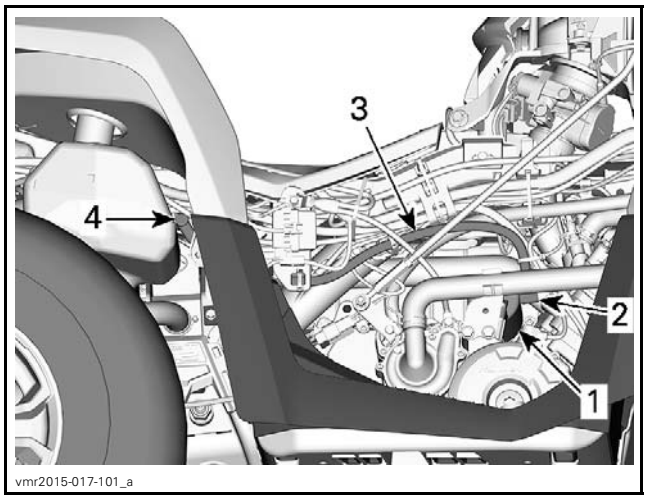

1. *Starter*
2. *Starter power cable connection at starter*
3. *Starter power cable*
4. *Starter power cable connection at solenoid*

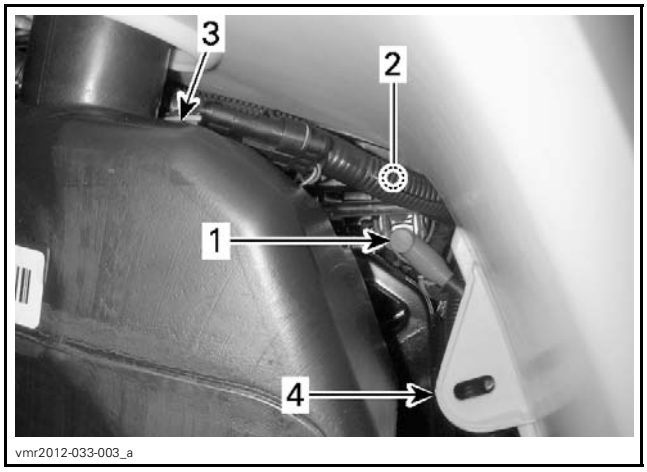

1. *Power cable from starter solenoid to starter*
2. *Power cable from battery to starter solenoid (not visible)*
3. *Fuel tank*
4. *RH rear fender*

2. Using booster cables, carefully supply current from a 12 volt battery directly to the starter power cable.

NOTICE **First connect the red jumper cable from the booster battery to the starter cable. Momentarily connect the BLACK (-) cable from the booster battery to engine ground last.**

If the starter turns, test other starting system components. Refer to *STARTING SYSTEM* subsection.

Removing the Starter

1. Make sure the ignition switch is in the OFF position.
2. Disconnect the BLACK (-) battery cable from the battery.

NOTICE **Always disconnect BLACK (-) battery cable first and reconnect last.**

3. Remove body parts as listed in *STARTER ACCESS*.
4. Remove the radiator coolant hose support from engine.

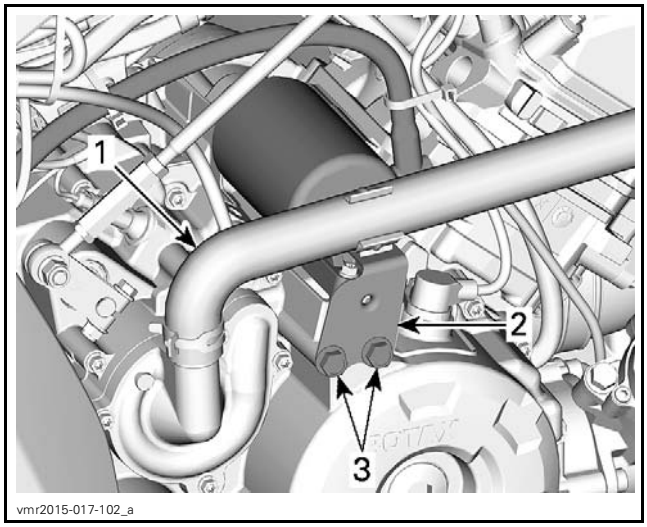

1. Radiator coolant hose
2. Hose support
3. Remove support screws

5. Disconnect the RED (+) power cable from starter.

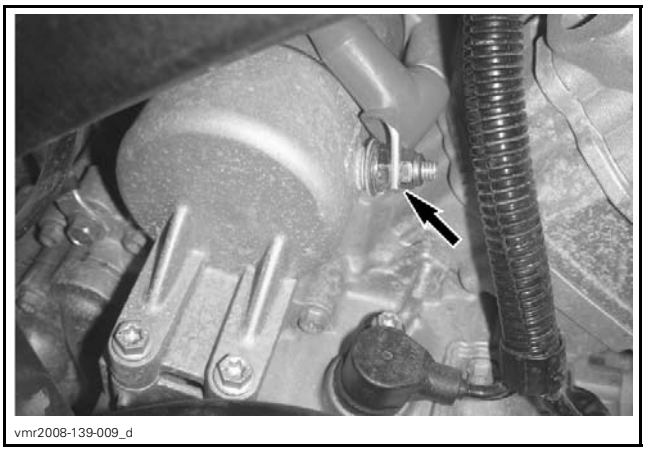

TYPICAL

6. Clean starter and surrounding area.
7. Remove starter mounting screws.

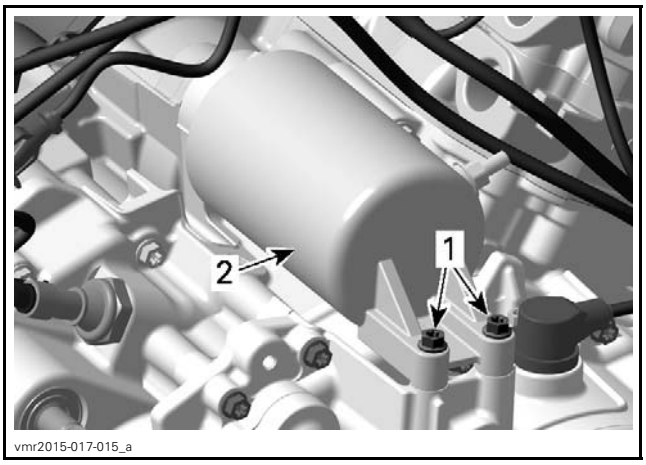

1. Starter mounting screws
2. Starter

8. Pull starter out from gear box.

Installing the Starter

The installation is the reverse of the removal procedure. However, pay attention to the following.

Make sure the starter and engine mating surfaces are free of debris. Serious problems may arise if the starter is not properly aligned.

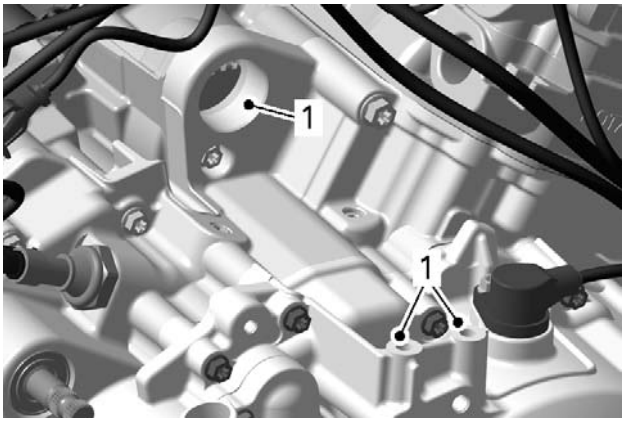

vmr2015-017-016_a

1. *Clean starter mating surfaces*

SERVICE PRODUCT	
Starter O-ring	SUPER LUBE GREASE (P/N 293 550 030)

Lubricate starter O-ring.

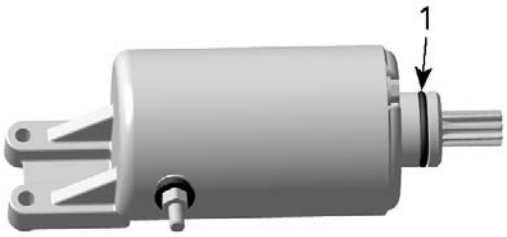

vmr2015-017-017_a

1. *Lubricate starter O-ring*

Install starter and tighten retaining screws to specification

TIGHTENING TORQUE	
Starter mounting screws	10 N•m ± 1 N•m (89 lbf•**in** ± 9 lbf•**in**)

Connect the RED (+) cable to the starter and tighten nut to specification.

TIGHTENING TORQUE	
Starter terminal and retaining nut	6 N•m ± 0.5 N•m (53 lbf•**in** ± 4 lbf•**in**) + DIELECTRIC GREASE (P/N 293 550 004)

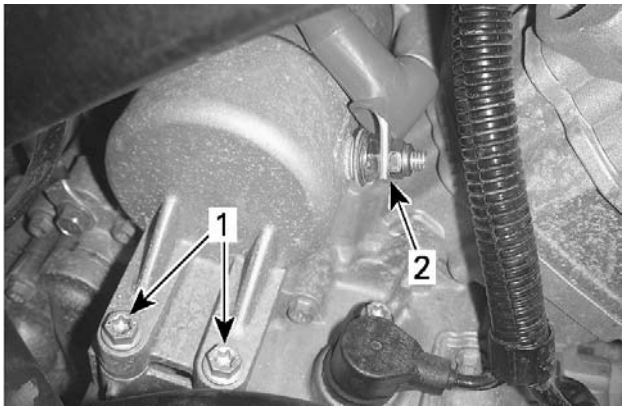

vmr2008-139-009_e

1. *Starter mounting screws*
2. *Starter terminal retaining nut*

Connect the BLACK (-) battery cable last.

NOTICE **Always connect the RED (+) starter cable first, then the BLACK (-) battery cable last. Whenever connecting the RED (+) cable to the starter motor, always make sure the BLACK (-) battery cable is disconnected to prevent electric shock.**

Test starter operation.

STARTER DRIVE

Removing the Starter

Remove drive pulley, refer to *CONTINUOUSLY VARIABLE TRANSMISSION* subsection.

Remove:

– Retaining screws
– Starter drive cover.

NOTE: Do not lose shim and/or spring during removal of starter drive cover.

Pull out starter drive.

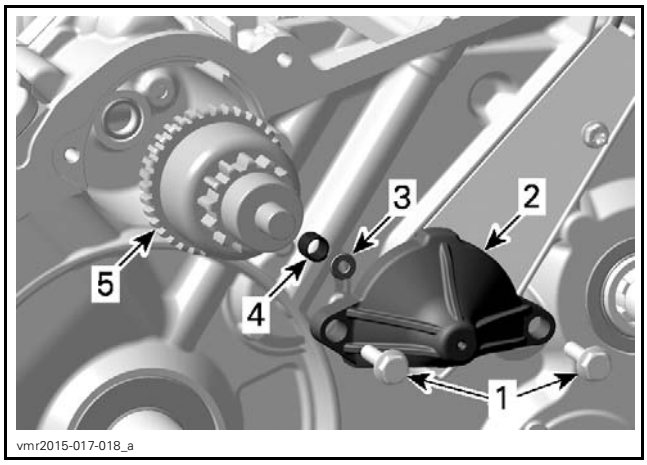

1. *Retaining screws*
2. *Starter drive cover*
3. *Shim*
4. *Spring*
5. *Starter drive*

Inspecting the Starter Drive

Check if starter drive pinion is free of movement.

NOTE: Centrifugal weights avoid disengaging of the pinion while starting the engine.

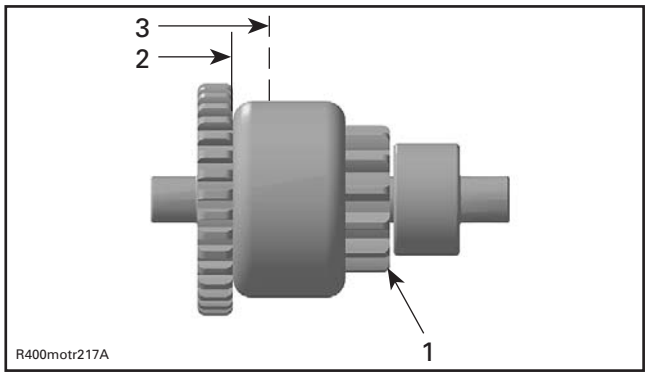

1. *Starter drive pinion*
2. *Starting position (spring released)*
3. *Gear is engaged drive pulley fixed half (spring loaded)*

Check needle bearing excessive play and smooth operation. If damaged see *REPLACING THE STARTER DRIVE NEEDLE BEARING* in this subsection.

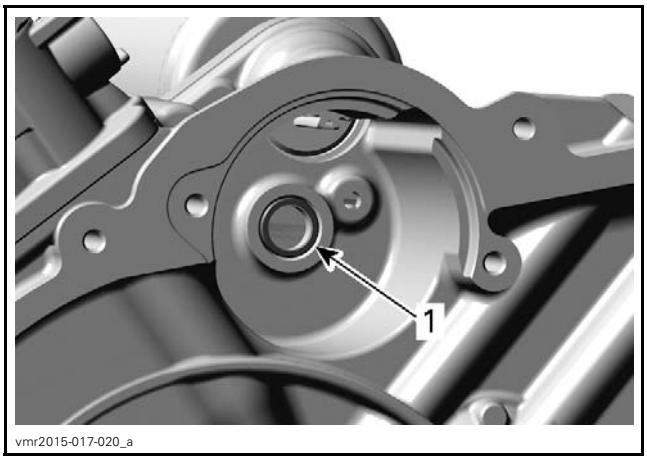

1. *Starter drive needle bearing*

Check starter drive cover for cracks and clean it before reinstallation.

Check bore inside starter drive cover if damaged, worn or otherwise damaged. Replace as necessary.

Replacing the Starter Drive Needle Bearing

Removing the Starter Drive Needle Bearing

REQUIRED TOOL	
Blind hole puller	

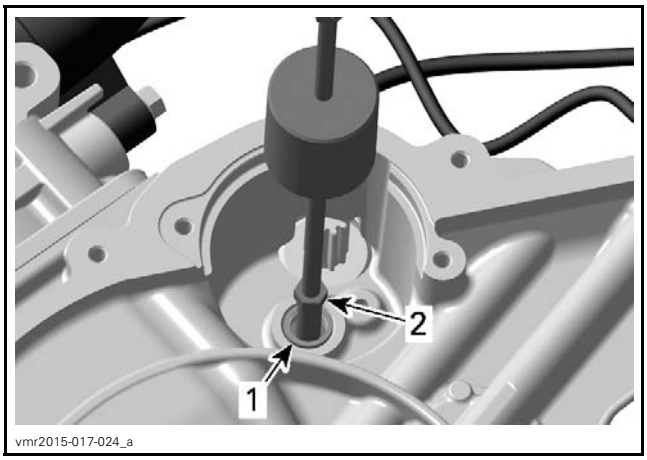

1. *Starter drive needle bearing*
2. *Blind hole bearing puller*

Installing the Starter Drive Needle Bearing

Install needle bearing.

REQUIRED TOOL	
STARTER DRIVE NEEDLE INSTALLER (P/N 529 035 934)	
HANDLE (P/N 420 877 650)	

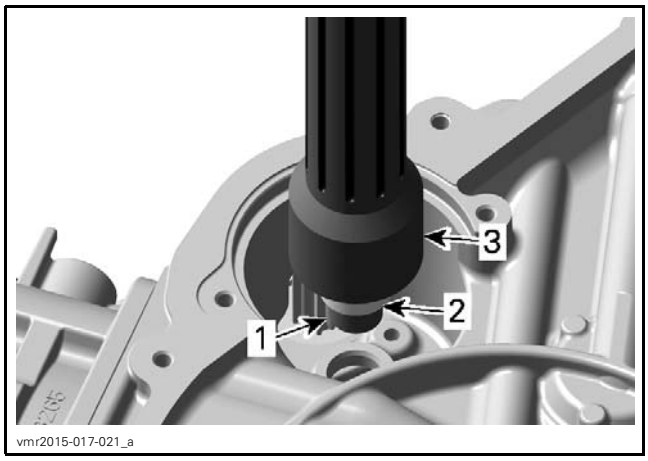

1. *Starter drive needle bearing*
2. *Starter drive needle bearing installer*
3. *Handle*

Replacing the Starter Drive Spring

Remove the starter drive. Refer to procedure in this subsection.

Replace the spring as per the following illustrations.

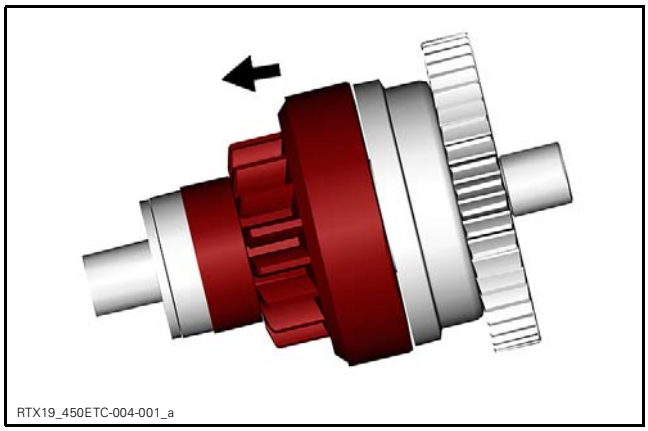

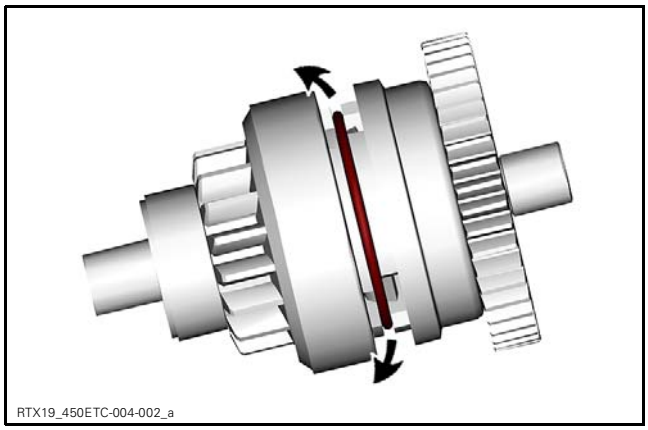

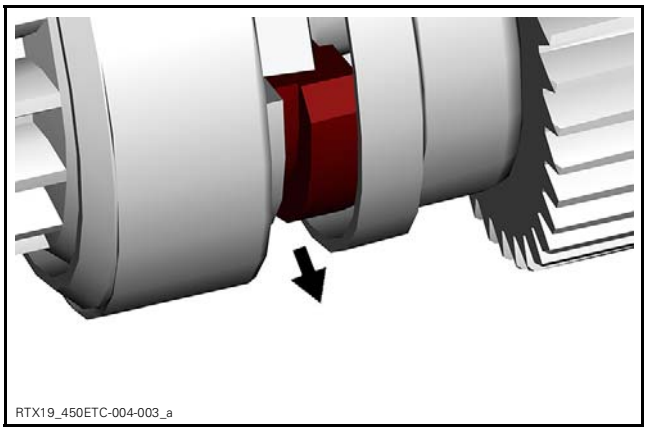

Make sure at least 1 centrifugal weight is in work position to keep the starter drive open.

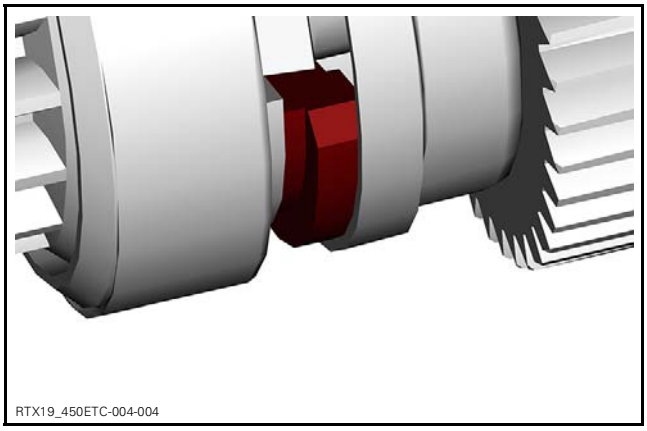

Place the starter drive on a support.

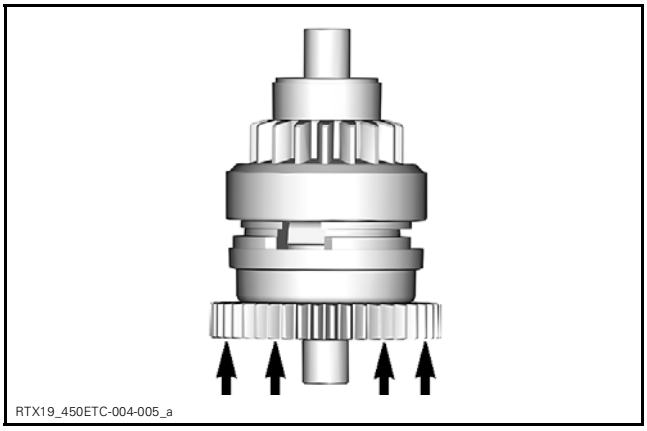

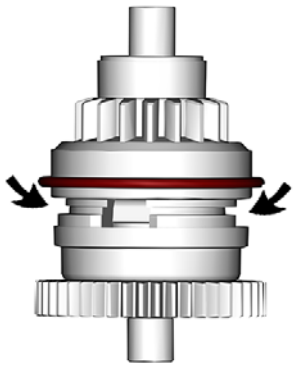

RTX19_450ETC-004-006_a

NOTICE Do not overstretch the spring during installation.

Check spring position for all centrifugal weights.

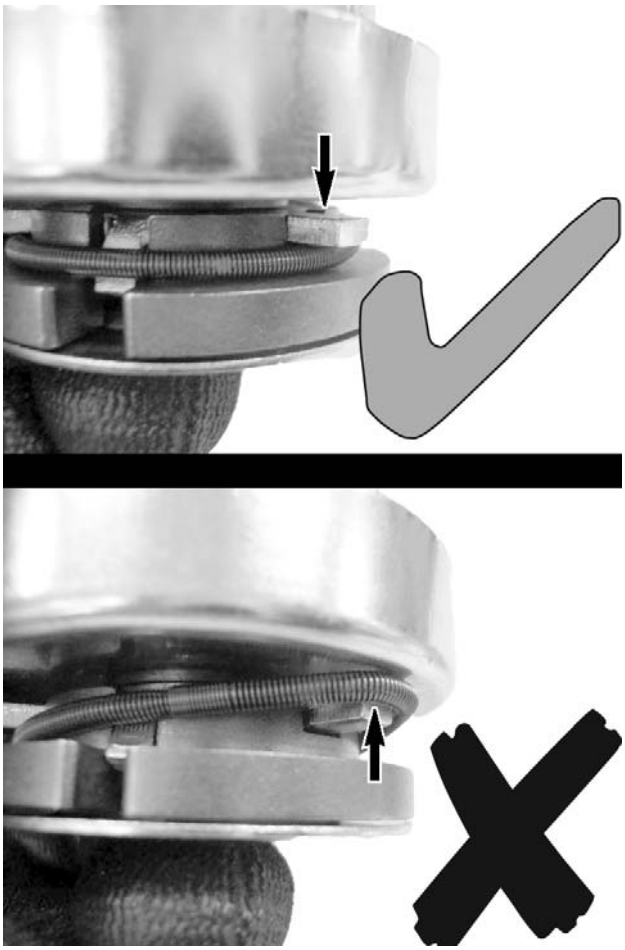

vgb2015-002-010_a

Installing the Starter Drive

The installation is the reverse of the removal procedure. However, pay attention to the following.

Apply multi-purpose grease inside starter drive pinion cover.

Clean out all residues of grease from:
- Needle bearing in the crankcase
- Starter drive journals
- Starter drive cover bore
- Spring.

Lubricate needle bearing and starter drive cover bore with specified service product.

SERVICE PRODUCT
ISOFLEX GREASE TOPAS NB 52 (P/N 293 550 021)

MAGNETO AND STARTER

SERVICE TOOLS

Description	Part Number	Page
CRANKSHAFT LOCKING BOLT	529 035 617	76
CRANKSHAFT PROTECTOR	529 036 034	76
FLUKE 115 MULTIMETER	529 035 868	74–75
MAGNETO PULLER	529 035 748	76

SERVICE PRODUCTS

Description	Part Number	Page
DIELECTRIC GREASE	293 550 004	81
DREI BOND SEALING COMPOUND	420 297 906	73
LOCTITE 243 (BLUE)	293 800 060	76
LOCTITE 648 (GREEN)	413 711 400	78–79
LOCTITE 767 (ANTISEIZE LUBRICANT)	293 800 070	80–81
LOCTITE CHISEL (GASKET REMOVER)	413 708 500	73
PULLEY FLANGE CLEANER	413 711 809	77–78

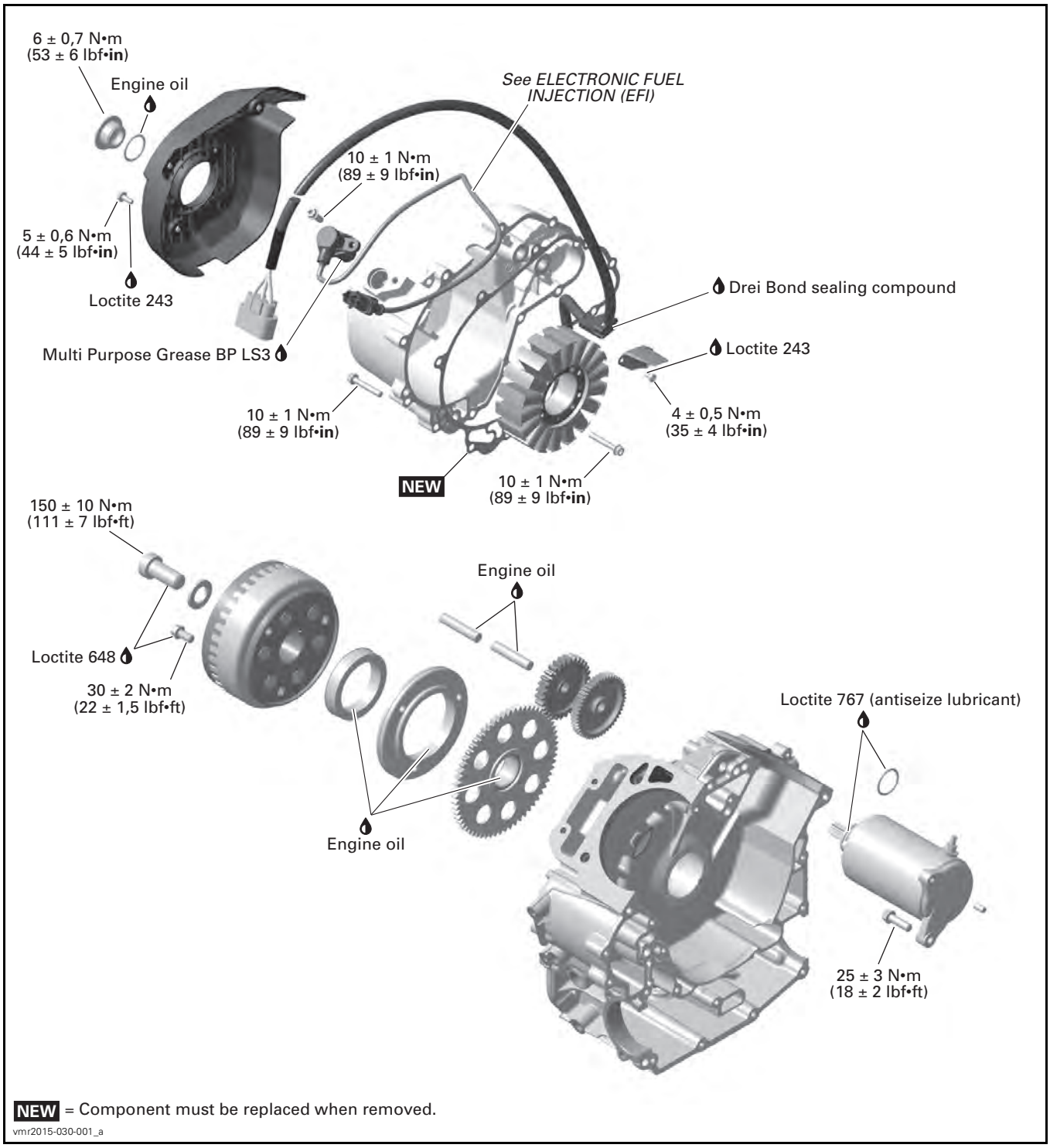

NEW = Component must be replaced when removed.

vmr2015-030-001_a

PROCEDURES

MAGNETO COVER

Magneto Cover Access

Refer to *BODY* subsection and remove the following:
- Seat
- Console
- RH side panel and extension panel
- RH footboard panel.

Removing the Magneto Cover

Drain engine oil (refer to *ENGINE OIL CHANGE* in the *PERIODIC MAINTENANCE PROCEDURES* subsection).

Remove crankshaft position sensor (CPS) and cut tie raps.

Disconnect the stator connector on the voltage regulator/rectifier, refer to *STATOR CONNECTOR ACCESS* in this subsection.

Remove dipstick with O-ring.

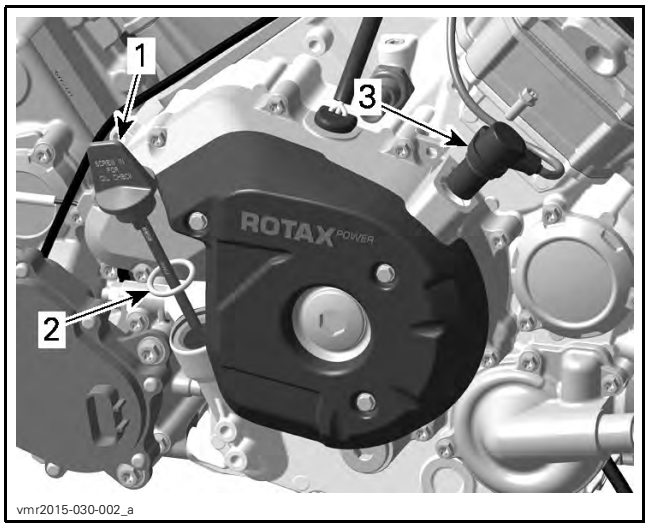

1. *Dipstick*
2. *O-ring*
3. *Crank position sensor (CPS)*

Remove magneto cover retaining screws.

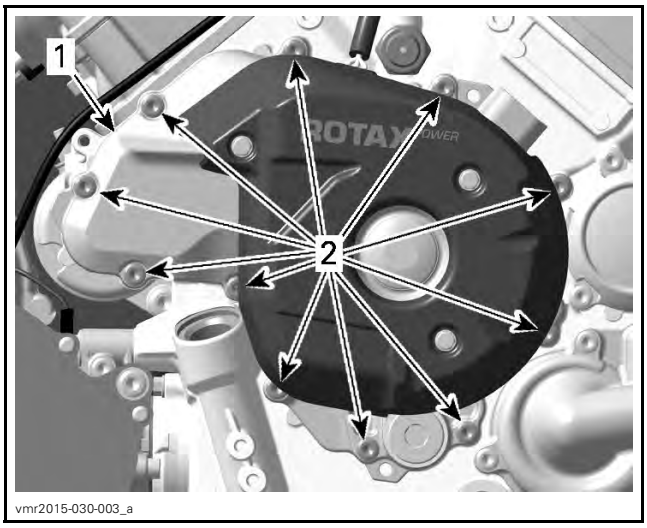

1. *Magneto cover*
2. *Retaining screws*

Pull out magneto cover.

Inspecting and Cleaning the Magneto Cover

Check magneto cover for cracks or other damage. Replace if necessary.

NOTE: Clean all metal components in a non-ferrous metal cleaner. Use LOCTITE CHISEL (GASKET REMOVER) (P/N 413 708 500), or suitable equivalent.

⚠ WARNING

Wear safety glasses and work in a well ventilated area when working with strong chemical products. Also wear suitable non-absorbent gloves to protect your hands.

Installing the Magneto Cover

For installation, reverse the removal procedure. However, pay attention to the following.

Install a **NEW** magneto cover gasket.

Apply DREI BOND SEALING COMPOUND (P/N 420 297 906) on stator cable grommet as shown in next illustration.

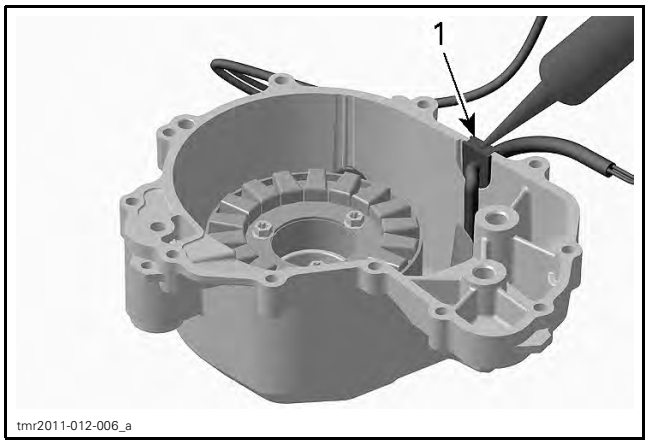

1. Stator cable grommet (apply Drei Bond sealing compound)

Tighten screws using the following sequence.

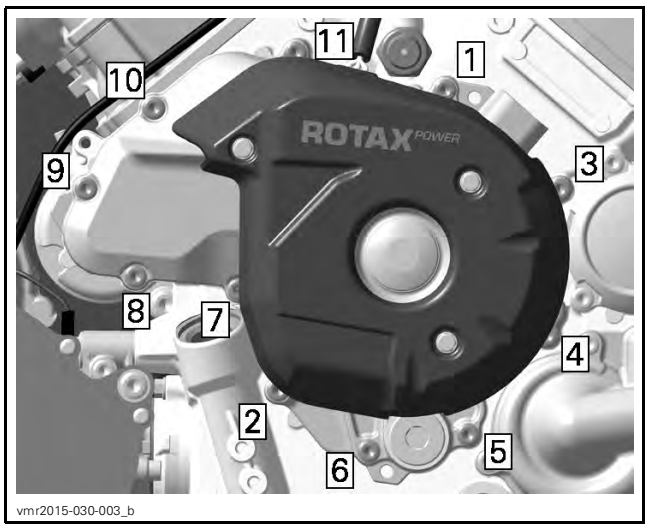

TIGHTENING SEQUENCE

TIGHTENING TORQUE	
Magneto cover screws	10 N•m ± 1 N•m (89 lbf•**in** ± 9 lbf•**in**)

Refill engine with recommended oil.

STATOR

Stator Connector Access

NOTE: The stator is directly connected to the voltage regulator/rectifier.

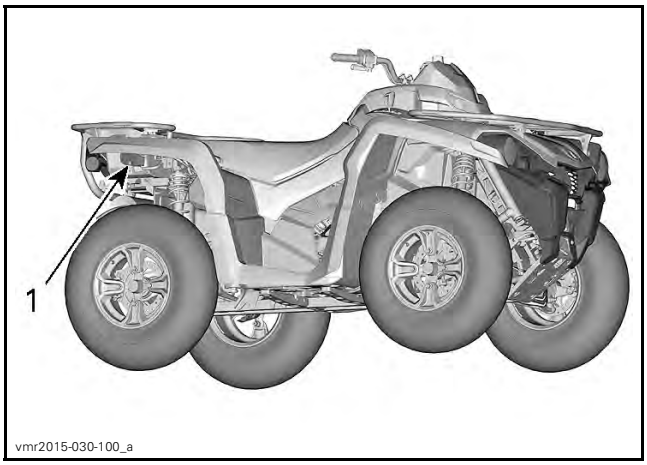

TYPICAL
1. Voltage regulator/rectifier location

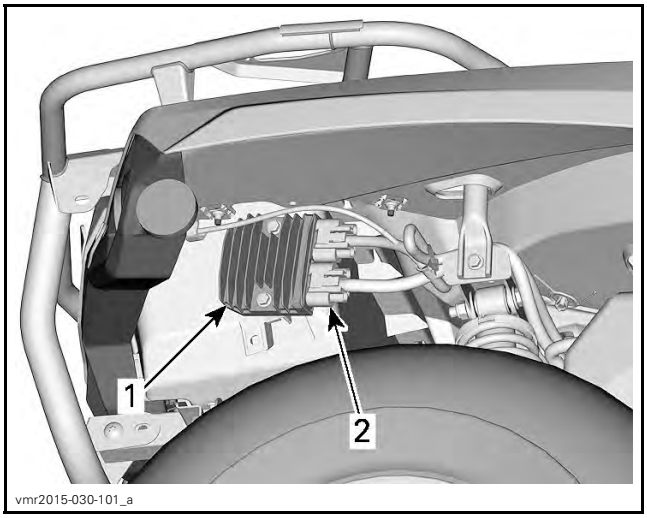

1. Voltage regulator/rectifier
2. Three YELLOW wires

Testing the Stator Static Continuity

1. Disconnect the stator connector on the voltage regulator/rectifier.

REQUIRED TOOL	
FLUKE 115 MULTIMETER (P/N 529 035 868)	

2. Set multimeter to Ω.
3. Connect multimeter between YELLOW wires.
4. Read resistance.

TERMINAL	RESISTANCE @ 20°C (68°F)
1 and 2	0.15 - 0.30 Ω
1 and 3	
2 and 3	

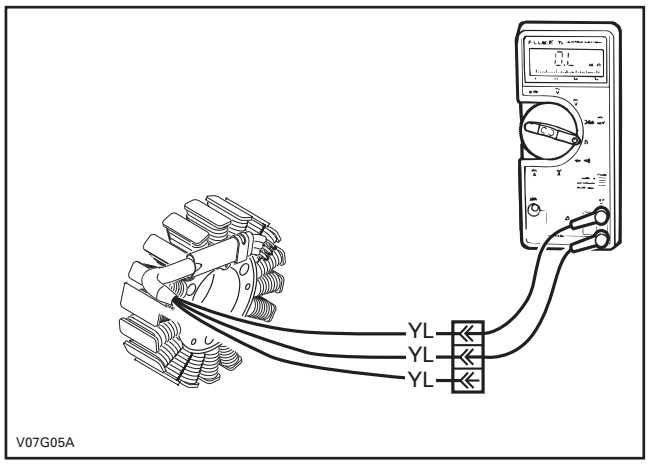

TYPICAL

5. If any reading is out of specification, replace stator.
6. Re-plug connectors properly.

Testing the Stator Insulation

REQUIRED TOOL	
FLUKE 115 MULTIMETER (P/N 529 035 868)	

1. Set multimeter to Ω.
2. Connect multimeter between any YELLOW wire (on stator connector) and engine ground.
3. Read resistance.

TEST PROBES	RESISTANCE @ 20°C (68°F)
Any YELLOW wire and engine ground	Infinite (open circuit)

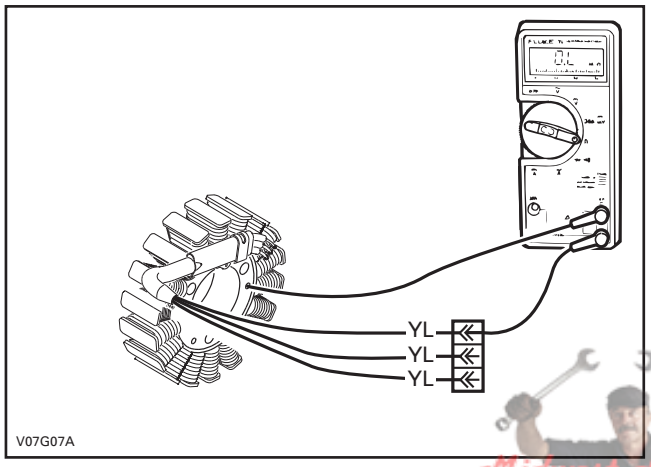

TYPICAL

4. If there is a resistance or continuity, the stator coils and/or the wiring is shorted to ground and needs to be repaired or replaced.
5. Re-plug connectors properly.

Removing the Stator

Remove *MAGNETO COVER*. See procedure in this subsection.

Remove screws securing the wire holding strip.

Remove stator retaining screws then the stator.

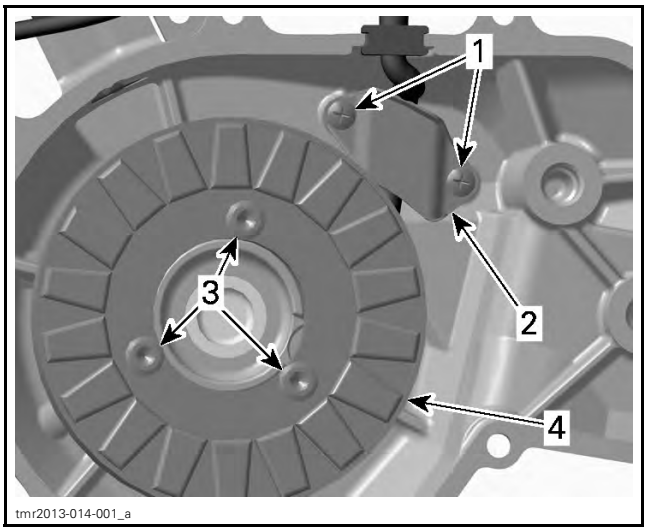

1. *Holding strip screws*
2. *Wire holding strip*
3. *Stator retaining screws*
4. *Stator*

Inspecting the Stator

Check stator windings and insulation for cracks or other damages. If damaged replace it.

Check if stator wires are brittle, hard or otherwise damaged.

Installing the Stator

For installation, reverse the removal procedure. However, pay attention to the following.

NOTICE **When installing the stator take care to route wires properly and install retaining strip.**

NOTE: There is only one position for the stator (notch in the magneto housing cover).

Midwest Manuals
Green Manuals
Paperless Manuals
For a Better Tomorrow
www.green-manuals.com
If you bought this manual from any other seller please leave them
NEGATIVE feedback and notify me at bestshopmanuals@gmail.com

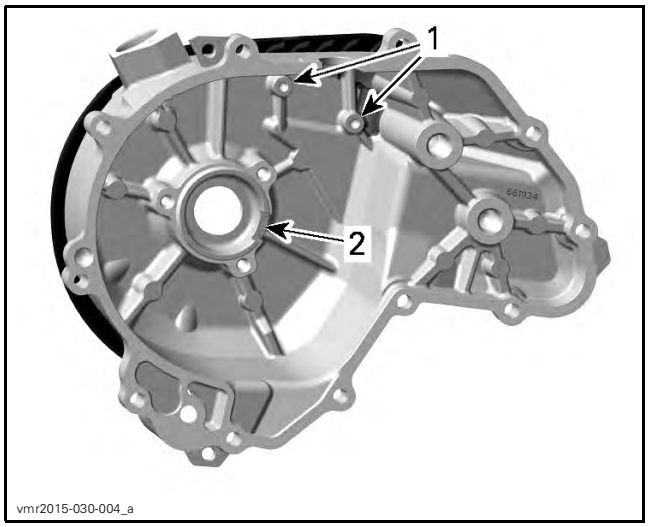

1. Threads for cable holding strip
2. Notch for stator

SERVICE PRODUCT	
Holding strip screws	LOCTITE 243 (BLUE) (P/N 293 800 060)

TIGHTENING TORQUE	
Holding strip screws	4 N•m ± 0.5 N•m (35 lbf•**in** ± 4 lbf•**in**)

TIGHTENING TORQUE	
Stator retaining screws	10 N•m ± 1 N•m (89 lbf•**in** ± 9 lbf•**in**)

ROTOR

Removing the Rotor

Remove *MAGNETO COVER*. See procedure in this subsection.

Lock crankshaft (refer to *CRANKSHAFT LOCKING PROCEDURE* in the *BOTTOM END* subsection).

REQUIRED TOOL	
CRANKSHAFT LOCKING BOLT (P/N 529 035 617)	

Heat screw in order to break the Loctite.

Remove screw and washer securing rotor to crankshaft.

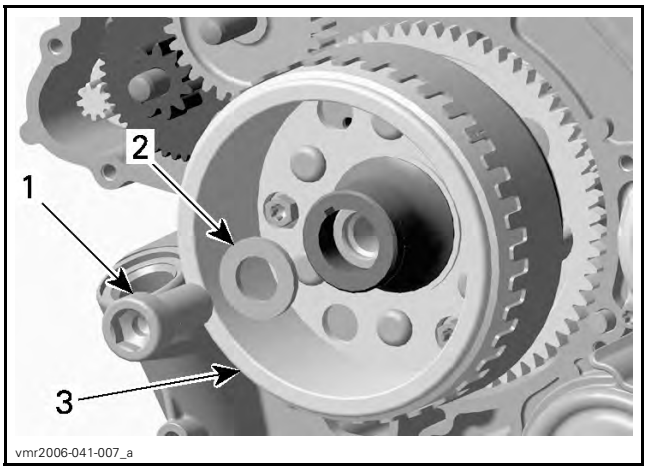

1. Screw M16
2. Washer
3. Rotor

Remove rotor.

REQUIRED TOOLS	
CRANKSHAFT PROTECTOR (P/N 529 036 034)	
MAGNETO PULLER (P/N 529 035 748)	

NOTE: Use grease to place protector on crankshaft end prior to screw on the magneto puller.

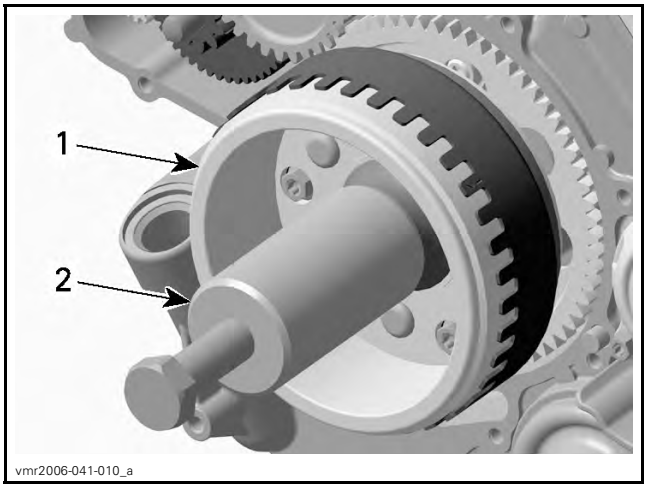

1. Rotor
2. Magneto puller

Screw magneto puller bolt to remove rotor.

Inspecting the Rotor

Check inner side of rotor for scratches or other damage.

Blow pressurized air in the rotor oil bore and make sure it is not clogged.

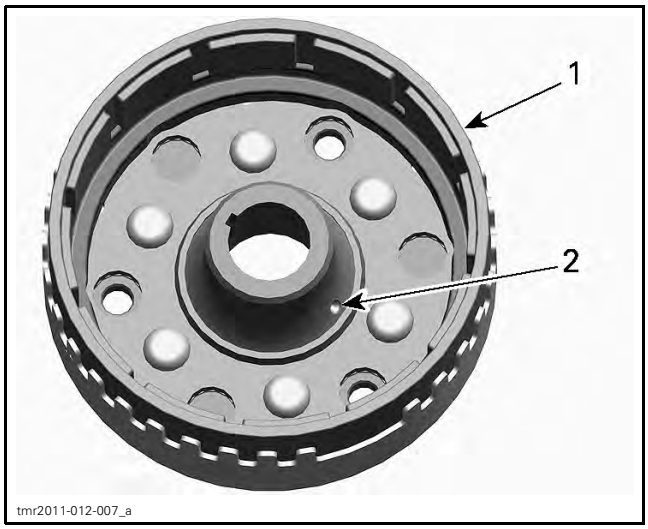

1. Rotor
2. Oil bore

Check keyway of the rotor for wear or damages.

Check if trigger wheel teeth are bent or otherwise damaged.

Check woodruff key and keyway on the crankshaft for wear or damages.

Replace parts as necessary.

Installing the Rotor

For installation, reverse the removal procedure. However, pay attention to the following.

Use PULLEY FLANGE CLEANER (P/N 413 711 809) to clean following parts:

– Crankshaft taper
– Oil passage in crankshaft taper
– Thread in crankshaft
– Rotor taper
– Oil bore in rotor.

NOTICE **Taper on crankshaft and rotor must be free of grease.**

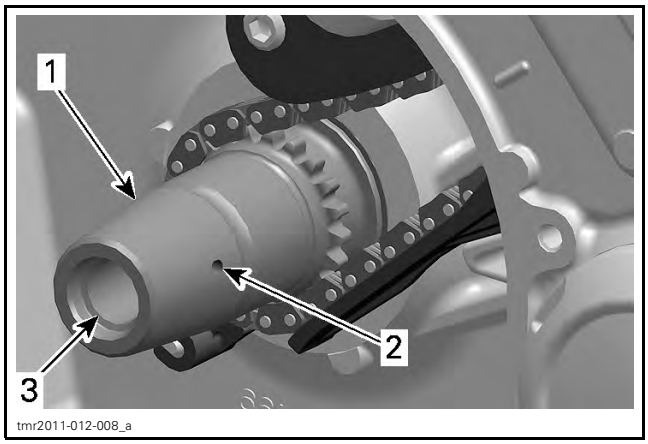

1. Crankshaft (MAG side)
2. Oil passage
3. Threads

Oil sprag clutch and install sprag clutch gear.

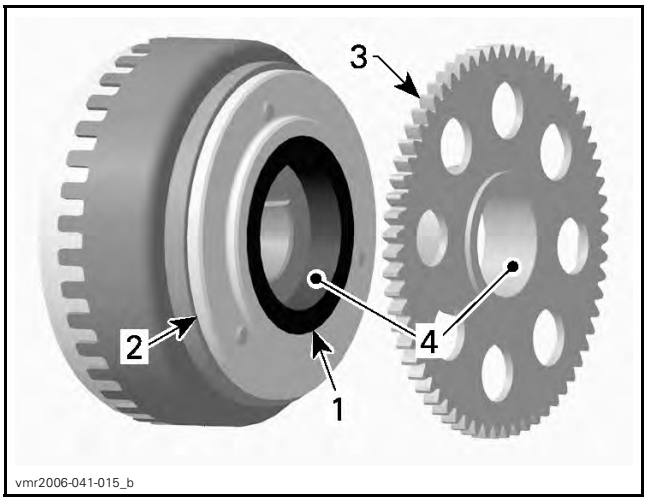

1. Sprag clutch
2. Sprag clutch housing
3. Sprag clutch gear
4. Apply engine oil here

Slide rotor onto crankshaft. The woodruff key and the keyway must be aligned.

Rotate starter double gear counterclockwise to align intermediate gear teeth with sprag clutch gear.

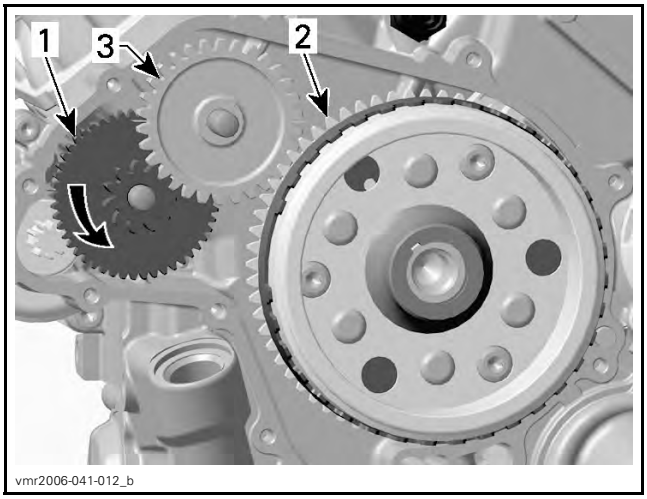

1. Starter double gear
2. Sprag clutch gear
3. Intermediate gear

SERVICE PRODUCT	
Rotor retaining screw	LOCTITE 648 (GREEN) (P/N 413 711 400)

TIGHTENING TORQUE	
Rotor retaining screw	150 N•m ± 10 N•m (111 lbf•ft ± 7 lbf•ft)

SPRAG CLUTCH

Removing the Sprag Clutch

Remove *MAGNETO COVER*. See procedure in this subsection.

Heat screws in order to break the Loctite.

Loosen sprag clutch housing screws located inside rotor.

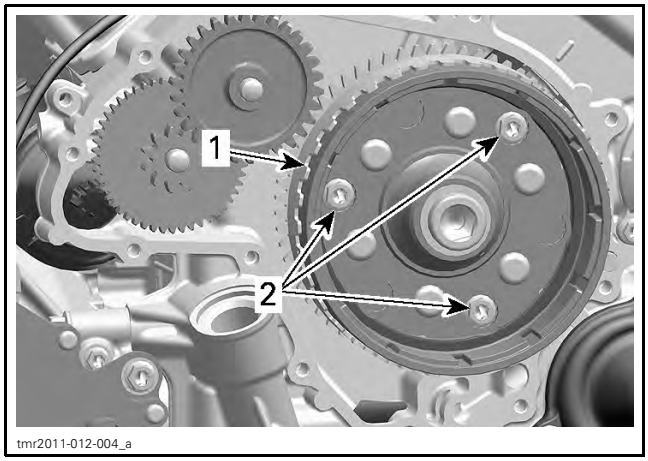

1. *Rotor*
2. *Sprag clutch housing screws*

Remove rotor (refer to *ROTOR* in this subsection).

Remove sprag clutch gear.

Remove sprag clutch housing screws and sprag clutch housing.

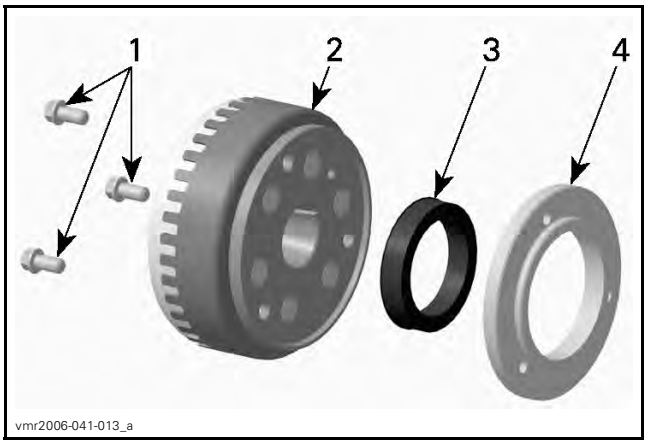

1. *Sprag clutch housing screws*
2. *Rotor*
3. *Sprag clutch*
4. *Sprag clutch housing*

Inspecting the Sprag Clutch

Inspect sprag clutch and sprag clutch housing for wear and damage.

Also check the collar of the sprag clutch gear.

Rotate sprag clutch gear in sprag clutch.

NOTE: Sprag clutch must lock in counterclockwise direction.

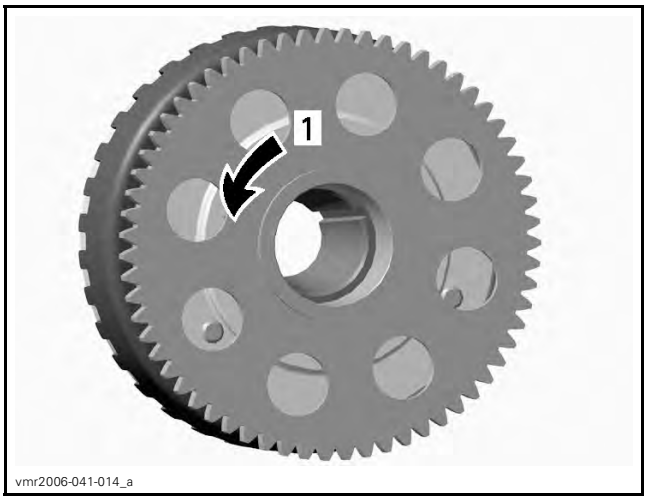

SPRAG CLUTCH FUNCTIONAL TEST
1. *Lock*

NOTE: Sprag clutch, housing and gear must be replaced at the same time, if damaged.

Installing the Sprag Clutch

For installation, reverse the removal procedure. However, pay attention to the following details.

Use PULLEY FLANGE CLEANER (P/N 413 711 809) to clean following:

– Threads in sprag clutch housing
– Threads of sprag clutch housing screws.

Apply LOCTITE 648 (GREEN) (P/N 413 711 400) on threads of sprag clutch housing screws.

Install screws but do not torque yet.

Apply engine oil on sprag clutch and sprag clutch gear needle bearing.

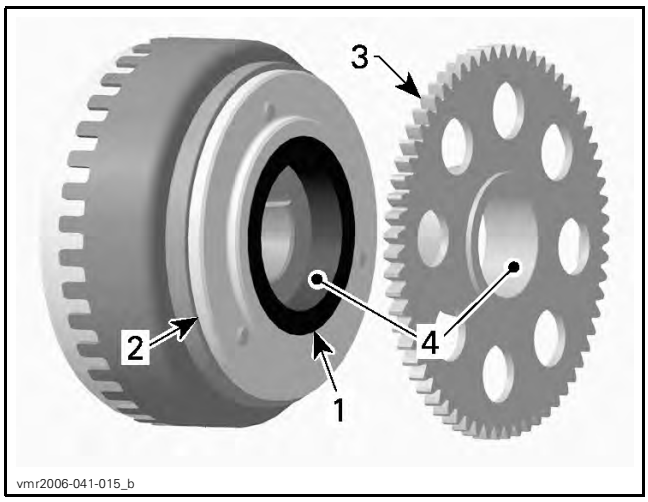

1. Sprag clutch
2. Sprag clutch housing
3. Sprag clutch gear
4. Apply engine oil here

Install rotor, refer to *ROTOR* in this subsection.

Tighten sprag clutch housing screws to specification.

TIGHTENING TORQUE	
Sprag clutch housing screws	30 N•m ± 2 N•m (22 lbf•ft ± 1 lbf•ft)

SPRAG CLUTCH GEAR

Removing the Sprag Clutch Gear

Remove *ROTOR*. See procedure in this subsection.

Pull sprag clutch gear out of the rotor.

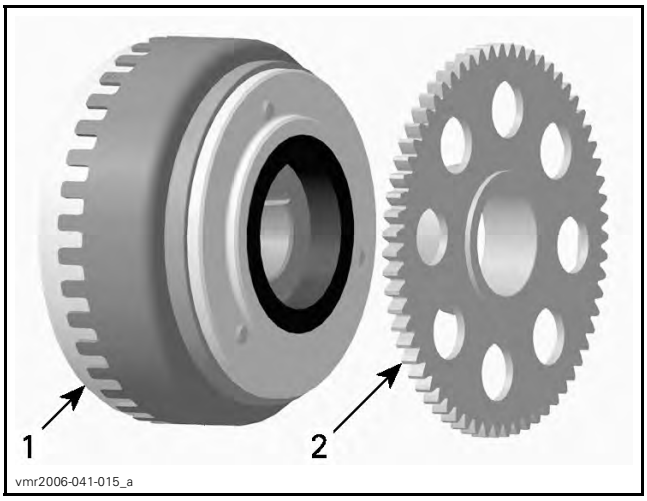

1. Rotor
2. Sprag clutch gear

Inspecting the Sprag Clutch Gear

Inspect gear, especially teeth and sprag clutch collar, for wear and other damage.

Check needle bearing condition. Replace sprag clutch gear if necessary.

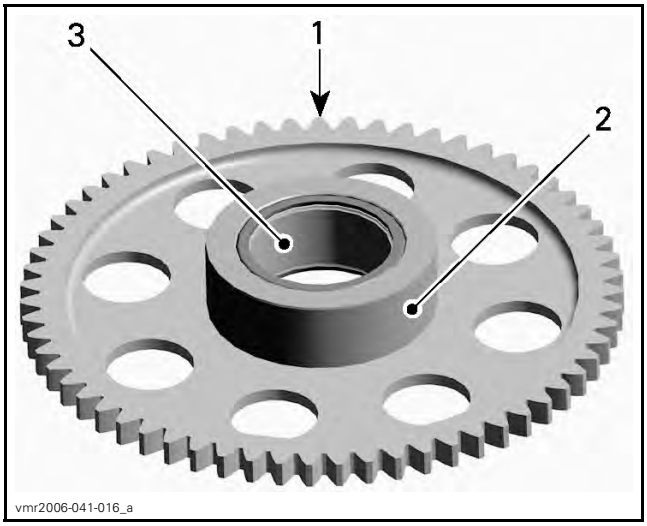

INSPECT
1. Teeth
2. Collar
3. Needle bearing

Installing the Sprag Clutch Gear

The installation is the reverse of the removal procedure. However, pay attention to the following.

NOTE: Apply engine oil on needle bearing and collar of sprag clutch gear.

STARTER DRIVE GEARS

Starter Drive Gear Location

The starter drive gears are located on the engine MAG side behind the magneto cover.

Removing the Starter Drive Gear

Remove *MAGNETO COVER*. See procedure in this subsection.

Remove location pins, starter double gear and intermediate gear.

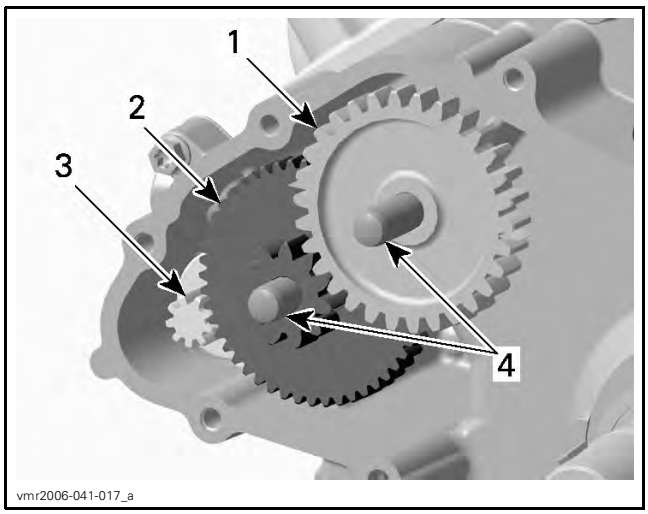

1. *Intermediate gear*
2. *Starter double gear*
3. *Starter gear*
4. *Location pins*

Inspecting the Starter Drive Gear

Inspect gears and location pins for wear and damage.

Replace parts as necessary.

Installing the Starter Drive Gear

The installation is the reverse of the removal procedure. Pay attention to the following details.

Apply LOCTITE 767 (ANTISEIZE LUBRICANT) (P/N 293 800 070) on starter gear before installing the starter double gear.

Apply engine oil on location pins.

ELECTRIC STARTER

Starter Access

To access starter electrical terminal, refer to *BODY* subsection and remove the following:

– Seat
– Console
– RH side panel and extension panel
– RH footboard panel.

Testing the Starter Operation

1. Disconnect starter power cable from starter solenoid and pull cable out to RH side of the vehicle.

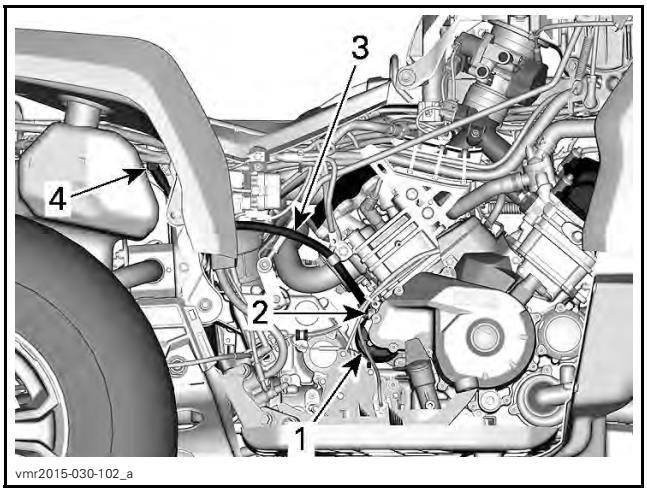

1. *Starter*
2. *Starter power cable connection at starter*
3. *Starter power cable*
4. *Starter power cable connection at solenoid*

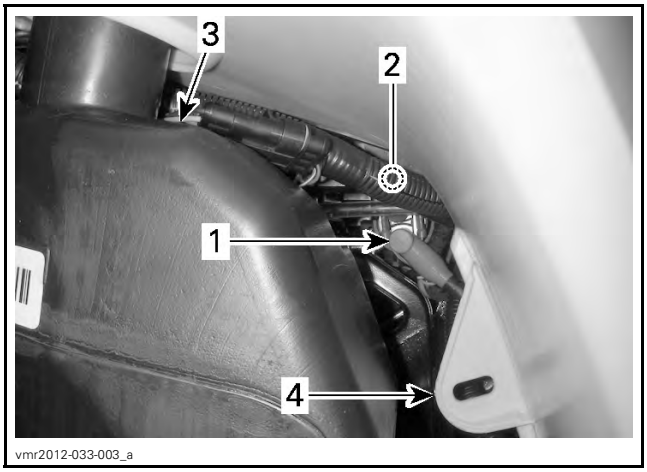

1. *Power cable from starter solenoid to starter*
2. *Power cable from battery to starter solenoid (not visible)*
3. *Fuel tank*
4. *RH rear fender*

2. Using booster cables, carefully supply current from a 12 volt battery directly to the starter power cable.

NOTICE **First connect the red jumper cable from the booster battery to the starter cable. Momentarily connect the BLACK (-) cable from the booster battery to engine ground last.**

If the starter turns, test other starting system components.

Removing the Starter

1. Ensure ignition switch is set to OFF.
2. Disconnect BLACK (-) cable from battery.

⚠ WARNING

Always disconnect BLACK (-) cable first and reconnect last.

3. Remove body parts as listed in *STARTER ACCESS*.
4. Disconnect RED (+) cable from starter.
5. Clean starter area.
6. Remove starter retaining screw (from RH side of engine).

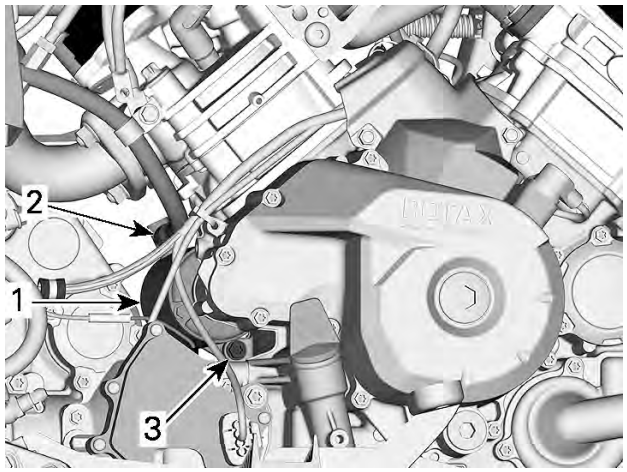

1. Starter
2. Starter power cable to disconnect
3. Starter retaining screw to remove

7. Carefully pry starter out of the engine crankcase.

Installing the Starter

Reverse the removal procedure. However, pay particular attention to the following.

Make sure the starter and engine mating surfaces are free of debris. Serious problems may arise if the starter is not properly aligned.

Lubricate starter O-ring.

SERVICE PRODUCT	
Starter O-ring and mating surface	LOCTITE 767 (ANTISEIZE LUBRICANT) (P/N 293 800 070)

Bring starter close to its location. Rotate it so that its mounting ear allows installation in engine crankcase and on its alignment pin.

Push starter in place and align mounting ear to install screw.

TIGHTENING TORQUE	
Starter mounting screw	25 N•m ± 3 N•m (18 lbf•ft ± 2 lbf•ft)

NOTICE **When connecting the RED (+) cable to the starter motor, make sure the battery cables are disconnected.**

SERVICE PRODUCT	
Starter terminal and retaining nut	DIELECTRIC GREASE (P/N 293 550 004)

TIGHTENING TORQUE	
Service product	DIELECTRIC GREASE (P/N 293 550 004)
Starter terminal and retaining nut	6 N•m ± 0.5 N•m (53 lbf•**in** ± 4 lbf•**in**)

When installing remaining removed parts, refer to applicable subsections.

Connect battery cables.

⚠ WARNING

Always connect RED (+) cable first then BLACK (-) cable last.

Test starter operation.

INTAKE MANIFOLD

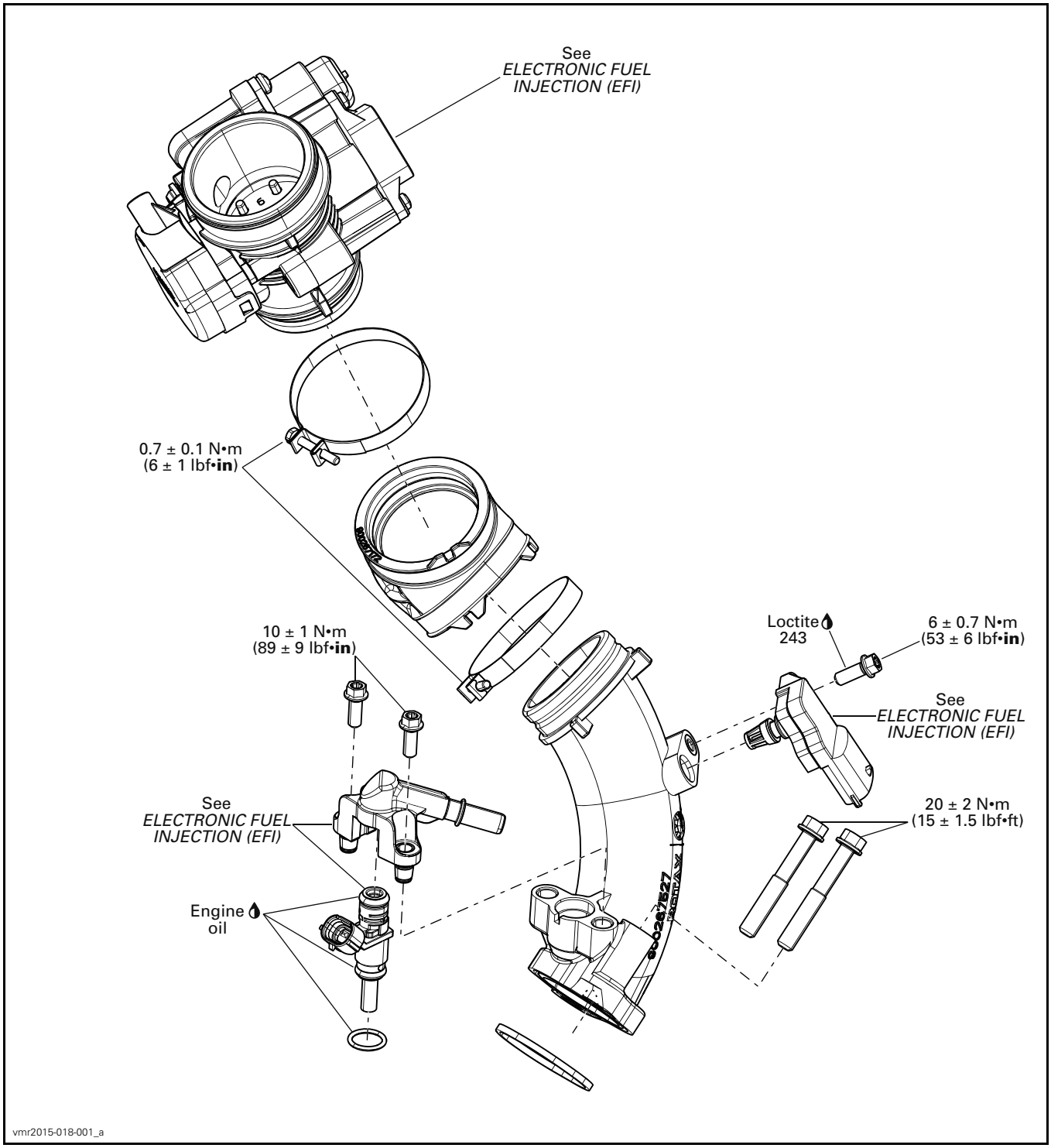

PROCEDURES

INTAKE MANIFOLD

Intake Manifold Access

Refer to *BODY* subsection and remove the following:
- Console
- LH side panel and extension
- RH side panel and extension.

Refer to *EXHAUST SYSTEM* subsection and remove the outer exhaust system heat shield.

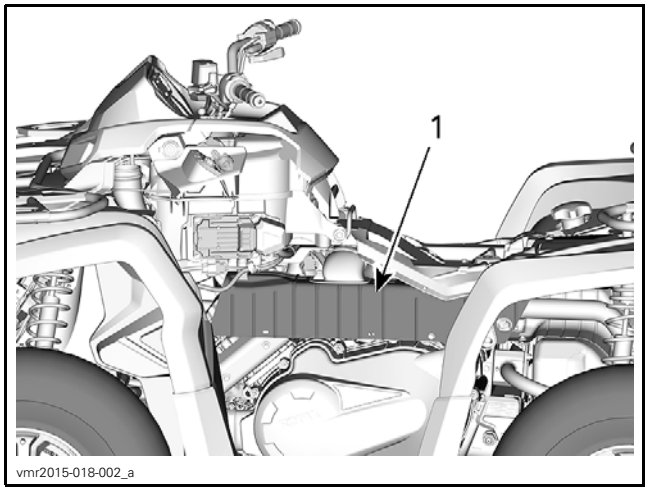

1. Remove this heat shield

Intake Manifold Removal

1. Release fuel pressure. Refer to *FUEL TANK AND FUEL PUMP* subsection.
2. From the right side of the vehicle, loosen the lower clamp that retains the intake adapter to the intake manifold.

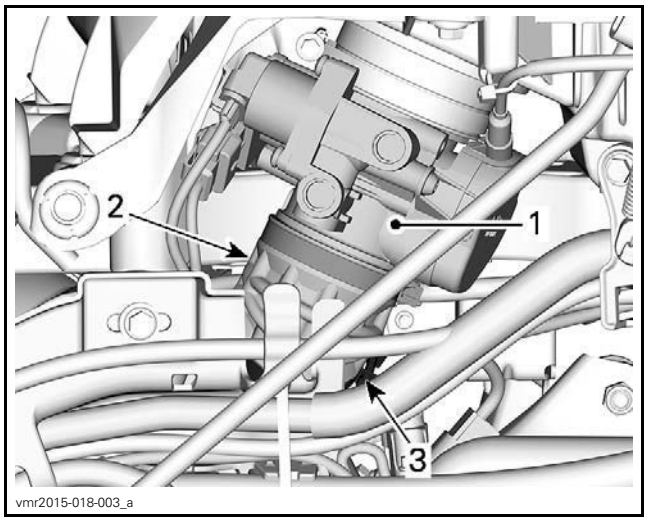

1. Throttle body
2. Intake adapter
3. Loosen this clamp

3. From left side, disconnect the fuel hose from fuel rail, refer to *ELECTRONIC FUEL INJECTION (EFI)* subsection.

⚠ CAUTION The fuel hose may still be under pressure.

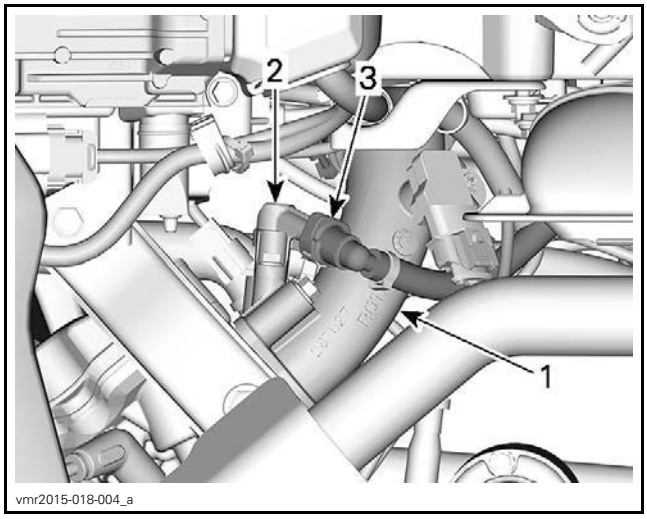

1. Intake manifold
2. Fuel rail
3. Fuel rail disconnect

4. Disconnect fuel injector electrical connector.
5. Disconnect MAPTS connector.

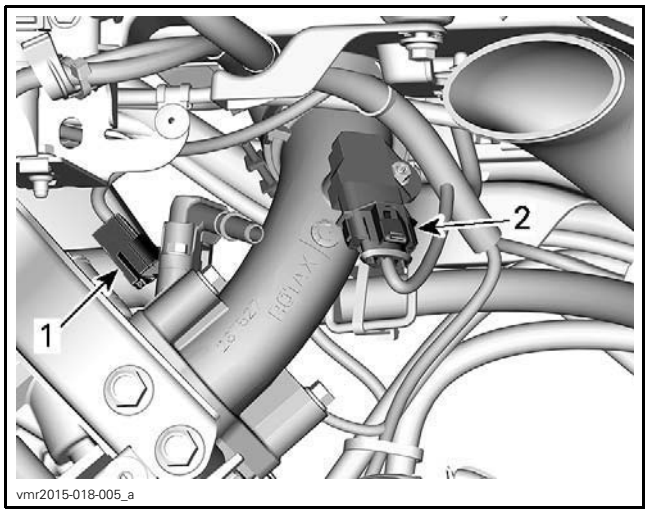

1. *Fuel injector connector*
2. *MAPTS connector*

6. Remove intake manifold from engine and intake adapter.

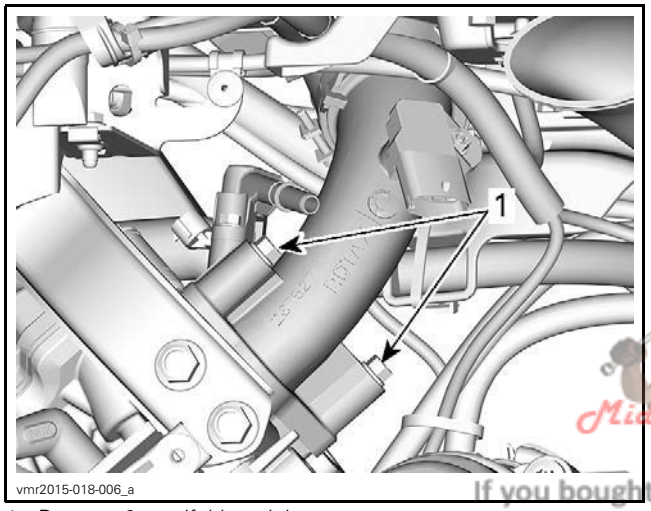

1. *Remove 2 manifold retaining screws*

Midwest Manuals
Green Manuals
Paperless Manuals For a Better Tomorrow www.green-manuals.com
If you bought this manual from any other seller please leave them NEGATIVE feedback and notify me at bestshopmanuals@gmail.com

Intake Manifold Inspection

Check intake manifold for cracks, warping at flanges or any other damage. Replace if necessary.

Intake Manifold Installation

The installation is the reverse of the removal procedure. However, pay attention to the following.

Tighten intake manifold retaining screws to specified torque.

INTAKE MANIFOLD RETAINING SCREWS	
Tightening torque	20 N•m ± 2 N•m (15 lbf•ft ± 1 lbf•ft)

INTAKE MANIFOLD

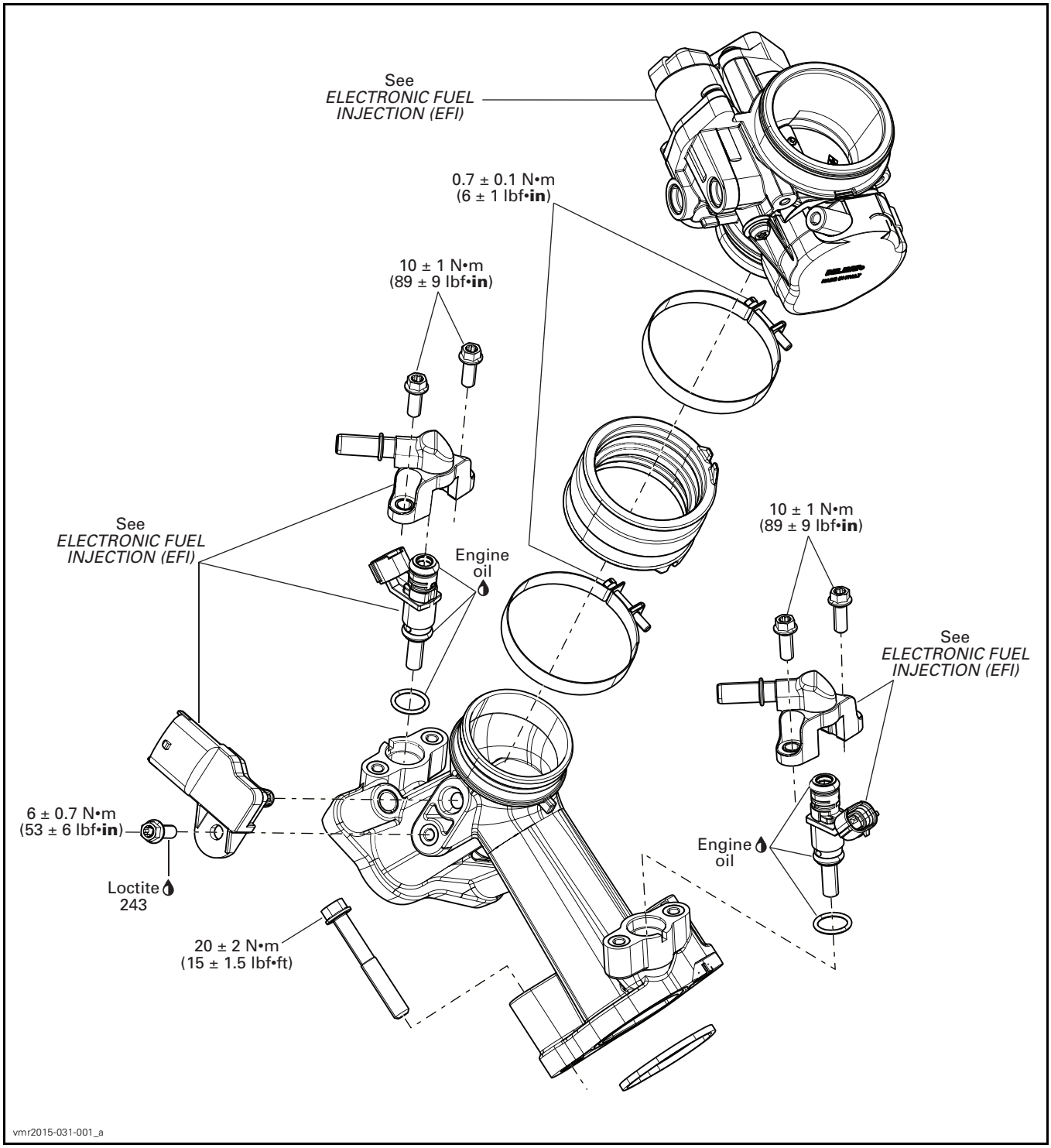

PROCEDURES

INTAKE MANIFOLD

Intake Manifold Access

Refer to *BODY* subsection and remove the following:

– Console
– RH side panel and extension.

Removing the Intake Manifold

1. Release fuel pressure. Refer to *FUEL TANK AND FUEL PUMP* subsection.
2. Disconnect top of shift rod.

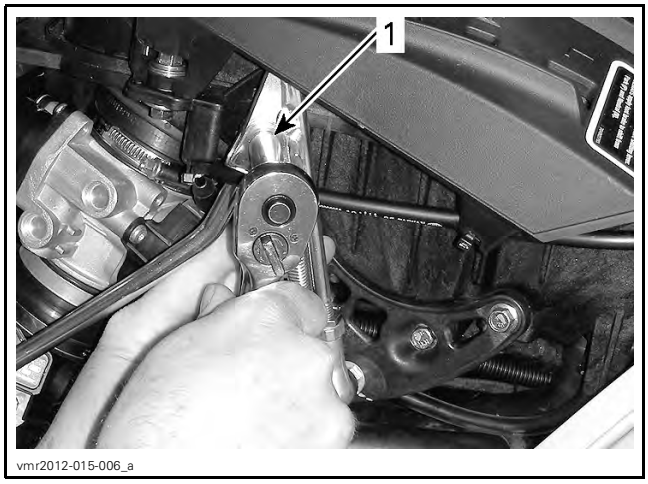

SHIFT ROD DISCONNECT
1. Remove screw, nut, and bushing

3. Disconnect the fuel hoses from fuel rails, refer to *ELECTRONIC FUEL INJECTION (EFI)* subsection.

CAUTION The fuel hose may still be under pressure.

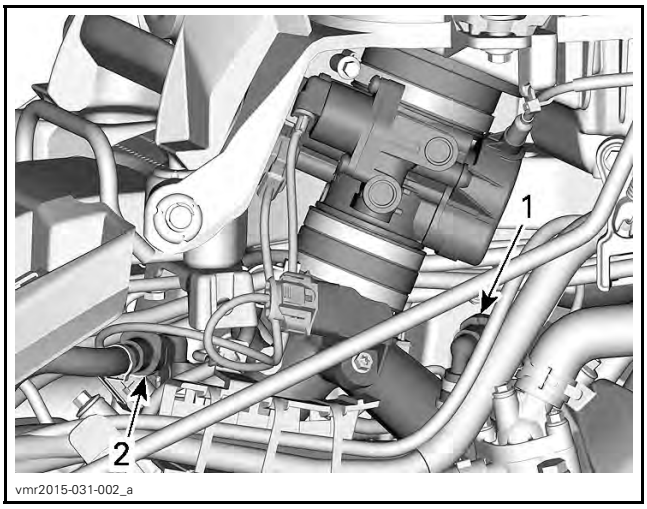

1. Forward fuel rail disconnect
2. Rear fuel rail disconnect

4. Disconnect fuel injector electrical connectors.
5. Disconnect MAPTS connector.

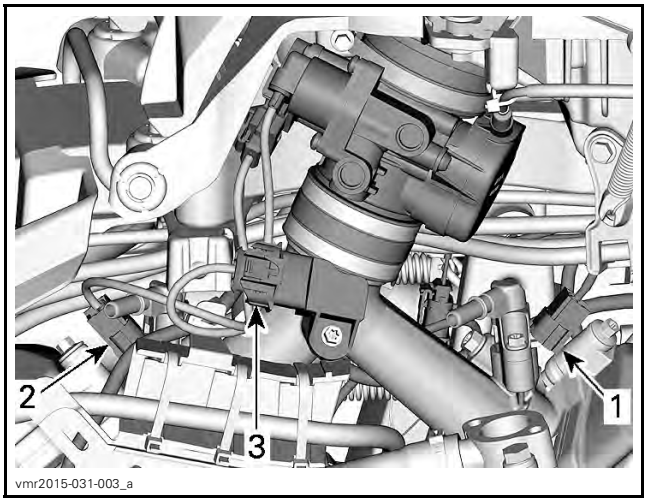

1. Forward fuel injector connector
2. Rear fuel injector connector
3. MAPTS connector

6. Disconnect throttle body from intake manifold and air intake silencer. Refer to *ELECTRONIC FUEL INJECTION (EFI)* subsection.

NOTE: Do not disconnect throttle cable needlessly.

7. Remove wiring harness support from engine.

vmr2012-015-005_a

1. Remove

8. Remove intake manifold from engine.

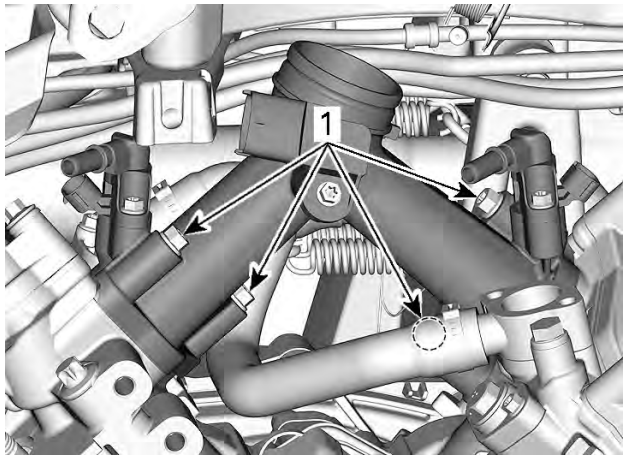

vmr2015-031-004_a

1. Manifold retaining screws (4x)

Inspecting the Intake Manifold

Check intake manifold for cracks, warping at flanges or any other damage. Replace if necessary.

Installing the Intake Manifold

The installation is the reverse of the removal procedure. However, pay attention to the following.

Tighten intake manifold retaining screws to specified torque one cylinder at a time.

TIGHTENING TORQUE	
Intake manifold retaining screws	20 N•m ± 2 N•m (15 lbf•ft ± 1 lbf•ft)

Enable fuel pump using B.U.D.S.

TOP END

SERVICE TOOLS

Description	Part Number	Page
DIAL INDICATOR ADAPTER	529 036 159	129
ENGINE LEAK DOWN TEST KIT	529 035 661	129
PISTON CIRCLIP INSTALLER	529 036 083	146
TDC DIAL INDICATOR	414 104 700	129
VALVE GUIDE INSTALLER	529 036 269	141
VALVE GUIDE REMOVER (6 MM)	529 036 074	141
VALVE SPRING COMPRESSOR CUP	529 036 270	137
VALVE SPRING COMPRESSOR	529 035 724	137

SERVICE TOOLS – OTHER SUPPLIER

Description	Part Number	Page
SNAP-ON PLIERS	YA 8230	139

SERVICE PRODUCTS

Description	Part Number	Page
LOCTITE 767 (ANTISEIZE LUBRICANT)	293 800 070	141

CYLINDER HEAD

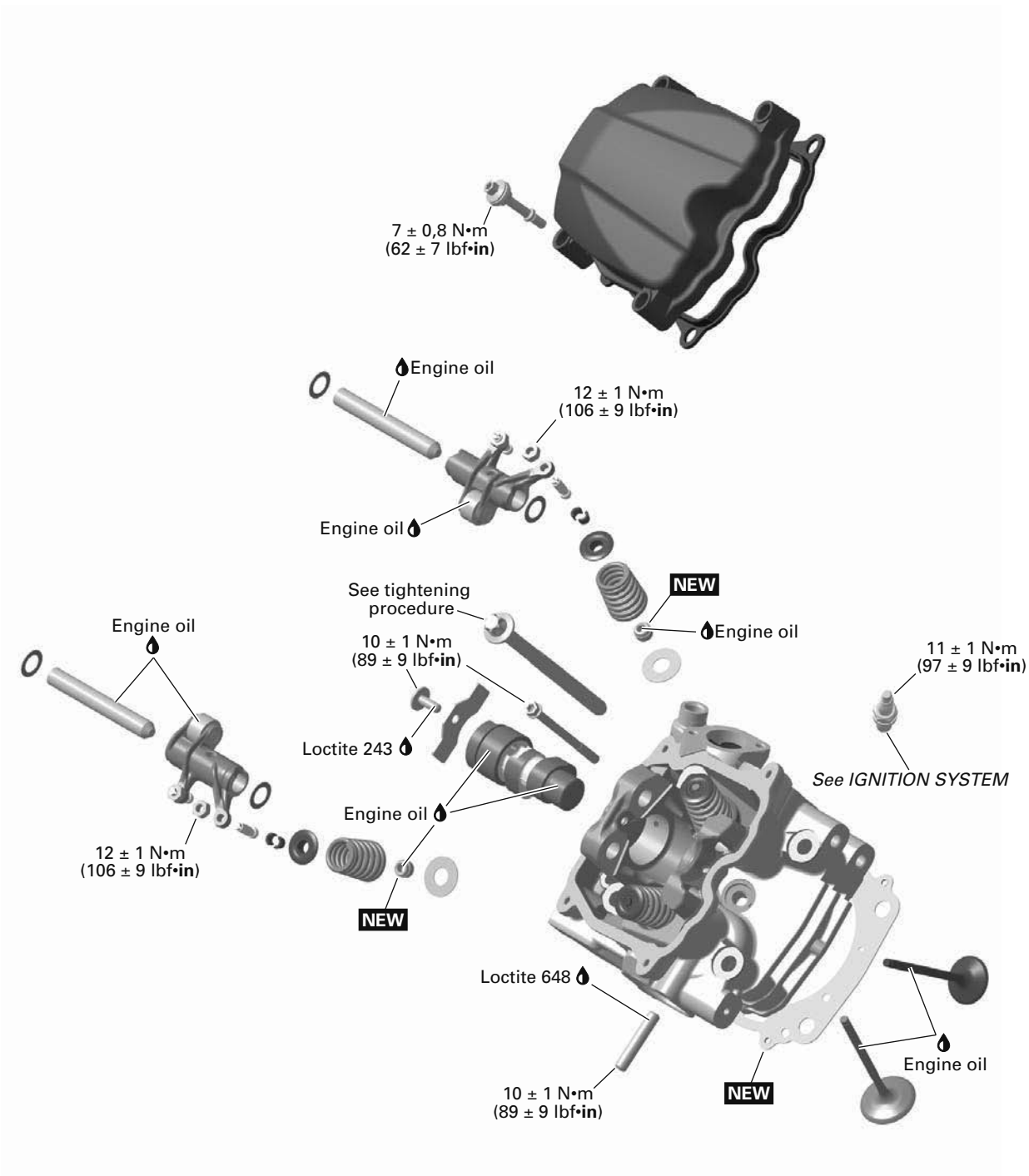

NEW = Component must be replaced when removed.

vmr2015-019-001_a

CYLINDER AND PISTON

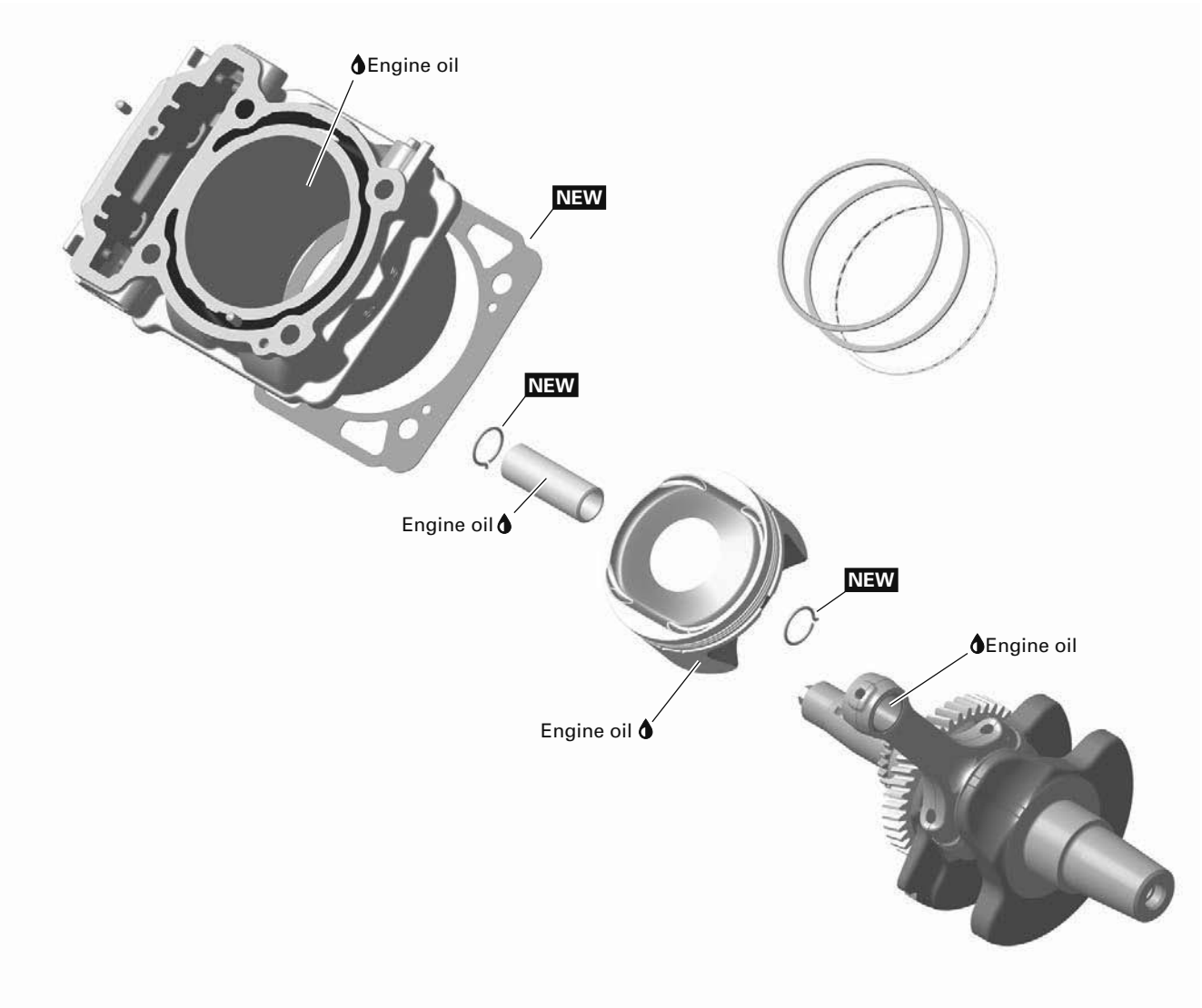

NEW = Component must be replaced when removed.

vmr2015-019-002_a

GENERAL

When diagnosing an engine problem, always perform a cylinder leak test.

NOTE: Even though the following procedures do not require the engine removal, many illustrations show the engine out of the vehicle for more clarity.

IMPORTANT: Note position of parts on disassembly. This may help to find the root cause of a problem. A component that is not replaced should be reinstalled in the same position as originally mounted.

INSPECTION

LEAK TEST

Before performing the cylinder leak test, verify the following:

– Clamp(s) tightness
– Radiator and hoses.

NOTE: For best accuracy, the leak test should be done with the engine at normal operating temperature.

⚠ WARNING

Prevent burning yourself on hot engine parts.

Preparation

Disconnect battery.

⚠ WARNING

Always respect this order for disassembly; disconnect BLACK (-) cable first.

Remove radiator cap.

⚠ WARNING

To prevent burning yourself only remove the radiator cap by wearing the appropriate safety equipment.

Unplug spark plug cable.

Clean spark plug area and remove spark plug from cylinder head.

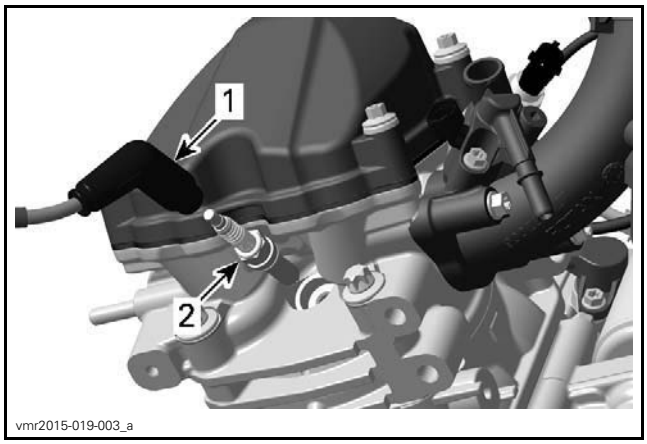

1. Spark plug cable
2. Spark plug

Remove valve cover. Refer to procedure in this subsection.

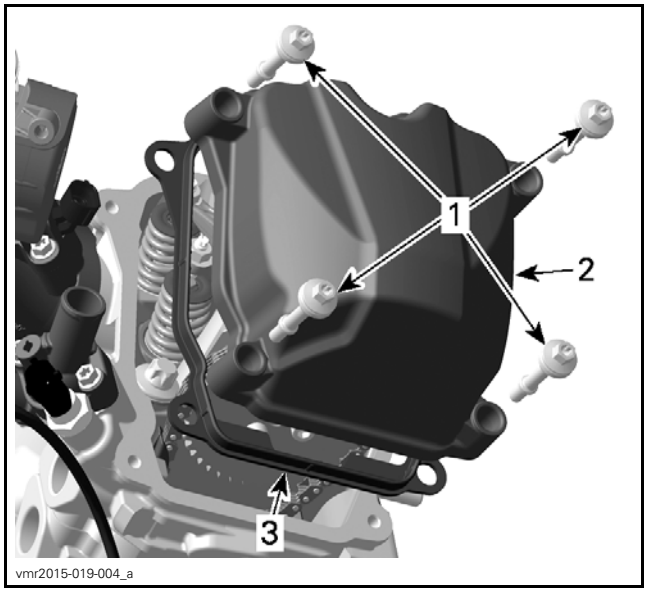

1. Valve cover screws
2. Valve cover

Rotate crankshaft until piston is at TDC ignition.

To turn crankshaft, there are two possible procedures.

First Procedure

Turn the drive pulley.

Second Procedure

1. Remove plug screw with O-ring from magneto cover.

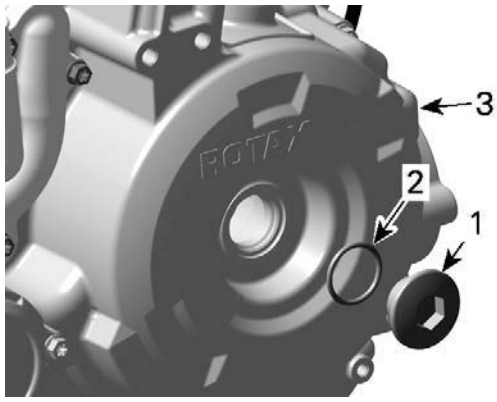

vmr2015-019-005_a

1. *Plug screw*
2. *O-ring*
3. *Magneto cover*

2. Turn crankshaft.

REQUIRED TOOL
13 mm socket

NOTICE **Turn only clockwise to avoid loosening of the MAG side screw of the crankshaft.**

Set the piston to precisely TDC ignition. For proper procedure refer to *CRANKSHAFT LOCKING PROCEDURE* in the *BOTTOM END* subsection.

NOTE: If engine is removed from vehicle a dial indicator can be used.

REQUIRED TOOL	
TDC DIAL INDICATOR (P/N 414 104 700)	
DIAL INDICATOR ADAPTER (P/N 529 036 159)	

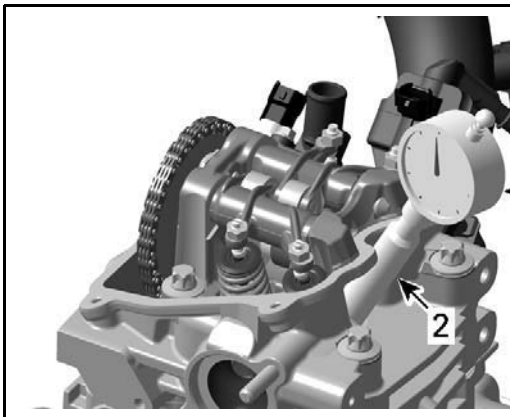

vmr2015-019-006_a

1. *TDC dial indicator*
2. *Dial indicator adapter*

NOTE: If a dial indicator is not available, use a screwdriver or another similarly suitable tool.

NOTICE **Do not scratch or damage piston/cylinder surface.**

NOTE: At TDC ignition the marks on the camshaft timing gear have to be parallel to cylinder head base as per following illustration.

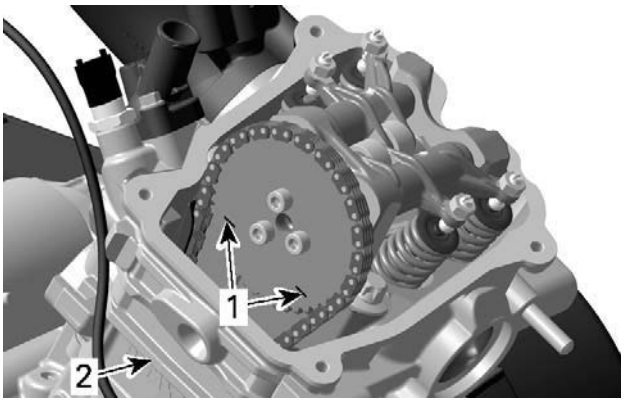

vmr2015-019-007_a

1. *Marks on camshaft timing gear*
2. *Cylinder head base*

Leak Test

REQUIRED TOOL	
ENGINE LEAK DOWN TEST KIT (P/N 529 035 661)	

Connect leak tester to adequate air supply.

Set needle of measuring gauge to zero.

NOTE: All testers have specific instructions on gauge operation and required pressure.

Install gauge adapter into previously cleaned spark plug hole.

Supply combustion chamber with air pressure.

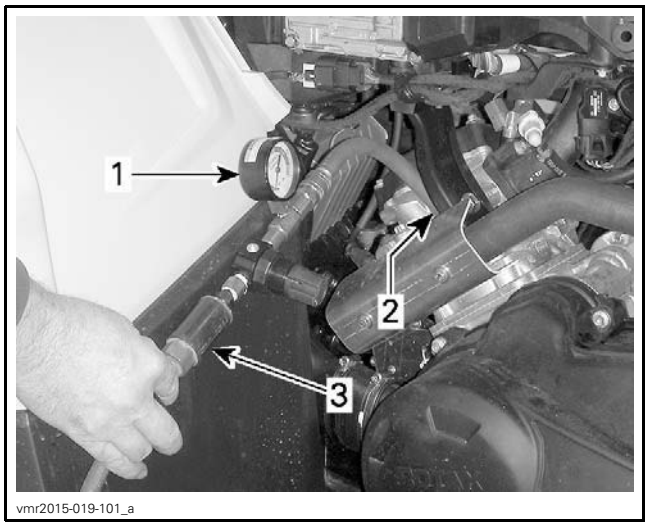

1. Leak tester
2. Leak tester installed in spark plug bore
3. Air supply hose

Note the amount or percentage of leakage (depending on tester).

LEAKAGE PERCENTAGE	ENGINE CONDITION
0% to 15%	Excellent condition
16% to 25%	Good condition
26% to 40%	Fair condition; reduced engine performance
41% and higher	Poor condition, diagnose and repair engine

NOTE: To make sure there is no false reading due to a valves not perfectly seated, tap each valve adjustment screw (on the rocker) using a soft hammer.

Diagnosis

Listen for air leaks.

- Air escaping in intake port/throttle body means leaking intake valve(s).
- Air escaping in exhaust port means leaking exhaust valve(s).
- Air bubbles in the coolant (radiator) means leaking cylinder head gasket.
- Air/coolant escaping from cylinder/head means damaged gasket(s) and/or loosened screws.
- Air escaping into crankcase area means excessively worn cylinder and/or broken piston rings.
- Air/oil escaping from crankcase means damaged gasket and/or loosened screws (refer to *BOTTOM END* subsection).

NOTE: For all the checkpoints mentioned above, see the appropriate engine section to diagnose and repair the engine.

Reassembly

Reverse the preparation procedure. Ensure to respect torque values and use of appropriate products/lubricants. Refer to exploded views in other subsections of this manual as required.

PROCEDURES

VALVE COVER

Valve Cover Access

Refer to *BODY* subsection and remove the following.

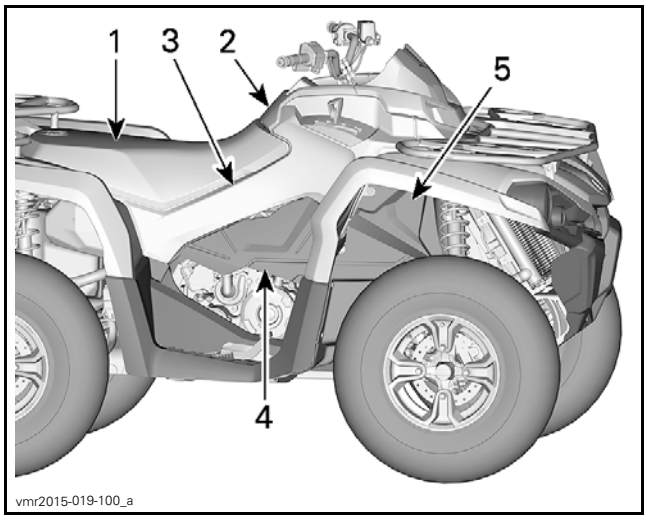

1. Seat
2. Console
3. RH side panel
4. RH side panel extension
5. RH inner fender panel

Valve Cover Removal

Remove:

- Valve cover screws
- Valve cover
- Gasket.

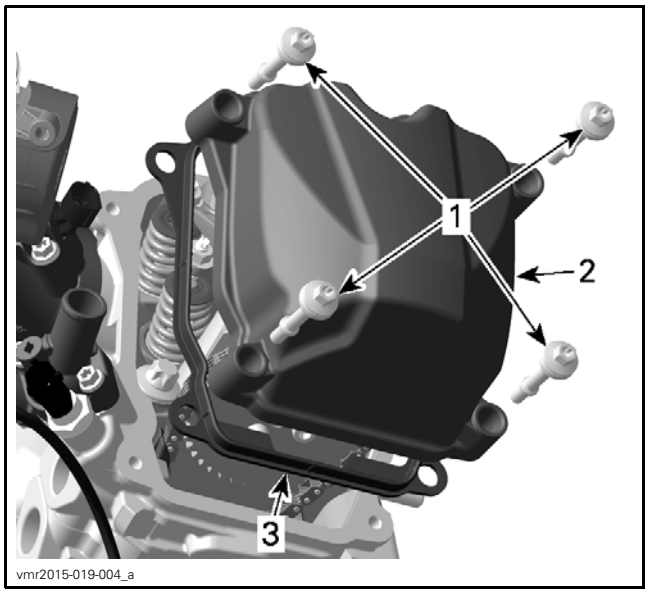

1. *Valve cover screws*
2. *Valve cover*
3. *Gasket*

Valve Cover Inspection

Check the gasket on the valve cover if it is brittle, cracked or hard. If so, replace the gasket.

Valve Cover Installation

The installation is the reverse of the removal procedure.

Tighten valve cover retaining screws to specified torque in a criss-cross sequence.

VALVE COVER RETAINING SCREWS	
Tightening torque	7 N•m ± 0.8 N•m (62 lbf•**in** ± 7 lbf•**in**)

ROCKER ARM

Rocker Arm Removal

Remove valve cover.

Refer to *TIMING CHAIN* subsection and remove the following parts:

– Timing chain tensioner
– Camshaft timing gear.

Remove:

– Pan head screw
– Camshaft retaining plate.

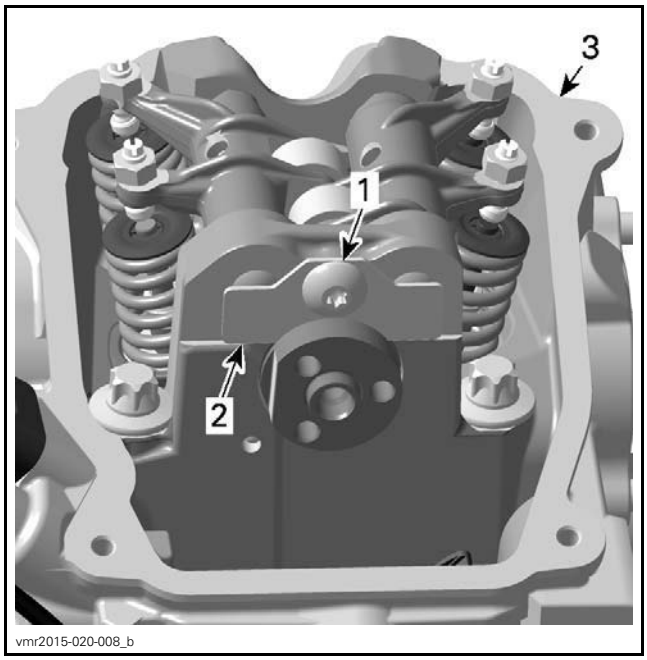

1. *Pan head screw*
2. *Camshaft retaining plate*
3. *Cylinder head*

Remove rocker arm shafts.

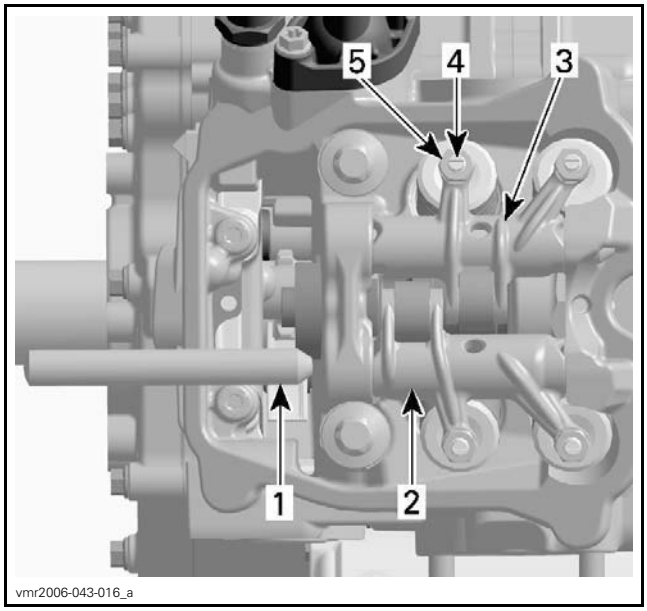

1. *Rocker arm shaft*
2. *Rocker arm (exhaust side)*
3. *Rocker arm (intake side)*
4. *Adjustment screw*
5. *Lock nut*

Remove:

– Rocker arm assembly (exhaust side and intake side) with adjustment screws and lock nuts
– Thrust washers.

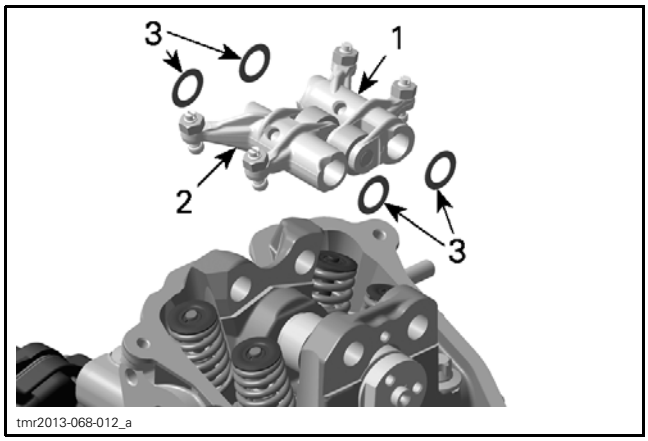

1. Rocker arm (exhaust side)
2. Rocker arm (intake side)
3. Thrust washers

NOTICE Pay attention not to lose thrust washers or drop them into the timing chain compartment.

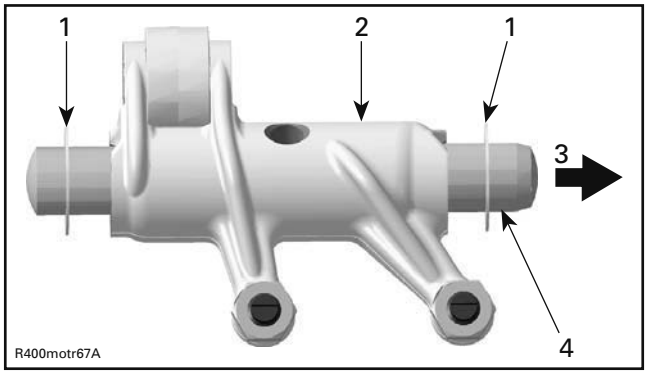

1. 2 thrust washers
2. Rocker arm (exhaust side)
3. Cylinder head (spark plug side)
4. Big taper to spark plug side

Rocker Arm Inspection

Inspect each rocker arm for cracks and scored friction surfaces. If so, replace rocker arm assembly.

Check the rocker arm rollers for free movement, wear and excessive radial play. Replace rocker arm assembly if necessary.

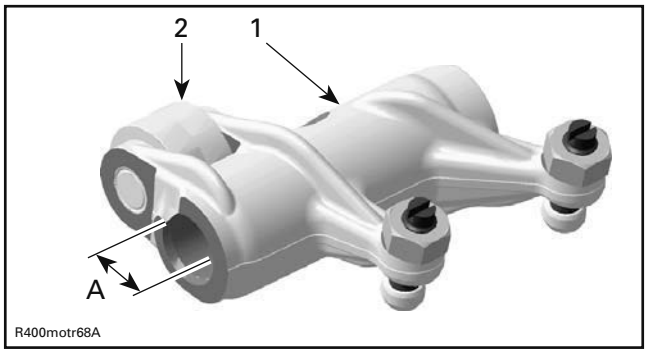

1. Rocker arm (exhaust side)
2. Roller
A. Bore for rocker arm shaft

Measure rocker arm bore diameter. If diameter is out of specification, change the rocker arm assembly.

ROCKER ARM BORE DIAMETER	
NEW	12.036 mm to 12.050 mm (.4739 in to .4744 in)
SERVICE LIMIT	12.060 mm (.4748 in)

Check adjustment screws for free movement, cracks and/or excessive play.

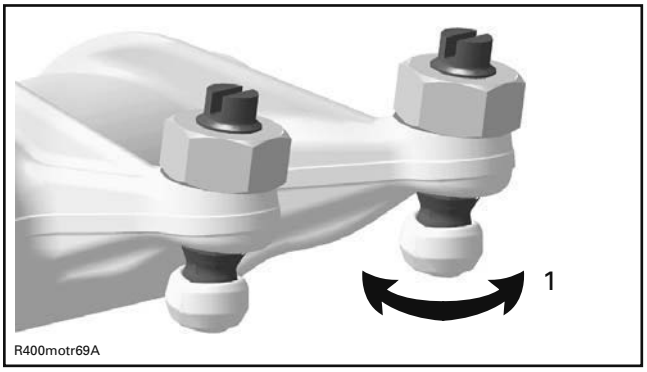

1. Free movement of adjustment screw top

Rocker Arm Shaft Inspection

Check for scored friction surfaces; if so, replace parts.

Measure rocker arm shaft diameter.

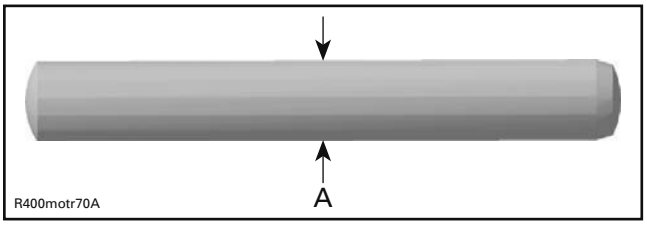

A. Measure rocker arm shaft diameter here

ROCKER ARM SHAFT DIAMETER	
NEW	12.00 mm to 12.018 mm (.4724 in to .4731 in)
SERVICE LIMIT	11.990 mm (.472 in)

Any area worn excessively will require parts replacement.

Rocker Arm Installation

NOTE: Use the same procedure for exhaust and intake rocker arm.

Apply engine oil on rocker arm shaft.

Insert a rocker arm shaft with the chamfered edge first through rocker arm pin bore.

Install a thrust washer at timing chain side, then the proper rocker arm (exhaust side or intake side).

Push in rocker arm shaft until its chamfer reaches the end of rocker arm bore.

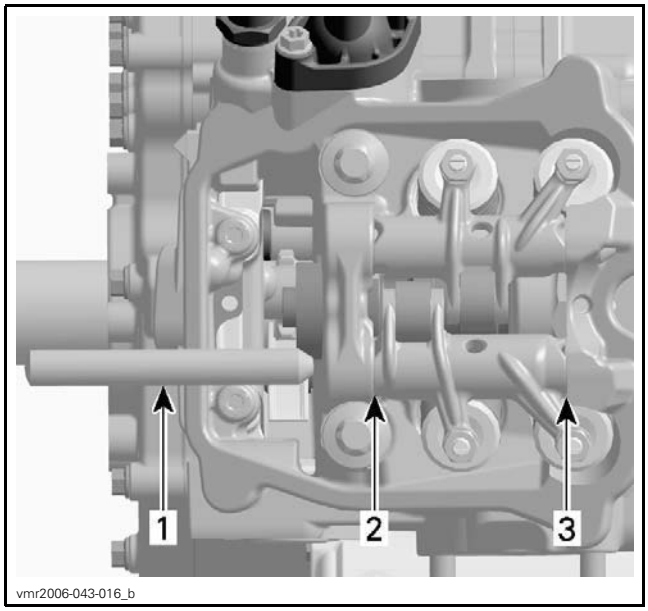

1. *Rocker arm shaft*
2. *Thrust washer (timing chain side)*
3. *Thrust washer (spark plug side)*

Place the other thrust washer and push rocker arm shaft to end position.

Install the camshaft retaining plate.

Tighten pan head screw to specification.

PAN HEAD SCREW	
Tightening torque	10 N•m ± 1 N•m (89 lbf•**in** ± 9 lbf•**in**)

Adjust valve clearance, refer to *PERIODIC MAINTENANCE PROCEDURE*.

CAMSHAFT

Camshaft Removal

Remove valve cover (see *VALVE COVER* in this subsection).

Refer to *TIMING CHAIN* subsection and remove the following parts:

– Timing chain tensioner
– Camshaft timing gear.

Remove the camshaft retaining plate.

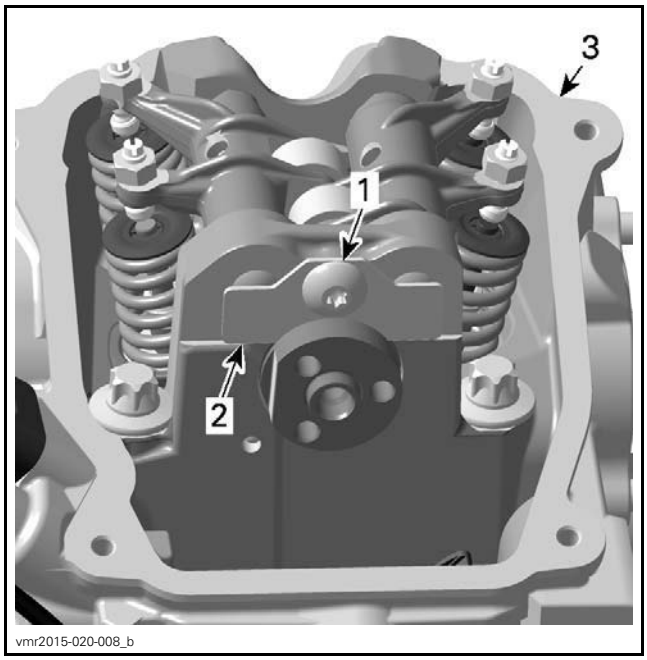

1. *Camshaft retaining plate*
2. *Pan head screw*
3. *Cylinder head*

Remove rocker arms (see *ROCKER ARM* in this subsection).

Remove the camshaft.

NOTE: For removal rotate camshaft so that intake/exhaust lobe shows to upper side of cylinder head.

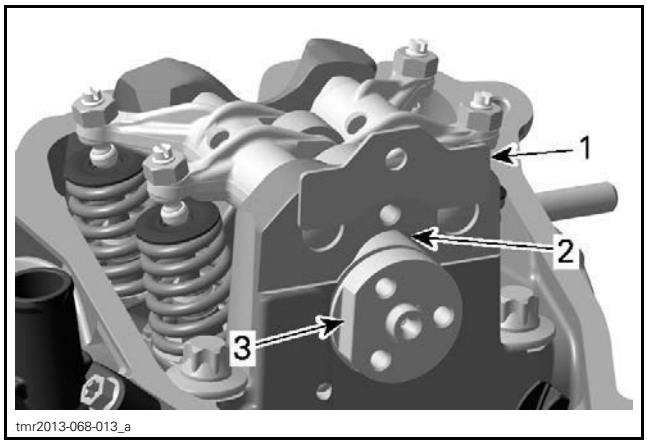

1. *Camshaft retaining plate*
2. *Area for camshaft lobes*
3. *Camshaft*

Camshaft Inspection

Check each lobe and bearing journal for:

– scoring
– scuffing
– cracks
– signs of wear.

Using a micrometer to measure:
– camshaft lobe height
– camshaft journal.

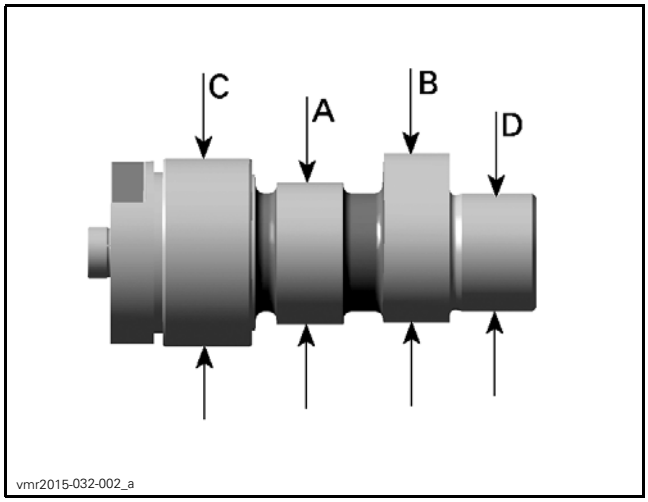

A. Camshaft lobe (exhaust valves)
B. Camshaft lobe (intake valves)
C. Camshaft journal (timing chain side)
D. Camshaft journal (spark plug side)

CAMSHAFT LOBE (EXHAUST)	
NEW	32.890 mm to 33.090 mm (1.295 in to 1.303 in)
SERVICE LIMIT	32.840 mm (1.293 in)

CAMSHAFT LOBE (INTAKE)	
NEW	32.950 mm to 33.150 mm (1.297 in to 1.305 in)
SERVICE LIMIT	32.900 mm (1.295 in)

CAMSHAFT JOURNAL (TIMING CHAIN SIDE)	
NEW	34.959 mm to 34.975 mm (1.3763 in to 1.377 in)
SERVICE LIMIT	34.950 mm (1.376 in)

CAMSHAFT JOURNAL (SPARK PLUG SIDE)	
NEW	21.959 mm to 21.980 mm (.8645 in to .8654 in)
SERVICE LIMIT	21.950 mm (.8642 in)

Measure camshaft bearing in cylinder head. Refer to *CYLINDER HEAD INSPECTION* in this subsection.

Camshaft Installation

The installation is the reverse of the removal procedure. However, pay attention to the following.

NOTICE **The camshafts are not identical in design. Do not invert the camshafts during assembly. Any mix-up of the components will lead to engine damage.**

Place the camshaft retaining plate in the slot of the camshaft.

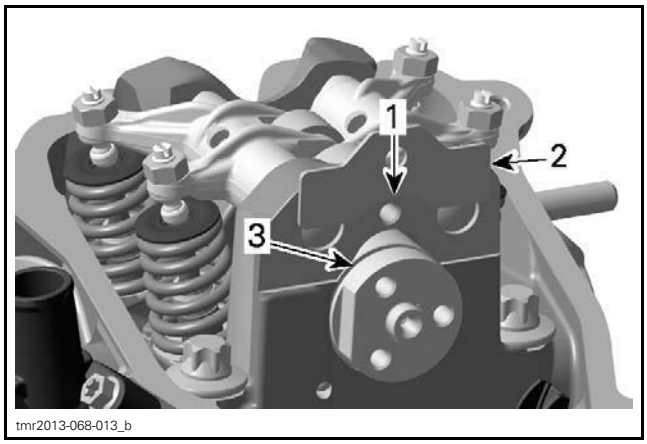

1. Direction of movement
2. Camshaft retaining plate
3. Slot retaining camshaft

Tighten pan head screw to specification.

PAN HEAD SCREW	
Tightening torque	10 N•m ± 1 N•m (89 lbf•**in** ± 9 lbf•**in**)

For other parts, refer to proper installation procedure.

CYLINDER HEAD

Cylinder Head Access

Refer to *BODY* subsection and remove the following.

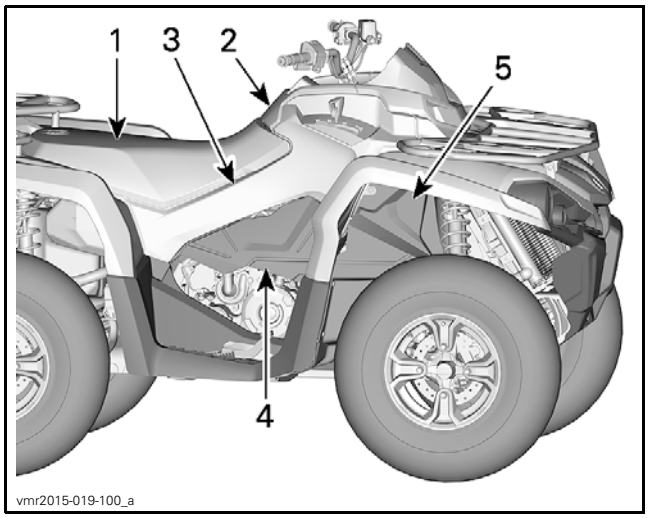

1. *Seat*
2. *Console*
3. *RH side panel*
4. *RH side panel extension*
5. *RH inner fender panel*

Cylinder Head Removal

Drain engine coolant. Refer to *ENGINE COOLANT REPLACEMENT* in the *PERIODIC MAINTENANCE PROCEDURES* subsection.

Disconnect the coolant hose from the thermostat housing.

NOTE: Before removing cylinder head, blow out remaining coolant using air pressure. During cylinder head removal, the remaining coolant in cylinder head could overflow into the engine and the engine oil will be contaminated.

Refer to *EXHAUST SYSTEM* subsection and disconnect exhaust pipe from cylinder head.

Refer to *INTAKE MANIFOLD* and disconnect the intake manifold from the cylinder head.

Disconnect spark plug wire.

Disconnect CTS connector, located at the cylinder head.

Remove the valve cover and its gasket (see *VALVE COVER* in this subsection).

Refer to *TIMING CHAIN* subsection and remove the following parts:

– Timing chain tensioner
– Camshaft timing gear.

First remove the M6 cylinder head screws, then the M10 cylinder head screws.

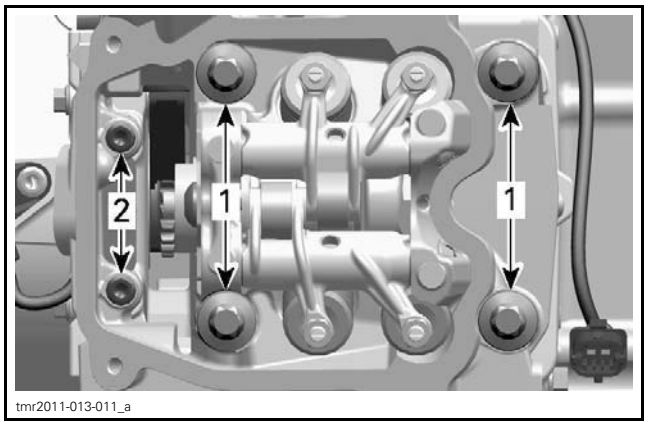

1. *Cylinder head screws M10*
2. *Cylinder head screws M6*

Pull up cylinder head.

Remove timing chain guide (fixed).

Remove and discard the cylinder head gasket.

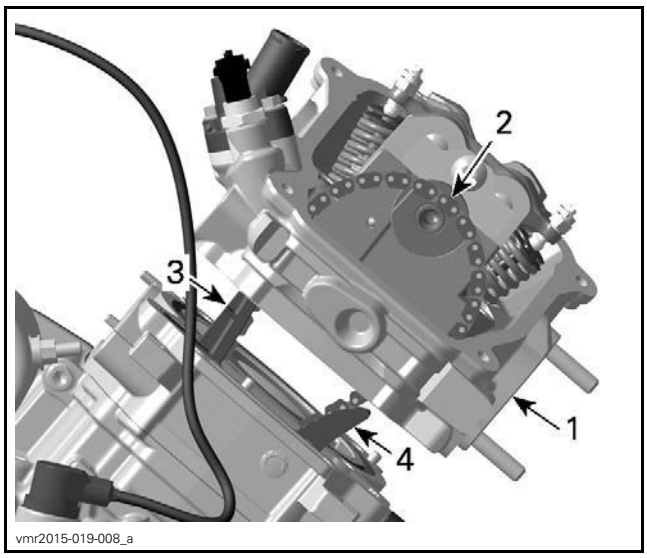

1. *Cylinder head*
2. *Timing chain*
3. *Chain guide (fixed)*
4. *Cylinder head gasket*

Cylinder Head Inspection

Inspect timing chain guide (fixed) for wear, cracks or other damages. Replace if necessary.

Check for cracks between valve seats, if so, replace cylinder head.

Check mating surface between cylinder and cylinder head for contamination. If so, clean both surfaces.

Clean oil support through the cylinder head from contamination.

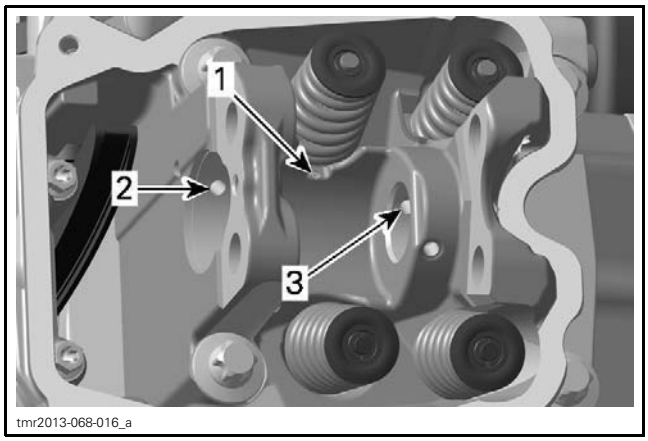

1. *Oil port to lubricate camshaft lobes intake/exhaust*
2. *Oil supply to camshaft bearing journal (timing chain side)*
3. *Oil supply to camshaft bearing journal (spark plug side)*

Cylinder Head Camshaft Bearing Inspection

Measure camshaft bearing in cylinder head.

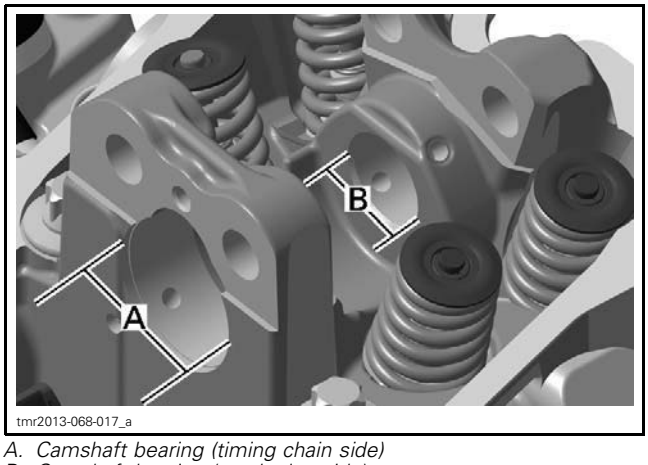

A. *Camshaft bearing (timing chain side)*
B. *Camshaft bearing (spark plug side)*

CAMSHAFT BEARING (TIMING CHAIN SIDE)	
NEW	35.000 mm to 35.025 mm (1.378 in to 1.3789 in)
SERVICE LIMIT	35.040 mm (1.3795 in)
CAMSHAFT BEARING (SPARK PLUG SIDE)	
NEW	22.000 mm to 22.021 mm (.8661 in to .867 in)
SERVICE LIMIT	22.040 mm (.8677 in)

Cylinder Head Installation

The installation is the reverse of the removal procedure. However, pay attention to the following.

Ensure dowel pins are in place.

NOTICE **Timing chain guide (fixed) has to be fixed between cylinder and cylinder head.**

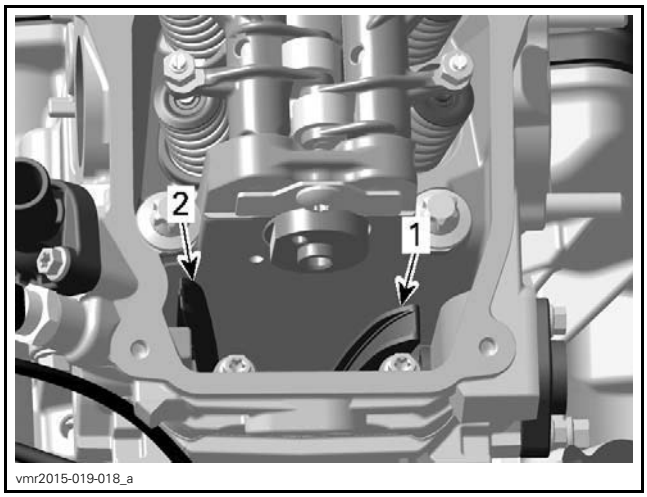

1. *Timing chain guide (tensioner side) mounted in crankcase*
2. *Timing chain guide (fixed) between cylinder and cylinder head*

Install a NEW cylinder head gasket.

Install cylinder head screws.

NOTICE **Check for proper lengths of the cylinder head screws.**

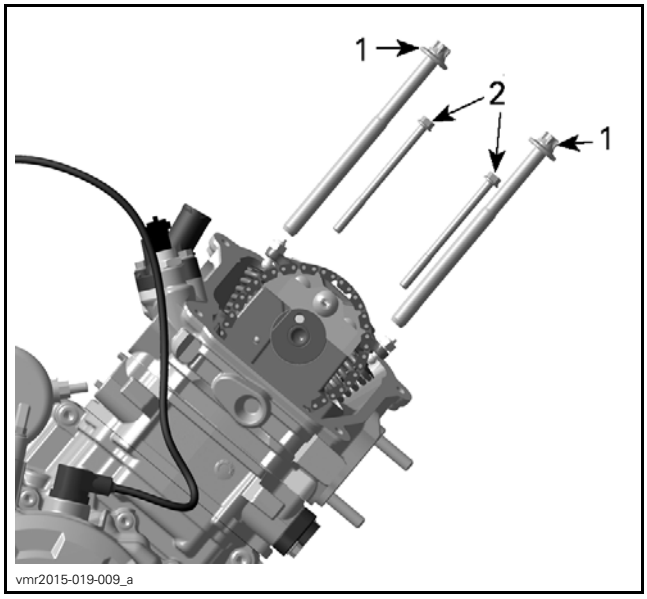

1. *Location no. 1*
2. *Location no. 2*

CYLINDER HEAD SCREW IDENTIFICATION	
Location no. 1	M10 x 140
Location no. 2	M6 x 85

Tighten M10 cylinder head screws FIRST as per following specifications.

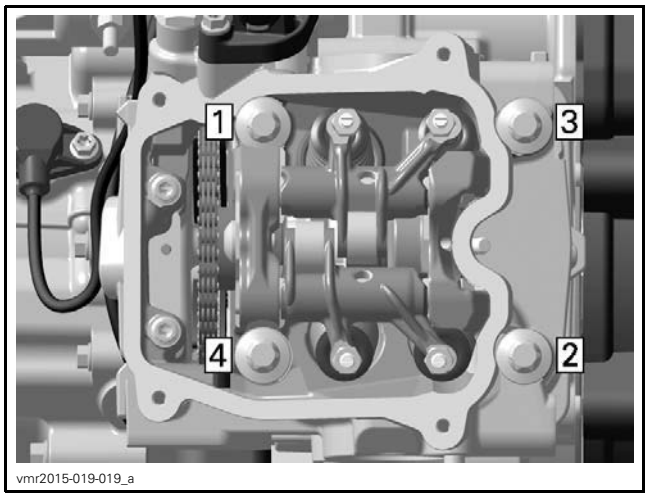

TIGHTENING SEQUENCE - M10 CYLINDER HEAD SCREWS

M10 CYLINDER HEAD SCREWS		
Tightening torque	step 1	20 N•m ± 1 N•m (15 lbf•ft ± 1 lbf•ft)
	step 2	180° ± 5°

Tighten M6 cylinder head screws as per following specification.

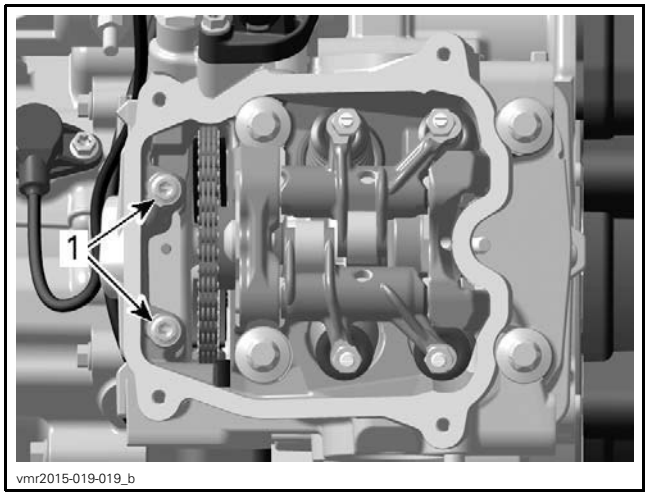

1. M6 Screws

M6 CYLINDER HEAD SCREWS	
Tightening torque	10 N•m ± 1 N•m (89 lbf•**in** ± 9 lbf•**in**)

Check timing chain guide (tensioner side) for movement.

Refer to applicable subsection for installation details of remaining removed parts.

VALVE SPRINGS

Valve Spring Removal

Refer to following procedures in this subsection to remove:

– *CAMSHAFT*
– *CYLINDER HEAD*.

Compress valve spring.

REQUIRED TOOL	
VALVE SPRING COMPRESSOR (P/N 529 035 724)	
VALVE SPRING COMPRESSOR CUP (P/N 529 036 270)	

⚠ WARNING

Always wear safety glasses when disassembling valve springs. Be careful when unlocking valves. Components could fly away because of the strong spring preload.

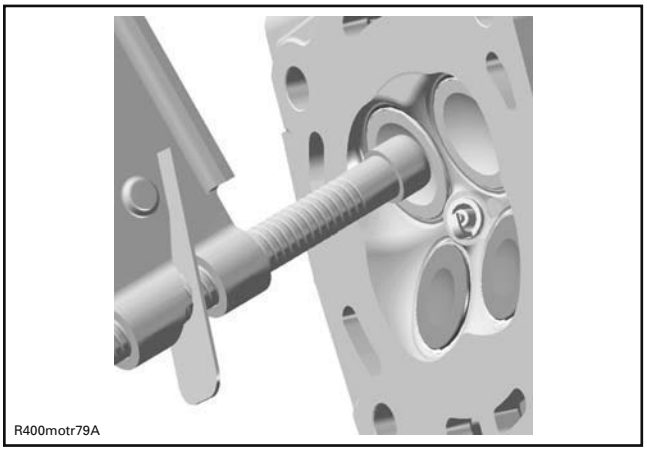

LOCATE VALVE SPRING COMPRESSOR IN CENTER OF THE VALVE

Remove valve cotters.

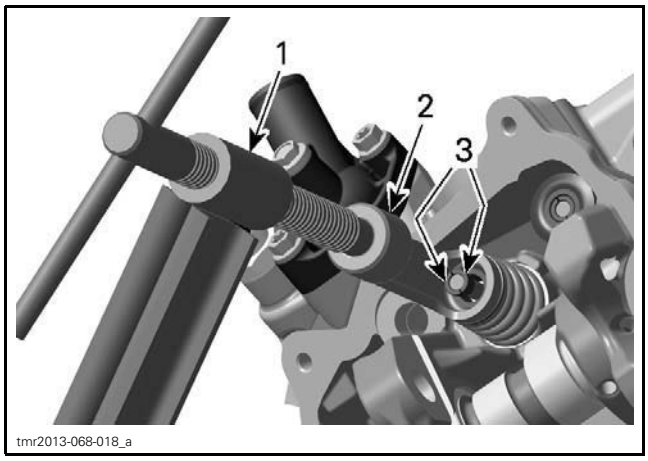

1. Valve spring compressor
2. Valve spring compressor cup
3. Valve cotter

Remove tools and withdraw valve spring retainer and valve spring.

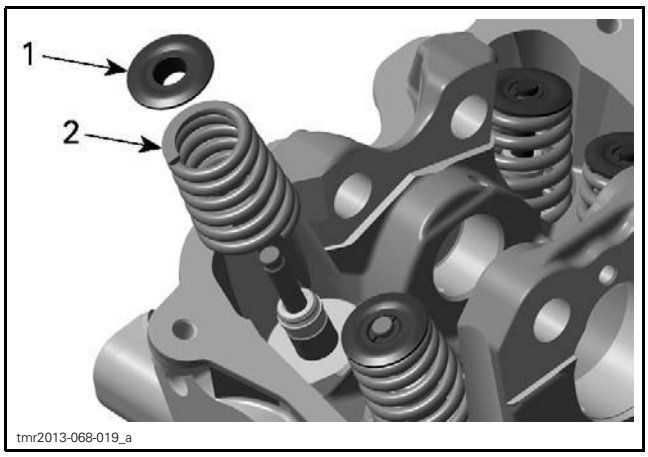

1. Valve spring retainer
2. Valve spring

Valve Spring Inspection

Check valve spring for visible damage. If so, replace valve spring.

Check valve spring for free length and straightness.

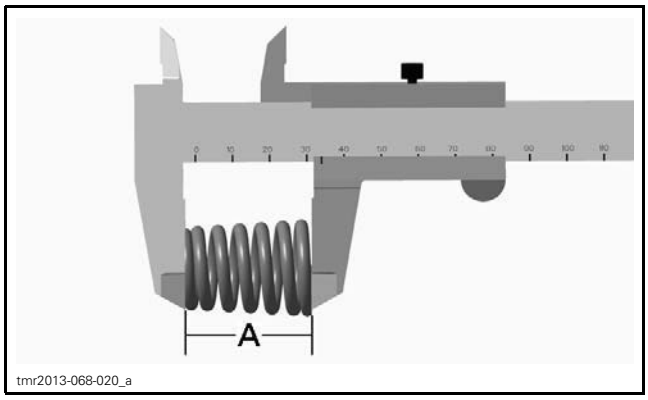

A. Valve spring length

VALVE SPRING FREE LENGTH	
NEW	40.41 mm (1.591 in)
SERVICE LIMIT	39.00 mm (1.535 in)

Replace valve springs if not within specifications.

Valve Spring Installation

The installation is the reverse of the removal procedure. However, pay attention to the following.

Colored area of the valve spring must be placed on bottom side.

To ease installation of cotters, apply oil or grease on them so that they remain in place while releasing the spring.

NOTE: Valve cotter must be properly engaged in valve stem grooves.

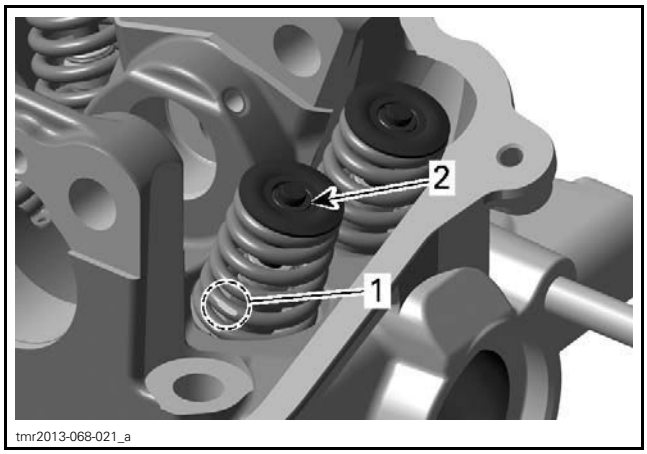

1. Colored area position of the valve spring
2. Valve cotter

After spring is installed, ensure it is properly locked by tapping on valve stem end with a soft hammer so that valve opens and closes a few times.

NOTICE **An improperly locked valve spring will cause engine damage.**

VALVES

Valve Removal

Remove valve spring, see *VALVE SPRING* in this subsection.

Push valve stem, then pull valves (intake and exhaust) out of valve guide.

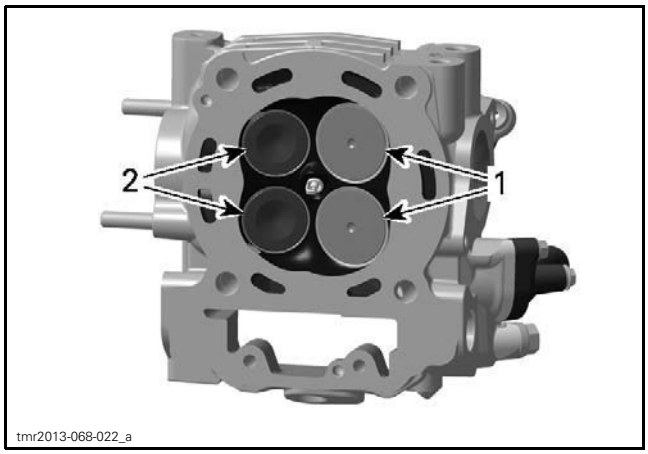

1. Intake valves 36.5 mm (1.437 in)
2. Exhaust valves 31 mm (1.22 in)

Remove valve stem seal and discard it.

REQUIRED TOOL	
SNAP-ON PLIERS (P/N YA 8230)	

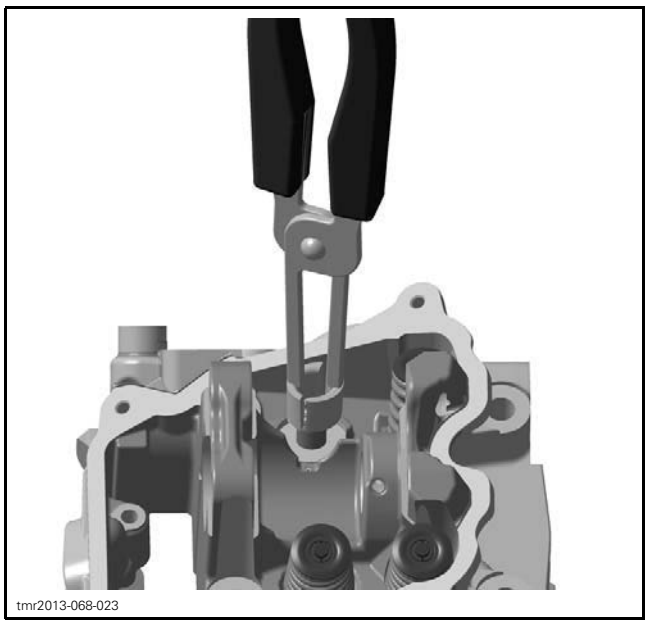

Valve Inspection

Whenever valves are removed always inspect valve guides. Refer to *VALVE GUIDES* in this subsection.

Valve Stem Seal

Always install **NEW** seals whenever valves are removed.

Valve

Inspect valve surface, check for abnormal stem wear and bending. If out of specification, replace by a new one.

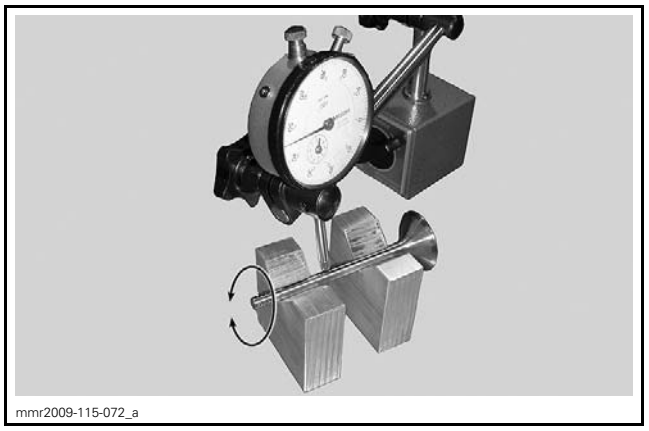

VALVE OUT OF ROUND (INTAKE AND EXHAUST VALVES)	
NEW	0.005 mm (.0002 in)
SERVICE LIMIT	0.060 mm (.0024 in)

Valve Stem

Measure valve stem in three places using a micrometer.

Replace valve if valve stem is out of specification or has other damages such as wear or friction surface.

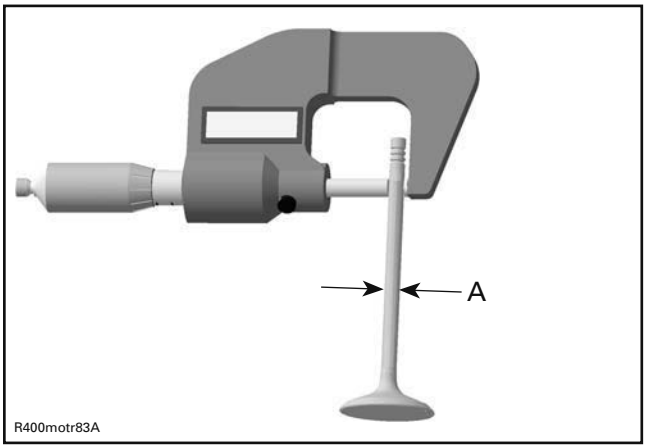

A. Valve stem diameter

VALVE STEM DIAMETER	
EXHAUST VALVE	
NEW	5.461 mm to 5.476 mm (.215 in to .2156 in)
SERVICE LIMIT	5.440 mm (.2142 in)
INTAKE VALVE	
NEW	5.472 mm to 5.486 mm (.2154 in to .216 in)
SERVICE LIMIT	5.450 mm (.2146 in)

Valve Face and Seat

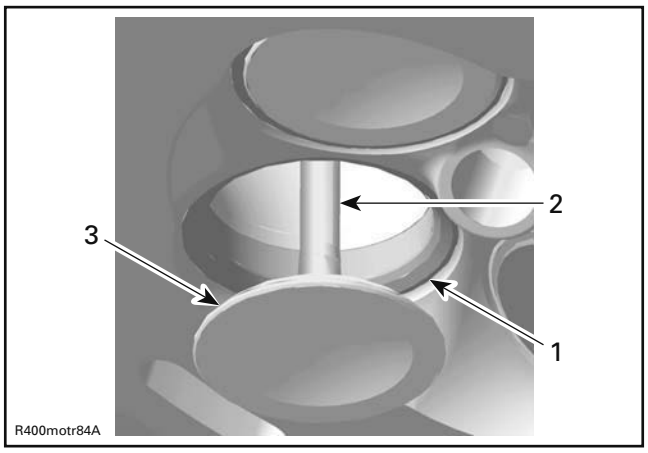

1. Valve seat
2. Exhaust valve contaminated area
3. Valve face (contact surface to valve seat)

Check valve face and seat for burning or pittings and replace valve or cylinder head if there are signs of damage.

Ensure to seat valves properly. Apply some lapping compound to valve face and work valve on its seat with a lapping tool (see *VALVE GUIDES* in this subsection).

Measure valve face contact width.

NOTE: The location of contact area should be in center of valve seat.

Measure valve seat width using a caliper.

VALVE SEAT CONTACT WIDTH	
EXHAUST VALVE	
NEW	1.25 mm to 1.55 mm (.049 in to .061 in)
SERVICE LIMIT	2.00 mm (.079 in)
INTAKE VALVE	
NEW	1.05 mm to 1.35 mm (.041 in to .053 in)
SERVICE LIMIT	1.80 mm (.071 in)

If valve seat contact width is too wide or has dark spots, replace the cylinder head.

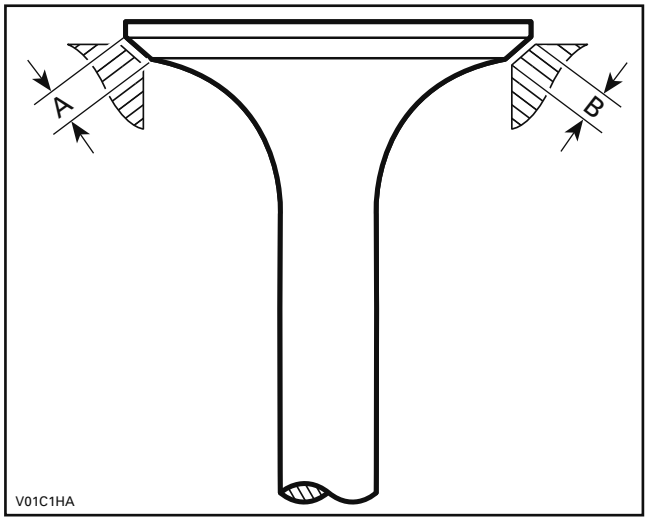

A. Valve face contact width
B. Valve seat contact width

Valve Installation

The installation is the reverse of the removal procedure. However, pay attention to the following.

Install a NEW valve stem seal. Make sure thrust washer is installed before installing seal.

Apply engine oil on valve stem and install it.

NOTICE **Be careful when valve stem is passed through sealing lips of valve stem seal.**

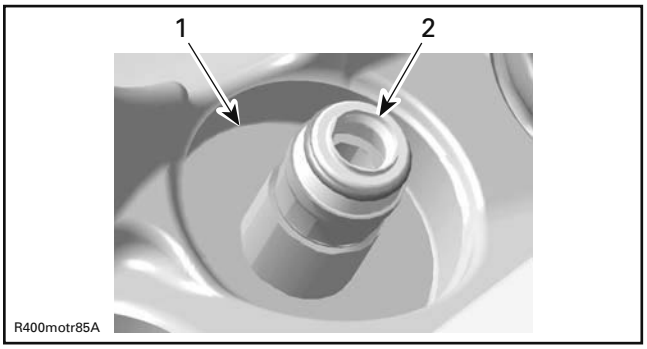

1. Thrust washer
2. Sealing lips of valve stem seal

For proper valve spring installation refer to *VALVE SPRINGS* in this subsection.

NOTICE **An improperly locked valve spring will cause engine damage.**

VALVE GUIDES

Valve Guide Inspection

Always replace valve stem seals whenever valve guides are removed.

Measure valve guide in three places using a small bore gauge.

NOTE: Clean valve guide to remove carbon deposits before measuring.

Replace valve guide if it is out of specification or has other damages such as wear or friction surface.

VALVE GUIDE DIAMETER (INTAKE AND EXHAUST VALVES)	
NEW	5.506 mm to 5.518 mm (.2168 in to .2172 in)
SERVICE LIMIT	5.568 mm (.2192 in)

Valve Guide Removal

Refer to following procedures in this subsection to remove:

- Cylinder head
- Valve springs
- Valves
- Valve stem seals
- Thrust washers.

NOTE: Clean valve guide area from contamination before removal.

Drive the valve guide out of cylinder head.

REQUIRED TOOL	
Hammer	
VALVE GUIDE REMOVER (6 MM) (P/N 529 036 074)	

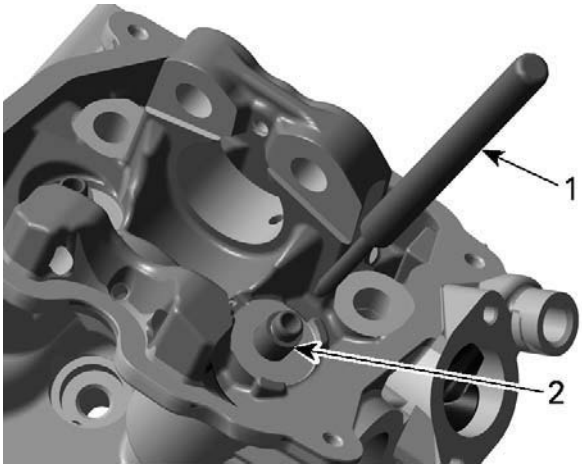

tmr2013-068-024_a

1. *Valve guide remover*
2. *Valve guide*

Valve Guide Installation

The installation is the reverse of the removal procedure. However, pay attention to the following.

Clean the valve guide bore before reinstalling the valve guide into cylinder head.

NOTE: Apply LOCTITE 767 (ANTISEIZE LUBRICANT) (P/N 293 800 070) on valve guide prior to install it into the cylinder head.

Install valve guide.

REQUIRED TOOL	
VALVE GUIDE INSTALLER (P/N 529 036 269)	

NOTICE **Valve guide installer is used for intake and exhaust valve guides. Choose proper side for installation.**

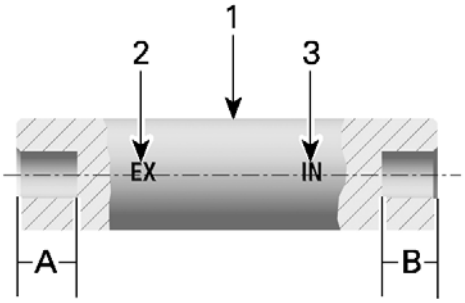

tmr2013-068-026_a

1. *Valve guide installer*
2. *Mark "EX" - exhaust valve guide installer*
3. *Mark "IN" - intake valve guide installer*

A. *14.5 mm (.571 in)*
B. *13.3 mm (.524 in)*

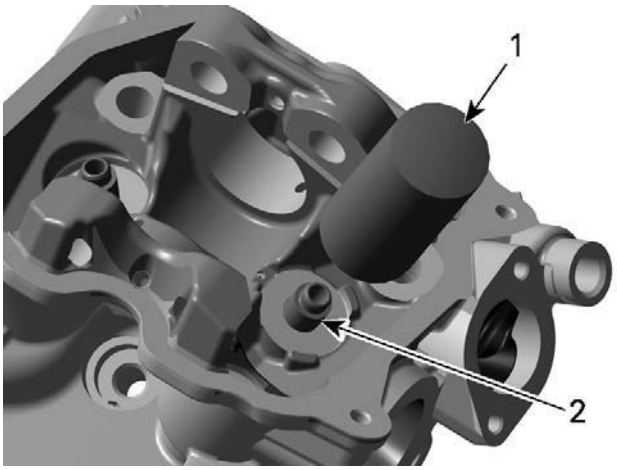

tmr2013-068-025_a

1. *Valve guide installer*
2. *Valve guide*

NOTICE **Push valve guide in the cold cylinder head as per following illustration.**

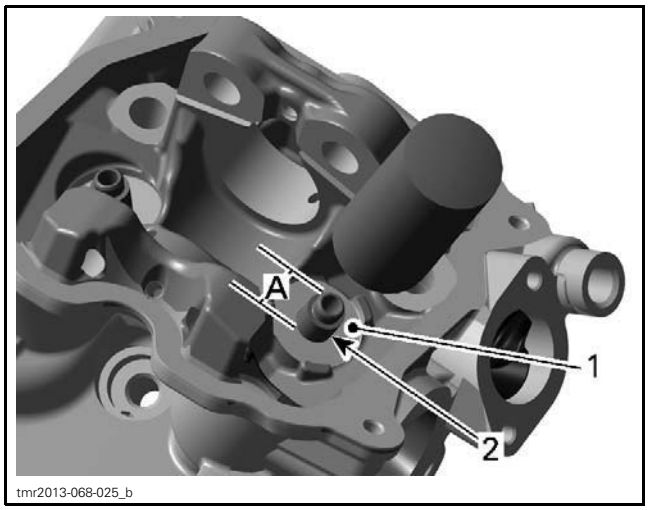

1. Thrust surface of cylinder head
2. Valve guide
A. Measurement from thrust surface to valve guide top

VALVE GUIDE (MEASUREMENT "A")	
INTAKE	13.1 mm to 13.5 mm (.5157 in to .5315 in)
EXHAUST	14.3 mm to 14.7 mm (.563 in to .579 in)

Apply some lapping compound to valve face and work valve on its seat with a lapping tool.

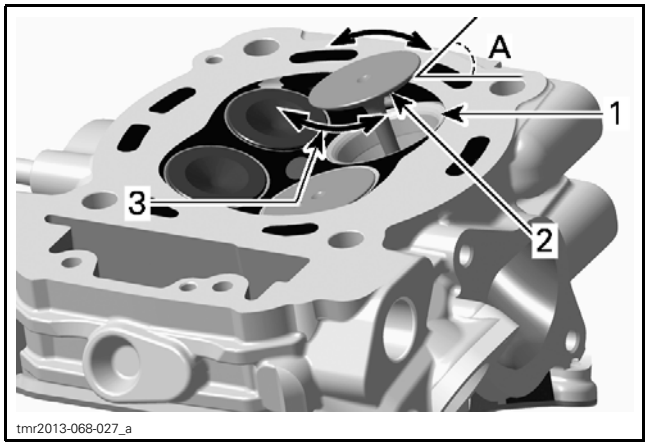

1. Valve seat
2. Valve face (contact surface to valve seat)
3. Turn valve while pushing against cylinder head
A. Valve seat angle 45°

NOTE: Ensure to seat valves properly. Apply marking paste to ease checking contact pattern.

Repeat procedure until valve seat/valve face fits together.

CYLINDER

Cylinder Removal

Refer to *TIMING CHAIN* subsection and remove the following parts:

– Timing chain tensioner
– Camshaft timing gear.

Remove the cylinder head (see *CYLINDER HEAD* in this subsection).

Pull cylinder.

Discard cylinder base gaskets.

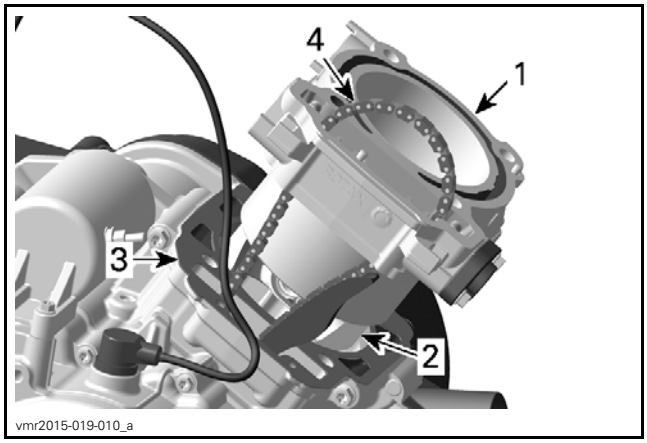

1. Cylinder
2. Piston assembly
3. Cylinder base gasket
4. Camshaft timing chain

Cylinder Inspection

Check cylinder for cracks, scoring and wear ridges on the top and bottom of the cylinder. If so, replace cylinder.

Cylinder Taper

Measure cylinder bore at 3 recommended positions.

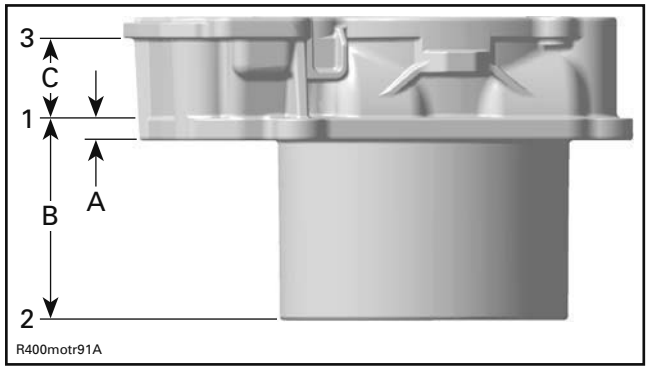

A. First measurement (from cylinder bottom)
B. Second measurement
C. Third measurement

CYLINDER TAPER MEASUREMENTS	
MEASUREMENT	SPECIFICATION
A	5 mm (.197 in)
B	58 mm (2.283 in)
C	52 mm (2.047 in)

CYLINDER TAPER SPECIFICATION	
NEW (MAXIMUM)	0.038 mm (.0015 in)
SERVICE LIMIT	0.090 mm (.0035 in)

Distance between measurements should not exceed the service limit mentioned above. Otherwise, replace cylinder and piston rings.

Cylinder Out of Round

Measure cylinder diameter in piston axis direction from top of cylinder. Take another measurement 90° from first one and compare.

NOTE: Take the same measuring points like described in *CYLINDER TAPER* above.

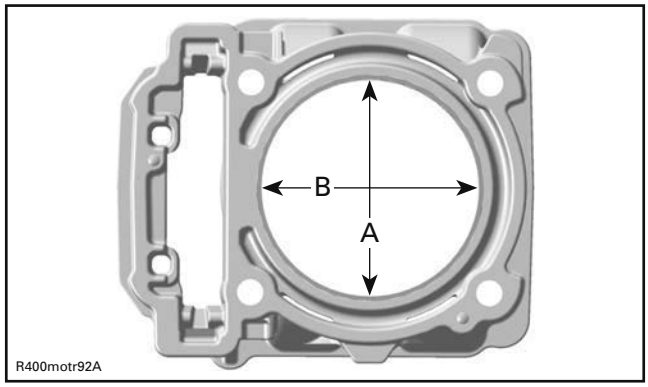

A. Perpendicular to crankshaft axis
B. Parallel to crankshaft axis

CYLINDER OUT OF ROUND	
NEW (MAXIMUM)	0.015 mm (.0006 in)
SERVICE LIMIT	0.020 mm (.0008 in)

Cylinder Installation

the installation is the reverse of the removal procedure. However, pay attention to the following.

NOTICE **Always replace cylinder base gasket before installing the cylinder.**

NOTE: Make sure piston rings are properly spaced, refer to *PISTON RINGS* in this subsection.

Apply engine oil:

– In the bottom area of the cylinder bore
– On the piston rings
– On the piston ring compressor.

Compress piston rings.

Apply engine oil on the band of the tool.

REQUIRED TOOL
Piston ring compressor with band width of 15 mm to 20 mm (.59 in to .79 in)

NOTE: The cylinder can not be pushed fully over the piston unless the piston is located at TDC.

Put timing chain through the chain pit then put the cylinder in place.

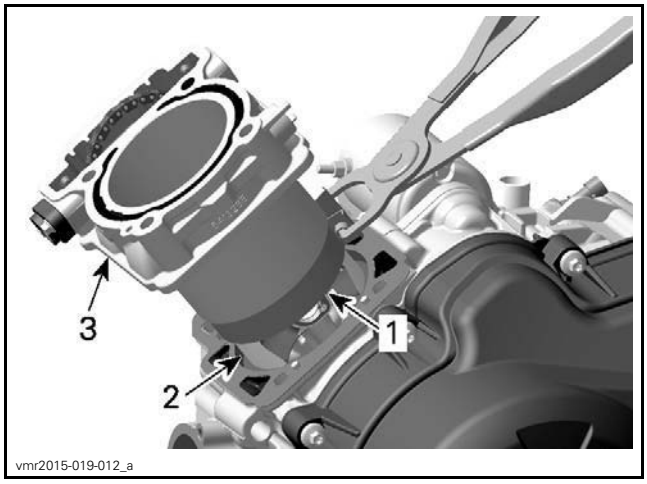

1. Piston ring compressor
2. Piston
3. Cylinder

NOTICE **Chain guide has to be fixed between cylinder and cylinder head.**

Install cylinder head and the other parts in accordance with the proper installation procedures.

PISTON

Piston Removal

Refer to following procedures in this subsection to remove:

– Cylinder head
– Cylinder.

Place a rag under piston and in the area of timing chain compartment.

⚠ WARNING

Piston circlips are spring loaded.

Remove one piston circlip and discard it.

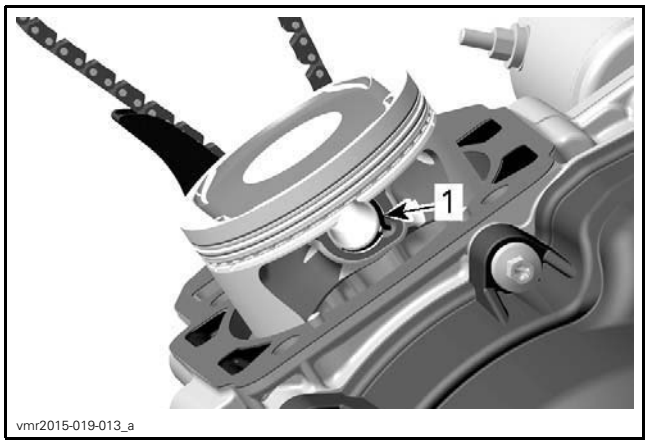

1. Piston circlip

NOTE: The removal of both piston circlips is not necessary to remove piston pin.

Push piston pin out of piston.

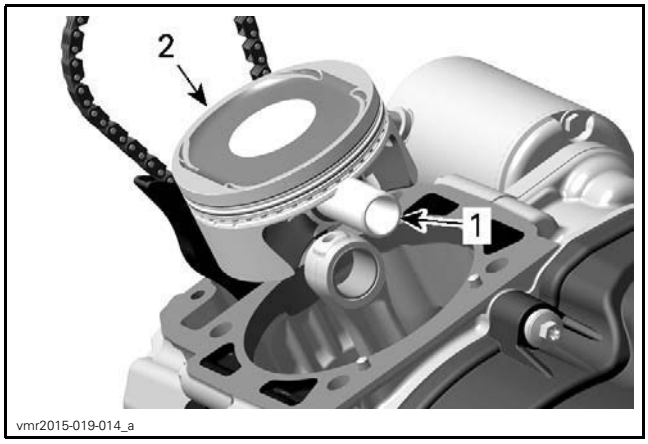

1. Piston pin
2. Piston

Detach piston from connecting rod.

Piston Inspection

Inspect piston for scoring, cracking or other damages. Replace piston and piston rings if necessary.

Using a micrometer, measure piston at 8 mm (.315 in) perpendicularly (90°) to piston pin.

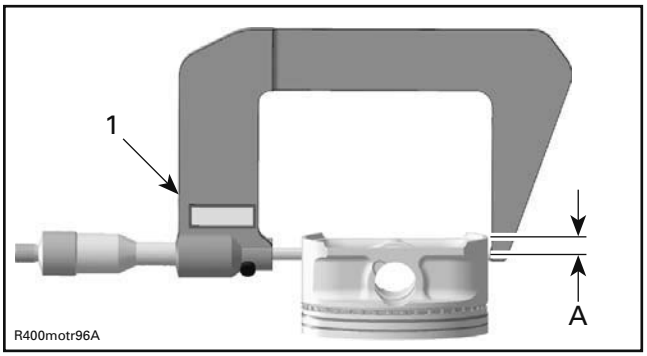

1. Measuring perpendicularly (90°) to piston pin
A. 8 mm (.315 in)

The measured dimension should be as described in the following tables. If not, replace piston.

PISTON MEASUREMENT	
NEW	93.950 mm to 93.966 mm (3.6988 in to 3.6994 in)
SERVICE LIMIT	93.940 mm (3.6984 in)

Piston/Cylinder Clearance

Adjust and lock a micrometer to the piston dimension.

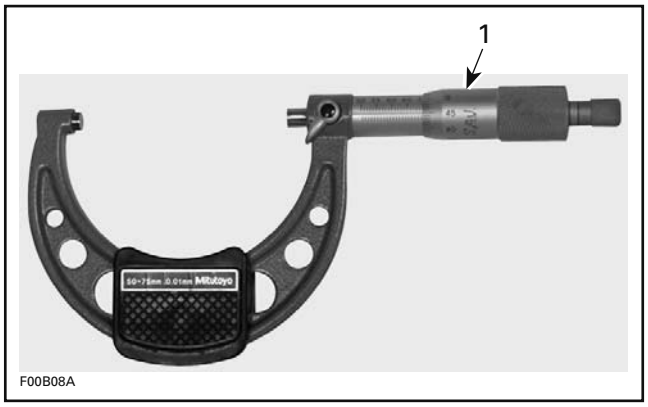

1. Micrometer set to the piston dimension

With the micrometer set to the dimension, adjust a cylinder bore gauge to the micrometer dimension and set the indicator to 0 (zero).

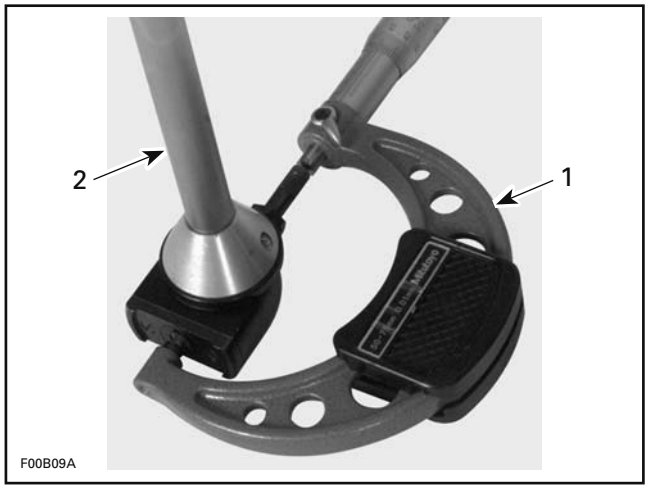

1. Use the micrometer to set the cylinder bore gauge
2. Dial bore gauge

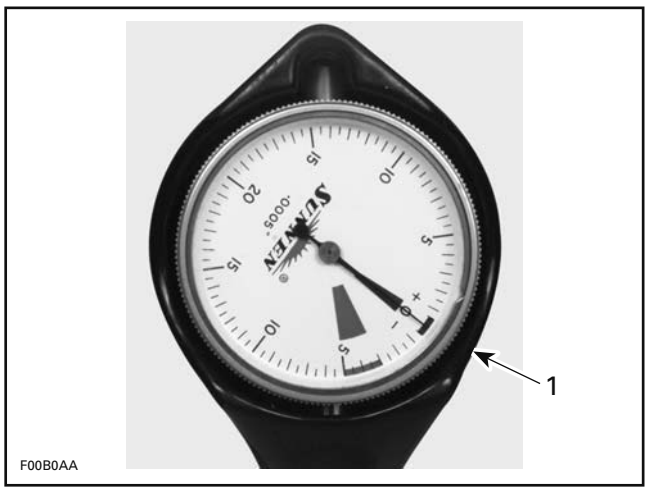

TYPICAL
1. Indicator set to 0 (zero)

Position the dial bore gauge 20 mm (.787 in) above cylinder base, measuring perpendicularly (90°) to piston pin axis.

Read the measurement on the cylinder bore gauge. The result is the exact piston/cylinder wall clearance.

PISTON/CYLINDER CLEARANCE	
NEW	0.027 mm to 0.057 mm (.0011 in to .0022 in)
SERVICE LIMIT	0.100 mm (.0039 in)

NOTE: Make sure used piston is not worn.

If clearance exceeds specified tolerance, replace piston by a new one and measure piston/cylinder clearance again.

NOTE: Make sure the cylinder bore gauge indicator is set exactly at the same position as with the micrometer, otherwise the reading will be false.

Connecting Rod/Piston Pin Clearance

Using synthetic abrasive woven, clean piston pin from deposits.

Inspect piston pin for scoring, cracking or other damages.

Measure piston pin. See the following illustration for the proper measurement positions.

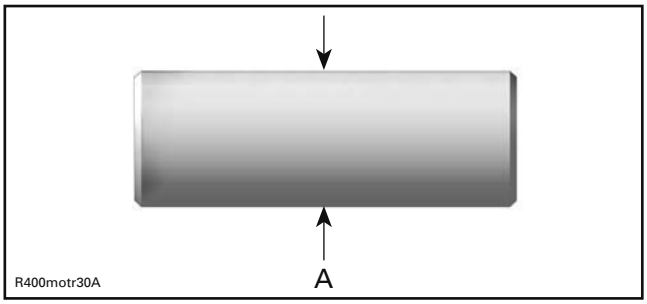

A. Piston pin diameter

PISTON PIN DIAMETER	
NEW	19.996 mm to 20.000 mm (.7872 in to .7874 in)
SERVICE LIMIT	19.980 mm (.7866 in)

Replace piston pin if diameter is out of specifications.

Measure inside diameter of connecting rod small end bushing.

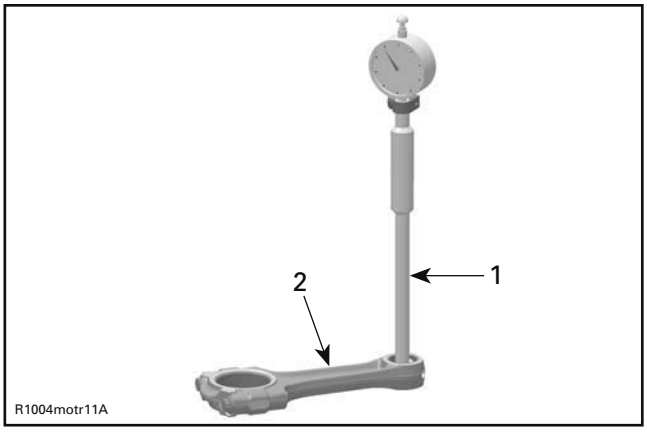

1. Bore gauge
2. Connecting rod

CONNECTING ROD SMALL END DIAMETER	
NEW	20.010 mm to 20.020 mm (.7878 in to .7882 in)
SERVICE LIMIT	20.060 mm (.7898 in)

Replace connecting rod if diameter of connecting rod small end is out of specifications. Refer to *BOTTOM END* subsection for removal procedure.

Compare measurements to obtain the connecting rod/piston pin clearance.

CONNECTING ROD/ PISTON PIN CLEARANCE	
SERVICE LIMIT	0.080 mm (.0031 in)

Piston Installation

The installation is the reverse of the removal procedure. However, pay attention to the following.

Apply engine oil on the piston pin.

Insert piston pin into piston and connecting rod.

Install piston with the punched arrow on piston dome must point towards exhaust side of the engine.

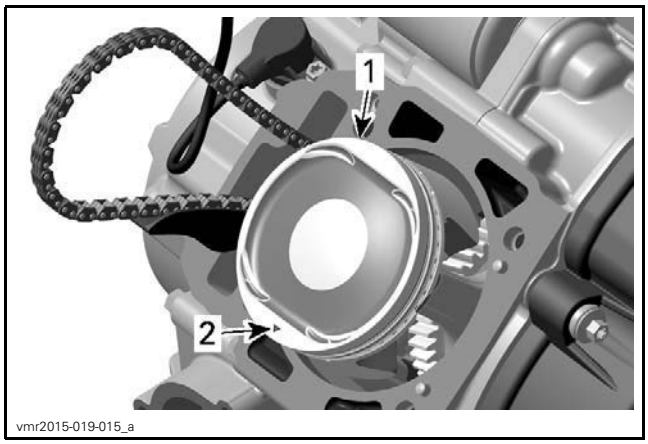

1. Piston
2. Mark on piston must show to exhaust side

Install NEW piston circlip as per following procedure:

REQUIRED TOOL	
PISTON CIRCLIP INSTALLER (P/N 529 036 083)	

NOTICE **Always replace disassembled piston circlip(s) by NEW ones. Place a rag on cylinder base to avoid dropping the circlip inside the engine.**

1. Place circlip in sleeve and push piston circlip installer handle until circlip reaches the mid position in the sleeve.

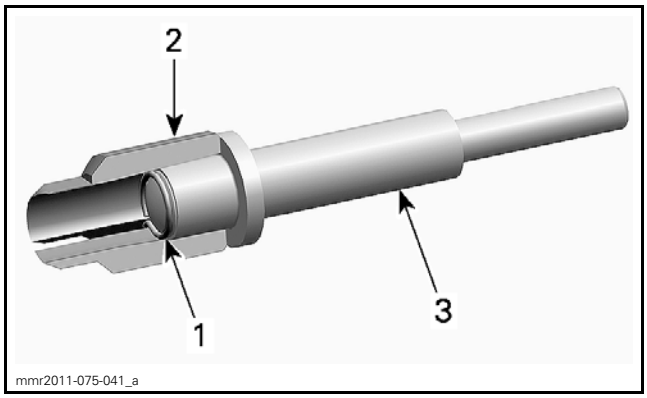

TYPICAL
1. Circlip
2. Sleeve
3. Installer handle

2. Push piston circlip installer handle until circlip reaches end position in the sleeve.

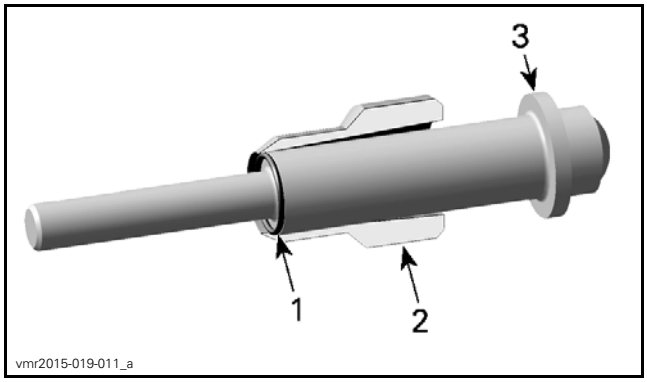

TYPICAL
1. Circlip
2. Sleeve
3. Installer handle

3. Align sleeve with piston pin axis and push installer handle until circlip engages in piston.

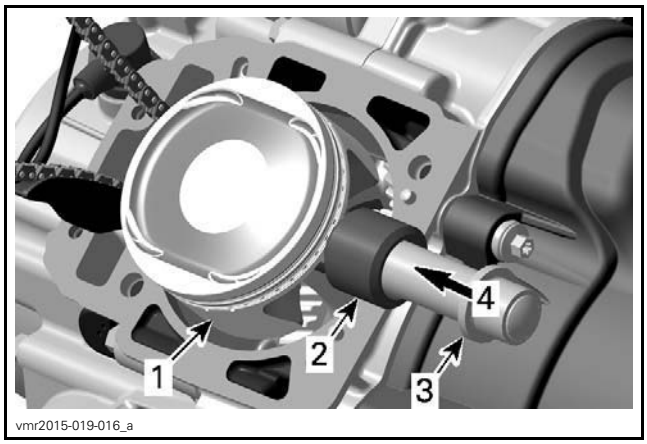

1. Hold piston while pushing circlip in place
2. Sleeve
3. Installer handle
4. Direction to push circlip

NOTE: Take care that the hook of the piston circlip is positioned properly.

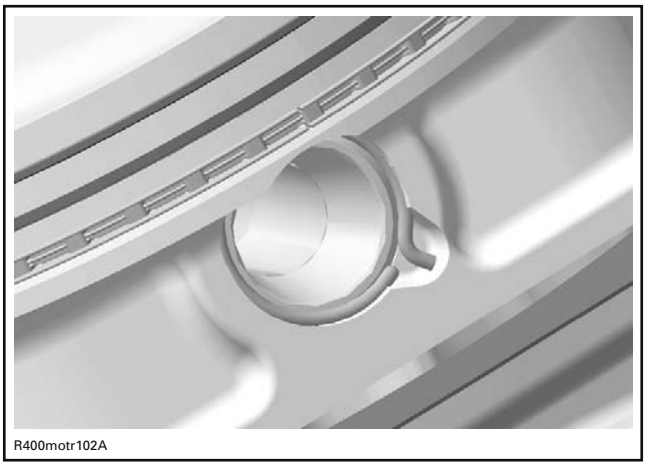

CORRECT POSITION OF THE PISTON CIRCLIP

PISTON RINGS

Ring Removal

Remove the piston (see *PISTON* in this subsection).

Ring Inspection

Ring/Piston Groove Clearance

Using a feeler gauge measure each ring/piston groove clearance. If the clearance is too large, the piston and the piston rings should be replaced.

RING/PISTON GROOVE CLEARANCE	
UPPER COMPRESSION RING	
NEW	0.03 mm to 0.07 mm (.0012 in to .0028 in)
SERVICE LIMIT	0.150 mm (.0059 in)
LOWER COMPRESSION RING	
NEW	0.02 mm to 0.06 mm (.0008 in to .0024 in)
SERVICE LIMIT	0.150 mm (.0059 in)
OIL SCRAPER RING	
NEW	0.01 mm to 0.18 mm (.0004 in to .0071 in)
SERVICE LIMIT	0.250 mm (.0098 in)

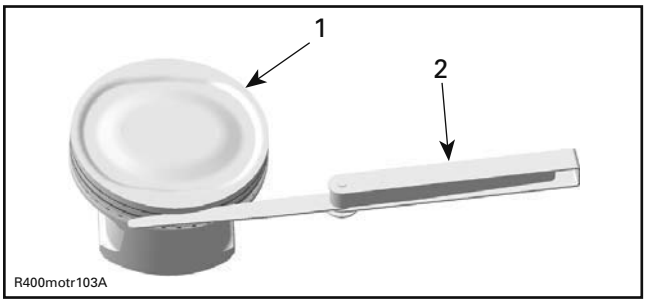

1. *Piston*
2. *Feeler gauge*

Ring End Gap

RING END GAP	
UPPER COMPRESSION RING	
NEW	0.20 mm to 0.35 mm (.008 in to .014 in)
SERVICE LIMIT	0.60 mm (.024 in)
LOWER COMPRESSION RING	
NEW	0.35 mm to 0.55 mm (.014 in to .022 in)
SERVICE LIMIT	0.85 mm (.033 in)
OIL SCRAPER RING	
NEW	0.20 mm to 0.70 mm (.008 in to .028 in)
SERVICE LIMIT	1.00 mm (.039 in)

To measure the ring end gap place the ring in the cylinder in the area of 8 mm to 16 mm (5/16 in to 5/8 in) from top of cylinder.

NOTE: In order to correctly position the ring in the cylinder, use piston as a pusher.

Using a feeler gauge, check ring end gap. Replace ring if gap exceeds above described specified tolerance.

Ring Installation

The installation is the reverse the removal procedure. However, pay attention to the following.

NOTE: Use a ring expander to prevent breakage during installation. The oil ring must be installed by hand.

NOTE: First install spring and then rings of oil scraper ring.

Install the oil scraper ring first, then the lower compression ring with the word “N and TOP “ facing up, then the upper compression ring with the word “N and TOP“ facing up.

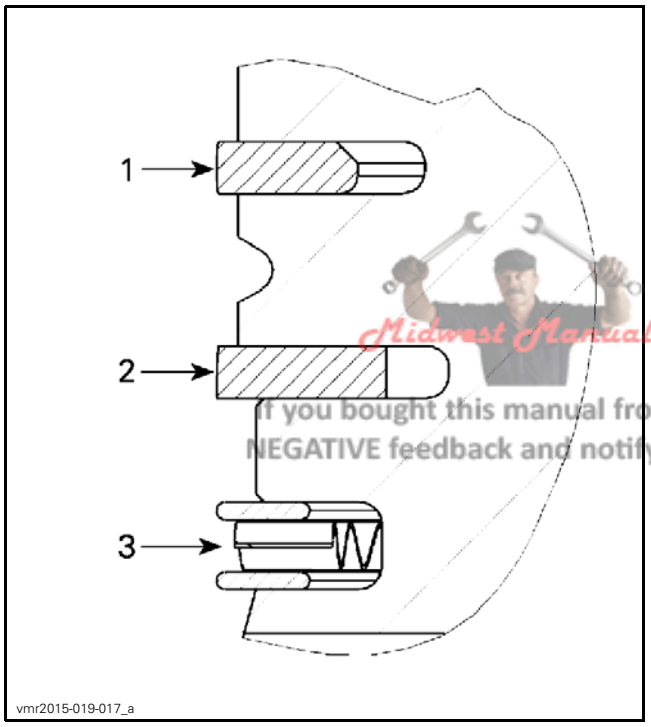

1. Upper compression ring
2. Lower compression ring
3. Oil scraper ring

Midwest Manuals
Green Manuals
Paperless Manuals
For a Better Tomorrow
www.green-manuals.com
If you bought this manual from any other seller please leave them
NEGATIVE feedback and notify me at bestshopmanuals@gmail.com

NOTICE Ensure that top and second rings are not interchanged.

Check that rings rotate smoothly after installation.

Space the piston ring end gaps 120° apart and do not align the gaps with the piston pin bore or the thrust side axis.

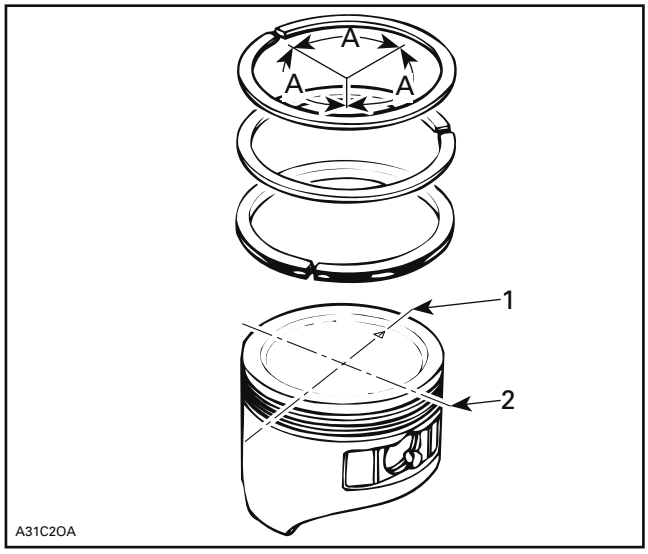

1. DO NOT align ring gap with piston thrust side axis
2. DO NOT align ring gap with piston pin bore axis

A. 120°

TOP END

SERVICE TOOLS

Description	Part Number	Page
CRANKSHAFT LOCKING BOLT	529 035 617	106
ENGINE LEAK DOWN TEST KIT	529 035 661	92
PISTON CIRCLIP INSTALLER	529 035 921	109
TDC DIAL INDICATOR	414 104 700	92
VALVE GUIDE INSTALLER	529 036 140	104
VALVE GUIDE REMOVER 5 MM	529 035 924	104
VALVE SPRING COMPRESSOR CUP	529 035 764	100
VALVE SPRING COMPRESSOR	529 035 724	100

SERVICE TOOLS – OTHER SUPPLIER

Description	Part Number	Page
SNAP-ON PLIERS	YA 8230	102

SERVICE PRODUCTS

Description	Part Number	Page
LOCTITE 767 (ANTISEIZE LUBRICANT)	293 800 070	104

CYLINDER HEAD NO. 1

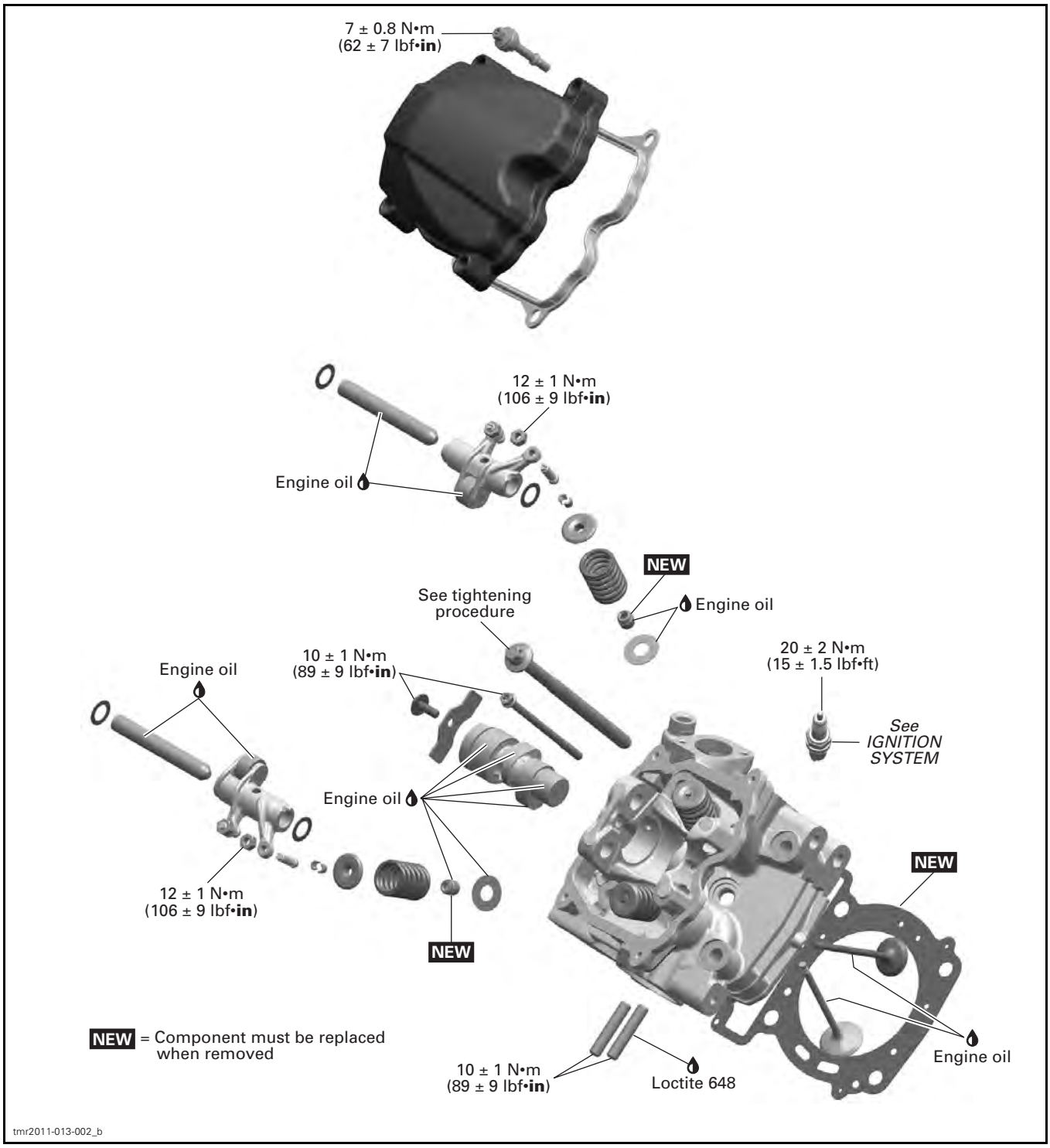

CYLINDER HEAD NO. 2

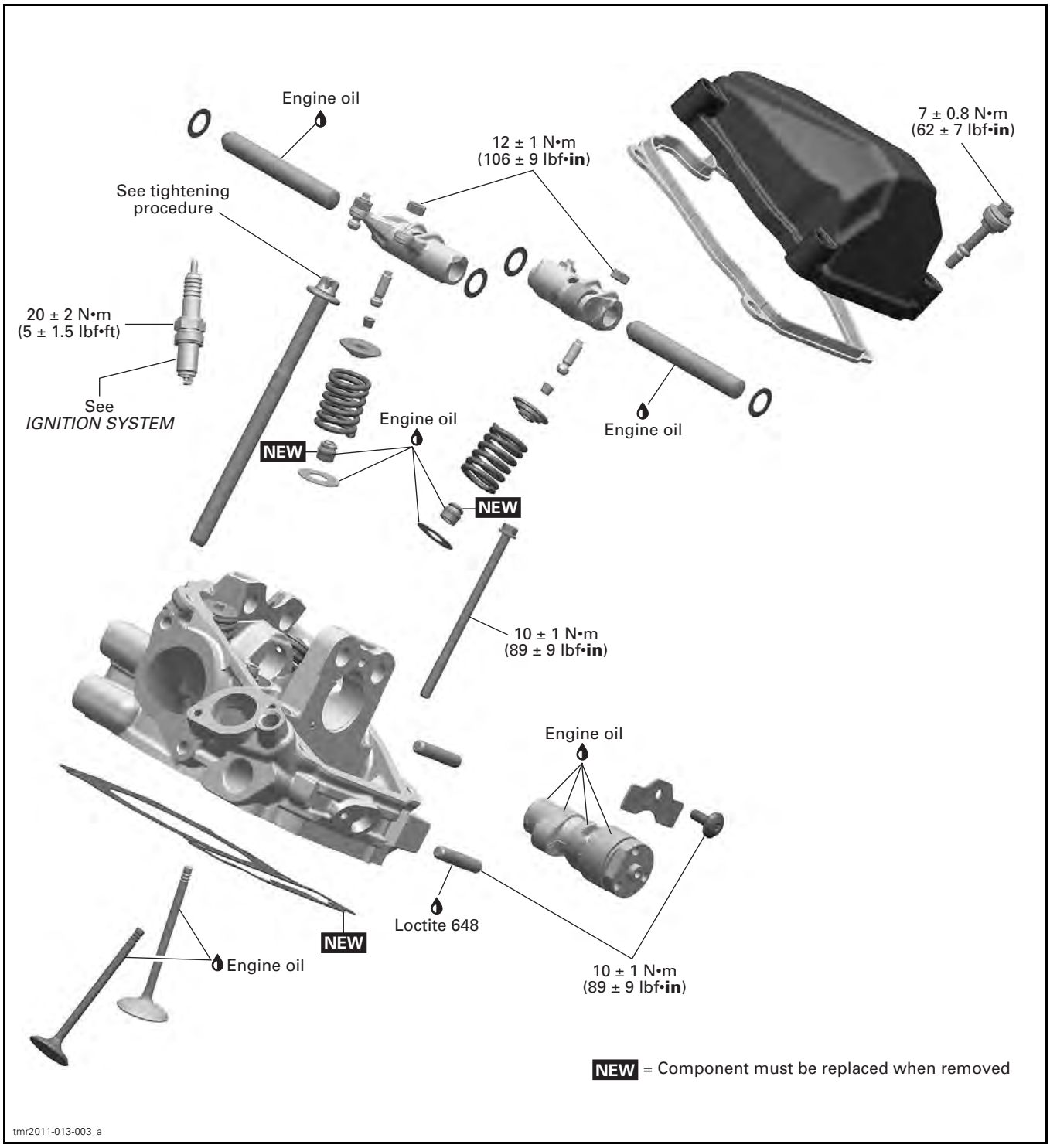

CYLINDERS AND PISTONS

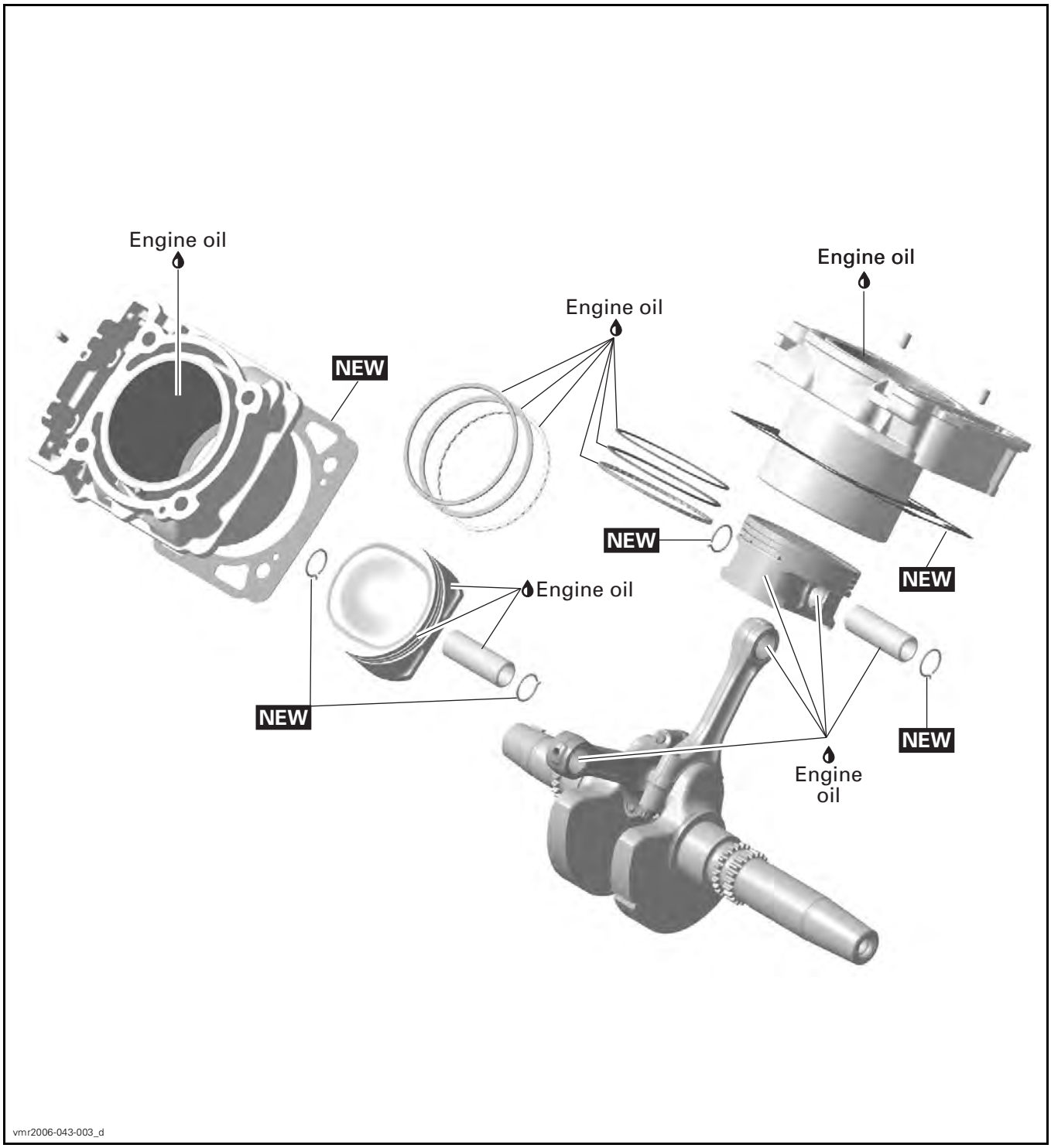

GENERAL

Special reference are made in the text for procedures which are different for cylinder no. 1 and cylinder no. 2.

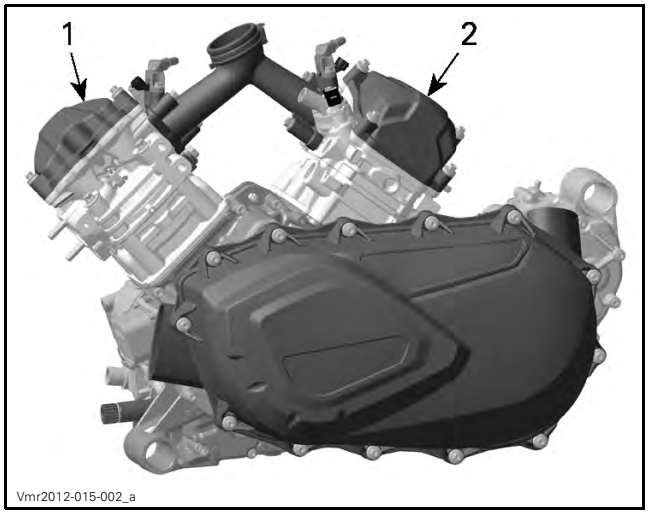

1. Cylinder 1 (front)
2. Cylinder 2 (rear)

When diagnosing an engine problem, always perform a cylinder leak test.

NOTE: Even though the following procedures do not require the engine removal, many illustrations show the engine out of the vehicle for more clarity.

IMPORTANT: Note position of parts upon disassembly. This may help to find the root cause of a problem. A component that is not replaced should be reinstalled in the same position as originally mounted.

INSPECTION

LEAK TEST

Before performing the cylinder leak test, verify the following:

– Clamp(s) tightness
– Radiator and hoses.

NOTE: For best accuracy, the leak test should be done with the engine at normal operating temperature.

⚠ WARNING

Prevent burning yourself on hot engine parts.

Preparing the Leak Test

1. Disconnect battery.

⚠ WARNING

Always respect this order for disassembly; disconnect BLACK (-) cable first.

2. Remove radiator cap.

⚠ WARNING

To prevent burning yourself only remove the radiator cap by wearing the appropriate safety equipment.

3. Unplug spark plug cable.
4. Clean spark plug area and remove spark plug from cylinder head.

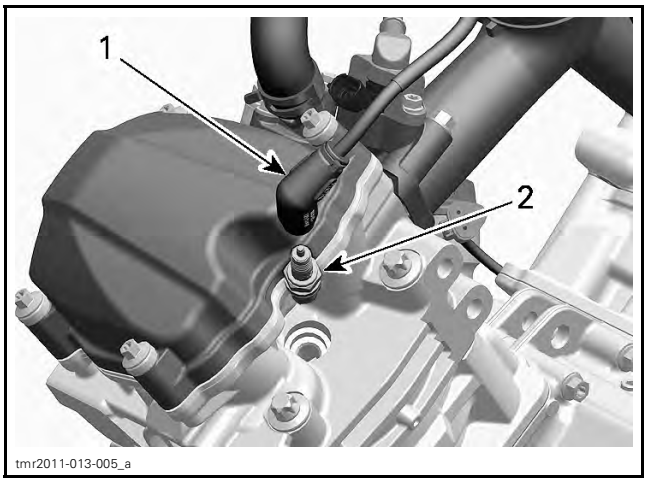

1. Spark plug cable
2. Spark plug

5. Remove *VALVE COVER*. See procedure in this subsection.
6. Rotate crankshaft until piston is at ignition TDC.
7. Turn crankshaft using one of the following two procedures.

First Procedure

Turn the drive pulley.

Second Procedure

1. Remove plug screw with O-ring from magneto cover.
2. Use a 14 mm Allen key and turn crankshaft.

NOTICE **Turn only clockwise to avoid loosening of magneto flywheel Allen screw.**

3. Set the piston to precisely ignition TDC.

REQUIRED TOOL	
TDC DIAL INDICATOR (P/N 414 104 700)	

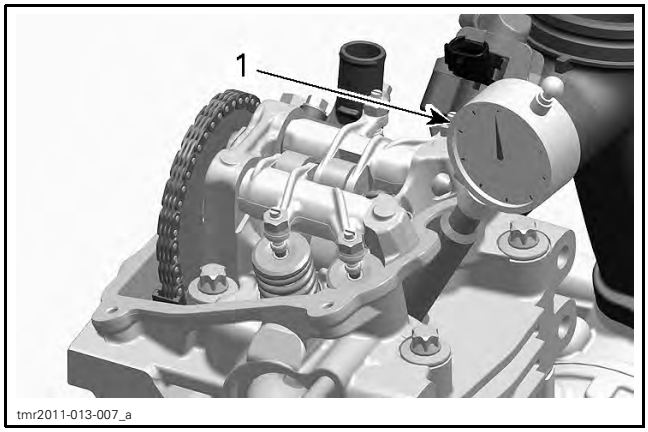

1. TDC dial indicator

NOTE: If a dial gauge is not available, use a screwdriver or another similarly suitable tool.

NOTICE **Do not scratch or damage piston/cylinder surface.**

NOTE: At ignition TDC the marks on the camshaft timing gear have to be parallel to cylinder head base as per following illustration.

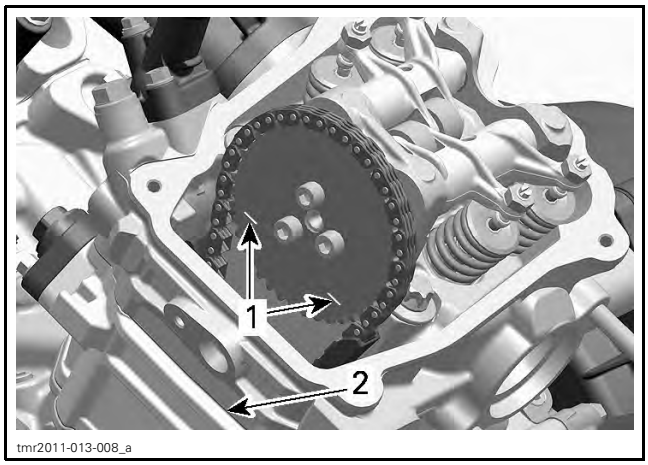

1. Marks on camshaft timing gear
2. Cylinder head base

Leak Test

1. Install gauge adapter into spark plug hole.

REQUIRED TOOL	
ENGINE LEAK DOWN TEST KIT (P/N 529 035 661)	

2. Connect to adequate air supply.
3. Set needle of measuring gauge to zero.

NOTE: All testers have specific instructions on gauge operation and required pressure.

4. Install gauge adapter into previously cleaned spark plug hole.
5. Supply combustion chamber with air pressure.

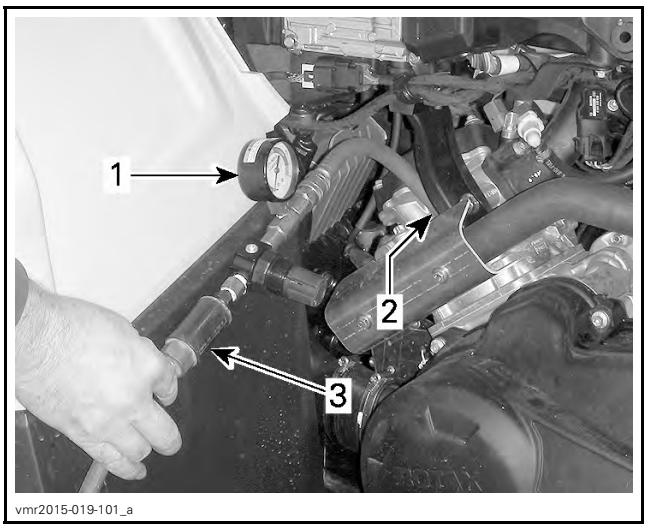

TYPICAL
1. Leak tester
2. Leak tester installed in spark plug bore
3. Air supply hose

6. Note the amount or percentage of leakage (depending on tester).

LEAKAGE PERCENTAGE	ENGINE CONDITION
0% to 15%	Excellent condition
16% to 25%	Good condition
26% to 40%	Fair condition; reduced engine performance
41% and higher	Poor condition, diagnose and repair engine

NOTE: To make sure there is no false reading due to a valves not perfectly seated, tap each valve adjustment screw (on the rocker arm) using a soft hammer.

Diagnosis

Listen for air leaks.

- Air escaping in intake port/throttle body means leaking intake valve(s).
- Air escaping in exhaust port means leaking exhaust valve(s).
- Air bubbles in the coolant (radiator) means leaking cylinder head gasket.
- Air/coolant escaping from cylinder/head means damaged gasket(s) and/or loosened screws.

– Air escaping into crankcase area means excessively worn cylinder and/or broken piston rings.
– Air/oil escaping from crankcase means damaged gasket and/or loosened screws (refer to *BOTTOM END* subsection).

NOTE: For all checkpoints mentioned above, see appropriate engine section to diagnose and repair the engine.

Reassembly

Reverse the preparation procedure. Ensure to respect torque values and use of appropriate products/lubricants. Refer to exploded views in other subsections of this manual as required.

PROCEDURES

VALVE COVER

Valve Cover Access

Front Cylinder

Refer to *BODY* subsection and remove the following.

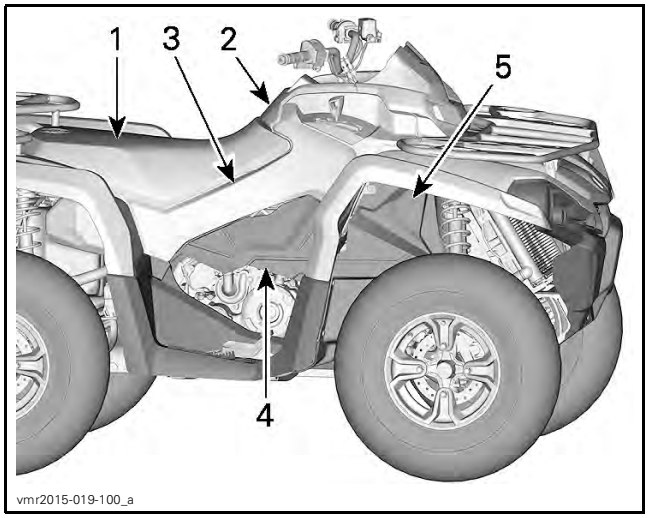

1. *Seat*
2. *Console*
3. *RH side panel*
4. *RH side panel extension*
5. *RH inner fender panel*

Rear Cylinder

Refer to *BODY* and remove:
– Seat
– Console
– RH side panel and extension(s)
– LH side panel and extension(s).

Refer to *EXHAUST SYSTEM* and remove exhaust pipe.

Removing the Valve Cover

Remove:
– Valve cover screws
– Valve cover
– Gasket.

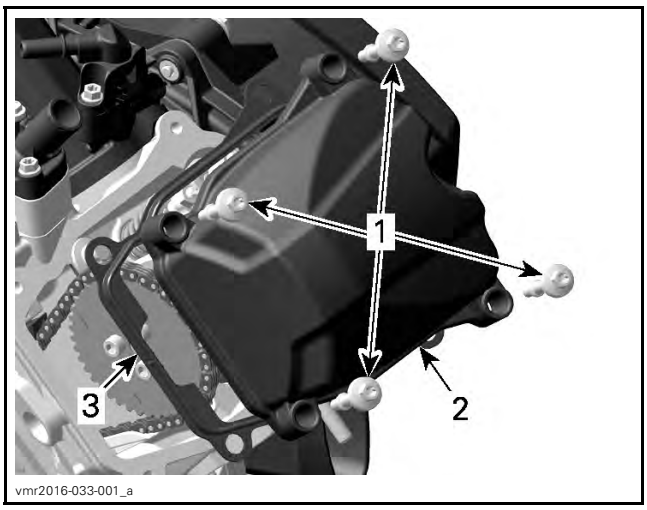

TYPICAL — FRONT CYLINDER SHOWN
1. *Valve cover screws*
2. *Valve cover*
3. *Gasket*

Inspecting the Valve Cover

Check the gasket on the valve cover if it is brittle, cracked or hard. If so, replace the gasket.

Installing the Valve Cover

For installation, reverse the removal procedure. However, pay attention to the following.

Tighten valve cover retaining screws to specified torque in a criss-cross sequence.

TIGHTENING TORQUE	
Valve cover retaining screws	7 N•m ± 0.8 N•m (62 lbf•**in** ± 7 lbf•**in**)

ROCKER ARM

Removing the Rocker Arm

1. Remove *VALVE COVER*. See procedure in this subsection.
2. Refer to *TIMING CHAIN* subsection and remove following parts:
   – Timing chain tensioner
   – Camshaft timing gear.
3. Remove pan head screw and camshaft retaining plate.

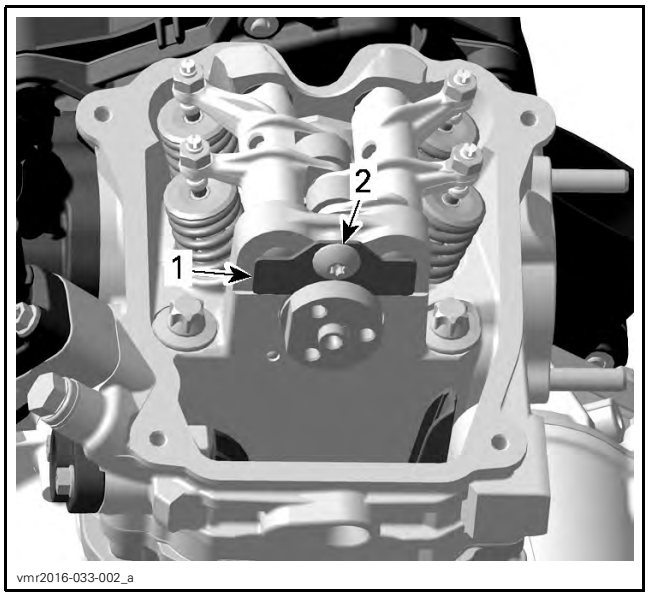

TYPICAL
1. *Camshaft retaining plate*
2. *Pan head screw*

4. Remove rocker arm shafts.

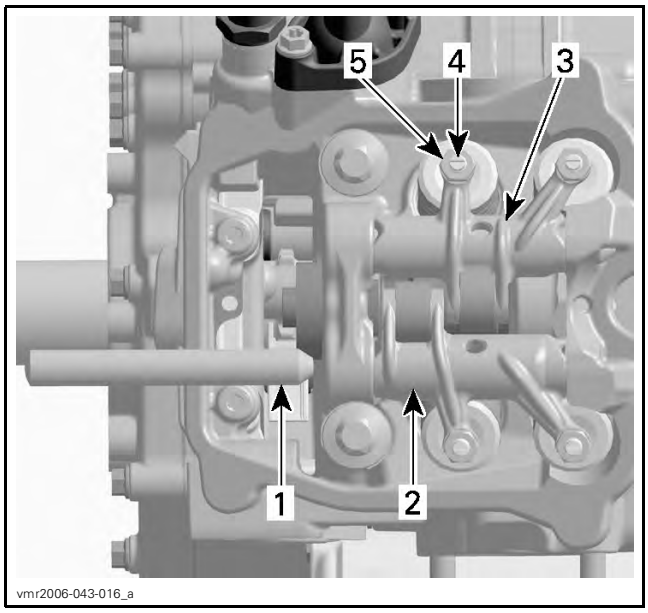

1. *Rocker arm shaft*
2. *Rocker arm (exhaust side)*
3. *Rocker arm (intake side)*
4. *Adjustment screw*
5. *Lock nut*

5. Remove rocker arm assembly (exhaust side and intake side) with adjustment screws and lock nuts.
6. Remove thrust washers.

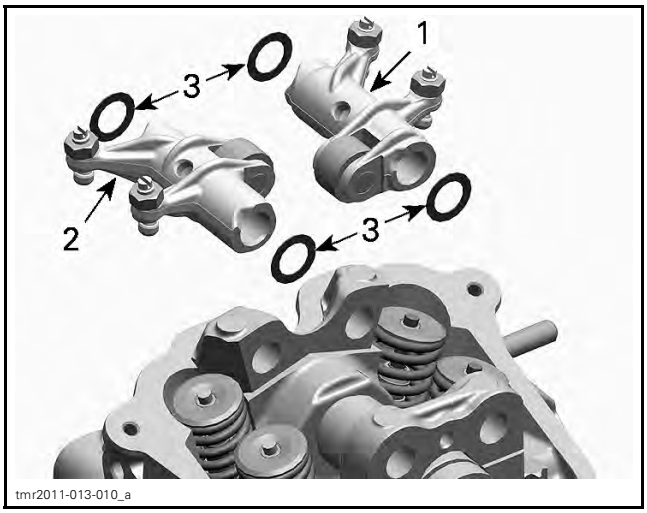

1. *Rocker arm (exhaust side)*
2. *Rocker arm (intake side)*
3. *Thrust washers*

NOTICE Pay attention not to lose thrust washers or drop them into the timing chain compartment.

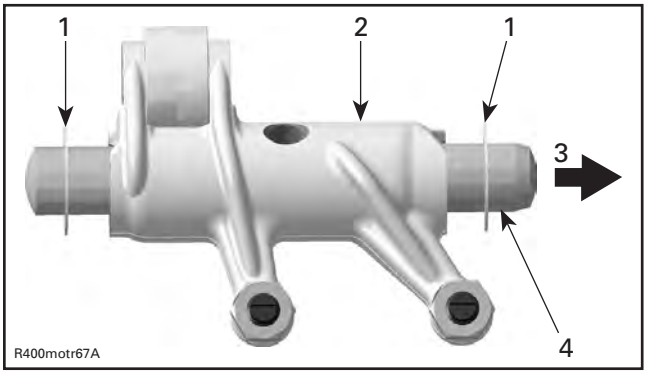

1. *2 thrust washers*
2. *Rocker arm (exhaust side)*
3. *Cylinder head (spark plug side)*
4. *Big taper to spark plug side*

Inspecting the Rocker Arm

Inspect each rocker arm for cracks and scored friction surfaces. If so, replace rocker arm assembly.

Check the rocker arm rollers for free movement, wear and excessive radial play. Replace rocker arm assembly if necessary.

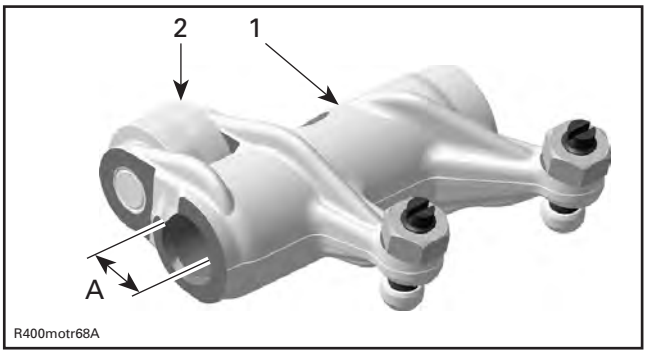

1. Rocker arm (exhaust side)
2. Roller
A. Bore for rocker arm shaft

Measure rocker arm bore diameter. If diameter is out of specification, change the rocker arm assembly.

ROCKER ARM BORE DIAMETER	
NEW	12.036 mm to 12.050 mm (.4739 in to .4744 in)
SERVICE LIMIT	12.060 mm (.4748 in)

Check adjustment screws for free movement, cracks and/or excessive play.

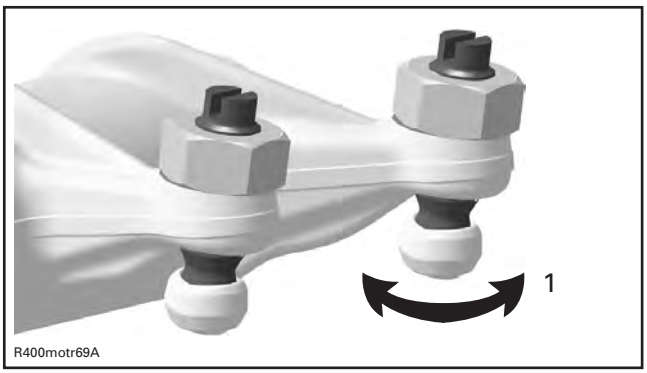

1. Free movement of adjustment screw top

Rocker Arm Shaft Inspection

Check for scored friction surfaces; if so, replace parts.

Measure rocker arm shaft diameter.

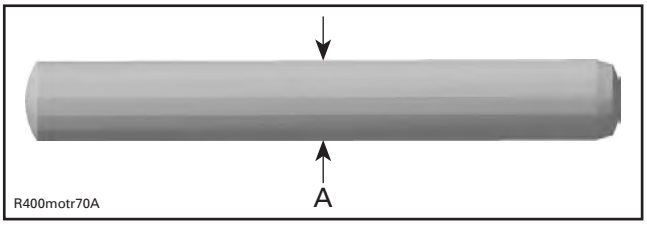

A. Measure rocker arm shaft diameter here

ROCKER ARM SHAFT DIAMETER	
NEW	12.000 mm to 12.018 mm (.4724 in to .4731 in)
SERVICE LIMIT	11.990 mm (.472 in)

Any area worn excessively will require parts replacement.

Installing the Rocker Arm

NOTE: Use the same procedure for exhaust and intake rocker arm.

1. Apply engine oil on rocker arm shaft.
2. Insert a rocker arm shaft with the chamfered edge first through rocker arm pin bore.
3. Install a thrust washer at timing chain side, then the proper rocker arm (exhaust side or intake side).
4. Push in rocker arm shaft until its chamfer reaches the end of rocker arm bore.

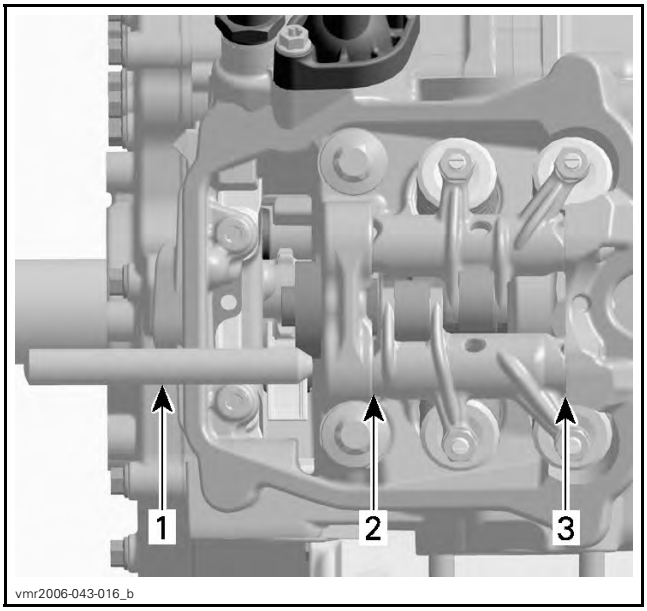

1. Rocker arm shaft
2. Thrust washer (timing chain side)
3. Thrust washer (spark plug side)

5. Place the other thrust washer and push rocker arm shaft to end position.
6. Install the camshaft retaining plate.
7. Adjust valve clearance, refer to *PERIODIC MAINTENANCE PROCEDURES* subsection.

CAMSHAFT

NOTE: The engine is equipped with two different camshafts.

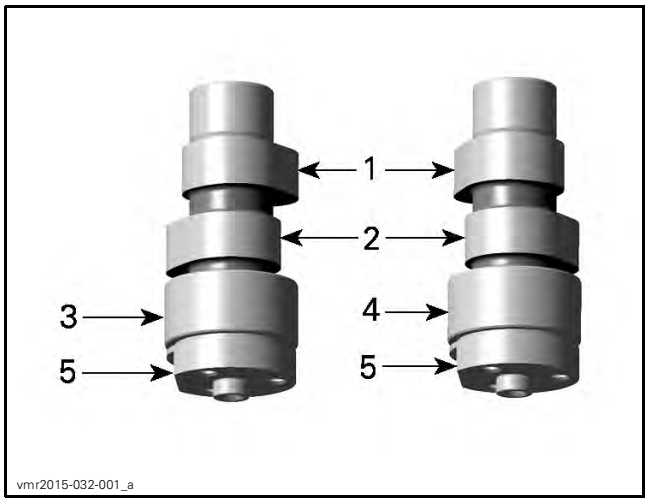

1. *Intake cam*
2. *Exhaust cam*
3. *Camshaft of cylinder 1*
4. *Camshaft of cylinder 2*
5. *Flat spot*

Removing the Camshaft

The removal procedure is the same for both camshafts.

NOTICE **Each camshaft is different in design. Thus, it is important not to mix up any parts of the camshaft assembly with that of the other cylinder. Keep parts as a group.**

1. Remove valve cover (see *VALVE COVER* in this subsection).
2. Refer to the *TIMING CHAIN* subsection to remove the following parts:
   – Chain tensioner
   – Camshaft timing gear.
3. Remove the camshaft retaining plate.

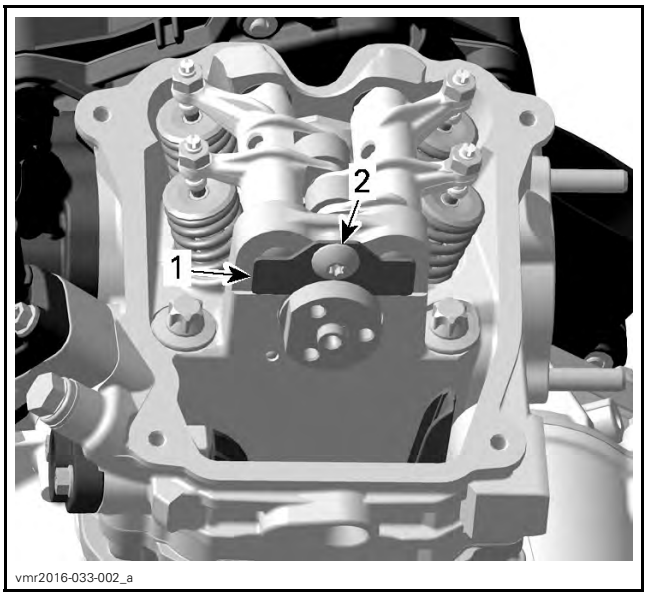

1. *Camshaft retaining plate*
2. *Pan head screw*
3. *Cylinder head*

4. Remove rocker arms (see *ROCKER ARM* in this subsection).
5. Remove the camshaft.

NOTE: For removal rotate camshaft so that intake/exhaust lobe shows to upper side of cylinder head.

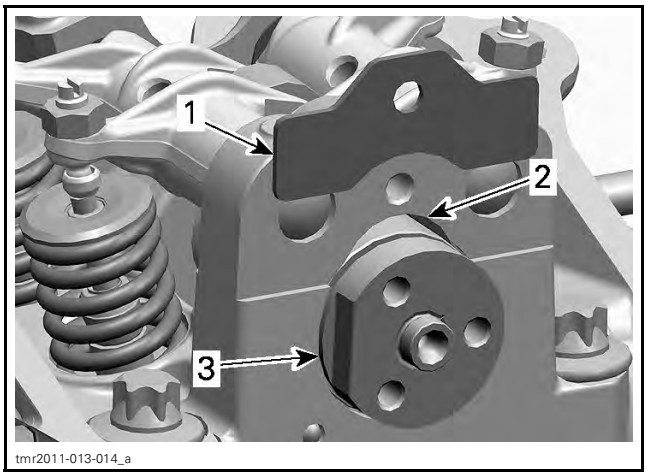

1. *Camshaft retaining plate*
2. *Area for camshaft lobes*
3. *Camshaft*

Inspecting the Camshaft

Inspecting the Camshaft Lobe

Check each lobe for scoring, scuffing, cracks or other signs of wear.

Measure camshaft lobe height using a micrometer.

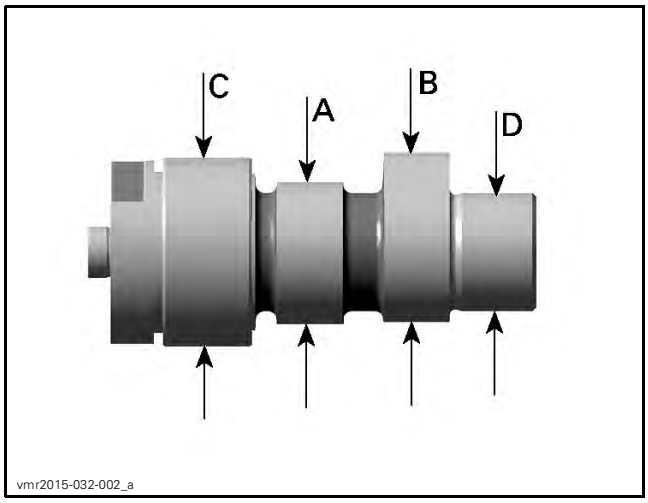

A. Camshaft lobe (exhaust valves)
B. Camshaft lobe (intake valves)
C. Camshaft journal (timing chain side)
D. Camshaft journal (spark plug side)

CAMSHAFT LOBE (INTAKE)	
NEW	31.830 mm to 32.030 mm (1.2531 in to 1.261 in)
SERVICE LIMIT	31.810 mm (1.2524 in)

CAMSHAFT LOBE (EXHAUST)	
NEW	31.730 mm to 31.930 mm (1.2492 in to 1.2571 in)
SERVICE LIMIT	31.710 mm (1.2484 in)

Measure camshaft bearing in cylinder head. Refer to *CYLINDER HEAD INSPECTION* in this subsection.

Inspecting the Camshaft Journal

Check each journal for scoring, scuffing, cracks or other signs of wear.

Measure camshaft journal using a micrometer.

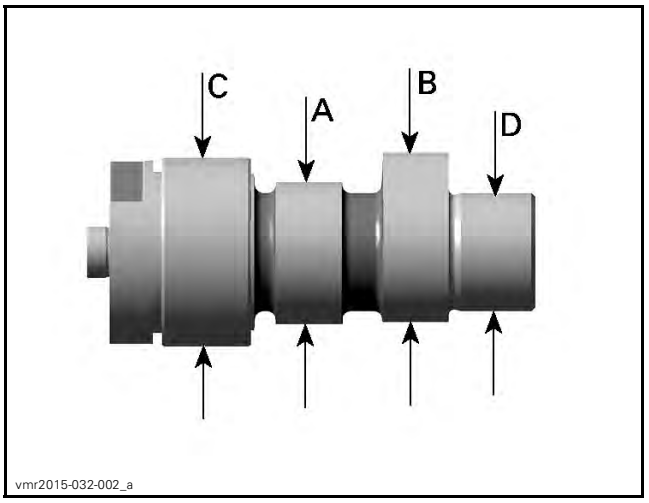

A. Camshaft lobe (exhaust valves)
B. Camshaft lobe (intake valves)
C. Camshaft journal (timing chain side)
D. Camshaft journal (spark plug side)

CAMSHAFT JOURNAL (TIMING CHAIN SIDE)	
NEW	34.959 mm to 34.975 mm (1.3763 in to 1.377 in)
SERVICE LIMIT	34.950 mm (1.376 in)

CAMSHAFT JOURNAL (SPARK PLUG SIDE)	
NEW	21.959 mm to 21.980 mm (.8645 in to .8654 in)
SERVICE LIMIT	21.950 mm (.8642 in)

Installing the Camshaft

Reverse the removal procedure. Pay attention to the following details.

NOTICE **The camshafts are not identical in design. Do not invert the camshafts during assembly. Any mix-up of the components will lead to engine damage.**

Place the camshaft retaining plate in the slot of the camshaft.

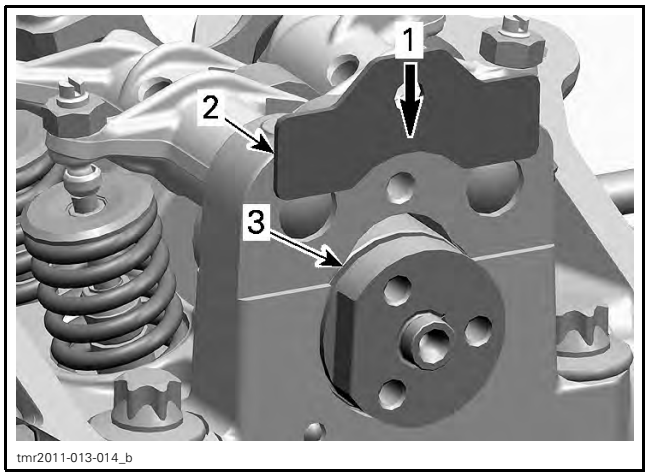

1. Direction of movement
2. Camshaft retaining plate
3. Slot retaining camshaft

For other parts, refer to proper installation procedure.

CYLINDER HEAD

Cylinder Head Access

Refer to *VALVE COVER* in this subsection.

Removing the Cylinder Head

1. The removal procedure is the same for both cylinder heads.
2. Drain coolant (refer to *PERIODIC MAINTENANCE PROCEDURES* subsection).
3. Disconnect the coolant hose from the thermostat housing.

NOTE: Before removing cylinder head, blow out remaining coolant by air pressure. During cylinder head removal, the remaining coolant in cylinder head could overflow into the engine and a little quantity of coolant could drop into the engine. In this case, the engine oil will be contaminated.

4. Refer to *EXHAUST SYSTEM* subsection and disconnect exhaust system head pipe from cylinder head.
5. Disconnect spark plug wire.
6. Disconnect temperature sensor connector, located at rear cylinder head.
7. Remove the intake manifold. Refer to *INTAKE MANIFOLD* subsection.
8. Remove the valve cover and its gasket (see *VALVE COVER* in this subsection).
9. Refer to the *TIMING CHAIN* subsection to remove the following parts:
   – Chain tensioner
   – Camshaft timing gear.
10. First remove the M6 cylinder head screws, then the cylinder head screws M10.

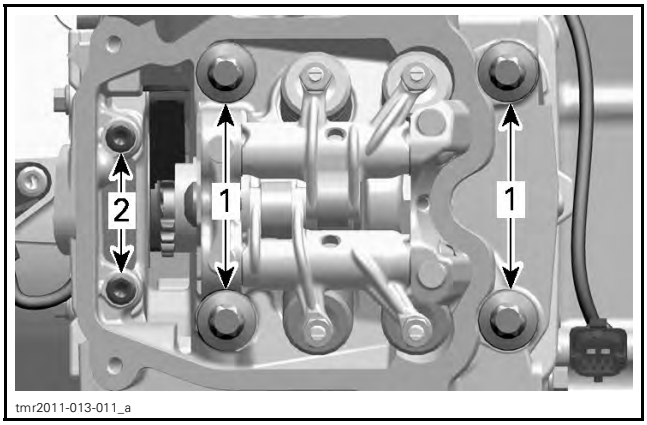

1. Cylinder head screws M10
2. Cylinder head screws M6

11. Pull up cylinder head.
12. Remove timing chain guide (fixed).
13. Remove and discard the cylinder head gasket.

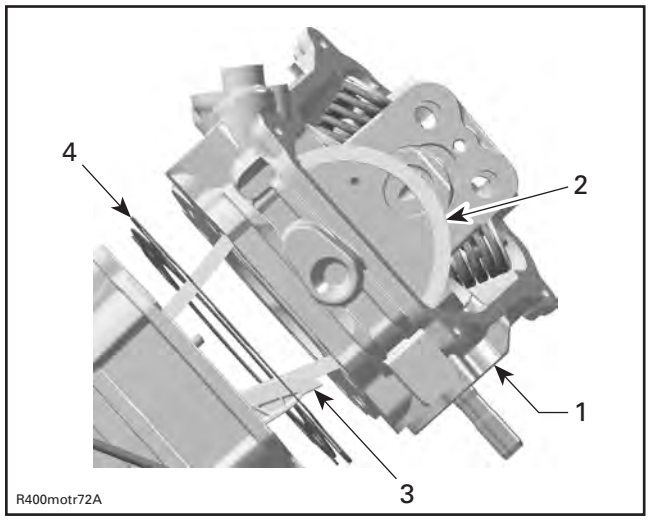

1. Cylinder head
2. Timing chain
3. Chain guide (fixed)
4. Cylinder head gasket

Inspecting the Cylinder Head

Inspect timing chain guide (fixed) for wear, cracks or other damages. Replace if necessary.

Check for cracks between valve seats, if so, replace cylinder head.

Check mating surface between cylinder and cylinder head for contamination. If so, clean both surfaces.

Clean oil support through the cylinder head from contamination.

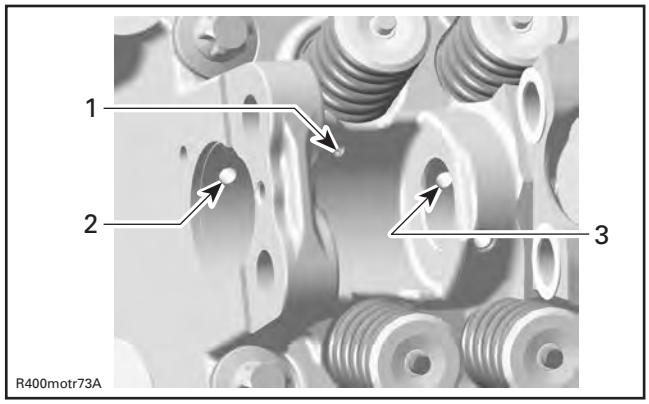

1. Oil port to lubricate camshaft lobes intake/exhaust
2. Oil supply to camshaft bearing journal (timing chain side)
3. Oil supply to camshaft bearing journal (spark plug side)

Inspecting the Cylinder Head Camshaft Bearing

Measure camshaft bearing in cylinder head.

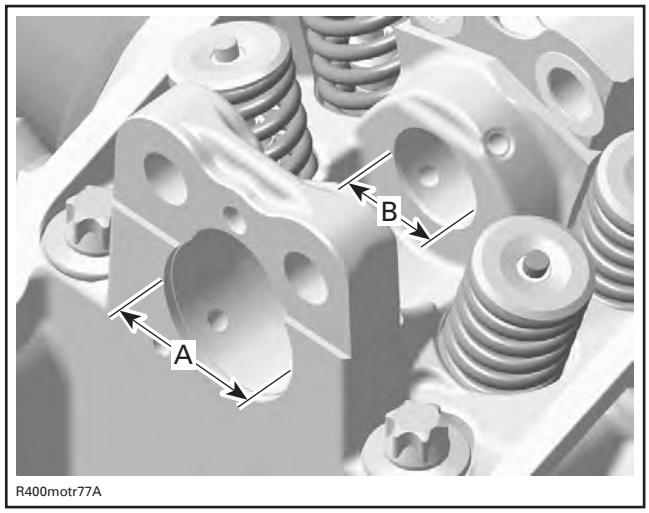

A. Camshaft bearing (timing chain side)
B. Camshaft bearing (spark plug side)

CAMSHAFT BEARING (TIMING CHAIN SIDE)	
NEW	35.000 mm to 35.025 mm (1.378 in to 1.3789 in)
SERVICE LIMIT	35.040 mm (1.3795 in)
CAMSHAFT BEARING (SPARK PLUG SIDE)	
NEW	22.000 mm to 22.021 mm (.8661 in to .867 in)
SERVICE LIMIT	22.040 mm (.8677 in)

Installing the Cylinder Head

NOTE: Front and rear cylinder heads are not identical. **Never** interchange cylinder heads.

Reverse the removal procedure. Pay attention to the following details.

Ensure dowel pins are in place.

NOTICE **Timing chain guide (fixed) has to be fixed between cylinder and cylinder head.**

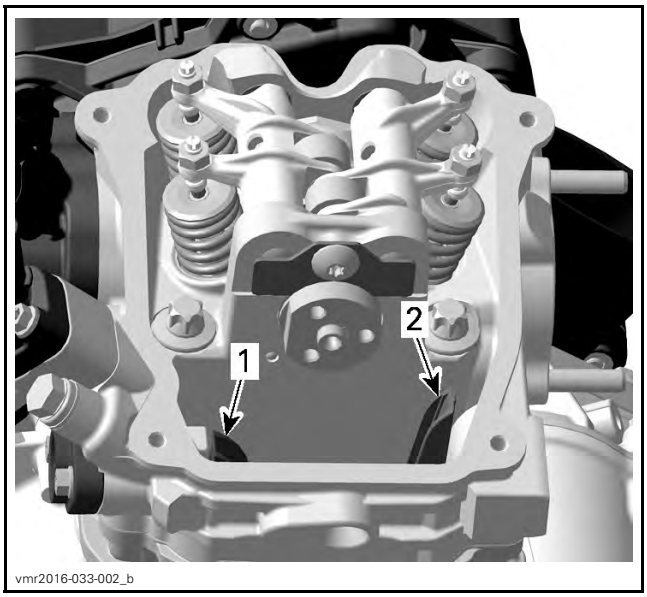

1. Timing chain guide (tensioner side) mounted in crankcase
2. Timing chain guide (fixed) between cylinder and cylinder head

Install a NEW cylinder head gasket.

Install cylinder head screws in correct position.

NOTICE **Cylinder head screws have different sizes and lengths.**

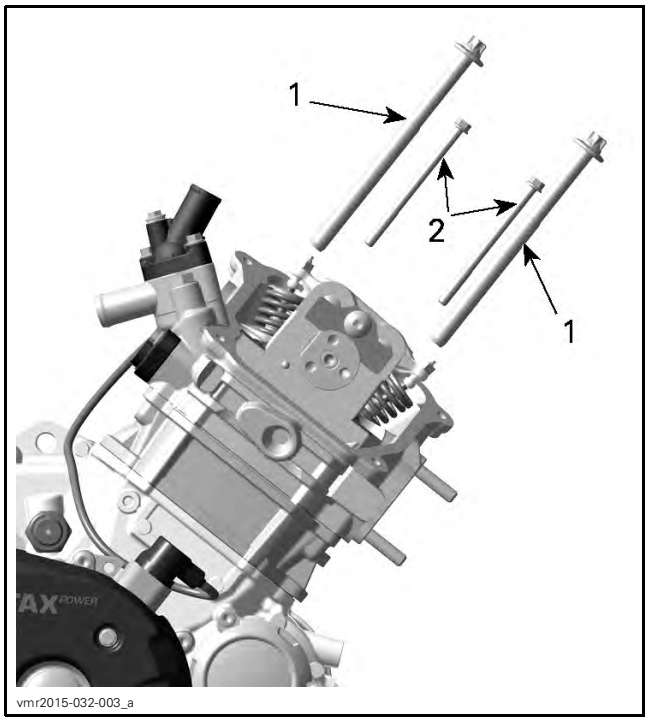

1. Location no. 1
2. Location no. 2

CYLINDER HEAD SCREW IDENTIFICATION	
Location no. 1	M10 x 140
Location no. 2	M6 x 85

Tighten M10 cylinder head screws FIRST as per following specifications.

NOTE: Always perform one step on all M10 cylinder head screws before going to the next step.

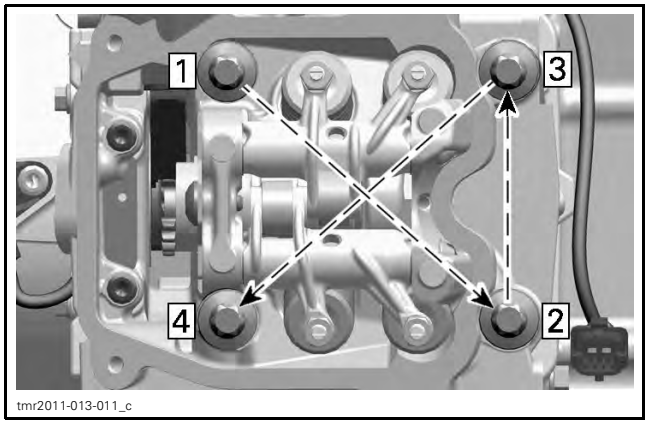

TIGHTENING SEQUENCE - M10 CYLINDER HEAD SCREWS

TIGHTENING TORQUE		
M10 cylinder head screws	STEP A	20 N•m ± 1 N•m (15 lbf•ft ± 1 lbf•ft)
	STEP B	180° +/- 5°

Tighten M6 cylinder head screws as per following specification.

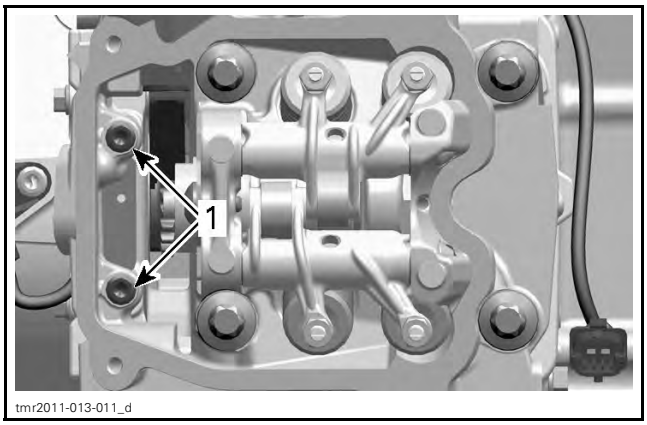

1. M6 Screws

TIGHTENING TORQUE	
M6 cylinder head screws	10 N•m ± 1 N•m (89 lbf•**in** ± 9 lbf•**in**)

Check timing chain guide (tensioner side) for movement.

Refer to applicable subsection for installation details of remaining removed parts.

VALVE SPRINGS

Removing the Valve Spring

1. Refer to following procedures in this subsection to remove:
   – *CAMSHAFT*
   – *CYLINDER HEAD*.
2. Remove valve spring.

REQUIRED TOOL	
VALVE SPRING COMPRESSOR (P/N 529 035 724)	
VALVE SPRING COMPRESSOR CUP (P/N 529 035 764)	

⚠ WARNING

Always wear safety glasses when disassembling valve springs. Be careful when unlocking valves. Components could fly away because of the strong spring preload.

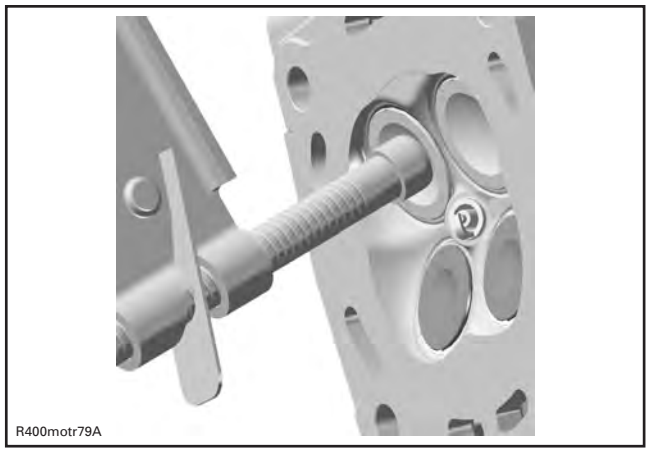

LOCATE VALVE SPRING COMPRESSOR CLAMP IN CENTER OF THE VALVE

3. Remove valve cotters.

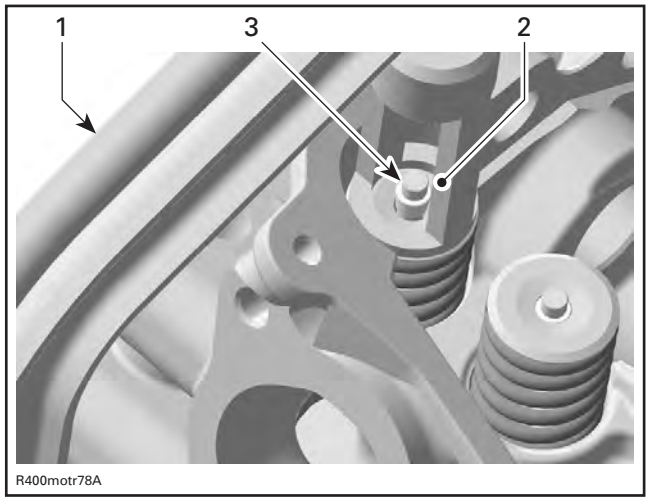

1. *Valve spring compressor clamp*
2. *Valve spring compressor cup*
3. *Valve cotter*

4. Remove tools and withdraw valve spring retainer and valve spring.

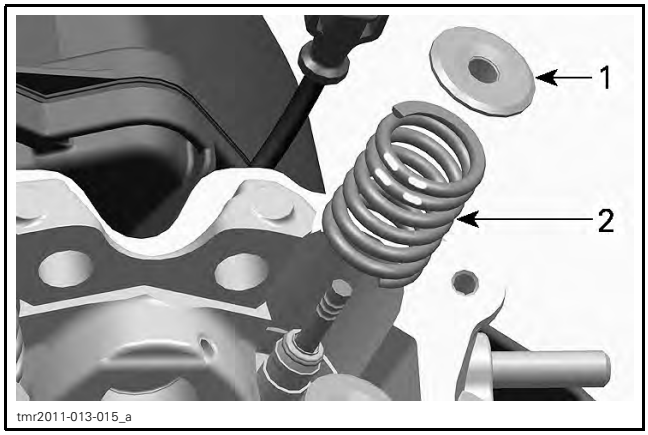

1. *Valve spring retainer*
2. *Valve spring*

Inspecting the Valve Spring

Check valve spring for visible damage. If so, replace valve spring.

Check valve spring for free length and straightness.

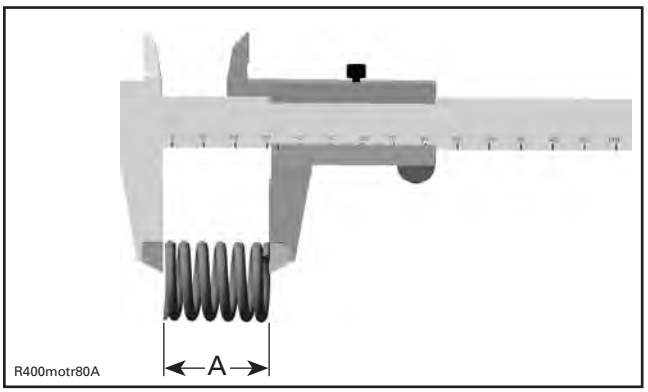

A. Valve spring length

VALVE SPRING FREE LENGTH	
NOMINAL NEW	40.81 mm (1.607 in)
SERVICE LIMIT	39.00 mm (1.535 in)

Replace valve springs if not within specifications.

Installing the Valve Spring

For installation, reverse the removal procedure. Pay attention to the following details.

Colored area of the valve spring must be placed on top.

To ease installation of cotters, apply oil or grease on them so that they remain in place while releasing the spring.

NOTE: Valve cotter must be properly engaged in valve stem grooves.

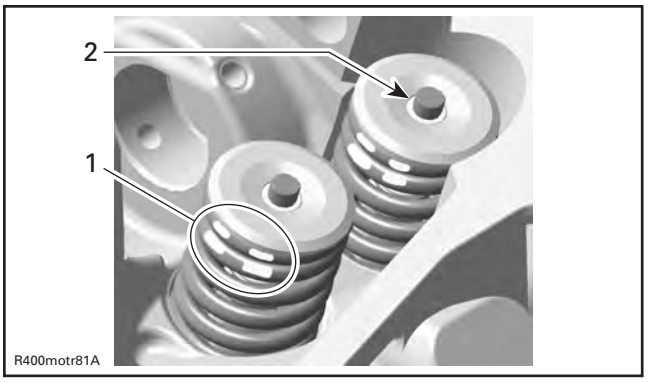

1. *Position of the valve spring*
2. *Valve cotter*

After spring is installed, ensure it is properly locked by tapping on valve stem end with a soft hammer so that valve opens and closes a few times.

NOTICE **An improperly locked valve spring will cause engine damage.**

VALVES

Removing the Valve

1. Remove valve spring, see *VALVE SPRING* in this subsection.
2. Push valve stem, then pull valves (intake and exhaust) out of valve guide.

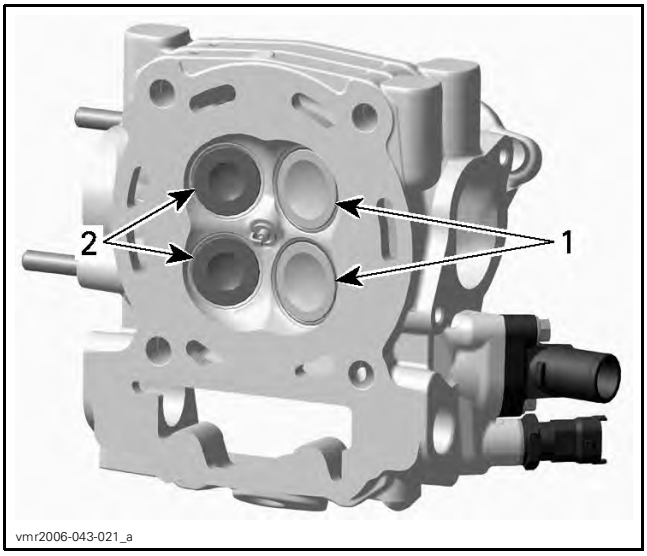

vmr2006-043-021_a

1. Intake valves 31 mm
2. Exhaust valves 27 mm

3. Remove valve stem seal and discard it.

REQUIRED TOOL
SNAP-ON PLIERS (P/N YA 8230)

vmr2006-043-023

Inspecting the Valve

Whenever valves are removed always inspect valve guides. Refer to *VALVE GUIDES* in this subsection.

Valve Stem Seal

Always install **NEW** seals whenever valves are removed.

Inspecting the Valve

Inspect valve surface, check for abnormal stem wear and bending. If out of specification, replace by a new one.

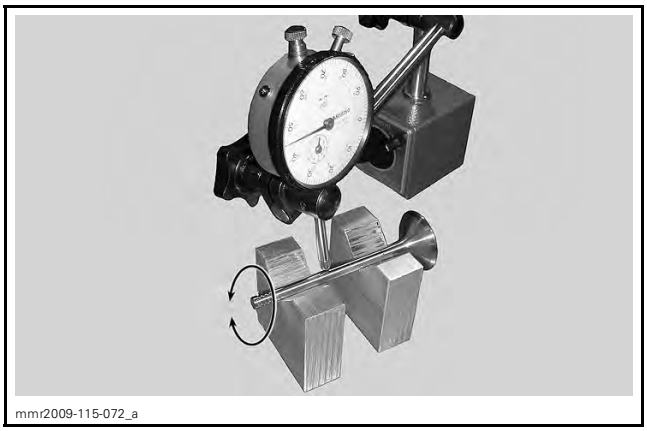
mmr2009-115-072_a

VALVE OUT OF ROUND (INTAKE AND EXHAUST VALVES)	
NEW	0.005 mm (.0002 in)
SERVICE LIMIT	0.06 mm (.0024 in)

Inspecting the Valve Stem

Measure valve stem in three places using a micrometer.

Replace valve if valve stem is out of specification or has other damages such as wear or friction surface.

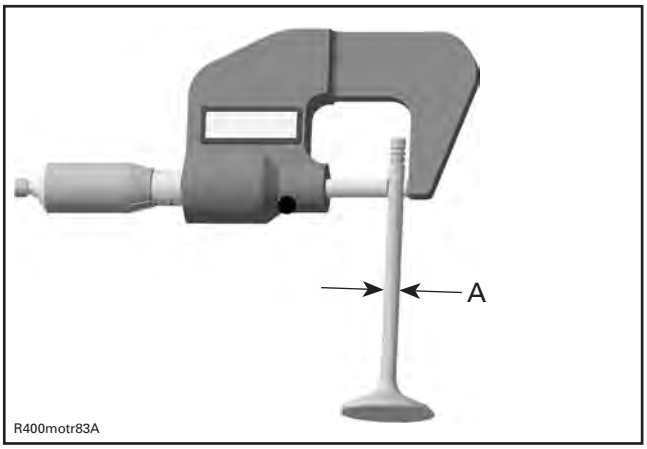

A. Valve stem diameter

VALVE STEM DIAMETER	
EXHAUST VALVE	
NEW	4.956 mm to 4.970 mm (.1951 in to .1957 in)
SERVICE LIMIT	4.930 mm (.1941 in)
INTAKE VALVE	
NEW	4.966 mm to 4.980 mm (.1955 in to .1961 in)
SERVICE LIMIT	4.930 mm (.1941 in)

Inspecting the Valve Face and Seat

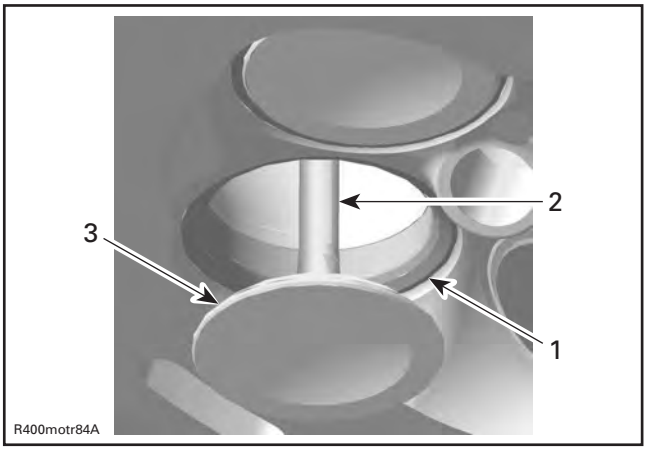

1. *Valve seat*
2. *Exhaust valve contaminated area*
3. *Valve face (contact surface to valve seat)*

Check valve face and seat for burning or pitting and replace valve or cylinder head if there are signs of damage.

Ensure to seat valves properly. Apply some lapping compound to valve face and work valve on its seat with a lapping tool (see *VALVE GUIDES* in this subsection).

Measure valve face contact width.

NOTE: The location of contact area should be in center of valve seat.

Measure valve seat width using a caliper.

VALVE SEAT CONTACT WIDTH	
EXHAUST VALVE	
NEW	1.25 mm to 1.55 mm (.049 in to .061 in)
SERVICE LIMIT	2.00 mm (.079 in)
INTAKE VALVE	
NEW	1.05 mm to 1.35 mm (.041 in to .053 in)
SERVICE LIMIT	1.80 mm (.071 in)

If valve seat contact width is too wide or has dark spots, replace the cylinder head.

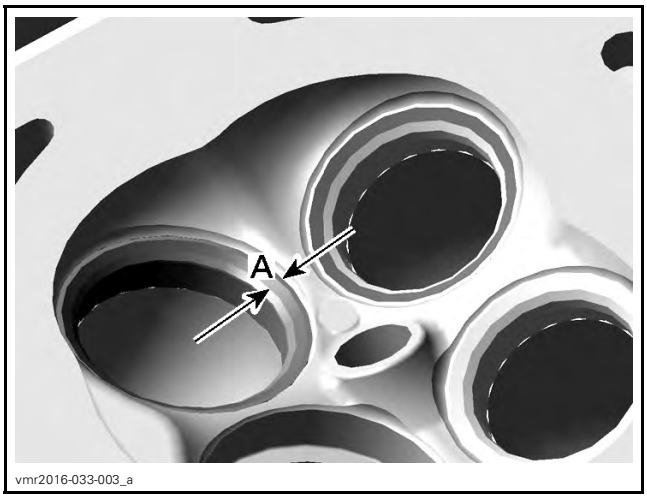

A. Valve seat contact width

Installing the Valve

Reverse the removal procedure. Pay attention to the following details.

Install a NEW valve stem seal. Make sure thrust washer is installed before installing seal.

Apply engine oil on valve stem and install it.

NOTICE **Be careful when valve stem is passed through sealing lips of valve stem seal.**

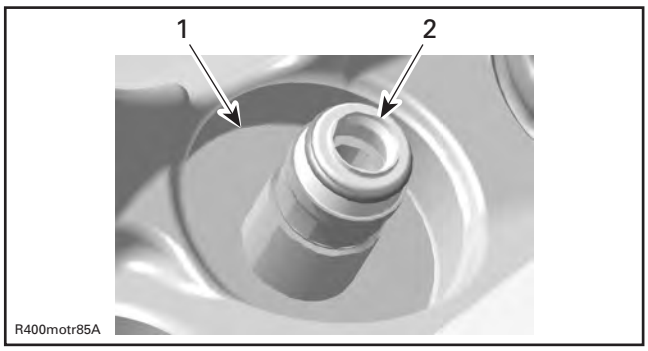

1. Thrust washer
2. Sealing lips of valve stem seal

To ease installation of cotters, apply oil or grease on them so that they remain in place while releasing the spring.

After spring is installed, ensure it is properly locked by tapping on valve stem end with a soft hammer so that valve opens and closes a few times.

NOTICE **An improperly locked valve spring will cause engine damage.**

VALVE GUIDES

Inspecting the Valve Guide

Always replace valve stem seals whenever valve guides are removed.

Measure valve guide in three places using a small bore gauge.

NOTE: Clean valve guide to remove carbon deposits before measuring.

Replace valve guide if it is out of specification or has other damages such as wear or friction surface.

VALVE GUIDE DIAMETER (INTAKE AND EXHAUST VALVES)	
NEW	4.998 mm to 5.018 mm (.1968 in to .1976 in)
SERVICE LIMIT	5.050 mm (.1988 in)

Removing the Valve Guide

1. Remove cylinder head (see *CYLINDER HEAD* in this subsection).
2. Remove valves (see *VALVES* in this subsection).

NOTE: Clean valve guide area from contamination before removal.

3. Drive valve guide out of cylinder head using specified tool.

REQUIRED TOOL	
VALVE GUIDE REMOVER 5 MM (P/N 529 035 924)	
Hammer	

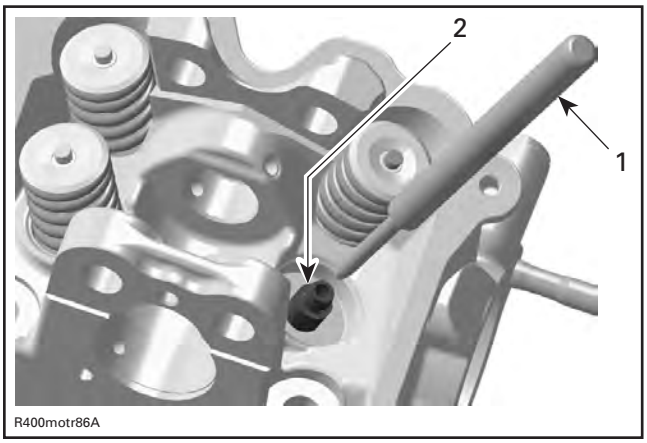

1. Valve guide remover
2. Valve guide

Installing the Valve Guide

For installation, reverse the removal procedure. Pay attention to the following details.

Clean the valve guide bore before reinstalling the valve guide into cylinder head.

Install valve guide.

REQUIRED TOOL	
VALVE GUIDE INSTALLER (P/N 529 036 140)	

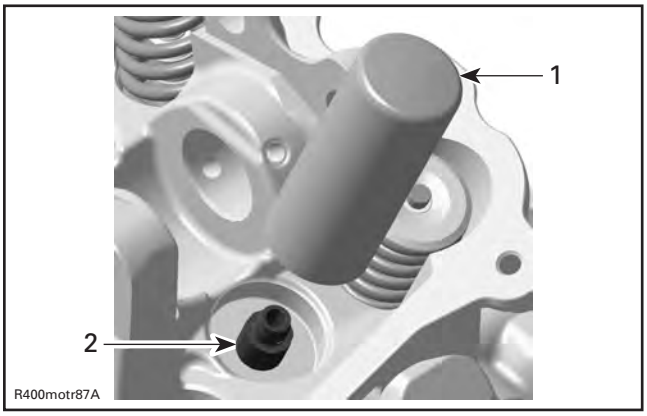

1. Valve guide installer
2. Valve guide

NOTE: Apply LOCTITE 767 (ANTISEIZE LUBRICANT) (P/N 293 800 070) on valve guide prior to install it into the cylinder head.

NOTICE Push valve guide in the cold cylinder head as per following illustration.

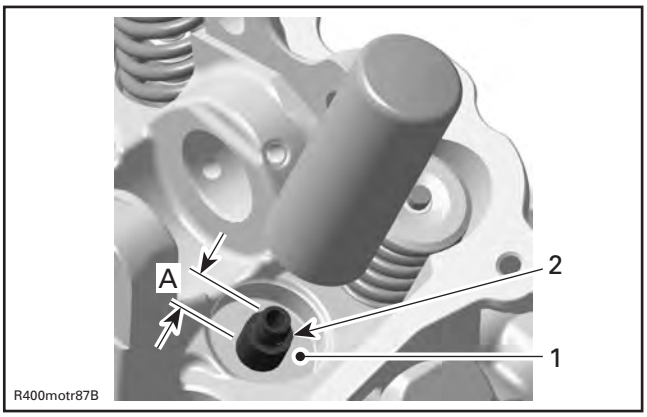

1. Thrust surface of cylinder head
2. Valve guide
A. Measurement from thrust surface to valve guide top

VALVE GUIDE (MEASUREMENT A)	
NEW	14.00 mm to 14.40 mm (.5512 in to .5669 in)

Apply some lapping compound to valve face and work valve on its seat with a lapping tool.

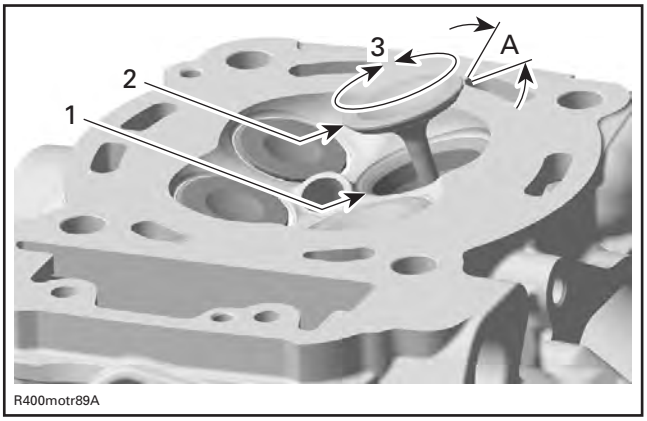

1. Valve seat
2. Valve face (contact surface to valve seat)
3. Turn valve while pushing against cylinder head
A. Valve seat angle 45°

NOTE: Ensure to seat valves properly. Apply marking paste to ease checking contact pattern.

Repeat procedure until valve seat/valve face fits together.

CYLINDER

Removing the Cylinder

1. Refer to the *TIMING CHAIN* subsection to remove the following parts:
   – Chain tensioner
   – Camshaft timing gear.
2. Remove the cylinder head (see *CYLINDER HEAD* in this subsection).
3. Pull cylinder.
4. Discard cylinder base gaskets.

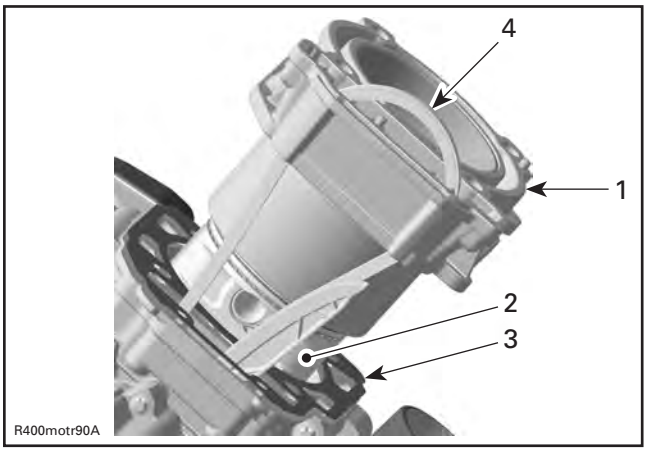

1. Cylinder
2. Piston assembly
3. Cylinder base gasket
4. Camshaft timing chain

Inspecting the Cylinder

Check cylinder for cracks, scoring and wear ridges on the top and bottom of the cylinder. If so, replace cylinder.

Cylinder Taper

Measure cylinder bore at recommended positions.

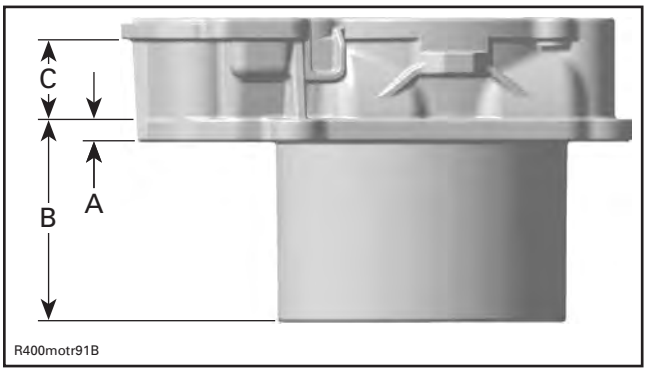

A. First measurement (from cylinder bottom)
B. Second measurement
C. Third measurement

CYLINDER TAPER MEASUREMENTS	
MEASUREMENT	SPECIFICATION
A	5 mm (.197 in)
B	63 mm (2.48 in)
C	37 mm (1.46 in)

CYLINDER TAPER SPECIFICATION	
NEW (MAXIMUM)	0.038 mm (.0015 in)
SERVICE LIMIT	0.090 mm (.0035 in)

Distance between measurements should not exceed the service limit. Otherwise, replace cylinder and piston rings.

Cylinder Out of Round

Measure cylinder diameter in piston axis direction from top of cylinder. Take another measurement 90° from first one and compare.

NOTE: Take the same measuring points like described in *CYLINDER TAPER* above.

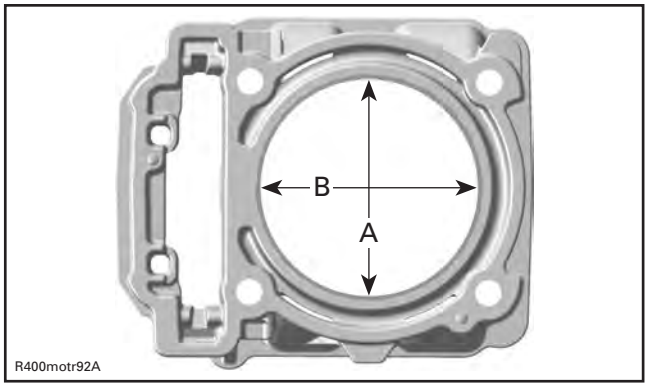

A. Perpendicular to crankshaft axis
B. Parallel to crankshaft axis

CYLINDER OUT OF ROUND	
NEW (MAXIMUM)	0.015 mm (.0006 in)
SERVICE LIMIT	0.020 mm (.0008 in)

Installing the Cylinder

Reverse the removal procedure. Pay attention to the following details.

NOTICE **Always replace cylinder base gasket before installing the cylinder.**

NOTE: Make sure piston rings are properly spaced, refer to *PISTON RINGS* in this subsection.

Apply engine oil:
- In the bottom area of the cylinder bore
- On the piston rings
- On the piston ring compressor.

Compress piston rings.

REQUIRED TOOL
Piston ring compressor with band width of 15 mm to 20 mm (.59 in to .79 in)

First mount cylinder 2.

NOTE: The cylinder can not be pushed fully over the piston unless the piston is located at TDC.

Then remove the CRANKSHAFT LOCKING BOLT (P/N 529 035 617).

Crank the engine further and position piston 1 at TDC.

Mount cylinder 1.

Put timing chain through the chain passage, then slide cylinder over piston.

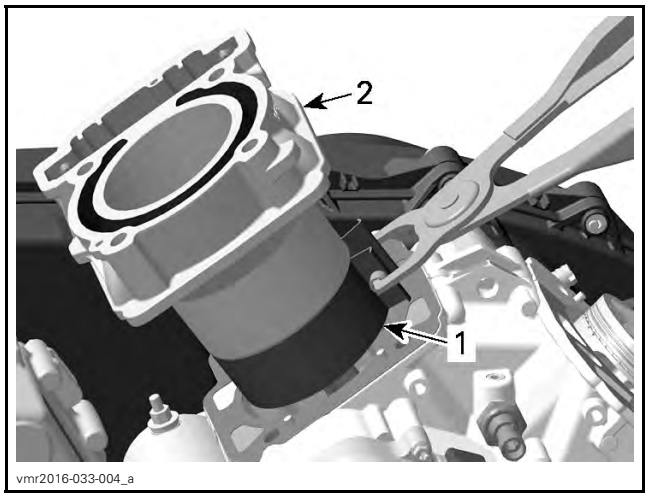

1. Piston ring compressor
2. Cylinder

NOTICE **Chain guide has to be fixed between cylinder and cylinder head.**

NOTE: After both cylinders are installed, turn crankshaft until piston of cylinder 2 is at TDC and lock crankshaft. Refer to *CRANKSHAFT* in the *BOTTOM END* subsection.

Install cylinder head and the other parts in accordance with the proper installation procedures.

PISTON

Removing the Piston

1. Refer to following procedures in this subsection and remove following parts:
   - Cylinder head
   - Cylinder.

2. Place a rag under piston and in the area of timing chain compartment.

⚠ WARNING

Piston circlips are spring loaded.

3. Remove one piston circlip and discard it.

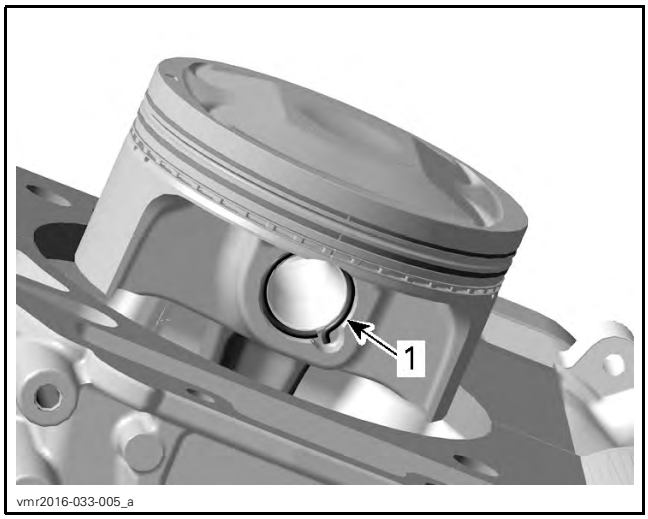

1. Piston circlip

NOTE: The removal of both piston circlips is not necessary to remove piston pin.

4. Push piston pin out of piston.

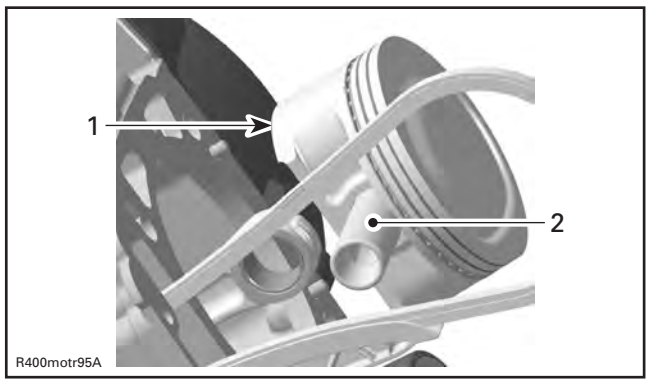

1. Piston
2. Piston pin

5. Detach piston from connecting rod.

Inspecting the Piston

Inspect piston for scoring, cracking or other damages. Replace piston and piston rings if necessary.

Using a micrometer, measure piston at 8 mm (.315 in) perpendicularly (90°) to piston pin.

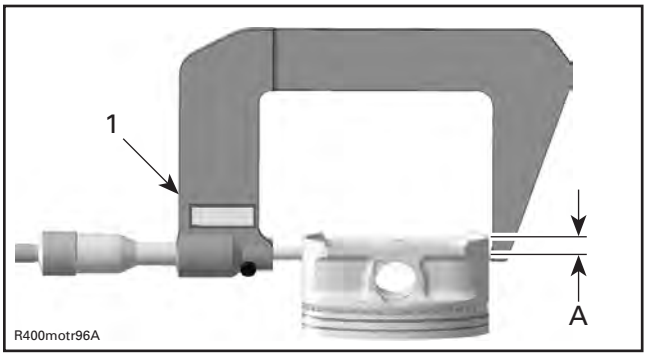

1. Measuring perpendicularly (90°) to piston pin
A. 8 mm (.315 in)

The measured dimension should be as described in the following tables. If not, replace piston.

PISTON MEASUREMENT	
NEW	83.950 mm to 83.966 mm (3.3051 in to 3.3057 in)
SERVICE LIMIT	83.850 mm (3.3012 in)

Piston/Cylinder Clearance

Adjust and lock a micrometer to the piston dimension.

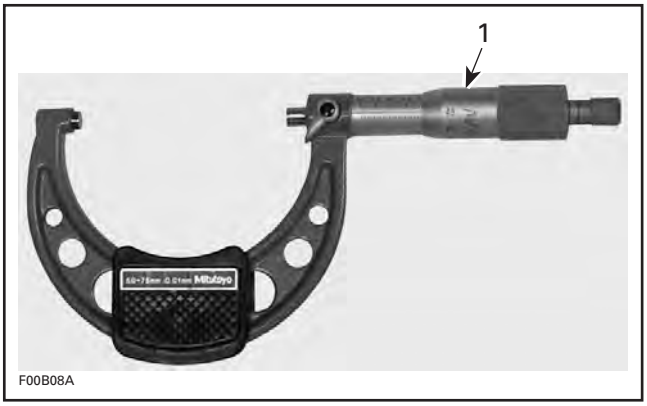

1. Micrometer set to the piston dimension

With the micrometer set to the dimension, adjust a cylinder bore gauge to the micrometer dimension and set the indicator to 0 (zero).

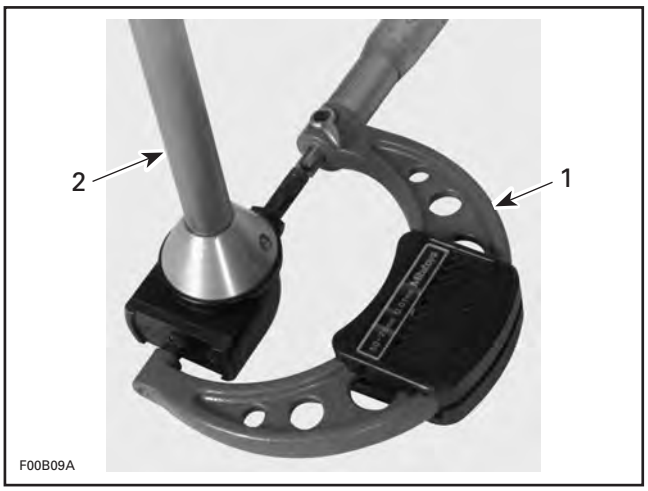

1. Use the micrometer to set the cylinder bore gauge
2. Dial bore gauge

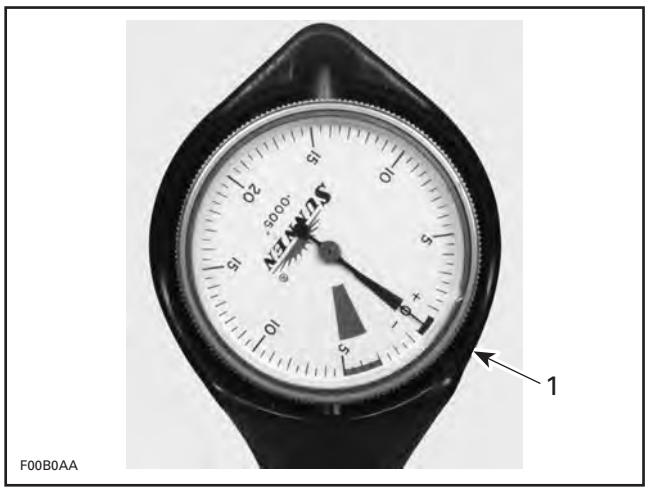

TYPICAL
1. Indicator set to 0 (zero)

Position the dial bore gauge 20 mm (.787 in) above cylinder base, measuring perpendicularly (90°) to piston pin axis.

Read the measurement on the cylinder bore gauge. The result is the exact piston/cylinder wall clearance.

PISTON/CYLINDER CLEARANCE	
NEW	0.057 mm to 0.087 mm (.0022 in to .0034 in)
SERVICE LIMIT	0.130 mm (.0051 in)

NOTE: Make sure used piston is not worn.

If clearance exceeds specified tolerance, replace piston by a new one and measure piston/cylinder clearance again.

NOTE: Make sure the cylinder bore gauge indicator is set exactly at the same position as with the micrometer, otherwise the reading will be false.

Connecting Rod/Piston Pin Clearance

Using synthetic abrasive woven, clean piston pin from deposits.

Inspect piston pin for scoring, cracking or other damages.

Measure piston pin. See the following illustration for the proper measurement positions.

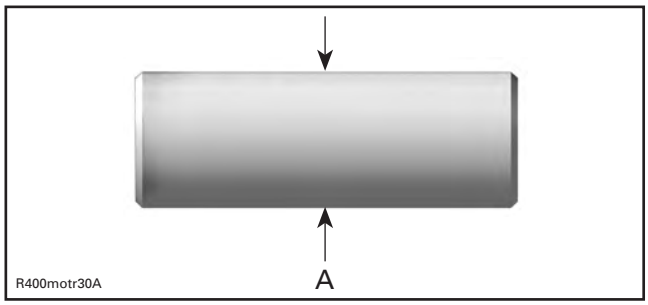

A. Piston pin diameter

PISTON PIN DIAMETER	
NEW	19.996 mm to 20.000 mm (.7872 in to .7874 in)
SERVICE LIMIT	19.980 mm (.7866 in)

Replace piston pin if diameter is out of specifications.

Measure inside diameter of connecting rod small end bushing.

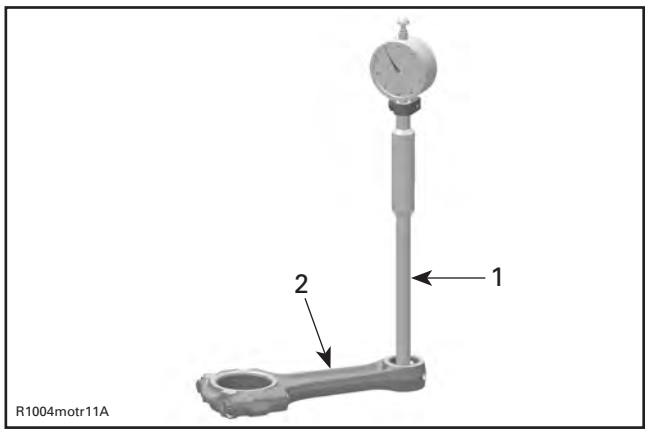

1. Bore gauge
2. Connecting rod

CONNECTING ROD SMALL END DIAMETER	
NEW	20.010 mm to 20.020 mm (.7878 in to .7882 in)
SERVICE LIMIT	20.060 mm (.7898 in)

Replace connecting rod if diameter of connecting rod small end is out of specifications. Refer to *BOTTOM END* subsection for removal procedure.

Compare measurements to obtain the connecting rod/piston pin clearance.

CONNECTING ROD/ PISTON PIN CLEARANCE	
SERVICE LIMIT	0.080 mm (.0031 in)

Installing the Piston

Reverse the removal procedure. Pay attention to the following details.

Apply engine oil on the piston pin.

Insert piston pin into piston and connecting rod.

For each cylinder, install piston with the punched arrow on piston dome pointing towards the rear side of the engine.

Front cylinder: Mark on top of piston must show to intake side.

Rear cylinder: Mark on top of piston must show to exhaust side.

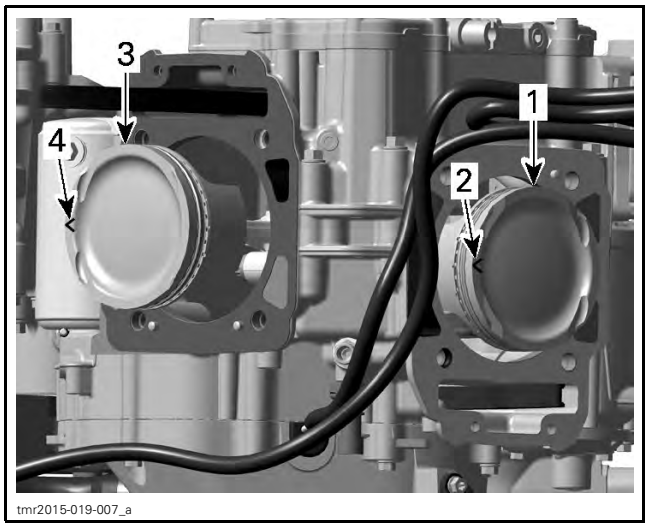

1. *Piston of cylinder 1*
2. *Mark on piston must show to intake side of cylinder 1*
3. *Piston of cylinder 2*
4. *Mark on piston must show to exhaust side of cylinder 2*

Use the piston appropriate circlip installer to assemble the NEW piston circlip as per following procedure:

REQUIRED TOOL	
PISTON CIRCLIP INSTALLER (P/N 529 035 921)	

NOTICE **Always replace disassembled piston circlip(s) by NEW ones. Place a rag on cylinder base to avoid dropping the circlip inside the engine.**

Place circlip in sleeve as per following illustration.

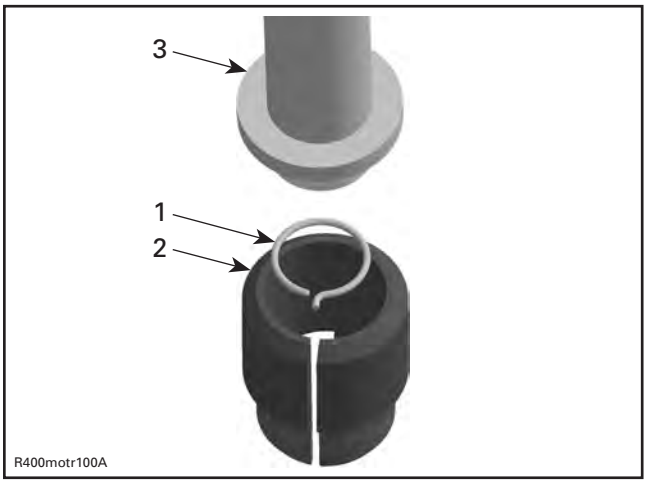

1. *Circlip*
2. *Sleeve*
3. *Assembly jig from piston clip installer*

Push taper side of assembly jig until circlip reaches middle of sleeve.

Align sleeve with piston pin axis and push assembly jig until circlip engages in piston.

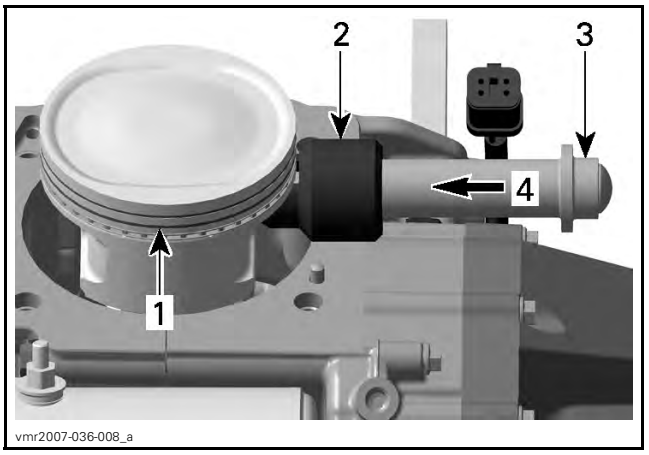

1. *Hold piston while pushing circlip in place*
2. *Sleeve*
3. *Assembly jig*
4. *Direction to push circlip*

NOTE: Take care that the hook of the piston circlip is positioned properly.

CORRECT POSITION OF THE PISTON CIRCLIP

PISTON RINGS

Removing the Piston Rings

Remove the piston (see *PISTON* in this subsection).

Inspecting the Piston Rings

Ring/Piston Groove Clearance

Using a feeler gauge measure each ring/piston groove clearance. If the clearance is too large, the piston and the piston rings should be replaced.

RING/PISTON GROOVE CLEARANCE	
UPPER COMPRESSION RING	
NEW	0.025 mm to 0.070 mm (.001 in to .0028 in)
SERVICE LIMIT	0.100 mm (.0039 in)
LOWER COMPRESSION RING	
NEW	0.020 mm to 0.060 mm (.0008 in to .0024 in)
SERVICE LIMIT	0.150 mm (.0059 in)
OIL SCRAPER RING	
NEW	0.010 mm to 0.180 mm (.0004 in to .0071 in)
SERVICE LIMIT	0.250 mm (.0098 in)

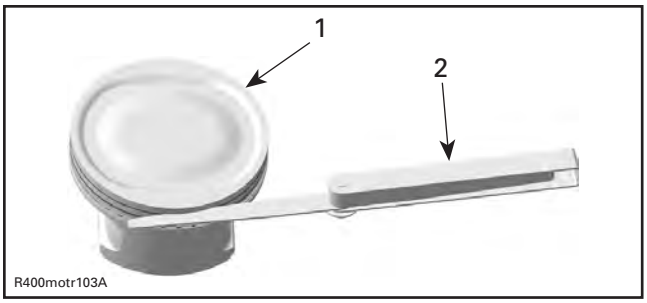

1. Piston
2. Feeler gauge

Ring End Gap

RING END GAP	
UPPER COMPRESSION RING	
NEW	0.10 mm to 0.30 mm (.004 in to .012 in)
SERVICE LIMIT	0.40 mm (.016 in)
LOWER COMPRESSION RING	
NEW	0.35 mm to 0.55 mm (.014 in to .022 in)
SERVICE LIMIT	0.85 mm (.033 in)
OIL SCRAPER RING	
NEW	0.20 mm to 0.70 mm (.008 in to .028 in)
SERVICE LIMIT	1.00 mm (.039 in)

To measure the ring end gap place the ring in the cylinder in the area of 8 mm to 16 mm (5/16 in to 5/8 in) from top of cylinder.

NOTE: In order to correctly position the ring in the cylinder, use piston as a pusher.

Using a feeler gauge, check ring end gap. Replace ring if gap exceeds specified tolerance.

Installing the Piston Rings

For installation, reverse the removal procedure. Pay attention to the following details.

NOTE: First install spring and then rings of oil scraper ring.

NOTE: Use a ring expander to prevent breakage during installation. The oil ring must be installed by hand.

Install the oil scraper ring first, then the lower compression ring with the word “N and TOP “ facing up, then the upper compression ring with the word “N and TOP“ facing up.

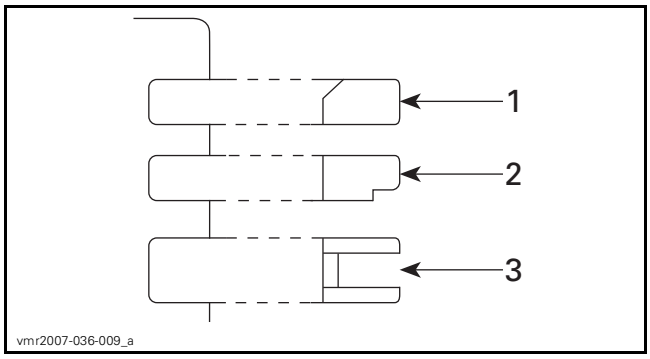

1. Upper compression ring
2. Lower compression ring
3. Oil scraper ring

NOTICE Ensure that top and second rings are not interchanged.

Check that rings rotate smoothly after installation.

Space the piston ring end gaps 120° apart and do not align the gaps with the piston pin bore or the thrust side axis.

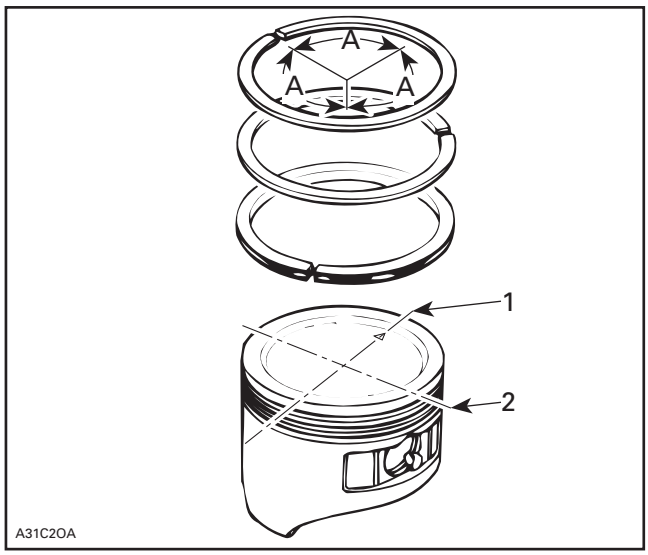

1. DO NOT align ring gap with piston thrust side axis
2. DO NOT align ring gap with piston pin bore axis
A. 120°

TIMING CHAIN

SERVICE TOOLS

Description	Part Number	Page
CAMSHAFT TIMING TOOL	529 036 268	154–155

SERVICE PRODUCTS

Description	Part Number	Page
LOCTITE 243 (BLUE)	293 800 060	155, 157

TIMING CHAIN

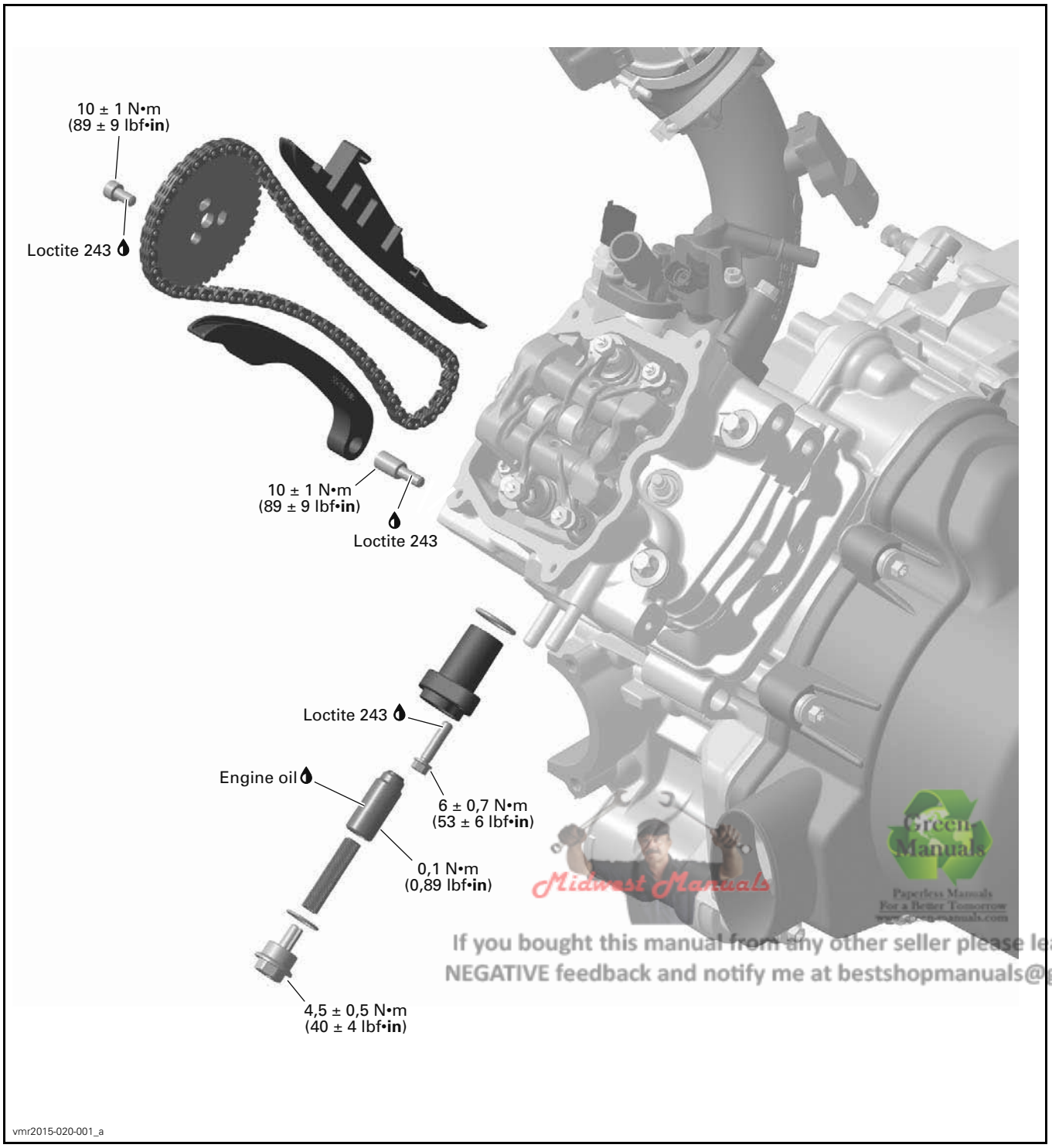

Midwest Manuals
If you bought this manual from any other seller please leave them
NEGATIVE feedback and notify me at bestshopmanuals@gmail.com

GENERAL

IMPORTANT: Note position of parts on disassembly. This may help to find the root cause of a problem. A component that is not replaced should be reinstalled in the same position as originally mounted.

TROUBLESHOOTING

UNUSUAL ENGINE NOISE OR VIBRATION

1. IMPROPER VALVE CLEARANCE ADJUSTMENT AND/OR WORN OUT ROCKER ARM(S)
   - *Readjust valve clearance and/or replace defective part(s), refer to TOP END subsection.*
2. DEFECTIVE CHAIN TENSIONER
   - *Replace chain tensioner.*
3. WORN OUT TIMING CHAIN GUIDE(S)
   - *Replace timing chain guide(s).*
4. STRETCHED TIMING CHAIN OR WORN OUT TIMING GEARS
   - *Replace timing chain and timing gears.*
5. LOOSE TIMING GEAR RETAINING SCREWS
   - *Retighten screws to recommended torque.*
6. INCORRECT CAMSHAFT TIMING
   - *Replace damaged components and readjust camshaft timing.*

ENGINE LACKS ACCELERATION OR POWER

1. INCORRECT CAMSHAFT TIMING
   - *Replace damaged components and readjust camshaft timing.*

PROCEDURES

TIMING CHAIN TENSIONER

Timing Chain Tensioner Location

The timing chain tensioner is located in the cylinder.

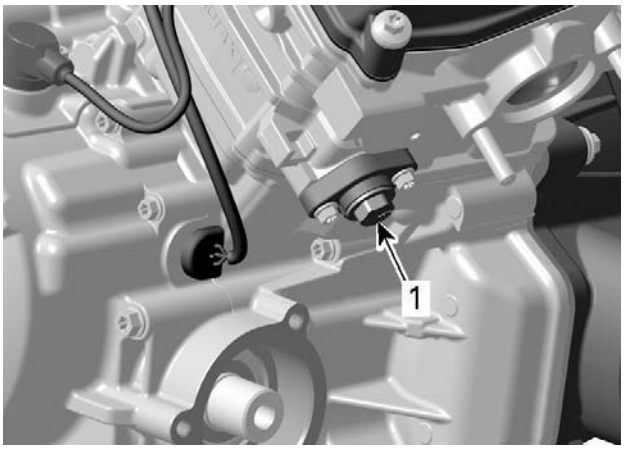

vmr2015-020-002_a

1. Timing chain tensioner

Timing Chain Tensioner Access

Refer to *BODY* subsection and remove the RH inner fender panel.

Timing Chain Tensioner Removal

1. Make sure the piston is set to TDC ignition. Refer to *CRANKSHAFT LOCKING PROCEDURE* in the *BOTTOM END* subsection.
2. Carefully unscrew chain tensioner plug and release spring tension.

CAUTION Tensioner is spring loaded.

3. Remove:
   – O-ring
   – Spring
   – Chain tensioner plunger.

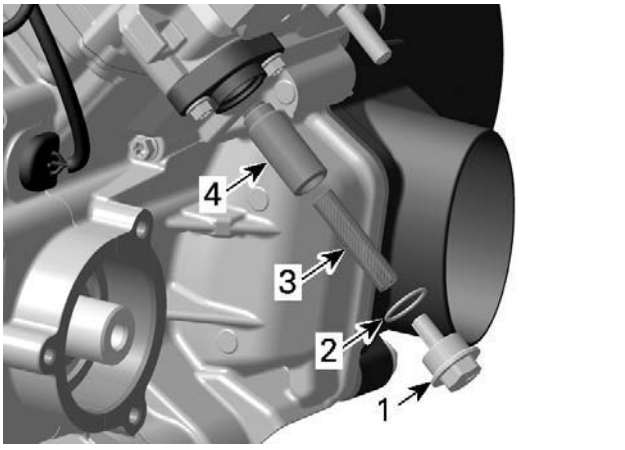

vmr2015-020-003_a

1. Chain tensioner plug
2. O-ring
3. Spring
4. Chain tensioner plunger

4. Remove:
   – Chain tensioner housing retaining screws

– Chain tensioner housing
– O-ring.

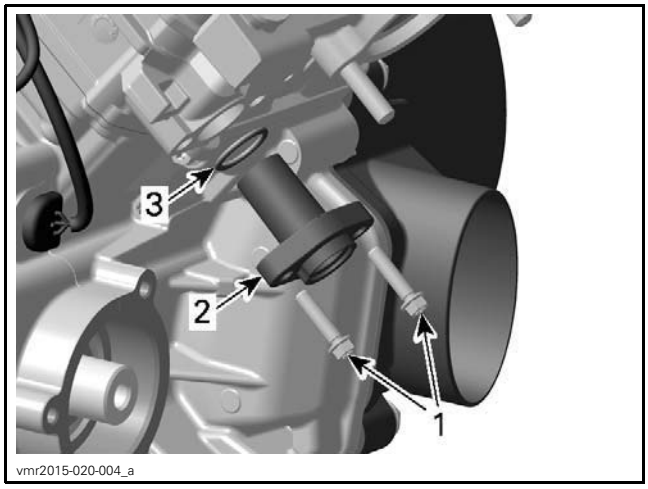

1. Screws
2. Chain tensioner housing
3. O-ring

Timing Chain Tensioner Inspection

Check the chain tensioner housing and plug for cracks or other damages. Replace if necessary.

Check chain tensioner plunger for free movement and/or scoring.

Check if O-rings are brittle, cracked or hard. Replace if necessary.

Check spring condition. Replace if bent, broken or worn.

Timing Chain Tensioner Installation

1. The installation is the reverse of the removal procedure. However, pay attention to the following.

NOTE: Before installing the chain tensioner make sure, that the camshaft timing gear can be moved back and forth.

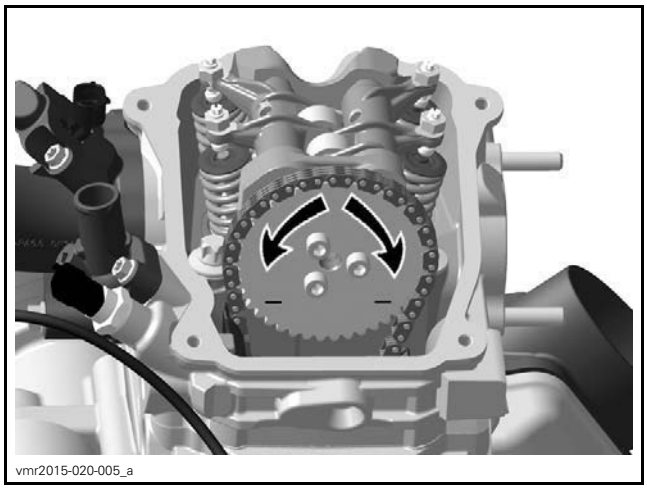

MOVE GEAR BACK AND FORTH

2. Apply engine oil on the plunger before installation.
3. Slightly turn the camshaft timing gear in order to get the timing chain play on the tensioner side.
4. Slightly screw the plunger in until the timing chain allows no more back and forth movement of the camshaft timing gear.
5. Screw the plunger in an additional 1/8 turn to reach the required specified torque.

TIMING CHAIN TENSIONER ADJUSTMENT (TORQUE)
0.1 N•m (.9 lbf•**in**)

NOTICE **Improper adjustment of the timing chain will lead to severe engine damage.**

6. Place the O-ring on plug.
7. Fit the spring on one side into the slot of the plug.

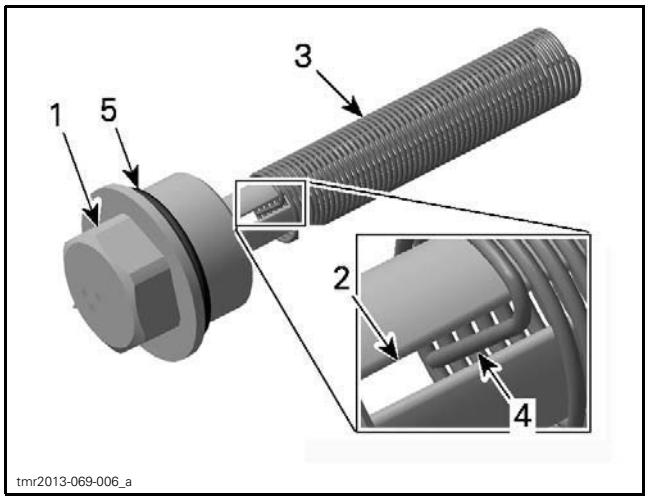

1. Plug
2. Slot
3. Spring
4. Spring end
5. O-Ring

Fit the spring on the other side into the plunger.

NOTE: Turn spring only clockwise in order to fit the spring end into the notch of the plunger to avoid loosening the plunger during spring installation. Do not preload the spring.

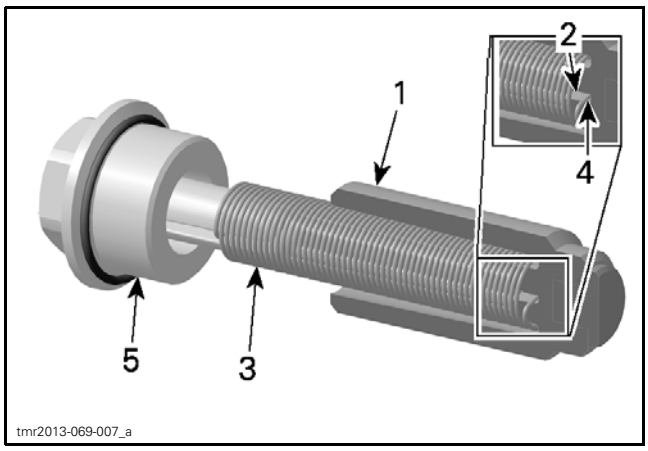

FOR CLARITY PARTS ARE REMOVED FROM CYLINDER
1. Plunger
2. Notch
3. Spring
4. Spring end
5. Plug with O-ring

8. Then compress the spring and screw the plug in.

NOTE: To avoid overstressed timing chain, the plug must engage into threads within the first full turn.

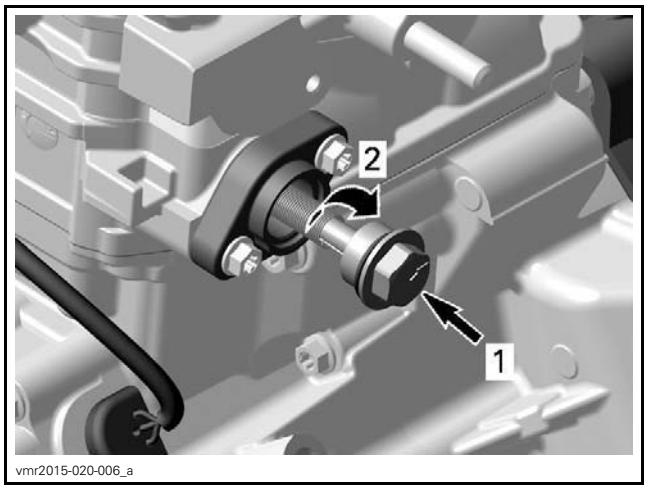

Step 1: Compress spring
Step 2: Screw in plug

9. Remove the crankshaft locking bolt and install all other removed parts.

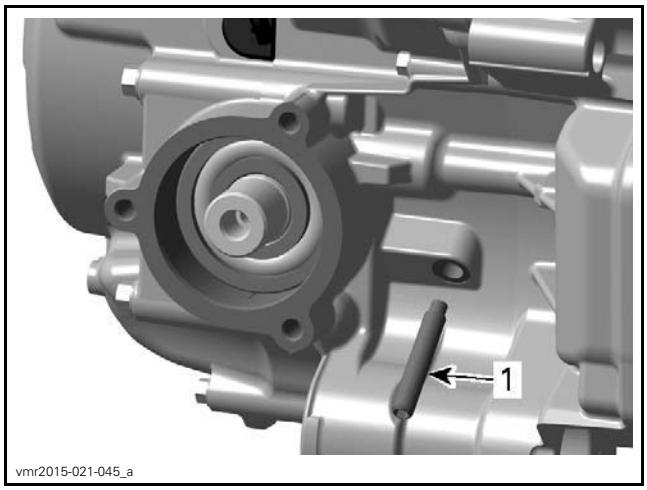

1. Crankshaft locking bolt

10. Finally, tighten the chain tensioner plug to specification.

CHAIN TENSIONER PLUG	
Tightening torque	4.5 N•m ± 0.5 N•m (40 lbf•**in** ± 4 lbf•**in**)

CAMSHAFT TIMING GEAR

Camshaft Timing Gear Removal

Remove the valve cover, refer to *TOP END* subsection.

Turn crankshaft to TDC ignition and lock crankshaft, refer to *CRANKSHAFT LOCKING PROCEDURE* in the *BOTTOM END* subsection.

Unscrew timing chain tensioner. Refer to *TIMING CHAIN TENSIONER* in this subsection.

Remove:
- Camshaft timing gear retaining screws
- Camshaft timing gear.

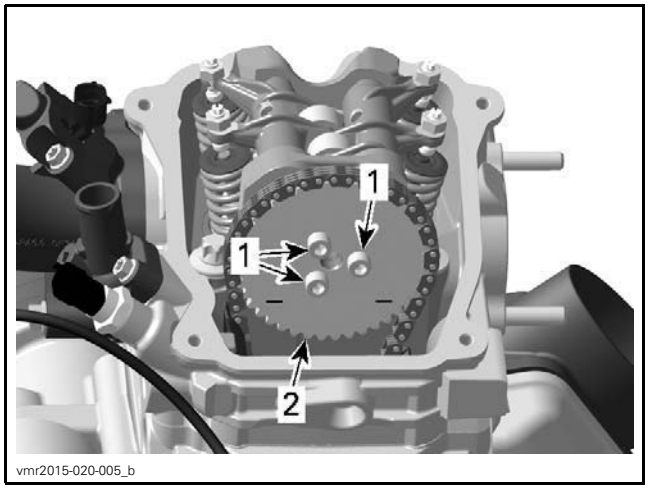

1. Camshaft timing gear retaining screws
2. Camshaft timing gear

NOTE: Secure timing chain with a piece of wire.

Camshaft Timing Gear Inspection

Check camshaft timing gear for wear or deterioration.

If gear is worn or damaged, replace it as a set with the timing chain.

For crankshaft gear, refer to *BOTTOM END* subsection, see *CRANKSHAFT*.

Camshaft Timing Gear Installation

The installation is the reverse of the removal procedure. However, pay attention to the following.

1. Clean mating surface and threads of camshaft prior installing camshaft timing gear.

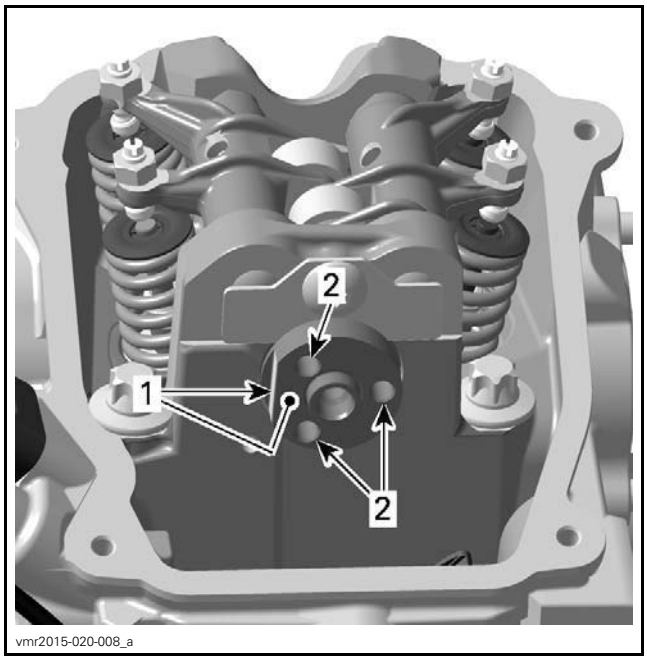

1. Mating surface on camshaft
2. Threads for camshaft screws

2. Crankshaft must be locked at TDC position before installing the timing chain, refer to *CRANKSHAFT LOCKING PROCEDURE* in the *BOTTOM END* subsection.
3. Install the camshaft timing tool on the cylinder head.

REQUIRED TOOL	
CAMSHAFT TIMING TOOL (P/N 529 036 268)	

NOTE: Align tube of camshaft adjustment tool properly with machined radius on cylinder head.

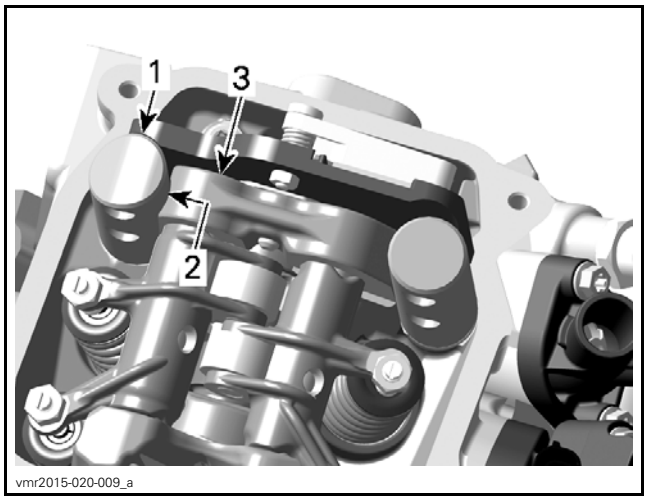

CAMSHAFT TIMING TOOL INSTALLED
1. Tube (camshaft adjustment tool)
2. Machined radius (camshaft adjustment tool)
3. Cylinder head

4. Set camshaft to TDC ignition position by aligning the camshaft flange flat spot with the tool lever.

NOTE: In addition, to ensure proper camshaft timing, press camshaft adjustment tool lever downwards.

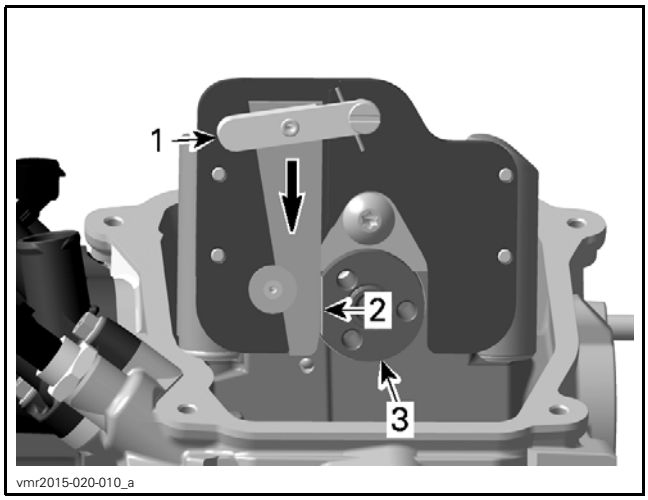

PRESS TOOL LEVER DOWN
1. *Lever*
2. *Flat spot*
3. *Camshaft*

NOTICE **Crankshaft and camshaft must be locked at TDC ignition position to place camshaft timing gear and timing chain in the proper position.**

5. Place camshaft timing gear along with the timing chain on the camshaft.

NOTE: The printed marks on the camshaft timing gear must be parallel to the cylinder head base.

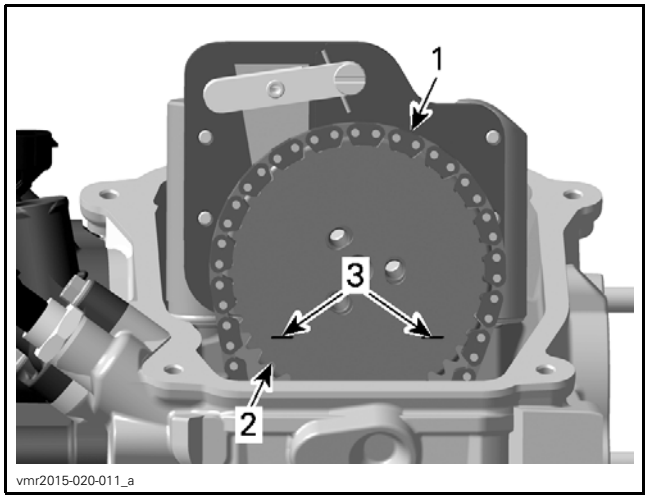

1. *Timing chain*
2. *Camshaft timing gear*
3. *Printed marks on camshaft timing gear*

6. Install and adjust timing chain tensioner, refer to *TIMING CHAIN TENSIONER* in this subsection.

7. Install and tighten camshaft timing gear retaining screws to specified torque.

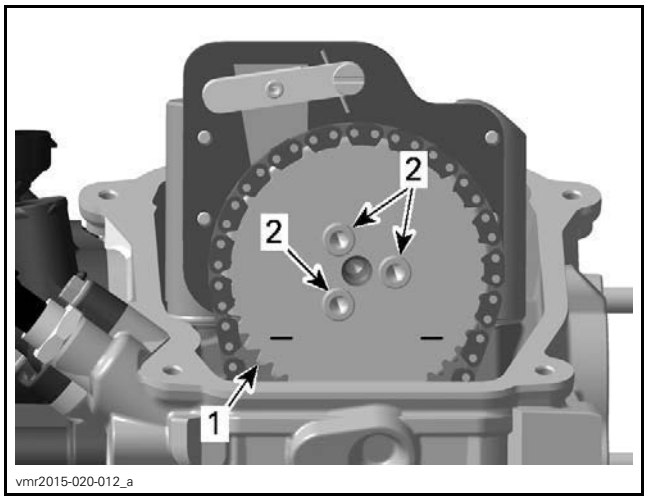

1. *Camshaft timing gear*
2. *Timing gear retaining screws*

CAMSHAFT TIMING GEAR RETAINING SCREWS	
Service product	LOCTITE 243 (BLUE) (P/N 293 800 060)
Tightening torque	10 N•m ± 1 N•m (89 lbf•**in** ± 9 lbf•**in**)

8. Remove the CAMSHAFT TIMING TOOL (P/N 529 036 268).

TIMING CHAIN

Timing Chain Removal

Remove engine from vehicle, refer to *ENGINE REMOVAL/INSTALLATION* subsection.

Refer to *MAGNETO AND STARTER SYSTEM* subsection and remove following parts:
– Magneto cover
– Rotor.

Refer to *TOP END* subsection and remove the valve cover.

Refer to *GEARBOX AND 4X4 COUPLING UNIT* subsection and remove the output shaft.

NOTE: Mark the operating direction of the timing chain and check for excessive radial play before removal. Refer to *TIMING CHAIN INSPECTION*.

Refer to following procedures in this subsection and remove following parts:
– Chain tensioner
– Camshaft timing gear.

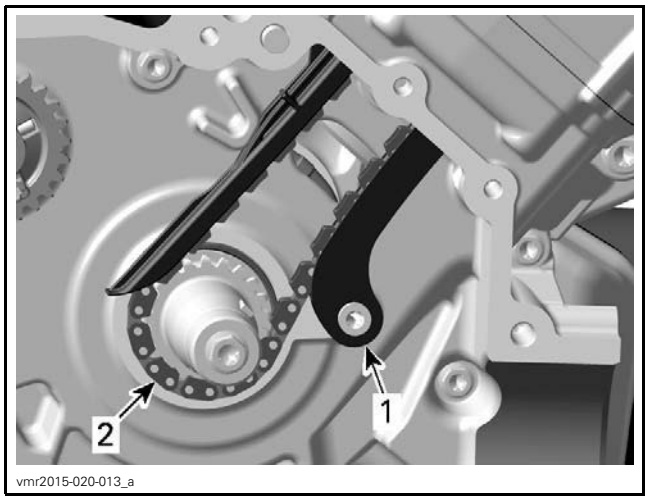

1. Timing chain guide (tensioner side)
2. Timing chain

Carefully pull the timing chain downwards and sideways, then out of the crankcase.

Timing Chain Inspection

Check timing chain on camshaft timing gear for excessive radial play.

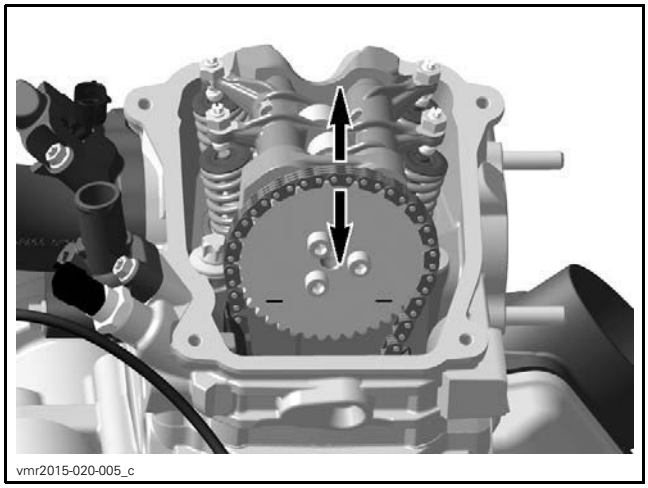

CHECKING TIMING CHAIN RADIAL PLAY

Check chain condition for wear and teeth condition.

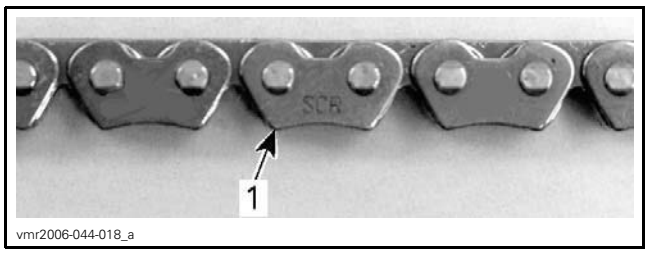

1. Timing chain

If chain is excessively worn or damaged, replace it as a set (camshaft timing gear and timing chain).

Check timing chain guides for wear, cracks or deforming. Replace as required.

NOTE: Check also the timing chain guide (tensioner side).

Timing Chain Installation

The installation is the reverse of the removal procedure. However, pay attention to the following.

Install timing chain with camshaft timing gear.

NOTE: Ensure to carry out proper valve timing, refer to *CAMSHAFT TIMING GEAR* in this subsection.

NOTICE **Improper valve timing will damage engine components.**

TIMING CHAIN GUIDE (TENSIONER SIDE)

Timing Chain Guide Removal (Tensioner Side)

Refer to procedures in this subsection and remove:

– Camshaft timing gear
– Timing chain.

Remove:

– Bearing screw
– Timing chain guide (tensioner side).

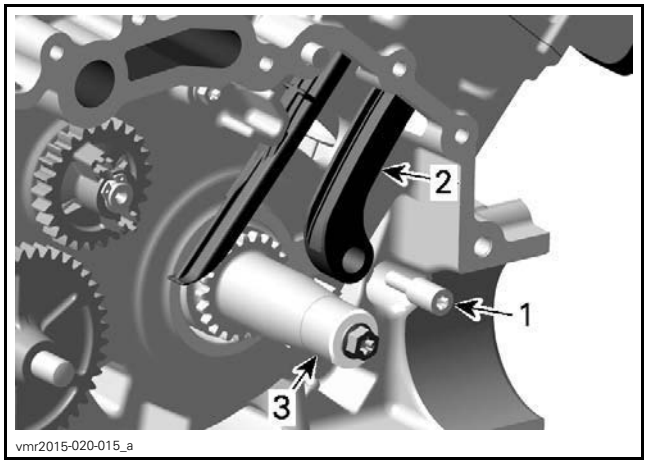

1. Bearing screw
2. Timing chain guide (tensioner side)
3. Crankshaft MAG side

Timing Chain Guide Inspection (Tensioner Side)

Check timing chain guide for wear, cracks or deforming. Replace if necessary.

Timing Chain Guide Installation (Tensioner Side)

The installation is the reverse of the removal procedure.

TIMING CHAIN GUIDE BEARING SCREW	
Service product	LOCTITE 243 (BLUE) (P/N 293 800 060)
Tightening torque	10 N•m ± 1 N•m (89 lbf•**in** ± 9 lbf•**in**)

TIMING CHAIN

SERVICE TOOLS

Description	Part Number	Page
CAMSHAFT TIMING TOOL	529 036 268	117
CRANKSHAFT TDC POSITION TOOL	529 036 201	117, 121

SERVICE PRODUCTS

Description	Part Number	Page
LOCTITE 243 (BLUE)	293 800 060	118, 123

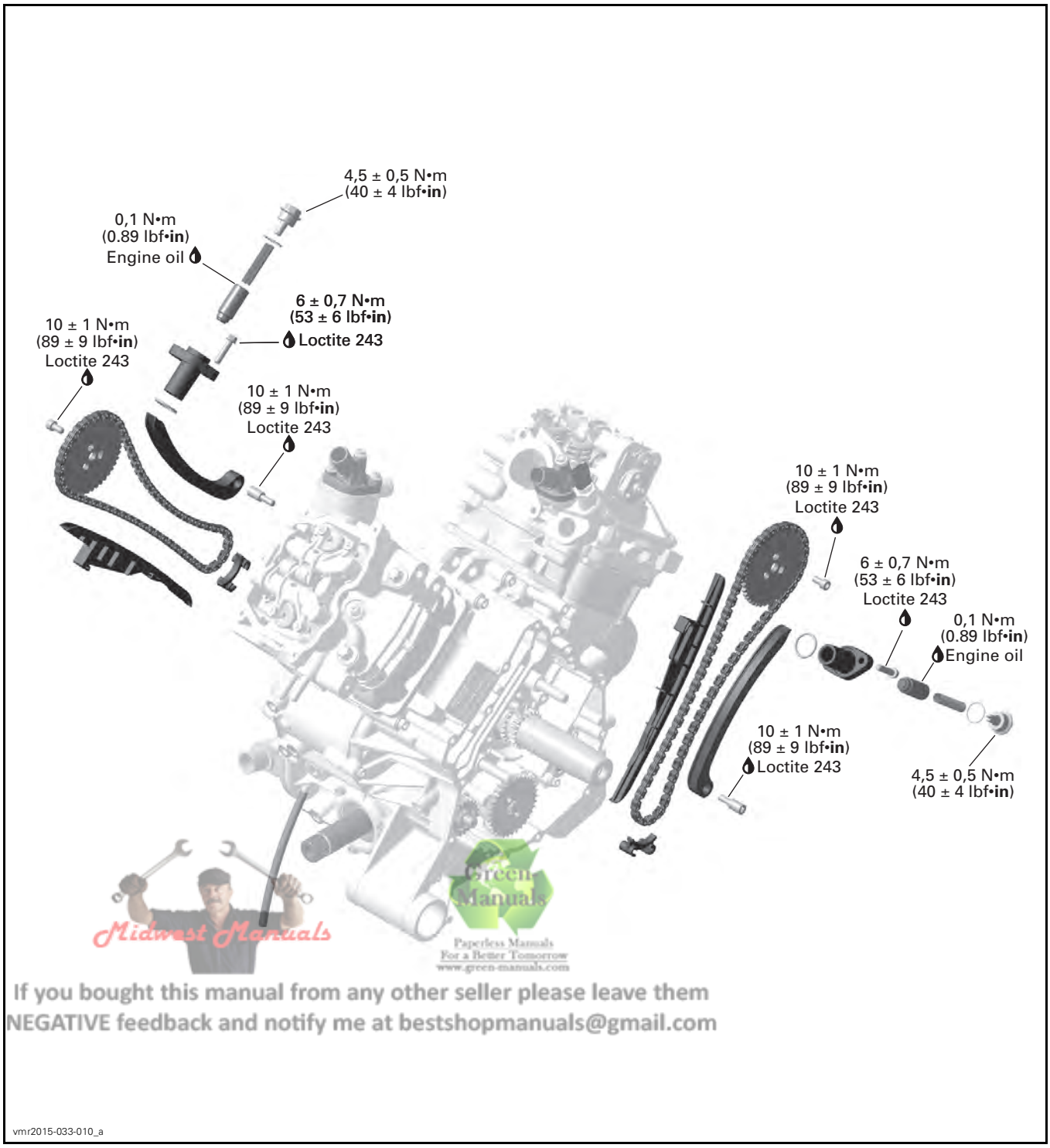

Midwest Manuals
Green Manuals
Paperless Manuals
For a Better Tomorrow
www.green-manuals.com
If you bought this manual from any other seller please leave them
NEGATIVE feedback and notify me at bestshopmanuals@gmail.com

vmr2015-033-010_a

TROUBLESHOOTING

UNUSUAL ENGINE NOISE OR VIBRATION

1. IMPROPER VALVE CLEARANCE ADJUSTMENT AND/OR WORN OUT ROCKER ARM(S)
   - *Readjust valve clearance and/or replace defective part(s), refer to TOP END subsection.*
2. DEFECTIVE CHAIN TENSIONER
   - *Replace chain tensioner.*
3. WORN OUT TIMING CHAIN GUIDE(S)
   - *Replace timing chain guide(s).*
4. STRETCHED TIMING CHAIN OR WORN OUT TIMING GEARS
   - *Replace timing chain and timing gears.*
5. LOOSE TIMING GEAR RETAINING SCREWS
   - *Retighten screws to recommended torque.*
6. INCORRECT CAMSHAFT TIMING
   - *Replace damaged components and readjust camshaft timing.*

ENGINE LACKS ACCELERATION OR POWER

1. INCORRECT CAMSHAFT TIMING
   - *Replace damaged components and readjust camshaft timing.*

PROCEDURES

TIMING CHAIN TENSIONERS

Timing Chain Tensioner Location

The timing chain tensioner is located on the back of each cylinder head.

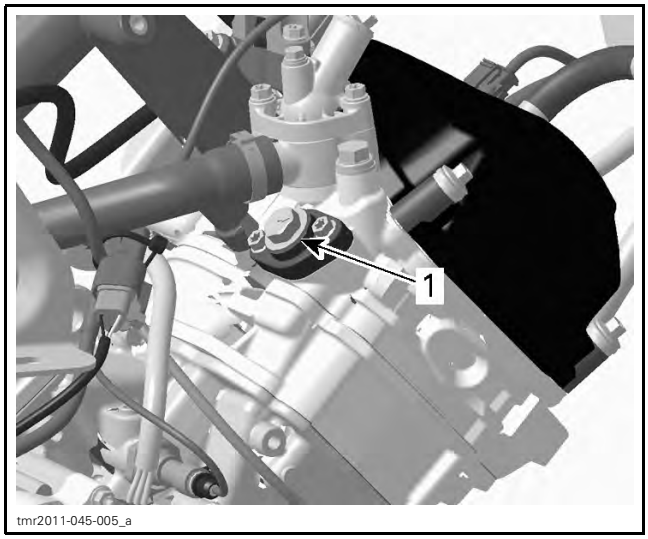

1. Timing chain tensioner

Timing Chain Tensioner Access

For the front cylinder chain tensioner, refer to *BODY* subsection and remove the following:

– Seat
– RH side panel and extension.

For the rear cylinder chain tensioner, refer to *BODY* subsection and remove the following:

– Seat
– LH side panel and extension.

For the rear cylinder chain tensioner, also remove the outer exhaust system heat shield. Refer to *EXHAUST SYSTEM* subsection.

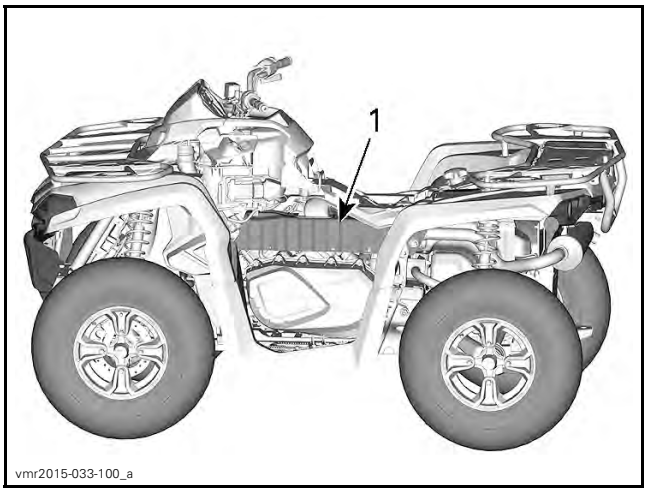

1. Heat shield to remove

Removing the Timing Chain Tensioner

1. Make sure the applicable piston is set to TDC ignition. Refer to *CAMSHAFT TIMING GEARS* in this subsection.
2. Carefully remove chain tensioner screw plug and release spring tension.

CAUTION Tensioner is spring loaded.

3. Remove:
   – O-ring
   – Spring
   – Chain tensioner plunger.

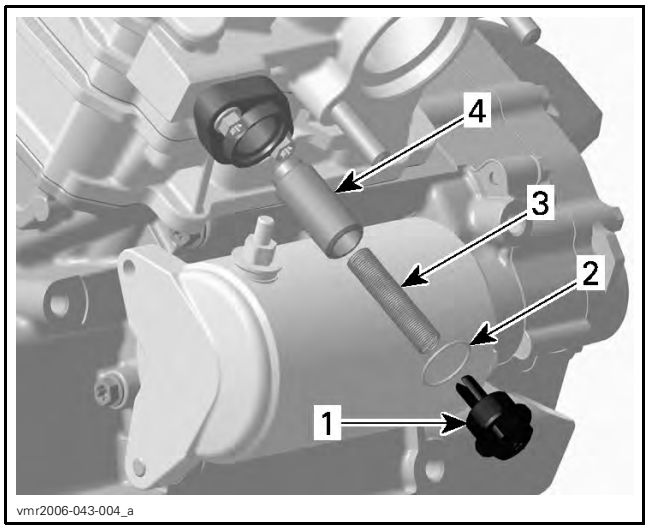

1. *Chain tensioner screw plug*
2. *O-ring*
3. *Spring*
4. *Chain tensioner plunger*

4. Remove:
   – Chain tensioner housing retaining screws
   – Chain tensioner housing
   – O-ring.

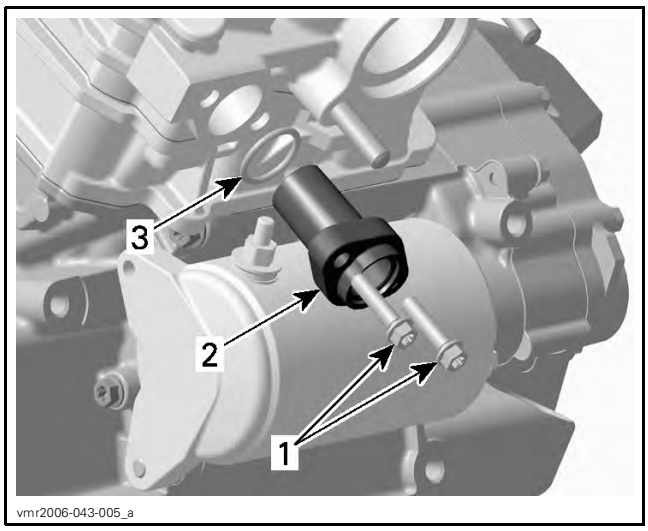

1. *Screws*
2. *Chain tensioner housing*
3. *O-ring*

Inspecting the Timing Chain Tensioner

Check chain tensioner housing and screw plug for cracks or other damages. Replace if necessary.

Check chain tensioner plunger for freedom of movement and/or scoring.

Ensure O-rings are not brittle, cracked or hard. Replace if necessary.

Check spring condition. Replace if bent, broken or worn.

Installing the Timing Chain Tensioner

Reverse the removal procedure. However, pay attention to the following.

NOTE: Before installing the chain tensioner, make sure the camshaft timing gear can be moved back and forth.

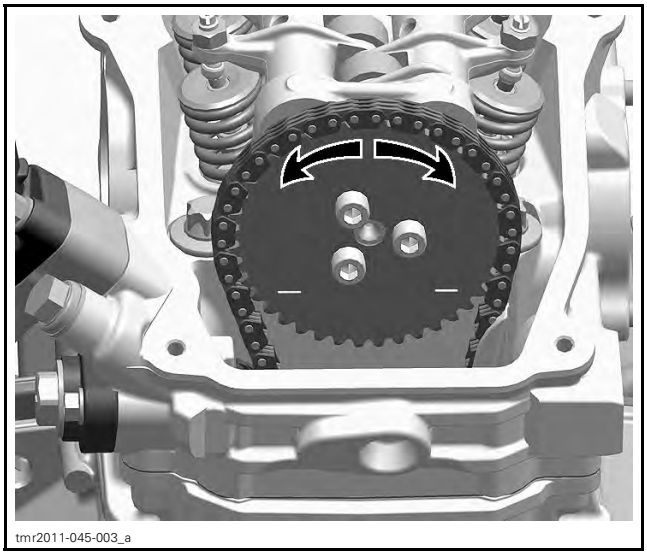

MOVE GEAR BACK AND FORTH

1. Apply engine oil on the chain tensioner plunger before installation.
2. Slightly turn the camshaft timing gear in order to move the timing chain excess play to the tensioner side.
3. Slightly screw in the plunger until the timing chain does not allow back and forth movement of the camshaft timing gear.
4. Screw the plunger in an additional 1/8 turn to obtain the required specified torque.

TIMING CHAIN TENSIONER ADJUSTMENT (TIGHTENING TORQUE)
0.1 N•m (.9 lbf•**in**)

NOTICE **Improper adjustment of the timing chain will lead to severe engine damage.**

5. Insert the spring on one side into the slot of the chain tensioner screw plug, and on the other side, into the plunger.

NOTE: Turn spring only clockwise in order to fit the spring end into the notch of the plunger to avoid loosening the plunger during spring installation. Do not preload the spring.

NOTE: Do not forget to place the O-ring on chain tensioner screw plug.

6. Then compress the spring and screw the plug in.

NOTE: To avoid overstressing the timing chain, the chain tensioner screw plug must engage in the tensioner bore threads within the first full turn.

7. Remove locking tool and install all other removed parts.
8. Tighten the chain tensioner screw plug.

CAMSHAFT TIMING GEARS

Removing the Camshaft Timing Gear

1. Remove valve cover, refer to *TOP END* subsection.
2. Set applicable piston to TDC ignition and lock magneto flywheel. Refer to *CAMSHAFT TIMING* in this subsection.
3. Remove timing chain tensioner. Refer to *TIMING CHAIN TENSIONERS* in this subsection.
4. Remove camshaft timing gear retaining screws.

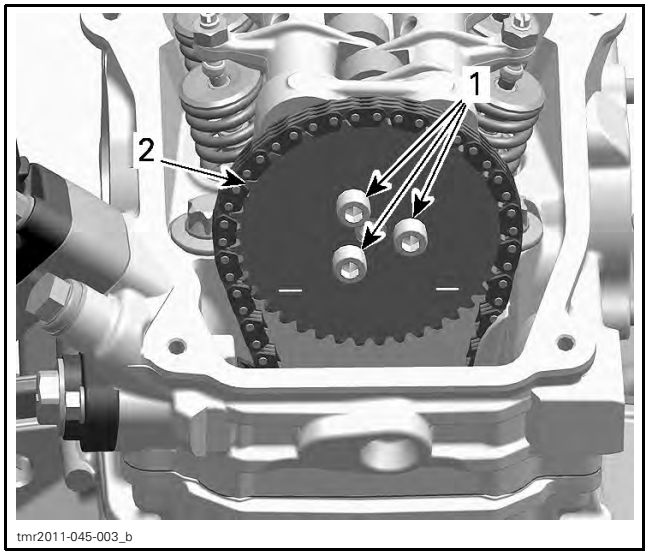

TYPICAL
1. Camshaft timing gear retaining screws
2. Camshaft timing gear

5. Remove the camshaft timing gear.

NOTE: Secure timing chain with a piece of wire.

Inspecting the Camshaft Timing Gear

Check camshaft timing gear for wear or deterioration.

If timing gear is worn or damaged, replace it as a set with the timing chain.

For crankshaft gear inspection, refer to *CRANKSHAFT* in the *BOTTOM END* subsection.

Installing the Camshaft Timing Gear

For installation, reverse the removal procedure. Pay attention to the following details.

1. Clean camshaft mating surface and threads prior to installing camshaft timing gear.

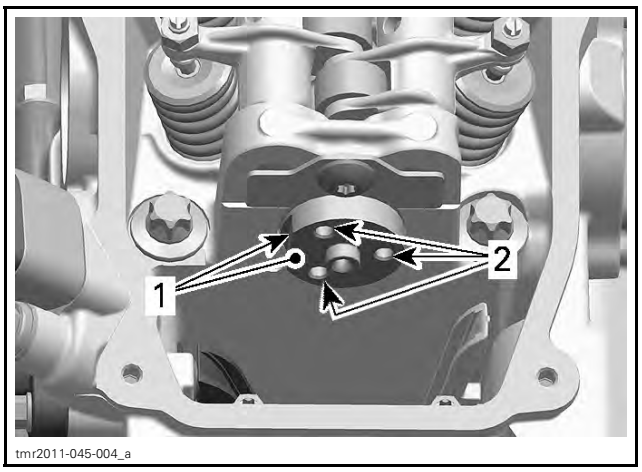

1. Camshaft mating surface
2. Camshaft screw threads

2. Set applicable piston to TDC ignition position and install the crankshaft position tool, refer to *CAMSHAFT TIMING* in this subsection.

REQUIRED TOOL	
CRANKSHAFT TDC POSITION TOOL (P/N 529 036 201)	

3. Install camshaft timing tool on the cylinder head.

REQUIRED TOOL	
CAMSHAFT TIMING TOOL (P/N 529 036 268)	

NOTE: Properly align tube of camshaft timing tool with machined radius on cylinder head.

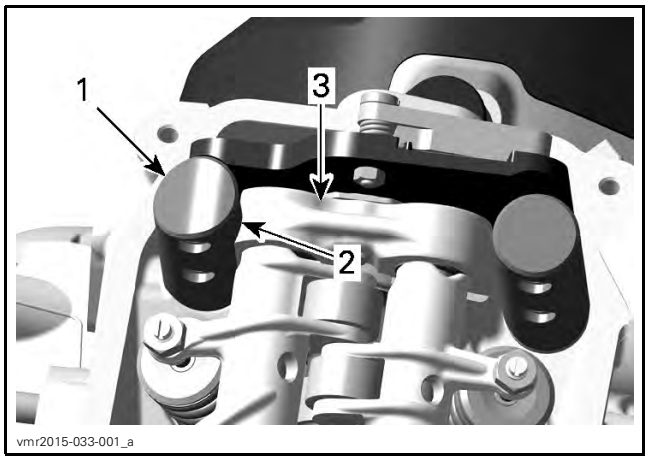

CAMSHAFT TIMING TOOL INSTALLED
1. *Tube (camshaft timing tool)*
2. *Machined radius (camshaft timing tool)*
3. *Cylinder head*

4. Set camshaft to TDC ignition position by aligning the flat portion on the camshaft flange with the tool lever.

NOTE: In addition, to ensure proper camshaft timing, press camshaft timing tool lever downwards.

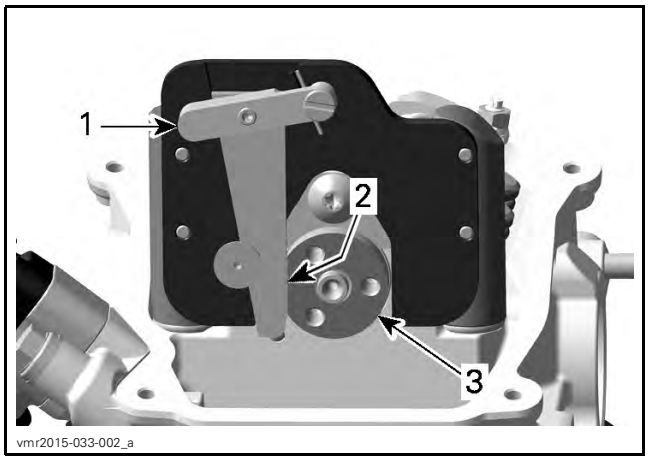

PRESS TOOL LEVER DOWN
1. *Lever*
2. *Flat portion*
3. *Camshaft*

NOTICE **Crankshaft and camshaft must be locked at TDC ignition position to place camshaft timing gear and timing chain in the proper position.**

5. Place camshaft timing gear and timing chain on the camshaft.

NOTE: The printed marks on the camshaft timing gear must be parallel to the cylinder head base.

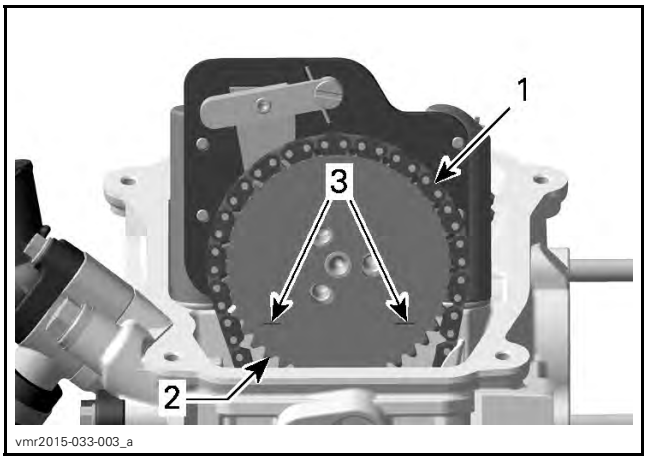

1. *Timing chain*
2. *Camshaft timing gear*
3. *Printed marks on camshaft timing gear*

6. Install and adjust timing chain tensioner, refer to *TIMING CHAIN TENSIONER* in this subsection.
7. Install and tighten camshaft timing gear retaining screws to specified torque.

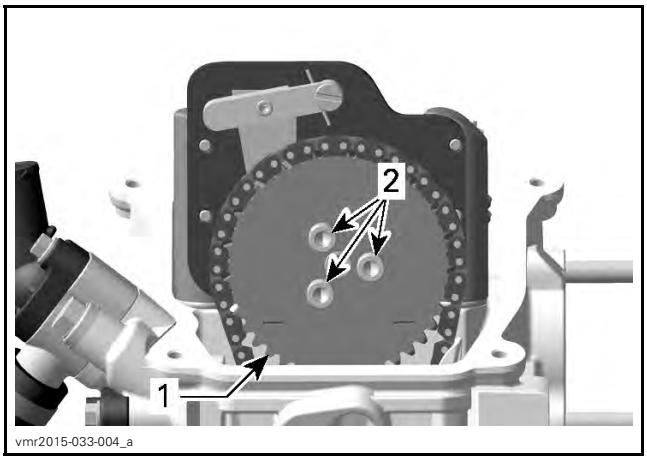

1. *Camshaft timing gear*
2. *Timing gear retaining screws*

SERVICE PRODUCT	
Camshaft timing gear retaining screws	LOCTITE 243 (BLUE) (P/N 293 800 060)

TIGHTENING TORQUE	
Camshaft timing gear retaining screws	10 N•m ± 1 N•m (89 lbf•**in** ± 9 lbf•**in**)

8. Remove the camshaft timing tool.

Camshaft Timing

NOTE: If a piston (cylinder 1 or 2) is set to TDC ignition, the camshaft timing gear of the opposite cylinder must be in the following position.

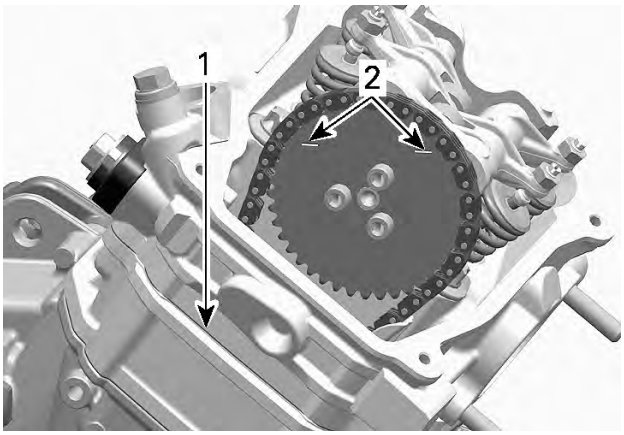

tmr2011-045-011_a

TYPICAL
1. *Cylinder head base*
2. *Marks on timing gear of the opposite cylinder*

Camshaft Timing Piston No. 2 (rear)

1. Remove spark plugs of both cylinders.
2. Remove valve covers of both cylinders.
3. Remove the screw plug and O-ring from magneto cover.

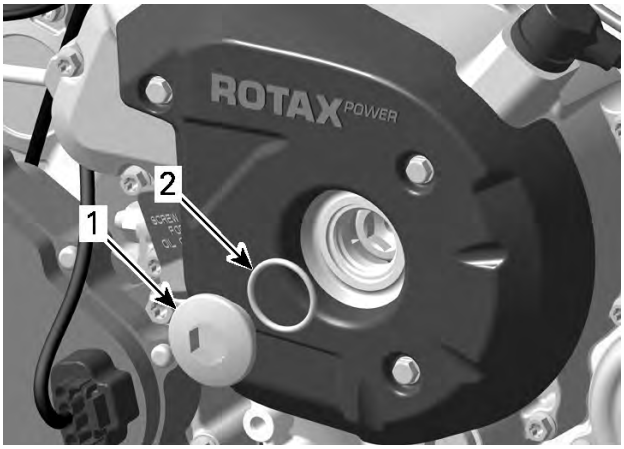

vmr2015-033-005_a

1. *Screw plug*
2. *O-ring*

4. Remove the crankshaft position sensor (CPS).

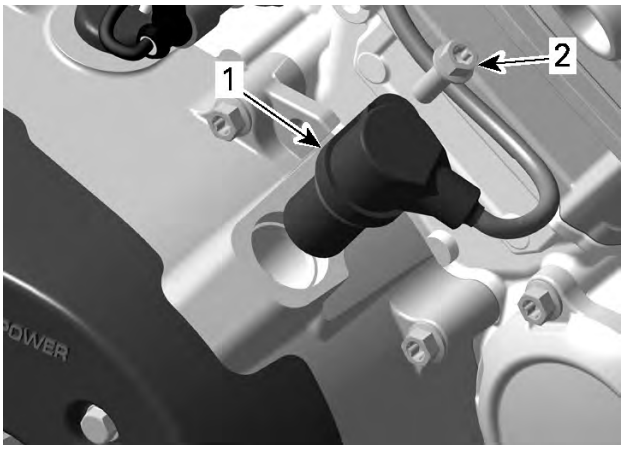

vmr2015-033-006_a

1. *CPS*
2. *Screw*

5. Set rear piston no. 2 to **TDC ignition** by turning the crankshaft clockwise.

REQUIRED TOOL
Allen key 14 mm

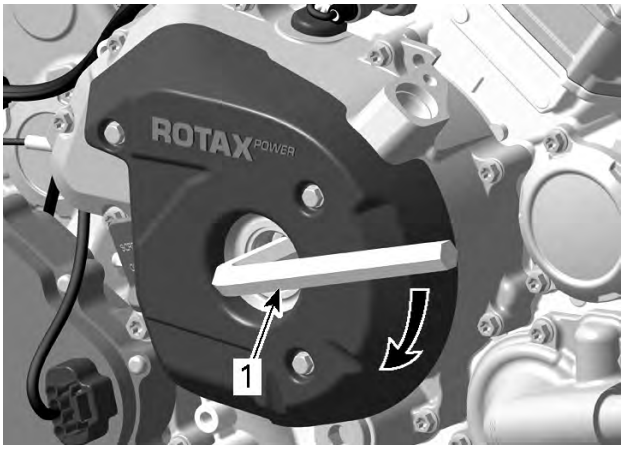

vmr2015-033-007_a

TURN CRANKSHAFT CLOCKWISE TO PISTON NO. 2 TDC
1. *Allen key 14 mm*

5.1 The rear piston is at TDC when it's index mark on the magneto flywheel is aligned with the notch in the magneto cover.

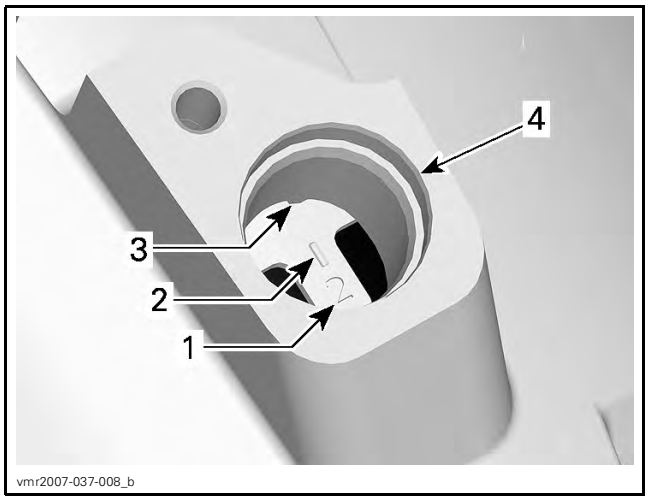

PISTON NO. 2 AT TDC
1. *Piston no. 2 identifier*
2. *Index mark on magneto flywheel*
3. *Notch on magneto cover*
4. *CPS bore in magneto cover*

5.2 Confirm printed marks on the camshaft timing gear are parallel with cylinder head base, in the lowest position. In this position the piston is set to **TDC ignition**.

NOTE: If marks on camshaft timing gear are not as specified, turn crankshaft 360°.

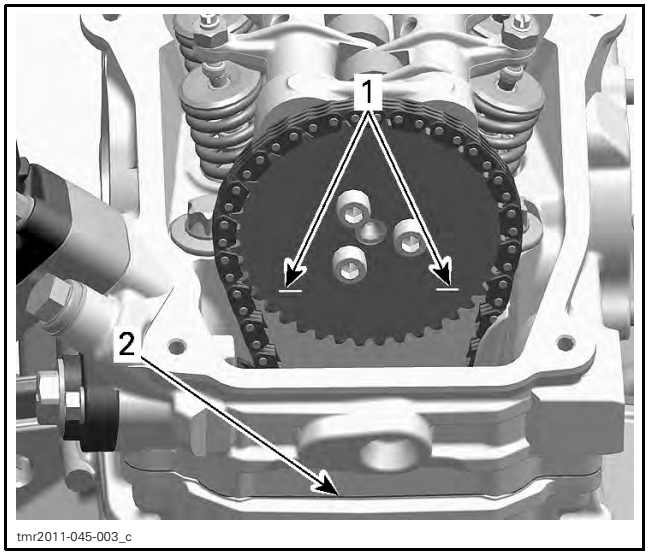

TYPICAL - PISTON AT TDC IGNITION
1. *Printed marks on camshaft timing gear*
2. *Cylinder head base*

6. Install the crankshaft TDC position tool to lock crankshaft in position. Refer to *CRANKSHAFT TDC POSITION TOOL* in this subsection.

Camshaft Timing Piston No. 1 (front)

1. Set rear piston no. 2 to **TDC ignition**, see *CAMSHAFT TIMING PISTON NO. 2 (REAR)* in this subsection.
2. Remove crankshaft TDC position tool.
3. To set front piston no. 1 to **TDC ignition** turn crankshaft 280° **counterclockwise**.

REQUIRED TOOL
Allen key 14 mm

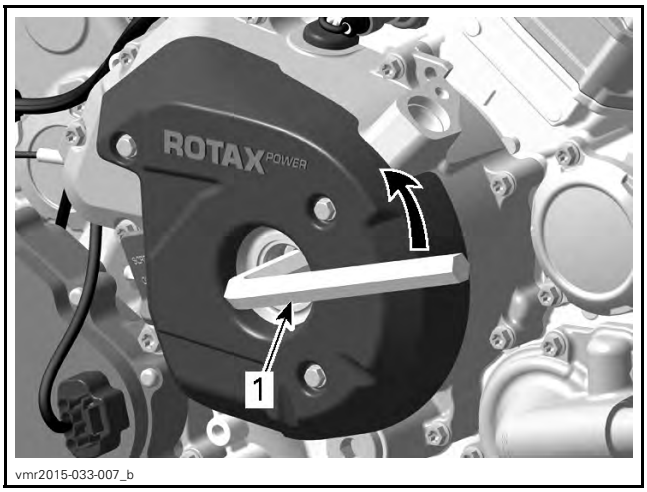

TURN COUNTERCLOCKWISE 280° TO NUMBER 1 PISTON TDC
1. *Allen key 14 mm*

3.1 The front piston is at TDC when it's index mark on the magneto flywheel is aligned with the notch in the magneto cover.

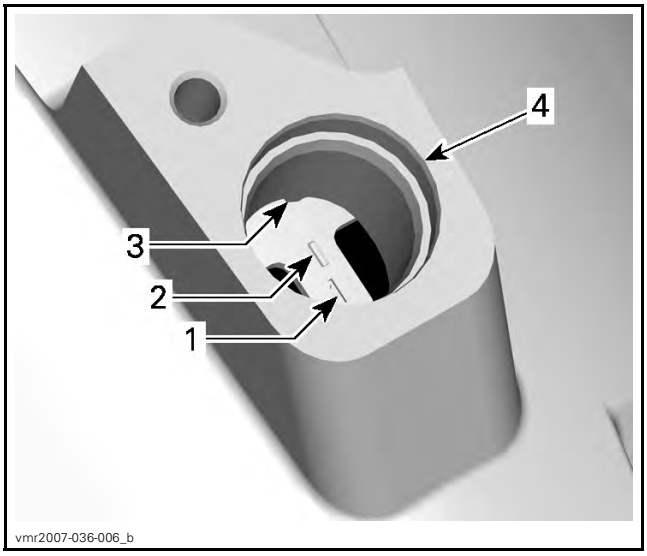

CYLINDER 1 AT TDC
1. *Number 1 piston identifier*
2. *Index mark "1" on magneto flywheel*
3. *Notch on magneto cover*
4. *Crankshaft position sensor bore*

3.2 Confirm printed marks on the camshaft timing gear are parallel with cylinder head base, in the lowest position. In this position the piston is set to **TDC ignition**.

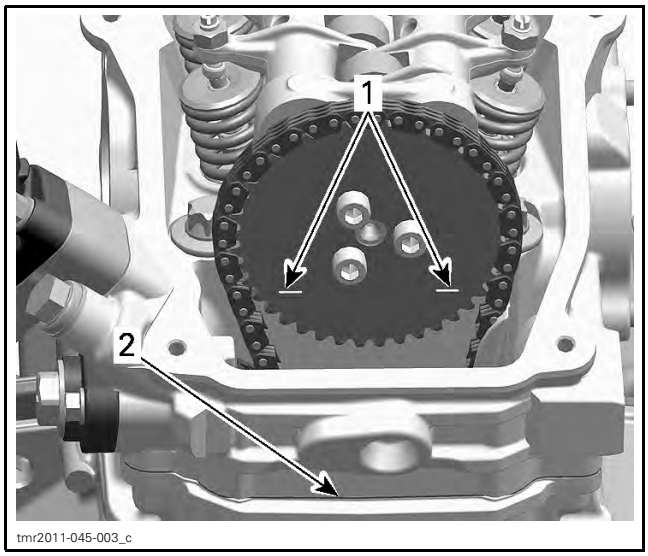

TYPICAL - PISTON AT TDC IGNITION
1. *Printed marks on camshaft timing gear*
2. *Cylinder head base*

4. Insert the crankshaft TDC position tool to lock crankshaft in position. Refer to *CRANKSHAFT TDC POSITION TOOL INSTALLATION* in this subsection.

Crankshaft TDC Position Tool Installation

NOTICE **Never use crankshaft TDC position tool to remove or tighten drive CVT screw or rotor retaining screw. Damage to the teeth of the trigger wheel on the rotor will occur.**

Install tool in magneto cover CPS bore.

REQUIRED TOOL	
CRANKSHAFT TDC POSITION TOOL (P/N 529 036 201)	

NOTE: Make sure to match the teeth on the crankshaft TDC position tool with the magneto rotor.

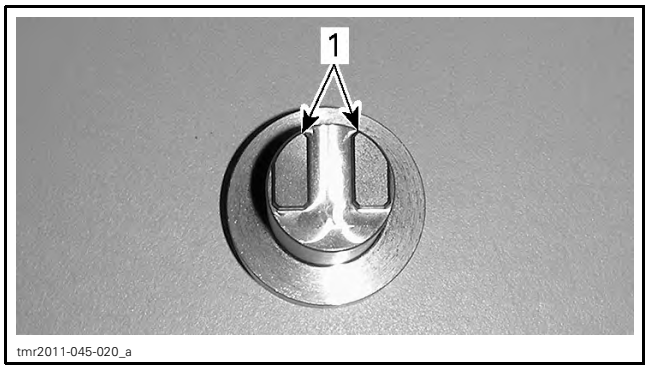

1. *Crankshaft TDC position tool teeth (end view)*

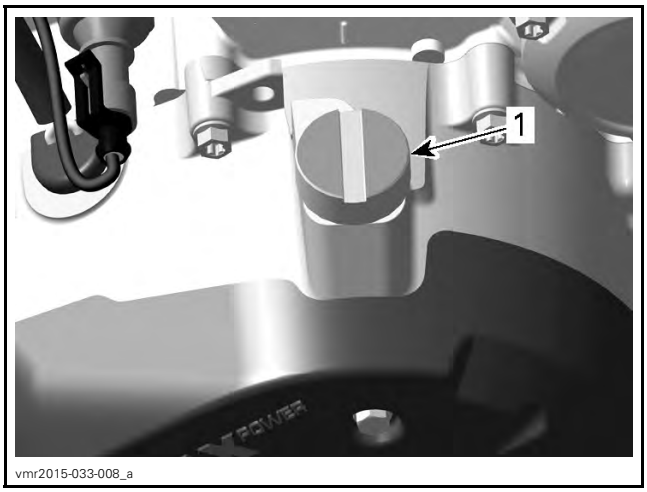

MAGNETO COVER
1. *Crankshaft TDC position tool installed in CPS bore*

NOTICE **Tool must be fully inserted.**

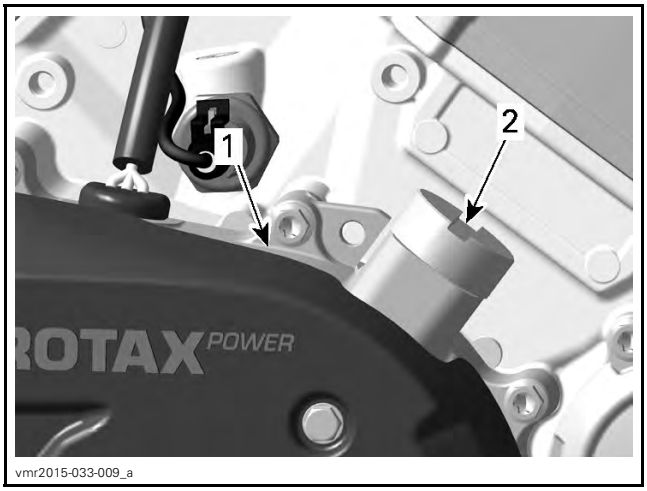

1. *Magneto cover*
2. *TDC position tool*

TIMING CHAIN

Timing Chain Location

The engine is equipped with two timing chains.
- MAG side timing chain is located behind the magneto cover.
- PTO side timing chain is located behind the PTO cover.

Removing the Timing Chain (MAG Side)

1. Refer to *MAGNETO AND STARTER* subsection and remove following parts:
   - Magneto cover
   - Rotor
   - Sprag clutch gear.

2. Refer to *TOP END* subsection and remove the following part:
   – Valve cover.
3. Refer to following procedures in this subsection and remove following parts:
   – Chain tensioner
   – Camshaft timing gear.
4. Remove timing chain guide (tensioner side) and lower timing chain guide.

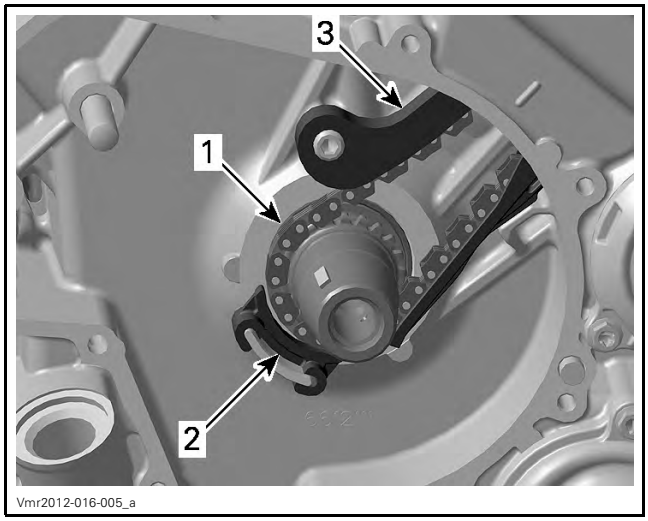

1. Timing chain
2. Lower timing chain guide
3. Timing chain guide (tensioner side)

NOTE: Mark the operating direction of the timing chain and check for excessive radial play before removal. Refer to *TIMING CHAIN INSPECTION*.

5. Carefully pull the timing chain downwards and sideways, then out of the crankcase.

Removing the Timing Chain (PTO Side)

1. Refer to *BOTTOM END* subsection and remove following parts:
   – PTO cover
   – Breather gear
   – Intermediate gear.
2. Refer to *TOP END* subsection and remove following part:
   – Valve cover.
3. Refer to applicable procedures in this subsection and remove following parts:
   – Chain tensioner
   – Camshaft timing gear.
4. Remove timing chain guide (tensioner side) and lower timing chain guide.

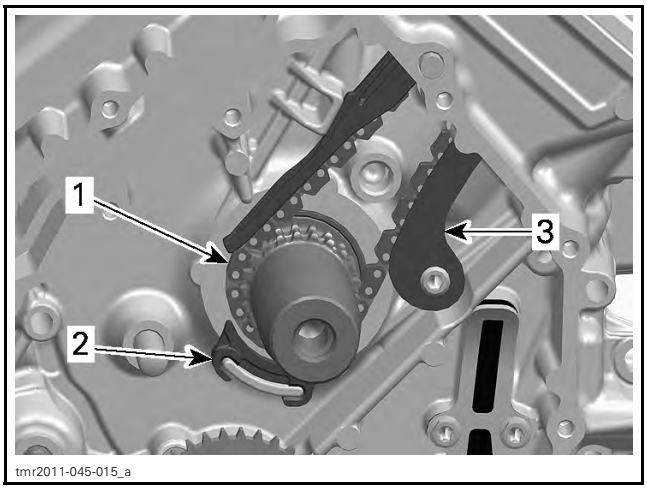

1. Timing chain
2. Lower timing chain guide
3. Timing chain guide (tensioner side)

NOTE: Mark the operating direction of the timing chain and check for excessive radial play before removal. Refer to *TIMING CHAIN INSPECTION*.

5. Carefully pull the timing chain sideward and down from the crankcase.

Inspecting the Timing Chain

Inspection is the same for both timing chains.

Check timing chain on camshaft timing gear for excessive radial play.

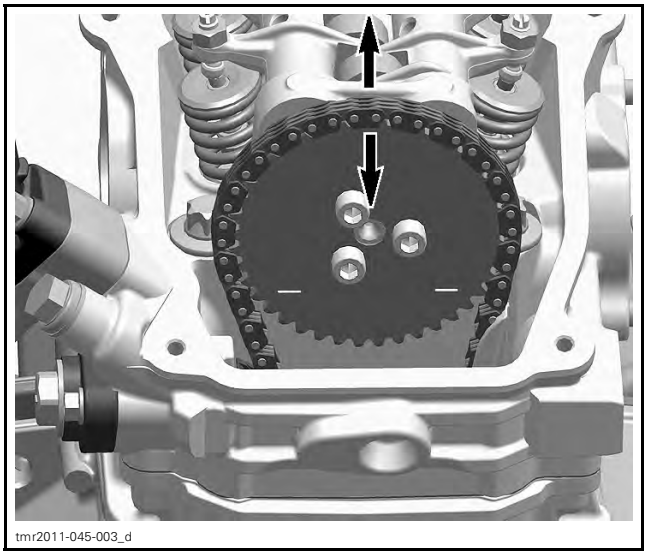

CHECKING TIMING CHAIN RADIAL PLAY

Check chain condition for wear and teeth condition.

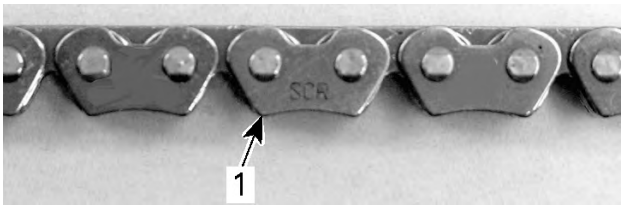

vmr2006-044-018_a

1. Timing chain

If chain is excessively worn or damaged, replace it as a set (camshaft timing gear and timing chain).

Check timing chain guides for wear, cracks or deformation. Replace as required.

NOTE: Check also the timing chain guide (tensioner side).

Installing the Timing Chain

The installation is essentially the reverse of the removal procedure however, pay attention to the following details.

NOTE: Installation is the same for both timing chains.

Install timing chain with camshaft timing gear.

NOTE: Ensure to carry out proper valve timing, refer to *CAMSHAFT TIMING GEARS* in this subsection.

NOTICE **Improper valve timing will damage engine components.**

TIMING CHAIN GUIDE (TENSIONER SIDE)

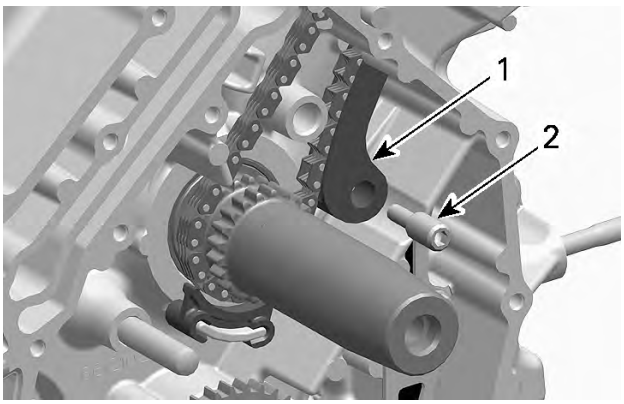

tmr2011-045-019_a

1. Timing chain guide (tensioner side)
2. Bearing screw

Removing the Timing Chain Guide (Tensioner Side)

Refer to *TIMING CHAIN* in this subsection.

Inspecting the Timing Chain Guide (Tensioner Side)

Check timing chain guide for wear, cracks or deformation. Replace if necessary.

Installing the Timing Chain Guide (Tensioner Side)

The installation is the reverse of the removal procedure.

SERVICE PRODUCT	
Timing chain guide bearing screw	LOCTITE 243 (BLUE) (P/N 293 800 060)

TIGHTENING TORQUE	
Timing chain guide bearing screw	10 N•m ± 1 N•m (89 lbf•**in** ± 9 lbf•**in**)

TIMING CHAIN

SERVICE TOOLS

Description	Part Number	Page
CAMSHAFT TIMING TOOL	529 036 268	117
CRANKSHAFT TDC POSITION TOOL	529 036 201	117, 121

SERVICE PRODUCTS

Description	Part Number	Page
LOCTITE 243 (BLUE)	293 800 060	118, 123

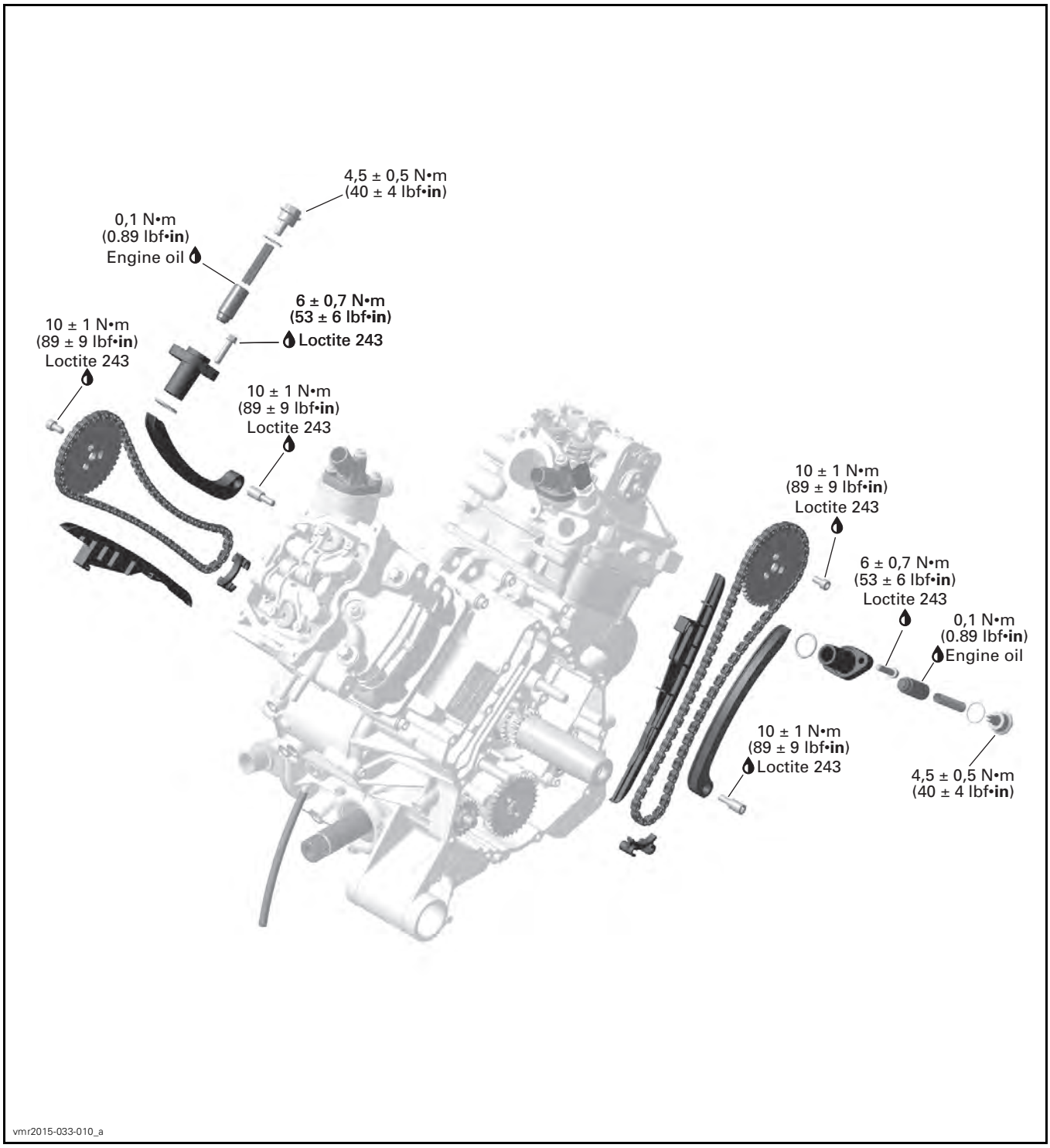
4,5 ± 0,5 N•m
(40 ± 4 lbf•in)
0,1 N•m
(0.89 lbf•in)
Engine oil
6 ± 0,7 N•m
(53 ± 6 lbf•in)
Loctite 243
10 ± 1 N•m
(89 ± 9 lbf•in)
Loctite 243
10 ± 1 N•m
(89 ± 9 lbf•in)
Loctite 243
10 ± 1 N•m
(89 ± 9 lbf•in)
Loctite 243
6 ± 0,7 N•m
(53 ± 6 lbf•in)
Loctite 243
0,1 N•m
(0.89 lbf•in)
Engine oil
10 ± 1 N•m
(89 ± 9 lbf•in)
Loctite 243
4,5 ± 0,5 N•m
(40 ± 4 lbf•in)
vmr2015-033-010_a

TROUBLESHOOTING

UNUSUAL ENGINE NOISE OR VIBRATION

1. IMPROPER VALVE CLEARANCE ADJUSTMENT AND/OR WORN OUT ROCKER ARM(S)
   - *Readjust valve clearance and/or replace defective part(s), refer to TOP END subsection.*
2. DEFECTIVE CHAIN TENSIONER
   - *Replace chain tensioner.*
3. WORN OUT TIMING CHAIN GUIDE(S)
   - *Replace timing chain guide(s).*
4. STRETCHED TIMING CHAIN OR WORN OUT TIMING GEARS
   - *Replace timing chain and timing gears.*
5. LOOSE TIMING GEAR RETAINING SCREWS
   - *Retighten screws to recommended torque.*
6. INCORRECT CAMSHAFT TIMING
   - *Replace damaged components and readjust camshaft timing.*

ENGINE LACKS ACCELERATION OR POWER

1. INCORRECT CAMSHAFT TIMING
   - *Replace damaged components and readjust camshaft timing.*

PROCEDURES

TIMING CHAIN TENSIONERS

Timing Chain Tensioner Location

The timing chain tensioner is located on the back of each cylinder head.

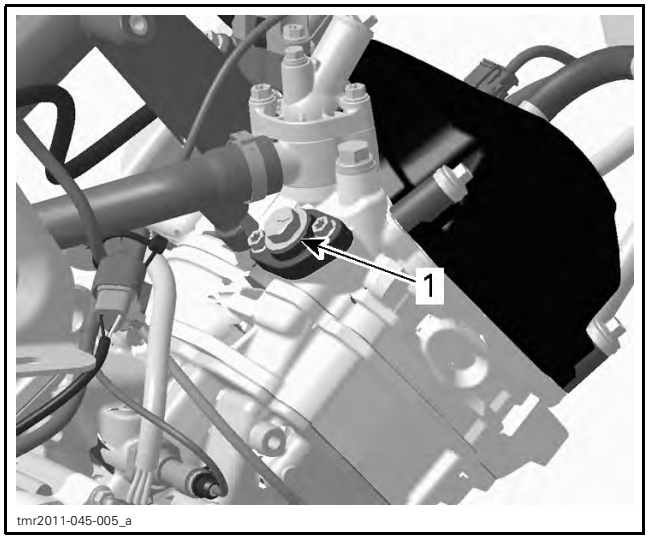

1. Timing chain tensioner

Timing Chain Tensioner Access

For the front cylinder chain tensioner, refer to *BODY* subsection and remove the following:

– Seat
– RH side panel and extension.

For the rear cylinder chain tensioner, refer to *BODY* subsection and remove the following:

– Seat
– LH side panel and extension.

For the rear cylinder chain tensioner, also remove the outer exhaust system heat shield. Refer to *EXHAUST SYSTEM* subsection.

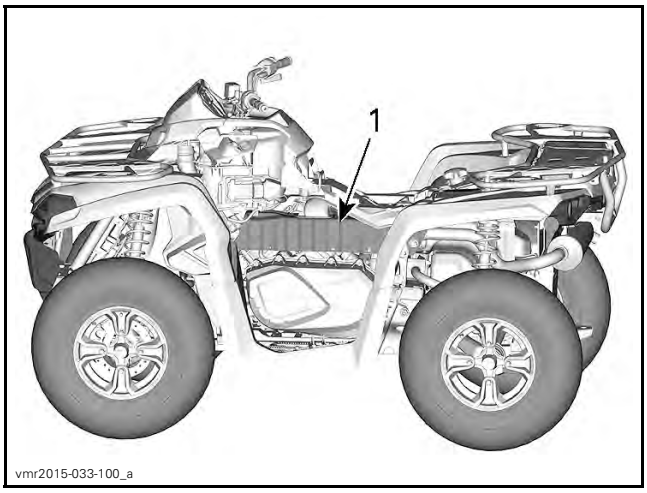

1. Heat shield to remove

Removing the Timing Chain Tensioner

1. Make sure the applicable piston is set to TDC ignition. Refer to *CAMSHAFT TIMING GEARS* in this subsection.
2. Carefully remove chain tensioner screw plug and release spring tension.

CAUTION Tensioner is spring loaded.

3. Remove:
   – O-ring
   – Spring
   – Chain tensioner plunger.

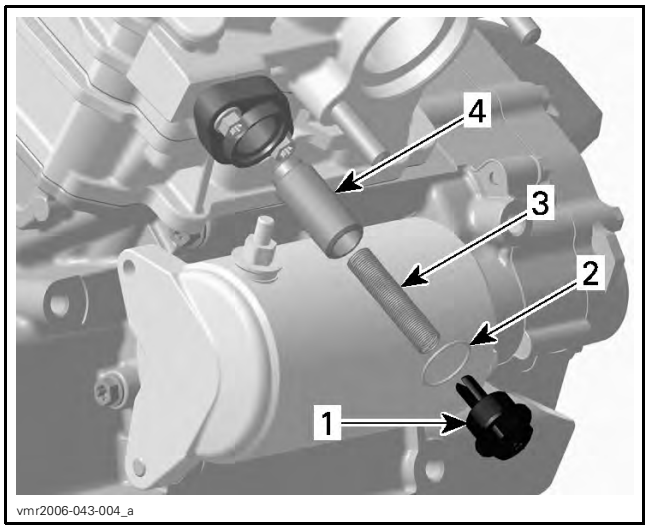

1. *Chain tensioner screw plug*
2. *O-ring*
3. *Spring*
4. *Chain tensioner plunger*

4. Remove:
   – Chain tensioner housing retaining screws
   – Chain tensioner housing
   – O-ring.

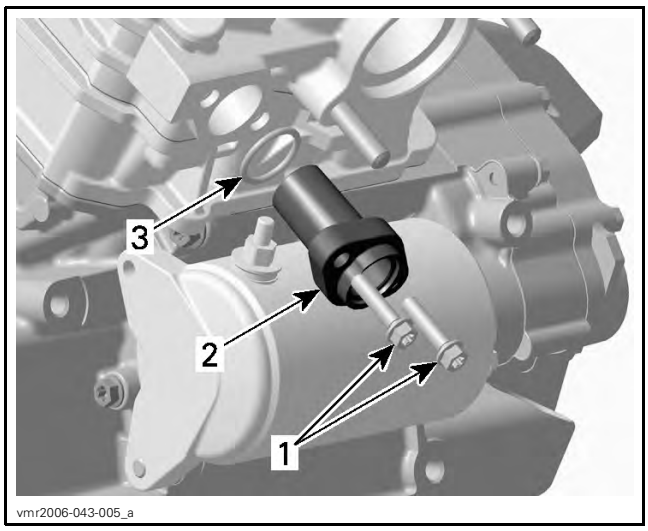

1. *Screws*
2. *Chain tensioner housing*
3. *O-ring*

Inspecting the Timing Chain Tensioner

Check chain tensioner housing and screw plug for cracks or other damages. Replace if necessary.

Check chain tensioner plunger for freedom of movement and/or scoring.

Ensure O-rings are not brittle, cracked or hard. Replace if necessary.

Check spring condition. Replace if bent, broken or worn.

Installing the Timing Chain Tensioner

Reverse the removal procedure. However, pay attention to the following.

NOTE: Before installing the chain tensioner, make sure the camshaft timing gear can be moved back and forth.

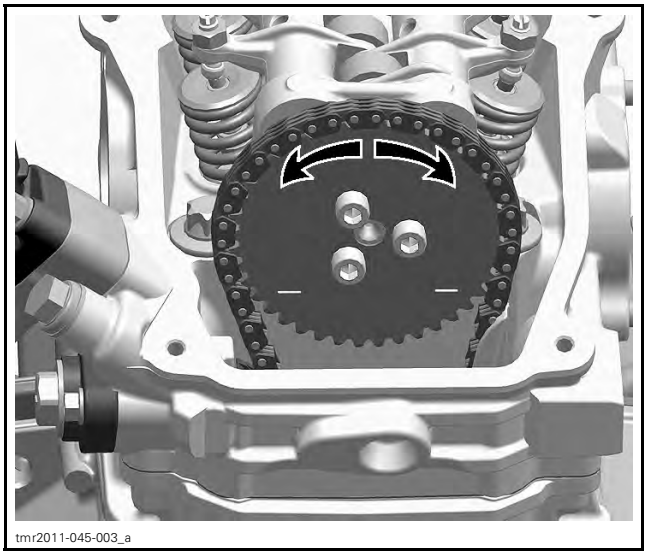

MOVE GEAR BACK AND FORTH

1. Apply engine oil on the chain tensioner plunger before installation.
2. Slightly turn the camshaft timing gear in order to move the timing chain excess play to the tensioner side.
3. Slightly screw in the plunger until the timing chain does not allow back and forth movement of the camshaft timing gear.
4. Screw the plunger in an additional 1/8 turn to obtain the required specified torque.

TIMING CHAIN TENSIONER ADJUSTMENT (TIGHTENING TORQUE)
0.1 N•m (.9 lbf•**in**)

NOTICE **Improper adjustment of the timing chain will lead to severe engine damage.**

5. Insert the spring on one side into the slot of the chain tensioner screw plug, and on the other side, into the plunger.

NOTE: Turn spring only clockwise in order to fit the spring end into the notch of the plunger to avoid loosening the plunger during spring installation. Do not preload the spring.

NOTE: Do not forget to place the O-ring on chain tensioner screw plug.

6. Then compress the spring and screw the plug in.

NOTE: To avoid overstressing the timing chain, the chain tensioner screw plug must engage in the tensioner bore threads within the first full turn.

7. Remove locking tool and install all other removed parts.
8. Tighten the chain tensioner screw plug.

CAMSHAFT TIMING GEARS

Removing the Camshaft Timing Gear

1. Remove valve cover, refer to *TOP END* subsection.
2. Set applicable piston to TDC ignition and lock magneto flywheel. Refer to *CAMSHAFT TIMING* in this subsection.
3. Remove timing chain tensioner. Refer to *TIMING CHAIN TENSIONERS* in this subsection.
4. Remove camshaft timing gear retaining screws.

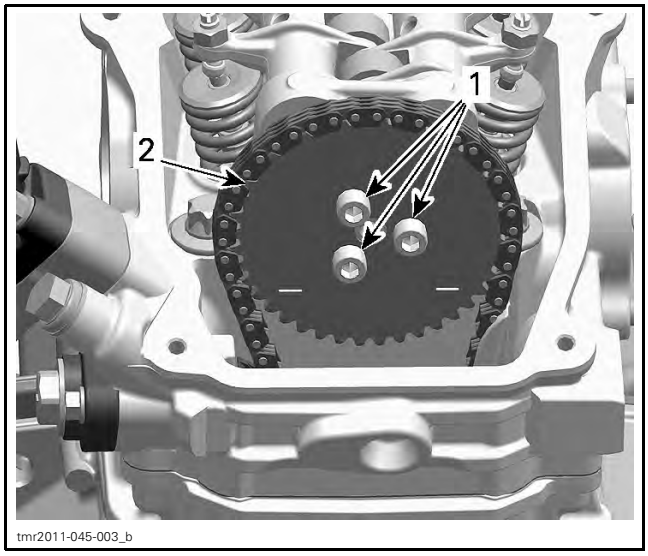

TYPICAL
1. Camshaft timing gear retaining screws
2. Camshaft timing gear

5. Remove the camshaft timing gear.

NOTE: Secure timing chain with a piece of wire.

Inspecting the Camshaft Timing Gear

Check camshaft timing gear for wear or deterioration.

If timing gear is worn or damaged, replace it as a set with the timing chain.

For crankshaft gear inspection, refer to *CRANKSHAFT* in the *BOTTOM END* subsection.

Installing the Camshaft Timing Gear

For installation, reverse the removal procedure. Pay attention to the following details.

1. Clean camshaft mating surface and threads prior to installing camshaft timing gear.

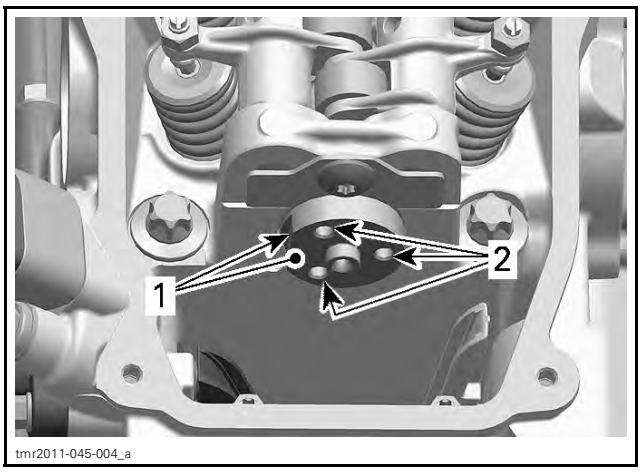

1. Camshaft mating surface
2. Camshaft screw threads

2. Set applicable piston to TDC ignition position and install the crankshaft position tool, refer to *CAMSHAFT TIMING* in this subsection.

REQUIRED TOOL	
CRANKSHAFT TDC POSITION TOOL (P/N 529 036 201)	

3. Install camshaft timing tool on the cylinder head.

REQUIRED TOOL	
CAMSHAFT TIMING TOOL (P/N 529 036 268)	

NOTE: Properly align tube of camshaft timing tool with machined radius on cylinder head.

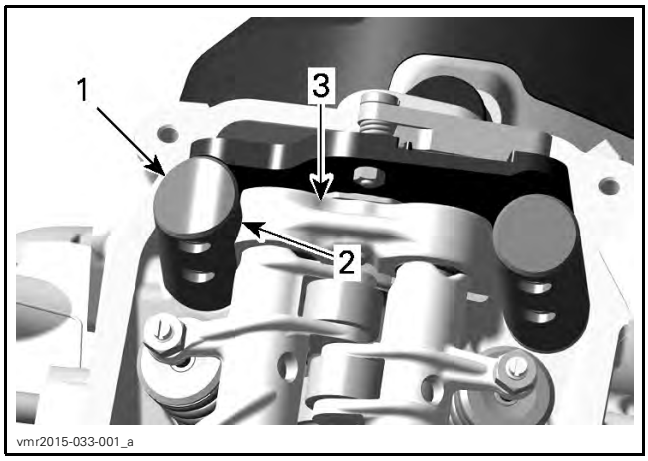

CAMSHAFT TIMING TOOL INSTALLED
1. *Tube (camshaft timing tool)*
2. *Machined radius (camshaft timing tool)*
3. *Cylinder head*

4. Set camshaft to TDC ignition position by aligning the flat portion on the camshaft flange with the tool lever.

NOTE: In addition, to ensure proper camshaft timing, press camshaft timing tool lever downwards.

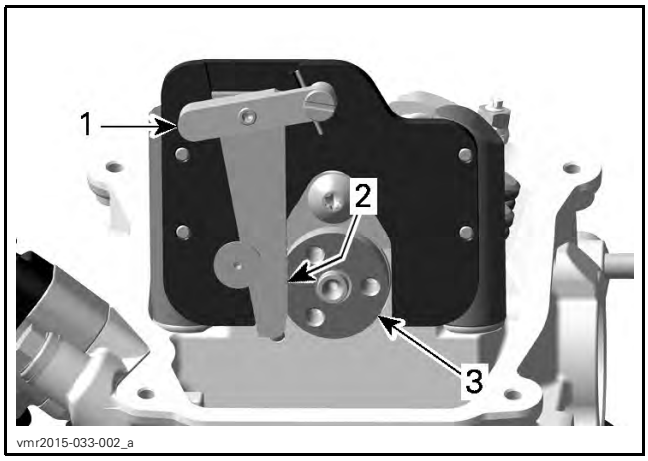

PRESS TOOL LEVER DOWN
1. *Lever*
2. *Flat portion*
3. *Camshaft*

NOTICE **Crankshaft and camshaft must be locked at TDC ignition position to place camshaft timing gear and timing chain in the proper position.**

5. Place camshaft timing gear and timing chain on the camshaft.

NOTE: The printed marks on the camshaft timing gear must be parallel to the cylinder head base.

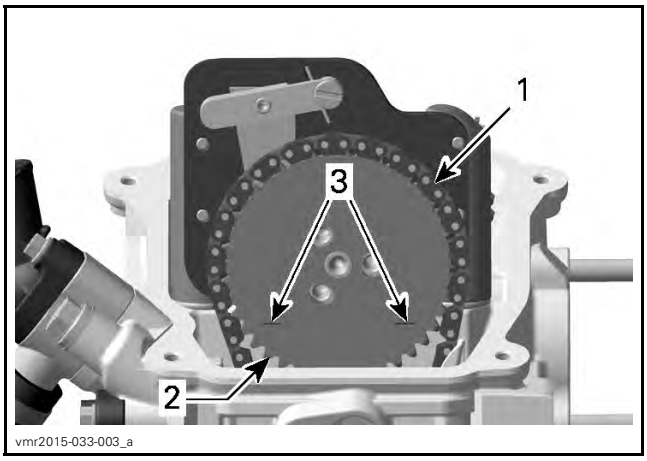

1. *Timing chain*
2. *Camshaft timing gear*
3. *Printed marks on camshaft timing gear*

6. Install and adjust timing chain tensioner, refer to *TIMING CHAIN TENSIONER* in this subsection.
7. Install and tighten camshaft timing gear retaining screws to specified torque.

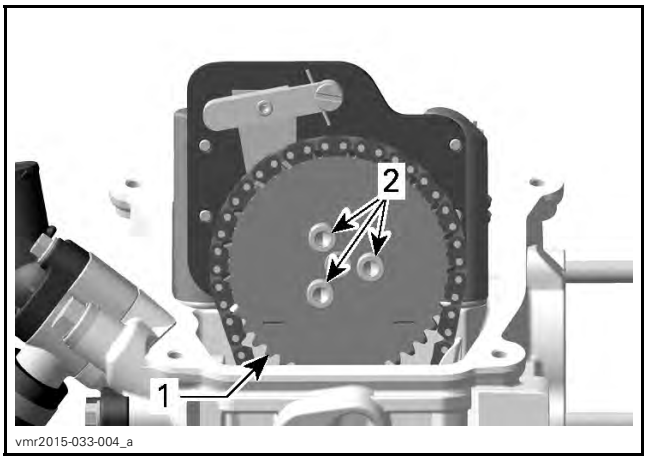

1. *Camshaft timing gear*
2. *Timing gear retaining screws*

SERVICE PRODUCT	
Camshaft timing gear retaining screws	LOCTITE 243 (BLUE) (P/N 293 800 060)

TIGHTENING TORQUE	
Camshaft timing gear retaining screws	10 N•m ± 1 N•m (89 lbf•**in** ± 9 lbf•**in**)

8. Remove the camshaft timing tool.

Camshaft Timing

NOTE: If a piston (cylinder 1 or 2) is set to TDC ignition, the camshaft timing gear of the opposite cylinder must be in the following position.

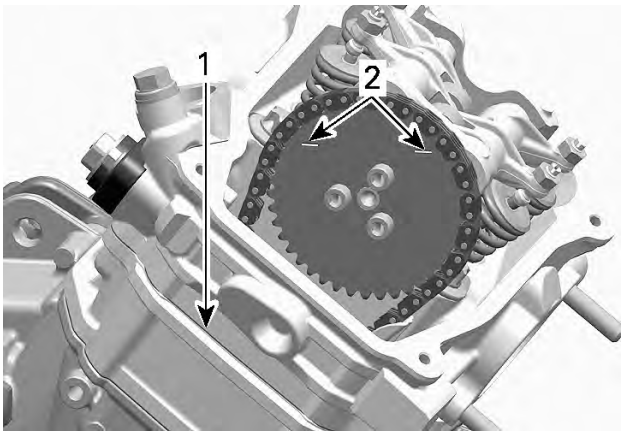

tmr2011-045-011_a

TYPICAL
1. *Cylinder head base*
2. *Marks on timing gear of the opposite cylinder*

Camshaft Timing Piston No. 2 (rear)

1. Remove spark plugs of both cylinders.
2. Remove valve covers of both cylinders.
3. Remove the screw plug and O-ring from magneto cover.

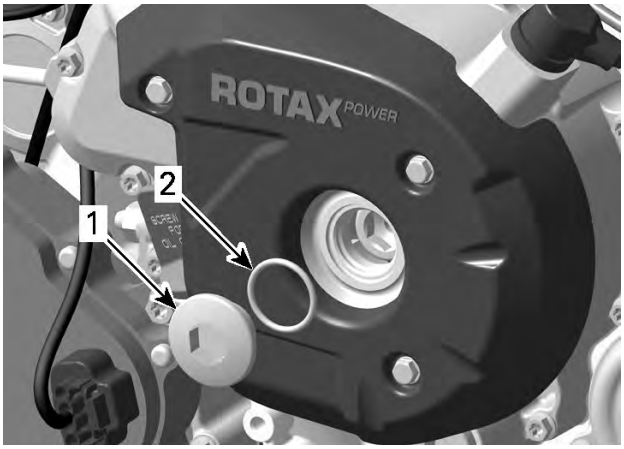

vmr2015-033-005_a

1. *Screw plug*
2. *O-ring*

4. Remove the crankshaft position sensor (CPS).

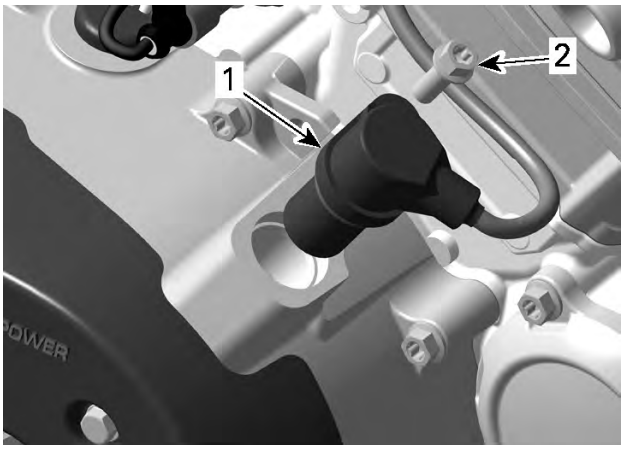

vmr2015-033-006_a

1. *CPS*
2. *Screw*

5. Set rear piston no. 2 to **TDC ignition** by turning the crankshaft clockwise.

REQUIRED TOOL
Allen key 14 mm

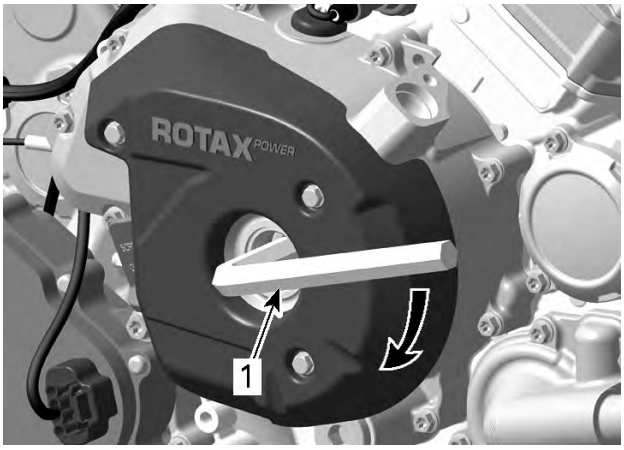

vmr2015-033-007_a

TURN CRANKSHAFT CLOCKWISE TO PISTON NO. 2 TDC
1. *Allen key 14 mm*

5.1 The rear piston is at TDC when it's index mark on the magneto flywheel is aligned with the notch in the magneto cover.

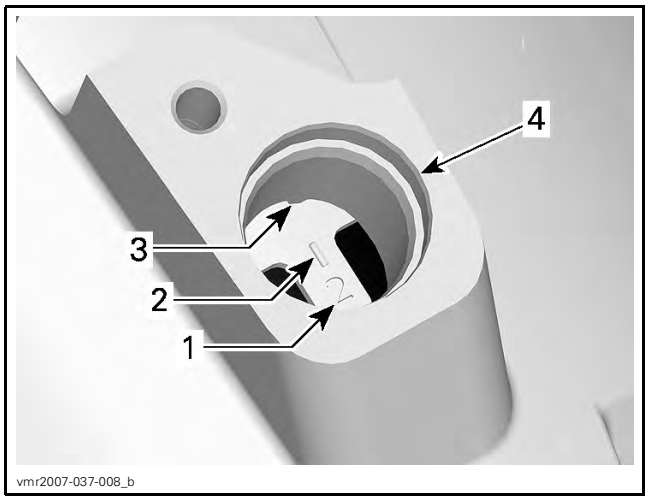

PISTON NO. 2 AT TDC
1. *Piston no. 2 identifier*
2. *Index mark on magneto flywheel*
3. *Notch on magneto cover*
4. *CPS bore in magneto cover*

5.2 Confirm printed marks on the camshaft timing gear are parallel with cylinder head base, in the lowest position. In this position the piston is set to **TDC ignition**.

NOTE: If marks on camshaft timing gear are not as specified, turn crankshaft 360°.

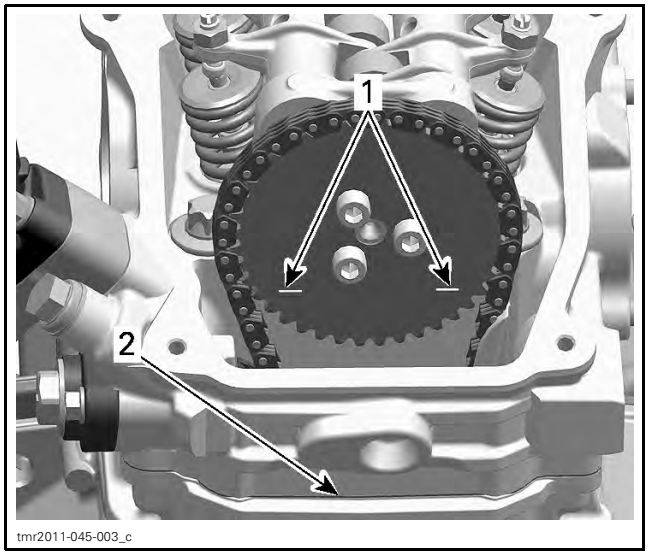

TYPICAL - PISTON AT TDC IGNITION
1. *Printed marks on camshaft timing gear*
2. *Cylinder head base*

6. Install the crankshaft TDC position tool to lock crankshaft in position. Refer to *CRANKSHAFT TDC POSITION TOOL* in this subsection.

Camshaft Timing Piston No. 1 (front)

1. Set rear piston no. 2 to **TDC ignition**, see *CAMSHAFT TIMING PISTON NO. 2 (REAR)* in this subsection.
2. Remove crankshaft TDC position tool.
3. To set front piston no. 1 to **TDC ignition** turn crankshaft 280° **counterclockwise**.

REQUIRED TOOL
Allen key 14 mm

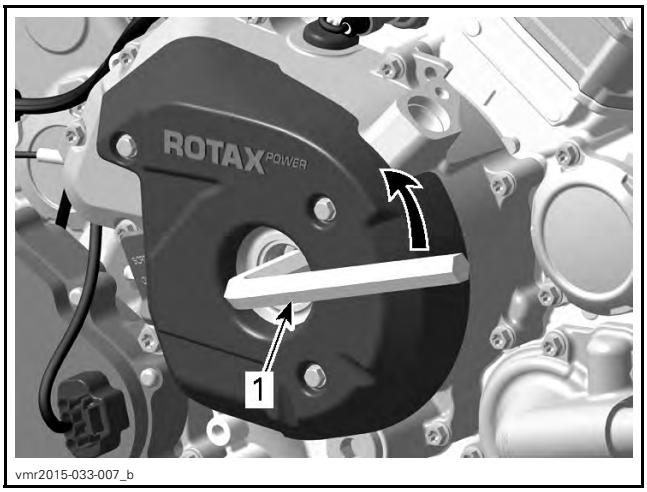

TURN COUNTERCLOCKWISE 280° TO NUMBER 1 PISTON TDC
1. *Allen key 14 mm*

3.1 The front piston is at TDC when it's index mark on the magneto flywheel is aligned with the notch in the magneto cover.

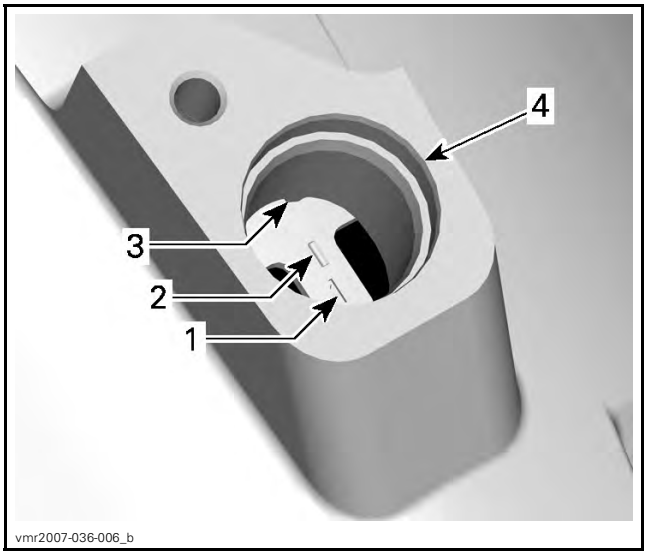

CYLINDER 1 AT TDC
1. *Number 1 piston identifier*
2. *Index mark "1" on magneto flywheel*
3. *Notch on magneto cover*
4. *Crankshaft position sensor bore*

3.2 Confirm printed marks on the camshaft timing gear are parallel with cylinder head base, in the lowest position. In this position the piston is set to **TDC ignition**.

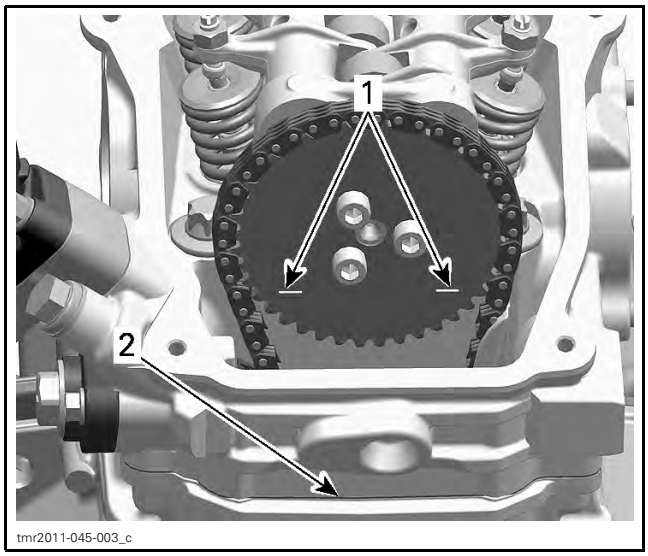

TYPICAL - PISTON AT TDC IGNITION
1. *Printed marks on camshaft timing gear*
2. *Cylinder head base*

4. Insert the crankshaft TDC position tool to lock crankshaft in position. Refer to *CRANKSHAFT TDC POSITION TOOL INSTALLATION* in this subsection.

Crankshaft TDC Position Tool Installation

NOTICE **Never use crankshaft TDC position tool to remove or tighten drive CVT screw or rotor retaining screw. Damage to the teeth of the trigger wheel on the rotor will occur.**

Install tool in magneto cover CPS bore.

REQUIRED TOOL	
CRANKSHAFT TDC POSITION TOOL (P/N 529 036 201)	

NOTE: Make sure to match the teeth on the crankshaft TDC position tool with the magneto rotor.

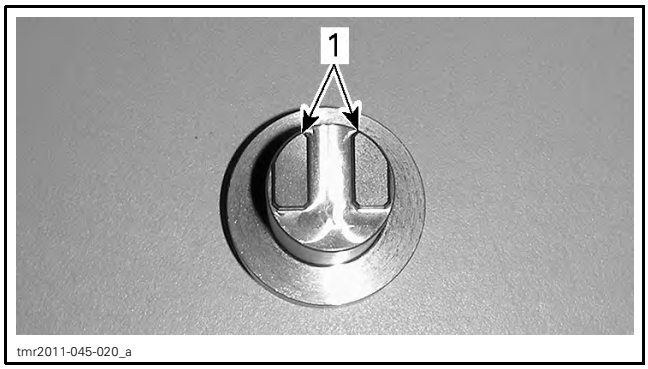

1. *Crankshaft TDC position tool teeth (end view)*

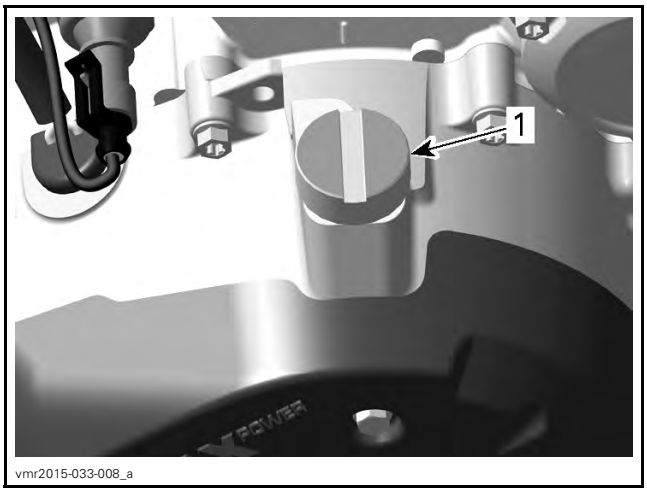

MAGNETO COVER
1. *Crankshaft TDC position tool installed in CPS bore*

NOTICE **Tool must be fully inserted.**

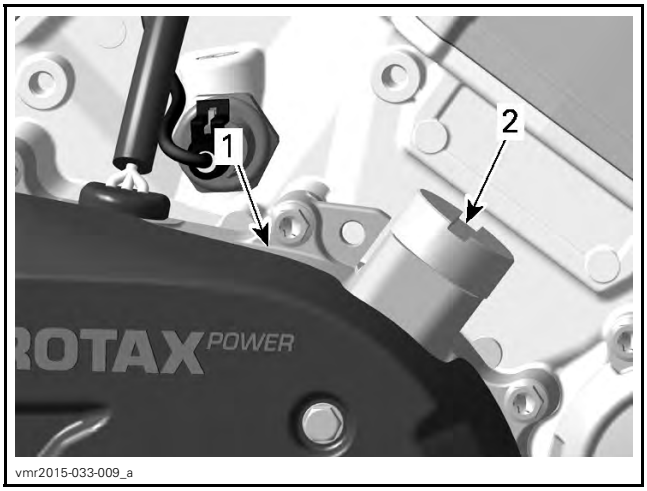

1. *Magneto cover*
2. *TDC position tool*

TIMING CHAIN

Timing Chain Location

The engine is equipped with two timing chains.
- MAG side timing chain is located behind the magneto cover.
- PTO side timing chain is located behind the PTO cover.

Removing the Timing Chain (MAG Side)

1. Refer to *MAGNETO AND STARTER* subsection and remove following parts:
   - Magneto cover
   - Rotor
   - Sprag clutch gear.

2. Refer to *TOP END* subsection and remove the following part:
   – Valve cover.
3. Refer to following procedures in this subsection and remove following parts:
   – Chain tensioner
   – Camshaft timing gear.
4. Remove timing chain guide (tensioner side) and lower timing chain guide.

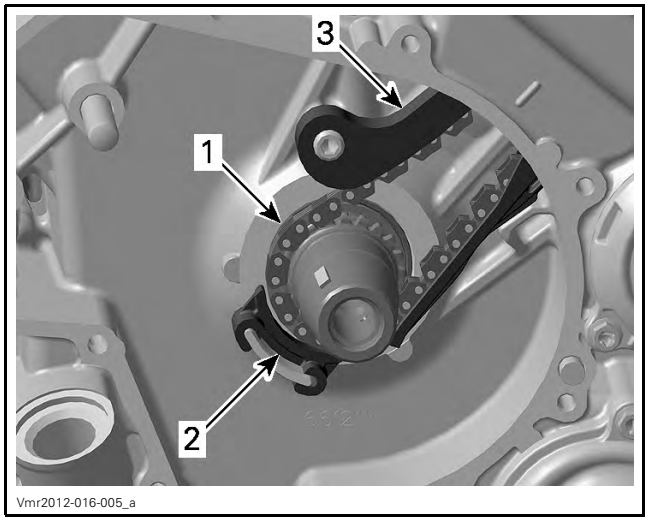

1. Timing chain
2. Lower timing chain guide
3. Timing chain guide (tensioner side)

NOTE: Mark the operating direction of the timing chain and check for excessive radial play before removal. Refer to *TIMING CHAIN INSPECTION*.

5. Carefully pull the timing chain downwards and sideways, then out of the crankcase.

Removing the Timing Chain (PTO Side)

1. Refer to *BOTTOM END* subsection and remove following parts:
   – PTO cover
   – Breather gear
   – Intermediate gear.
2. Refer to *TOP END* subsection and remove following part:
   – Valve cover.
3. Refer to applicable procedures in this subsection and remove following parts:
   – Chain tensioner
   – Camshaft timing gear.
4. Remove timing chain guide (tensioner side) and lower timing chain guide.

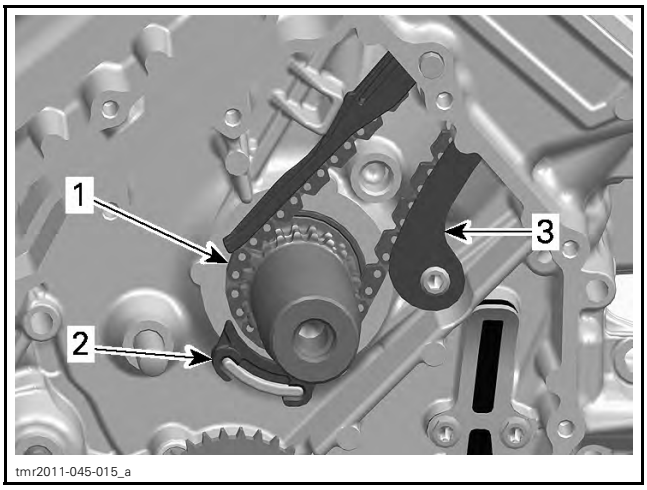

1. Timing chain
2. Lower timing chain guide
3. Timing chain guide (tensioner side)

NOTE: Mark the operating direction of the timing chain and check for excessive radial play before removal. Refer to *TIMING CHAIN INSPECTION*.

5. Carefully pull the timing chain sideward and down from the crankcase.

Inspecting the Timing Chain

Inspection is the same for both timing chains.

Check timing chain on camshaft timing gear for excessive radial play.

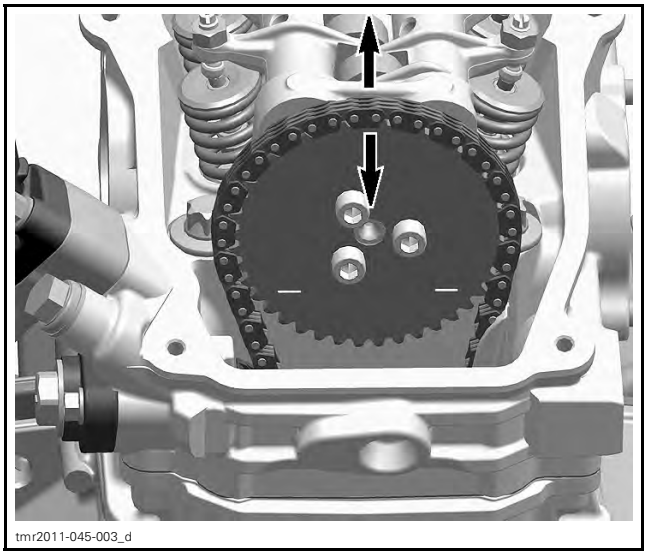

CHECKING TIMING CHAIN RADIAL PLAY

Check chain condition for wear and teeth condition.

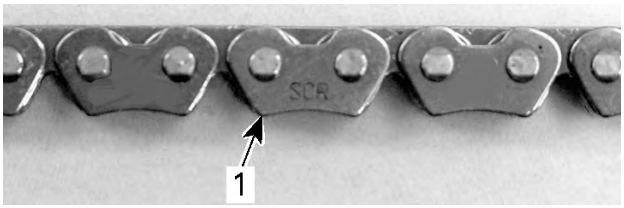

vmr2006-044-018_a

1. Timing chain

If chain is excessively worn or damaged, replace it as a set (camshaft timing gear and timing chain).

Check timing chain guides for wear, cracks or deformation. Replace as required.

NOTE: Check also the timing chain guide (tensioner side).

Installing the Timing Chain

The installation is essentially the reverse of the removal procedure however, pay attention to the following details.

NOTE: Installation is the same for both timing chains.

Install timing chain with camshaft timing gear.

NOTE: Ensure to carry out proper valve timing, refer to *CAMSHAFT TIMING GEARS* in this subsection.

NOTICE **Improper valve timing will damage engine components.**

TIMING CHAIN GUIDE (TENSIONER SIDE)

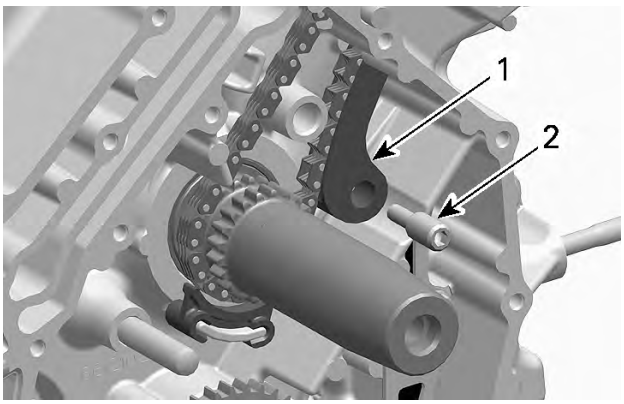

tmr2011-045-019_a

1. Timing chain guide (tensioner side)
2. Bearing screw

Removing the Timing Chain Guide (Tensioner Side)

Refer to *TIMING CHAIN* in this subsection.

Inspecting the Timing Chain Guide (Tensioner Side)

Check timing chain guide for wear, cracks or deformation. Replace if necessary.

Installing the Timing Chain Guide (Tensioner Side)

The installation is the reverse of the removal procedure.

SERVICE PRODUCT	
Timing chain guide bearing screw	LOCTITE 243 (BLUE) (P/N 293 800 060)

TIGHTENING TORQUE	
Timing chain guide bearing screw	10 N•m ± 1 N•m (89 lbf•**in** ± 9 lbf•**in**)

BOTTOM END

SERVICE TOOLS

Description	Part Number	Page
BEARING INSTALLER (GEARBOX)	529 035 762	172
BEARING INSTALLER (GEARBOX)	529 035 763	171
BLIND HOLE BEARING PULLER SET	529 036 117	172
CRANKCASE SUPPORT (MAG SIDE)	529 035 916	169–170
CRANKCASE SUPPORT PTO	529 035 754	169–170
CRANKSHAFT LOCKING BOLT	529 035 617	176, 180
DIAL INDICATOR ADAPTER	529 036 159	175
HANDLE	420 877 650	162, 169, 171–172
OIL SEAL INSTALLER	529 036 069	169
OUTPUT SHAFT SEAL INSTALLER	529 035 941	162
PLAIN BEARING REMOVER/INSTALLER	529 035 917	169–170
TDC DIAL INDICATOR	414 104 700	175

SERVICE PRODUCTS

Description	Part Number	Page
LOCTITE 5910	293 800 081	173
LOCTITE CHISEL (GASKET REMOVER)	413 708 500	167

CRANKCASE

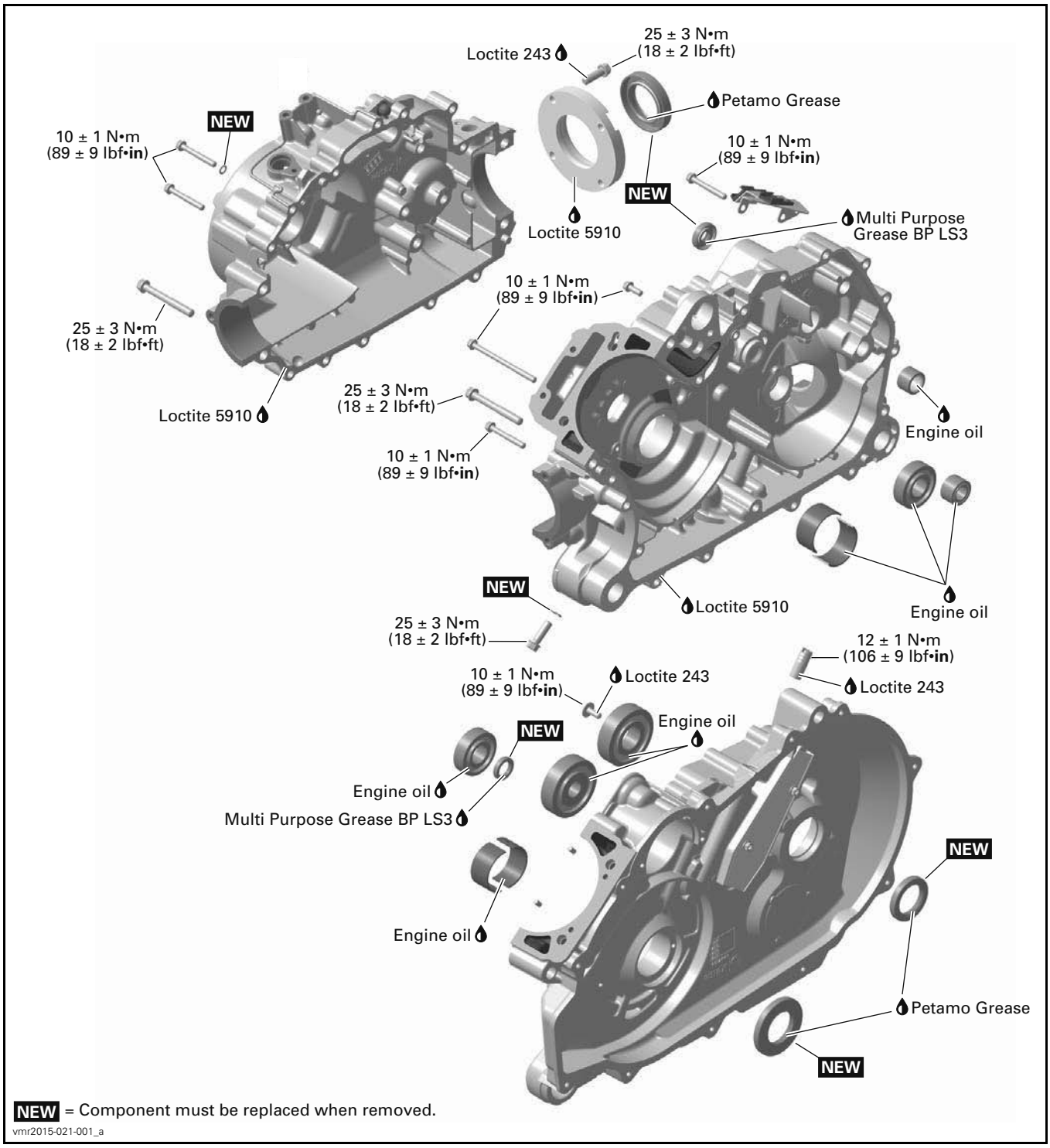
Loctite 243
25 ± 3 N•m
(18 ± 2 lbf•ft)
Petamo Grease
NEW
10 ± 1 N•m
(89 ± 9 lbf•in)
10 ± 1 N•m
(89 ± 9 lbf•in)
NEW
Loctite 5910
Multi Purpose
Grease BP LS3
10 ± 1 N•m
(89 ± 9 lbf•in)
25 ± 3 N•m
(18 ± 2 lbf•ft)
Loctite 5910
25 ± 3 N•m
(18 ± 2 lbf•ft)
Engine oil
10 ± 1 N•m
(89 ± 9 lbf•in)
NEW
Loctite 5910
Engine oil
25 ± 3 N•m
(18 ± 2 lbf•ft)
12 ± 1 N•m
(106 ± 9 lbf•in)
10 ± 1 N•m
(89 ± 9 lbf•in)
Loctite 243
Loctite 243
NEW
Engine oil
Engine oil
Multi Purpose Grease BP LS3
NEW
Engine oil
Petamo Grease
NEW
NEW = Component must be replaced when removed.
vmr2015-021-001_a

CRANKSHAFT/BALANCER SHAFT

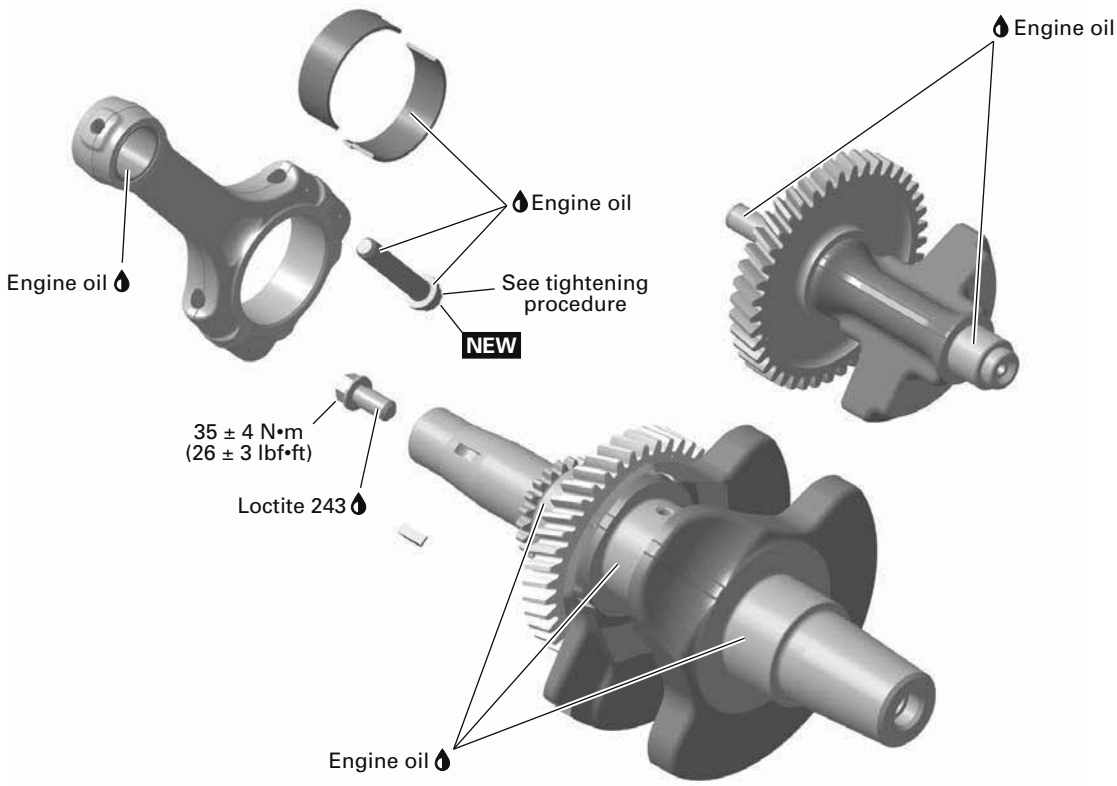

NEW = Component must be replaced when removed.

vmr2015-021-002_a

GENERAL

This section includes the procedures pertaining to the crankcase, crankshaft and balancer shaft. For the gearbox, follow the procedure for the *CRANKCASE* then refer to *GEARBOX AND 4X4 COUPLING UNIT* subsection.

During assembly / installation, use the torque values and service products as in the exploded views.

Clean threads before applying a thread locker. Refer to *SELF-LOCKING FASTENERS* and *LOCTITE APPLICATION* at the beginning of this manual for complete procedure.

⚠ WARNING

Torque wrench tightening specifications must strictly be adhered to.
Locking devices when removed (e.g.: locking tabs, elastic stop nuts, self-locking fasteners, etc.) must be installed or replaced with new ones where specified. If the efficiency of a locking device is impaired, it must be renewed.

PROCEDURES

IMPORTANT: Note position of parts on disassembly. This may help to find the root cause of a problem. A component that is not replaced should be reinstalled in the same position as originally mounted.

OUTPUT SHAFT OIL SEAL

Output Shaft Oil Seal Removal

Replace oil seal if brittle, hard or otherwise damaged.

NOTE: The output shaft oil seal can be removed and installed without removing the engine from vehicle.

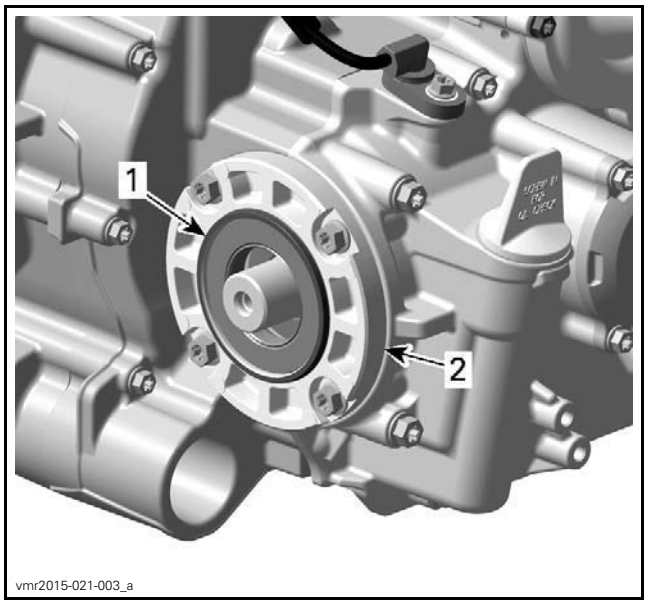

1. *Output shaft oil seal*
2. *Bearing flange*

Drain engine oil, refer to *ENGINE OIL CHANGE* in the *PERIODIC MAINTENANCE PROCEDURES* subsection.

Disconnect the rear propeller shaft from output shaft, refer to *REAR DRIVE* subsection.

Using a small screwdriver, remove the output shaft oil seal from bearing flange.

NOTICE **Avoid scratching the bearing flange or output shaft during oil seal removal.**

Check oil seal seating surface for grooves. Replace bearing flange if necessary.

Check bearing behind oil seal for contamination and/or metal shavings. Replace if necessary.

Output Shaft Oil Seal Installation

REQUIRED TOOL	
OUTPUT SHAFT SEAL INSTALLER (P/N 529 035 941)	
HANDLE (P/N 420 877 650)	

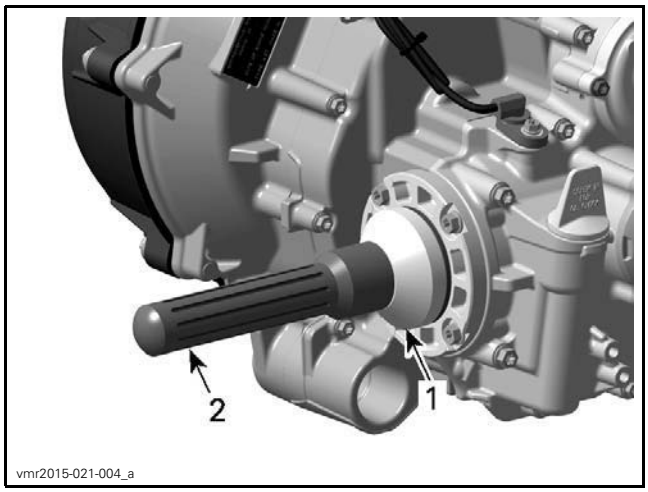

1. *Outputshaftseal installer*
2. *Handle*

Install all remaining removed parts. Refer to applicable subsections.

COUNTER SHAFT OIL SEAL

Counter Shaft Oil Seal Removal

Replace oil seal if brittle, hard or otherwise damaged.

NOTE: The counter shaft oil seal can be removed without removing the engine from vehicle.

Remove the driven pulley. Refer to *CONTINUOUSLY VARIABLE TRANSMISSION* subsection.

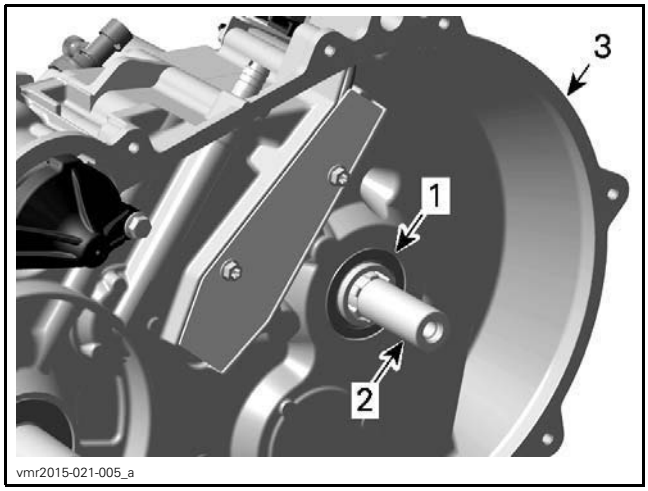

1. *Counter shaft oil seal*
2. *Counter shaft*
3. *Crankcase, PTO side*

Using a small screwdriver, remove the counter shaft oil seal.

NOTICE **Avoid scratching the crankcase or counter shaft during oil seal removal.**

Counter Shaft Oil Seal Installation

Using a suitable tube with the proper diameter to install the oil seal.

Install all removed parts.

SHIFT SHAFT OIL SEAL

Shift Shaft Oil Seal Removal

Replace oil seal if brittle, hard or otherwise damaged.

NOTE: The shift shaft oil seal can be removed without removing the engine from vehicle.

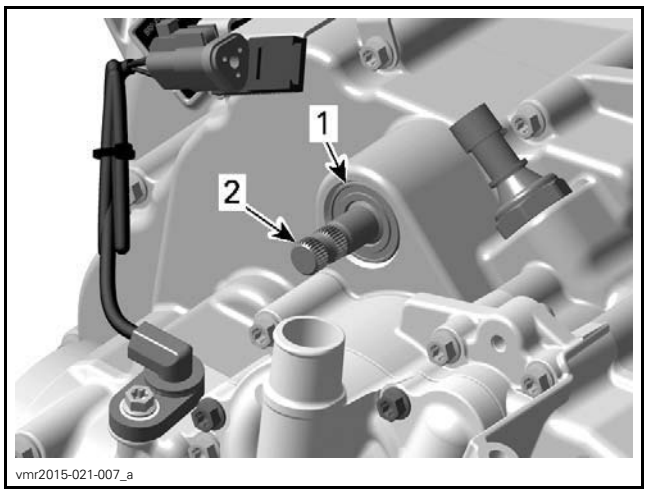

1. *Shift shaft oil seal*
2. *Shift shaft*

Scribe a mark on the end of shift shaft and on shifting plate.

Unscrew shifting plate bolt then remove shifting plate.

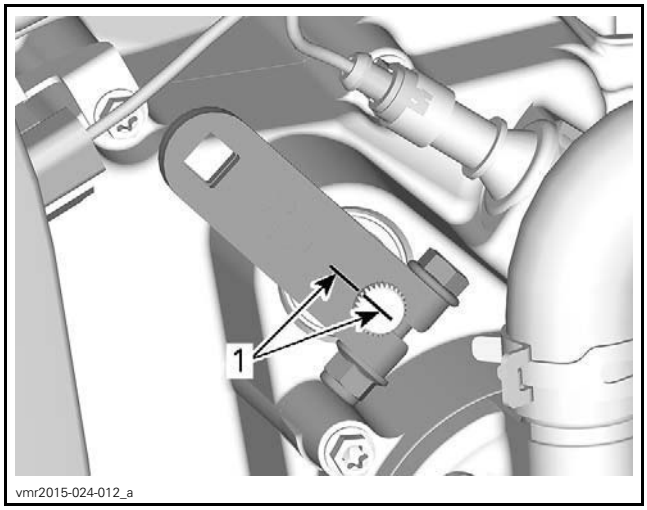

1. *Index mark*

Using a small screwdriver, remove the shift shaft oil seal.

NOTICE Avoid scratching the crankcase or shift shaft during oil seal removal.

Shift Shaft Oil Seal Installation

Using a suitable tube, with the proper diameter, install the seal.

Align the previously scribed marks and install the shift plate.

Tighten shift plate screw to specification.

SHIFT PLATE	
Tightening torque	9 N•m ± 1 N•m (80 lbf•**in** ± 9 lbf•**in**)

CRANKSHAFT OIL SEAL

Crankshaft Oil Seal Removal

Replace oil seal if brittle, hard or otherwise damaged.

NOTE: The crankshaft oil seal can be removed without removing the engine from vehicle.

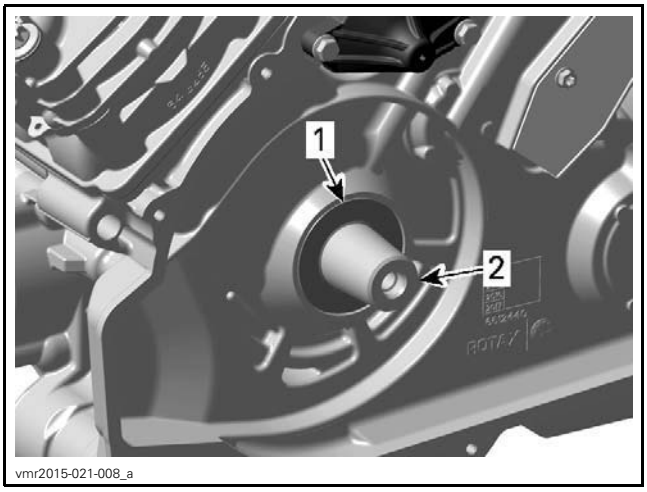

1. *Crankshaft oil seal*
2. *Crankshaft, PTO side*

Remove the drive pulley. Refer to *CONTINUOUSLY VARIABLE TRANSMISSION* subsection.

Using a small screwdriver, remove the crankshaft oil seal.

NOTICE Avoid scratching the crankcase or crankshaft during oil seal removal.

Crankshaft Oil Seal Installation

Using a suitable tube with the proper diameter to install the seal.

CRANKCASE

Crankcase Disassembly

NOTE: Oil pump removal from crankcase MAG side is not necessary, but recommended to see condition of oil pump, refer to *LUBRICATION SYSTEM* subsection.

Remove:

- Engine from vehicle, refer to *ENGINE REMOVAL AND INSTALLATION* subsection
- Magneto cover and rotor, refer to *MAGNETO AND STARTER* subsection
- Output shaft, refer to *GEARBOX AND 4X4 UNIT* subsection
- Cylinder head and cylinder, refer to *TOP END* subsection
- Drive and driven pulley, refer to *CONTINUOUSLY VARIABLE TRANSMISSION* subsection
- Oil pressure switch, refer to *LUBRICATION SYSTEM* subsection.

Measure axial clearance between the crankshaft and crankcase PTO with a feeler gauge.

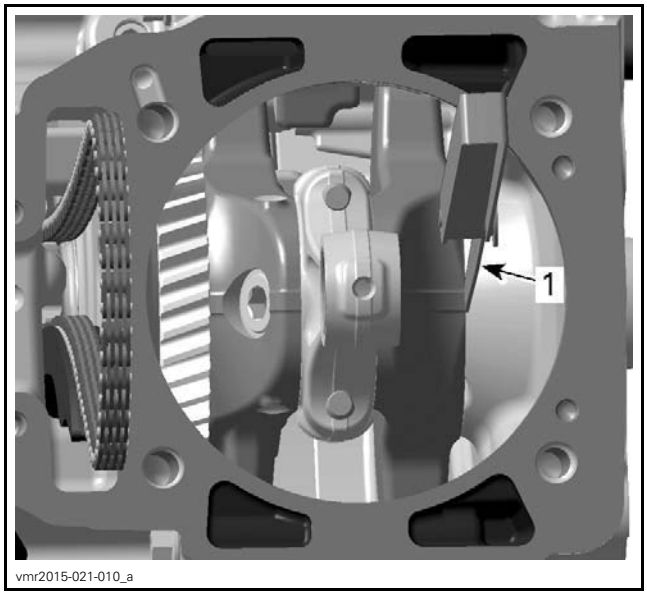

1. *Feeler gauge*

CRANKSHAFT AXIAL CLEARANCE	
NEW	0.1 mm to 0.4 mm (.004 in to .016 in)
SERVICE LIMIT	0.5 mm (.02 in)

If measurement is out of specification, inspect butting faces of crankshaft and crankcase (MAG/PTO side) for excessive wear.

Remove:

- Timing chain

– Intermediate gear of oil pump
– Drive gear of water pump.

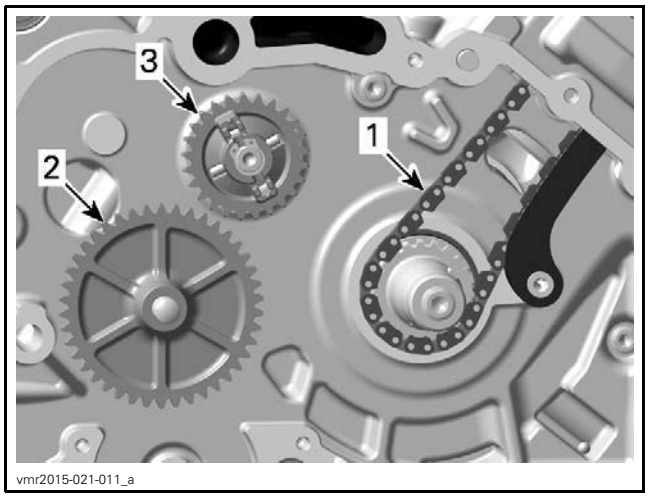

1. Timing chain
2. Intermediate gear, oil pump
3. Drive gear, water pump

Remove crankshaft locking bolt.

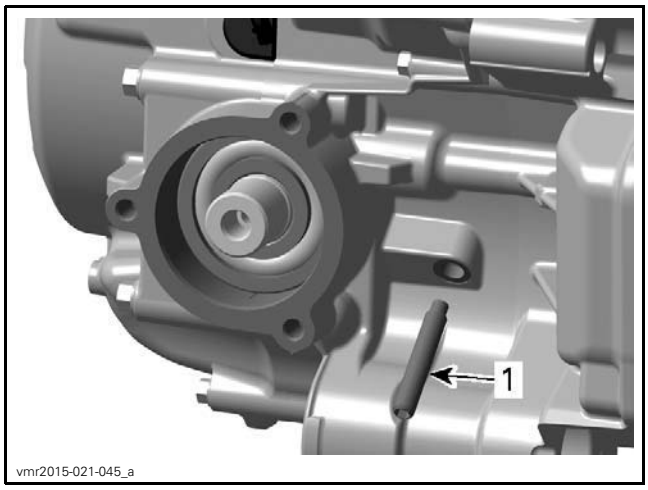

1. Crankshaft locking bolt

Remove crankcase retaining screws:
1. Start removing the M6 screws
2. Then remove the M8 screws.

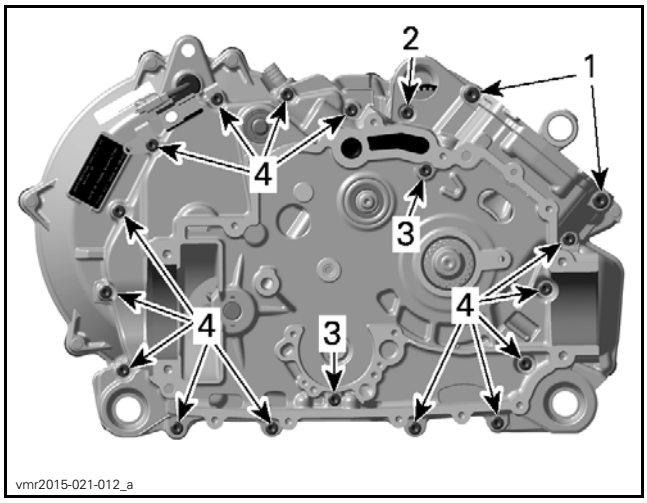

1. 2x screws M8 x 85
2. 1x screw M6 x 16
3. 2x screws M6 x 85
4. 14x screws M6 x 45

Place the crankcase on a wood stand, MAG side upwards.

Split crankcase with 2 screwdrivers.

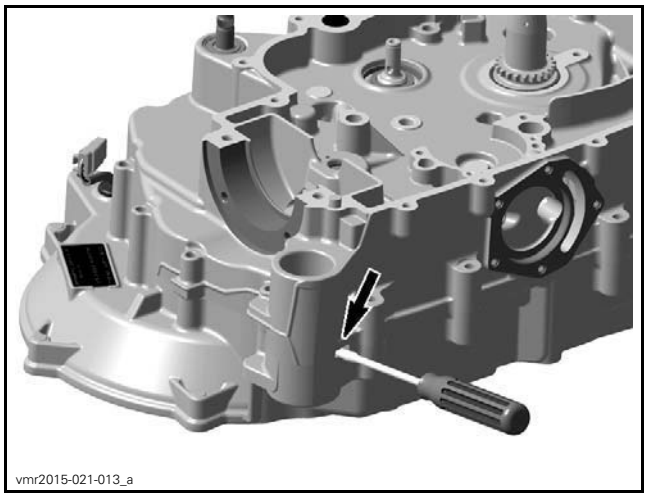

POSITION FOR BIG FLAT SCREWDRIVER

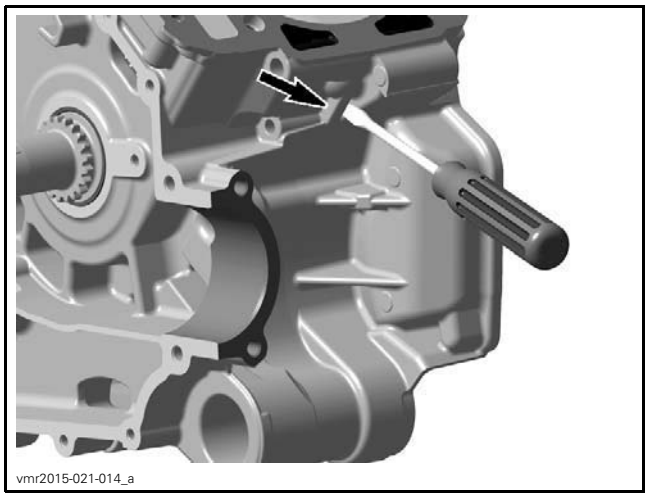

POSITION FOR BIG FLAT SCREWDRIVER

Crankcase Cleaning

Clean all metal components in a solvent.

Clean oil passages and make sure they are not clogged.

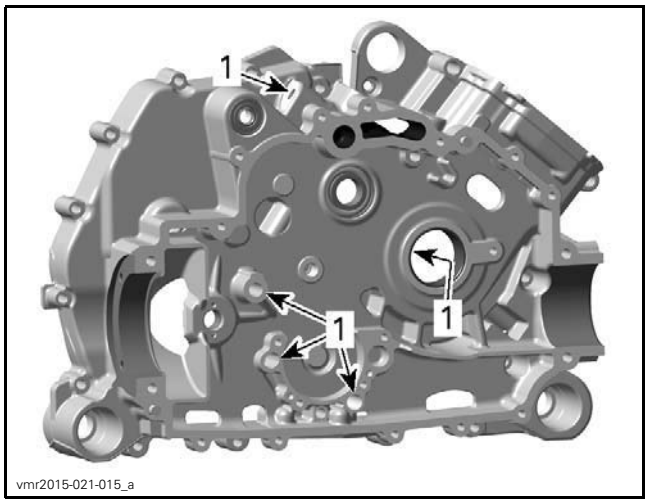

CRANKCASE MAG SIDE
1. Oil orifices

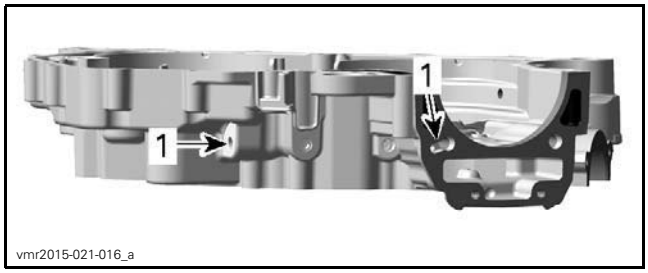

CRANKCASE MAG SIDE
1. Oil orifices

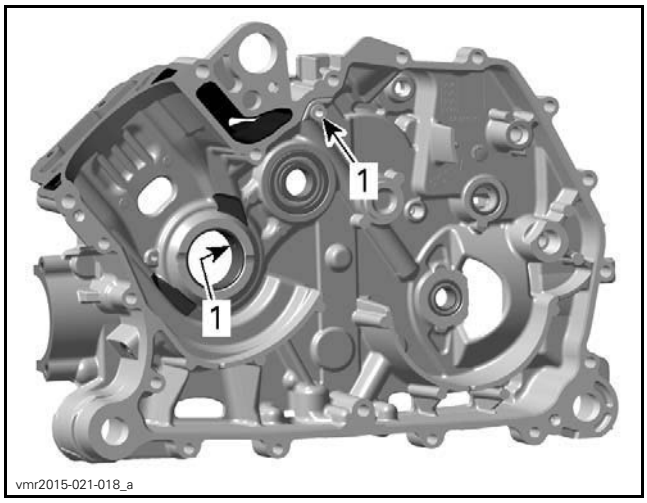

CRANKCASE MAG SIDE
1. Oil orifices

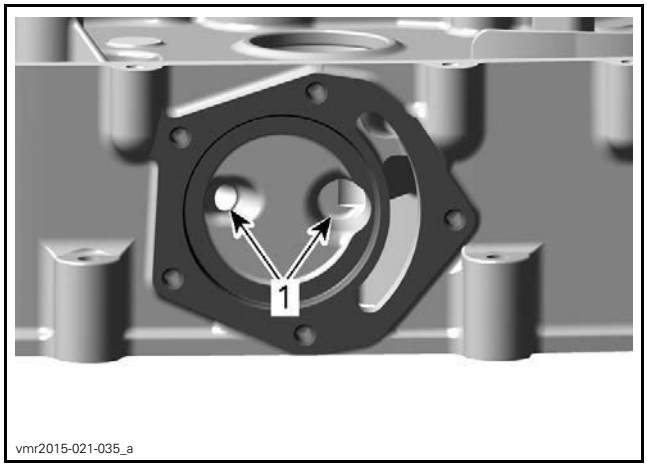

CRANKCASE MAG SIDE
1. Oil orifices

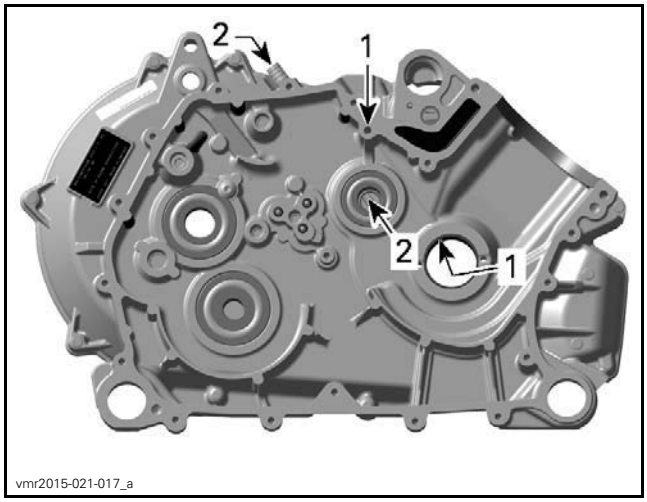

CRANKCASE PTO SIDE
1. Oil orifices
2. Engine blow by bore

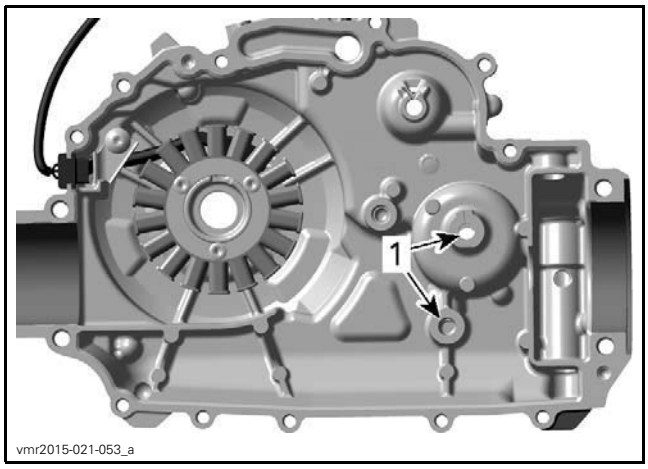

MAGNETO COVER
1. *Oil orifices*

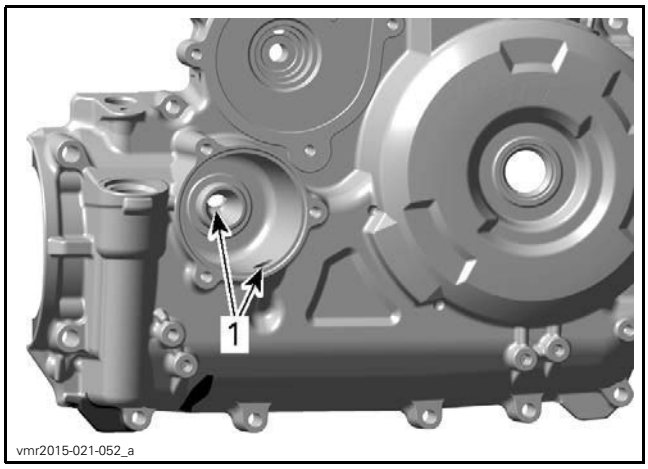

MAGNETO COVER
1. *Oil orifices*

Clean crankcase mating surfaces using a combination of LOCTITE CHISEL (GASKET REMOVER) (P/N 413 708 500) and a brass brush. First brush in one direction then make the final brushing perpendicularly (90°) to the first pass.

NOTICE **Do not wipe with rags. Use a new clean hand towel only.**

Crankcase Inspection

NOTE: To check some parts, it is recommended to remove all components from crankcase.

Crankshaft Plain Bearing

Check MAG and PTO plain bearings for scoring or other damages.

Measure plain bearing inside diameter.

Compare measurements to MAG/PTO main journal diameters of crankshaft, refer to *CRANKSHAFT* in this subsection.

Replace if the measurement is out of specification.

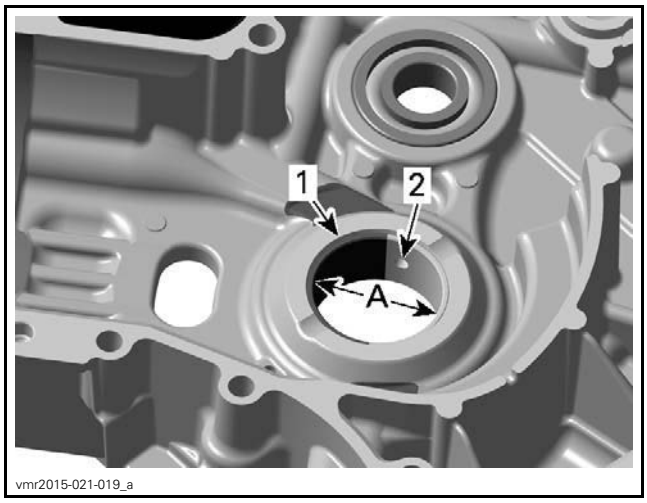

MAG PLAIN BEARING
1. *Plain bearing*
2. *Oil bore*

A. *Plain bearing inside diameter*

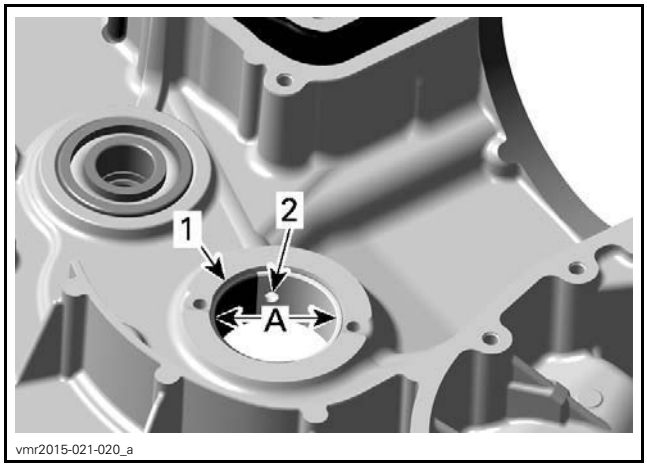

PTO PLAIN BEARING
1. *Plain bearing*
2. *Oil bore*

A. *Plain bearing inside diameter*

PLAIN BEARING INSIDE DIAMETER (MAG/PTO)	
SERVICE LIMIT	42.100 mm (1.6575 in)

Ball and Needle Bearings

Check ball bearings and needle bearings for excessive play and smooth operation. Replace if necessary.

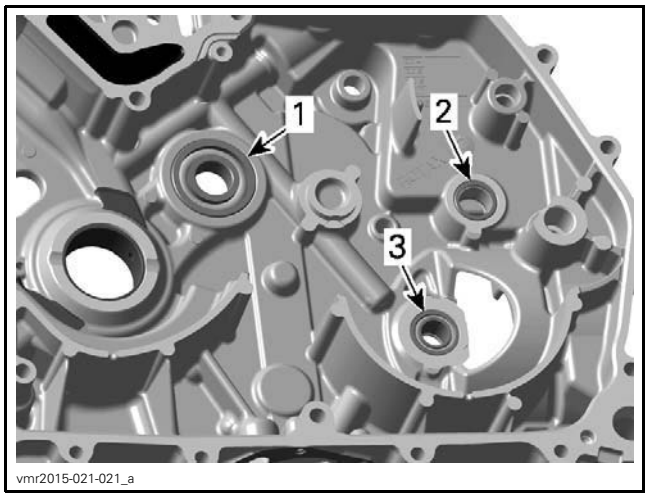

CRANKCASE MAG
1. *Balancer shaft ball bearing*
2. *Counter shaft needle bearing*
3. *Bevel gear needle bearing*

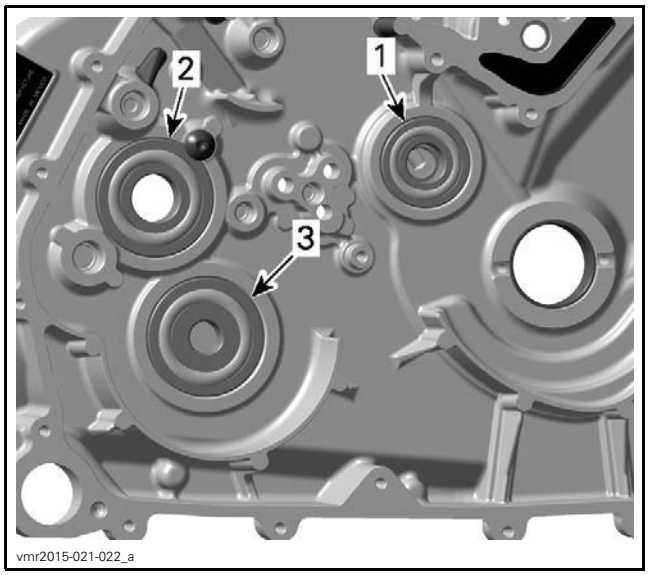

CRANKCASE PTO
1. *Balancer shaft ball bearing*
2. *Counter shaft ball bearing*
3. *Bevel gear ball bearing*

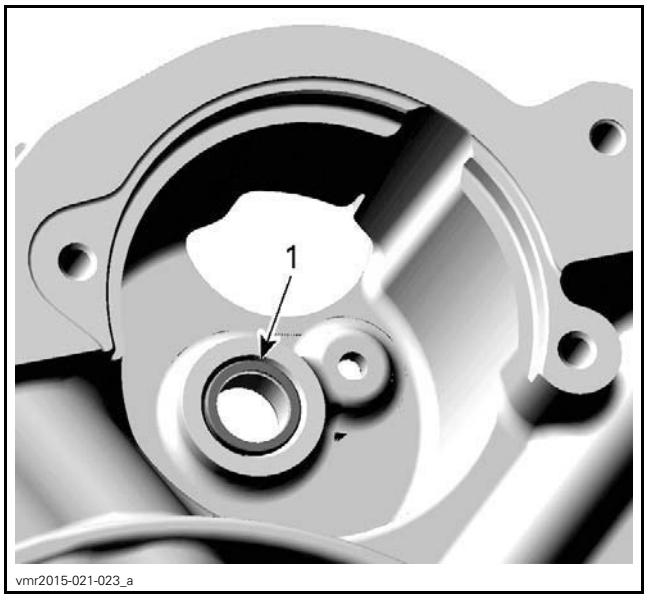

CRANKCASE PTO
1. *Starter drive needle bearing*

Balancer Shaft Oil Seal

Replace oil seal if brittle, hard or otherwise damaged.

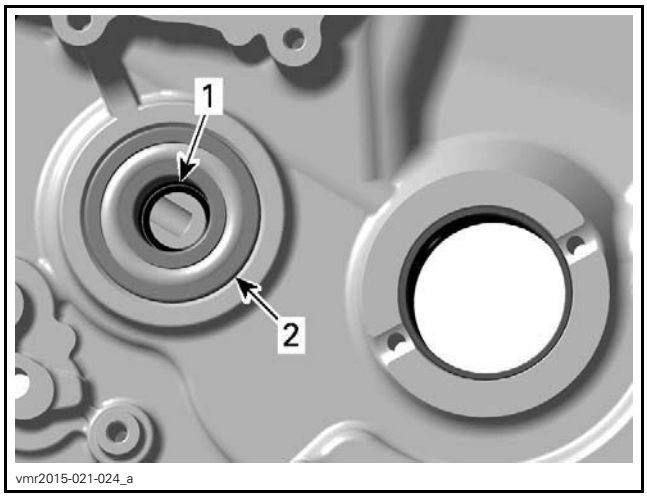

CRANKCASE PTO
1. *Balancer shaft oil seal*
2. *Balancer shaft ball bearing*

Balancer Shaft Oil Seal Replacement Procedure

Balancer Shaft Oil Seal Removal

Remove balancer shaft ball bearing, refer to *BEARING REPLACEMENT PROCEDURE* in this subsection.

The oil seal is removed easily with a flat screwdriver.

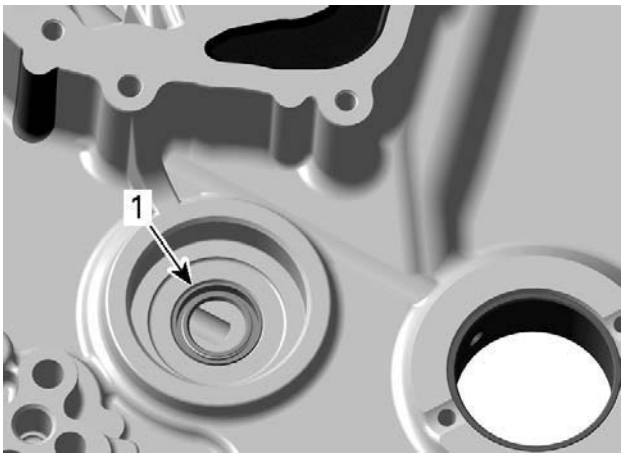

CRANKCASE PTO
1. Balancer shaft oil seal

NOTICE Avoid scoring bearing seat or oil seal bore in crankcase.

Balancer Shaft Oil Seal Installation

NOTICE Oil seal must be installed with sealing lip towards balancer shaft.

REQUIRED TOOL	
OIL SEAL INSTALLER (P/N 529 036 069)	
HANDLE (P/N 420 877 650)	

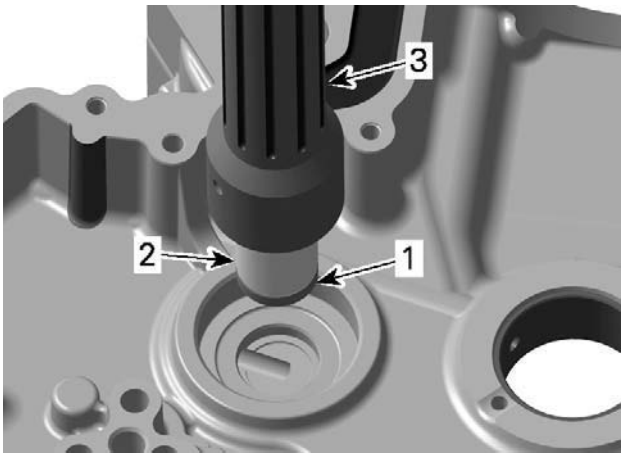

CRANKCASE, PTO SIDE
1. Balancer shaft oil seal
2. Oil seal installer
3. Handle

Bearing Replacement Procedure

NOTICE Clean oil, outside and inside, from crankcase.

NOTICE Always support crankcase properly when ball bearings, needle bearings or plain bearings are removed or installed; otherwise, crankcase could be damaged.

Unless otherwise instructed, never use hammer to install ball bearings, needle bearings or plain bearings. Use press machine only.

NOTICE Ball bearings have to be installed with closed bearing cage to the engine outside.

Crankshaft Plain Bearing Removal

NOTE: Always use a press for removal or installation of plain bearing halves.

Carefully press the plain bearings out from the crankcase half from inside towards the outside.

NOTE: Use proper crankcase support when removing plain bearings.

REQUIRED TOOL	
PLAIN BEARING REMOVER/INSTALLER (P/N 529 035 917)	
CRANKCASE SUPPORT (MAG SIDE) (P/N 529 035 916)	
CRANKCASE SUPPORT PTO (P/N 529 035 754)	

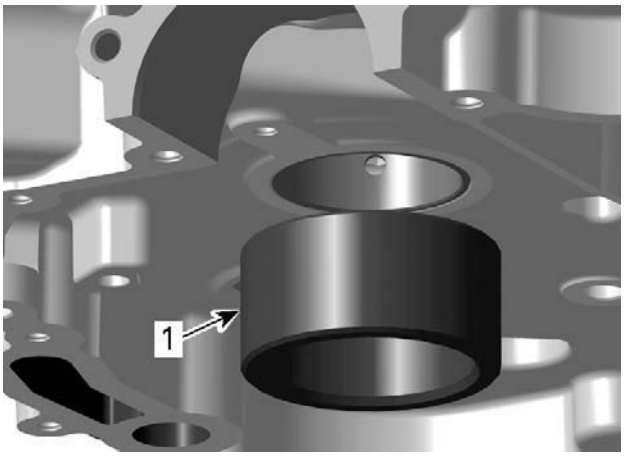

CRANKCASE MAG SIDE
1. Crankcase support MAG

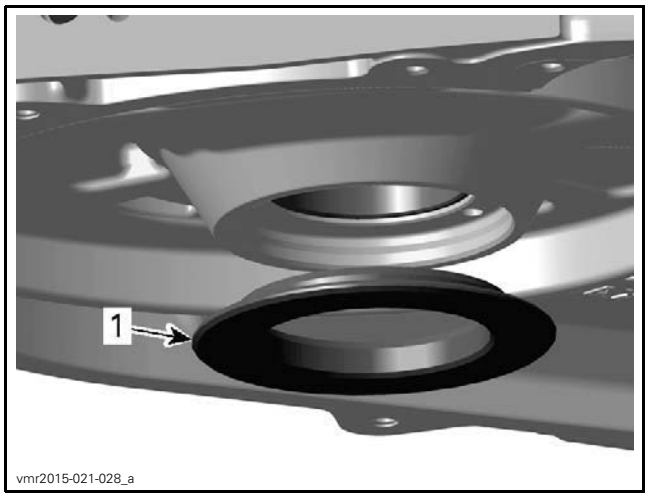

CRANKCASE PTO SIDE
1. *Crankcase support PTO*

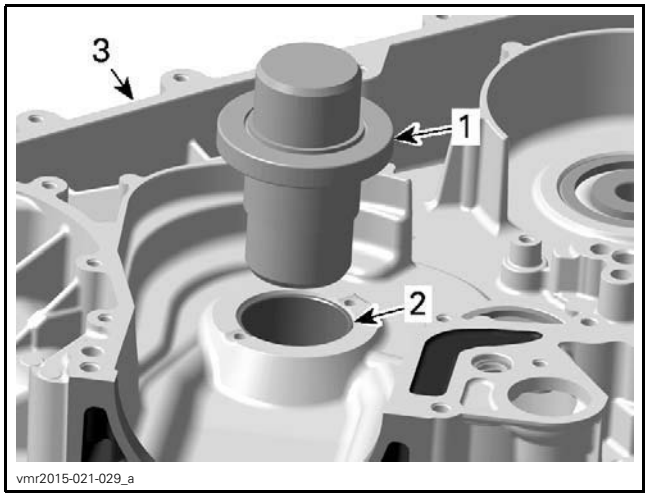

PRESS PLAIN BEARINGS OUTSIDE
1. *Plain bearing remover/installer*
2. *Plain bearing*
3. *Crankcase (PTO side shown)*

Crankshaft Plain Bearing Installation

NOTICE **Unless otherwise instructed, never use hammer to install plain bearings. Use press only.**

NOTE: Use proper crankcase support when installing plain bearings. Damage to crankcase may occur if this procedure is not performed correctly.

Carefully press in the plain bearings in the same direction as during disassembly, from the crankcase inside towards the outside.

Install plain bearings in a cold crankcase.

NOTE: Do not lubricate plain bearings and/or crankcase for installation.

REQUIRED TOOL	
PLAIN BEARING REMOVER/INSTALLER (P/N 529 035 917)	
CRANKCASE SUPPORT (MAG SIDE) (P/N 529 035 916)	
CRANKCASE SUPPORT PTO (P/N 529 035 754)	

Use an O-ring (Ø 42 mm (1.65 in) x 1 mm to 1.5 mm (.04 in to .06 in) thickness) to hold plain bearings in place during installation. The O-ring will disappear in the groove of the plain bearing remover/installer.

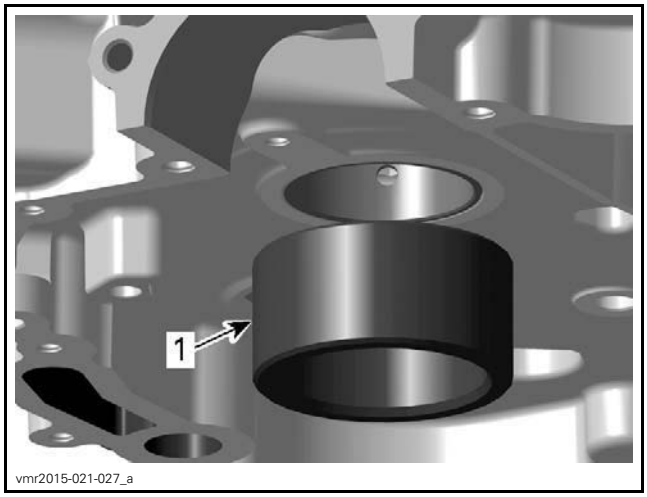

CRANKCASE MAG SIDE
1. *Crankcase support MAG*

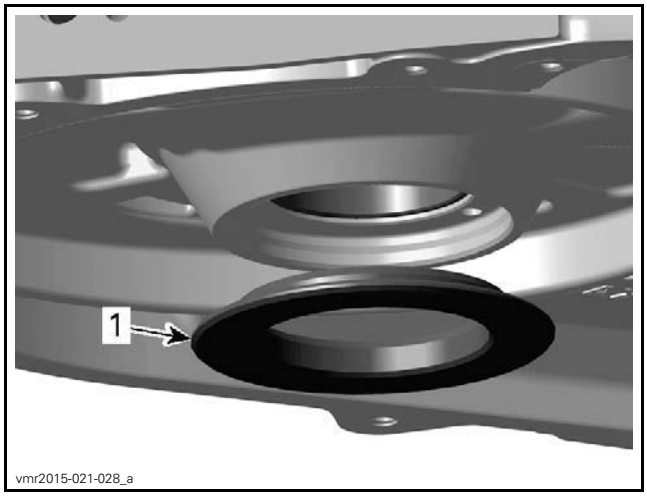

CRANKCASE PTO SIDE
1. *Crankcase support PTO*

Mark position of plain bearing oil bore on plain bearing remover/installer.

Mark position of oil bore on crankcase half.

Align mark on plain bearing remover/installer with mark on crankcase half.

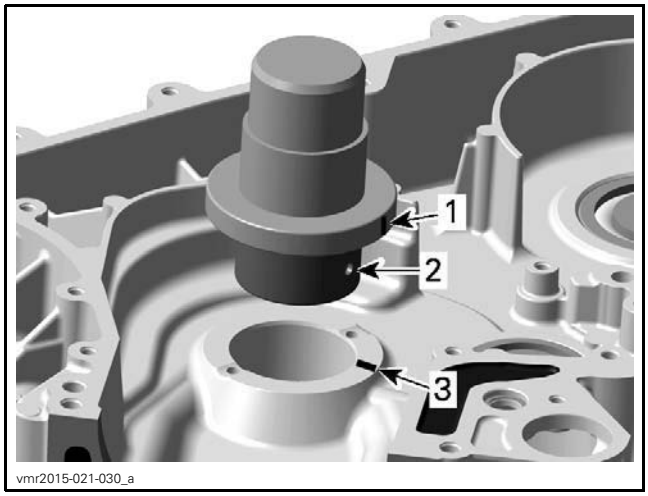

PRESS PLAIN BEARINGS INSIDE
1. *Oil bore position marked on plain bearing remover/installer*
2. *Plain bearing oil bore*
3. *Oil bore position marked on crankcase*

NOTICE **Misalignment of the plain bearing and crankcase oil bores will prevent proper oil supply to plain bearings.**

Carefully press in the plain bearings from inside the crankcase towards the outside.

NOTICE **The partition of the plain bearings in crankcase half MAG side must be positioned near to oil bore in counterclockwise direction.**

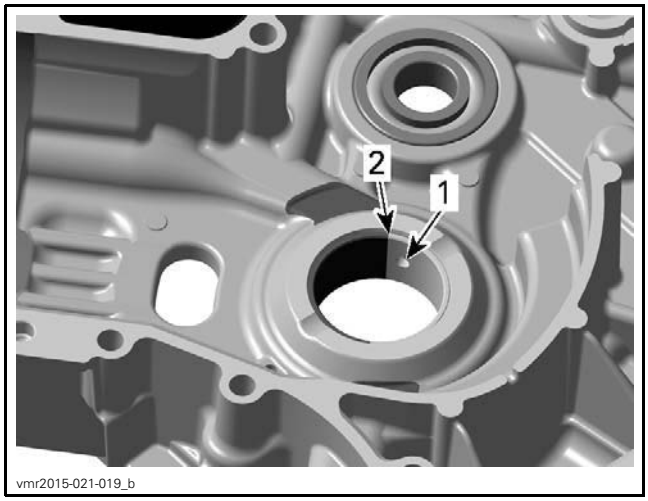

CRANKCASE MAG
1. *Oil bore*
2. *Partition*

NOTICE **The partition of the plain bearings in crankcase half PTO side must be positioned near to oil bore in counterclockwise direction.**

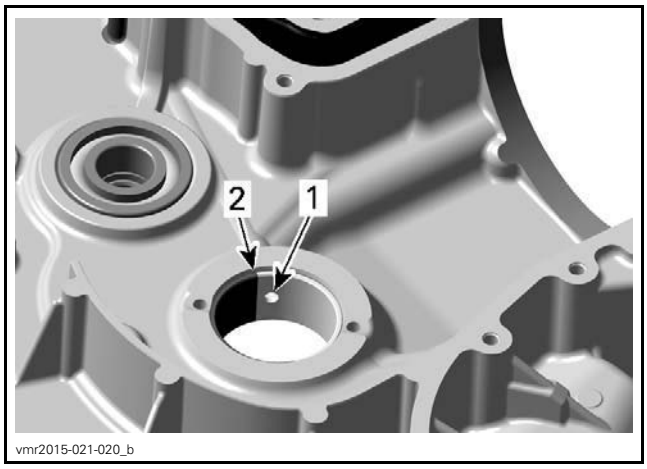

CRANKCASE PTO
1. *Oil bore*
2. *Partition*

Bevel Gear Needle Bearing Removal

Remove bevel gear needle bearing using a punch.

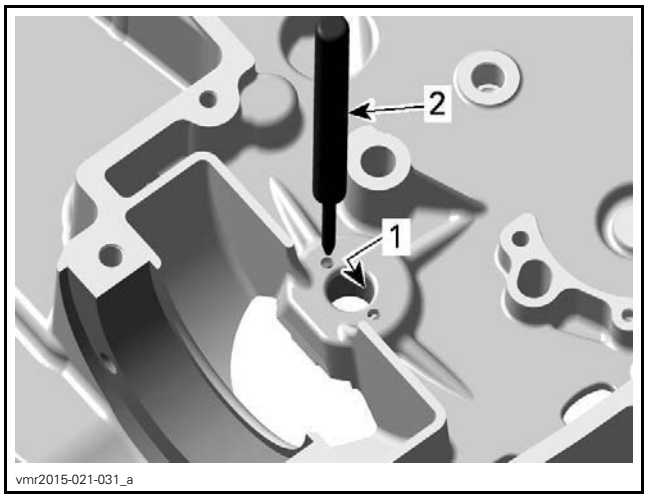

1. *Bevel gear needle bearing*
2. *Punch*

Bevel Gear Needle Bearing Installation

REQUIRED TOOL	
BEARING INSTALLER (GEARBOX) (P/N 529 035 763)	
HANDLE (P/N 420 877 650)	

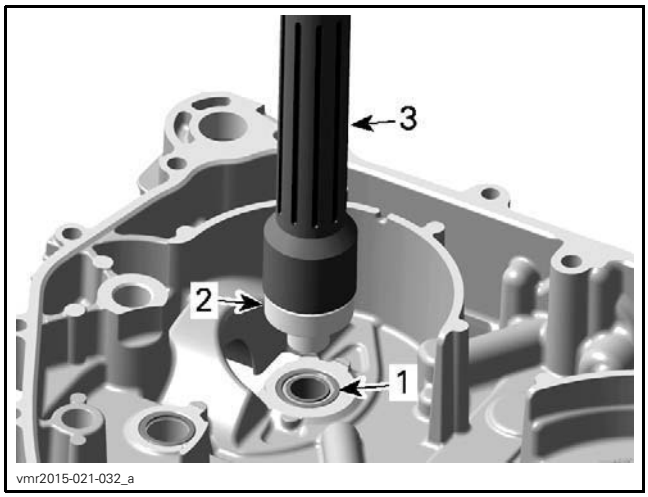

1. Bevel gear needle bearing
2. Needle bearing installer
3. Handle

Counter Shaft Needle Bearing Removal

Remove counter shaft needle bearing, using a punch.

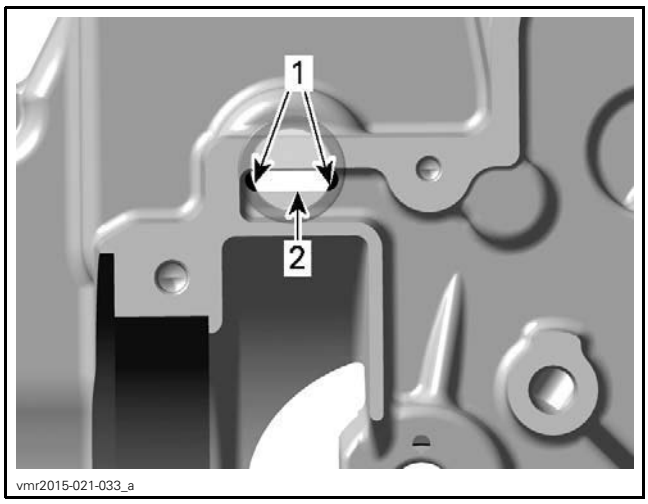

1. Counter shaft needle bearing
2. Hole in crankcase MAG side

Counter Shaft Needle Bearing Installation

REQUIRED TOOL	
BEARING INSTALLER (GEARBOX) (P/N 529 035 762)	
HANDLE (P/N 420 877 650)	

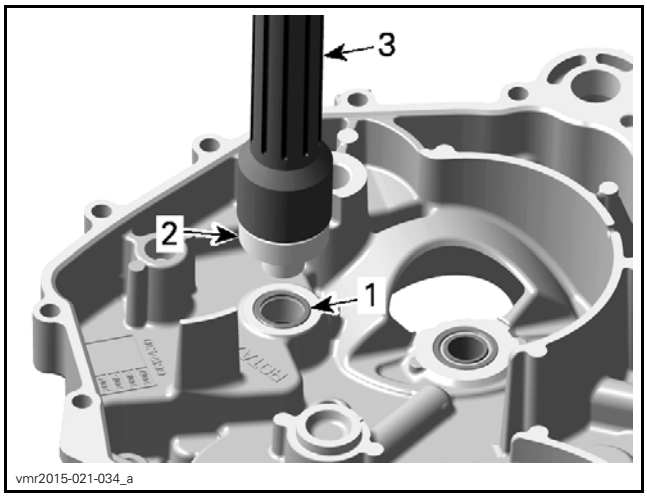

1. Counter shaft needle bearing
2. Needle bearing installer
3. Handle

Starter Drive Needle Bearing Replacement

For starter drive needle bearing replacement refer to *MAGNETO AND STARTER* subsection.

Balancer Shaft (PTO side) and Bevel Gear Ball Bearing Removal

To remove ball bearings use a blind hole bearing puller.

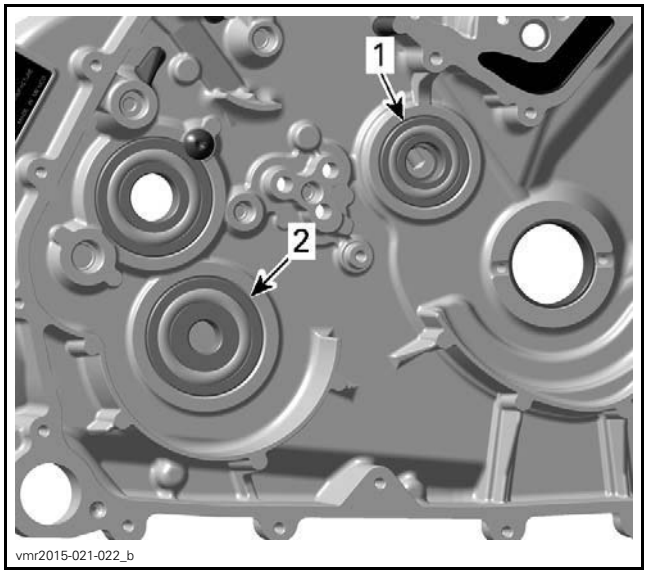

CRANKCASE PTO
1. Balancer shaft ball bearing
2. Bevel gear ball bearing

REQUIRED TOOL	
BLIND HOLE BEARING PULLER SET (P/N 529 036 117)	

Balancer Shaft (PTO side) and Bevel Gear Ball Bearing Installation

Use a suitable installer for installing ball bearings.

Balancer Shaft (MAG side) Ball Bearing Removal

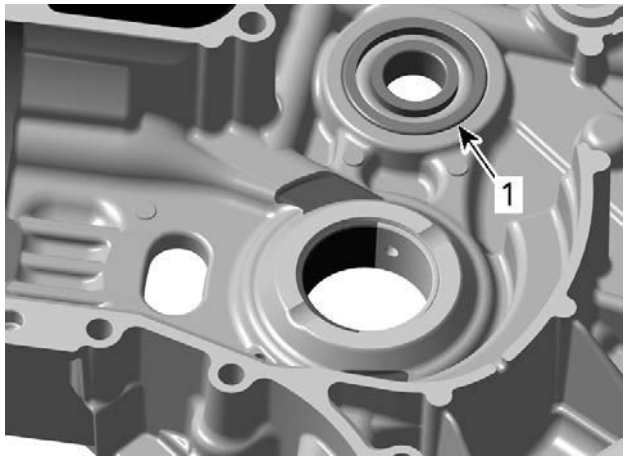

CRANKCASE MAG
1. Balancer shaft ball bearing

Removed ball bearing with a suitable pusher from outside in.

Balancer Shaft (MAG side) Ball Bearing Installation

Use a suitable installer.

Counter Shaft (PTO side) Ball Bearing Removal

Remove screw.

Push ball bearing from outside in with a punch.

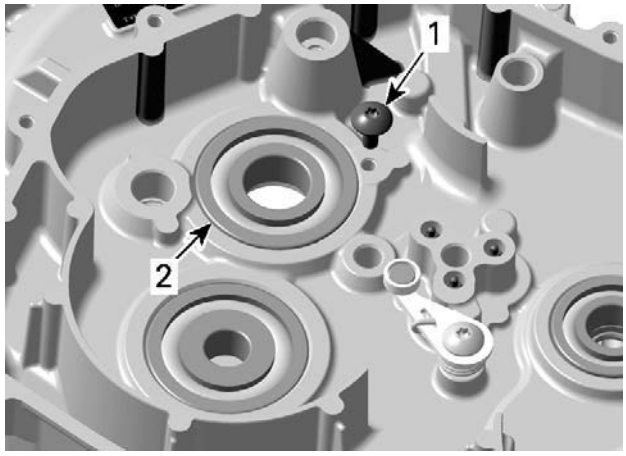

1. Screw
2. Counter shaft ball bearing

Counter Shaft (PTO side) Ball Bearing Installation

Use a suitable installer.

NOTE: Install ball bearing with closed bearing cage towards outside of engine.

Crankcase Assembly

The assembly is the reverse of the disassembly procedure. However, pay attention to the following.

Use LOCTITE 5910 (P/N 293 800 081) on mating surfaces.

IMPORTANT: When beginning the application of the crankcase sealant, the assembly and the first torquing should be done within 10 minutes. It is suggested to have all you need on hand to save time.

Use a polycarbonate plate and apply some sealant on it. Use a soft rubber roller 50 mm to 75 mm (2 in to 3 in) available in arts products suppliers for printing and roll the sealant to get a thin uniform coat on the plate (spread as necessary). When ready, apply the sealant on crankcase mating surfaces.

NOTE: It is recommended to apply this specific sealant as described here to get a uniform application without lumps. If you do not use the roller method, you may use your finger to uniformly distribute the sealant (using a finger will not affect the adhesion). Do not apply in excess as it will spread out inside crankcase.

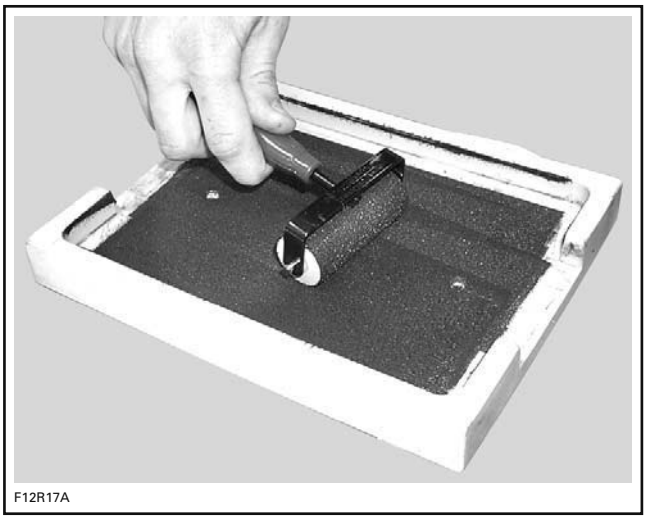

First tighten crankcase M8 retaining screws as per following sequence:

CRANKCASE M8 RETAINING SCREWS	
Tightening torque	25 N•m ± 3 N•m (18 lbf•ft ± 2 lbf•ft)

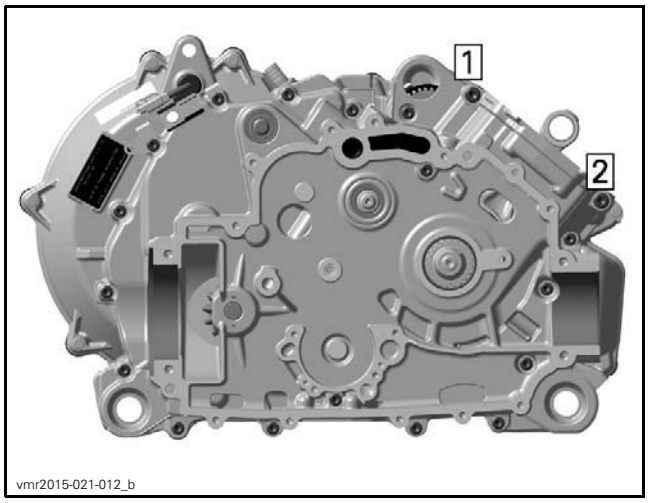

M8 SCREWS TIGHTENING SEQUENCE

Then tighten crankcase M6 retaining screws as per following sequence.

CRANKCASE M6 RETAINING SCREWS	
Tightening torque	10 N•m ± 1 N•m (89 lbf•**in** ± 9 lbf•**in**)

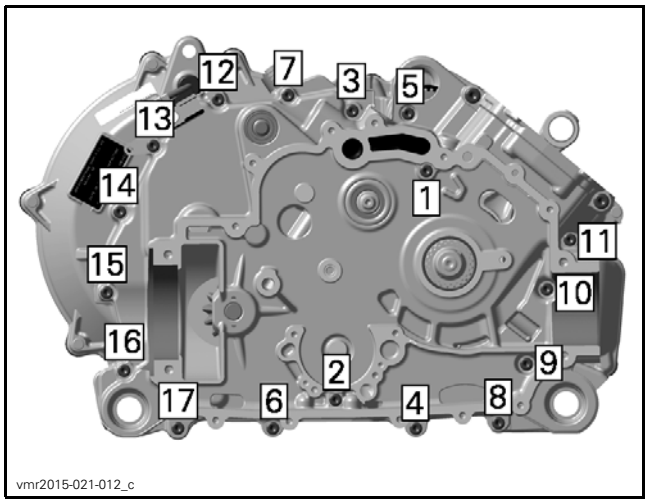

M6 SCREWS TIGHTENING SEQUENCE

BALANCER SHAFT

Balancer Shaft Removal

Split crankcase, refer to *CRANKCASE* in this subsection.

Remove the crankshaft locking bolt.

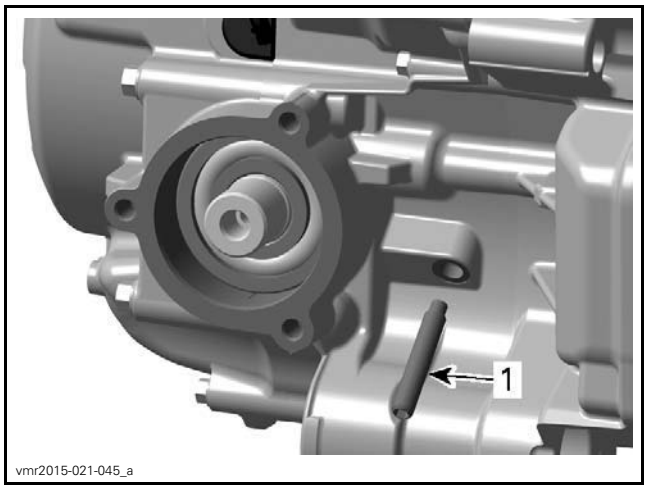

1. *Crankshaft locking bolt*

Align the dot of crankshaft gear with the balancer shaft gear dot then remove balancer shaft.

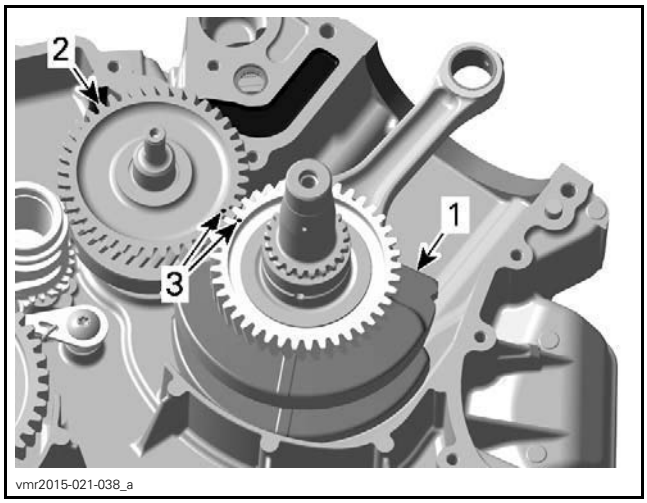

1. *Crankshaft*
2. *Balancer shaft*
3. *Dots on crankshaft gear and balancer shaft gear*

Balancer Shaft Inspection

Check balancer shaft and replace if damaged.

Check ball bearings on MAG and PTO side for excessive play and smooth operation. Replace if necessary.

Inspect the balancer shaft gear for chipped, worn or broken teeth. Replace balancer shaft if necessary.

NOTE: If any imperfection is detected, check also the crankshaft gear, refer to *CRANKSHAFT* in this subsection.

Balancer Shaft Installation

The installation is the reverse of the removal procedure. However, pay attention to the following.

Align the dot on crankshaft gear with the balancer shaft gear dot.

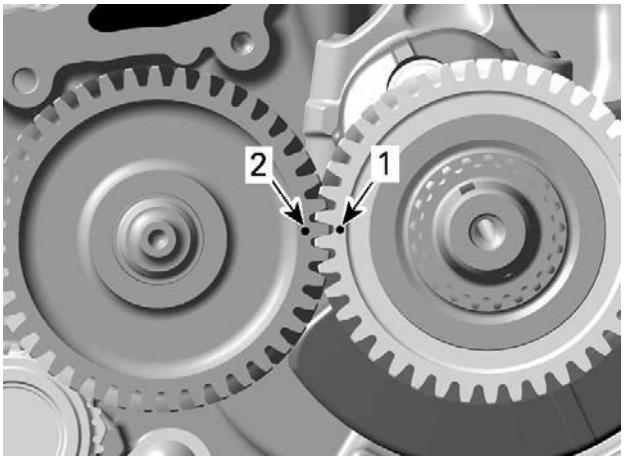

vmr2015-021-039_a

1. *Mark on crankshaft gear*
2. *Mark on balancer shaft gear*

CRANKSHAFT

Crankshaft Locking Procedure

Disconnect spark plug cable and remove the spark plug.

REQUIRED TOOL	
TDC DIAL INDICATOR (P/N 414 104 700)	
DIAL INDICATOR ADAPTER (P/N 529 036 159)	

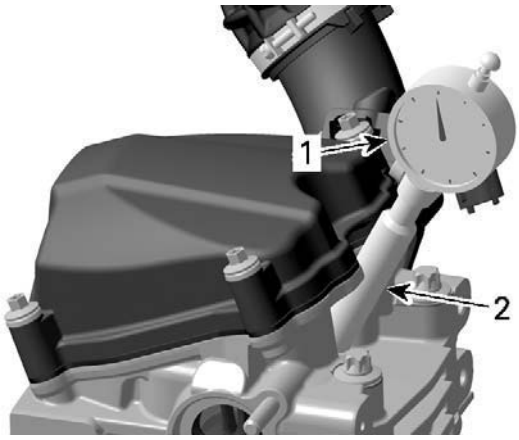

vmr2015-021-040_a

1. *Dial gauge*
2. *Dial indicator adapter*

Remove the plug screw and O-ring from magneto cover.

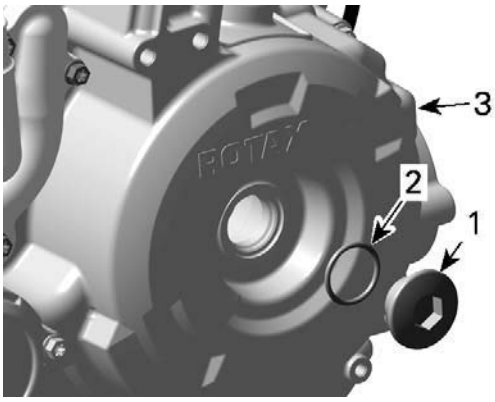

vmr2015-019-005_a

1. *Plug screw*
2. *O-ring*
3. *Magneto cover*

Set piston to TDC ignition by turning the crankshaft.

REQUIRED TOOL
13 mm socket

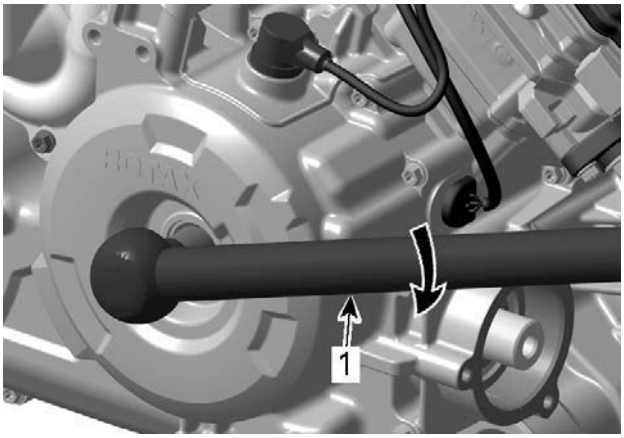

vmr2015-021-042_a

1. *Wrench with 13 mm socket*

TDC ignition

NOTICE **Never use the mark on the magneto to find the TDC. Only use the crankshaft locking tool to locate the TDC.**

Remove valve cover and verify if the printed marks on the camshaft timing gear are parallel with the cylinder head edge. If so, the engine is at TDC ignition position.

NOTE: If printed marks on camshaft timing gear are not as specified, turn crankshaft 360°.

NOTE: In this position the piston is set to TDC ignition.

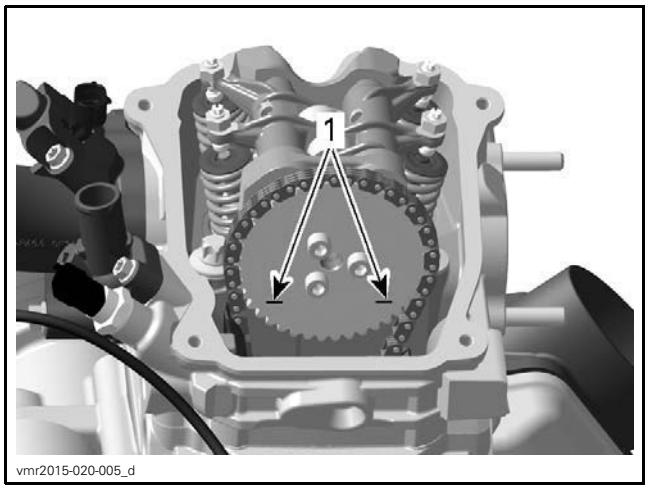

TYPICAL - PISTON AT TDC IGNITION
1. *Printed marks on camshaft timing gear*
2. *Cylinder head base*

Remove:
- Screw
- Sealing ring.

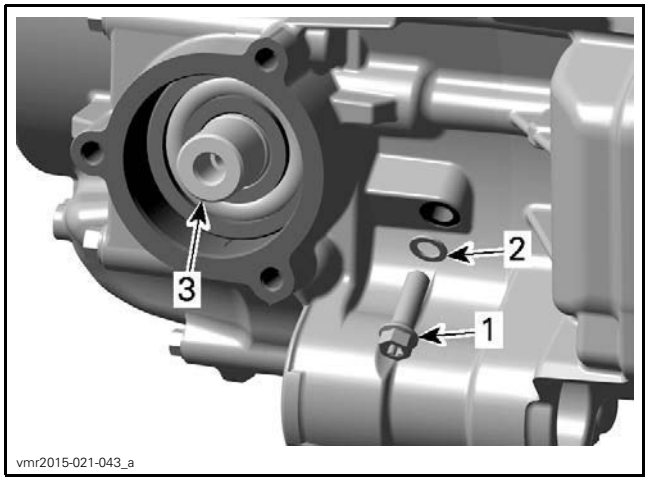

1. *Screw*
2. *Sealing ring*
3. *Output shaft on front side of vehicle*

Use a screwdriver to check if groove in crankshaft is aligned with the hole.

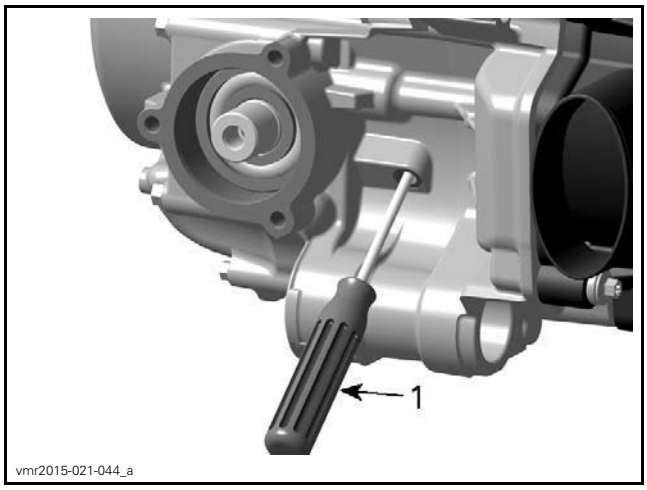

1. *Screwdriver*

Lock crankshaft.

REQUIRED TOOL	
CRANKSHAFT LOCKING BOLT (P/N 529 035 617)	

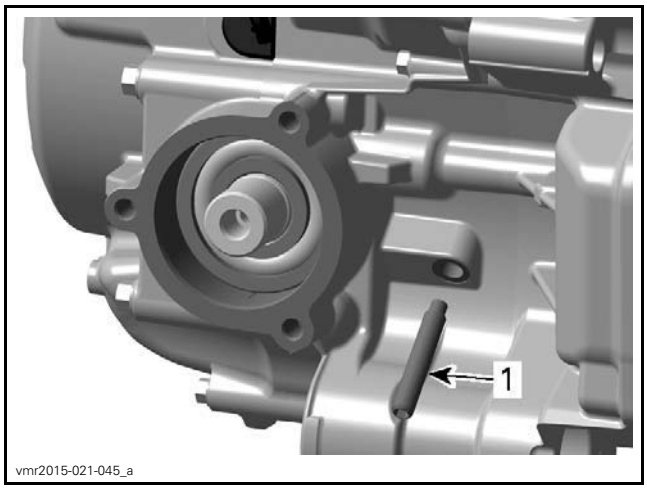

1. *Crankshaft locking bolt*

Crankshaft Removal

Remove:
- Balancer shaft, see *BALANCER SHAFT* in this subsection
- Crankshaft.

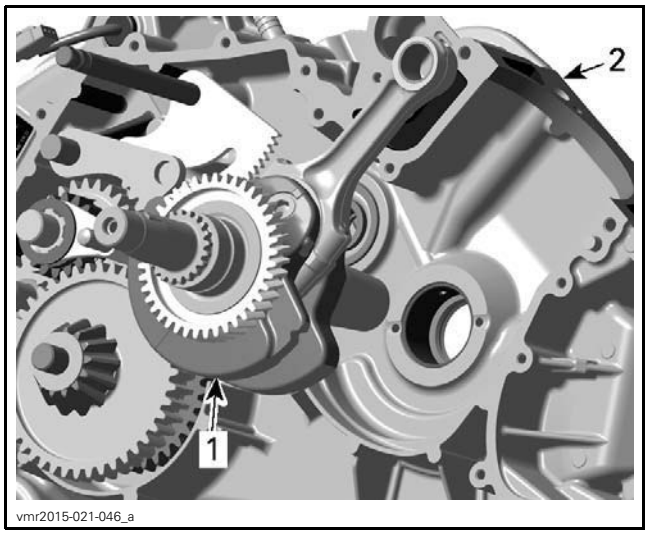

1. *Crankshaft*
2. *Crankcase PTO*

Crankshaft Inspection and Disassembly

Replace crankshaft if the gears are worn or otherwise damaged.

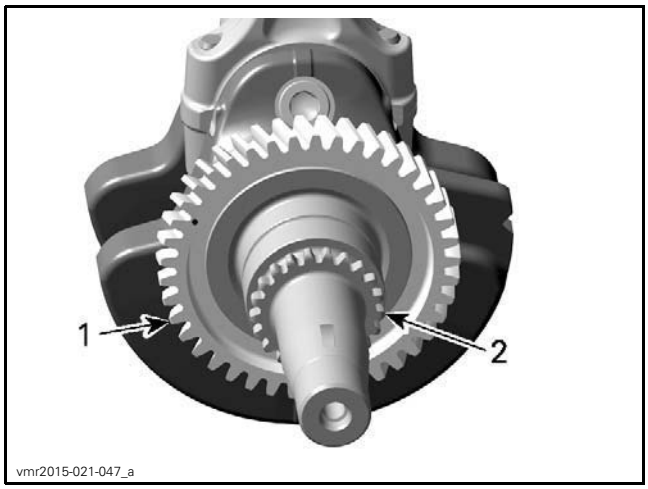

1. *Balancer gear*
2. *Crankshaft timing gear*

Connecting Rod Big End Axial Play

Using a feeler gauge, measure distance between butting face of connecting rod and crankshaft counterweight. If the distance exceeds specified tolerance, replace the crankshaft.

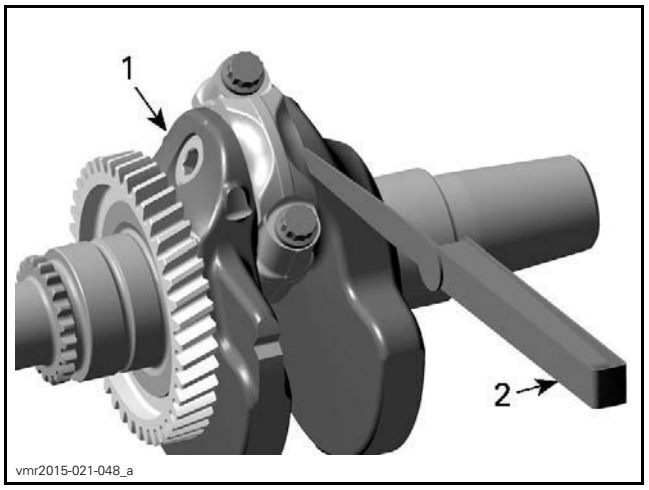

1. *Crankshaft*
2. *Feeler gauge*

CONNECTING ROD BIG END AXIAL PLAY	
NEW	0.100 mm to 0.452 mm (.004 in to .018 in)
SERVICE LIMIT	0.500 mm (.02 in)

Connecting Rod/Piston Pin Clearance

Refer to *TOP END* subsection.

Connecting Rod Big End Radial Play

NOTE: Prior to remove connecting rod from the crankshaft, mark big end halves together to ensure a correct reinstallation (cracked surface fits in only one position).

Remove connecting rod from crankshaft.

NOTICE **Connecting rod screws are not reusable. Always discard screws and replace by NEW ones. It is recommended to install new plain bearings when reinstalling connecting rods.**

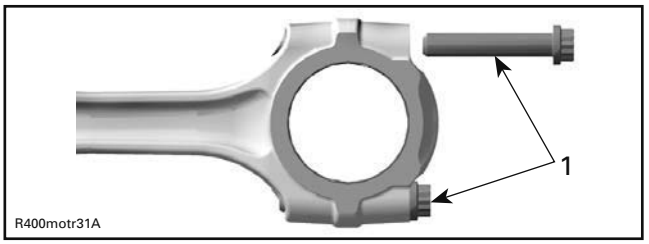

1. *Connecting rod screw*

Measure crankpin. Compare to inside diameter of connecting rod big end.

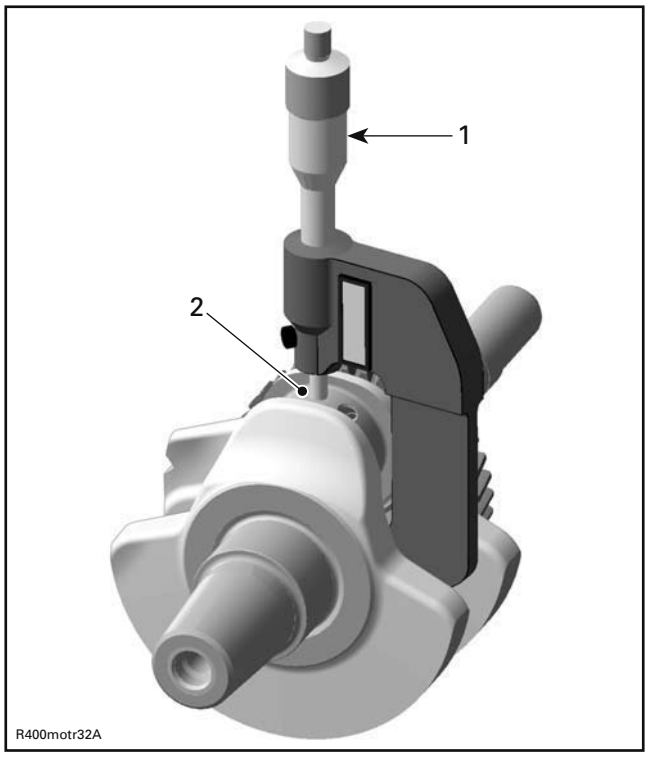

1. Micrometer
2. Crankpin area for plain bearings

CRANK PIN DIAMETER	
NEW	40.001 mm to 40.025 mm (1.5748 in to 1.5758 in)
SERVICE LIMIT	39.980 mm (1.574 in)

If the crank pin diameter is out of specification, replace crankshaft.

To measure the connecting rod big end diameter, use the OLD screws.

Install the OLD plain bearings as they were mounted initially.

Carry out the tightening procedure described in *CRANKSHAFT ASSEMBLY* in this subsection.

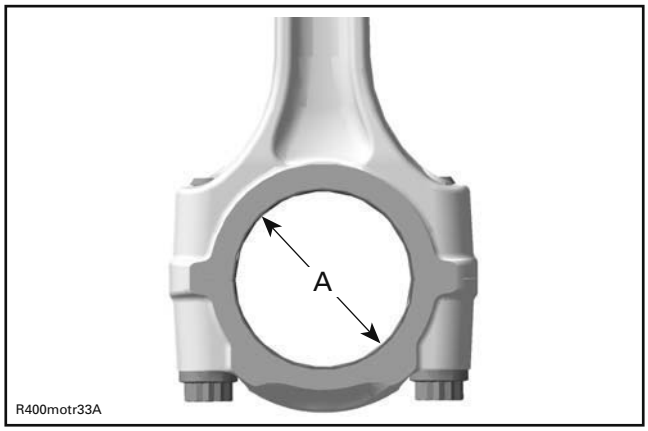

A. Connecting rod big end plain bearing

If the crank pin diameter is out of specification, replace crankshaft.

CONNECTING ROD BIG END DIAMETER	
SERVICE LIMIT	40.100 mm (1.579 in)

If connecting rod big end diameter is out of specification, replace plain bearings and recheck.

CONNECTING ROD BIG END RADIAL PLAY	
SERVICE LIMIT	0.09 mm (.0035 in)

If connecting rod big end radial clearance is out of specification, replace plain bearings and recheck.

Crankshaft Radial Play MAG/PTO Side

Measure crankshaft MAG/PTO side. Compare to inside diameter of MAG/PTO plain bearings, refer to *CRANKCASE* in this subsection.

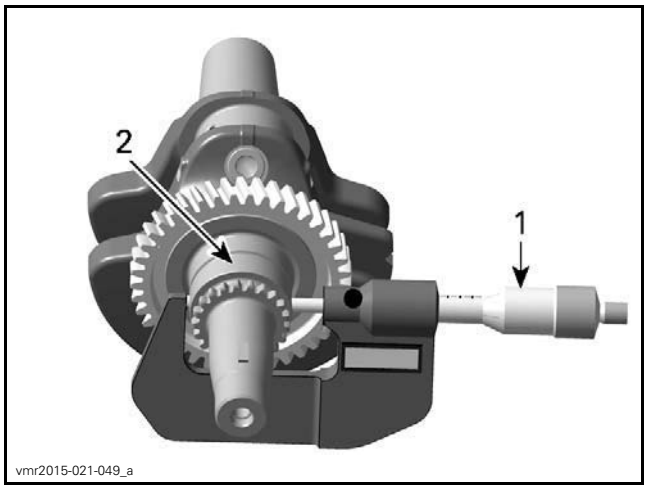

1. Micrometer
2. Crankshaft, MAG side main bearing journal

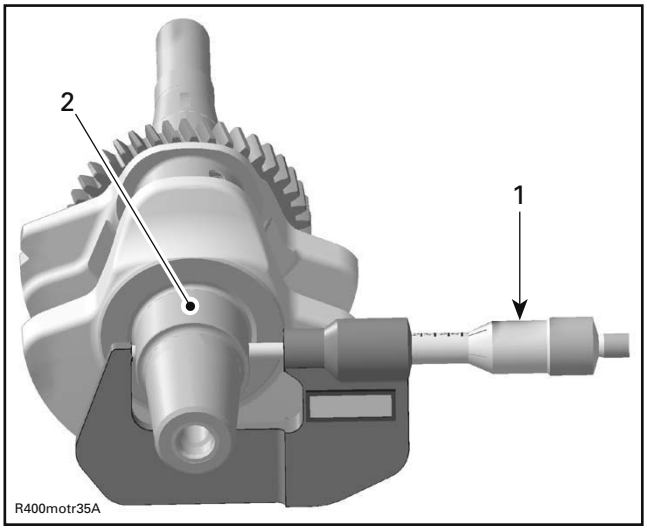

1. Micrometer
2. Crankshaft area for PTO plain bearing

CRANKSHAFT MAG/PTO DIAMETER	
NEW	42.016 mm to 42.040 mm (1.6542 in to 1.6551 in)
SERVICE LIMIT	42.000 mm (1.6535 in)

CRANKSHAFT MAG RADIAL PLAY	
SERVICE LIMIT	0.07 mm (.0028 in)

Crankshaft Assembly

The assembly is the reverse of the disassembly procedure. However, pay attention to the following.

Clean the split surface on both sides (cracked area) carefully with compressed air.

Use NEW bearings, when connecting rod big end diameter is out of specification.

Put plain bearings correctly in place.

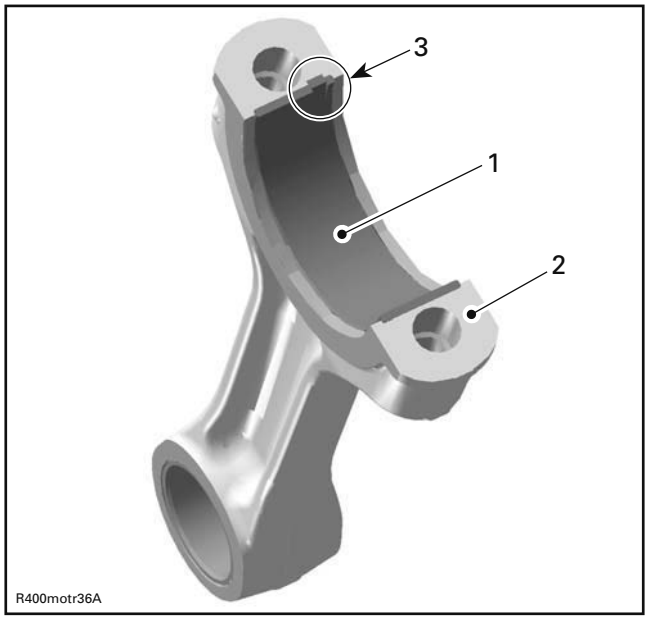

1. *Half plain bearing of connecting rod big end*
2. *Split surface of the connecting rod*
3. *Nose of bearing in line with connecting rod groove*

Oil the plain bearing surface of the connecting rod and crank pin before installation.

NOTICE **Lower cap and rod must match together since there is a cracked surface.**

Oil NEW connecting rod screws.

NOTICE **Always use NEW connecting rod screws for the final assembly. They are not reusable.**

Thread screws in connecting rod, then tighten as per following procedure.

NOTICE **Strictly adhere following instructions:**

- **Do not apply any thread locker.**
- **The running direction of the big end bearings and of the piston pins must not change.**
- **Always perform each step on both connecting rod screws before going to the next step.**
- **Failure to strictly follow procedure may cause connecting rod screws to loosen and lead to severe engine damage.**

REQUIRED TOOL
Torque wrench
Angle torque wrench

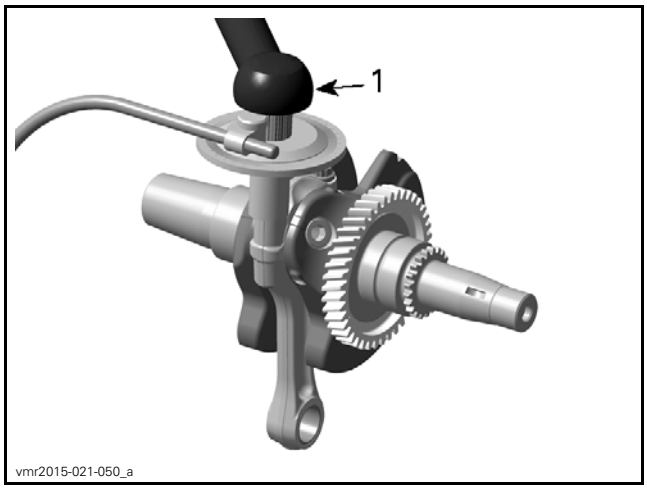

1. *Angle torque wrench*

CONNECTING RODS SCREWS TIGHTENING SEQUENCE	
Step 1	Tighten to 1/2 of specified torque
Step 2	Tighten to 20 N•m ± 2 N•m (15 lbf•ft ± 1 lbf•ft)
Step 3	Torque by an additional 60 ± 5° turn using an angle torque wrench

Crankshaft Installation

The installation is the reverse of the removal procedure. However, pay attention to following.

Install crankshaft first then balancer shaft.

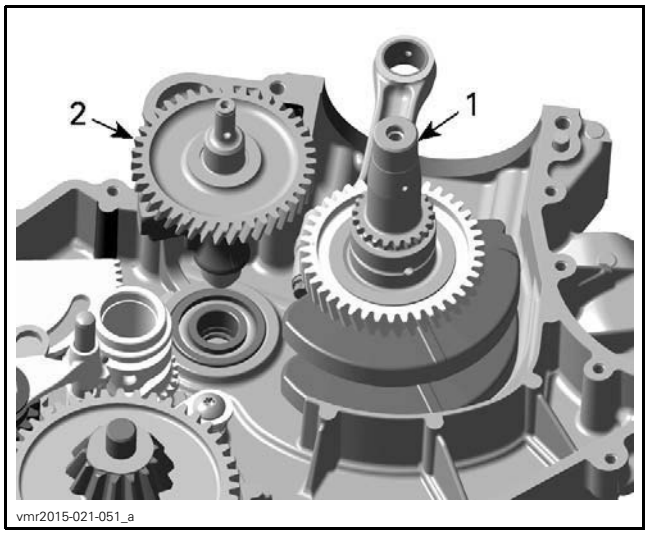

1. Crankshaft
2. Balancer shaft

Align the marks of crankshaft and balancer shaft.

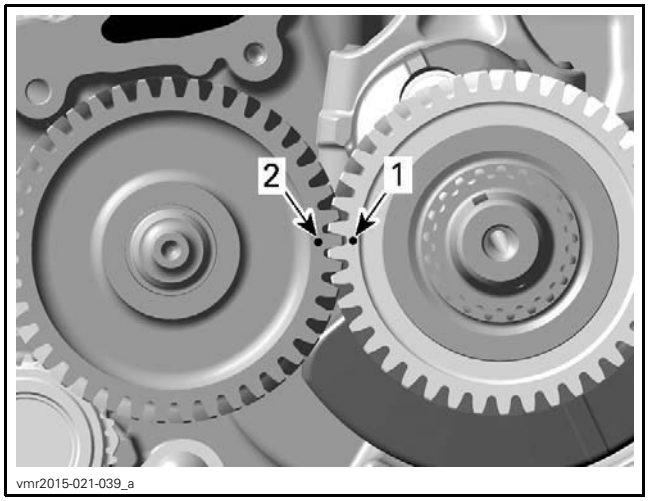

1. Mark on crankshaft gear
2. Mark on balancer shaft gear

After reinstalling of crankcase MAG, measure axial clearance of crankshaft with a feeler gauge between PTO crankcase and crankshaft thrust surface.

Install the CRANKSHAFT LOCKING BOLT (P/N 529 035 617) to keep the crankshaft in TDC position before installing the camshaft timing chain (refer to *CRANKSHAFT LOCKING PROCEDURE* in this subsection).

NOTICE **Make sure the woodruff key on crankshaft MAG is present and correctly in place.**

BOTTOM END

SERVICE TOOLS

Description	Part Number	Page
CRANKCASE SUPPORT MAG/PTO	529 036 031	139
CRANKSHAFT LOCKING BOLT	529 035 617	142
DRIVE SHAFT OIL SEAL INSTALLER	529 036 028	131–132
DRIVE SHAFT OIL SEAL PROTECTOR	529 036 029	130
PLAIN BEARING REMOVER/INSTALLER	529 035 917	139
PLAIN BEARING REMOVER/INSTALLER	529 036 032	134
PTO COVER OIL SEAL INSTALLER	529 036 033	133

SERVICE PRODUCTS

Description	Part Number	Page
LOCTITE 243 (BLUE)	293 800 060	131
LOCTITE 5910	293 800 081	130
LOCTITE CHISEL (GASKET REMOVER)	413 708 500	130

ENGINE DRIVE SHAFT

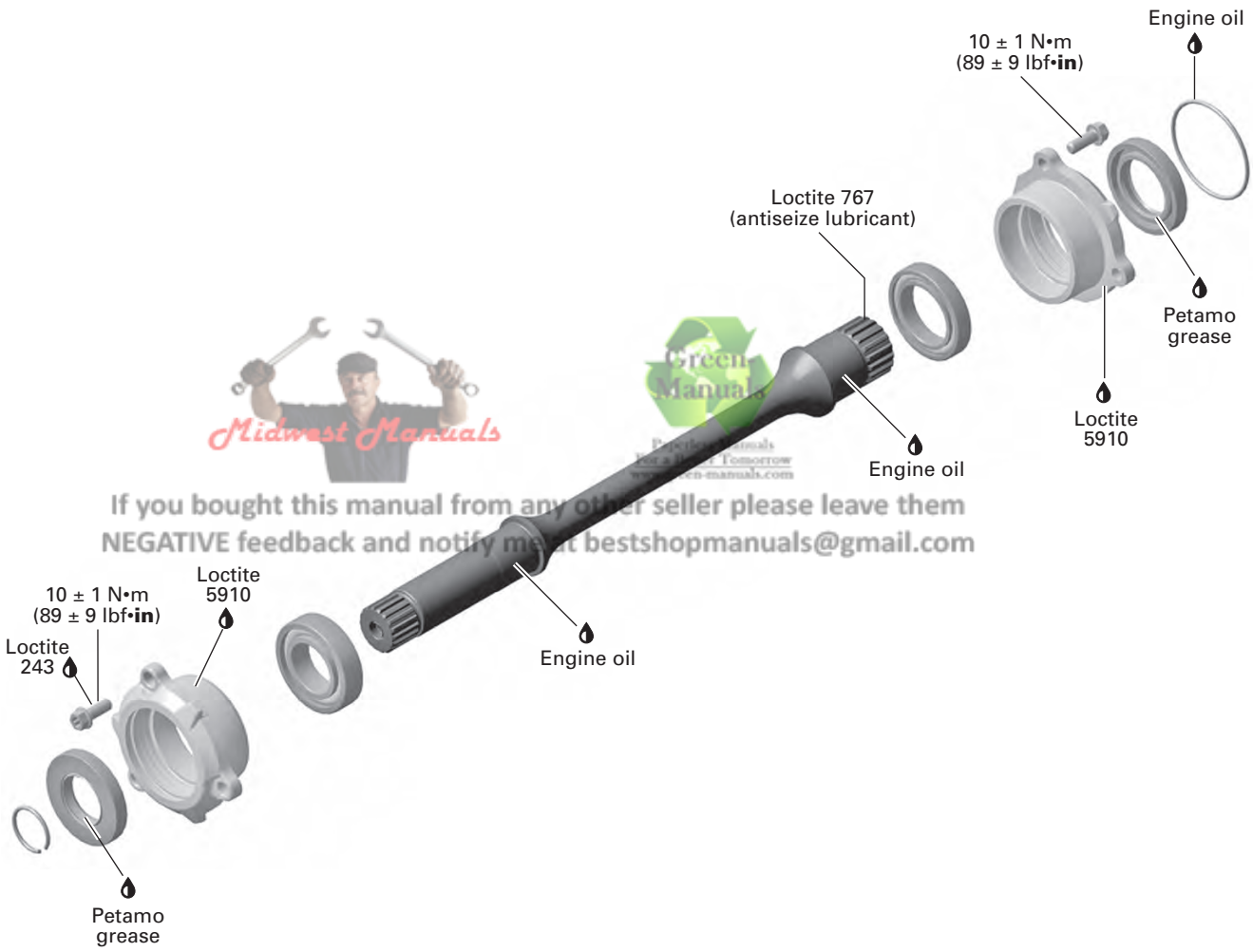

Midwest Manuals
If you bought this manual from any other seller please leave them
NEGATIVE feedback and notify me at bestshopmanuals@gmail.com

tmr2011-014-001_b

CRANKCASE AND PTO COVER

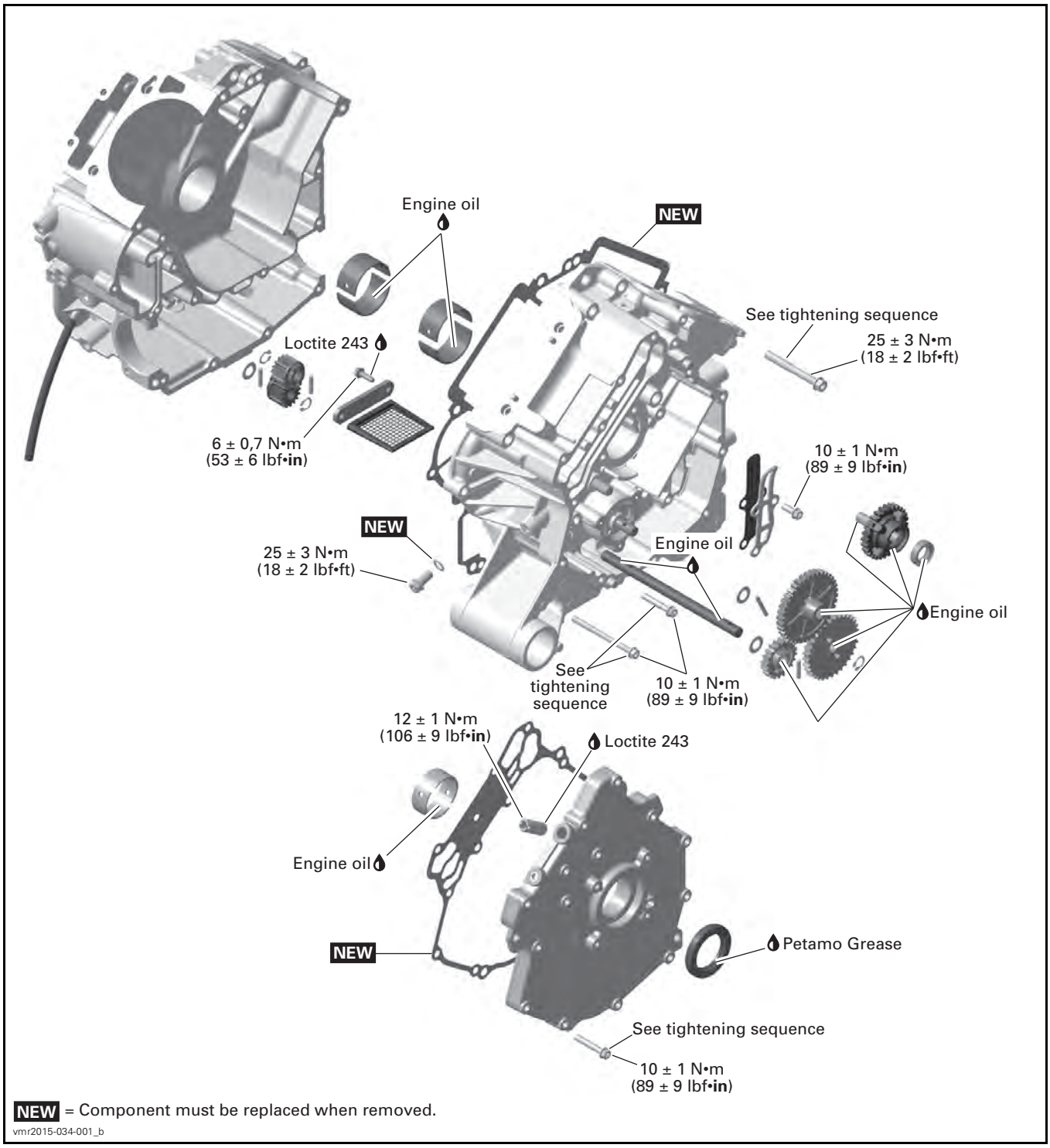

NEW = Component must be replaced when removed.

vmr2015-034-001_b

CRANKSHAFT

Midwest Manuals
Green Manuals
Paperless Manuals For a Better Tomorrow www.green-manuals.com
If you bought this manual from any other seller please leave them NEGATIVE feedback and notify me at bestshopmanuals@gmail.com

vmr2013-018-001_b

PROCEDURES

IMPORTANT: Note position of parts on disassembly. This may help to find the root cause of a problem. A component that is not replaced should be reinstalled in the same position as originally mounted.

ENGINE DRIVE SHAFT

NOTE: The engine drive shaft transmits the power from the gearbox to the front differential and is located inside the crankcase.

Removing the Engine Drive Shaft

Remove the engine. Refer to *ENGINE REMOVAL AND INSTALLATION* subsection.

Removing the Rear Bearing Cover

Detach gearbox from engine, refer to *GEARBOX AND 4X4 COUPLING UNIT* subsection.

At rear of engine, remove the bearing cover and its O-ring.

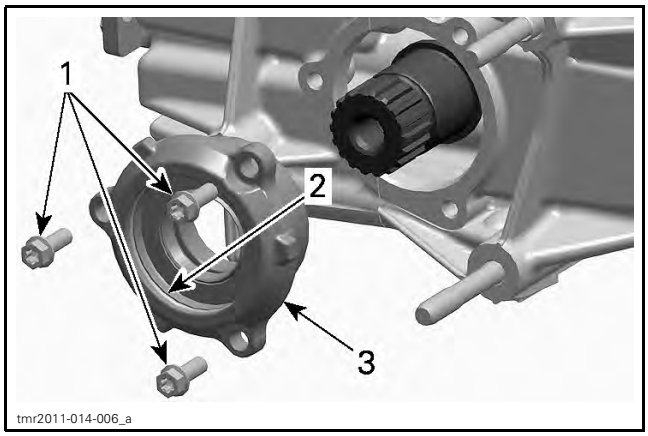

1. *Bearing cover screws*
2. *O-ring*
3. *Bearing cover gearbox side*

Removing the Front Bearing Cover

Remove the bearing cover at the front of the engine.

NOTICE **Check ends of the circlip for sharp edges or burrs before removing the drive shaft, to avoid damaging the oil seal.**

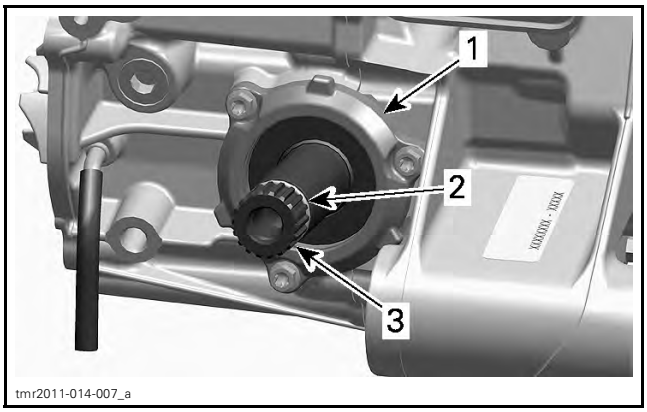

1. *Bearing cover front drive side*
2. *Circlip*
3. *Drive shaft*

Removing the Engine Drive Shaft

Split crankcase, refer to *CRANKCASE* in this subsection.

Remove engine drive shaft from the crankcase.

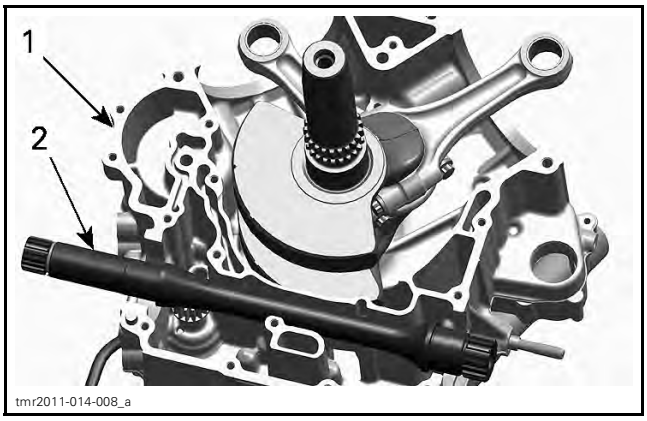

1. *Crankcase MAG side*
2. *Engine drive shaft*

Inspecting the Engine Drive Shaft

Replace oil seals and/or O-ring (bearing cover gearbox side) if they are brittle, hard or damaged.

Check drive shaft bearings for contamination and/or metal shavings. Check if bearings turn freely and smoothly. Replace if necessary.

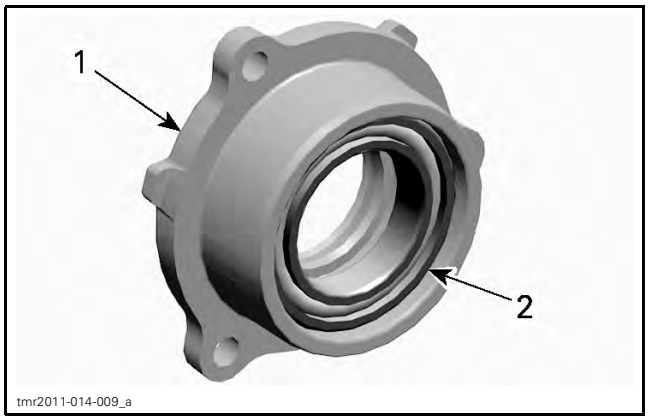

1. Bearing cover
2. Drive shaft bearing

Check drive shaft for cracks, bend, pitting or other visible damages.

Check drive shaft splines for wear or damages.

Check oil seal running surface of the drive shaft for scratches. Replace if necessary.

Installing the Engine Drive Shaft

The installation is the reverse of removal procedure however, pay attention to the following details.

Clean all metal components in solvent.

Clean crankcase surfaces and bearing covers using a combination of LOCTITE CHISEL (GASKET REMOVER) (P/N 413 708 500) and a brass brush. First brush in one direction then make the final brushing perpendicularly (90°) to the first pass.

NOTICE **Do not wipe with rags. Use a new clean hand towel only.**

Use a suitable installer for installing bearings.

Use LOCTITE 5910 (P/N 293 800 081) on mating surfaces.

IMPORTANT: When beginning the application of the bearing cover sealant, the assembly and the first torquing should be done within 10 minutes. It is suggested to have all you need on hand to save time.

Use a plexiglass plate and apply some sealant on it. Use a soft rubber roller 50 mm - 75 mm (2 in - 3 in), available in arts products suppliers for printing, and roll the sealant to get a thin uniform coat on the plate (spread as necessary). When ready, apply the sealant on bearing cover surfaces.

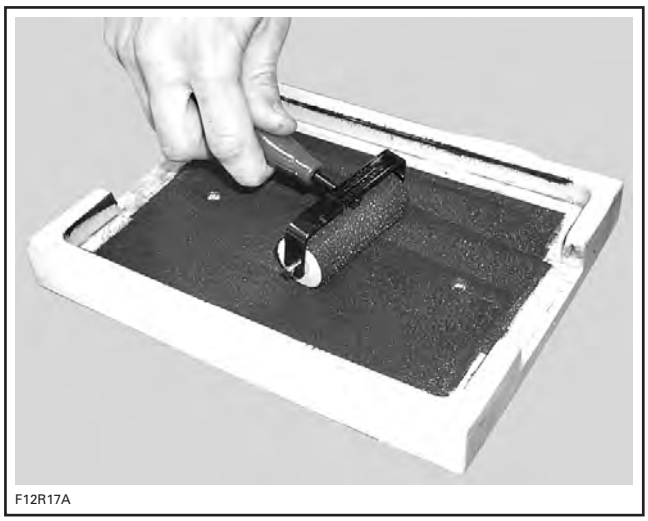

Do not apply in excess as it will spread out inside crankcase.

NOTE: It is recommended to apply this specific sealant as described here to get a uniform application without lumps. If you do not use the roller method, you may use your finger to uniformly distribute the sealant (using a finger will not affect the adhesion).

Installing the Rear Bearing Cover

For bearing cover installation on gearbox side, protect the oil seal to avoid damaging the sealing lip.

REQUIRED TOOL	
DRIVE SHAFT OIL SEAL PROTECTOR (P/N 529 036 029)	

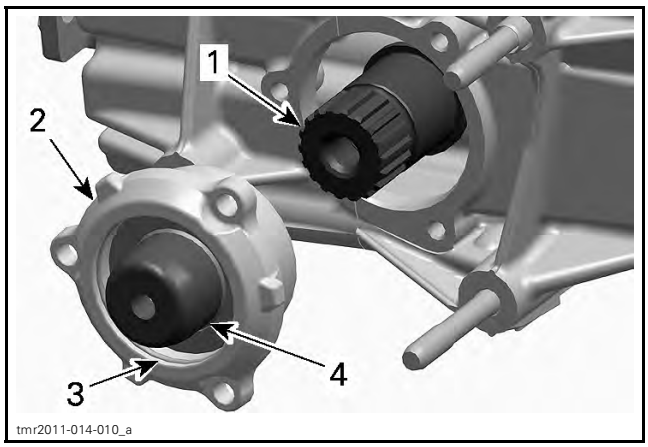

1. Drive shaft
2. Bearing cover gearbox side
3. O-ring
4. Protection sleeve

TIGHTENING TORQUE	
Rear bearing cover screws	10 N•m ± 1 N•m (89 lbf•**in** ± 9 lbf•**in**)

Installing the Front Bearing Cover

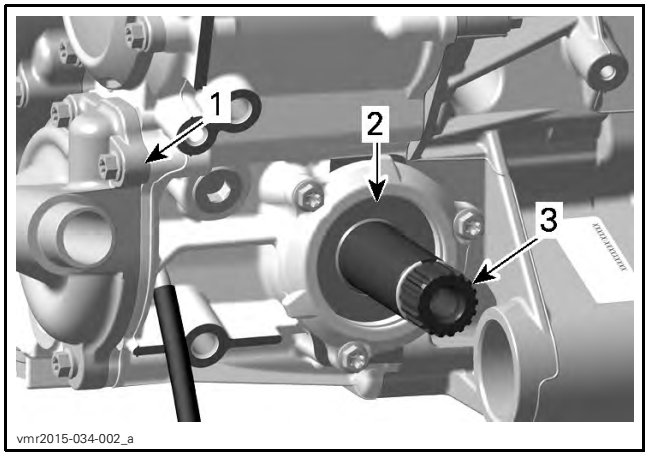

FRONT OF ENGINE
1. *Water pump cover*
2. *Oil seal front side*
3. *Drive shaft*

TIGHTENING TORQUE	
Service product	LOCTITE 243 (BLUE) (P/N 293 800 060)
Front bearing cover screws	10 N•m ± 1 N•m (89 lbf•**in** ± 9 lbf•**in**)

Installing the Engine Drive Shaft

Finally check for axial play of the drive shaft.

FRONT OIL SEAL (ENGINE DRIVE SHAFT)

Replacing the Front Oil Seal (Engine Drive Shaft)

NOTE: The front oil seal can be replaced with the engine installed.

1. Remove front propeller shaft.
2. Remove adapter sleeve between propeller shaft and front engine drive shaft.
3. Remove the front bearing cover, refer to *ENGINE DRIVE SHAFT REMOVAL/INSTALLATION* in this subsection.
4. Remove drive shaft seal from bearing cover.

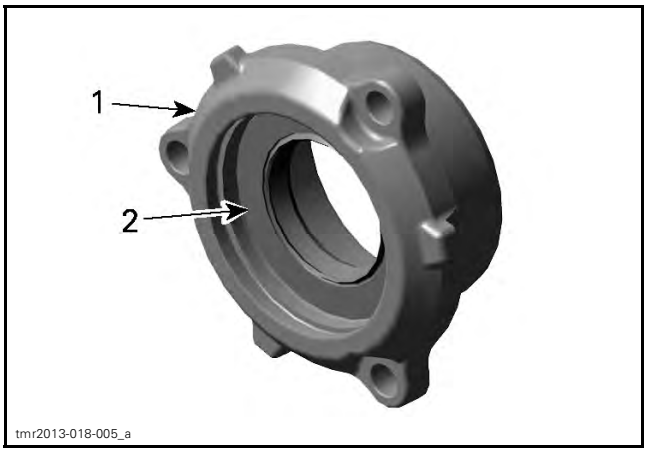

1. *Bearing cover*
2. *Oil seal*

5. Install drive shaft oil seal using the following tool.

REQUIRED TOOL	
DRIVE SHAFT OIL SEAL INSTALLER (P/N 529 036 028)	

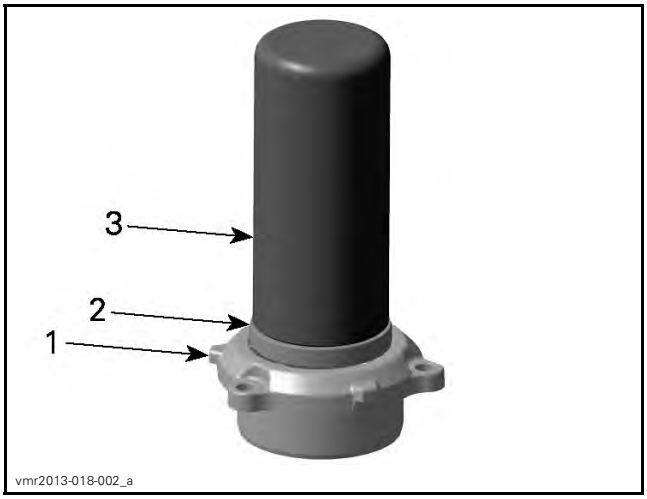

1. *Bearing cover*
2. *Oil seal*
3. *Oil seal installer*

6. Reinstall remaining parts in the reverse order of removal.

REAR OIL SEAL (ENGINE DRIVE SHAFT)

Replacing the Rear Oil Seal (Engine Drive Shaft)

1. Remove gearbox from the engine, refer to *GEARBOX AND 4X4 COUPLING UNIT* subsection.

2. Remove rear bearing cover, refer to *ENGINE DRIVE SHAFT REMOVAL/INSTALLATION* in this subsection.
3. Remove O-ring from bearing cover.

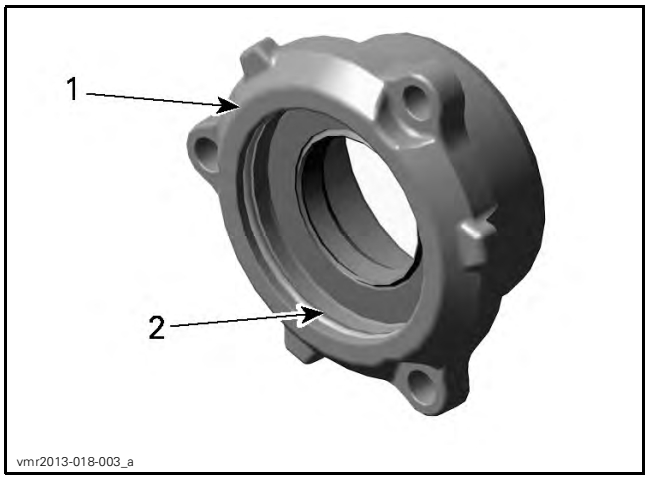

1. Bearing cover
2. O-ring

4. Remove drive shaft seal from bearing cover.

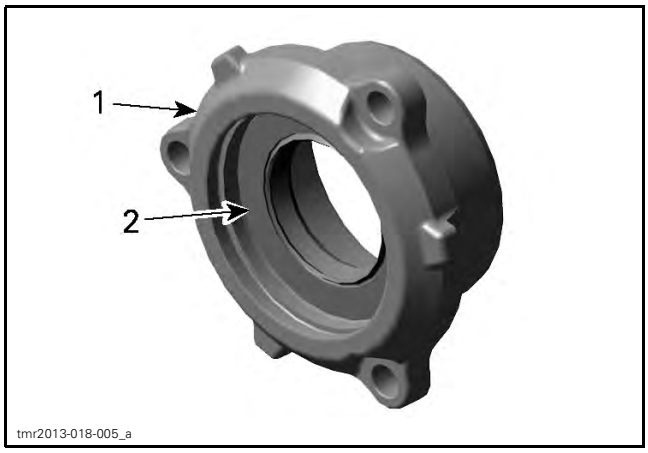

1. Bearing cover
2. Oil seal

5. Install drive shaft oil seal using the following tool.

REQUIRED TOOL	
DRIVE SHAFT OIL SEAL INSTALLER (P/N 529 036 028)	

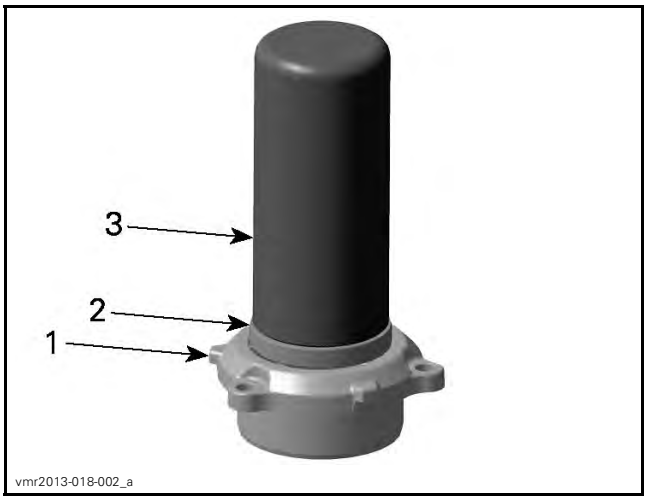

1. Bearing cover
2. Oil seal
3. Oil seal installer

6. Install O-ring in rear bearing cover.

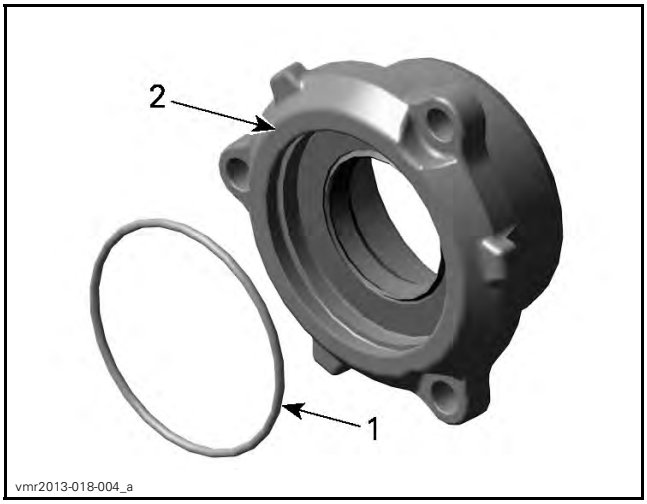

1. O-ring
2. Bearing cover

7. Reinstall remaining parts in the reverse order of removal.

PTO COVER OIL SEAL

NOTE: To replace oil seal it is not necessary to remove engine from vehicle.

Removing the PTO Oil Seal

1. Refer to *CONTINUOUSLY VARIABLE TRANSMISSION (CVT)* subsection and remove the following parts:
   – CVT cover
   – Drive pulley
   – Driven pulley
   – CVT air guide.
2. Remove oil seal using a small flat screwdriver.

NOTICE Avoid scoring surfaces with tool.

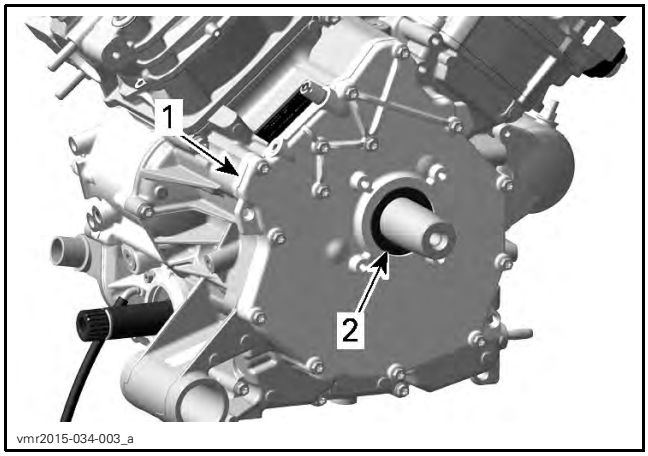

1. PTO cover
2. Oil seal

Inspecting the PTO Oil Seal

Check oil seal running surface of crankshaft PTO side for grooves. Replace if necessary.

Installing the PTO Oil Seal

The installation is the reverse of the removal procedure however, pay attention to the following details.

NOTICE Oil seal must be installed with sealing lip toward the engine.

Push oil seal in place using the following tool.

REQUIRED TOOL	
PTO COVER OIL SEAL INSTALLER (P/N 529 036 033)	

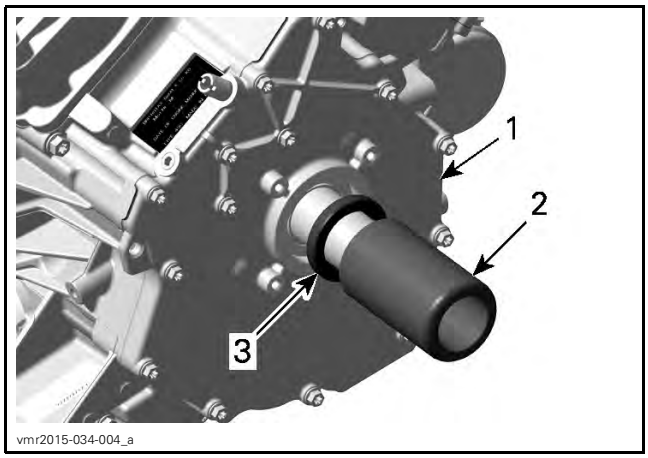

1. PTO cover
2. Oil seal installer
3. Oil seal

PTO COVER

Removing the PTO Cover

1. Refer to *CONTINUOUSLY VARIABLE TRANSMISSION (CVT)* subsection to remove the following parts:
   – CVT cover
   – Drive pulley
   – Driven pulley
   – CVT air guide.
2. Disconnect vent hose.
3. Remove PTO cover screws and pull on PTO cover to remove it.

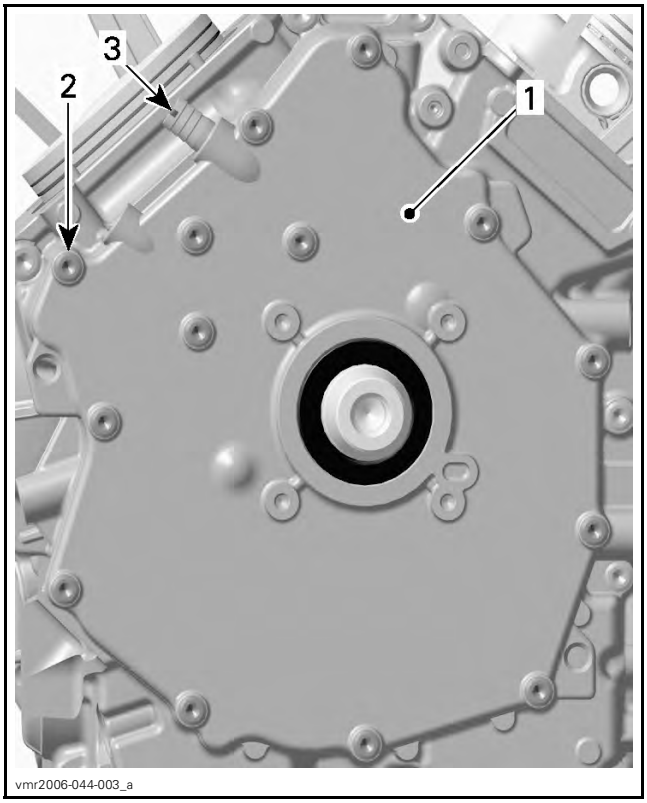

1. PTO cover
2. PTO cover screws
3. Vent hose nipple

Inspecting the PTO Cover

1. Check the PTO cover for cracks or other damage.
2. Replace PTO cover if damaged.
3. Clean oil breather bore in PTO cover from contaminations with a parts cleaner then use pressurized air to dry it.

⚠ WARNING

Always wear skin and eye protection. Chemicals can cause skin rash, skin burns and severe eye injury.

4. Check surface of sealing sleeve for wear or other damages. Replace PTO cover if damaged.

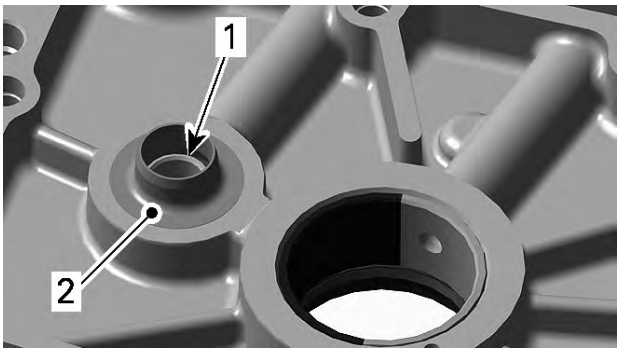

1. Oil breather bore
2. Surface of sealing sleeve

5. Check plain bearings for scoring or other damages.

NOTE: Measure plain bearing inside diameter (PTO cover) and compare to crankshaft bearing journal diameter (PTO cover bearing). Refer to *CRANKSHAFT* in this subsection. Replace if the measurement is out of specification.

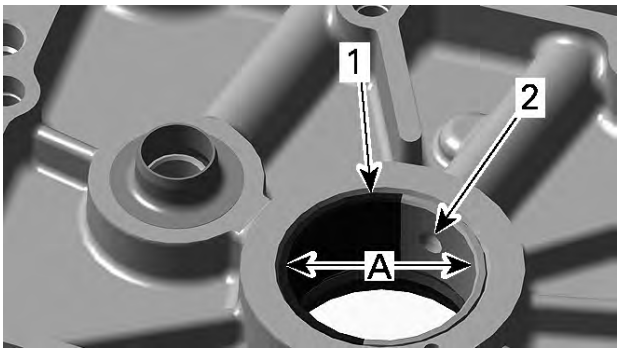

1. Plain bearing
2. Oil bore
A. Measure plain bearing inside diameter

PLAIN BEARING INSIDE DIAMETER (PTO COVER)	
SERVICE LIMIT	34.120 mm (1.3433 in)

Replacing the Plain Bearing (PTO Cover)

Removing the Plain Bearing

NOTICE **Unless otherwise instructed, never use a hammer to install plain bearings. Always use a press.**

1. Carefully remove the PTO oil seal with a screwdriver, without damaging the PTO cover.
2. Press out the plain bearings from the outside towards the inside.

REQUIRED TOOL	
PLAIN BEARING REMOVER/INSTALLER (P/N 529 036 032)	

NOTE: The PTO cover has to be supported from below on a suitable support with straight surface in order to prevent damage of the sealing surface.

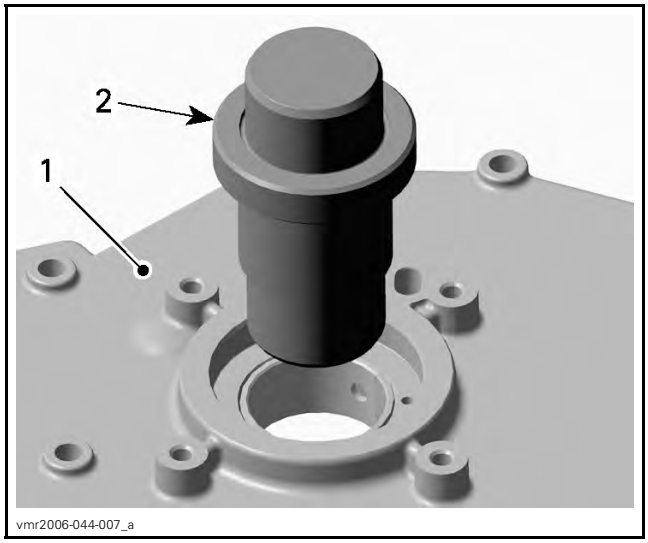

1. PTO cover
2. Plain bearing remover/installer

Installing the Plain Bearing

NOTE: Do not lubricate plain bearings or PTO cover for installation.

Install plain bearings in a cold PTO cover.

REQUIRED TOOL	
PLAIN BEARING REMOVER/INSTALLER (P/N 529 036 032)	

1. Mark position of oil bore on PTO cover and on plain bearing remover/installer.
2. Align mark on plain bearing remover/installer with mark on PTO cover.

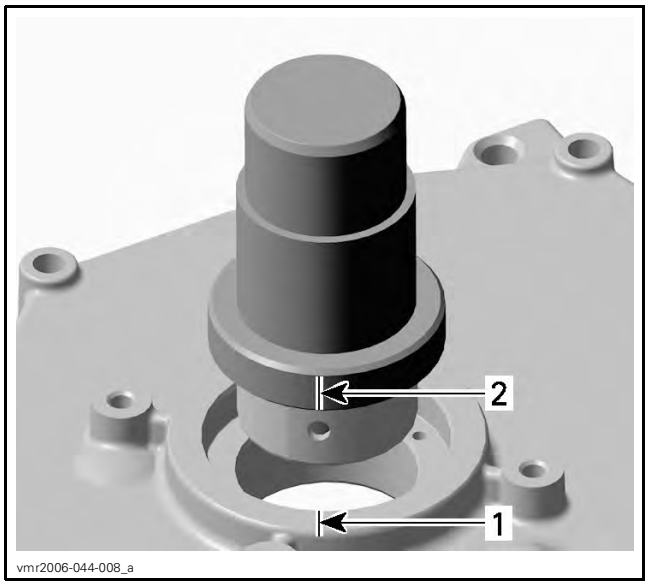

1. *Mark position of oil bore on PTO cover*
2. *Mark position of oil bore on plain bearing remover/installer*

NOTICE **Misalignment of plain bearing and PTO cover oil bores will prevent proper oil supply to plain bearings.**

3. Carefully press in the plain bearings in the same direction as during disassembly, from the outside towards the inside.

NOTE: Support PTO cover using a suitable support with a straight surface to prevent damage of the sealing surface.

NOTICE **The joining surfaces of the plain bearings must be positioned near the oil bore in a counterclockwise direction.**

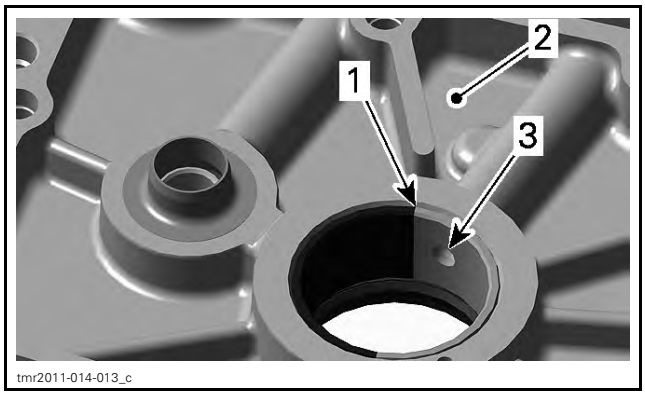

1. *Plain bearing joint*
2. *PTO cover (inside surface)*
3. *Oil bore*

Installing the PTO Cover

For installation, reverse the removal procedure however, pay attention to the following details.

NOTE: At installation, replace PTO cover gasket and oil seal.

Tighten PTO cover screws following the sequence illustrated.

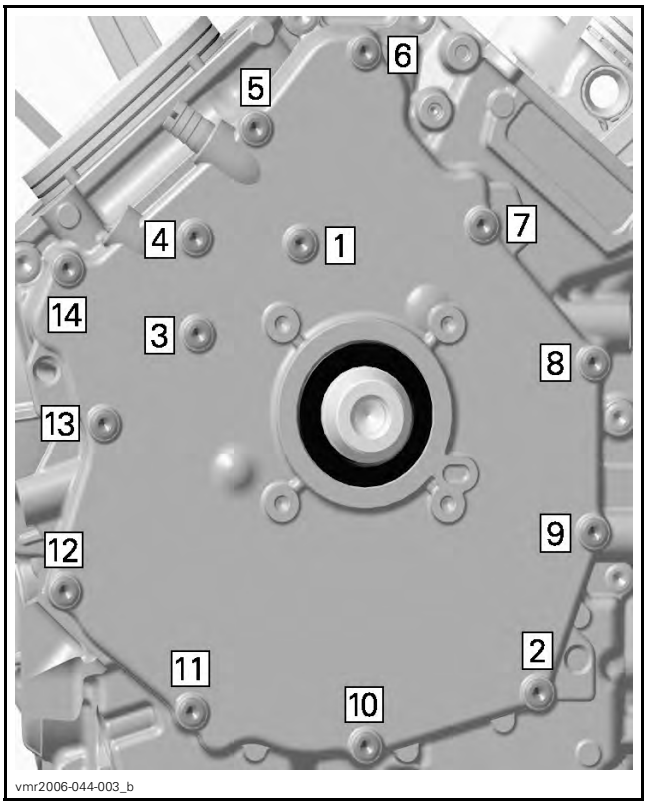

TIGHTENING SEQUENCE

TIGHTENING TORQUE	
PTO cover screws	10 N•m ± 1 N•m (89 lbf•**in** ± 9 lbf•**in**)

DRIVE GEARS

Drive Gears Location

The engine is equipped with a breather gear which prevents engine oil from seeping out through the breathing system into the air intake system.

The drive gears are located on the engine PTO side behind the PTO cover.

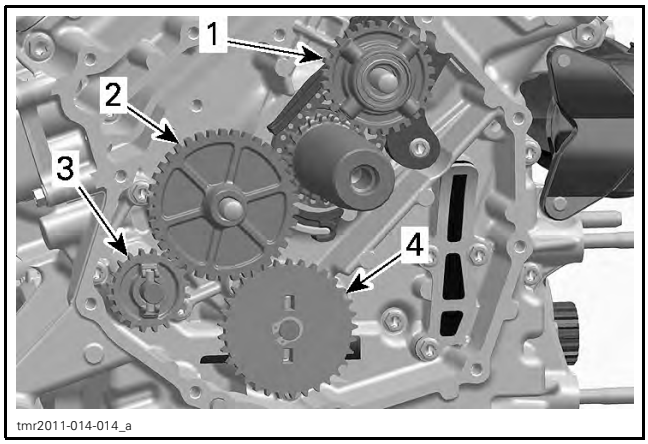

1. Breather gear
2. Intermediate gear
3. Water pump drive gear
4. Oil pump drive gear

Removing the Drive Gears

1. Remove PTO cover, refer to *PTO COVER* in this subsection.
2. Withdraw intermediate gear and breather gear.
3. Remove oil pump drive gear, refer to *OIL PUMP* in the *LUBRICATION SYSTEM* subsection.
4. To remove water pump drive gear, pull the shaft assembly slightly out and turn it about one tooth until it stays out.
5. Then push water pump drive gear in.

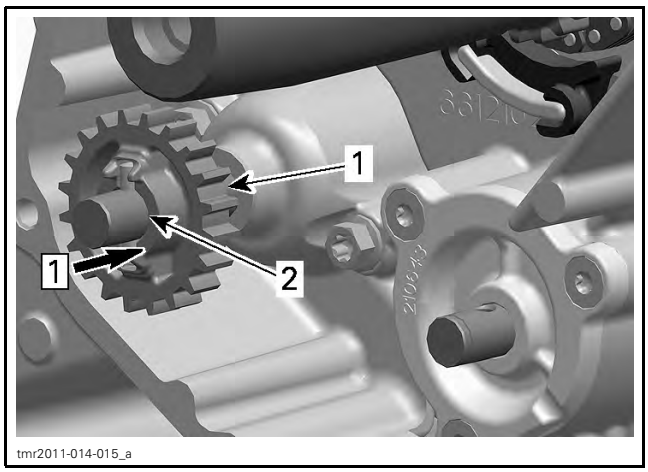

Step 1: Push gear in

1. Water pump drive gear
2. Intermediate shaft

6. Remove needle pin and pull water pump drive gear out.
7. Remove thrust washer from intermediate shaft.

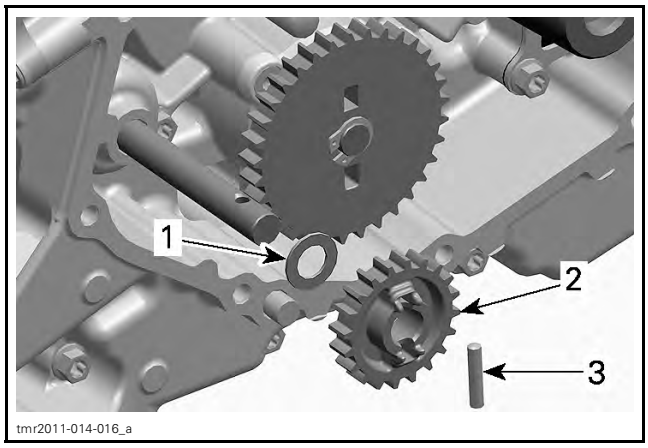

1. Thrust washer
2. Water pump drive gear
3. Needle pin

Inspecting the Drive Gears

Intermediate Gear/Oil Pump Drive Gear/Water Pump Drive Gear

Inspect gears for wear or other damage. Replace if damaged.

Breather Gear

Check if oil seal is brittle, hard or damaged. Replace if necessary.

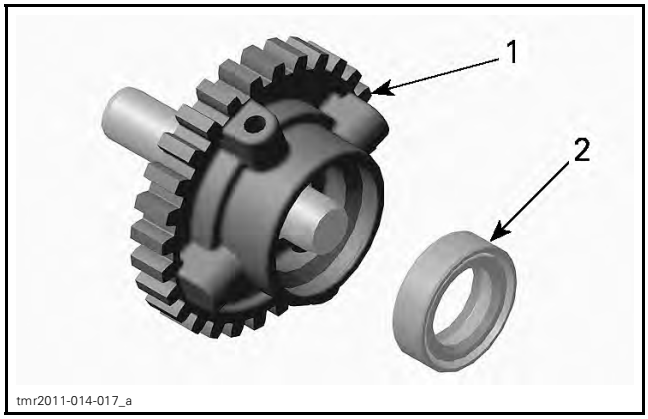

1. Breather gear
2. Oil seal

Inspect gear for wear or other damage.

Check ball bearing for excessive play and smooth operation. Replace breather gear assembly if necessary.

Installing the Drive Gears

The installation is essentially the reverse of the removal procedure however, pay attention to the following.

Adequately oil the ball bearing of the breather gear.

CRANKCASE

Disassembling the Crankcase

1. Refer to *PERIODIC MAINTENANCE PROCEDURES* subsection and carry out the following:
   1.1 Drain cooling system.
   1.2 Drain engine oil.
   1.3 Drain gearbox oil.
2. Lock crankshaft. Refer to *CRANKSHAFT LOCKING PROCEDURE* in the this subsection.
3. Refer to *CONTINUOUSLY VARIABLE TRANSMISSION (CVT)* subsection and remove the following parts:
   – CVT cover
   – Drive pulley
   – Driven pulley
   – CVT air guide.
4. Remove engine from vehicle. Refer to *ENGINE REMOVAL AND INSTALLATION* subsection.
5. Remove gearbox from engine.
6. Refer to *MAGNETO AND STARTER* subsection and remove the following parts:
   – Magneto cover
   – Rotor with sprag clutch gear
   – Starter drive gears.
7. Refer to applicable procedures in this subsection and remove the following parts:
   – PTO cover
   – Drive gears
   – Bearing covers of engine drive shaft.
8. Refer to *TIMING CHAIN* subsection and remove the following parts:
   – Chain tensioners
   – Camshaft timing gears
   – Timing chains
   – Timing chain guides.
9. Refer to *TOP END* subsection and remove the following parts:
   – Front cylinder head
   – Rear cylinder head
   – Cylinders.
10. Refer to *COOLING SYSTEM* subsection and remove the following parts:
   – Water pump housing.
11. Refer to *LUBRICATION SYSTEM* subsection and remove the following parts:
   – Oil filter
   – Oil cooler
   – Oil pump drive gear.

NOTE: Oil pump removal from crankcase is not necessary, but recommended to see condition of oil pump. Refer to *LUBRICATION SYSTEM* subsection.

12. Remove electric starter.

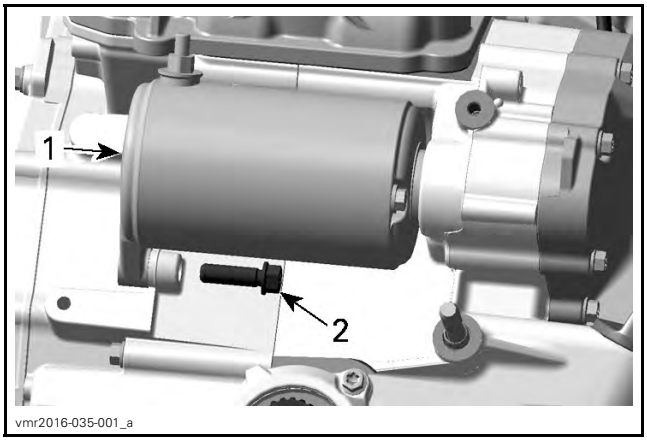

1. Electric starter
2. Screw

NOTE: Before splitting the crankcase, measure crankshaft axial play. Refer to *CRANKSHAFT* in this subsection.

13. Remove crankcase retaining screws.

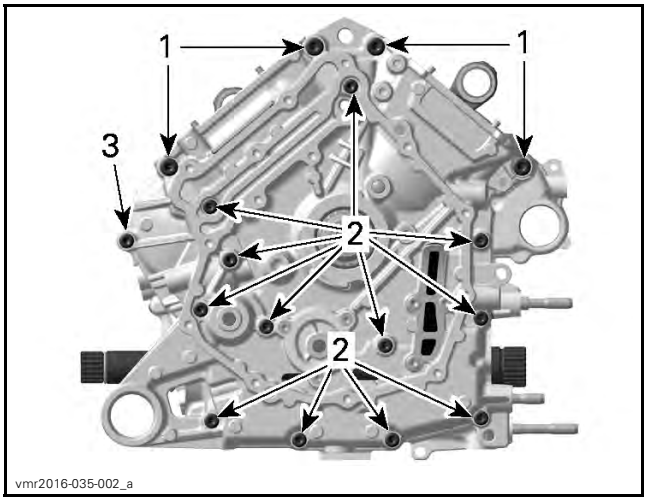

1. Four screws M8 x 65
2. 12 screws M6 x 75
3. One screw M6 x 25

14. Carefully split crankcase halves using a screwdriver and a soft hammer.

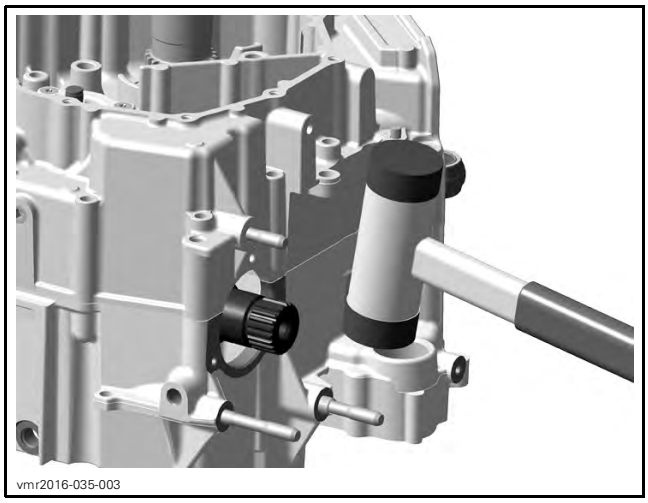

NOTE: During disassembly, do not damage the sealing surfaces of the crankcase halves.

15. Pull crankshaft out of crankcase.
16. Remove the water pump intermediate shaft.

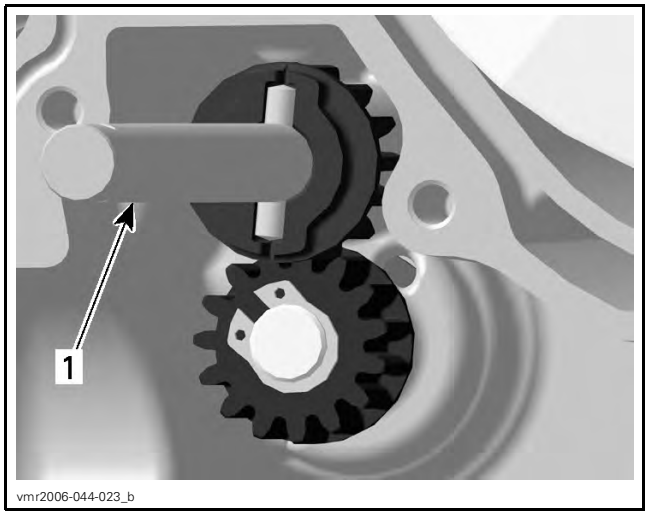

1. Water pump intermediate shaft

17. Remove engine oil strainer.

NOTE: Oil strainer removal for inspection and cleaning is recommended. Refer to *LUBRICATION SYSTEM* subsection.

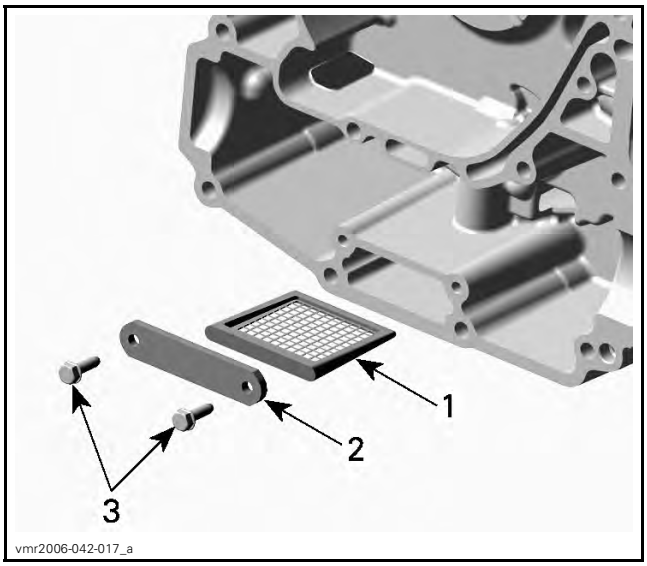

1. Engine oil strainer
2. Retaining plate
3. Screws

Cleaning the Crankcase

⚠ WARNING

Use safety goggles to avoid eye injuries.

Clean crankcase using a part cleaner.

Dry crankcase using compressed air.

Blow low pressure filtered air through the oil supply lines.

Inspecting the Crankcase

Check crankcase halves for cracks or other damage. Replace if damaged.

Check MAG and PTO plain bearings for scoring or other damages.

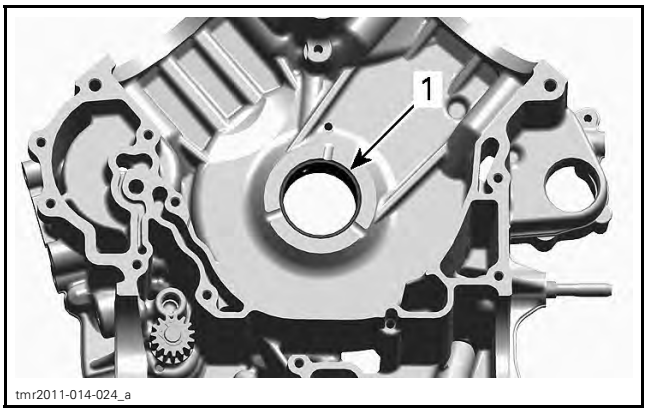

1. Plain bearing

Measure plain bearing inside diameter and compare to PTO/MAG main journal diameters of crankshaft, refer to *CRANKSHAFT* in this subsection. Replace if the measurements are out of specification.

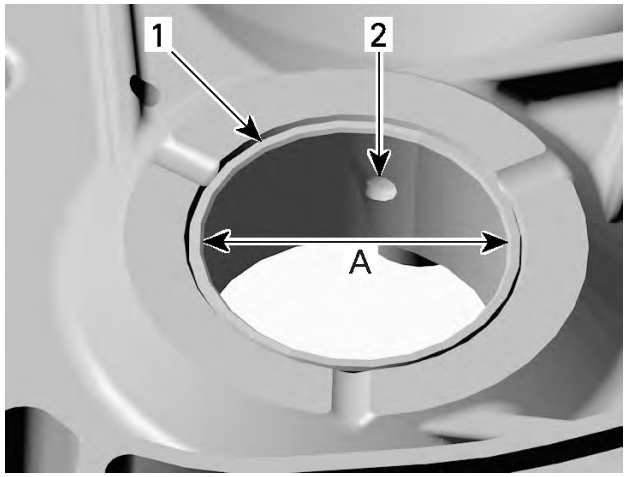

1. *Plain bearing*
2. *Oil bore*

A. *Measure plain bearing inside diameter*

MAIN BEARING INSIDE DIAMETER (PTO/MAG)	
SERVICE LIMIT	42.100 mm (1.6575 in)

Replacing the Plain Bearing (Main)

Removing the Plain Bearing

NOTICE **Always properly support crankcase halves when removing plain bearings. Damage to crankcase halves may occur if this procedure is not performed correctly.**

NOTE: Always use a press for removal of plain bearings.

Carefully press the plain bearings out from the crankcase half from the inside towards the outside.

NOTE: Place an appropriate support under crankcase halves before removing plain bearings.

REQUIRED TOOLS	
CRANKCASE SUPPORT MAG/PTO (P/N 529 036 031)	
PLAIN BEARING REMOVER/INSTALLER (P/N 529 035 917)	

NOTE: During disassembly, make sure not to damage the sealing surfaces of the crankcase halves.

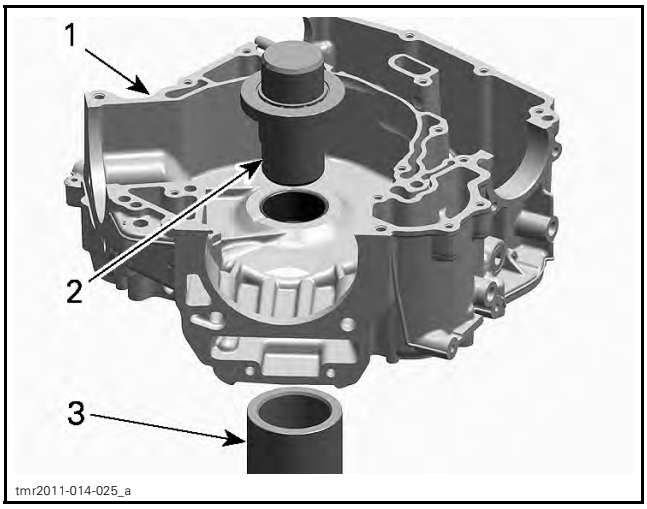

PRESS PLAIN BEARINGS OUTSIDE
1. *Crankcase half*
2. *Plain bearing remover/installer*
3. *Crankcase support sleeve (P/N 529 036 031)*

Installing the Plain Bearing

NOTICE **Unless otherwise instructed, never use a hammer to install plain bearings. Aways use a press.**

During reassembly, make sure not to damage the sealing surfaces of the crankcase halves.

NOTE: Place the proper crankcase support sleeve under crankcase halves before installing the plain bearings, refer to *PLAIN BEARING REMOVAL PROCEDURE* in this subsection.

Install plain bearings in a cold crankcase.

NOTE: Do not lubricate plain bearings and/or crankcase for installation.

REQUIRED TOOL	
PLAIN BEARING REMOVER/INSTALLER (P/N 529 035 917)	

NOTE: Use an O-ring (Ø 42 x 1 mm to 1.5 mm (.04 in to .06 in) thickness) to hold plain bearings in place during installation. The O-ring will disappear in the groove of the plain bearing remover/installer.

1. Mark position of plain bearing oil bore on plain bearing remover/installer.
2. Mark position of oil bore on crankcase half.
3. Align mark on plain bearing remover/installer with mark on crankcase half.

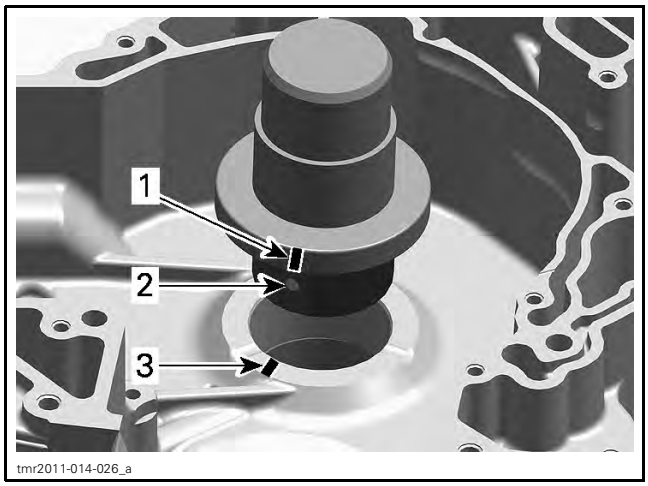

1. Oil bore position marked on plain bearing remover/installer
2. Plain bearing oil bore
3. Oil bore position marked on crankcase

NOTICE **Misalignment of the plain bearing and crankcase oil bores will prevent proper oil supply to plain bearings.**

4. Carefully press in the plain bearings from inside the crankcase towards the outside.

NOTICE **The joint of the plain bearings in crankcase half MAG side must be positioned near the oil bore in a clockwise direction.**

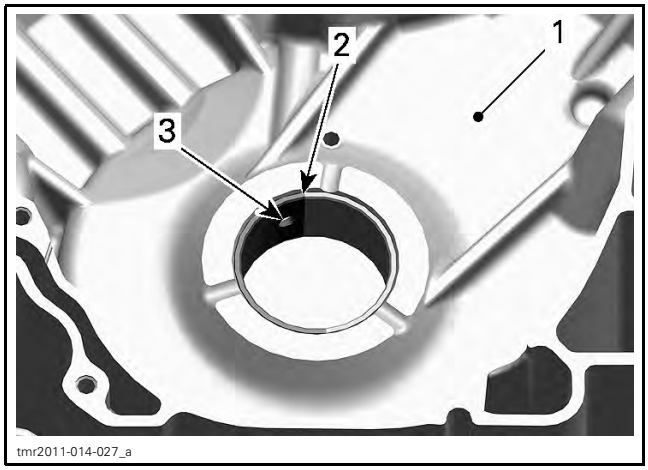

1. Crankcase half MAG (inside surface)
2. Partition
3. Oil bore

NOTICE **The joint of the plain bearings in the crankcase half PTO side must be positioned near the oil bore in the counterclockwise direction.**

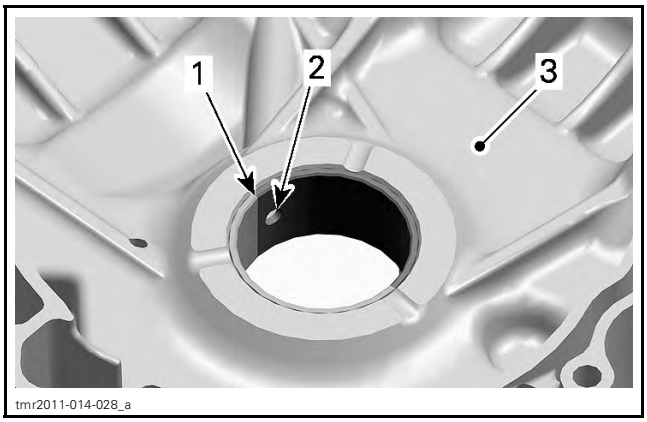

1. Plain bearing joint
2. Oil bore
3. Crankcase half PTO (inside surface)

Assembling the Crankcase

The assembly of crankcase is essentially the reverse of removal procedure. However, pay attention to the following details.

Clean oil passages and make sure they are not clogged.

Clean all metal components in a solvent.

Install a NEW crankcase gasket.

Oil the plain bearings before mounting the crankshaft.

Reinstall crankshaft, see procedure in this subsection

Properly reinstall engine oil strainer and screws. Refer to *LUBRICATION SYSTEM* subsection.

Reinstall water pump intermediate shaft and gears, refer to *WATER PUMP GEARS* in the *COOLING SYSTEM* subsection.

Tighten crankcase retaining screws as per following sequence.

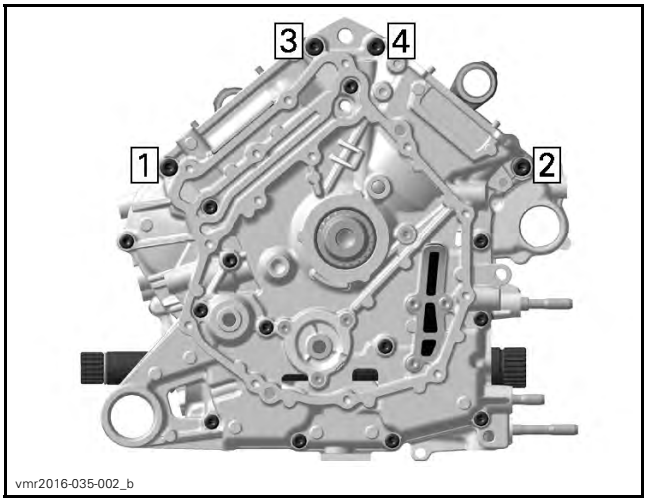

M8 SCREWS TIGHTENING SEQUENCE

TIGHTENING TORQUE	
M8 crankcase screws	25 N•m ± 3 N•m (18 lbf•ft ± 2 lbf•ft)

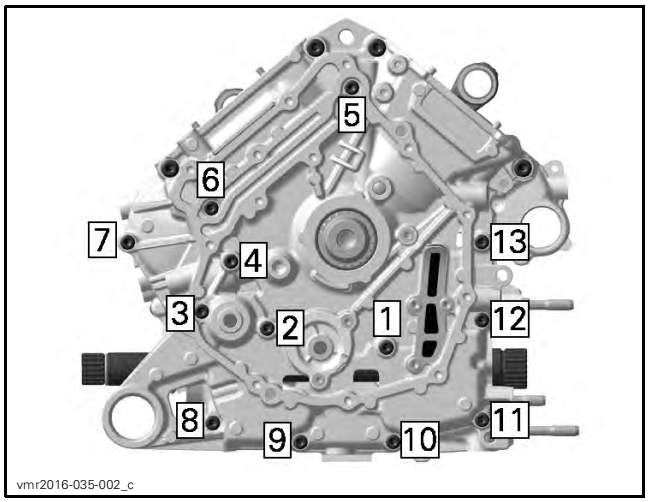

M6 SCREWS TIGHTENING SEQUENCE

TIGHTENING TORQUE	
M6 crankcase screws	10 N•m ± 1 N•m (89 lbf•**in** ± 9 lbf•**in**)

CRANKSHAFT

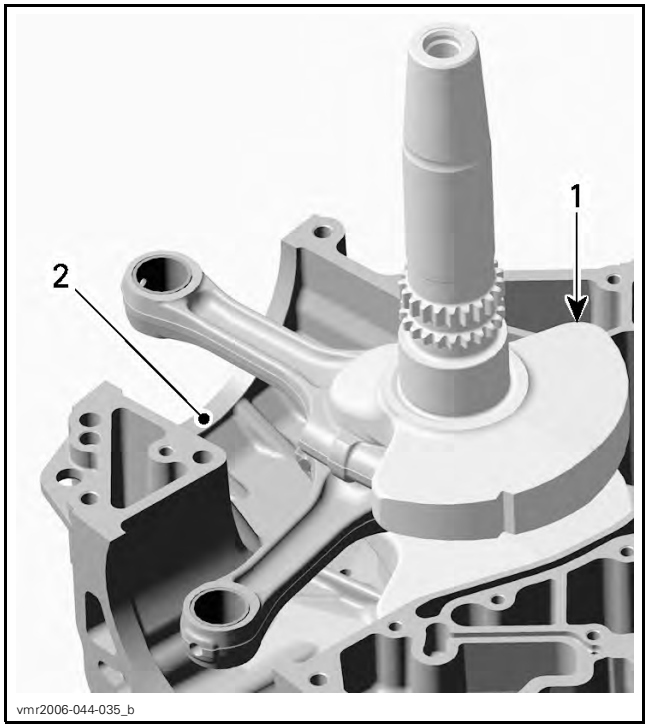

1. *Crankcase MAG*
2. *Crankshaft*

Crankshaft Locking Procedure

NOTE: When the crankshaft is locked, the rear piston no. 2 is at TDC (top dead center). The crankshaft cannot be locked with front piston no. 1 at TDC.

NOTICE To see if the rear piston no. 2 is at TDC ignition, refer to *CAMSHAFT TIMING GEAR* in the *TIMING CHAIN* subsection.

1. Remove spark plug cables and spark plugs from both cylinders.
2. Remove screw plug and O-ring from magneto cover.

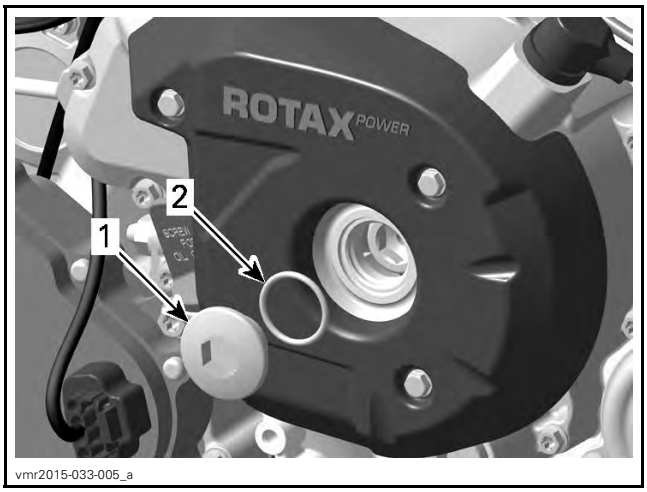

1. *Plug screw*
2. *O-ring*

3. Remove crankshaft position sensor.

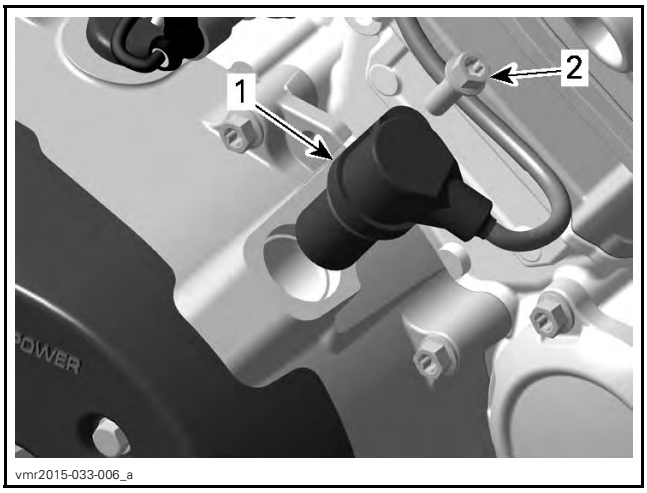

1. *Crankshaft position sensor*
2. *Screw*

4. Remove screw plug and discard sealing ring.

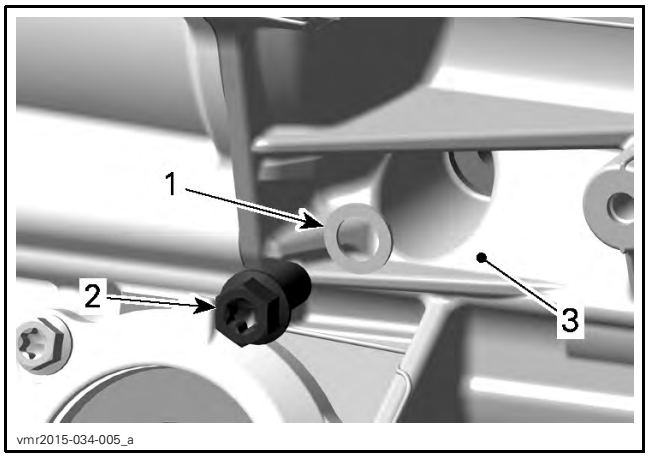

1. Sealing ring
2. Plug screw
3. Crankcase PTO side, front side

5. Use a 14 mm Allen key to turn crankshaft until the rear piston no. 2 is at TDC.

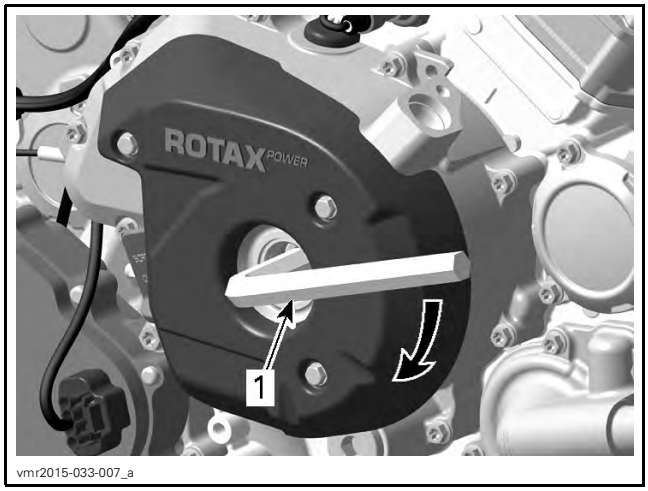

1. Allen key 14 mm

NOTE: When the piston no. 2 is at TDC, the number 2 piston index mark on the magneto flywheel and the notch on the magneto cover are aligned.

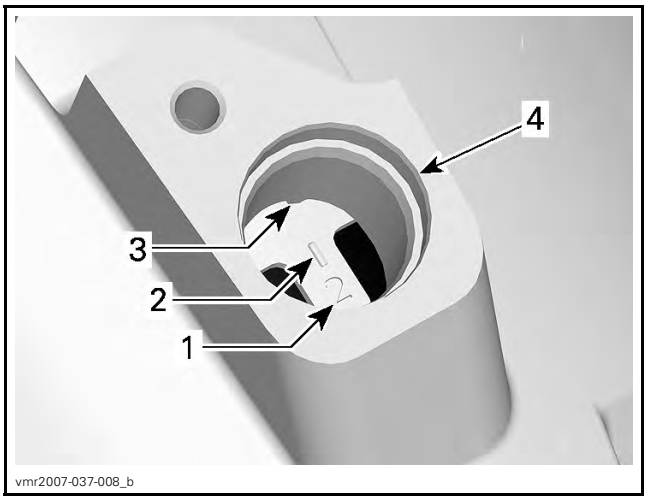

CYLINDER 2 AT TDC
1. Number 2 piston identifier
2. Index mark on magneto flywheel
3. Notch on magneto cover
4. CPS bore in magneto cover

6. Use a screwdriver to check if the groove in the crankshaft is aligned with the crankshaft locking tool orifice.

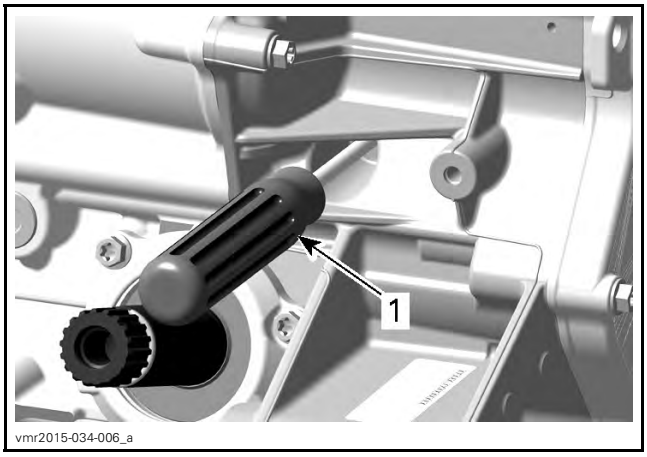

1. Screwdriver

7. Lock crankshaft.

REQUIRED TOOL	
CRANKSHAFT LOCKING BOLT (P/N 529 035 617)	

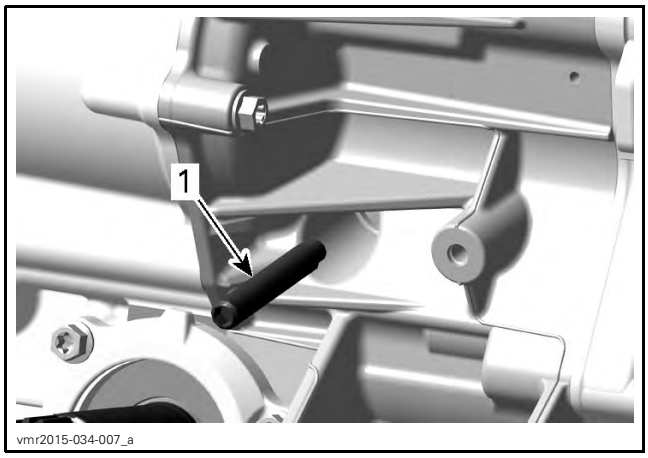

1. Crankshaft locking bolt

8. Gradually insert the tool in the crankshaft groove. Make sure that the tool tip enters the groove and does not jam on the crankshaft balancer surface.

Crankshaft Removal

Refer to *CRANKCASE*.

Crankshaft Inspection

NOTE: Check each crankshaft bearing journal for scoring, scuffing, cracks or other signs of wear.

NOTE: Replace crankshaft if the crankshaft timing gears are worn or otherwise damaged.

NOTICE **Components out of specifications must always be replaced. If this is not observed, severe damage may be caused to the engine.**

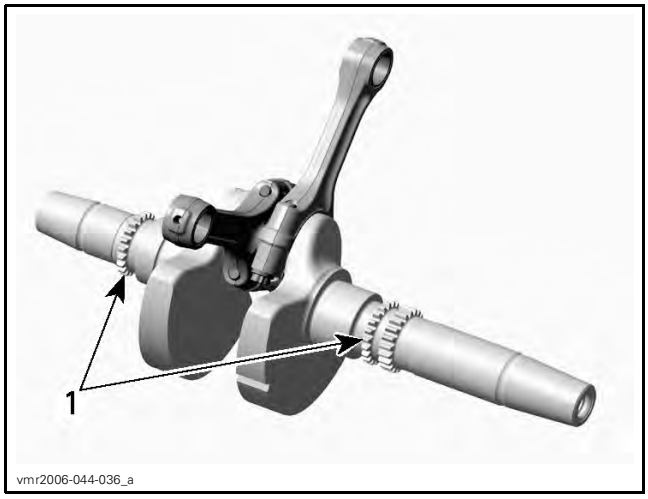

1. Crankshaft timing gears

Crankshaft Axial Play

NOTE: Axial play must be measured before splitting the crankcase.

Measure axial play on PTO end of crankshaft using a dial indicator.

CRANKSHAFT AXIAL PLAY	
NEW	0.200 mm to 0.500 mm (.008 in to .02 in)
SERVICE LIMIT	0.600 mm (.024 in)

If axial play is out of specification, replace crankcase and/or crankshaft.

Connecting Rod Big End Axial Play

Using a feeler gauge, measure between face of connecting rods and crankshaft counterweight. If the measurement exceeds specified tolerance, replace the crankshaft.

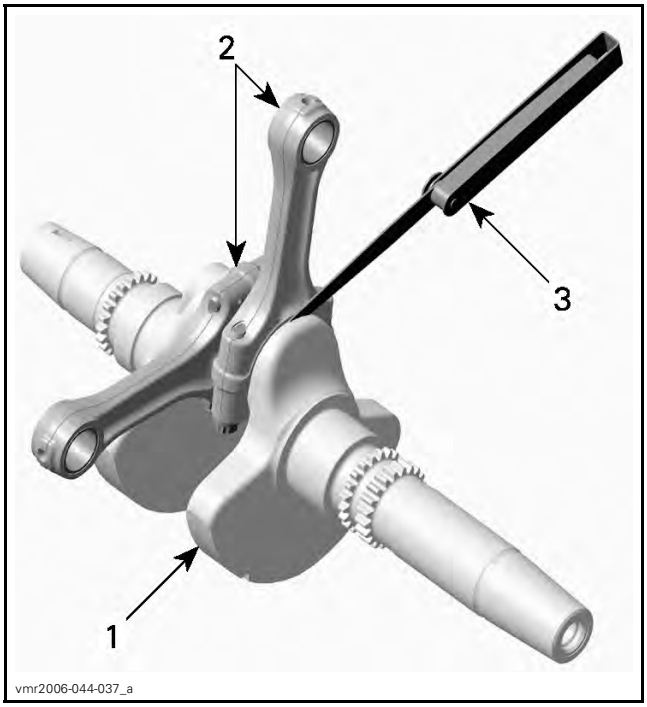

1. Crankshaft
2. Connecting rods
3. Feeler gauge

CONNECTING ROD BIG END AXIAL PLAY	
NEW	0.200 mm to 0.500 mm (.008 in to .02 in)
SERVICE LIMIT	0.600 mm (.024 in)

Connecting Rod/Piston Pin Clearance

Refer to *TOP END* subsection.

Connecting Rod Big End Radial Play

NOTE: Prior to removing connecting rod from the crankshaft, mark big end halves together to ensure a correct reinstallation (cracked surface fits in only one position).

1. Remove connecting rods from crankshaft.

NOTICE **Connecting rod screws are not reusable. Always discard screws and replace with NEW ones. It is recommended to install new plain bearings when reinstalling connecting rods.**

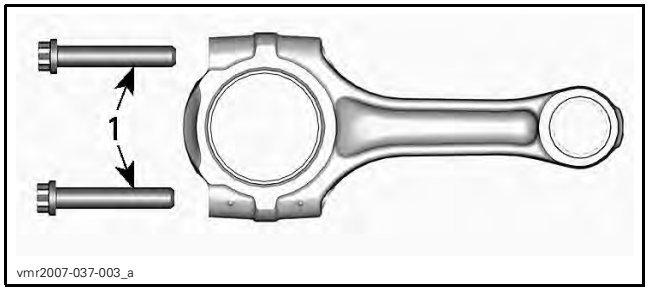

1. Connecting rod screws

2. Measure crankpin. Compare to inside diameter of connecting rod big end.

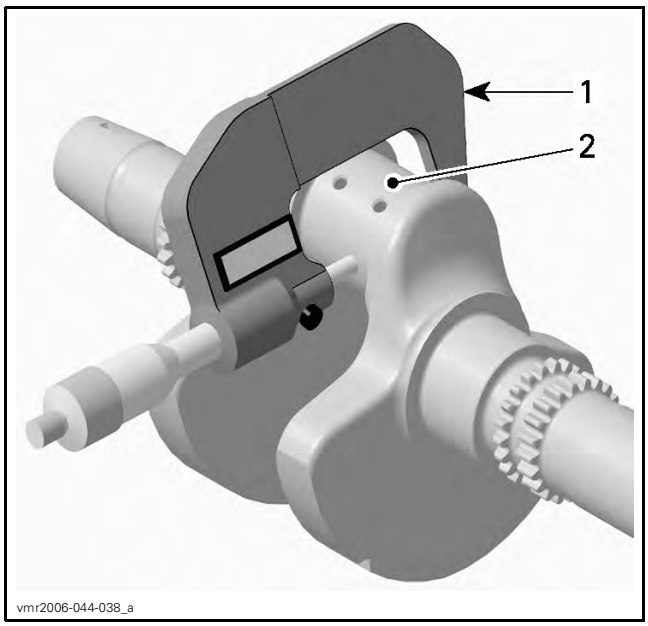

1. Micrometer
2. Crankpin

CRANK PIN DIAMETER	
NEW	40.001 mm to 40.025 mm (1.5748 in to 1.5758 in)
SERVICE LIMIT	39.990 mm (1.5744 in)

If the crank pin diameter is out of specification, replace crankshaft.

NOTE: To measure the connecting rod big end diameter, use the OLD connecting rod screws.

3. Install the OLD plain bearings as they were mounted initially.
4. Carry out the tightening procedure described in *CRANKSHAFT ASSEMBLY* in this subsection.

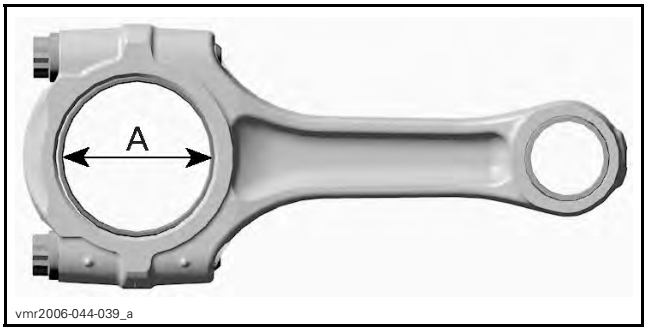

A. Connecting rod big end plain bearing

CONNECTING ROD BIG END DIAMETER	
SERVICE LIMIT	40.100 mm (1.5787 in)

If connecting rod big end diameter is out of specification, replace plain bearings and recheck.

CONNECTING ROD BIG END RADIAL CLEARANCE	
SERVICE LIMIT	0.09 mm (.0035 in)

If connecting rod big end radial clearance is out of specification, replace plain bearings and recheck.

Crankshaft Radial Play MAG/PTO Side

Measure crankshaft main bearing journals on MAG and PTO sides. Compare to inside diameter of MAG and PTO plain bearings, refer to *CRANKCASE* in this subsection.

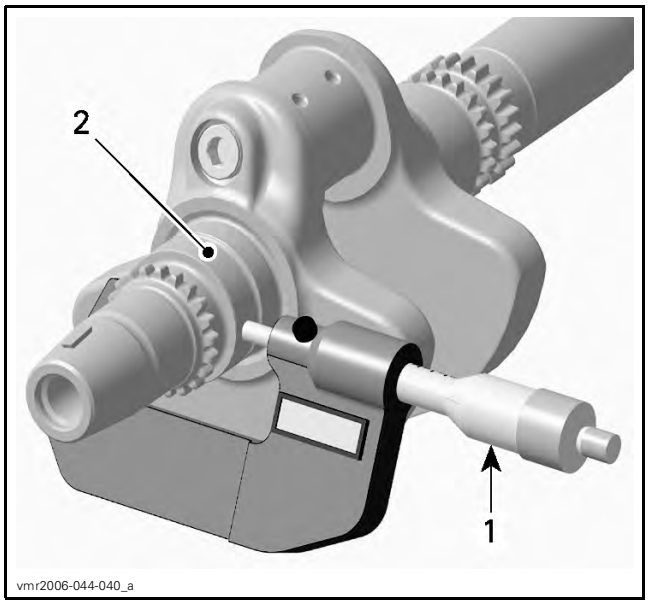

1. *Micrometer*
2. *Crankshaft MAG side main bearing journal*

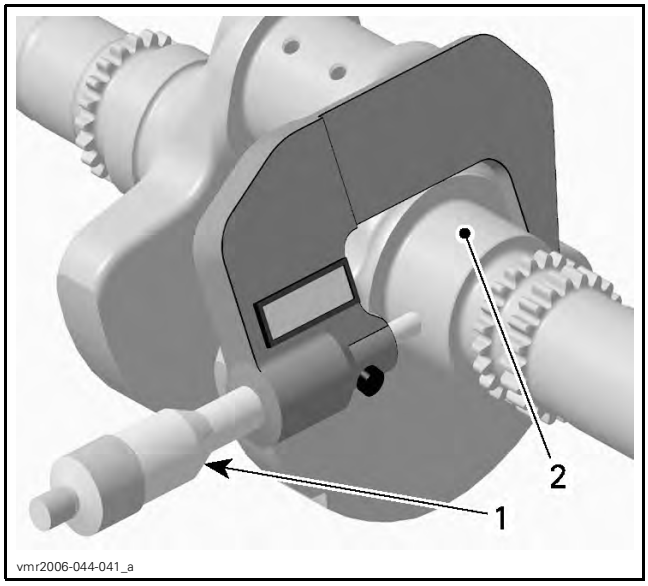

1. *Micrometer*
2. *Crankshaft PTO side main bearing journal*

CRANKSHAFT MAIN BEARING JOURNAL DIAMETER (MAG/PTO SIDE)	
NEW	42.016 mm to 42.040 mm (1.6542 in to 1.6551 in)
SERVICE LIMIT	42.000 mm (1.6535 in)

CRANKSHAFT RADIAL PLAY (MAG/PTO SIDE)	
SERVICE LIMIT	0.07 mm (.0028 in)

Crankshaft Radial Play (PTO Cover Bearing)

Measure crankshaft journal diameter (PTO cover bearing). Compare to plain bearing inside diameter (PTO cover). Refer to *PTO COVER* in this subsection.

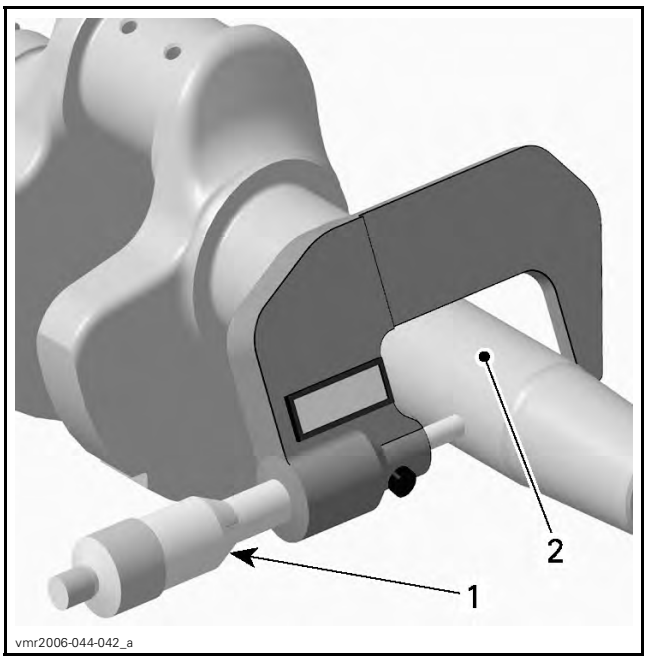

1. *Micrometer*
2. *Crankshaft journal (PTO support bearing)*

CRANKSHAFT JOURNAL DIAMETER (PTO COVER BEARING)	
NEW	34.004 mm to 34.020 mm (1.3387 in to 1.3394 in)
SERVICE LIMIT	33.998 mm (1.3385 in)

CRANKSHAFT RADIAL PLAY (PTO COVER BEARING)	
SERVICE LIMIT	0.10 mm (.0039 in)

If crankshaft journal diameter is out of specification, replace crankshaft.

If crankshaft radial play (PTO cover bearing) is out of specification, replace plain bearings and recheck.

Assembling the Crankshaft

For assembly, reverse the disassembly procedure however, pay attention to following details.

Clean the split surface on both sides (cracked area) carefully with compressed air.

Insert plain bearings in the connecting rods as illustrated.

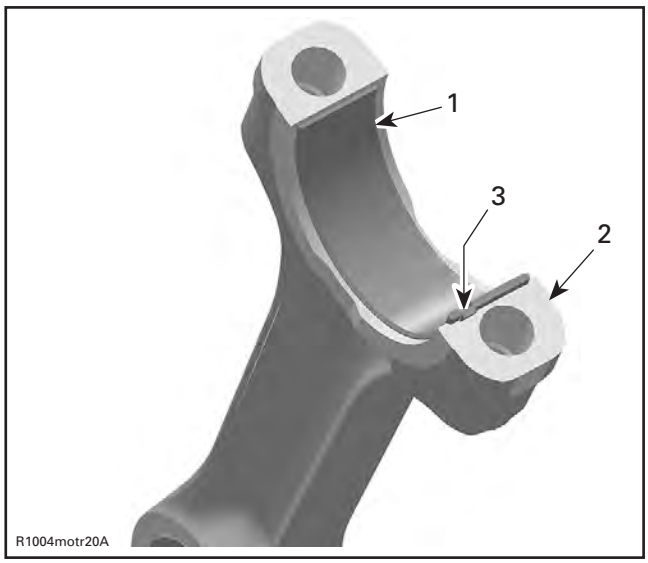

1. *Half plain bearing of connecting rod big end*
2. *Mating surface of the connecting rod*
3. *Joining surface of plain bearing in line with connecting rod groove*

Oil the plain bearing surface of the connecting rod and crankshaft pin before installation.

NOTICE **Lower cap and rod must match together since there is a cracked surface.**

Oil **NEW** connecting rod screws.

Thread screws in the connecting rods, then tighten as per following procedure.

NOTICE **Strictly adhere following instructions:**

- Always use **NEW** connecting rod screws at final assembly. They are **not reusable**.
- Do not apply any thread locker.
- The running direction of the big end bearings and of the piston pins must not change.
- Always perform each step on both connecting rod screws before going to the next step.
- Failure to strictly follow procedure may cause connecting rod screws to loosen and lead to severe engine damage.

REQUIRED TOOLS
Torque wrench
Angle torque wrench

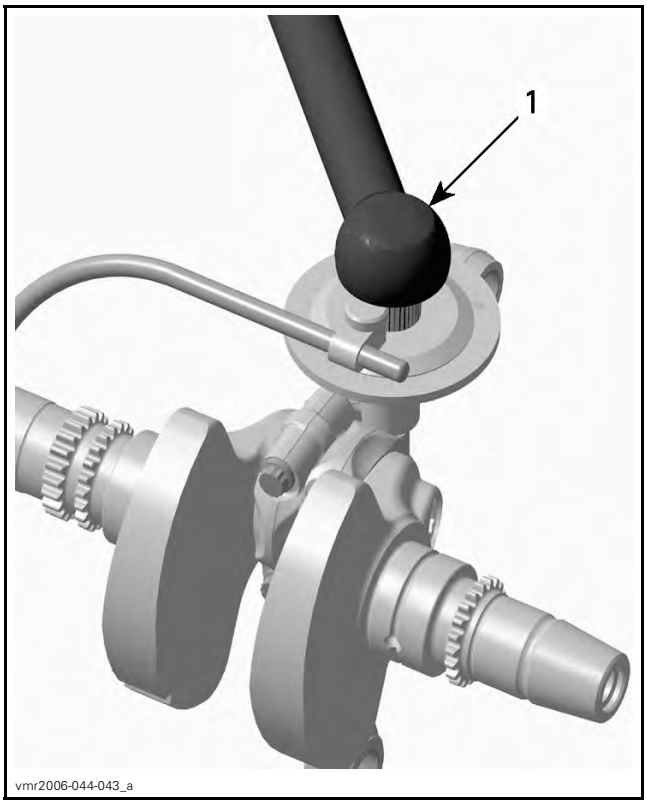

1. *Angle torque wrench*

NEW connecting rods can be installed either way.

TIGHTENING TORQUE		
Connecting rod screws	Step A	Tighten to 1/2 of specified torque
	Step B	Tighten to 20 N•m ± 2 N•m (15 lbf•ft ± 1 lbf•ft)
	Step C	Torque an additional 60 ± 5° turn using an angle torque wrench

Installing the Crankshaft

For installation of crankshaft in crankcase reverse the removal procedure. However, pay attention to the following details.

Do not interchange the connecting rods of pistons 1 and 2 during installation.

NOTICE **Observe the correct installation position when fitting the crankshaft with the connecting rods. The connecting rod MAG side has to face cylinder no. 1.**

Midwest Manuals
Green Manuals
Paperless Manuals
For a Better Tomorrow
www.green-manuals.com
If you bought this manual from any other seller please leave them
NEGATIVE feedback and notify me at bestshopmanuals@gmail.com

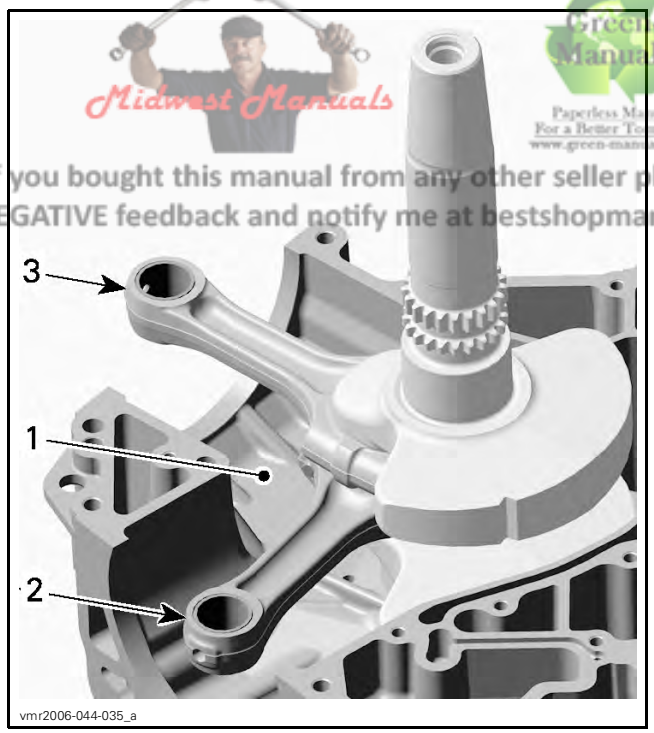

1. *Crankcase half MAG side*
2. *Connecting rod cylinder 1*
3. *Connecting rod cylinder 2*

CONTINUOUSLY VARIABLE TRANSMISSION (CVT)

SERVICE TOOLS

Description	Part Number	Page
CLUTCH PULLER	529 035 746	187
DRIVE PULLEY HOLDER (CVT)	529 006 400	186
DRIVEN CLUTCH HOLDER	529 035 771	196
PULLER/LOCKING TOOL	529 036 098	185, 202

SERVICE PRODUCTS

Description	Part Number	Page
ISOFLEX GREASE TOPAS NB 52	293 550 021	194
PULLEY FLANGE CLEANER	413 711 809	189, 197, 201

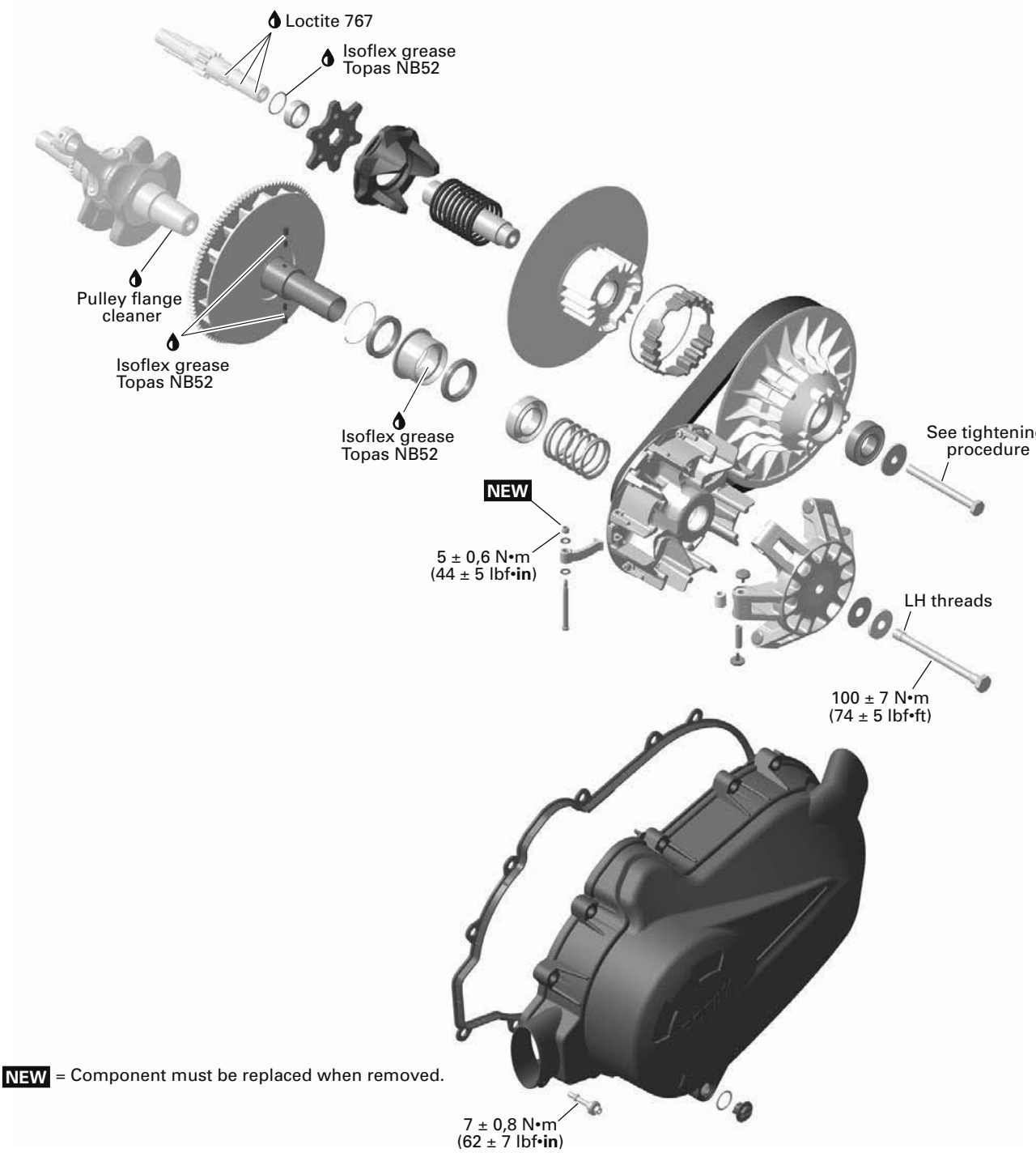

vmr2015-022-001_a

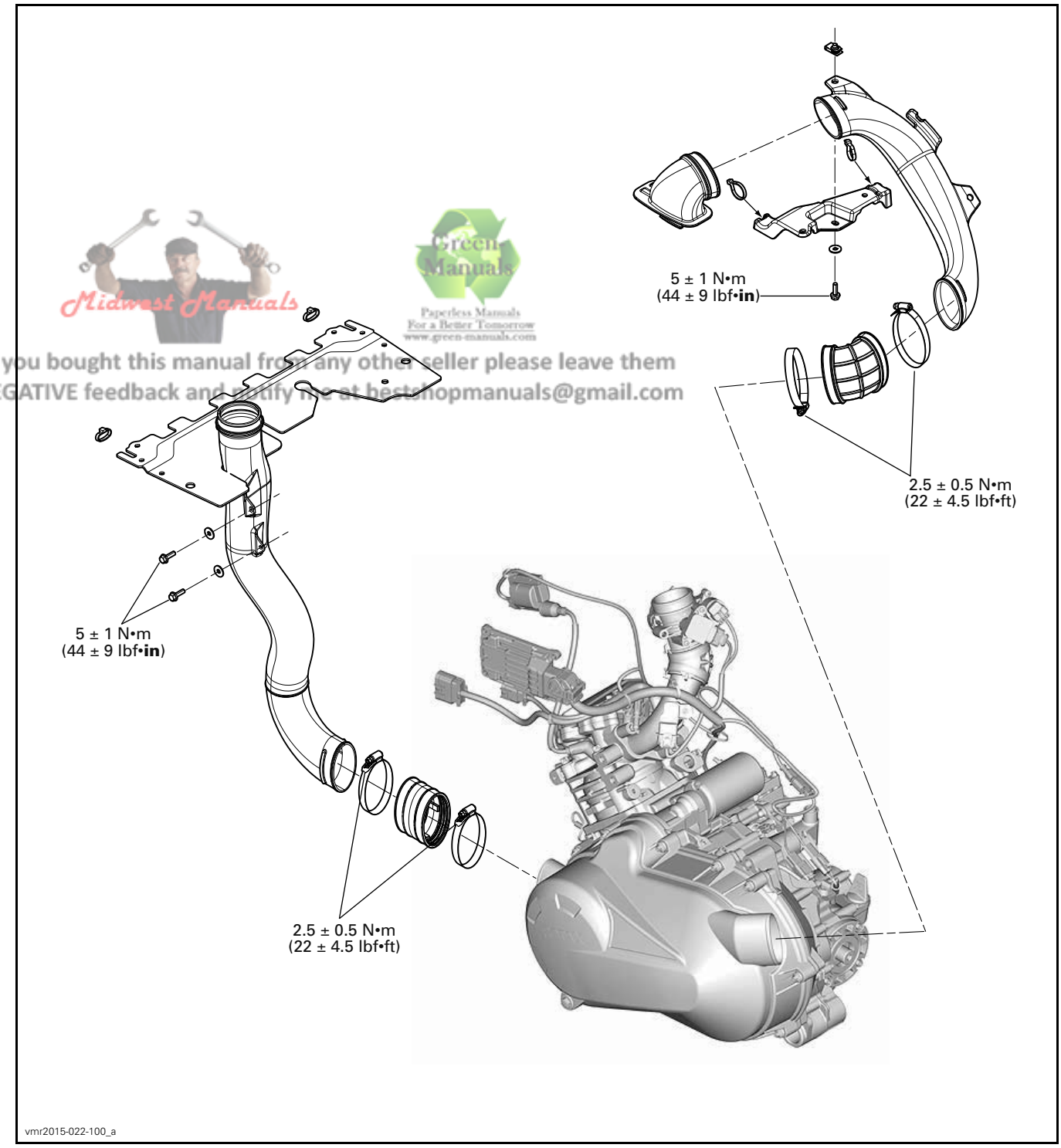

Midwest Manuals
Green Manuals
Paperless Manuals
For a Better Tomorrow
www.green-manuals.com
If you bought this manual from any other seller please leave them
NEGATIVE feedback and notify me at bestshopmanuals@gmail.com

GENERAL

NOTE: For a better understanding, the following illustrations are taken with engine out of vehicle. To perform the following instructions, it is not necessary to remove engine from vehicle.

This CVT is lubrication free. Never lubricate any components except drive pulley one-way clutch.

⚠ WARNING

Never touch CVT while engine is running. Never drive vehicle when CVT cover is removed.

⚠ WARNING

Any drive pulley repairs must be performed by an authorized Can-Am dealer. Subcomponent installation and assembly tolerances require strict adherence to procedures detailed.

NOTICE **Never use any type of impact wrench at drive pulley removal and installation.**

⚠ WARNING

The clutch assembly is a precisely balanced unit. Never replace parts with used parts from another clutch assembly.

NOTICE **These pulleys have metric threads. Do not use imperial thread puller. Always tighten puller by hand to ensure that the drive pulley has the same type of threads (metric vs imperial) before tightening completely.**

PROCEDURES

CVT COVER

CVT Cover Access

Refer to *BODY* subsection and remove the following:

– LH side and extension panels
– LH footboard panel.

CVT Cover Draining

Turn bayonet cap 90° counterclockwise to open it.

Remove bayonet cap with O-ring.

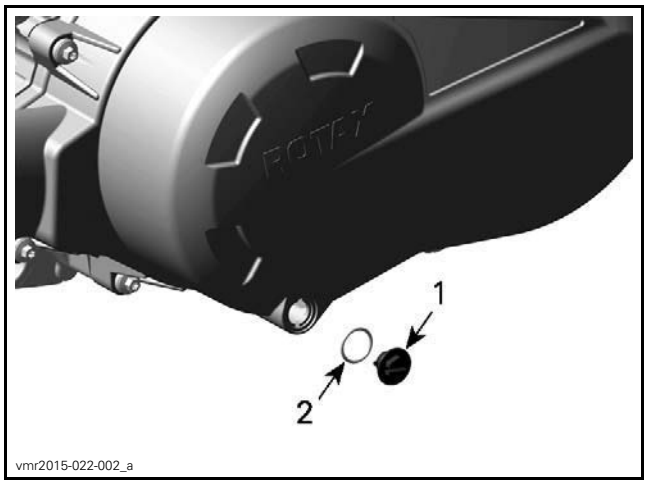

1. Bayonet cap
2. O-ring

Let water drain from CVT cover.

NOTICE **If an appreciable amount of water or any debris entered the CVT cover, CVT must be cleaned and inspected.**

Reinstall bayonet cap with O-ring.

CVT Cover Removal

Disconnect CVT cooling air ducts.

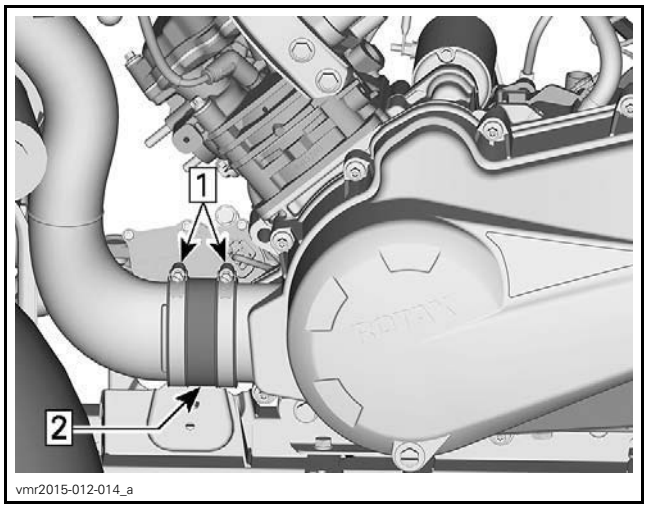

CVT AIR INLET DUCT DISCONNECT
1. Loosen clamps
2. Remove CVT air inlet adapter

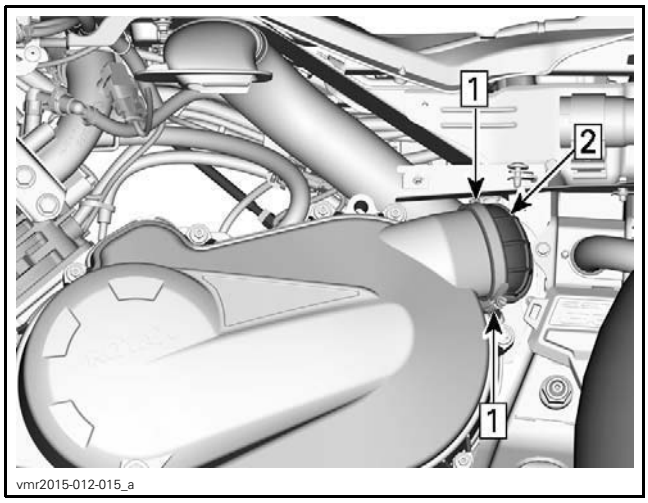

CVT AIR OUTLET DUCT DISCONNECT
Step 1: Loosen clamps
Step 2: Remove CVT air outlet adapter

Remove:
- Retaining screws
- CVT cover
- Gasket.

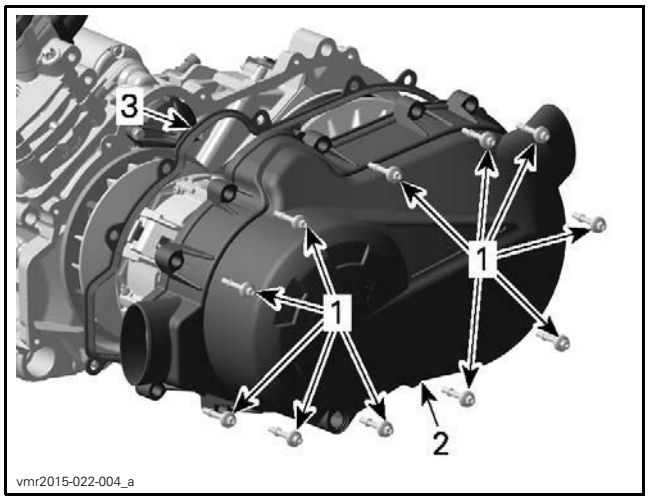

1. *Retaining screws*
2. *CVT cover*
3. *Gasket*

NOTE: To support the cover remove the center top screw last.

CVT Cover Installation

Install the center top screw of cover in first.

Install the other screws then torque them in a crisscross sequence.

Tighten the CVT cover screws as per following sequence.

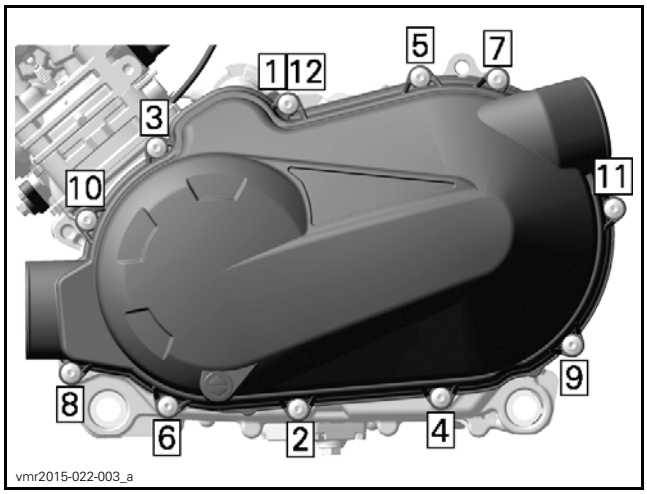

CVT COVER TIGHTENING SEQUENCE

CVT COVER RETAINING SCREWS	
Tightening torque	7 N•m ± 0.8 N•m (62 lbf•**in** ± 7 lbf•**in**)

DRIVE BELT

Drive Belt Removal

NOTICE **In case of a drive belt failure, the CVT cover, air inlet and air outlet must be cleaned and inspected for obstruction.**

Remove CVT cover, refer to procedure in this subsection.

Open driven pulley.

REQUIRED TOOL	
PULLER/LOCKING TOOL (P/N 529 036 098)	

Screw tool in the threaded hole of driven pulley and tighten to open the pulley.

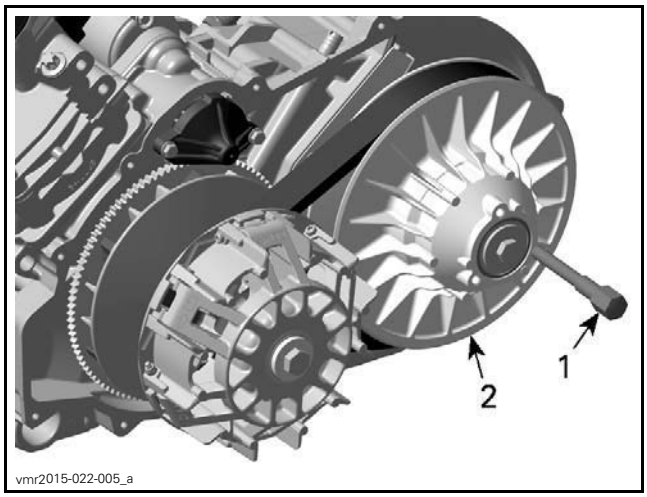

1. *Puller/locking tool*
2. *Fixed sheave of driven pulley*

Slide belt over the top edge of fixed sheave.

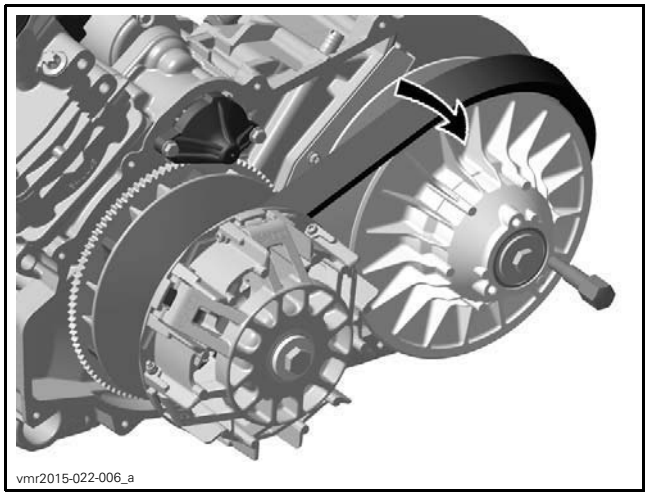

Drive Belt Inspection

For drive belt inspection refer to *DRIVE BELT INSPECTION* in the *PERIODIC MAINTENANCE PROCEDURES* subsection.

Drive Belt Installation

For installation, reverse the removal procedure. Pay attention to following details.

The maximum drive belt life span is obtained when the drive belt has the proper rotation direction. Install it so that the arrow printed on belt is pointing towards the back of the vehicle.

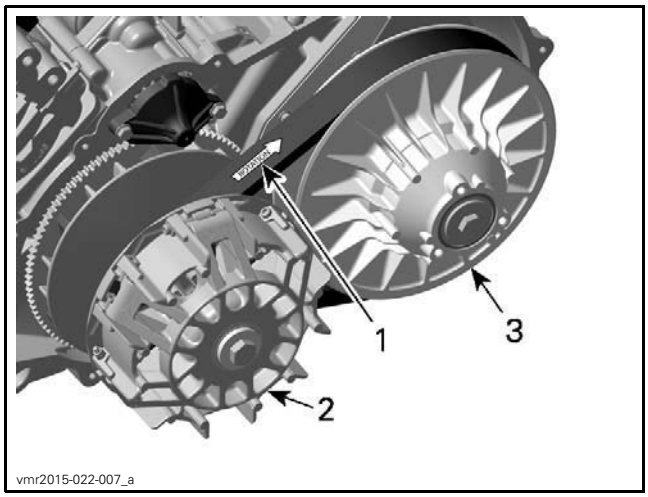

1. *Arrow towards the back of the vehicle*
2. *Drive pulley (front)*
3. *Driven pulley (rear)*

DRIVE PULLEY

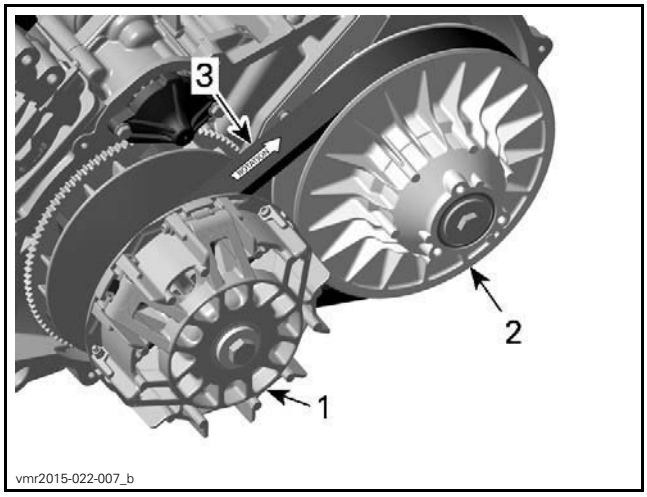

1. *Drive pulley*
2. *Driven pulley*
3. *Belt*

Drive Pulley Removal

Remove drive belt, refer to procedure in this subsection.

Prior to removing the drive pulley, mark sliding sheave and governor cup together to ensure correct reinstallation. There are 4 levers mounted out of 6 possible positions.

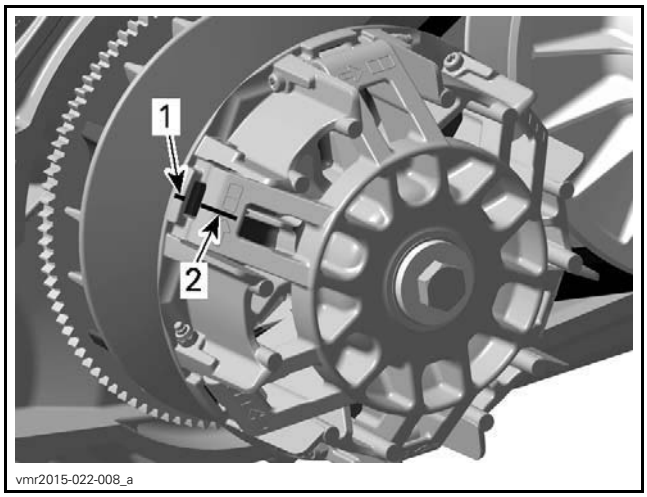

1. *Mark on drive pulley sliding sheave*
2. *Mark on governor cup*

To block drive pulley, two methods can be used:

– Lock crankshaft. Refer to *CRANKSHAFT LOCKING PROCEDURE* in the *BOTTOM END* subsection.
– Block drive pulley.

REQUIRED TOOL	
DRIVE PULLEY HOLDER (CVT) (P/N 529 006 400)	

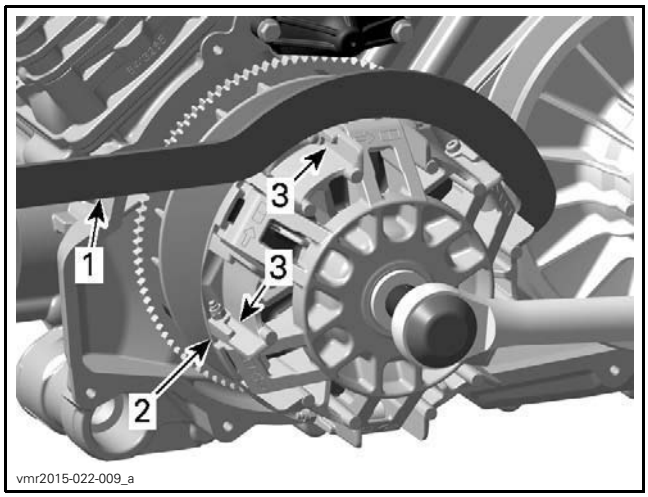

1. Drive pulley holder
2. Drive pulley sliding sheave
3. Area to place holding tool hook

Loosen drive pulley screw clockwise.

NOTICE **Drive pulley screw has LH threads.**

NOTE: Do not unscrew the drive pulley screw completely. If governor cup is stuck, hit it using a soft hammer.

Remove service tool.

Apply axial pressure with your hand on the sliding sheave and governor cup.

Remove:
- Screw
- Spring washer
- Thrust washer.

CAUTION **Sliding sheave of drive pulley is spring loaded.**

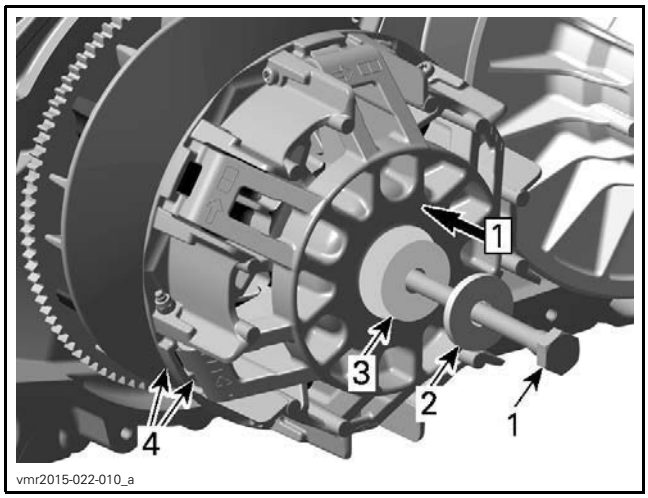

Step 1: Push

1. Drive pulley screw
2. Spring washer
3. Thrust washer
4. Sliding sheave with governor cup

Slowly release spring pressure and remove sliding sheave.

Slowly release sliding sheave.

Remove fixed sheave.

REQUIRED TOOL	
CLUTCH PULLER (P/N 529 035 746)	

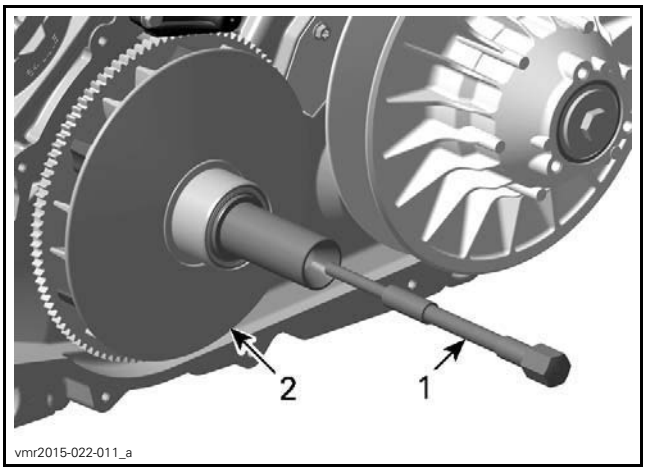

1. Drive pulley puller
2. Fixed sheave

Drive Pulley Disassembly

Governor Cup

Carefully lift governor cup until slider shoes come at their highest position into guides.

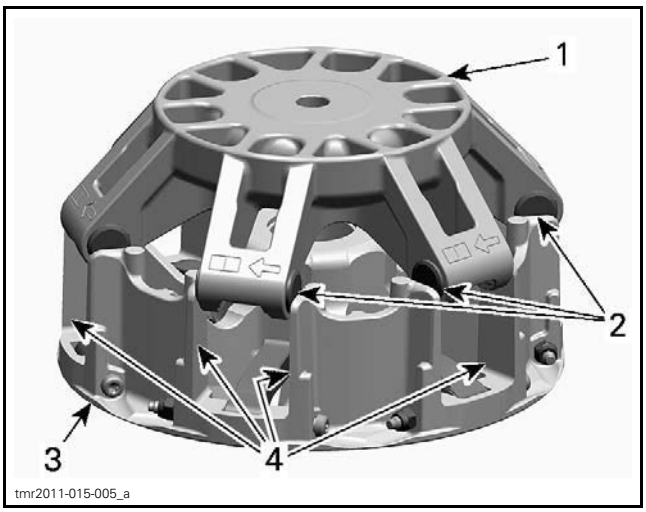

1. Governor cup
2. Slider shoes
3. Sliding sheave
4. Guides

NOTE: The following procedure is not necessary except if roller must be removed. Refer to *DRIVE PULLEY INSPECTION* before proceeding.

NOTE: Whenever removing a governor cup that has the 2 boxes marked (punch marks), replace it with a new one.

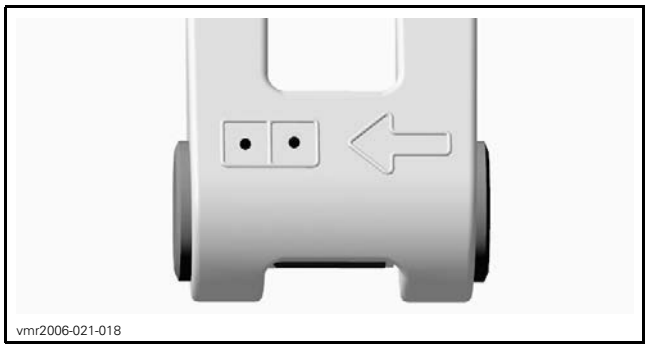

Remove slider shoess

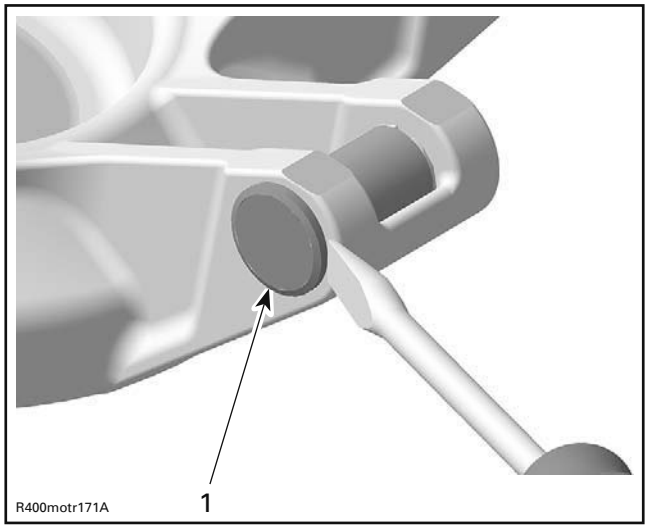

1. Slider shoe

Put governor cup on a vise. Use protection plates on the vise jaws to avoid marks and/or damages to the governor cup.

Push out roller sleeve with an appropriate punch in the direction illustrated (against insertion arrow marked on governor cup arm).

NOTE: Use a punch with a smaller diameter than the roller sleeve.

NOTICE **Do not clamp the governor cup in the vise to push out bearing sleeve. Governor cup will be damaged.**

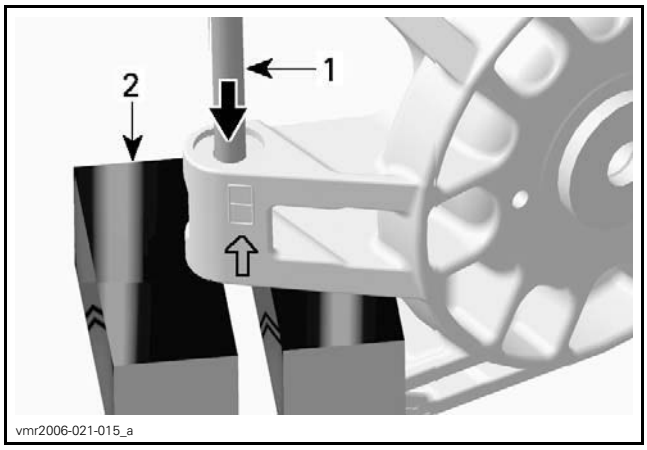

PUSHING OUT ROLLER SLEEVE
1. Punch
2. Vise

NOTICE **Always replace all rollers at the same time. Partially worn rollers may cause damage to the CVT system.**

Remove roller sleeve and roller.

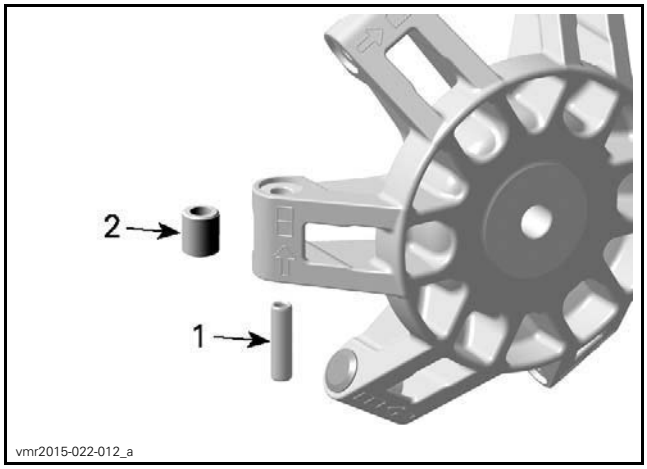

1. Roller sleeve
2. Roller

Sliding Sheave

NOTE: This drive pulley is equipped with 4 levers.

Unscrew lock nut and remove centrifugal lever pivot bolt.

Remove centrifugal lever and both thrust washers.

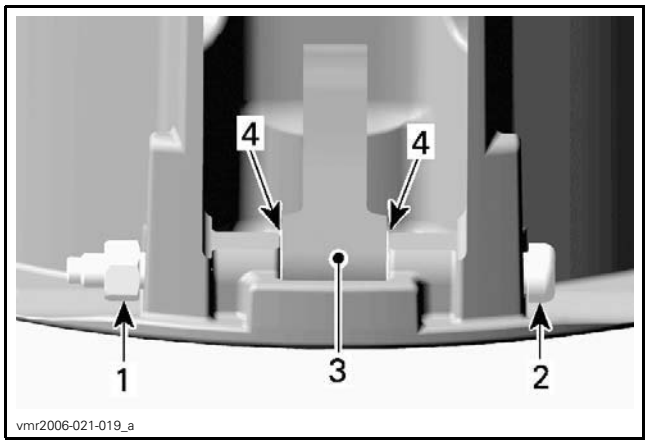

1. *Lock nut*
2. *Centrifugal lever pivot bolt*
3. *Centrifugal lever*
4. *Thrust washers*

Fixed Sheave

⚠ WARNING

Always wear safety glasses to remove spring sleeves.

Pull and rotate one-way clutch slowly until the half of spring sleeves are visible.

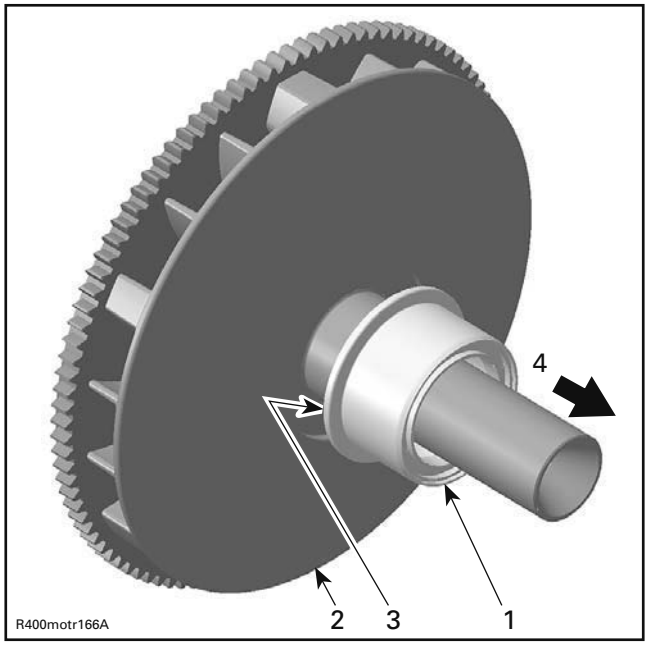

1. *One-way clutch*
2. *Fixed sheave*
3. *Spring sleeve area*
4. *Direction of removal*

Hold both spring sleeves with fingers and carefully remove them when the one-way clutch is disengaged.

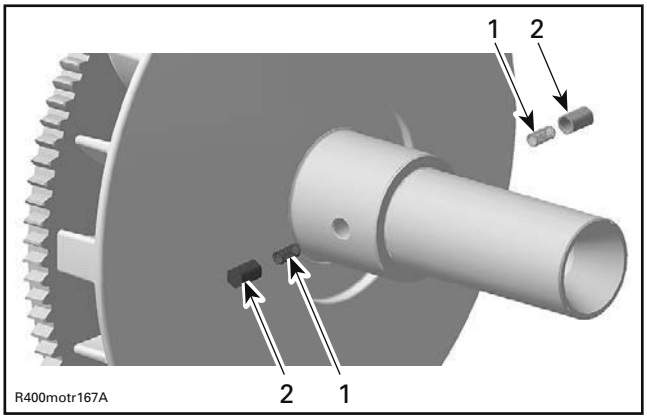

1. *Spring*
2. *Spring sleeves*

Drive Pulley Cleaning

Clean pulley faces and shaft with fine steel wool and dry cloth.

Using a paper towel with the recommended cleaning solvent, clean:

- Crankshaft tapered end
- Crankshaft threads
- Taper inside of the fixed sheave of the drive pulley
- Drive pulley screw threads.

REQUIRED SERVICE PRODUCT
PULLEY FLANGE CLEANER (P/N 413 711 809)

NOTICE **To avoid damage, make sure cleaner does not contact the crankshaft seal.**

Remove all hardened oil deposits that have baked on crankshaft and pulley tapered surfaces with coarse or medium steel wool and/or sand paper no. 600.

NOTICE **Do not use any other type of abrasive.**

Reclean mounting surfaces with paper towel and cleaning solvent.

Wipe off the mounting surfaces with a clean, dry paper towel.

NOTICE **Mounting surfaces must be free of any oil, cleaner or towel residue.**

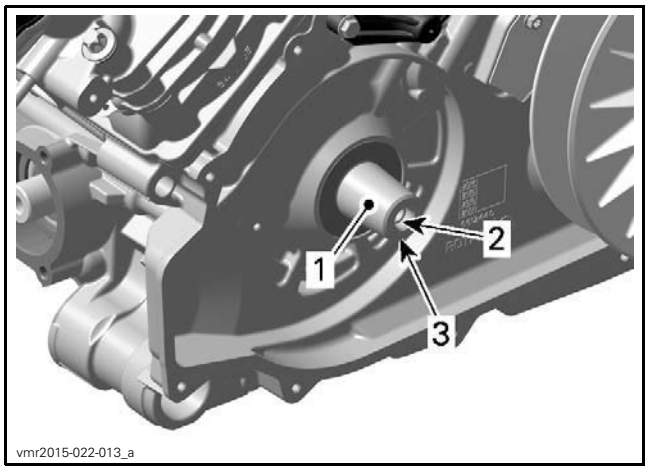

1. *Taper*
2. *Threads*
3. *Crankshaft*

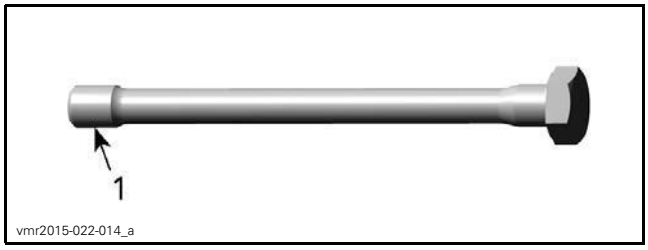

1. *Drive pulley screw threads*

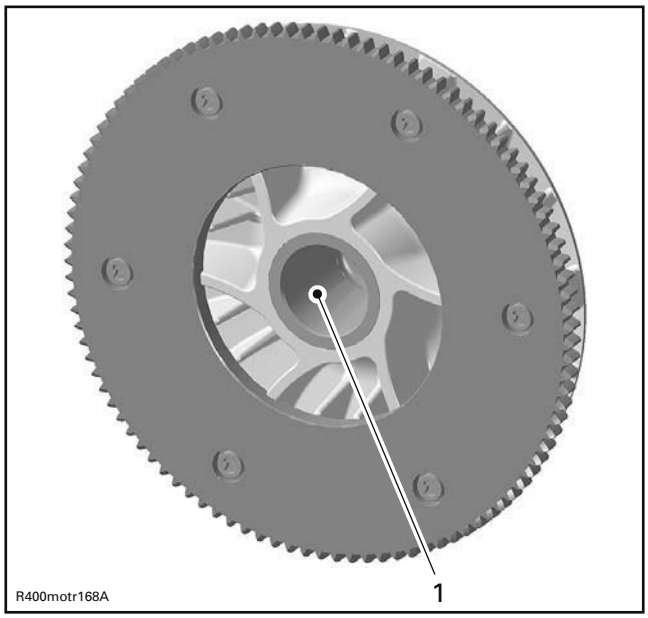

1. *Taper of fixed sheave*

Only use petrol base cleaner when cleaning bushings.

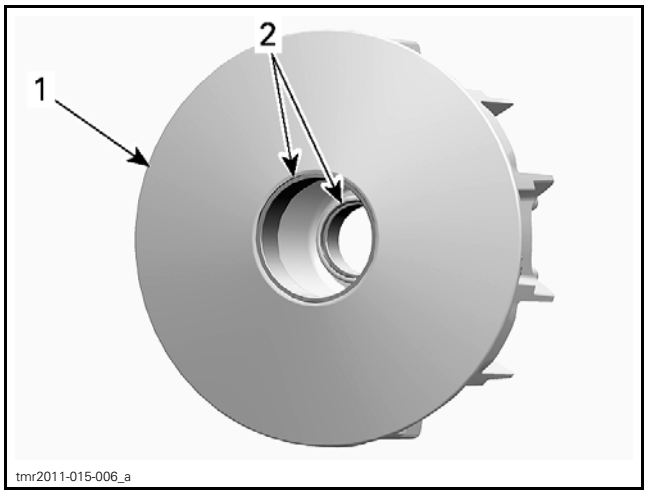

1. *Sliding sheave*
2. *Bushings*

NOTICE Do not use acetone to clean bushing.

Drive Pulley Inspection

Governor Cup

Check governor cup for cracks or other visible damages. Replace if necessary.

Roller and Slider Shoe

Check each roller for roundness of external diameter.

NOTE: Whenever replacing rollers and slider shoes, always replace all rollers and slider shoes as a set.

Check slider shoes for visible wear and replace if damaged.

Measure the roller diameter. If one roller is out of specification, replace all rollers.

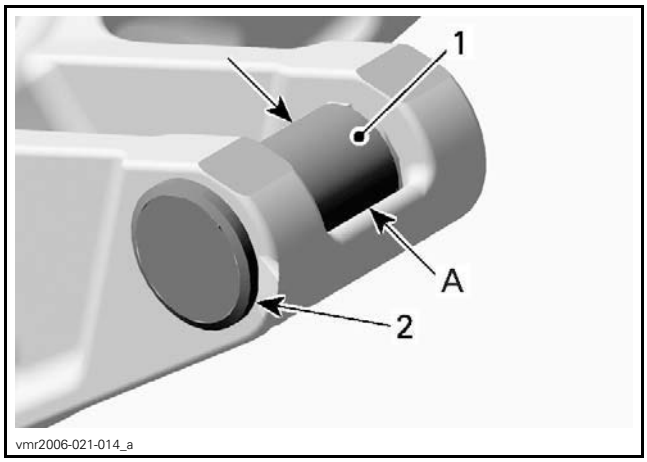

1. *Roller*
2. *Slider shoe*

A. *Roller outer diameter*

ROLLER OUTER DIAMETER	
NEW	13.80 mm to 14.00 mm (.543 in to .551 in)
SERVICE LIMIT	13.20 mm (.52 in)
ROLLER INNER DIAMETER	
NEW	8.025 mm to 8.175 mm (.316 in to .322 in)
SERVICE LIMIT	9.00 mm (.354 in)

Centrifugal Lever Pivot Bolt

Measure diameter of centrifugal lever pivot bolt, replace if it is out of specification.

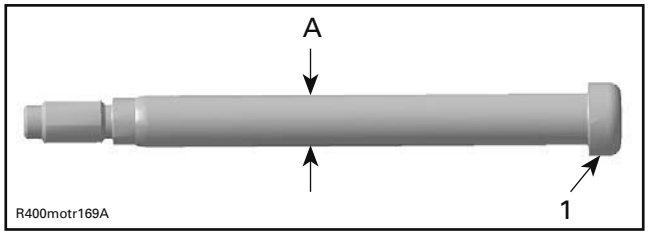

1. Centrifugal lever pivot bolt
A. Measure diameter here

CENTRIFUGAL LEVER PIVOT BOLT DIAMETER	
SERVICE LIMIT	6.000 mm (.236 in)

Centrifugal Lever

Check bushing diameter in the centrifugal lever for wear. If a centrifugal lever must be replaced, replace all levers at the same time.

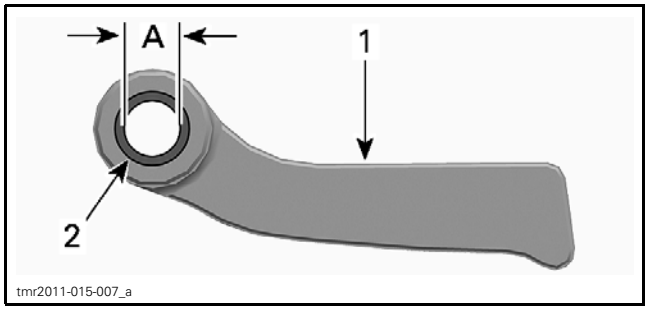

1. Centrifugal lever
2. Bushing
A. Bushing inner diameter

CENTRIFUGAL LEVER BORE DIAMETER	
SERVICE LIMIT	6.200 mm (.244 in)

Inspect and replace as necessary the following items if their contact surfaces are heavy worn:

– Centrifugal lever
– Thrust washers
– Centrifugal lever pivot bolts
– Lock nuts.

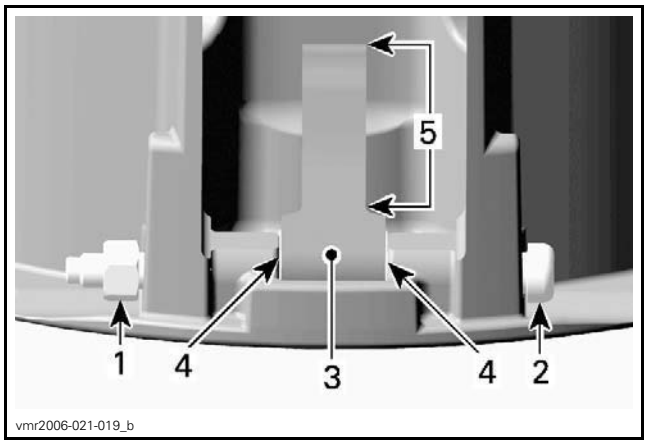

1. Lock nut
2. Centrifugal lever pivot bolt
3. Centrifugal lever
4. Thrust washers
5. Contact surface to the roller

NOTICE **Whenever replacing centrifugal levers, always replace all levers at the same time. Otherwise, the drive pulley will be unbalanced (because of lever differences).**

Sliding Sheave

Check sliding sheave for cracks and sliding contact surface for excessive wear. Replace sliding sheave if necessary.

Measure centrifugal lever pivot bolt bores. Replace sliding sheave if bores are out of specification or damaged.

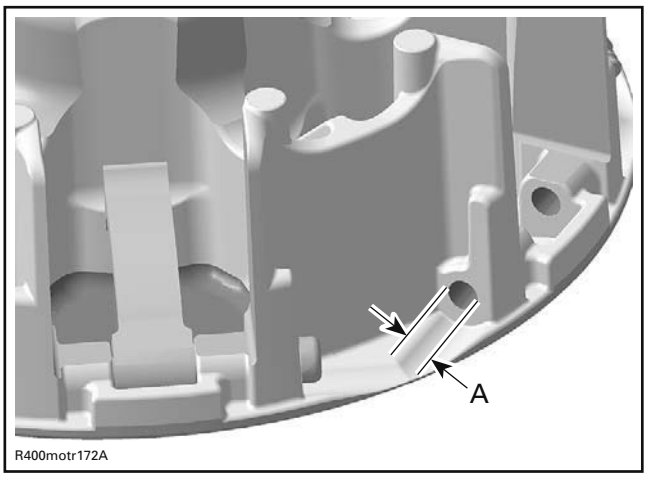

A. Centrifugal lever pivot bolt bore diameter

CENTRIFUGAL LEVER PIVOT BOLT BORE DIAMETER	
NEW	6.113 mm to 6.171 mm (.241 in to .243 in)
SERVICE LIMIT	6.300 mm (.248 in)

Measure bushing diameters of sliding sheave.

REQUIRED TOOL
Dial bore gauge

MEASURING POINT
At least 5 mm (1/4 in) from bushing edge

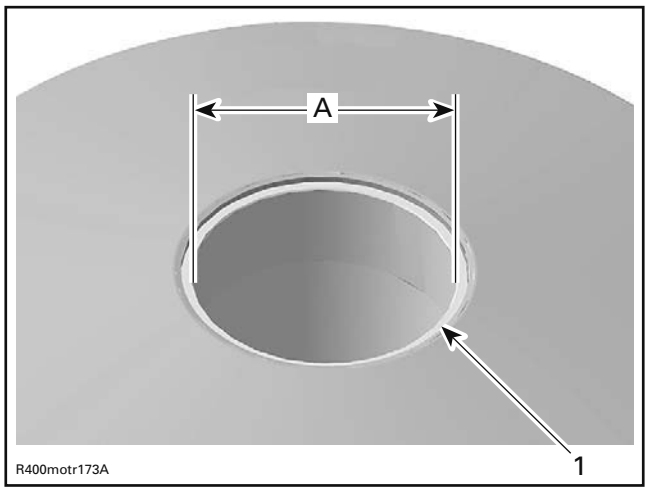

1. Bushing on fixed sheave side
A. Bore diameter of bushing

SLIDING SHEAVE LARGE BUSHING	
NEW	55.000 mm to 55.040 mm (2.165 in to 2.167 in)
SERVICE LIMIT	55.200 mm (2.173 in)

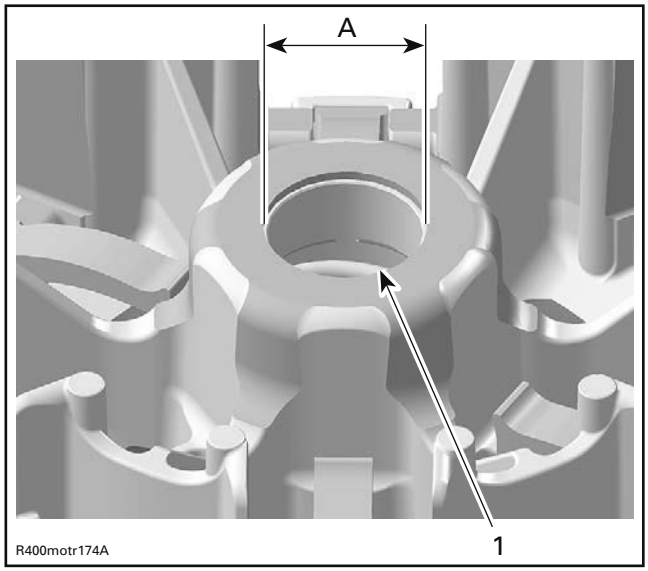

1. Bushing on governor cup side
A. Bore diameter of bushing

SLIDING SHEAVE SMALL BUSHING	
NEW	30.000 mm to 30.040 mm (1.181 in to 1.183 in)
SERVICE LIMIT	30.200 mm (1.189 in)

Replace sliding sheave if one of the bushings is out of specification. Visually inspect coatings.

Fixed Sheave

Check fixed sheave contact surface to the governor cup for scoring and other damages. If so, replace fixed sheave.

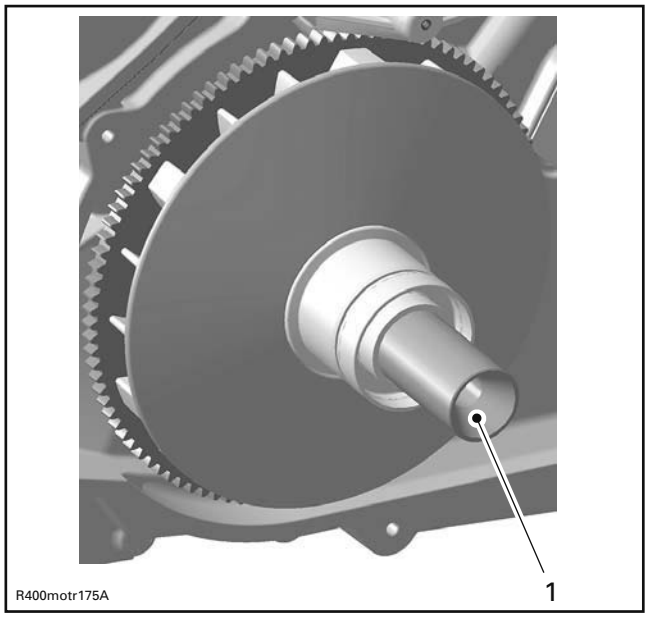

1. Visually check here

Check for any marks on fixed sheave plate. Replace if necessary.

Check ring gear teeth for excessive wear or other damage. Replace fixed sheave if necessary.

⚠ WARNING

Fixed sheave and ring gear are balanced together. Always replace both parts together otherwise severe injury and/or damages may occur.

Spring

Measure spring free length and squareness. If spring is out of specification, replace by a new one.

SPRING FREE LENGTH	
SERVICE LIMIT	75 mm (2.953 in)

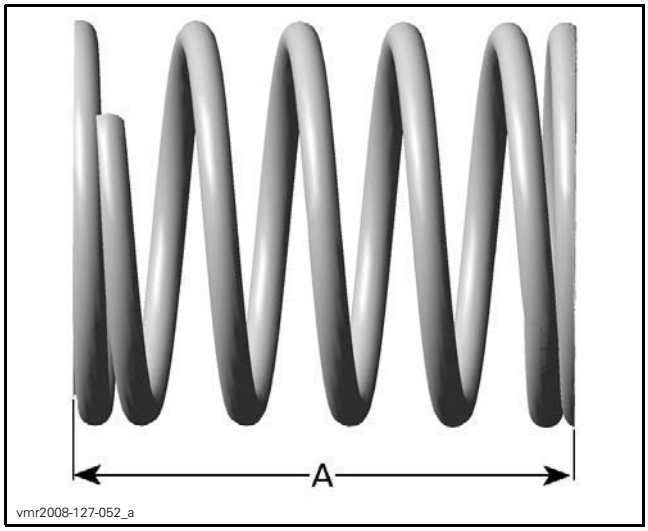

A. Free length

CLUTCH SPRING SQUARENESS	
SERVICE LIMIT	4 mm (.157 in)

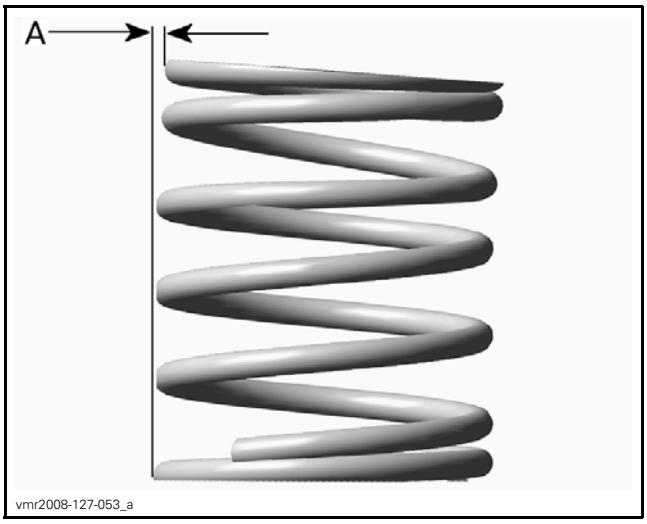

A. Squareness

One-Way Clutch

Check bearings for excessive play and smooth operation. Replace one-way clutch if necessary.

NOTICE **Be careful not to damage the inside of one-way clutch during bearing removal.**

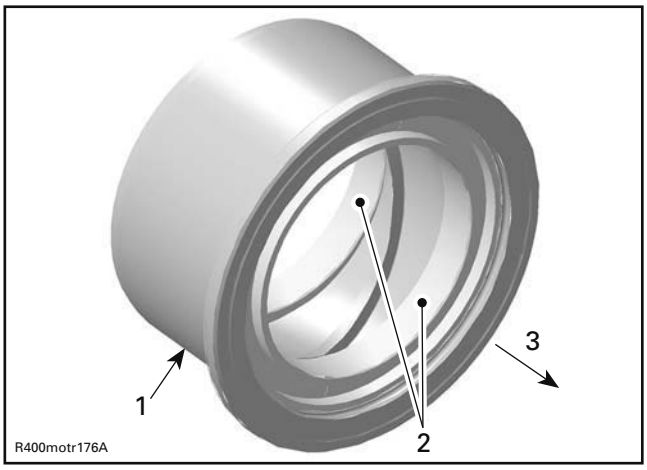

1. *One-way clutch*
2. *Bearings*
3. *Drive pulley sliding sheave side*

Measure length of spring sleeve and check if edges on top of the spring sleeve are excessively worn. If out of specifications, replace both spring sleeves and springs at the same time.

SPRING SLEEVE LENGTH	
NEW	9.2 mm to 9.4 mm (.362 in to .37 in)
SERVICE LIMIT	9.0 mm (.354 in)

Drive Pulley Assembly

For assembly, reverse the disassembly procedure. Pay attention to following details.

One-Way Clutch

Lubricate spring sleeves, springs and between one-way clutch bearings using recommended product.

REQUIRED SERVICE PRODUCTT
ISOFLEX GREASE TOPAS NB 52 (P/N 293 550 021)

Sliding Sheave

Install centrifugal lever and both thrust washers.

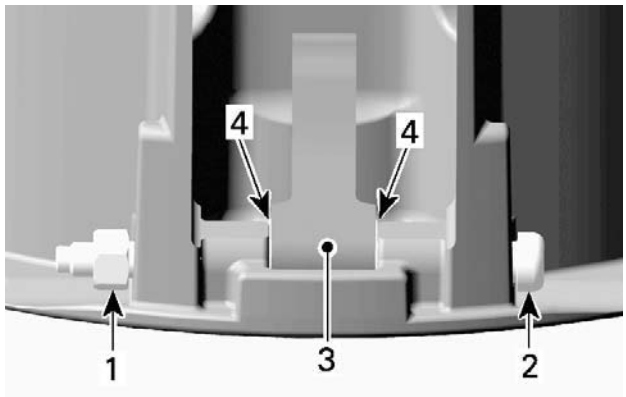

vmr2006-021-019_a

1. *Lock nut*
2. *Centrifugal lever pivot bolt*
3. *Centrifugal lever*
4. *Thrust washers*

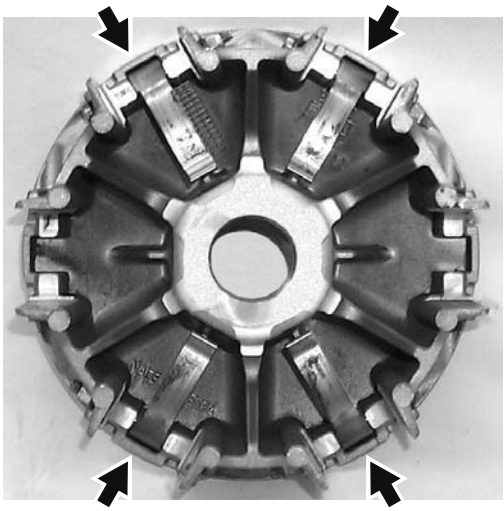

NOTICE Centrifugal lever must move easily after installation.

Governor Cup

Rebuild governor cup with NEW roller sleeves, thrust washers, rollers and slider shoes.

Push in roller sleeve with an appropriate punch in the direction of the protruding arrow. Push until roller sleeve aligns with the contact surface of the slider shoe.

NOTICE Final position of roller sleeve has to be flush with the contact surface of the slider shoes (no protrusion).

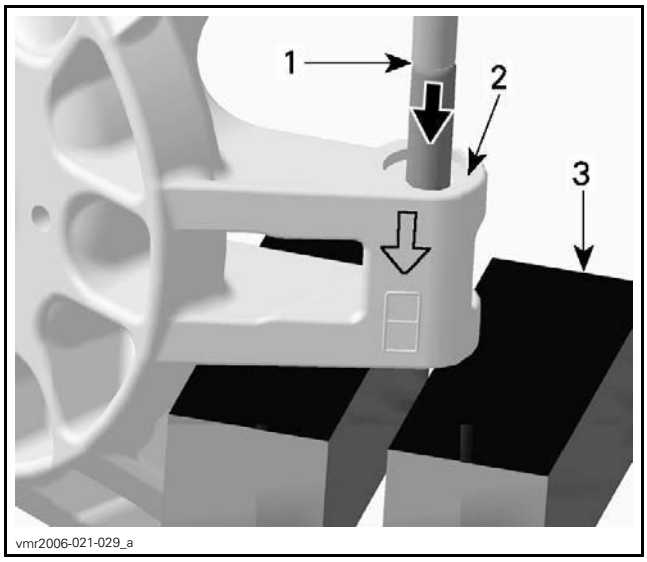

vmr2006-021-029_a

1. *Top edge of roller sleeve*
2. *Mating surface of slider shoes*
3. *Vise*

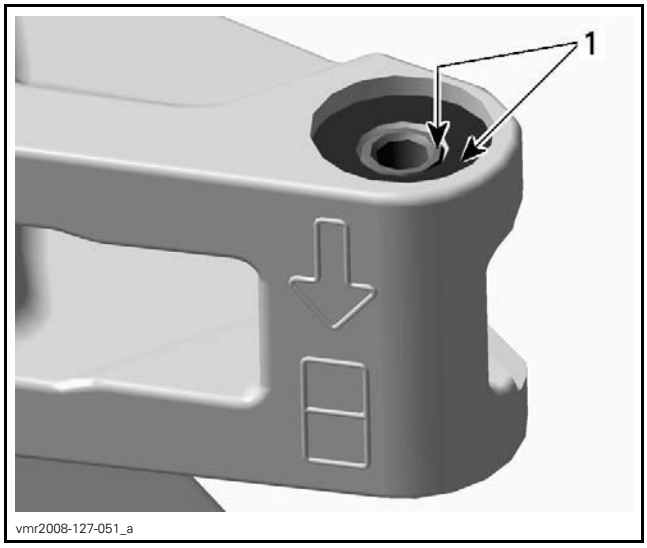

vmr2008-127-051_a

1. *Flush surfaces*

Whenever replacing roller sleeves, punch a mark in an empty telltale box. If each box is already marked, replace governor cup with a new one.

NOTICE Do not tap too hard. Severe damage to the governor cup may appear.

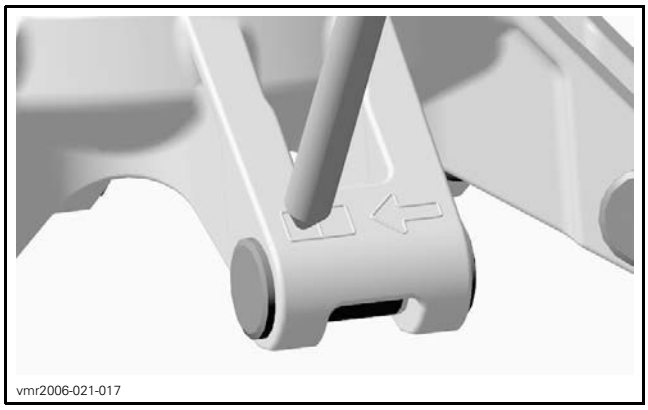
vmr2006-021-017

NOTICE **Rollers must move easily after installation.**

Carefully press slider shoes in the governor cup arm so they **bottom out evenly** in the machined portion of the governor cup arm.

NOTICE **Slider shoes must be pressed in evenly to ensure they are centered in the arm and slide properly in the guides.**

Align governor cup with sliding sheave using the marks traced at disassembly.

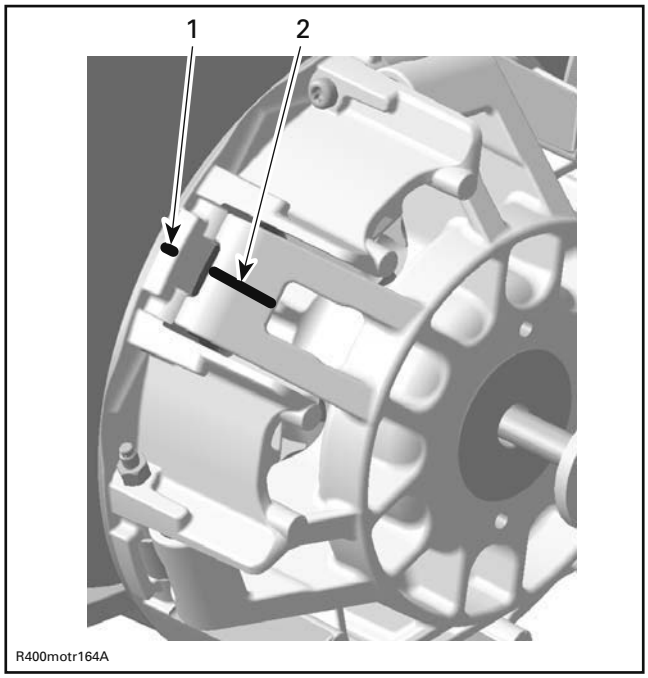

R400motr164A

1. *Mark on drive pulley sliding sheave*
2. *Mark on governor cup*

Drive Pulley Installation

For installation, reverse the removal procedure. Pay attention to the following details.

NOTICE **Do not apply antiseize or any lubricant on crankshaft and drive pulley tapers.**

NOTICE **Never use any type of impact wrench at drive pulley removal and installation.**

Clean mounting surfaces as described in *DRIVE PULLEY CLEANING* in this subsection.

Install drive pulley on crankshaft extension.

Install:
- Thrust washer
- Spring washer with its concave side towards drive pulley
- Drive pulley screw.

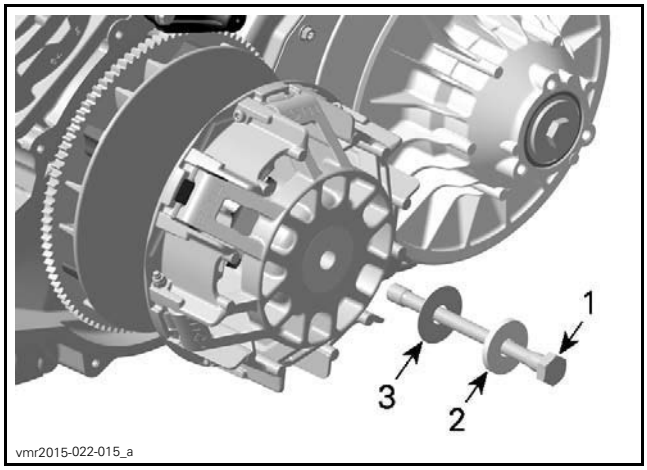

vmr2015-022-015_a

1. *Drive pulley screw*
2. *Spring washer*
3. *Thrust washer*

⚠ WARNING

Never substitute spring washer and/or screw with aftermarket parts. Always use BRP genuine parts.

Lock the drive pulley as per removal procedure.

Tighten drive pulley screw counterclockwise to specification.

DRIVE PULLEY SCREW	
Tightening torque	100 N•m ± 7 N•m (74 lbf•ft ± 5 lbf•ft)

NOTE: Drive pulley screw has LH threads.

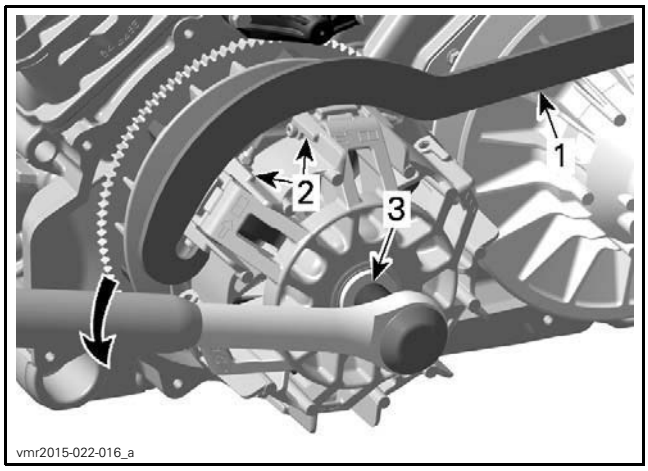

1. *Drive pulley holder*
2. *Drive pulley removal/installation area*
3. *Drive pulley screw*

DRIVEN PULLEY

Driven Pulley Removal

Remove drive belt, refer to *DRIVE BELT* in this subsection.

Block driven pulley fixed sheave.

REQUIRED TOOL	
DRIVEN CLUTCH HOLDER (P/N 529 035 771)	

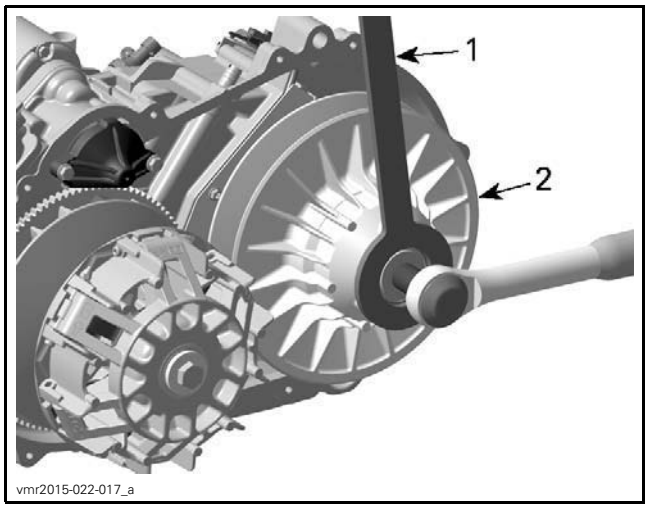

1. *Driven clutch holder*
2. *Driven pulley fixed sheave*

Unscrew the driven pulley screw.

NOTE: Do not remove screw completely.

Apply axial pressure with your hand on driven pulley and maintain during screw removal.

Remove:
- Driven pulley screw
- Washer.

⚠ WARNING

Driven pulley is spring loaded. Hold driven clutch pulley tight and slowly remove the driven pulley screw to release spring tension.

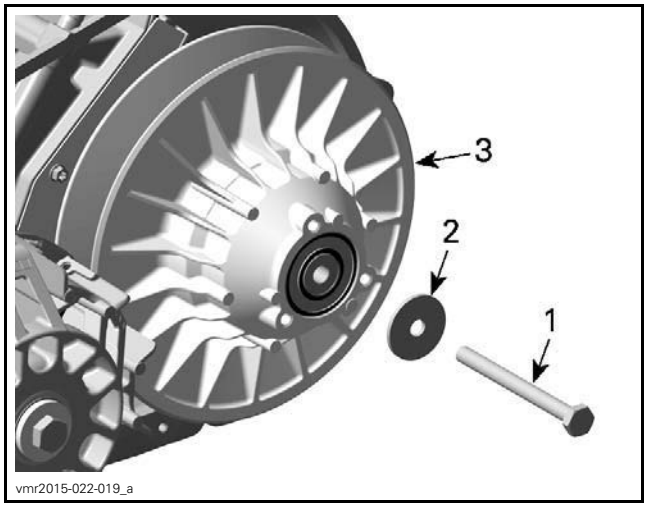

1. *Driven pulley screw*
2. *Washer*
3. *Driven pulley fixed sheave*

Remove:
- Driven pulley
- Spring
- Cam
- Plate.

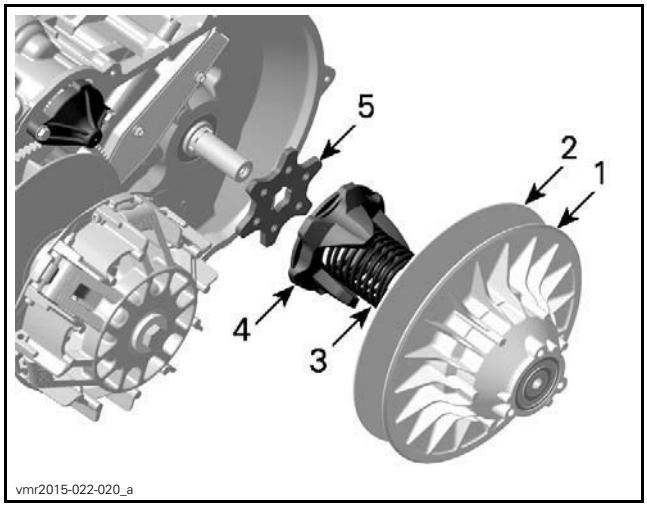

1. *Fixed sheave of driven pulley*
2. *Sliding sheave of driven pulley*
3. *Spring*
4. *Cam*
5. *Plate*

Remove distance sleeve including O-ring from counter shaft on engine PTO side.

Replace O-ring if brittle, hard or damaged.

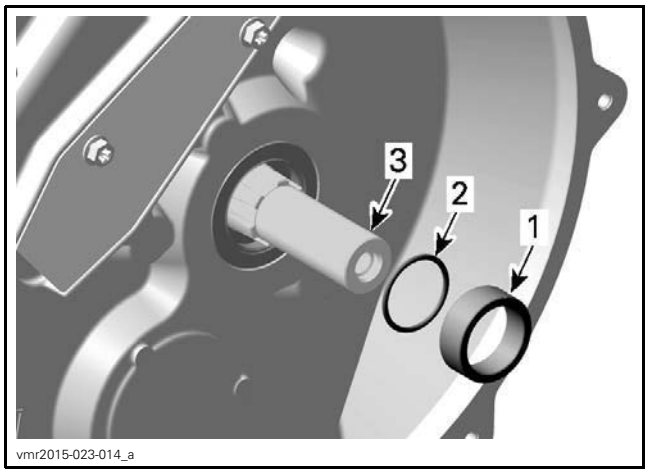

1. *Distance sleeve*
2. *O-ring*
3. *Counter shaft*

Driven Pulley Disassembly

Fixed Sheave

Remove retaining ring and lift torque gear.

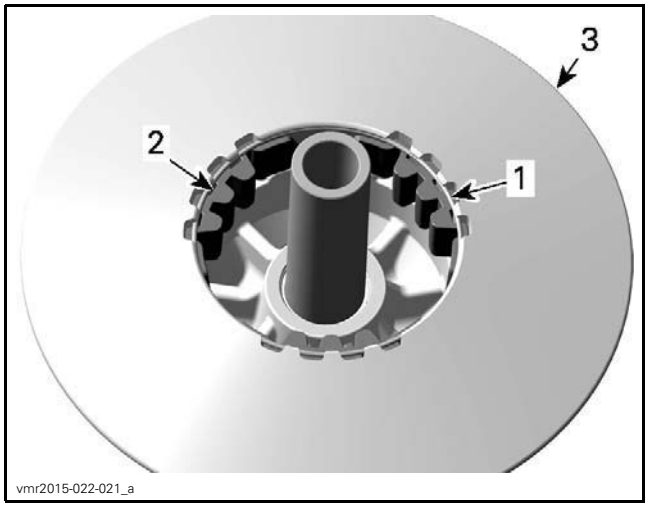

1. *Retaining ring*
2. *Torque gear*
3. *Fixed sheave of driven pulley*

NOTE: The following procedure is not necessary except if ball bearing or shaft must be removed. Refer to *INSPECTION* before proceeding.

Heat ball bearing area up to 100°C (212°F) before removing ball bearing.

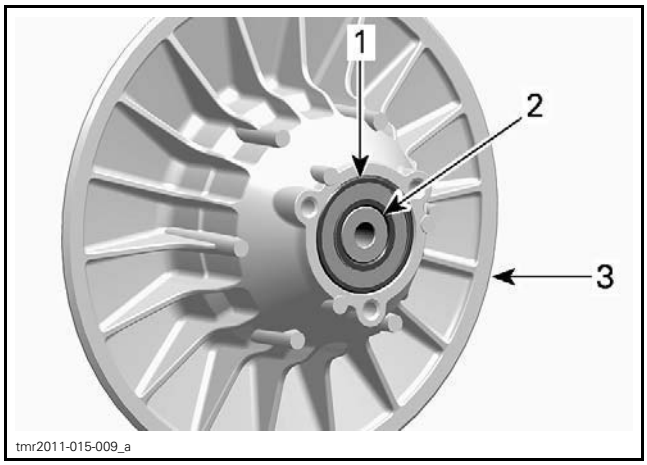

1. *Ball bearing*
2. *Shaft*
3. *Fixed sheave of driven pulley*

Use a soft hammer to push shaft with bearing out of fixed sheave.

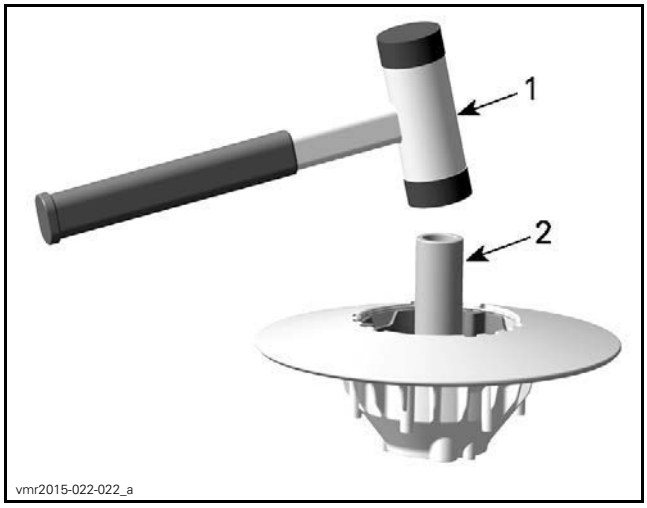

1. *Soft hammer*
2. *Shaft*

Remove shaft from ball bearing.

Driven Pulley Cleaning

To remove a dust deposit from cam or shaft, use a dry cloth.

Clean pulley faces and shaft with fine steel wool and dry cloth.

Clean driven pulley using the recommended product

RECOMMENDED PRODUCT
PULLEY FLANGE CLEANER (P/N 413 711 809)

Clean the CVT crankcase area from contamination.

Using a paper towel with cleaning solvent to clean counter shaft end and the inside of the shaft.

NOTICE To avoid damage, make sure cleaner does not contact the counter oil shaft seal.

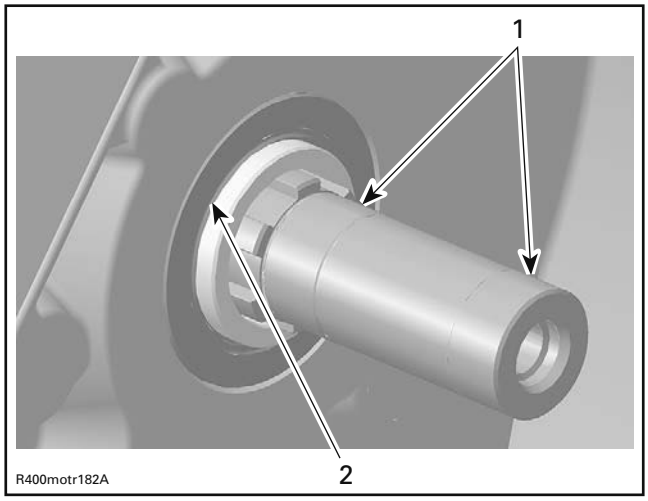

1. Counter shaft supports
2. Sealing lip of counter shaft oil seal

Driven Pulley Inspection

Sliding Sheave

Check sliding sheave for cracks and sliding contact surface for excessive wear. Replace sliding sheave if necessary.

Check bushings for cracks, scratch and for free movement when assembled to sliding sheave.

Using a dial bore gauge, measure bushing diameters. Measuring point must be at least 5 mm (1/4 in) from bushing edges.

Measure bushing inner diameter.

NOTE: Bushings cannot be replaced. Replace sliding sheave if bushings are out of specification. Visually inspect coatings.

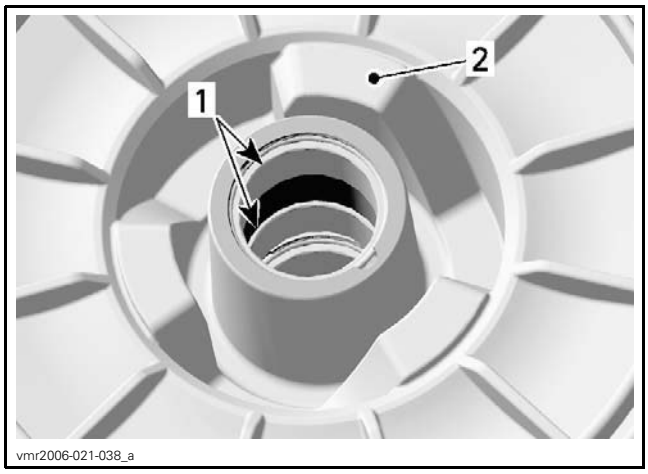

1. Bushings
2. Backside of sliding sheave

REQUIRED TOOL
Dial bore gauge

MEASURING POINT
At least 5 mm (1/4 in) from bushing edge

BUSHINGS INNER DIAMETER	
NEW	30.060 mm to 30.100 mm (1.183 in to 1.185 in)
SERVICE LIMIT	30.200 mm (1.189 in)

Fixed Sheave

Check fixed sheave for cracks and excessive wear. Replace fixed sheave if necessary.

Check ball bearing for free play and smooth operation. Replace if necessary.

Check shaft for heavy wear or visible damage. Replace if necessary.

If the shaft is removed, measure bushing inner diameter

NOTE: This bushing cannot be replaced. Replace fixed sheave if bushing is out of specification. Visually inspect coatings.

REQUIRED TOOL
Dial bore gauge

MEASURING POINT
At least 5 mm (1/4 in) from bushing edge

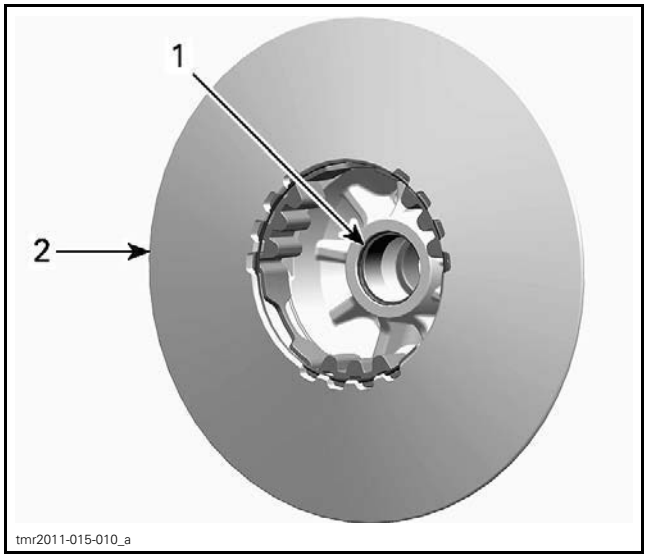

1. Bushing
2. Fixed sheave

BUSHING INNER DIAMETER	
NEW	30.060 mm to 30.100 mm (1.183 in to 1.185 in)
SERVICE LIMIT	30.200 mm (1.189 in)

Check torque gear for visible damage and cracks.

Measure for wear limit using a caliper.

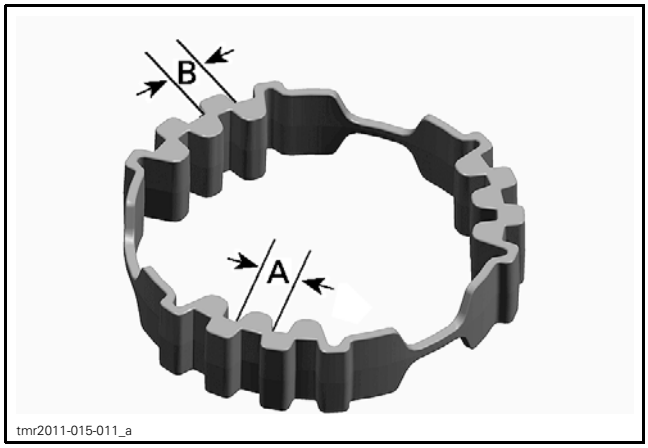

A. Measurement inside
B. Measurement outside

WEAR ON TEETH (BOTH SIDES)	
SERVICE LIMIT	7.500 mm (.295 in)

Cam

Check cam for visible damage and measure for wear using a caliper.

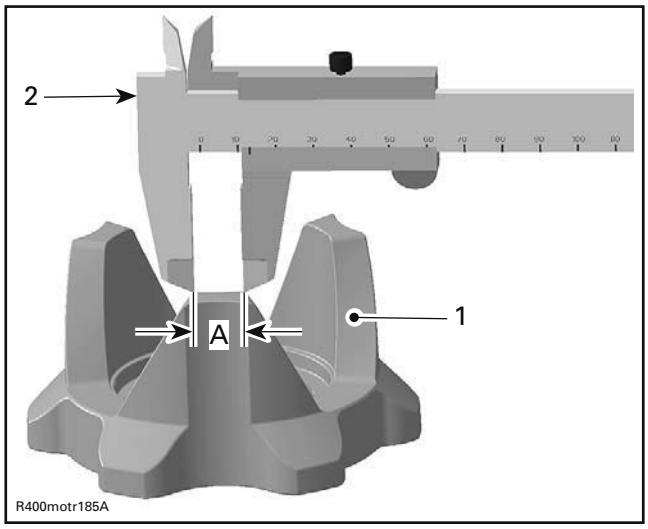

1. Contact surfaces for power train
2. Caliper

A. Width to be measured due to wear on contact surface

WIDTH ON TOP SURFACE	
SERVICE LIMIT	6.000 mm (.236 in)

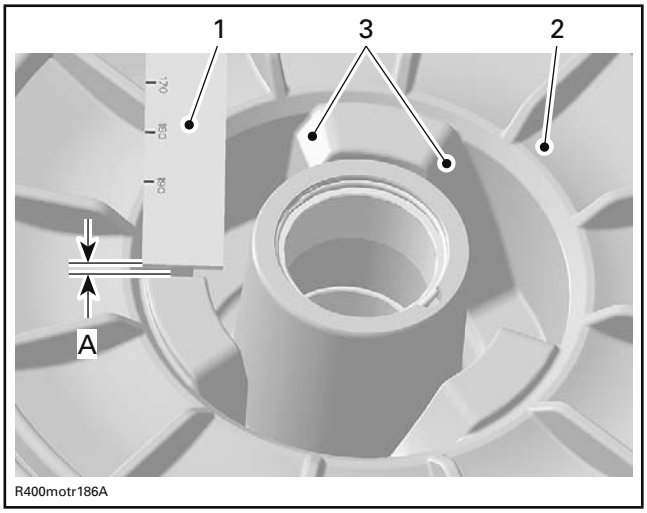

1. Caliper
2. Sliding sheave
3. Contact surface

A. Wear to be measured

WEAR ON CONTACT SURFACE	
SERVICE LIMIT	1.000 mm (.039 in)

Spring

Measure spring free length and squareness. If spring is out of specification, replace by a new one.

SPRING FREE LENGTH	
SERVICE LIMIT	164 mm (6.457 in)

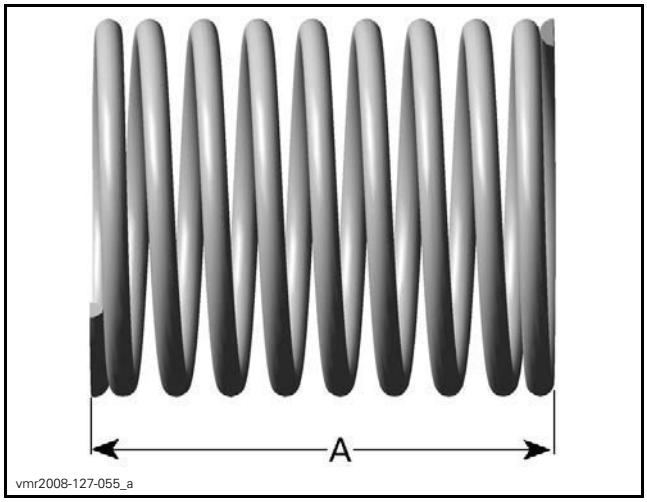

A. Free length

CLUTCH SPRING SQUARENESS	
SERVICE LIMIT	3.8 mm (.15 in)

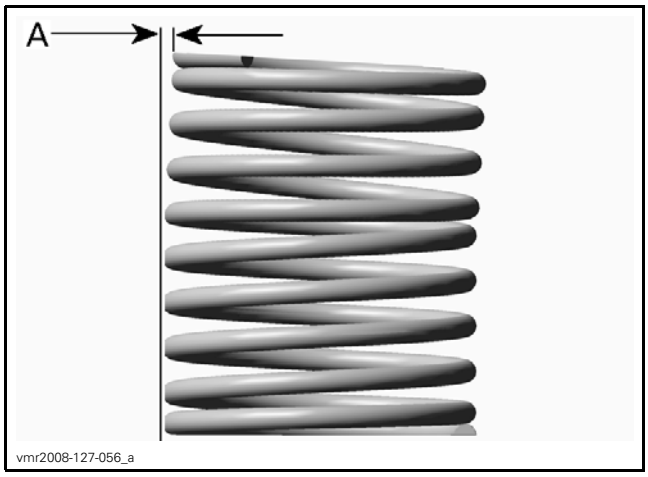

A. Squareness

Driven Pulley Assembly

For installation, reverse the removal procedure. Pay attention to following details.

Heat ball bearing area up to 100°C (212°F) before ball bearing installation.

NOTE: Place new ball bearing in a freezer for 10 minutes before installation.

Install ball bearing with the writing on top and push only on the outer ring.

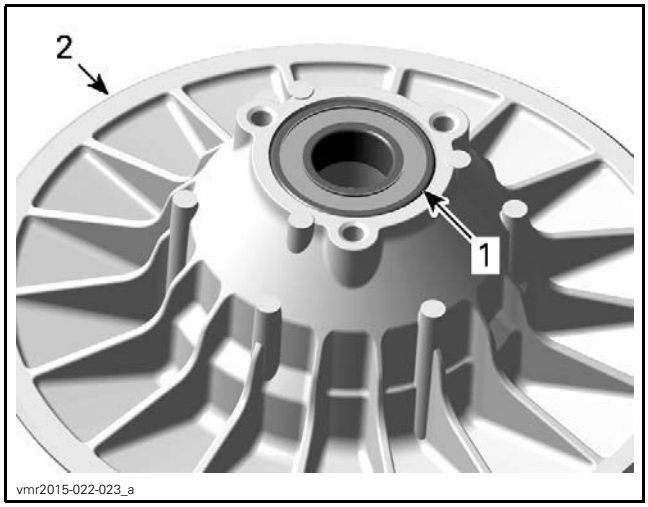

1. Ball bearing

NOTICE **Do not use a hammer, use a press only.**

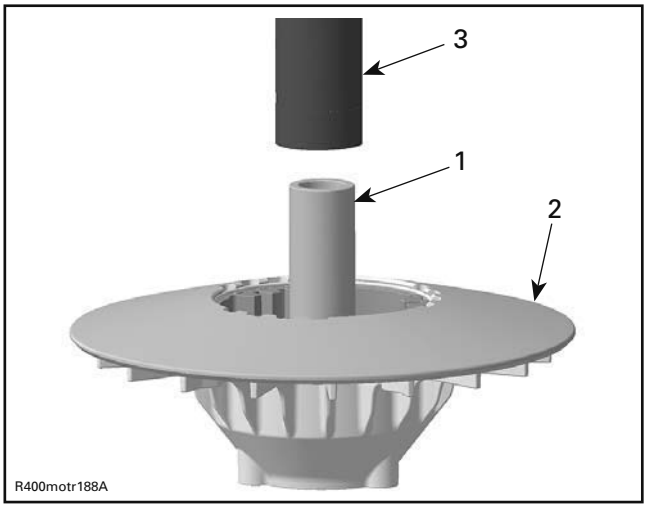

1. Shaft
2. Fixed sheave
3. Press machine

Install torque gear then secure it with retaining ring.

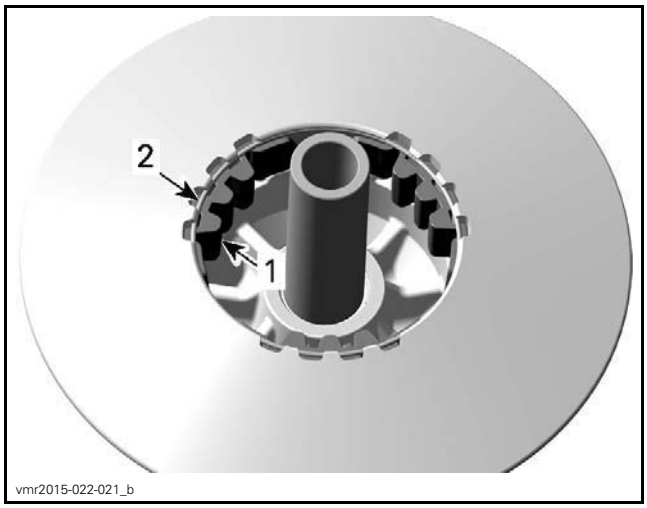

1. Torque gear
2. Retaining ring

Driven Pulley Installation

For installation, reverse the removal procedure. Pay attention to the following details.

Place O-ring on counter shaft splines and move it with spacer in end position.

NOTICE **Chamfer on inside diameter of the spacer must face engine side.**

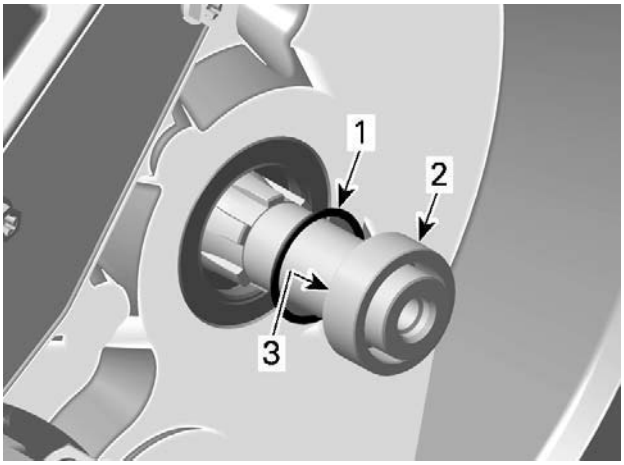

vmr2015-022-024_a

1. *O-ring*
2. *Distance sleeve*
3. *Chamfered area of distance sleeve*

Clean:

– Threads of gearbox counter shaft
– Driven pulley screw threads.

REQUIRED SERVICE PRODUCT
PULLEY FLANGE CLEANER (P/N 413 711 809)

NOTICE **Threads of gearbox counter shaft and driven pulley screw must be free of oil and grease. Lubricants in threads will create too high preload to tightened driven pulley screw.**

Install cam retainer on counter shaft spline the right way then install cam.

NOTE: Place cam retainer with printed mark "ENGINE SIDE" towards the engine.

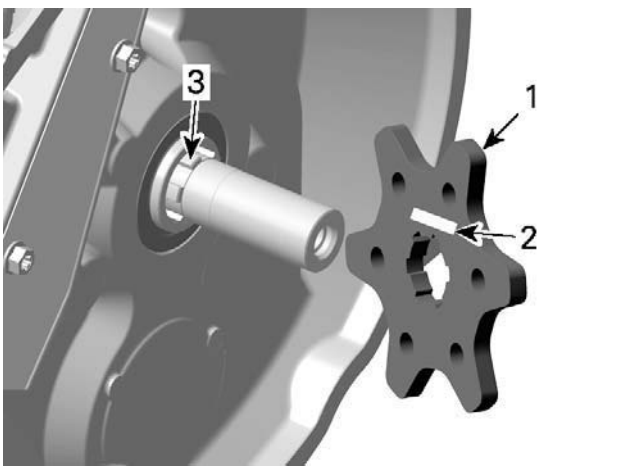

vmr2015-022-025_a

1. *Cam retainer*
2. *Printed mark "ENGINE SIDE"*
3. *Counter shaft spline*

Insert sliding sheave into fixed sheave.

Place spring behind sliding sheave then align driven pulley with cam.

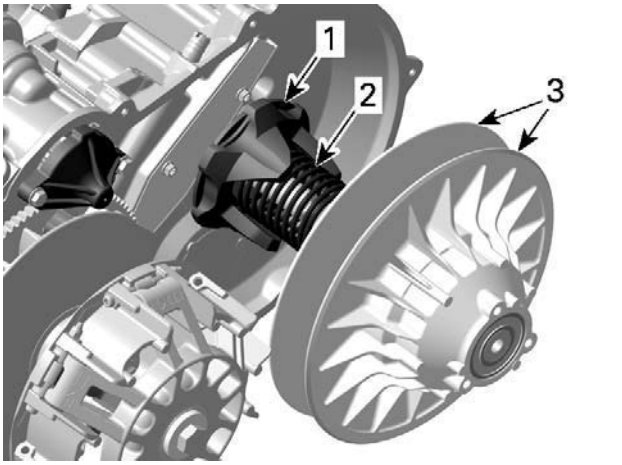

vmr2015-022-026_a

1. *Cam*
2. *Spring*
3. *Driven pulley*

With your hand, push the driven pulley onto the shaft to compress the spring.

NOTICE **A cam not correctly engaged will cause damage to the driven pulley and cam.**

Install the driven pulley screw and its washer.

NOTE: Tighten the screw with your hand sufficiently for the cam to remain engaged.

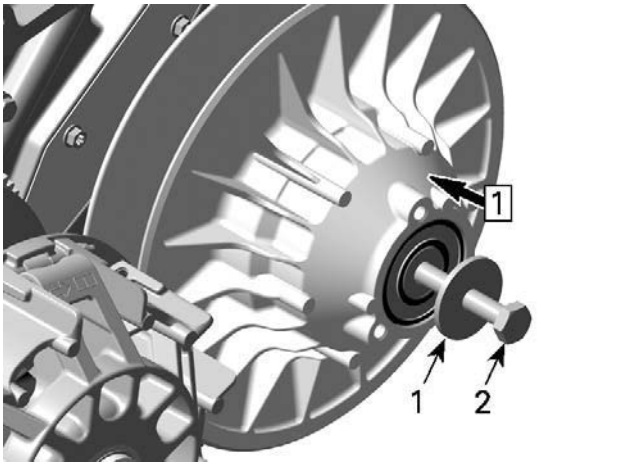

vmr2015-022-027_a

Step 1: Push

1. *Washer*
2. *Driven pulley screw*

Install drive belt. Refer to *DRIVE BELT* in this subsection.

REQUIRED TOOL	
PULLER/LOCKING TOOL (P/N 529 036 098)	

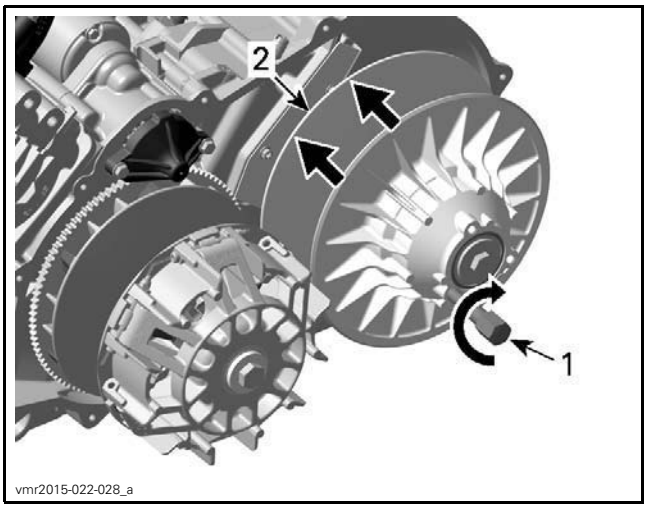

1. Puller/locking tool
2. Sliding sheave

NOTE: If driven pulley sheaves cannot be opened when the service tool is screwed in, the cam is not correctly engaged in the sliding sheave.

Torque driven pulley screw to specification.

DRIVEN PULLEY SCREW TIGHTENING PROCEDURE	
Step 1	20 N•m ± 1 N•m (15 lbf•ft ± 1 lbf•ft)
Step 2	180° ± 5°

Check driven pulley end play.

SPECIFICATION	
Driven pulley end play	0 mm (0 in)

CONTINUOUSLY VARIABLE TRANSMISSION (CVT)

SERVICE TOOLS

Description	Part Number	Page
CLUTCH HOLDER	529 036 238	154, 162, 167
CLUTCH PULLER	529 035 746	154
PULLER/LOCKING TOOL	529 036 098	153, 167

SERVICE PRODUCTS

Description	Part Number	Page
ISOFLEX GREASE TOPAS NB 52	293 550 021	160
LOCTITE 767 (ANTISEIZE LUBRICANT)	293 800 070	166
PULLEY FLANGE CLEANER	413 711 809	157, 163–164, 166

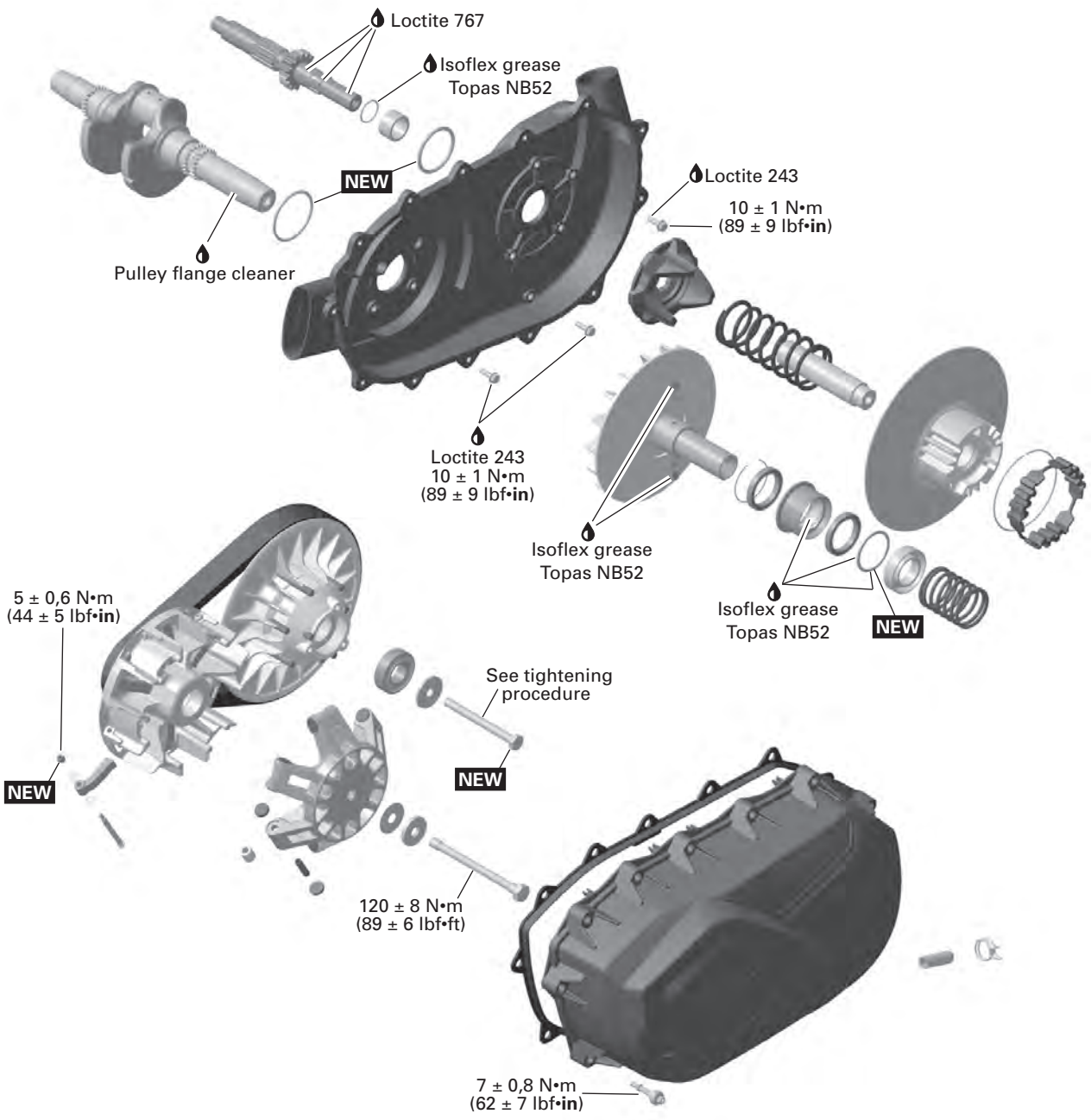

NEW = Component must be replaced when removed.

vmr2016-036-001_a

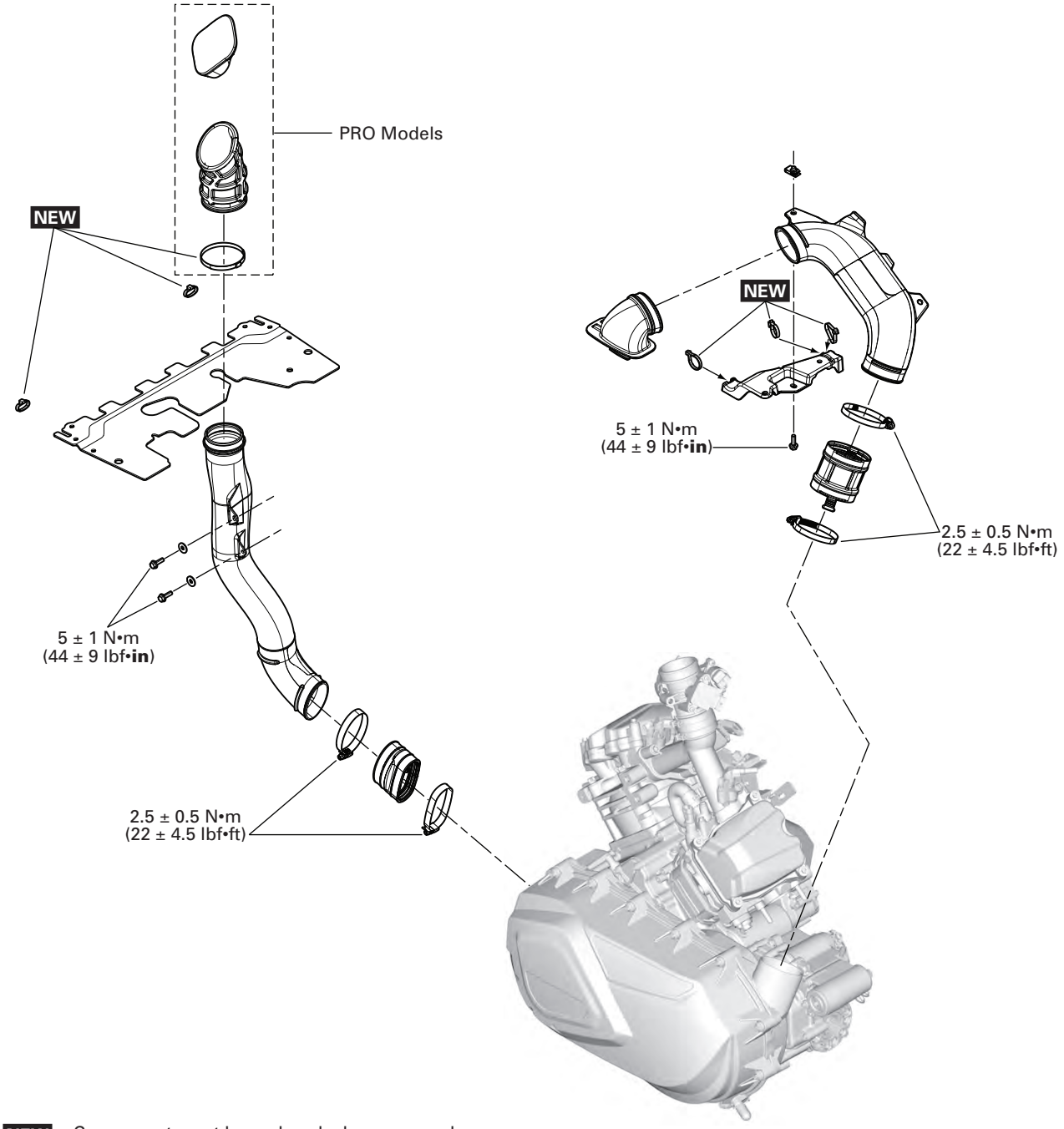

NEW = Component must be replaced when removed.

vmr2016-036-101_a

GENERAL

NOTE: For a better understanding, the following illustrations are taken with engine out of vehicle. To perform the following instructions, it is not necessary to remove engine.

⚠ WARNING

Never touch CVT while engine is running. Never drive vehicle when CVT cover is removed.

⚠ WARNING

Any drive pulley repairs must be performed by an authorized Can-Am dealer. Subcomponent installation and assembly tolerances require strict adherence to procedures detailed.

⚠ WARNING

The clutch assembly is a precisely balanced unit. Never replace parts with used parts from another clutch assembly.

PROCEDURES

CVT COVER

CVT Cover Access

Refer to *BODY* subsection and remove the following:

– LH side and extension panels
– LH footboard panel.

Draining the CVT Cover

If water is present in CVT cover, it can be drained as follows:

1. Remove drain reservoir from CVT cover.

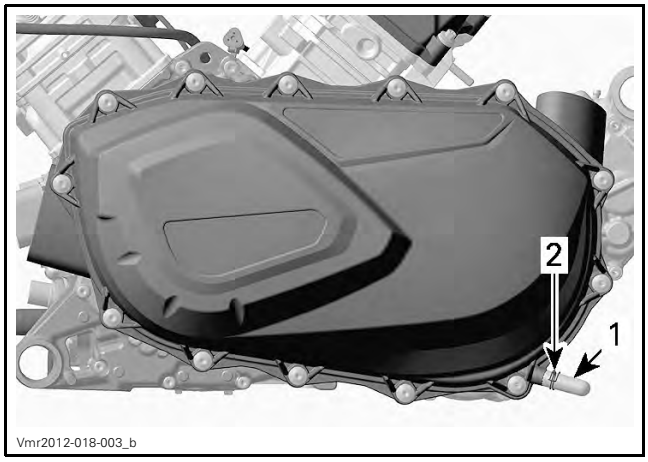

1. Drain reservoir
2. Spring clip

2. Let water drain from CVT cover.
3. Reinstall drain reservoir.

NOTICE **If an appreciable amount of water or any debris entered the CVT cover, CVT must be cleaned and inspected.**

Removing the CVT Cover

Remove CVT cover screws.

NOTE: Do not use and impact tool to remove CVT cover screws. To support the CVT cover remove the top center screw last.

Remove the CVT cover and its gasket.

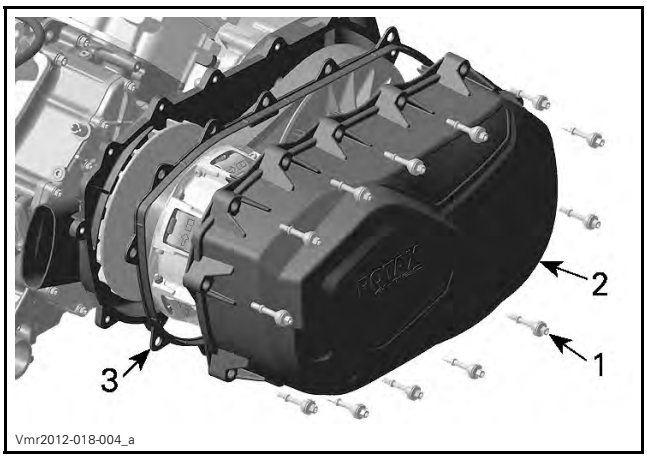

1. CVT cover screw
2. CVT cover
3. Gasket

Installing the CVT Cover

Install the top center screw of first.

NOTE: Do not use and impact tool to install CVT cover screws.

Tighten the CVT cover screws as per following sequence.

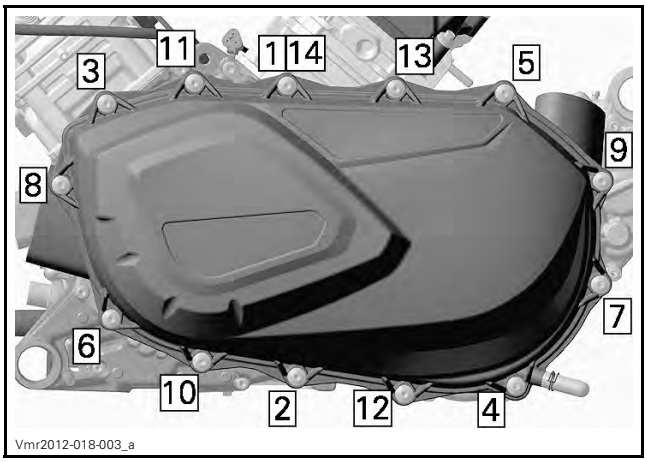

CVT COVER TIGHTENING SEQUENCE

TIGHTENING TORQUE	
CVT cover screws	7 N•m ± 0.8 N•m (62 lbf•**in** ± 7 lbf•**in**)

DRIVE BELT

Removing the Drive Belt

NOTICE **In case of a drive belt failure, the CVT, cover, drain reservoir and air outlet must be cleaned and inspected for obstruction.**

1. Remove *CVT COVER*.
2. Open driven pulley.

REQUIRED TOOL	
PULLER/LOCKING TOOL (P/N 529 036 098)	

3. Screw tool in the threaded hole of driven pulley and tighten to open the pulley.

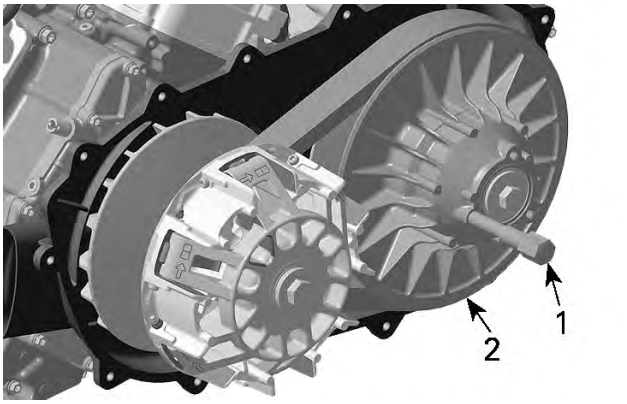

Vmr2012-018-005_a

1. Puller/locking tool
2. Fixed sheave of driven pulley

4. Slide the belt over the top edge of fixed sheave to remove it.

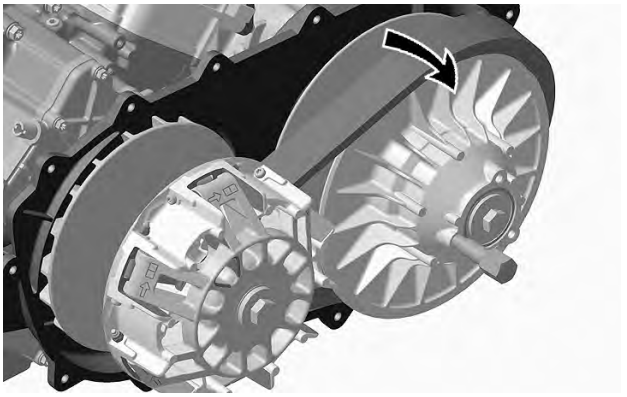
Vmr2012-018-006_a

Inspecting the Drive Belt

For drive belt inspection refer to *DRIVE BELT INSPECTION* in the *PERIODIC MAINTENANCE PROCEDURES* subsection.

Installing the Drive Belt

For installation, reverse the removal procedure. Pay attention to following details.

The maximum drive belt life span is obtained when the drive belt has the proper rotation direction. Install it so that the arrow printed on belt is pointing towards front of the vehicle, viewed from top.

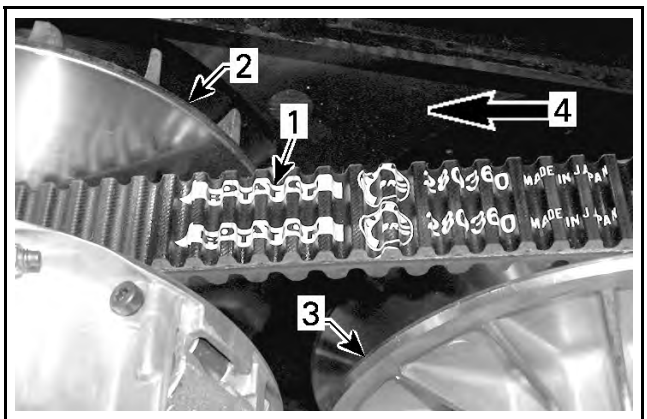

vmr2007-051-006_a

1. Arrow printed on belt
2. Drive pulley (front)
3. Driven pulley (rear)
4. Rotation direction

DRIVE PULLEY

Removing the Drive Pulley

1. Remove *DRIVE BELT*, see procedure in this subsection.
2. Prior to removing the drive pulley, mark sliding sheave and governor cup to ensure correct indexation at reinstallation.

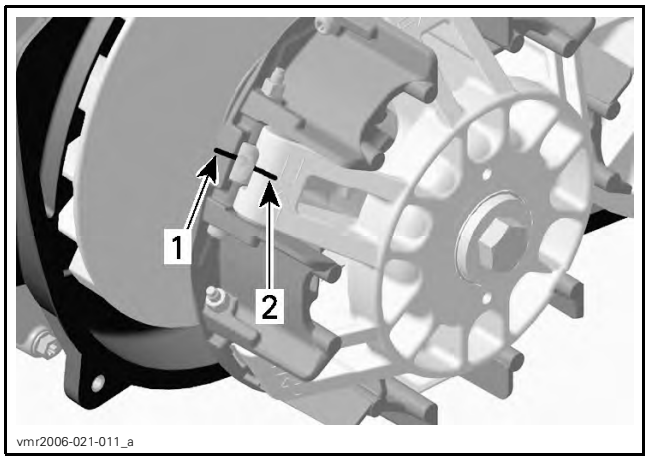

1. Mark on drive pulley sliding sheave
2. Mark on governor cup

3. Lock the drive pulley.

REQUIRED TOOL	
CLUTCH HOLDER (P/N 529 036 238)	

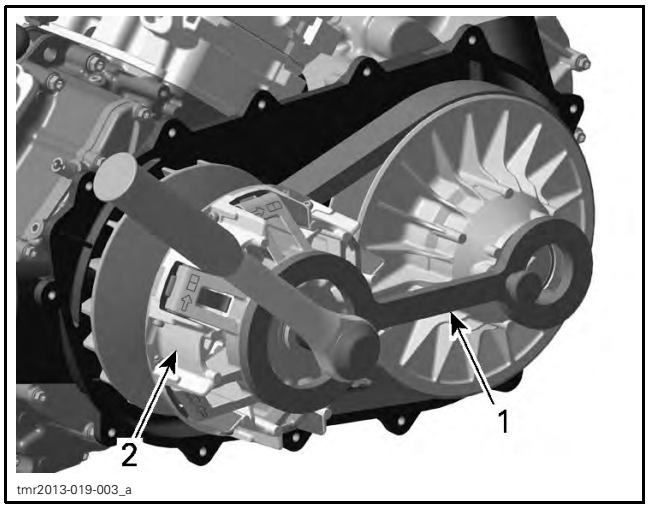

1. Clutch holder
2. Drive pulley sliding sheave

4. Loosen the drive pulley screw.

NOTICE **Never use any type of impact wrench for drive pulley removal.**

NOTE: Do not unscrew the drive pulley screw completely. If governor cup is stuck, hit it using a soft hammer.

5. Remove service tool.
6. Apply axial pressure with your hand on the sliding sheave and governor cup.
7. Remove drive pulley screw with its conical spring washer and thrust washer.

CAUTION **Sliding sheave of drive pulley is spring loaded.**

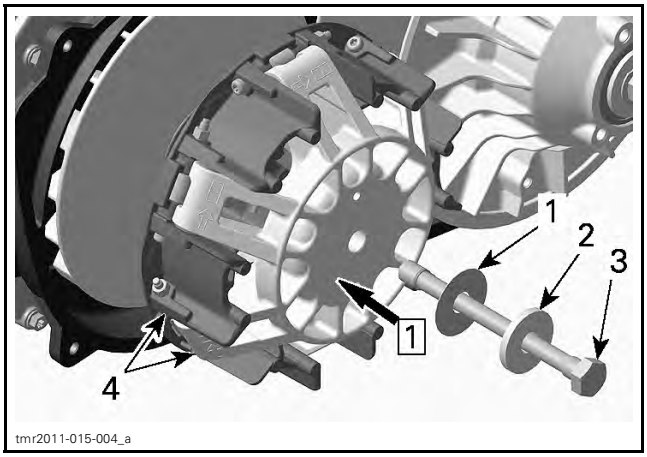

Step 1: Push

1. Thrust washer
2. Conical spring washer
3. Drive pulley screw
4. Sliding sheave with governor cup

8. Slowly release and remove sliding sheave.
9. Remove friction washer.

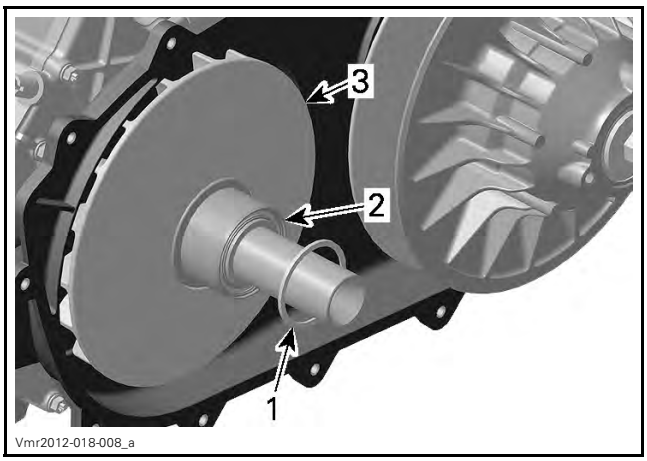

1. Friction washer
2. One way clutch
3. Drive pulley fixed sheave

10. Screw clutch puller in fixed sheave to remove fixed pulley.

NOTICE **Use only recommended tool.**

REQUIRED TOOL	
CLUTCH PULLER (P/N 529 035 746)	

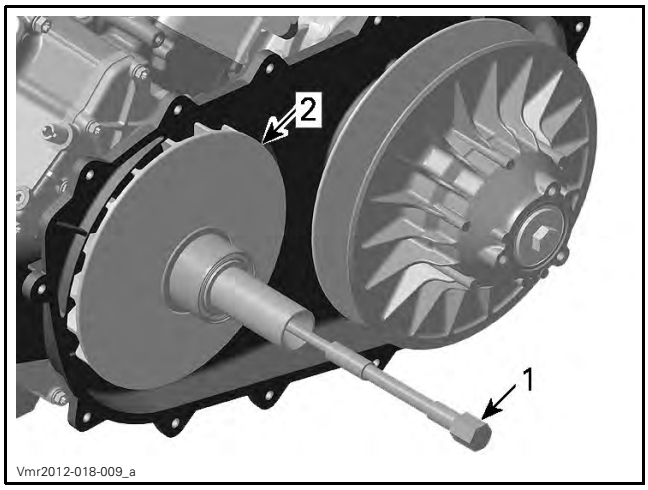

1. *Drive pulley puller*
2. *Fixed sheave*

Disassembling the Drive Pulley

Governor Cup

1. Carefully lift governor cup until slider shoes move to their highest position in the guides.

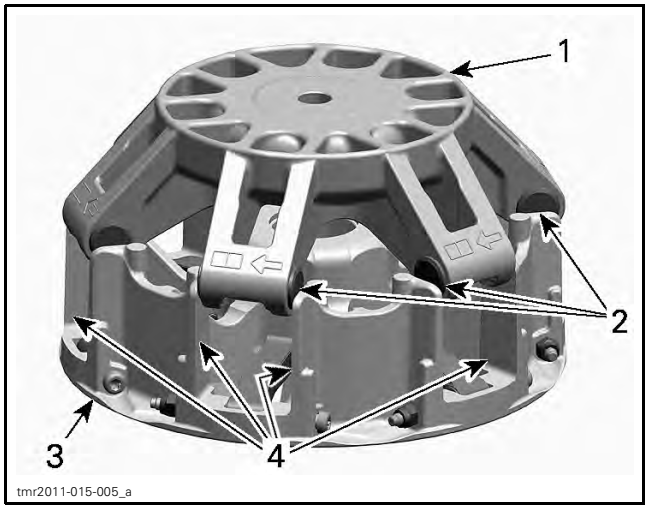

1. *Governor cup*
2. *Slider shoes*
3. *Sliding sheave*
4. *Guides*

NOTE: The following steps are not necessary except if roller must be removed. Refer to *INSPECTION* before proceeding.

2. Remove slider shoes from governor cup arm. Use a flat screwdriver if necessary.

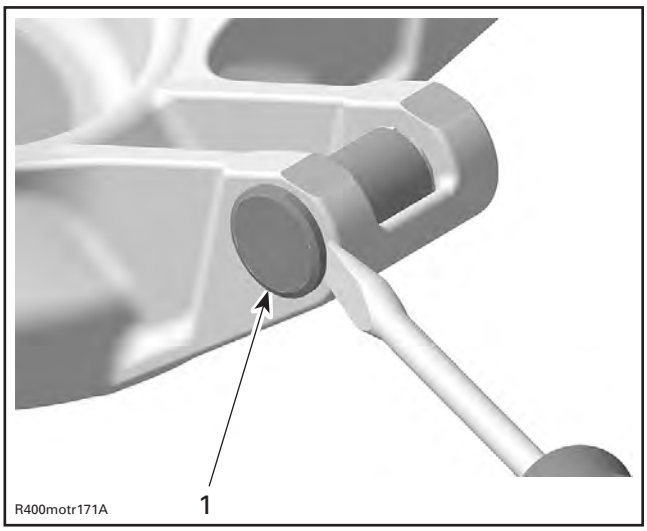

1. *Slider shoe*

3. Place the governor cup on a vice to push out the roller sleeve in the direction illustrated (against insertion arrow marked on governor cup arm). Use an appropriate punch (diameter of punch must be smaller than the diameter of the sleeve bore in the governor cup arm).

NOTICE **Do not clamp the governor cup in the vice to push out roller sleeve. Governor cup will be damaged.**

NOTE: Use protection plates to avoid marks and/or damages to the governor cup.

NOTICE **Always replace all rollers as a set. Partly worn rollers may cause damage to the CVT system.**

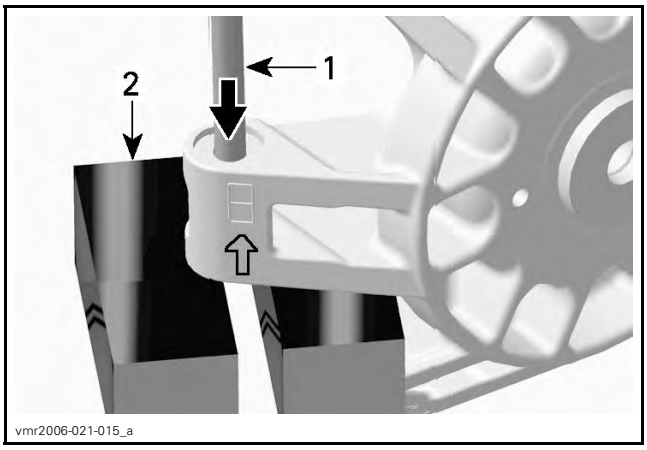

1. *Punch*
2. *Vice*

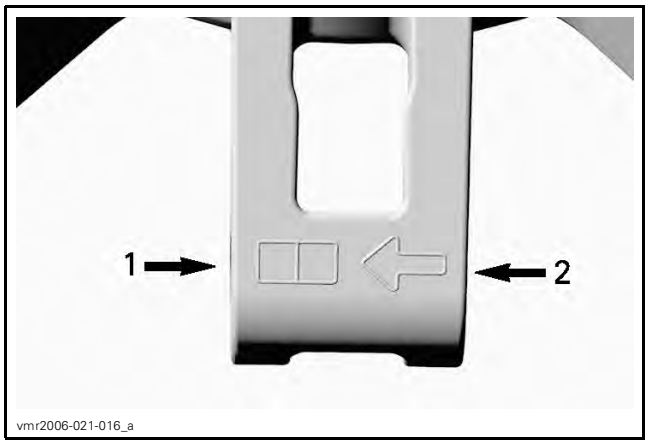

1. Removal direction
2. Assembly direction

NOTE: Whenever removing a governor cup which already has two marked boxes, replace it by a new one.

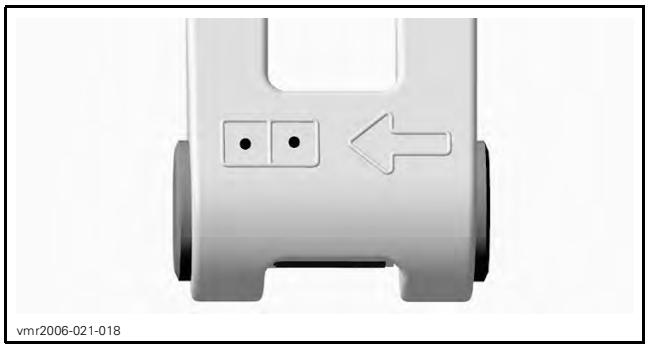

Sliding Sheave

Unscrew lock nut and remove centrifugal lever pivot bolt. This drive pulley is equipped with 4 levers.

Remove centrifugal lever and both thrust washers.

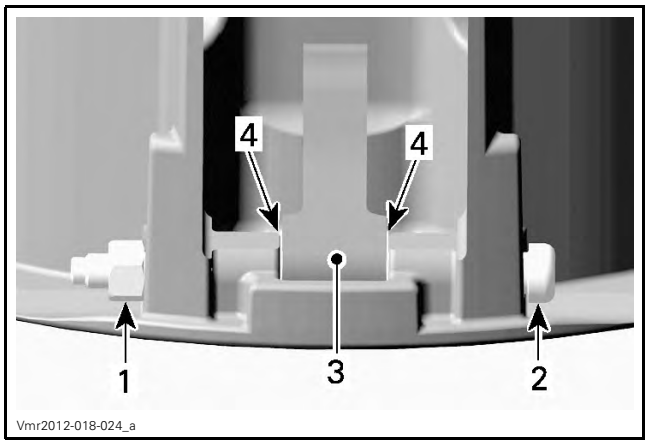

1. Lock nut
2. Centrifugal lever pivot bolt
3. Centrifugal lever
4. Thrust washers

Fixed Sheave

⚠ WARNING

Always wear safety glasses to remove spring sleeves.

Pull and rotate one-way clutch slowly until the spring sleeves are visible.

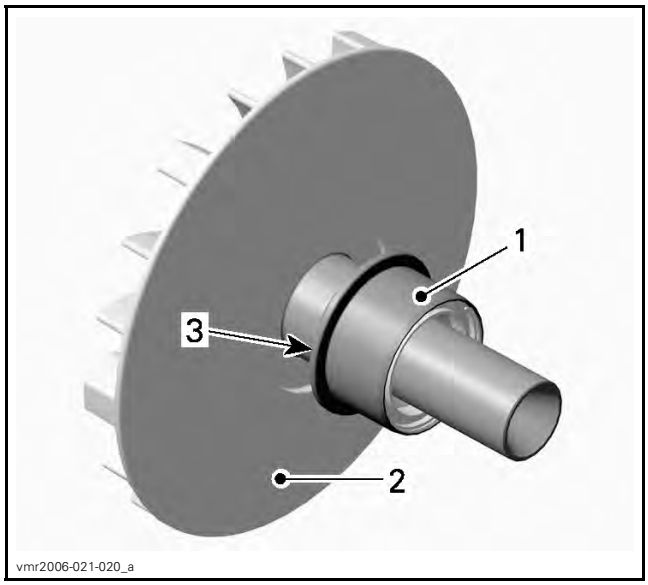

1. One-way clutch
2. Fixed sheave
3. Spring sleeve area

Hold both spring sleeves with fingers and carefully remove them when the one-way clutch is disengaged.

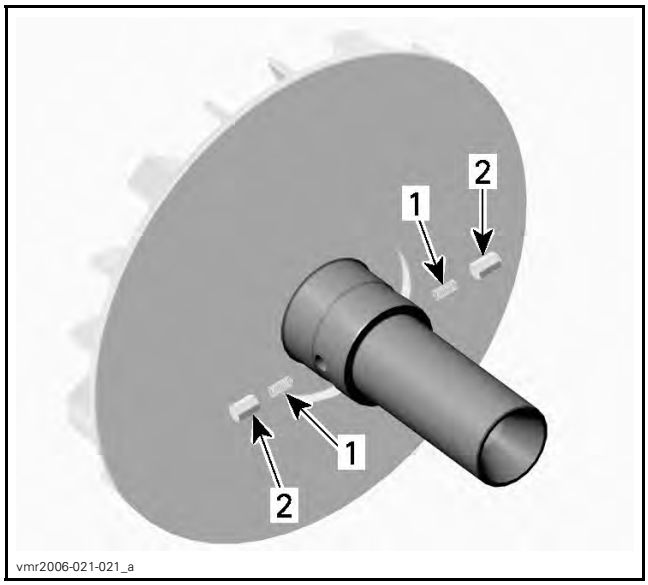

1. Springs
2. Spring sleeves

Cleaning the Drive Pulley

Clean pulley faces and shaft with fine steel wool and a dry cloth.

Using a paper towel with the recommended cleaning solvent, clean:

- Crankshaft tapered end
- Taper inside the fixed sheave of the drive pulley
- Crankshaft threads
- Drive pulley screw threads.

REQUIRED PRODUCT
PULLEY FLANGE CLEANER (P/N 413 711 809)

NOTICE **Avoid contact between cleaner and crankshaft seal as damage may occur.**

Remove all hardened oil deposits that have baked on the crankshaft and pulley tapered surfaces using coarse or medium steel wool, and/or sand paper no. 600.

NOTICE **Do not use any other type of abrasive.**

Reclean mounting surfaces with paper towel and PULLEY FLANGE CLEANER (P/N 413 711 809).

Wipe off the mounting surfaces with a clean, dry paper towel.

NOTICE **Mounting surfaces must be free of any oil, cleaner or towel residue.**

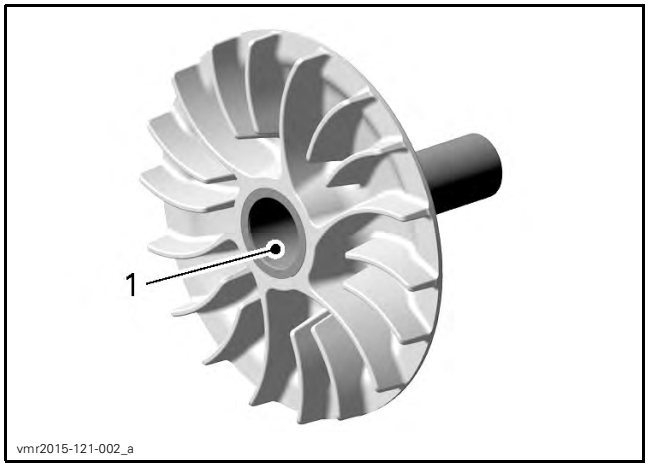

1. Taper of fixed sheave

Only use petrol base cleaner when cleaning sliding sheave bushings.

NOTICE **Do not use acetone to clean bushing.**

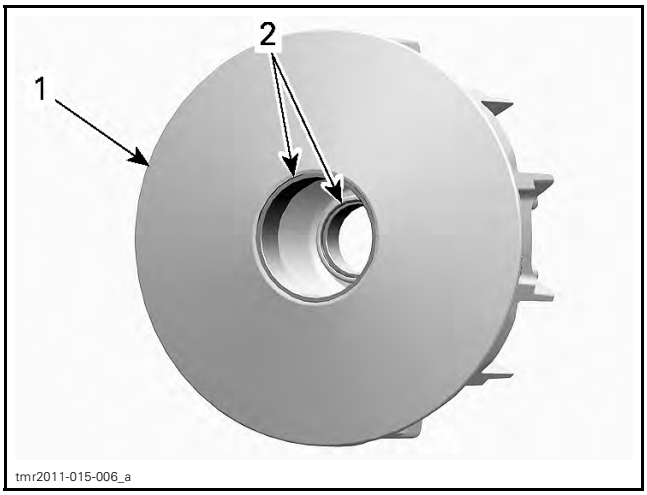

1. Sliding sheave
2. Bushings

Inspecting the Drive Pulley

Bushings

For bushing inspection, refer to *SLIDING SHEAVE* in this subsection.

Governor Cup

Check governor cup for cracks or other visible damage. Replace if necessary.

Roller and Slider Shoe

Check each roller for roundness of external diameter.

Check if rollers move freely.

NOTICE **Whenever replacing rollers and slider shoes, always replace all rollers and slider shoes as a set.**

Check slider shoes for visible wear If chamfer is not present anymore, replace ALL slider shoes.

NOTE: If necessary, use a screwdriver to remove slider shoes.

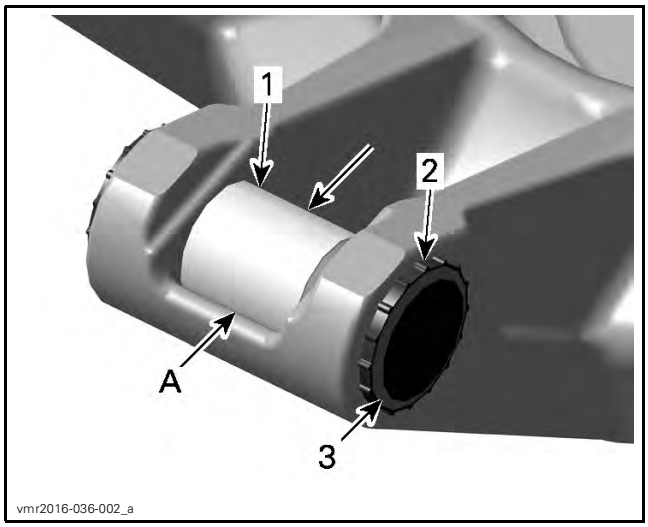

1. *Roller*
2. *Slider shoe*
3. *Chamfer*

A. *Roller outer diameter*

ROLLER OUTER DIAMETER	
NEW	13.80 mm to 14.00 mm (.543 in to .551 in)
SERVICE LIMIT	13.20 mm (.519 in)
ROLLER INNER DIAMETER	
NEW	8.025 mm to 8.175 mm (.316 in to .322 in)
SERVICE LIMIT	9 mm (.354 in)

Centrifugal Lever Pivot Bolt

Measure diameter of centrifugal lever pivot bolt; replace if out of specification.

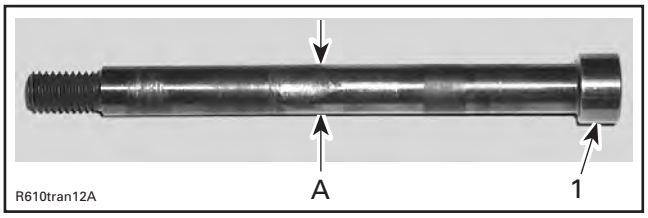

1. *Centrifugal lever pivot bolt*

A. *Measure diameter here*

CENTRIFUGAL LEVER PIVOT BOLT DIAMETER	
NEW	6.078 mm to 6.100 mm (.239 in to .24 in)
SERVICE LIMIT	6.00 mm (.236 in)

Centrifugal Lever

Check bushing diameter in the centrifugal lever for wear. Replace centrifugal lever if necessary.

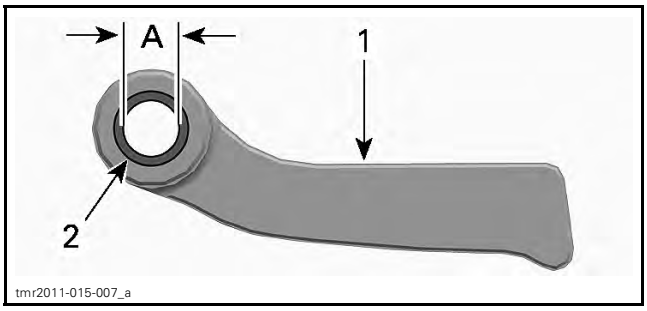

1. *Centrifugal lever*
2. *Bushing*

A. *Bushing inner diameter*

CENTRIFUGAL LEVER BORE DIAMETER	
NEW	6.035 mm to 6.078 mm (.238 in to .239 in)
SERVICE LIMIT	6.200 mm (.244 in)

Inspect and replace as necessary the following items if their contact surfaces are heavy worn:

– Centrifugal lever
– Thrust washers
– Centrifugal lever pivot bolts
– Lock nuts.

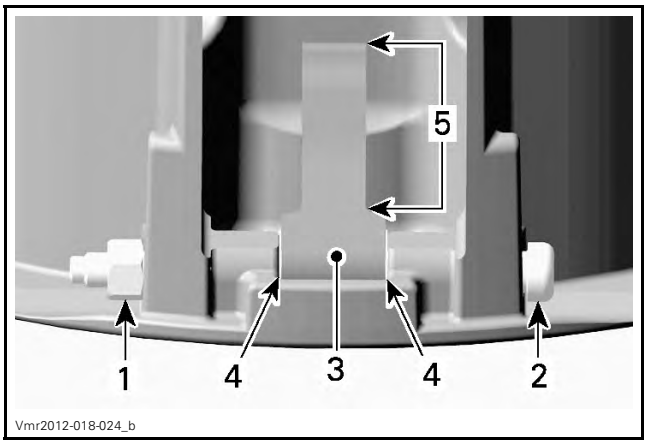

1. *Lock nut*
2. *Centrifugal lever pivot bolt*
3. *Centrifugal lever*
4. *Thrust washers*
5. *Contact surface to the roller*

⚠ WARNING

Whenever replacing centrifugal levers, always replace all levers as a set. Otherwise, drive pulley unbalance will occur.

Sliding Sheave

Check sliding sheave for cracks and sliding contact surface for excessive wear. Replace sliding sheave if necessary.

Measure centrifugal lever pivot bolt bores. Replace sliding sheave if bores are out of specification or otherwise damaged.

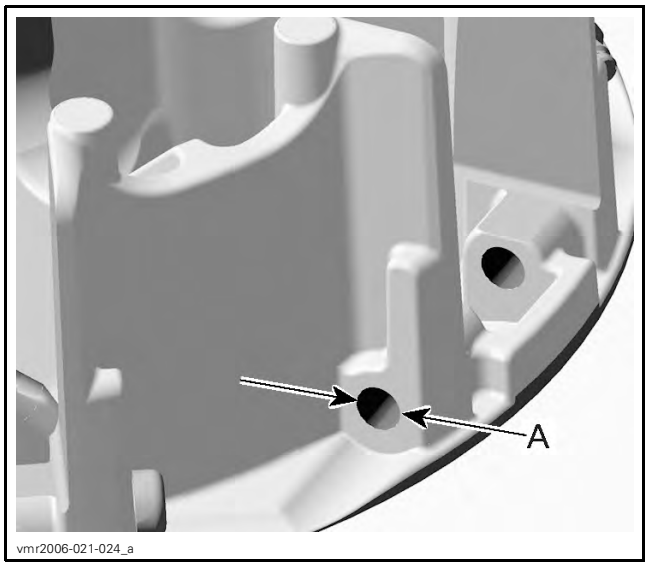

A. Centrifugal lever pivot bolt bore diameter

CENTRIFUGAL LEVER PIVOT BOLT BORE DIAMETER	
NEW	6.113 mm to 6.171 mm (.241 in to .243 in)
SERVICE LIMIT	6.300 mm (.248 in)

Measure bushing diameters of sliding sheave.

REQUIRED TOOL
Dial bore gauge

MEASURING POINT
At least 5 mm (1/4 in) from bushing edge

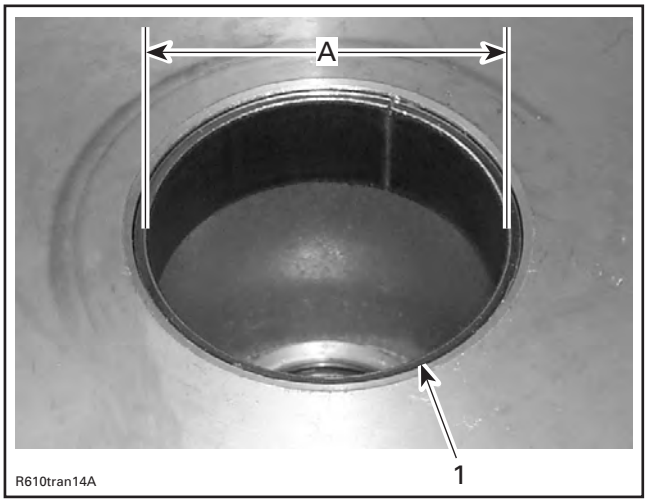

1. Bushing on fixed sheave side
A. Bore diameter of bushing

SLIDING SHEAVE LARGE BUSHING	
NEW	55.000 mm to 55.040 mm (2.165 in to 2.167 in)
SERVICE LIMIT	55.200 mm (2.173 in)

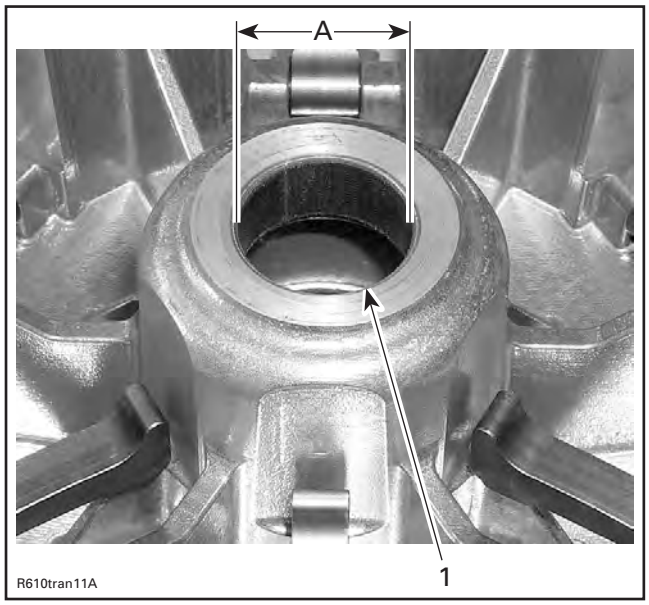

1. Bushing on governor cup side
A. Bore diameter of bushing

SLIDING SHEAVE SMALL BUSHING	
NEW	32.000 mm to 32.040 mm (1.26 in to 1.261 in)
SERVICE LIMIT	32.200 mm (1.268 in)

Replace sliding sheave if one of the bushings is out of specification. Visually inspect coatings for wear.

Fixed Sheave

Check fixed sheave contact surface to the governor cup for scratches or other damages. If damaged, replace fixed sheave.

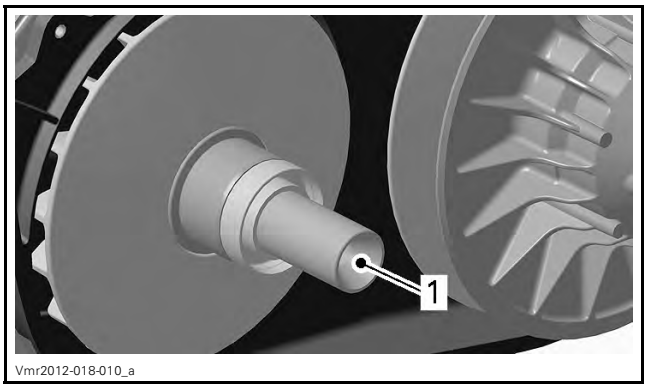

1. Visually check here

Check for any marks on fixed sheave plate. Replace if necessary.

Spring

Measure spring free length and squareness. If spring is out of specification, replace by a new one.

CLUTCH SPRING FREE LENGTH
SERVICE LIMIT
85 MM (3.35 IN)
CLUTCH SPRING SQUARENESS
SERVICE LIMIT
4 MM (.157 IN)

One-Way Clutch

Check bearings for excessive play and smooth operation. Replace bearings if necessary.

NOTICE **Be careful not to damage the inside of one-way clutch during bearing removal.**

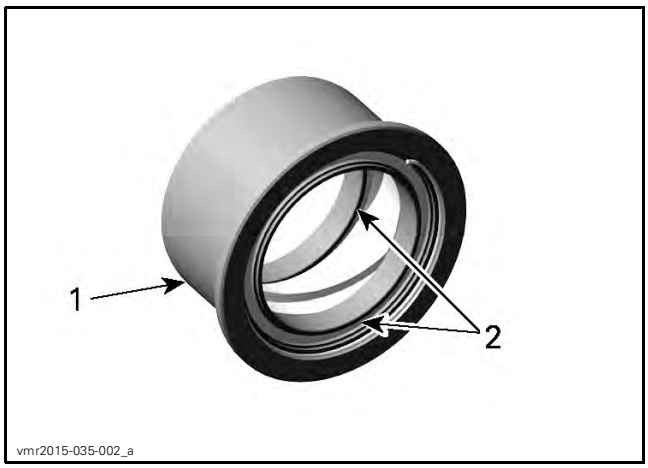

1. *One-way clutch*
2. *Bearings*

Measure length of spring sleeves and check if edges on top of the spring sleeve are excessively worn. If out of specification, replace both spring sleeves at the same time.

SPRING SLEEVE LENGTH	
NEW	9.2 mm to 9.4 mm (.362 in to .37 in)
SERVICE LIMIT	9.0 mm (.354 in)

Assembling the Drive Pulley

For assembly, reverse the disassembly procedure. Pay attention to following details.

One-Way Clutch

Clean parts.

Lubricate springs, spring sleeves and between one way clutch bearings using recommended product.

REQUIRED PRODUCT
ISOFLEX GREASE TOPAS NB 52 (P/N 293 550 021)

Friction Washer

NOTE: Apply recommended grease on both sides of friction washer.

REQUIRED PRODUCT
ISOFLEX GREASE TOPAS NB 52 (P/N 293 550 021)

NOTE: Friction washer must be assembled with collar towards one way clutch.

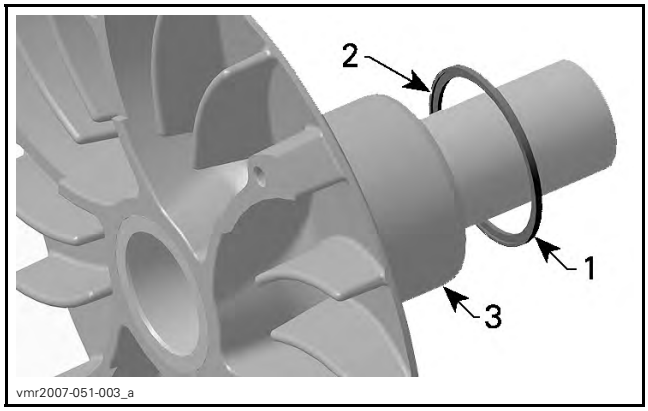

1. *Friction washer*
2. *Collar*
3. *One way clutch*

Sliding Sheave

Install centrifugal levers with their thrust washers.

NOTICE **Centrifugal levers must move easily after installation.**

Governor Cup

Rebuild governor cup with new roller sleeves, rollers and slider shoes.

NOTICE **Final position of roller sleeves must be flush with the sleeve bore in the governor cup arm (no protrusion).**

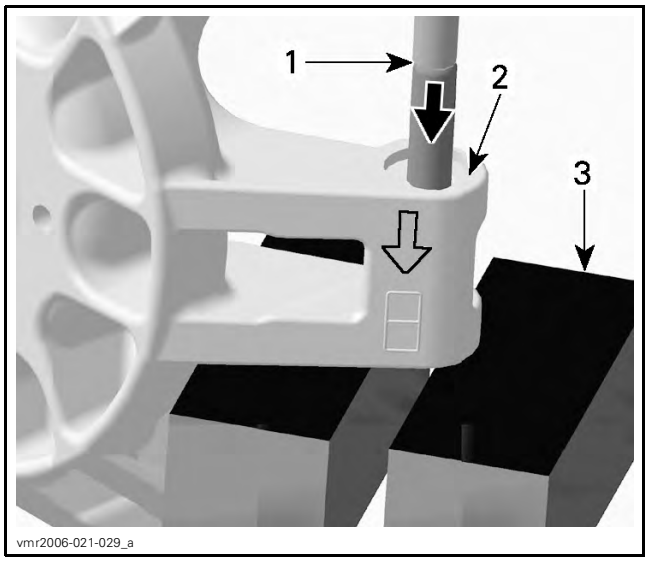

1. *Top edge of roller sleeve*
2. *Mating surface of slider shoes*
3. *Vice*

Whenever replacing the roller sleeves, make a mark in the box on the governor arm using a punch.

NOTICE **Do not tap too hard. Severe damage to the governor cup may appear.**

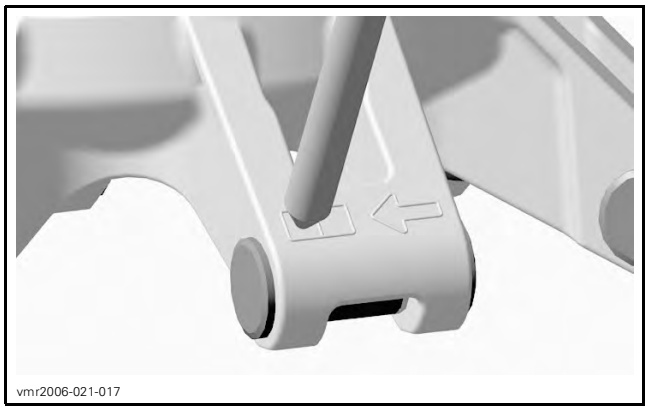

NOTICE **Rollers must move easily after installation.**

Carefully press slider shoes in the governor cup arm so they **bottom out evenly** in the machined portion of the governor cup arm.

NOTICE **Slider shoes must be pressed in evenly to ensure they are centered in the arm and slide properly in the guides.**

Installing the Drive Pulley

For installation, reverse the removal procedure. Pay attention to the following details.

⚠ WARNING

Do not apply antiseize or any lubricant on crankshaft and drive pulley tapers.

NOTICE **Never use any type of impact wrench for drive pulley removal and installation.**

Clean mounting surfaces as described in *DRIVE PULLEY CLEANING*.

Install drive pulley on crankshaft extension.

NOTICE **Do not forget to install thrust washer and conical spring washer as per illustration that follows.**

NOTE: Install conical spring washer with its concave side towards drive pulley.

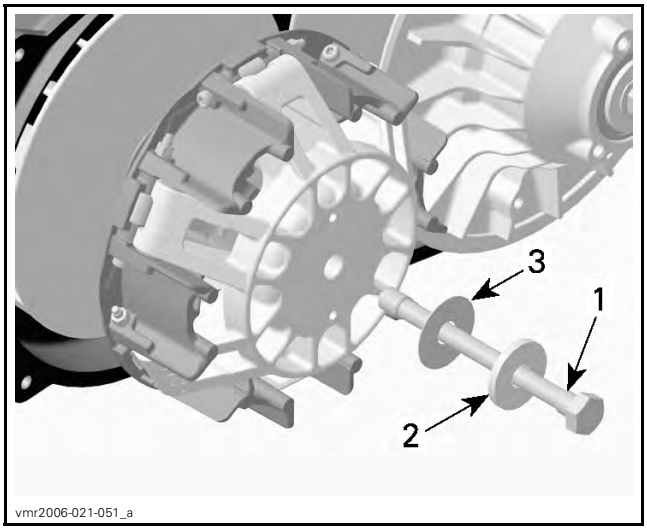

1. *Drive pulley screw*
2. *Conical spring washer*
3. *Thrust washer*

⚠ WARNING

Never substitute conical spring washer and/or screw with aftermarket parts. Always use genuine BRP parts.

Lock the drive pulley as per removal procedure.

Tighten drive pulley screw to specification.

NOTICE **Never use any type of impact wrench for drive pulley installation.**

TIGHTENING TORQUE	
Drive pulley screw	120 N•m ± 8 N•m (89 lbf•ft ± 6 lbf•ft)

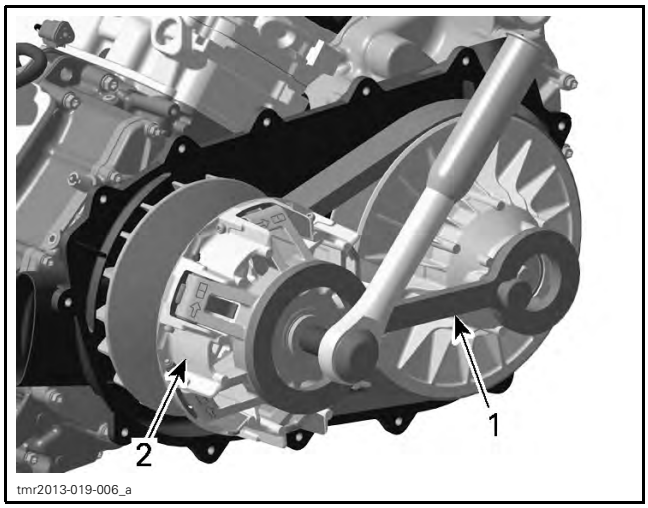

1. Clutch holder (P/N 529 036 238)
2. Drive pulley

DRIVEN PULLEY

Removing the Driven Pulley

1. Remove drive belt, refer to *DRIVE BELT REMOVAL* in this subsection.
2. Hold the driven pulley and loosen the driven pulley screw.

NOTE: Do not completely remove the driven pulley screw.

REQUIRED TOOL	
CLUTCH HOLDER (P/N 529 036 238)	

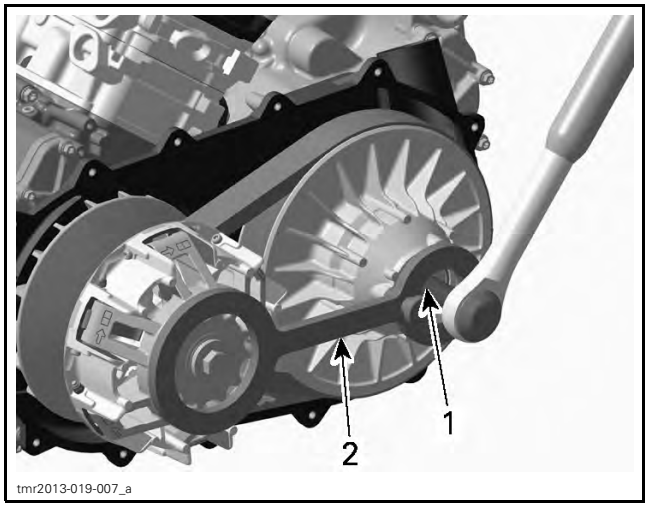

1. Driven pulley screw
2. Clutch holder (P/N 529 036 238)

3. Remove service tool.
4. Apply axial pressure with your hand on driven pulley and maintain during screw removal.
5. Remove driven pulley screw and washer. Discard driven pulley screw.

⚠ CAUTION Driven pulley is spring loaded. Hold driven pulley tight and slowly remove the driven pulley screw to release spring tension.

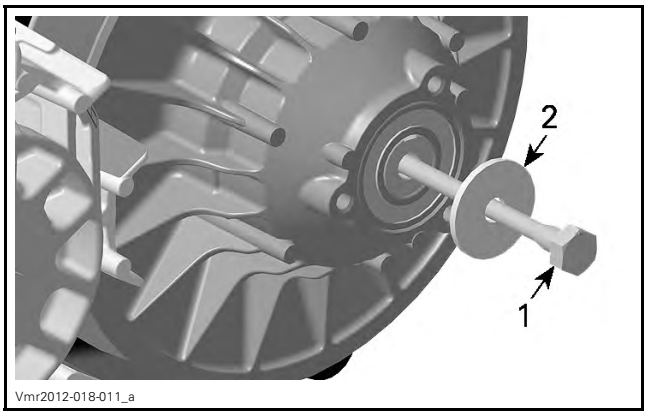

1. Driven pulley screw
2. Thrust washer

6. Remove the driven pulley with the spring and the cam.

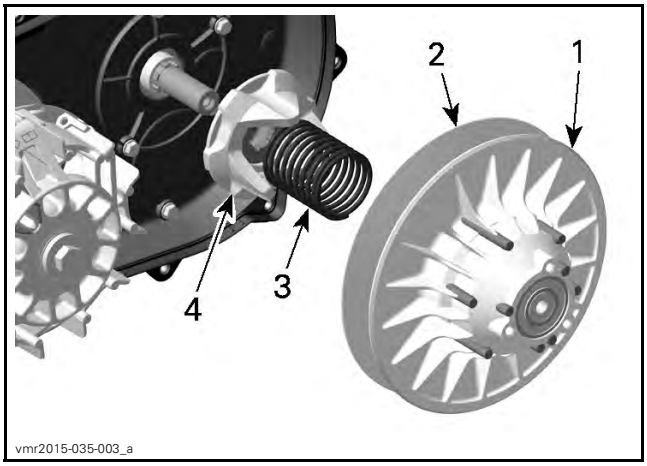

1. Fixed sheave of driven pulley
2. Sliding sheave of driven pulley
3. Spring
4. Cam

Disassembling the Driven Pulley

Fixed Sheave

1. Remove retaining ring and lift torque gear.

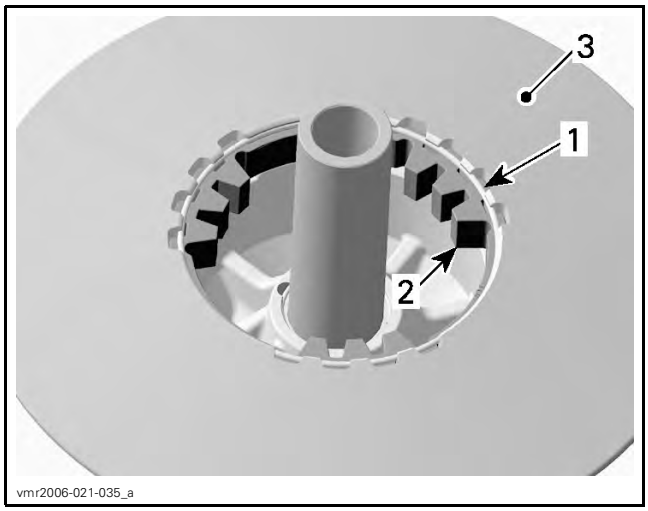

1. *Retaining ring*
2. *Torque gear*
3. *Fixed sheave of driven pulley*

NOTE: The following procedure is not necessary except if ball bearing or shaft must be removed. Refer to *INSPECTION* before proceeding.

2. Heat ball bearing area up to 100°C (212°F) before removing ball bearing.

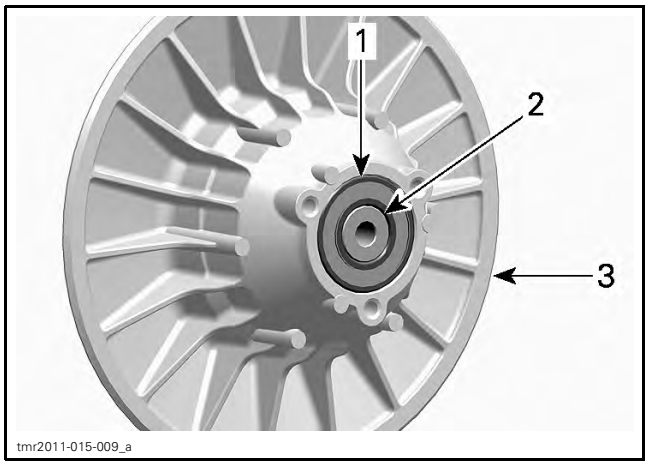

1. *Ball bearing*
2. *Shaft*
3. *Fixed sheave of driven pulley*

3. Use a soft hammer to push shaft and bearing out of fixed sheave.

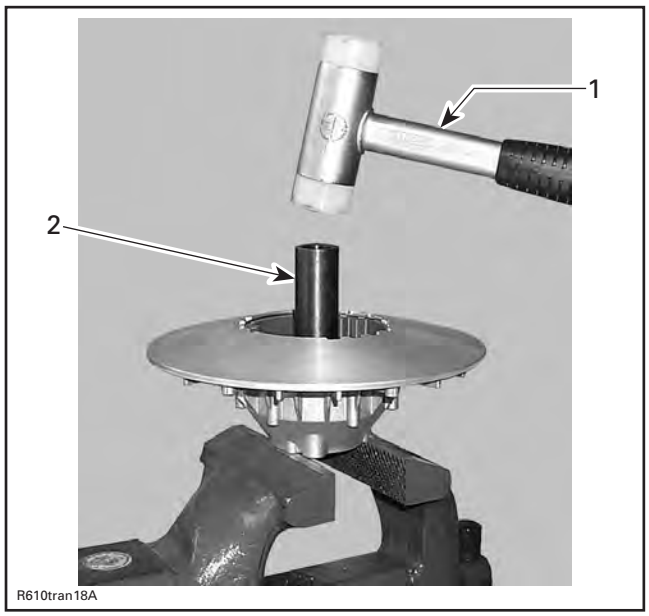

1. *Soft hammer*
2. *Shaft*

4. Remove shaft from ball bearing.
5. Remove distance sleeve and O-ring from countershaft.
6. Replace O-ring if brittle, hard or damaged.

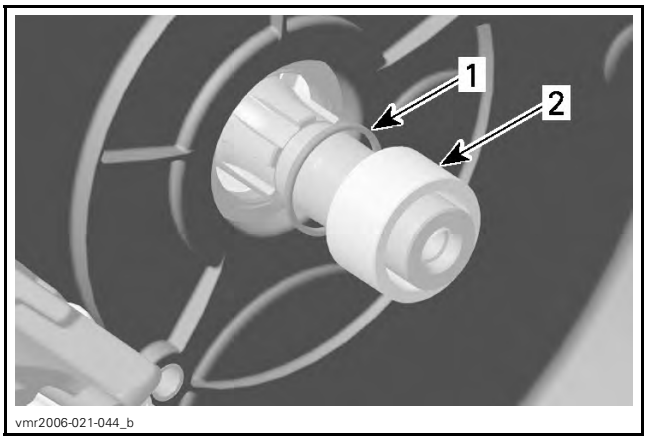

1. *O-ring*
2. *Distance sleeve*

Cleaning the Driven Pulley

When a dust deposit has to be removed from the cam or the shaft, use a dry cloth.

Clean pulley faces and shaft using fine steel wool and a dry cloth.

Clean driven pulley using the recommended product.

RECOMMENDED PRODUCT
PULLEY FLANGE CLEANER (P/N 413 711 809)

Clean the CVT air guide area from contamination.

Using a paper towel with PULLEY FLANGE CLEANER (P/N 413 711 809), clean countershaft end and shaft bore.

NOTICE **To avoid damage, make sure cleaner does not contact the countershaft oil seal.**

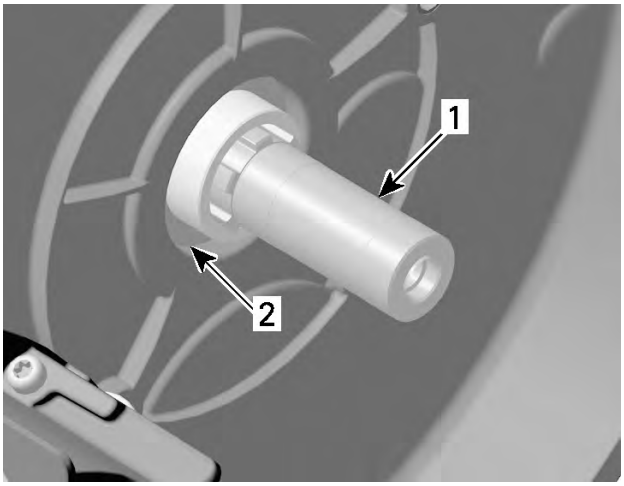

vmr2006-021-037_a

1. *Countershaft support*
2. *Countershaft oil seal*

Inspecting the Driven Pulley

Sliding Sheave

Check sliding sheave for cracks and sliding contact surface for excessive wear. Replace sliding sheave if necessary.

Check bushings for cracks, scratches and for freedom of movement when assembled to sliding sheave.

Measure bushing inner diameter.

NOTE: Bushings cannot be replaced. Replace sliding sheave if bushings are out of specification. Visually inspect coatings.

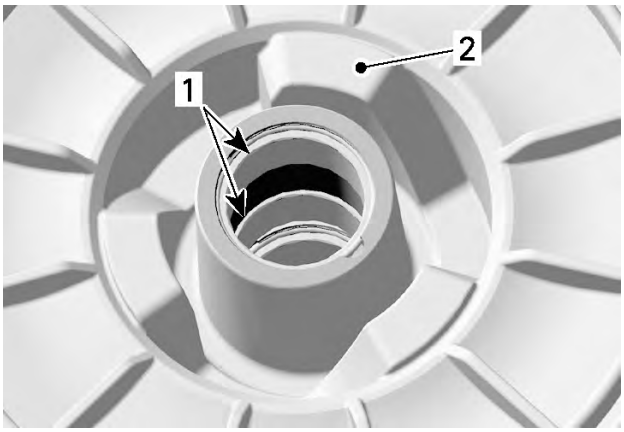

vmr2006-021-038_a

1. *Bushings*
2. *Backside of sliding sheave of driven pulley*

REQUIRED TOOL
Dial bore gauge

MEASURING POINT
At least 5 mm (1/4 in) from bushing edge

BUSHING INNER DIAMETER	
NEW	30.060 mm to 30.100 mm (1.183 in to 1.185 in)
SERVICE LIMIT	30.200 mm (1.189 in)

Fixed Sheave

Check fixed sheave for cracks and excessive wear. Replace fixed sheave if necessary.

Check ball bearing for free play and smooth operation. Replace if necessary.

Check shaft for heavy wear or visible damage. Replace if necessary.

If the shaft is removed, measure bushing inner diameter.

NOTE: This bushing cannot be replaced. Replace fixed sheave if bushing is out of specification. Visually inspect coatings.

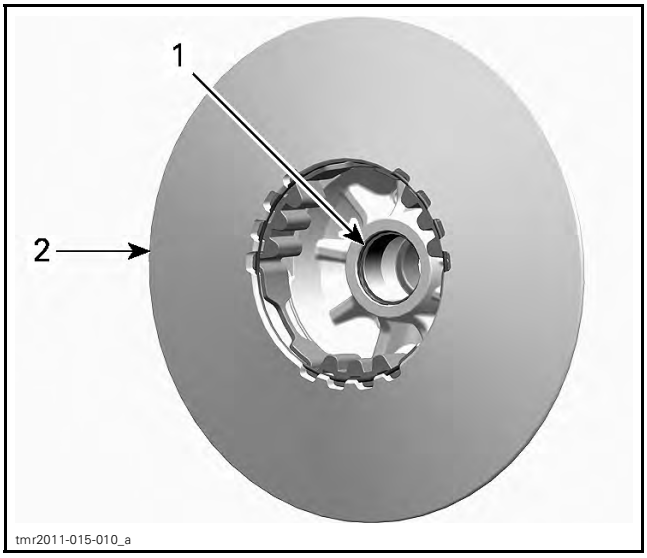

tmr2011-015-010_a

1. *Bushing*
2. *Fixed sheave of driven pulley*

REQUIRED TOOL
Dial bore gauge

MEASURING POINT
At least 5 mm (1/4 in) from bushing edge

BUSHING INNER DIAMETER	
NEW	30.060 mm to 30.100 mm (1.183 in to 1.185 in)
SERVICE LIMIT	30.200 mm (1.189 in)

Check torque gear for visible damage and cracks.

Measure for wear limit using a caliper.

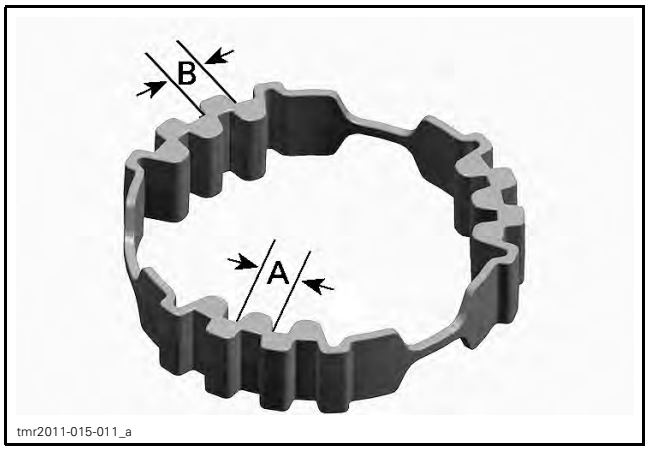

A. Measurement inside
B. Measurement outside

WEAR ON TEETH (BOTH SIDES)	
SERVICE LIMIT	7.500 mm (.295 in)

Cam

Check cam for visible damage and measure for wear using a caliper.

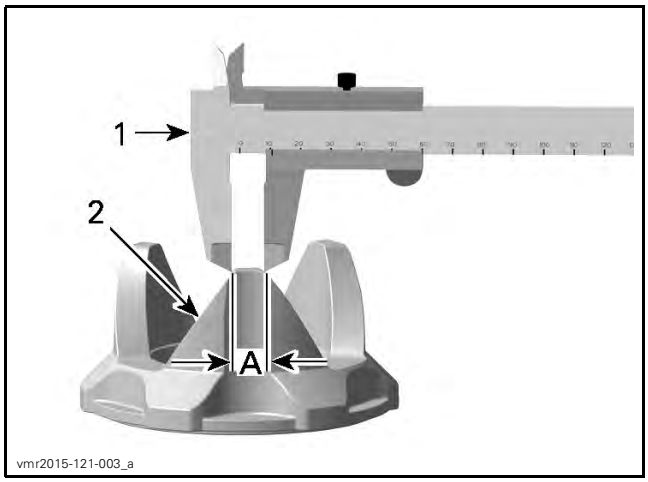

1. Caliper
2. Contact surface
A. Width to be measured due to wear on contact surface

WIDTH ON TOP SURFACE	
SERVICE LIMIT	4.5 mm (.177 in)

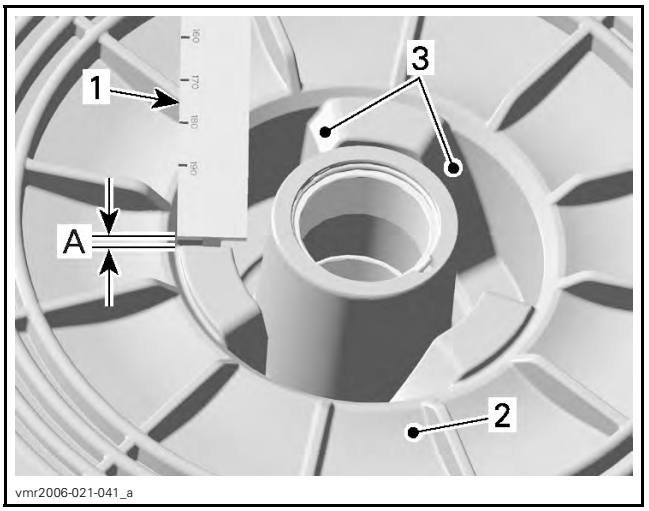

1. Caliper
2. Sliding sheave
3. Contact surface
A. Wear to be measured

WEAR ON CONTACT SURFACE	
SERVICE LIMIT	1.00 mm (.039 in)

Spring

Measure spring free length and squareness. If spring is out of specification, replace by a new.

SPRING FREE LENGTH
SERVICE LIMIT
125 MM (4.92 IN)
CLUTCH SPRING SQUARENESS
SERVICE LIMIT
3.8 MM (.15 IN)

Assembling the Driven Pulley

For installation, reverse the removal procedure. Pay attention to following details.

Heat ball bearing area up to 100°C (212°F) before ball bearing installation.

NOTE: Place new ball bearing in a freezer for 10 minutes before installation.

Install ball bearing with the writing on top and press it in using only the outer race.

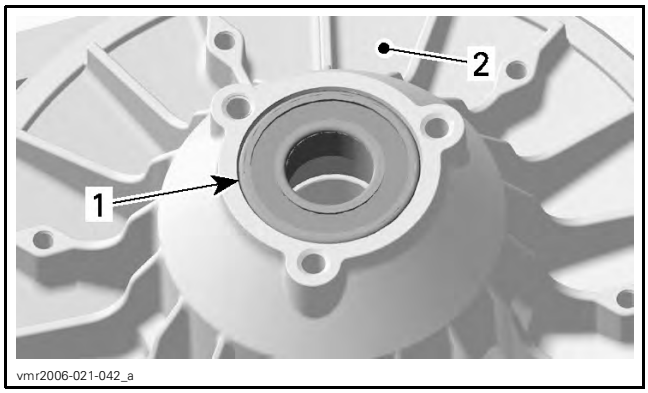

1. Ball bearing
2. Fixed sheave of driven pulley

NOTICE Do not use a hammer, bearing must be pressed in only.

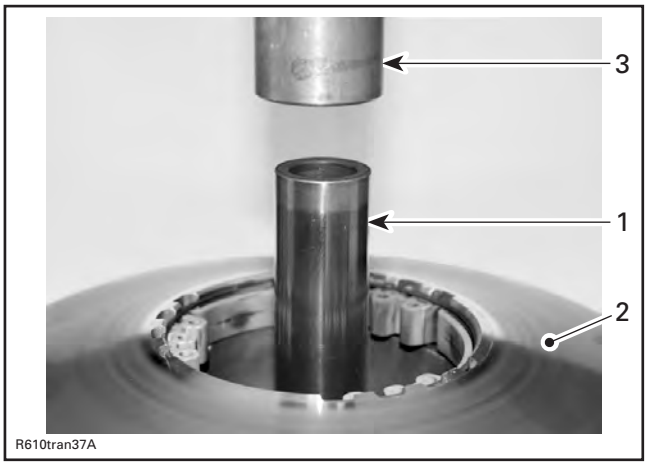

1. Shaft
2. Fixed sheave
3. Press machine

Install torque gear then secure it with the retaining ring.

1. Retaining ring
2. Torque gear
3. Fixed sheave of driven pulley

Midwest Manuals
Green Manuals
Paperless Manuals For a Better Tomorrow www.green-manuals.com
If you bought this manual from any other seller please leave them NEGATIVE feedback and notify me at bestshopmanuals@gmail.com

Installing the Driven Pulley

For installation, reverse the removal procedure. Pay attention to the following details.

Place O-ring on countershaft splines and move it and the distance sleeve into position.

NOTICE Chamfer on inside diameter of the distance sleeve must face to gearbox side.

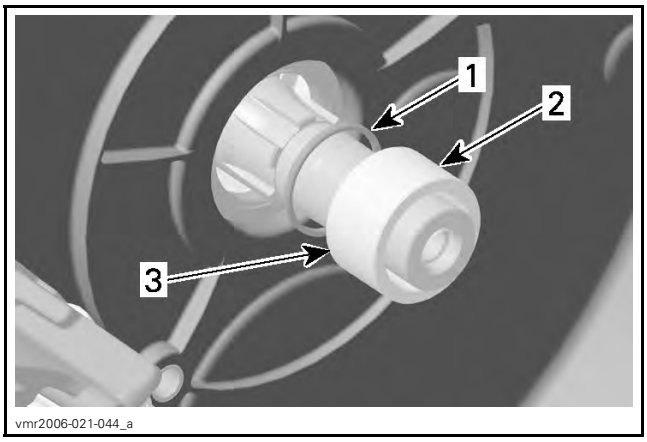

1. O-ring
2. Distance sleeve
3. Chamfered area of distance sleeve

NOTICE Threads of gearbox countershaft and driven pulley screw must be free of oil and grease. Lubricants in threads will create too high preload to tightened driven pulley screw.

Clean threads using PULLEY FLANGE CLEANER (P/N 413 711 809).

Install cam on countershaft.

NOTICE Cam splines must engage on countershaft splines.

REQUIRED PRODUCT	
Countershaft splines and countershaft end	LOCTITE 767 (ANTISEIZE LUBRICANT) (P/N 293 800 070)

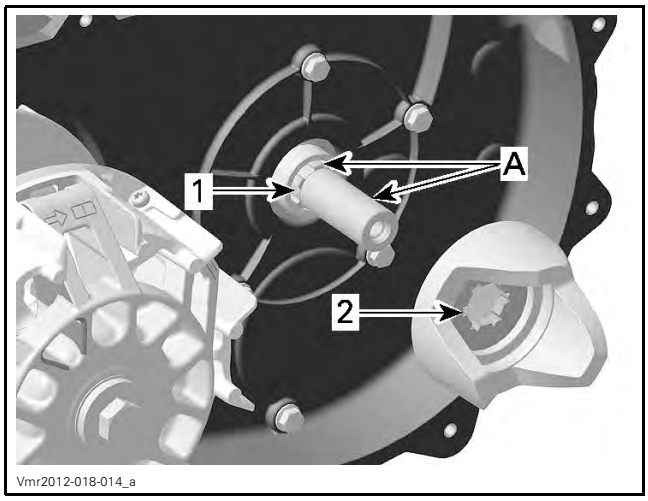

TYPICAL
1. *Countershaft splines*
2. *Cam splines*

A. Loctite 767 here

Insert sliding sheave in fixed sheave.

Place spring behind sliding sheave then align driven pulley with cam.

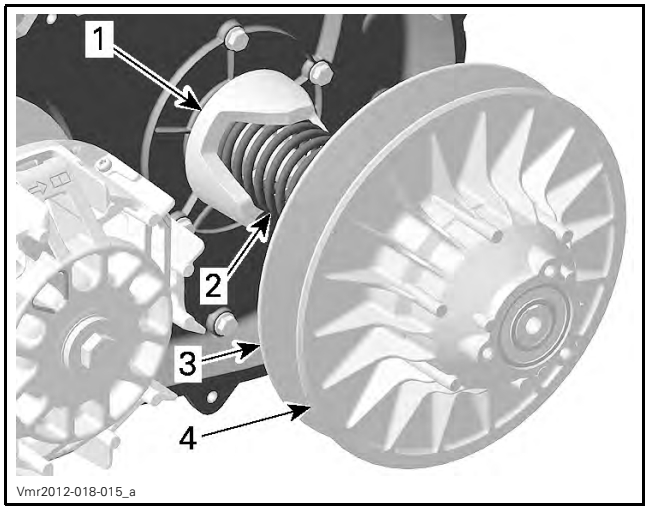

TYPICAL
1. *Cam*
2. *Spring*
3. *Sliding sheave*
4. *Fixed sheave*

With your hand, push the driven pulley onto the shaft to compress the spring.

NOTICE **A cam not correctly engaged will cause damage to the driven pulley and cam.**

As you hold the pulley compressed, install a NEW driven pulley screw and thrust washer.

NOTICE **This assembly uses a stretch screw. Always install a NEW screw.**

NOTE: Tighten the screw with your hand sufficiently for the cam to remain engaged.

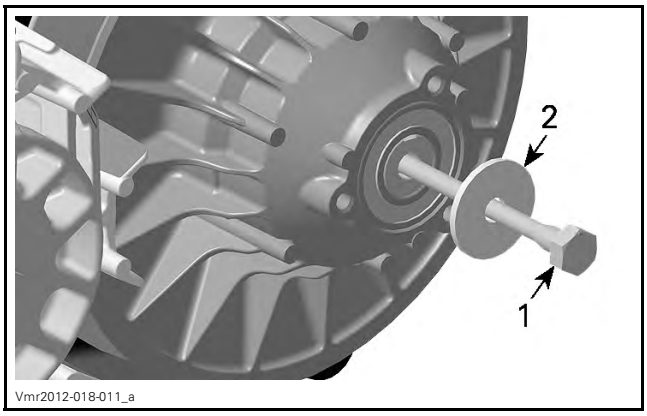

1. *Driven pulley screw*
2. *Thrust washer*

Install drive belt. Refer to *DRIVE BELT* in this subsection.

REQUIRED TOOL	
PULLER/LOCKING TOOL (P/N 529 036 098)	

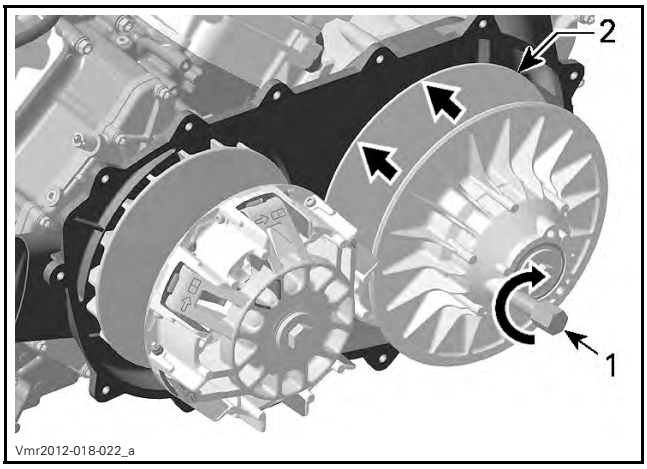

1. *Puller/locking tool*
2. *Sliding sheave*

NOTE: If driven pulley sheaves cannot be opened when the service tool is screwed in, the cam is not correctly engaged in the sliding sheave.

Tighten driven pulley screw to specification.

REQUIRED TOOL	
CLUTCH HOLDER (P/N 529 036 238)	

TIGHTENING TORQUE		
Driven pulley screw	Step A	20 N•m ± 1 N•m (15 lbf•ft ± 1 lbf•ft)
	Step B	180° ± 5°

Check driven pulley end play.

SPECIFICATION	
Driven pulley end play	0 mm (0 in)

CVT AIR GUIDE

Removing the CVT Air Guide

1. Remove the *DRIVE PULLEY* and the *DRIVEN PULLEY*.
2. Unscrew the clamps retaining the CVT air hoses.
3. Remove CVT air guide.

Inspecting the CVT Air Guide

Clean CVT air guide from contamination

Check O-rings. If brittle, hard or damaged, replace as necessary.

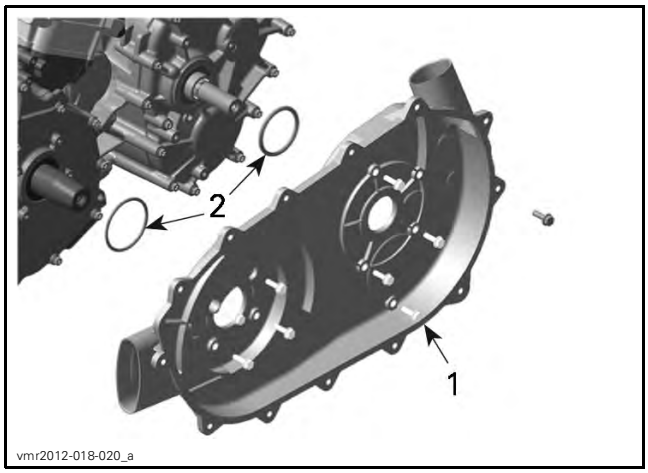

1. CVT air guide
2. O-rings

Installing the CVT Air Guide

For installation reverse the removal procedure.

GEARBOX AND 4X4 COUPLING UNIT (WITH EXTERNAL SWITCHES)

SERVICE TOOLS

Description	Part Number	Page
BACKLASH MEASUREMENT TOOL	529 036 030	13
BEARING INSTALLER (GEARBOX)	529 035 763	29
BEARING INSTALLER (GEARBOX)	529 035 762	29
COUNTERSHAFT OIL SEAL PUSHER	529 036 222	11
DRIVE SHAFT OIL SEAL INSTALLER	529 036 028	12
FLUKE 115 MULTIMETER	529 035 868	5, 8
HANDLE	420 877 650	12, 29
OIL SEAL INSTALLER (GEARBOX)	529 035 758	12

SERVICE TOOLS – OTHER SUPPLIER

Description	Part Number	Page
FLUKE RIGID BACK-PROBE	TP88	5–6

SERVICE PRODUCTS

Description	Part Number	Page
LOCTITE 243 (BLUE)	293 800 060	34
LOCTITE 5910	293 800 081	8, 16–17, 33
LOCTITE CHISEL (GASKET REMOVER)	413 708 500	16, 25, 33
PETAMO GREASE GHY 133N	420 899 271	10
SUPER LUBE GREASE	293 550 030	6, 9, 17

GEARBOX COMPONENTS AND 4X4 COUPLING MECHANISM

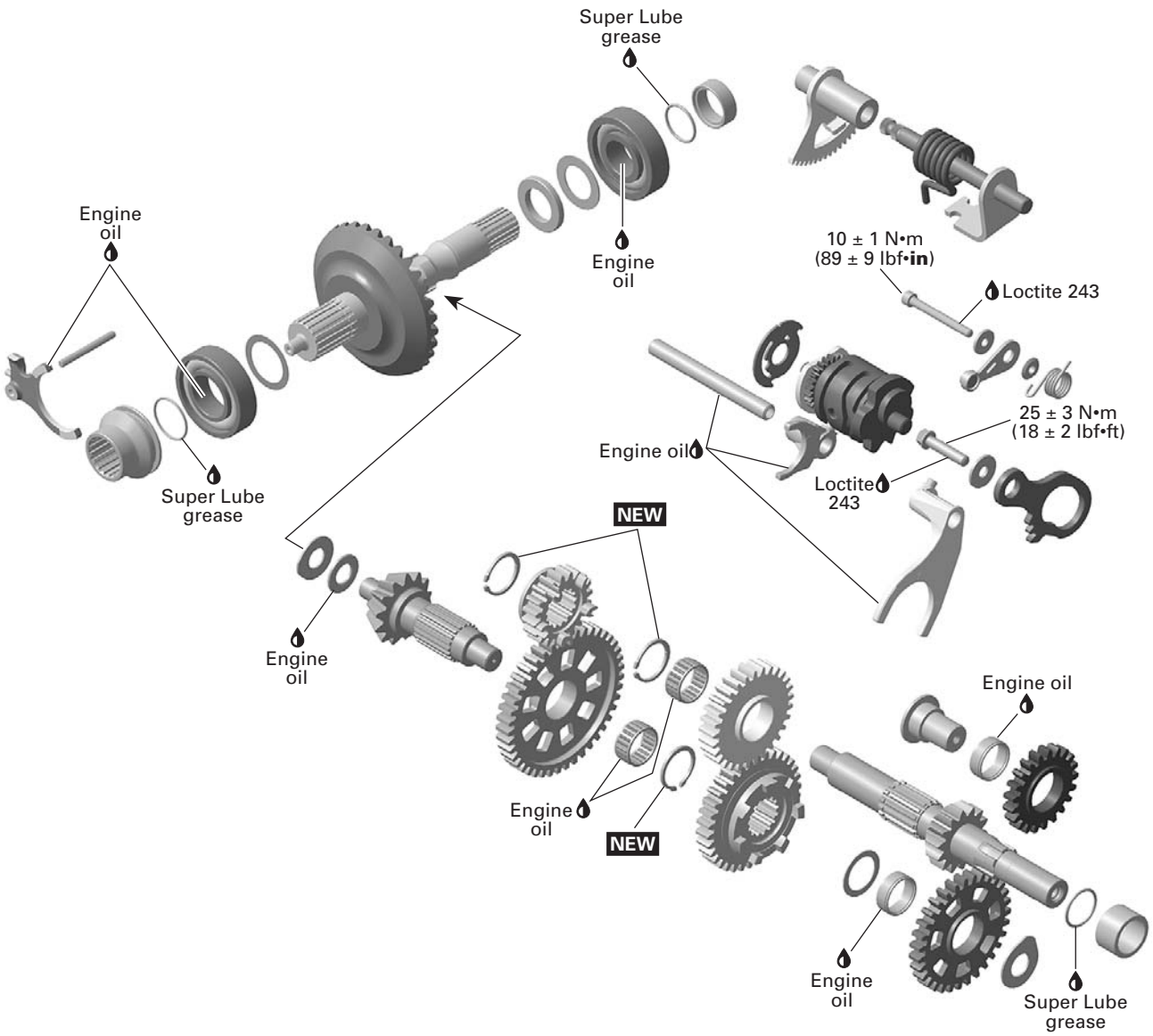

NEW = Component must be replaced when removed.

vmr2012-019-001_a

GEARBOX HOUSING AND 4X4 ACTUATOR UNIT

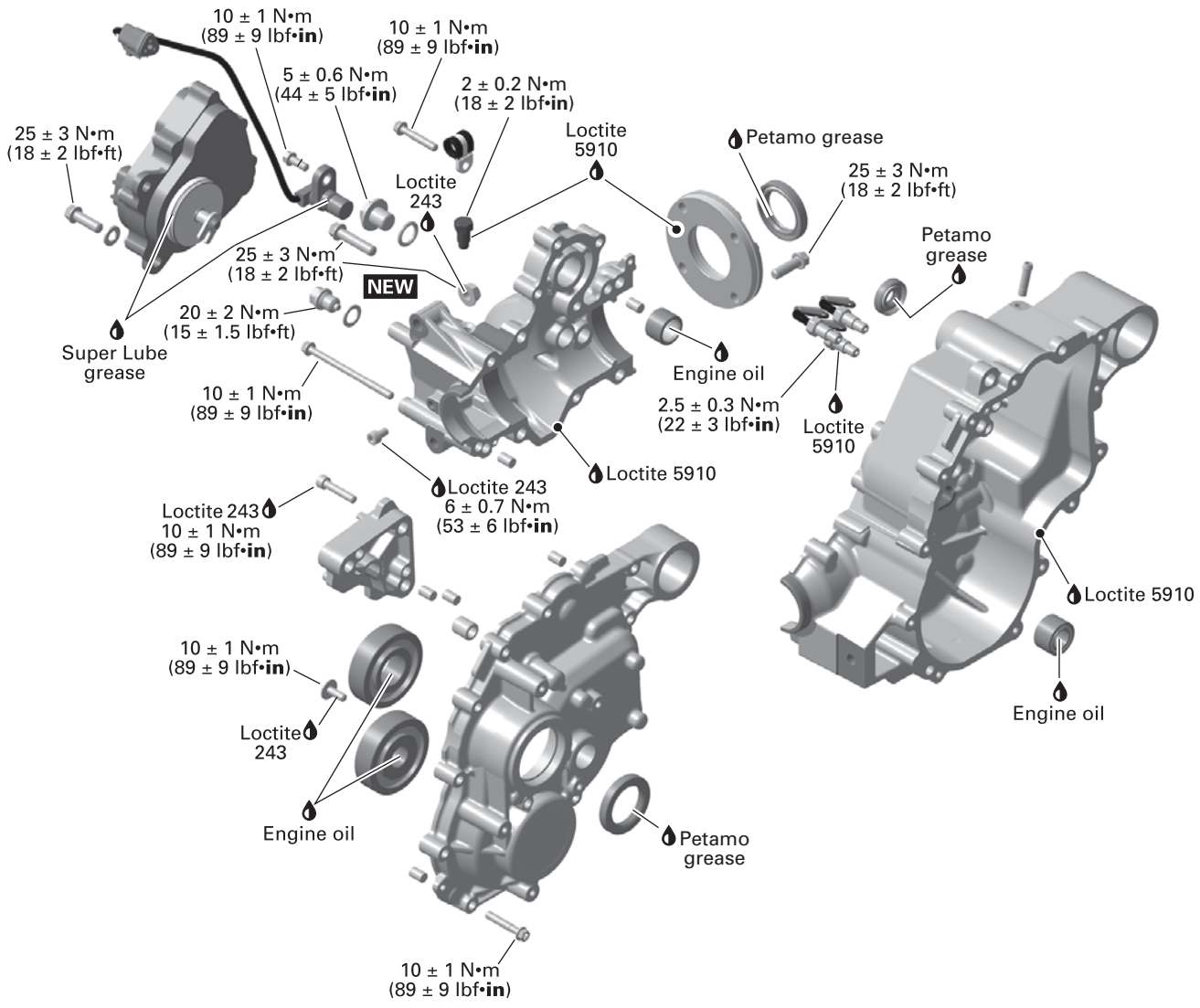

NEW = Component must be replaced when removed.

RTX19_1010HO-002_001_a

GENERAL

GEARBOX IDENTIFICATION

Gearbox with GBPS

This gearbox is equipped with 1 gearbox position sensor.

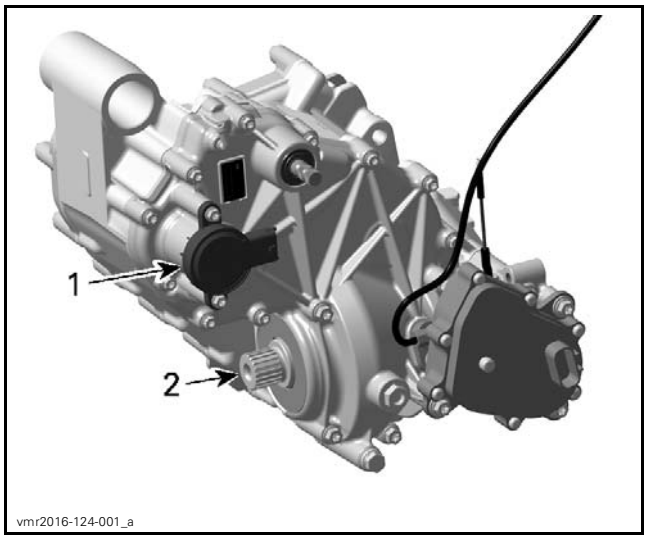

GEARBOX, RIGHT HAND SIDE
1. *Gearbox position sensor*
2. *Output shaft*

Gearbox with External Switches

This gearbox is equipped with 3 gearbox position indicator switches.

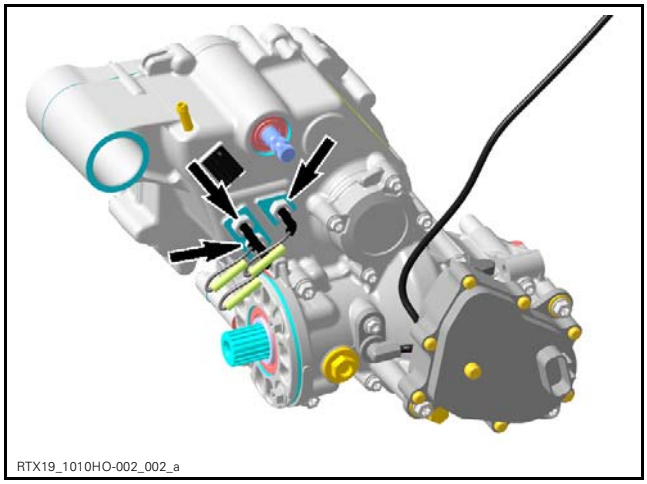

GEARBOX, RIGHT HAND SIDE

OVERVIEW

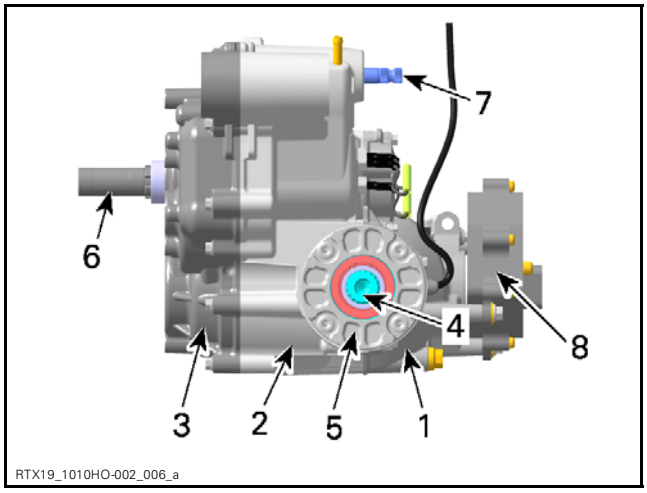

1. *Right housing*
2. *Center housing*
3. *Left housing*
4. *Output shaft*
5. *Bearing cover*
6. *Countershaft*
7. *Shift shaft*
8. *Actuator*

TROUBLESHOOTING

UNUSUAL GEARBOX NOISE AND/OR VIBRATIONS

1. Low oil level in gearbox.
   - *Oil leakage from gearbox. Replace damaged gasket(s) and/or oil seal(s).*
2. Defective bearings.
   - *Bearing(s) do(es) not turn smoothly. Replace bearing(s).*
3. Damaged or worn gears.
   - *Inspect gears for damages or missing teeth. Replace respective gears.*

GEAR INDICATION FAILS

1. Check contact screws on gear housing center.
   - *Contact(s) is (are) corroded and/or connectors to wiring harness got loose.*
   - *Damaged wires. Repair as required.*
   - *Shifting indicator switch(es) pin(s) is (are) worn and/or damaged. Replace shifting indicator switch(es).*

GEAR(S) IS (ARE) HARD TO SHIFT

1. Incorrect shift rod adjustment.
   - *Adjust shift rod (refer to SHIFT ROD in SHIFTER subsection).*

4 WHEEL DRIVE DOES NOT ENGAGE OR DISENGAGE

1. **Defective actuator.**
   - *Test actuator.*
2. **Damaged or worn shifting fork or sleeve.**
   - *Remove actuator and inspect shifting fork and sleeve.*

PROCEDURES

VEHICLE SPEED SENSOR (VSS)

VSS Location

The vehicle speed sensor is located on the right housing of the gearbox behind the actuator.

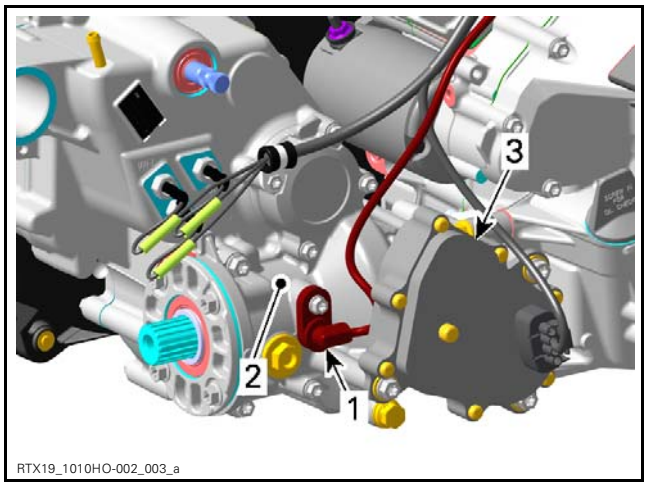

1. *VSS (Vehicle Speed Sensor)*
2. *Right housing of gearbox*
3. *Actuator*

The VSS connector is located between the cylinders, behind the OPS cover.

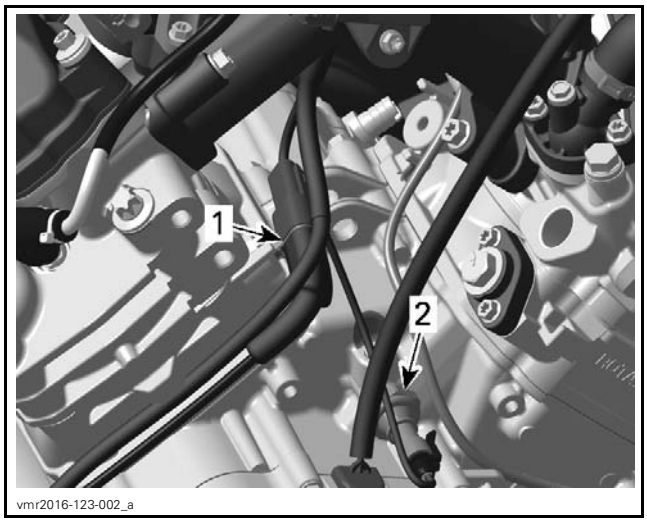

1. *VSS connector*
2. *OPS (Oil Pressure Switch)*

VSS Wire Identification

FUNCTION	PIN - SENSOR CONNECTOR	PIN - WIRING HARNESS CONNECTOR
12-volt input from fuse F5	A	1
Speed signal (to ECM pin E1)	B	2
Ground (to ECM pin D4)	C	3

VSS Circuit Protection

CONDITION	CIRCUIT PROTECTION
Supplied with main relay activated	Fuse 5

Testing the VSS Input Voltage

1. Remove VSS connector cover.
2. Set multimeter to Vdc.

REQUIRED TOOL
FLUKE 115 MULTIMETER (P/N 529 035 868)

3. Turn ignition switch ON.
4. Set emergency engine stop switch to RUN.
5. Back-probe the VSS connector.

REQUIRED TOOL
FLUKE RIGID BACK-PROBE (P/N TP88)

1. *VSS connector*

6. Measure voltage as per following table.

VEHICLE SPEED SENSOR INPUT VOLTAGE TEST		
TEST PROBES		RESULT (KEY ON)
PIN 1	PIN 3	Battery voltage

If voltage is not as specified, test positive and ground circuits separately.

Testing the VSS Signal

1. Lift rear of vehicle so that rear wheels are off the ground.
2. Set transmission to 2WD and to NEUTRAL.
3. Back-probe the VSS connector.

REQUIRED TOOL
FLUKE RIGID BACK-PROBE (P/N TP88)

4. Turn ignition switch ON.
5. Set emergency engine stop switch to RUN.
6. Set multimeter to Vdc.
7. Measure voltage while slowly rotating rear wheels by hand.

VEHICLE SPEED SENSOR SIGNAL TEST		
TEST PROBES		RESULT (WHILE ROTATING WHEELS)
PIN B	PIN C	Alternate reading between battery voltage and 0 Vdc

NOTE: Since we measure pulsating voltage, the numeric display will continuously change. The analog display may be easier to follow.

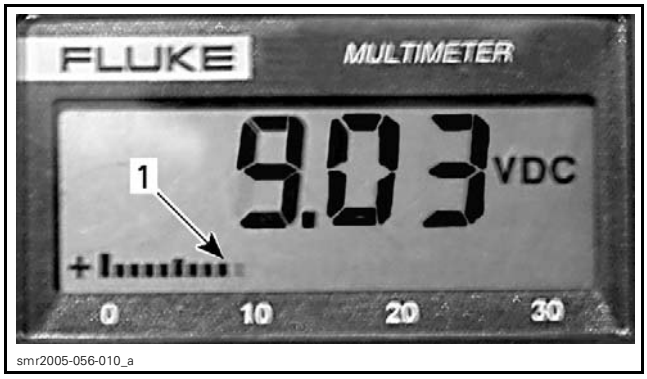

1. Analog display

Removing the VSS

Pull out the VSS after removing the retaining screws.

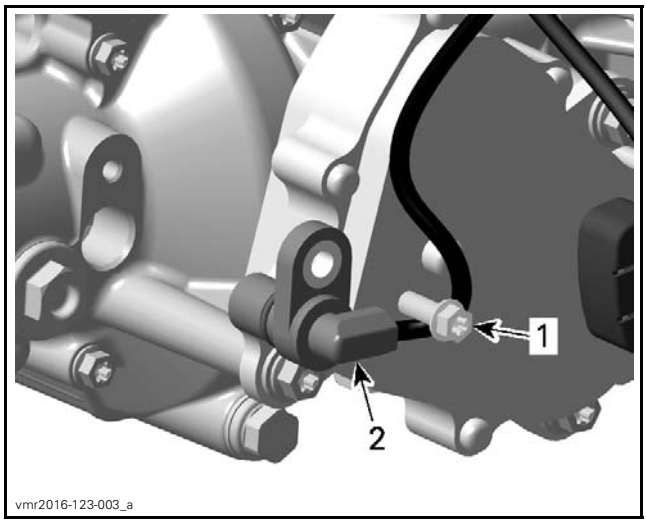

1. Screw
2. VSS

Installing the VSS

The installation is the reverse of the removal procedure. However, pay attention to the following.

Lubricate VSS O-ring.

VSS O-RING	
Service product	SUPER LUBE GREASE (P/N 293 550 030)

Tighten VSS retaining screw to specification.

TIGHTENING TORQUE	
VSS retaining screw	10 N•m ± 1 N•m (89 lbf•**in** ± 9 lbf•**in**)

GEARBOX POSITION INDICATOR SWITCHES

Gearbox Position Indicator Switch Access

Refer to *BODY* subsection and remove the following:

– Seat
– Console
– RH side panel and extension(s)
– RH footrest panel.

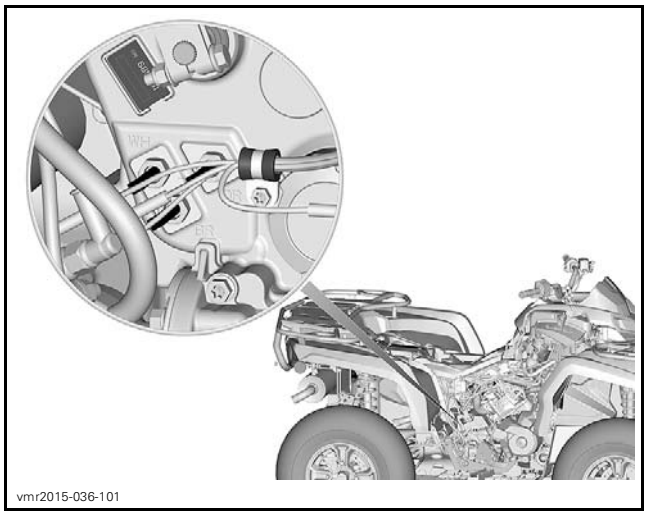
vmr2015-036-101

Testing the Gearbox Position Indicator Switch Continuity

1. Remove parts required for access, refer to *GEARBOX POSITION INDICATOR SWITCH ACCESS* in this subsection.

NOTE: Take note of corresponding switch position and wire color.

2. Disconnect wires from switches.

NOTE: Remove insulating paint to obtain correct readings.

3. Using a multimeter, measure the resistance from the indicator switch to engine ground while selecting the gearbox to each position. Compare results with the logic table below.

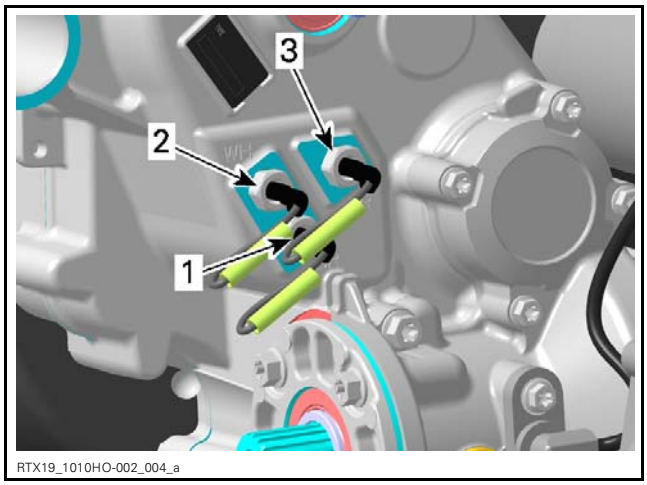

RTX19_1010HO-002_004_a

1. *Gearbox position indicator switch - position 1 BROWN/GREY wire*
2. *Gearbox position indicator switch - position 2 WHITE/RED wire*
3. *Gearbox position indicator switch - position 3 ORANGE/GREY wire*

SHIFTER POSITION	CORRESPONDING SWITCH		
	BROWN/ GREY	WHITE/ RED	ORANGE/ GREY
	Position 1	Position 2	Position 3
L	X		X
H			X
N		X	X
R		X	
P	X	X	

An "X" indicates switch is making ground contact, thus there should be continuity (R is close to 0 Ohms).

A blank space indicates switch is not making contact, there should be no continuity (R = infinite).

If the indicator switch is good, check the vehicle harness and/or indicator lights.

Removing the Gearbox Position Indicator Switch

NOTE: Clean area of dirt before removing gearbox indicator position switch(es). Take note of corresponding switch position and wire color.

Disconnect indicator switch from engine wiring harness.

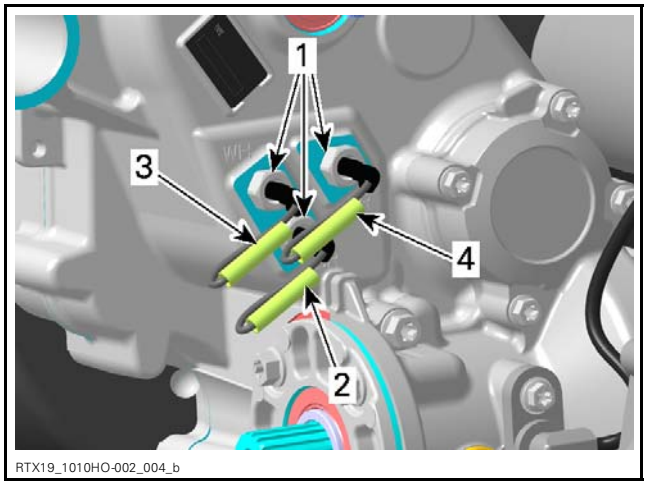

RTX19_1010HO-002_004_b

1. *Gearbox position indicator switches*
2. *BROWN/GREY wire*
3. *WHITE/RED wire*
4. *ORANGE/GREY wire*

Unscrew switch.

Installing the Gearbox Position Indicator Switch

Reverse the removal procedure. However, pay attention to the following.

Take care to avoid damaging threads in switch bores during installation.

Carefully apply some sealant on threads of shift indicator switches.

NOTICE **Do not apply sealant on switch plunger as it will lead to switch malfunction.**

TIGHTENING TORQUE	
Indicator switches	2.5 N•m ± 0.3 N•m (22 lbf•**in** ± 3 lbf•**in**) + LOCTITE 5910 (P/N 293 800 081)

If all switches are removed, make sure to put the wires back in the correct location as noted prior to removal.

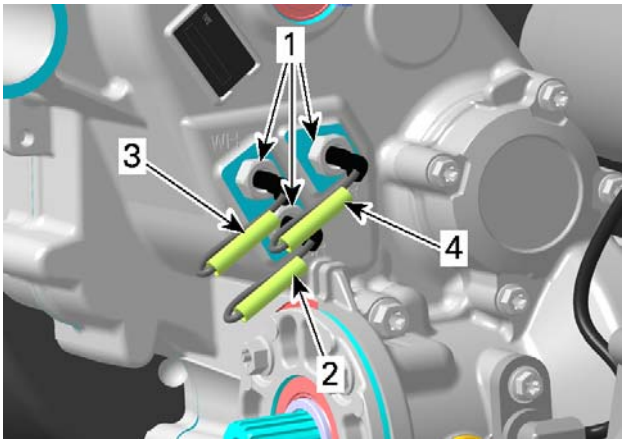

RTX19_1010HO-002_004_b

1. *Gearbox position indicator switches*
2. *BROWN/GREY wire*
3. *WHITE/RED wire*
4. *ORANGE/GREY wire*

4WD ACTUATOR

4WD Actuator Access

To access the actuator, refer to *BODY* subsection and remove the following parts:

- Seat
- Console
- RH side panel and extension(s)
- RH footrest panel.

Testing the 4WD Actuator Power Supply

REQUIRED TOOL	
FLUKE 115 MULTIMETER (P/N 529 035 868)	

1. Unplug 4WD actuator connector.
2. Turn ignition key ON.
3. Set emergency engine stop switch to RUN.
4. Measure voltage as follows.

SWITCH POSITION	SWITCH PIN		VOLTAGE
2WD	Pin 2	Pin 1	Battery voltage
4WD	Pin 3		

If the selector is out of specifications, check wires, connectors and replace the selector if necessary.

If the selector is good, check the vehicle harness.

If the vehicle harness is good, replace the actuator.

Testing the 4WD Indication Continuity

REQUIRED TOOL	
FLUKE 115 MULTIMETER (P/N 529 035 868)	

1. Turn ignition switch OFF.
2. Unplug:
   - 4WD Actuator connector
   - HIC connector.
3. Measure continuity.

4WD INDICATION CONTINUITY	
4WD Actuator	HIC
PIN 4	PIN B

4. Unplug the right steering switch connector (RSS).
5. Measure continuity.

4WD INDICATION CONTINUITY	
HIC	RSS
PIN B	PIN 3

If continuity is good, replace 4WD Actuator.

If continuity is out of specification repair wires and or connectors.

Removing the 4WD Actuator

NOTE: Before beginning any servicing on the actuator, make sure the vehicle is in 4WD position. No need to remove engine from vehicle.

1. Detach brake master cylinder from frame.

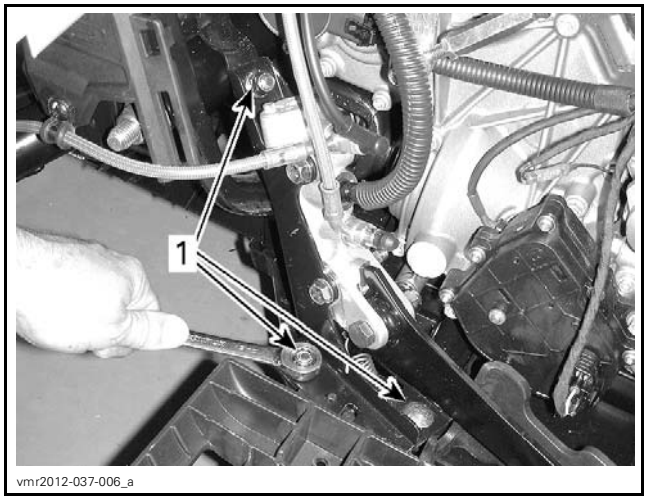

1. Remove retaining screws from master cylinder support

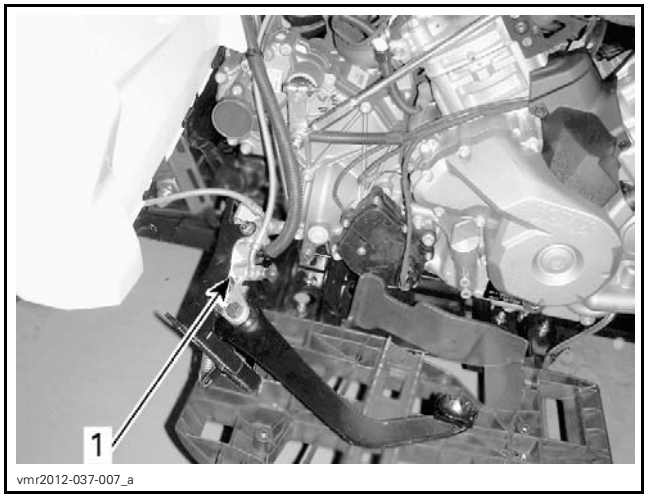

1. Master cylinder moved apart

2. Unplug actuator connector.
3. Place a drain pan under actuator.
4. Unscrew actuator bolts.

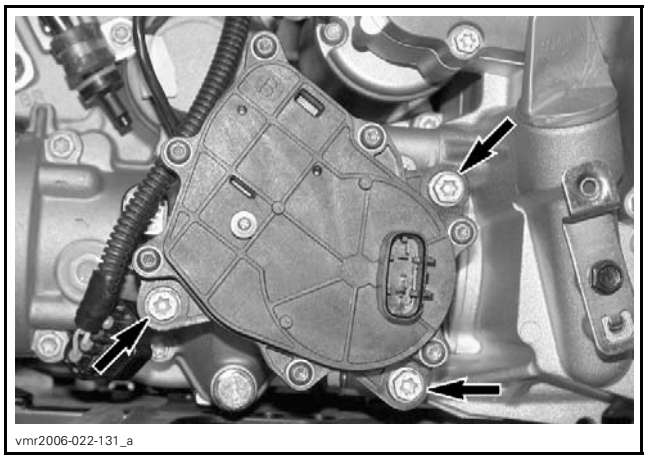

5. When all actuator bolts are removed, pull the actuator out of housing.

Installing the 4WD Actuator

1. Lubricate actuator O-ring.

ACTUATOR O-RING	
Service product	SUPER LUBE GREASE (P/N 293 550 030)

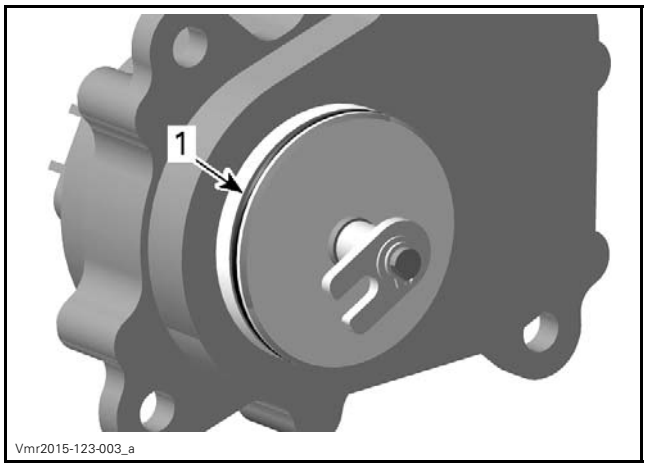

1. Actuator O-ring

2. Verify if coupling fork is in 4WD position. The coupling fork should be positioned toward the front of vehicle.

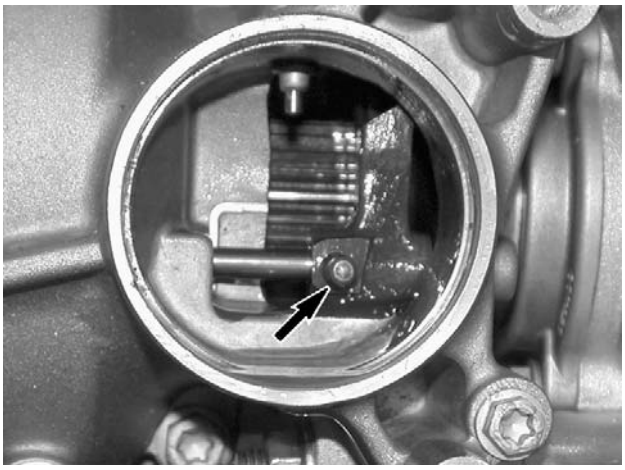
vmr2006-022-132_a

3. Align the actuator fork with the pin on coupling fork then push the actuator in the housing. See the following illustration to position the actuator correctly.

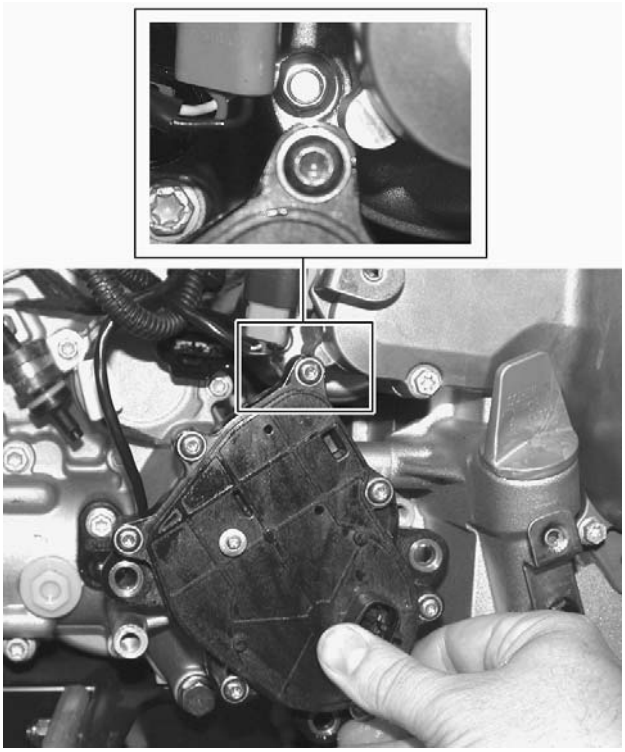
vmr2006-022-133_a

4. Rotate the actuator counterclockwise until it orients itself to mounting position.

NOTICE **Do not cut or break the actuator O-ring.**

5. Install all actuator bolts then torque them to specification.

TIGHTENING TORQUE	
Actuator screws	25 N•m ± 3 N•m (18 lbf•ft ± 2 lbf•ft)

6. Connect actuator.
7. Lift the front of vehicle.
8. Turn front wheels. The front propeller shaft should not turn (the PARK position must be selected).

If the front propeller shaft turns, the actuator is not installed correctly. Remove actuator and reinstall it.

9. Set ignition switch to ON.
10. Set emergency engine stop switch to RUN.
11. Select the 2WD position.
12. Turn front wheel again. The front propeller shaft. The shaft should turn easily.

If the front propeller shaft does not turn, the actuator is not installed correctly. Remove actuator and reinstall it.

NOTICE **Refill missing gearbox oil, refer to *PERIODIC MAINTENANCE PROCEDURES* subsection.**

13. Install all other removed parts.

GEARBOX OIL SEALS

Replacing the Gearbox Oil Seals

Replace oil seals if they are brittle, hard or damaged.

A small flat screwdriver can be used to remove most of these oil seals.

NOTICE **Avoid scoring parts during oil seal removal.**

When replacing an oil seal, take this opportunity to inspect the following:

– Check bearings behind each oil seal for contamination and/or metal shavings.
– Check oil seal running surfaces for scratches.

Lubricating the Oil Seal

When installing or reinstalling oil seals, use PETAMO GREASE GHY 133N (P/N 420 899 271) to:

– Lubricate sealing lips all around.
– Fill up the room between sealing lips halfway around the perimeter.

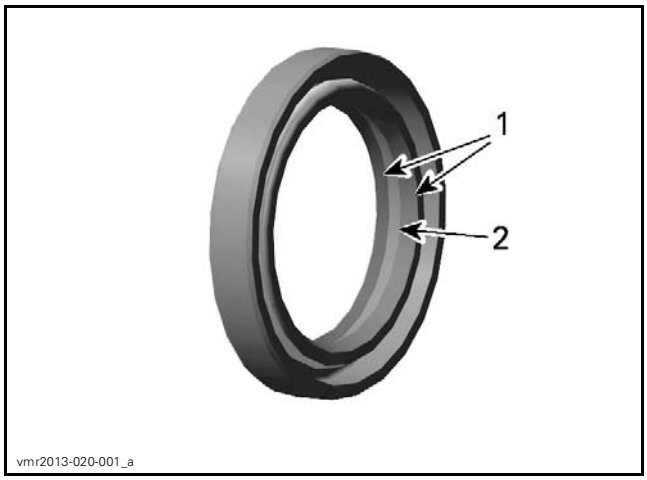

1. Sealing lips
2. Room between sealing lips

Countershaft Oil Seal

The countershaft oil seal can be removed without removing gearbox from vehicle. Remove drive and driven pulley and CVT air guide.

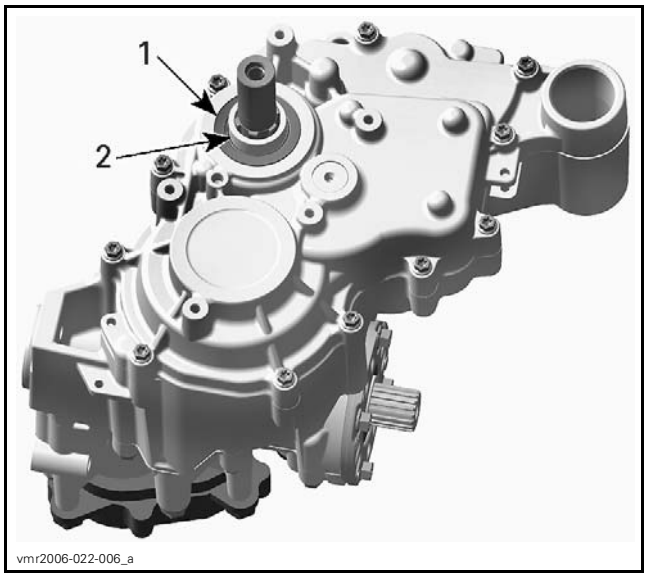

1. Countershaft oil seal
2. Distance sleeve

NOTE: When oil seal is removed also inspect O-ring.

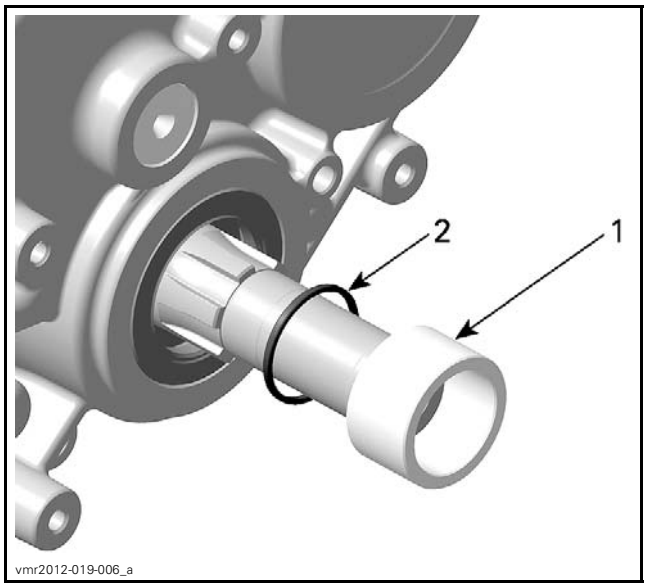

1. Distance sleeve
2. O-ring

For countershaft oil seal installation use the following service tool.

REQUIRED TOOL	
COUNTERSHAFT OIL SEAL PUSHER (P/N 529 036 222)	

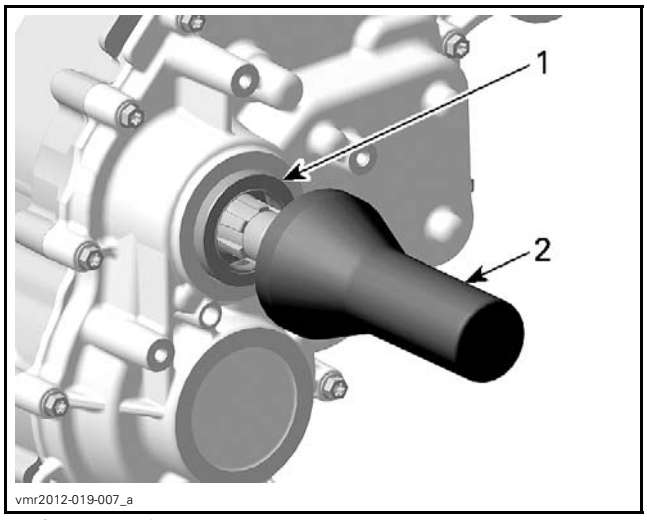

1. Countershaft oil seal
2. Oil seal pusher

Shift Shaft Oil Seal

The shift shaft oil seal can be removed without removing the gearbox from the vehicle.

To replace the shift shaft oil seal, refer to *BODY* subsection and remove:

- Seat
- Console
- RH side panel

– RH footrest panel
– Shift plate from shift shaft (refer to *SHIFTER* subsection.

Using a suitable tube with the proper diameter to install the shift shaft oil seal.

If gearbox housing is apart, the following tools can be used for shift shaft oil seal installation.

REQUIRED TOOL	
OIL SEAL INSTALLER (GEARBOX) (P/N 529 035 758)	
HANDLE (P/N 420 877 650)	

NOTICE **Oil seal must be installed with sealing lip toward gearbox.**

Output Shaft Oil Seal

Remove propeller shaft. Refer to *REAR DRIVE* subsection.

Punch a sharp screwdriver through oil seal for removal.

NOTE: When oil seal is removed also inspect O-ring.

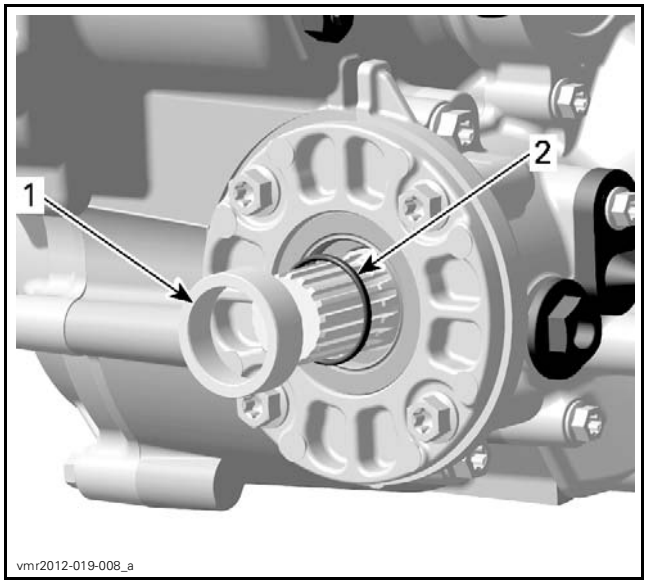

1. *Distance sleeve*
2. *O-ring*

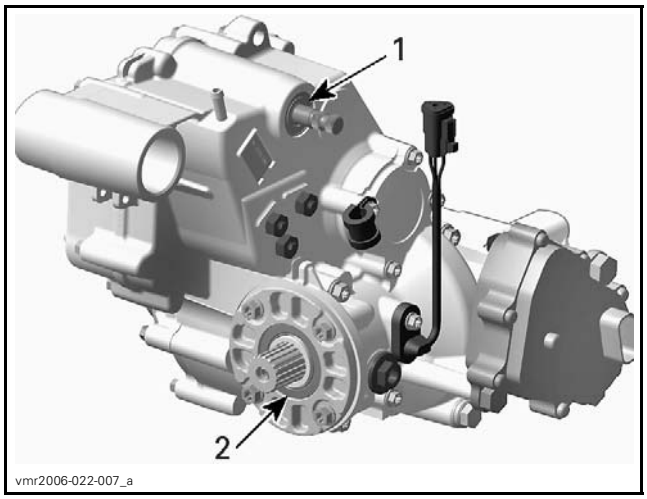

1. *Shift shaft oil seal*
2. *Output shaft oil seal*

For output shaft oil seal installation use the following service tool.

REQUIRED TOOL	
DRIVE SHAFT OIL SEAL INSTALLER (P/N 529 036 028)	

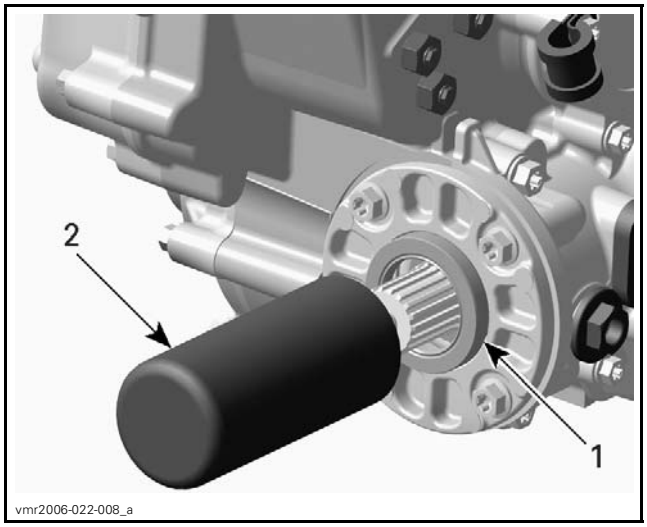

1. *Output shaft oil seal*
2. *Oil seal installer*

OUTPUT SHAFT AND COUPLING MECHANISM

Remove gearbox. Refer to *GEARBOX* in this subsection.

Before removing the right housing and output shaft measure the backlash on output shaft. This measure will indicate if output shaft adjustment is necessary.

Output Shaft Backlash Procedure

1. Engage PARK position on the gear shaft to block gearbox.
2. Remove bearing cover with oil seal

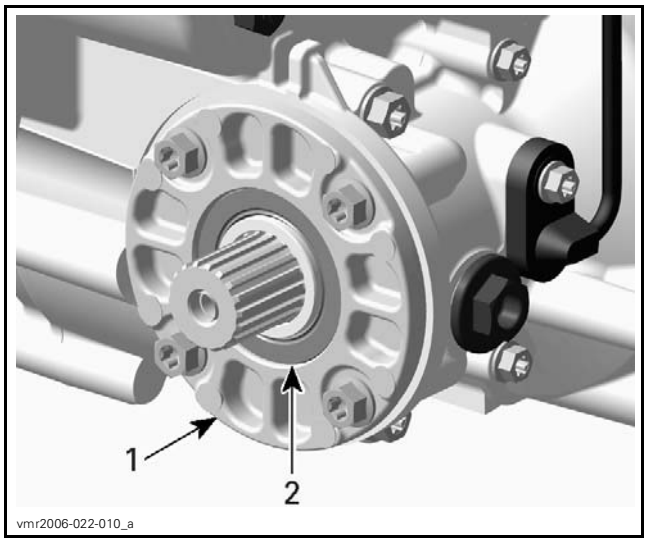

1. Bearing cover
2. Oil seal

3. Remove:
   – Distance sleeve
   – O-ring.

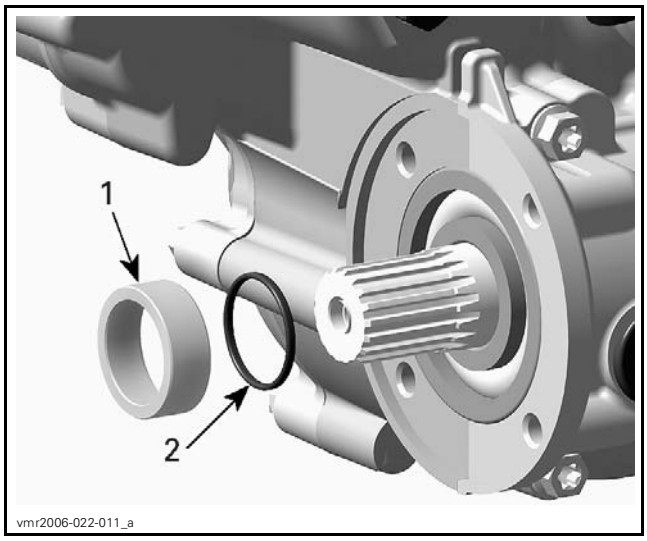

1. Distance sleeve
2. O-ring

4. Install the measurement tool at the end of output shaft.

REQUIRED TOOL	
BACKLASH MEASUREMENT TOOL (P/N 529 036 030)	

5. From center of tool bolt, measure 47 mm (1.85 in)and place a mark on the tab.

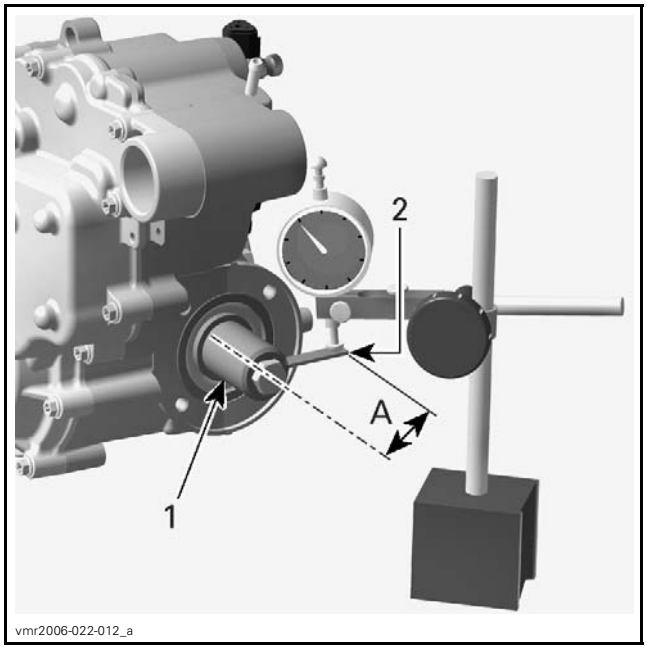

1. Backlash measurement tool
2. Mark on tab
A. 47 mm (1.85 in)

6. Position the head of the dial indicator, against the tab at a 90° angle and on the line. Then, gently rotate the output shaft.

This reading gives the backlash measurement. Refer to the following table for backlash specifications.

OUTPUT SHAFT BACKLASH	
NEW	0.10 mm to 0.20 mm (.0039 in to .0079 in)
SERVICE LIMIT	0.25 mm (.0098 in)

If backlash is not within the specification, remove the output shaft and select the next thicker or thinner shim to meet the specifications.

NOTE: Use next thicker shim to increase backlash and next thinner shim to reduce backlash.

Removing the Output Shaft and Coupling Mechanism

1. Remove actuator.
2. Remove the bearing cover with oil seal.
3. Unscrew all bolts retaining the right housing to the center housing.
4. To remove right housing, use 2 big screwdrivers.

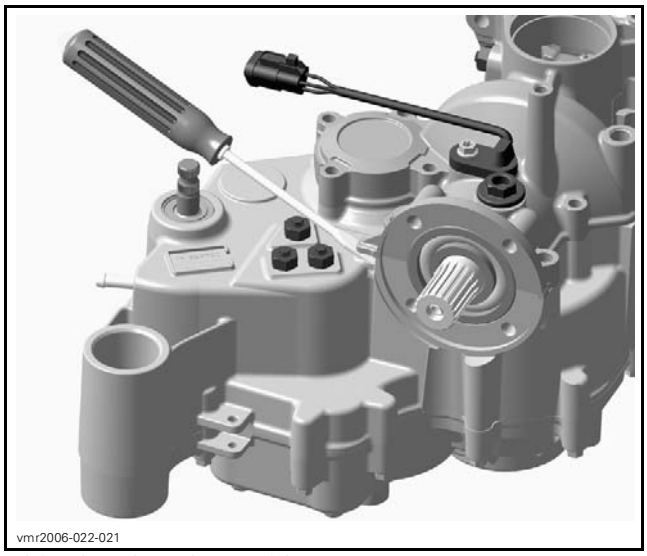

POSITION FOR BIG FLAT SCREWDRIVER

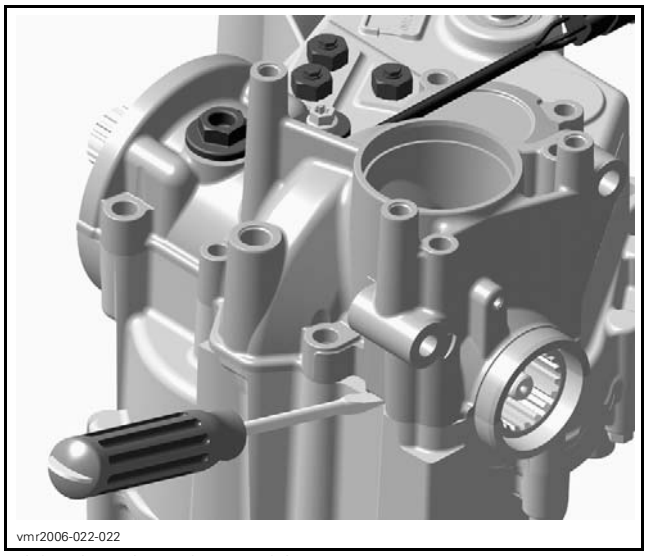

POSITION FOR BIG FLAT SCREWDRIVER

5. Remove output shaft.

REQUIRED TOOL
Soft hammer

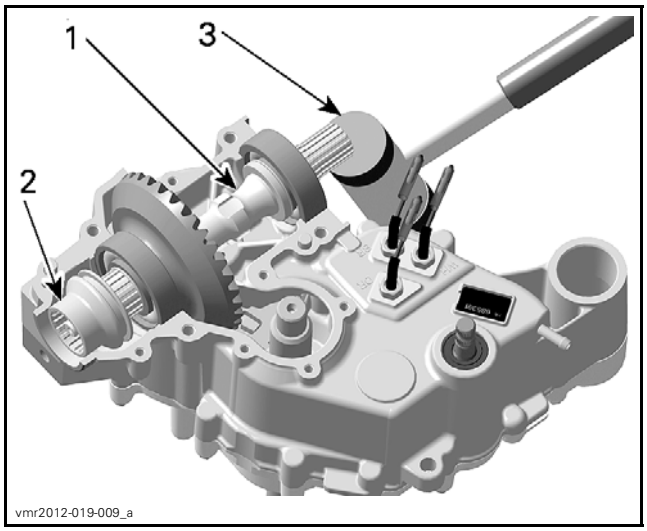

1. *Output shaft*
2. *Coupling sleeve*
3. *Soft hammer*

6. Remove:
   - Coupling sleeve
   - O-ring
   - Ball bearing
   - Thrust washer.

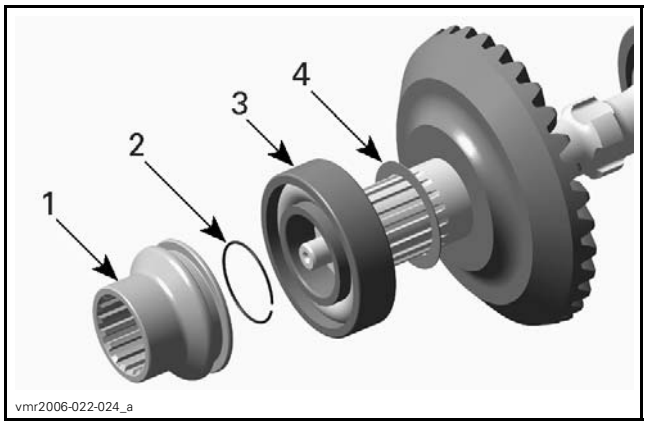

1. *Coupling sleeve*
2. *O-ring*
3. *Ball bearing*
4. *Thrust washer*

7. Remove:
   - Ball bearing
   - Thrust washer.

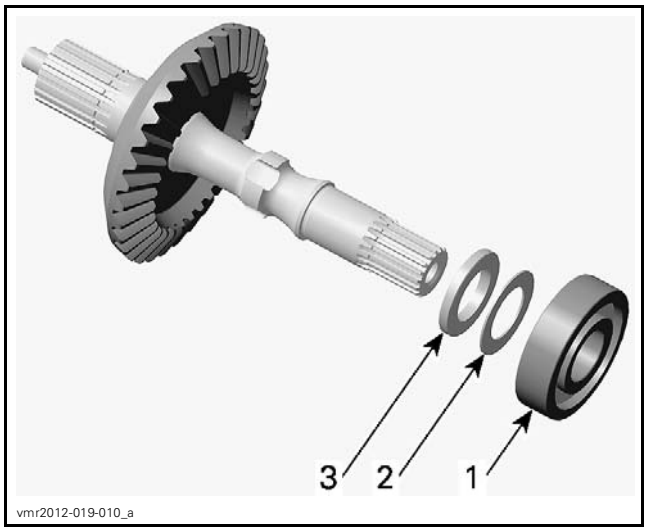

1. *Ball bearing*
2. *Thrust washer*
3. *Distance ring*

8. Remove:
   - Screw
   - Pin
   - Coupling fork.

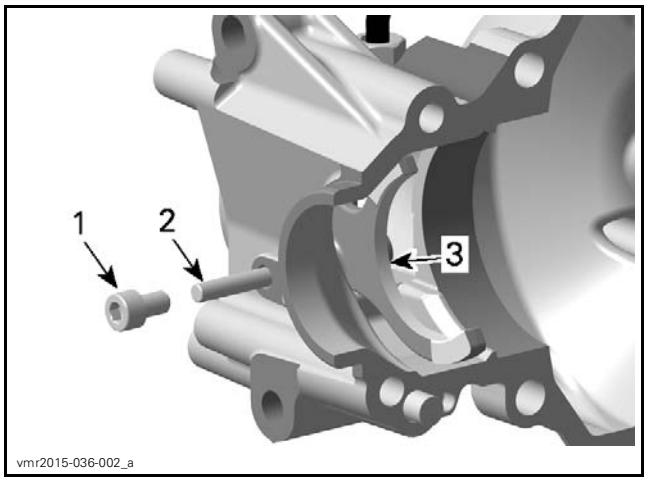

1. *Screw*
2. *Pin*
3. *Coupling fork*

Inspecting the Output Shaft and Coupling Mechanism

Check output shaft and its gear for cracks, bend, pitting or other visible damages.

Check output shaft splines for wear or other damages.

NOTICE **Always replace output shaft and bevel gear shaft at the same time. Adjust these components upon replacement.**

Check if the output shaft ball bearings turn freely and smoothly. Replace if necessary, refer to *GEARBOX ADJUSTMENT* in this subsection.

Replace oil seal if brittle, hard or damaged.

Replace O-rings if brittle, hard or damaged.

Check splines of coupling sleeve for wear or other damages.

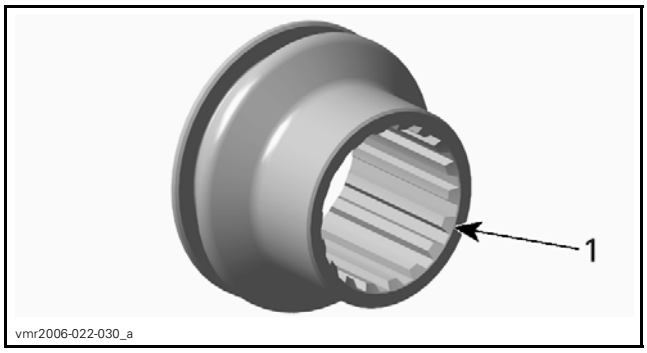

1. *Inspect splines*

Measure the coupling sleeve groove width.

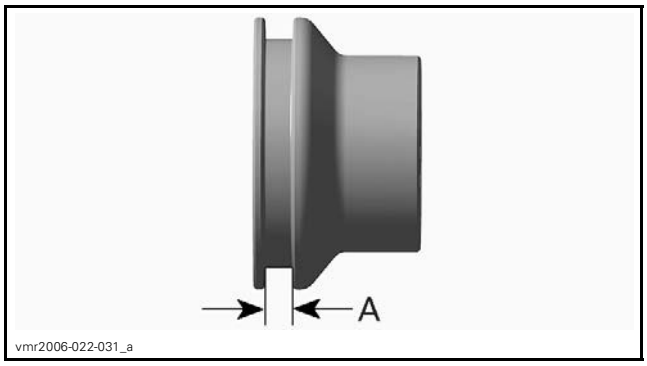

A. *Groove width*

COUPLING SLEEVE GROOVE WIDTH	
NEW	5.25 mm to 5.35 mm (.207 in to .211 in)
SERVICE LIMIT	5.50 mm (.217 in)

Check coupling fork claw thickness.

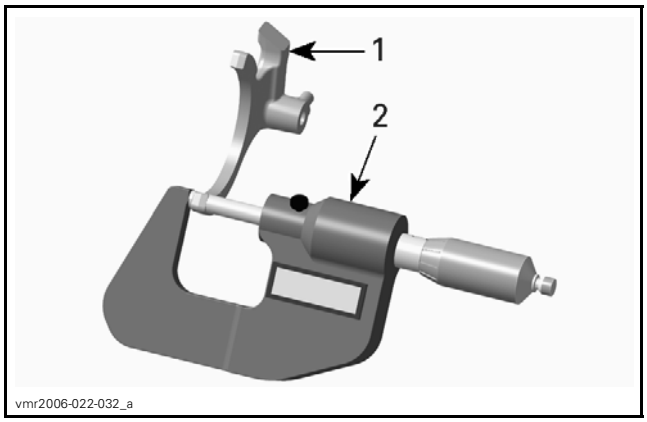

1. *Coupling fork*
2. *Micrometer*

COUPLING FORK CLAW THICKNESS	
NEW	4.95 mm to 5.05 mm (.195 in to .199 in)
SERVICE LIMIT	4.80 mm (.189 in)

Clean housing split surface and especially the bearing areas from metal particles or other contamination.

Installing the Output Shaft and Coupling Mechanism

The installation is the reverse of the removal procedure. However, pay attention to the following.

Install thrust washer, bearing, O-ring and coupling sleeve onto the output shaft.

Install distance ring, thrust washer and ball bearing.

NOTE: O-ring and distance sleeve are not installed at this time.

Place the output shaft into the center housing.

Use soft hammer to put bearing exactly in place against center housing.

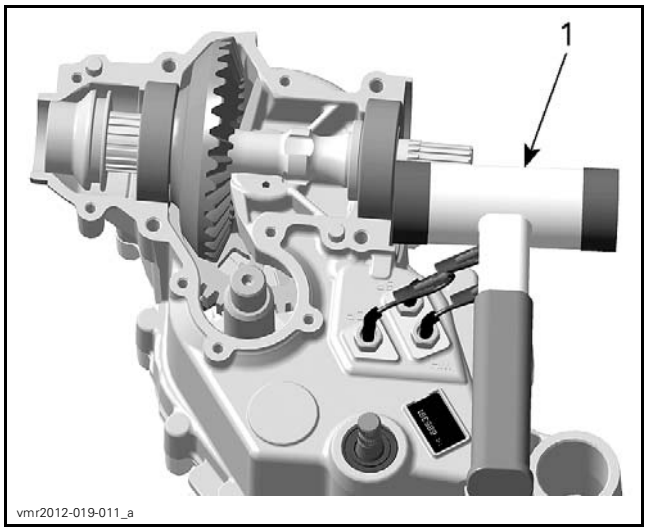

1. *Soft hammer*

Clean the bearing cover location then attach bearing cover with oil seal to the housing.

Temporarily install the right housing with the four (4) M8 TORX screws beside bearing seats.

NOTE: Prior to tightening the TORX screws, tap on the gear end of output shaft with a soft hammer to take up all gear free play.

Verify output shaft backlash. Refer to *OUTPUT SHAFT BACKLASH PROCEDURE* in this subsection. Adjust as required.

If backlash is within specifications, remove dial indicator, backlash measuring tool, bearing cover and right housing.

NOTE: Install coupling fork, pin and screw in right housing before applying sealant to the mating surface.

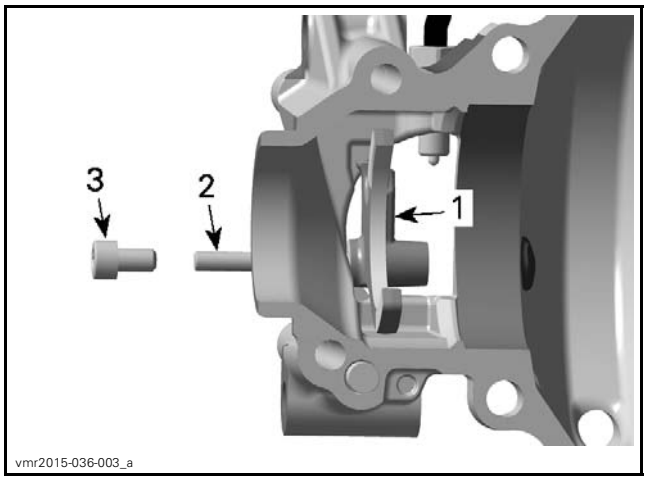

1. *Coupling fork*
2. *Pin*
3. *Screw*

Clean all metal components in a solvent.

Housing mating surfaces are best cleaned using a combination of LOCTITE CHISEL (GASKET REMOVER) (P/N 413 708 500) and a brass brush. Brush a first pass in one direction then make the final brushing perpendicularly (90°) to the first pass cross (hatch).

NOTICE **Do not wipe with rags. Use a new clean hand towel only.**

IMPORTANT: When beginning the application of sealant, the assembly and the first torquing should be done within 10 minutes. It is suggested to have all you need on hand to save time.

Use LOCTITE 5910 (P/N 293 800 081) on mating surfaces.

Use a plexiglass plate and apply some sealant on it. Use a soft rubber roller (50 - 75 mm (2 - 3 in)), available in arts products suppliers for printing, and roll the sealant to get a thin uniform coat on the plate (spread as necessary). When ready, apply the sealant on housing mating surfaces.

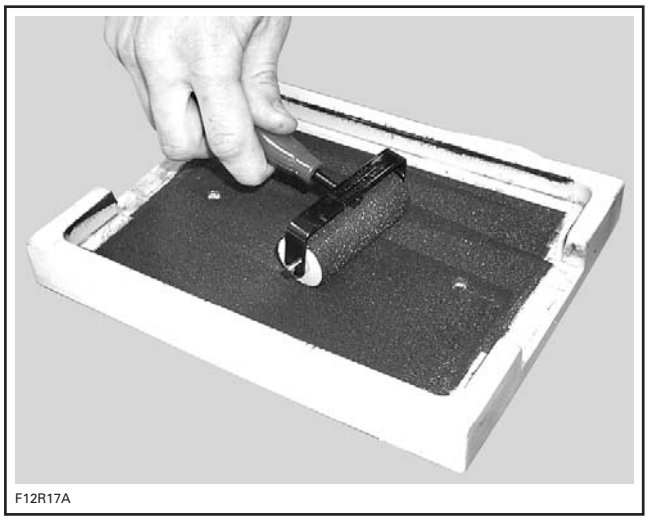
F12R17A

Do not apply in excess as it will spread out inside housings.

NOTE: It is recommended to apply this specific sealant as described here to get a uniform application without lumps. If you do not use the roller method, you may use your finger to uniformly distribute the sealant (using a finger will not affect the adhesion).

Install all other screws on right housing then the O-ring and the distance sleeve on end of output shaft. Chamfered bore of distance sleeve has to face the engine.

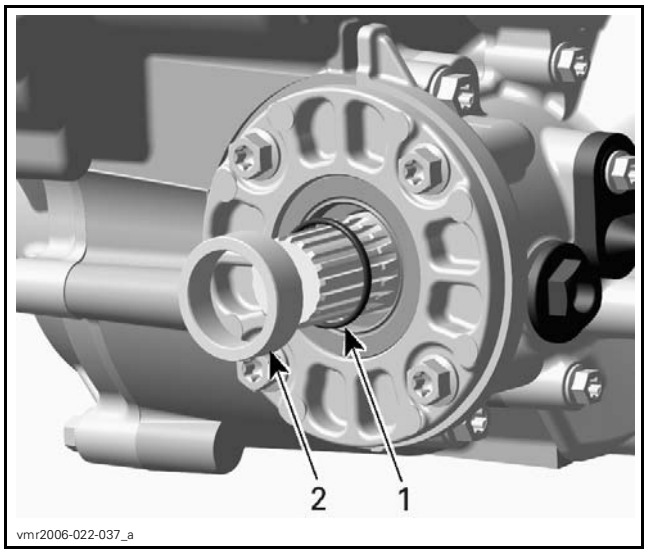

vmr2006-022-037_a

1. *O-ring*
2. *Distance sleeve*

NOTE: To install the right housing align the coupling fork with the groove in the coupling sleeve.

Torque the four (4) M8 Torx screws in a crisscross sequence to following specification.

TIGHTENING TORQUE		
Right housing M8 screws	Step A	Hand tightened
	Step B	25 N•m ± 3 N•m (18 lbf•ft ± 2 lbf•ft)

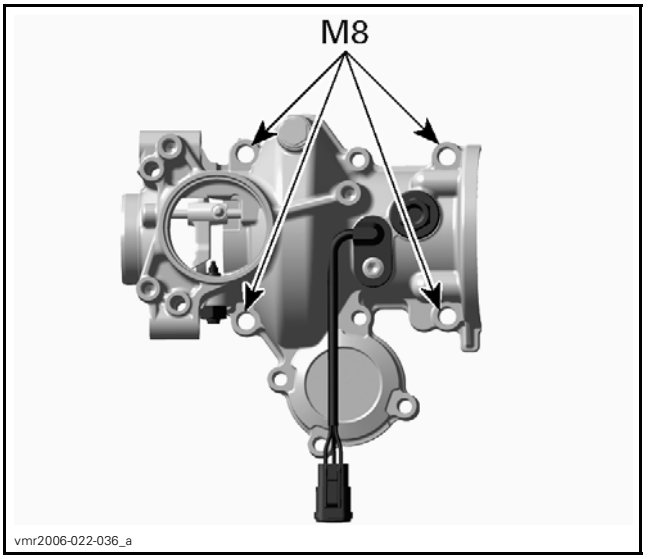

vmr2006-022-036_a

Tighten all M6 Torx screws to specification

TIGHTENING TORQUE	
Right housing M6 screws	10 N•m ± 1 N•m (89 lbf•**in** ± 9 lbf•**in**)

Before installing bearing cover, apply LOCTITE 5910 (P/N 293 800 081) on the housing and SUPER LUBE GREASE (P/N 293 550 030) on oil seal.

Install the actuator, refer to *ACTUATOR* in this subsection.

Once this is done, complete final assembly.

GEARBOX

Removing the Gearbox

1. Remove engine from vehicle and place it on footrest support. Refer to *ENGINE REMOVAL AND INSTALLATION* subsection for the procedure.
2. Drain gearbox. Refer to *GEARBOX OIL DRAINING PROCEDURE* in *PERIODIC MAINTENANCE PROCEDURES* subsection.
3. Remove drive and driven pulley and CVT air guide, refer to *CONTINUOUSLY VARIABLE TRANSMISSION (CVT)* subsection.
4. Unscrew the three (3) nuts that attach the gearbox to the engine.
5. Pull gearbox to separate it from engine.

Disassembling the Gearbox

During gearbox disassembly, inspect the condition of each part closely.

1. Remove the output shaft. Refer to *OUTPUT SHAFT AND COUPLING MECHANISM* in this subsection.
2. Push bevel gear with a pin slightly down and measure the axial clearance of bevel gear with a feeler gauge.

NOTE: Bevel gear axial clearance must be measured before center and left housings separation.

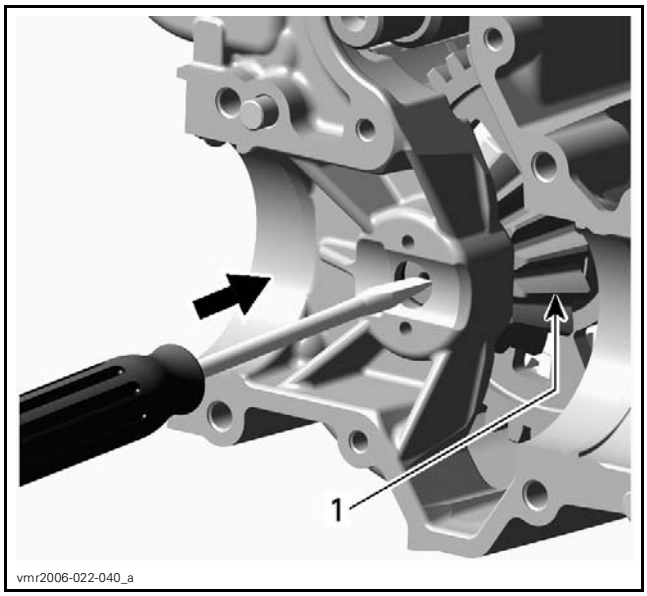

1. Bevel gear

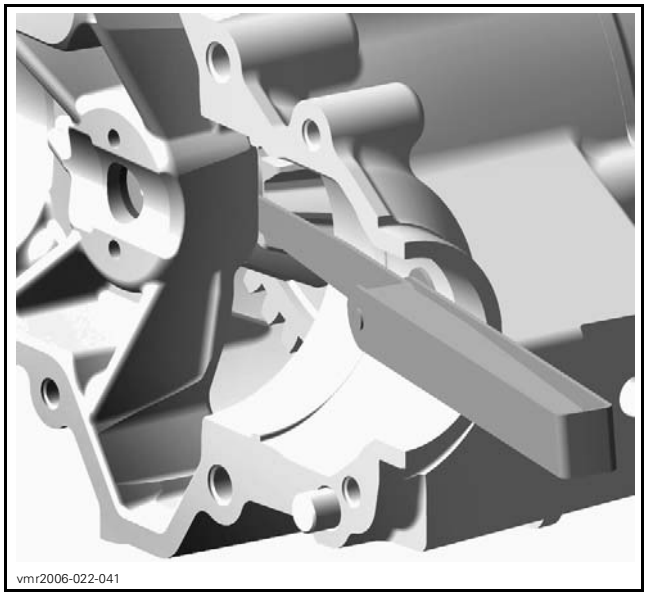

MEASURE AXIAL CLEARANCE OF BEVEL GEAR

BEVEL GEAR AXIAL CLEARANCE	
NEW	0.02 mm to 0.15 mm (.0008 in to .0059 in)
SERVICE LIMIT	0.19 mm (.0075 in)

3. Unscrew the left housing screws.
4. Place the left housing on a wood stand, center housing pointing upwards.
5. Using 2 big flat screwdrivers, lift the center housing.

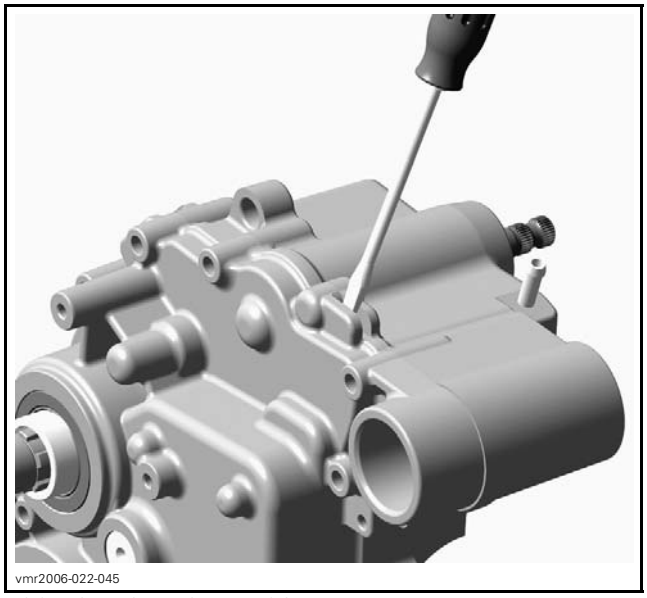

POSITION FOR BIG FLAT SCREWDRIVER

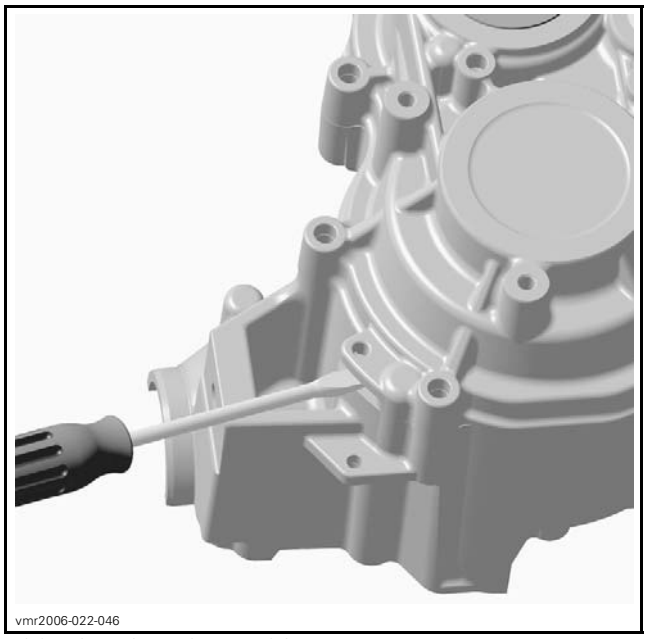

POSITION FOR BIG FLAT SCREWDRIVER

6. Remove center housing completely.
7. Remove shift shaft assembly.

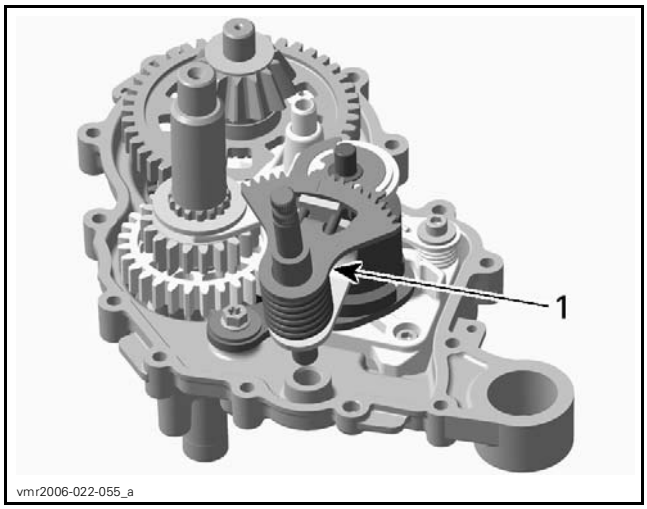

1. Shift shaft assembly

8. Remove shift fork shaft.
9. Disengage shift forks from shift drum and remove shift fork.

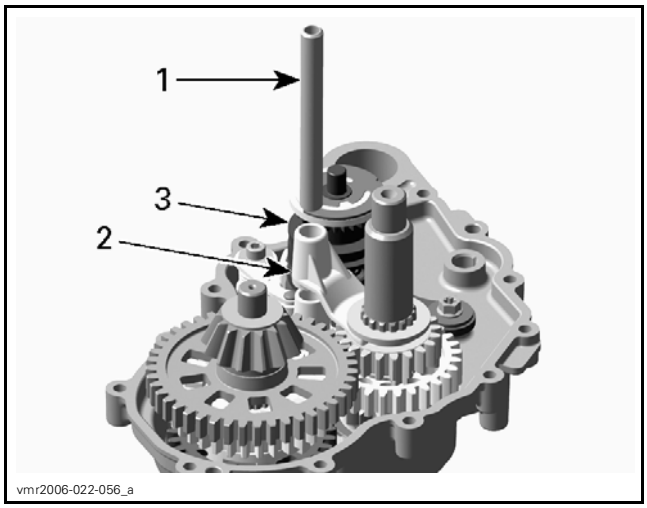

1. Shift fork shaft
2. Shift fork
3. Shift drum

10. Remove bevel gear shaft with low range gear assembly and shim.

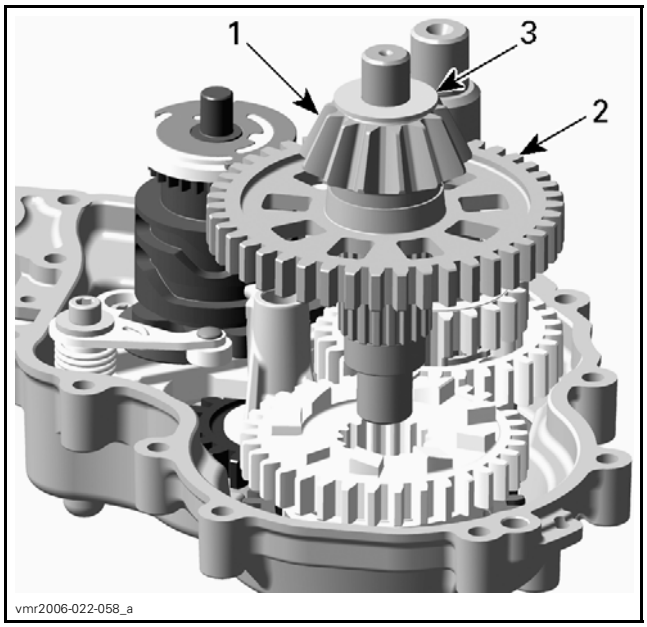

1. Bevel gear
2. Low range gear
3. Shim

11. Remove sliding gear with shift fork.

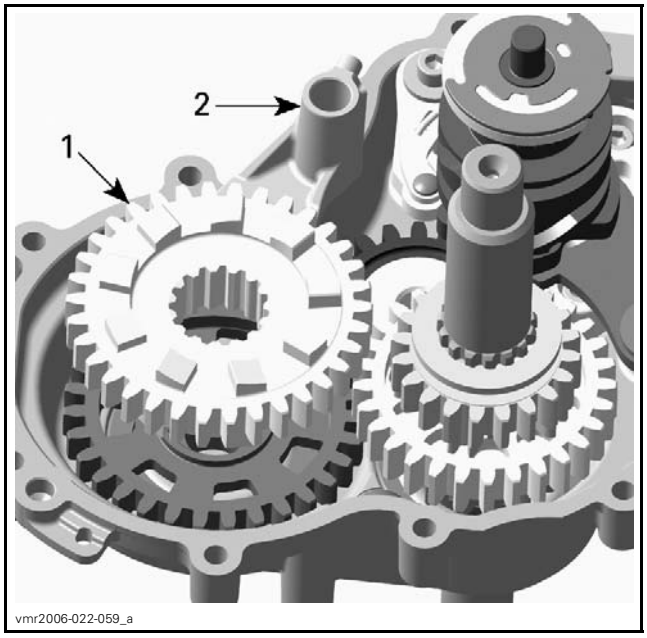

1. Sliding gear
2. Shift fork

12. Remove thrust washer, needle bearing and reverse gear.

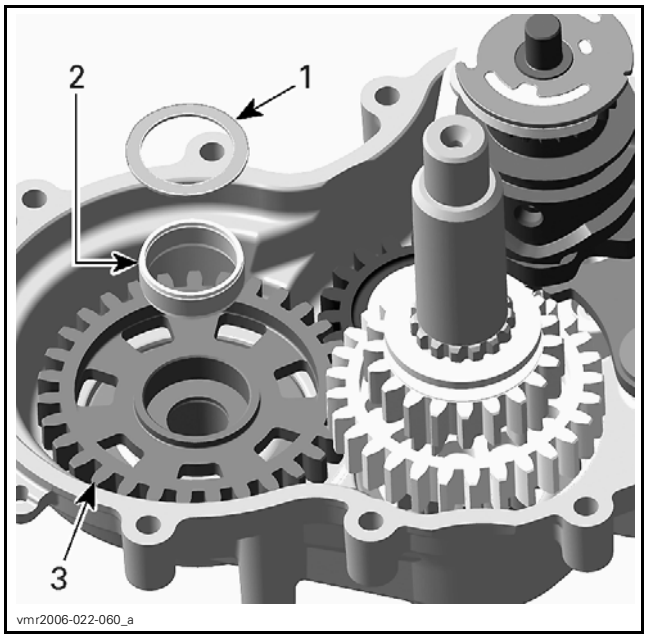

1. *Thrust washer*
2. *Needle bearing*
3. *Reverse gear*

13. Remove shim on CVT side.

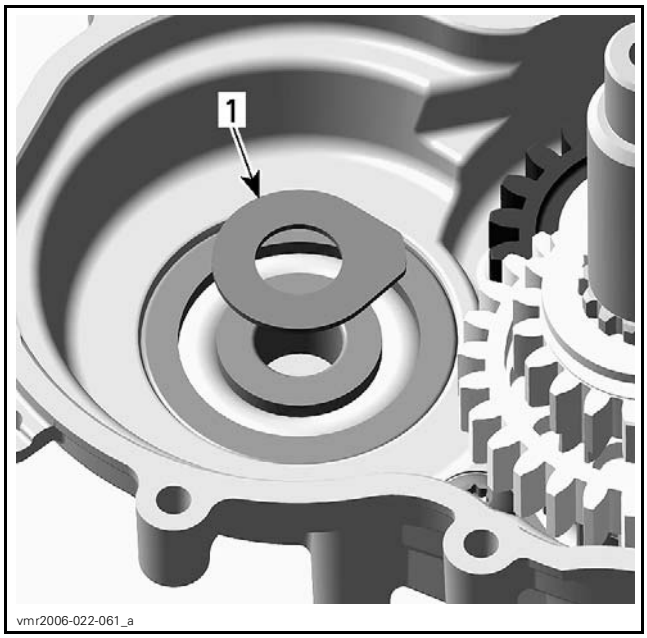

1. *Shim on CVT side*

14. Remove countershaft with low range gear and high range gear assembly.

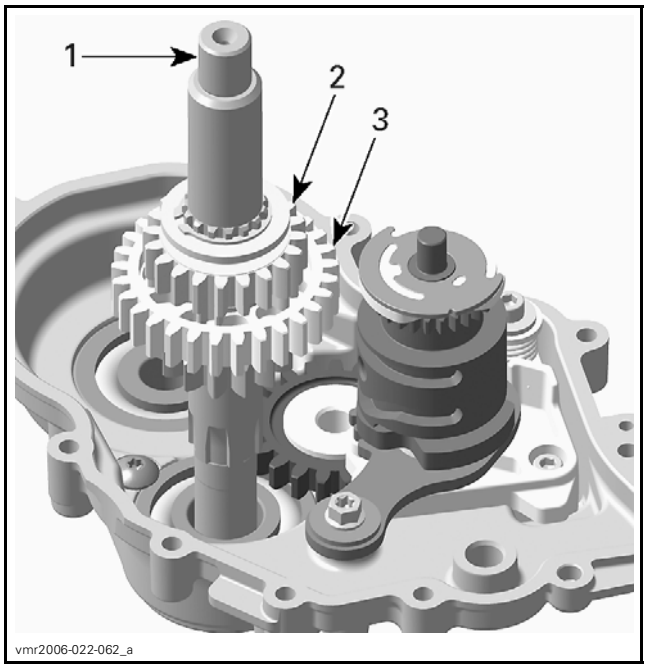

1. *Countershaft*
2. *Low range gear*
3. *High range gear*

15. Insert a flat screwdriver in the slot of index lever. Turn screwdriver clockwise and remove shift drum.

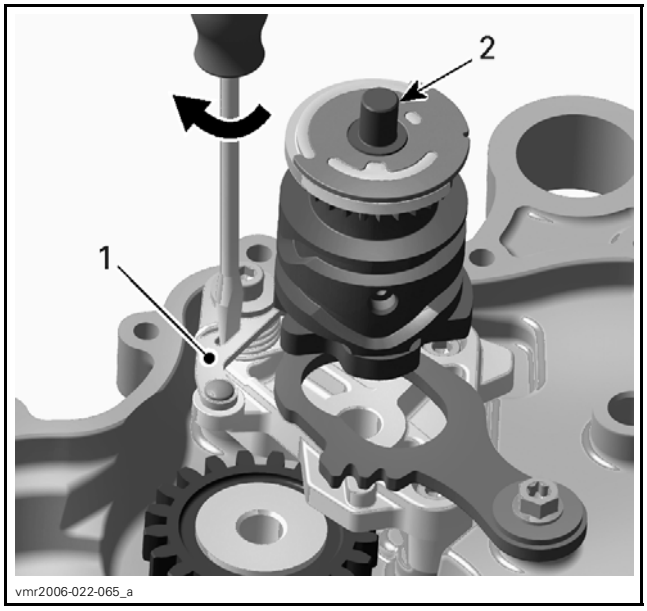

1. *Index lever*
2. *Shift drum*

16. Remove parking lock lever.

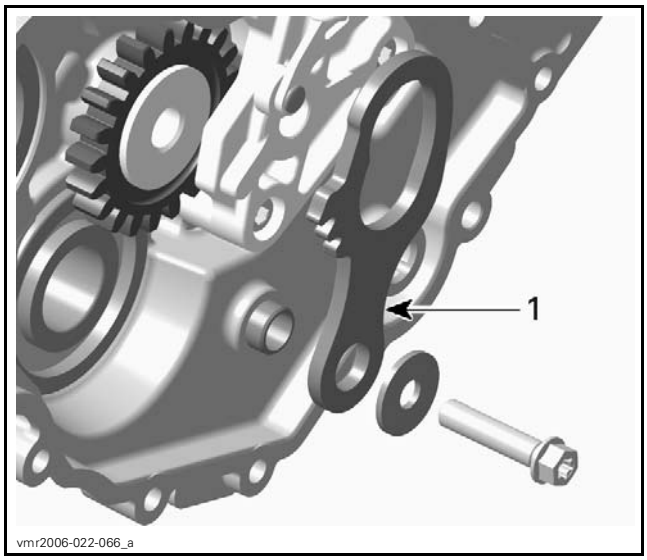

1. Parking lock lever

17. Remove index lever with washer, step ring and spring.

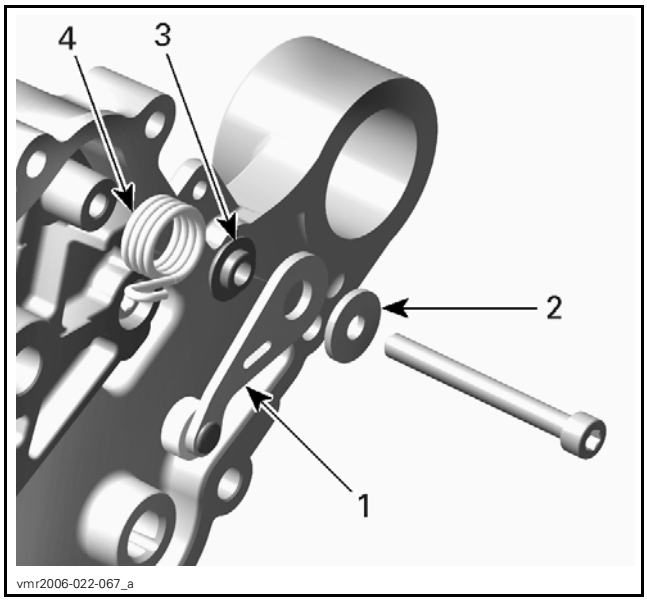

1. Index lever
2. Washer
3. Step ring
4. Index spring

18. Remove support flange.

NOTE: To remove intermediate gear and needle bearing, use a press bench to push out the intermediate gear shaft.

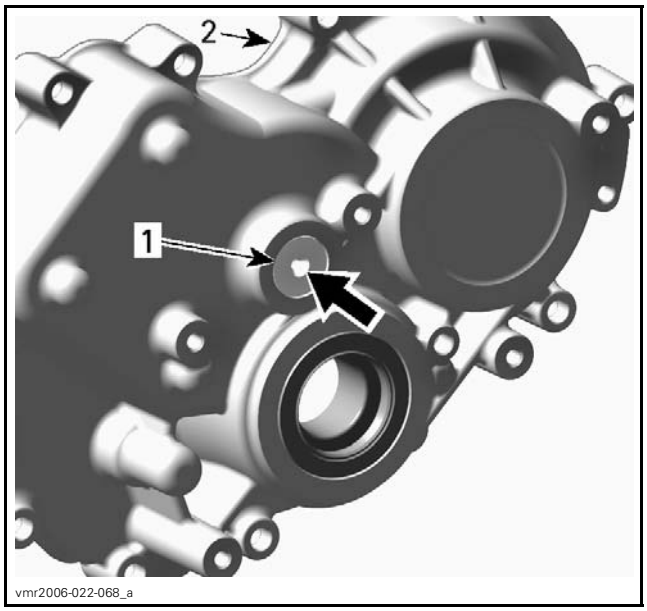

PRESS SHAFT IN THE DIRECTION AS SHOWN BY THE ARROW
1. Intermediate gear shaft
2. Left housing

Removing the Bearings

If necessary heat housing up to 100°C (212°F) before removing ball bearings or needle bearings.

⚠ WARNING

Clean oil, outside and inside, from housing before heating.

NOTICE **Always support gearbox housings properly when ball bearings or needle bearings are removed. Housing damages may occur if this procedure is not performed correctly.**

To remove bevel gear needle bearing use a punch.

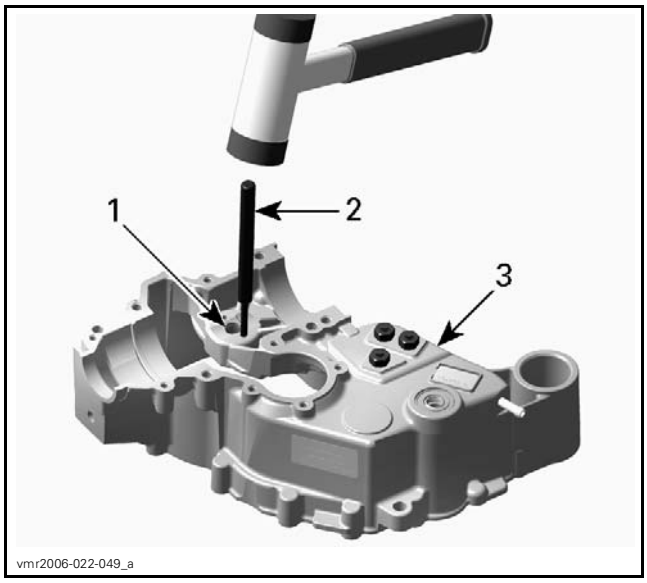

1. *Bevel gear needle bearing*
2. *Punch*
3. *Center housing*

To remove ball bearings of bevel gear and needle bearing of countershaft, use a blind hole bearing puller.

For countershaft ball bearing, remove screw and intermediate gear shaft, then push with a suitable puller from outside in.

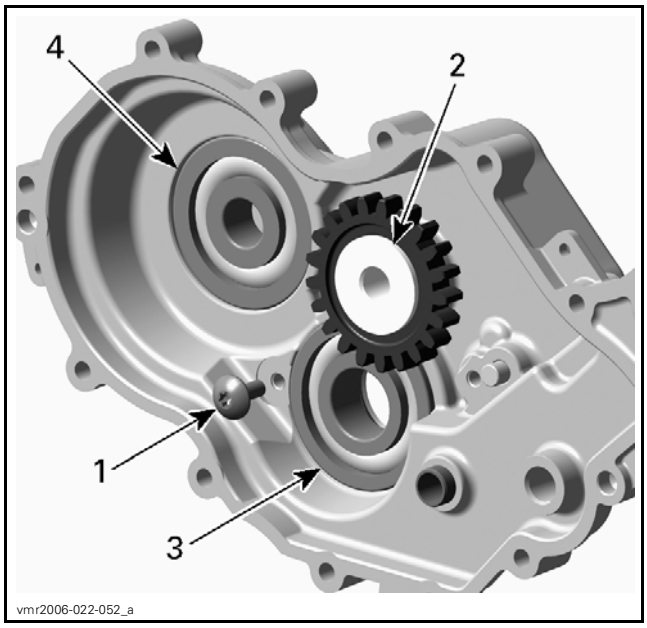

1. *Screw*
2. *Intermediate gear shaft*
3. *Ball bearing countershaft*
4. *Bevel gear ball bearing*

Inspecting the Gearbox

Always verify for the following when inspecting gearbox components:

– Gear teeth damage
– Worn or scoured bearing surfaces
– Worn or scoured shift fork
– Worn or scoured shift fork shaft
– Rounded engagement dogs and slots
– Bent shift forks
– Bent shift fork shaft
– Worn shift fork engagement pins
– Worn tracks on shift drum
– Worn shift fork engagement groove
– Worn splines on shafts and gears.

Bearings

Check if ball bearings and needle bearings turn freely and smoothly.

Check all bearings, bearing points, tooth flanks, taper grooves and annular grooves. Annular grooves must have sharp edges.

Shift Forks

Check both shift forks for visible damage, wear or bent shift fork claws.

Measure the shift fork claw thickness.

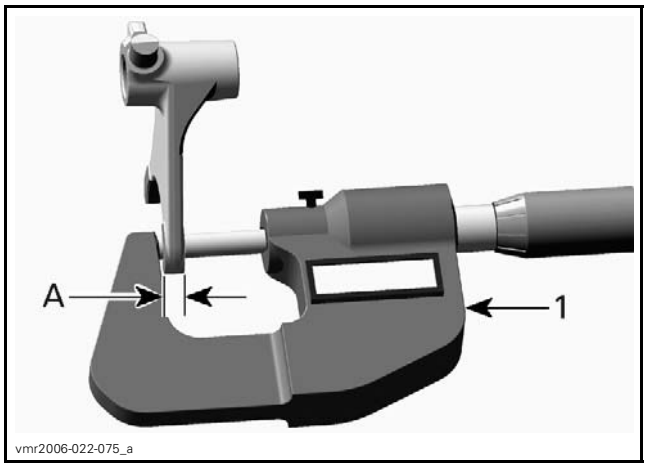

1. *Micrometer*

A. *Shift fork claw thickness*

SHIFT FORK CLAW THICKNESS (HIGH GEAR SHIFTING)	
NEW	4.80 mm to 4.90 mm (.189 in to .193 in)
SERVICE LIMIT	4.70 mm (.185 in)4.70 mm (.185 in)

SHIFT FORK CLAW THICKNESS (LOW/REVERSE GEAR SHIFTING)	
NEW	5.10 mm to 5.20 mm (.201 in to .205 in)
SERVICE LIMIT	5.00 mm (.197 in)

Measure shift fork pins.

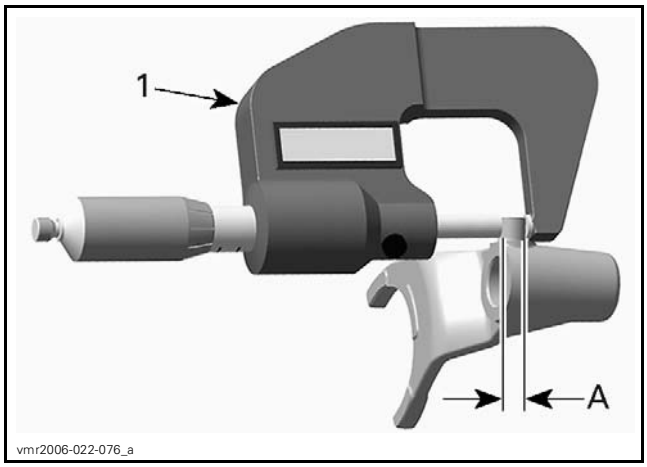

1. Micrometer
A. Shift fork pin diameter

SHIFT FORK PIN DIAMETER	
NEW	6.920 mm to 6.970 mm (.272 in to .274 in)
SERVICE LIMIT	6.850 mm (.27 in)

Shift Drum

Check shift drum tracks for scouring or heavy wear, like rounded engagement slots.

Replace isolating washer if there are signs of wear or visible damages.

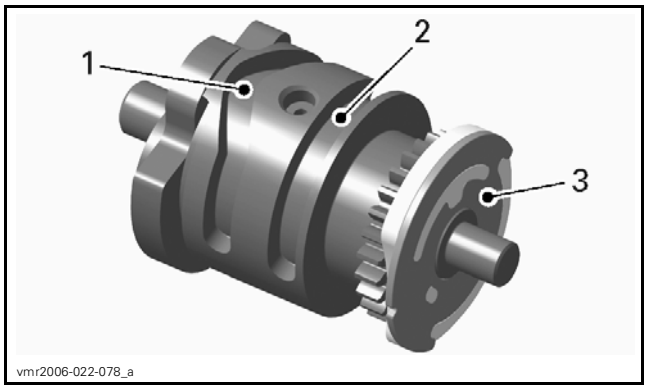

1. Track for the low/reverse gear shift fork
2. Track for the high gear shift fork
3. Isolating washer on the shift drum

Levers

Check parking lever for cracks or other damages.

Index lever with roller must move freely.

Gears

NOTE: Replace gears only together with the corresponding meshing gears. Always replace circlips and use special pliers to install them.

Measure the width of shift fork engagement groove.

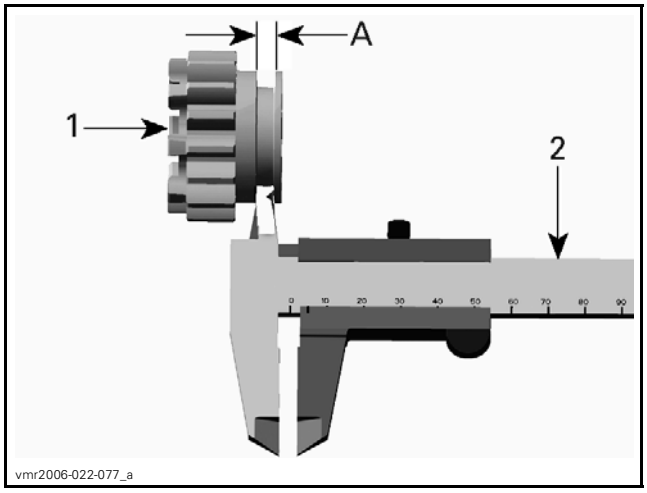

1. Main gear
2. Caliper
A. Width for engagement of shift fork

WIDTH OF SHIFT FORK ENGAGEMENT GROOVE (HIGH GEAR SHIFTING)	
NEW	5.00 mm to 5.10 mm (.197 in to .201 in)
SERVICE LIMIT	5.20 mm (.205 in)

WIDTH OF SHIFT FORK ENGAGEMENT GROOVE (LOW/REVERSE GEAR SHIFTING)	
NEW	5.30 mm to 5.40 mm (.209 in to .213 in)
SERVICE LIMIT	5.50 mm (.217 in)

Check free pinions for wear.

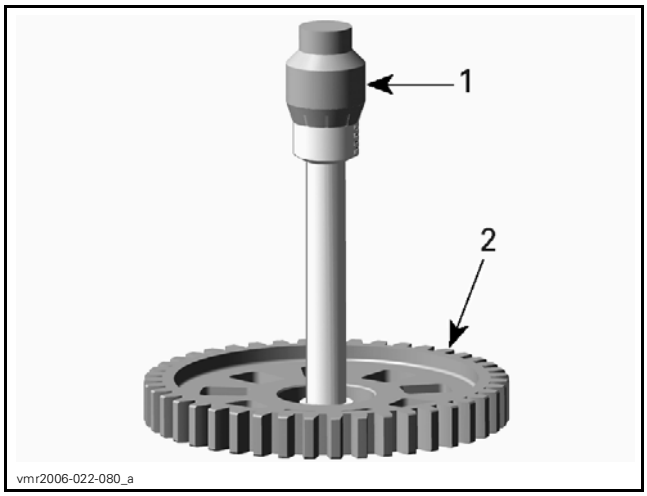

TYPICAL
1. *Micrometer*
2. *Free pinion*

DIAMETER FREE PINION	
NEW	29.000 mm to 29.013 mm (1.1417 in to 1.1422 in)
SERVICE LIMIT	29.015 mm (1.1423 in)

Shafts

Check shift shaft for worn splines and gears.

Check intermediate shaft for wear.

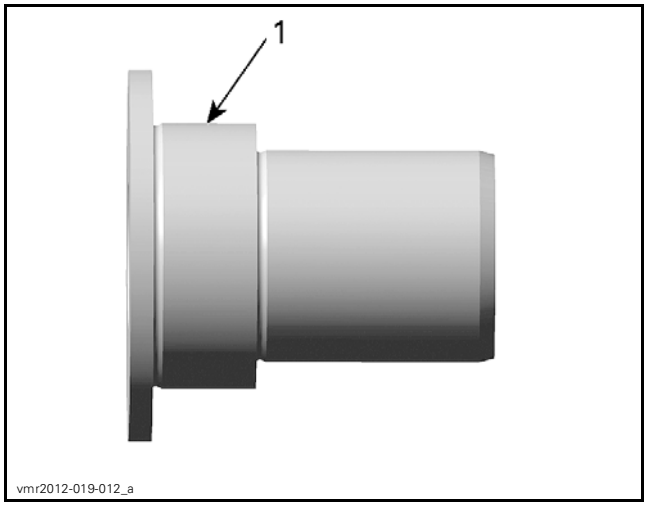

1. *Intermediate gear bearing*

INTERMEDIATE GEAR SHAFT	
NEW	24.979 mm to 25.000 mm (.9834 in to .9843 in)
SERVICE LIMIT	24.977 mm (.9833 in)

Check countershaft for wear.

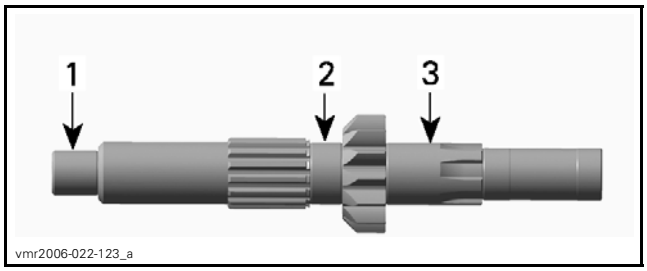

1. *MAG side*
2. *Free pinion bearing*
3. *CVT side*

COUNTERSHAFT	
SERVICE LIMIT	
MAG SIDE	17.990 mm (.7083 in)
FREE PINION BEARING	24.970 mm (.9831 in)
CVT SIDE	24.970 mm (.9831 in)

Check bevel gear shaft.

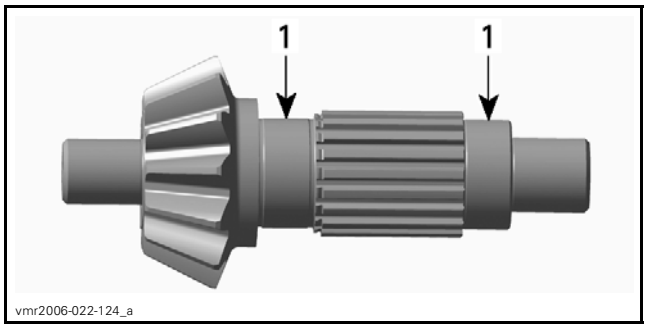

1. *Free pinion bearings*

BEVEL GEAR SHAFT	
SERVICE LIMIT	
FREE PINION BEARING	24.984 mm (.9836 in)

Shims

Always replace shim by a new one with the same thickness, when reassembling the gearbox with existing output shaft and bevel gear shaft.

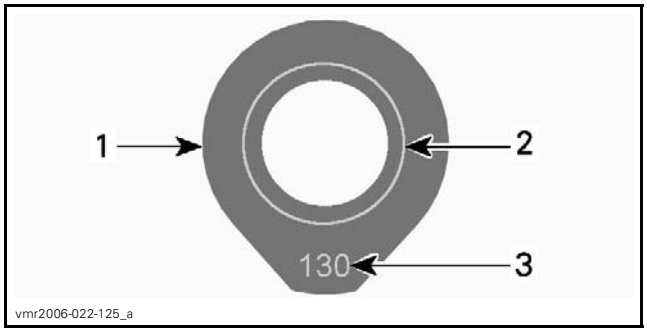

1. *Shim for adjusting the bevel gear on center housing side*
2. *Area where wear signs appear*
3. *Thickness of the shim*

Adjusting the Gearbox

Bevel Gear

NOTE: Only necessary if the backlash and axial clearance of the bevel gear is out of specification or if parts are changed (output shaft, bevel gear shaft or housing).

There are 2 adjustments to perform on the bevel gear.

- Bevel gear backlash on center housing
- Bevel gear axial clearance on left housing.

The bevel gear backlash is adjusted by finding the proper shim thickness E as per following illustration.

The bevel gear axial clearance is adjusted by finding the proper shim thickness J as per following illustration.

Clean mating surface of housing before taking measurements using a combination of LOCTITE CHISEL (GASKET REMOVER) (P/N 413 708 500) and a brass brush. Brush a first pass in one direction then make the final brushing perpendicularly (90°) to the first pass cross (hatch).

NOTICE **Do not wipe with rags. Use a new clean hand towel only.**

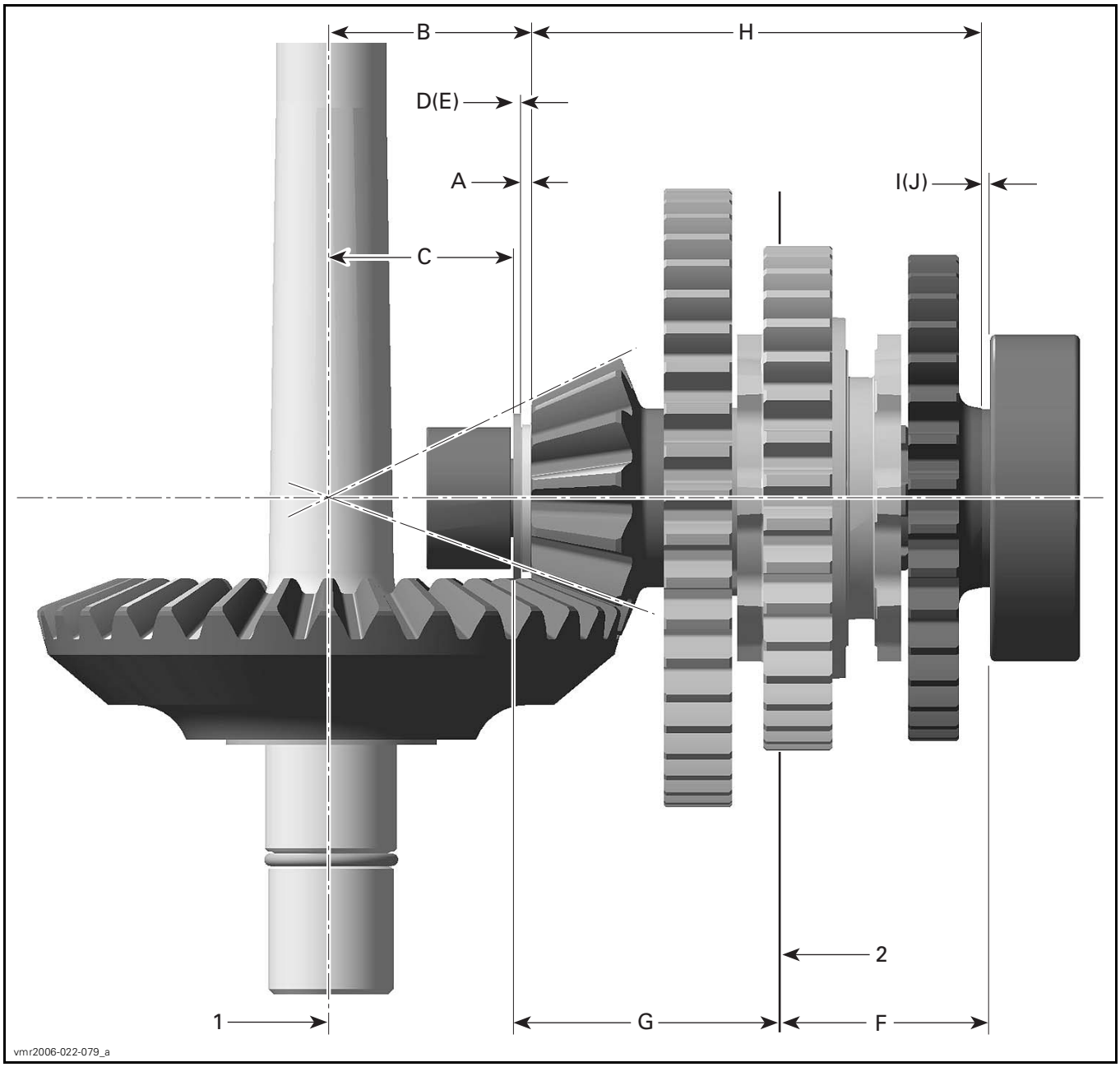

1. Mating surface — output shaft
2. Mating surface — left housing

Bevel Gear Backlash Procedure

Use the following course of calculation to determine the theoretical shim thickness D:

D = B - C - A

B = The distance between the thrust surface of the bevel gear and the theoretical center of its taper. This is defined by manufacturer and is written on the bevel gear shaft.

This bevel gear reference number could be between - 10 and + 10.

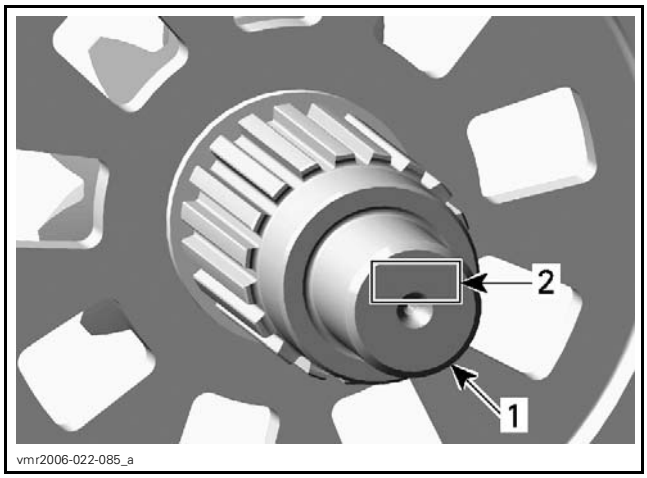

1. Bevel gear
2. Bevel gear reference number

Use following formula to find out value B.

$$B = \left(\frac{\text{Bevel gear reference number}}{100}\right) + 37.8$$

For example: bevel gear reference number = - 3.

B = (- 3/100) + 37.8 = 37.77

C = Distance between the shim thrust surface in the center housing and the mating surface to right housing.

NOTE: For a better understanding following illustration is made as a cutaway.

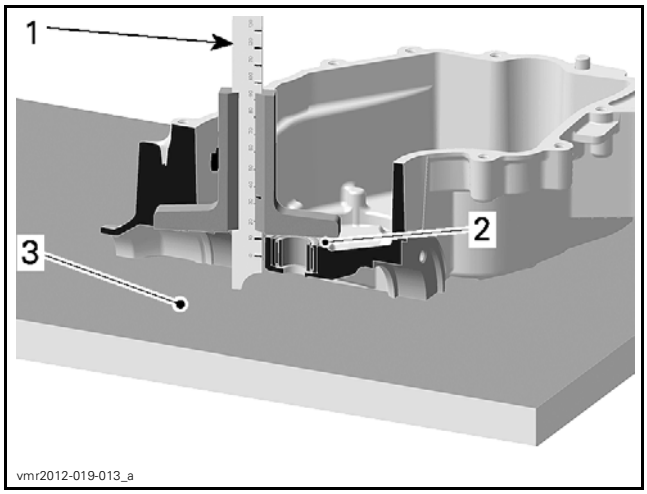

1. Deep gauge — measurement **C**
2. Shim surface in center housing
3. Mating surface to right housing

A = 2 mm (.0787 in) nominal thickness of axial needle bearing.

When the measurements are taken, calculate the theoretical shim thickness (D) using the formula: (D = B - C - A).

Take the obtained theoretical shim thickness (D) and choose the corresponding shim number (E) according to the following table.

THEORETICAL SHIM THICKNESS -D-	SHIM NUMBER -E-
1.20 mm to 1.29 mm (.0472 in to .0508 in)	120
1.30 mm to 1.39 mm (.0512 in to .0547 in)	130
1.40 mm to 1.49 mm (.0551 in to .0587 in)	140
1.50 mm to 1.59 mm (.0591 in to .0626 in)	150
1.60 mm to 1.69 mm (.063 in to .0665 in)	160
1.70 mm to 1.79 mm (.0669 in to .0705 in)	170
1.80 mm to 1.89 mm (.0709 in to .0744 in)	180

NOTE: For example, if the theoretical shim thickness (D) is 1.53 mm (.0602 in), choose the corresponding shim number 150 (E). The shim number 150 represents a nominal value equal to 1.50 mm (.0591 in).

Bevel Gear Axial Clearance Procedure

Use the following course of calculation to determine the theoretical shim thickness (I):

I = F + G - H - A - E

F = Distance between mating surface of left housing to ball bearing inner race.

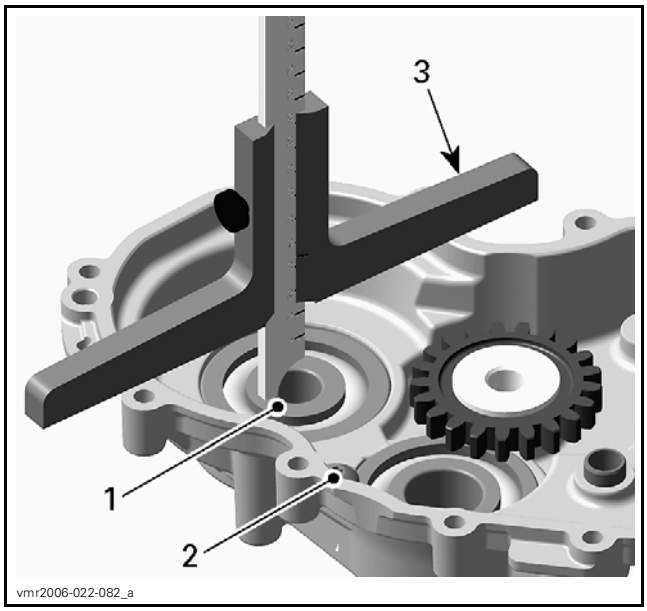

vmr2006-022-082_a

1. *Ball bearing inner race*
2. *Mating surface of left housing*
3. *Depth gauge*

G = Distance between mating surface of center housing and shim surface.

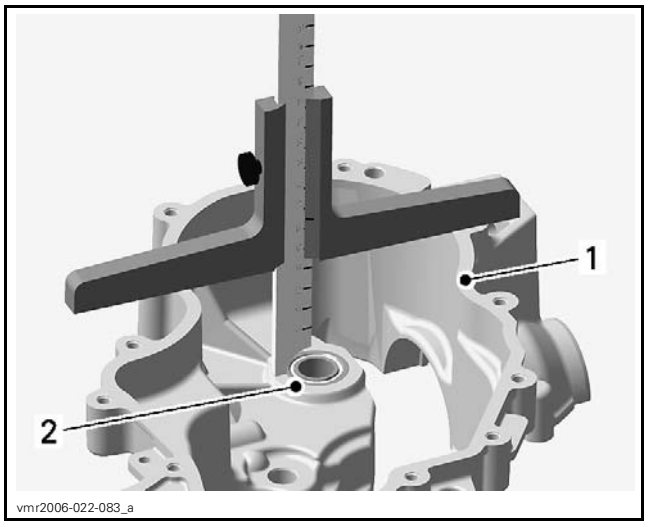

vmr2006-022-083_a

1. *Mating surface of center gear housing*
2. *Shim surface*

H = Distance between thrust surfaces of bevel gear shaft.

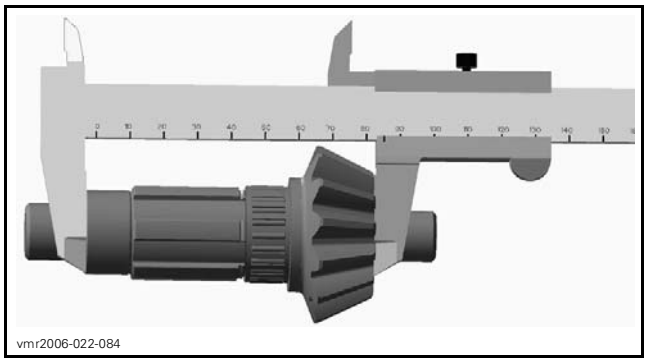
vmr2006-022-084

A = 2 mm (.0787 in) nominal thickness of axial needle bearing.

E = The shim number nominal value as found in the *BEVEL GEAR BACKLASH PROCEDURE*. For example, shim number 150 represents a value of 1.50 mm (.0591 in).

When the measurements are taken, calculate the theoretical shim thickness (I) using the formula: (I = F + G - H - A - E).

Take the obtained theoretical shim thickness (I) and choose the corresponding shim number (J) according to the following table.

THEORETICAL SHIM THICKNESS -I-	SHIM NUMBER -J-
1.22 mm to 1.31 mm (.048 in to .0516 in)	120
1.32 mm to 1.41 mm (.052 in to .0555 in)	130
1.42 mm to 1.51 mm (.0559 in to .0594 in)	140
1.52 mm to 1.61 mm (.0598 in to .0634 in)	150
1.62 mm to 1.71 mm (.0638 in to .0673 in)	160
1.72 mm to 1.81 mm (.0677 in to .0713 in)	170
1.82 mm to 1.91 mm (.0717 in to .0752 in)	180

For example, if the theoretical shim thickness (I) is 1.53 mm (.0602 in), choose the corresponding shim number 150 (J).

Bevel gear axial clearance of 0.02 mm to 0.11 mm (.0008 in to .0043 in) is included in the above table.

Assembling the Gearbox

Reverse the disassembly procedure. However, pay attention to the following details.

Installing the Bearings

Unless otherwise instructed, never use hammer to install ball bearings or needle bearings. Use press machine only.

If necessary heat housings up to 100°C (212°F) before installing ball bearings or needle bearings.

⚠ WARNING

Clean oil, outside and inside, from housing before heating.

Place new bearing in freezer for 10 minutes before installation.

Use a suitable installer for installing ball bearings of countershaft and bevel gear.

NOTE: Place gearbox housings on a wood stand before installing ball bearings.

Install countershaft needle bearing in right housing.

REQUIRED TOOL	
BEARING INSTALLER (GEARBOX) (P/N 529 035 762)	
HANDLE (P/N 420 877 650)	

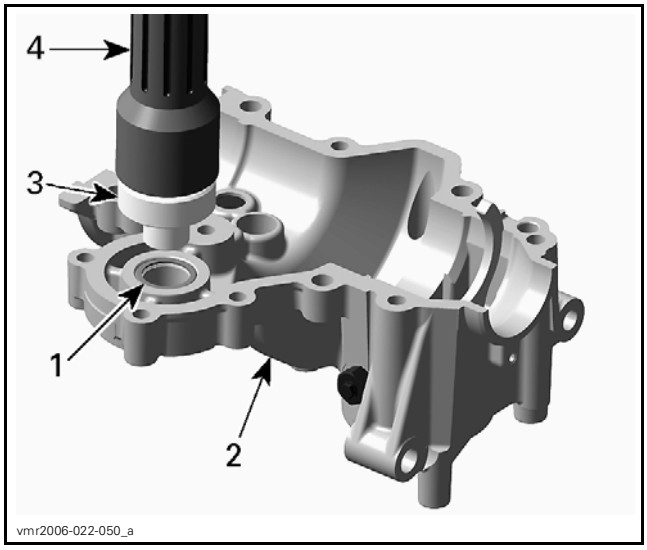

1. *Countershaft needle bearing*
2. *Right housing*
3. *Needle bearing installer*
4. *Installer handle*

Install bevel gear needle bearing.

REQUIRED TOOL	
BEARING INSTALLER (GEARBOX) (P/N 529 035 763)	
HANDLE (P/N 420 877 650)	

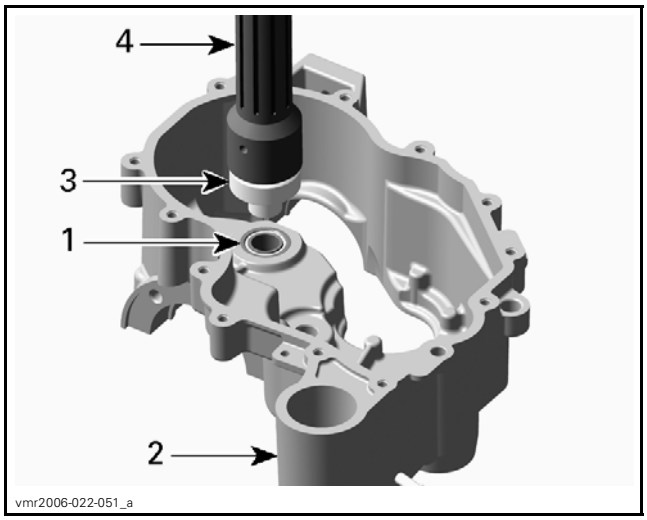

1. *Bevel gear needle bearing*
2. *Center housing*
3. *Needle bearing installer*
4. *Installer handle*

Install new oil seals with the proper installer (refer to *GEARBOX OIL SEALS* in this subsection).

Other Gearbox Components

Fit intermediate gear with needle bearing on intermediate gear shaft.

NOTE: Fit gear with collar facing to housing side on the intermediate shaft.

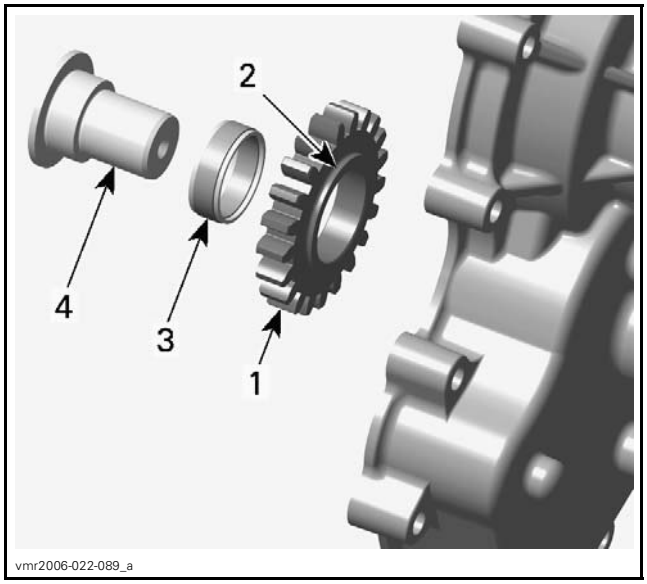

1. *Intermediate gear*
2. *Collar facing housing*
3. *Needle bearing*
4. *Intermediate gear shaft*

Press intermediate gear shaft in the left housing.

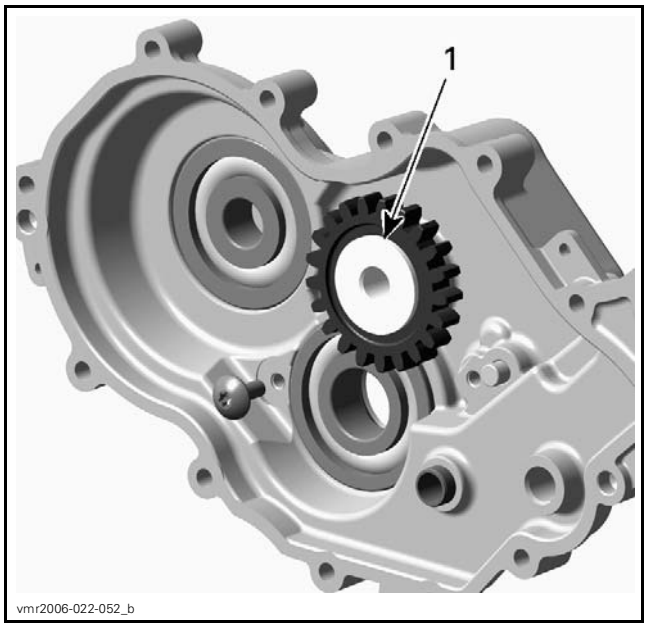

1. Intermediate gear shaft

Fit support flange in the left housing and install index lever.

NOTE: Fit step ring into index lever.

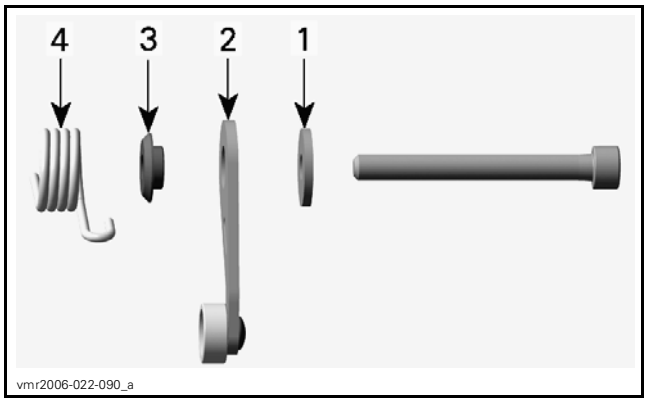

1. Washer
2. Index lever
3. Step ring
4. Index spring

Install parking lock lever, teeth showing to countershaft.

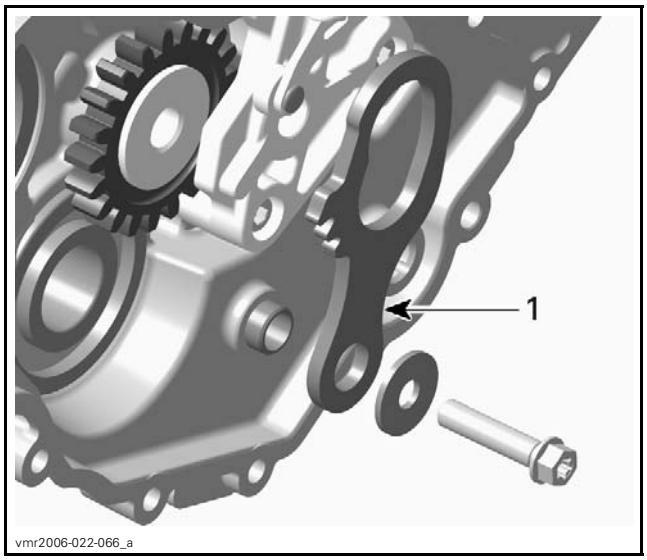

1. Parking lock lever

Place shim of CVT side on bearing.

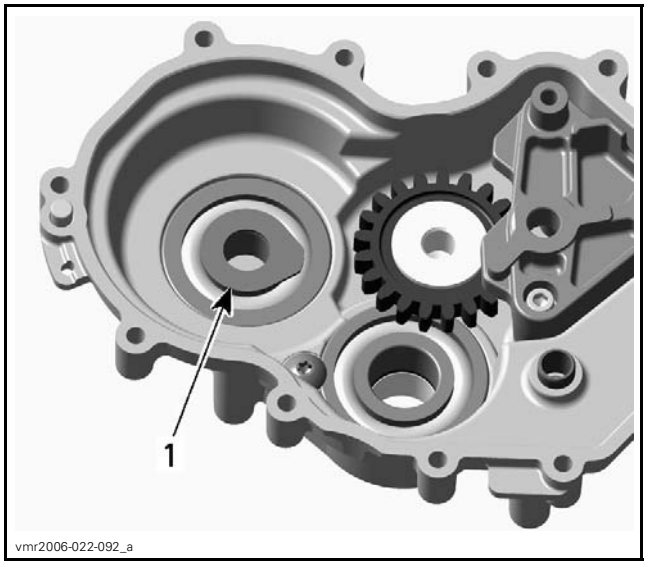

1. Shim CVT side

Place reverse gear with needle bearing and thrust washer.

NOTE: Check if the screw to secure countershaft bearing is installed.

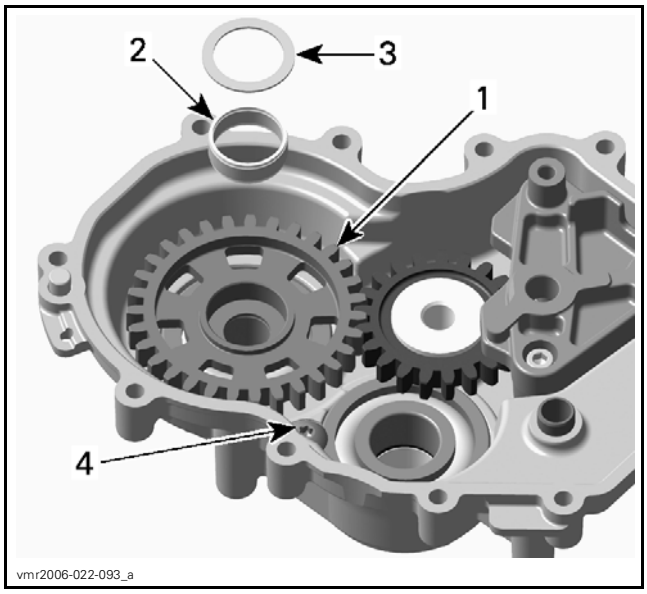

1. *Reverse gear*
2. *Needle bearing*
3. *Thrust washer*
4. *Countershaft bearing screw*

Install countershaft with low gear and high gear assembly.

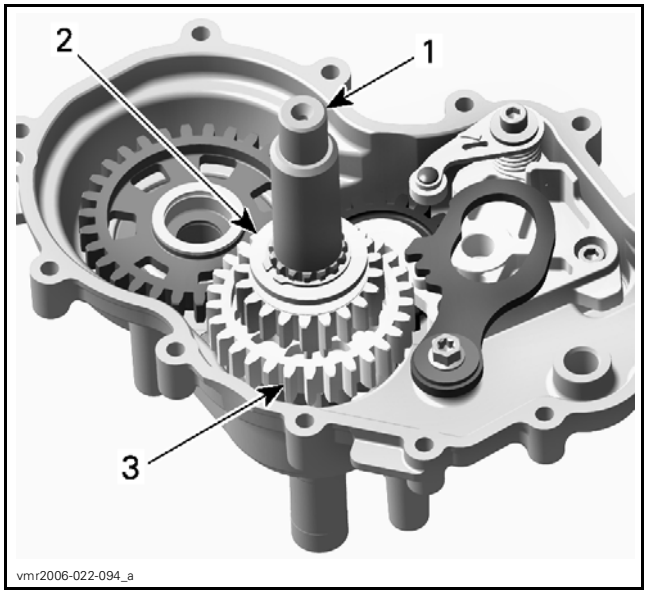

1. *Countershaft*
2. *Low gear*
3. *High gear*

Install a new shim onto bevel gear shaft, fork side.

Install bevel gear with sliding gear assembly together with shift fork.

NOTE: If a new bevel gear and output shaft are used, it is necessary to verify the shim adjustment prior to finalize assembly. Refer to *ADJUSTMENT* in this subsection. If the existing bevel gear is used, it is mandatory to use a new shim with the same thickness, a new needle bearing and shim.

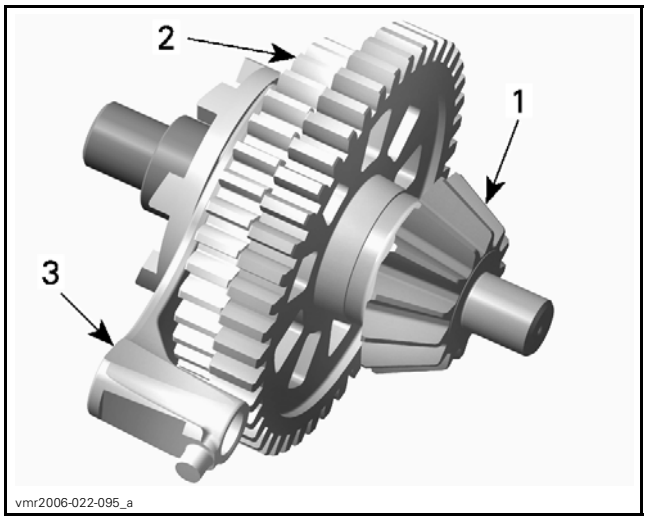

1. *Bevel gear*
2. *Sliding gear*
3. *Shift fork*

Install a new needle bearing and shim.

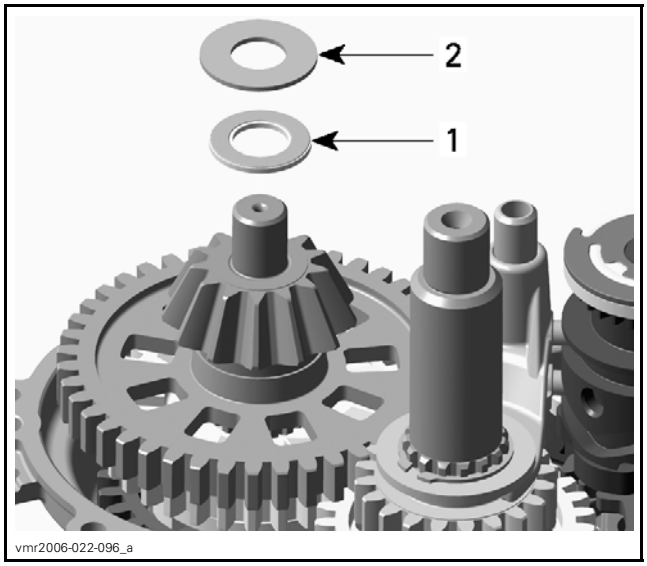

1. *Needle bearing*
2. *Shim*

Insert a flat screwdriver in the slot of the index lever, turn screwdriver clockwise and install shift drum on neutral position as per following illustration.

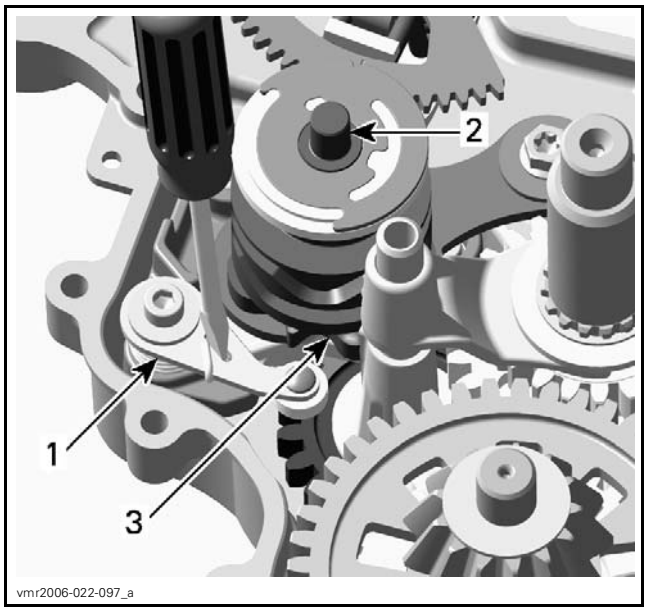

1. *Index lever*
2. *Shift drum*
3. *Neutral position*

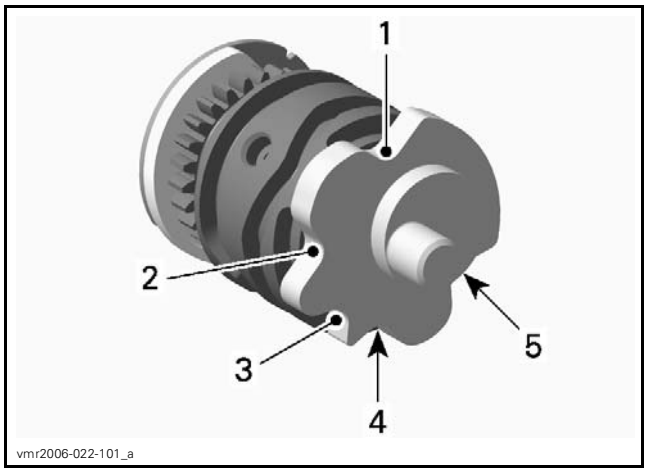

1. *Parking stop location*
2. *Reverse stop location*
3. *Neutral stop location*
4. *High gear stop location*
5. *Low gear stop location*

Install shift shaft assembly.

NOTE: Marks on shift drum/isolating washer and shift shaft must align.

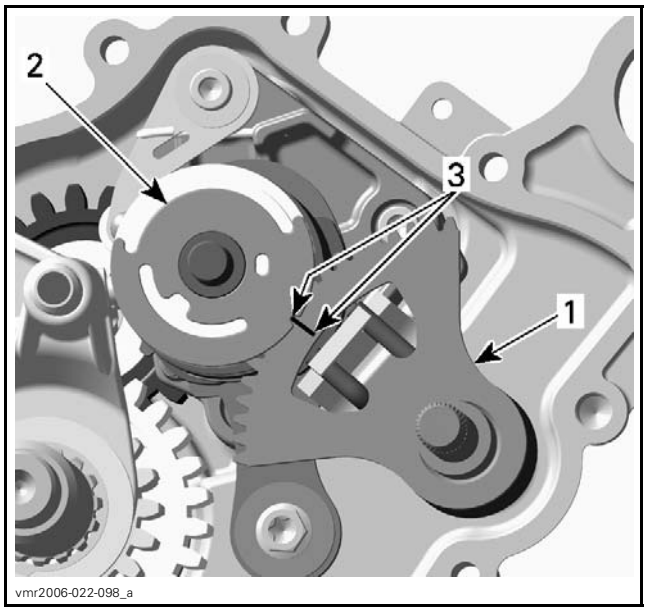

1. *Shift shaft assembly*
2. *Isolating washer*
3. *Marks*

Install shift fork then engage both shift fork pins in their corresponding groove on the shift drum.

NOTE: Move sliding gears to facilitate engagement of pins inside grooves.

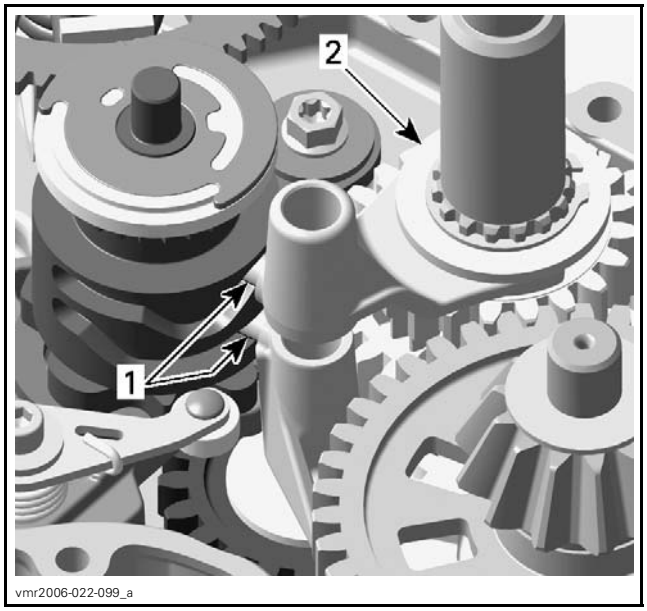

1. *Shift fork pins*
2. *Sliding gear*

Install shift fork shaft.

NOTE: Run all gears as a final function check before installing center housing.

Now, close the housings by doing the following:

Clean all metal components in a solvent.

Gearbox housing mating surfaces are best cleaned using a combination of LOCTITE CHISEL (GASKET REMOVER) (P/N 413 708 500) and a brass brush. Brush a first pass in one direction then make the final brushing perpendicularly (90°) to the first pass cross (hatch).

NOTICE **Do not wipe with rags. Use a new clean hand towel only.**

IMPORTANT: When beginning the application of the gear housing sealant, the assembly and the first torquing should be done within 10 minutes. It is suggested to have all you need on hand to save time.

Use LOCTITE 5910 (P/N 293 800 081) on mating surfaces.

Use a plexiglass plate and apply some sealant on it. Use a soft rubber roller (50 - 75 mm (2 - 3 in)), available in arts products suppliers for printing, and roll the sealant to get a thin uniform coat on the plate (spread as necessary). When ready, apply the sealant on gear housing mating surfaces.

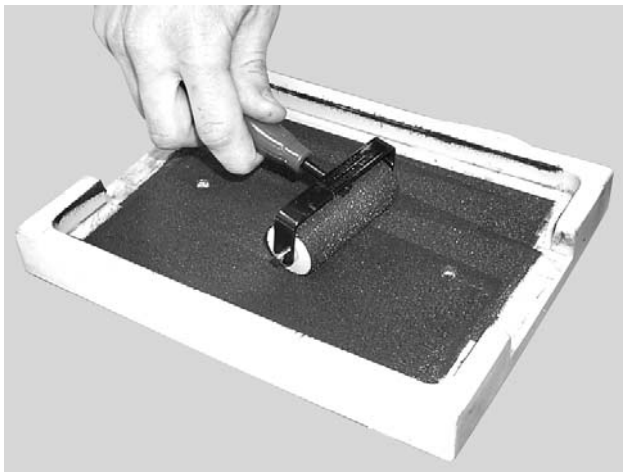

F12R17A

Do not apply in excess as it will spread out inside gear housing.

NOTE: It is recommended to apply this specific sealant as described here to get a uniform application without lumps. If you do not use the roller method, you may use your finger to uniformly distribute the sealant (using a finger will not affect the adhesion).

Tighten gear housing screws in a crisscross sequence.

TIGHTENING TORQUE		
Gear housing screws	Step A	Hand tightened
	Step B	10 N•m ± 1 N•m (89 lbf•**in** ± 9 lbf•**in**)

Install O-ring including distance sleeve on countershaft CVT side.

NOTICE **Place O-ring including distance sleeve right away. Chamfered bore of distance sleeve has to face the gearbox.**

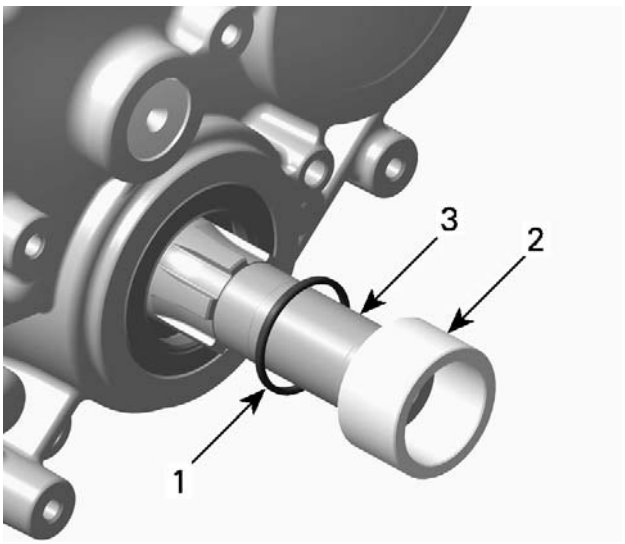

vmr2006-022-100_a

COUNTERSHAFT END CVT SIDE
1. *O-ring*
2. *Distance sleeve*
3. *Countershaft end CVT side*

Refer to *OUTPUT SHAFT AND COUPLING MECHANISM* to install these components. Measure the output shaft backlash.

Installing the Gearbox

The installation is the reverse of the removal procedure.

Before gearbox installation check O-ring in bearing cover if brittle, hard or damaged. Replace if necessary.

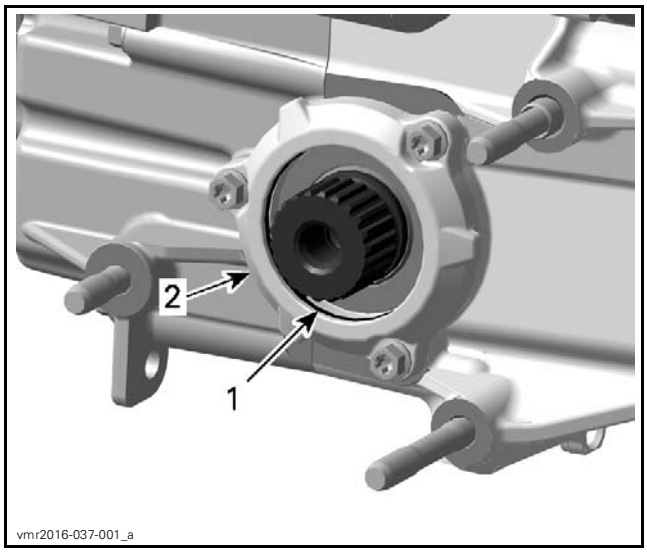

1. *O-ring*
2. *Bearing cover*

Tighten the three (3) nuts that attaching the gearbox to the engine.

TIGHTENING TORQUE	
Gearbox retaining nuts	25 N•m ± 3 N•m (18 lbf•ft ± 2 lbf•ft) + LOCTITE 243 (BLUE) (P/N 293 800 060)

After installation refill gearbox oil, refer to *PERIODIC MAINTENANCE PROCEDURES*.

SHIFTER (GEARBOX WITH EXTERNAL SWITCHES)

SERVICE PRODUCTS

Description	Part Number	Page
LOCTITE 243 (BLUE)	293 800 060	2

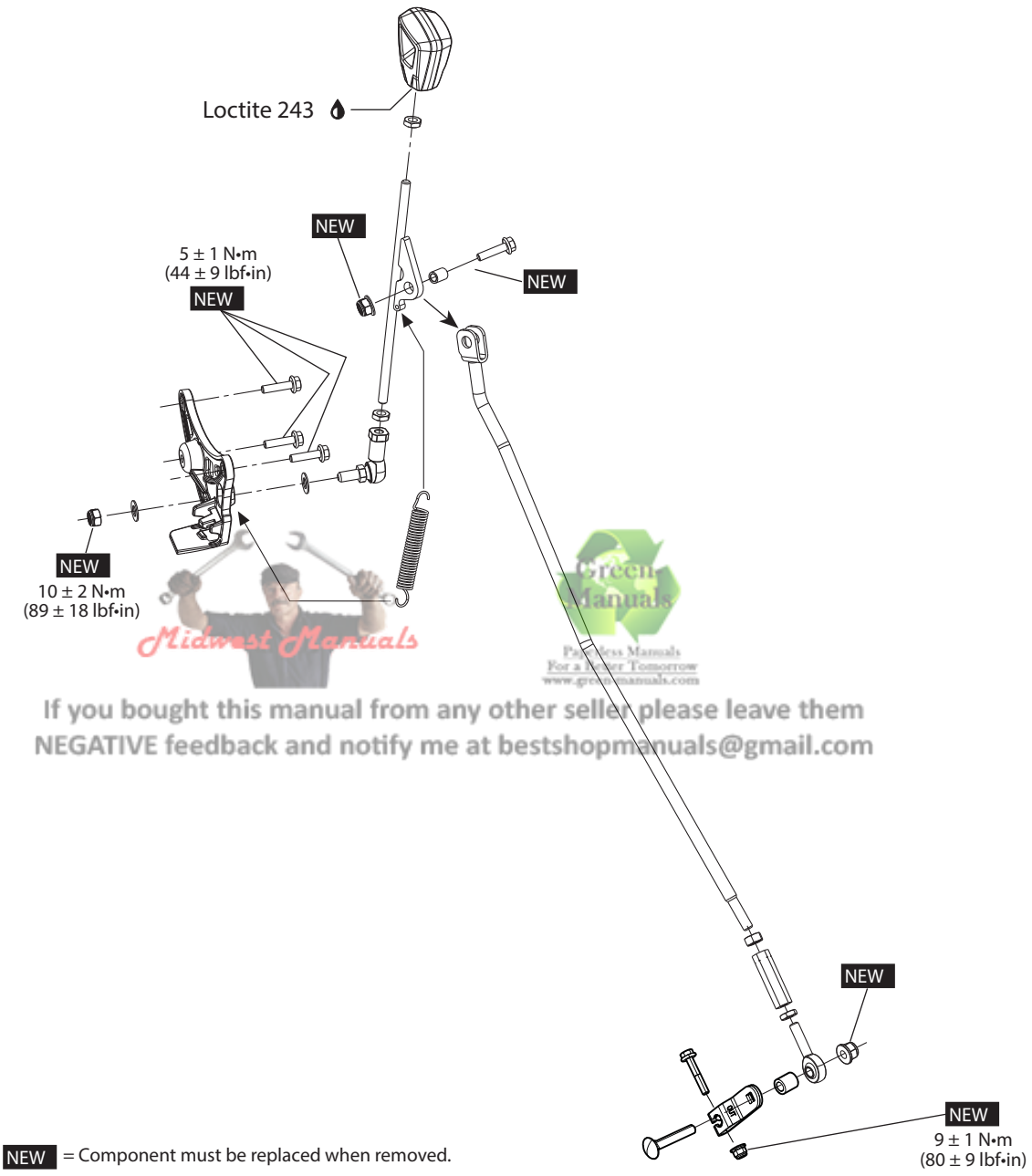

Midwest Manuals
Green Manuals
Paperless Manuals
For a Better Tomorrow
www.greenmanuals.com
If you bought this manual from any other seller please leave them
NEGATIVE feedback and notify me at bestshopmanuals@gmail.com

vmr2020-004-001

PROCEDURES

HANDLE

Removing the Handle

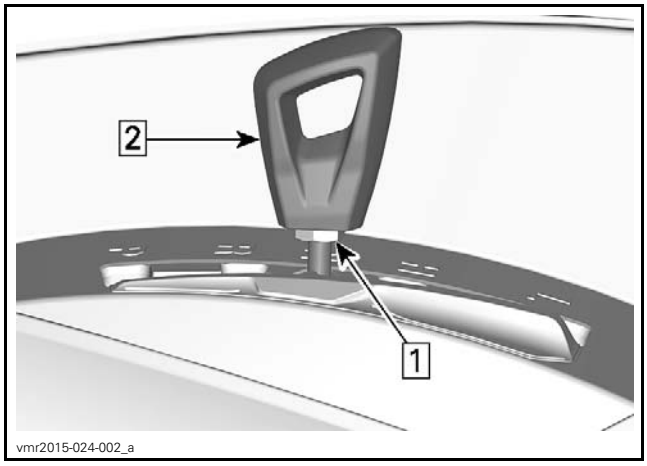

Step 1: Loosen lock nut
Step 2: Unscrew shift lever handle

Installing the Handle

The installation is the reverse of the removal procedure.

RECOMMENDED SERVICE PRODUCT	
Shift lever threads	LOCTITE 243 (BLUE) (P/N 293 800 060)

SHIFT LEVER

Removing the Shift Lever

1. Remove body parts as required. Refer to *BODY* subsection.
2. Place shift lever in **NEUTRAL** position.

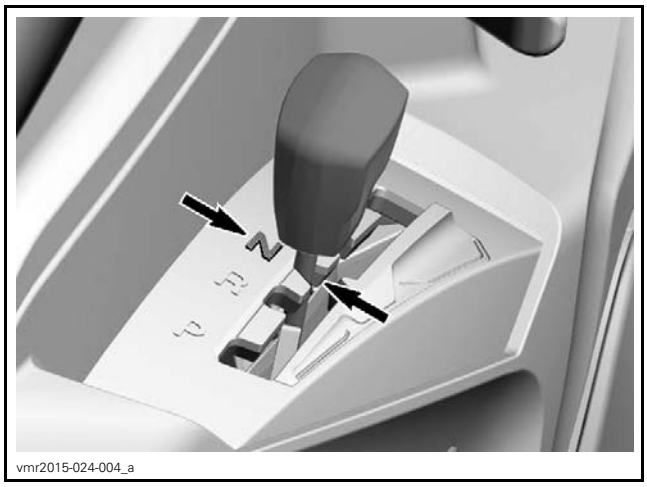

3. Secure vehicle using wheel chocks.
4. Remove parts as indicated in following illustrations.

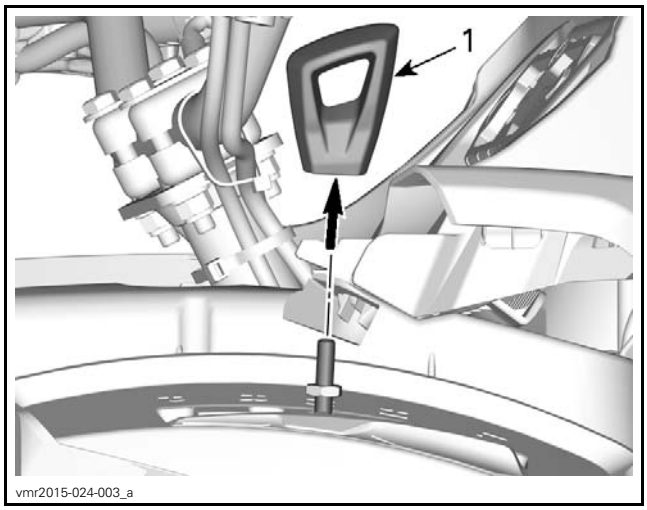

1. Shift lever handle

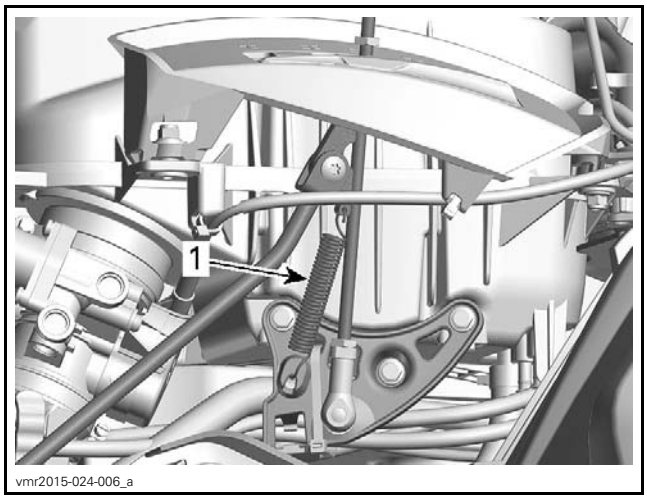

TYPICAL
1. Remove spring

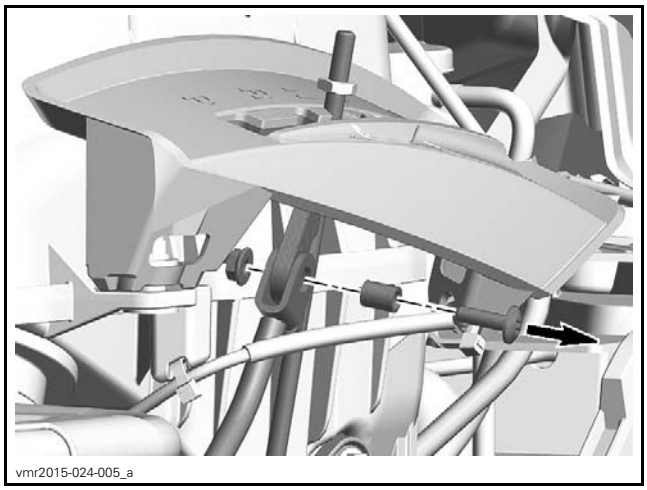

TYPICAL

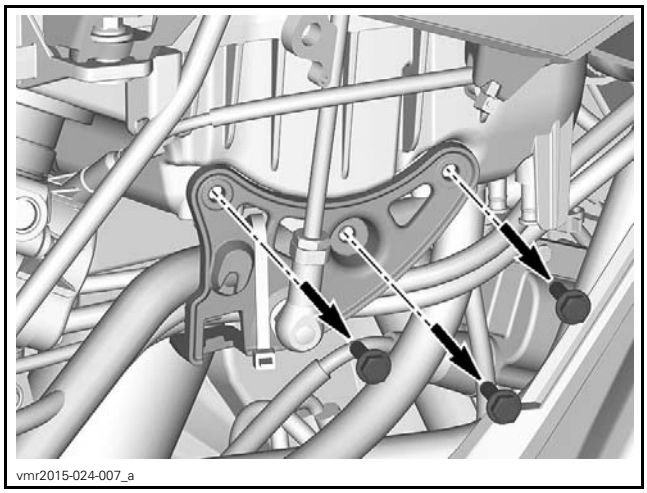

TYPICAL

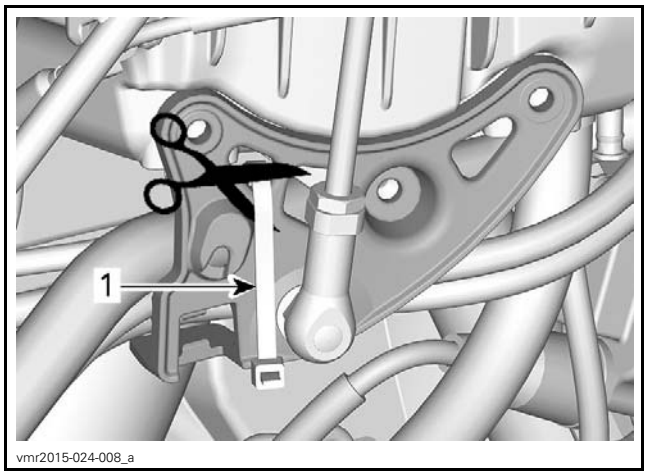

TYPICAL
1. Locking tie to cut

5. Remove shift lever with shift lever support.

Inspecting the Shift Lever

Check shift lever for bending or cracks.

Check spring and bushing condition.

Check ball joint condition.

Replace all damaged parts.

Installing the Shift Lever

The installation is the reverse of the removal procedure. However, pay attention to the following.

Adjust shift lever handle as per following illustration.

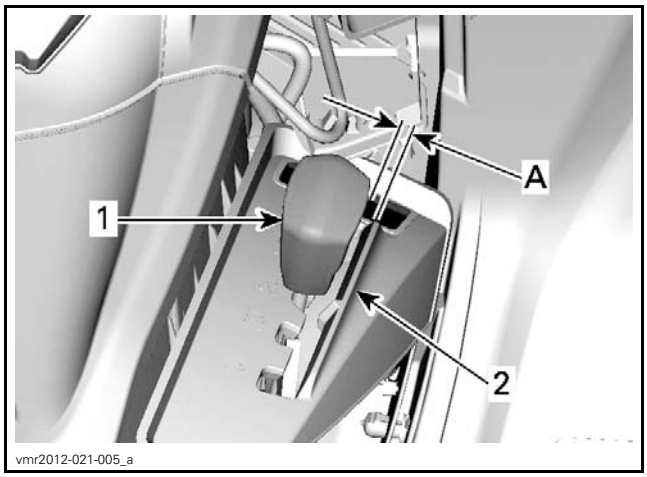

1. Handle
2. Ridge
A. Handle parallel with ridge

Check if shift lever works properly in all positions. Ensure throttle cable does not interfere with shift lever in all positions.

NOTE: Shift lever must be perfectly centered with the neutral position indicator when transmission is engaged in neutral.

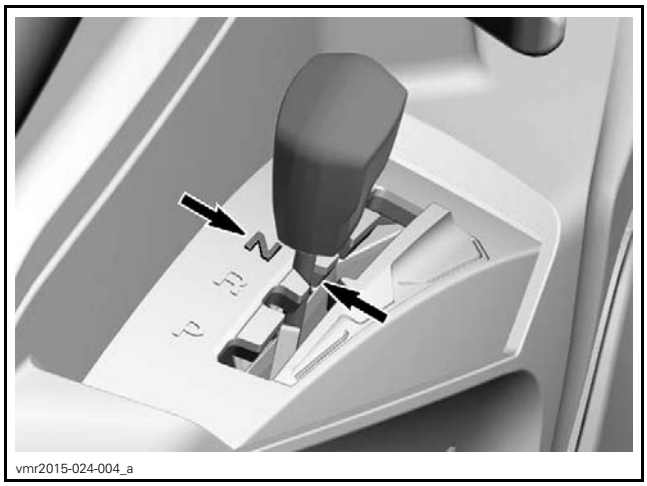

If adjustment is required, refer to *ADJUSTING THE SHIFT ROD* in this subsection.

SHIFT ROD

Adjusting the Shift Rod

1. Place shift lever in **NEUTRAL** position.

NOTICE **Move vehicle back and forth to ensure gearbox is set in neutral position.**

2. Secure vehicle using wheel chocks.
3. Remove body parts as required. Refer to *BODY* subsection.
4. Loosen shift rod adjustment nuts.

NOTE: Be aware that a nut has LH threads.

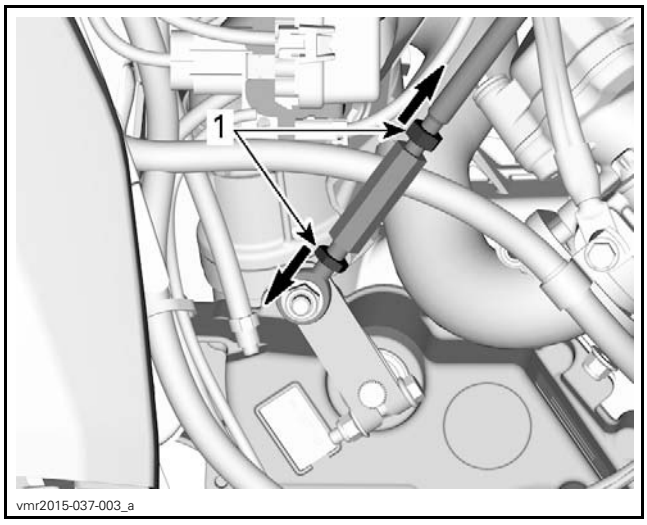

1. Adjustment nuts

5. Turn rod adjuster to center shift lever in neutral notch.

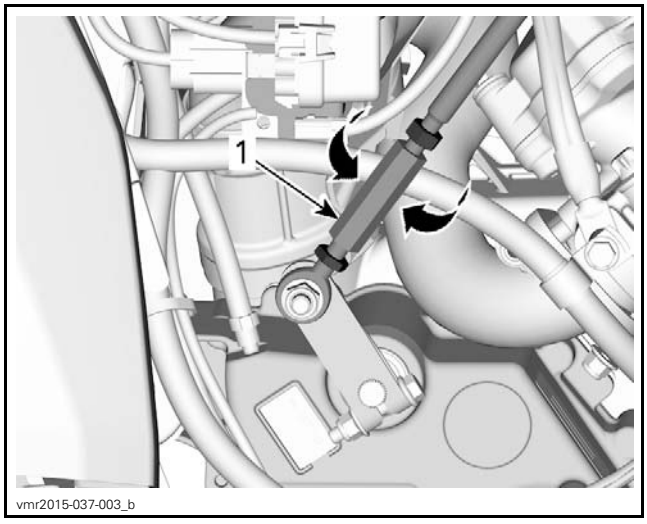

1. Shift rod adjuster

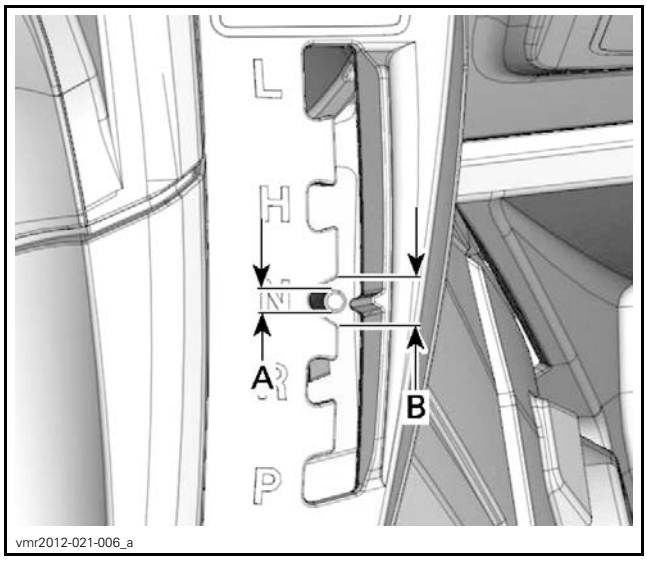

A. Shift lever
B. Neutral notch

6. Move shift lever in R position then in H position.
7. Place shift lever in NEUTRAL position.
8. Check if shift lever is properly centered in neutral notch. Readjust as required.
9. Hold adjuster steady and tighten lock nuts.

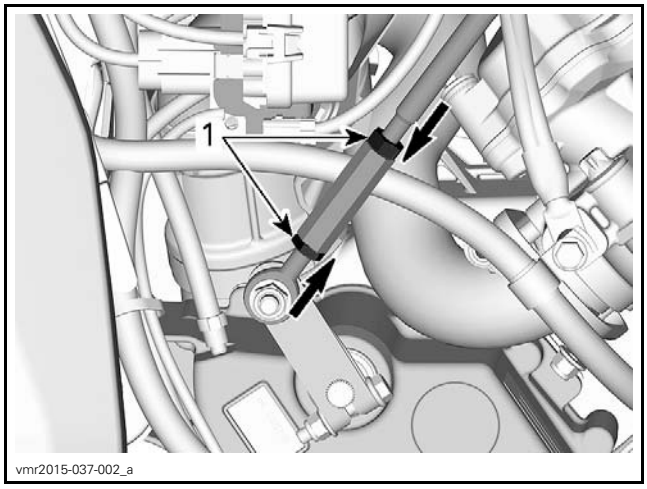

1. Adjuster lock nuts tightened

10. Test the shifter to confirm that the system works properly in all positions.

NOTE: Ensure shift rod ball joint is parallel with shift plate. It may be necessary to realign shift rod ball joint to ensure freedom of movement.

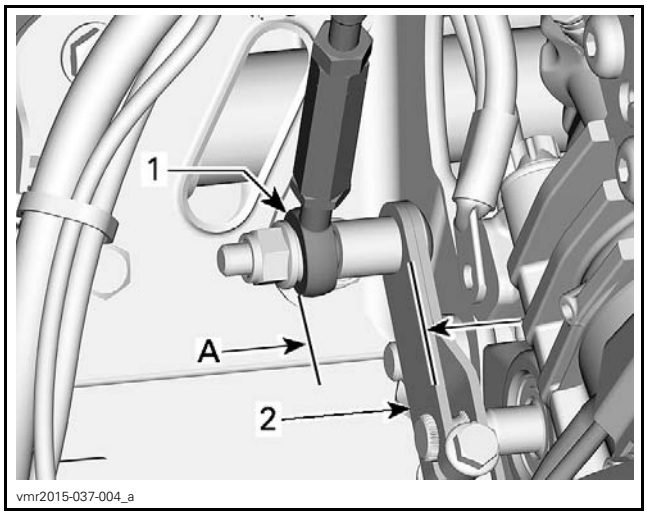

1. *Shift rod ball joint*
2. *Shift plate*

A. *Parallel within +/- 5°*

⚠ WARNING

After adjustment, make sure the PARK position is also properly set.

SHIFT PLATE

Removing the Shift Plate

NOTE: Do not remove shift plate needlessly.

1. Remove body parts as required. Refer to *BODY* subsection.
2. Place shift lever in NEUTRAL position.
3. Remove shift rod from shift plate.

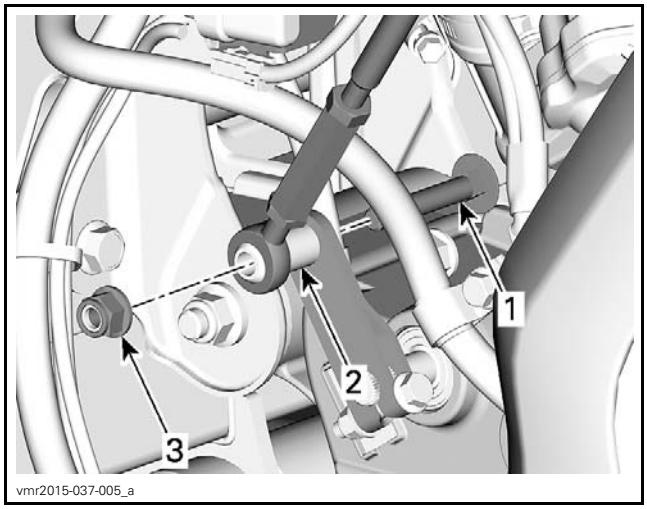

1. *Bolt*
2. *Spacer*
3. *Nut*

4. Trace an index mark on shift plate and shift shaft.

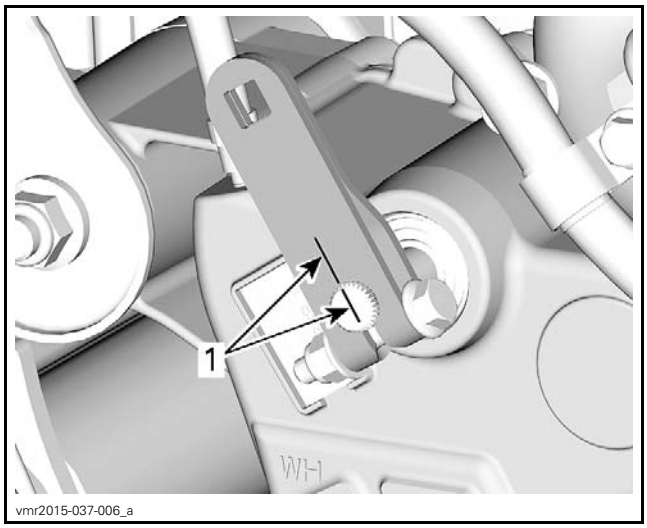

1. *Trace a mark on both parts*

5. Remove shift plate nut and bolt.

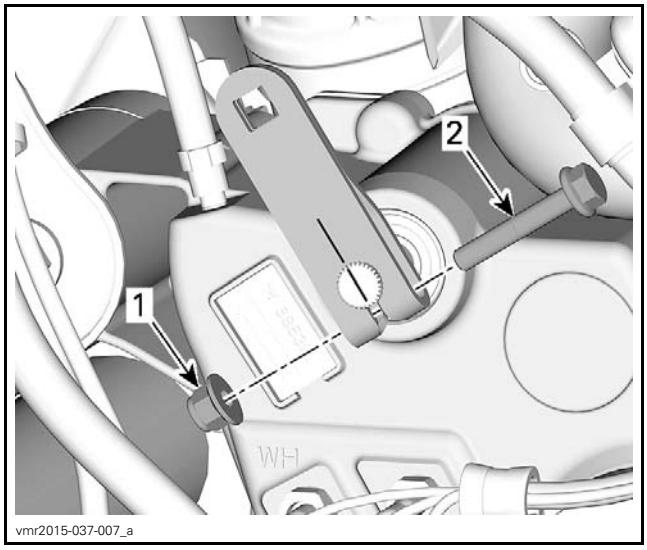

1. *Shift plate nut*
2. *Bolt*

6. Remove shift plate.

Inspecting the Shift Plate

Check shift plate for:

– Cracks
– Bending
– Spline condition.

Installing the Shift Plate

The installation is the reverse of the removal procedure. However, pay attention to the following.

Place gearbox in NEUTRAL position before shift plate installation.

Position shift plate with the marking "ATV OUT" visible outward.

Align shift plate using marks previously traced.

If there are no index marks, adjust shift plate as per following illustrations.

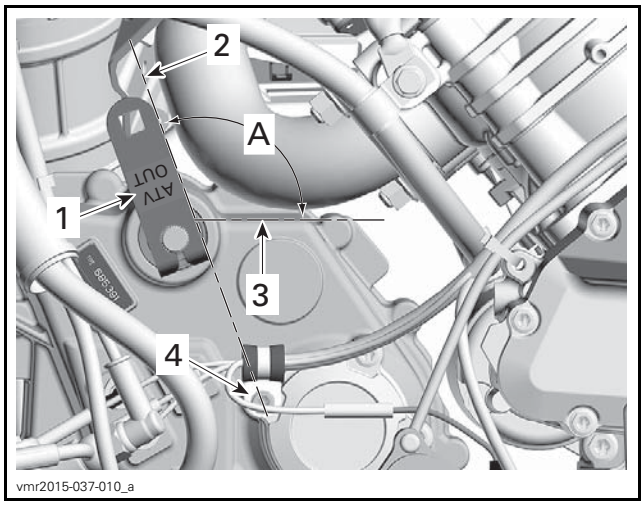

vmr2015-037-010_a

1. *"ATV OUT" marking this side*
2. *Forward edge of shift plate*
3. *Horizontal plane (top forward surface crankcase)*
4. *Center of bolt (secondary alignment reference)*

A. *110° +/- 2.5°*

Ensure that shift shaft protrudes shift plate as per illustration.

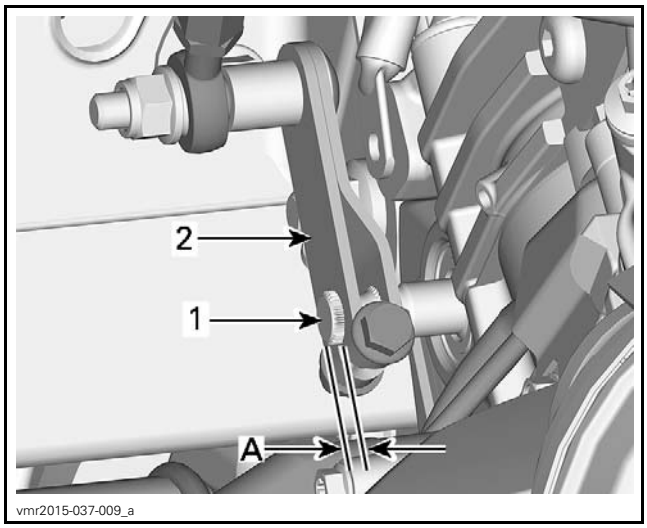

vmr2015-037-009_a

1. *Shift shaft end*
2. *Shift plate*

A. *2.5 mm ± 1 mm (.1 in ± .040 in)*

Adjust shift rod, refer to *ADJUSTING THE SHIFT ROD* in this subsection.

Tighten shift plate nut to specification.

TIGHTENING TORQUE	
Shift plate nut	9 N•m ± 1 N•m (80 lbf•**in** ± 9 lbf•**in**)

ENGINE MANAGEMENT SYSTEM (EMS) (with iTC)

Twin Cylinders

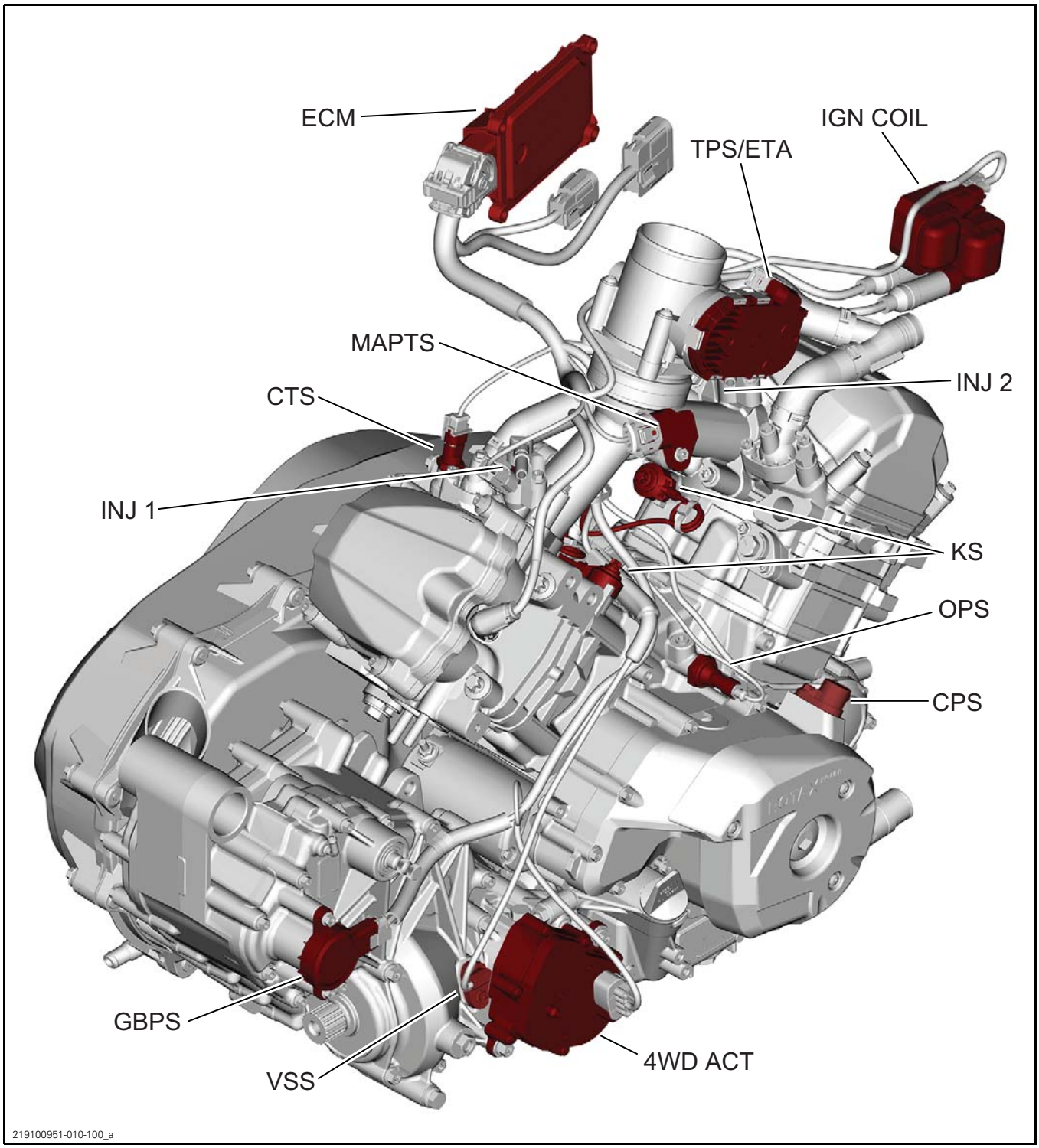

4WD ACT = 4WD Actuator with 4WD Indicator Switch
CPS = Crankshaft Position Sensor
CTS = Cooling Temperature Sensor
ECM = Engine Control Module
ETA = Electric Throttle Actuator
GBPS = Gearbox position sensor
IGN COIL = Ignition coil
INJ 1= Injector 1
INJ 2 = Injector 2
KS = Knock Sensor
MAPTS = Manifold Air Pressure and Temperature Sensor
OPS = Oil Pressure Switch
TPS = Throttle Position Sensor
VSS = Vehicle Speed Sensor

Single Cylinder

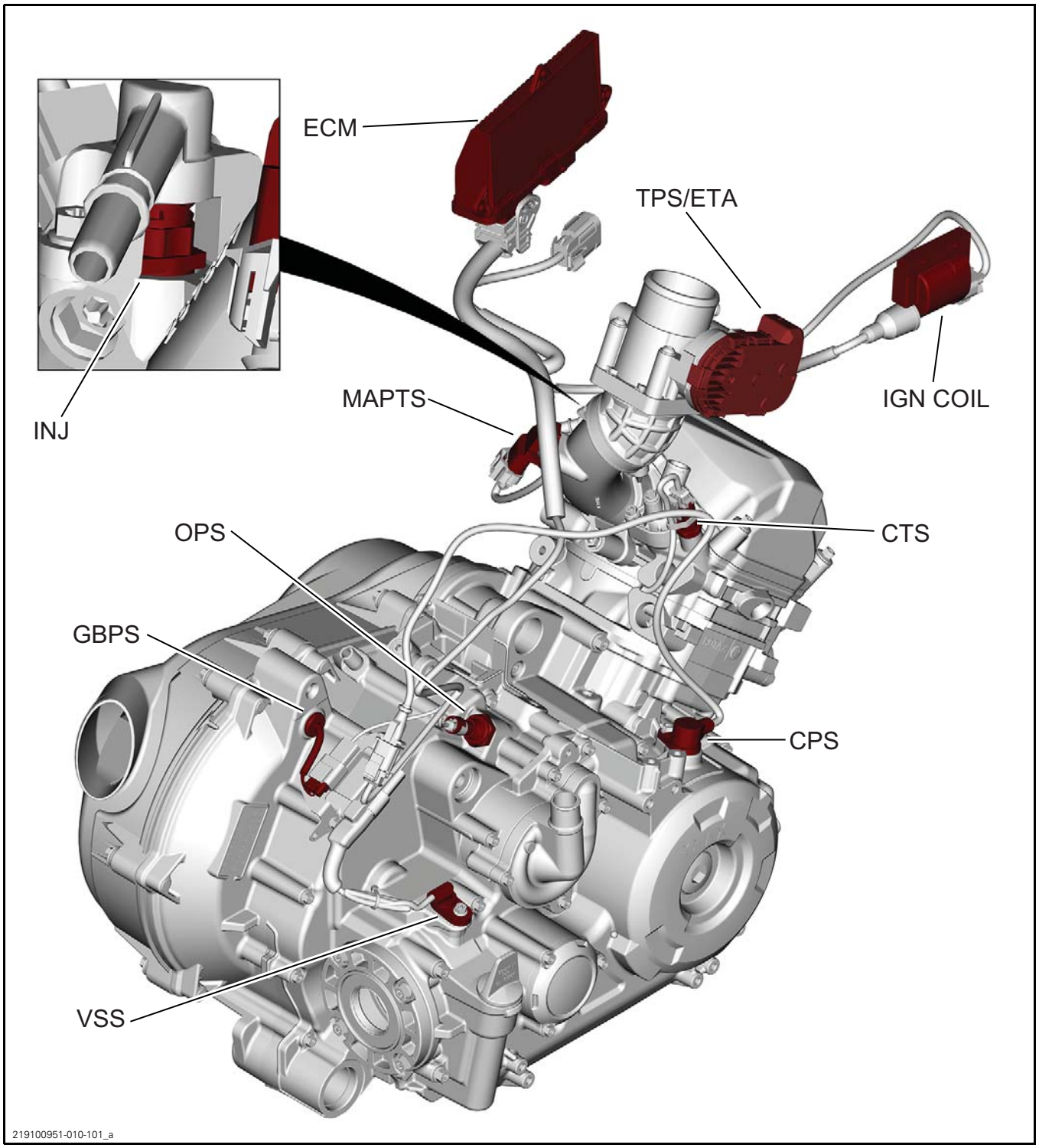

CPS = Crankshaft Position Sensor
CTS = Cooling Temperature Sensor
ECM = Engine Control Module
ETA = Electric Throttle Actuator
GBPS = Gearbox Position Sensor
IGN COIL = Ignition coil
INJ = Injector
MAPTS = Manifold Air Pressure and Temperature Sensor
OPS = Oil Pressure Switch
TPS = Throttle Position Sensor
VSS = Vehicle Speed Sensor

GENERAL

SYSTEM DESCRIPTION

The ECM ensures a high power output with clean combustion.

There are 7 main systems that are controlled by the ECM:

1. Electronic Fuel Injection (EFI)
2. Intelligent throttle control
3. Cooling system (cooling fan)
4. Ignition system
5. Starting system
6. Fuel system

NOTE: For further information related to these systems, refer to the applicable subsection.

The ECM is the central point of the engine management system.

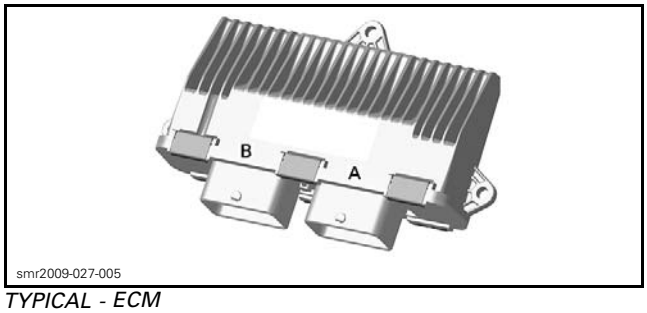

TYPICAL - ECM

The ECM is located behind the LH panel.

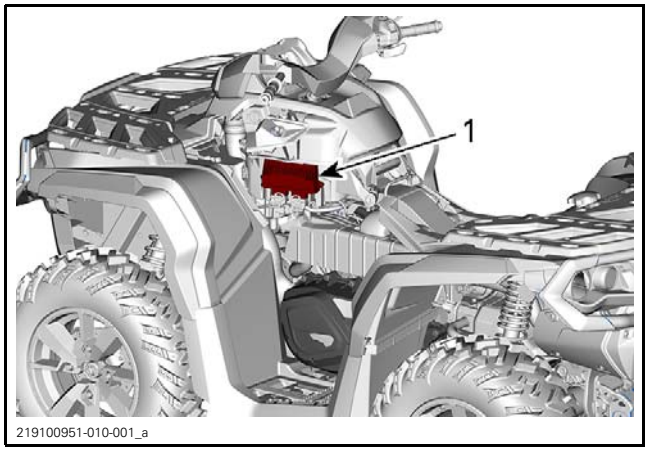

TYPICAL

The ECM reads input signals from various switches, controls, and sensors, that it compares to predetermined parameters, makes computations, and provides control signal outputs required for proper engine management.

The ECM also interacts through CAN bus with the gauge module for various functions, information exchange and display of messages. Refer to *CONTROLLER AREA NETWORK (CAN)* and *GAUGE* subsections.

The ECM also features a permanent memory that will store the information on the various ignition keys programmed to the vehicle, fault codes, customer information, and other engine information, even when the battery is removed from the vehicle.

Diagnostic Mode

The ECM features a self-diagnostic mode that is activated on system power up (ignition key ON) for certain systems and components, and when the engine is running for others. Refer to *DIAGNOSTIC AND FAULT CODES* subsection for more information.

Monitoring System

The MONITORING SYSTEM monitors various electrical and electronic components of the engine control systems such as the:

– ETA (Electric Throttle Actuator)
– TPS (Throttle Position Sensor)
– TAS (Throttle Accelerator Sensor)
– ECM (Engine Control Module).

The engine management system provides for redundancies in these components should a failure or partial failure occur to which it will adjust system operation to protect the vehicle and most of importantly, the driver.

Should the engine management system not respond (or not respond correctly) to a failure, then the monitoring system will react to ensure vehicle and driver safety.

The monitoring system therefore ensures the engine management system is functioning correctly.

Limp Home Mode

When a major component of the EMS is not operating properly, limp home mode will be set.

Engine RPM will be limited and/or engine behavior and control may be modified depending on the cause of the failure.

LIMP HOME will be displayed in the multifunction gauge and the CHECK ENGINE light symbol will be on in the gauge.

A failure of any of the following major components will force the vehicle into LIMP HOME MODE:

– TPS / ETC / TAS

- Injectors
- Low oil pressure
- High engine coolant temp
- MAPTS signal fault.

iCONTROL SYSTEM

GENERAL

iControl™ (intelligent Control systems) provides an environment whereby the operator can control many systems while constantly maintaining a proper grip on the handlebar.

All iControl inputs are at the operator's finger tips. The operator's attention can thus remain focused on driving.

One such system is the intelligent throttle control system (iTC). This system provides improved response to operator inputs and increased maneuverability and control.

iTC (INTELLIGENT THROTTLE CONTROL)

The iTC system uses a throttle accelerator sensor (TAS) at the throttle lever to provide command signals to the ECM (Engine Control Module).

The throttle body in this system encompasses a throttle position sensor (TPS) and an electric throttle actuator (ETA). The two together are known as the electronic throttle control (ETC).

The ECM compares the TAS signal to the TPS signal and provides appropriate control signals to the ETA to regulate the butterfly valve position. With this system, there is no need for a traditional throttle cable.

CONTROLLER AREA NETWORK (CAN)

GENERAL

SYSTEM DESCRIPTION

The CAN (Controller Area Network) protocol is an ISO standard for serial data communication. The CAN bus links the ECM, multifunction gauge and DPS module together so that they can communicate to each other and interact as required. The components (modules) are connected together by 2 wires and are in constant communication at a rate of about every 20 milliseconds. CAN lines consist of a pair of wires (WHITE/BEIGE and WHITE/BLACK).

If a component or system malfunction is detected, a module (ECM, multifunction gauge or DPS) may generate a fault code, which it transmits through the CAN bus as a signal. The fault signal may be used for various functions such as triggering the display of an error message in the multifunction gauge cluster, turning on a fault indicator light, limiting or inhibiting vehicle or engine operation, or viewed using the BRP diagnostic software (BUDS2) for troubleshooting.

Using BUDS2, technicians may also communicate through the diagnostic connector (DB) with electronic modules (ECM, Cluster, DPS, CCK) for various reasons such as:

– Extracting data
– Programming a module
– Changing settings
– Viewing fault codes
– and for various other functions.

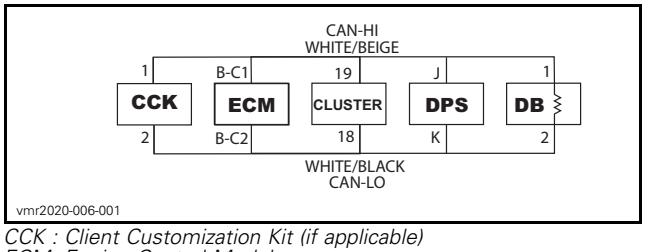

CCK : Client Customization Kit (if applicable)
ECM: Engine Control Module
CLUSTER: Multifunction Gauge
DPS: Dynamic Power Steering
DB: Diagnostic Connector
WHITE/BEIGE: (wire color code)
WHITE/BLACK: (wire color code)

COMMUNICATION TOOLS

SERVICE TOOLS

Description	Part Number	Page
DIAGNOSTIC CABLE	710 000 851	1
MPI-2 INTERFACE CARD	529 036 018	1
MPI-3 INTERFACE CARD	529 036 353	1

GENERAL

Connect vehicle to the BRP Diagnostic Software BUDS2.

Refer to the **B.U.D.S. directory** on *KNOWLEDGE CENTER* for all B.U.D.S. related information, including:

- Download link
- User manual (navigation through menus, programming keys, reading fault codes, writing data to modules etc.)
- Installation instructions.

Refer to the BRP B.U.D.S. chart to ensure you are using the appropriate hardware and tools.

Search keyword: "BUDS".

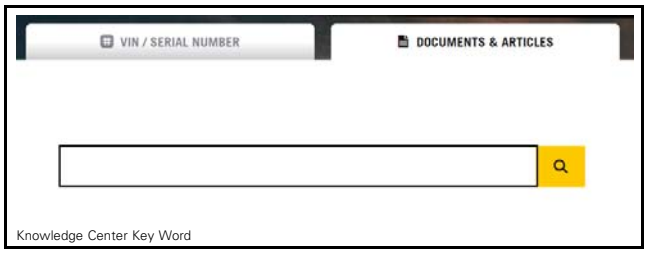

Knowledge Center Key Word

REQUIRED TOOLS

MANDATORY TOOLS
A personal computer (laptop or desktop)
MPI-2 INTERFACE CARD (P/N 529 036 018)
OR
MPI-3 INTERFACE CARD (P/N 529 036 353)

MANDATORY TOOLS
DIAGNOSTIC CABLE (P/N 710 000 851)
OPTIONAL TOOL
Extension cable available at electronic retail outlets. Do not exceed 7.5 m (25 ft)

TROUBLESHOOTING

DIAGNOSTIC TIPS

Troubleshooting the MPI Connection

MPI Status Lights

The MPI card includes 2 status lights that indicate the connection condition: USB and CAN. Both lights must be GREEN to function properly. Otherwise, refer to the following charts.

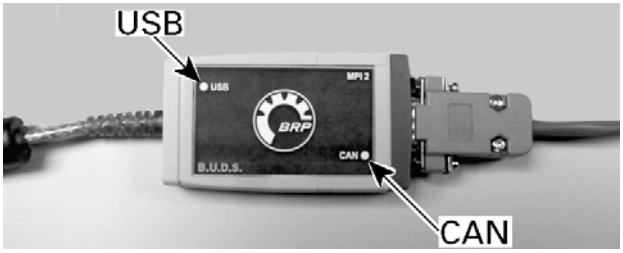

vdd2006-001-151_b

MPI-2 CARD

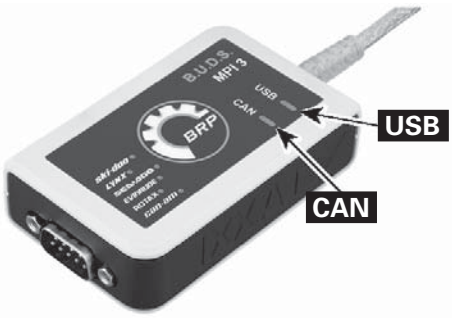

vmr2016-128-001_a

MPI-3 CARD

Prerequisite for USB Communication:
- Computer turned on.
- MPI card connected to computer.

COMMUNICATION PROBLEM (USB)	
STATUS	WHAT TO DO
Light is OFF	Check USB connection between MPI card and computer. Check USB operation on computer (hardware or USB drivers)
Light is GREEN	Connections are GOOD. Communication can take place on USB side

Prerequisite for CAN Communication:
- MPI card connected to diagnostic connector on vehicle.
- Computer turned ON
- The D.E.S.S. key installed on the engine D.E.S.S. post (if applicable).
- ECM is powered.

COMMUNICATION PROBLEM (CAN)	
STATUS	WHAT TO DO
CAN Light is OFF	– BUDS2 does not communicate with the vehicle. – Check connections from computer to vehicle. – Check if BUDS2 is started. – Check if vehicle is powered: is cluster turned ON? If it is not ON, install the D.E.S.S. key on the D.E.S.S. post (if apllicable).
CAN Light is RED	This occurs when BUDS2 looses communication with vehicle. – Check connections from computer to vehicle. – Check if vehicle is powered: is cluster turned on ? If not, install the D.E.S.S. key on the D.E.S.S. post (if applicable).
CAN Light is GREEN	– Connections are GOOD. BUDS2 communicates normally with the vehicle.

PROCEDURES

MULTI-PURPOSE INTERFACE CARD (MPI-2 OR MPI-3)

The MPI (Multi-Purpose Interface) in conjunction with the diagnostic cable is used with BUDS2 to communicate with the ECM (engine control module) and other modules.

MPI Card Power

The MPI card uses the power from the computer's USB port.

Diagnostic Connector Location

The 6-pin diagnostic connector is located under the seat.

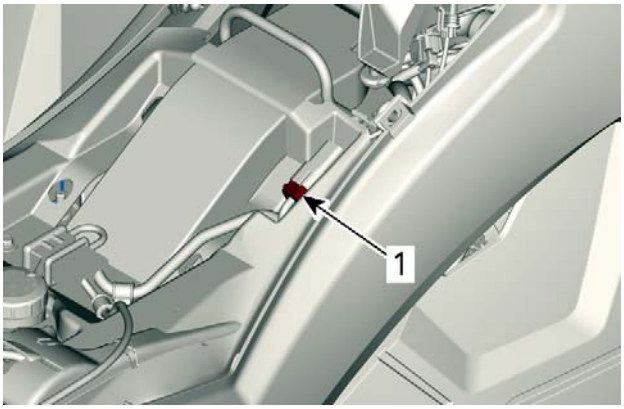

219100943-032-001_a

1. Diagnostic connector

DIAGNOSTIC AND FAULT CODES

GENERAL

MONITORING SYSTEM

The ECM features a monitoring system that self-diagnoses various electrical and electronic components. This mode becomes active when the ignition key is turned ON.

NOTE: Some components require the engine to be running to be monitored (fuel injectors for example).

The monitoring system continuously validates that the components (control modules, sensors and actuators) are not faulty or defective. When a malfunction is detected, the related electronic module(s):

– Sets an active fault code.
– Adapts the proper protection strategy according to the failure.
– Sends out signals to the multifunction gauge to inform the rider of a particular condition.

If a minor fault occurs, the engine and vehicle will continue to operate without noticeable loss of performance.

If a more important fault occurs, engine RPM may be limited. The engine/vehicle will continue to operate with reduced performance.

If a major component of the Engine Management System (EMS) fails, engine RPM will be limited as well as vehicle speed. Refer to *LIMP HOME MODE* in the *ENGINE MANAGEMENT SYSTEM* subsection.

These strategies are used to protect engine/electrical system from damage and to maintain safe operation of the vehicle. In extreme cases, the engine may also be completely shut down.

Messages in Gauge for Problematic Conditions

If an abnormal condition occurs, the gauge will display one of the following messages. It can be combined with a pilot lamp.

MESSAGE	DESCRIPTION
CHECK ENGINE	All active or previously activated faults that require attention. No engine limitation engaged.
LIMP HOME	Critical faults requiring diagnostic as soon as possible. An engine limitation is engaged and/or the engine behavior is modified.
LO BATT VOLT	Low battery voltage detected by ECM.
HIGH BATT VOLT	High battery voltage detected by ECM.
LOW OIL	Low oil pressure detected by the ECM.
D.E.S.S. KEY NOT RECOGNIZED	D.E.S.S. KEY is not recognized by ECM.
HI TEMP	High temperature detected by the ECM.
ECM CRC ERROR	Error message from ECM.
TPS FAULT	TPS (throttle position sensor) fault, generally followed by a Limp Home message.
BRAKE SWITCH FAULT	Brake signal fault.
ECM NOT RECOGNIZED	Message displayed when the gauge is unable to identify the ECM.

MESSAGE	DESCRIPTION
TRANSMISSION SIGNAL FAULT	Gearbox position sensor fault active. "E" is also displayed in the gear display.
PPS FAULT	When one or both sensor of the TAS (throttle accelerator sensor) is/are faulty, erratic or out of range or that the ratio between the two is incorrect, the message will be displayed and the check engine pilot lamp will be lit.
MANUAL LIMP HOME	When the TAS Limp Home (throttle accelerator sensor) is engaged, the message will be displayed.

Limp Home Mode

Refer to *LIMP HOME MODE* in the *ENGINE MANAGEMENT SYSTEM* subsection.

FAULT CODES

Fault Code Categories

A fault code consists of an alphanumeric designator followed by a hexadecimal number of 3 digits. The alphanumeric designator defines the category of the fault code while the hexadecimal number refers to a unique fault.

FAULT CODE CATEGORIES		
ALPHANUMERIC DESIGNATOR	MODULE/ SYSTEM	EXAMPLE OF FAULT CODE
From P0 to P3	Power train	P0116
From U0 to U3	Communication between module and sensors	U0073

RELATED MODULE AND FAULTS	
MODULE	FAULT CODE CATEGORY
ECM	P and U
Cluster	P and U
DPS	P and U

Fault Code States

Fault codes have 3 possible states:

– Active
– Occurred
– Inactive.

Active Fault Codes

An active fault code is an indication of a fault that is **currently triggered**.

The active fault may or may not compromise normal operation of the system(s). Service action should be taken to correct the problem that caused the fault code.

Once the fault condition(s) of the active fault is no longer present, its state will change to "occurred".

Occurred Fault Codes

An occurred fault code indicates a fault that was active, but **no longer** is.

The occurred fault does not presently affect system or component operation but is retained as a history of the faults that were detected.

The fault may have been generated due to a system or component that was momentarily operating outside normal parameters. Repeated occurred faults of this type should be considered when troubleshooting a problem, and may require that maintenance action be taken.

An occurred fault may also be generated when disconnecting and reconnecting a component, replacing a burnt fuse, when the software update of an electronic module has been carried out, or may be due to a momentary high or low voltage.

Inactive Fault Codes

An inactive fault code represents a fault code that is neither active, nor occurred. It is simply part of a list of all possible faults that can be monitored by the ECM and multifunction gauge, which may become active or occurred if the monitoring system detects an applicable fault. These codes can be viewed in BRP diagnostic software BUDS2.

Reading and Clearing Fault Codes

For more information pertaining to the faults code status and report, refer to BUDS2.

How to Read Fault Codes Using the Multifunction Gauge

Refer to the applicable *GAUGE* subsection.

NOTE: A fault code must be in an "Active" state to be displayed in the multifunction gauge. BRP diagnostic software BUDS2 must be used to read all fault codes states.

How to Find Fault Code Descriptions

Connect BUDS2 to the vehicle.

Navigate to the **Faults** page.

Browse lists of active/occurred and inactive fault codes.

FAULT CODE DIAGNOSTIC

Diagnostic Tips

To see the last two minutes of operating conditions, click on the **Summary** tab in BUDS2 and select **Statistics**.

NOTE: The page displays data whatever there is fault code(s) or not.

GENERAL GUIDELINES TO SOLVE FAULT CODES	
CONDITION	ACTION
Troubleshooting vehicle	Use BUDS2 to: Read fault codes. Display "Active" faults to see components currently not operating normally. Display "Occurred" faults to troubleshoot intermittent problems. Monitor system(s), sensor(s), switches and actual conditions. Activate component(s) for troubleshooting. Set components (resets etc). Know the last minute of operating conditions by using the "History" page. Know the operating conditions, if available, when a fault code occurred by using the "More details" button in the fault page.
New fault(s) appear after a vehicle maintenance or repair	Check sensor connections or mixed up connections. **Before** vehicle maintenance: Read the electronic modules with BUDS2 Save and print the BUDS2 file (keep faults option only). **After** vehicle maintenance: Read the electronic modules with BUDS2 Compare the fault code(s) before and after the maintenance using the printed copy and the current reading. Investigate only the newly fault codes. Clear all occurred faults
Sensor "Active" fault	Read the fault description in BUDS2
Low system voltage on one module. Power problem on sensor(s)	Check related fuse(s) and relay. Check related power and ground wires. Check for common power supply to several sensors/modules (refer to *POWER DISTRIBUTION AND GROUNDS)*. NOTE: Some sensors are supplied by the battery while others are supplied by a module.
Low system voltage on several modules (several communication faults will also appear)	Check battery condition and connections. Check related fuse(s) and relay. Check voltage regulator/rectifier.
High system voltage on several modules	A battery charger has likely been used to substitute the vehicle battery. Clear all occurred faults and check again. Check voltage regulator/rectifier.
When all modules report that a module is missing	Check the module that is reported as missing. Check related fuse(s) and relay. Check related power and ground wires.

GENERAL GUIDELINES TO SOLVE FAULT CODES	
CONDITION	ACTION
When several modules are in fault	Search for a common problem such as a faulty sensor.
CAN buss OFF	When several modules and sensors report that a module is missing. The missing module may report CAN bus off. Check related CAN wires (continuity, short to ground, short between CAN low and high). Check module pins and wiring terminals. Then, the other modules should stop reporting that module is missing.
Occurred fault(s)	May have been generated due to a system or component that was momentarily operating outside normal parameters.
	May be generated when disconnecting and reconnecting a component, replacing a burnt fuse, or may be due to a momentary high or low voltage.
	Before being "Occurred", a fault has always been "Active" for a certain time, indicating that an unexpected condition or problem has been present during the driving cycle. A frequent momentarily fault or an intermittent fault may never be seen as "Active" in BUDS2 while there is still a pending problem. This type of malfunctions can be discovered by looking at the "Occurred" faults and then by evaluating the fault count. As long as a fault is present, it is displayed as "Active".
Fault count (0 - 255)	**Low value:** Suggests handling problems (connections, terminal contact/ shape etc.). **High value:** Suggests a frequent and unsolved problem. The problem should be investigated.
Fault conditions	Look for abnormal, excessive values.
Hard to find problems	When the basic troubleshooting has been done and the fault code(s) persists, often the problem is related to the wiring harness, connections or electromechanical components. Short to ground, to battery or between wires. Wire splices, chafing, terminal problems (pulled out, bent, out of shape, corroded etc.). Bad contacts in switch or relay.

ECUs share information and their systems may interact with each other. Certain faults may cause more than one ECU to set a fault code or indication (pilot lamp or message) as the failure of some components may affect the operation of several systems.

SPECIFIC FAULTS

TPS Fault

A TPS fault may be considered to be a major fault as the TPS provides the most important feedback (2 signals) to the ECM on throttle position.

A TPS fault affects engine control as the throttle plate is moved by the ETA (electric throttle actuator) which, is controlled by the ECM (see *INTELLIGENT THROTTLE CONTROL (ITC)* subsection).

A TPS fault is generally followed by LIMP HOME mode and the engine is brought back to idle, or may be completely shutdown.

Low Battery Voltage Fault

If the battery voltage is low when the engine is running at idle RPM, the ECM will command an increase in RPM to a set value, thereby increasing the charging system output in order to prevent the battery from being discharged, and to allow normal system operation.

TAS Fault

If one TAS (throttle accelerator sensor) signal is missing, LIMP HOME MODE will be activated and the check engine light will come ON. Pressing and holding the OVERRIDE button will allow normal control of the accelerator pedal.

If both sensors in the TAS are at fault, a TAS FAULT message will appear in the gauge, the check engine light will come ON and the engine will run at idle. The accelerator pedal will not have any affect on engine RPM. However, the vehicle may be driven in LIMP HOME MODE by pressing the OVERRIDE button.

When limp home mode is engaged using the override button, a MANUAL LIMP HOME message will appear in the gauge. The OVERRIDE button can then be used as the accelerator, vehicle speed is controlled by pressing and/or releasing the button.

BRAKE ACTIVATION Fault Message in Gauge

If a brake signal is received continuously for 15 seconds above 5 km/h (3 MPH), a BRAKE message will be displayed in the gauge.

DIAGNOSTIC AND FAULT CODES

GENERAL

FAULT CODE TABLE

PCODE	MODULE	DESCRIPTION	CAUSE	ACTION
C2109	SCM-XMR	Release valve activation delay exceeded	Pressure did not drop to desired set point after predefined delay Release valve tube momentary blocked Blown valve fuse Damaged circuit wires or connectors Faulty valve block Faulty SCM	1- Go to Activations - SCM and start Rear Test routine. If the test passed, the system is working properly. Check the harness and connection to see a potential source of intermittent dysfunction, if nothing is found clear the occurred fault and no more actions have to be done. Mud, dust or water in the release tube may explain the fault code. If the Test status shows a Fail_release, proceed to next action step. 2-Verify the release tube (orange) for obstruction. If nothing is found go to next action step. 3- Unplug the valves block connector and measure that 12V is present between pin D of the connector on the SCM side and the battery negative post. If not, verify the valve fuse and relay (refer to schematics for more information). Verify the harness and the connection between the valve and the SCM. If everything is fine, go to next action step. 4- Verify the release valve activation by disconnecting the valve block electrical connector and applying 12V across pin D and H on valve connector. If the release valve is operating, change the SCM, otherwise change the valve block.

Midwest Manuals
Green Manuals
Paperless Manuals
For a Better Tomorrow
www.green-manuals.com
If you bought this manual from any other seller please leave them NEGATIVE feedback and notify me at bestshopmanuals@gmail.com

PCODE	MODULE	DESCRIPTION	CAUSE	ACTION
C2111	SCM-XMR	Auxiliary line pressure sensor value out of range	Too many values of the external sensor out of range (negative pressure) Sensor disconnect Damaged circuit wires or connectors Faulty auxiliary line sensor Faulty SCM	1- Go to Activations - SCM and start Rear Test routine. Verify that the Shock Absorber Pressure and the Auxiliary Line Pressure correlates in BUDS. If the test is done with no fault, the system is working properly. Check the harness and connection to see a potential source of intermittent dysfunction, if nothing is found clear the occurred fault and no more actions have to be done. If the Test Status shows a Fail_Comparison_Sensor_Test, verify for leak. If no leak found, verify the wiring and connector of the external sensor and the SCM. In the next action step, verify which of Shock absorber or Auxiliary Line Pressure sensors is defective. 2-Make sure to have no pressure in the system by activating the relief valve in Activation -SCM. Connect the supplied air hose into the compressor fitting and plug it to a known pressure supply in the range of 30 to 120 psi (as car tire) and compare it to the Shock absorber pressure and Auxiliary line pressure, it should be similar. If the Shock absorber pressure is off, change the SCM module. Go to next action step to perform Auxiliary Line Pressure sensor test. 3-Back probe the signal coming from the sensor between the pin 3 of the SCM electrical connector and the negative battery post (this action must be done with special probe to not damage the connector seal). The value must be between 0.9 and 8.3 Volts for a pressure range of 0 - 100 psi. If not go to next action step. If the value is in the range, the Auxiliary Line Pressure sensor is fine, change the SCM. 5- Unplug the Auxiliary Line Pressure sensor and make sure to have 12V between pin 3 and 1 on the connector coming from SCM. If 12V is present change the sensor, if not change the SCM.

PCODE	MODULE	DESCRIPTION	CAUSE	ACTION
C21E0	SCM-XMR	System rear suspension pumping delay exceeded	Pressure did not reach to desired set point after predefined delay Leak in the system Jammed compressor intake tube Damaged circuit wires or connectors Blown compressor fuse Corroded or disconnected compressor GND Faulty relay Faulty compressor Jammed check valve Faulty SCM	1- Check for leaks. If no leak found go to next action step. 2- Go to Activations - SCM and start Rear Test routine. If the test is done with no fault, the system is working properly. Check the harness and connector to see a potential source of intermittent dysfunction, if nothing is found clear the occurred fault and no more actions have to be done. If the compressor is not starting check the compressor GND, harness and connection then continue to the next action step. If the compressor is running and the Test Status show a Fail_Pumping_Rear go to action step 6. 3-Test the compressor with an external power supply (as a 12V battery). If the compressor is functional go to next action step. 4-Unplug the relay and make sure to have 12V between battery negative post and relay pin 30. If not, check the compressor fuse and harness. If 12V is present, test the relay. If the relay is functional plug it back and go to next action step. 5- Disconnect the SCM, take a jumper wire and connect pin 8 to the battery negative post. If then the compressor starts, change the SCM. 6- Verify that the compressor intake tube (transparent) is not blocked or kinked. Unplug the SCM air tube (yellow) and start the compressor. If air blow out of the tube change the SCM. If not go to next action step. 7- During the Rear Test routine verify the pressure sensors value. If the Shock Absorber Pressure and Auxiliary Line Pressure is not going up verify the first check valve at the exit of the compressor. If only the Shock Absorber Pressure is not going up verify the second check valve after green tube.
C21E1	SCM-XMR	System rear suspension high leakage detected	Leak in the system	1- Verify suspension system for air leaks.

PCODE	MODULE	DESCRIPTION	CAUSE	ACTION
C21E2	SCM-XMR	System rear suspension valve failure	Too many occurrence of pressure pumping and release in short delay Rear valve tube blocked Blown valve fuse Faulty valve block Damaged circuit wires or connectors Faulty SCM	1- Disconnect the air line to the rear shocks. Go to Activations - SCM and start Rear Test routine. If the air blows out the system is working properly. Check the harness and connection to see a potential source of intermittent dysfunction, if nothing is found clear the occurred fault and no more actions have to be done. If the air do not blow out continue to next action step. 2- Verify the air tube (black) from the valve to the rear suspension. If nothing found go to next action step. 3- Unplug the valve block electrical connector and verify that 12V is present between pin A and battery negative post. If not verify valve fuse, relay and harness (refer to schematics for more information). If 12V is read go to next action step. 4- Verify the rear valve activation by disconnecting the valve block electrical connector and applying 12V across pin A and E while compressor running (Go to Activations - SCM and start Rear Test routine). If the rear valve is opening and filling the shocks change the SCM. If the rear valve is not opening, change the block valve.

PCODE	MODULE	DESCRIPTION	CAUSE	ACTION
C21F0	SCM-XMR	System front suspension pumping delay exceeded	Pressure did not reach to desired set point after predefined delay Leak in the system Jammed compressor intake tube Damaged circuit wires or connectors Blown compressor fuse Corroded or disconnected compressor GND Faulty relay Faulty compressor Jammed check valve Faulty SCM	1- Check for leaks. If no leak found go to next action step. 2- Go to Activations - SCM and start Rear Front routine. If the test is done with no fault, the system is working properly. Check the harness and connector to see a potential source of intermittent dysfunction, if nothing is found clear the occurred fault and no more actions have to be done. If the compressor is not starting check the compressor GND, harness and connection then continue to the next action step. If the compressor is running and the Test Status show a Fail_Pumping_Rear go to action step 6. 3-Test the compressor with an external power supply (as a 12V battery). If the compressor is functional go to next action step. 4-Unplug the relay and make sure to have 12V between battery negative post and relay pin 30. If not, check the compressor fuse and harness. If 12V is present, test the relay. If the relay is functional plug it back and go to next action step. 5- Disconnect the SCM, take a jumper wire and connect pin 8 to the battery negative post. If then the compressor starts, change the SCM. 6- Verify that the compressor intake tube (transparent) is not blocked or kinked. Unplug the SCM air tube (yellow) and start the compressor. If air blow out of the tube change the SCM. If not go to next action step. 7- During the Front Test routine verify the pressure sensors value. If the Shock Absorber Pressure and Auxiliary Line Pressure is not going up verify the first check valve at the exit of the compressor. If only the Shock Absorber Pressure is not going up verify the second check valve after green tube.
C21F1	SCM-XMR	System front suspension high leakage detected	Leak in the system	1- Verify suspension system for air leaks.

PCODE	MODULE	DESCRIPTION	CAUSE	ACTION
C21F2	SCM-XMR	System front suspension valve failure	Too many occurrence of pressure pumping and release in short delay Front valve tube blocked Blown valve fuse Faulty valve block Damaged circuit wires or connectors Faulty SCM	1- Disconnect the air line from the front shocks. Go to Activations - SCM and start Front Test routine. If the air blows out of both shocks the system is working properly. Check the harness and connection to see a potential source of intermittent dysfunction, if nothing is found clear the occurred fault and no more actions have to be done. If the air does not blow out even from one shock continue to next action step. 2- Verify the air tubes (blue) from the valves to both front shocks. If clear go to next action step. 3- Unplug the valve block electrical connector and verify that 12V is present between pin B and battery negative post (right) / between pin C and battery negative post (left). If not verify valve fuse, relay and harness (refer to schematics for more information). If both 12V are read go to next action step. 4- Verify the front valves activation by disconnecting the valve block electrical connector and applying 12V across pin B and F (right) or C and G (wrong in wire diagram) (left) while compressor running (Go to Activations - SCM and start Front Test routine.). If the front valves are opening and filling the shocks change the SCM. If either of the front valves are not opening, change the block valve.
P0008	ECM	Lost of Synchronisation	Engine Synchronisation Check Failed	Check for Crankshaft Position Sensor fault Check for dirty Crankshaft Position Sensor. Check compression on engine

PCODE	MODULE	DESCRIPTION	CAUSE	ACTION
P0107	ECM	Manifold Air Pressure Sensor voltage too Low	Damaged sensor, damaged circuit wires, damaged connector or damaged ECM pins, ECM voltage supply Low	Make sure sensor connector is fully inserted. Measure voltage between harness connector pins 1 and 3 . (Expected value: 4.8 to 5.1 volts) Measure resistance from connector: ECM-F3 to MAPTS-2 (Expected value: < 2 ohms) Measure resistance from connector: ECM-A1 to MAPTS-3 (Expected value: < 2 ohms) Measure resistance from connector: ECM-G2 to MAPTS-1 (Expected value: < 2 ohms) Measure resistance from connector: ECM-F2 to MAPTS-4 (Expected value: < 2 ohms)
P0108	ECM	Manifold Air Pressure Sensor voltage too High	Damaged sensor, wires shorted to battery +, ECM voltage supply too High.	Make sure sensor connector is fully inserted. Measure voltage between harness connector pins 1 and 3 . (Expected value: 4.8 to 5.1 volts) Measure resistance from connector: ECM-F3 to MAPTS-2 (Expected value: < 2 ohms) Measure resistance from connector: ECM-A1 to MAPTS-3 (Expected value: < 2 ohms) Measure resistance from connector: ECM-G2 to MAPTS-1 (Expected value: < 2 ohms) Measure resistance from connector: ECM-F2 to MAPTS-4 (Expected value: < 2 ohms)
P0112	ECM	Intake Air Temperature Sensor 1 circuit Low	Damaged sensor, damaged circuit wires, damaged connector or damaged ECM pins, ECM voltage supply Low	Make sure sensor connector is fully inserted. Measure voltage between harness connector pins 1 and 3 . (Expected value: 4.8 to 5.1 volts) Measure resistance from connector: ECM-F3 to MAPTS-2 (Expected value: < 2 ohms) Measure resistance from connector: ECM-A1 to MAPTS-3 (Expected value: < 2 ohms) Measure resistance from connector: ECM-G2 to MAPTS-1 (Expected value: < 2 ohms) Measure resistance from connector: ECM-F2 to MAPTS-4 (Expected value: < 2 ohms)

PCODE	MODULE	DESCRIPTION	CAUSE	ACTION
P0113	ECM	Intake Air Temperature Sensor 1 circuit High	Damaged sensor, wires shorted to battery +, ECM voltage supply too High.	Make sure sensor connector is fully inserted. Measure voltage between harness connector pins 1 and 3 . (Expected value: 4.8 to 5.1 volts) Measure resistance from connector: ECM-F3 to MAPTS-2 (Expected value: < 2 ohms) Measure resistance from connector: ECM-A1 to MAPTS-3 (Expected value: < 2 ohms) Measure resistance from connector: ECM-G2 to MAPTS-1 (Expected value: < 2 ohms) Measure resistance from connector: ECM-F2 to MAPTS-4 (Expected value: < 2 ohms)
P0114	ECM	Intake Air Temperature Sensor Intermittent	Damaged sensor, damaged circuit wires, damaged connector or damaged ECM pins, ECM voltage supply	Make sure sensor connector is fully inserted. Measure voltage between harness connector pins 1 and 3 . (Expected value: 4.8 to 5.1 volts) Measure resistance from connector: ECM-F3 to MAPTS-2 (Expected value: < 2 ohms) Measure resistance from connector: ECM-A1 to MAPTS-3 (Expected value: < 2 ohms) Measure resistance from connector: ECM-G2 to MAPTS-1 (Expected value: < 2 ohms) Measure resistance from connector: ECM-F2 to MAPTS-4 (Expected value: < 2 ohms)
P0116	ECM	Engine Coolant Temperature Sensor 1 circuit range/performance	Damaged sensor, wires shorted to battery +, ECM voltage supply.	Disconnect the sensor. Measure resistance from connector: ECM-F4 to CTS-1 (Expected value: < 2 ohms) Measure resistance from connector: ECM-C3 to CTS-2 (Expected value: < 2 ohms) Measure CTS resistance value (Expected value: 2280 to 2736 ohms at 19 to 21°C (66 to 70°F))
P0117	ECM	Engine Coolant Temperature Sensor 1 circuit Low	Engine temperature sensor or circuit wires shorted to ground.	Disconnect the sensor. Measure resistance from connector: ECM-F4 to CTS-1 (Expected value: < 2 ohms) Measure resistance from connector: ECM-C3 to CTS-2 (Expected value: < 2 ohms) Measure CTS resistance value (Expected value: 2280 to 2736 ohms at 19 to 21°C (66 to 70°F))

PCODE	MODULE	DESCRIPTION	CAUSE	ACTION
P0118	ECM	Engine Coolant Temperature Sensor 1 circuit High	Disconnected sensor, or sensor resistance too High.	Disconnect the sensor. Measure resistance from connector: ECM-F4 to CTS-1 (Expected value: < 2 ohms) Measure resistance from connector: ECM-C3 to CTS-2 (Expected value: < 2 ohms) Measure CTS resistance value (Expected value: 2280 to 2736 ohms at 19 to 21°C (66 to 70°F))
P011A	ECM	Engine Coolant Temperature Correlation Check failed	Correlation Check failed	Check for coolant fluid leak and coolant fluid level Check radiator condition Check for other fault, Check thermostat
P0122	ECM	Throttle Position Sensor (TPS) Short circuit to GND	Damaged circuit wires, damaged sensor or damaged ECM pins.	Make sure sensor connector is fully inserted. Measure resistance from connector: ECM-A1 to TPS-1 (Expected value: < 2 ohms) Measure resistance from connector: ECM-G3 to TPS-3 (Expected value: < 2 ohms) Measure resistance from connector: ECM-G2 to TPS-2 (Expected value: < 2 ohms)
P0123	ECM	Throttle Position Sensor (TPS) shorted to battery +	Damaged circuit wires, damaged sensor or damaged ECM pins.	Make sure sensor connector is fully inserted. Measure resistance from connector: ECM-A1 to TPS-1 (Expected value: < 2 ohms) Measure resistance from connector: ECM-G3 to TPS-3 (Expected value: < 2 ohms) Measure resistance from connector: ECM-G2 to TPS-2 (Expected value: < 2 ohms)
P0217	ECM	Engine Coolant over temperature condition	Coolant fluid temperature too high	Check for coolant fluid leak and coolant fluid level Check radiator condition Check for other fault, Check thermostat
P0219	ECM	Engine Overspeed Condition detected	Engine speed too high	

PCODE	MODULE	DESCRIPTION	CAUSE	ACTION
P0231	ECM	Fuel Pump circuit shorted to ground, or open circuit	Blown fuse, damaged or disconnected fuel pump relay, damaged circuit wires, damaged connectors or damaged ECM output pins.	Check fuse Measure voltage between harness connector PF1-12B and ground (Expected value: 11 to 13 volts) Measure voltage between harness connector PF1-11B and ground (Expected value: 11 to 13 volts) Measure resistance from harness connector: ECM-J1 to PF1-12A (Expected value: < 2 ohms) Measure resistance from harness connector: PF1-11A to FP-3 (Expected value: < 2 ohms) Measure resistance from harness connector: FP-4 to ground (Expected value: < 2 ohms)
P0232	ECM	Fuel Pump circuit shorted to battery +	Blown fuse, damaged or disconnected fuel pump relay, damaged circuit wires, damaged connectors or damaged ECM output pins.	Check fuse Measure voltage between harness connector PF1-12B and ground (Expected value: 11 to 13 volts) Measure voltage between harness connector PF1-11B and ground (Expected value: 11 to 13 volts) Measure resistance from harness connector: ECM-J1 to PF1-12A (Expected value: < 2 ohms) Measure resistance from harness connector: PF1-11A to FP-3 (Expected value: < 2 ohms) Measure resistance from harness connector: FP-4 to ground (Expected value: < 2 ohms)
P0261	ECM	Cylinder 1 injector open circuit or shorted to ground	Blown fuse, damaged or disconnected injector, damaged or disconnected circuit wires, damaged ECM output pins.	Disconnect injector 1 Measure resistance between injector pin 1 and 2 (Expected value = 14 to15 ohms). Measure resistance from harness connector: INJ1-1 to INJ1-2 (Expected value: > OPEN) Measure voltage between harness connector INJ1-2 and ground. (Expected value: 11 to 13 volts) Measure resistance from harness connector: ECM-K4 to INJ1-1 (Expected value: < 2 ohms)

PCODE	MODULE	DESCRIPTION	CAUSE	ACTION
P0262	ECM	Cylinder 1 injector shorted to battery +	Damaged injector, damaged circuit wires, damaged connector or damaged ECM output pins.	Disconnect injector 1 Measure resistance between injector pin 1 and 2 (Expected value = 14 to15 ohms). Measure resistance from harness connector: INJ1-1 to INJ1-2 (Expected value: > OPEN) Measure voltage between harness connector INJ1-2 and ground. (Expected value: 11 to 13 volts) Measure resistance from harness connector: ECM-K4 to INJ1-1 (Expected value: < 2 ohms)
P0264	ECM	Cylinder 2 injector open circuit or shorted to ground	Blown fuse, damaged or disconnected injector, damaged or disconnected circuit wires, damaged ECM output pins.	Disconnect injector 2 Measure resistance between injector pin 1 and 2 (Expected value = 14 to15 ohms). Measure resistance from harness connector: INJ2-1 to INJ2-2 (Expected value: > OPEN) Measure voltage between harness connector INJ2-2 and ground. (Expected value: 11 to 13 volts) Measure resistance from harness connector: ECM-L4 to INJ2-1 (Expected value: < 2 ohms)
P0265	ECM	Cylinder 2 injector shorted to battery +	Damaged injector, damaged circuit wires, damaged connector or damaged ECM output pins.	Disconnect injector 2 Measure resistance between injector pin 1 and 2 (Expected value = 14 to15 ohms). Measure resistance from harness connector: INJ2-1 to INJ2-2 (Expected value: > OPEN) Measure voltage between harness connector INJ2-2 and ground. (Expected value: 11 to 13 volts) Measure resistance from harness connector: ECM-L4 to INJ2-1 (Expected value: < 2 ohms)
P0338	ECM	Crankshaft Position Sensor Spike detected	Damaged CPS, damaged circuit wires, damaged connector or damaged ECM output pins. Wrong mounting position of sensor	Make sure sensor connector is fully inserted. Measure resistance from connector: ECM-E1 to CPS-1 (Expected value: < 2 ohms) Measure resistance from connector: ECM-D1 to CPS-2 (Expected value: < 2 ohms)
P0339	ECM	Crankshaft Position Sensor Intermittent	incorect nomber of tooth detecded Damaged CPS, damaged circuit wires, damaged connector or damaged ECM output pins. Wrong mounting position of sensor	Make sure sensor connector is fully inserted. Measure resistance from connector: ECM-E1 to CPS-1 (Expected value: < 2 ohms) Measure resistance from connector: ECM-D1 to CPS-2 (Expected value: < 2 ohms)

PCODE	MODULE	DESCRIPTION	CAUSE	ACTION
P0480	ECM	Radiator cooling fan relay	Blown fuse, damaged or disconnected relay, damaged circuit wires or connectors, damaged ECM output pins, damaged Relay.	Check fuse Disconnect relay. Measure resistance between terminals 85 and 86 on relay. (Expected value: 70 to 90 Ohms) Measure resistance between harness connector PF-1E and ground. (Expected value > OPEN). Measure resistance from harness connector: ECM-B3 to PF1-1E (Expected value: < 2 ohms)
P0500	DPS	Invalid or missing vehicle speed	No vehicle speed available & Vehicle is in (H or L Gear) with Engine RPM over 4000RPM. Damaged Vehicle Speed sensor circuit, Damaged sensor, Wrong mounting position of speed sensor.	Check if vehicle speed is available in Monitoring page in BUDS. Measure voltage between harness connector CV-A (red) and CV-C (ground black). (Expected value: 11 to 13 volts) Measure resistance from connector: CI-9 to CV-B (pink) (Expected value: < 5 ohms) on ATV
P0508	ECM	Idle Air Control System Circuit Low	Damaged IDLE, damaged circuit wires, damaged connector or damaged ECM output pins.	Make sure IDLE connector is fully inserted. Measure resistance from connector: ECM-D4 to IDLE-D (Expected value: < 2 ohms) Measure resistance from connector: ECM-D3 to IDLE-A (Expected value: < 2 ohms) Measure resistance from connector: ECM-E4 to IDLE-B (Expected value: < 2 ohms) Measure resistance from connector: ECM-C4 to IDLE-C (Expected value: < 2 ohms)
P0509	ECM	Idle Air Control System Circuit High	Damaged IDLE, damaged circuit wires, damaged connector or damaged ECM output pins.	Make sure IDLE connector is fully inserted. Measure resistance from connector: ECM-D4 to IDLE-D (Expected value: < 2 ohms) Measure resistance from connector: ECM-D3 to IDLE-A (Expected value: < 2 ohms) Measure resistance from connector: ECM-E4 to IDLE-B (Expected value: < 2 ohms) Measure resistance from connector: ECM-C4 to IDLE-C (Expected value: < 2 ohms)
P0513	ECM	Invalid Access Key Detected	A non stored access key was detected when key switch was turned to ON.	Use a stored access key to turn key switch. If no stored access keys are available program one and try again

PCODE	MODULE	DESCRIPTION	CAUSE	ACTION
P0523	ECM	Engine oil pressure sensor sticking	Damaged switch, damaged circuit wires, damaged connector, damaged ECM pins.	Measure resistance between harness connector OPS and ground When engine stopped. (Expected value < 2 ohms) Measure resistance between harness connector OPS and ground When engine running. (Expected value = open) Measure resistance from harness connector: OPS to ECM-E2 (Expected value: < 2 ohms)
P0524	ECM	Engine oil pressure too Low	Damaged switch, damaged circuit wires, damaged connector, damaged ECM pins.	Measure resistance between harness connector OPS and ground When engine stopped. (Expected value < 2 ohms) Measure resistance between harness connector OPS and ground When engine running. (Expected value = open) Measure resistance from harness connector: OPS to ECM-E2 (Expected value: < 2 ohms)
P0551	DPS	TORQUE_ SENSOR_ OPEN	Damaged DPS	External troubleshooting is not possible Replace the DPS.
P0552	DPS	TORQUE_ SENSOR_ SHORT_GND	Damaged DPS	External troubleshooting is not possible Replace the DPS.
P0553	DPS	TORQUE_ SENSOR_ SHORT_5V	Damaged DPS	External troubleshooting is not possible Replace the DPS.
P0562	DPS	System voltage low	Blown fuse, battery low (damaged magneto/regulator), damaged circuit wires or connection, intense winch usage	Check the two DPS fuses Validate that all the DPS connectors are secured Measure voltage between harness connector DPS2-A&B and ground. (Expected value = 11 to 13 volts) Measure battery voltage with engine stopped. (Expected value: 11 to 13 volts) Check ground and positive connections on battery.
P0562	ECM	System voltage low	Blown fuse FC, battery failure, voltage regulator failure, damaged circuit wires or connection, damaged magneto generator. An external battery charger may have been used. Intense winch usage	Measure battery voltage with engine stopped. (Expected value: 11 to 13 volts) Measure battery voltage with engine running. (Expected value: 13 to 14.7 volts) Check connections on voltage regulator. Check ground and positive connections on battery. Check ground on vehicle frame

PCODE	MODULE	DESCRIPTION	CAUSE	ACTION
P0563	DPS	system voltage high	Rectifier failure, damaged circuit wires or connection.	Measure battery voltage with engine stopped. (Expected value: 11 to 13 volts) Measure battery voltage with engine Running at 3500RPM. (Expected value: 13 to 14.7 volts) Check connections on voltage regulator. Check ground and positive connections on battery.
P0563	ECM	System voltage high	Damaged regulator. An external battery charger may have been used.	Measure battery voltage with engine stopped. (Expected value: 11 to 13 volts) Measure battery voltage with engine running. (Expected value: 13 to 14.7 volts) Check connections on voltage regulator. Check ground and positive connections on battery. Check ground on vehicle frame
P0601	DPS	CALIBRATION FAULT	DPS not calibrated or damage DPS	Try updating the DPS
P0601	SCM-XMR	Bad checksum of Calibration memory section	Lost of power on reflash	If an update file is available reflash the SCM, if not clear the fault, if it returns, replace the SCM.
P0615	ECM	Starter Relay circuit open	Damaged relay, Danaged start switch, damaged circuit wires, damaged connector, damaged ECM pins.	Check start button, Check Run/Stop button, check if free weeling diode is in the good way. Disconnect starter solenoid relay Measure resistance from harness connector: ECM-L3 to SS2 (Expected value: < 2 ohms) Measure resistance from harness connector: MG2-6 to SS1 (Expected value: < 2 ohms) Measure resistance between terminals SS1 and SS2. (Expected value: 3 to 6 ohms)
P0616	ECM	Starter Relay circuit shorted to ground	Damaged relay, Danaged start switch, damaged circuit wires, damaged connector, damaged ECM pins.	Check start button, Check Run/Stop button, check if free weeling diode is in the good way. Disconnect starter solenoid relay Measure resistance from harness connector: ECM-L3 to SS2 (Expected value: < 2 ohms) Measure resistance from harness connector: MG2-6 to SS1 (Expected value: < 2 ohms) Measure resistance between terminals SS1 and SS2. (Expected value: 3 to 6 ohms)

PCODE	MODULE	DESCRIPTION	CAUSE	ACTION
P0617	ECM	Starter Relay circuit shorted to battery +	Damaged relay, Danaged start switch, damaged circuit wires, damaged connector, damaged ECM pins.	Check start button, Check Run/Stop button, check if free weeling diode is in the good way. Disconnect starter solenoid relay Measure resistance from harness connector: ECM-L3 to SS2 (Expected value: < 2 ohms) Measure resistance from harness connector: MG2-6 to SS1 (Expected value: < 2 ohms) Measure resistance between terminals SS1 and SS2. (Expected value: 3 to 6 ohms)
P0636	DPS	MOTOR LOW CURRENT FAULT	Internal error or damaged DPS	External troubleshooting is not possible Replace the DPS.
P0637	DPS	MOTOR HIGH CURRENT FAULT	Internal error or damaged DPS	External troubleshooting is not possible Replace the DPS.
P0642	ECM	Sensor Reference Voltage Low	Damaged sensor connected to ECM voltage supply, Damaged ECM voltage supply output.	Measure voltage between harness connector ECM-A1 and ground. (Expected value: 4.8 to 5.1 volts) Check sensor connected to ECM voltage supply output
P0643	ECM	Sensor Reference Voltage High	Damaged sensor connected to ECM voltage supply, Damaged ECM voltage supply output.	Measure voltage between harness connector ECM-A1 and ground. (Expected value: 4.8 to 5.1 volts) Check sensor connected to ECM voltage supply output
P0658	DPS	PHASE A_LOW	DPS motor supply Damaged DPS	External troubleshooting is not possible Replace the DPS.
P0659	DPS	PHASE A_HIGH	DPS motor supply Damaged DPS	External troubleshooting is not possible Replace the DPS.
P0666	DPS	HIGH TEMPERATURE	High temperature of the DPS. Extreme usage of the unit.	Let the unit cool down.

PCODE	MODULE	DESCRIPTION	CAUSE	ACTION
P0685	ECM	Accessory relay circuit	diagnosis related to Accessories or Light relay, Blown fuse, damaged or disconnected relay, damaged circuit wires, damaged connectors or damaged ECM output pins	Check fuse Disconnect Accessory relay and Lights relay & turn key switch (on w/lights) Measure voltage between harness connector PF1-10E and ground. (Expected value: 11 to 13 volts) Measure voltage between harness connector PF1-6D and ground. (Expected value: 11 to 13 volts) Measure resistance from harness connector: ECM-K2 to PF1-12D (Expected value: < 2 ohms) Measure resistance from harness connector: ECM-K2 to PF1-7C (Expected value: < 2 ohms) Measure resistance between terminals 85 and 86 on the 2 relays. (Expected value: 70 to 90 ohms)
P0686	ECM	Accessory relay circuit shorted to ground or open circuit	diagnosis related to Accessories or Light relay, Blown fuse, damaged or disconnected relay, damaged circuit wires, damaged connectors or damaged ECM output pins	Check fuse Disconnect Accessory relay and Lights relay & turn key switch (on w/lights) Measure voltage between harness connector PF1-10E and ground. (Expected value: 11 to 13 volts) Measure voltage between harness connector PF1-6D and ground. (Expected value: 11 to 13 volts) Measure resistance from harness connector: ECM-K2 to PF1-12D (Expected value: < 2 ohms) Measure resistance from harness connector: ECM-K2 to PF1-7C (Expected value: < 2 ohms) Measure resistance between terminals 85 and 86 on the 2 relays. (Expected value: 70 to 90 ohms)
P0687	ECM	Accessory relay circuit shorted to battery +	diagnosis related to Accessories or Light relay, Damaged relay, damaged circuit wires, damaged connector or damaged ECM output pins.	Check fuse Disconnect Accessory relay and Lights relay & turn key switch (on w/lights) Measure voltage between harness connector PF1-10E and ground. (Expected value: 11 to 13 volts) Measure voltage between harness connector PF1-6D and ground. (Expected value: 11 to 13 volts) Measure resistance from harness connector: ECM-K2 to PF1-12D (Expected value: < 2 ohms) Measure resistance from harness connector: ECM-K2 to PF1-7C (Expected value: < 2 ohms) Measure resistance between terminals 85 and 86 on the 2 relays. (Expected value: 70 to 90 ohms)

PCODE	MODULE	DESCRIPTION	CAUSE	ACTION
P0691	ECM	Radiator fan circuit shorted to ground or open circuit	Blown fuse, damaged or disconnected fan relay, damaged circuit wires, damaged connectors or damaged ECM output pins.	Check fuse Disconnect radiator fan relay Measure voltage between harness connector PF1-3D and ground. (Expected value: 11 to 13 volts) Measure resistance from harness connector: ECM-B3 to PF1-1E (Expected value: < 2 ohms) Measure resistance between terminals 85 and 86 on relay. (Expected value: 70 to 90 ohms)
P0692	ECM	Radiator fan circuit shorted to battery +	Damaged fan relay, damaged circuit wires, damaged connector or damaged ECM output pins.	Check fuse Disconnect radiator fan relay Measure voltage between harness connector PF1-3D and ground. (Expected value: 11 to 13 volts) Measure resistance from harness connector: ECM-B3 to PF1-1E (Expected value: < 2 ohms) Measure resistance between terminals 85 and 86 on relay. (Expected value: 70 to 90 ohms)
P0705	ECM	Subtransmission Internal switch Combinations error	Wrong Switch Combinations Damaged Switch, damaged circuit wires, damaged connectors or damaged ECM pins.	Check for disconnected transmission connector. Check for misplaced terminal on gearbox Measure resistance form each switch to ground in all position (PR & N) (Expected value if switch activated: < 2 ohms) Measure resistance from harness connector: ECM-J3 to PRN-1 (Expected value: < 2 ohms) Measure resistance from harness connector: ECM-H2 to PRN-2 (Expected value: < 2 ohms) Measure resistance from harness connector: ECM-H4 to PRN-3 (Expected value: < 2 ohms)
P0706	ECM	GBPS invalide gear position	GBPS position not plausible	Verify that gear position information change when you change the position of gear on vehicle. Disconnect GBPS Measure voltage between harness connector GBPS-1 and GBPS-3. (Expected value: 4.8 to 5.1 volts) Measure resistance from connector: ECM-D2 to GBPS-2 (Expected value: < 2 ohms) Measure resistance from connector: ECM-C3 to GBPS-3 (Expected value: < 2 ohms) Replace GBPS sensor

Midwest Manuals
Green Manuals
Paperless Manuals
For a Better Tomorrow
If you bought this manual from any other seller please leave them NEGATIVE feedback and notify me at bestshopmanuals@gmail.com

PCODE	MODULE	DESCRIPTION	CAUSE	ACTION
P0707	ECM	Gear position sensor shorted to ground, or open circuit		Verify that gear position information change when you change the position of gear on vehicle. Disconnect GBPS Measure voltage between harness connector GBPS-1 and GBPS-3. (Expected value: 4.8 to 5.1 volts) Measure resistance from connector: ECM-D2 to GBPS-2 (Expected value: < 2 ohms) Measure resistance from connector: ECM-C3 to GBPS-3 (Expected value: < 2 ohms) Replace GBPS sensor
P0708	ECM	Gear position sensor circuit shorted to battery +		Verify that gear position information change when you change the position of gear on vehicle. Disconnect GBPS Measure voltage between harness connector GBPS-1 and GBPS-3. (Expected value: 4.8 to 5.1 volts) Measure resistance from connector: ECM-D2 to GBPS-2 (Expected value: < 2 ohms) Measure resistance from connector: ECM-C3 to GBPS-3 (Expected value: < 2 ohms) Replace GBPS sensor
P1562	ECM	System voltage low (from Key switch)	Blown fuse FC, battery failure, voltage regulator failure, damaged circuit wires or connection, damaged magneto generator. An external battery charger may have been used.	Measure battery voltage with engine stopped. (Expected value: 11 to 13 volts) Measure battery voltage with engine running. (Expected value: 13 to 14.7 volts) Check connections on voltage regulator. Check ground and positive connections on battery. Check ground on vehicle frame
P1563	ECM	System voltage high (from Key switch)	Damaged regulator. An external battery charger may have been used.	Measure battery voltage with engine stopped. (Expected value: 11 to 13 volts) Measure battery voltage with engine running. (Expected value: 13 to 14.7 volts) Check connections on voltage regulator. Check ground and positive connections on battery. Check ground on vehicle frame
P1619	ECM	TPS adaptation failure	Wrong throttle body mechanical position during reset of closed TPS or no initialization after ECM replacement.	Replace gauge if necessary.

PCODE	MODULE	DESCRIPTION	CAUSE	ACTION
P1F01	DPS	Power output overload	Motor short circuit or power output failed	Reset fault, If fault re-occur, replace DPS unit
P1F02	DPS	Power output overload (18V).	High voltage at the unit input.	Measure battery voltage with engine stopped. (Expected value: 11 to 13 volts) Measure battery voltage with engine running. (Expected value: 13 to 14.7 volts) test charging system as per shop manual
P1F03	DPS	Electronic Circuit Overheat	Hi temperature detected by on board temperature sensor.	Fault may become Active in extreme use situations. Reset fault and let DPS cool down. If fault re-occur in normal riding conditions, replace DPS unit
P1F05	DPS	Motor current sensor range/performance	Motor input vs output Current correlation check failed	External troubleshooting is not possible Replace the DPS.
P2300	ECM	Cyllinder 1 Ignition output shorted to ground	Damaged ignition coil, damaged circuit wires, damaged connector or damaged ECM output pins.	Open the ECM Activation page in BUDS Perform an ignition coil activation and check if ignition coil is reacting as expected Measure resistance from harness connector: ECM-M2 to BA-3 (Expected value: < 2 ohms) Measure voltage between harness connector BA-2 and ground. (Expected value: 11 to 13 volts) Refer to the service manual for detailed ignition coil testing procedure.
P2301	ECM	Cyllinder 1 Ignition output short to V +	Damaged ignition coil, damaged circuit wires, damaged connector or damaged ECM output pins.	Open the ECM Activation page in BUDS Perform an ignition coil activation and check if ignition coil is reacting as expected Measure resistance from harness connector: ECM-M2 to BA-3 (Expected value: < 2 ohms) Measure voltage between harness connector BA-2 and ground. (Expected value: 11 to 13 volts) Refer to the service manual for detailed ignition coil testing procedure.

PCODE	MODULE	DESCRIPTION	CAUSE	ACTION
P2303	ECM	Cyllinder 2 Ignition output shorted to ground	Damaged ignition coil, damaged circuit wires, damaged connector or damaged ECM output pins.	Open the ECM Activation page in BUDS Perform an ignition coil activation and check if ignition coil is reacting as expected Measure resistance from harness connector: ECM-M1 to BA-1 (Expected value: < 2 ohms) Measure voltage between harness connector BA-2 and ground. (Expected value: 11 to 13 volts) Refer to the service manual for detailed ignition coil testing procedure.
P2304	ECM	Cyllinder 2 Ignition output short to V +	Damaged ignition coil, damaged circuit wires, damaged connector or damaged ECM output pins.	Open the ECM Activation page in BUDS Perform an ignition coil activation and check if ignition coil is reacting as expected Measure resistance from harness connector: ECM-M1 to BA-1 (Expected value: < 2 ohms) Measure voltage between harness connector BA-2 and ground. (Expected value: 11 to 13 volts) Refer to the service manual for detailed ignition coil testing procedure.
P2670	DPS	PHASE B_LOW	DPS motor supply Damaged DPS	External troubleshooting is not possible Replace the DPS.
P2671	DPS	PHASE B_HIGH	DPS motor supply Damaged DPS	External troubleshooting is not possible Replace the DPS.
P280A	ECM	Gear position sensor adaptation not plausible	GBPS learning position failure Wrong transmission mechanical position during GBPS reset, No initialization after ECM replacement.	Using BUDS performe a GBPS initialization.

PCODE	MODULE	DESCRIPTION	CAUSE	ACTION
P3000	SCM-LTD	Auxiliary line pressure sensor value out of range	Too many values of the external sensor out of range (negative pressure) Sensor disconnect Damaged circuit wires or connectors Faulty auxiliary line sensor Faulty SCM	1- Go to Activations - SCM and start Test routine. Verify that the Shock Absorber Pressure and the Auxiliary Line Pressure correlates in BUDS. If the test is done with no fault, the system is working properly. Check the harness and connection to see a potential source of intermittent dysfunction, if nothing is found clear the occurred fault and no more actions have to be done. If the Test Status shows a Fail_Comparison_Sensor_Test, verify for leak. If no leak found, verify the wiring and connector of the external sensor and the SCM. In the next action step, verify which of Shock absorber or Auxiliary Line Pressure sensors is defective. 2-Make sure to have no pressure in the system by activating the relief valve in Activation -SCM. Connect the supplied air hose into the compressor fitting and plug it to a known pressure supply in the range of 30 to 120 psi (as car tire) and compare it to the Shock absorber pressure and Auxiliary line pressure, it should be similar. If the Shock absorber pressure is off, change the SCM module. Go to next action step to perform Auxiliary Line Pressure sensor test. 4-Back probe the signal coming from the sensor between the pin 3 of the SCM electrical connector and the negative battery post (this action must be done with special probe to not damage the connector seal). The value must be between 0.9 and 8.3 Volts for a pressure range of 0 - 100 psi. If not go to next action step. If the value is in the range, change the SCM. 5- Unplug the Auxiliary Line Pressure sensor and make sure to have 12V between pin 3 and 1 on the connector coming from SCM. If 12V is present change the sensor, if not change the SCM.

Midwest Manuals
Green Manuals
Paperless Manuals For a Better Tomorrow
If you bought this manual from any other seller please leave them NEGATIVE feedback and notify me at bestshopmanuals@gmail.com

PCODE	MODULE	DESCRIPTION	CAUSE	ACTION
P3001	SCM-LTD	System suspension pumping delay exceeded	Pressure did not reach to desired set point after predefined delay Leak in the system Jammed compressor intake tube Damaged circuit wires or connectors Blown compressor fuse Corroded or disconnected compressor GND Faulty relay Faulty compressor Jammed check valve Faulty SCM	1- Check for leaks. If no leak found go to next action step. 2- Go to Activations - SCM and start Test routine. If the test is done with no fault, the system is working properly. Check the harness and connector to see a potential source of intermittent dysfunction, if nothing is found clear the occurred fault and no more actions have to be done. If the compressor is not starting check the compressor GND, harness and connection then continue to the next action step. If the compressor is running and the Test Status show a Fail_Pumping go to action step 6. 3-Test the compressor with an external power supply (as a 12V battery). If the compressor is functional go to next action step. 4-Unplug the relay and make sure to have 12V between battery negative post and relay pin 30. If not, check the compressor fuse and harness. If 12V is present, test the relay. If the relay is functional plug it back and go to next action step. 5- Disconnect the SCM, take a jumper wire and connect pin 8 to the battery negative post. If then the compressor starts, change the SCM. 6- Verify that the compressor intake tube (transparent) is not blocked or kinked. Unplug the SCM air tube (yellow) and start the compressor. If air blow out of the tube change the SCM. If not go to next action step. 7- During the Test routine verify the pressure sensors value. If the Shock Absorber Pressure and Auxiliary Line Pressure is not going up verify the first check valve at the exit of the compressor. If only the Shock Absorber Pressure is not going up verify the second check valve after green tube.

Midwest Manuals
Green Manuals
Paperless Manuals For a Better Tomorrow www.green-manuals.com
If you bought this manual from any other seller please leave them NEGATIVE feedback and notify me at bestshopmanuals@gmail.com

PCODE	MODULE	DESCRIPTION	CAUSE	ACTION
P3002	SCM-LTD	Release valve activation delay exceeded	Pressure did not drop to desired set point after predefined delay Release valve momentary blocked Blown valve fuse Damaged circuit wires or connectors Faulty valve block Faulty SCM	1- Go to Activations - SCM and start Test routine. If the test passed, the system is working properly. Check the harness and connection to see a potential source of intermittent dysfunction, if nothing is found clear the occurred fault and no more actions have to be done. Mud, dust or water in the release valve may explain the fault code. If the Test status shows a Fail_release, proceed to next action step. 2-Verify the release valve for obstruction. If nothing is found go to next action step. 3- Unplug the valve connector and verify that 12V is present between pin 1 of the connector on the SCM side and the battery negative post. If not, verify the valve fuse and relay (refer to schematics for more information). Verify the harness and the connection between the valve and the SCM. If everything is fine, go to next action step. 4- Verify the release valve activation by disconnecting the valve block electrical connector and applying 12V across pin 1 and 2 on valve connector. If the release valve is operating, change the SCM, otherwise change the valve block.
P3003	SCM-LTD	System high leakage detected	Leak in the system	1- Verify suspension system for air leaks
P3004	SCM-LTD	Bad checksum of Calibration memory section	Lost of power on reflash	If an update file is available reflash the SCM, if not clear the fault, if it returns, replace the SCM.
P3005	SCM-LTD	Communication network disconnected	Lost of CAN communication	1- Verify if all the module are present in BUDS (under Module Menu), if they are the vehicle is working properly. 2- Check continuity between the cluster, ECM and SCM CAN network.
U0073	DPS	CAN bus off, no messages	Damaged circuit wires or damaged DPS pins.	Disconnect MPI2 from DB connector. Measure resistance between DB-1 and DB-2 (Expected value = 50 to 70 ohms). Measure resistance between DB-1 and DPS1-C (Expected value < 5 ohms). Measure resistance between DB-2 and DPS1-D (Expected value < 5 ohms).

PCODE	MODULE	DESCRIPTION	CAUSE	ACTION
U0073	ECM	CAN bus off, no messages	Damaged circuit wires or damaged CLUSTER pins.	Disconnect MPI2 from DB connector. Measure resistance between DB-1 and DB-2 (Expected value = 50 to 70 ohms). Measure resistance between DB-1 and ECM-B1 (Expected value < 2 ohms). Measure resistance between DB-2 and ECM-C1 (Expected value < 2 ohms).
U0100	DPS	Lost communication with ECM (lost of CAN ID's)	Damaged CAN Bus wires to ECM, damaged DPS/ECM pins.	Disconnect MPI2 from DB connector. Measure resistance between DB-1 and DB-2 (Expected value = 50 to 70 ohms). Measure resistance between DB-1 and ECM B1 (Expected value < 5 ohms). Measure resistance between DB-2 and ECM C1 (Expected value < 5 ohms).
U0155	DPS	Lost communication with CLUSTER	Damage CAN Bus wires to cluster Damaged circuit wires or damaged Cluster module pins.	Measure voltage between harness connector CL-17 and ground. (Expected value = 11 to 13 volts) Disconnect MPI2 from DB connector. Measure resistance between DB-1 and DB-2 (Expected value = 50 to 70 ohms). Measure resistance between DB-1 and CL-4 (Expected value < 5 ohms). Measure resistance between DB-2 and CL-19 (Expected value < 5 ohms).
U0155	ECM	Lost communication with CLUSTER	Missing CLUSTER CAN ID Module internal error Damaged circuit wires or damaged module pins.	Measure voltage between harness connector CL-17 and ground. (Expected value = 11 to 13 volts) Disconnect MPI2 from DB connector. Measure resistance between DB-1 and DB-2 (Expected value = 50 to 70 ohms). Measure resistance between DB-1 and ECM-B1 (Expected value < 2 ohms). Measure resistance between DB-2 and ECM-C1 (Expected value < 2 ohms). Measure resistance between DB-1 and CL-19 (Expected value < 2 ohms). Measure resistance between DB-2 and CL-18 (Expected value < 2 ohms).

PCODE	MODULE	DESCRIPTION	CAUSE	ACTION
U0155	ECM	Lost communication with CLUSTER (lost of CAN ID's)	Missing CAN ID Module internal error Damaged circuit wires or damaged module pins.	Check for Cluster fault or ECM fault Measure voltage between harness connector CL-17 and ground. (Expected value = 11 to 13 volts) Disconnect MPI2 from DB connector. Measure resistance between DB-1 and DB-2 (Expected value = 50 to 70 ohms). Measure resistance between DB-1 and ECMB-C1 (Expected value < 2 ohms). Measure resistance between DB-2 and ECMB-C2 (Expected value < 2 ohms). Measure resistance between DB-1 and CL-19 (Expected value < 2 ohms). Measure resistance between DB-2 and CL-18 (Expected value < 2 ohms).
U0155	SCM-XMR	Communication network disconnected	Lost of CAN communication	1- Verify if all the module are present in BUDS (under Module Menu), if they are the vehicle is working properly. 2- Check continuity between the cluster, ECM and SCM CAN network.
U0167	ECM	Lost communication with Vehicle Immobilizer Control Module	The Vehicle Immobilizer is reporting an electrical fault on the communication line.	Check for dirty or oxidized Key contact. Clean key contact if needed. Check for broke key contact Ensure sensor connector is fully inserted. Measure resistance between ECMB-A1 and CC-C (Expected value < 2 ohms). Measure resistance between ECMB-C2 and CC-E (Expected value < 2 ohms).
U0167	ECM	Lost communication with Vehicle Immobilizer Control Module	The Vehicle Immobilizer is reporting an electrical fault on the communication line.	Check for dirty or oxidized Key contact. Clean key contact if needed. Check for broke key contact Ensure sensor connector is fully inserted. Measure resistance between ECMB-A1 and CC-C (Expected value < 2 ohms). Measure resistance between ECMB-C2 and CC-E (Expected value < 2 ohms).
U0300	ECM	Invalid Security Exchange received	Incorrect ECM or CLUSTER, Incorrect software version.	Install the proper ECM or CLUSTER on vehicle. Update security coding using BUDS
U0400	DPS	Variant Coding failure Software incompatibility	Faulty variant coding Faulty programming	Check in the BUDS Tab "vehicle configuration" if the DPS option is checked. Reflash the DPS with the latest software

PCODE	MODULE	DESCRIPTION	CAUSE	ACTION
U0400	SCM-XMR	Variant coding failure	Faulty variant coding Faulty programming	1- Verify in Setting - Vehicle Configuration page is correctly set up. 2- If Update File is available reflash the SCM. If not, clear the fault, if it returns replace the SCM.
U0400	SCM-LTD	Variant coding failure	Faulty variant coding Faulty programming	1- Verify in Setting - Vehicle Configuration page is correctly set up. 2- If Update File is available reflash the SCM. If not, clear the fault, if it returns replace the SCM.
U0426	ECM	Invalid Data Received From Vehicle Immobilizer Control Module	The Vehicle Immobilizer could not read the number of the access key.	Check for dirty or oxidized Key contact. Clean key contact if needed. Check for broke key contact Ensure sensor connector is fully inserted. Measure resistance between ECMB-A1 and CC-C (Expected value < 2 ohms). Measure resistance between ECMB-C2 and CC-E (Expected value < 2 ohms).
U3001	DPS	Module improper shutdown	Lost of power on DPS that can be caused by damaged circuit wires or damaged DPS pins.	Check the two DPS fuses Ensure DPS connector is fully inserted. Check for Damaged tail light, DPS, Cluster circuit wires Check for damaged DPS pins.

INTELLIGENT THROTTLE CONTROL (iTC)

GENERAL

SYSTEM DESCRIPTION

The iTC is an electronic throttle control system often referred to as a "throttle by wire" system.

This system recives information from the following components:

– Throttle Accelerator Sensor (TAS) - located in the throttle housing
– Electronic Throttle Actuator (ETA) - located on the throttle body
– Engine Control Module (ECM)

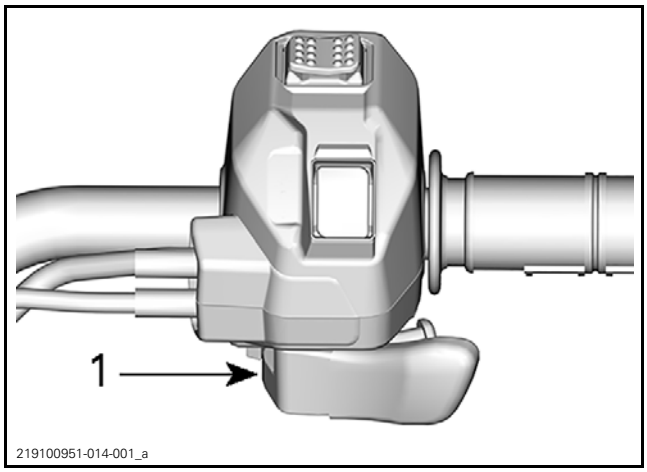

TYPICAL
1. Throttle lever

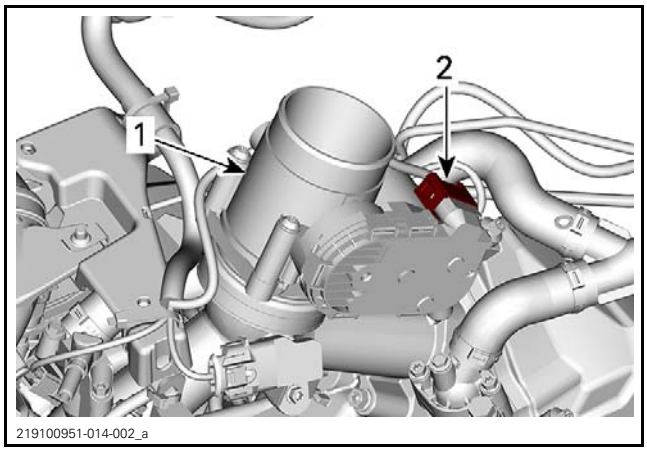

1. Throttle body
2. ETA connector

The ETA is an electric motor which controls the throttle opening.

The position of the throttle is measured with two potentiometers.

The ECM evaluates the throttle position with these two measures and controls the motor to reach the desired position.

These potentiometers are powered by the ECM with a voltage of 3.3 volts.

The signals given by these potentiometers vary from 0.33V to 2.97V for (SIGNAL 1) and 2.97V to 0.33V for (SIGNAL 2).

The relation between these two signals is (SIGNAL 1) + (SIGNAL 2) = 3.3V.

When ECM is woken up, throttle body will close completely to reinitialize. For both signals to be properly set at idle position.

If a problem occurs with any of these controls or signals then a diagnostic fault code will be generated.

Learning Key (If equipped)

The learning key limits the torque and speed of the vehicle, therefore enabling first time users and less experienced operators to learn how to operate while gaining the necessary confidence and control.

To adjust the speed limiter, Refer to *RADIO FREQUENCY DIGITALLY ENCODED SECURITY SYSTEM (RF D.E.S.S.)* subsection.

PROCEDURES

THROTTLE ACCELERATOR SENSOR (TAS)

General

The throttle accelerator sensor (TAS) is a double hall effect sensor, which translates the position of the lever into two analog voltage and sends a signal to the ECM which is proportional to the throttle lever angle.

These Hall effect sensors are powered by the ECM with a voltage of 5.0 volts.

The signals given by these sensors vary from 0.53V to 3V for (SIGNAL 1) and 0.25V to 1.5V for (SIGNAL 2).

The relation between these two signals is (Signal 1) = (Signal 2) X 2.

If a problem occurs with any of these signals then a diagnostic fault code will be generated.

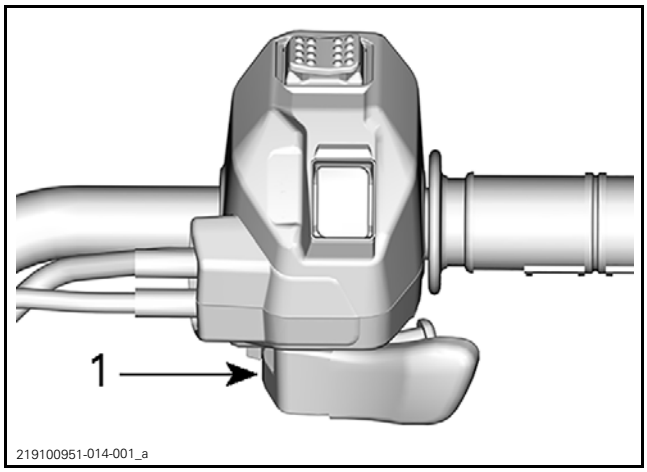

1. Throttle lever

First ensure the throttle lever functions adequately. Apply throttle lever fully then release it. It must reach the wide open position and return to the idle position freely when released. Otherwise, refer to *STEERING SYSTEM* for inspection.

Testing the TAS Voltage

Disconnect TAS connector and measure voltage on the main harness side.

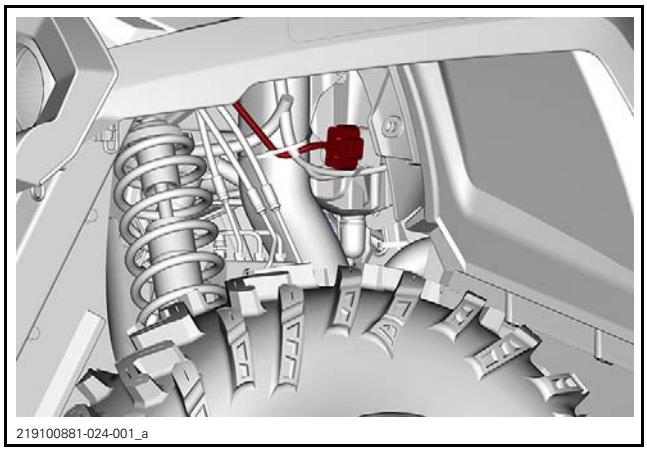

TAS CONNECTOR TEST	
Pin	Measurement
B and A	5V
D and E	5V

If not 5V, ECM might be defective, oxidation might be present in circuits or terminals might not have good contact.

Reconnect TAS connector and backprobe to measure voltage.

If 2 for 1 relation is not met for signal 1 and 2 ratio, then TAS sensor is defective. Refer to *REPLACING THE TAS* in this subsection for replacement procedure.

Electronic Throttle Actuator (ETA)

The ETA is part of the throttle body.

The ETA is an electric motor that receives signals from the ECM to control the throttle plate opening.

NOTE: As a first troubleshooting step, always check for applicable fault codes using the BRP diagnostic software (BUDS2).

Testing the ETA Voltage

Disconnect ETA connector on throttle body and measure on the engine harness.

ETA CONNECTOR TEST		
Engine	Pin	Measurement
570, 650 and 1000	2 and 6	3.3V
450, 850 and 1000R	2 and 3	

If not 3.3V, ECM is might be defective, oxidation might be present in circuits or terminals might not have good contact.

Reconnect ETA connector and backprobe to measure voltage.

If (Signal 1) + (Signal 2) does not equal 3.3V, then the ETA is defective, replace throttle body. Refer to *THROTTLE BODY* in *EFI* subsection.

Replacing the ETA

The ETA comes assembled with the complete throttle body unit.

To replace throttle body assembly. Refer to *ELECTRONIC FUEL INJECTION (EFI)*.

DRIVE MODE SWITCH (If equipped)

Testing the Drive Mode Switch Operation

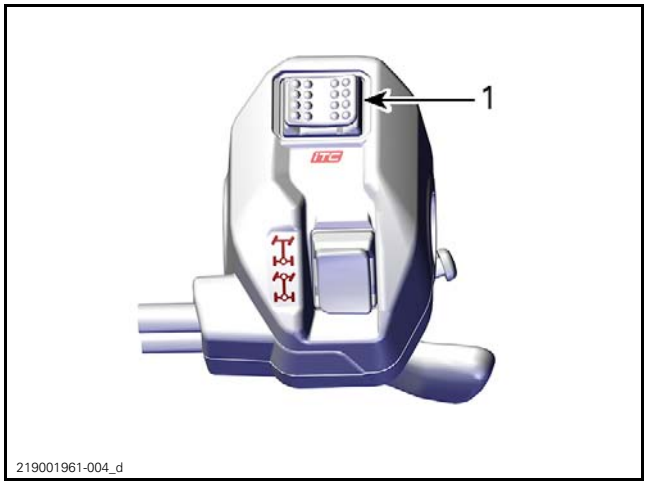

1. Drive mode switch

1. Remove gauge support and gauge.

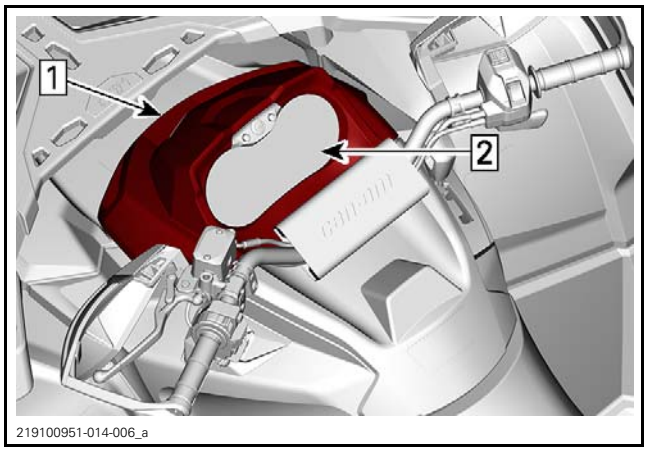

Step 1: Remove gauge support
Step 2: Remove gauge

2. Disconnect RSS connector and measure on the switch connector side.

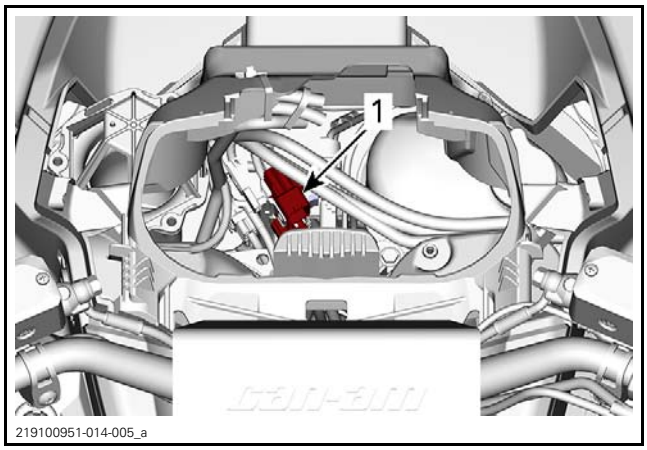

PARTS REMOVED FOR CLARITY
1. RSS connector

NOTE: The RSS connector will have red tape around it.

3. Set multimeter to Ω.
4. Test the drive mode switch for continuity as per following table.

DRIVE MODE SWITCH CONNECTOR TEST		
Position	Pin	Measurement
Left	4 and 5	0 Ω
Released	4 and 5	Infinite (OL)
Right	5 and 6	0 Ω
Released	5 and 6	Infinite (OL)

If the drive mode switch does not test as specified, replace the TAS assembly.

2WD/4WD SWITCH

Testing the 2WD/4WD Switch Operation

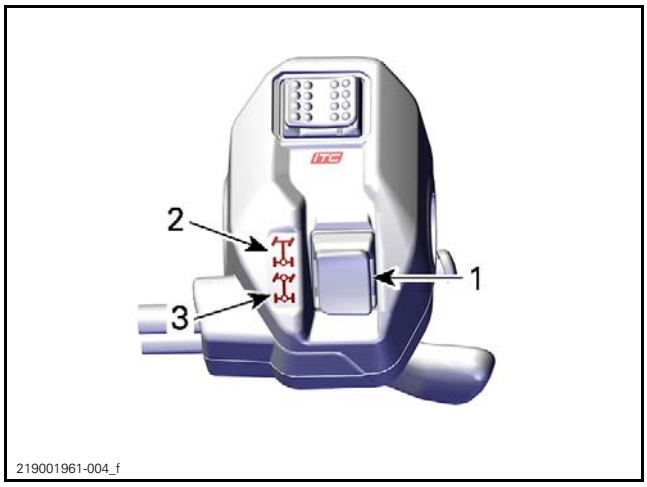

4WD MODE - TYPICAL

TYPICAL
1. *2WD/4WD selector*
2. *2WD position*
3. *4WD position*

1. Disconnect RSS connector and measure on the switch connector side.

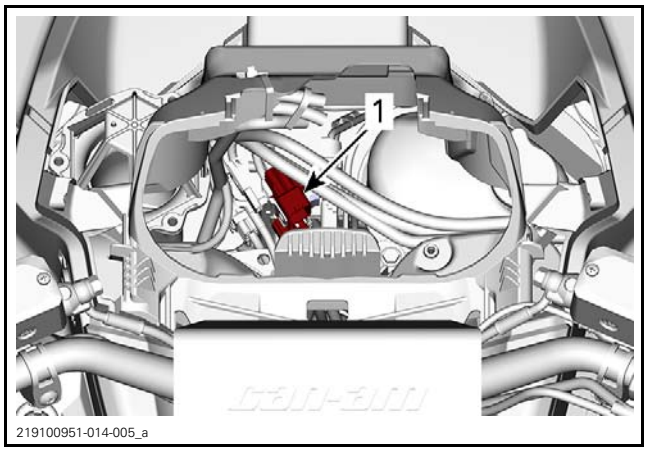

PARTS REMOVED FOR CLARITY
1. *RSS connector*

2. Set multimeter to Ω.
3. Test the 2WD/4WD switch for continuity as per following table.

2WD/4WD SWITCH CONNECTOR TEST (450 ENGINE)		
Position	Pin	Measurement
2 X 4	2 and 3	0 Ω
4 X 4	2 and 3	Infinite (OL)

2WD/4WD SWITCH CONNECTOR TEST (OTHER ENGINES - WITHOUT DRIVING MODES)		
Position	Pin	Measurement
2 X 4	1 and 2	0 Ω
4 X 4	1 and 2	Infinite (OL)

2WD/4WD SWITCH CONNECTOR TEST (OTHER ENGINES WITH DRIVING MODES)		
Position	Pin	Measurement
2 X 4	2 and 3	Infinite (OL)
4 X 4	2 and 3	0 Ω

If the 2WD/4WD switch does not test as specified, replace the TAS assembly.

Replacing the TAS

1. Refer to appropriate subsection and remove:
   - LH inner fender panel
   - Multifunction gauge.
2. Disconnect RSS and TAS connectors.

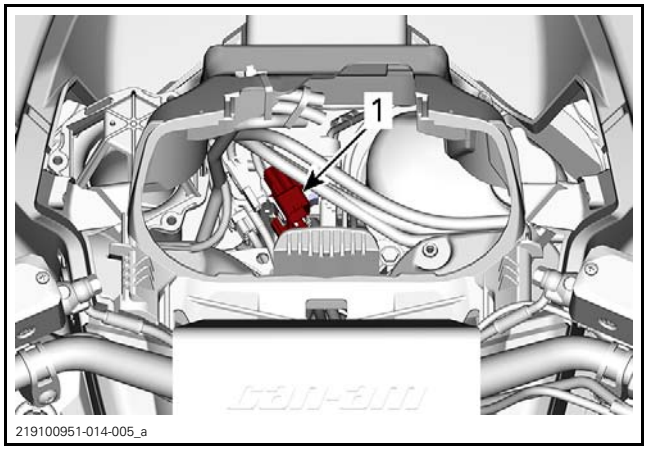

PARTS REMOVED FOR CLARITY
1. *RSS connector*

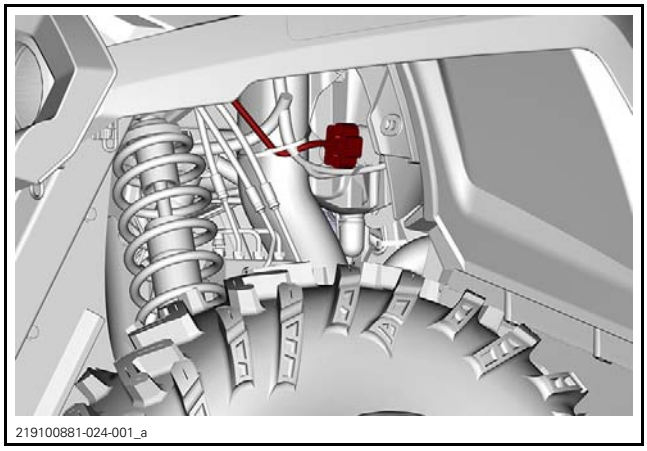

3. Cut locking ties securing TAS harness.

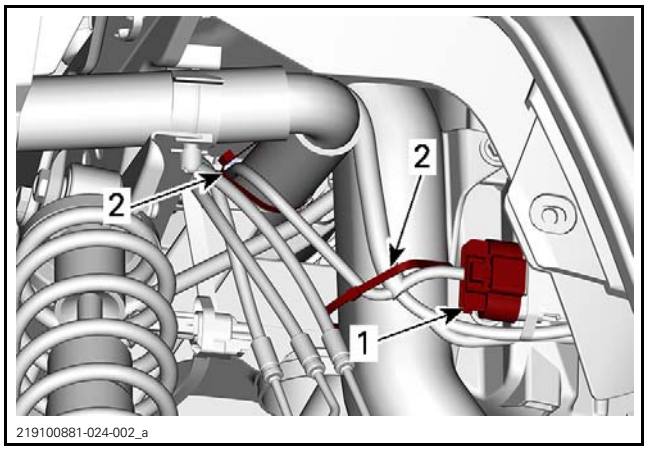

1. TAS connector
2. Locking tie

4. Remove TAS housing retaining screws.

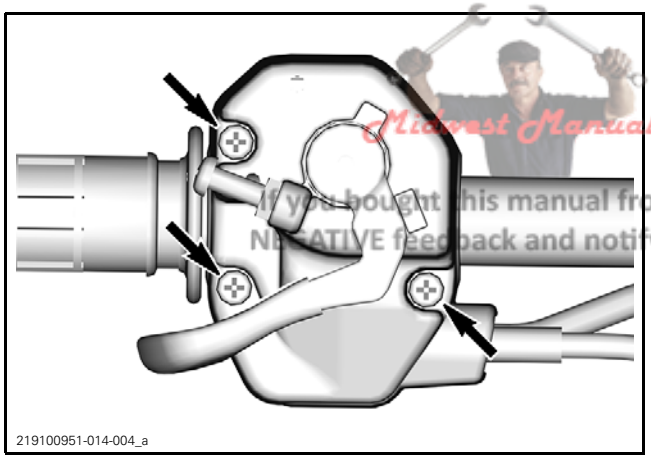

Midwest Manuals
Green Manuals
Paperless Manuals
For a Better Tomorrow
www.green-manuals.com
If you bought this manual from any other seller please leave them
NEGATIVE feedback and notify me at bestshopmanuals@gmail.com

Installing the TAS Housing

The installation is the reverse of the removal procedure. However, pay attention to the following.

Tighten TAS housing retaining screws to specification in the following order.

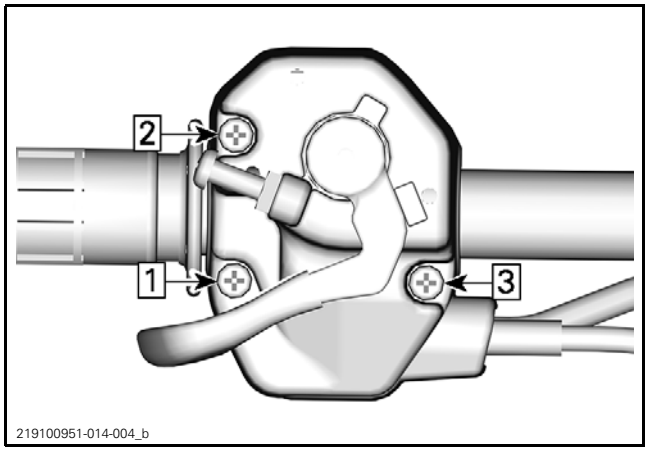

TIGHTENING TORQUE	
TAS housing retaining screws	3.5 N•m ± 0.5 N•m (31 lbf•**in** ± 4 lbf•**in**)

Turn handlebar completely from side to side making sure it does not exert unwanted tension on handlebar wires.

ELECTRONIC FUEL INJECTION (EFI)

SERVICE TOOLS

Description	Part Number	Page
ECM ADAPTER TOOL	529 036 166	4, 12–13, 15–16, 18
FLUKE 115 MULTIMETER	529 035 868	4, 7–8, 12, 14, 17–18

SERVICE PRODUCTS

Description	Part Number	Page
LOCTITE 243 (BLUE)	293 800 060	16
LOCTITE 767 (ANTI-SEIZE LUBRICANT)	293 800 070	18–19
SYNTHETIC GREASE	779162	13

GENERAL

⚠ WARNING

Fuel is flammable and explosive under certain conditions.
Ensure work area is well ventilated.
Do not smoke or allow open flames or sparks in the vicinity.
Fuel lines remain under pressure at all times. Always proceed with care and use appropriate safety equipment when working on pressurized fuel system.
Wipe off any fuel spillage.
Do not allow fuel to spill on hot engine parts and/or on electrical connectors.
Replace any damaged, leaking or deteriorated fuel lines or connections.
Always, pressurize the fuel system if any fuel related component was disconnected or removed.
Proceed with care when removing/installing high pressure test equipment.

SYSTEM DESCRIPTION

The electronic fuel injection system (EFI) is comprised of various sensors used for detecting ongoing operating conditions of the engine and vehicle, and includes all the components that perform the required adjustments to the engine.

Electrical System

ECM (Electronic Control Module)

From input signals, the ECM acknowledges driver demands and converts them to an engine torque requirement through calculation of several variables. Then, the ECM controls the iTC, the injection system and the ignition system to meet the torque requirement.

The ECM manages the engine torque requirements and controls engine operation to ensure it is delivering optimum performance and fuel economy. The ECM also controls idle RPM and limits maximum engine speed through the iTC system.

EFI Sensors

The ECM reads the inputs from the sensors which it compares to predetermined parameters stored in the ECM, makes computations, and activates the outputs accordingly (injectors, ignition coils etc.).

Signals from sensors are used by the ECM to determine the injection and ignition parameters (referenced to fuel maps) as required to maintain the optimum air-fuel ratio.

Air Intake System

Air Filter

Air, drawn into the air filter housing, first passes through an inlet duct.

After it passes through the air filter, an air duct (intake adapter) is used to channel the air to the throttle body.

Throttle Body

The throttle body is mounted on the front end of the intake manifold, aft of the air filter housing.

Air for combustion, drawn in by the engine, flows through the air intake system, then through the throttle body where it is regulated by a throttle plate.

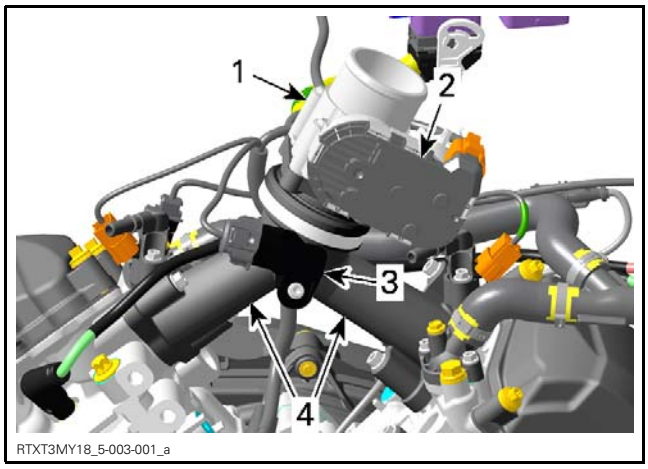

1. *Throttle body*
2. *ETA and TPS*
3. *MAPTS (Manifold Air Pressure Temperature Sensor)*
4. *Air intake manifold*

Fitted on the throttle body, an electronic throttle actuator (ETA) allows the ECM to electronically control the throttle plate opening which regulates the amount of air that enters the engine, and therefore engine torque.

There is no idle air control valve (IACV).

The TPS is also incorporated in the throttle body. It provides a signal to the ECM of the actual throttle plate position.

Fuel System

Fuel Rail

Two fuel rails, one for each injector, are mounted on the intake manifold. The fuel rails, which are used to secure the injectors to the manifold, also provide to the injectors the fuel pressure that they receive from the fuel pump.

The fuel pressure applied to the fuel rails is regulated by the fuel pressure regulator located in the fuel pump module.

Fuel Injectors

The fuel injectors are used to inject fuel into the intake ports of the cylinder head. One injector is used per cylinder.

Fuel Pump

An electric fuel pump with an integrated pressure regulator and fuel system filters is used. For more details on the fuel pump unit, refer to *FUEL TANK AND FUEL PUMP* subsection.

ADJUSTMENT

IDLE SPEED

Idle speed is not adjustable. The ECM controls the idle speed of the engine primarily through control of the throttle plate position.

The vehicle multifunction gauge can provide an accurate digital readout of the engine's idle speed.

The engine RPM may also be verified using the BRP diagnostic software (BUDS2).

In BUDS2, go to:

– **Measurements** page
– **ECM** button.

NOTE: The multifunction gauge and the BRP diagnostic software (BUDS2) use the same signal to provide the engine RPM indication.

TROUBLESHOOTING

DIAGNOSTIC TIPS

Engine problems are not necessarily related to the fuel injection system.

It is important to ensure that the engine and propulsion system, fuel delivery and electrical systems are functioning normally.

For diagnostics purposes, use the BRP diagnostic software (BUDS2).

After a problem has been solved, be sure to clear the fault(s) in the ECM using the BRP diagnostic software.

⚠ WARNING

Electrical actuators and electronic modules may be powered up as soon as the ignition switch is set to ON. Always disconnect the battery prior to disconnecting any electrical or electronic parts.

Never use a battery charger to temporarily substitute the battery as it may cause the ECM to function erratically, or not at all.

Check related-circuit fuse solidity and condition with an ohmmeter. A visual inspection could lead to a false diagnosis.

Electrical Related Problems

It is important to check the following in the electrical system:

– Battery voltage
– Fuses

– Ground connections
– Wiring and connectors.

Ensure that all electronic components are genuine OEM. Any modification to the wiring harness may lead to poor system operation or generate fault codes.

Electrical Connections

Pay particular attention to ensure that terminals and pins are not out of their connectors, corroded, or out of shape.

When probing terminals, pay attention not to deform the terminals as this could cause a loose or intermittent connection that would be difficult to troubleshoot.

PROCEDURES

ENGINE CONTROL MODULE (ECM)

NOTE: As a first troubleshooting step, always check for applicable fault codes using the BRP diagnostic software (BUDS2).

Quick Test to Validate ECM Operation

Turn ignition key to ON.

NOTE: Setting the ignition switch to ON wakes up the ECM, which then turns on the following.

QUICK INDICATION THAT ECM IS FUNCTIONING (ASSUMING THE OBSERVED COMPONENT IS IN GOOD WORKING ORDER)
Multifunction gauge turns ON.
Fuel pump turns on for approx. 5 seconds.
Rear lights turn on.
Headlamps turn on (ignition key on with lights position).

ECM First Initialization

This procedure performs a reset of the following values in the ECM:
– TAS (Throttle Accelerator Sensor)
– TPS (Throttle Position sensor)
– GBPS (Gearbox Position Sensor).

This reset **must** be carried out whenever the ECM has been replaced.

This reset **may** be carried out whenever any of the following components have been replaced instead of their respective reset procedures:
– Throttle body (for TPS)
– GBPS (Gearbox Position Sensor).

1. Connect the vehicle to the BRP diagnostic software (BUDS2).
2. In B.U.D.S., select the following:
   – **Setting** page
   – **ECM** button
   – **Initializations** tab
   – **ECM First Initialization**
3. In the **ECM first initialization** field, click on the **Reset** button.
4. Follow the instructions in the message boxes that appear.

If the operation is successful, a message will be displayed stating that the reset was successful.

If an error occurred or a component is out of range, a message may be displayed. Follow the instructions in the message and repeat the procedure.

5. Check for fault codes.

If a fault code is generated, carry out the service actions, reset the fault and repeat the reset procedure.

6. Start engine and make sure it operates normally throughout its full engine RPM range.

ECM Access

The ECM is located on the LH side of the air intake silencer.

LH PANEL REMOVED
1. ECM location

ECM Connector Identification

There are 2 connectors connected to the ECM:
- Engine harness connected to ECM-A
- Vehicle system control harness connected to ECM-B.

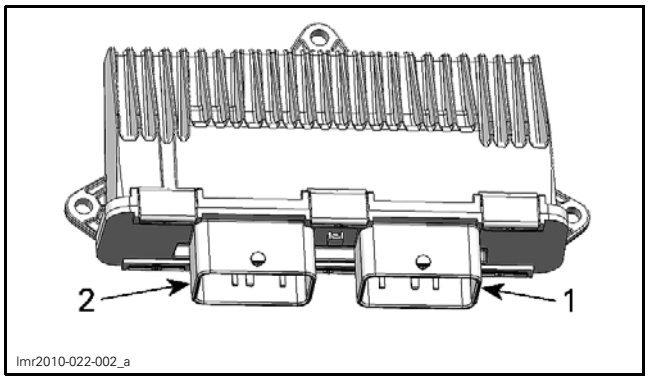

1. Connector A
2. Connector B

For connector information, cleaning and probing, refer to *WIRING HARNESS AND CONNECTORS* subsection.

ECM Testing Tools

To test and probe the ECM connector terminals, the following tools are required. The ECM replacement will be required if connectors or terminals are damaged.

REQUIRED TOOLS	
FLUKE 115 MULTIMETER (P/N 529 035 868)	
ECM ADAPTER TOOL (P/N 529 036 166)	

Testing the ECM Power Supply

1. Disconnect connector "B" from the ECM.
2. Install ECM connector "B" on the ECM adapter tool.
3. Install a jumper wire between B-H2 and B-M2 on the ECM adapter tool.
4. Turn the ignition switch to ON.
5. Set the multimeter to Vdc.
6. Check for voltage as follows.

ECM ADAPTER	BATTERY	VOLTAGE
B-M4	Negative post	Battery voltage

If voltage is not measured, check the following:
- Main relay
- Wiring and connections, refer to the *WIRING DIAGRAM*.

Testing the Continuity of ECM Ground Circuits

1. Disconnect connector "B" from ECM.
2. Install the ECM-B connector on the ECM adapter tool.
3. Set the multimeter to Ω.
4. Probe adapter terminals as per following table.

ECM ADAPTER	BATTERY POST	RESISTANCE
Pins B-L1, B-M2 and B-M3	Ground	Close to 0 Ω (continuity)

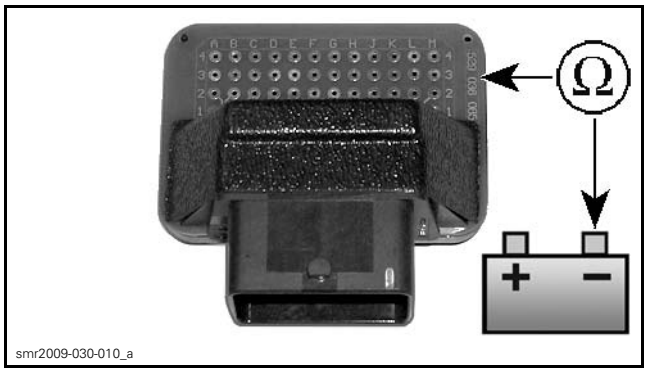

If any measurement is out of specification, refer to *POWER DISTRIBUTION* and check all grounds.

Removing the ECM

NOTE: If a new ECM is to be installed, first read the procedures in *REPLACING THE ECM* in this subsection.

1. Disconnect battery cables.

NOTICE **Always disconnect the BLACK negative (–) battery cable first, then disconnect RED positive (+) cable.**

2. Disconnect both ECM connectors from ECM.
3. Unscrew all retaining screws and pull out ECM.

Installing the ECM

Reverse removal procedure however, pay attention to the following.

TIGHTENING TORQUE	
ECM screws	2 N•m ± 0.2 N•m (18 lbf•**in** ± 2 lbf•**in**)

1. Reconnect ECM connectors.
2. Reconnect battery cables.

NOTICE **Always reconnect the RED positive (+) battery cable first, then reconnect BLACK negative (–) cable.**

3. If a new ECM is installed, refer to *REPLACING THE ECM* in this subsection.

Replacing the ECM

Prior to replacing an ECM, ensure that all the recommendations in the general introduction of this section have been followed.

NOTE: Proceed with an *ECM FIRST INITIALIZATION* as it may resolve the problem.

If the ECM is replaced, data must be manually entered into the new ECM.

ECM Data Entry for ECM Replacement

Use one of the following 2 methods to collect the required information. The 1st being the easiest:

1. Use BUDS2 to obtain the data from a saved "*.buds2" file on your PC computer.
2. Collect the information from the vehicle and on the Knowledge Center.

Once the required information has been collected, refer to *ENTERING THE COLLECTED INFORMATION INTO THE ECM*.

1st Collecting Method: Obtaining the Data from a Saved .buds2 File

1. Start BUDS2.

NOTE: It is not necessary to perform any connection. The PC computer can be used alone.

2. In BUDS2, click on the **Open a BUDS2 file** button.

Make sure you are at: C:\Program Files(x86)\BRP\BUDS2\Files.

IMPORTANT: Be sure to use the file that specifically matches the vehicle you are servicing.

NOTE: The file name structure is as follows:
VIN_date read (yyyymmdd)_hour read (hhmmss).mpem
Example: **2BPSBK8C68V000168_20090206_111640.buds2** Therefore: VIN: 2BPSBK8C68V000168 Date: 2009 02 06 Hour: 11h 16m 40s

3. Select the **Summary** page then the **Vehicle** tab and record (write down) the following information.
   1. Vehicle serial number
   2. Engine serial number
   3. Vehicle model number
   4. Customer name.

2nd Collecting Method: Collect the Information from the Vehicle and BOSSWeb

1. Record engine serial number.
2. Record the following numbers from BOSSWeb. Look in **Sales** menu and choose **Unit history**.
   1. Vehicle serial number
   2. Vehicle model number
   3. Customer name.

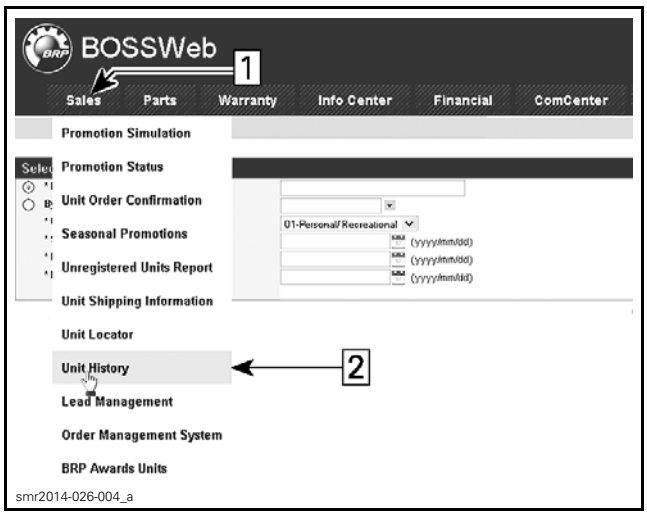

SERVICE, UNIT HISTORY
1. Click on SALES *menu*
2. Select Unit History

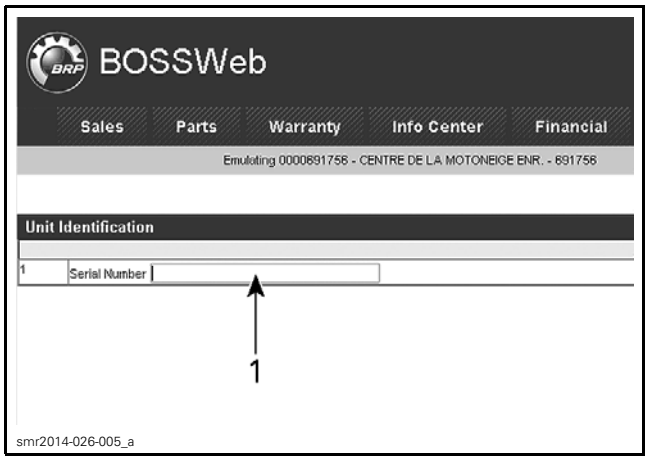

1. *Vehicle Serial Number here*

3. Enter the recorded data in the new ECM as detailed in *ENTERING THE COLLECTED INFORMATION INTO THE ECM*.

Entering the Collected Information Into the ECM

1. Connect the vehicle to the BRP diagnostic software (BUDS2).
2. In BUDS2, click the **Scan** button to read the new ECM.
3. Select:
   – **Summary** page
   – **Vehicle** button.
4. Write all of the following information you recorded previously.
   1. Vehicle serial number (VIN)
   2. Engine serial number
   3. Vehicle model number
   4. Customer name.

NOTICE **Enter only the appropriate product model number as obtained when gathering the information.**

NOTICE **Pay particular attention when typing the V.I.N. and model numbers. Once Write Data button is pressed, the data cannot be modified.**

5. Perform the *THROTTLE POSITION SENSOR INITIALIZATION* procedure, refer to *THROTTLE POSITION SENSOR (TPS)* in this subsection.
6. Start the engine and ensure proper operation.
7. Reinstall any remaining removed parts.

FUEL INJECTOR

Testing the Fuel Injector Operation Using BUDS2. (Dynamic)

NOTE: As a first troubleshooting step, always check for applicable fault codes using the BRP diagnostic software (BUDS2).

1. Connect the vehicle to the BRP diagnostic software (BUDS2).
2. Start engine.
3. In BUDS2, select the following:
   – **Functions** page
   – **ECM** button.
4. Select an injector and press the **ACTIVE** button.
5. Repeat for all injectors.

If the engine RPM drops momentarily when clicking on a cylinder, the injector on this cylinder is functioning normally.

If the engine RPM does not drop momentarily when clicking on a cylinder, this cylinder is not functioning properly. Check the following:

– Fuel injector operation. Refer to *TESTING THE FUEL INJECTOR BALANCE USING BUDS2*
– Spark plug and ignition coil. Refer to *IGNITION SYSTEM* subsection.
– Engine condition.

Testing the Fuel Injector Balance Using BUDS2

NOTICE **After fuel injector activation using BUDS2, always crank engine in drowned mode to ventilate engine and prevent a potential backfire due to fuel accumulation in engine.**

1. Install a fuel pressure gauge as described in *FUEL PUMP PRESSURE TEST* of *FUEL TANK AND FUEL PUMP* subsection.
2. Connect the vehicle to the BRP diagnostic software (BUDS2).
3. Turn the ignition key to ON.
4. In BUDS2, select the following:
   – **Functions** page
   – **ECM** button
   – **Activate Fuel Pump**.
5. Click on the **ACTIVATE** button to activate fuel pump.
6. Fuel pressure must be within specification. Refer to *FUEL TANK AND FUEL PUMP* subsection. Re-activate fuel pump as necessary.

7. In BUDS2, energize fuel injector **no. 1**.

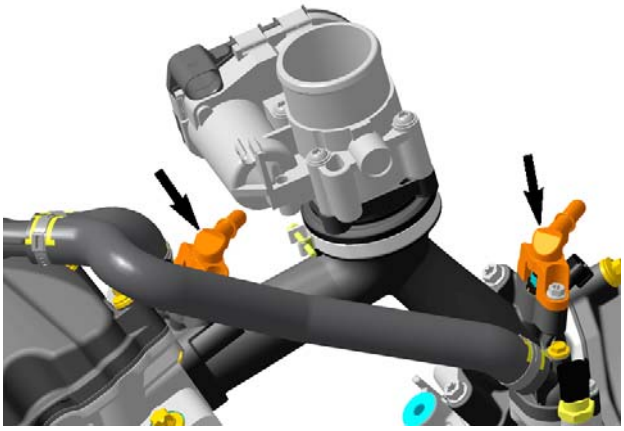

CLICK ON INJECTOR TO ACTIVATE

8. Record the fuel pressure drop for injector **no. 1**.
9. Re-activate fuel pump.
10. Repeat the procedure for fuel injector **no. 2** and record the pressure drop.
11. The maximum fuel pressure drop between injectors should not exceed the following specification:

MAXIMUM FUEL PRESSURE DROP ALLOWED BETWEEN FUEL INJECTORS
10 kPa (1.5 PSI)

If pressure drop of any fuel injector is greater than the specification, replace injector then repeat the test.

12. Using the valve on the fuel pressure gauge, release the pressure in the system (if so equipped).
13. Remove fuel pressure gauge and reinstall removed parts.

Testing the Fuel Injector for Leaks

Carry out the *FUEL PUMP PRESSURE TEST* as detailed in the *FUEL TANK AND FUEL PUMP* subsection.

Testing the Fuel Injector Resistance

Disconnect connector "A" from the ECM.

Disconnect the engine connector (HIC). Refer to *WIRING HARNESS AND CONNECTORS* subsection.

Check resistance value between terminals as follows.

REQUIRED TOOL	
FLUKE 115 MULTIMETER (P/N 529 035 868)	

FUEL INJECTOR RESISTANCE TEST AT HIC CONNECTOR			
INJECTOR	**HIC CONNECTOR**	**ECM CONNECTOR "A"**	**RESISTANCE @ 20°C (68°F)**
FRONT	D	A-J1	11.4 - 12.6 Ω
REAR		A-K1	

If resistance value obtained is incorrect, remove injector connector and check resistance value between injector pins as follows.

FUEL INJECTOR RESISTANCE TEST AT INJECTOR CONNECTOR			
INJECTOR	**INJECTOR PIN**		**RESISTANCE @ 20°C (68°F)**
FRONT	1	2	11.4 - 12.6 Ω
REAR			

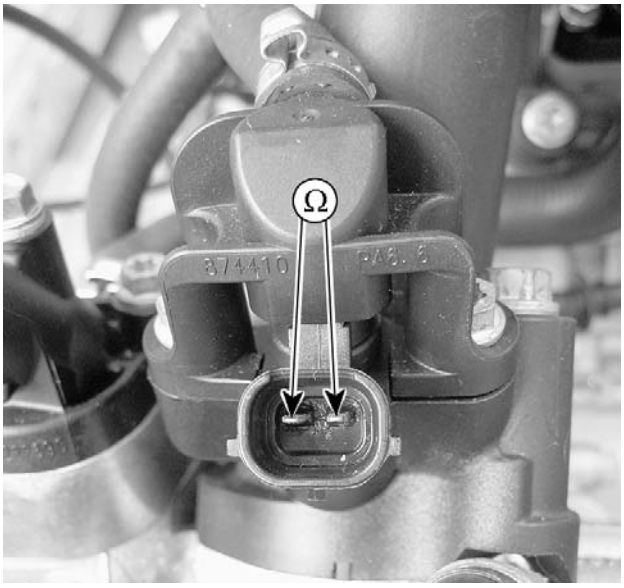

TYPICAL

If readings are out of specifications, replace injector.

If readings are good, carry out *TESTING THE FUEL INJECTOR INPUT VOLTAGE*.

Testing the Fuel Injector Input Voltage

Disconnect the fuel injector connector.

NOTE: If the connector is hard to unlock, gently use a screwdriver to release connector.

vmr2006-014-001_a

TYPICAL

NOTE: It is not necessary to activate the injector since it is continuously powered when the ignition key is set to ON.

Use a multimeter and set it to Vdc. Read voltage.

CYLINDER	INJECTOR CONNECTOR WIRE		MEASUREMENT
FRONT	VIOLET/ BLUE	Battery ground	Battery voltage
REAR			

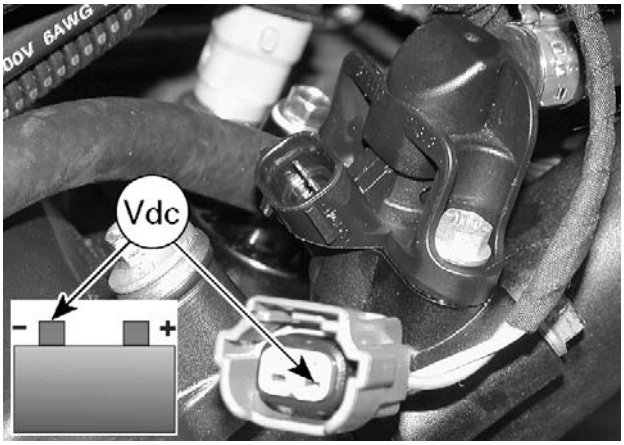

vmr2006-014-075_a

TYPICAL

If supply voltage is not good, check continuity between fuse F5 and injector (see *WIRING DIAGRAMS*).

NOTE: Probe fuse exactly as shown. This validates fuse at the same time.

Set multimeter to Ω.

REQUIRED TOOL	
FLUKE 115 MULTIMETER (P/N 529 035 868)	

CYLINDER	INJECTOR CIRCUIT WIRE		MEASUREMENT
FRONT	VIOLET/ BLUE	Fuse F5	Close to 0 Ω
REAR			

If continuity is good, check relay and wiring from battery.

If continuity is faulty, check fuse and if OK, repair or replace wiring going to injector.

If supply voltage is good, check ground circuit between injector and ECM (see *WIRING DIAGRAMS*).

– If ground circuit is faulty, repair/replace wiring and connectors.
– If ground circuit is good, refer to *REPLACING THE ECM*.

Removing the Fuel Injector

Remove the fuel rail refer to *FUEL RAIL* for the procedure.

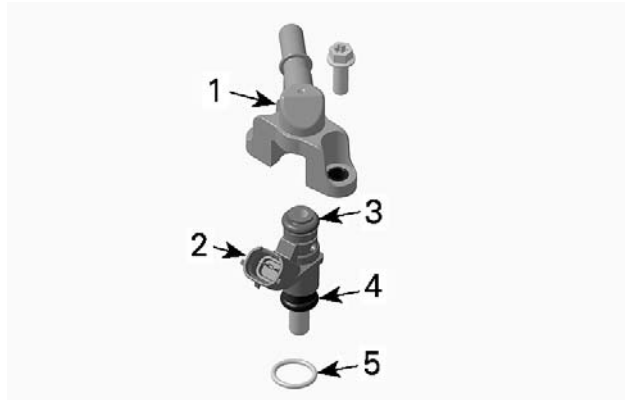

vmr2009-022-001_a

TYPICAL - FUEL RAIL ASS'Y
1. *Fuel rail*
2. *Fuel injector*
3. *Injector top O-ring*
4. *Injector bottom O-ring*
5. *Manifold O-ring*

Pull fuel injector out of the fuel rail.

Installing the Fuel Injector

The installation is the reverse of the removal procedure. However, pay attention to the following details.

NOTICE **If installing the removed injector(s), always install NEW O-rings.**

Lubricate O-rings to ease insertion in rail.

FUEL INJECTOR O-RINGS	
Service product	Engine oil

Install fuel injector with your hand. Do not use any tool.

Position the manifold O-ring on injector as in following illustration.

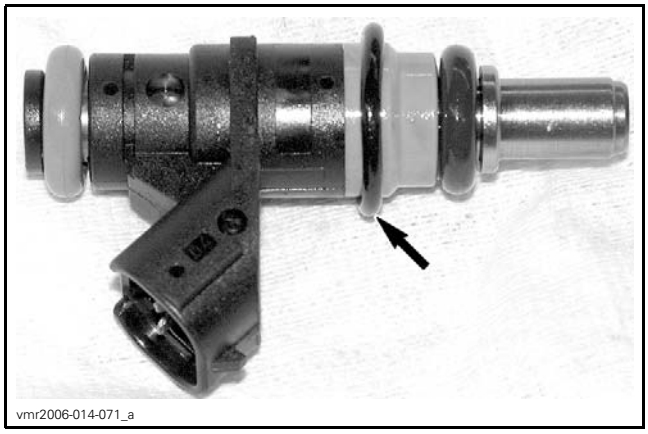

TYPICAL - MANIFOLD O-RING POSITION

Carefully insert injector in manifold paying attention to the manifold O-ring.

NOTICE **Gently push O-ring in evenly all around while inserting injector. O-ring must be completely inserted and not visible, before completing the insertion of the injector.**

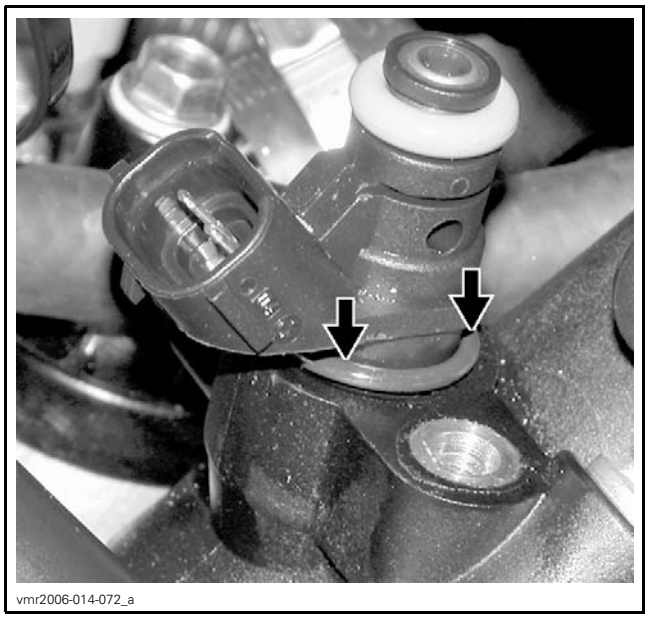

Firmly push injector until it bottoms out.

Reinstall fuel rail.

FUEL RAIL

Replacing the Fuel Rail

Removing the Fuel Rail

1. Connect the vehicle to the BRP diagnostic software (BUDS2).
2. Go to this location and follow the instructions:
   - **Function** page
   - **ECM** button
   - **Execute Fuel Pressure Relief**.
3. Wrap a rag around the inlet hose and release the quick fitting.

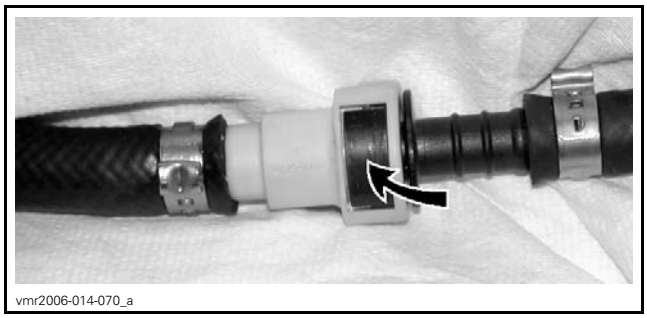

TYPICAL

4. Unscrew rail retaining screws.
5. Gently pull rail off by hand.

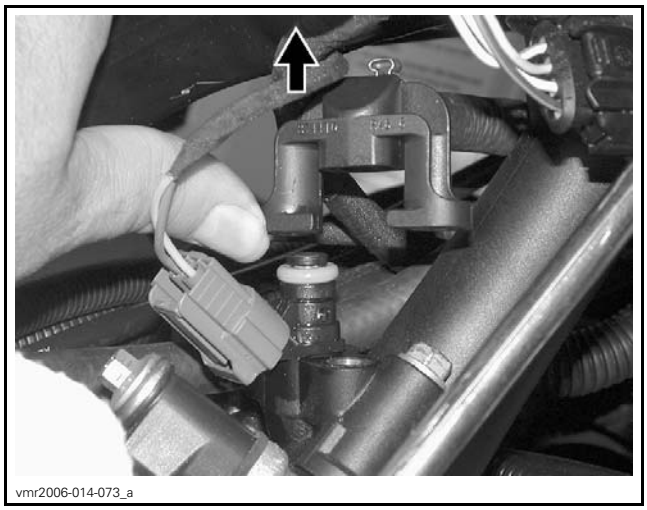

TYPICAL

To disconnect fuel rail from hose, cut clamp on fuel hose. Refer to *FUEL TANK AND FUEL PUMP* for clamp removal/installation procedures.

NOTE: If fuel rail is removed for access to fuel injector, it is not necessary to cut hose clamp. Only to replace fuel rail.

Installing the Fuel Rail

The installation is the reverse of the removal procedure. However, pay attention to the following details.

Install new clamps using pliers as per removal (if fuel rail was replaced).

Apply a thin film of engine oil to injector O-rings to ease insertion in rail.

INJECTOR O-RINGS	
SERVICE PRODUCT	Lubricate with engine oil

Install fuel rail and evenly tighten screws a little at a time each side.

TIGHTENING TORQUE	
Fuel rail retaining screws	10 N•m ± 1 N•m (89 lbf•**in** ± 9 lbf•**in**)

⚠ WARNING

Perform a fuel pressure test and ensure that there is no leak. Refer to *FUEL TANK AND FUEL PUMP*. Run engine and check for leaks.

THROTTLE BODY

Throttle Body Description

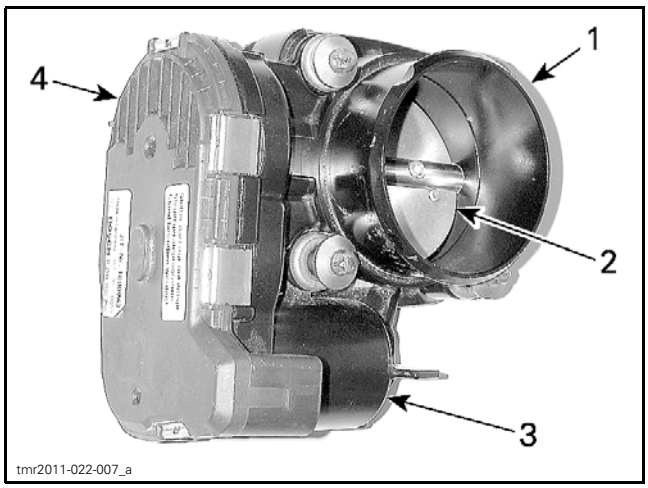

1. *Throttle body*
2. *Throttle plate*
3. *Electronic throttle actuator (electric motor inside)*
4. *Throttle position sensor (TPS) (inside)*

Throttle Body Access

Remove the RH side panel. Refer to *BODY* subsection.

Lubricating the Throttle Body

No lubrication is required.

Cleaning the Throttle Body

1. Remove air inlet hose from throttle body.
2. Check throttle body cleanliness using a flashlight. Fully open throttle plate and verify:
   - Throttle body bore
   - Throttle plate edge.

   Look for:
   - Dirt
   - Oily surfaces
   - Carbon and salt deposits on throttle plate and the surrounding bore.
3. Clean as necessary.
4. Use a throttle body cleaner such as GUNK INTAKE MEDIC or an equivalent.

NOTICE **Only use an appropriate throttle body cleaner that will not damage O-rings and EFI sensors.**

⚠ CAUTION **Use the product in a well ventilated area. Refer to product manufacturer's warnings.**

5. To avoid getting dirt into engine, spray cleaner on a clean rag then rub rag against throttle plate and bore. A toothbrush may also be used.

⚠ CAUTION **Ensure ignition key is removed so that nobody can activate the electrical system, otherwise the ECM would turn on and the throttle actuator (ETA) would cycle. This could cause serious finger injury as the throttle plate moves quickly.**

6. Gently open throttle plate and hold fully open to reach all surfaces.
7. To remove residual dirt, spray cleaner on throttle plate and on bore.
8. Reinstall removed parts.

Removing the Throttle Body

1. Disconnect air inlet hose from throttle body.
2. Disconnect throttle body connector.

To remove connector from throttle body, simultaneously press the end of both connector locking tabs illustrated.

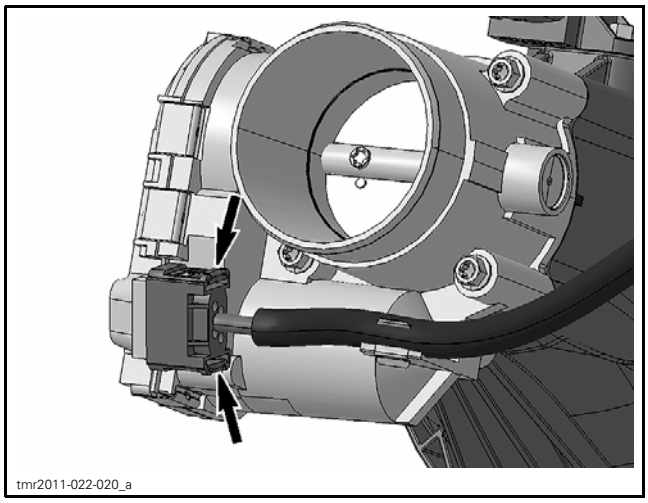

THROTTLE BODY CONNECTOR- PRESS HERE TO UNLOCK

3. Remove screws retaining throttle body to intake socket.

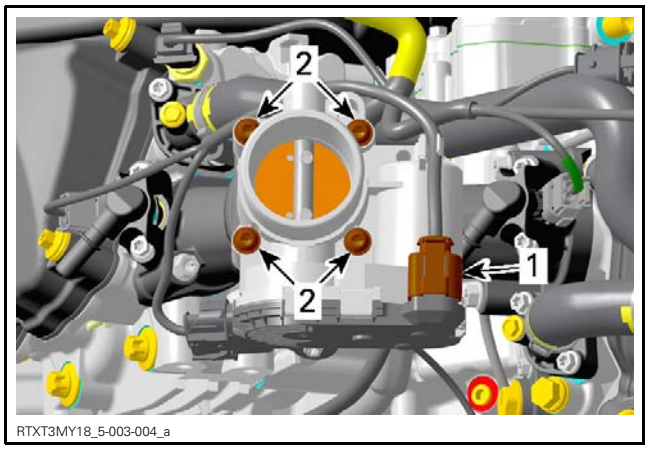

1. *Throttle body connector*
2. *Screws (4)*

4. Pull throttle body off intake socket.

Installing the Throttle Body

The installation is the reverse of the removal procedure. However, pay attention to the following details.

TIGHTENING TORQUE	
Throttle body retaining screws	10 N•m ± 1.2 N•m (89 lbf•**in** ± 11 lbf•**in**)

1. Perform the *THROTTLE POSITION SENSOR INITIALIZATION* reset procedure. Refer to *THROTTLE POSITION SENSOR (TPS)* in this subsection.

THROTTLE POSITION SENSOR (TPS)

TPS Description

The TPS is part of the throttle body.

The throttle position sensor (TPS) is a double potentiometer that sends signals to the ECM that are proportional to the throttle plate angle.

NOTE: As a first troubleshooting step, always check for applicable fault codes using the BRP diagnostic software (BUDS2).

Throttle Position Sensor Initialization

NOTE: The TPS initialization procedure **must** be carried out whenever the throttle body is replaced, unless an ECM first initialization reset is carried out.

This operation performs a reset of the TPS basic values in the ECM. This reset is very important as the TPS values are part of the basic parameters for all fuel mapping calculations and control of several settings such as for idle speed, LIMP HOME mode and maximum RPM of the engine.

NOTICE **An improperly set TPS may lead to improper idle speed (too low or too high), poor engine performance, poor engine starting and engine stop on deceleration, fault codes and possible engine damage. Emission compliance may also be affected.**

1. Connect the vehicle to the BRP diagnostic software (BUDS2). Refer to *COMMUNICATION TOOLS AND B.U.D.S.* subsection.
2. In BUDS2, select the following:
   – **Setting** page
   – **ECM** button
   – **Reset TPS**.
3. Ensure the throttle lever is fully released and at the idle position.
4. In the **Reset TPS** box, click on the **Reset** button.

A message will be displayed if the operation is successful.

If an error occurred or the TPS is not within the allowed range while resetting, the ECM will generate a fault code and will not accept the setting.

5. If a fault message is displayed, follow the instructions in the message(s).
6. Check for fault codes.
7. If a fault code is generated,
   – Carry out the service actions.

– Reset the fault.
– Repeat the reset procedure.

8. Start engine and make sure it operates normally throughout its full engine RPM range.

Testing the TPS Resistance

1. Ensure the throttle body connector is properly connected.
2. Disconnect ECM connector A from the ECM and install it on the ECM adapter tool..
3. Set multimeter to Ω.

REQUIRED TOOL	
FLUKE 115 MULTIMETER (P/N 529 035 868)	
ECM ADAPTER TOOL (P/N 529 036 166)	

4. Probe circuit as per following table while using your hand to manually move throttle plate.

ECM ADAPTER		FULLY CLOSED THROTTLE PLATE (1)		FULLY OPEN THROTTLE PLATE	
		RESISTANCE (Ω)			
PIN		MIN.	MAX.	MIN.	MAX.
A-A2	A-K4	875	1625	875	1625
A-A2	A-K3	954	1934	228	585
A-A2	A-F3	254	634	980	1983
A-K3	A-K4	228	585	954	1934
A-K3	A-F3	1385	2315	1385	2315
A-K4	A-F3	980	1983	254	634

(1) To obtain the fully closed position, it is necessary to push against the throttle plate in the throttle body with your hand and hold it in this position for the measurement.

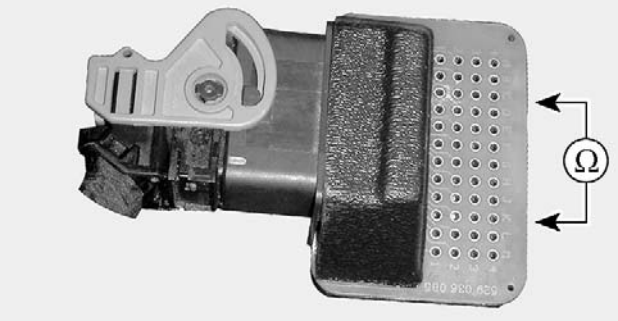

vmr2008-022-005_a

If any resistance value is incorrect, check wire continuity between ECM and throttle body before assuming the TPS is at fault. Refer to *WIRING DIAGRAM* subsection.

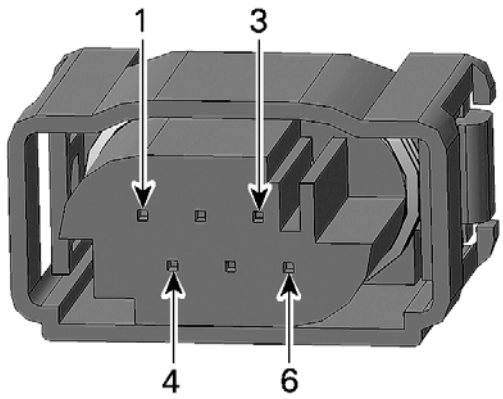

tmr2011-022-019_a

THROTTLE BODY CONNECTOR PIN-OUT

Replacing the TPS

The TPS cannot be replaced alone. It is part of the throttle body.

Carry out the *THROTTLE POSITION SENSOR INITIALIZATION* procedure as detailed in *THROTTLE BODY* of this subsection.

CRANKSHAFT POSITION SENSOR (CPS)

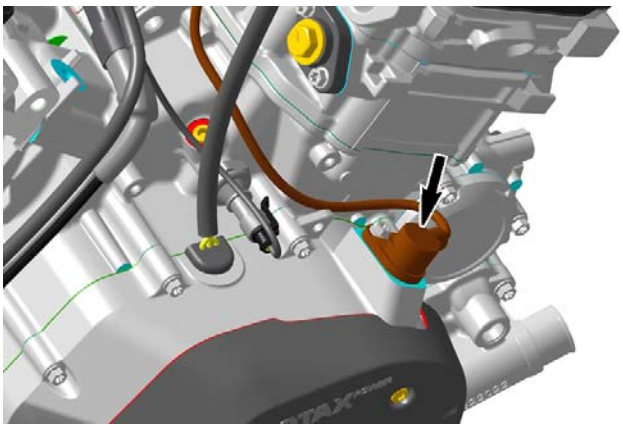
RTXT3MY18_5-003-006_a

Take into account that a CPS fault can be triggered by bent or missing encoder wheel teeth. First check fault codes using the BRP diagnostic software (BUDS2), then check the encoder wheel teeth condition if necessary (refer to *MAGNETO AND STARTER* subsection).

Testing the CPS Resistance

Disconnect CPS wiring harness connector.

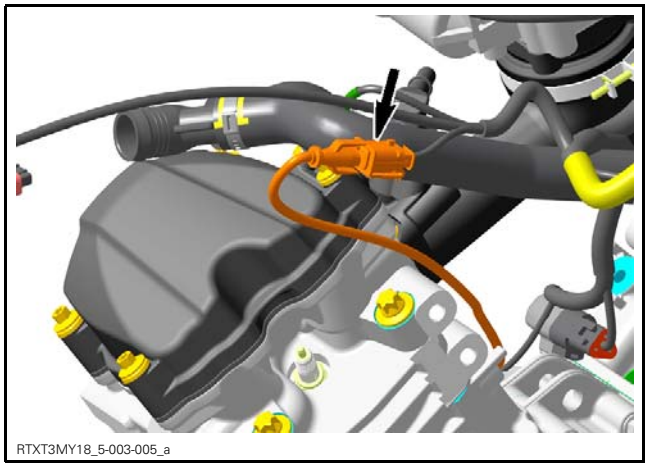

TYPICAL - LH SIDE OF VEHICLE

Probe terminals as per following table.

CPS CONNECTOR		MEASUREMENT
PIN		RESISTANCE Ω @ 20°C (68°F)
1	2	700 - 900 Ω

If resistance is not within specifications, replace the CPS.

If resistance tests good, **reconnect** the CPS connector and disconnect the connector "A" on the ECM.

Install ECM-A connector on ECM ADAPTER TOOL (P/N 529 036 166).

Using a multimeter, recheck resistance as per table.

ECM CONNECTOR		MEASUREMENT
PIN		RESISTANCE Ω @ 20°C (68°F)
A-H1	A-K2	700 - 900 Ω

If resistance value is correct, refer to *REPLACING THE CTS*.

If resistance value is incorrect, repair the connectors or replace the wiring harness between ECM connector and the CPS.

Replacing the CPS

Disconnect CPS connector and cut harness locking tie.

Remove CPS retaining screw and pull up on CPS to remove it.

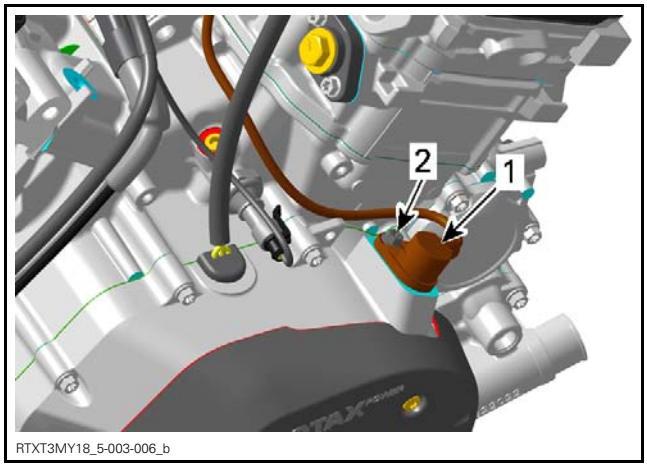

1. *CPS*
2. *Retaining screw*

Lubricate O-ring of CPS.

O-RING	
Service product	SYNTHETIC GREASE (P/N 779162)

Install new CPS and secure harness with a new locking tie.

TIGHTENING TORQUE	
CPS retaining screw	10 N•m ± 1 N•m (89 lbf•**in** ± 9 lbf•**in**)

MANIFOLD AIR PRESSURE AND TEMPERATURE SENSOR (MAPTS)

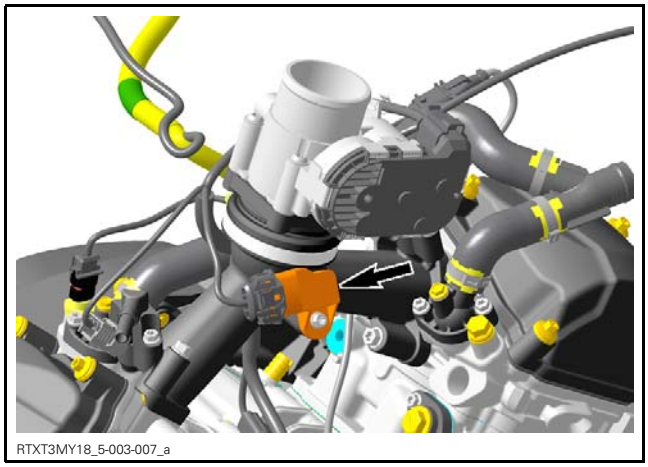

MANIFOLD AIR PRESSURE AND TEMPERATURE SENSOR (MAPTS)

NOTE: This sensor is a multifunction device.

MAPTS Pressure Function

Before the engine is started, when power is applied to the system, the sensor measures the ambient air atmospheric pressure. The ambient pressure is, at that moment, stored in the ECM. Thereafter, once the engine is started, it measures the air pressure in the inlet end of the intake manifold at operating RPMs.

The sensor must be correctly installed on intake manifold. Otherwise, the MAPTS could generate a fault code for an unexpected sensor range at idle when it reads the atmospheric pressure. If this is the case, remove sensor and check for oil or dirt on its end and if problem persists, check throttle plate condition/position and the wiring harness. Perform the following tests.

Testing the MAPTS Pressure Function Quick

1. Connect the vehicle to the BRP diagnostic software (BUDS2).
2. In BUDS2, select the following:
   –
   – **Measurements** page
   – **ECM** button
   – **Custom** tab
   – **Manifold Pressure With Altitude Correction**.
3. Look for and take note of the MAPTS pressure reading while the engine is stopped.
4. Perform the same test with a new MAPTS and compare both readings.

Values have to be within ± 3.4 kPa (.5 PSI).

NOTE: 1 kPa = 10 hPa.

MAPTS PRESSURE FUNCTION QUICK TEST			
RESULT	SERVICE ACTION		
NO READING	Circuit Continuity Test of MAPTS Pressure Function	MAPTS Input Voltage Test	Repair or replace wiring
VALUE IS OUT OF RANGE	Replace MAPTS		

Testing the MAPTS Input Voltage

Check the voltage output from ECM to the pressure sensor.

1. Turn ignition key ON.
2. Remove electrical connector from MAPTS.
3. Measure for input voltage as per following table.

REQUIRED TOOL	
FLUKE 115 MULTIMETER (P/N 529 035 868)	

MAPTS CONNECTOR		MEASUREMENT
PIN		VOLTAGE
1	3	5 Vdc

If voltage test is good, replace the MAPTS.

If voltage test is not good, carry out *TESTING THE MAPTS CIRCUIT CONTINUITY (PRESSURE FUNCTION)*.

Testing the MAPTS Circuit Continuity (Pressure Function)

1. Disconnect the ECM "A" connector.
2. Install ECM-A connector on ECM adapter tool.
3. Check continuity of the following circuits.

MAPTS CIRCUIT CONTINUITY TEST (PRESSURE FUNCTION)		
ECM-A	MAPTS CONNECTOR	RESISTANCE VALUE
Pin B4	Pin 3	Close to 0 Ω
Pin G4	Pin 4	
Pin H2	Pin 1	

If resistance is not within specification, repair or replace the wiring harness between ECM connector and the MAPTS.

MAPTS Temperature Function

The sensor monitors the temperature in the inlet of the intake manifold.

Testing the MAPTS (Temperature Function)

1. Connect the vehicle to the BRP diagnostic software (BUDS2).
2. In BUDS2, select the following:
   – **Monitoring** page
   – **ECM** button
   – **Custom** tab.
3. Look for the **Intake Temperature** reading while the engine is stopped.
4. Perform the same test with a new MAPTS and compare both readings.

If the engine's MAPTS temperature reading is significantly different than the new MAPTS, replace it.

NOTE: Both sensors must measure the same ambient air temperature.

If there is no reading, carry out a *TESTING THE MAPTS RESISTANCE (TEMPERATURE FUNCTION)*.

Testing the MAPTS Resistance (Temperature Function)

Disconnect the connector from the MAPTS.

Check the resistance of the sensor itself as shown.

MAPTS		MEASUREMENT
PIN		RESISTANCE Ω @ 20°C (68°F)
1	2	2280 - 2740

If resistance is not within specification, replace the MAPTS.

If resistance tests good, **reconnect** the MAPTS and disconnect the connector "A" from the ECM.

Install ECM-A connector on ECM ADAPTER TOOL (P/N 529 036 166).

Using a multimeter, recheck resistance value as per following table.

ECM CONNECTOR		MEASUREMENT
PIN		RESISTANCE Ω @ 20°C (68°F)
A-H2	A-H3	2280 - 2740

MAPTS TEMPERATURE SENSOR TEST RESULTS			
RESULT	SERVICE ACTION		
NO READING	Circuit Continuity Test of MAPTS Temperature Function	MAPTS Input Voltage Test	Repair or replace wiring
INCORRECT RESISTANCE VALUE	Replace MAPTS		

Testing the MAPTS Circuit Continuity (Temperature Function)

MAPTS CIRCUIT CONTINUITY TEST (TEMPERATURE FUNCTION)		
ECM ADAPTER	MAPTS CONNECTOR	RESISTANCE VALUE
Pin H2	Pin 1	Close to 0 Ω
Pin H3	Pin 2	

Replacing the MAPTS

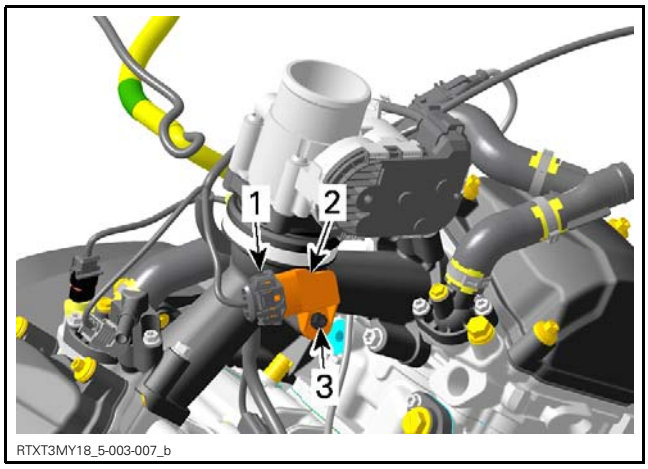

1. MAPTS connector
2. MAPTS
3. Retaining screw

Disconnect MAPTS connector and remove the MAPTS from the intake manifold.

Install new MAPTS as per following table.

TIGHTENING TORQUE	
MAPTS retaining screw	6 N•m ± 0.7 N•m (53 lbf•**in** ± 6 lbf•**in**) + LOCTITE 243 (BLUE) (P/N 293 800 060)

COOLANT TEMPERATURE SENSOR (CTS)

CTS Access

The CTS is located on the LH of the engine, aft cylinder. To access it, remove the:

– Driver's seat
– LH lateral console panel.

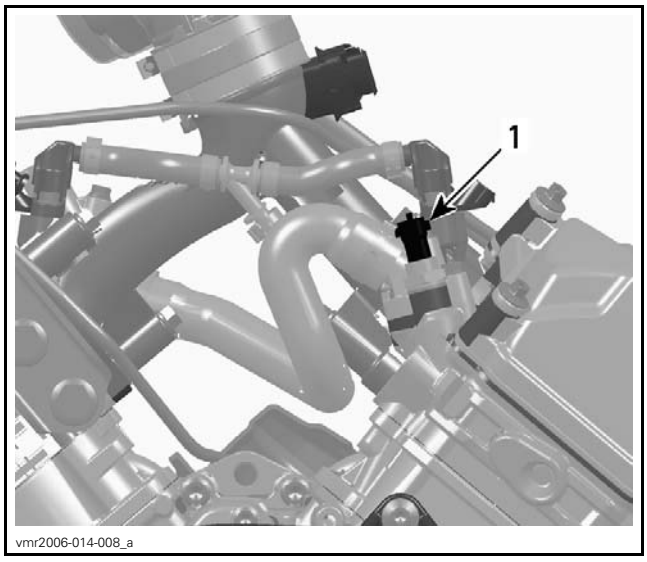

LH SIDE OF THE ENGINE, REAR CYLINDER
1. Coolant temperature sensor (CTS)

Testing the CTS Resistance

1. Disconnect the plug connector from the CTS and check the resistance of the sensor itself.

CTS SENSOR		MEASUREMENT
PIN		RESISTANCE Ω @ 20°C (68°F)
1	2	2280 - 2740

CHECK SENSOR RESISTANCE

If resistance is out of specification, replace the CTS.

If resistance test is good,**reconnect** the CTS and disconnect the ECM connector "A" from the ECM.

2. Install ECM-A connector on ECM ADAPTER TOOL (P/N 529 036 166).

3. Using a multimeter, recheck resistance from the ECM connector as per table.

ECM ADAPTER		MEASUREMENT
PIN		RESISTANCE Ω @ 20°C (68°F)
A1	J2	2280 - 2740

If resistance value is correct, refer to *ECM REPLACEMENT*.

If resistance value is incorrect, repair the connectors or replace the wiring harness between ECM connector and the CTS.

Replacing the CTS

1. Disconnect CTS connector and remove CTS.
2. Install the new CTS and torque as specified.

TIGHTENING TORQUE	
CTS	16 N•m ± 2 N•m (142 lbf•**in** ± 18 lbf•**in**)

3. Reinstall remaining removed parts.
4. Refill and bleed the cooling system, refer to *COOLING SYSTEM* subsection.

HEATED OXYGEN SENSOR (HO_2S)

Oxygen Sensor Location

This vehicle is equipped with a heated oxygen sensor (HO_2S): The sensor is located on the exhaust pipe, between the rear cylinder and the muffler.

Oxygen Sensor General Precautions

Take the following precautions to avoid sensor malfunction:

– Do not use any product on sensor probe.
– Do not expose sensor to water, oil, windshield cleaner, anticorrosion oil, grease, terminal cleaner, etc.
– Do not drop or use an oxygen sensor that has been dropped.
– Do not use any compound on sensor threads unless labeled as compatible with oxygen sensor.
– Do not use impact wrench or conventional socket type wrench to install sensor.
– Do not allow sensor or wire to touch exhaust system or any other hot component.
– Do not route sensor wires to create tension in the wires. This could cause faults or sensor malfunction.

Oxygen Sensor Troubleshooting

Always use the BRP diagnostic software (BUDS2) to check for fault codes. Carry out service actions.

In BUDS2, also check oxygen sensor voltage and refer to following table.

OXYGEN SENSOR VOLTAGE IN BUDS2	
VOLTAGE READING	CONDITION
Varies 0.1 to 0.8 Volts	Normal oxygen sensor operation in closed loop
Constant 0.45 Volts	Oxygen sensor circuit open
Constant low voltage	Indicates fuel mixture too lean, possible oxygen sensor fault, possible fuel system fault, possible air leak
Constant high voltage	Indicates fuel mixture too rich, possible fuel system fault, possible fuel canister problem

Testing the Oxygen Sensor

Testing for Oxygen Sensor Input Voltage

NOTE: This test validates the heater element circuit.

1. Ensure main power relay (R2) in installed in fuse box 1.
2. Disconnect the oxygen sensor connector.
3. Turn ignition switch ON.
4. Using a multimeter set to Vdc, read the input voltage provided to the sensor heater.

REQUIRED TOOLS	
FLUKE 115 MULTIMETER (P/N 529 035 868)	

OXYGEN SENSOR CONNECTOR (HARNESS SIDE)		MEASUREMENT
PIN		
C	Battery ground	Battery voltage

If Input voltage is good, refer to *TESTING THE RESISTANCE OF THE OXYGEN SENSOR HEATER* and *TESTING FOR OXYGEN SENSOR CIRCUIT CONTINUITY*.

If input voltage is not good, test the continuity of the power circuit from fuse F4 in fuse box 1. Refer to the applicable *WIRING DIAGRAM* for details.

If input voltage wire continuity is at fault, repair or replace wiring or connector.

Testing the Resistance of the Oxygen Sensor Heater

Test the resistance value of the oxygen sensor between the sensor pins as follows.

OXYGEN SENSOR PIN		RESISTANCE @ 20°C (68°F)
C	D	Approximately 7 - 11 Ω

If reading is **not** within specification, replace the oxygen sensor.

Testing for Oxygen Sensor Circuit Continuity

NOTE: This test validates the heater element circuit and the sensor circuits.

1. Remove main power relay (R2) in fuse box 1. Refer to *POWER DISTRIBUTION AND GROUNDS* subsection.
2. Disconnect ECM-B connector and install it on the ECM adapter tool.
3. Set the multimeter to "Ω". test for continuity between the oxygen sensor harness connector and the ECM adaptor as per following tables.
4. Test for continuity between the oxygen sensor harness connector and the ECM adaptor as per following tables.

REQUIRED TOOLS	
FLUKE 115 MULTIMETER (P/N 529 035 868)	
ECM ADAPTER TOOL (P/N 529 036 166)	

OXYGEN SENSOR CIRCUIT CONTINUITY TEST		
OXYGEN SENSOR PIN	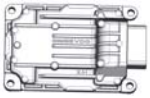	RESISTANCE @ 20°C (68°F)
A	C3	Close to 0 Ω
B	G4	
C	L1	
D	L2	

OXYGEN SENSOR CIRCUIT CONTINUITY TEST		
OXYGEN SENSOR PIN		RESISTANCE @ 20°C (68°F)
A	J1	Close to 0 Ω
B	D2	
D	L2	

If a resistance value is NOT as specified, repair or replace the wiring and connectors.

Replacing the Oxygen Sensor

1. Remove main power relay (R2) in fuse box 1. Refer to *POWER DISTRIBUTION AND GROUNDS* subsection.

⚠ CAUTION Exhaust system and oxygen sensor may be hot. To avoid possible injury, allow exhaust system components time to cool before proceeding.

2. Disconnect oxygen sensor connector.
3. Cut locking tie securing oxygen sensor harness.
4. Unscrew oxygen sensor from exhaust pipe.

NOTICE Handle oxygen sensor with clean hands. Oxygen sensor probe must remain free of oil, grease, antiseize lubricant and any other foreign matter that could affect its operation.

If a new oxygen sensor is installed, its threads are already coated with an anti-seize product. Sensor is ready for installation.

If the same oxygen sensor is installed, apply LOCTITE 767 (ANTI-SEIZE LUBRICANT) (P/N 293 800 070) on its **first two threads**.

NOTICE Always use a product that is oxygen sensor safe.

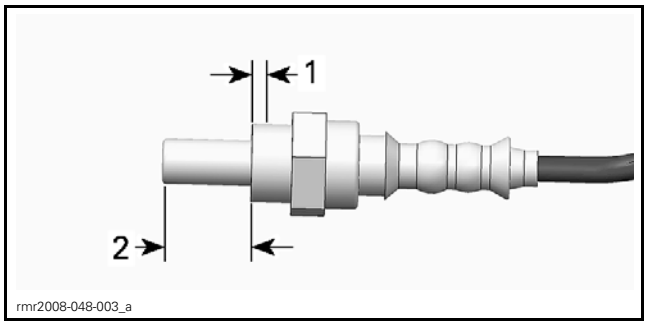

TYPICAL
1. Apply antiseize lubricant first two threads
2. Must be free of any product

NOTICE Do not apply any antiseize lubricant to the sensor probe as it could affect its operation.

5. Screw sensor in exhaust pipe.

TIGHTENING TORQUE	
Oxygen sensor	50 N•m ± 10 N•m (37 lbf•ft ± 7 lbf•ft) + LOCTITE 767 (ANTI-SEIZE LUBRICANT) (P/N 293 800 070)

6. Install all other removed parts.

ELECTRONIC FUEL INJECTION (EFI) (iTC)

SERVICE TOOLS

Description	Part Number	Page
ECM ADAPTER TOOL	529 036 166	1
FLUKE 115 MULTIMETER	529 035 868	1

SERVICE PRODUCTS

Description	Part Number	Page
LOCTITE 243 (BLUE)	293 800 060	15
LOCTITE 767 (ANTISEIZE LUBRICANT)	293 800 070	18
SYNTHETIC GREASE	779162	13

GENERAL

The following tools are required to test most of the electrical parts.

REQUIRED TOOLS	
FLUKE 115 MULTIMETER (P/N 529 035 868)	
ECM ADAPTER TOOL (P/N 529 036 166)	

⚠ WARNING

Fuel is flammable and explosive under certain conditions.
Ensure work area is well ventilated.
Do not smoke or allow open flames or sparks in the vicinity.
Fuel lines remain under pressure at all times. Always proceed with care and use appropriate safety equipment when working on pressurized fuel system.
Wipe off any fuel spillage.
Do not allow fuel to spill on hot engine parts and/or on electrical connectors.
Replace any damaged, leaking or deteriorated fuel lines or connections.
Always, pressurize the fuel system if any fuel related component was disconnected or removed.
Proceed with care when removing/installing high pressure test equipment.

SYSTEM DESCRIPTION

The electronic fuel injection system (EFI) is comprised of various sensors used for detecting ongoing operating conditions of the engine and vehicle, and includes all the components that perform the required adjustments to the engine.

Electrical System

ECM (Electronic Control Module)

From input signals, the ECM acknowledges driver demands and converts them to an engine torque requirement through calculation of several variables. Then, the ECM controls the iTC, the injection system and the ignition system to meet the torque requirement.

The ECM manages the engine torque requirements and controls engine operation to ensure it is delivering optimum performance and fuel economy. The ECM also controls idle RPM and limits maximum engine speed through the iTC system.

EFI Sensors

The ECM reads the inputs from the sensors which it compares to predetermined parameters stored in the ECM, makes computations, and activates the outputs accordingly (injectors, ignition coils etc.).

Signals from sensors are used by the ECM to determine the injection and ignition parameters (referenced to fuel maps) as required to maintain the optimum air-fuel ratio.

Air Intake System

Air Filter

Air, drawn into the air filter housing, first passes through an inlet duct.

After it passes through the air filter, an air duct (intake adapter) is used to channel the air to the throttle body.

Throttle Body

The throttle body is mounted on the front end of the intake manifold, aft of the air filter housing.

Air for combustion, drawn in by the engine, flows through the air intake system, then through the throttle body where it is regulated by a throttle plate.

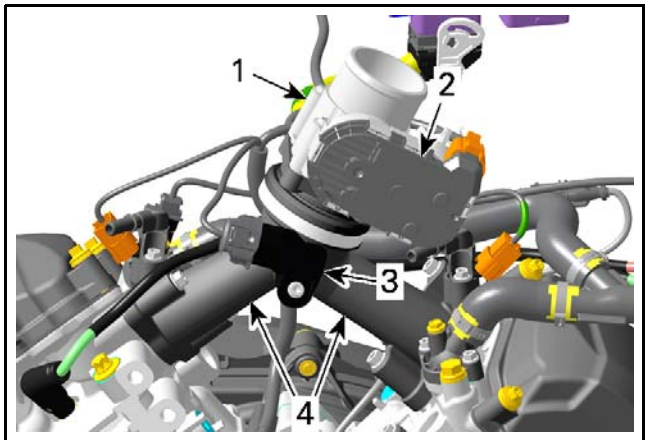

RTXT3MY18_5-003-001_a

1. *Throttle body*
2. *ETA and TPS*
3. *MAPTS (Manifold Air Pressure Temperature Sensor)*
4. *Air intake manifold*

Fitted on the throttle body, an electronic throttle actuator (ETA) allows the ECM to electronically control the throttle plate opening which regulates the amount of air that enters the engine, and therefore engine torque.

There is no idle air control valve (IACV).

The TPS is also incorporated in the throttle body. It provides a signal to the ECM of the actual throttle plate position.

Fuel System

Fuel Rail

Two fuel rails, one for each injector, are mounted on the intake manifold. The fuel rails, which are used to secure the injectors to the manifold, also provide to the injectors the fuel pressure that they receive from the fuel pump.

The fuel pressure applied to the fuel rails is regulated by the fuel pressure regulator located in the fuel pump module.

Fuel Injectors

The fuel injectors are used to inject fuel into the intake ports of the cylinder head. One injector is used per cylinder.

Fuel Pump

An electric fuel pump with an integrated pressure regulator and fuel system filters is used. For more details on the fuel pump unit, refer to *FUEL TANK AND FUEL PUMP* subsection.

ADJUSTMENT

IDLE SPEED

Idle speed is not adjustable. The ECM controls the idle speed of the engine primarily through control of the throttle plate position.

The vehicle multifunction gauge can provide an accurate digital readout of the engine's idle speed.

The engine RPM may also be verified using the BRP diagnostic software (BUDS2).

In BUDS2, go to:

– **Measurements** page
– **ECM** button.

NOTE: The multifunction gauge and the BRP diagnostic software (BUDS2) use the same signal to provide the engine RPM indication.

TROUBLESHOOTING

DIAGNOSTIC TIPS

Engine problems are not necessarily related to the fuel injection system.

It is important to ensure that the engine and propulsion system, fuel delivery and electrical systems are functioning normally.

For diagnostics purposes, use the BRP diagnostic software (BUDS2).

After a problem has been solved, be sure to clear the fault(s) in the ECM using the BRP diagnostic software.

⚠ WARNING

Electrical actuators and electronic modules may be powered up as soon as the ignition switch is set to ON. Always disconnect the battery prior to disconnecting any electrical or electronic parts.

Never use a battery charger to temporarily substitute the battery as it may cause the ECM to function erratically, or not at all.

Check related-circuit fuse solidity and condition with an ohmmeter. A visual inspection could lead to a false diagnosis.

Electrical Related Problems

It is important to check the following in the electrical system:

– Battery voltage
– Fuses
– Ground connections
– Wiring and connectors.

Ensure that all electronic components are genuine OEM. Any modification to the wiring harness may lead to poor system operation or generate fault codes.

Electrical Connections

Pay particular attention to ensure that terminals and pins are not out of their connectors, corroded, or out of shape.

When probing terminals, pay attention not to deform the terminals as this could cause a loose or intermittent connection that would be difficult to troubleshoot.

PROCEDURES

ENGINE CONTROL MODULE (ECM)

NOTE: As a first troubleshooting step, always check for applicable fault codes using the BRP diagnostic software (BUDS2).

Quick Test to Validate ECM Operation

Turn ignition key to ON.

NOTE: Setting the ignition switch to ON wakes up the ECM, which then turns on the following.

QUICK INDICATION THAT ECM IS FUNCTIONING (ASSUMING THE OBSERVED COMPONENT IS IN GOOD WORKING ORDER)
Multifunction gauge turns ON.
Fuel pump turns on for approx. 5 seconds.
Rear lights turn on.
Headlamps turn on (ignition key on with lights position).

ECM First Initialization

This procedure performs a reset of the following values in the ECM:

– TAS (Throttle Accelerator Sensor)
– TPS (Throttle Position sensor)
– GBPS (Gearbox Position Sensor).

This reset **must** be carried out whenever the ECM has been replaced.

This reset **may** be carried out whenever any of the following components have been replaced instead of their respective reset procedures:

– Throttle body (for TPS)
– GBPS (Gearbox Position Sensor).

1. Connect the vehicle to the BRP diagnostic software (BUDS2).
2. In BUDS2, select the following:
   – **Settings** page
   – **ECM** button
   – **Settings** tab
   – **Initialization - Reset TPS**
3. In the **Initialization - Reset TPS** field, click on the **Reset** button.
4. Follow the instructions in the message boxes that appear.

If the operation is successful, a message will be displayed stating that the reset was successful.

If an error occurred or a component is out of range, a message may be displayed. Follow the instructions in the message and repeat the procedure.

5. Check for fault codes.

If a fault code is generated, carry out the service actions, reset the fault and repeat the reset procedure.

6. Start engine and make sure it operates normally throughout its full engine RPM range.

ECM Access

The ECM is located on the LH side of the air intake silencer.

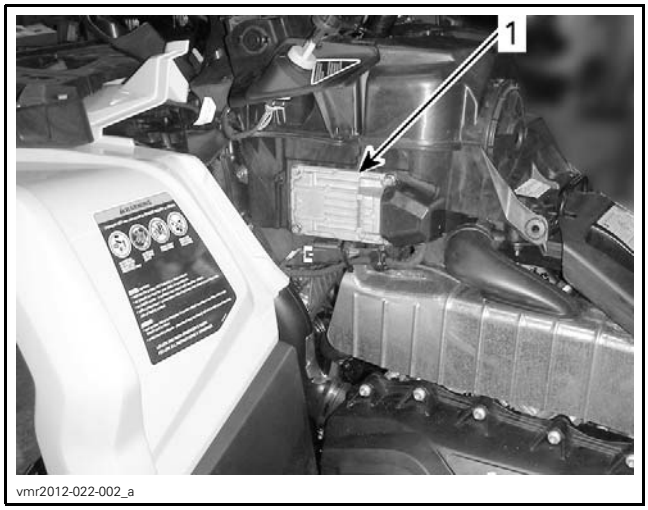

LH PANEL REMOVED
1. ECM location

ECM Connector Identification

There are 2 connectors connected to the ECM:
- Engine harness connected to ECM-A
- Vehicle system control harness connected to ECM-B.

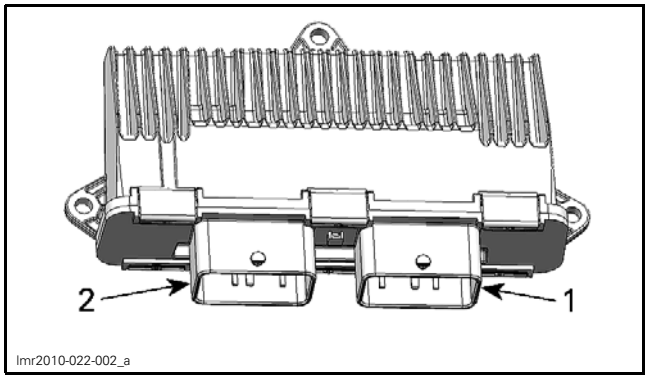

1. Connector A
2. Connector B

For connector information, cleaning and probing, refer to *WIRING HARNESS AND CONNECTORS* subsection.

Testing the ECM Power Supply

1. Disconnect connector "B" from the ECM.
2. Install ECM connector "B" on the ECM adapter tool.
3. Install a jumper wire between B-H2 and B-M2 on the ECM adapter tool.
4. Turn the ignition switch to ON.
5. Set the multimeter to Vdc.
6. Check for voltage as follows.

ECM ADAPTER	BATTERY	VOLTAGE
B-M4	Negative post	Battery voltage

If voltage is not measured, check the following:
- Main relay
- Wiring and connections, refer to the *WIRING DIAGRAM*.

Testing the Continuity of ECM Ground Circuits

1. Disconnect connector "B" from ECM.
2. Install the ECM-B connector on the ECM adapter tool.
3. Set the multimeter to Ω.
4. Probe adapter terminals as per following table.

ECM ADAPTER	BATTERY POST	RESISTANCE
Pins B-L1, B-M2 and B-M3	Ground	Close to 0 Ω (continuity)

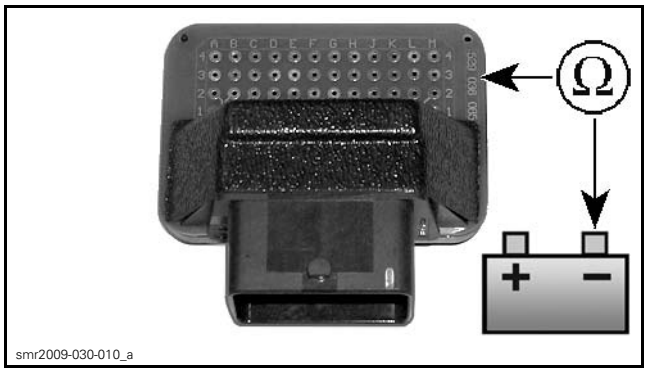

If any measurement is out of specification, refer to *POWER DISTRIBUTION* and check all grounds.

Removing the ECM

NOTE: If a new ECM is to be installed, first read the procedures in *REPLACING THE ECM* in this subsection.

1. Disconnect battery cables.

NOTICE **Always disconnect the BLACK negative (–) battery cable first, then disconnect RED positive (+) cable.**

2. Disconnect both ECM connectors from ECM.
3. Unscrew all retaining screws and pull out ECM.

Installing the ECM

Reverse removal procedure however, pay attention to the following.

TIGHTENING TORQUE	
ECM screws	2 N•m ± 0.2 N•m (18 lbf•**in** ± 2 lbf•**in**)

1. Reconnect ECM connectors.
2. Reconnect battery cables.

NOTICE **Always reconnect the RED positive (+) battery cable first, then reconnect BLACK negative (–) cable.**

3. If a new ECM is installed, refer to *REPLACING THE ECM* in this subsection.

Replacing the ECM

Prior to replacing an ECM, ensure that all the recommendations in the general introduction of this section have been followed.

NOTE: Proceed with an *ECM FIRST INITIALIZATION* as it may resolve the problem.

If the ECM is replaced, data must be manually entered into the new ECM.

ECM Data Entry for ECM Replacement

Use one of the following 2 methods to collect the required information. The 1st being the easiest:

1. Use BUDS2 to obtain the data from a saved "*.buds2" file on your PC computer.
2. Collect the information from the vehicle and on the Knowledge Center.

Once the required information has been collected, refer to *ENTERING THE COLLECTED INFORMATION INTO THE ECM*.

1st Collecting Method: Obtaining the Data from a Saved .buds2 File

1. Start BUDS2.

NOTE: It is not necessary to perform any connection. The PC computer can be used alone.

2. In BUDS2, click on the **Open a BUDS2 file** button.

Make sure you are at: C:\Program Files(x86)\BRP\BUDS2\Files.

IMPORTANT: Be sure to use the file that specifically matches the vehicle you are servicing.

NOTE: The file name structure is as follows:
VIN_date read (yyyymmdd)_hour read (hhmmss).mpem
Example: **2BPSBK8C68V000168_20090206_111640.buds2** Therefore: VIN: 2BPSBK8C68V000168 Date: 2009 02 06 Hour: 11h 16m 40s

3. Select the **Summary** page then the **Vehicle** tab and record (write down) the following information.
   1. Vehicle serial number
   2. Engine serial number
   3. Vehicle model number
   4. Customer name.

2nd Collecting Method: Collect the Information from the Vehicle and BOSSWeb

1. Record engine serial number.
2. Record the following numbers from BOSSWeb. Look in **Sales** menu and choose **Unit history**.
   1. Vehicle serial number
   2. Vehicle model number
   3. Customer name.

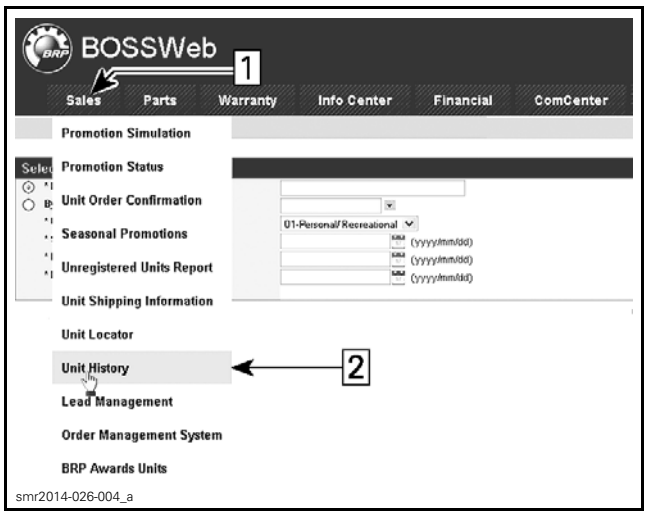

SERVICE, UNIT HISTORY
1. Click on SALES *menu*
2. Select Unit History

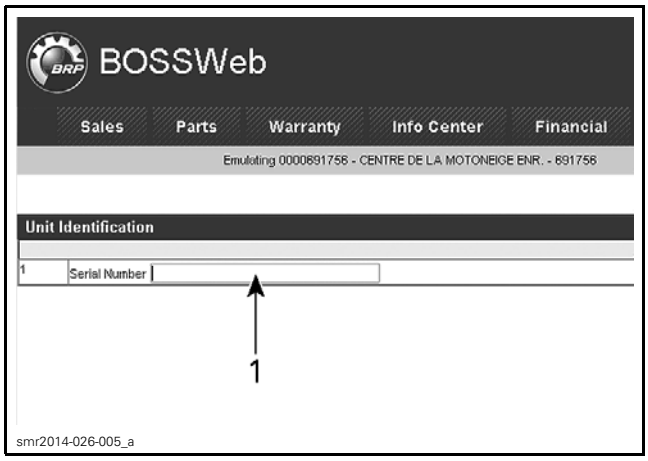

1. *Vehicle Serial Number here*

3. Enter the recorded data in the new ECM as detailed in *ENTERING THE COLLECTED INFORMATION INTO THE ECM*.

Entering the Collected Information Into the ECM

1. Connect the vehicle to the BRP diagnostic software (BUDS2).
2. In BUDS2, click the **Scan** button to read the new ECM.
3. Select:
   – **Summary** page
   – **Vehicle** button.
4. Write all of the following information you recorded previously.
   1. Vehicle serial number (VIN)
   2. Engine serial number
   3. Vehicle model number
   4. Customer name.

NOTICE **Enter only the appropriate product model number as obtained when gathering the information.**

NOTICE **Pay particular attention when typing the V.I.N. and model numbers. Once Write Data button is pressed, the data cannot be modified.**

5. Perform the *THROTTLE POSITION SENSOR INITIALIZATION* procedure, refer to *THROTTLE POSITION SENSOR (TPS)* in this subsection.
6. Start the engine and ensure proper operation.
7. Reinstall any remaining removed parts.

FUEL INJECTOR

Testing the Fuel Injector Operation Using BUDS2. (Dynamic)

NOTE: As a first troubleshooting step, always check for applicable fault codes using the BRP diagnostic software (BUDS2).

1. Connect the vehicle to the BRP diagnostic software (BUDS2).
2. Start engine.
3. In BUDS2, select the following:
   – **Functions** page
   – **ECM** button.
4. Select an injector and press the **ACTIVE** button.
5. Repeat for all injectors.

If the engine RPM drops momentarily when clicking on a cylinder, the injector on this cylinder is functioning normally.

If the engine RPM does not drop momentarily when clicking on a cylinder, this cylinder is not functioning properly. Check the following:

– Fuel injector operation. Refer to *TESTING THE FUEL INJECTOR BALANCE USING BUDS2*
– Spark plug and ignition coil. Refer to *IGNITION SYSTEM* subsection.
– Engine condition.

Testing the Fuel Injector Balance Using BUDS2

NOTICE **After fuel injector activation using BUDS2, always crank engine in drowned mode to ventilate engine and prevent a potential backfire due to fuel accumulation in engine.**

1. Install a fuel pressure gauge as described in *FUEL PUMP PRESSURE TEST* of *FUEL TANK AND FUEL PUMP* subsection.
2. Connect the vehicle to the BRP diagnostic software (BUDS2).
3. Turn the ignition key to ON.
4. In BUDS2, select the following:
   – **Functions** page
   – **ECM** button
   – **Activate Fuel Pump**.
5. Click on the **ACTIVATE** button to activate fuel pump.
6. Fuel pressure must be within specification. Refer to *FUEL TANK AND FUEL PUMP* subsection. Re-activate fuel pump as necessary.

7. In BUDS2, energize fuel injector **no. 1**.

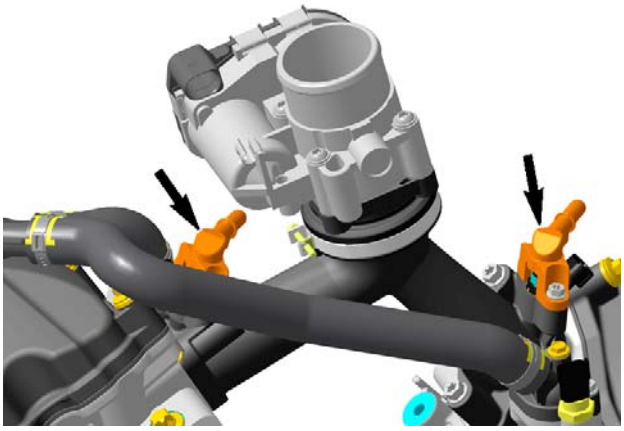

CLICK ON INJECTOR TO ACTIVATE

8. Record the fuel pressure drop for injector **no. 1**.
9. Re-activate fuel pump.
10. Repeat the procedure for fuel injector **no. 2** and record the pressure drop.
11. The maximum fuel pressure drop between injectors should not exceed the following specification:

MAXIMUM FUEL PRESSURE DROP ALLOWED BETWEEN FUEL INJECTORS
10 kPa (1.5 PSI)

If pressure drop of any fuel injector is greater than the specification, replace injector then repeat the test.

12. Using the valve on the fuel pressure gauge, release the pressure in the system (if so equipped).
13. Remove fuel pressure gauge and reinstall removed parts.

Testing the Fuel Injector for Leaks

Carry out the *FUEL PUMP PRESSURE TEST* as detailed in the *FUEL TANK AND FUEL PUMP* subsection.

Testing the Fuel Injector Resistance

Disconnect connector "A" from the ECM.

Disconnect the engine connector (HIC). Refer to *WIRING HARNESS AND CONNECTORS* subsection.

Check resistance value between terminals as follows.

FUEL INJECTOR RESISTANCE TEST AT HIC CONNECTOR			
INJ.	**HIC CONNECT.**	**ECM CONNECT. "A"**	**RESISTANCE @ 20°C (68°F)**
FRONT	D	A-J1	11.4 - 12.6 Ω
REAR		A-K1	

If resistance value obtained is incorrect, remove injector connector and check resistance value between injector pins as follows.

FUEL INJECTOR RESISTANCE TEST AT INJECTOR CONNECTOR			
INJECTOR	**INJECTOR PIN**		**RESISTANCE @ 20°C (68°F)**
FRONT	1	2	11.4 - 12.6 Ω
REAR			

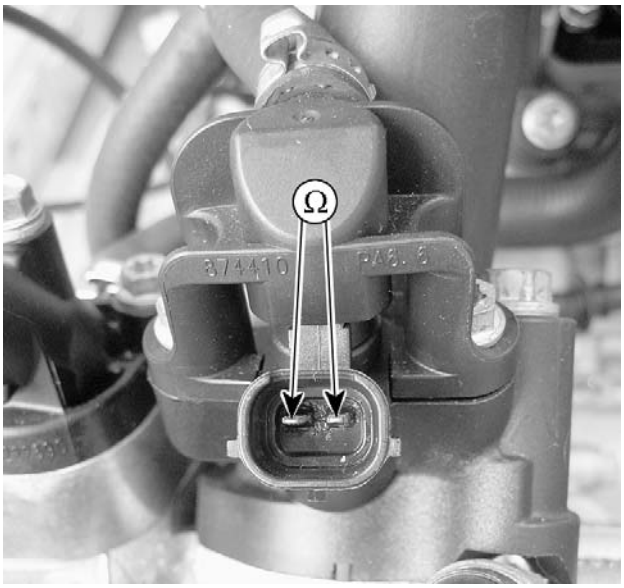

TYPICAL

If readings are out of specifications, replace injector.

If readings are good, carry out *TESTING THE FUEL INJECTOR INPUT VOLTAGE*.

Testing the Fuel Injector Input Voltage

Disconnect the fuel injector connector.

NOTE: If the connector is hard to unlock, gently use a screwdriver to release connector.

vmr2006-014-001_a

TYPICAL

NOTE: It is not necessary to activate the injector since it is continuously powered when the ignition key is set to ON.

Use a multimeter and set it to Vdc. Read voltage.

CYLINDER	INJECTOR CONNECTOR WIRE		MEASUREMENT
FRONT	VIOLET/ BLUE	Battery ground	Battery voltage
REAR			

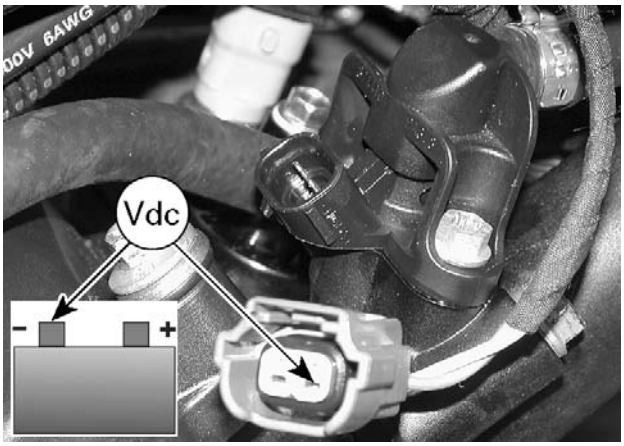

vmr2006-014-075_a

TYPICAL

If supply voltage is not good, check continuity between fuse F5 and injector (see *WIRING DIAGRAMS*).

NOTE: Probe fuse exactly as shown. This validates fuse at the same time.

Set multimeter to Ω.

CYLINDER	INJECTOR CIRCUIT WIRE		MEASUREMENT
FRONT	VIOLET/ BLUE	Fuse F5	Close to 0 Ω
REAR			

If continuity is good, check relay and wiring from battery.

If continuity is faulty, check fuse and if OK, repair or replace wiring going to injector.

If supply voltage is good, check ground circuit between injector and ECM (see *WIRING DIAGRAMS*).

– If ground circuit is faulty, repair/replace wiring and connectors.
– If ground circuit is good, refer to *REPLACING THE ECM*.

Removing the Fuel Injector

Remove the fuel rail refer to *FUEL RAIL* for the procedure.

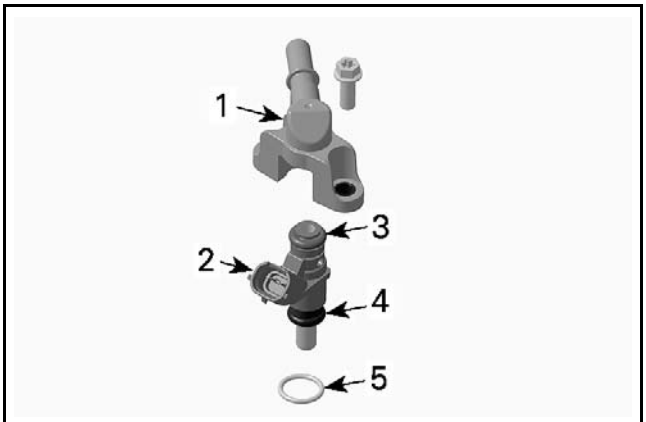

vmr2009-022-001_a

TYPICAL - FUEL RAIL ASS'Y
1. *Fuel rail*
2. *Fuel injector*
3. *Injector top O-ring*
4. *Injector bottom O-ring*
5. *Manifold O-ring*

Pull fuel injector out of the fuel rail.

Installing the Fuel Injector

The installation is the reverse of the removal procedure. However, pay attention to the following details.

NOTICE **If installing the removed injector(s), always install NEW O-rings.**

Lubricate O-rings to ease insertion in rail.

SERVICE PRODUCT	
Fuel injector O-rings	Engine oil

Install fuel injector with your hand. Do not use any tool.

Position the manifold O-ring on injector as in following illustration.

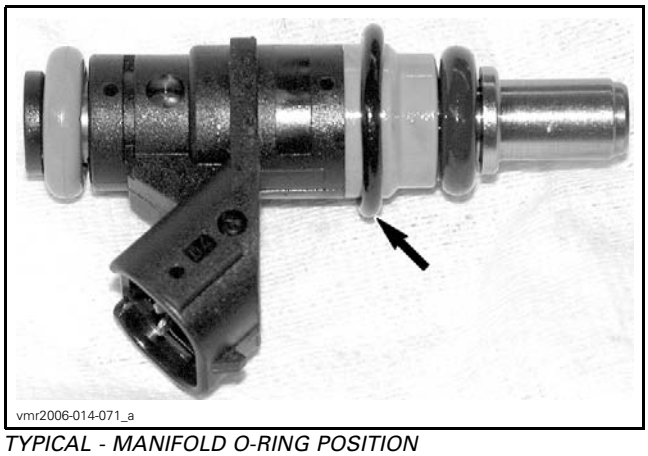

TYPICAL - MANIFOLD O-RING POSITION

Carefully insert injector in manifold paying attention to the manifold O-ring.

NOTICE **Gently push O-ring in evenly all around while inserting injector. O-ring must be completely inserted and not visible, before completing the insertion of the injector.**

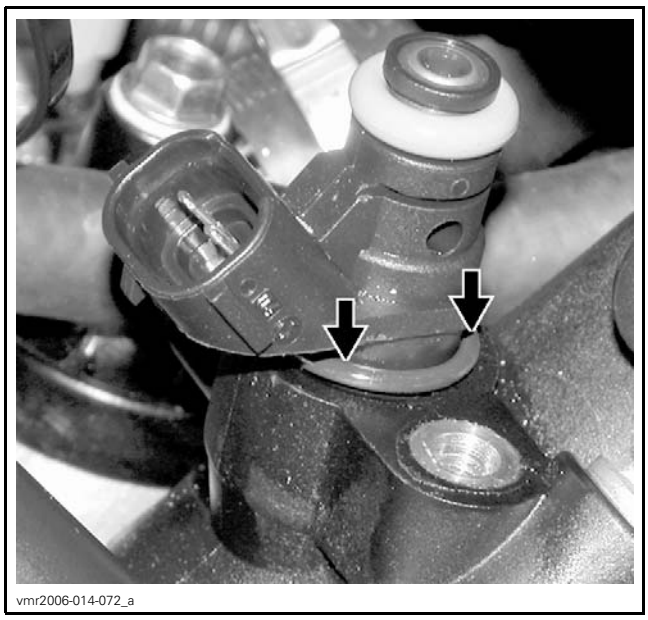

Firmly push injector until it bottoms out.

Reinstall fuel rail.

FUEL RAIL

Replacing the Fuel Rail

Removing the Fuel Rail

1. Connect the vehicle to the BRP diagnostic software (BUDS2).
2. Go to this location and follow the instructions:
   - **Function** page
   - **ECM** button
   - **Execute Fuel Pressure Relief**.
3. Wrap a rag around the inlet hose and release the quick fitting.

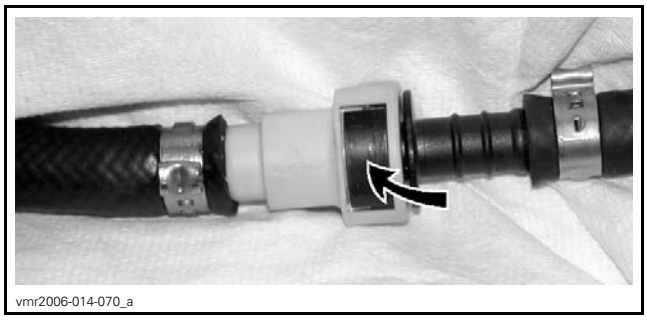

TYPICAL

4. Unscrew rail retaining screws.
5. Gently pull rail off by hand.

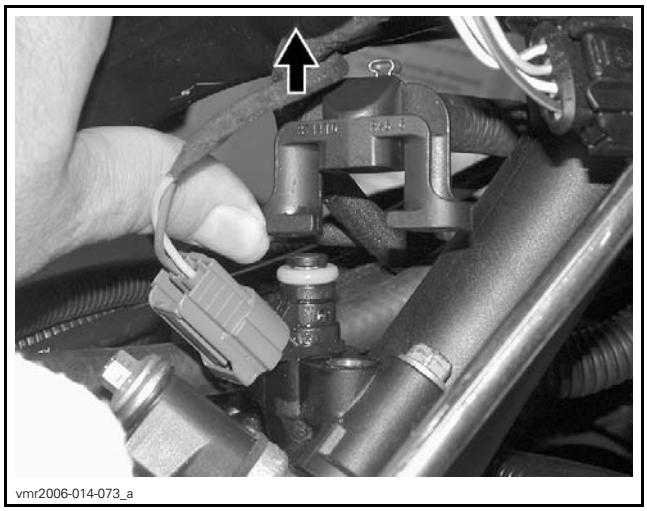

TYPICAL

To disconnect fuel rail from hose, cut clamp on fuel hose. Refer to *FUEL TANK AND FUEL PUMP* for clamp removal/installation procedures.

NOTE: If fuel rail is removed for access to fuel injector, it is not necessary to cut hose clamp. Only to replace fuel rail.

Installing the Fuel Rail

The installation is the reverse of the removal procedure. However, pay attention to the following details.

Install new clamps using pliers as per removal (if fuel rail was replaced).

Apply a thin film of engine oil to injector O-rings to ease insertion in rail.

SERVICE PRODUCT	
Injector O-rings	Engine oil

Install fuel rail and evenly tighten screws a little at a time each side.

TIGHTENING TORQUE	
Fuel rail retaining screws	10 N•m ± 1 N•m (89 lbf•**in** ± 9 lbf•**in**)

⚠ WARNING

Perform a fuel pressure test and ensure that there is no leak. Refer to *FUEL TANK AND FUEL PUMP*. Run engine and check for leaks.

THROTTLE BODY

Throttle Body Description

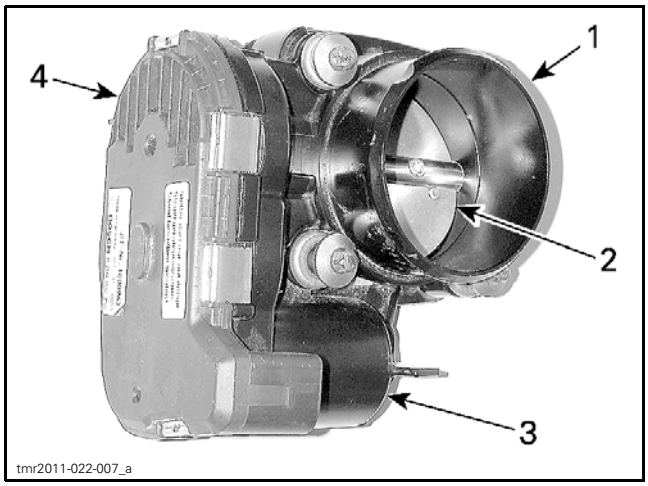

1. *Throttle body*
2. *Throttle plate*
3. *Electronic throttle actuator (electric motor inside)*
4. *Throttle position sensor (TPS) (inside)*

Throttle Body Access

Remove the RH side panel. Refer to *BODY* subsection.

Lubricating the Throttle Body

No lubrication is required.

Cleaning the Throttle Body

1. Remove air inlet hose from throttle body.
2. Check throttle body cleanliness using a flashlight. Fully open throttle plate and verify:
   - Throttle body bore
   - Throttle plate edge.

   Look for:
   - Dirt
   - Oily surfaces
   - Carbon and salt deposits on throttle plate and the surrounding bore.
3. Clean as necessary.
4. Use a throttle body cleaner such as GUNK INTAKE MEDIC or an equivalent.

NOTICE **Only use an appropriate throttle body cleaner that will not damage O-rings and EFI sensors.**

⚠ CAUTION **Use the product in a well ventilated area. Refer to product manufacturer's warnings.**

5. To avoid getting dirt into engine, spray cleaner on a clean rag then rub rag against throttle plate and bore. A toothbrush may also be used.

⚠ CAUTION **Ensure ignition key is removed so that nobody can activate the electrical system, otherwise the ECM would turn on and the throttle actuator (ETA) would cycle. This could cause serious finger injury as the throttle plate moves quickly.**

6. Gently open throttle plate and hold fully open to reach all surfaces.
7. To remove residual dirt, spray cleaner on throttle plate and on bore.
8. Reinstall removed parts.

Removing the Throttle Body

1. Disconnect air inlet hose from throttle body.
2. Disconnect throttle body connector.

To remove connector from throttle body, simultaneously press the end of both connector locking tabs illustrated.

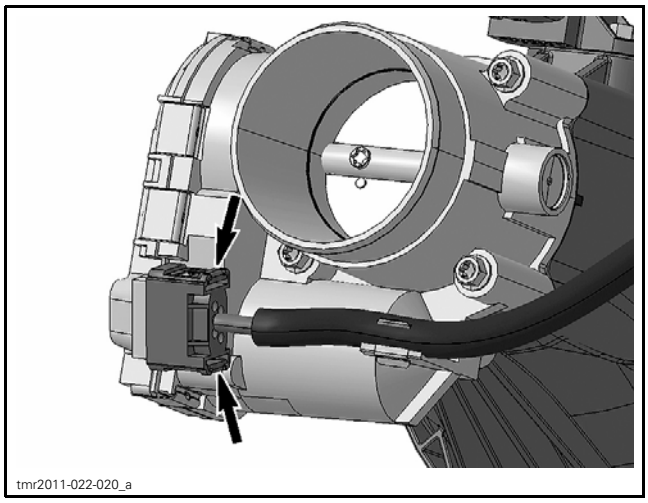

THROTTLE BODY CONNECTOR- PRESS HERE TO UNLOCK

3. Remove screws retaining throttle body to intake socket.

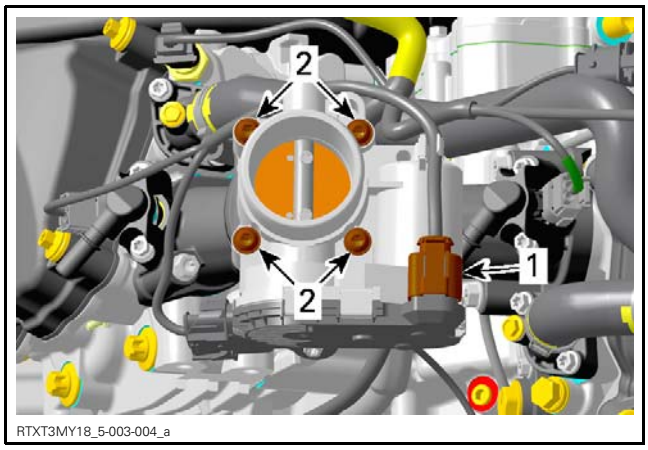

1. *Throttle body connector*
2. *Screws (4)*

4. Pull throttle body off intake socket.

Installing the Throttle Body

The installation is the reverse of the removal procedure. However, pay attention to the following details.

TIGHTENING TORQUE	
Throttle body retaining screws	10 N•m ± 1.2 N•m (89 lbf•**in** ± 11 lbf•**in**)

1. Perform the *THROTTLE POSITION SENSOR INITIALIZATION* reset procedure. Refer to *THROTTLE POSITION SENSOR (TPS)* in this subsection.

THROTTLE POSITION SENSOR (TPS)

TPS Description

The TPS is part of the throttle body.

The throttle position sensor (TPS) is a double potentiometer that sends signals to the ECM that are proportional to the throttle plate angle.

NOTE: As a first troubleshooting step, always check for applicable fault codes using the BRP diagnostic software (BUDS2).

Throttle Position Sensor Initialization

NOTE: The TPS initialization procedure **must** be carried out whenever the throttle body is replaced, unless an ECM first initialization reset is carried out.

This operation performs a reset of the TPS basic values in the ECM. This reset is very important as the TPS values are part of the basic parameters for all fuel mapping calculations and control of several settings such as for idle speed, LIMP HOME mode and maximum RPM of the engine.

NOTICE **An improperly set TPS may lead to improper idle speed (too low or too high), poor engine performance, poor engine starting and engine stop on deceleration, fault codes and possible engine damage. Emission compliance may also be affected.**

1. Connect the vehicle to the BRP diagnostic software (BUDS2). Refer to *COMMUNICATION TOOLS AND B.U.D.S.* subsection.
2. In BUDS2, select the following:
   – **Settings** page
   – **ECM** button
   – **Initialization - Reset TPS**.
3. Ensure the throttle lever is fully released and at the idle position.
4. In the **Initialization - Reset TPS** box, click on the **Reset** button.

A message will be displayed if the operation is successful.

If an error occurred or the TPS is not within the allowed range while resetting, the ECM will generate a fault code and will not accept the setting.

5. If a fault message is displayed, follow the instructions in the message(s).
6. Check for fault codes.
7. If a fault code is generated,
   – Carry out the service actions.

– Reset the fault.
– Repeat the reset procedure.

8. Start engine and make sure it operates normally throughout its full engine RPM range.

Testing the TPS Resistance

1. Ensure the throttle body connector is properly connected.
2. Disconnect ECM connector A from the ECM and install it on the ECM adapter tool..
3. Set multimeter to Ω.
4. Probe circuit as per following table while using your hand to manually move throttle plate.

ECM ADAPTER		FULLY CLOSED THROTTLE PLATE (1)		FULLY OPEN THROTTLE PLATE	
		RESISTANCE (Ω)			
PIN		MIN.	MAX.	MIN.	MAX.
A-A2	A-K4	875	1625	875	1625
A-A2	A-K3	954	1934	228	585
A-A2	A-F3	254	634	980	1983
A-K3	A-K4	228	585	954	1934
A-K3	A-F3	1385	2315	1385	2315
A-K4	A-F3	980	1983	254	634

(1) To obtain the fully closed position, it is necessary to push against the throttle plate in the throttle body with your hand and hold it in this position for the measurement.

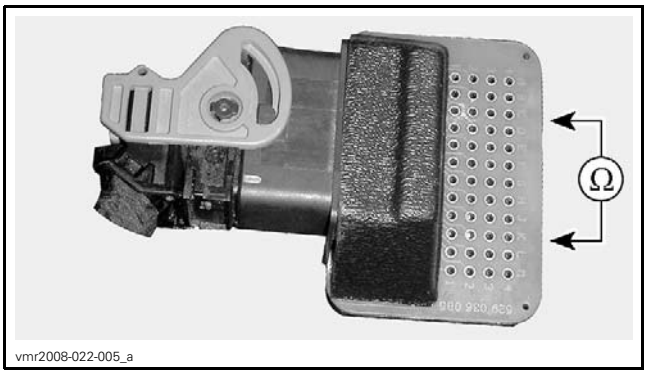

vmr2008-022-005_a

If any resistance value is incorrect, check wire continuity between ECM and throttle body before assuming the TPS is at fault. Refer to *WIRING DIAGRAM* subsection.

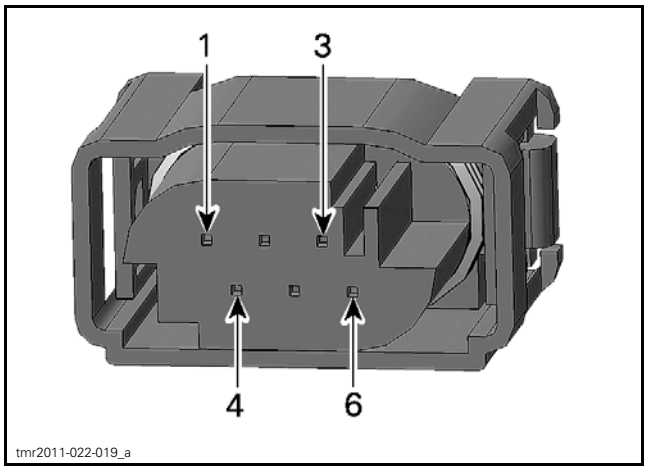

tmr2011-022-019_a

THROTTLE BODY CONNECTOR PIN-OUT

Replacing the TPS

The TPS cannot be replaced alone. It is part of the throttle body.

Carry out the *THROTTLE POSITION SENSOR INITIALIZATION* procedure as detailed in *THROTTLE BODY* of this subsection.

CRANKSHAFT POSITION SENSOR (CPS)

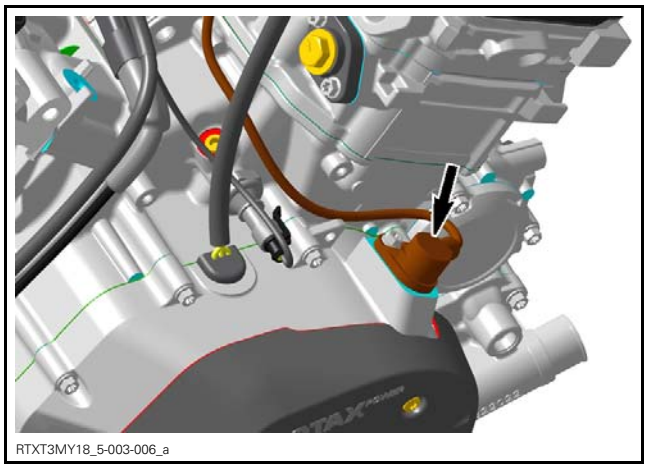
RTXT3MY18_5-003-006_a

Take into account that a CPS fault can be triggered by bent or missing encoder wheel teeth. First check fault codes using the BRP diagnostic software (BUDS2), then check the encoder wheel teeth condition if necessary (refer to *MAGNETO AND STARTER* subsection).

Testing the CPS Resistance

Disconnect CPS wiring harness connector.

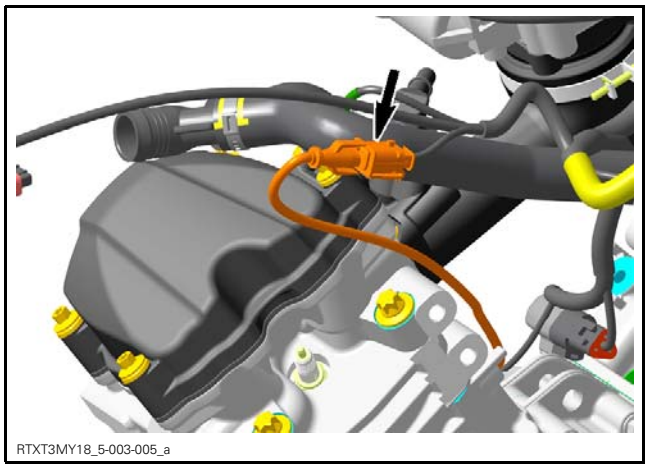

TYPICAL - LH SIDE OF VEHICLE

Probe terminals as per following table.

CPS CONNECTOR		MEASUREMENT
PIN		RESISTANCE Ω @ 20°C (68°F)
1	2	700 - 900 Ω

If resistance is not within specifications, replace the CPS.

If resistance tests good, **reconnect** the CPS connector and disconnect the connector "A" on the ECM.

Install the ECM adapter tool on the ECM-A connector.

Using a multimeter, recheck resistance as per table.

ECM CONNECTOR		MEASUREMENT
PIN		RESISTANCE Ω @ 20°C (68°F)
A-H1	A-K2	700 - 900 Ω

If resistance value is correct, refer to *REPLACING THE CPS*.

If resistance value is incorrect, repair the connectors or replace the wiring harness between ECM connector and the CPS.

Replacing the CPS

Disconnect CPS connector and cut harness locking tie.

Remove CPS retaining screw and pull up on CPS to remove it.

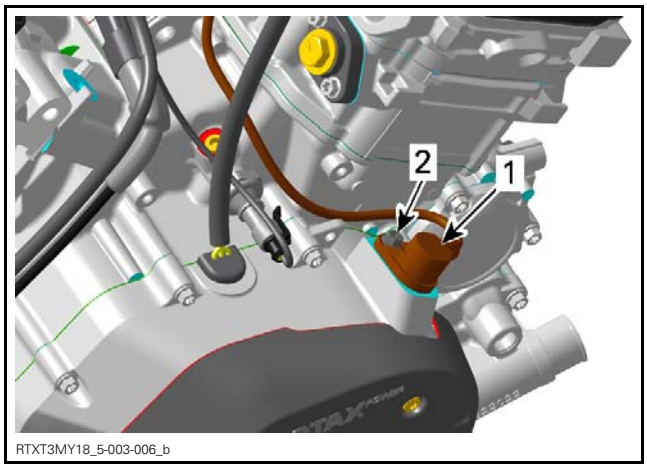

1. *CPS*
2. *Retaining screw*

Lubricate O-ring of CPS.

SERVICE PRODUCT	
O-ring	SYNTHETIC GREASE (P/N 779162)

Install new CPS and secure harness with a new locking tie.

TIGHTENING TORQUE	
CPS retaining screw	10 N•m ± 1 N•m (89 lbf•**in** ± 9 lbf•**in**)

MANIFOLD AIR PRESSURE AND TEMPERATURE SENSOR (MAPTS)

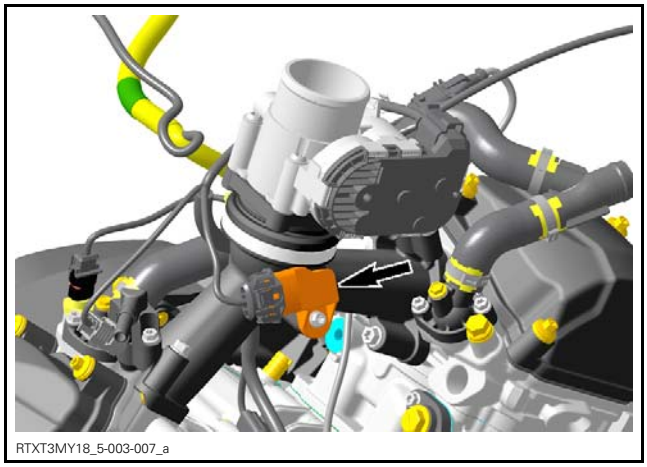

MANIFOLD AIR PRESSURE AND TEMPERATURE SENSOR (MAPTS)

NOTE: This sensor is a multifunction device.

MAPTS Pressure Function

Before the engine is started, when power is applied to the system, the sensor measures the ambient air atmospheric pressure. The ambient pressure is, at that moment, stored in the ECM. Thereafter, once the engine is started, it measures the air pressure in the inlet end of the intake manifold at operating RPMs.

The sensor must be correctly installed on intake manifold. Otherwise, the MAPTS could generate a fault code for an unexpected sensor range at idle when it reads the atmospheric pressure. If this is the case, remove sensor and check for oil or dirt on its end and if problem persists, check throttle plate condition/position and the wiring harness. Perform the following tests.

Testing the MAPTS Pressure Function Quick

1. Connect the vehicle to the BRP diagnostic software (BUDS2).
2. In BUDS2, select the following:
   –
   – **Measurements** page
   – **ECM** button
   – **Custom** tab
   – **Manifold Pressure With Altitude Correction**.
3. Look for and take note of the MAPTS pressure reading while the engine is stopped.
4. Perform the same test with a new MAPTS and compare both readings.

Values have to be within ± 3.4 kPa (.5 PSI).

NOTE: 1 kPa = 10 hPa.

MAPTS PRESSURE FUNCTION QUICK TEST			
RESULT	SERVICE ACTION		
NO READING	Circuit Continuity Test of MAPTS Pressure Function	MAPTS Input Voltage Test	Repair or replace wiring
VALUE IS OUT OF RANGE	Replace MAPTS		

Testing the MAPTS Input Voltage

Check the voltage output from ECM to the pressure sensor.

1. Turn ignition key ON.
2. Remove electrical connector from MAPTS.
3. Measure for input voltage as per following table.

MAPTS CONNECTOR		MEASUREMENT
PIN		VOLTAGE
1	3	5 Vdc

If voltage test is good, replace the MAPTS.

If voltage test is not good, carry out *TESTING THE MAPTS CIRCUIT CONTINUITY (PRESSURE FUNCTION)*.

Testing the MAPTS Circuit Continuity (Pressure Function)

1. Disconnect the ECM "A" connector.
2. Install ECM-A connector on ECM adapter tool.
3. Check continuity of the following circuits.

MAPTS CIRCUIT CONTINUITY TEST (PRESSURE FUNCTION)		
ECM-A	MAPTS CONNECTOR	RESISTANCE VALUE
Pin B4	Pin 3	Close to 0 Ω
Pin G4	Pin 4	
Pin H2	Pin 1	

If resistance is not within specification, repair or replace the wiring harness between ECM connector and the MAPTS.

MAPTS Temperature Function

The sensor monitors the temperature in the inlet of the intake manifold.

Testing the MAPTS (Temperature Function)

1. Connect the vehicle to the BRP diagnostic software (BUDS2).
2. In BUDS2, select the following:
   – **Monitoring** page
   – **ECM** button
   – **Custom** tab.
3. Look for the **Intake Temperature** reading while the engine is stopped.
4. Perform the same test with a new MAPTS and compare both readings.

If the engine's MAPTS temperature reading is significantly different than the new MAPTS, replace it.

NOTE: Both sensors must measure the same ambient air temperature.

If there is no reading, carry out a *TESTING THE MAPTS RESISTANCE (TEMPERATURE FUNCTION)*.

Testing the MAPTS Resistance (Temperature Function)

Disconnect the connector from the MAPTS.

Check the resistance of the sensor itself as shown.

MAPTS		MEASUREMENT
PIN		RESISTANCE Ω @ 20°C (68°F)
1	2	2280 - 2740

If resistance is not within specification, replace the MAPTS.

If resistance tests good, **reconnect** the MAPTS and disconnect the connector "A" from the ECM.

Install the ECM adapter on the ECM-A connector.

Using a multimeter, recheck resistance value as per following table.

ECM CONNECTOR		MEASUREMENT
PIN		RESISTANCE Ω @ 20°C (68°F)
A-H2	A-H3	2280 - 2740

MAPTS TEMPERATURE SENSOR TEST RESULTS			
RESULT	SERVICE ACTION		
NO READING	Circuit Continuity Test of MAPTS Temperature Function	MAPTS Input Voltage Test	Repair or replace wiring
INCORRECT RESISTANCE VALUE	Replace MAPTS		

Testing the MAPTS Circuit Continuity (Temperature Function)

MAPTS CIRCUIT CONTINUITY TEST (TEMPERATURE FUNCTION)		
ECM ADAPTER	MAPTS CONNECTOR	RESISTANCE VALUE
Pin H2	Pin 1	Close to 0 Ω
Pin H3	Pin 2	

Replacing the MAPTS

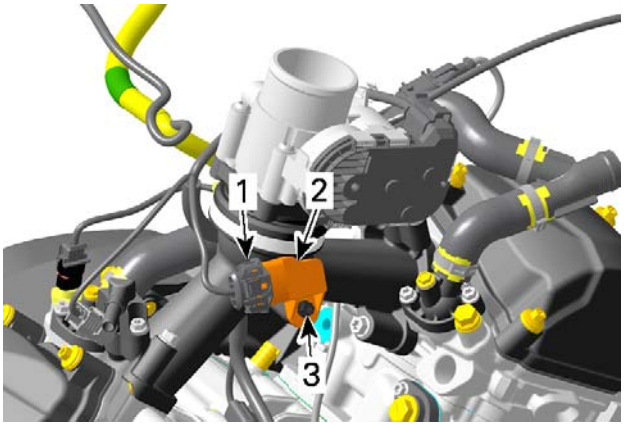

RTXT3MY18_5-003-007_b

1. *MAPTS connector*
2. *MAPTS*
3. *Retaining screw*

Disconnect MAPTS connector and remove the MAPTS from the intake manifold.

Install new MAPTS as per following table.

TIGHTENING TORQUE	
MAPTS retaining screw	6 N•m ± 0.7 N•m (53 lbf•**in** ± 6 lbf•**in**) + LOCTITE 243 (BLUE) (P/N 293 800 060)

COOLANT TEMPERATURE SENSOR (CTS)

CTS Location

The CTS is located on the LH of the engine, aft cylinder.

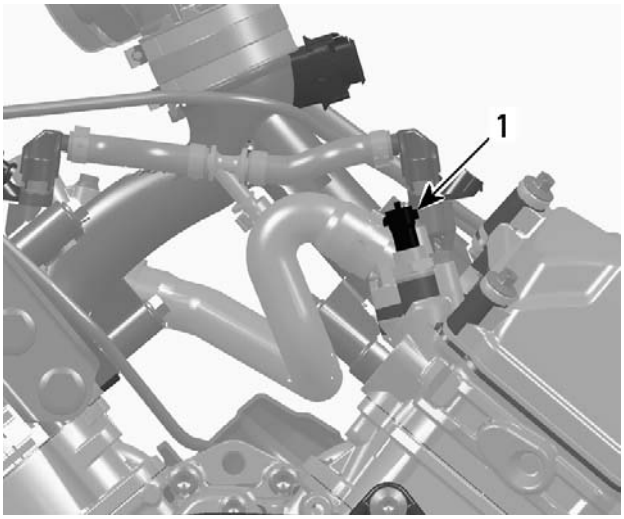

LH SIDE OF THE ENGINE, REAR CYLINDER
1. Coolant temperature sensor (CTS)

Testing the CTS Resistance

1. Disconnect the plug connector from the CTS and check the resistance of the sensor itself.

CTS SENSOR		MEASUREMENT
PIN		RESISTANCE Ω @ 20°C (68°F)
1	2	2280 - 2740

CHECK SENSOR RESISTANCE

If resistance is out of specification, replace the CTS.

If resistance test is good,**reconnect** the CTS and disconnect the ECM connector "A" from the ECM.

2. Install the ECM adapter on the ECM-A connector.
3. Using a multimeter, recheck resistance from the ECM connector as per table.

ECM ADAPTER		MEASUREMENT
PIN		RESISTANCE Ω @ 20°C (68°F)
A1	J2	2280 - 2740

If resistance value is correct, refer to *REPLACING THE CTS*.

If resistance value is incorrect, repair the connectors or replace the wiring harness between ECM connector and the CTS.

Replacing the CTS

1. Disconnect CTS connector and remove CTS.
2. Install the new CTS and torque as specified.

TIGHTENING TORQUE	
CTS	16 N•m ± 2 N•m (142 lbf•**in** ± 18 lbf•**in**)

3. Reinstall remaining removed parts.
4. Refill and bleed the cooling system, refer to *COOLING SYSTEM* subsection.

HEATED OXYGEN SENSOR (HO_2S)

Oxygen Sensor Location

This vehicle is equipped with a heated oxygen sensor (HO_2S): The sensor is located on the exhaust pipe, between the rear cylinder and the muffler.

Oxygen Sensor General Precautions

Take the following precautions to avoid sensor malfunction:

– Do not use any product on sensor probe.
– Do not expose sensor to water, oil, windshield cleaner, anticorrosion oil, grease, terminal cleaner, etc.
– Do not drop or use an oxygen sensor that has been dropped.
– Do not use any compound on sensor threads unless labeled as compatible with oxygen sensor.
– Do not use impact wrench or conventional socket type wrench to install sensor.
– Do not allow sensor or wire to touch exhaust system or any other hot component.
– Do not route sensor wires to create tension in the wires. This could cause faults or sensor malfunction.

Oxygen Sensor Troubleshooting

Always use the BRP diagnostic software (BUDS2) to check for fault codes. Carry out service actions.

In BUDS2, also check oxygen sensor voltage and refer to following table.

OXYGEN SENSOR VOLTAGE IN BUDS2	
VOLTAGE READING	CONDITION
Varies 0.1 to 0.8 Volts	Normal oxygen sensor operation in closed loop
Constant 0.45 Volts	Oxygen sensor circuit open
Constant low voltage	Indicates fuel mixture too lean, possible oxygen sensor fault, possible fuel system fault, possible air leak
Constant high voltage	Indicates fuel mixture too rich, possible fuel system fault, possible fuel canister problem

Testing the Oxygen Sensor

Testing for Oxygen Sensor Input Voltage

NOTE: This test validates the heater element circuit.

1. Ensure main power relay (R2) in installed in fuse box 1.
2. Disconnect the oxygen sensor connector.
3. Turn ignition switch ON.
4. Using a multimeter set to Vdc, read the input voltage provided to the sensor heater.

OXYGEN SENSOR CONNECTOR (HARNESS SIDE)		MEASUREMENT
PIN		
C	Battery ground	Battery voltage

If Input voltage is good, refer to *TESTING THE RESISTANCE OF THE OXYGEN SENSOR HEATER* and *TESTING FOR OXYGEN SENSOR CIRCUIT CONTINUITY*.

If input voltage is not good, test the continuity of the power circuit from fuse F4 in fuse box 1. Refer to the applicable *WIRING DIAGRAM* for details.

If input voltage wire continuity is at fault, repair or replace wiring or connector.

Testing the Resistance of the Oxygen Sensor Heater

Test the resistance value of the oxygen sensor between the sensor pins as follows.

OXYGEN SENSOR PIN		RESISTANCE @ 20°C (68°F)
C	D	Approximately 7 - 11 Ω

If reading is **not** within specification, replace the oxygen sensor.

Testing for Oxygen Sensor Circuit Continuity

NOTE: This test validates the heater element circuit and the sensor circuits.

1. Remove main power relay (R2) in fuse box 1. Refer to *POWER DISTRIBUTION AND GROUNDS* subsection.
2. Disconnect ECM-B connector and install it on the ECM adapter tool.
3. Set the multimeter to "Ω". test for continuity between the oxygen sensor harness connector and the ECM adaptor as per following tables.
4. Test for continuity between the oxygen sensor harness connector and the ECM adaptor as per following tables.

OXYGEN SENSOR CIRCUIT CONTINUITY TEST		
OXYGEN SENSOR PIN	ECM CONNECTOR "B"	RESISTANCE @ 20°C (68°F)
A	J1	Close to 0 Ω
B	D2	
D	L2	

If a resistance value is NOT as specified, repair or replace the wiring and connectors.

Replacing the Oxygen Sensor

1. Remove main power relay (R2) in fuse box 1. Refer to *POWER DISTRIBUTION AND GROUNDS* subsection.

⚠ CAUTION Exhaust system and oxygen sensor may be hot. To avoid possible injury, allow exhaust system components time to cool before proceeding.

2. Disconnect oxygen sensor connector.
3. Cut locking tie securing oxygen sensor harness.
4. Unscrew oxygen sensor from exhaust pipe.

NOTICE Handle oxygen sensor with clean hands. Oxygen sensor probe must remain free of oil, grease, antiseize lubricant and any other foreign matter that could affect its operation.

If a new oxygen sensor is installed, its threads are already coated with an anti-seize product. Sensor is ready for installation.

If the same oxygen sensor is installed, apply anti-seize on its **first two threads**.

NOTICE **Always use a product that is oxygen sensor safe.**

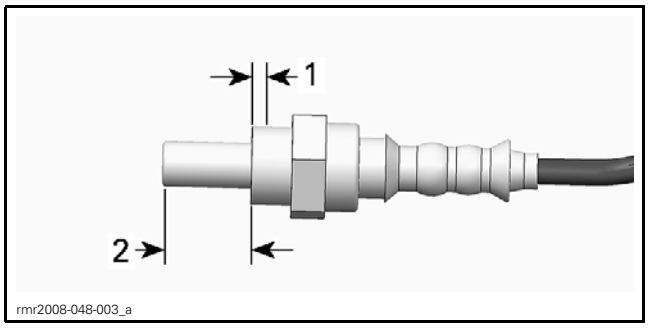

TYPICAL
1. *Apply antiseize lubricant first two threads*
2. *Must be free of any product*

NOTICE **Do not apply any antiseize lubricant to the sensor probe as it could affect its operation.**

5. Screw sensor in exhaust pipe.

TIGHTENING TORQUE	
Oxygen sensor	50 N•m ± 10 N•m (37 lbf•ft ± 7 lbf•ft) + LOCTITE 767 (ANTISEIZE LUBRICANT) (P/N 293 800 070)

6. Install all other removed parts.

FUEL TANK AND FUEL PUMP

SERVICE TOOLS

Description	Part Number	Page
FLUKE 115 MULTIMETER	529 035 868	12
FUEL HOSE ADAPTER	529 036 396	5
FUEL PUMP NUT TOOL	529 036 427	13
OETIKER PLIER	295 000 070	8
PRESSURE GAUGE	529 036 395	5
SMALL HOSE PINCHER	295 000 076	17
VACUUM/PRESSURE PUMP	529 021 800	4, 17

SERVICE TOOLS – OTHER SUPPLIER

Description	Part Number	Page
FLUKE RIGID BACK PROBE	TP88	12

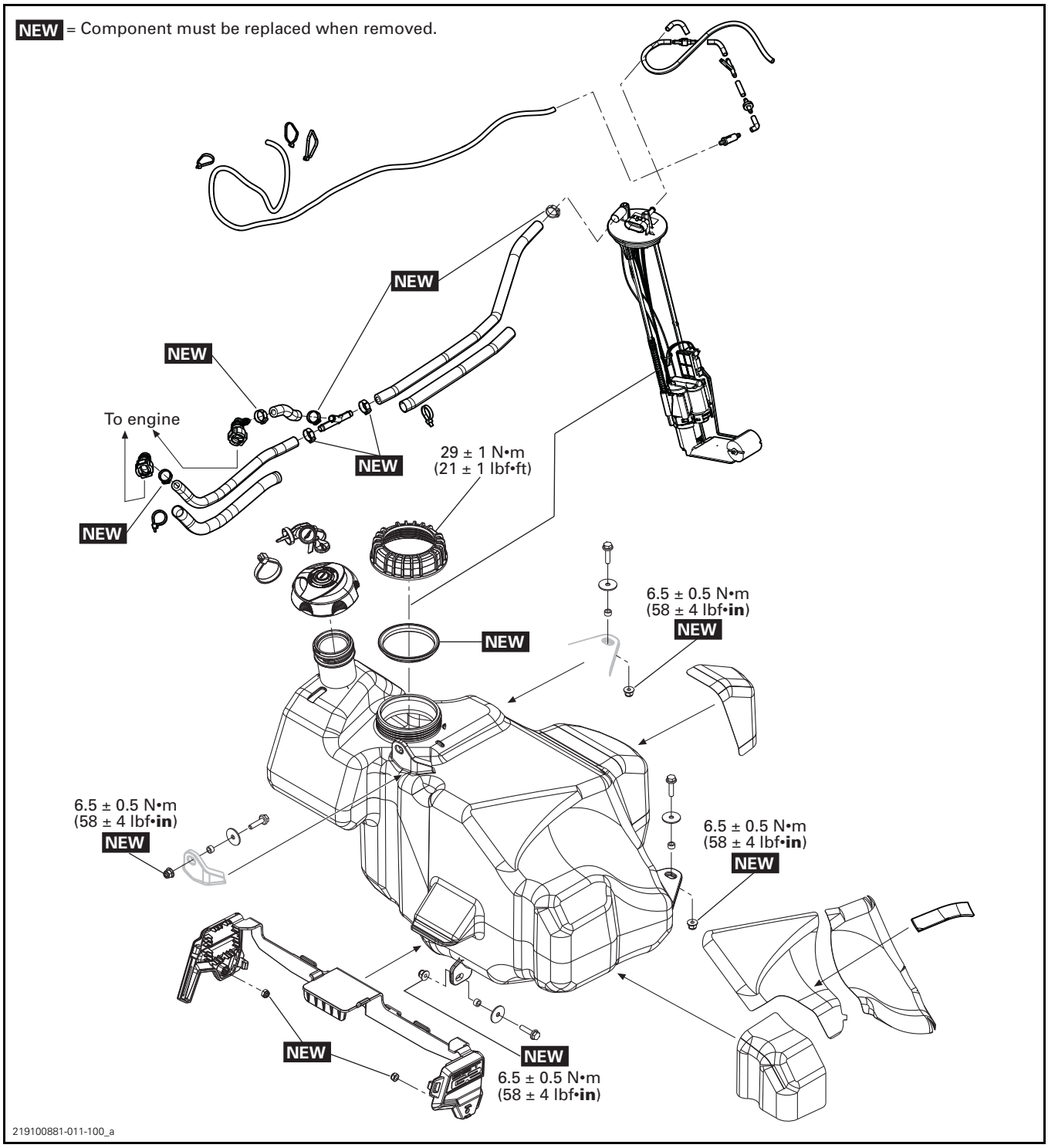
NEW = Component must be replaced when removed.
NEW
NEW
To engine
NEW
29 ± 1 N•m
(21 ± 1 lbf•ft)
NEW
6.5 ± 0.5 N•m
(58 ± 4 lbf•in)
NEW
NEW
6.5 ± 0.5 N•m
(58 ± 4 lbf•in)
NEW
6.5 ± 0.5 N•m
(58 ± 4 lbf•in)
NEW
NEW
NEW
6.5 ± 0.5 N•m
(58 ± 4 lbf•in)
219100881-011-100_a

GENERAL

⚠ WARNING

Fuel is flammable and explosive under certain conditions. Ensure work area is well ventilated. Do not smoke or allow open flames or sparks in the vicinity.

⚠ WARNING

Always disconnect battery prior disconnecting a fuel system pressure hose.

⚠ WARNING

Always proceed with care and use appropriate safety equipment when working on pressurized fuel system. Wear safety glasses.

⚠ WARNING

Do not allow fuel to spill on hot engine parts and/or on electrical connectors.

When the repair is completed, ensure that all hoses are connected and secured. Perform the *FUEL PRESSURE TEST* and the *FUEL TANK LEAK TEST* as explained in this subsection.

Fuel lines remain under pressure at all times. Proceed with care when removing/installing high pressure test equipment.

SYSTEM DESCRIPTION

Fuel Tank Vent System

The fuel tank is equipped with a vent system that provides over pressure relief and negative pressure relief of the fuel tank.

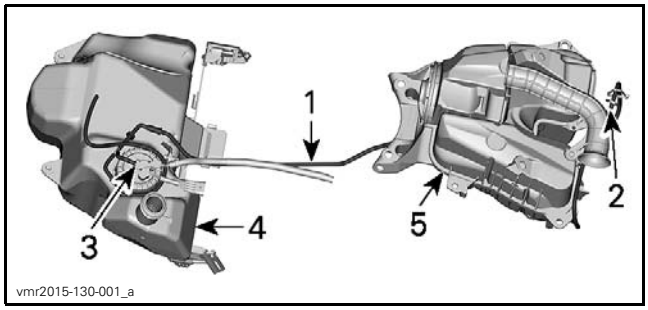

TYPICAL - FUEL TANK VENT SYSTEM
1. *Vent hose*
2. *Vent system hose inlet*
3. *Vent system connected to fuel pump*
4. *Fuel tank*
5. *Engine air intake system*

Air can enter the fuel tank at all times through the vent system INLET check valve. This prevents negative pressure within the fuel tank which could cause fuel starvation.

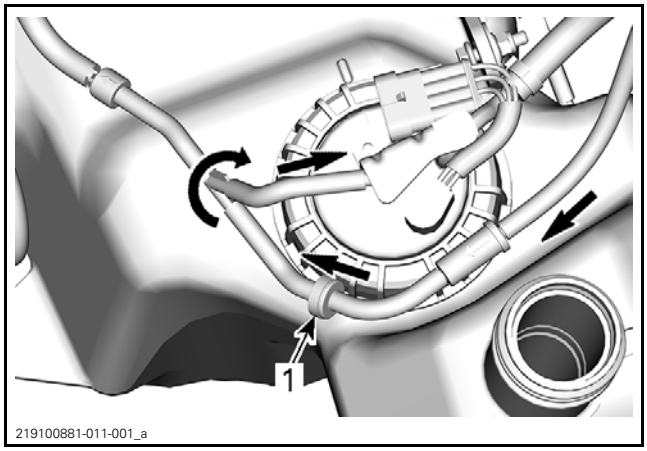

TYPICAL - AMBIENT AIR PRESSURE IN
1. *Vent inlet check valve*

The vent inlet check valve also prevents fuel from flowing out through the inlet of the vent system.

If the pressure in the fuel tank builds up and exceeds 2.5 kPa - 7.6 kPa (.36 PSI - 1.1 PSI), the pressure relief valve opens and lets the excess pressure evacuate through the vent system OUTLET hose.

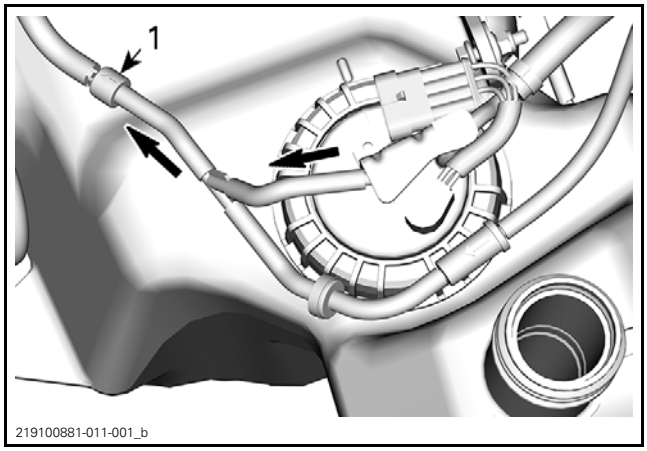

TYPICAL - OVER PRESSURE RELIEF
1. *Outlet pressure relief valve*

Fuel Tank Vent Breather Filter

The vent system is equipped with an in-line breather filter that prevents entry of particles such as dust or small insects. It is located next to the fuel pump, on the inlet hose, before the air inlet check valve.

To access the fuel tank vent breather filter, remove the rear body module.

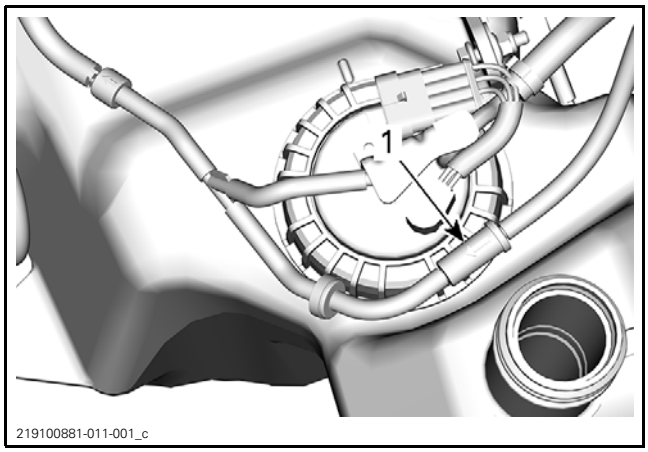

TYPICAL
1. Fuel tank vent breather filter

Fuel Pump Module

The fuel pump module is inserted in the fuel tank. It provides fuel delivery for the EFI system and encompasses the following components:

– Electric fuel pump
– Fuel pump pre-filter
– Fuel pump filter
– Fuel pressure regulator
– Fuel level sender.

Fuel Filters

The system comprises two levels of filtration:

– A replaceable pre-filter element attached to the bottom of the fuel pump.
– A non-replaceable fine filter element that is integral to the fuel pump module.

Fuel Pump Pressure Regulator

The fuel pressure regulator is integral to the fuel pump module. The pressure regulator maintains proper fuel pressure for the EFI system.

INSPECTION

PERFORMING THE FUEL TANK LEAK TEST

⚠ WARNING

Always carry out a fuel tank leak test whenever the fuel tank shows signs of wear or damage which may cause a leak, or when the fuel pump has been removed or replaced, or if you suspect a leak. If the fuel tank is damaged, the fuel tank should be replaced even if no leak is present. Do not attempt to repair the fuel tank.

1. Refill fuel tank and ensure fuel tank cap is in good condition and properly installed.
2. Remove the gauge support for access to the fuel vent inlet hose.
3. Pressurize the fuel tank through the vent hose.

REQUIRED TOOL	
VACUUM/PRESSURE PUMP (P/N 529 021 800)	

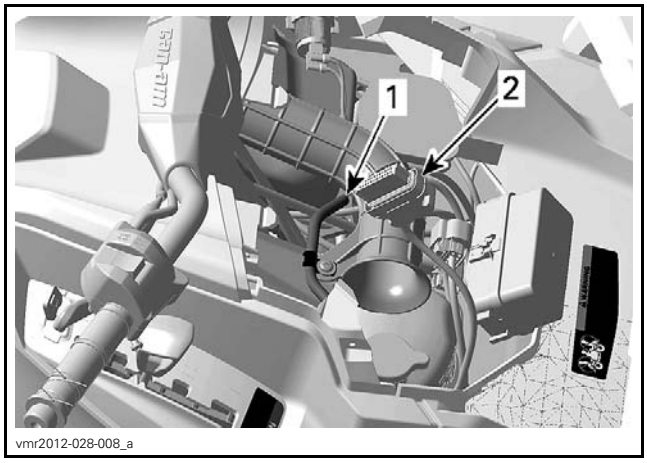

1. Fuel tank vent inlet hose
2. Gauge connector

PRESSURE	TIME WITHOUT PRESSURE DROP
14 kPa (2 PSI)	3 minutes

If pressure drops, locate fuel leak(s) and repair or replace leaking component(s).

To locate a leak, check for a fuel smell or leaking fuel.

To ease locating leak(s), spray soapy water on all hose connections and components; bubbles will indicate the leak location(s).

NOTE: For access to the fuel tank vent system, refer to *FUEL PUMP ACCESS* in this subsection.

PERFORMING THE FUEL SYSTEM PRESSURE TEST

The pressure test will show the available pressure in the system. It validates the pressure regulator and the fuel pump, and allows for checking the fuel system for leaks (high pressure side).

NOTE: Refer to the *FUEL SYSTEM DIAGNOSTIC FLOW CHART* in this subsection to help diagnose a fuel system related problem.

1. Ensure the fuel level in the tank is sufficient.
2. Ensure the battery voltage is over 12 volts.
3. Remove seat.
4. Remove RH side body panel, refer to *BODY* subsection.
5. Disconnect the fuel pressure hose from the fuel injector fuel rail. Refer to *DISCONNECTING A FUEL PRESSURE HOSE* in *FUEL HOSE AND OETIKER CLAMPS*.
6. Remove the 2 most forward locking ties securing the fuel hose to the upper cable support.

NOTE: This is required to provide more hose length for proper connection to test equipment.

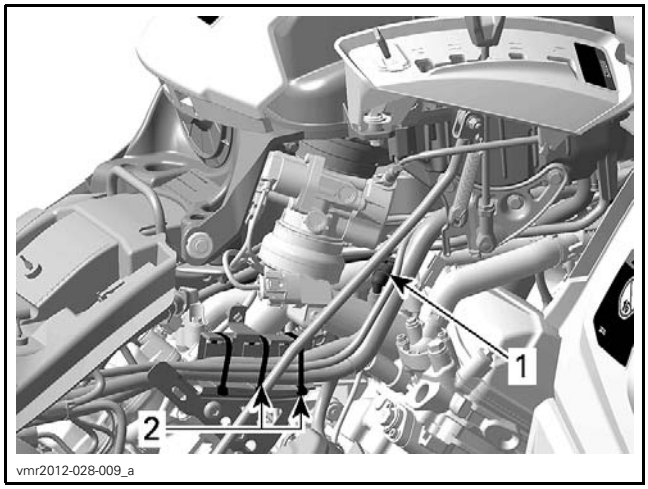

TYPICAL
1. *Forward injector rail fitting*
2. *Locking ties*

7. Install the fuel pressure gauge and fuel hose adapter between the disconnected injector hose and fuel rail (in-line installation).

REQUIRED TOOLS	
PRESSURE GAUGE (P/N 529 036 395)	
FUEL HOSE ADAPTER (P/N 529 036 396)	

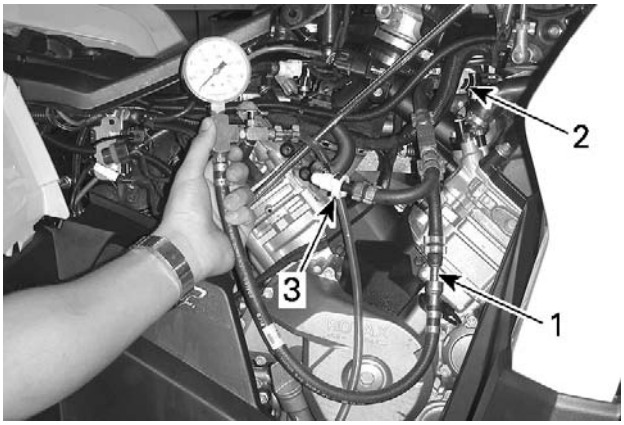

TYPICAL - PRESSURE GAUGE SETUP
1. *Pressure gauge to fuel hose adapter*
2. *Fuel hose adapter to fuel rail*
3. *Fuel hose adapter to fuel pump pressure hose*

8. Reinstall the fuel pump relay (R4) in the forward fuse box.
9. Turn ignition key ON and observe fuel pressure.

FUEL PRESSURE (Valid at 12v ± 0.1v)	350 kPa ± 10 kPa (51 PSI ± 1 PSI)

10. Start engine and observe fuel pressure.
11. Stop engine.
12. Remove test equipment and reconnect fuel hose to injector fuel rail by proceeding in the same manner as for its installation.

Test Conclusion

The fuel pressure should be within specification in static or dynamic tests.

Rapid Pressure Drop

If there is a rapid pressure drop after the engine is stopped, check for leakage at:

– A fuel hose
– A fuel rail.

NOTE: The fuel pump check valve integral to the fuel pump module may also be at fault.

If no leak is detected, replace fuel pump.

Slow Pressure Drop

If there is a slow pressure drop after the engine is stopped, check for a fuel injector leak. Refer to *ELECTRONIC FUEL INJECTION (EFI)* subsection.

NOTE: The fuel pressure regulator or fuel pump check valve integral to the fuel pump module may also be at fault.

If no leak is detected, replace fuel pump.

TROUBLESHOOTING

FUEL SYSTEM DIAGNOSTIC FLOW CHART

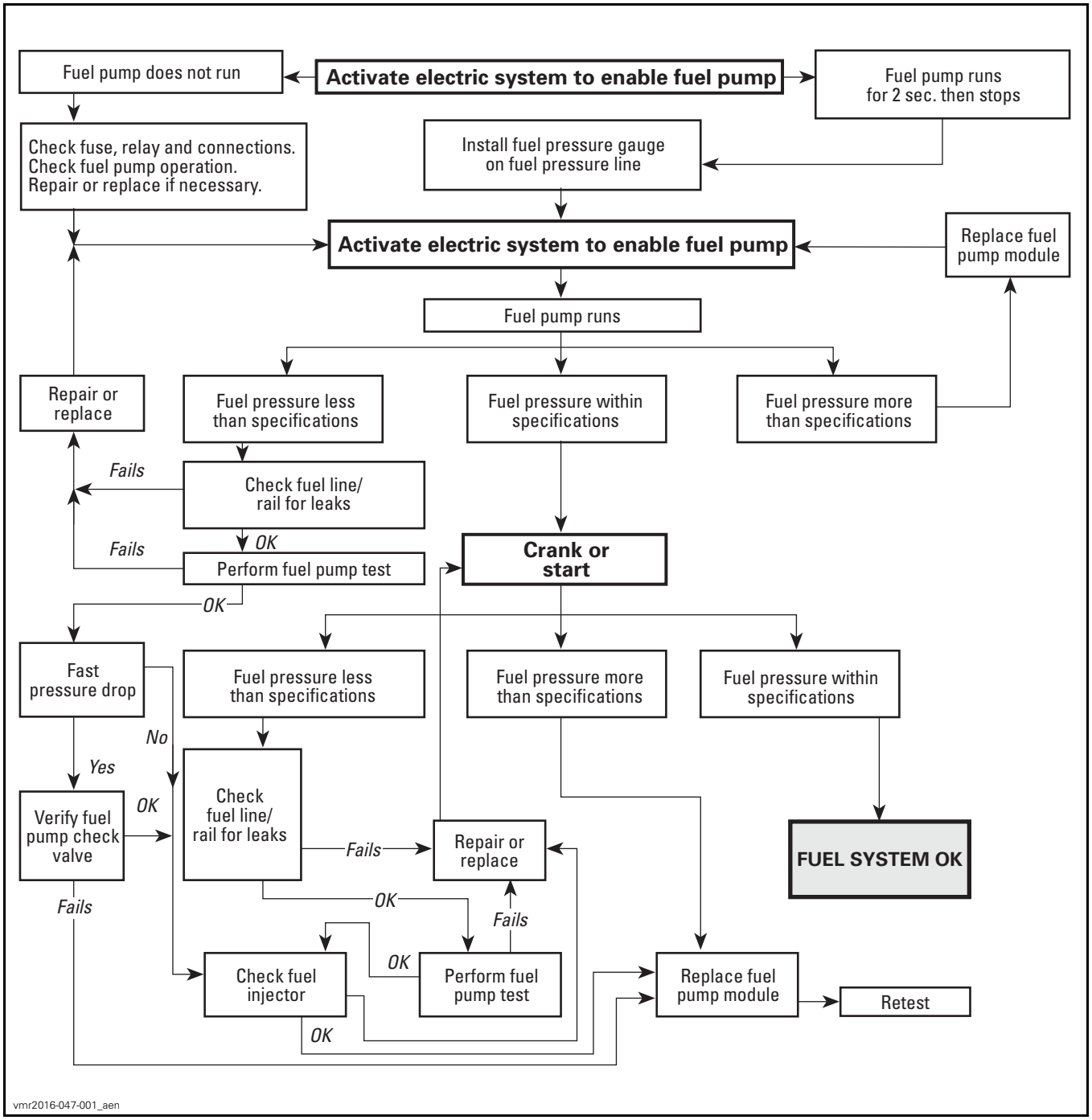

PROCEDURES

FUEL HOSE AND OETIKER CLAMPS

Disconnecting a Fuel Pressure Hose

1. Connect the vehicle to the BRP diagnostic software (BUDS2).
2. In BUDS2, go to:
   - **Function** page
   - **IO Control** button
   - **Execute Fuel Pressure Relief**
3. Carefully disconnect the fuel hose fitting from the injector fuel rail by pressing on the release tab of the quick disconnect fitting.

Replacing the Fuel Hose

When replacing fuel hoses, be sure to use hoses and clamps as available from BRP parts department. This will ensure continued proper and safe operation.

⚠ WARNING

Use of fuel lines other than those recommended by BRP may compromise fuel system integrity.

⚠ WARNING

Whenever removing a hose in the fuel system, always use new Oetiker clamps at assembly. Then validate fuel system tightness by performing a fuel pressure test.

Replacing the Oetiker Clamp

REQUIRED TOOL	
OETIKER PLIER (P/N 295 000 070)	

FUEL TANK

Draining the Fuel Tank

Remove fuel tank cap and siphon gas into an approved fuel container.

Removing the Fuel Tank

1. Drain fuel tank. Refer to *DRAINING FUEL TANK* in this subsection.
2. Disconnect the fuel pressure hose from the fuel injector fuel rail. Refer to *DISCONNECTING A FUEL PRESSURE HOSE* in *FUEL HOSE AND OETIKER CLAMPS*.
3. Disconnect and remove the battery, refer to *CHARGING SYSTEM* subsection.
4. Remove the rear body module, refer to *BODY* subsection.
5. Refer to *EXHAUST SYSTEM* and remove the following:
   - Muffler assembly
   - Muffler/exhaust pipe heat shield.
6. Remove rear frame. Refer to *FRAME* subsection.
7. Disconnect the following from the fuel pump module:
   - Fuel pump electric connector
   - Fuel system vent hose
   - Fuel pump pressure hose.

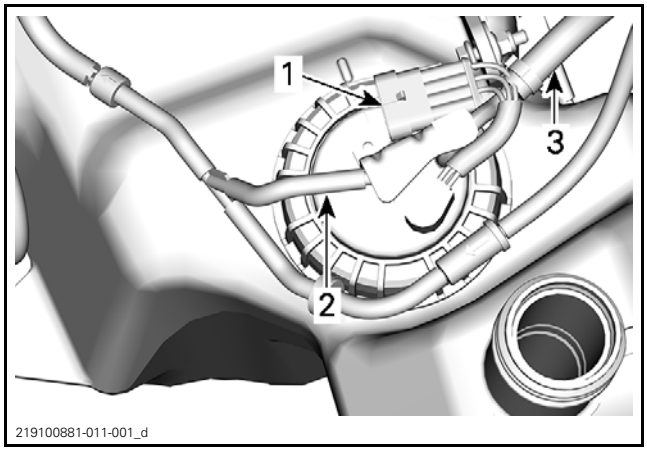

1. Fuel pump connector
2. Vent hose
3. High pressure fuel hose

8. Disconnect the RED (+) battery cable from the starter solenoid.
9. Remove the 2 screws that secure the front of the battery support.

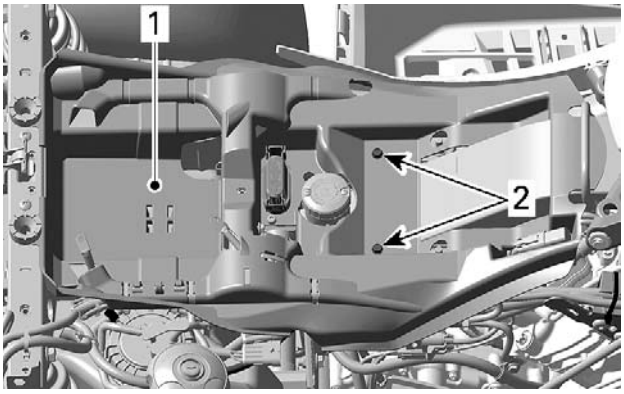

vmr2012-028-013_a

1. Battery support
2. Support retaining screws

NOTE: It is not necessary to remove the wiring harness or other components from the battery support.

10. Flip the battery support over towards the RH side of the vehicle for access to the rear frame extension.

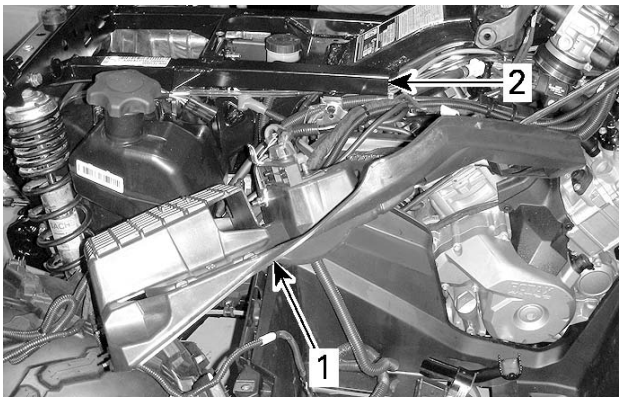

vmr2012-028-014_a

TYPICAL
1. Battery support
2. Rear frame extension

11. Remove the upper mounting bolt from both rear shock absorbers.

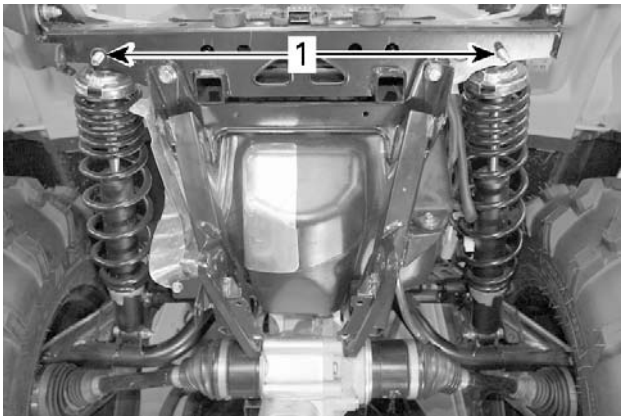

sfvmr2014-010-071_a

TYPICAL
1. Upper shock mounting bolts

12. Block the front wheels with wheel chocks.
13. Lift back end of vehicle and properly support under the lower rear portion of the frame, near the final drive.

⚠ CAUTION Before working on vehicle, ensure the vehicle is securely supported.

14. Remove vent tube from final drive.

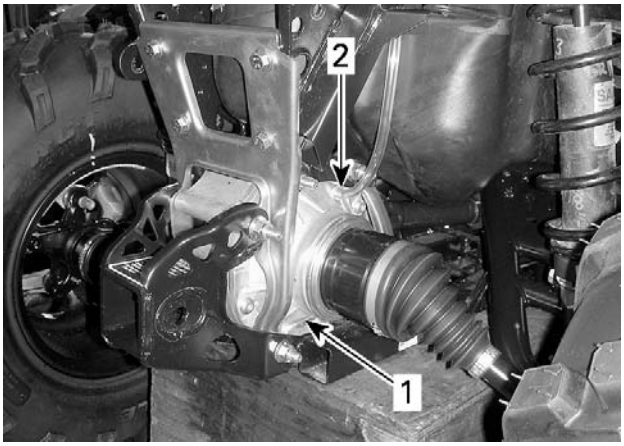

vmr2012-028-017_a

1. Final drive unit
2. Vent tube to remove

15. Remove fuel tank retaining screws (4).

NOTE: Note position of washers and bushings on each screw.

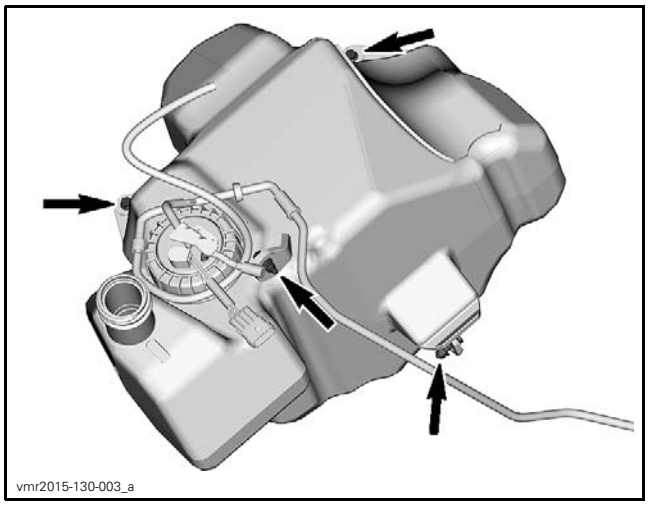
vmr2015-130-003_a

16. Loosen the front 2 nuts and remove the 4 bolts retaining the frame extension.

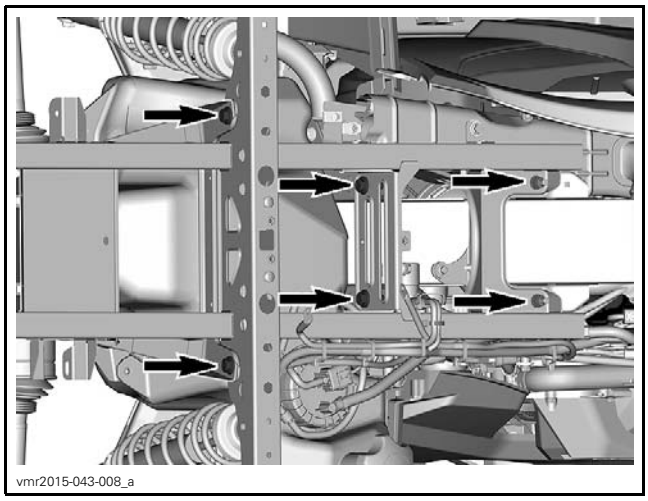
vmr2015-043-008_a

17. Remove nuts and screws securing trailer hitch/final drive protector and rear frame support to rear final drive.

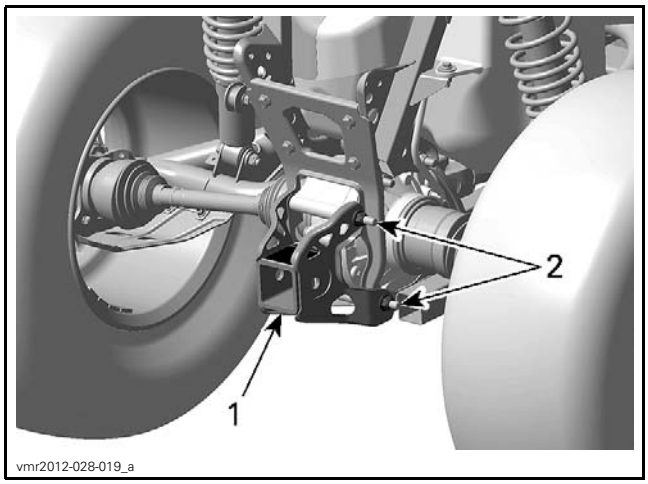

vmr2012-028-019_a

TYPICAL
1. *Trailer hitch*
2. *Bolts to remove*

18. Remove 2 nuts and screws securing rear frame support to rear frame section.

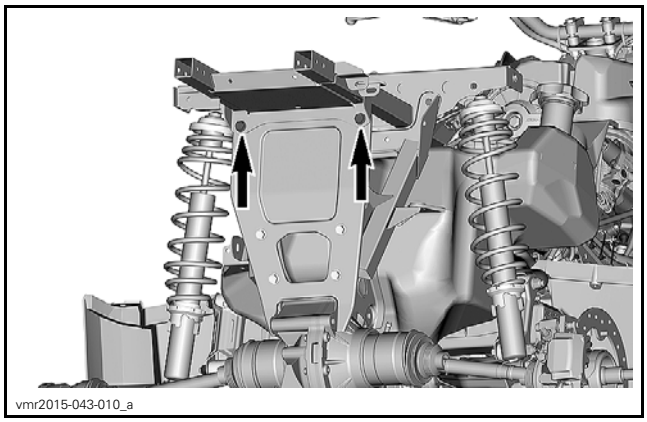
vmr2015-043-010_a

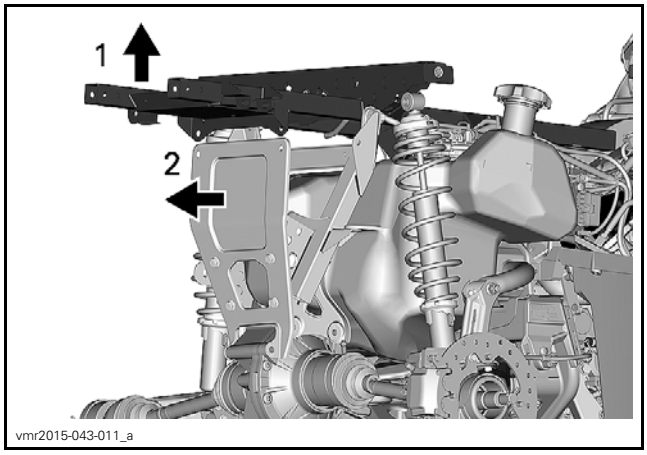

vmr2015-043-011_a

19. Lift up on frame extension and pull fuel tank out of vehicle.

NOTE: When lifting up on the frame extension, the shock absorbers will fall backwards.

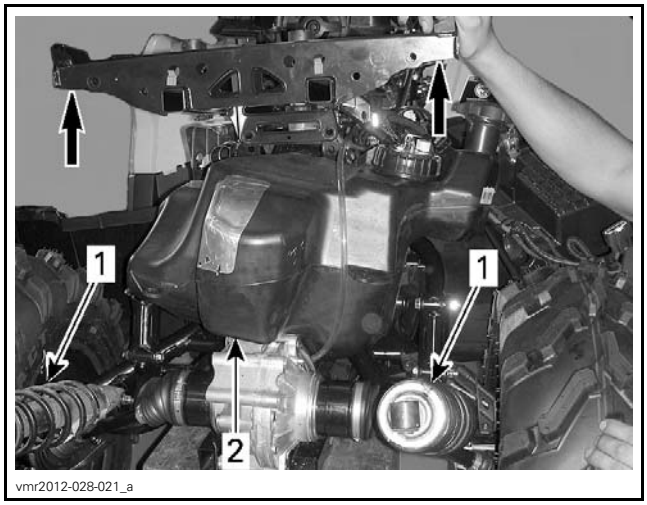

vmr2012-028-021_a

TYPICAL
1. *Rear shock absorbers*
2. *Fuel tank*

Inspecting the Fuel Tank

Inspect fuel tank for any damages or cracks which may result in fuel leaks.

Inspect fuel tank and fuel tank protector on frame for damages.

Inspect protector for damages.

If cracks, gouges or other damages which may lead to a fuel leak, or damages to attachment points that could prevent the tank from being secure are found, replace fuel tank.

Installing the Fuel Tank

Installation is the reverse of the removal procedure. However, pay attention to the following.

Install a bushing on each fuel tank mounting screw. The bushing inserts within the fuel tank screw hole cavity.

Be sure to install the washers between the fuel tank and the fastener as noted at removal.

Install **all** fuel tank fasteners loosely.

NOTICE **The fuel tank fasteners must not be tightened to specified torque until complete assembly in vehicle.**

Install all frame component fasteners loosely, then apply torque as specified in the *FRAME* subsection.

Apply specified torque to fuel tank retaining screws.

TIGHTENING TORQUE	
Fuel tank retaining screws	6.5 N•m ± 0.5 N•m (58 lbf•**in** ± 4 lbf•**in**)

Be sure to properly connect and route:
- Fuel tank vent tube
- Fuel pump pressure hose
- Electrical connectors.

Refuel tank and ensure there are no leaks by performing a *FUEL TANK LEAK TEST* and a *FUEL PUMP PRESSURE TEST* as described in this subsection.

FUEL PUMP

Performing the Fuel Pump Pressure Test

Refer to *INSPECTION* in this subsection.

Fuel Pump Quick Test

1. Turn ignition key to ON.
2. Listen for fuel pump operation.

NOTE: Fuel pump should come ON for a few seconds, then stop.

If fuel pump does not come ON, carry out the following:
- Check fuel pump relay fuse and fuel pump relay. Refer to *WIRING DIAGRAM*.
- Check in BRP diagnostic software (BUDS2) for applicable fault codes. Refer to *COMMUNICATION TOOLS* subsection.
- Carry out a fuel pump input voltage test.

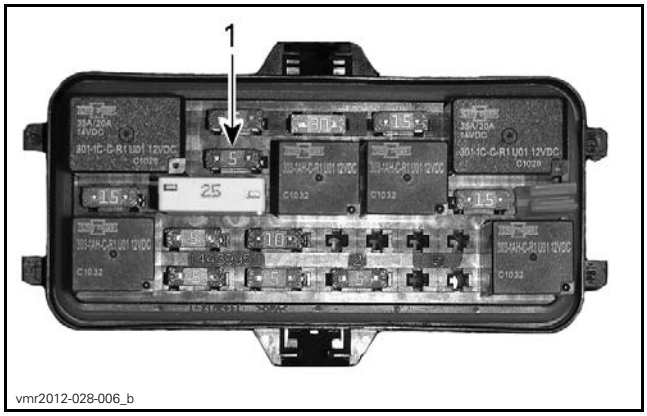

TYPICAL
1. Fuel pump relay fuse

Accessing the Fuel Pump Connector

The fuel pump connector can be accessed from under the RH rear fender, just above the forward end of the fuel tank.

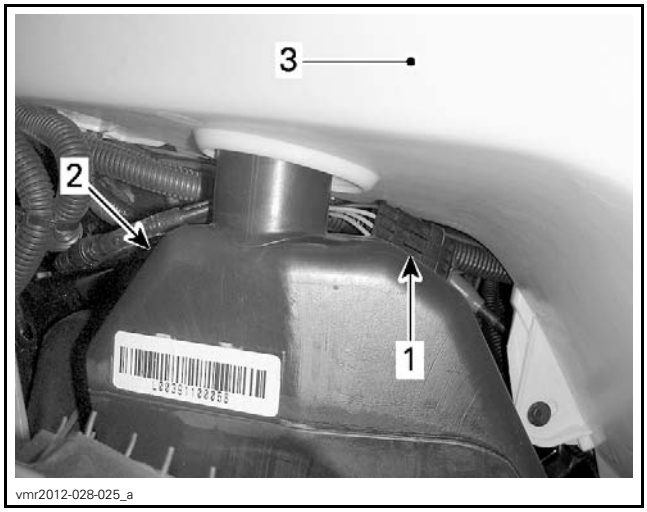

TYPICAL
1. Fuel pump connector
2. Fuel tank
3. Underside of RH rear fender

Testing the Fuel Pump Input Voltage

1. Disconnect the fuel pump connector.

2. Turn ignition key ON.
3. Read voltage as follows.

NOTE: The fuel pump voltage will be read only when the fuel pump is activated.

REQUIRED TOOLS	
FLUKE 115 MULTIMETER (P/N 529 035 868)	
FLUKE RIGID BACK PROBE (P/N TP88)	

FUEL PUMP INPUT VOLTAGE TEST		
TEST PROBES		VOLTAGE READING
Fuel pump connector Pin 3	Fuel pump connector Pin 4	Battery voltage

If battery voltage is read, carry out a fuel pump resistance test.

If battery voltage is not read, test fuel pump power input as follows.

FUEL PUMP POWER WIRE TEST		
TEST PROBES		VOLTAGE READING
Fuel pump connector Pin 3	Battery ground	Battery voltage

If battery voltage is now read, check fuel pump ground circuit between fuel pump connector FP-4 and battery ground.

If battery voltage is still not read, check the following:
- Fuse (F15)
- Fuel pump relay (R4)
- Fuel pump relay input voltage (control and power circuits)
- Fuel pump relay control circuit continuity to ECM-J1
- Wiring and connectors.

Testing the Fuel Pump Resistance

1. Ensure fuel pump connector is properly connected.
2. Remove fuel pump relay (R4).

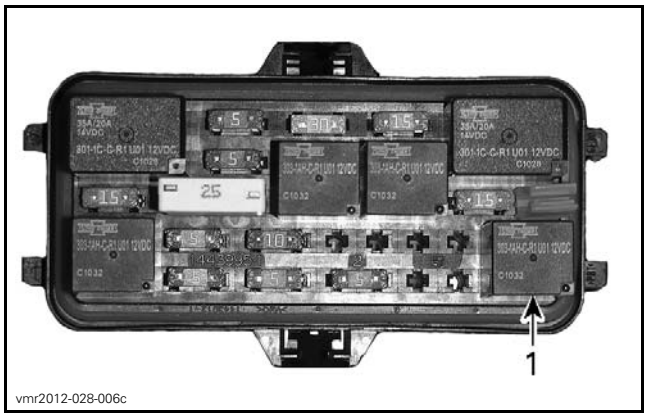

1. Fuel pump relay

3. Measure fuel pump resistance as follows.

FUEL PUMP RESISTANCE TEST (AT FUSE BOX)		
TEST PROBES		RESISTANCE Ω @ 20°C (68°F)
Fuse box contact A11	Battery ground	Approximately 2 Ω

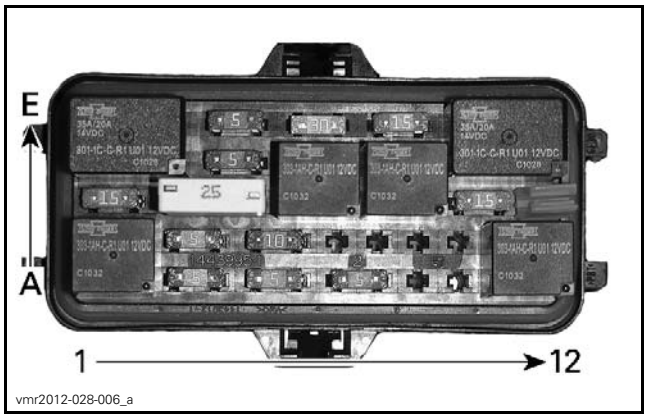

FUSE BOX COORDINATES

If resistance test failed, disconnect fuel pump connector and measure resistance at fuel pump connector.

FUEL PUMP RESISTANCE TEST (AT FUEL PUMP CONNECTOR)	
Pins 3 and 4	Approximately 2 Ω

If test failed at pump connector, replace fuel pump.

If test succeeded at pump connector, check wiring and connectors from:
- Fuse box to fuel pump
- Fuel pump to battery ground.

Repair or replace as necessary.

Accessing the Fuel Pump

Remove rear body module, refer to *BODY* subsection.

Releasing the Fuel System Pressure

Refer to *DISCONNECTING A FUEL PRESSURE HOSE* in this subsection.

Removing the Fuel Pump

1. Release the pressure of the fuel system.
2. Disconnect the following from the fuel pump:
   – Fuel pump electric connector
   – Fuel system vent hose
   – Fuel pump pressure hose.

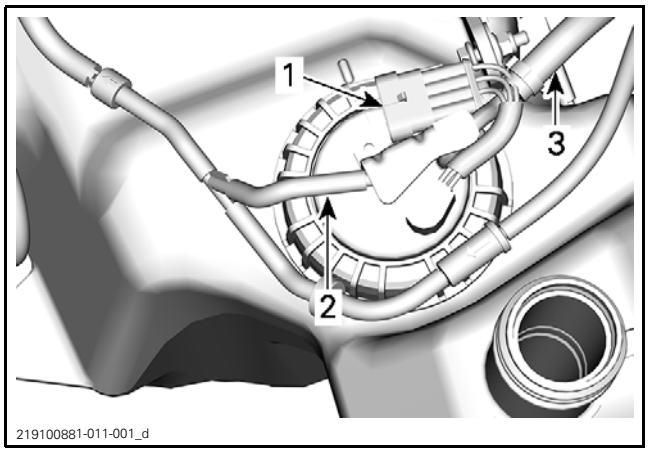

TYPICAL
1. Fuel pump connector
2. Vent hose
3. High pressure fuel hose

3. Remove fuel pump retaining nut.

⚠ WARNING

Fuel vapors are flammable and explosive under certain conditions. Use only non-sparking tools.

⚠ CAUTION Replace fuel pump gasket whenever fuel pump retaining nut is loosened.

REQUIRED TOOL	
FUEL PUMP NUT TOOL (P/N 529 036 427)	

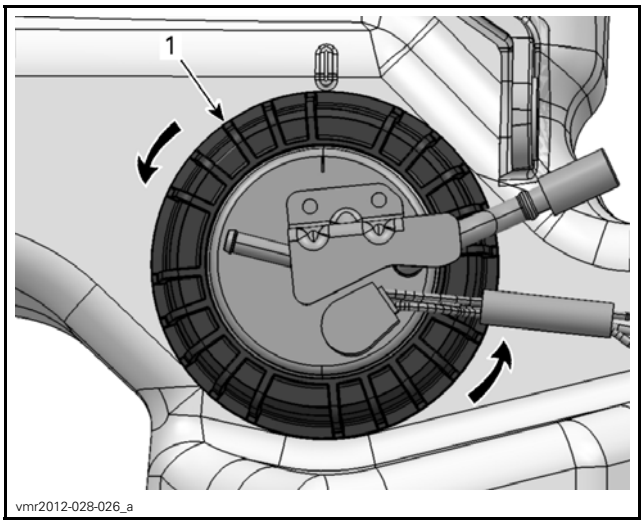

TYPICAL - FUEL PUMP REMOVAL
1. Fuel pump retaining nut

4. Carefully pull out and rotate fuel pump as required.

NOTICE Pay attention not to damage fuel sender and fuel pump prefilter.

5. Discard gasket ring.
6. Wipe off any fuel spillage.

Installing the Fuel Pump

The installation is the reverse of the removal procedure. However, pay attention to the following.

Rotate fuel pump during insertion as per removal procedure.

⚠ CAUTION Pay attention not to damage fuel sender and fuel pump pre-filter.

1. Install a NEW gasket ring.
2. Place gasket so that it is properly located between fuel pump and fuel pump mounting neck on fuel tank.

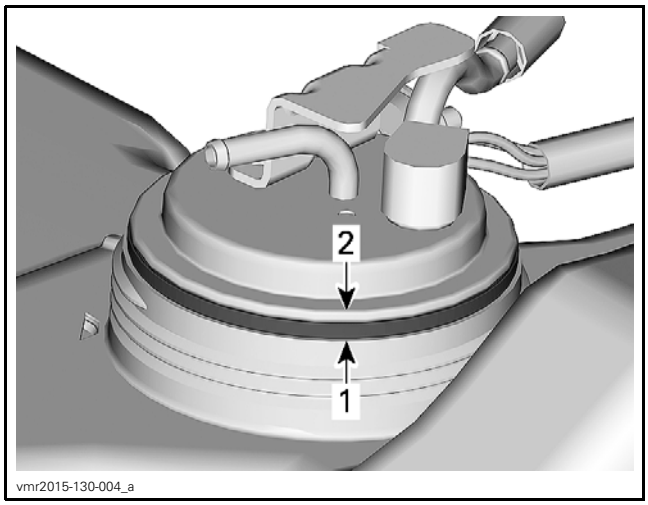

TYPICAL
1. *Gasket ring here*
2. *Fuel pump flange*

⚠ WARNING

Ensure gasket ring makes good contact all around fuel pump and fuel pump mounting neck on fuel tank.

3. Ensure proper fuel pump orientation as in following illustration.

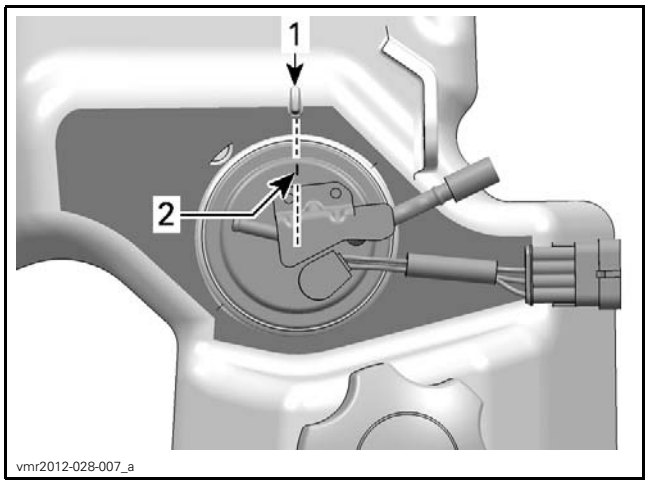

1. *Fuel tank pump index*
2. *Fuel pump index*

4. Insert fuel pump retaining nut over the fuel pressure hose and electrical wiring connector.
5. While firmly holding pump against tank, engage fuel pump retaining nut on fuel tank flange.

NOTE: If necessary, move the pump in order to ensure the flange is sitting completely flat on the tank.

6. Tighten fuel pump retaining nut to specification.

NOTE: Ensure pump is properly aligned with index marks after nut is tightened to specification.

TIGHTENING TORQUE	
Fuel pump retaining nut	29 N•m ± 1 N•m (21 lbf•ft ± 1 lbf•ft)

7. Install fuel pressure hose on fuel pump using a **NEW** Oetiker clamp.
8. Install fuel vent tube on fuel pump.
9. Install electrical connector on fuel pump.
10. Install fuel pump relay (R4).
11. Refuel tank and ensure there are no leaks by performing a *FUEL TANK LEAK TEST* and a *FUEL PUMP PRESSURE TEST* as described in this subsection.
12. Check fuel level sender operation.

FUEL PUMP PRE-FILTER (STRAINER)

Replacing the Fuel Pump Pre-filter

1. Remove *FUEL PUMP*, see *REMOVING THE FUEL PUMP* in this subsection.
2. Unlock 3 tabs on strainer plastic ring.

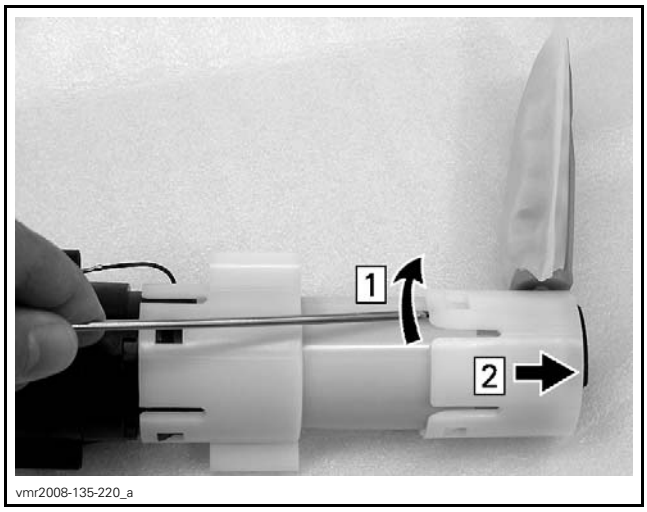

Step 1: Lift these tabs to unlock ring
Step 2: Pull ring off pump inlet

3. Remove rubber pad.

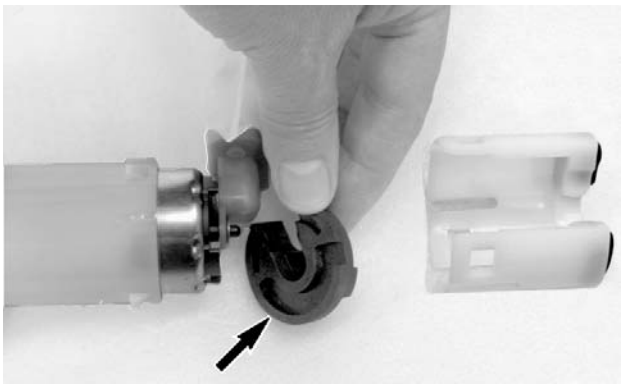
vmr2008-135-221_a

4. Remove push nut securing strainer to fuel pump. Be careful not to break the plastic pin.

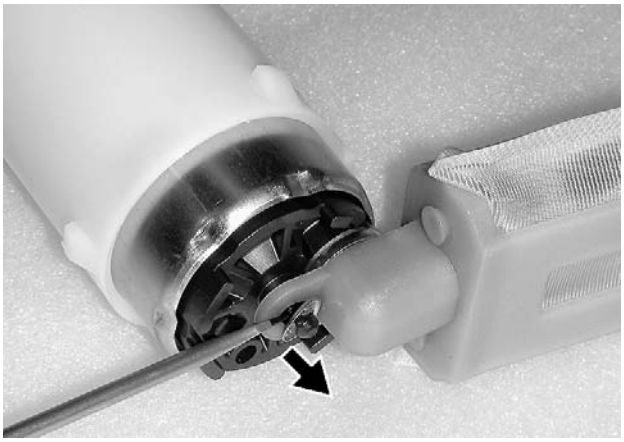
vmr2008-135-222_a

5. Pull strainer off fuel pump.

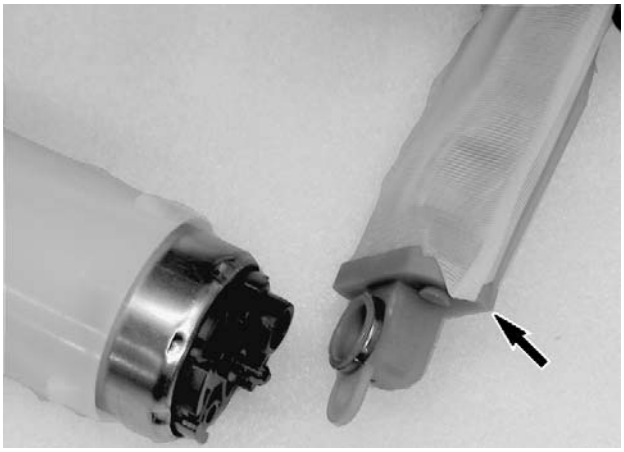
vmr2008-135-223_a

NOTE: A non-serviceable filter is located within the fuel pump module. If it is clogged, replace fuel pump.

6. Insert the new strainer on fuel pump making sure to press it in tightly against the fuel pump surface.
7. Press in a **NEW** push nut to secure strainer.
8. Reinstall remaining removed parts.

FUEL LEVEL SENDER

The fuel level sender is a float actuated variable resistance type that is part of the fuel pump.

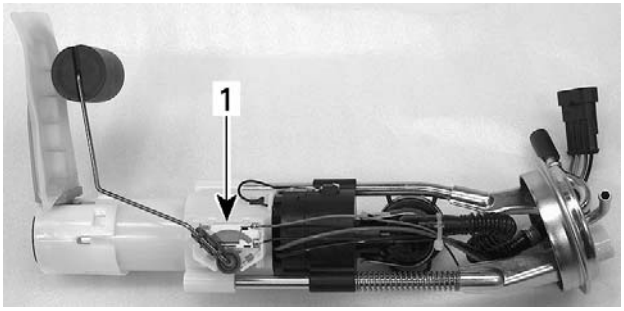

vmr2008-135-901_a

1. Fuel level sender

Testing the Fuel Level Sender Resistance (Fuel Pump Module Installed)

1. Disconnect multifunction gauge, refer to the appropriate *GAUGE* subsection.
2. Measure the resistance of the fuel level sender as follows.

FUEL LEVEL SENDER RESISTANCE TEST		
FUEL LEVEL	GAUGE CONNECTOR	RESISTANCE Ω @ 20°C (68°F)
Full	Pins 4 and 21	5 Ω ± 1
Empty		100 Ω ± 5

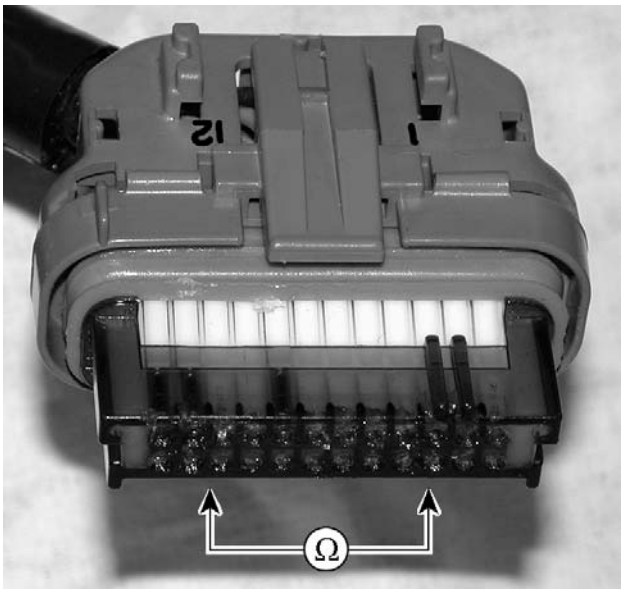

vmr2006-020-052_c

FUEL LEVEL SENDER RESISTANCE TEST		
FUEL LEVEL	4.5" DIGITAL DISPLAY GAUGE CONNECTOR	RESISTANCE Ω @ 20°C (68°F)
Full	Pins 3 and 8	5 Ω ± 1
Empty		100 Ω ± 5

219100949-018-001_a

MULTIFUNCTION 4.5" DIGITAL DISPLAY GAUGE CONNECTOR (PIN-OUT)

If readings are out of specification, refer to *TESTING THE FUEL LEVEL SENDER RESISTANCE (AT FUEL PUMP CONNECTOR)*.

If readings are as specified, refer to *TESTING THE FUEL LEVEL SENDER INPUT VOLTAGE*.

Testing the Fuel Level Sender Resistance (at Fuel Pump Connector)

FUEL LEVEL SENDER RESISTANCE TEST		
FUEL LEVEL	FUEL PUMP CONNECTOR	RESISTANCE Ω @ 20°C (68°F)
Full	Pins 1 and 2	5 Ω ± 1
Empty		100 Ω ± 5

If resistance test at fuel pump connector is failed, replace fuel pump module.

Testing the Fuel Level Sender Input Voltage

1. Set ignition switch to ON.
2. Disconnect fuel pump connector, refer to *FUEL PUMP CONNECTOR ACCESS* in this subsection.
3. Measure for input voltage as follows.

FUEL LEVEL SENDER INPUT VOLTAGE TEST		
FUEL PUMP CONNECTOR	BATTERY	VOLTAGE
Pin 2	Negative terminal	5V

TEST RESULT	SERVICE ACTION
5V is not read	Test wiring continuity between fuel level sender and multifunction gauge
Wiring continuity is good	Replace multifunction gauge
Wiring continuity is not obtained	Repair or replace wiring

Replacing the Fuel Level Sender

Replace fuel pump. Refer to *FUEL PUMP* in this subsection.

FUEL TANK VENT VALVES

Testing the Fuel Tank Vent Valve

Testing the Inlet Check Valve

1. Remove rear body module, refer to *BODY* subsection.
2. Remove multifunction gauge for access to the vent system inlet hose, refer to the appropriate *GAUGE* subsection.

3. Install a small hose pincher between the vent pressure relief valve and the fuel pump vent inlet.

REQUIRED TOOL	
SMALL HOSE PINCHER (P/N 295 000 076)	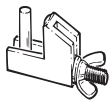

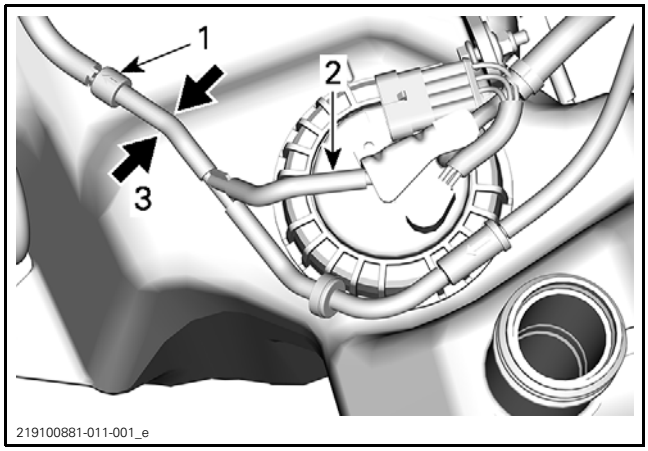

TYPICAL
1. *Pressure relief valve*
2. *Fuel pump vent inlet*
3. *Install small hose pincher here*

4. Connect the vacuum/pressure pump to the fuel tank vent hose inlet.

REQUIRED TOOL	
VACUUM/PRESSURE PUMP (P/N 529 021 800)	

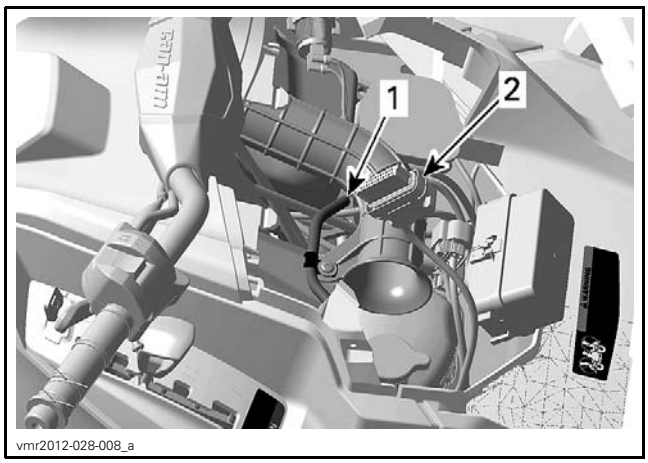

TYPICAL
1. *Fuel tank vent hose inlet*
2. *Gauge connector*

5. Remove fuel tank cap.

6. Set vacuum/pressure pump to **PRESSURE** and activate pump. The gauge on the pump **should not change in reading**.
7. Set vacuum/pressure pump to **VACUUM** and activate pump. The **gauge should increase in reading**.

If the test failed, carry out the following:
- Ensure breather filter is properly installed, refer to *PERIODIC MAINTENANCE PROCEDURES*.
- Ensure inlet check valve is properly installed, refer to *INSTALLING THE FUEL TANK VENT VALVE* in this subsection.
- Test inlet check valve separately. If good, replace the breather filter, refer to *PERIODIC MAINTENANCE PROCEDURES*.

Testing the Pressure Relief Valve

1. Install the small hose pincher between the inlet check valve and the fuel pump vent inlet fitting.

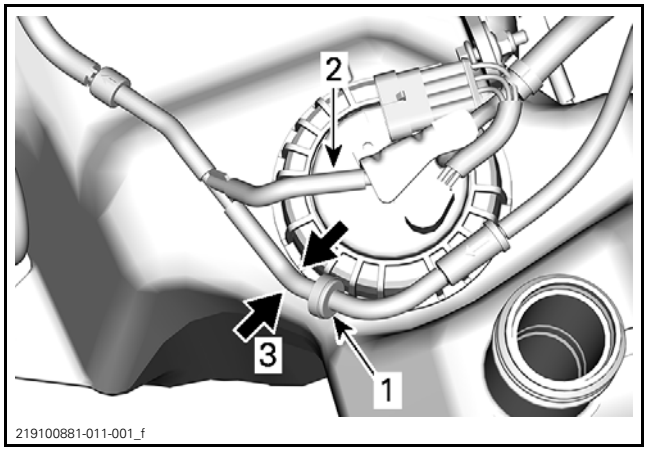

TYPICAL
1. *Inlet check valve*
2. *Fuel pump vent inlet fitting*
3. *Install small hose pincher here*

2. Set vacuum/pressure pump to **PRESSURE** and activate pump. The **gauge should increase in reading**.
3. Set vacuum/pressure pump to **VACUUM** and activate pump. The gauge on the pump **should not change in reading**.

If the test failed, carry out the following:
- Ensure pressure relief valve is properly installed, refer to *INSTALLING THE PRESSURE RELIEF VALVE* in this subsection.
- Replace pressure relief valve if it fails the test.

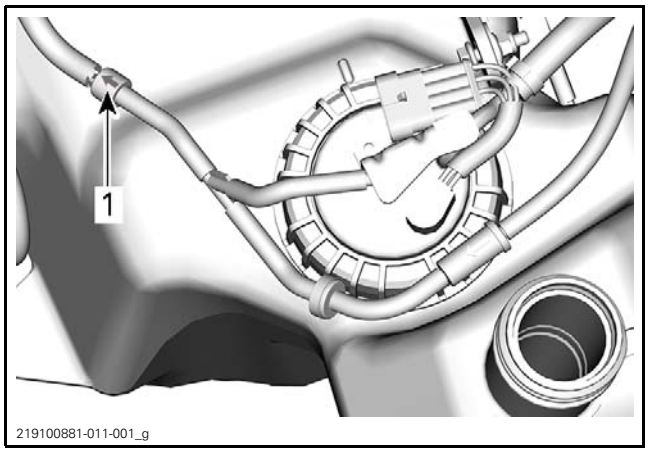

TYPICAL
1. *Pressure relief valve flow direction arrow*

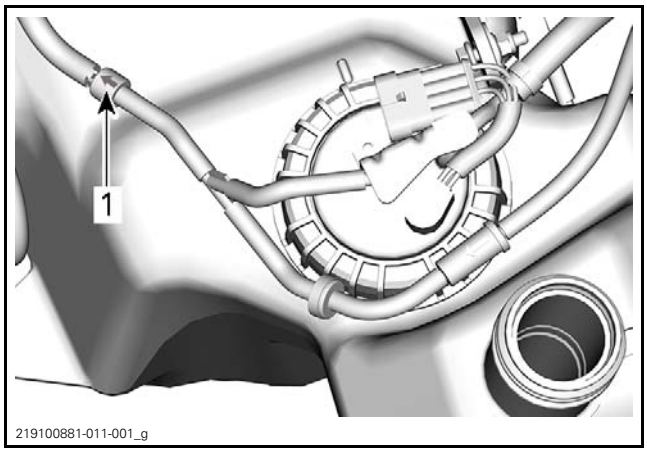

TYPICAL
1. *Pressure relief valve flow direction arrow*

Installing the Fuel Tank Vent Valve

Installing the Inlet Check Valve

Ensure white portion of inlet check valve is towards the vent breather filter.

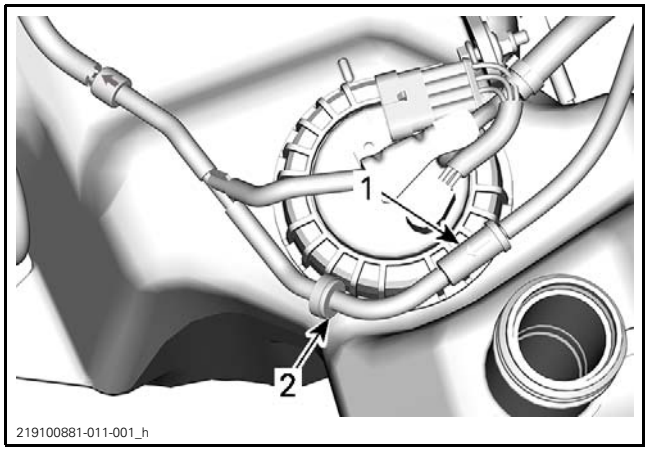

TYPICAL
1. *Vent breather filter*
2. *White portion of inlet check valve*

Installing the Pressure Relief Valve

Ensure pressure relief valve flow arrow is pointing away from fuel pump vent fitting.

POWER DISTRIBUTION AND GROUNDS

GENERAL

OVERVIEW

The battery is the primary source of power for the electrical system, it is recharged by the magneto.

Some components are permanently connected to the battery (unswitched) while some require a relay or switch to be closed (switched). Refer to the color *WIRING DIAGRAM* on *KNOWLEDGE CENTER*.

At high RPM if the magneto power is greater than the loads, the rectifier/regulator will regulate power as necessary.

The system uses an external voltage regulator/rectifier.

FUSE BOX 1

FUSE IDENTIFICATION		
F1	Key/Clock	10 A
F2	Lights	30 A
F3	Acc1	20 A
F4	Acc2	20 A
F5	INJ/ING/Fuel	10 A
F6	Speedo (Gauge)	10 A
F7	Tail Lamp	10 A
F8	ECM	10 A
F9	2WD/4WD	10 A
F10	Flashers	10 A
F11	ABS Valves	25 A
F12	Cooling Fan	25 A

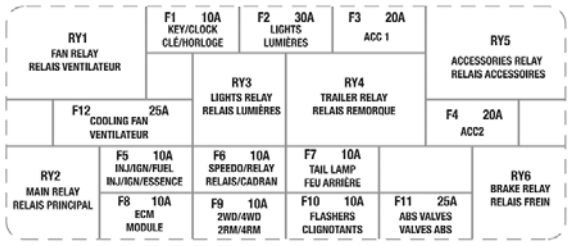

FUSE BOX

RELAY IDENTIFICATION		RELAY STATE (ON)	RELAY STATE (OFF)
RY1	Cooling fan	See *COOLING SYSTEM*	
RY2	Main	When ignition key is turned ON AND Run/Stop switch is set to RUN	Approximately 30 seconds after ignition key is turned OFF
RY3	Lights	Same as main relay	When ignition key is turned OFF OR When engine speed is less than 1000 RPM for at least 50 minutes
RY4	Trailer Flasher Relay	When a trailer is plugged	When there is no trailer plugged
RY5	Accessories	Same as main relay	When ignition key is turned OFF OR When engine speed is less than 1000 RPM for at least 50 minutes
RY6	Brake	See *BRAKES*	

FUSE LINKS AND FUSE BOX 2

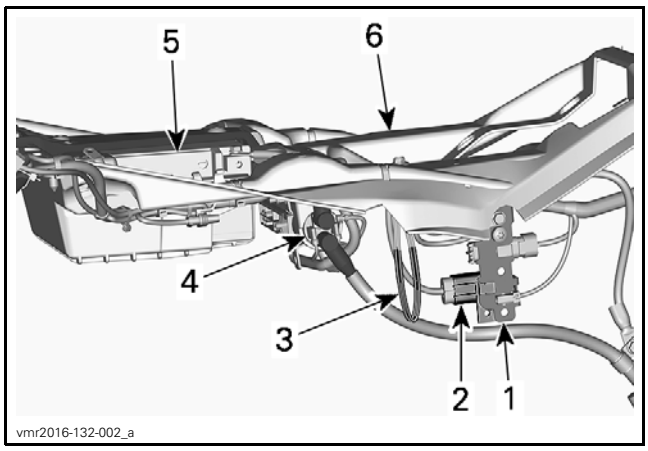

LOCATION OF FUSE LINKS AND FB2
1. *Connector support (right side of vehicle)*
2. *Fuse box 2*
3. *Fuse links 1 and 2*
4. *Starter solenoid*
5. *Battery*
6. *Battery support*

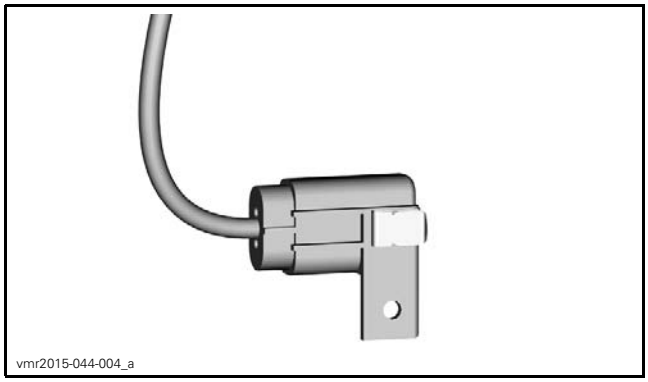

FUSE BOX 2

FUSE LINK IDENTIFICATION			
Fuse links	1	Main	16 awg
	2	Fan/accessories	16 awg
FUSE IN FUSE BOX 2 IDENTIFICATION			
Fuse	3	DPS (dynamic power steering)	40 A

FUSE HOLDER			
Fuse	PF3	ABS pump	40 A

GROUNDS

All grounds are grouped at the same location on RH side of frame.

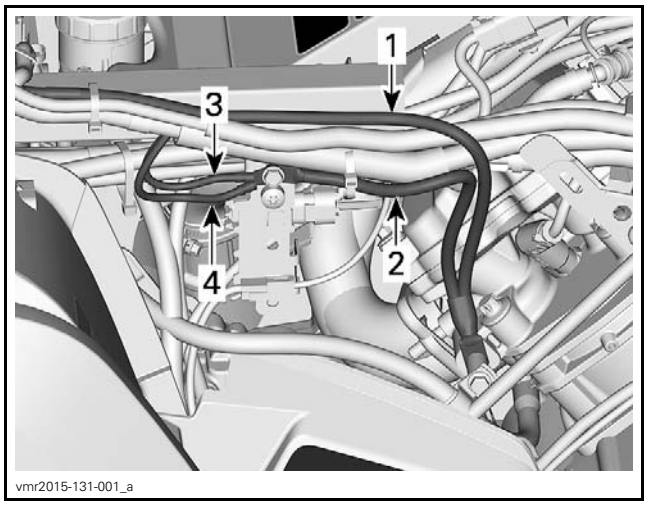

TYPICAL - RH SIDE
1. *Battery ground*
2. *Engine ground*
3. *DPS ground*
4. *Wiring harness ground*

PROCEDURES

TESTING A FUSE LINK

Measure the fuse link output voltage (at the fuse box). Refer to the *WIRING DIAGRAM*.

If no voltage is measured, carry out the following:
- Remove the right side panel and extension panel.
- Grab each end of the fuse link and gently pull in opposite directions.

If the fuse link is open, the insulator should stretch and break where the link has failed.

NOTE: Failure of a fuse link is usually due to a severe overload (or short circuit) between the fuse link and the load it protects (the fuse box).

REPLACING A FUSE LINK

NOTICE **Before replacing a fuse link, be sure to find and repair the cause of the failure.**

The gauge of the fuse link can be identified by the color of its insulator, and by an identification label. Be sure to replace a fuse link by an identical fuse link.
- BLUE = 18 awg
- BLACK = 16 awg
- GRAY = 14 awg

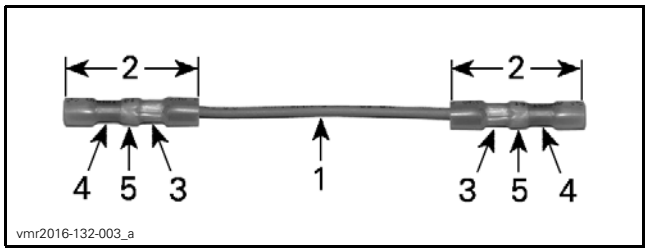

PRE-ASSEMBLED REPLACEMENT FUSE LINK
1. Insulated fuse link wire
2. Butt end terminal
3. Terminal factory crimped on fuse link
4. Crimp here when installing in circuit
5. Solder ring

1. Disconnect the battery.
2. Cut the circuit wiring as close as possible to the fuse link terminals.
3. Remove 8 mm (5/16 in) of insulator from the ends of the circuit wiring.
4. Insert the circuit wire end in the link terminal making sure the wire end bottoms out in the center of the terminal.
5. Crimp the terminal on the bare wire.
6. Using a heat gun, carefully heat the link terminal until the solder ring has melted into the wiring, and the terminal insulator has shrunk tightly around the terminals and wire insulators.
7. Reconnect the battery.

WIRING HARNESS AND CONNECTORS

SERVICE TOOLS

Description	Part Number	Page
ECM ADAPTER TOOL	529 036 166	11
ECM TERMINAL REMOVER 2.25	529 036 175	12
ECM TERMINAL REMOVER 3.36	529 036 174	12

GENERAL

The illustrations in this subsection are typical. Several variants of the connector types, such as different number of pin cavities, are used on the vehicle.

MAIN HARNESS

Main Harness (Except T Category)

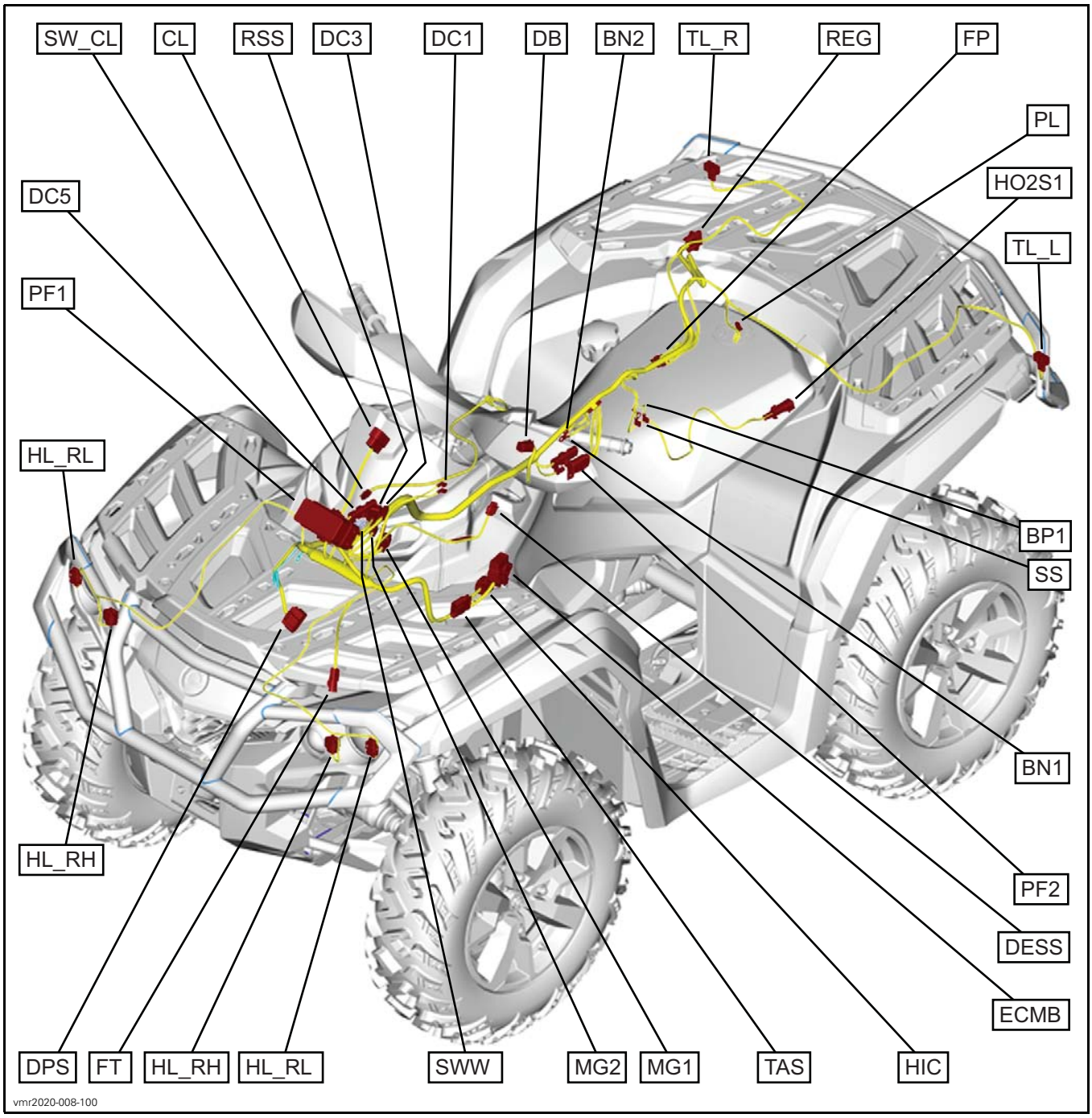

Main Harness (T Category)

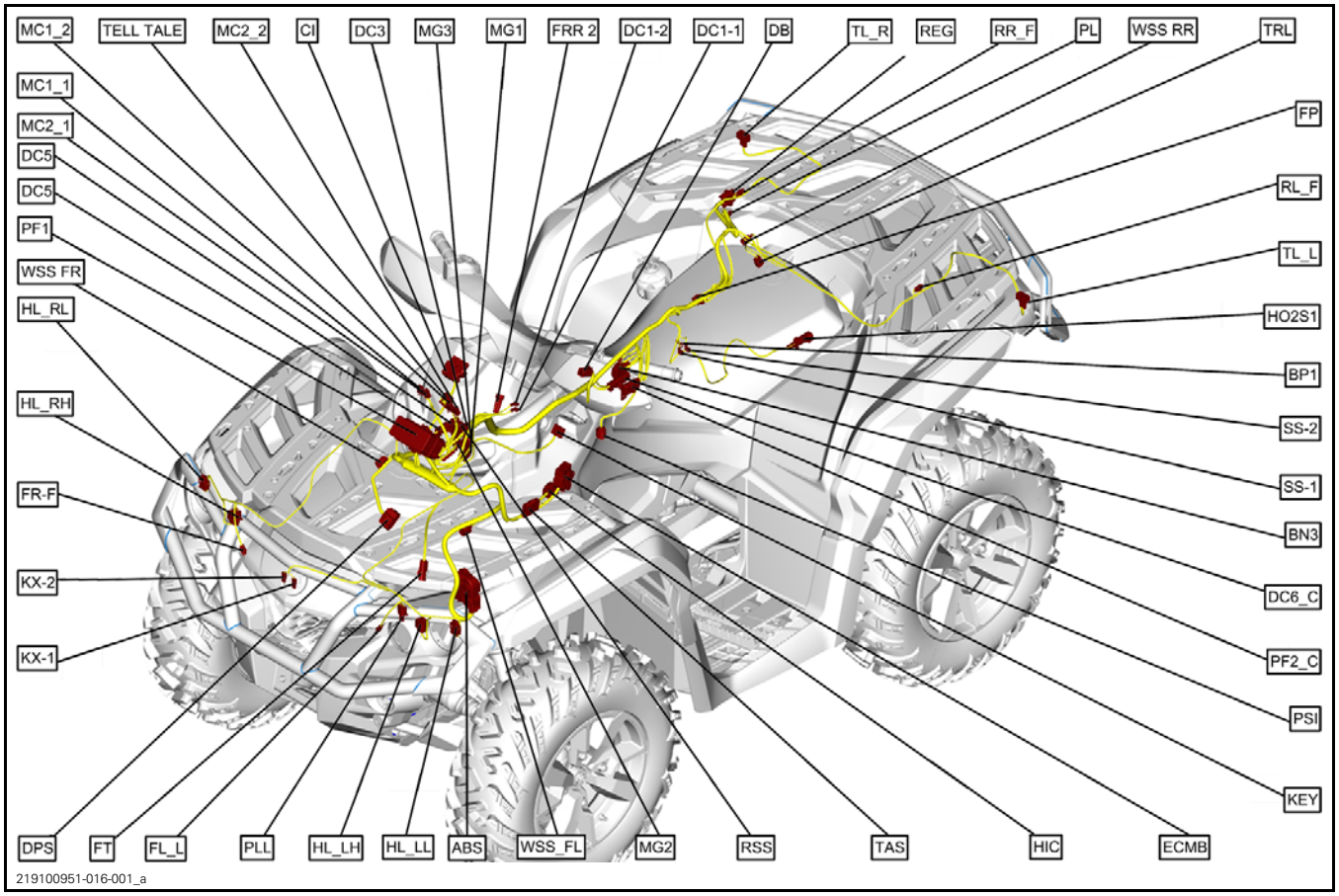

MAIN HARNESS SPLICE LOCATION

Main Harness (Rear Part)

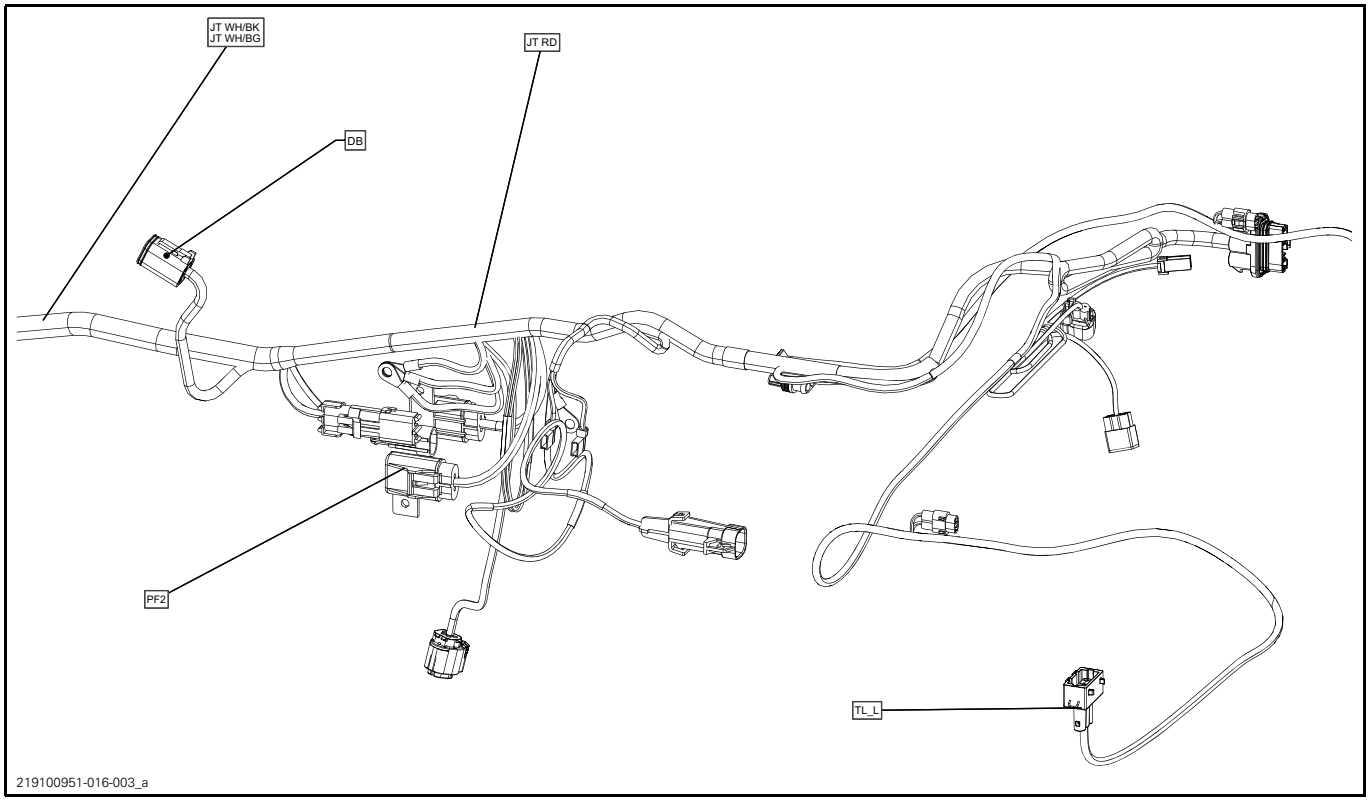

Main Harness (Front Part 1/2)

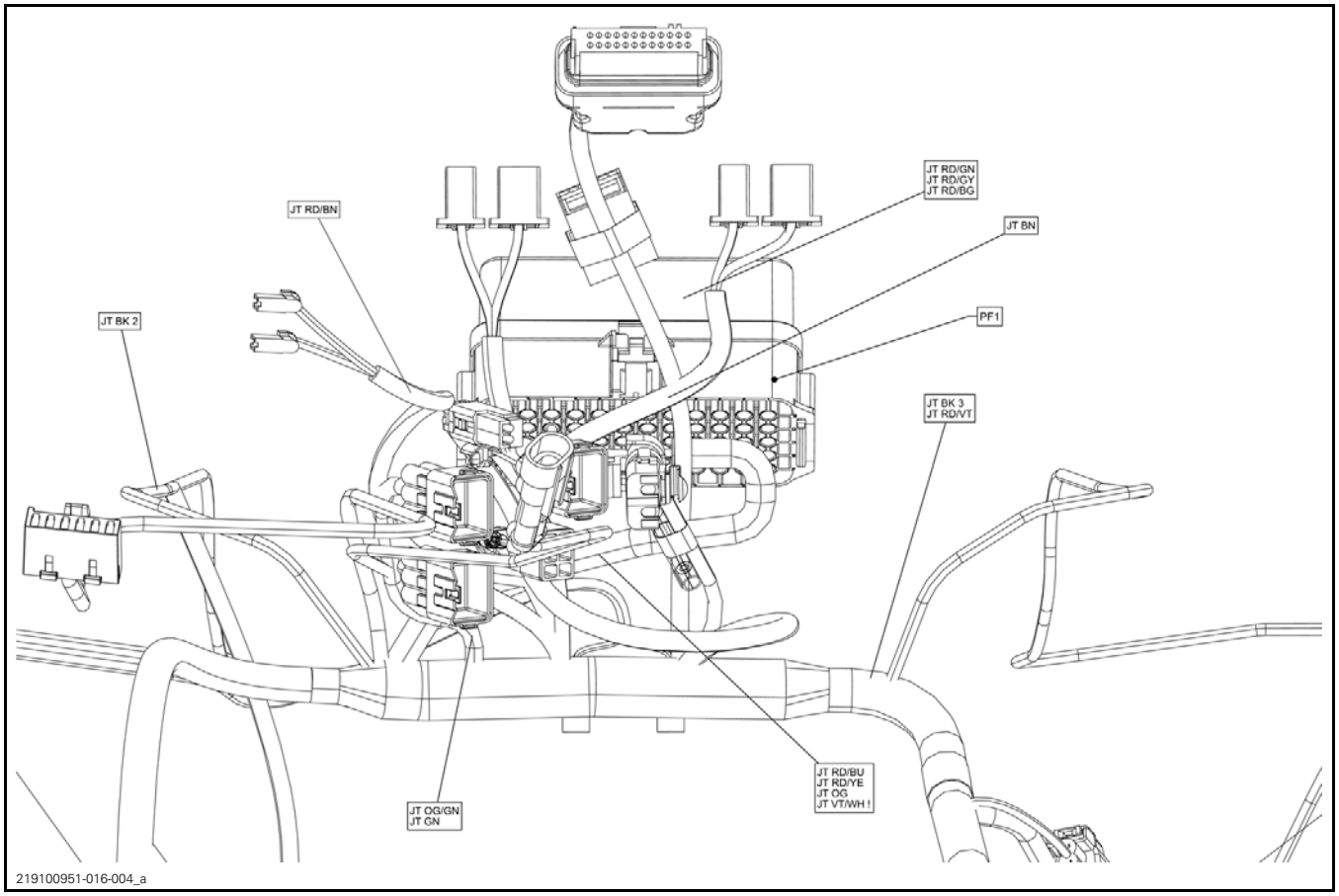

TYPICAL

Main Harness (Front Part 2/2)

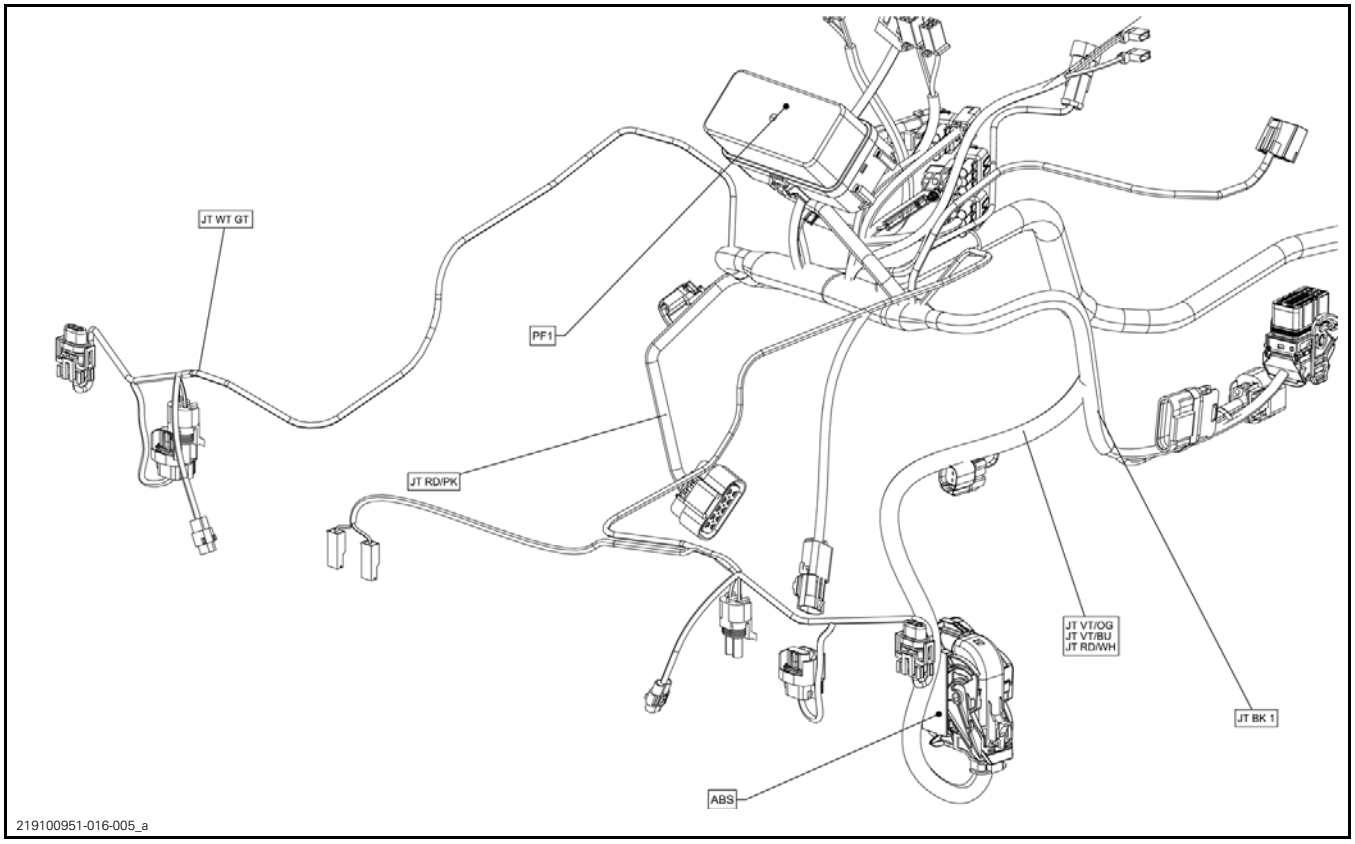

CONNECTOR ABBREVIATION DESCRIPTION

ABBREVIATION	DESCRIPTION
ABS	Anti-lock braking system (If equipped)
BN	Ground terminal
BP	Positive terminal
CL	Cluster
DB	Diagnostic connector
DC	Accessory outlet
DPS	Dynamic power steering
ECMB	Engine Control Module (Connector B)
FL	Fuse link
FL F	Front Left Flasher
FP	Fuel pump
FR F	Front Right Flasher
FRR1	Rear brake light switch
FRR2	Brake lever switch (If ABS equipped)

ABBREVIATION	DESCRIPTION
FT	Cooling fan
HIC	Harness interconnect
H02S1	Oxygen sensor 1 (if equipped)
HL LL	LH LO beam headlight
HL LH	LH HI beam headlight
HL RL	RH LO beam headlight
HL RH	RH HI beam headlight
KEY	Ignition switch
KX	Horn
MC1	Vehicle Flasher Module
MC2	Trailer Flasher Module
MG	LH multifunction switch
PF	Fuse box
PLL	Left position light
PLR	Right position light
PSI	Pressure Sensor (If ABS equipped)
RL_F	Rear Left Flasher

ABBREVIATION	DESCRIPTION
REG	Voltage regulator/rectifier
RR_F	Rear Right Flasher
RSS	Right Steering Switch
SS	Starter solenoid
SW	Winch relay (If winch equipped)
SW_CL	Cluster Switch
SWW	Winch remote switch (If winch equipped)
TAS	Throttle Accelerator sensor
TELLTALE	Telltale
TL_L	Rear LH light
TL_R	Rear RH light
TRL	Trailer harness
WSS	Wheel Speed Sensor (If ABS equipped)

PROCEDURES

DEUTSCH CONNECTORS

Deutsch Connector Application

A variety of Deutsch connectors are used on various systems:

– Diagnostic connector
– Vehicle speed sensor (VSS) connector.

The following procedures may be used on each as they are similar in construction.

Disassembling and Reassembling Deutsch Connector

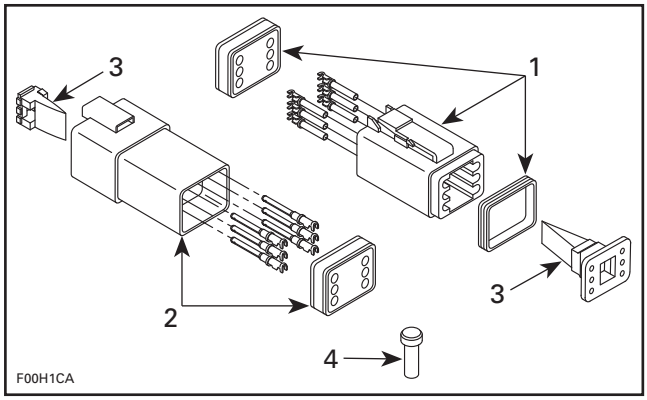

TYPICAL —DEUTSCH CONNECTOR
1. Male connector
2. Female connector
3. Secondary lock
4. Sealing cap

NOTICE Do not apply dielectric grease on terminal inside connector.

Removing Terminal

To remove terminals from connector, proceed as follows:

1. Using long nose pliers, pull out the secondary plastic lock from between the terminals.

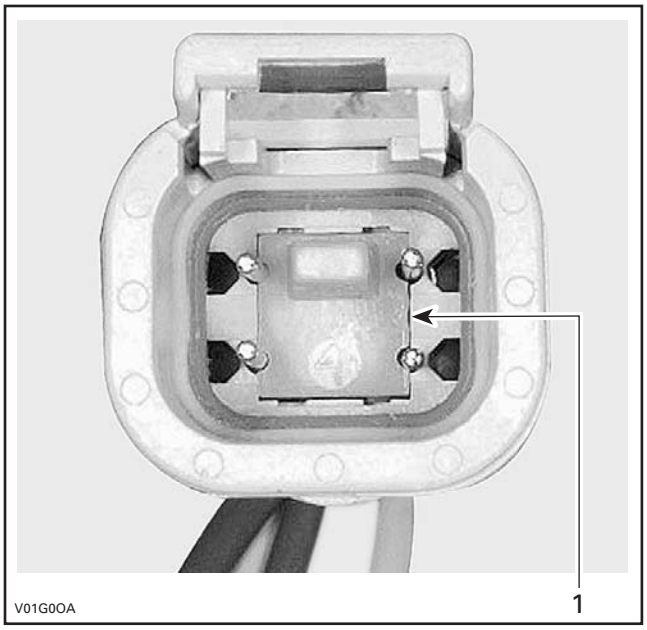

TYPICAL — FEMALE CONNECTOR
1. Female lock

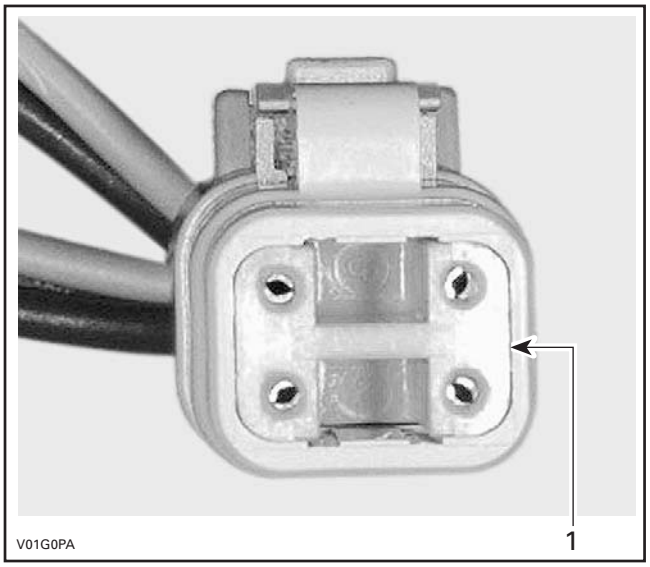

TYPICAL — MALE CONNECTOR
1. Male lock

NOTE: Before pin extraction, push wire forward to relieve pressure on retaining tab.

2. Insert a 4.8 mm (.189 in) wide screwdriver blade inside the front of the terminal cavity.

3. Pry the retaining tab away from the terminal while gently pulling the wire and terminal out of the back of the connector.

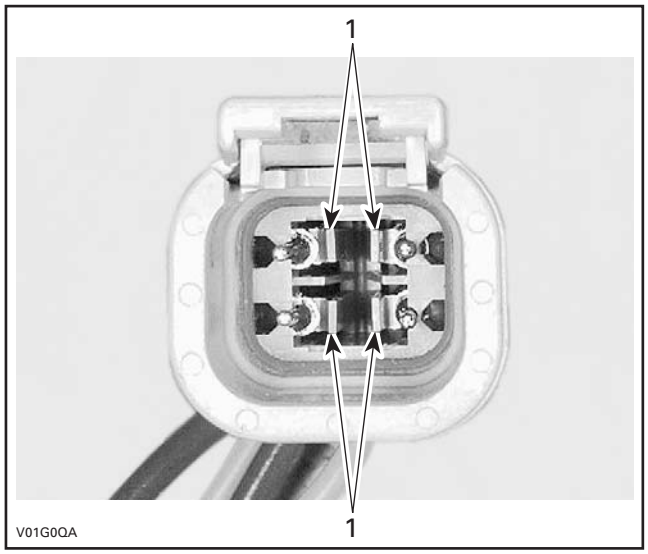

TYPICAL — FEMALE CONNECTOR
1. Retaining tabs

Inserting Terminal

1. For insertion of a terminal, ensure the secondary plastic lock is removed.
2. Insert terminal through the back of the connector in the appropriate position, and push it in as far as it will go. You should feel or hear the terminal lock engage.
3. Pull back on the terminal wire to be sure the retaining tabs are holding the terminal.
4. After all required terminals have been inserted, the lock must be installed.

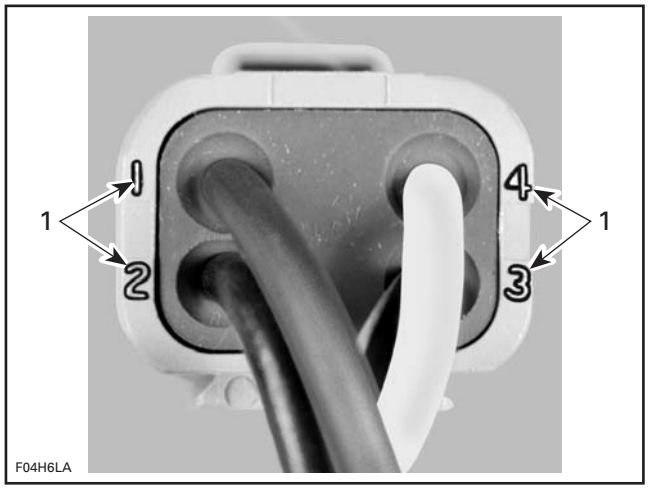

TYPICAL — CONNECTOR PIN-OUT
1. Terminal position identification numbers

PACKARD CONNECTORS

Packard Connector Application

Packard connectors are used to connect:
– Electrical harnesses
– Gauges.

3-Pin Packard Connector

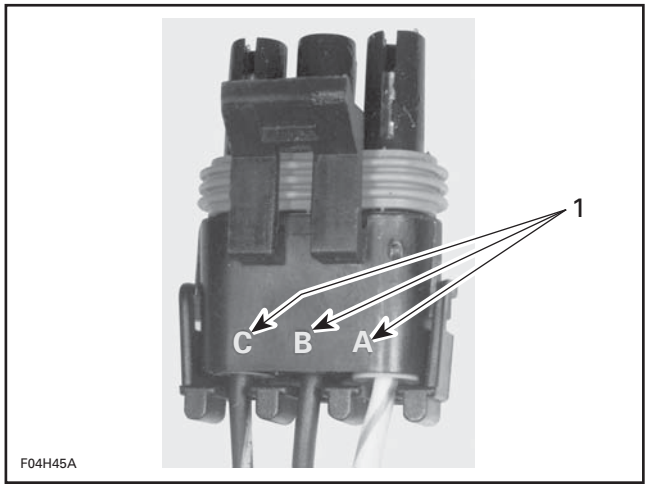

VIEW OF A 3-PIN PACKARD CONNECTOR
1. Identification letters

NOTE: This type of connector also comes in other pin configurations.

Use a terminal remover to remove a terminal from a 3-pin Packard connector.

⚠ WARNING

Ensure all terminals are properly crimped on wires and connectors are properly fastened.

PACKARD CONNECTOR (MULTIFUNCTION GAUGE)

Firmly push down tab and hold to unlock connector while pulling it out.

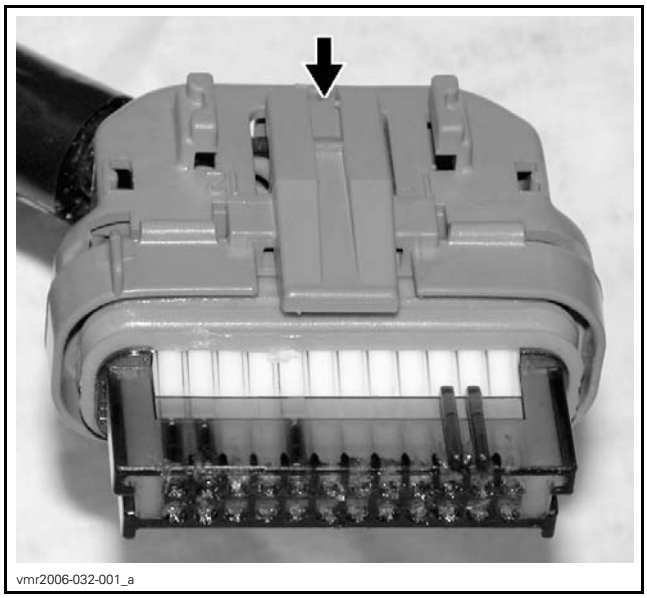

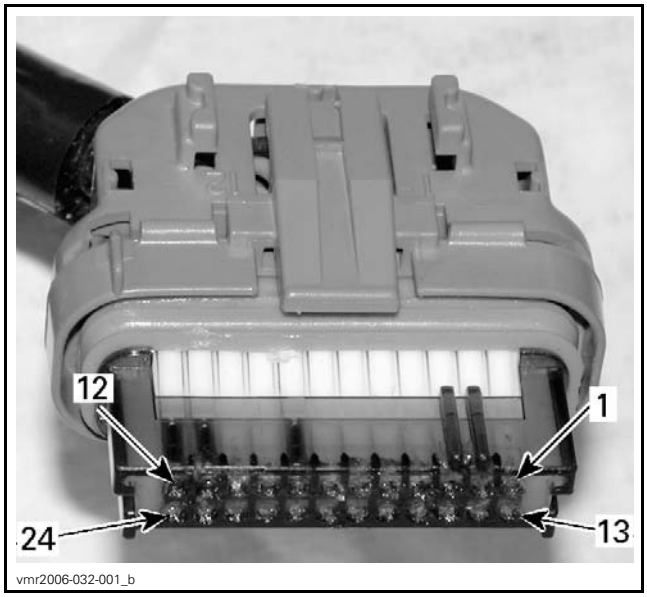

CONNECTOR PINOUT

Push on both tabs to remove retainer.

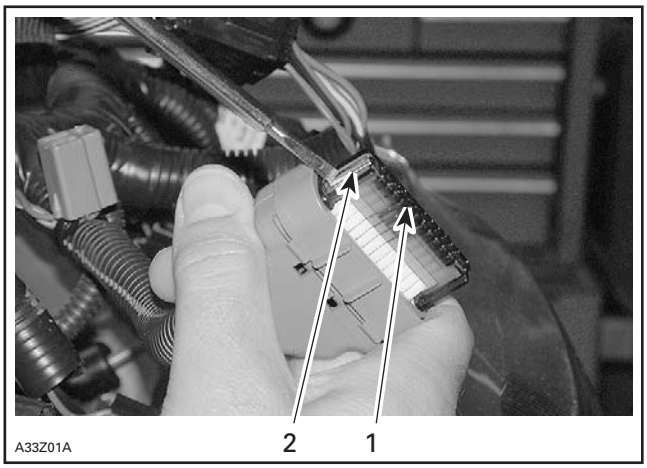

TYPICAL
1. *Retainer*
2. *Tab (one on each side)*

Open housing by lifting 4 tabs.

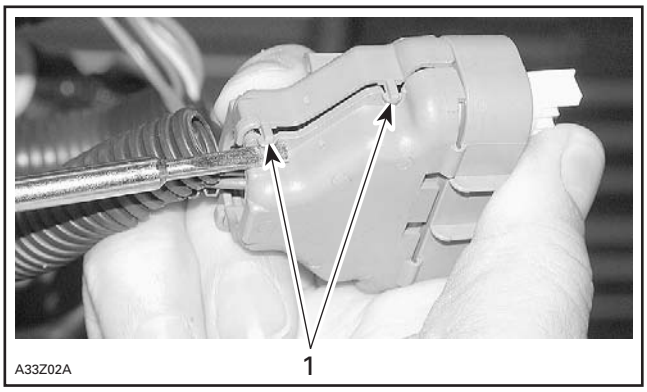

TYPICAL
1. *Tabs (2 on each side)*

Lift the top plastic lock of the female terminal to be removed and hold in position. Lift the female terminal to unlock from the housing and push out of housing.

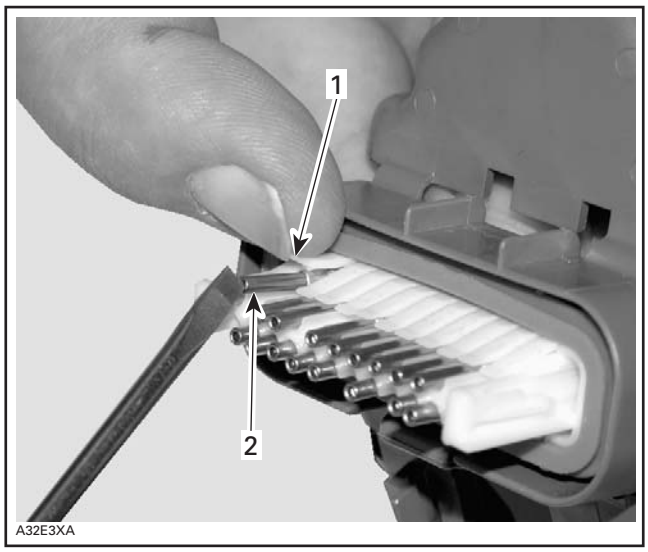

TYPICAL
1. Lift and hold plastic lock
2. Lift to unlock and push out

MOLEX CONNECTOR

There are 2 connectors on the ECM.

The engine wiring harness connector is connected to ECM connector "A". The vehicle wiring harness connector is connected to ECM connector "B".

Each ECM connector has 48 pins however, connectors "A" and "B" are not interchangeable due to their specific keyways.

NOTE: If you need to remove the connector, be sure to not disconnect fuel quick-connector at ECM. If you need to remove the ECM or fuel quick connector, insure the ECM electrical connectors are securely in place and avoid fuel intrusion into connector/seal.

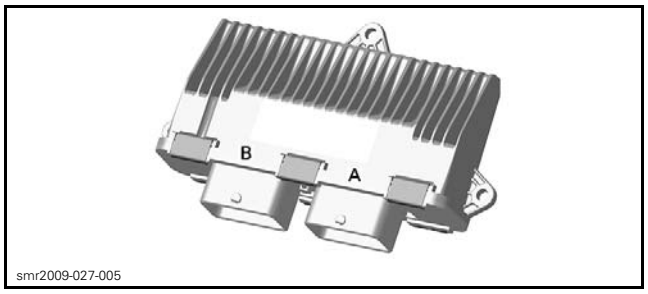

Removing Molex Connector

Push and hold the locking tab.

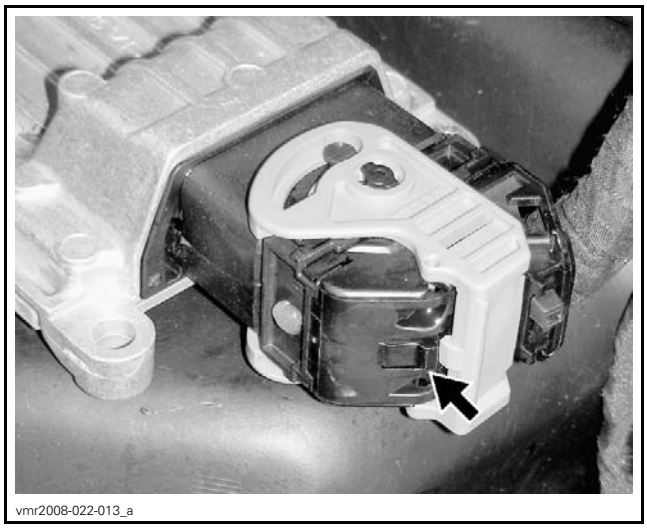

Rotate connector lock until it stops.

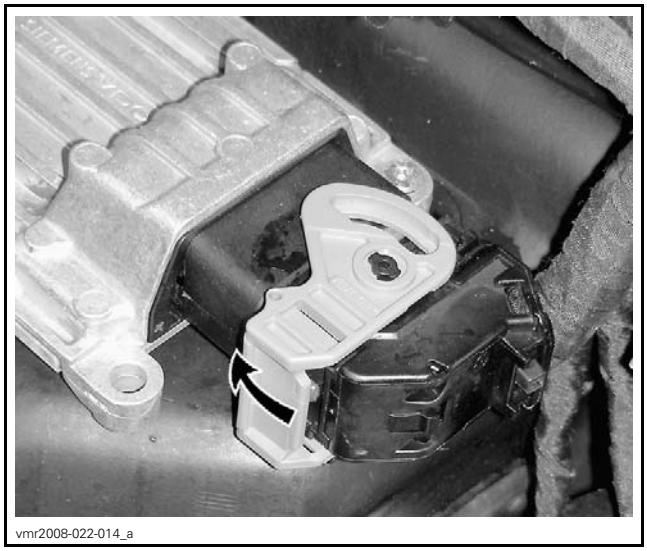

Pull out connector.

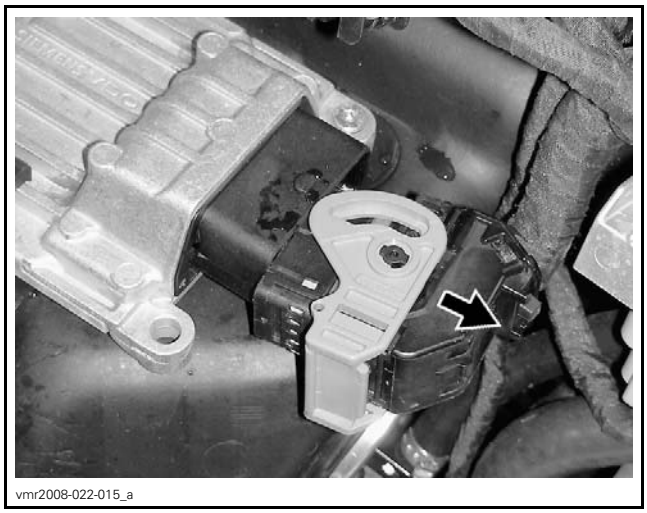

Installing Molex Connector

Fully open connector lock.

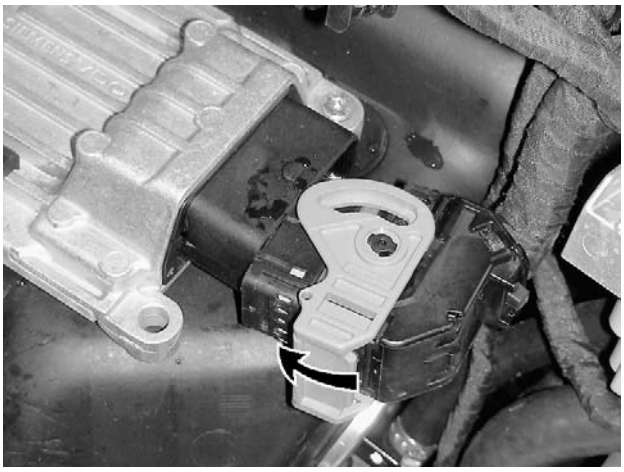

vmr2008-022-015_b

Install connector to ECM.

Rotate connector lock until it snaps locked.

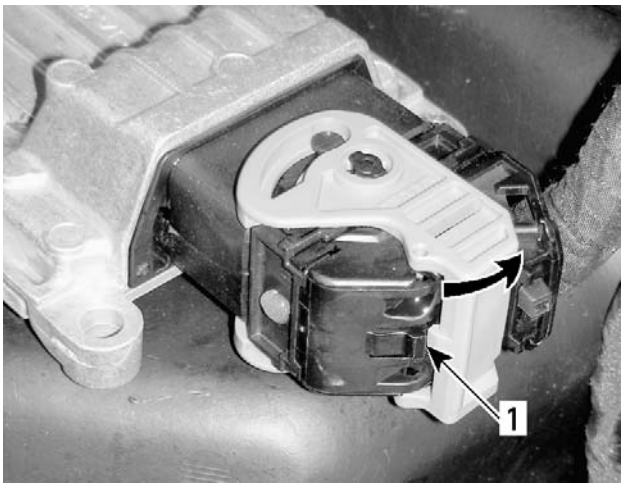

vmr2008-022-013 _b

1. Locked here

Probing Molex Connector

The most recommended and safest method to probe ECM connector terminals is to use the ECM adapter tool. This tool will prevent deforming or enlarging terminals which would lead to bad ECM terminal contact creating intermittent or permanent problems.

REQUIRED TOOLS	
ECM ADAPTER TOOL (P/N 529 036 166)	

Disconnect the ECM connector and reconnect on the tool connector. Probe required terminals directly in the tool holes.

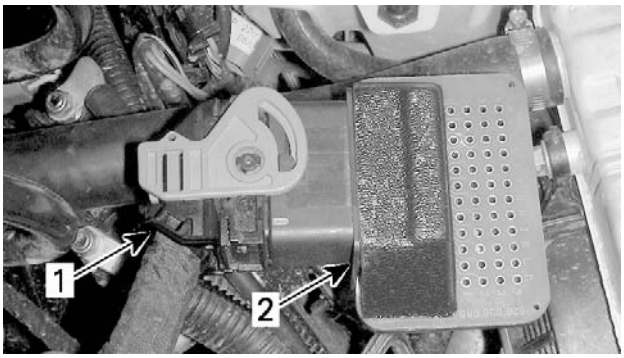

vmr2008-139-016_a

1. ECM connector (harness side)
2. ECM adapter

NOTICE **Never probe directly on ECM harness connector. This could change the shape or enlarge the terminals and create intermittent or permanent contact problems.**

Inspecting Molex Connector

Before replacing an ECM, always check electrical connections.

1. Ensure connector locking mechanism is functioning properly.
2. Ensure all wire terminals (pins) are properly locked in the connector.
3. Ensure they are very tight, make good contact with the pins in the ECM.
4. Ensure the pins in the harness connector and the ECM connector are clean, shiny and corrosion-free.
5. Check wiring harness for signs of scoring.

NOTE: A "defective ECM module" could possibly be repaired simply by disconnecting and reconnecting it.

NOTICE **Do not apply any lubricant product to the pins of the ECM connector.**

Removing the Molex Connector Terminal (Harness Connector)

To remove a signal terminal from the ECM harness connector, use the 2.25 terminal remover.

To remove a power terminal, use the 3.36 terminal remover.

REQUIRED TOOLS	
ECM TERMINAL REMOVER 2.25 (P/N 529 036 175)	
ECM TERMINAL REMOVER 3.36 (P/N 529 036 174)	

1. Remove rear protector from connector.
2. Pull out the connector lock.

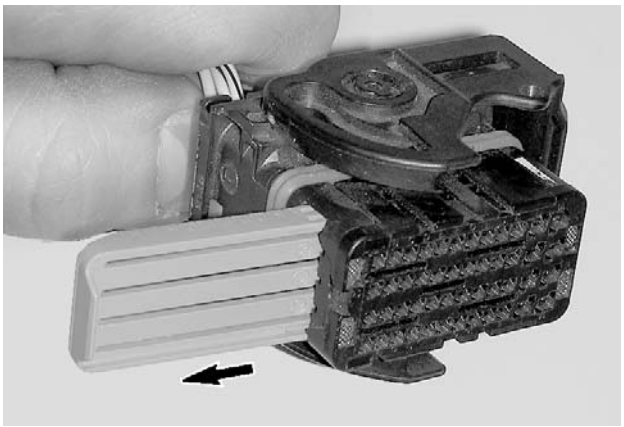

smr2009-045-025_a

3. Insert tool to unlock terminal.

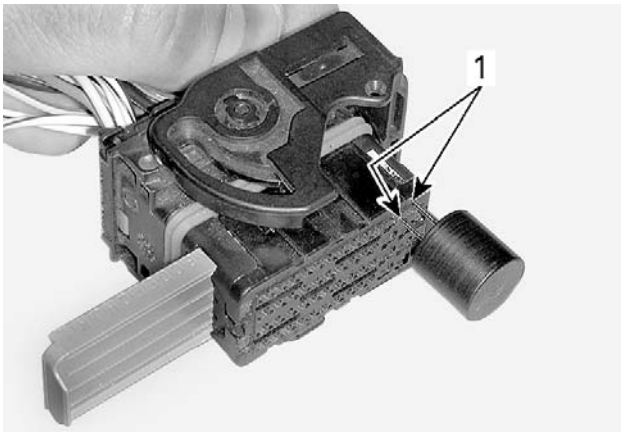

smr2009-045-026_a

1. Unlock here

4. Gently pull on the wire to extract the terminal out the back of the connector.

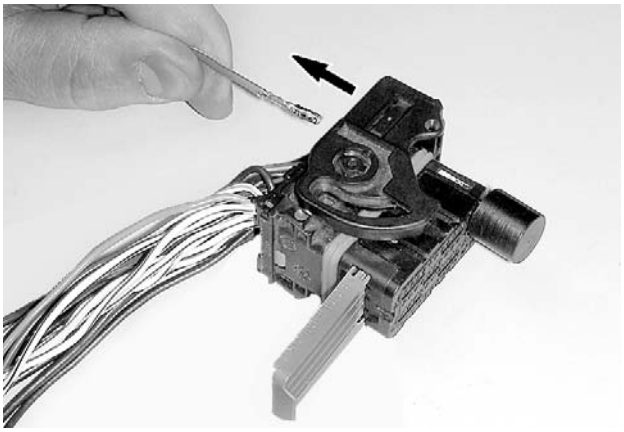

smr2009-045-027_a

NOTICE Before installing wire terminals in the connector, ensure all terminals are properly crimped on wires. After installation of wire terminals in the connectors, ensure they are properly locked by gently pulling on them as if to extract them.

FURUKAWA CONNECTOR

Furukawa Connector Application

Voltage regulator/rectifier.

Removing the Terminal

1. Remove the secondary lock (plastic insert).

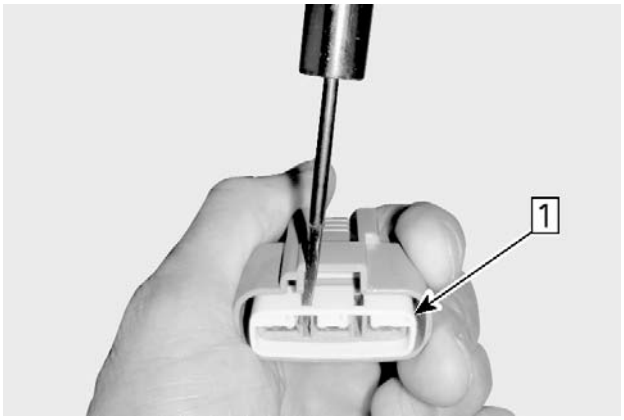

smr2010-050-021_a

Step 1: Remove the secondary lock

2. Carefully insert a terminal extractor between the lock and the pin to release the pin.

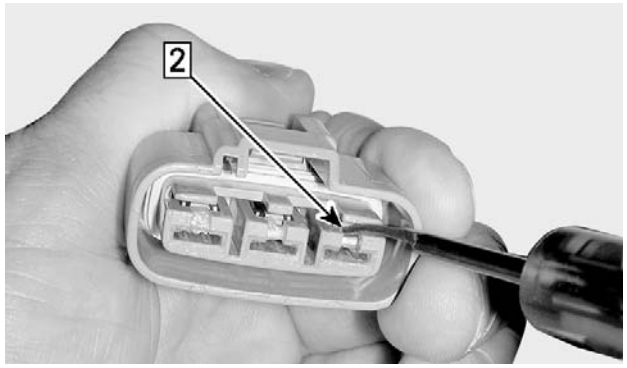

smr2010-050-022_a

Step 2: Insert GM terminal extractor tool

3. Gently pull on the wire to extract the pin out the back of the connector.

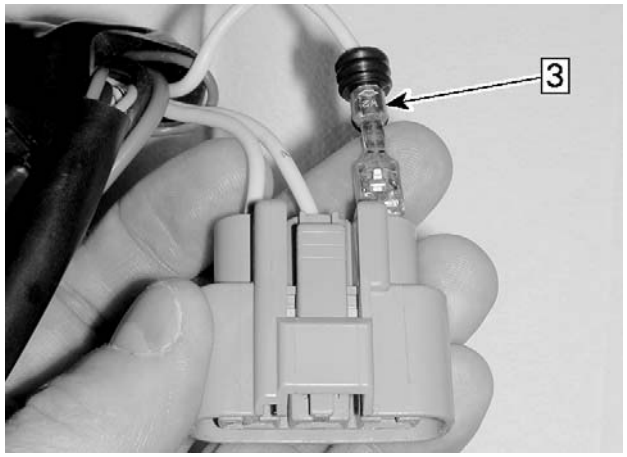

smr2010-050-023_a

Step 3: Pull wire to extract pin

NOTICE **Before installing terminals in the connectors, ensure all terminals are properly crimped on the wires. After installation of the wire terminals in the connectors, ensure they are properly locked by gently pushing on them as if to extract them.**

BATTERY AND STARTER CABLE TERMINALS

Crimping Cable

Carefully strip the wire approximately to 13 mm (1/2 in) in length, using a wire stripping tool or sharp blade/knife.

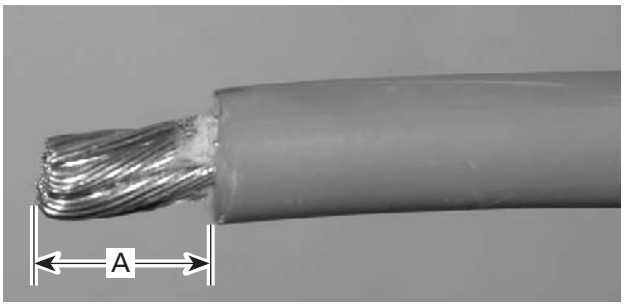

A32E2QA

A. 10 mm (3/8 in)

NOTE: Make sure not to cut wire strands while stripping the wire.

Install the appropriate terminal on the wire according to the requirement. Refer to appropriate *PARTS CATALOG*.

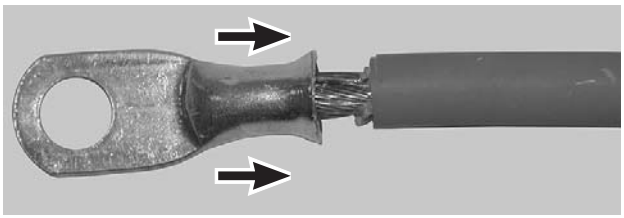

A32E2RA

INSTALLATION OF TERMINAL

Follow the instructions provided with the crimping tool to select the proper position of the tool.

NOTE: Different wires require different crimping pliers settings.

After positioning the crimping pliers, crimp the terminal already installed on wire.

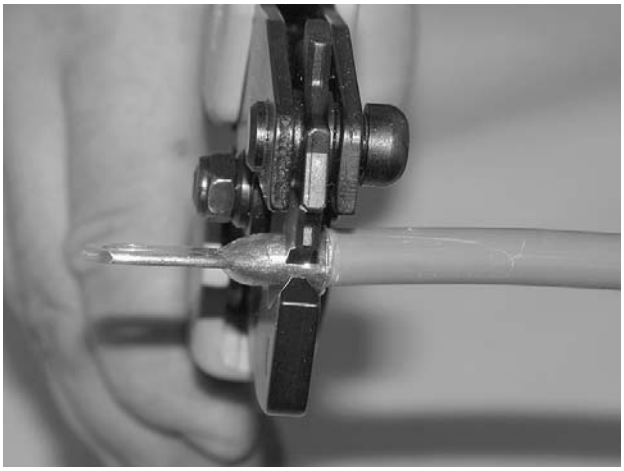

A32E2TA

CRIMPING OF WIRE

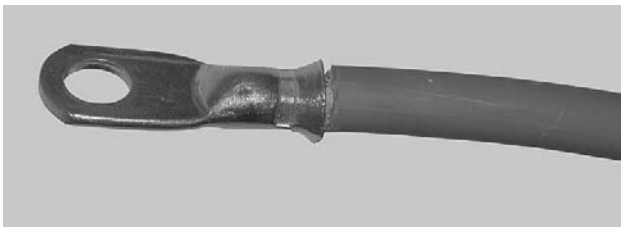
A32E2UA

PROPERLY CRIMPED WIRE

To verify, if the wire is properly crimped, apply some pulling force on wire and the terminal at the same time from both directions.

NOTICE **Never weld the wire to the terminal. Welding can change the property of the wire and it can become brittle and break.**

Install the protective heat shrink rubber tube on the terminal. Heat the heat shrink rubber tube using the heat gun so that it grasps the wire and the terminal.

NOTICE **Make sure that the protective heat shrink rubber tube has been properly installed and no part of wire is exposed.**

SPLICES REPAIR PROCEDURE

Make sure to perform the usual tests described in *ELECTRICAL SYSTEM* sections before investigating the harness splices.

If an electrical issue can not be found with the usual tests, locate the main harness splice that is involved in the faulty circuit and repair it as per the *SPLICES REPAIR PROCEDURE*.

To repair a splice, we recommend the use of a tin solder meeting the followings requirements or an equivalent.

TIN SOLDER REQUIREMENTS
SN 60
PB 40
DIA 0.062
FLUX RA 2%

CASE 1: Wire Detached from Splice

⚠ WARNING

Repairs described in this section should never be performed on harness sections that can be exposed to water.

1. Locate splice. Refer to splices location diagrams.
2. Remove wires from protector tube.
3. Locate the shrink tube protecting the defective splice.

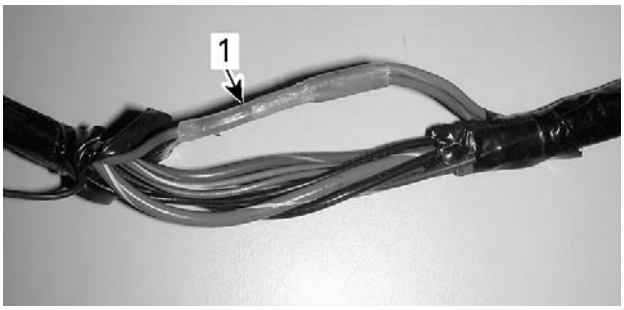

mmr2010-043-001_a

1. Shrink tube

4. Remove the shrink tube.
   4.1 Using a blade, cut the shrink tube.

   NOTICE **Be careful with the blade to avoid cutting wires insulation.**

mmr2010-043-002

   4.2 Slightly heat the shrink tube using a heat gun.

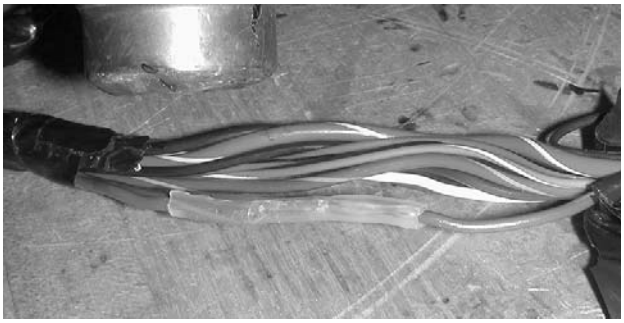
mmr2010-043-003

4.3 Remove the shrink tube with long nose pliers.

5. Locate detached wire from splice.

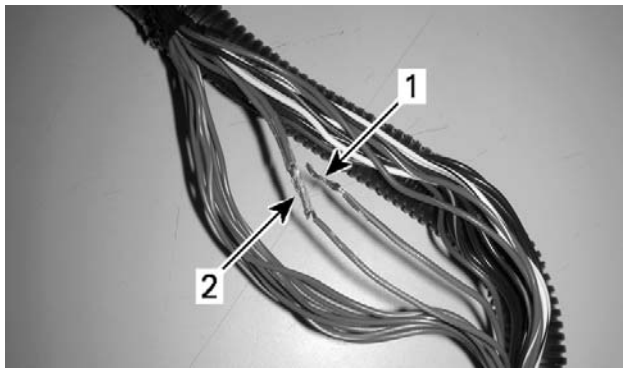

mbg2008-021-116_a

1. *Detached wire*
2. *Splice*

6. Twist detached wire around splice.

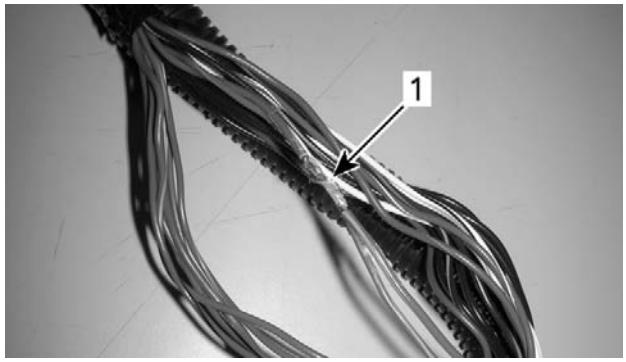

mbg2008-021-117_a

1. *Twisted wire*

7. Perform a tin solder on twisted wire.
8. Apply electrical tape to cover splice.

NOTE: Make sure tape overlaps on wire insulation, approximately 13 mm (1/2 in) each side.

9. Reinstall wires into protector tube.

CASE 2: Wire Broken from Splice

NOTICE Repairs described in this section should never be performed on harness sections that can be exposed to water.

1. Locate splice. Refer to splices location diagrams.
2. Remove wires from protector tube.
3. Locate the shrink tube protecting the defective splice.

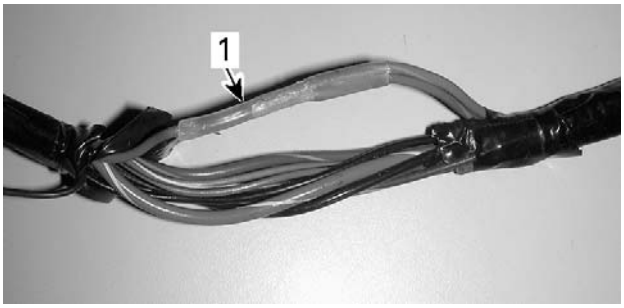

mmr2010-043-001_a

1. *Shrink tube*

4. Remove the shrink tube.

4.1 Using a blade, cut the shrink tube.

mmr2010-043-002

NOTICE Be careful with the blade to avoid cutting wires insulation.

4.2 Slightly heat the shrink tube using a heat gun.

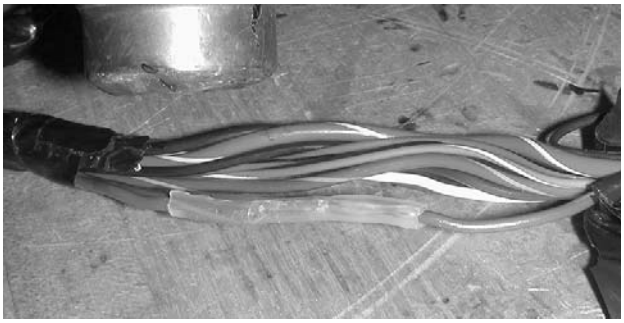
mmr2010-043-003

4.3 Remove the shrink tube with long nose pliers.

5. Locate broken wire from splice.

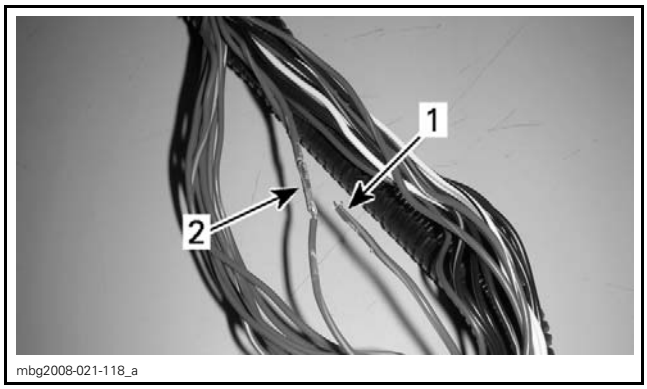

1. Broken wire
2. Splice

6. Strip wire insulation at the end of broken wire.
7. Strip wire insulation below the splice.

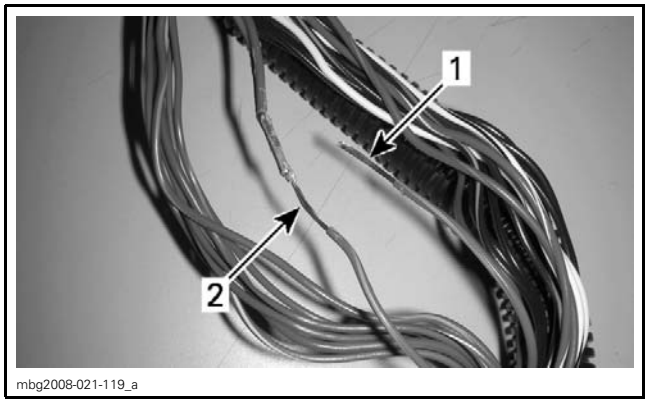

1. Broken wire stripped
2. Splice wire stripped

8. Twist wire around stripped wire.

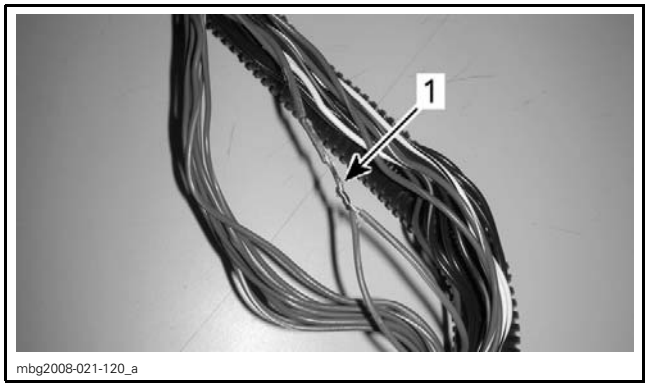

1. Twisted wire

9. Perform a tin solder on twisted wire.
10. Apply electrical tape to cover splice.

NOTE: Make sure tape overlaps on wire insulation, approximately 13 mm (1/2 in) each side.

11. Reinstall wires into protector tube.

NOTE: Always perform a solder on a bigger wire (lower gage).

IGNITION SYSTEM

SERVICE TOOLS

Description	Part Number	Page
ECM ADAPTER TOOL	529 036 166	2, 4
FLUKE 115 MULTIMETER	529 035 868	3–4

GENERAL

SYSTEM DESCRIPTION

The battery supplies the primary side of ignition coils through the main relay (R2) while the ECM completes the circuit for each cylinder by switching it to ground at the right moment. The ECM can detect an open and short circuit in the primary winding but it does not check the secondary winding.

The Engine Management System (EMS) controls the ignition system. For more information, refer to *ENGINE MANAGEMENT* subsection.

Ignition Timing

Ignition timing is not adjustable.

TROUBLESHOOTING

It is good practice to check for fault codes using the BRP diagnostic software (BUDS2) as a first troubleshooting step. Refer to *DIAGNOSTIC AND FAULT CODES* subsection.

Always refer to the *WIRING DIAGRAM* when troubleshooting an electrical circuit.

Refer to *POWER DISTRIBUTION AND GROUNDS* for fuse and relay information.

Refer to *WIRING HARNESS AND CONNECTORS* for vehicle wiring harness layout and component locations.

Refer to *ENGINE MANAGEMENT SYSTEM (EMS)* for powertrain wiring harness layout and component locations.

DIAGNOSTIC GUIDELINES

The following is provided to help in diagnosing the probable cause of a problem. It is a guideline and should not be assumed to list all possible causes.

ENGINE WILL NOT START (ENGINE TURNS OVER)

1. Fouled or defective spark plug
   - *Replace.*
2. Defective CPS
   - *Check operation of CPS and replace if necessary. Refer to ELECTRONIC FUEL INJECTION (EFI) subsection.*
3. Defective trigger wheel
   - *Inspect trigger wheel. Refer to MAGNETO AND STARTER subsection.*
4. Defective ignition circuit
   - *Check fuse 5 of fuse box 1, ignition coil and wiring condition.*
5. Defective fuel pump
   - *Check fuel pump, refer to FUEL TANK AND FUEL PUMP subsection.*
6. Defective fuel injectors or circuit
   - *Check fuel injectors, refer to ENGINE MANAGEMENT SYSTEM subsection.*

ENGINE HARD TO START

1. Spark plug faulty, fouled or worn out
   - *Check spark plug condition. Replace if necessary.*
2. Low fuel pressure
   - *Test fuel pressure, refer to FUEL TANK AND FUEL PUMP subsection.*

ENGINE MISFIRES, RUNS IRREGULARLY

1. Fouled, defective, worn spark plugs
   - *Check/verify heat range/gap/replace.*
2. Damaged trigger wheel/loose CPS
   - *Inspect trigger wheel. Refer to MAGNETO AND STARTER subsection.*
3. Defective ignition circuit
   - *Check ignition coil, fuse 5, and wiring condition.*
4. Poor engine grounds
   - *Check/clean/repair.*

ENGINE CONTINUALLY BACKFIRES

1. Fouled, defective spark plugs
   - *Clean/replace spark plugs.*

2. Damaged trigger wheel/defective or loose CPS
   - *Inspect trigger wheel and CPS, refer to MAGNETO AND STARTER and ELECTRONIC FUEL INJECTION (EFI) subsections.*

PROCEDURES

IGNITION SWITCH

Ignition Switch Quick Test

Turn ignition switch to ON position.

If multifunction gauge turns on (assuming it works), the ignition switch is good.

If multifunction gauge does not turn on, check the following in this order:

– Battery
– Fuse link 1
– Fuse 4, 5 and 8 of fuse box 1
– ECM is properly powered (refer to *ELECTRONIC FUEL INJECTION (EFI)* subsection)
– Ignition switch
– Emergency engine stop switch.

Ignition Switch Access

Refer to *BODY* subsection and remove the LH side panel.

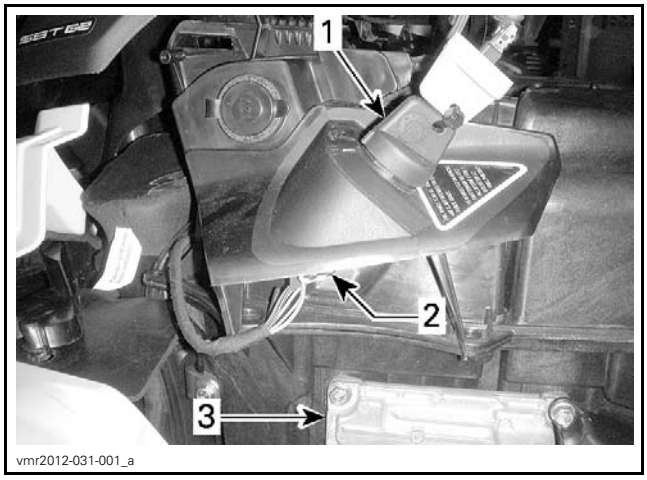

TYPICAL
1. *Ignition key*
2. *Ignition switch connector*
3. *ECM*

EMERGENCY ENGINE STOP SWITCH

Testing the Emergency Engine Stop Switch at ECM

1. Disconnect ECM connector and install it on the ECM adapter tool.

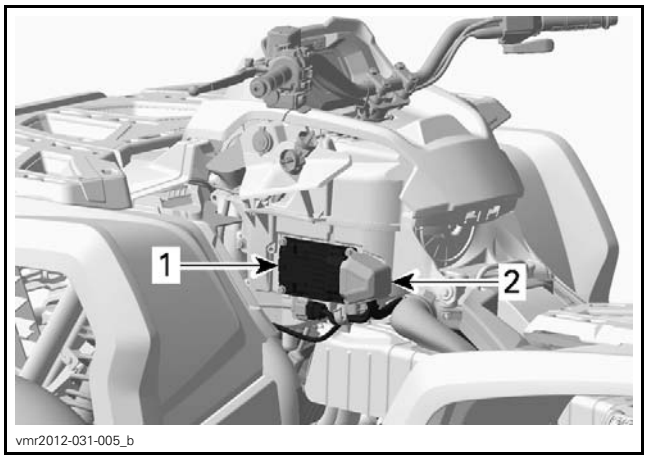

TYPICAL
1. *ECM*
2. *ECM connector cover*

REQUIRED TOOL	
ECM ADAPTER TOOL (P/N 529 036 166)	

2. Remove ignition key switch fuse (F8), refer to *POWER DISTRIBUTION AND GROUNDS* subsection.
3. Turn ignition key to ON position.
4. Test for continuity as per following table.

EMERGENCY ENGINE STOP SWITCH TEST AT ECM			
FUNCTION	FUSE BOX CONTACT	ECM ADAPTER	RESULT
RUN position	5E	A4	Close to 0 Ω
	—	G2 to K3	Open circuit
STOP position	5E	A4	
	—	G2 to K3	Close to 0 Ω

If switch fails the test, refer to *TESTING THE EMERGENCY ENGINE STOP SWITCH AT MULTIFUNCTION SWITCH CONNECTORS*.

Testing the Emergency Engine Stop Switch at Multifunction Switch Connectors

Refer to *WIRING HARNESS AND CONNECTORS* subsection for connector locations.

The emergency engine stop switch is wired into the LH multifunction switch connectors (MG1 and MG2).

1. Remove gauge support, refer to *GAUGE* subsection.
2. Disconnect MG1 and MG2 connectors.
3. Test switch continuity as per following table.

EMERGENCY ENGINE STOP SWITCH PIN-OUT		
FUNCTION	PROBE	RESULT
RUN position	MG1-3 to MG2-3	Open circuit
	MG1-1 to MG1-2	Close to 0 Ω
STOP position	MG1-3 to MG2-3	
	MG1-1 to MG1-2	Open circuit

If switch tests good, test continuity of wiring. Refer to *WIRING DIAGRAM*.

IGNITION COIL

vmr2006-018-100

Ignition Coil Access

Refer to *BODY* subsection and remove RH inner fender panel(s) for access to the ignition coil.

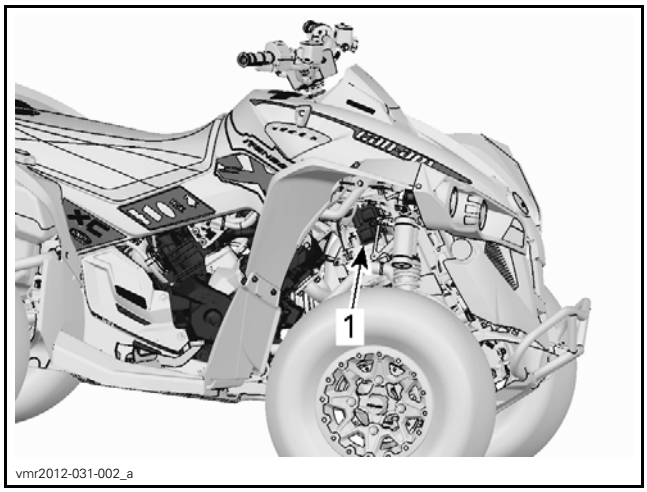

vmr2012-031-002_a

TYPICAL
1. Ignition coil location

Installing the Ignition Coil

Install a new elastic nut and tighten to the specified torque.

TIGHTENING TORQUE	
Ignition coil retaining bolt	8 N•m ± 1 N•m (71 lbf•**in** ± 9 lbf•**in**)

Testing the Ignition Coil Input Voltage

1. Disconnect the 3-pin connector from the ignition coil. Refer to *IGNITION COIL ACCESS*.

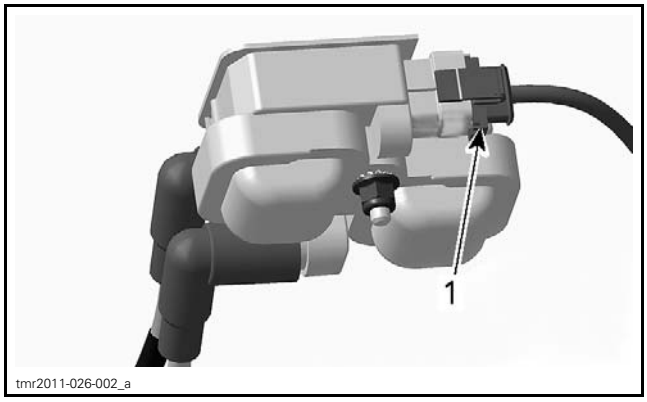

tmr2011-026-002_a

1. Ignition coil connector

2. Set emergency engine stop switch to RUN.
3. Turn ignition switch to ON.
4. Read voltage as per following table.

REQUIRED TOOL	
FLUKE 115 MULTIMETER (P/N 529 035 868)	

IGNITION COIL INPUT VOLTAGE TEST	
CONNECTORS	VOLTAGE
Pin 2 with battery ground	Battery voltage

If battery voltage is NOT read, check continuity of ignition coil supply circuit. Refer to *WIRING DIAGRAM*.

Testing the Ignition Coil Ground Circuit Continuity

1. Disconnect the ECM connector and connect it to the ECM adapter tool. Refer to *ELECTRONIC FUEL INJECTION (EFI)* subsection.

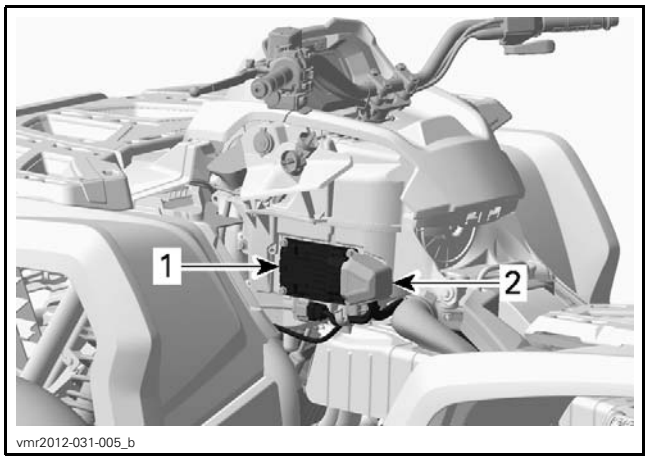

TYPICAL
1. ECM
2. ECM connector cover

REQUIRED TOOLS	
ECM ADAPTER TOOL (P/N 529 036 166)	
FLUKE 115 MULTIMETER (P/N 529 035 868)	

2. Check wiring continuity as per following table.

IGNITION COIL GROUND CIRCUIT CONTINUITY TEST		
COMPONENT	PIN (IGNITION COIL CONNECTOR)	PIN (ECM CONNECTOR)
Cylinder 1 (front)	1	M1
Cylinder 2 (rear)	3	M2

Testing the Ignition Coil Resistance

An ignition coil with good resistance measurement can still be faulty. Voltage leakage can occur at high voltage levels which is not detectable with an ohmmeter. Replacing the ignition coil may be necessary as a test.

Primary Windings

1. Disconnect HIC2 connector.

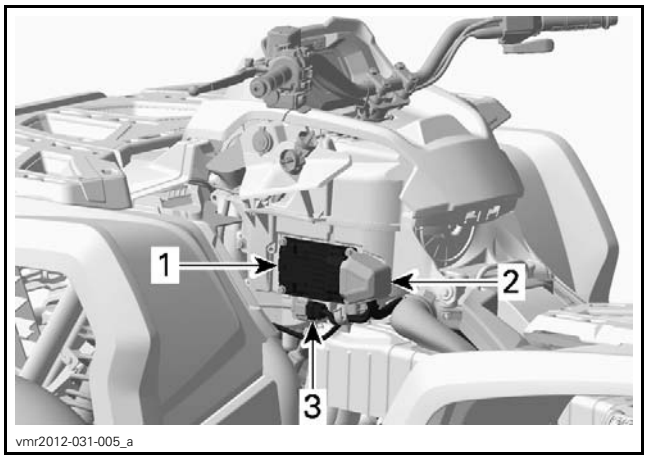

TYPICAL
1. ECM
2. ECM connector cover
3. HIC2 connector

2. Disconnect ECM connector and connect it to the ECM adapter tool.

REQUIRED TOOL	
ECM ADAPTER TOOL (P/N 529 036 166)	

3. Using a multimeter set to Ω, check resistance in primary windings as follows.

IGNITION COIL RESISTANCE TEST			
PRIMARY CIRCUIT	ENGINE CONNECTOR (HIC2)	ECM CONNECTOR	RESISTANCE @ 20°C (68°F)
Cylinder 1 (front)	Pin C	M1	.3 - .6 Ω
Cylinder 2 (rear)		M2	

If any resistance is not good, measure resistance directly on coil. If second test is ok, check wiring.

Secondary Windings

Due to the integrated diode, it is not possible to take any resistance measurement of the secondary winding.

SPARK PLUG

For spark plug replacement procedure, refer to *PERIODIC MAINTENANCE PROCEDURES* subsection.

Troubleshooting Fouled Spark Plug

Fouling of the spark plug is indicated by irregular running of the engine, decreased engine speed due to misfiring, reduced performance, and increased fuel consumption. This is due to a loss of compression. Other possible causes are: prolonged idling or low-speed riding, a clogged air filter, incorrect fuel, defective ignition system, incorrect spark plug gap, lubricating oil entering the combustion chamber, or too cold spark plug. The plug face of a fouled spark plug has either a wet black deposit or a black carbon fouling. Such coatings form a conductive connection between the center electrode and ground.

Spark Plug Analysis

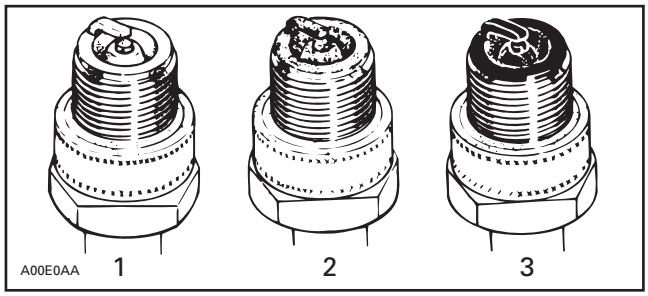

TYPICAL
1. *Overheated (light grey, white)*
2. *Normal (light brown, brown)*
3. *Fouled (black, wet or dry, dark deposits, grey, melted coating)*

The plug face reveals the condition of the engine, operating condition, method of driving and fuel mixture. For this reason it is advisable to inspect the spark plug at regular intervals, examining the plug face (i.e. the part of the plug projecting into the combustion chamber).

CHARGING SYSTEM

GENERAL

SYSTEM DESCRIPTION

The purpose of the charging system is to keep the battery at a full state of charge.

NOTE: For an overview of the vehicle electrical system, refer to *ENGINE MANAGEMENT SYSTEM* section.

Magneto

The magneto is the primary source of electrical energy. It transforms a magnetic field into electric current (AC).

The alternating current is regulated and transformed into direct current (DC) by the voltage regulator, and normally powers all of the vehicle's systems and accessories.

The magneto has a 3 phase delta wound stator.

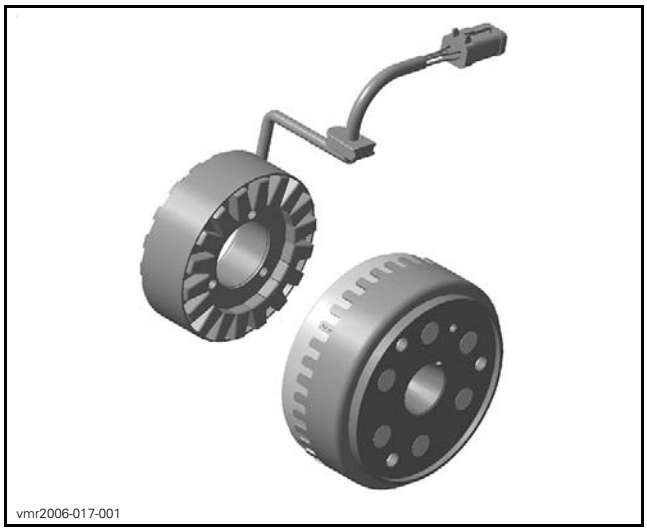

vmr2006-017-001

TYPICAL

Voltage Regulator

The regulator receives AC current from the magneto and transforms it into direct current (DC).

The voltage regulator output voltage is distributed as follows:

– Fuse links
– Battery.

The voltage regulator limits voltage to prevent any damage to electrical components.

COMPONENT	VOLTAGE Vdc
Voltage Regulator	Minimum 12.5
	Maximum 15

vmr2006-017-002

TYPICAL

Battery

The battery supplies DC power to every electrical and electronic system in the vehicle as well as all accessories. At low engine RPM operation and high current load conditions, it supplements the magneto's output as required, and helps to maintain a steady system voltage.

INSPECTION

CHARGING SYSTEM OUTPUT

First ensure that battery is in good condition prior to performing the following tests.

Testing the Output Voltage.

1. Connect the vehicle to the BRP diagnostic software (BUDS2).

In BUDS2, go to:

– **Measurements** page
– **ECM** button
– **Battery voltage** (V)

2. Start engine.
3. Increase engine RPM as specified in the following table.

OUTPUT VOLTAGE TEST USING BUDS2	
ENGINE SPEED	VOLTAGE (DC)
4000 RPM	14.8 ± .4 Vdc

If voltage is above specification, replace voltage regulator/rectifier.

If voltage is below specification, check stator output and wiring harness prior to concluding that voltage regulator/rectifier is defective. Refer to *MAGNETO SYSTEM* subsection.

TROUBLESHOOTING

It is good practice to check for fault codes using the BRP diagnostic software (BUDS2) as a first troubleshooting step. Refer to *DIAGNOSTIC AND FAULT CODES* subsection.

BATTERY REGULARLY DISCHARGED OR WEAK

1. **Loose or corroded battery cable connections.**
   - *Tighten or repair battery cable connections.*
2. **Worn or defective battery.**
   - *Charge and test battery.*
3. **Defective magneto stator.**
   - *Test stator, refer to MAGNETO AND STARTER SYSTEM subsection.*
4. **Defective regulator/rectifier.**
   - *Test system voltage.*
5. **Damaged magneto rotor or Woodruff key.**
   - *Replace magneto rotor or Woodruff key, refer to MAGNETO AND STARTER SYSTEM subsection.*

PROCEDURES

Ensure battery is fully charged.

Refer to *WIRING HARNESS AND CONNECTORS* subsection for harness layout and connector locations on vehicle.

Refer to appropriate *WIRING DIAGRAM* for additional information.

The magneto is covered in *MAGNETO AND STARTER* subsection.

⚠ WARNING

Ensure vehicle is in PARK when performing charging system tests.

LOAD TESTING THE BATTERY

1. Remove seat.
2. Connect a battery load tester.
3. Ensure proper test conditions.

TEST CONDITIONS	
Initial battery voltage‡	Above 12.5 Vdc
Engine	OFF
Load	3 times the amp-hour (AH) rating
Time	15 seconds
‡ Required for accurate testing	

SPECIFICATION	
Battery	Above 9.6 Vdc

If battery voltage drops below specification during test, replace battery and perform a *CHARGING SYSTEM LOAD TEST*.

LOAD TESTING THE CHARGING SYSTEM

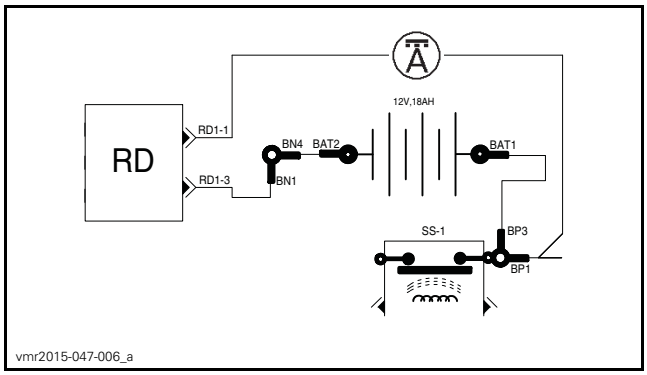

1. Remove seat.
2. Connect a battery load tester.
3. Start vehicle and read voltage on tester.

SPECIFICATION	
Voltage	12.5 - 15 Vdc

If voltage is **above** specification, replace regulator and continue *LOAD TESTING THE CHARGING SYSTEM*.

4. Connect an ammeter around RD1-1 wire.

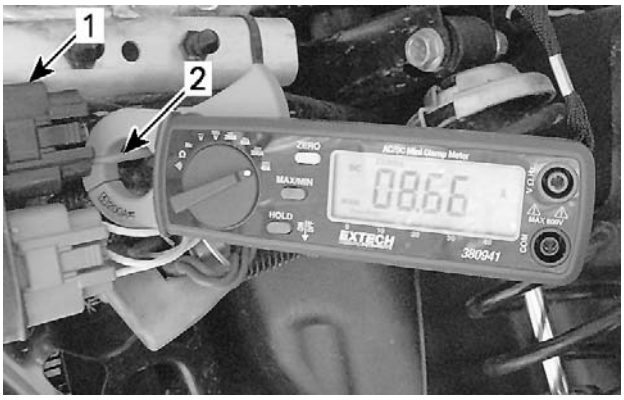

vmr2008-138-001_a

DC CURRENT TEST WITH INDUCTIVE AMMETER
1. Output connector of voltage regulator
2. Ammeter clamped over RED wire

5. Ensure proper test conditions.

TEST CONDITIONS	
Battery voltage at idle‡	Above 12.6 Vdc
Engine	Increase to 4000 RPM
Load	As required to decrease battery voltage to 12 Vdc
Time	15 seconds
‡ Required for accurate testing	

6. Read amperage on ammeter.

MODEL	SPECIFICATION
Base/DPS	41 ± 5 Amps
All other models	50 ± 5 Amps

NOTE: With a fully charged battery and no electrical loads, specification is less than 10A.

If amperage or voltage is not within specification, verify magneto and wires. Refer to *MAGNETO AND STARTER* subsection. Replace:

– Voltage regulator if magneto test is within specifications.
– Magneto if magneto test is not within specifications.

VOLTAGE REGULATOR (RD)

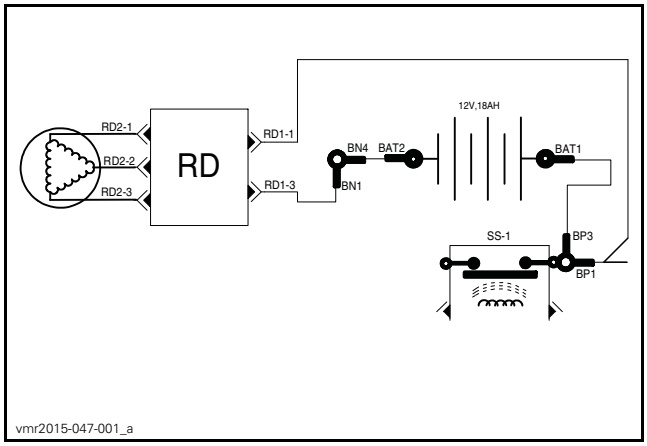

vmr2015-047-001_a

Testing Voltage Regulator Continuity

Due to internal circuitry, there is no static test available.

Testing Voltage Regulator Power

The voltage regulator/rectifier is accessible on the RH rear side of the vehicle.

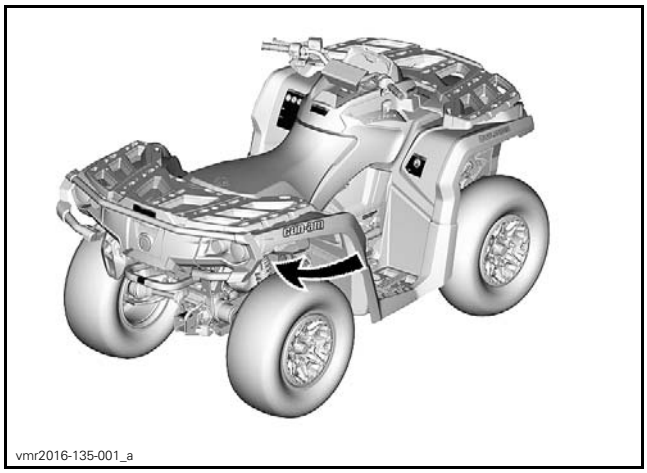

vmr2016-135-001_a

1. Check voltage at RD1-1.

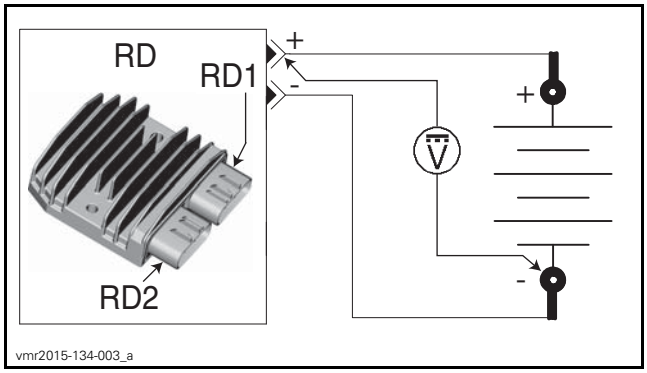

vmr2015-134-003_a

TEST CONDITIONS	
RD1-1	Hot at all times

BACKPROBE	PROBE	SPECIFICATION
RD1-1	BAT2 (-)	Battery voltage

2. Connect a battery load tester.
3. Start vehicle.
4. Ensure proper test conditions.

TEST CONDITIONS	
Battery voltage at idle‡	Above 12.6 Vdc
Engine	Increase to 4000 RPM
Load	As required to decrease battery voltage to 12 Vdc
Time	15 seconds
‡ Required for accurate testing	

5. Measure voltage drop.

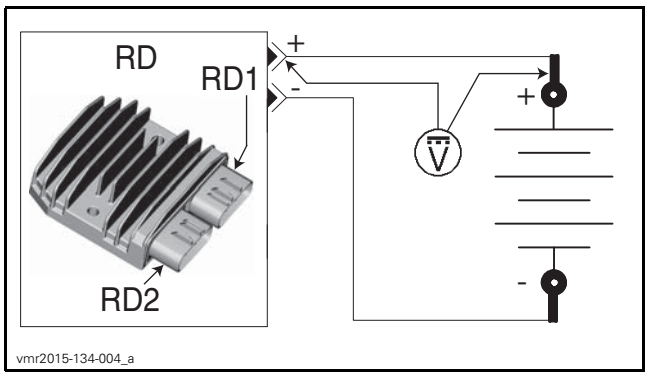

BACKPROBE	PROBE	SPECIFICATION
RD1-1	BAT1 (+)	Under 0.2 Vdc

If voltage drop is above specification, locate and repair damaged connector/wire.

Testing Voltage Regulator Ground

1. Check ground at RD1-3.

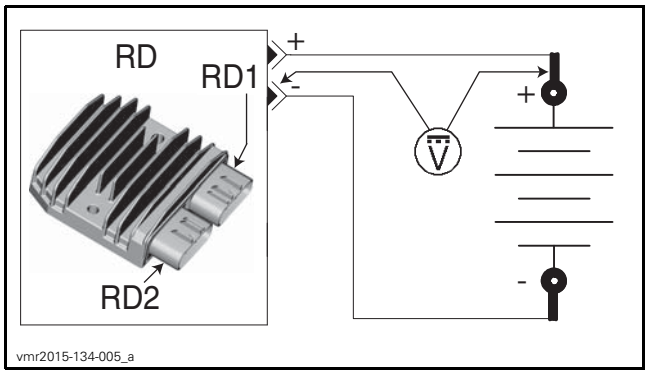

TEST CONDITIONS	
RD1-3	Permanent ground

BACKPROBE	PROBE	SPECIFICATION
RD1-3	BAT1 (+)	Battery voltage

2. Connect a battery load tester.
3. Start vehicle.
4. Ensure proper test conditions.

TEST CONDITIONS	
Battery voltage at idle‡	Above 12.6 Vdc
Engine	Increase to 4000 RPM
Load	As required to decrease battery voltage to 12 Vdc
Time	15 seconds
‡ Required for accurate testing	

5. Measure voltage drop.

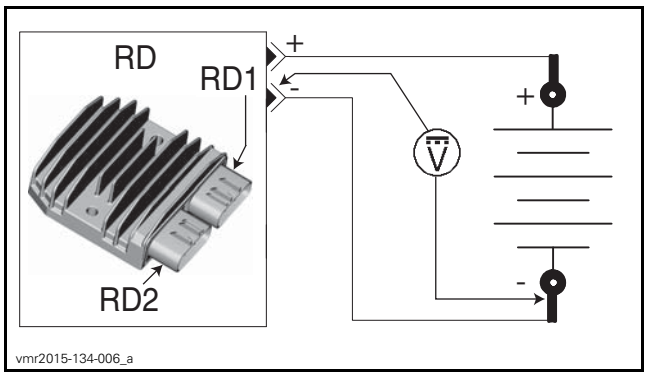

BACKPROBE	PROBE	SPECIFICATION
RD1-3	BAT2 (-)	Under 0.4 Vdc

If voltage drop is above specification, locate and repair damaged connector/wire.

BATTERY

Battery Information

These vehicles are equipped with a VRLA battery (Valve Regulated Lead Acid). It is a maintenance-free type battery.

Refer to battery manufacturer's instructions for proper filling, activation and routine charging procedures.

Removing the Battery

1. Remove seat.

2. Disconnect BLACK (-) cable first, then the RED (+) cable.

NOTICE **Always respect this order for removal; disconnect BLACK (-) cable first.**

3. Remove battery retaining plate.

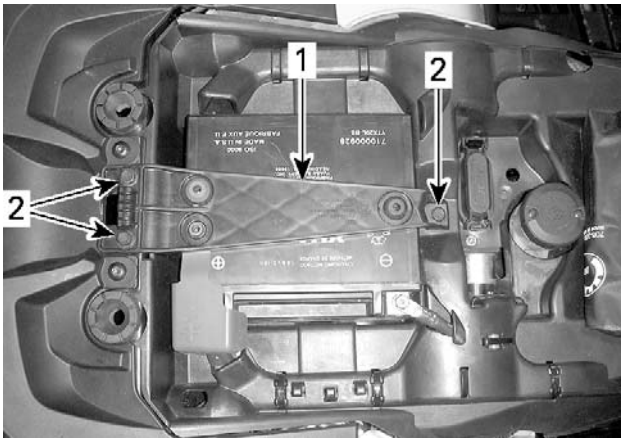

vmr2012-032-002_a

TYPICAL
1. Battery retaining plate
2. Retaining plate screws (3)

4. Remove battery.

Installing the Battery

NOTICE **Always connect RED (+) cable first then BLACK (-) cable.**

Installation is the reverse of removal procedure, however pay attention to the following.

TIGHTENING TORQUE	
Battery retaining plate screws	4.5 N•m ± 0.5 N•m (40 lbf•**in** ± 4 lbf•**in**)

STARTING SYSTEM

SERVICE TOOLS

Description	Part Number	Page
ECM ADAPTER TOOL	529 036 166	1
FLUKE 115 MULTIMETER	529 035 868	1

GENERAL

The following tools are required to test most of the electrical parts.

REQUIRED TOOL	
FLUKE 115 MULTIMETER (P/N 529 035 868)	
ECM ADAPTER TOOL (P/N 529 036 166)	

STARTING SYSTEM OPERATION

When the START button is pressed, 12 Vdc is applied through the key switch (KEY) and the start button (MG2) to the starter solenoid coil and ECM.The ECM completes the starter solenoid control circuit by providing a ground. The starter solenoid then closes its contacts and battery power is applied to the starter for cranking the engine.

Engine Cranking Conditions

The following conditions must be met to allow engine cranking.

– Ignition switch turned ON
– Engine stop switch to RUN
– Transmission in Park, Neutral or a brake pedal/lever is applied
– Start button is pressed and held.

TROUBLESHOOTING

Check for fault codes. Refer to: *DIAGNOSTIC AND FAULT CODES* subsection.

ENGINE WILL NOT TURN

If the starter cranks over the engine with the brakes applied, check the following:

1. Shifter rod adjustment, (refer to appropriate *SHIFTER* subsection).
2. Gearbox position indicator switches or the gearbox position sensor (GBPS), (refer to appropriate *GEARBOX AND COUPLING UNIT* subsection).
3. Switches or sensor wires and connectors, (refer to appropriate *WIRING DIAGRAM*).

If the "Engine cranking conditions" are met and the starter will not crank the engine, check the following:

1. Battery and connections (refer to *CHARGING SYSTEM*).
2. Starter solenoid.
3. Start button switch.
4. Starter (refer to *MAGNETO AND STARTER* subsection).
5. Wiring and connections.

ENGINE TURNS

Starting system is OK.

1. Verify ignition system. Refer to *IGNITION SYSTEM* subsection.
2. Verify EFI systems. Refer to *ELECTRONIC FUEL INJECTION (EFI)* subsection.
3. Verify mechanical condition of engine. Refer to *ENGINE, CVT AND GEARBOX* section.

PROCEDURES

Ensure battery is fully charged.

Refer to applicable *WIRING HARNESS AND CONNECTORS* for harness layout and connector locations on vehicle.

Refer to applicable *WIRING DIAGRAM* for additional information.

⚠ WARNING

Ensure vehicle is in PARK when performing starting system tests.

STARTING SYSTEM TESTS

Starter Solenoid

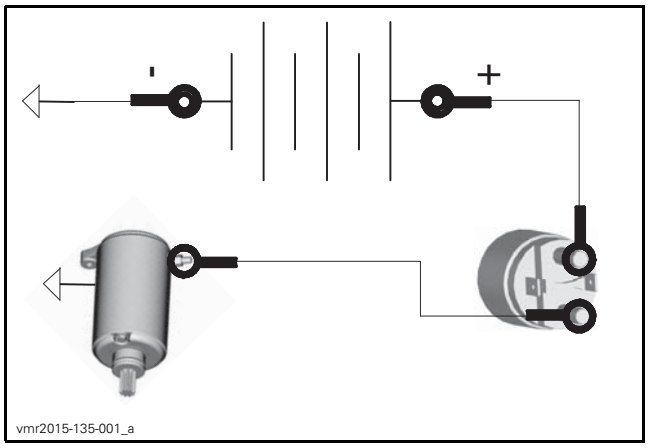

1. Disconnect SS+ and SS-

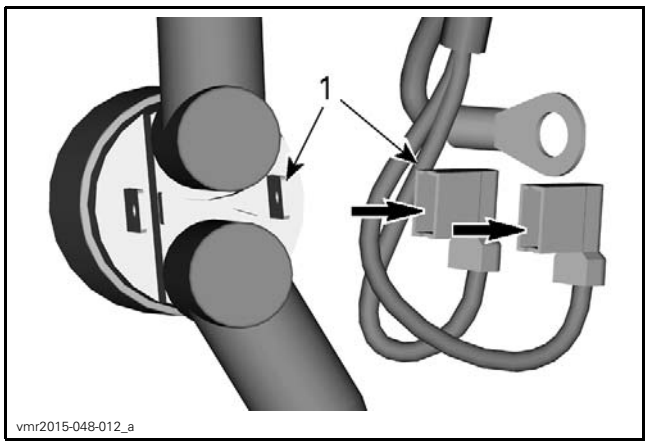

1. SS+

2. Activate the starter solenoid.
   2.1 Apply 12Vdc to SS+
   2.2 Ground SS-

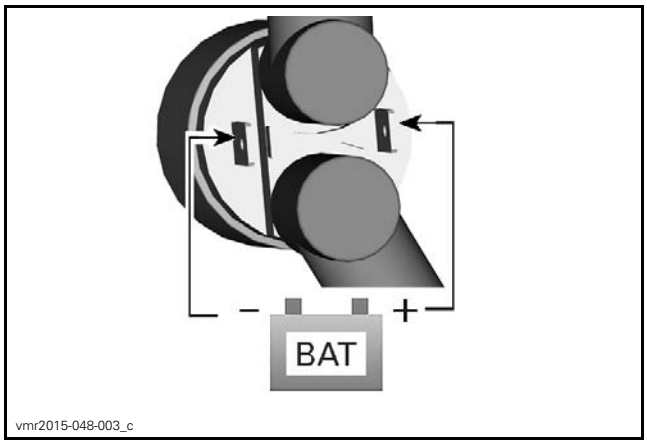

SS+ IS ON THE RIGHT

3. If starter turns, verify *STARTER SOLENOID CONTROL CIRCUIT*.
4. If starter does not turn, verify *STARTER SOLENOID CONTINUITY*.

Starter Solenoid Control Circuit

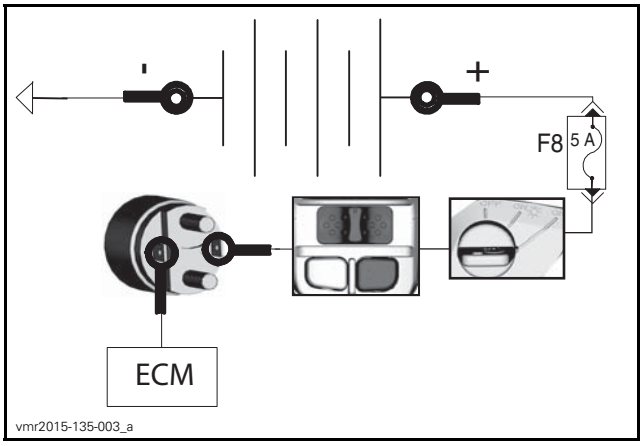

TEST CONDITION	
Engine stop switch	RUN
Ignition switch	ON
Start button	Pressed

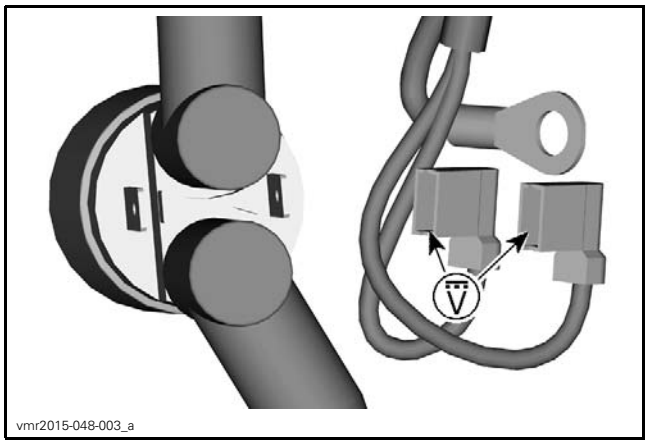

SS+ IS ON THE RIGHT

PROBE	PROBE	SPECIFICATION
SS+	SS-	Battery voltage
SS+	BAT -	Battery voltage
BAT +	SS-	Battery voltage

If voltage is as per specification replace starter solenoid.

If voltage is not as per specification, verify *STARTER SOLENOID CONTROL POWER CIRCUIT* or *STARTER SOLENOID CONTROL GROUND CIRCUIT* as applicable.

Starter Solenoid Control Power Circuit

NOTE: This procedure also tests the start button.

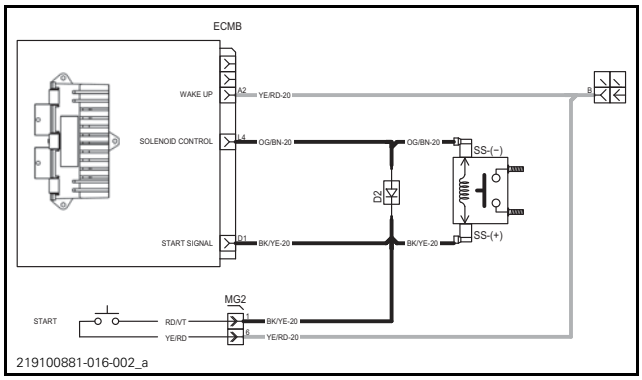

1. Disconnect MG2 connector.

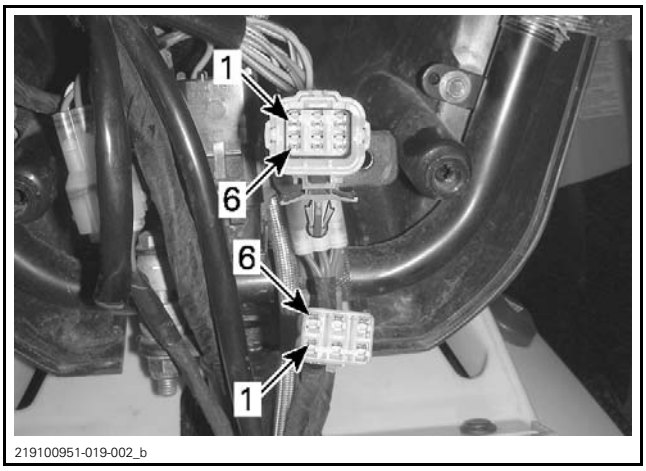

TYPICAL - MG2 STEERING HARNESS CONNECTOR PIN-OUT

TEST CONDITION	
Engine stop switch	RUN
Ignition switch	ON

PROBE	PROBE	SPECIFICATION
MG2-1	BAT -	Battery voltage.

2. If voltage is not as per specification:
   1. Check fuse(s).
   2. Test engine stop switch. Refer to *IGNITION SYSTEM* subsection.
   3. Test ignition switch Refer to *IGNITION SYSTEM* subsection.
3. Test start button.

TEST CONDITION	
Start button	Pressed

PROBE	PROBE	SPECIFICATION
MG2-1	MG2-6	Close to 0Ω

If start button does not test as specified, replace the multifunction switch assembly.

If start switch tests as specified, repair wire to starter solenoid SS+ terminal.

Starter Power Circuit Voltage Drop

NOTE: Engine must be in starting condition for this test. Do not perform on a «No Start» vehicle.

TEST CONDITION	
Fuse F10 / Fuse F3 (Europe and International Models)	Removed‡
Engine stop switch	RUN
Ignition switch	ON

TEST CONDITION	
Start button	Pressed
Engine	Cranking
‡ Will prevent engine from starting	

1. Measure voltage drop.

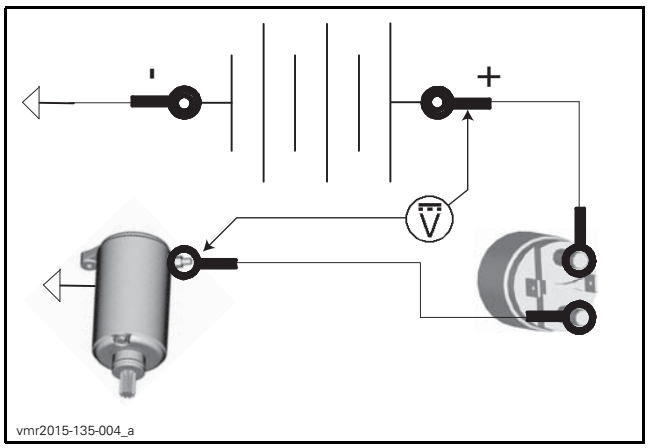

PROBE	PROBE	SPECIFICATION
BAT1	Starter B+ terminal	Below 0.4 Vdc

If voltage drop is above specification, repair or replace sources of high resistance in circuit.

Starter Solenoid Control Ground Circuit

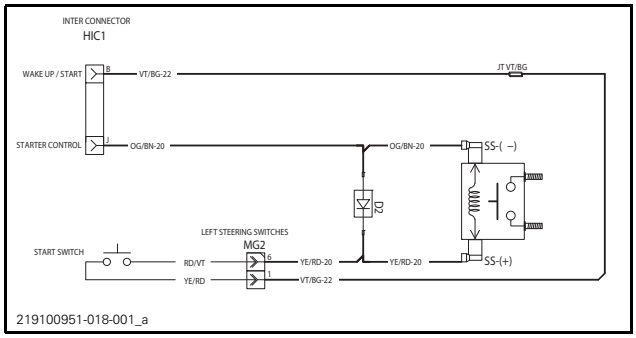

Europe and International Models

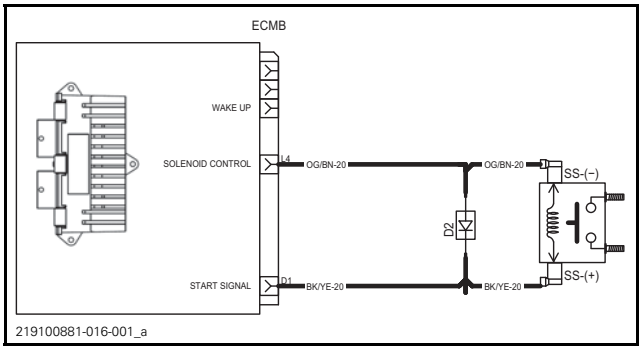

1. Disconnect SS-.
2. Install the ECM adapter onto the ECM connector.

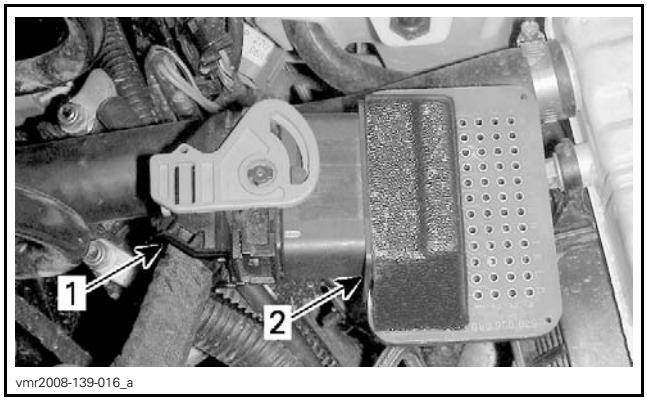

1. ECM connector
2. ECM adapter tool

PROBE	PROBE	SPECIFICATION
SS-	ECM-HIC1 / ECM-L4 (Europe and International Models)	Close to 0Ω

If resistance is not as specified, repair or replace wiring/connections.

If solenoid power control circuit and ground control circuit both test good, test ECM ground circuits. Refer to *ELECTRONIC FUEL INJECTION (EFI)* subsection.

NOTE: Supply a ground with a jumper wire if you suspect that the ECM is not supplying a ground to the solenoid.

Starter Solenoid Continuity

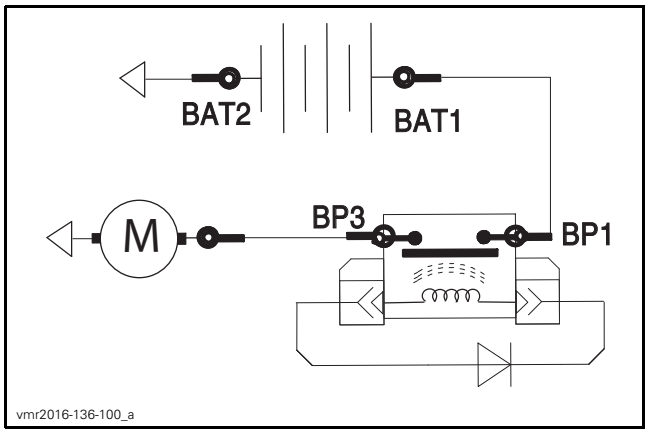

1. Disconnect the BLACK (-) negative battery cable.
2. Disconnect SS+ and SS-.

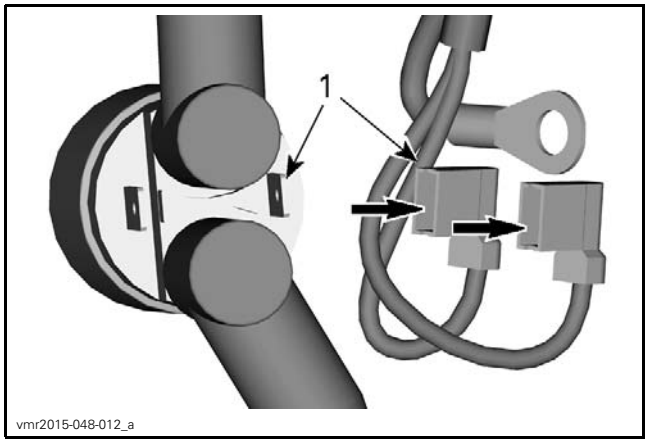

1. SS+

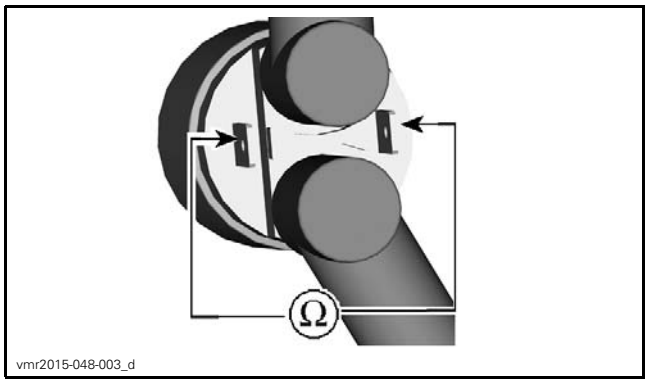

PROBE	PROBE	SPECIFICATION @ 20°C (68°F)
SS+	SS-	Close to 6Ω

If resistance is not as per specification, replace the solenoid.

3. Disconnect BP1.

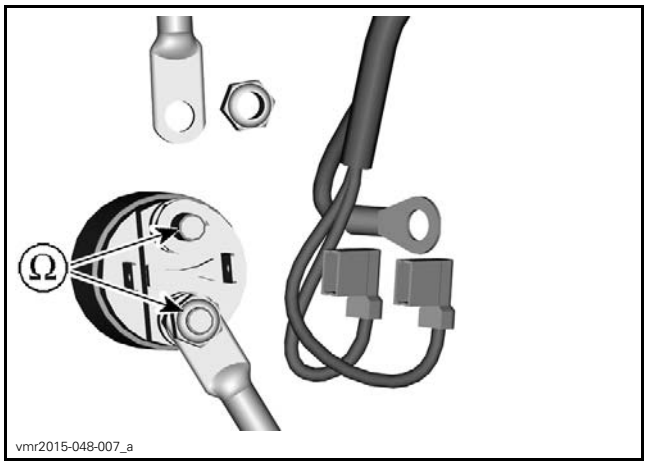

PROBE	PROBE	SPECIFICATION
BP1	Terminal to starter motor	O.L.

4. Jump starter solenoid.

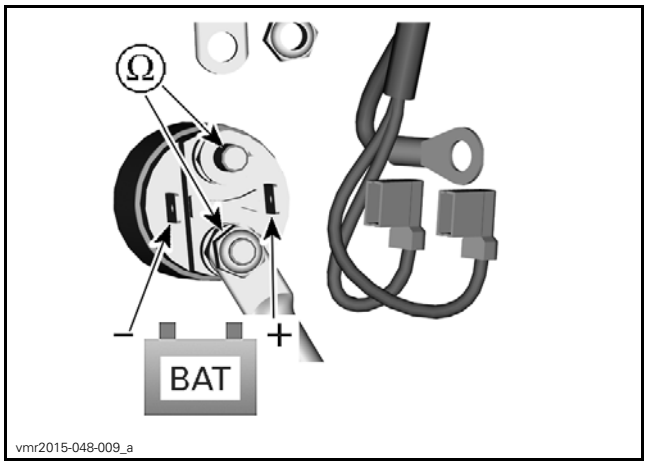

SS+ IS ON THE RIGHT

PROBE	PROBE	SPECIFICATION
BP1	Terminal to starter motor	Close to 0Ω

If resistance is not as per specification, replace the solenoid.

If starter power and ground circuits are good, refer to *MAGNETO AND STARTER* subsection for starter diagnosis and replacement.

Solenoid Diode Test

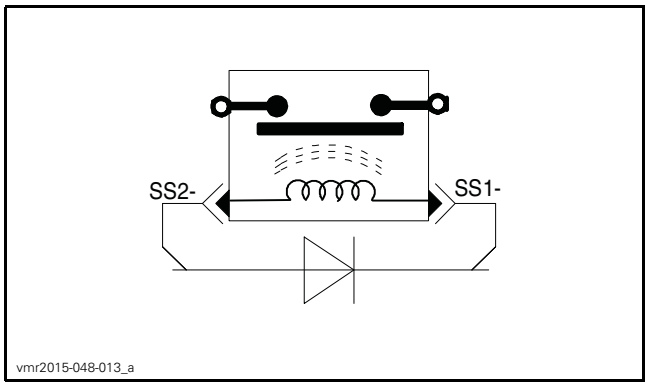

1. Disconnect SS+ and SS- from starter solenoid.

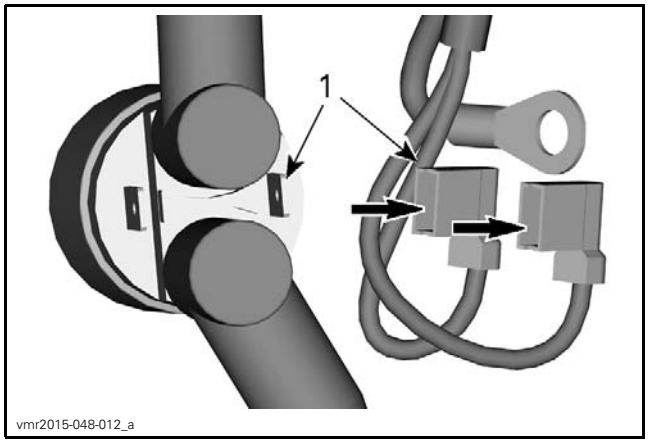

1. SS+

2. Set the multimeter to the diode symbol as shown.

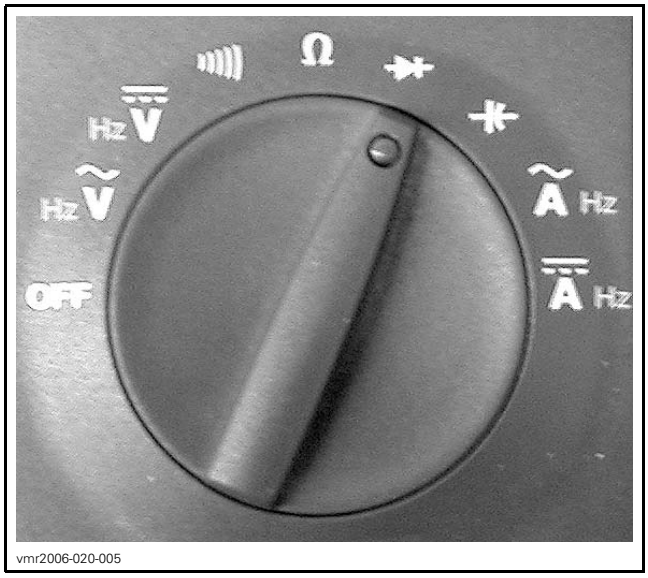

3. Probe wires while paying attention to the diode polarity.

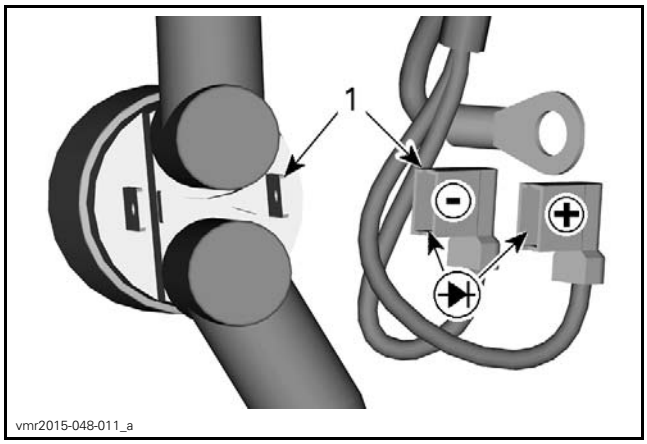

FORWARD POLARITY, MUST BE AROUND 0.5 V
1. SS-

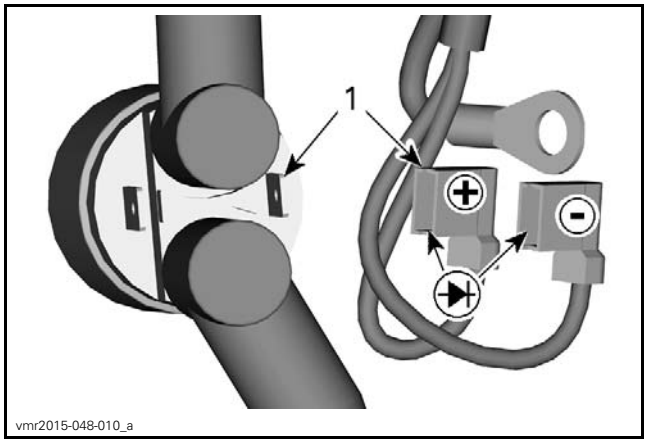

REVERSE POLARITY, MUST BE OPEN CIRCUIT
1. SS+

If test failed, replace diode. Refer to *WIRING HARNESS AND CONNECTORS* for diode location.

NOTE: The diode is integrated in the harness near the starter solenoid.

DIGITALLY ENCODED SECURITY SYSTEM (D.E.S.S.)

GENERAL

SYSTEM DESCRIPTION

The ignition key contains a ROM chip with a unique digital code that is the equivalent of a unique teeth pattern on a conventional key.

When the ignition key is turned ON, the ECM reads the ignition key and, if it is not recognized, no engine starting will be possible.

NOTE: When a key is not recognized by the ECM, INVALID KEY will be displayed in the multifunction speedometer.

NOTE: All ignition keys have the same teeth pattern. Therefore, they can be used and turned in the switch of any D.E.S.S.-equipped vehicle. However, unless the D.E.S.S. system recognizes (in the ECM) a valid programmed key, the engine starting will not be allowed.

NOTE: Actually, it is the memory of the ECM that is programmed to recognize the digital code of the ignition key.

Up to 10 ignition keys may be programmed in the memory of the ECM. They can also be erased individually or all at once.

Note that the D.E.S.S. circuitry is already activated on all new ECM.

TROUBLESHOOTING

DIAGNOSTIC TIPS

NOTE: It is a good practice to check for fault codes using the BRP diagnostic software (BUDS2) as a first troubleshooting step.

If D.E.S.S. key is not recognized by the ECM, key is defective or there is a wiring problem, CHECK ENGINE light will turn on and a message will be displayed in the multifunction speedometer.

PROCEDURES

ADDING A KEY

1. Connect the vehicle to the BRP diagnostic software (BUDS2). Refer to *COMMUNICATION TOOLS* subsection.
2. Turn ignition switch to ON using any of the key provided with the vehicle. DO NOT start the engine.
3. Click on **Keys** page.
4. Turn ignition switch to OFF.
5. Remove the key.
6. Check the color of the key to be programmed.

KEY	KEY TYPE
BLACK key	Performance key
GRAY key	Normal key (30 km/h)
GRAY key	Normal key (40 km/h)

NOTE: A Black key can be programed as a normal key, however, it is recommended to have a different color key for different purpose. For example, having all black keys can be difficult to differentiate between a Performance key and a Normal 30 km/h key.

7. Insert the key to be programmed.
8. Turn ignition key to ON position.
9. Click on the appropriate **Add Key** button. The new key should be displayed in the table.
10. Repeat to program more keys if needed.

When new data is written in the ECM, a message that says “Remove key from vehicle” is displayed in the gauge. When this occurs, remove the key from ignition switch and wait until the message disappears.

11. Turn ignition key to ON position.
12. Erase occurred fault(s) in the fault tabs.
13. Turn ignition switch to OFF.

ERASING A KEY

1. Connect the vehicle to the BRP diagnostic software (BUDS2).
2. Turn ignition switch to ON using the key to be erased. DO NOT start the engine.
3. Click on **Keys** page.
4. Click on **Erase Key**.

After approximately 10 seconds the following message will appear.

The key is now erased.

ERASING ALL KEYS

1. Connect the vehicle to the BRP diagnostic software (BUDS2).
2. Turn ignition switch to ON using a key to be erased. DO NOT start the engine.
3. Click on **Keys** page.
4. Click on **Erase All Keys**.
5. When done, program at least one new key to the vehicle. Refer to *ADDING A KEY* in this subsection.

RADIO FREQUENCY DIGITALLY ENCODED SECURITY SYSTEM (RF D.E.S.S.)

GENERAL

SYSTEM DESCRIPTION

All Models (Except T Category Models)

This system limits engine or vehicle speed.

At startup the RF D.E.S.S. module attempts to read the key and sends a signal to the ECM. The ECM analyses the signal and determines if the key is:

– Performance
– Normal
– Work

SPEED/TORQUE LIMITED TO		
KEY	LIMIT	HOW
Performance	No D.E.S.S. imposed limit	Not applicable
Normal	Vehicle speed limited to 70 km/h (43 MPH)	By varying throttle opening (iTC)
Work	Vehicle speed limited to 40 km/h (25 MPH)	By varying throttle opening (iTC)
DESS key not recognized / Bad Key[1]	Engine will not start	ECM will not ground starter solenoid
[1] BUDS2 will display an error when trying to read key. Messages will scroll on gauge.		

T Category Models

T category models are equipped with a mechanical D.E.S.S. key.

Troubleshooting and procedures remains the same for RF D.E.S.S. or mechanical D.E.S.S. keys

NOTE: Additional information on learning key modes and how an operator can modify engine torque and vehicle speed is available in the *OPERATOR'S GUIDE*.

RF D.E.S.S. KEY

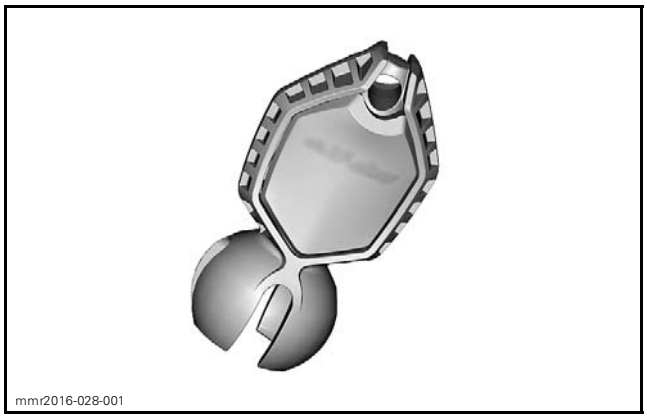

The RF D.E.S.S. key contains a magnet and a RFID chip.

– The magnet closes the hall effect switch inside the engine cut-off switch.
– The RFID chip contains a unique digital code. It is the equivalent of the tooth-pattern cut on a conventional ignition key.

RF D.E.S.S. keys are programmed in the ECM memory using BUDS2. The keys can also be erased individually.

NOTE: If desired, a RF D.E.S.S. key can be used on another vehicle equipped with the RF D.E.S.S. system. It only needs to be programmed for that vehicle.

RF D.E.S.S. MODULE / CUT-OFF SWITCH / D.E.S.S. POST

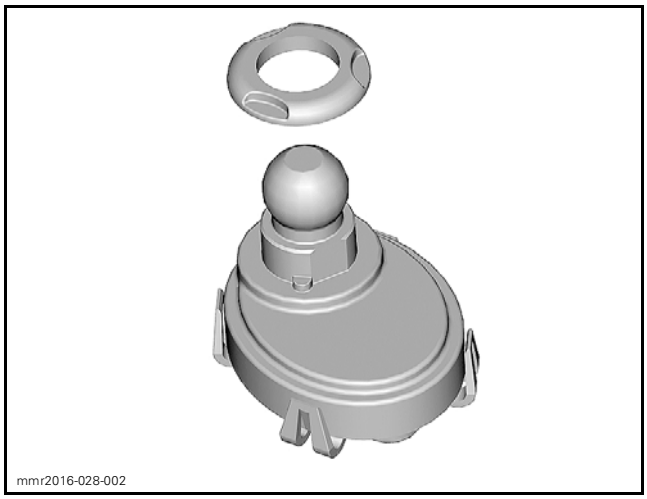
mmr2016-028-002

The hall effect switch (cut off switch) must be closed to start the engine.

The RF D.E.S.S. module emits an RF signal when the vehicle is powered up that activates the chip in the key, the module can then read the key.

The RF D.E.S.S. module does not determine the type of key, it only reads the chip for the ECM.

TROUBLESHOOTING

When starting the engine with a RF D.E.S.S. key on the engine cut-off switch, the key is identified by the ECM and RF D.E.S.S. signals will be issued according to the key recognition.

RF D.E.S.S. SIGNAL		DESCRIPTION	COMMENT
BEEPER	DISPLAYED MESSAGE		
2 shorts beeps	Can-Am	Welcome message, good key	Working RF D.E.S.S. key.
Short beeps repeating slowly	CHECK KEY	Unable to read key	– Make sure no accessory or accessory wires are near key or engine cut-off switch. – RPM limited to 2500. Vehicle cannot be driven – Check D.E.S.S. status in BUDS2 – No voltage at RFID connector pin D
Shorts beeps repeating rapidly	BAD KEY	Invalid key or key not programmed	– Use the proper key for this vehicle or have the key programmed. – RPM limited to 2500, Vehicle can not be driven.

PROCEDURES

RF D.E.S.S. KEY

Programming RF D.E.S.S. Keys

1. Connect the vehicle to BRP diagnostic software (BUDS2). Refer to *COMMUNICATION TOOLS* subsection.

IMPORTANT: Ensure all connections have been made **before starting BUDS2** to allow proper operation.

2. Install the new key to be programmed on the engine cut-off switch.

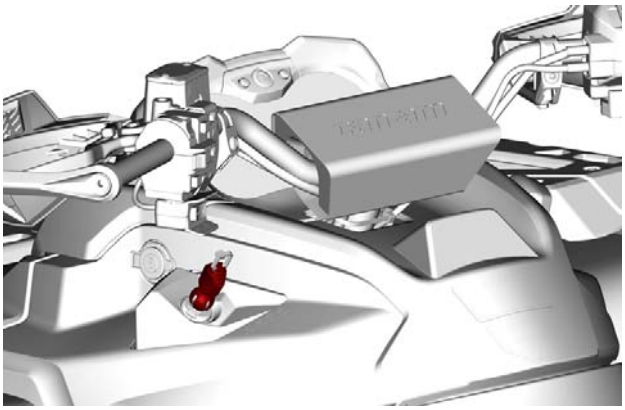
219100951-019-001_a

3. In BUDS2, go to:
   - **Keys** page
   - In **Current Inserted Key**, **Read** the key to be programmed.
   - Select the **Key Type**
   - Then click on the **Add** button

NOTE: Ensure that anti theft system is activated. If not, activate it before trying to add a key.

The D.E.S.S. key is now saved in the computer.

NOTE: To program other key(s), install a new key on the engine cut-off switch and repeat the procedure.

Erasing Keys

1. Install the key to be erased on the engine cut-off switch.

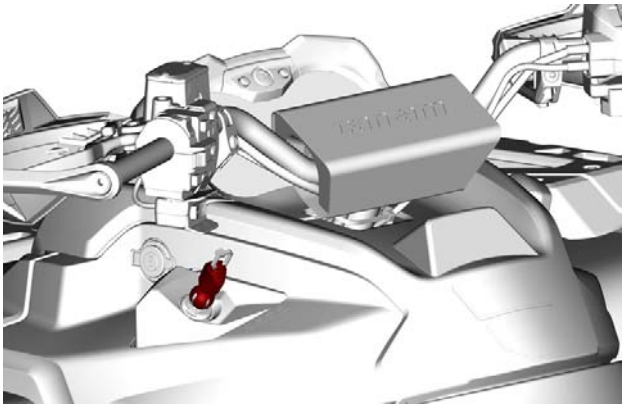

219100951-019-001_a

2. Connect the vehicle to the BRP diagnostic software (BUDS2), refer to *COMMUNICATION TOOLS* subsection.
3. In BUDS2, go to :
   - **Keys** page
   - In **Current Inserted Key**
   - Select **Erase key**

After approximately 10 seconds, a message will appear.

The key is now erased.

NOTE: This will only erase the key inserted in the engine cut-off switch.

Erasing All Keys

1. Connect the vehicle to the BRP diagnostic software (BUDS2), refer to *COMMUNICATION TOOLS* subsection.
2. In BUDS2, go to :
   - **Keys** page
   - In **Generic Settings**
   - Select **Erase All Keys**
3. When done, program at least one new key to the vehicle. Refer to *PROGRAMMING RF D.E.S.S. KEYS* in this subsection.

RF D.E.S.S. / ENGINE CUT-OFF OPERATION

Normal Operation

BUDS2 can read and recognize key type.

Vehicle starts.

Refer to *WIRING DIAGRAM*.

RFID CONNECTOR PIN	SPECIFICATIONS (DISCONNECTED RFID CONNECTOR) ECM AWAKE (PUSH START/STOP BUTTON)
A	Ground thru ECM
B	Ground to Stop Switch
C	0 Vdc (data signal to ECM)
D	12 Vdc

Key Not Recognized

The gauge scrolls the message: "Key not recognized".

Possible causes:
- Wrong key
- Damaged RFID chip
- No signal at RFID-C to ECM

Bad Key

The gauge scrolls the message: "Bad key".

Possible causes:
- Key not programmed to vehicle

Condition can be duplicated by installing a key that is not programmed to the vehicle.

Gauge and Vehicle Won't Stay Awake

The gauge powers off shortly after the start/stop button is pressed.

Possible causes:
- No key on D.E.S.S. post.
- Engine stop switch is in OFF position (if equipped).
- Magnet in key not closing hall effect switch in D.E.S.S. post.
- No voltage at RFID-D connector
- No voltage at RFID-B connector
- No ground at RFID-A connector

Condition can be duplicated by unplugging the RFID connector.

LIGHTS

SERVICE TOOLS

Description	Part Number	Page
FLUKE 115 MULTIMETER	529 035 868	4

SERVICE PRODUCTS

Description	Part Number	Page
DEOXIT LUBRICANT	293 550 034	2
DIELECTRIC GREASE	293 550 004	2

GENERAL

NOTICE It is recommended to always disconnect the battery when replacing any electric or electronic parts. Always disconnect battery exactly in the specified order, BLACK (-) cable first.

TROUBLESHOOTING

DIAGNOSTIC TIPS

NOTE: It is a good practice to check for fault codes using the BRP diagnostic software (BUDS2) as a first troubleshooting step. Refer to *COMMUNICATION TOOLS* subsection.

IMPORTANT: When troubleshooting an electrical system fault, check battery condition, cables and connections first.

Testing a Circuit

Check the related-circuit fuse condition with a fuse tester or test lamp (a visual inspection could lead to a wrong conclusion).

NOTE: If the electrical system is left activated for a certain period of time, the accessory relay will shut down.

Inspecting an Electrical Connection

When replacing an electric or electronic component, always check electrical connections. Make sure they are tight, make good contact, and are corrosion-free. Dirty, loose or corroded contacts are poor conductors and are often the source of a system or component malfunction.

Pay particular attention to ensure that pins are not bent or pushed out of their connectors.

Ensure all wire terminals are properly crimped on wires, and connector housings are properly fastened.

Check for signs of moisture, corrosion or dullness. Clean pins properly with DEOXIT LUBRICANT (P/N 293 550 034) and coat them with DIELECTRIC GREASE (P/N 293 550 004) or other appropriate lubricant when reassembling them, except if otherwise specified such as for the ECM connector.

Pay attention to ground wires.

For wiring harness connector locations, refer to *WIRING HARNESS AND CONNECTORS* subsection.

DIAGNOSTIC GUIDELINES

LOW AND HIGH BEAM HEADLIGHTS WILL NOT COME ON SIMULTANEOUSLY (PLASTIC RACK MODELS)

1. Jumper JMP_F and/or JMP_M is open circuit or missing.
   - *Check JMP, located at MG2 Left handlebar switch connector. , refer to POWER DISTRIBUTION subsection.*

BRAKE LIGHTS WILL NOT COME ON WHEN BRAKES ARE APPLIED

1. Defective fuse.
   - *Check fuse, refer to the appropriate BRAKE LIGHT CIRCUIT PROTECTION in this subsection.*
2. Defective brake relay.
   - *Test brake relay (RY6), refer to POWER DISTRIBUTION subsection.*
3. Defective brake light switch(es).
   - *Refer to BRAKE LIGHT SWITCHES in the BRAKE subsection.*
4. Defective wiring/connectors.
   - *Test wiring continuity, refer to applicable WIRING DIAGRAM.*

TURN SIGNAL LIGHTS WILL NOT COME ON WHEN SELECTED

1. Defective fuse.
   - *Check fuse, refer to the appropriate TURN SIGNAL/HAZARD CIRCUIT PROTECTION in this subsection.*
2. Defective Flasher Module.
   - *Replace flasher module, refer to TURN SIGNALS/HAZARD in this subsection.*
3. Defective wiring/connectors.
   - *Test wiring continuity, refer to applicable WIRING DIAGRAM.*
4. Defective Turn Signal Switch.
   - *Test switch, refer to appropriate TURN SIGNALS/HAZARD in this subsection and to applicable WIRING DIAGRAM.*

HAZARD LIGHTS WILL NOT COME ON WHEN SELECTED

1. Defective fuse.
   - *Check fuse, refer to TURN SIGNAL/HAZARD CIRCUIT PROTECTION in this subsection.*
2. Hazard lights 12 Vdc input circuit open.
   - *Check wiring and connectors, refer to the appropriate TURN SIGNAL/HAZARD in this subsection. Refer to WIRING DIAGRAM.*

3. Hazard lights selector switch defective.
   - *Test switch, refer to the appropriate TURN SIGNAL/HAZARD in this subsection. Refer to WIRING DIAGRAM.*
4. Defective wiring/connector between hazard lights selector switch and flasher module.
   - *Refer to applicable WIRING DIAGRAM.*
5. Flasher module ground circuit open.
   - *Test wiring and connectors, refer to applicable WIRING DIAGRAM.*
6. Defective flasher module.
   - *Replace flasher module, refer to the appropriate TURN SIGNAL/HAZARD in this subsection.*

HAZARD LIGHTS COME ON WITHOUT BEING SELECTED

1. Hazard lights switch or wiring short circuit.
   - *Check for water in LH multifunction switch.*
   - *Test hazard light switch and wiring, refer to applicable WIRING DIAGRAM.*
2. Flasher module parallel Resistor is open.
   - *Test resistor (between hazard switch output and ground), refer to applicable WIRING DIAGRAM.*

TURN SIGNAL/HAZARD LIGHTS INDICATOR IN MULTIFUNCTION GAUGE WILL NOT COME ON WITH TURN SIGNAL OR HAZARD LIGHTS SELECTED ON, IGNITION SWITCH ON

1. Signal wire from flasher module to multifunction gauge open circuit.
   - *Test circuit continuity from flasher module (MC1_2–4) to multifunction gauge (C1–8).*
2. Defective flasher module.
   - *Replace flasher module, refer to the appropriate FLASHER MODULE in this subsection.*
3. Defective multifunction gauge.
   - *Replace multifunction gauge, refer to GAUGE subsection.*

HAZARD LIGHTS INDICATOR NOT WORKING WITH IGNITION SWITCH OFF

1. Diode D10 open circuit.
   - *Test diode, refer to applicable WIRING DIAGRAM.*

POSITION LIGHTS WILL NOT COME ON

1. Defective fuse.
   - *Check fuse, refer to the appropriate POSITION LIGHTS in this subsection.*
2. Power or ground circuit wiring.
   - *Check wiring continuity, refer to WIRING DIAGRAM.*
3. Defective light bulbs
   - *Test/replace light bulbs.*

TRAILER LAMPS WILL NOT COME ON

1. No trailer plugged.
   - *Plug a trailer.*
2. Trailer tail lamps are flashing at a higher frequency than normal.
   - *Make sure that the trailer circuits turn light/hazard trailers lamps are equivalent to 40 Watts.*

PROCEDURES

ACTIVATING THE ELECTRICAL SYSTEM

NOTICE **Activating the electrical system repeatedly or using electrical equipment will discharge the battery and you may not be able to start the engine.**

Turn the ignition key to the ON position

HEADLIGHTS

Headlight Wire Identification

HEADLIGHTS RELAY (RY3)	
FUNCTION	PIN
12 volt input from fuse F2 (headlights power)	D 6
12 volt input from fuse F1 (relay winding input, through Ignition switch)	C6
12 volt output to light switch	C5
Relay winding ground (from ECM G1)	D5

LIGHT SWITCH		
FUNCTION	PIN	COLOR
12 volt input from headlights relay	MG2-4	RD/BU
12 volt output to high beam headlights	MG2-5	BU
12 volt output to low beam headlights	MG2-2	GN

Headlights Circuit Protection

CONDITION	CIRCUIT PROTECTION
Unswitched	Fuse 2

Testing the Headlights

1. Disconnect LOW beam and HIGH beam headlight bulb connectors. Refer to *REPLACING THE HEADLIGHT BULB* in this subsection.
2. Turn the ignition key to the ON position.
3. Measure the voltage on headlight connector as follows.

REQUIRED TOOL	
FLUKE 115 MULTIMETER (P/N 529 035 868)	

LIGHT SWITCH POSITION	WIRE COLOR		VOLTAGE
LO beam	BU (Low beam connector)	BK	Battery voltage
HI beam			
HI beam	GN (Hi beam connector)		

Replacing the Headlight Bulb

NOTICE **Never touch glass portion of a halogen bulb with bare fingers, it shortens its operating life. If glass is touched, clean it with isopropyl alcohol which will not leave a film on the bulb.**

1. Unplug connector from bulb.
2. Rotate bulb.

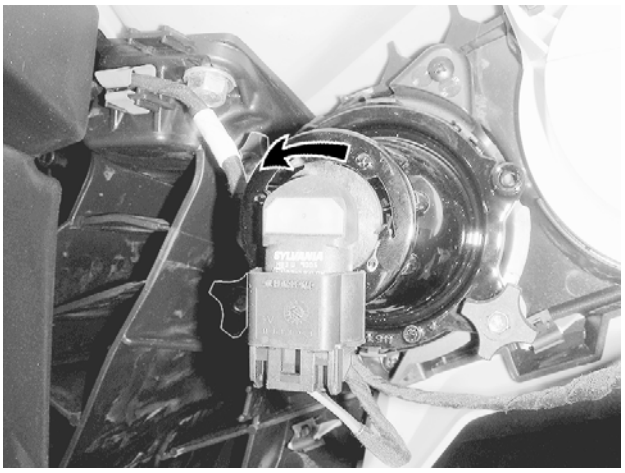

vmo2012-012-060_b

TYPICAL

3. Pull bulb out.
4. Properly reinstall removed parts in the reverse order of their removal.
5. Validate headlight operation.

HEADLAMP BEAM AIMING (ALL MODELS)

NOTE: Load vehicle as per normal use.

1. Position vehicle on a level surface 5 m (16 ft) in front of a test surface (wall or screen) as in first illustration.
2. Measure the distance from the center of each headlight to the ground (high beam and low beam).
3. Trace a line on the test surface parallel to the ground at each measured height (one for high beam and one for low beam).

Low beam aiming is correct when the crest of the low beam is **below** the applicable horizontal center line traced on the test surface as per specification.

High beam aiming is correct when the center of the high beam (focus point) is **below** the applicable horizontal center line traced on the test surface as per specification.

SPECIFICATION	
Low beam crest (top of low beam)	25 mm to 125 mm (1 in to 5 in) **below** applicable line
High beam center (focus point)	

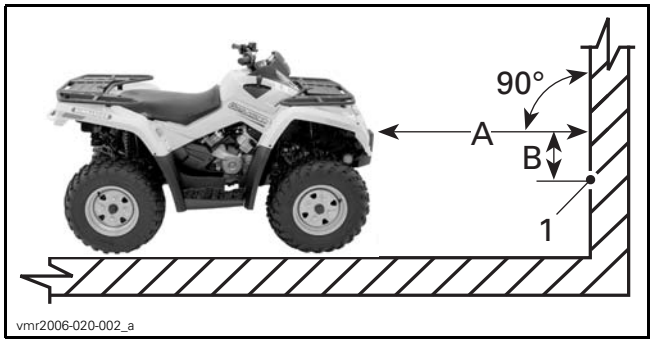

TYPICAL
1. Light beam center
A. 5 m (16 ft)
B. Beam aiming specification

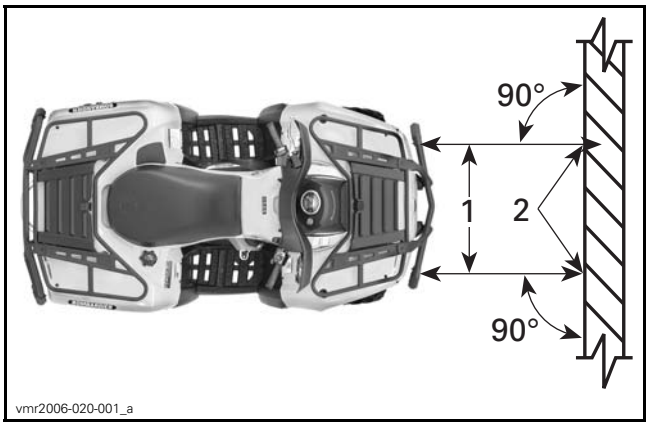

TYPICAL
1. Headlight center lines
2. Light beam center

Adjusting Beam Aiming

Turn adjustment knobs to adjust beam height and side orientation to specification.

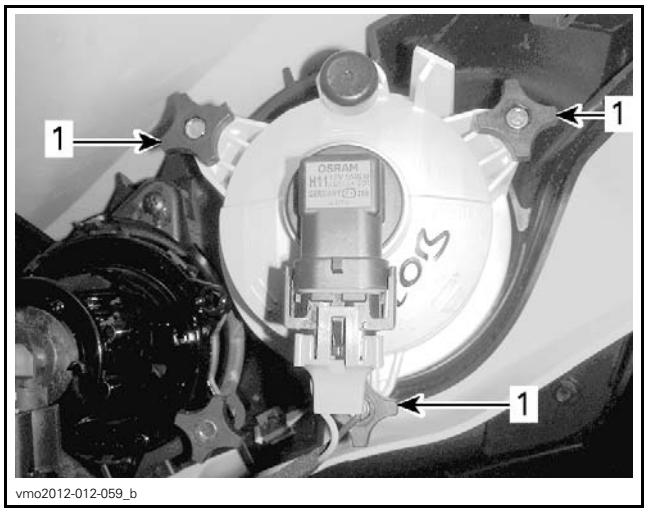

OUTLANDER LOW BEAM
1. Adjustment knobs

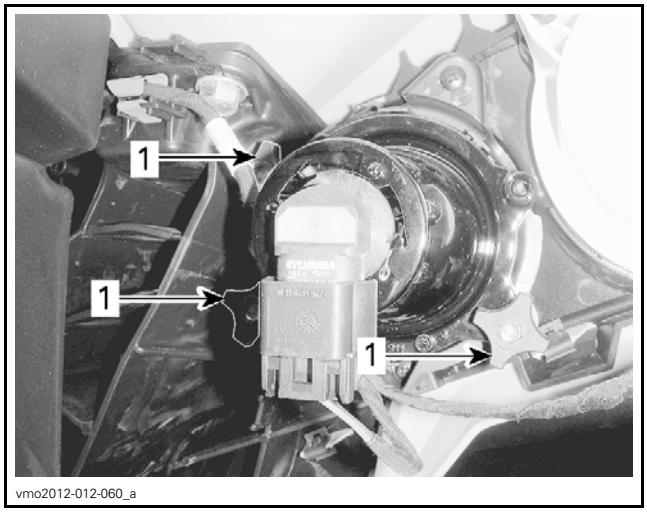

OUTLANDER HIGH BEAM AND RENEGADE LOW BEAM/HIGH BEAM
1. Adjustment knobs

TAILLIGHTS/BRAKE LIGHTS

Brake Light Switch

For brake light switch location and testing, refer to *BRAKES* subsection.

Brake Light Wire Identification

BRAKE LIGHT RELAY (RY6)	
FUNCTION	PIN
12 volt input from fuse F7 (brake light power)	B12
12 volt input from F7 (relay winding input)	B11
12 volt output to LH and RH brake lights	A11
Relay winding ground (from brake light switch(es)) (Only on ABS version)	A12

Brake Light Circuit Protection

CONDITION	CIRCUIT PROTECTION
Supplied when: Main relay RY2 activated Brake relay RY6 activated	Fuse 7 (from Main relay RY2)

Taillight Wire Identification

FUNCTION	PIN	CIRCUIT PROTECTION
Supplied when Main relay RY2 activated	3	VI/WT
Ground from BK20	2	BK

Taillight Circuit Protection

CONDITION	CIRCUIT PROTECTION
Supplied when Main relay RY2 activated	Fuse 7 (from Main relay RY2)

Taillight/Brake Light Bulb Replacement

1. Unplug connector from bulb.
2. Rotate light bulb counterclockwise to remove it from taillight.

ROTATE BULB COUNTERCLOCKWISE

3. Remove bulb socket from taillight.

Installation is the reverse of the removal procedure.

POSITION LIGHTS

Headlight Wire Identification

NOTE: The position lights and licence plate light are supplied whenever the light relay RY3 is activated.

LIGHT RELAY (RY3)	
FUNCTION	PIN
12 volt input from fuse F2	D6
12 volt input from F6 (relay winding input)	C6
12 volt output to lights	C5
Relay winding ground (from ECM G1)	D5

Position Light Circuit Protection

CONDITION	CIRCUIT PROTECTION
Supplied when relay RY3 is activated	Fuse 2 (from light relay RY3)

TURN SIGNALS/HAZARD

Turn Signal/Hazard Lights Wire Identification

FLASHER MODULE		
FUNCTION	PIN	COLOR
12 volt input from fuse F10 (unswitched)	MC1_2-1	RD/WH

FLASHER MODULE		
FUNCTION	PIN	COLOR
12 volt input from fuse F7 (switched)	MC1_1-5	VT/WH
RH turn 12 volt input from turn signal switch	MC1_1-1	BG/BN
LH turn 12 volt input from turn signal switch	MC1_1-2	BG/GY
Output to RH turn signal lights	MC1_2-2	BN
Output to LH turn signal lights	MC1_2-3	GY
Output to multifunction gauge (turn signal indicator)	MC1_2-4	WH/VT
Ground	MC1_1-4	BK
Hazard 12 volt input from hazard switch	MC1_1-6	BG/RD

TURN SIGNAL SWITCH (IN MULTIFUNCTION SWITCH)		
FUNCTION	PIN	COLOR
12 volt input from fuse F7 (unswitched)	MG3-3	RD/BK
RH turn 12 volt output to flasher module	MG3-1	BG/BN
LH turn 12 volt output to flasher module	MG3-2	BG/GY

HAZARD SWITCH		
FUNCTION	PIN	COLOR
12 volt input from fuse F10 (unswitched)	MG3-6	RD/WT
12 volt output to flasher module	MG3-5	BG/RD
12 volt output to TellTale		

Turn Signal/Hazard Circuit Protection

TURN SIGNAL CIRCUIT	
CONDITION	CIRCUIT PROTECTION
Supplied with Main relay (RY2) activated	Fuse 7 (from Accessories relay RY3)
Battery power (continuous)	Fuse 10

HAZARD CIRCUIT	
CONDITION	CIRCUIT PROTECTION
Battery power (continuous)	Fuse 10

Flasher Module Access

Remove multifunction gauge.

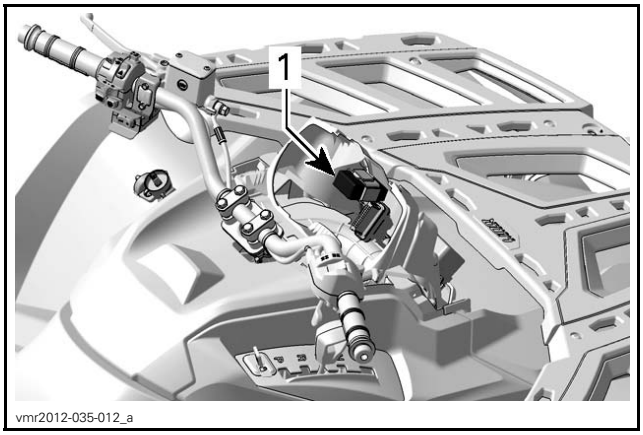

TYPICAL
1. Flasher module location

TRAILER PLUG

Trailer Plug Wire Identification

TRAILER FLASHER MODULE		
FUNCTION	PIN	COLOR
Output to trailer adaptor to RH turn signal	MC2_2-2	GN
Output to trailer adaptor to LH turn signal	MC2_2-3	YE
12 volt input from fuse F10 (unswitched)	MC2_2-1	YE/RD
Indicator to tell tale	MC2_2-4	OG
Hazard 12 volt input from hazard switch	M2_1-6	BG/RD
12 volt input from fuse F7 (switched)	MC2_1-5	VT/WH
LH turn 12 volt input from flasher switch	MC2_1-2	BG/GY
RH turn 12 volt input from flasher switch	MC2_1-1	BG/BN
Ground	MC2_1-4	BK

COMPACT DIGITAL GAUGE

SERVICE TOOLS

Description	Part Number	Page
FLUKE 115 MULTIMETER	529 035 868	7

SERVICE PRODUCTS

Description	Part Number	Page
DEOXIT LUBRICANT	293 550 034	5
DIELECTRIC GREASE	293 550 004	5

GENERAL

NOTICE It is recommended to always disconnect the battery when replacing any electric or electronic parts. Always disconnect battery exactly in the specified order, BLACK (-) cable first.

COMPACT DIGITAL MULTIFUNCTION GAUGE

Multifunction Gauge Description

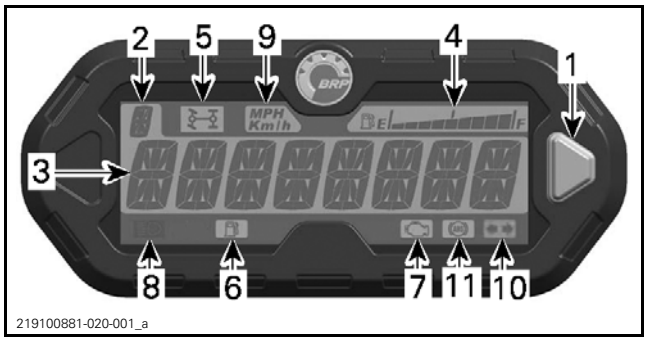

1. *Selector button*
2. *Transmission position display*
3. *Main screen*
4. *Fuel level display*
5. *4WD indicator lamp*
6. *Low fuel level indicator lamp*
7. *Check engine indicator lamp*
8. *High beam indicator lamp*
9. *MPH, Km/h indicator lamp*
10. *Signal lights/hazard lights indicator lamp*
11. *ABS indicator lamp*

1) Selector Button

The selector button is used to navigate or change settings in the multifunction gauge.

2) Transmission Position Display

This display will show transmission position.

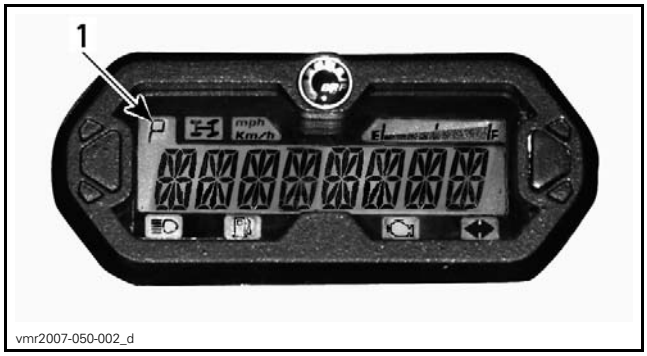

1. *Transmission position*

DISPLAY	FUNCTION
P	Park
R	Reverse
N	Neutral
H	High range
L	Low range

3) Main Screen

The main screen is used to display numerous functions of the multifunction gauge.

Refer to *MULTIFUNCTION DISPLAY MODES* for the available display modes.

4) Fuel Level Display

Bar gauge continuously indicates the level of fuel in the fuel tank while riding.

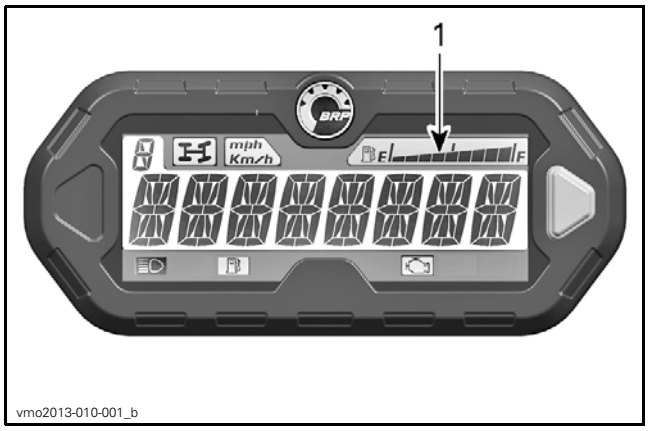

1. Fuel level display

5) 4WD Indicator Lamp

When this indicator is ON, it indicates the **4WD** system is activated.

6) Low Fuel Level Indicator Lamp

When this indicator is ON, it indicates that there is approximately 5 L (1.3 U.S. gal.) of fuel left in fuel tank.

7) Check Engine Indicator Lamp

When this indicator is ON, it indicates an engine fault code, look for a message in the main screen display.

When this indicator blinks, it indicates that **LIMP HOME** mode is activated.

8) High Beam Indicator Lamp

When this indicator is ON, it indicates that **high beam** is selected on the headlights switch and that the ignition key is in the "ON with lights" position.

9) KM/H or MPH Indicator Lamp

mph
Km/h

The applicable lamp turns on to indicate the active speedometer unit of display.

10) Turn signal/Hazard lights Indicator Lamp (If equipped)

When this indicator is ON, it indicates:

– A turn signal is activated, or
– The hazard lights are activated.

11) ABS Indicator Lamp (If equipped)

The applicable lamp turns on to indicate ABS system malfunction.

Multifunction Display Modes

Speed Mode

In this mode, the display shows the speed of the vehicle either in km/h or in MPH.

RPM Mode

In this mode, the display shows the engine RPM.

Combined Mode

In this mode, the display shows the speed of the vehicle and the engine RPM.

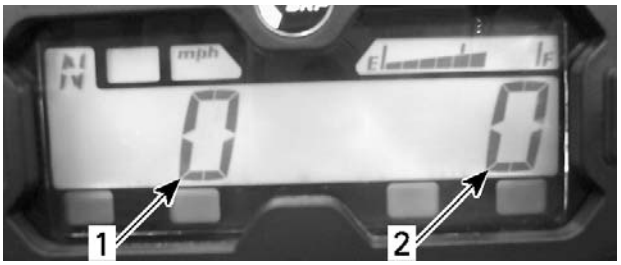

vdd2008-001-085_a

1. *Vehicle speed*
2. *Engine RPM*

Odometer (OD)

Odometer records the total distance travelled either in miles or kilometers.

vsi2009-018-030

Clock

Shows current time.

vmo2011-008-001

Refer to *PROCEDURES* to set current time.

Trip Meter (TP)

The trip meter records the travelled distance since it has been reset. Distance travelled is displayed either in kilometers or miles.

vsi2009-018-031

Press and HOLD the selector button for 2 seconds to reset the trip meter.

Trip Hour Meter (TH)

The trip hour meter records vehicle running time when the electrical system is activated. It can be used to establish traveling time between 2 places.

vsi2009-018-032

Press and HOLD the selector button for 2 seconds to reset the hour meter.

Engine Hour Meter (EH)

The engine hour meter records engine running time.

vsi2009-018-033

Message Display Mode

If an abnormal engine condition occurs, a message may scroll across the main screen in conjunction with a pilot lamp.

Refer to *DIAGNOSTIC AND FAULT CODES* subsection.

Driving Modes (If equipped)

Some models are equipped with a driving mode selector.

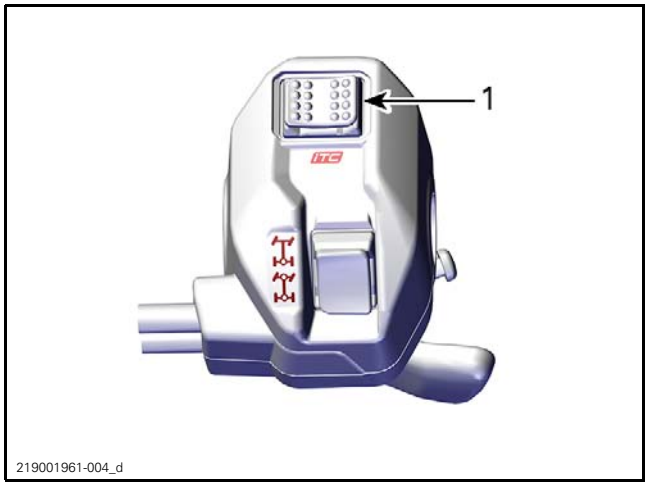

1. Driving mode selector

A message of the selected mode will be displayed at activation and deactivation as follow:

DRIVE MODE	MESSAGE AT ACTIVATION
Sport	SPORT MODE
Normal	NORMAL MODE
Work (If equipped)	WORK MODE
Eco (If equipped)	ECO MODE

Navigating the LCD Gauge

⚠ WARNING

Never adjust or set functions on the multi-function gauge while riding the vehicle.

Default Display Mode

After vehicle startup, the default display mode is either:

– Vehicle speed
– Engine revolutions per minute (RPM)
– Both parameters simultaneously (combined mode).

To change from one display to the other, proceed as follows.

1. Turn ignition key to ON to power-up the system.
2. Wait until the "greeting message" has been displayed.
3. Press and release selector button once to display OD (odometer).
4. Press the selector button again, this time for 2 seconds.

This will change the Mode to either Speed, RPM or Combined.

5. To select another mode, repeat steps 3 and 4 until the desired mode is displayed.

Temporary Display Mode

In the temporary display mode, the following functions are available:

– Odometer
– Clock
– Trip meter (resettable)
– Trip Hour meter (resettable)
– Engine hour meter.

Press and release selector button to change the default display mode to the temporary mode.

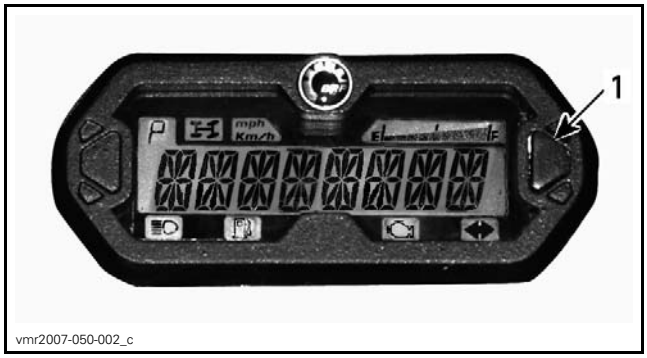

1. Selector button

The gauge will display the selected mode for 10 seconds then will return to the normal display mode.

While in a resettable mode, push and HOLD selector button for 2 seconds to reset it.

TROUBLESHOOTING

DIAGNOSTIC TIPS

NOTE: It is a good practice to check for fault codes using Use the BRP diagnostic software (BUDS2) as a first troubleshooting step. Refer to *COMMUNICATION TOOLS* subsection.

IMPORTANT: When troubleshooting an electrical system fault, check battery condition, cables and connections first.

Testing a Circuit

Check the related-circuit fuse condition with a fuse tester or test lamp (a visual inspection could lead to a wrong conclusion).

NOTE: If the ignition switch is left ON for a certain period of time, the accessory relay will shut down.

Inspecting an Electrical Connection

When replacing an electric or electronic component, always check electrical connections. Make sure they are tight, make good contact, and are corrosion-free. Dirty, loose or corroded contacts are poor conductors and are often the source of a system or component malfunction.

Pay particular attention to ensure that pins are not bent or pushed out of their connectors.

Ensure all wire terminals are properly crimped on wires, and connector housings are properly fastened.

Check for signs of moisture, corrosion or dullness. Clean pins properly with DEOXIT LUBRICANT (P/N 293 550 034) and coat them with DIELECTRIC GREASE (P/N 293 550 004) or other appropriate lubricant when reassembling them, except if otherwise specified such as for the ECM connector.

Pay attention to ground wires.

For wiring harness connector locations, refer to *WIRING HARNESS AND CONNECTORS* subsection.

DIAGNOSTIC GUIDELINES

MULTIFUNCTION GAUGE WILL NOT COME ON

1. **Multifunction gauge not powered up.**
   - *Check fuse(s), refer to CIRCUIT PROTECTION in this subsection.*
   - *Test multifunction gauge 12 Vdc input and ground circuits as per WIRING IDENTIFICATION in this subsection. Refer to applicable WIRING DIAGRAM.*
2. **Defective Multifunction Gauge.**
   - *Replace multifunction gauge.*

MULTIFUNCTION GAUGE COMMUNICATION ERROR

1. **Multifunction gauge CAN circuit open.**
   - *Ensure multifunction gauge is properly connected and powered up.*
   - *Check for applicable fault code using BUDS2, refer to DIAGNOSTIC AND FAULT CODES subsection.*
   - *Carry out TESTING THE CAN RESISTOR in this subsection.*
   - *Carry out a continuity test of the multifunction gauge CAN wires, refer to applicable WIRING DIAGRAM.*

NO FUEL QUANTITY INDICATION

1. **Defective fuel level sender or wiring.**
   - *Refer to FUEL TANK AND FUEL PUMP subsection.*
2. **Defective Multifunction Gauge.**
   - *Replace multifunction gauge, refer to PROCEDURES in this subsection.*

PROCEDURES

MULTIFUNCTION GAUGE

Resetting the "Maintenance Required" Message Using BUDS2

Connect the vehicle to the IBRP diagnostic software (BUDS2)..

Go to:

– **Summary** page
– **Vehicle** button

Click on the **Reset Service** button.

Resetting the "Maintenance Required" Message Using the Gauge Button

1. Select display and hold button as per following table:

GAUGE TYPE	DISPLAY	BUTTON (HOLD)
Analog / digital multifunction gauge	Odometer	SET (S)
Compact digital multifunction gauge	Default	Selector button

2. While holding the button, alternate between LOW beam and HIGH beam 3 times.

NOTE: Step 2 must be started on high beam and completed within **2 seconds**.

3. Release SET button.

Wiring Identification

FUNCTION	PIN
Switched 12 volt input from fuse F6 (1000R, T series and European models)	17
Switched 12 volt input from fuse F4 (All others)	
Unswitched 12 volt input from fuse F1 (1000R, T series and European models)	16
Unswitched 12 volt input from fuse F8 (All others)	
Ground	20
CAN LO	18
CAN HI	19
Fuel level gauge signal	4
Fuel level gauge ground	21
4WD ON	7
HI beam signal (+)	5
Overdrive ON	6
Flasher Signal	8

Circuit Protection

CONDITION	CIRCUIT PROTECTION
Supplied at all times	Fuse 1 of fuse block 1 (from fusible link 1)
Supplied with main relay activated	Fuse 6 of fuse block 1 (from main relay RY2 in fuse block 1)

Setting Using BUDS2

Connect the vehicle to the BRP diagnostic software (BUDS2).

Language Selection

Go to:
- **Settings** page
- **Cluster** button.
- **Configuration - Change Cluster Language** tab

Selecting Units

Go to:
- **Settings** page
- **Cluster** button.
- **Configuration - Change Cluster Units** tab

Setting the Clock

Go to:
- **Settings** page
- **Cluster** button.
- **Configuration - Change Real Time Clock** tab

Selecting Tire Size

Go to:
- **Settings** page
- **ECM** button.
- **Configuration - Change Tire Size** tab

Testing Using BUDS2

Connect the vehicle to the BRP diagnostic software (BUDS2)..

Wow Test

This function is used to check if the indicator lights, display and analog indicators (if applicable) are functional.

NOTE: This function does not test the signals or external circuits.

Go to:
- **Functions** page
- **Cluster** button.
- **Functions** tab.
- **Execute Cluster WOW test**

Monitoring Measurement Values

Connect the vehicle to the BRP diagnostic software (BUDS2).

In BUDS2, go to:
- **Measurements** page
- **Cluster** button
- **Preset** or **Custom** tab.

In **Preset** tab, select desired preset values (for example: Cluster Basic).

In **Custom** tab, a large list of measurements is displayed. It is possible to choose several values by clicking "Please Select".

Testing the CAN Resistor

Disconnect DPS connector. Refer to the appropriate *DYNAMIC POWER STEERING (DPS)* subsection.

1. Remove seat to access diagnostic link connector (DB).
2. Remove diagnostic link connector from its holder.

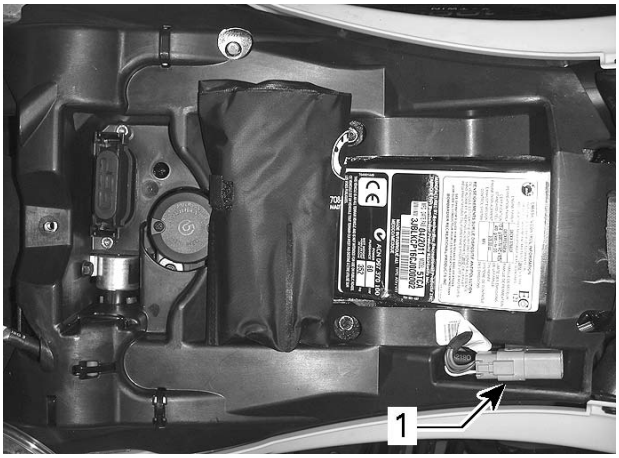

vmr2012-023-003_a

1. Diagnostic link connector (DB)

3. Measure the resistance of the CAN resistors as follows.

REQUIRED TOOL	
FLUKE 115 MULTIMETER (P/N 529 035 868)	

CAN RESISTOR TEST	
DIAGNOSTIC LINK CONNECTOR	RESISTANCE
Pins 1 and 2	Approximately 60 Ω

NOTE: This tests both the ECM and the Cluster CAN resistors and wires.

TEST RESULT	
READING	POSSIBLE CAUSE
Approximately 60 Ω	ECM and CLUSTER CAN wires and resistors good
Approximately 120 Ω	CAN wire to CLUSTER open CAN wire to ECM open CLUSTER CAN resistor open ECM CAN resistor open
Infinite (open circuit)	CAN wire to DB connector open circuit

Removing the Multifunction Gauge (Outlander)

Remove gauge outer support.

– Push in on both sides of its leading edge to disengage it.
– Lift up and pull forward to remove.

NOTE: There are a total of 6 tabs that retain the gauge support.

vmr2012-035-001_a

OUTER GAUGE SUPPORT REMOVAL
1. Push in and lift up here (both sides)

From the back of gauge support, rotate the gauge clockwise to release it from its support.

Analog / Digital Multifunction Gauge

Release tabs.

Tilt gauge rearward.

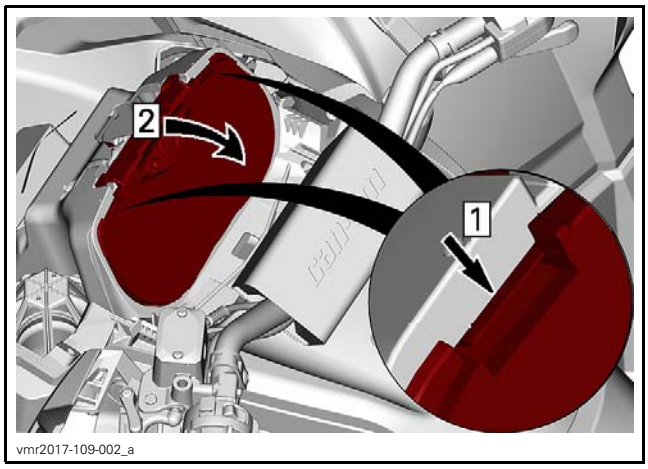

vmr2017-109-002_a

Disconnect the gauge connector.

Remove gauge from the inner support by pulling it up.

Removing the Multifunction Gauge (Renegade)

1. Remove console panel, refer to *BODY* subsection.
2. Remove the gauge support as shown.

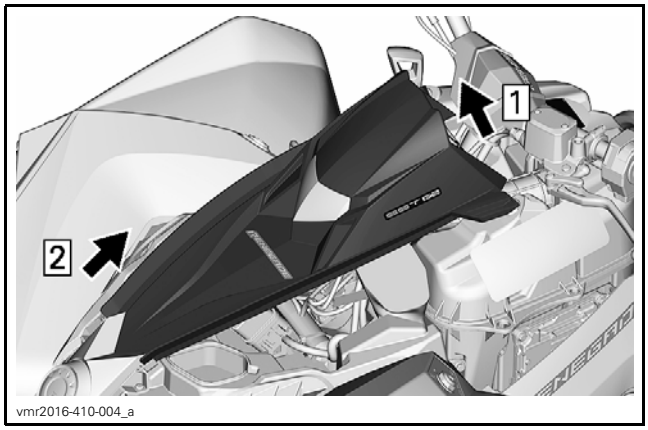

vmr2016-410-004_a

3. From the back of the gauge support, release the gauge retaining tabs and remove the gauge from its support.

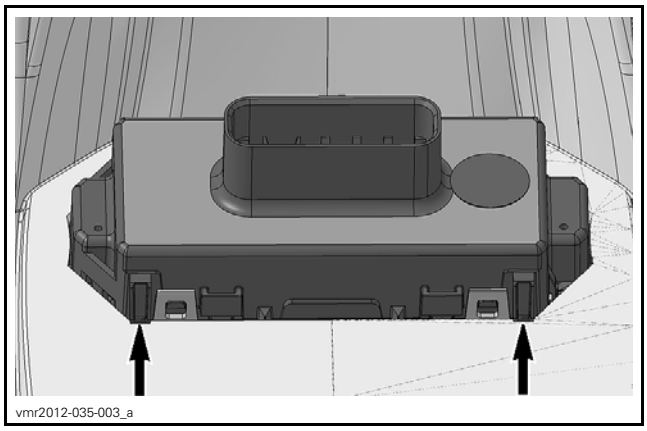
vmr2012-035-003_a

GAUGE RELEASE TABS (4)

Installing the Multifunction Gauge

For the installation, reverse the removal procedure.

ACCESSORIES

SERVICE PRODUCTS

Description	Part Number	Page
DEOXIT LUBRICANT	293 550 034	1
DIELECTRIC GREASE	293 550 004	1

GENERAL

NOTICE **It is recommended to always disconnect the battery when replacing any electric or electronic parts. Always disconnect battery exactly in the specified order, BLACK (-) cable first.**

TROUBLESHOOTING

DIAGNOSTIC TIPS

NOTE: It is a good practice to check for fault codes using BRP diagnostic software (BUDS2) as a first troubleshooting step. Refer to *COMMUNICATION TOOLS* subsection.

IMPORTANT: When troubleshooting an electrical system fault, check battery condition, cables and connections first.

Testing a Circuit

Check the related-circuit fuse condition with a fuse tester or test lamp (a visual inspection could lead to a wrong conclusion).

NOTE: If the electrical system is left activated for a certain period of time, the accessory relay will shut down. See *ACTIVATING THE ELECTRICAL SYSTEM* in this subsection for details.

Inspecting an Electrical Connection

When replacing an electric or electronic component, always check electrical connections. Make sure they are tight, make good contact, and are corrosion-free. Dirty, loose or corroded contacts are poor conductors and are often the source of a system or component malfunction.

Pay particular attention to ensure that pins are not bent or pushed out of their connectors.

Ensure all wire terminals are properly crimped on wires, and connector housings are properly fastened.

Check for signs of moisture, corrosion or dullness. Clean pins properly with DEOXIT LUBRICANT (P/N 293 550 034) and coat them with DIELECTRIC GREASE (P/N 293 550 004) or other appropriate lubricant when reassembling them, except if otherwise specified such as for the ECM connector.

Pay attention to ground wires.

For wiring harness connector locations, refer to *WIRING HARNESS AND CONNECTORS* subsection.

PROCEDURES

ACTIVATING THE ELECTRICAL SYSTEM

NOTICE **Activating the electrical system repeatedly or using electrical equipment will discharge the battery and you may not be able to start the engine.**

Turn the ignition key to the ON position

12 VOLT POWER OUTLET

Removing and Installing a 12 Volt Power Outlet

Remove the gauge support, refer to *GAUGE* in this subsection.

Unplug the connectors of the power outlet.

Unscrew the retaining nut.

Reverse procedure for installation.

12 Volt Power Outlet Wire Identification

FUNCTION	PIN	COLOR
12 volt input from fuse F3 (iTC equipped models)	2	RD/BN
12 volt input from fuse F12 (All others)		
Ground (to ground terminal BK3)	1	BK

12 Volt Power Outlet Circuit Protection

CONDITION	CIRCUIT PROTECTION
Supplied with accessories relay (RY3 for iTC equipped models, RY5 for all others) activated	Fusible link 2 (FL2)

HEATED VISOR CONNECTORS

Removing and Installing the Front Heated Visor Connector

Unscrew the cap from the connector.

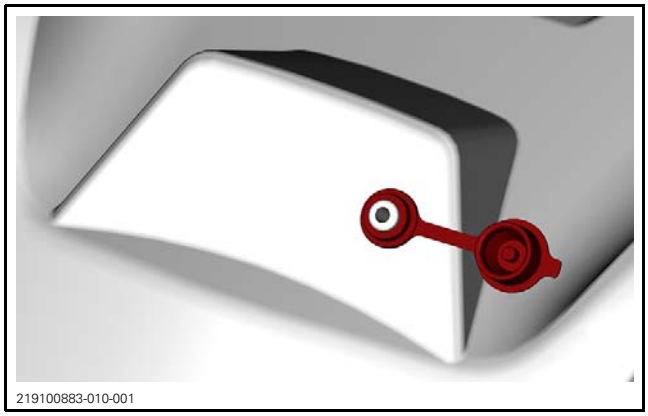

219100883-010-001

Refer to *GAUGE* and remove the gauge support.

Refer to *BODY* and remove:

– Windshield
– Console

Disconnect the other end of the harness from the accessory connector.

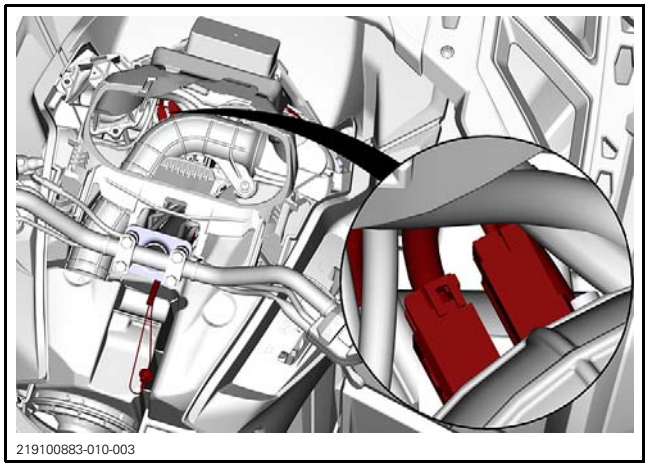

219100883-010-003

The installation is the reverse of the removal procedure, however, pay attention to the following.

Install the negative wire eyelet between the console and the connector body.

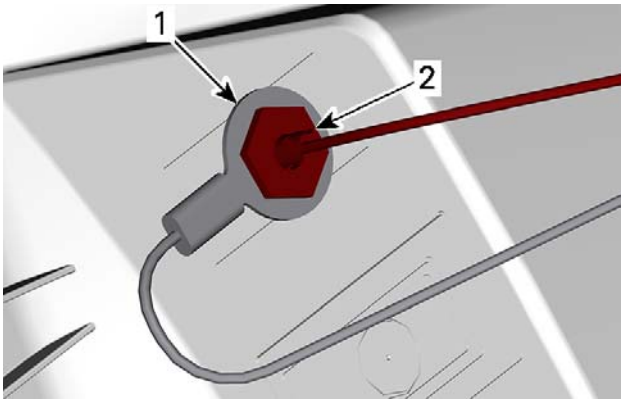

219100883-010-002_a

UNDERNEATH THE CONSOLE
1. Negative eyelet
2. Connector body

Removing and Installing the Rear Heated Visor Connector

Remove the rear seat.

Underneath, disconnect the seat harness connector.

Separate the seat cushion from the base.

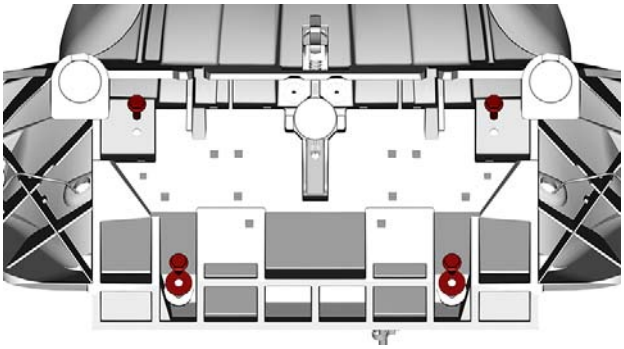

219100883-010-011

Remove the heated visor connector cap.

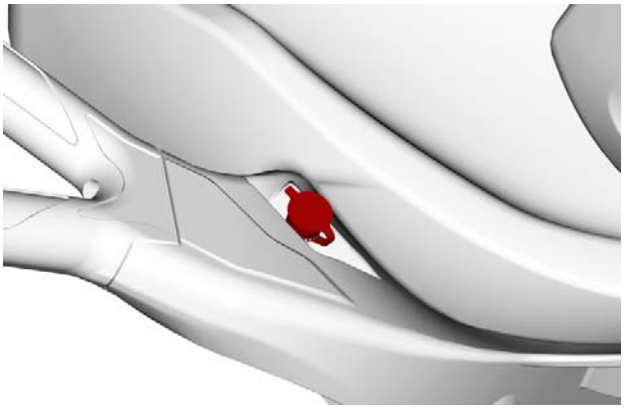

219100883-010-004

Cut the black wire near the eyelet.

Remove the heated visor connector from the handhold, then pass it through the openings.

Disconnect the wires from the seat harness.

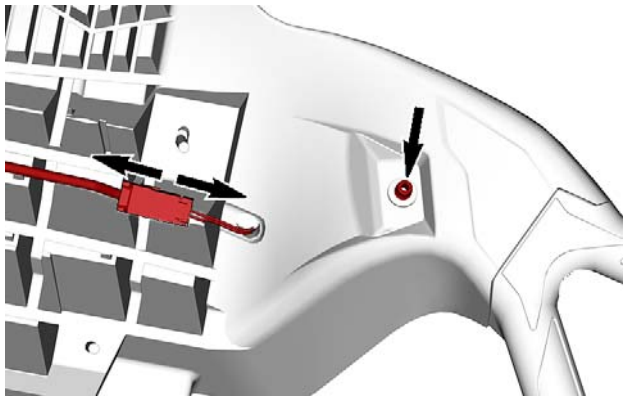

219100883-010-005_a

The installation is the reverse of the removal procedure, however, pay attention to the following.

Pass the wires through the openings, then crimp the new eyelet to the black wire.

Install the eyelet between the seat base and the connector body.

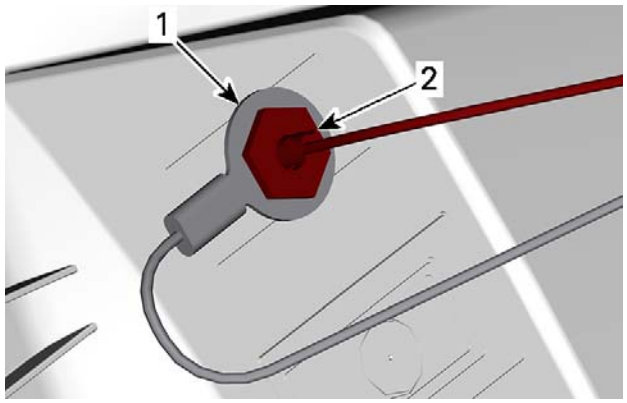

219100883-010-002_a

TYPICAL - UNDERNEATH THE SEAT BASE
1. Negative eyelet
2. Connector body

TIGHTENING TORQUE	
Seat cushion retaining screws	5 N•m ± 1 N•m (44 lbf•**in** ± 9 lbf•**in**)
Handhold retaining screws	25 N•m ± 3 N•m (18 lbf•ft ± 2 lbf•ft)

Heated Visor Connectors Wire Identification

The heated visor connectors are connected to the DC3 accessory connector through an extension harness.

To verify the extension Harness, refer to *TESTING THE REAR EXTENSION HARNESS OUTPUT VOLTAGE* in *HEATED PASSENGER GRIPS*.

FUNCTION	PIN	COLOR
12 volt power supply from fuse F3	Welded	RD/BN
Ground (to ground terminal BK3)	Eyelet	BK

Heated Visor Connectors Circuit Protection

CONDITION	CIRCUIT PROTECTION
Accessories relay (RY3) activated	Fuse 3

HEATED THROTTLE LEVER

Removing and Installing the Heated Throttle Lever

Refer to *GAUGE* and remove the gauge support.

Refer to *BODY* and remove:
– Windshield
– Console

Remove the air intake tube retaining screw.

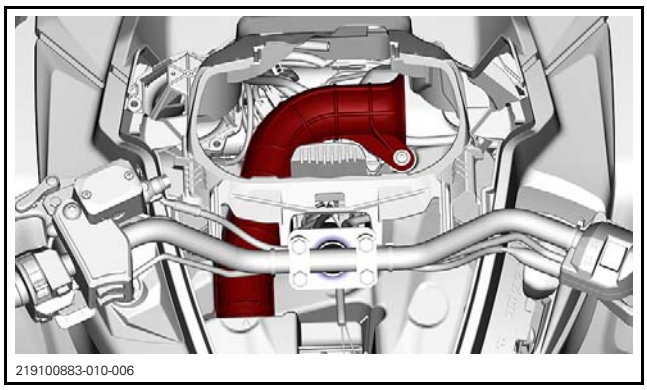

219100883-010-006

Move the air intake tube aside, and disconnect the throttle lever wires from the accessories connector.

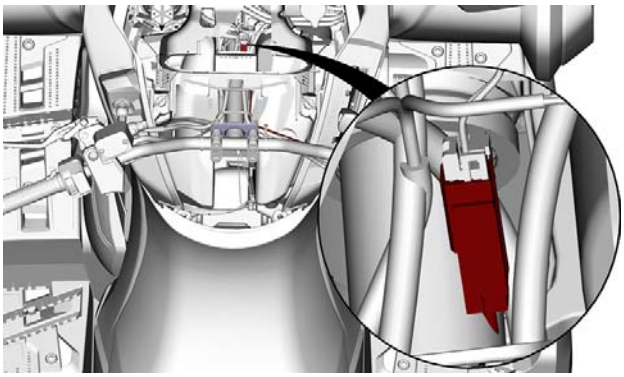
219100883-010-009

Note the wire routing and cable ties position.

Cut the cable ties.

Refer to *STEERING SYSTEM* and remove the throttle lever.

The installation is the reverse of the removal procedure, however, pay attention to the following.

TIGHTENING TORQUE	
Air intake tube retaining screw	1.6 N•m ± 0.4 N•m (14 lbf•**in** ± 4 lbf•**in**)

Heated Throttle Lever Wire Identification

The throttle lever heated element is connected to a switch which is to connected to connector DC5.

FUNCTION	PIN	COLOR
12 volt power supply to switch from fuse F4 (iTC equipped models)	B	RD/VT
12 volt power supply to switch from fuse F12 (450 engine)		
12 volt power supply to switch from fuse F14 (all others)		
Switch ground (to ground terminal BK3)	A	BK
Positive power supply to heating element (variable voltage)	2 Throttle lever side	OR
Heating element ground	1 Throttle lever side	BK

Heated Throttle Lever Circuit Protection

CONDITION	CIRCUIT PROTECTION
Accessories relay (RY5) activated (iTC equipped models)	F4
Accessories relay (RY3) activated (all others)	F12 (450 engine) F14 (all others)

Testing the Throttle Lever Heating Element

Refer to *REMOVING AND INSTALLING THE HEATED THROTTLE LEVER* for connector access.

Disconnect the heating element connector.

Measure the heating element resistance as per following table.

THROTTLE LEVER HEATING ELEMENT TEST		
HEATER WIRE		RESISTANCE @ 20°C (68°F)
OR	BK	21 to 26 Ω

If the resistance is out of specification, replace the throttle lever.

If resistance is good, carry out *TESTING THE THROTTLE LEVER HEATING ELEMENT INPUT VOLTAGE*.

Testing the Throttle Lever Heating Element Input Voltage

IMPORTANT: Make sure the switch power supply and ground are good before carrying out this test.

Refer to *REMOVING AND INSTALLING THE HEATED THROTTLE LEVER* for connector access.

Activate the electrical system or start engine.

Backprobe the heating element connector and measure voltage as per following table.

HEATING ELEMENT CONNECTOR		SELECTED HEAT LEVEL	VOLTAGE (APPROXIMATE)
OR wire	BK wire	1	3 to 3.5 Vdc
		2	6 to 7 Vdc
		3	9 to 10.5 Vdc
		4	12 to 14 Vdc

If voltage is out of specifications, replace the switch.

HEATED HANDLEBAR GRIPS

Removing and Installing the Heated Handlebar Grips

Refer to *BODY* and remove:

– Windshield
– Console
– Gauge support

Disconnect the heated grip wires from the switch harness.

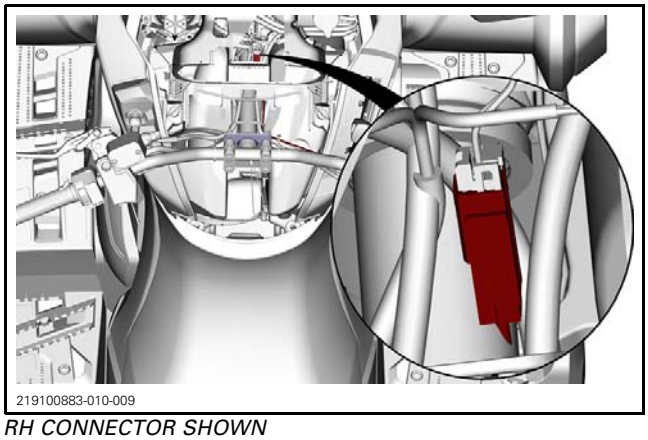

RH CONNECTOR SHOWN

Note the wire routing and cable ties position.

Cut the cable ties.

On the LH side, split the multifunction switch.

Remove the handlebar tip.

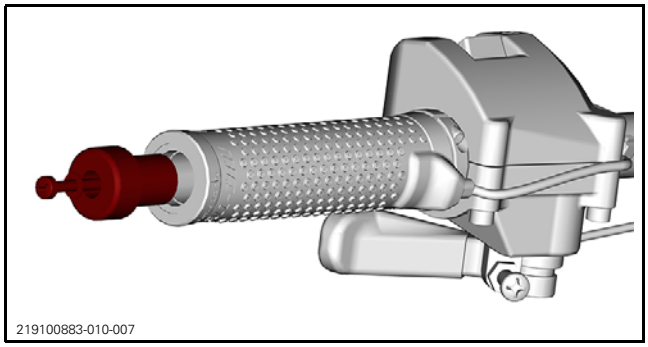

Loosen the grip clamping screw.

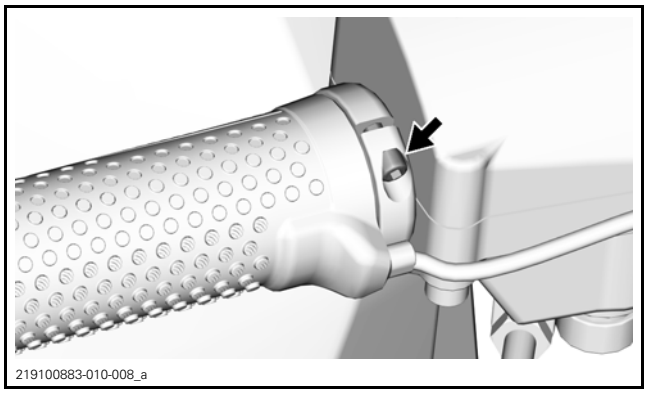

Remove the grip.

NOTE: If the grip does not come off, cut it lengthwise.

The installation is the reverse of the removal procedure, however, pay attention to the following.

TIGHTENING TORQUE	
Clamping screw	4.5 N•m ± 0.5 N•m (40 lbf•**in** ± 4 lbf•**in**)
Handlebar tip screw	0.4 N•m ± 0.1 N•m (4 lbf•**in** ± 1 lbf•**in**)

Heated Handlebar Grips Wire Identification

The heated handlebar grips switch is connected to connector DC5.

FUNCTION	PIN	COLOR
12 volt power supply to switch from fuse F4 (iTC equipped models)	B	WH
12 volt power supply to switch from fuse F12 (450 engine)		
12 volt power supply to switch from fuse F14 (all others)		
Switch ground (to ground terminal BK3)	A	BK
Positive power supply to heating element (variable voltage)	2 Switch side	RD
Heating element ground	1 Switch side	BK

Heated Handlebar Grips Circuit Protection

CONDITION	CIRCUIT PROTECTION
Accessories relay (RY5) activated (iTC equipped models)	F4
Accessories relay (RY3) activated (all others)	F12 (450 engine) Fuse 14 (all others)

Testing the Handlebar Grips Heating Element

If only one element is heating up, carry out this test.

If no element is heating up, carry out *TESTING THE HEATED HANDLEBAR GRIPS INPUT VOLTAGE*.

Refer to *REMOVING AND INSTALLING THE HEATED HANDLEBAR GRIPS* for connector access.

Disconnect the heating element connector.

Measure resistance as per following table.

GRIPS HEATING ELEMENT TEST		
HEATER WIRE		RESISTANCE @ 20°C (68°F)
RD	BK	8.5 to 10.5 Ω

If the resistance is out of specification, replace the grip.

If resistance is good, verify the accessory harness wiring continuity.

Testing the Heated Handlebar Grips Input Voltage

If no element is heating up, carry out this test.

If only one element is heating up, verify the accessory harness wiring continuity and carry out *TESTING THE HANDLEBAR GRIPS HEATING ELEMENT*.

IMPORTANT: Make sure the switch power supply and ground are good before carrying out this test.

Refer to *REMOVING AND INSTALLING THE HEATED HANDLEBAR GRIPS* for connector access.

Activate the electrical system or start engine.

Backprobe the heating element connector and measure voltage as per following table.

HEATING ELEMENT CONNECTOR		SELECTED HEAT LEVEL	VOLTAGE (APPROXIMATE)
OR wire	BK wire	1	3 to 3.5 Vdc
		2	6 to 7 Vdc
		3	9 to 10.5 Vdc
		4	12 to 14 Vdc

If voltage is out of specifications, replace the switch.

HEATED PASSENGER GRIPS

Removing and Installing the Heated Passenger Grips

Remove the rear seat.

Underneath, disconnect the seat harness connector.

Separate the seat cushion from the base.

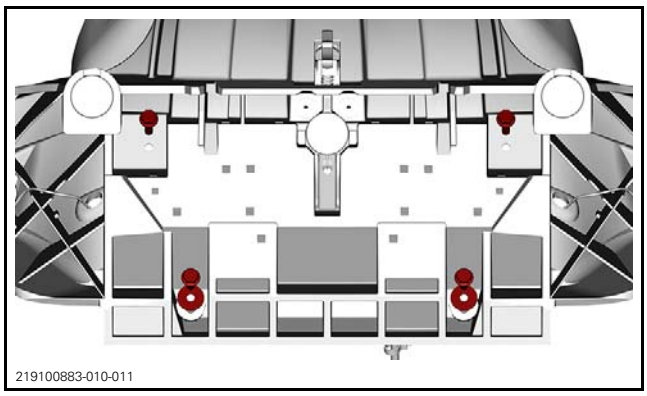

Note the wire routing.

Disconnect the wires from the seat harness.

Cut the heating element wires (on the handhold side).

Remove the handhold retaining screw.

Remove the handhold from the seat base.

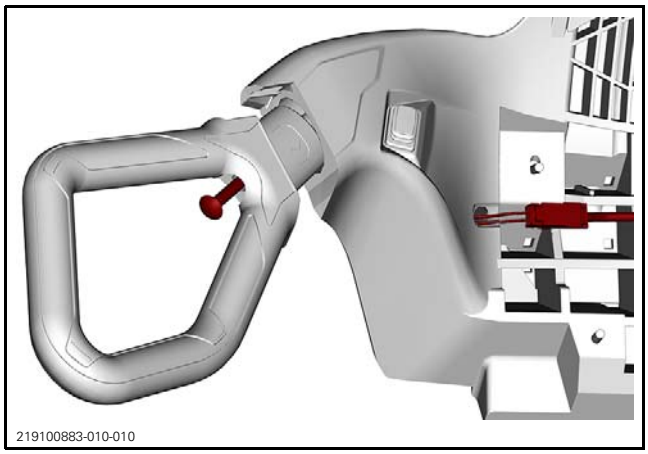
219100883-010-010

The installation is the reverse of the removal procedure, however, pay attention to the following.

Once the wires are passed through the opening, insert and lock the terminals in the connector housing as per following table.

WIRE	CONNECTOR HOUSING PIN
GY	1
GN	2
RD	3

TIGHTENING TORQUE	
Seat cushion retaining screws	5 N•m ± 1 N•m (44 lbf•**in** ± 9 lbf•**in**)
Handhold retaining screws	25 N•m ± 3 N•m (18 lbf•ft ± 2 lbf•ft)

Heated Passenger Grips Wire Identification

The heated passenger grips connector is connected to the DC3 accessory connector through an extension harness.

FUNCTION	COLOR
12 volt power supply to switch from fuse F12	RD/BK
12 volt power supply to heating element (HI)	RD
12 volt power supply to heating element (LO)	GN
Heating element ground (to ground terminal BK3)	GY

Heated Passenger Grips Circuit Protection

CONDITION	CIRCUIT PROTECTION
Accessories relay (RY3) activated	Fuse 12

Testing the Rear Extension Harness Output Voltage

Remove the rear seat.

Underneath, disconnect the seat harness connector.

REAR EXTENSION HARNESS CONNECTOR		VOLTAGE (APPROXIMATE)
RD/BR wire	BK wire	12 Vdc

219100883-010-012

Testing the Passenger Grips Switch Output

If no element is heating up, carry out this test.

If only one element is heating up, verify the accessory harness wiring continuity and carry out *TESTING THE PASSENGER GRIPS HEATING ELEMENT*.

IMPORTANT: Make sure the switch power supply is good before carrying out this test.

Backprobe the switch connector and measure voltage as per following table.

HEAT LEVEL	HEATED ELEMENT CONNECTOR		VOLTAGE (APPROXIMATE)
HI	RD wire	GY wire	12 Vdc
LO	GN wire		12 Vdc

If voltage is out of specifications, replace the switch.

If voltage is good, verify seat harness wiring continuity.

Testing the Passenger Grips Heating Element

If only one element is heating up, carry out this test.

If no element is heating up, verify the accessory harness wiring continuity and carry out *TESTING THE PASSENGER GRIPS SWITCH OUTPUT*.

Remove the rear seat.

Underneath, disconnect the seat harness connector.

Separate the seat cushion from the base.

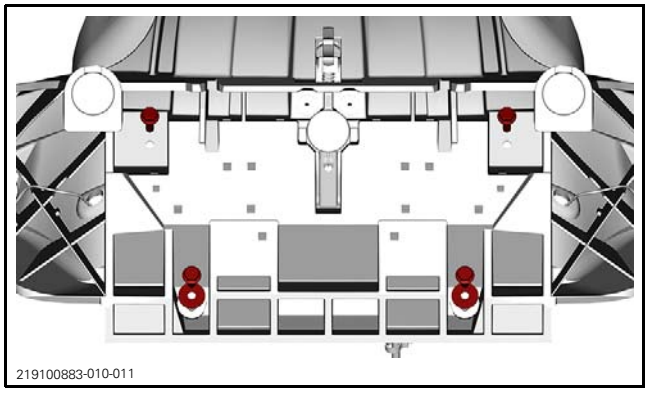

Disconnect the heating element connector.

Measure resistance as per following table.

GRIPS HEATING ELEMENT TEST		
HEATER WIRE		RESISTANCE @ 20°C (68°F)
GN	GY	13 to 17 Ω
RD		6 to 8 Ω

If the resistance is out of specification, replace the handhold.

HORN (IF EQUIPPED)

Horn Wire Identification

HORN SWITCH (IN MULTIFUNCTION SWITCH)		
FUNCTION	PIN	COLOR
12 volt input from fuse F10 (unswitched)	MG3-6	RD/WH
12 volt output to horn	MG3-4	BG/BK

HORN		
FUNCTION	PIN	COLOR
12 volt input from horn switch	2	BG/BK
Ground	1	BK

Horn Circuit Protection

CONDITION	CIRCUIT PROTECTION
Battery power (unswitched)	Fuse 10

WINCH (IF EQUIPPED)

Winch Wire Identification

WINCH RELAY		
FUNCTION	PIN	COLOR
12 volt input from battery (winch power)	BP4	RD
Ground (Wire)	SW4	BK
Ground (Cable)	BN4	BK
12 volt input from switch (IN)	SW1	GN/BU
12 volt input from switch (OUT)	SW2	LT BU
Motor power (switches polarity depending on rotation direction)	SW3	RD (with blue sleeve)
Motor power (switches polarity depending on rotation direction)	SW5	RD (with yellow sleeve)

NOTE: The small black wire at terminal SW4 connected to the diodes is used to prevent electric arcs in the switch. It can also be connected to BN4.

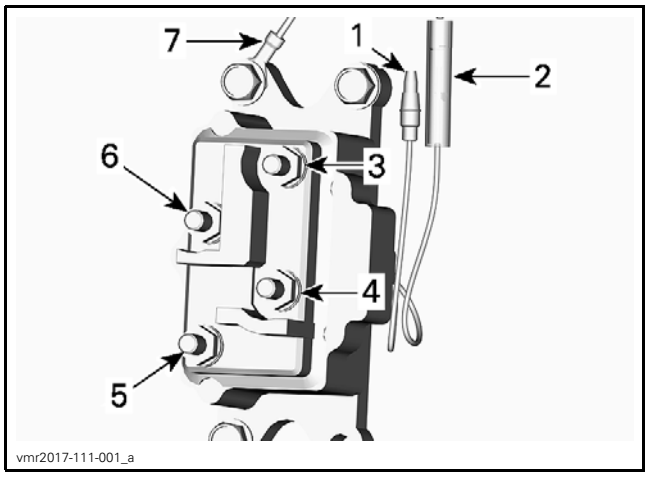

WINCH RELAY
1. *To GN / BU wire*
2. *To LT BU wire*
3. *To winch motor cable with BLUE sleeve*
4. *To BK ground cable*
5. *To winch motor cable with YELLOW sleeve*
6. *To RD positive cable*
7. *BK ground wire (can also be connected with the ground cable)*

WINCH SWITCH		
FUNCTION	PIN	COLOR
12 volt input from fuse 7	A	RD/BK
12 volt output to relay winding (IN)	C	GN/BU
12 volt output to relay winding (OUT)	B	LT BU

NOTICE **Before testing, make sure the winch is in FREESPOOL mode (Freespool clutch disengaged).**

Winch Relay Access

Remove the RH inner fender panel. Refer to *BODY* subsection.

Winch Switch Circuit Protection

CONDITION	CIRCUIT PROTECTION
Supplied when accessories relay RY3 is activated	F9 (iTC models) F7 (all others)

Winch Motor Circuit Protection

Two circuit breakers (50 A) are used to protect the winch motor in case of overheating.

Removing the Winch

1. Disconnect the battery BLACK (-) cable first, then the RED (+) cable.

NOTICE **Always respect this order for disassembly; disconnect BLACK (-) cable first.**

2. Remove the hook.
   2.1 Remove and discard the cotter pin.
   2.2 Remove the hook pin.

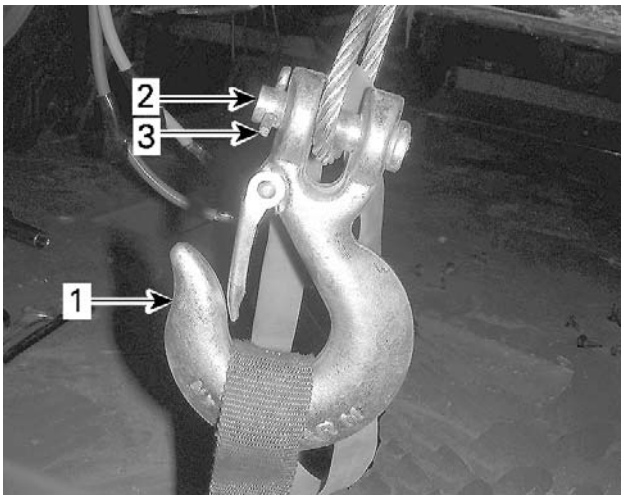

1. *Hook*
2. *Hook pin*
3. *Cotter pin*

3. Remove the winch cable fairlead.

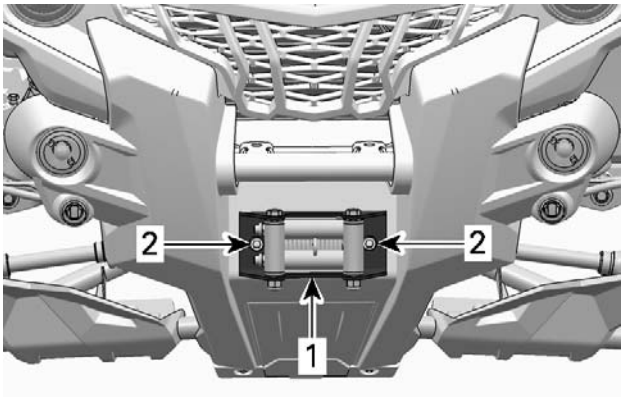

TYPICAL
1. *Winch fairlead*
2. *Fairlead retaining screws*

4. Remove the front skid plate.
5. Disconnect the turn signal lights and front marker lights (If equipped).

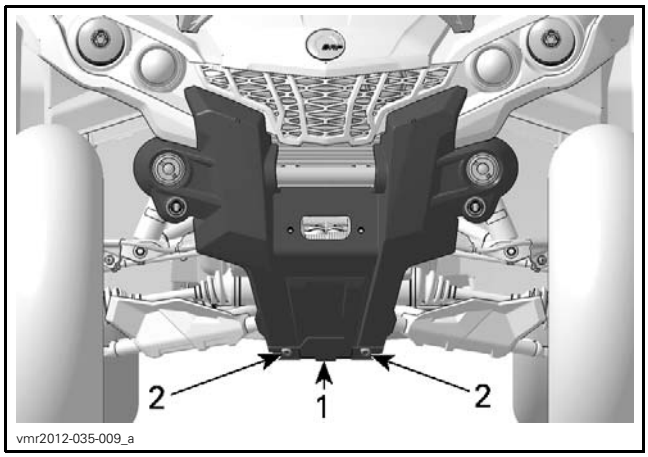

1. Front skid plate
2. Retaining screws

6. Disconnect both winch power cables.

NOTE: Note the position of the power cables for reinstallation.

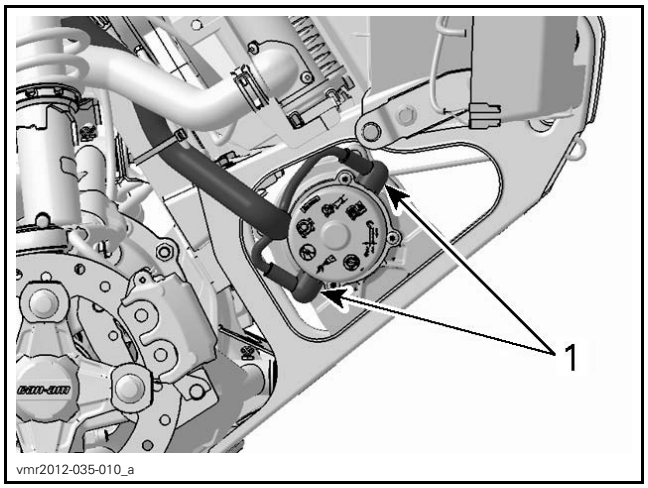

TYPICAL
1. Winch power cables

7. Remove the four winch retaining screws from the front bumper support.

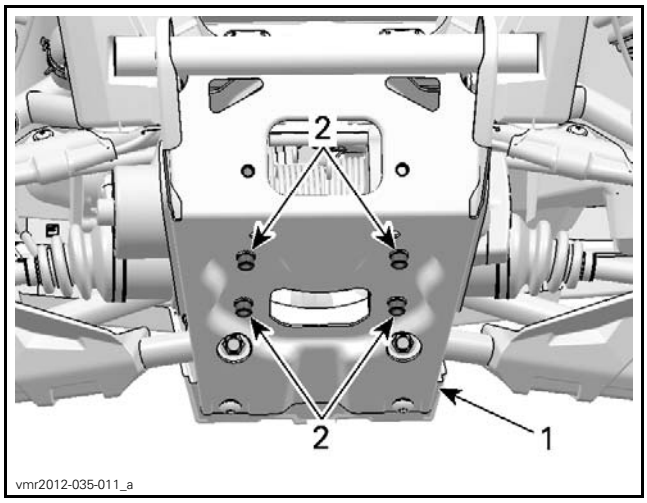

TYPICAL
1. Front bumper support
2. Winch retaining screws

8. Remove winch.

Installing the Winch

The installation is the reverse of the removal procedure. However, pay attention to the following.

Connect winch power cables as noted at removal.

NOTE: If the winch power cables are not connected correctly, the winch motor will operate in the reverse direction of selection.

TIGHTENING TORQUE	
Winch retaining screws	16 N•m ± 2 N•m (142 lbf•**in** ± 18 lbf•**in**)
Winch power cables	7 N•m ± .5 N•m (62 lbf•**in** ± 4 lbf•**in**)
Winch fairlead elastic nuts	16 N•m ± 2 N•m (142 lbf•**in** ± 18 lbf•**in**)

Install a **new** cotter pin on the hook pin.

WHEELS AND TIRES

SERVICE PRODUCTS

Description	Part Number	Page
LOCTITE 767 (ANTI-SEIZE LUBRICANT)	293 800 070	3

PROCEDURES

TIRES

⚠ WARNING

Do not rotate tires. The front and rear tires have a different size. Respect direction of rotation when applicable.

Tire Pressure

⚠ WARNING

Tire pressure greatly affects vehicle handling and stability. Insufficient pressure may cause tire to deflate and rotate on wheel. Excessive pressure may burst the tire. Always follow recommended pressure.

Check pressure when tires are **cold** before using the vehicle. Tire pressure changes with temperature and altitude. Recheck pressure if one of these conditions has changed.

Refer to *TECHNICAL SPECIFICATIONS* for tire pressure table.

Tire Inspection

Check tire for presence of slits, bulges, wear or other damage. Replace if necessary.

Tire Replacement

Use an automotive tire changer to replace tires.

⚠ WARNING

- **Replace tires only with the same type and size as original tires.**
- **For unidirectional tread pattern, ensure that the tires are installed in the correct direction of rotation.**

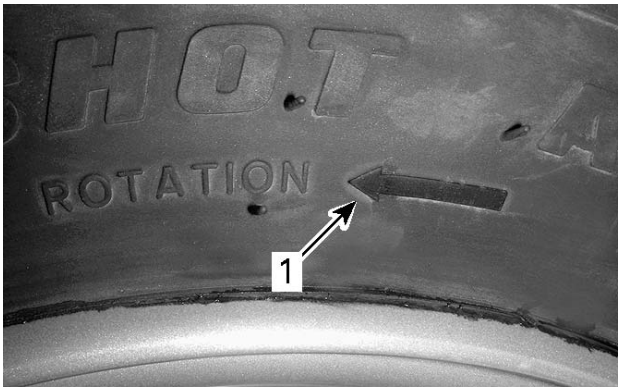

tmr2011-033-002_a

TYPICAL
1. Direction of rotation

Check for proper tire size

Tire Mounting on Beadlock Wheels

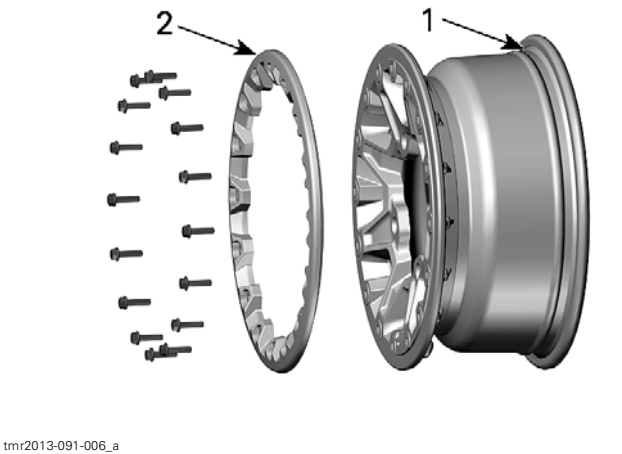

tmr2013-091-006_a

TYPICAL
1. Inner tire bead seat
2. Outer tire beadlock ring

NOTE: Tires should be mounted, by an experienced person, in accordance to good tire mounting practices using acceptable tire mounting equipment designed for the tire industry.

1. Mount the tire on wheel.
   - 1.1 On the opposite side of beadlock, apply the tire mounting lube on inner bead of tire and wheel to ensure proper seating when inflating.
   - 1.2 Mount the inner bead over the wheel.

NOTICE **Mount tire from beadlock side only.**

1.3 Seat the tire outer bead in the shoulder of the beadlock inner ring and center the tire.

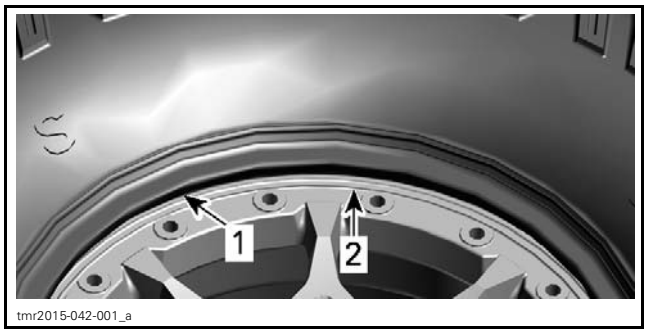

1. Tire outer bead
2. Beadlock inner ring shoulder

2. Install all beadlock screws. To avoid cross threading, start all screws by hand.

NOTICE **Do not use an impact wrench for installing beadlock screws. The risk of screw breaking or screw stripping is high when using an impact wrench.**

3. Tighten beadlock screws as per following specification and sequence.

NOTE: To ensure even pressure on the beadlock clamp ring, tighten screws **a few turns at a time**.

TIGHTENING TORQUE	
Beadlock screws (FIRST TORQUE)	3 N•m ± 1 N•m (27 lbf•**in** ± 9 lbf•**in**)

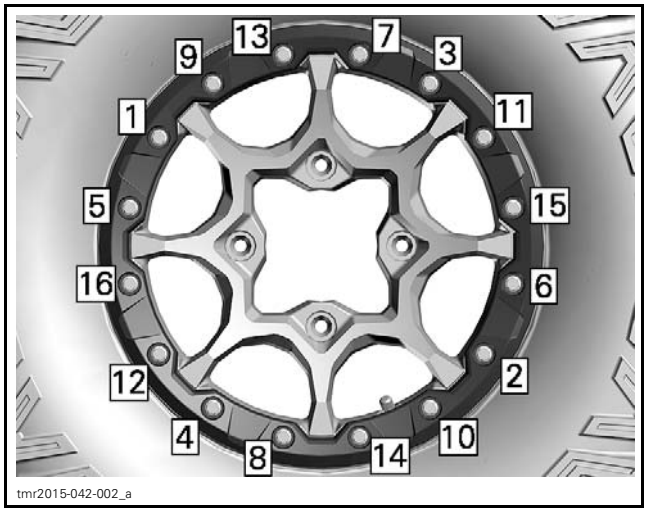

FIRST TIGHTENING SEQUENCE

4. At this time check if the tire is still centered on wheel. Reposition it if necessary.
5. Tighten beadlock screws as per the **second** torque using the same sequence.

TIGHTENING TORQUE	
Beadlock screws (SECOND TORQUE)	8 N•m ± 1 N•m (71 lbf•**in** ± 9 lbf•**in**)

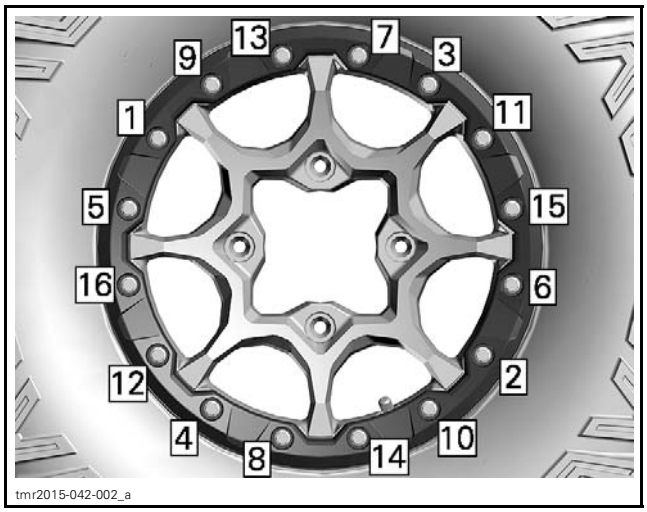

SECOND TIGHTENING SEQUENCE

NOTE: The beadlock clamp ring should be in contact with the beadlock inner ring. The beadlock clamp ring can flex slightly to match the tire bead. IT IS NORMAL.

6. Verify the gap between tire and beadlock clamp ring, it should be practically equal all around the ring.

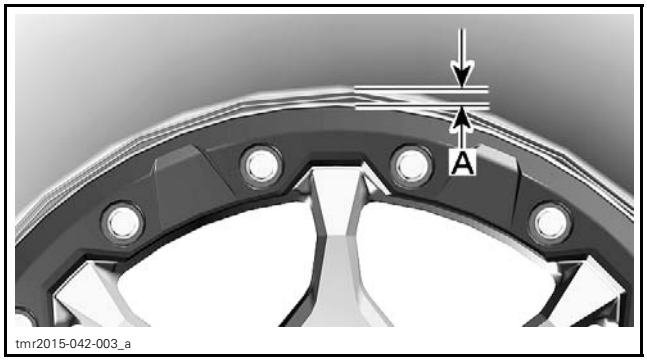

A. Gap equal all around beadlock clamp ring

If the gap is not acceptable:
- Loosen all screws.
- Check tire position on wheel and reposition it if necessary.
- Restart the tightening sequence as detailed.

7. Tighten beadlock screws a **final** time as per following specification and sequence.

TIGHTENING TORQUE	
Beadlock screws (FINAL TORQUE)	11 N•m ± 1 N•m (97 lbf•**in** ± 9 lbf•**in**)

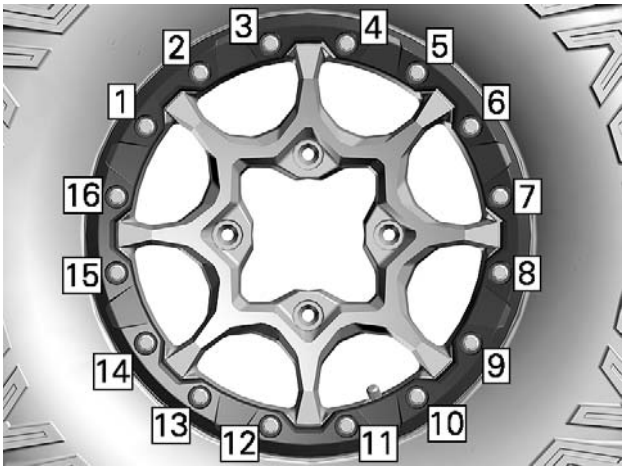

tmr2015-042-002_b

FINAL TIGHTENING SEQUENCE

8. Inflate tire to seat the inner bead on wheel. Always use safe practices, such as a tire safety cage.

⚠ WARNING

Never exceed tire recommended maximum pressure for seating beads.

WHEELS

Removing the Wheel

Loosen nuts just enough to be able to unscrew them once the vehicle will be off the ground.

Lift and support the vehicle. Refer to *INTRODUCTION* subsection.

Remove nuts, then remove wheel.

Inspecting the Wheel

Inspect wheel for wear or damage especially at the mounting holes.

Installing the Wheel

At installation it is recommended to apply anti-seize lubricant on conical area **only**.

SERVICE PRODUCT
LOCTITE 767 (ANTI-SEIZE LUBRICANT) (P/N 293 800 070)

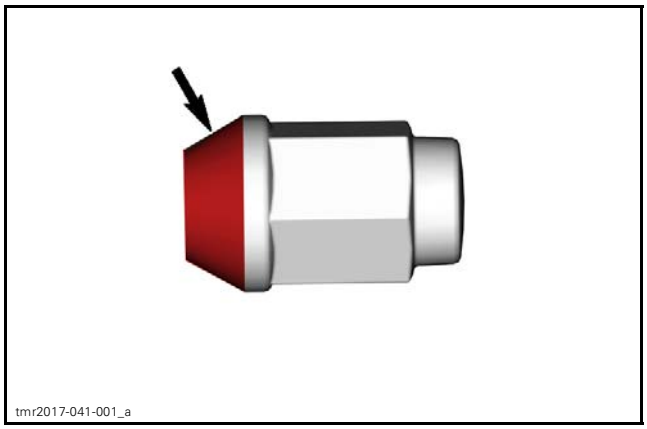
tmr2017-041-001_a

Check if tires are unidirectional.

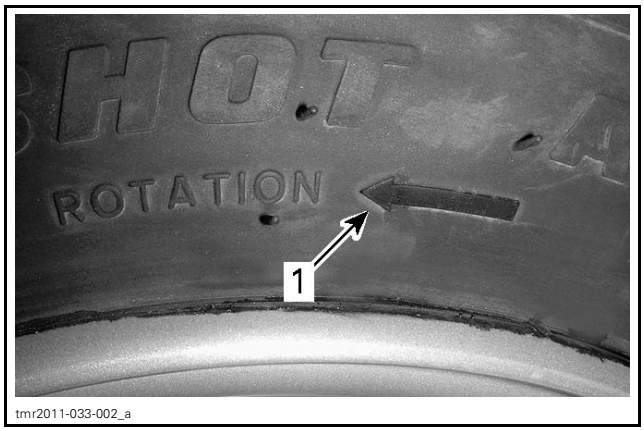

tmr2011-033-002_a

TYPICAL
1. Direction of rotation

Tighten wheel lug nuts to the specified torque using the illustrated sequence.

TIGHTENING TORQUE	
Wheel lug nuts	80 N•m ± 5 N•m (59 lbf•ft ± 4 lbf•ft)

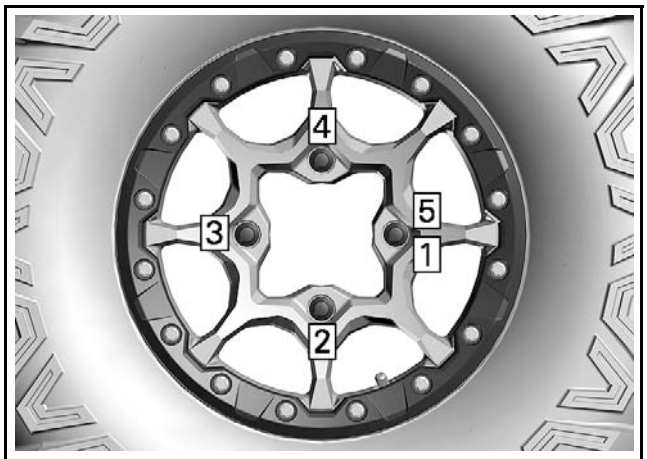

tmr2015-042-004_a

TIGHTENING SEQUENCE

NOTICE Always use the recommended wheel lug nuts for the type of wheel. Using a different lug nut could cause damages to the rim or studs.

ACCESSORIES

SERVICE PRODUCTS

Description	Part Number	Page
DEOXIT LUBRICANT	293 550 034	1
DIELECTRIC GREASE	293 550 004	1

GENERAL

NOTICE **It is recommended to always disconnect the battery when replacing any electric or electronic parts. Always disconnect battery exactly in the specified order, BLACK (-) cable first.**

TROUBLESHOOTING

DIAGNOSTIC TIPS

NOTE: It is a good practice to check for fault codes using BRP diagnostic software (BUDS2) as a first troubleshooting step. Refer to *COMMUNICATION TOOLS* subsection.

IMPORTANT: When troubleshooting an electrical system fault, check battery condition, cables and connections first.

Testing a Circuit

Check the related-circuit fuse condition with a fuse tester or test lamp (a visual inspection could lead to a wrong conclusion).

NOTE: If the electrical system is left activated for a certain period of time, the accessory relay will shut down. See *ACTIVATING THE ELECTRICAL SYSTEM* in this subsection for details.

Inspecting an Electrical Connection

When replacing an electric or electronic component, always check electrical connections. Make sure they are tight, make good contact, and are corrosion-free. Dirty, loose or corroded contacts are poor conductors and are often the source of a system or component malfunction.

Pay particular attention to ensure that pins are not bent or pushed out of their connectors.

Ensure all wire terminals are properly crimped on wires, and connector housings are properly fastened.

Check for signs of moisture, corrosion or dullness. Clean pins properly with DEOXIT LUBRICANT (P/N 293 550 034) and coat them with DIELECTRIC GREASE (P/N 293 550 004) or other appropriate lubricant when reassembling them, except if otherwise specified such as for the ECM connector.

Pay attention to ground wires.

For wiring harness connector locations, refer to *WIRING HARNESS AND CONNECTORS* subsection.

PROCEDURES

ACTIVATING THE ELECTRICAL SYSTEM

NOTICE **Activating the electrical system repeatedly or using electrical equipment will discharge the battery and you may not be able to start the engine.**

Turn the ignition key to the ON position

12 VOLT POWER OUTLET

Removing and Installing a 12 Volt Power Outlet

Remove the gauge support, refer to *GAUGE* in this subsection.

Unplug the connectors of the power outlet.

Unscrew the retaining nut.

Reverse procedure for installation.

12 Volt Power Outlet Wire Identification

FUNCTION	PIN	COLOR
12 volt input from fuse F3 (iTC equipped models)	2	RD/BN
12 volt input from fuse F12 (All others)		
Ground (to ground terminal BK3)	1	BK

12 Volt Power Outlet Circuit Protection

CONDITION	CIRCUIT PROTECTION
Supplied with accessories relay (RY3 for iTC equipped models, RY5 for all others) activated	Fusible link 2 (FL2)

HEATED VISOR CONNECTORS

Removing and Installing the Front Heated Visor Connector

Unscrew the cap from the connector.

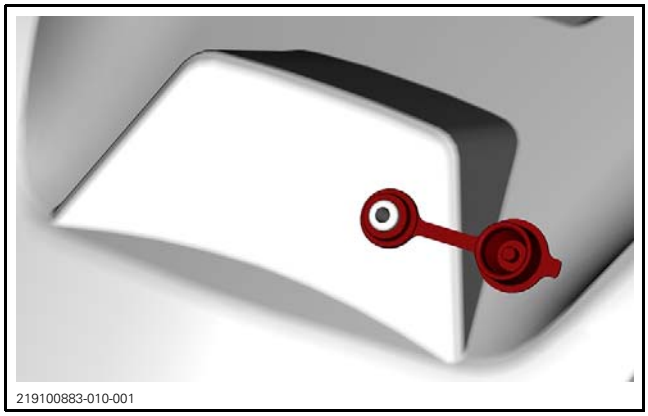

219100883-010-001

Refer to *GAUGE* and remove the gauge support.

Refer to *BODY* and remove:

– Windshield
– Console

Disconnect the other end of the harness from the accessory connector.

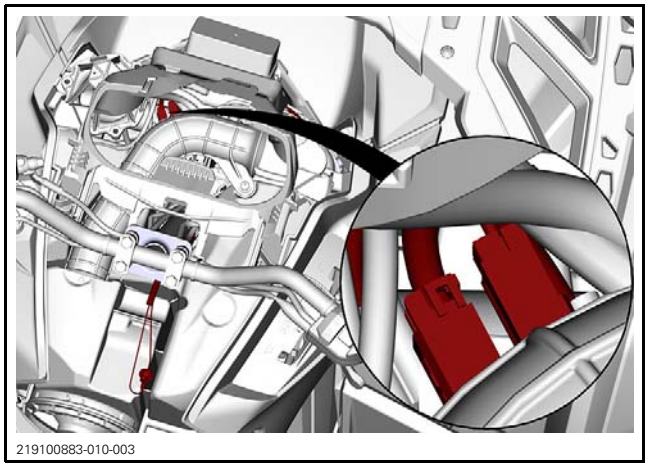

219100883-010-003

The installation is the reverse of the removal procedure, however, pay attention to the following.

Install the negative wire eyelet between the console and the connector body.

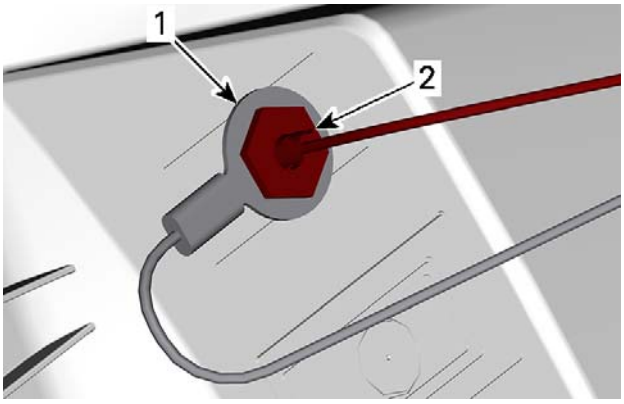

219100883-010-002_a

UNDERNEATH THE CONSOLE
1. Negative eyelet
2. Connector body

Removing and Installing the Rear Heated Visor Connector

Remove the rear seat.

Underneath, disconnect the seat harness connector.

Separate the seat cushion from the base.

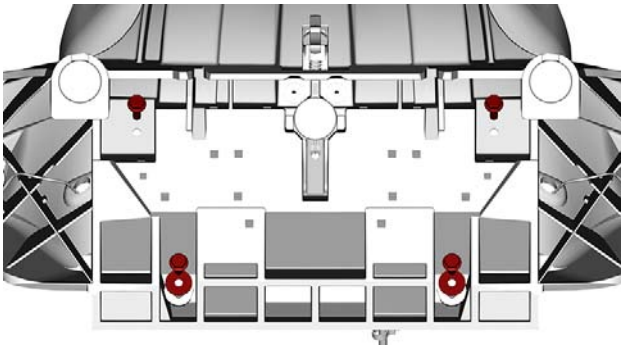

219100883-010-011

Remove the heated visor connector cap.

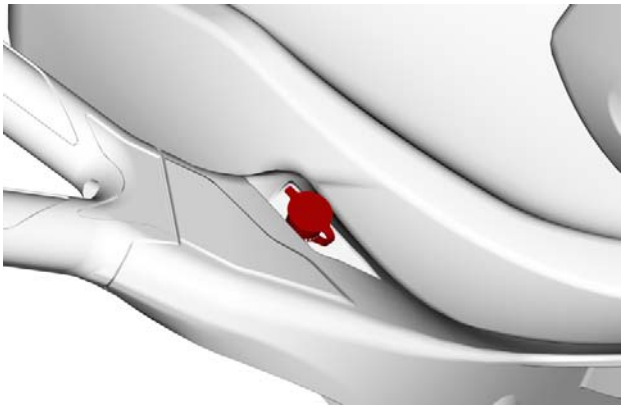

219100883-010-004

Cut the black wire near the eyelet.

Remove the heated visor connector from the handhold, then pass it through the openings.

Disconnect the wires from the seat harness.

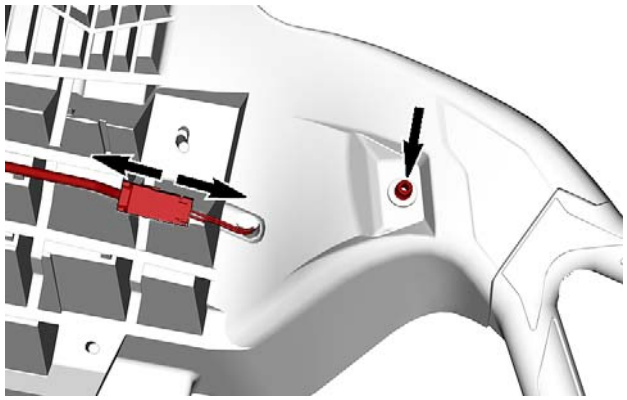

219100883-010-005_a

The installation is the reverse of the removal procedure, however, pay attention to the following.

Pass the wires through the openings, then crimp the new eyelet to the black wire.

Install the eyelet between the seat base and the connector body.

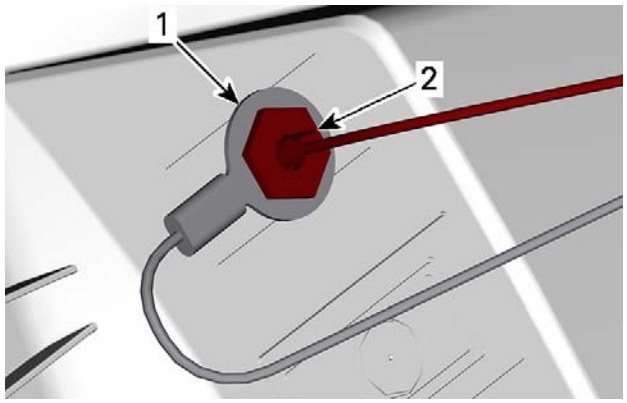

219100883-010-002_a

TYPICAL - UNDERNEATH THE SEAT BASE
1. Negative eyelet
2. Connector body

TIGHTENING TORQUE	
Seat cushion retaining screws	5 N•m ± 1 N•m (44 lbf•**in** ± 9 lbf•**in**)
Handhold retaining screws	25 N•m ± 3 N•m (18 lbf•ft ± 2 lbf•ft)

Heated Visor Connectors Wire Identification

The heated visor connectors are connected to the DC3 accessory connector through an extension harness.

To verify the extension Harness, refer to *TESTING THE REAR EXTENSION HARNESS OUTPUT VOLTAGE* in *HEATED PASSENGER GRIPS*.

FUNCTION	PIN	COLOR
12 volt power supply from fuse F3	Welded	RD/BN
Ground (to ground terminal BK3)	Eyelet	BK

Heated Visor Connectors Circuit Protection

CONDITION	CIRCUIT PROTECTION
Accessories relay (RY3) activated	Fuse 3

HEATED THROTTLE LEVER

Removing and Installing the Heated Throttle Lever

Refer to *GAUGE* and remove the gauge support.

Refer to *BODY* and remove:
– Windshield
– Console

Remove the air intake tube retaining screw.

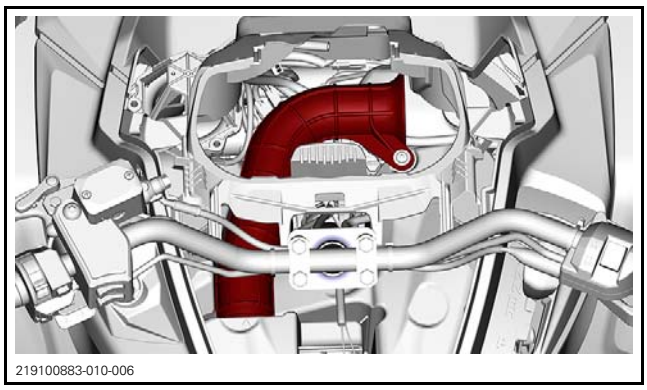

219100883-010-006

Move the air intake tube aside, and disconnect the throttle lever wires from the accessories connector.

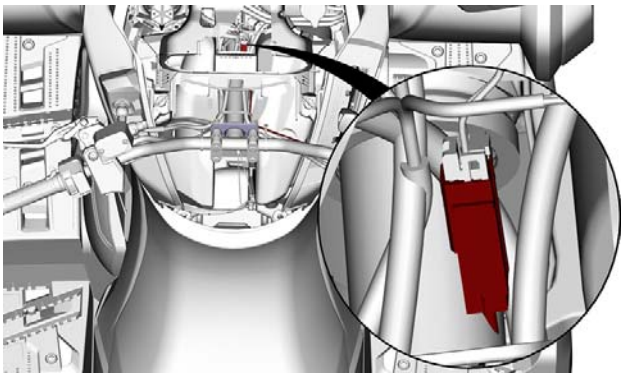
219100883-010-009

Note the wire routing and cable ties position.

Cut the cable ties.

Refer to *STEERING SYSTEM* and remove the throttle lever.

The installation is the reverse of the removal procedure, however, pay attention to the following.

TIGHTENING TORQUE	
Air intake tube retaining screw	1.6 N•m ± 0.4 N•m (14 lbf•**in** ± 4 lbf•**in**)

Heated Throttle Lever Wire Identification

The throttle lever heated element is connected to a switch which is to connected to connector DC5.

FUNCTION	PIN	COLOR
12 volt power supply to switch from fuse F4 (iTC equipped models)	B	RD/VT
12 volt power supply to switch from fuse F12 (450 engine)		
12 volt power supply to switch from fuse F14 (all others)		
Switch ground (to ground terminal BK3)	A	BK
Positive power supply to heating element (variable voltage)	2 Throttle lever side	OR
Heating element ground	1 Throttle lever side	BK

Heated Throttle Lever Circuit Protection

CONDITION	CIRCUIT PROTECTION
Accessories relay (RY5) activated (iTC equipped models)	F4
Accessories relay (RY3) activated (all others)	F12 (450 engine) F14 (all others)

Testing the Throttle Lever Heating Element

Refer to *REMOVING AND INSTALLING THE HEATED THROTTLE LEVER* for connector access.

Disconnect the heating element connector.

Measure the heating element resistance as per following table.

THROTTLE LEVER HEATING ELEMENT TEST		
HEATER WIRE		RESISTANCE @ 20°C (68°F)
OR	BK	21 to 26 Ω

If the resistance is out of specification, replace the throttle lever.

If resistance is good, carry out *TESTING THE THROTTLE LEVER HEATING ELEMENT INPUT VOLTAGE*.

Testing the Throttle Lever Heating Element Input Voltage

IMPORTANT: Make sure the switch power supply and ground are good before carrying out this test.

Refer to *REMOVING AND INSTALLING THE HEATED THROTTLE LEVER* for connector access.

Activate the electrical system or start engine.

Backprobe the heating element connector and measure voltage as per following table.

HEATING ELEMENT CONNECTOR		SELECTED HEAT LEVEL	VOLTAGE (APPROXIMATE)
OR wire	BK wire	1	3 to 3.5 Vdc
		2	6 to 7 Vdc
		3	9 to 10.5 Vdc
		4	12 to 14 Vdc

If voltage is out of specifications, replace the switch.

HEATED HANDLEBAR GRIPS

Removing and Installing the Heated Handlebar Grips

Refer to *BODY* and remove:

– Windshield
– Console
– Gauge support

Disconnect the heated grip wires from the switch harness.

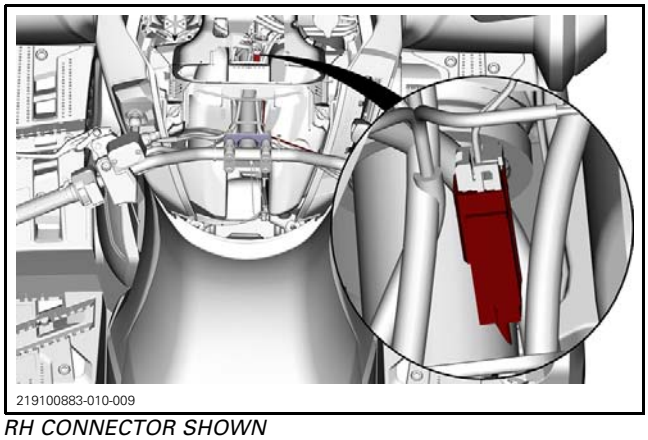

RH CONNECTOR SHOWN

Note the wire routing and cable ties position.

Cut the cable ties.

On the LH side, split the multifunction switch.

Remove the handlebar tip.

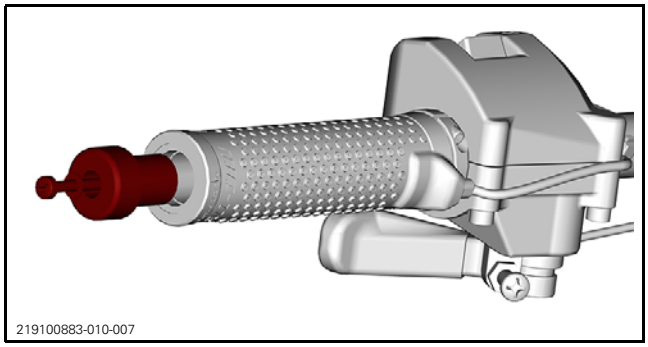

Loosen the grip clamping screw.

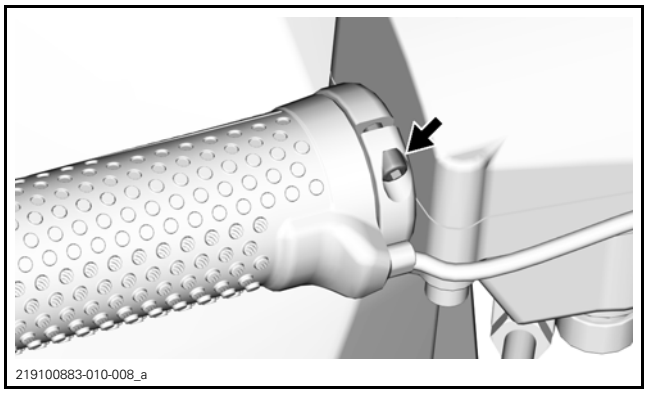

Remove the grip.

NOTE: If the grip does not come off, cut it lengthwise.

The installation is the reverse of the removal procedure, however, pay attention to the following.

TIGHTENING TORQUE	
Clamping screw	4.5 N•m ± 0.5 N•m (40 lbf•**in** ± 4 lbf•**in**)
Handlebar tip screw	0.4 N•m ± 0.1 N•m (4 lbf•**in** ± 1 lbf•**in**)

Heated Handlebar Grips Wire Identification

The heated handlebar grips switch is connected to connector DC5.

FUNCTION	PIN	COLOR
12 volt power supply to switch from fuse F4 (iTC equipped models)	B	WH
12 volt power supply to switch from fuse F12 (450 engine)		
12 volt power supply to switch from fuse F14 (all others)		
Switch ground (to ground terminal BK3)	A	BK
Positive power supply to heating element (variable voltage)	2 Switch side	RD
Heating element ground	1 Switch side	BK

Heated Handlebar Grips Circuit Protection

CONDITION	CIRCUIT PROTECTION
Accessories relay (RY5) activated (iTC equipped models)	F4
Accessories relay (RY3) activated (all others)	F12 (450 engine) Fuse 14 (all others)

Testing the Handlebar Grips Heating Element

If only one element is heating up, carry out this test.

If no element is heating up, carry out *TESTING THE HEATED HANDLEBAR GRIPS INPUT VOLTAGE*.

Refer to *REMOVING AND INSTALLING THE HEATED HANDLEBAR GRIPS* for connector access.

Disconnect the heating element connector.

Measure resistance as per following table.

GRIPS HEATING ELEMENT TEST		
HEATER WIRE		RESISTANCE @ 20°C (68°F)
RD	BK	8.5 to 10.5 Ω

If the resistance is out of specification, replace the grip.

If resistance is good, verify the accessory harness wiring continuity.

Testing the Heated Handlebar Grips Input Voltage

If no element is heating up, carry out this test.

If only one element is heating up, verify the accessory harness wiring continuity and carry out *TESTING THE HANDLEBAR GRIPS HEATING ELEMENT*.

IMPORTANT: Make sure the switch power supply and ground are good before carrying out this test.

Refer to *REMOVING AND INSTALLING THE HEATED HANDLEBAR GRIPS* for connector access.

Activate the electrical system or start engine.

Backprobe the heating element connector and measure voltage as per following table.

HEATING ELEMENT CONNECTOR		SELECTED HEAT LEVEL	VOLTAGE (APPROXIMATE)
OR wire	BK wire	1	3 to 3.5 Vdc
		2	6 to 7 Vdc
		3	9 to 10.5 Vdc
		4	12 to 14 Vdc

If voltage is out of specifications, replace the switch.

HEATED PASSENGER GRIPS

Removing and Installing the Heated Passenger Grips

Remove the rear seat.

Underneath, disconnect the seat harness connector.

Separate the seat cushion from the base.

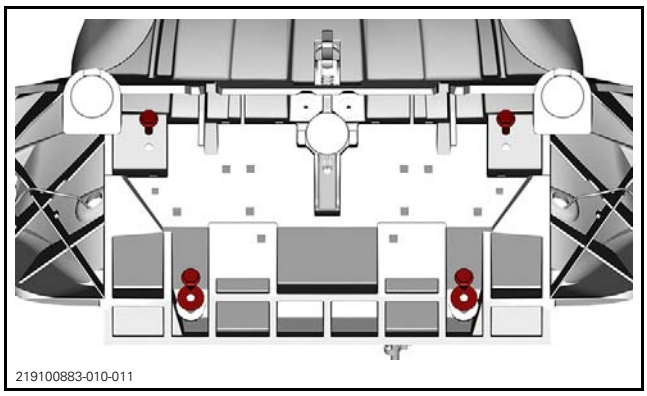

Note the wire routing.

Disconnect the wires from the seat harness.

Cut the heating element wires (on the handhold side).

Remove the handhold retaining screw.

Remove the handhold from the seat base.

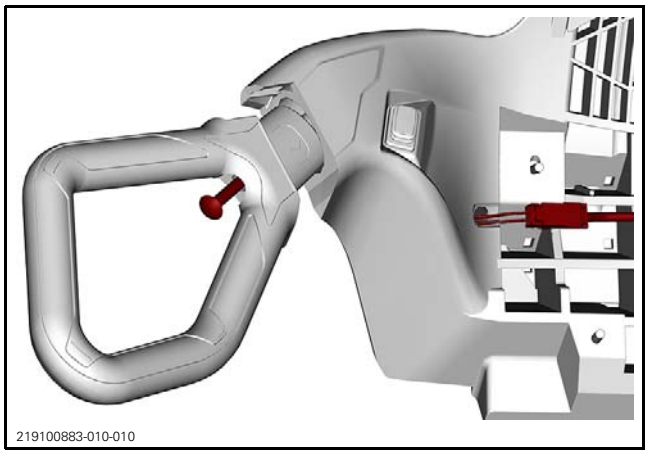
219100883-010-010

The installation is the reverse of the removal procedure, however, pay attention to the following.

Once the wires are passed through the opening, insert and lock the terminals in the connector housing as per following table.

WIRE	CONNECTOR HOUSING PIN
GY	1
GN	2
RD	3

TIGHTENING TORQUE	
Seat cushion retaining screws	5 N•m ± 1 N•m (44 lbf•**in** ± 9 lbf•**in**)
Handhold retaining screws	25 N•m ± 3 N•m (18 lbf•ft ± 2 lbf•ft)

Heated Passenger Grips Wire Identification

The heated passenger grips connector is connected to the DC3 accessory connector through an extension harness.

FUNCTION	COLOR
12 volt power supply to switch from fuse F12	RD/BK
12 volt power supply to heating element (HI)	RD
12 volt power supply to heating element (LO)	GN
Heating element ground (to ground terminal BK3)	GY

Heated Passenger Grips Circuit Protection

CONDITION	CIRCUIT PROTECTION
Accessories relay (RY3) activated	Fuse 12

Testing the Rear Extension Harness Output Voltage

Remove the rear seat.

Underneath, disconnect the seat harness connector.

REAR EXTENSION HARNESS CONNECTOR		VOLTAGE (APPROXIMATE)
RD/BR wire	BK wire	12 Vdc

219100883-010-012

Testing the Passenger Grips Switch Output

If no element is heating up, carry out this test.

If only one element is heating up, verify the accessory harness wiring continuity and carry out *TESTING THE PASSENGER GRIPS HEATING ELEMENT*.

IMPORTANT: Make sure the switch power supply is good before carrying out this test.

Backprobe the switch connector and measure voltage as per following table.

HEAT LEVEL	HEATED ELEMENT CONNECTOR		VOLTAGE (APPROXIMATE)
HI	RD wire	GY wire	12 Vdc
LO	GN wire		12 Vdc

If voltage is out of specifications, replace the switch.

If voltage is good, verify seat harness wiring continuity.

Testing the Passenger Grips Heating Element

If only one element is heating up, carry out this test.

If no element is heating up, verify the accessory harness wiring continuity and carry out *TESTING THE PASSENGER GRIPS SWITCH OUTPUT*.

Remove the rear seat.

Underneath, disconnect the seat harness connector.

Separate the seat cushion from the base.

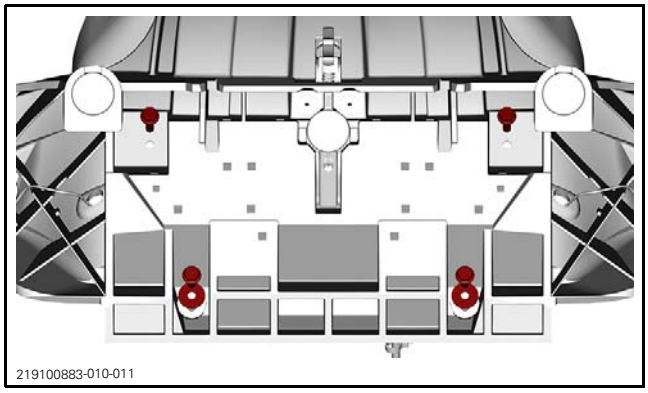

Disconnect the heating element connector.

Measure resistance as per following table.

GRIPS HEATING ELEMENT TEST		
HEATER WIRE		RESISTANCE @ 20°C (68°F)
GN	GY	13 to 17 Ω
RD		6 to 8 Ω

If the resistance is out of specification, replace the handhold.

HORN (IF EQUIPPED)

Horn Wire Identification

HORN SWITCH (IN MULTIFUNCTION SWITCH)		
FUNCTION	PIN	COLOR
12 volt input from fuse F10 (unswitched)	MG3-6	RD/WH
12 volt output to horn	MG3-4	BG/BK

HORN		
FUNCTION	PIN	COLOR
12 volt input from horn switch	2	BG/BK
Ground	1	BK

Horn Circuit Protection

CONDITION	CIRCUIT PROTECTION
Battery power (unswitched)	Fuse 10

WINCH (IF EQUIPPED)

Winch Wire Identification

WINCH RELAY		
FUNCTION	PIN	COLOR
12 volt input from battery (winch power)	BP4	RD
Ground (Wire)	SW4	BK
Ground (Cable)	BN4	BK
12 volt input from switch (IN)	SW1	GN/BU
12 volt input from switch (OUT)	SW2	LT BU
Motor power (switches polarity depending on rotation direction)	SW3	RD (with blue sleeve)
Motor power (switches polarity depending on rotation direction)	SW5	RD (with yellow sleeve)

NOTE: The small black wire at terminal SW4 connected to the diodes is used to prevent electric arcs in the switch. It can also be connected to BN4.

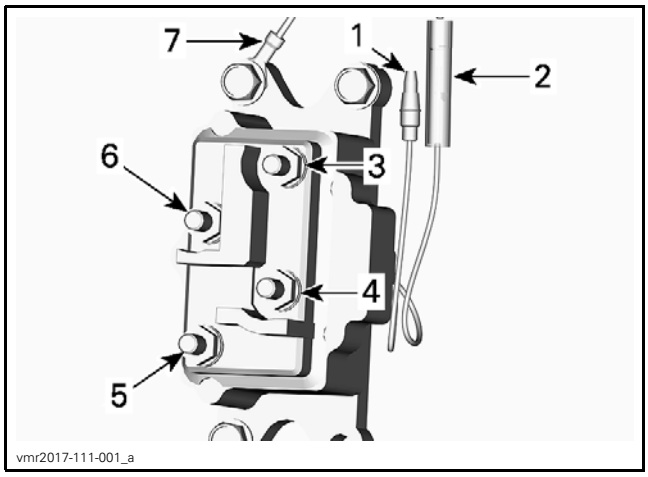

WINCH RELAY
1. *To GN / BU wire*
2. *To LT BU wire*
3. *To winch motor cable with BLUE sleeve*
4. *To BK ground cable*
5. *To winch motor cable with YELLOW sleeve*
6. *To RD positive cable*
7. *BK ground wire (can also be connected with the ground cable)*

WINCH SWITCH		
FUNCTION	PIN	COLOR
12 volt input from fuse 7	A	RD/BK
12 volt output to relay winding (IN)	C	GN/BU
12 volt output to relay winding (OUT)	B	LT BU

NOTICE **Before testing, make sure the winch is in FREESPOOL mode (Freespool clutch disengaged).**

Winch Relay Access

Remove the RH inner fender panel. Refer to *BODY* subsection.

Winch Switch Circuit Protection

CONDITION	CIRCUIT PROTECTION
Supplied when accessories relay RY3 is activated	F9 (iTC models) F7 (all others)

Winch Motor Circuit Protection

Two circuit breakers (50 A) are used to protect the winch motor in case of overheating.

Removing the Winch

1. Disconnect the battery BLACK (-) cable first, then the RED (+) cable.

NOTICE **Always respect this order for disassembly; disconnect BLACK (-) cable first.**

2. Remove the hook.
   2.1 Remove and discard the cotter pin.
   2.2 Remove the hook pin.

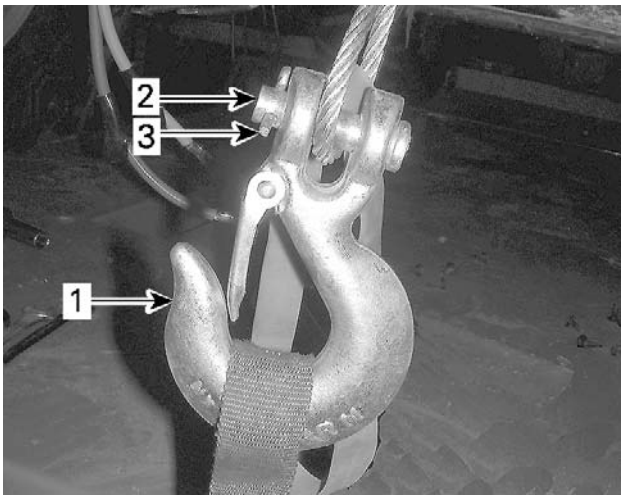

1. *Hook*
2. *Hook pin*
3. *Cotter pin*

3. Remove the winch cable fairlead.

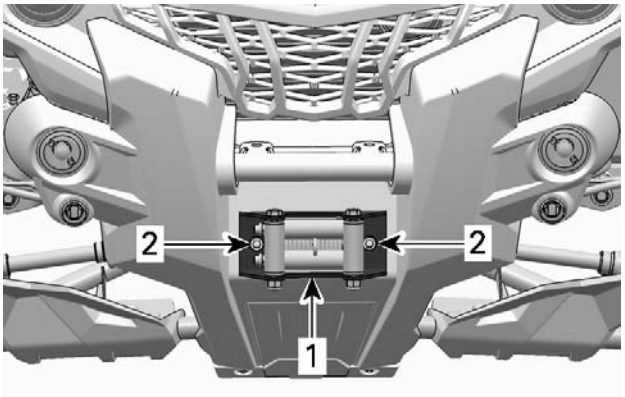

TYPICAL
1. *Winch fairlead*
2. *Fairlead retaining screws*

4. Remove the front skid plate.
5. Disconnect the turn signal lights and front marker lights (If equipped).

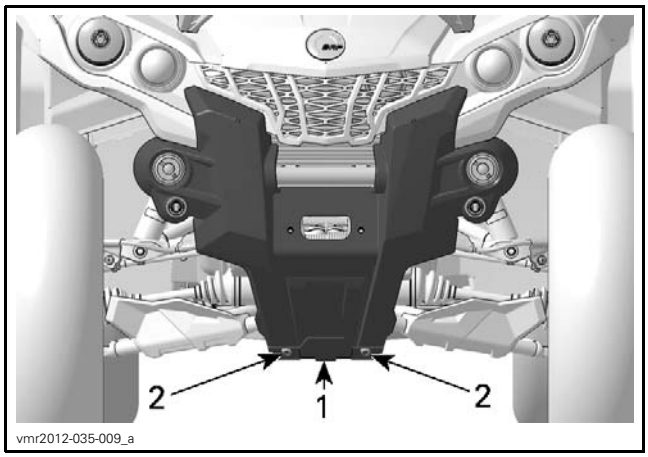

1. Front skid plate
2. Retaining screws

6. Disconnect both winch power cables.

NOTE: Note the position of the power cables for reinstallation.

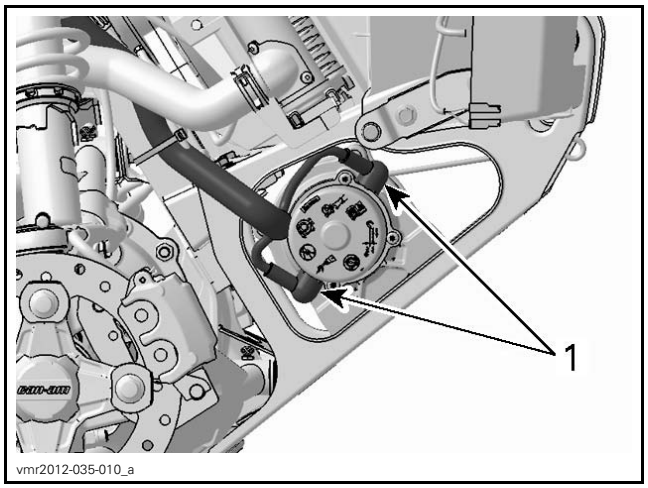

TYPICAL
1. Winch power cables

7. Remove the four winch retaining screws from the front bumper support.

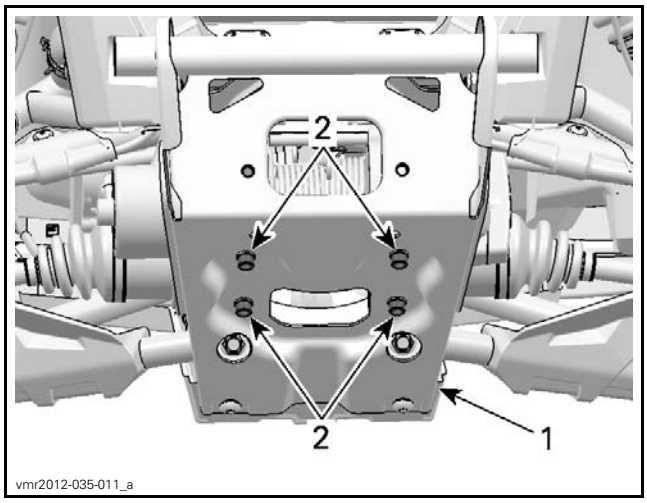

TYPICAL
1. Front bumper support
2. Winch retaining screws

8. Remove winch.

Installing the Winch

The installation is the reverse of the removal procedure. However, pay attention to the following.

Connect winch power cables as noted at removal.

NOTE: If the winch power cables are not connected correctly, the winch motor will operate in the reverse direction of selection.

TIGHTENING TORQUE	
Winch retaining screws	16 N•m ± 2 N•m (142 lbf•**in** ± 18 lbf•**in**)
Winch power cables	7 N•m ± .5 N•m (62 lbf•**in** ± 4 lbf•**in**)
Winch fairlead elastic nuts	16 N•m ± 2 N•m (142 lbf•**in** ± 18 lbf•**in**)

Install a **new** cotter pin on the hook pin.

FRONT DRIVE (MODELS WITH ABS)

SERVICE TOOLS

Description	Part Number	Page
BACKLASH MEASUREMENT TOOL	529 035 665	7
CV BOOT CLAMP PLIER	529 036 120	5
CV JOINT EXTRACTOR	529 036 005	5
SPANNER SOCKET	529 035 649	9

Midwest Manuals
Green Manuals
Paperless Manuals
For a Better Tomorrow
www.green-manuals.com

SERVICE PRODUCTS

If you bought this manual from any other seller please leave them NEGATIVE feedback and notify me at bestshopmanuals@gmail.com

Description	Part Number	Page
LOCTITE 277	293 800 073	11
LOCTITE 648 (GREEN)	413 711 400	13
XPS SYNTHETIC GREASE	293 550 010	5, 11–12

FRONT DRIVE SHAFTS AND FRONT PROPELLER SHAFT

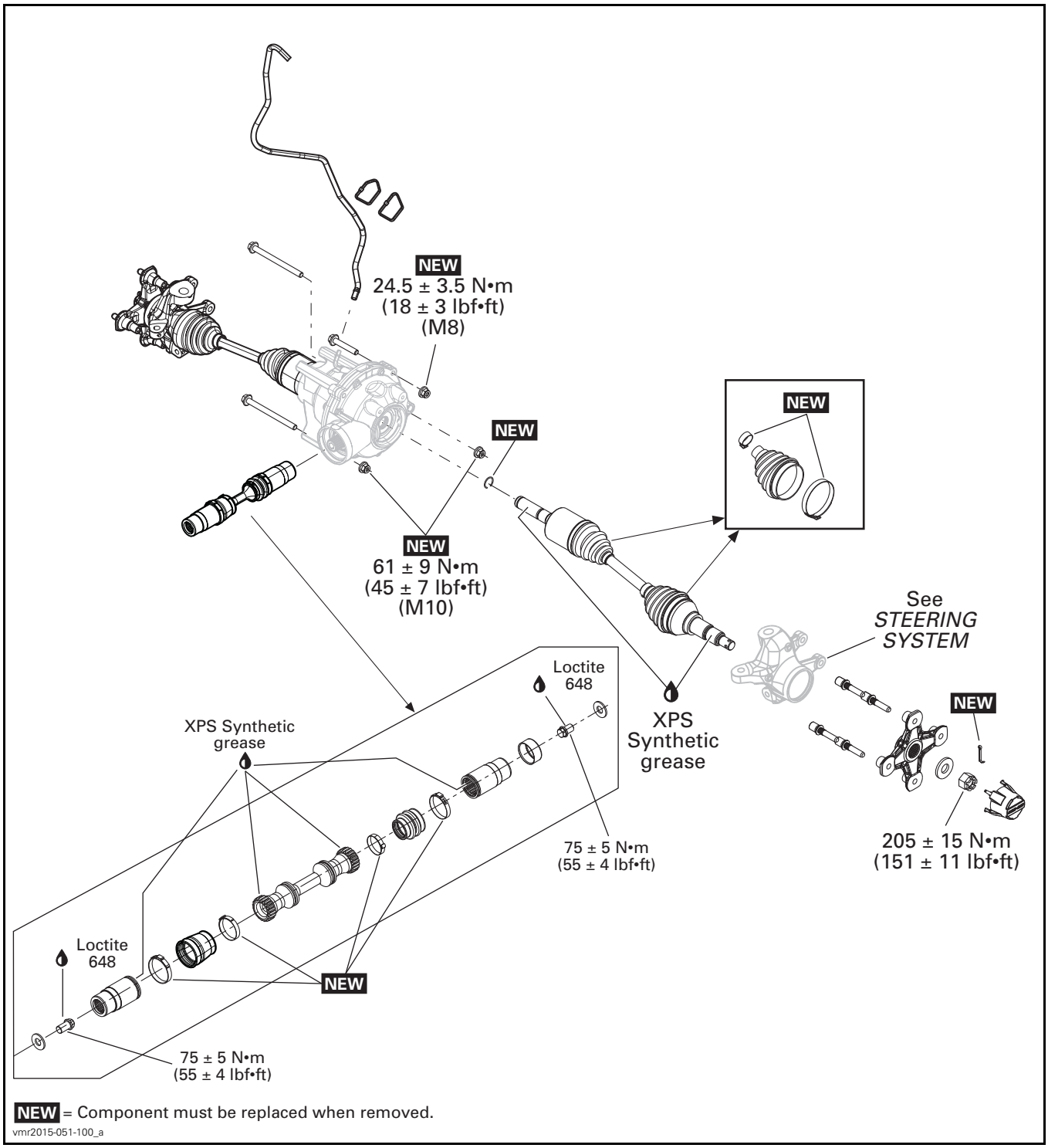

FRONT DIFFERENTIAL

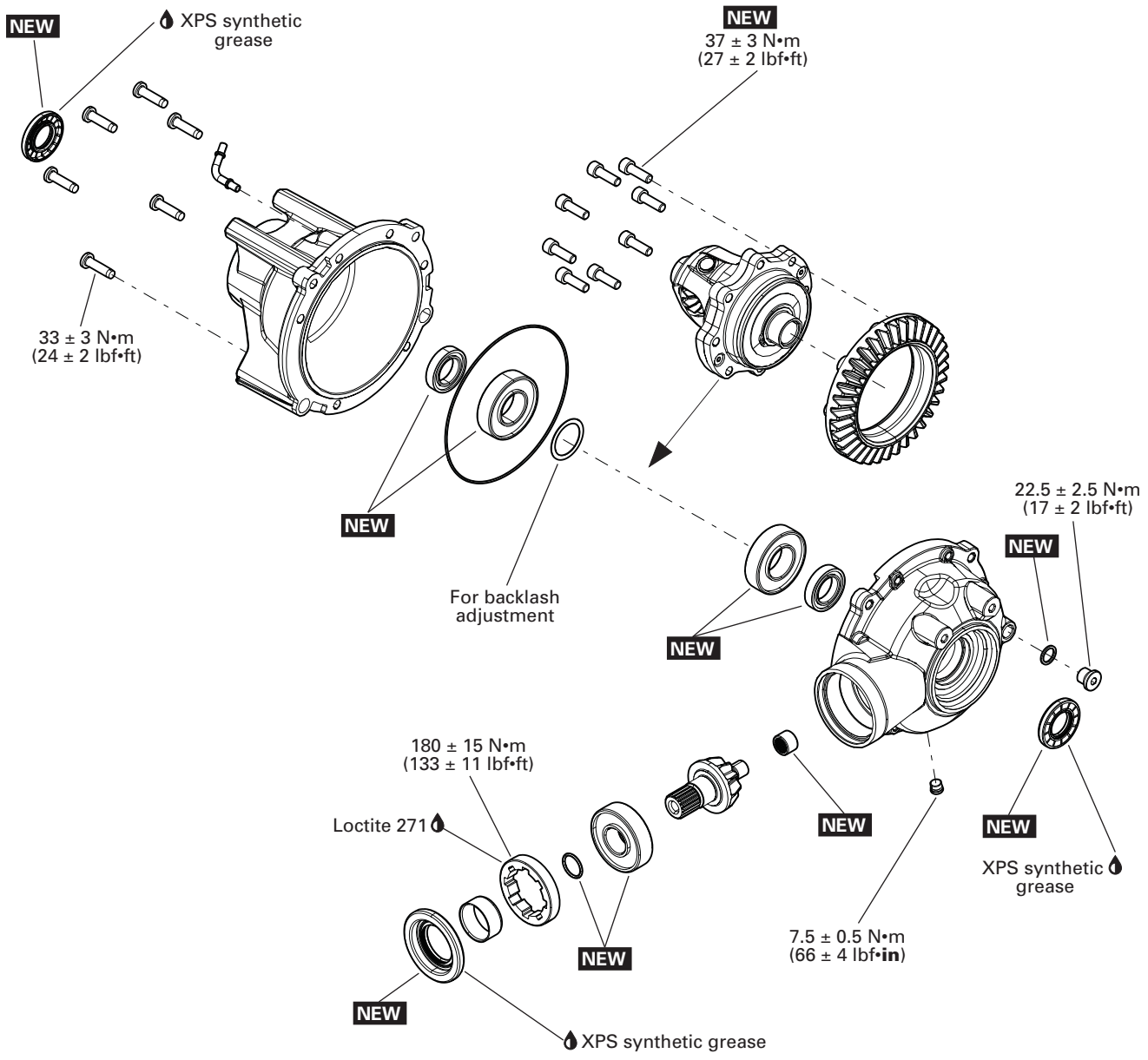

NEW = Component must be replaced when removed.

vmr2015-051-101_a

GENERAL

The procedure explained below is the same for the RH and LH sides unless otherwise instructed.

PROCEDURES

WHEEL HUB

Removing the Wheel Hub

Lift and support vehicle.

Select the 4WD position and place the transmission lever on "P".

Remove caliper from knuckle. Refer to *BRAKES* subsection.

Remove the following parts:
- Wheel cap
- Cotter pin
- Castellated nut
- Belleville washer.

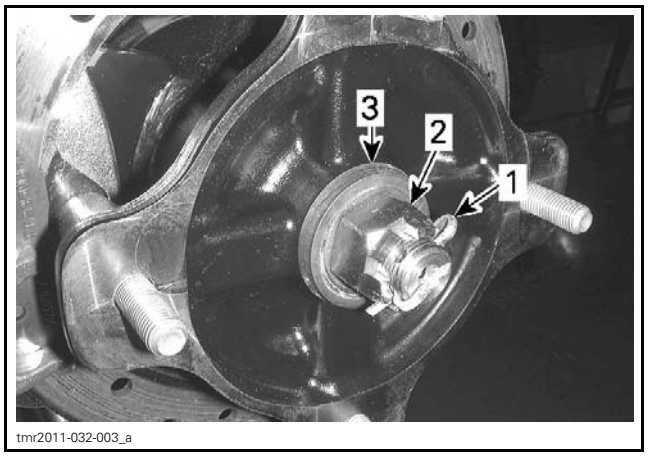

tmr2011-032-003_a

TYPICAL
1. *Cotter pin*
2. *Castellated nut*
3. *Belleville washer*

Remove wheel hub.

Inspecting the Wheel Hub

Check wheel hub for cracks or other damages.

Check inner splines for wear or other damages.

If any damage is detected on wheel hub, replace it with a new one.

Installing the Wheel Hub

The installation is the reverse of the removal procedure. However, pay attention to the following.

Install Belleville washer with its convex side outwards.

Tighten castellated nut to specification.

TIGHTENING TORQUE	
Castellated nut	205 N•m ± 15 N•m (151 lbf•ft ± 11 lbf•ft)

NOTE: Tighten further castellated nut if required to align grooves with drive shaft hole.

Install a **NEW** cotter pin.

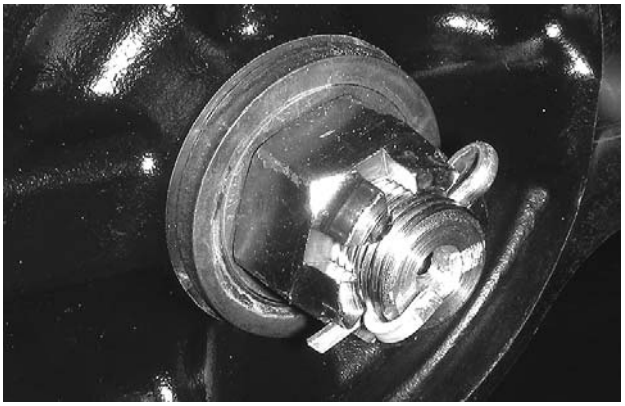
tmr2011-032-005

FRONT DRIVE SHAFT

Removing the Front Drive Shaft

Lift and support vehicle.

Remove inner fender panel(s). Refer to *BODY* subsection.

Remove the *KNUCKLE*. Refer to *STEERING SYSTEM* subsection.

Remove shock absorber lower bolt.

Lift and attach the following parts to make room.
- Shock absorber
- Upper suspension arm.

Remove the wheel speed sensor support and set aside.

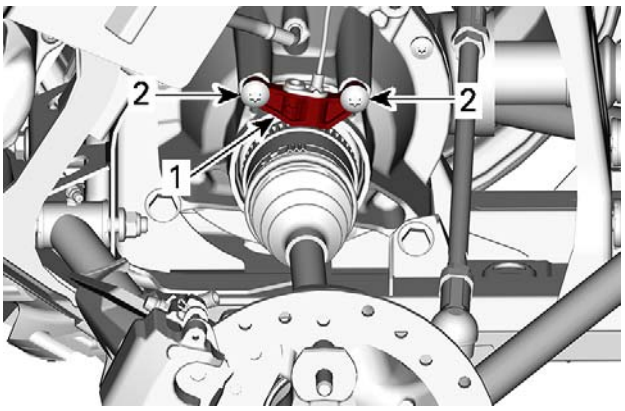

219100881-032-001_a

1. *Wheel speed sensor support*
2. *Wheel speed sensor support retaining screws*

Strongly pull drive shaft out of differential .

vmr2012-036-002_a

TYPICAL - PULL DRIVE SHAFT

Discard the stop ring at the end of the shaft.

Inspecting the Front Drive Shaft

Inspect the condition of boots. If there is any damage or evidence of leaking lubricant, replace them. Refer to *DRIVE SHAFT BOOT* in this subsection.

Check splines for excessive wear. Replace if necessary.

NOTE: If the splines on plunging joint are worn, a check of differential inner splines should be done.

Installing the Front Drive Shaft

The installation is the reverse of the removal procedure. However, pay attention to the following.

Install a NEW stop ring.

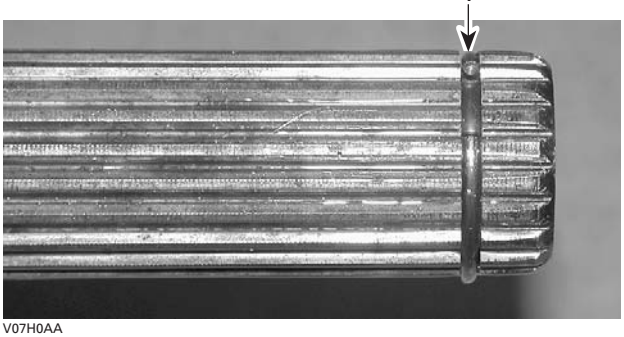

V07H0AA

TYPICAL
1. Stop ring

Apply XPS SYNTHETIC GREASE (P/N 293 550 010) on the splines.

Tighten the wheel speed sensor to specification.

TIGHTENING TORQUE	
Wheel speed sensor support screw	13.5 N•m ± 1.5 N•m (119 lbf•**in** ± 13 lbf•**in**)

DRIVE SHAFT BOOT

Removing the Drive Shaft Boot

Remove *FRONT DRIVE SHAFT*. See procedure in this subsection.

Remove drive shaft boot clamps.

REQUIRED TOOL
CV BOOT CLAMP PLIER (P/N 529 036 120)

529036120

Dislodge the large end of the boot.

Separate the joint from the shaft. Two procedures can be done.

Without the Special Tool

Clamp joint housing in a vise.

Align shaft with joint.

Pull hard on shaft to remove from joint.

Remove boot from drive shaft.

Remove and discard the circlip. A new one is included in the boot kit.

With the Special Tool

Place drive shaft in vice with the joint downward.

Install the tool on bearing.

REQUIRED TOOL
CV JOINT EXTRACTOR (P/N 529 036 005)

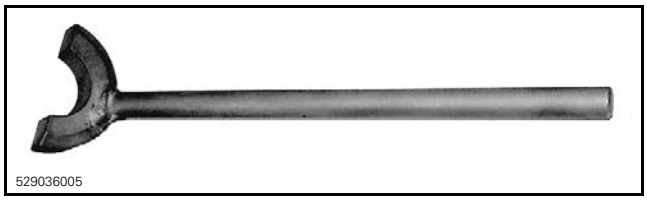
529036005

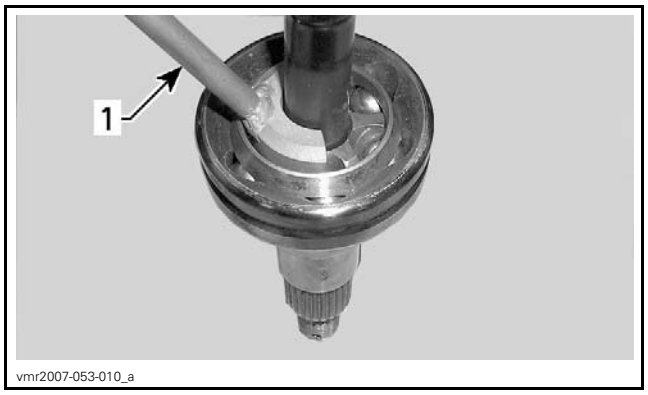

TYPICAL — CV JOINT SHOWN
1. Joint extractor tool

With an hammer, hit on the tool to separate joint from shaft.

When joint and shaft are separated, remove boot from drive shaft.

Remove and discard the circlip. A new one is included in the boot kit.

Installing the Drive Shaft Boot

The installation is the reverse of the removal procedure. However, pay attention to the following.

Install the **NEW** circlip.

Pack bearing area with grease (included with the new boot kit).

NOTE: Do not use or add other grease.

Install **NEW** drive shaft boot clamps.

FRONT DIFFERENTIAL

Removing the Front Differential

1. Drain front differential. Refer to *PERIODIC MAINTENANCE PROCEDURES* subsection.
2. Remove both front drive shafts. Refer to *FRONT DRIVE SHAFT* in this subsection.
3. Detach vent hose from front differential.

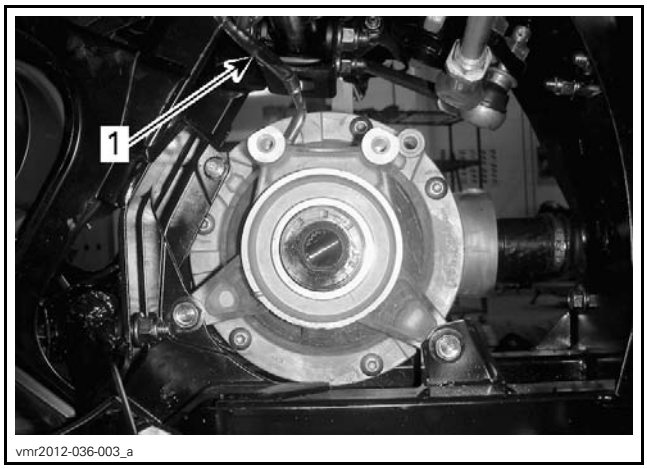

FROM LH SIDE
1. Vent hose

4. Remove bolts securing front differential to frame.

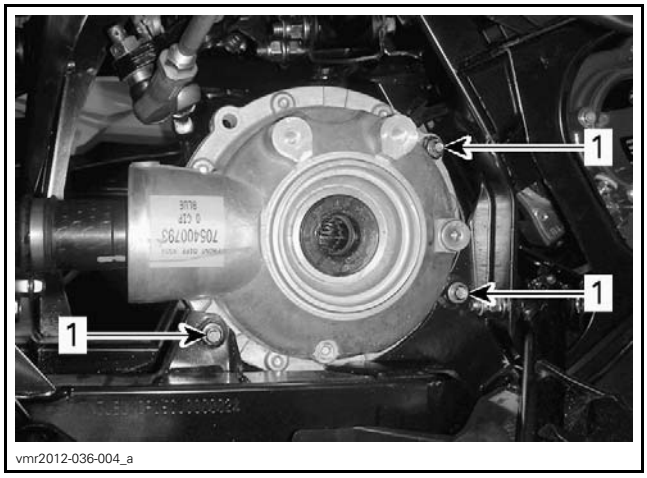

1. Bolts securing front differential to frame

5. Remove the following Oetiker clamps from front propeller shaft.

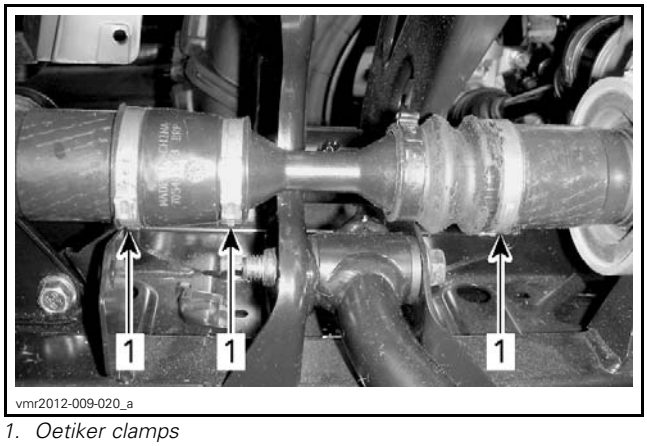

1. Oetiker clamps

6. Detach front propeller shaft from front differential by moving it rearward.

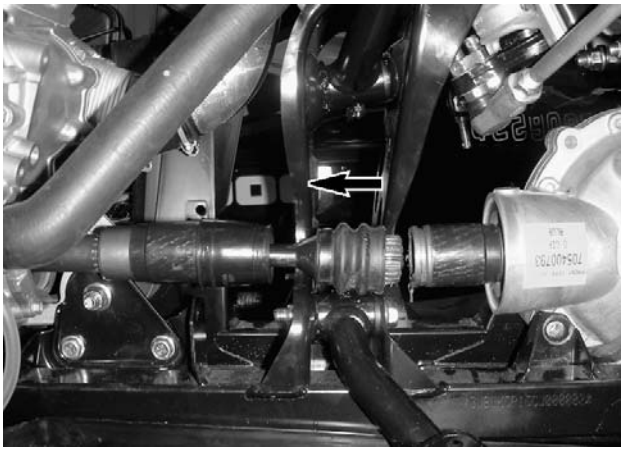
vmr2012-036-005_a

FRONT PROPELLER SHAFT MOVED REARWARD

7. Remove front differential by pulling it from RH side.

NOTICE **Be careful not to knock or to bend vent hose fitting while removing front differential.**

Front Differential Inspection (Assembled)

Manually turn the pinion gear; it should turn smoothly. Repair if necessary.

Check if oil seals are brittle, hard or damaged. Replace if necessary.

Backlash Inspection

When measuring backlash, the differential cover should be upside down to pull the ring gear out of mesh.

Using a dial indicator and the backlash measurement tool, measure the backlash.

REQUIRED TOOL
BACKLASH MEASUREMENT TOOL (P/N 529 035 665)

Place the backlash measurement tool at the end of pinion gear.

From center of tool bolt, measure 25.4 mm (1 in) and scribe a mark on the tab.

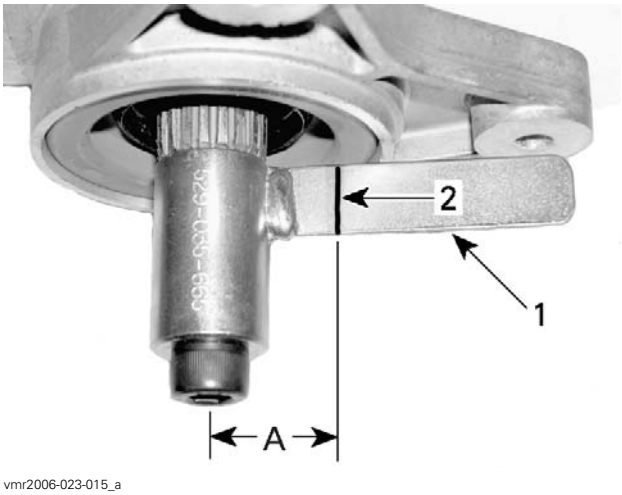

vmr2006-023-015_a

1. Tab of backlash measurement tool
2. Mark on tab
A. 25.4 mm (1 in)

Position the dial indicator tip against the tab at a 90° angle and right on the previously scribed mark.

Gently, move the tool tab back and forth. Note the backlash result.

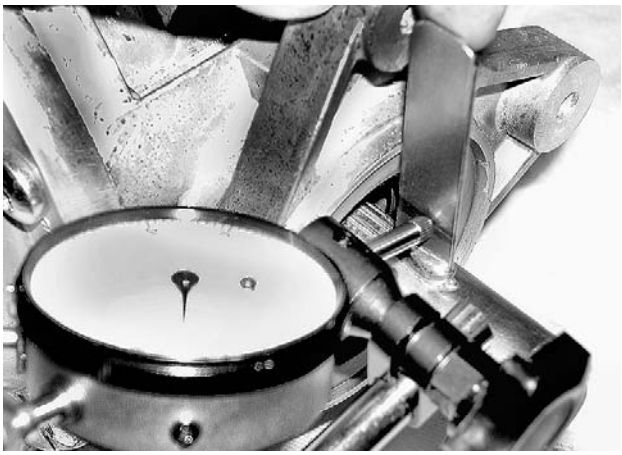
vmr2006-023-016

Rotate pinion gear 1/2 turn and recheck backlash. Note the result.

Rotate pinion gear 1 turn and recheck backlash.

BACKLASH SPECIFICATION
0.1 mm (.004 in) to 0.25 mm (.01 in)

If backlash is out of specification, split final drive housing and adjust shim thickness as per following guideline.

BACKLASH ADJUSTMENT GUIDELINE	
BACKLASH MEASUREMENT	WHAT TO DO
Below 0.1 mm (.004 in)	Remove shim(s) and recheck backlash
Above 0.25 mm (.01 in)	Add shim(s) and recheck backlash

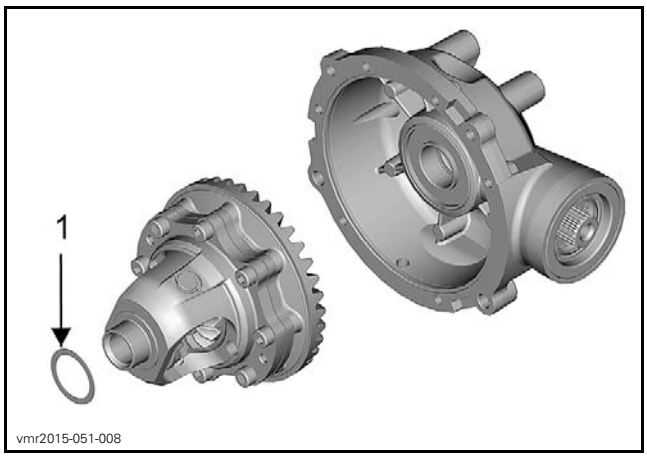

1. Backlash shim

Preload Inspection

Screw the propeller shaft screw in pinion gear.

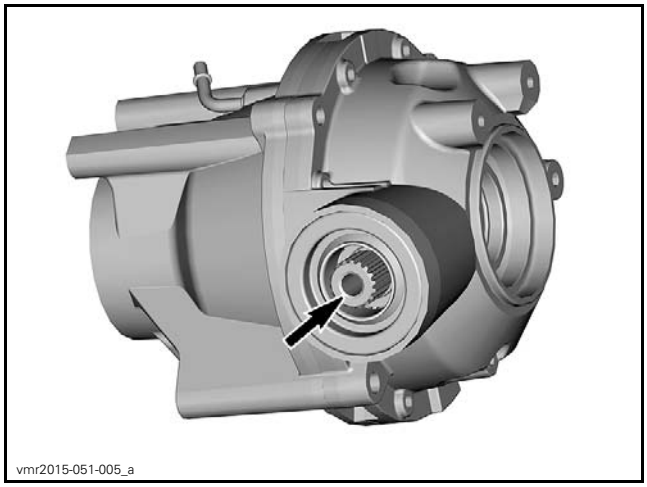

Using a needle torque wrench, measure the preload.

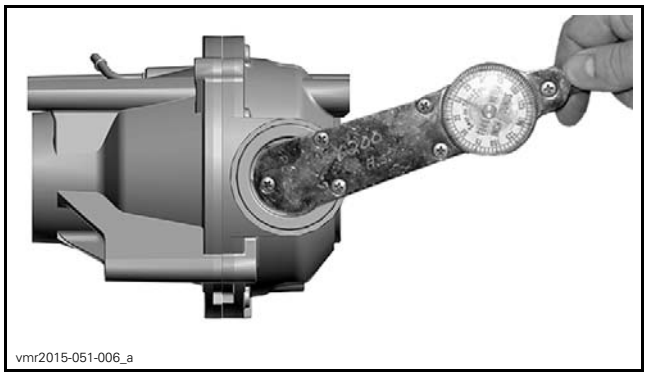

PRELOAD SPECIFICATION
Maximum 0.50 N•m (4 lbf•**in**)

If preload is out of specification, split front differential housing and check all bearings conditions.

Disassembling the Front Differential

Differential Housing

Remove front differential housing screws.

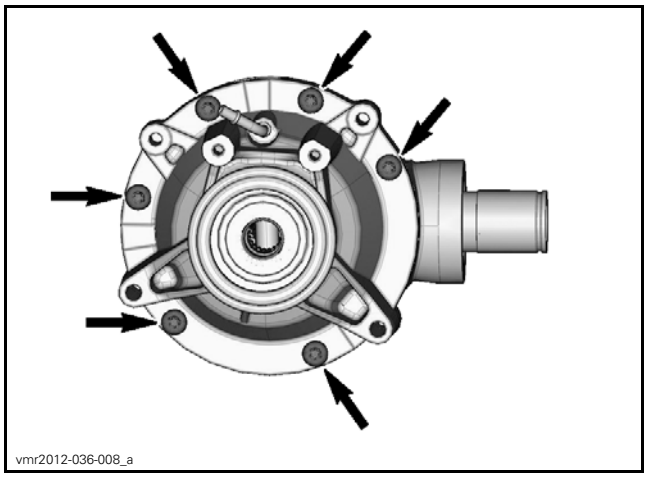

Separate half housings.

Remove oil seals.

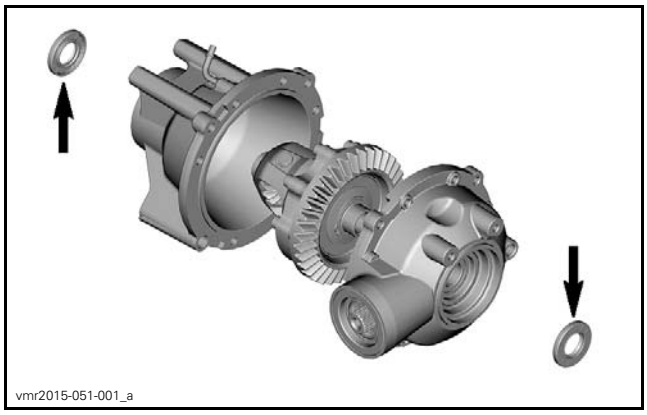

Carrier/Ring Gear

Remove carrier/ring gear out of half housing.

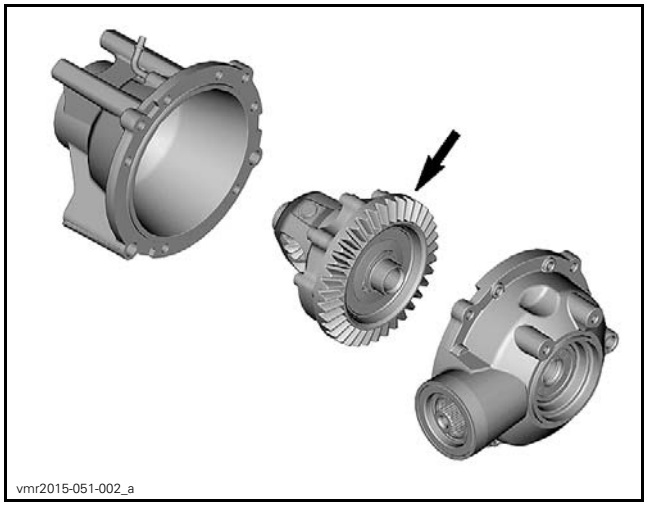

Remove screws securing ring gear to carrier.

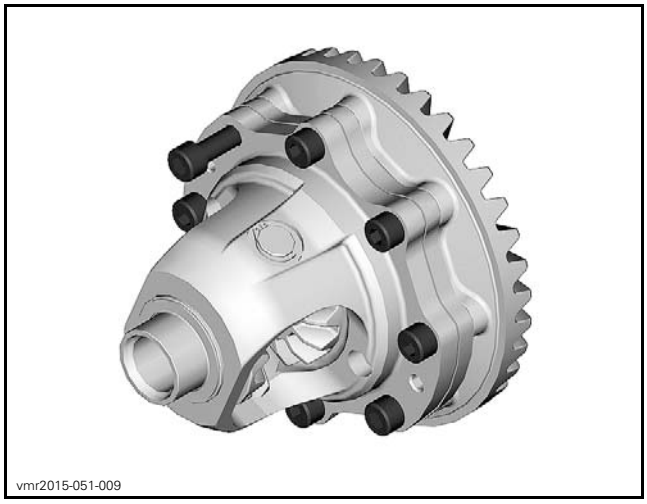

Separate ring gear from carrier.

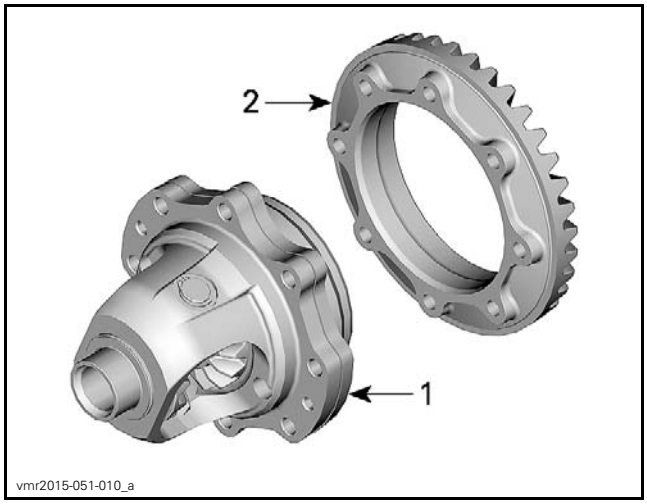

1. *Carrier*
2. *Ring gear*

Pinion Gear

Remove screw retaining front propeller shaft adapter.

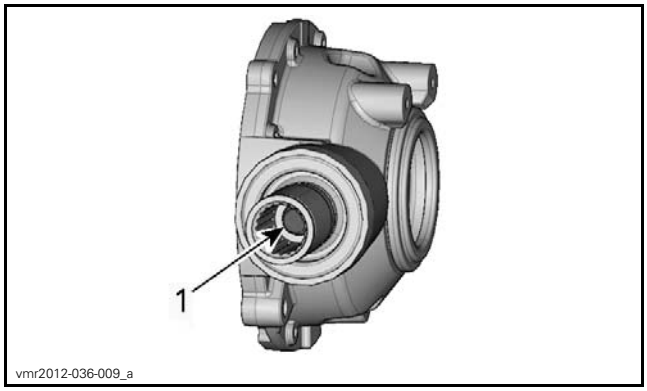

1. *Retaining screw*

Remove and discard oil seal.

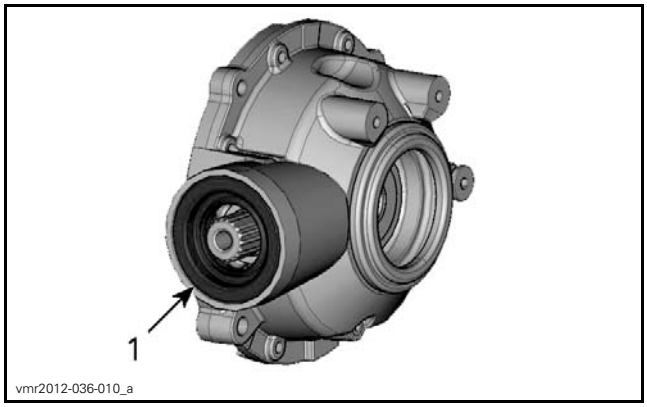

1. *Oil seal*

Unscrew the pinion nut.

REQUIRED TOOL
SPANNER SOCKET (P/N 529 035 649)

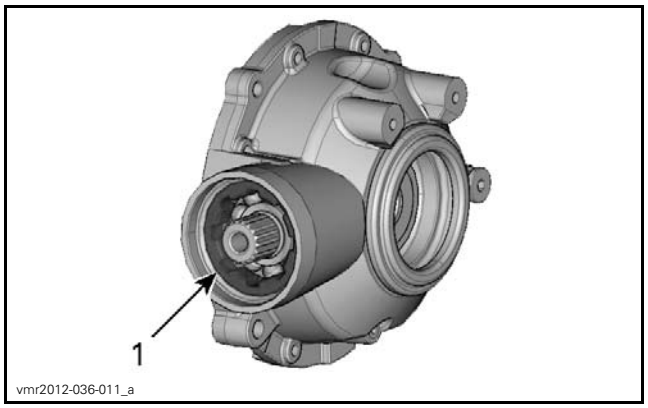

1. Pinion nut

Remove bearing and pinion gear together.

RECOMMENDED TOOLS	QTY
Pipe: 78 mm (3-1/16 in) diameter x 127 mm (5 in) in length	1
Threaded rod: M10 x 1.25, 178 mm (7 in) length	1
M10 x 1.25 nut	3
Flat bar	1

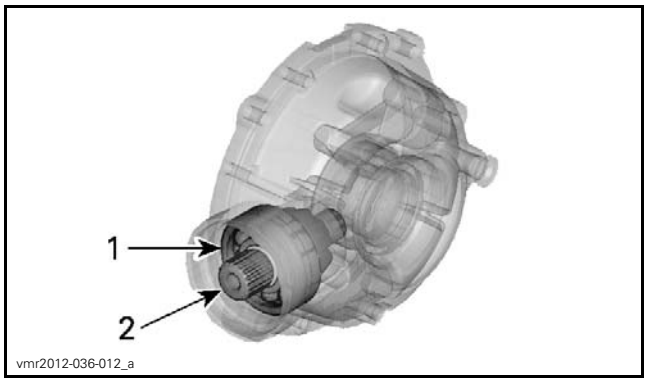

1. Bearing
2. Pinion gear

Remove and discard O-ring.

Remove bearing from pinion gear.

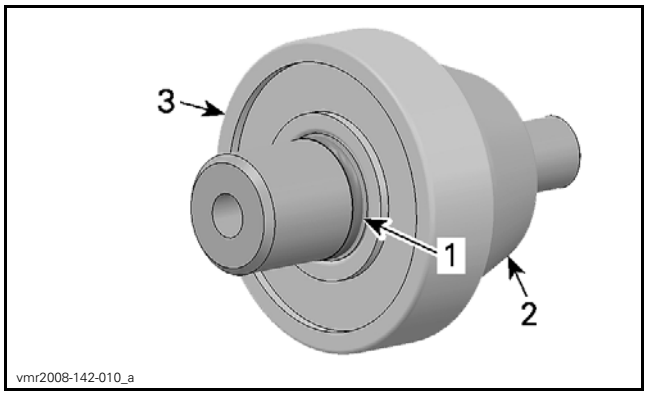

1. O-ring
2. Pinion gear
3. Bearing

Remove and discard the needle bearing.

Assembling the Front Differential

Adjustment is required when any of the following part is changed.

- Pinion gear
- Ring gear
- Carrier
- Housing.

As a preliminary setup, install shim according to the following table.

RECOMMENDED SHIM THICKNESS	
BACKLASH	0.5 mm (.02 in) (as a preliminary adjustment)

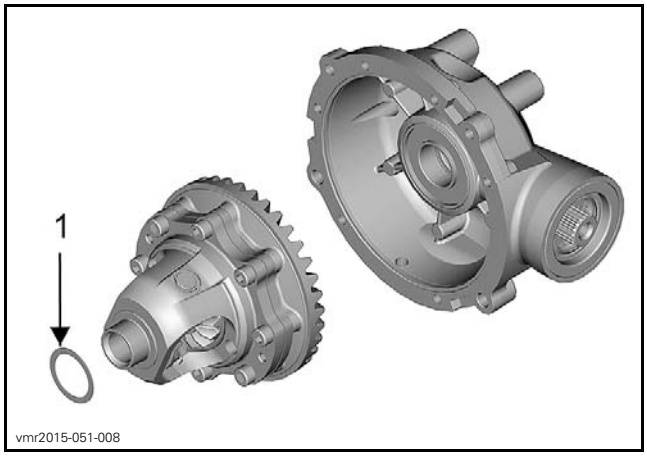

1. Backlash shim

Prior to finalizing assembly, proceed in this order:

- Temporarily assemble final drive using recommended torques.
- Do not apply thread locker product.
- Do not install a new pinion nut.
- Check backlash.
- Check preload.

Carrier/Ring Gear

The installation is the reverse of the removal procedure. However, pay attention to the following.

Tighten carrier ring gear screws to specification.

TIGHTENING TORQUE	
Carrier ring gear screws	37 N•m ± 3 N•m (27 lbf•ft ± 2 lbf•ft)

Check condition of seal. Replace if damaged.

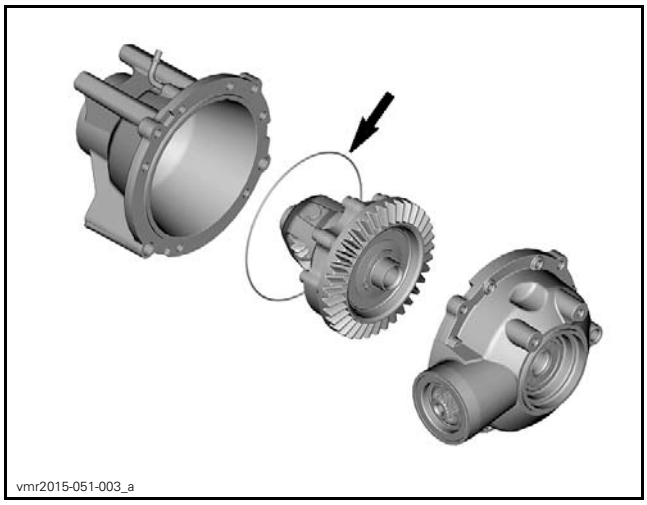

Check bearings. Replace with **NEW** bearings if necessary.

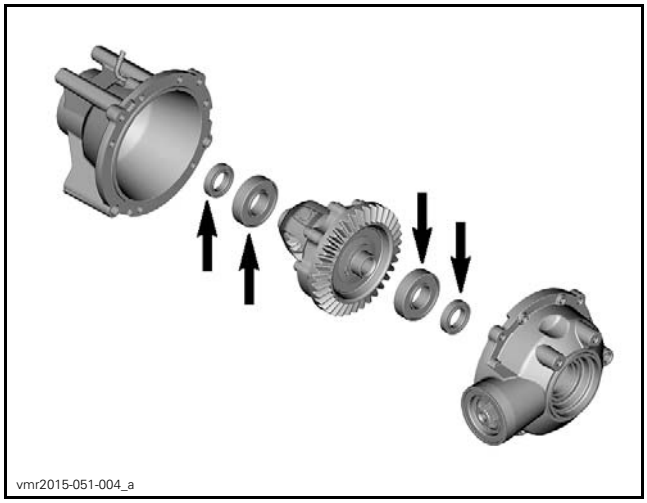

Apply XPS SYNTHETIC GREASE (P/N 293 550 010) on **NEW** oil seals and install.

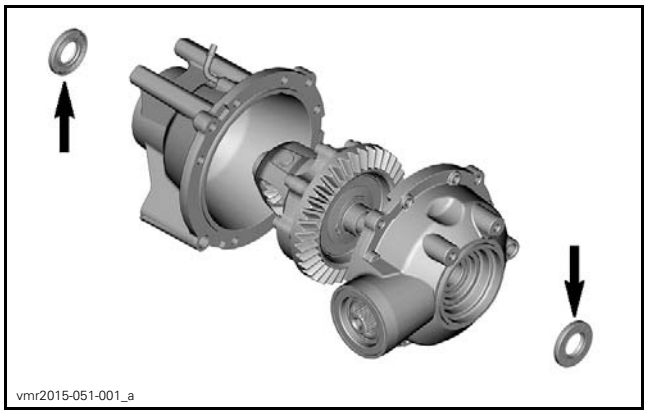

Tighten differential housing screws to specification.

TIGHTENING TORQUE	
Differential housing screws	23.5 N•m ± 3.5 N•m (17 lbf•ft ± 3 lbf•ft)

Pinion Gear

Install a **NEW** ball bearing.

Install a **NEW** O-ring.

Install a **NEW** needle bearing.

Apply LOCTITE 277 (P/N 293 800 073) to pinion nut.

Install and tighten the pinion nut to specification.

TIGHTENING TORQUE	
Pinion nut	180 N•m ± 15 N•m (133 lbf•ft ± 11 lbf•ft) + LOCTITE 277 (P/N 293 800 073)

Apply XPS SYNTHETIC GREASE (P/N 293 550 010) on **NEW** oil seal and install.

Tighten front propeller shaft adapter retaining screw to specification.

TIGHTENING TORQUE	
Front propeller shaft adapter retaining screw	75 N•m ± 5 N•m (55 lbf•ft ± 4 lbf•ft)

Installing the Front Differential

The installation is the reverse of the removal procedure. However, pay attention to the following.

When inserting the small portion of propeller shaft into propeller shaft boot, make sure both parts of propeller shaft are well indexed.

TIGHTENING TORQUE	
M8 nut securing front differential to frame	24.5 N•m ± 3.5 N•m (18 lbf•ft ± 3 lbf•ft)
M10 nuts securing front differential to frame	61 N•m ± 9 N•m (45 lbf•ft ± 7 lbf•ft)

Install **NEW** Oetiker clamps.

Refill front differential with recommended oil. Refer to *PERIODIC MAINTENANCE PROCEDURES* subsection.

FRONT PROPELLER SHAFT

Removing the Front Propeller Shaft

1. Lift and support vehicle.
2. Remove front wheel. Refer to *WHEELS AND TIRES* subsection.

3. Remove inner fender panel(s). Refer to *BODY* subsection.
4. Remove bolts securing front differential to frame.

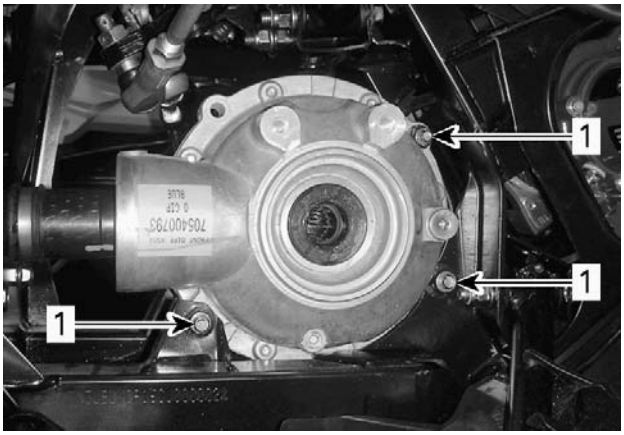

vmr2012-036-004_a

PARTS REMOVED FOR CLARITY
1. Bolts securing front differential to frame

5. Remove the following Oetiker clamps from front propeller shaft.

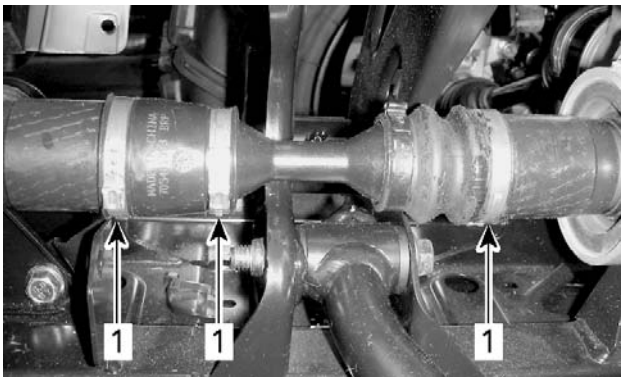

vmr2012-009-020_a

1. Oetiker clamps

6. Detach front propeller shaft from front differential by moving it rearward.

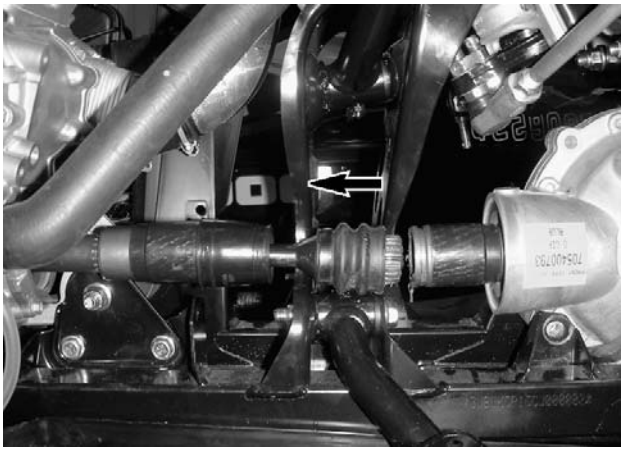
vmr2012-036-005_a

FRONT PROPELLER SHAFT MOVED REARWARD

7. Pry front differential upwards to make room.

vmr2012-036-007_a

1. Pry bar

8. Remove front propeller shaft by pulling it forward.
9. Remove front propeller shaft adapters from engine and from front differential.

Inspecting the Front Propeller Shaft

Inspect if propeller shaft is not bent or twisted.

Check propeller shaft splines for wear or damage.

Check if propeller shaft bellows is pierced or brittle.

Installing the Front Propeller Shaft

The installation is the reverse of removal procedure. However, pay attention to the following.

Apply XPS SYNTHETIC GREASE (P/N 293 550 010) on splines.

Tighten propeller shaft adapter screw to specification.

TIGHTENING TORQUE	
Propeller shaft adapter screw **(differential side: M10x16)**	75 N•m ± 5 N•m (55 lbf•ft ± 4 lbf•ft) **+** LOCTITE 648 (GREEN) (P/N 413 711 400)
Propeller shaft adapter screw **(engine side: M12x20)**	75 N•m ± 5 N•m (55 lbf•ft ± 4 lbf•ft) **+** LOCTITE 648 (GREEN) (P/N 413 711 400)

REAR DRIVE (450/570 EXCEPT T CATEGORY)

SERVICE TOOLS

Description	Part Number	Page
BACKLASH MEASUREMENT TOOL	529 035 665	10
CV BOOT CLAMP PLIER	529 036 120	5
CV JOINT EXTRACTOR	529 036 005	5
SPANNER SOCKET	529 035 649	12

Midwest Manuals
Paperless Manuals
For a Better Tomorrow
www.green-manuals.com

SERVICE PRODUCTS

If you bought this manual from any other seller please leave them NEGATIVE feedback and notify me at bestshopmanuals@gmail.com

Description	Part Number	Page
LOCTITE 271 (RED)	293 800 005	14–15
LOCTITE 648 (GREEN)	413 711 400	8
SYNTHETIC GREASE	779162	4, 7

DRIVE SHAFTS AND PROPELLER SHAFT

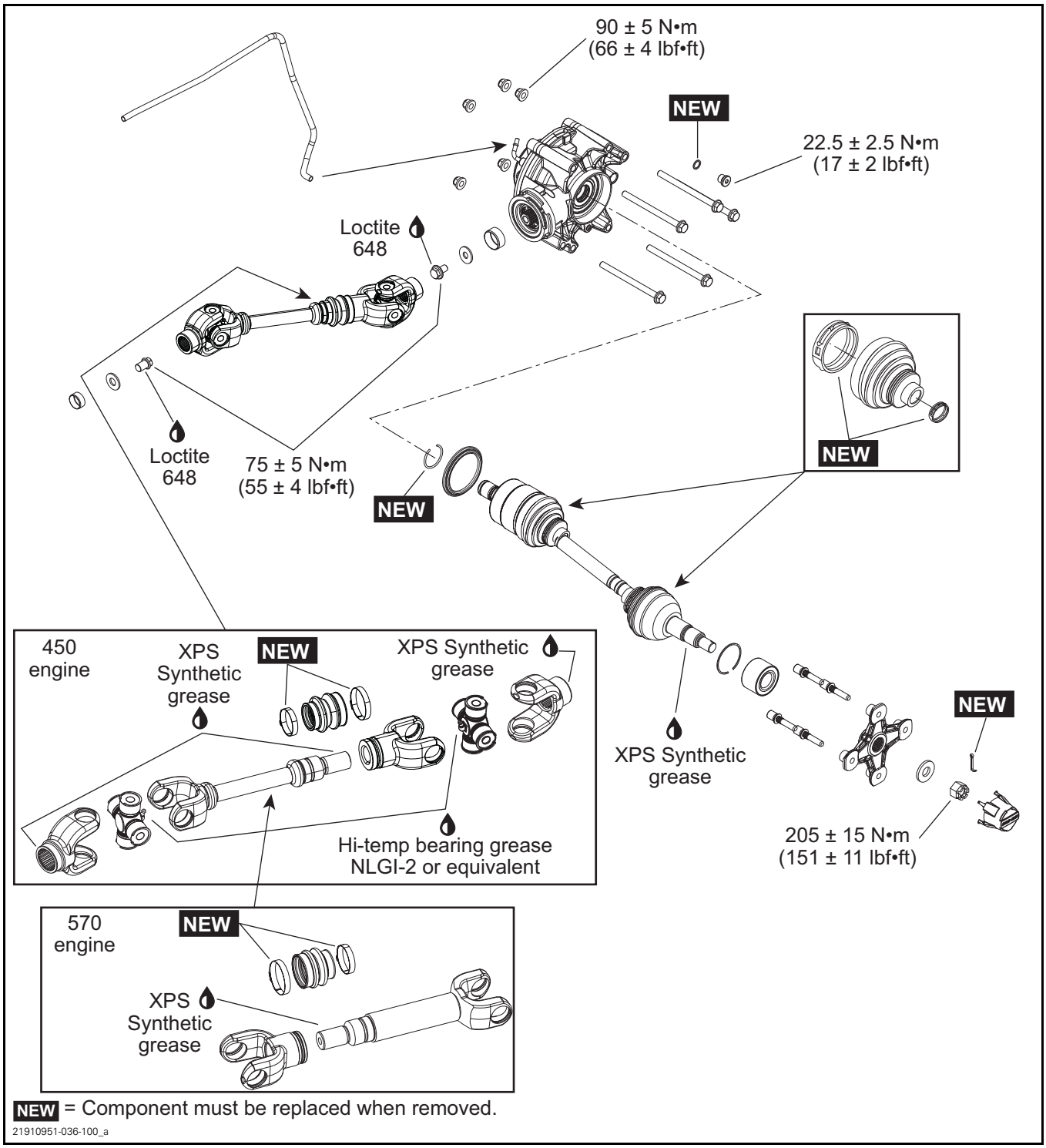

REAR FINAL DRIVE

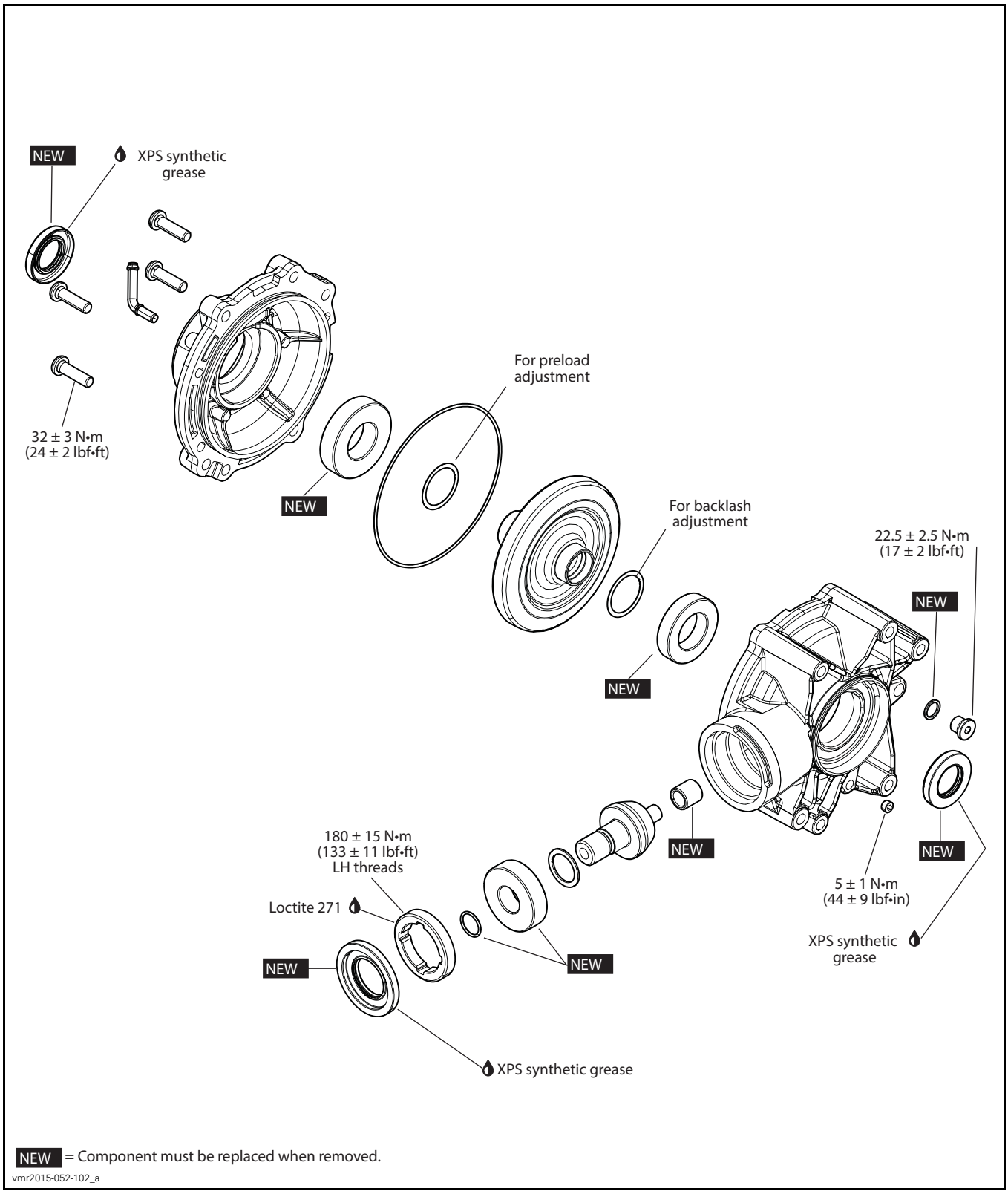

PROCEDURES

WHEEL HUB

Removing the Wheel Hub

Lift and support vehicle.

Remove the wheel.

Remove the following parts:

- Caliper mounting bolts (if applicable), refer to *BRAKES* subsection
- Hub cap
- Cotter pin
- Wheel hub nut
- Belleville washer.

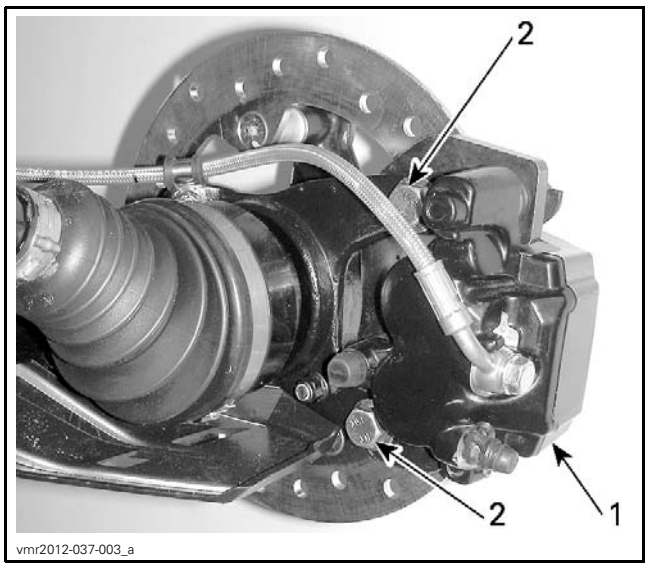

vmr2012-037-003_a

1. *Caliper*
2. *Remove bolts*

Remove wheel hub.

Inspecting the Wheel Hub

Remove disk from RH wheel hub as necessary.

Check wheel hub for cracks or other damages.

Check inner splines for wear or other damages.

If any damage is detected on wheel hub, replace it with a new one.

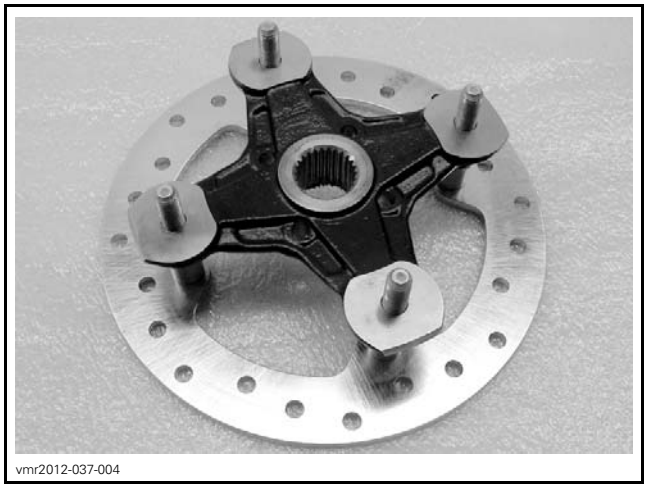
vmr2012-037-004

Installing the Wheel Hub

The installation is the reverse of removal procedure. Pay attention to the following.

Apply SYNTHETIC GREASE (P/N 779162) on drive shaft splines.

Install Belleville washer with its convex side outward.

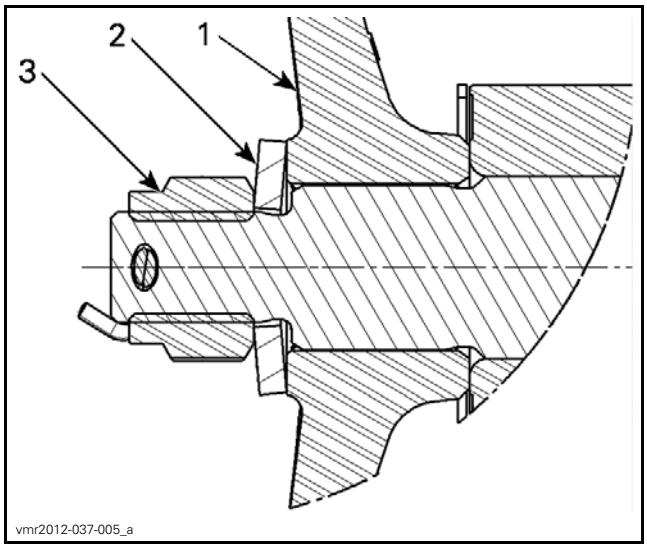

vmr2012-037-005_a

1. *Wheel hub*
2. *Washer — Convex side here*
3. *Nut*

TIGHTENING TORQUE	
Wheel hub nut	205 N•m ± 15 N•m (151 lbf•ft ± 11 lbf•ft)

NOTE: If required, tighten castle nut further to align grooves with drive shaft hole.

Install a NEW cotter pin, bend as shown.

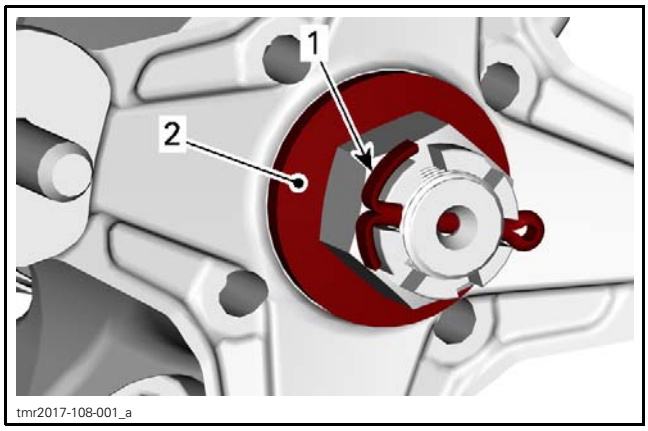

1. Cotter pin correctly bent
2. Domed (convex) side here

DRIVE SHAFT

Removing the Drive Shaft

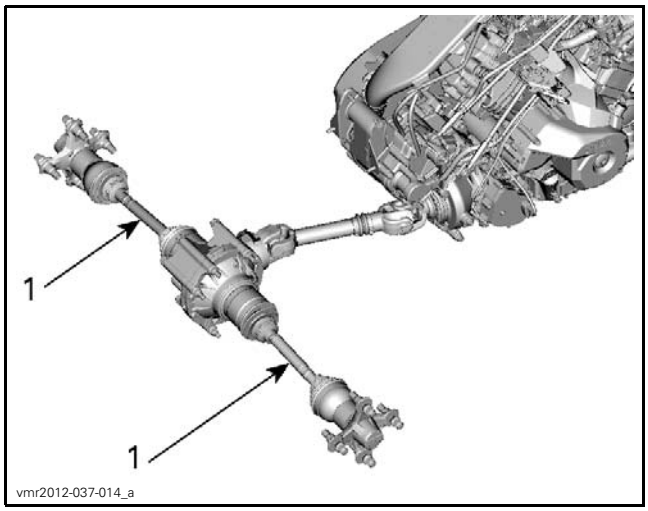

TYPICAL
1. Drive shafts

Lift and support vehicle.

Remove the wheel hub. See procedure in this subsection.

Remove trailing arm. Refer to *REAR SUSPENSION*.

Strongly pull drive shaft out of final drive.

Inspecting the Drive Shaft

Inspect the condition of boots. If there is any damage or evidence of leaking lubricant, replace them. Refer to *DRIVE SHAFT BOOT*.

Check shaft splines. Replace drive shaft if necessary.

Check dust shield on drive shaft end. Replace if necessary.

Installing the Drive Shaft

The installation is the reverse of the removal procedure. However, pay attention to the following.

Install a NEW stop ring.

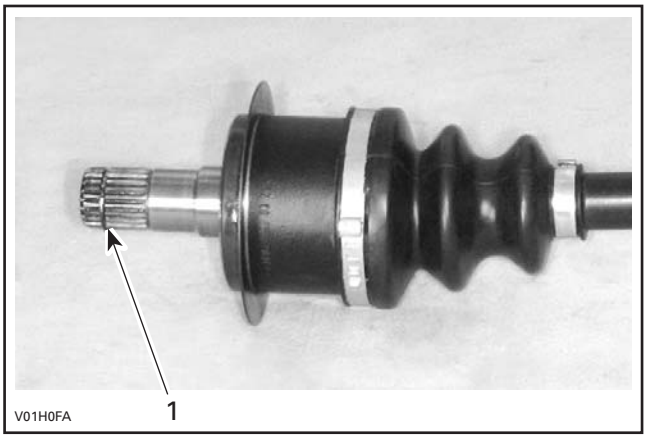

TYPICAL
1. NEW stop ring

After drive shaft insertion in rear final drive, validate if properly locked.

DRIVE SHAFT BOOT

Removing the Drive Shaft Boot

Remove the drive shaft from vehicle. See procedure in this subsection.

Remove drive shaft boot clamps using the following tool:

REQUIRED TOOL	
CV BOOT CLAMP PLIER (P/N 529 036 120)	

Dislodge the large boot end.

Separate the joint from the shaft. Two procedures can be done.

Without the Special Tool

Clamp joint housing in a vise.

Align shaft with joint.

Pull hard on shaft to remove from joint.

Remove boot from drive shaft.

Remove and discard the circlip. A new one is included in the boot kit.

With the Special Tool

Place drive shaft in vice with the joint downward.

Install the CV JOINT EXTRACTOR (P/N 529 036 005) on bearing.

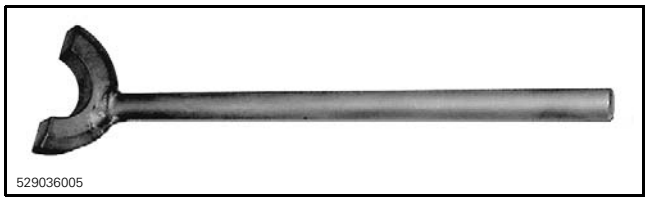

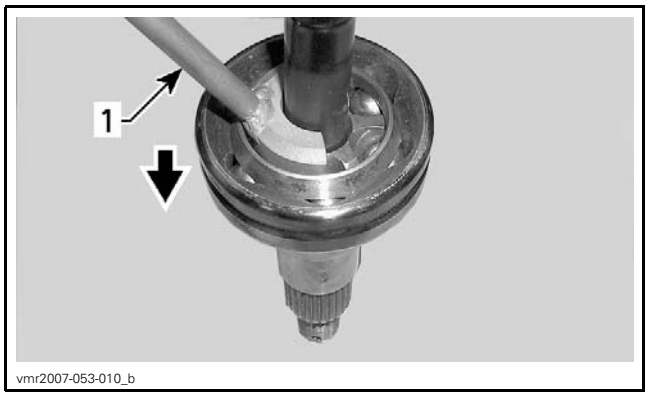

TYPICAL — CV JOINT SHOWN
1. Joint extractor tool

With an hammer, hit on the tool to separate joint from shaft.

When joint and shaft are separated, remove boot from drive shaft.

Remove and discard the circlip. A new one is included in the boot kit.

Remove drive shaft boot.

Installing the Drive Shaft Boot

For installation, reverse the removal procedure. Pay attention to the following.

Pack bearing area with grease (included with the new boot kit).

NOTE: Do not use any other grease.

PROPELLER SHAFT

Removing the Propeller Shaft

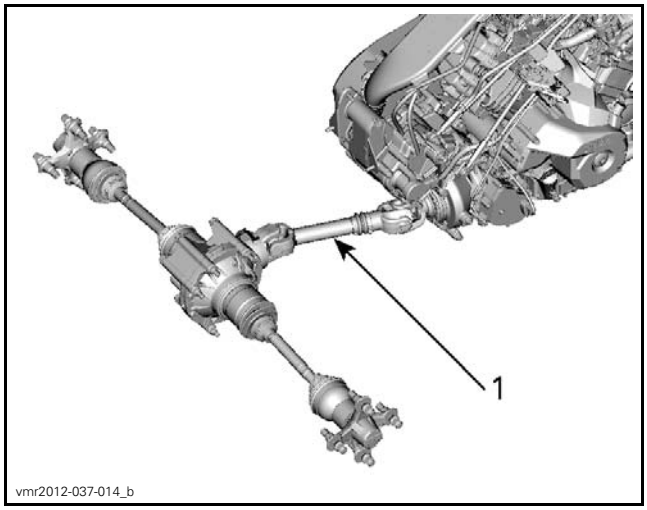

TYPICAL
1. Propeller shaft

1. Remove wheels. Refer to *WHEELS AND TIRES* subsection.
2. Drain oil from rear final drive. Refer to *PERIODIC MAINTENANCE PROCEDURES*.
3. Detach brake master cylinder from frame (Outlander only). Refer to *BRAKES* subsection.

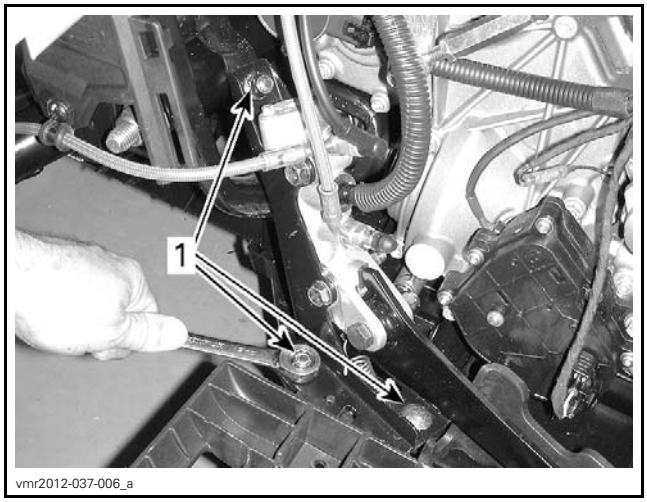

1. Remove retaining screws

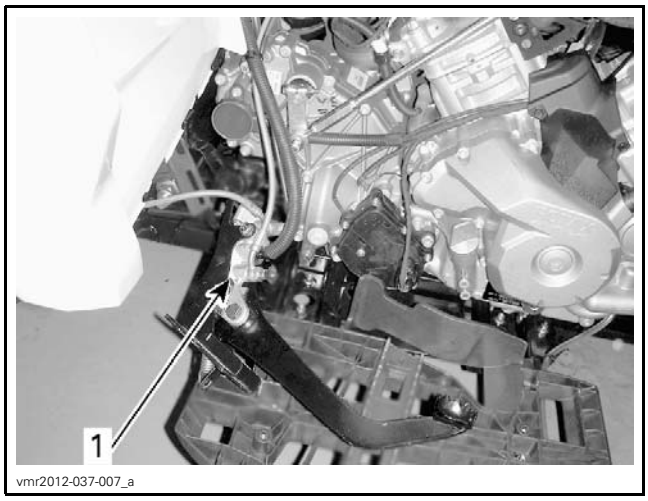

1. Master cylinder moved apart

4. Lift and support vehicle.
5. From RH side of vehicle, remove propeller shaft screw from gearbox output shaft.

NOTE: Heat screw to break the threadlocker bond prior to removal.

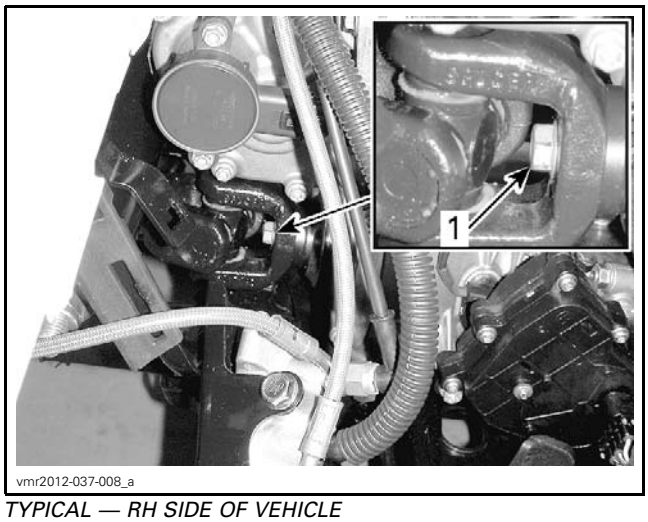

TYPICAL — RH SIDE OF VEHICLE
1. Remove screw

6. From LH side of vehicle, remove propeller shaft screw from rear final drive yoke.

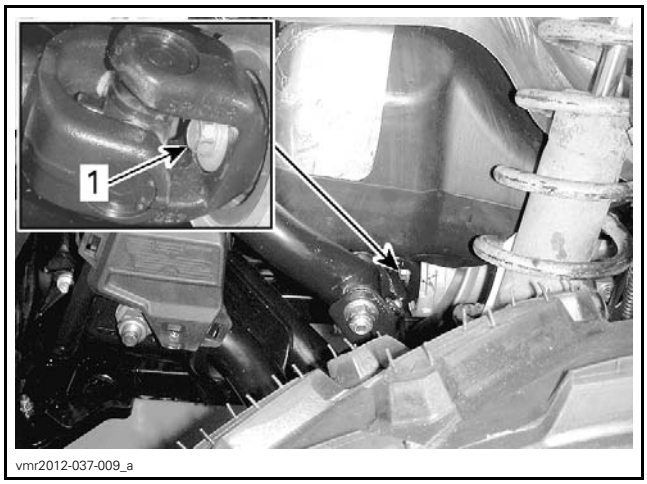

TYPICAL — LH SIDE OF VEHICLE
1. Remove screw

7. Remove rear final drive retaining bolts. Refer to *REAR FINAL DRIVE* in this subsection.
8. Remove bolts from rear retaining plate. Refer to *REAR FINAL DRIVE* in this subsection.
9. Move the rear final drive rearward to allow dislodging the propeller shaft.
10. Dislodge the propeller shaft from the gearbox.
11. Remove the propeller shaft.

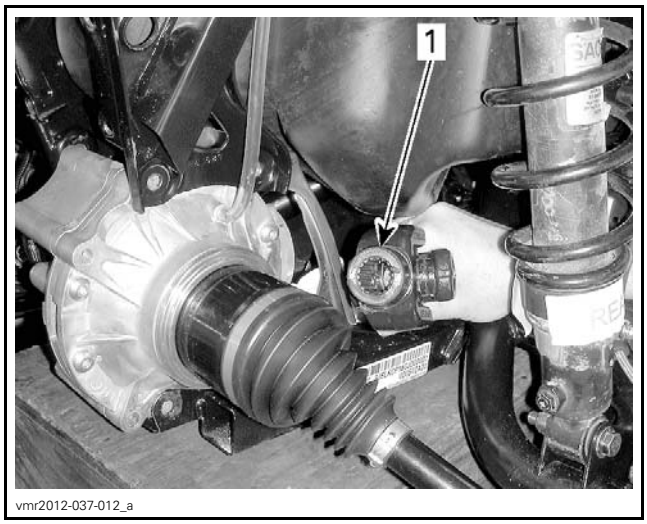

1. Pull out propeller shaft

Inspecting the Propeller Shaft

Inspect if propeller shaft is not bent or twisted.

Check propeller shaft splines for wear or damage.

Check if propeller shaft bellow is cracked, pierced or brittle.

Installing the Propeller Shaft

Installation is essentially the reverse of removal procedure. Pay attention to the following details.

Apply SYNTHETIC GREASE (P/N 779162) to splines.

On the engine side, Install the Belleville with the notches towards the screw head.

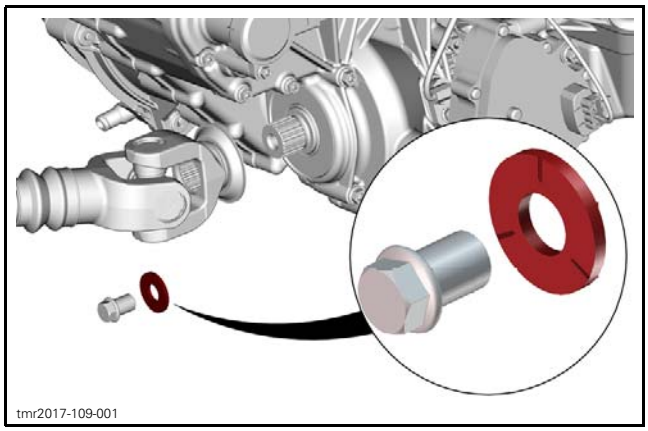

TYPICAL

TIGHTENING TORQUE	
Propeller shaft screw (rear final drive side)	75 N•m ± 5 N•m (55 lbf•ft ± 4 lbf•ft)
Propeller shaft screw (gearbox side)	75 N•m ± 5 N•m (55 lbf•ft ± 4 lbf•ft) + LOCTITE 648 (GREEN) (P/N 413 711 400)

Refill rear final drive. Refer to *PERIODIC MAINTENANCE PROCEDURES* subsection.

PROPELLER SHAFT U-JOINTS

Removing the Propeller Shaft U-Joint

Remove internal snap ring from bearing caps.

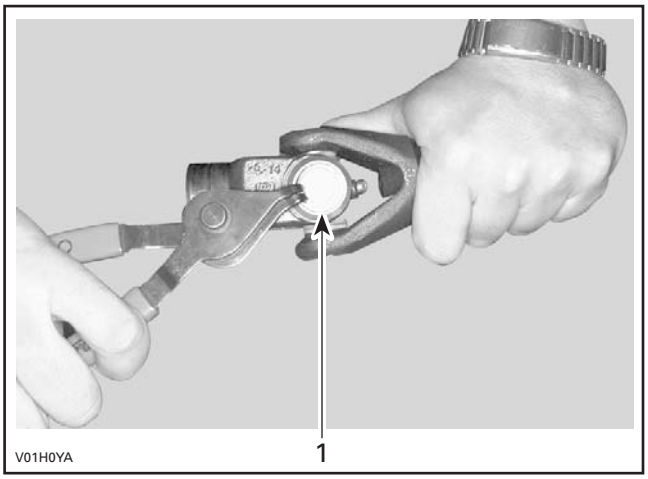

1. *Snap ring*

Support inner yoke in vice and drive other yoke down with a soft hammer.

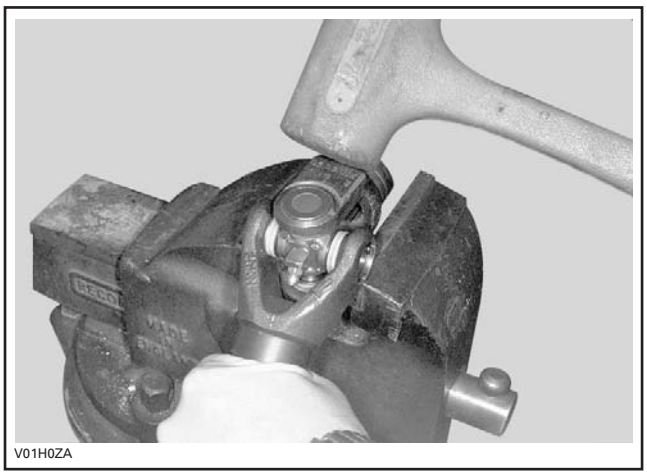

Support U-joint in vice and drive inner yoke down to remove remaining bearing caps.

Remove U-joint cross.

Installing the Propeller Shaft U-Joint

Install new U-joint in inner yoke.

NOTE: Position propeller shaft U-joint as shown for proper grease fitting location.

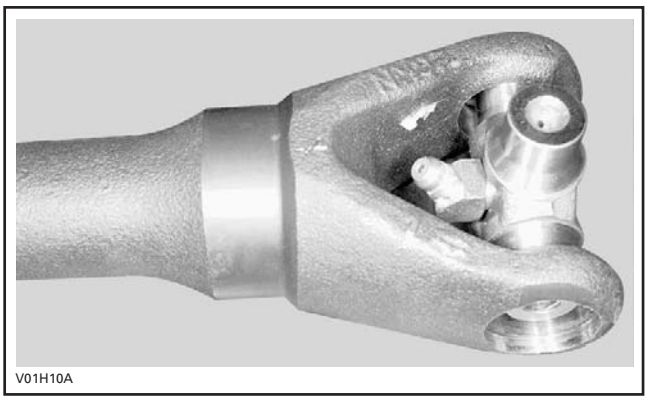

Install bearing caps. Use a vise to push bearing caps.

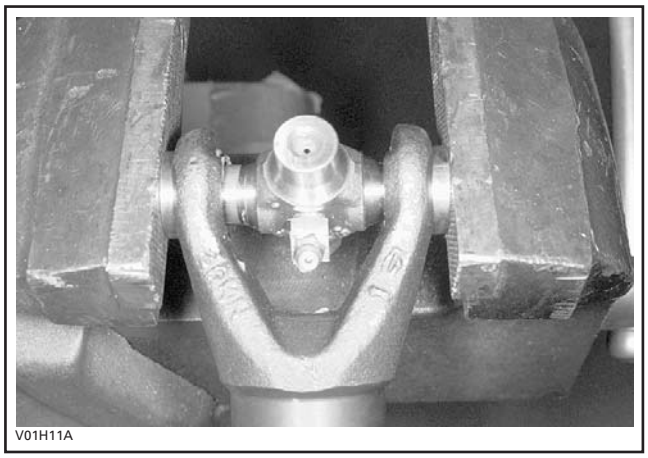

Using a suitable pusher, fully seat bearing cap on one side.

V01H12A

Install snap ring.

Complete installation for the other bearing caps.

Grease U-joint. Refer to *PERIODIC MAINTENANCE PROCEDURES* subsection.

REAR FINAL DRIVE

Removing the Rear Final Drive

Drain oil. Refer to *PERIODIC MAINTENANCE PROCEDURES* subsection.

Lift and support vehicle.

Support rear bottom end of frame.

Remove drive shafts. See procedure in this subsection.

Remove rear propeller shaft screw from the rear final drive yoke. Refer to *PROPELLER SHAFT* in this subsection.

Remove rear final drive bolts.

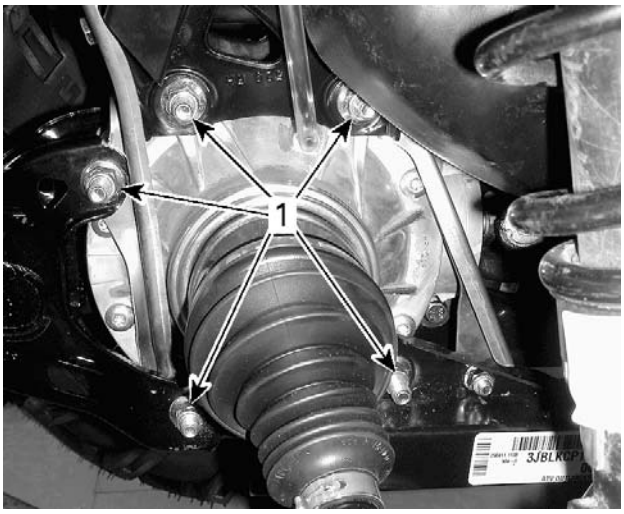

vmr2012-037-010_a

1. Remove bolts

Remove bolts from rear retaining plate.

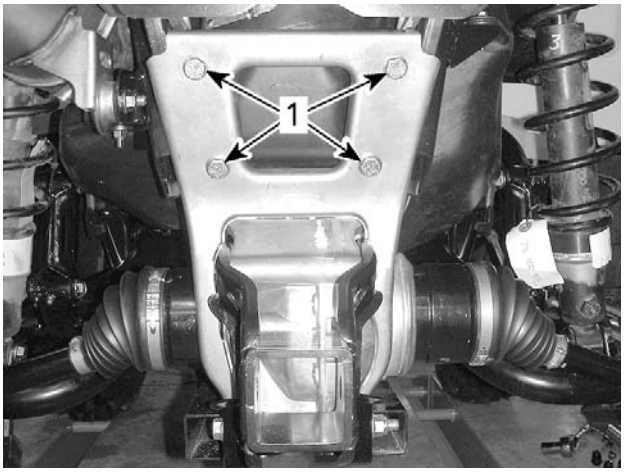

vmr2012-037-011_a

1. Remove bolts

Unplug the vent hose from final drive.

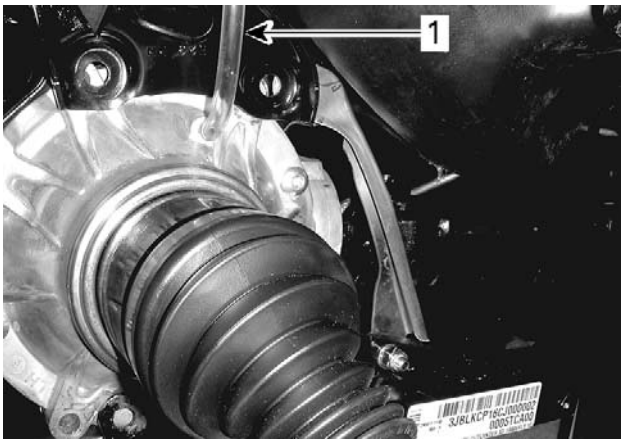

vmr2012-037-015_a

1. Pull out

Remove the final drive.

Inspecting the Rear Final Drive (Assembled)

Manually turn rear final drive gear; it should turn smoothly. Repair if necessary.

Check if oil seals are brittle, hard or damaged. Replace if necessary.

Measuring the Backlash

When measuring backlash, the differential cover should be upside down to pull the ring gear out of mesh.

REQUIRED TOOL
BACKLASH MEASUREMENT TOOL (P/N 529 035 665)
DIAL INDICATOR

Place the backlash measurement tool at the end of pinion gear.

From center of tool bolt, measure 25.4 mm (1 in) and scribe a mark on the tab.

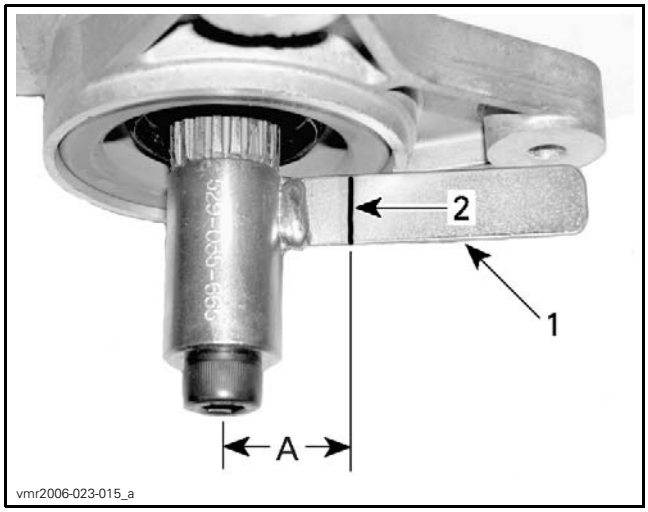

1. Tab of backlash measurement tool
2. Mark on tab
A. 25.4 mm (1 in)

Position the dial indicator tip against the tab at a 90° angle and right on the previously scribed mark.

Gently move the tool tab back and forth making sure the ring gear does not turn. Note the backlash result.

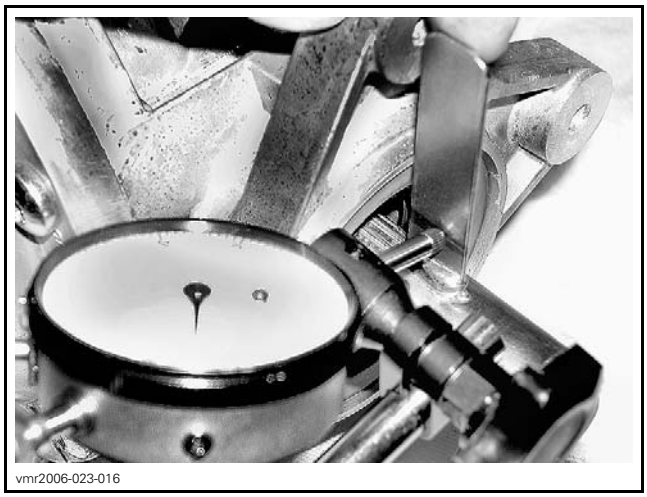

Rotate pinion gear 1/2 turn and recheck backlash. Note the result.

Rotate pinion gear 1 turn and recheck backlash.

BACKLASH SPECIFICATION
0.05 mm (.002 in) to 0.35 mm (.014 in)

If backlash is out of specification, split final drive housing, refer to *DISASSEMBLING THE REAR FINAL DRIVE* and adjust shim thickness as per following guideline.

BACKLASH ADJUSTMENT GUIDELINE	
BACKLASH MEASUREMENT	WHAT TO DO
Below 0.05 mm (.002 in)	Add shim(s) and recheck backlash
Above 0.35 mm (.014 in)	Remove shim(s) and recheck backlash

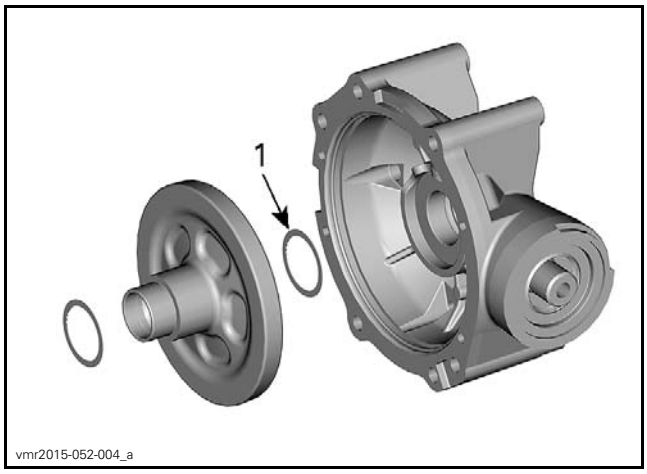

1. Backlash shim

Measuring the Preload

Screw the propeller shaft screw in pinion gear.

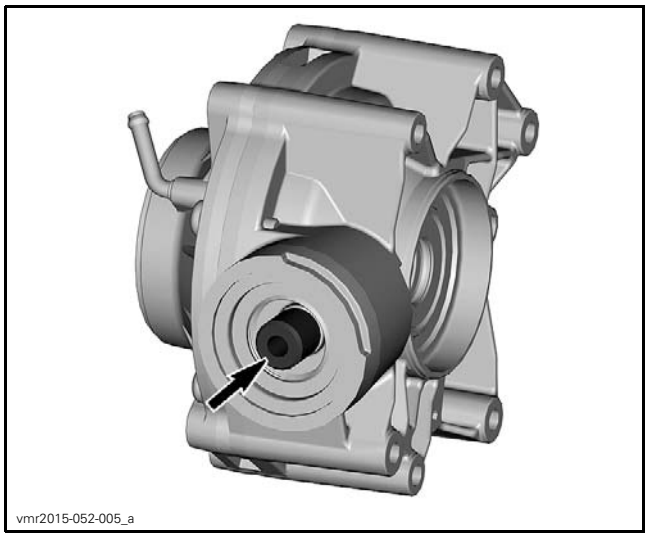
vmr2015-052-005_a

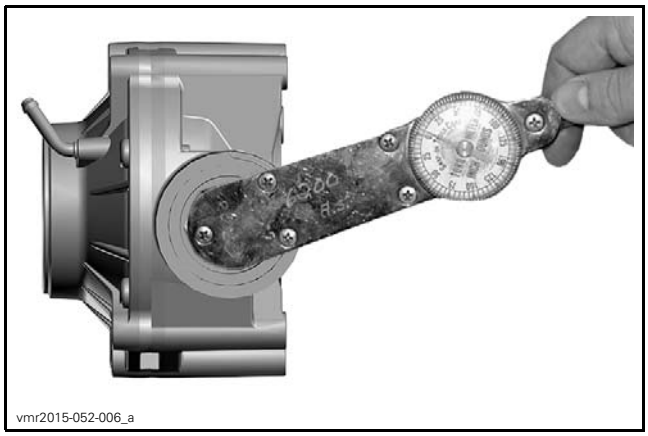
vmr2015-052-006_a

PRELOAD SPECIFICATION
Maximum 0.50 N•m (4 lbf•**in**)

There should be close to zero resistance when turning pinion shaft by hand.

If preload is out of specification, split final drive housing, refer to *DISASSEMBLING THE REAR FINAL DRIVE* and adjust shim thickness as per following guideline.

Carefully inspect all bearings condition.

PRELOAD GUIDELINE	
PRELOAD MEASUREMENT	WHAT TO DO
Below 0.06 N•m (.5 lbf•**in**)	Add shim(s) and recheck preload
Above 0.50 N•m (4 lbf•**in**)	Remove shim(s) and recheck preload

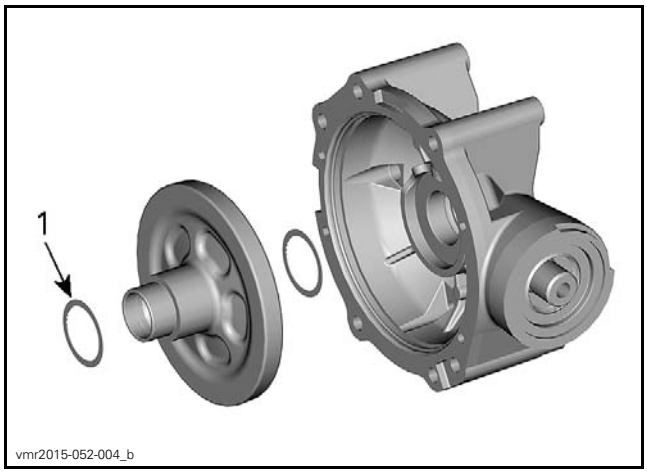

vmr2015-052-004_b

1. Preload shim

Disassembling the Rear Final Drive

Ring Gear

Remove the final drive housing screws.

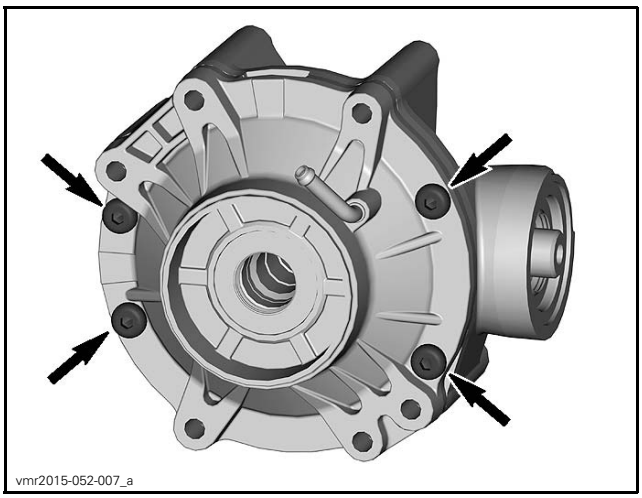
vmr2015-052-007_a

Split final drive housings.

If opening the housing for backlash or preload adjustment, remove and set aside the cover O-ring.

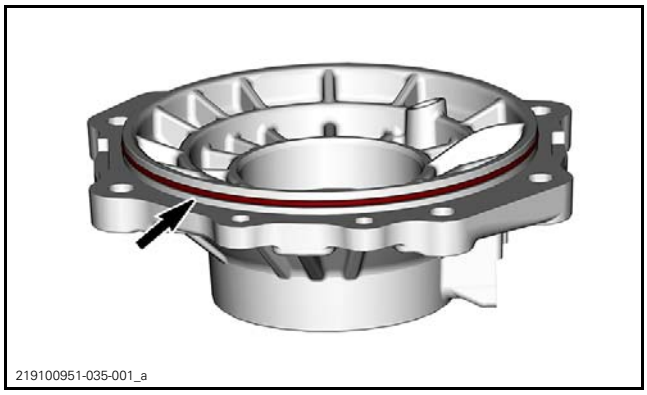
219100951-035-001_a

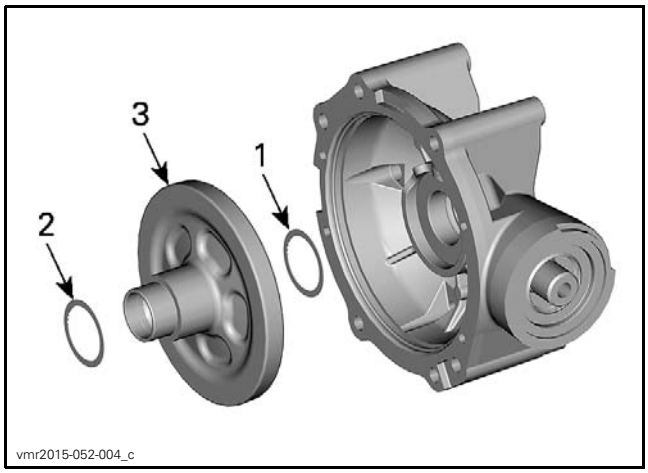

1. *Backlash shim*
2. *Preload shim*
3. *Ring gear*

Extract ring gear out of half housing.

NOTE: Be careful to keep track of shims. Write down the thickness and position of every shim.

Pinion Gear

Remove and discard oil seal.

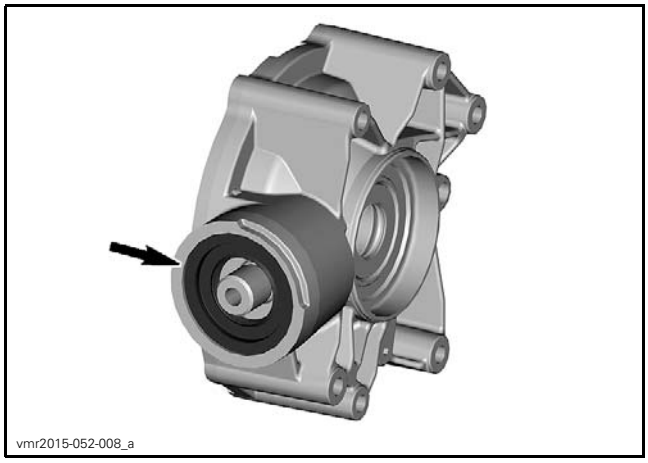

Unscrew the pinion nut. Use the required tool.

REQUIRED TOOL
SPANNER SOCKET (P/N 529 035 649)

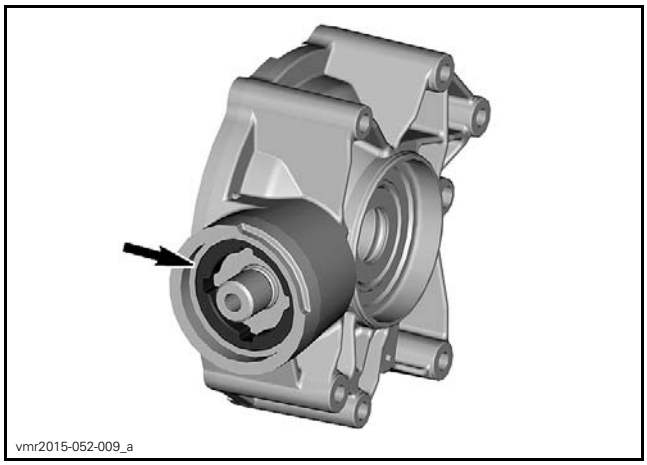

NOTE: The pinion nut is left hand threaded. Unscrew by turning clockwise.

Remove the bearing along with the pinion gear. Be careful to keep track of shims. Discard bearing.

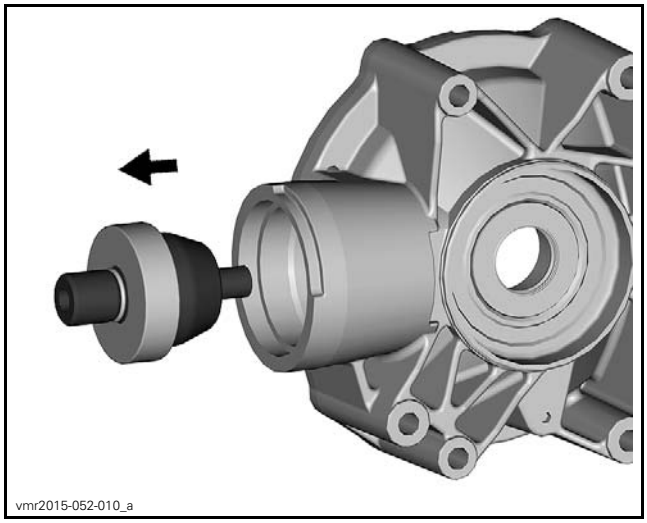

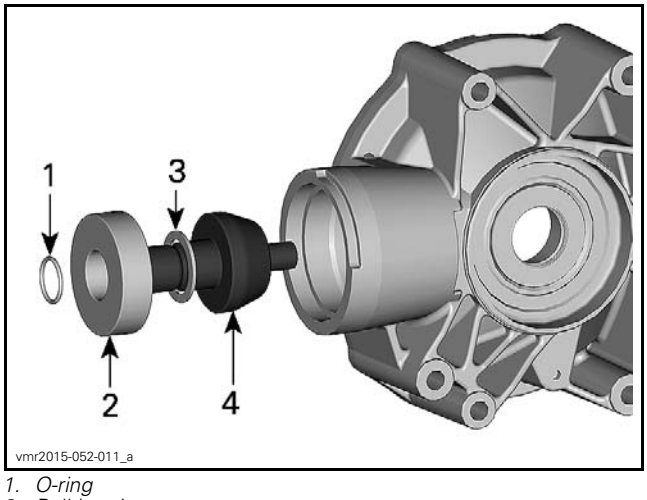

1. *O-ring*
2. *Ball bearing*
3. *Pinion gear shim*
4. *Pinion gear*

The pinion gear and bearing can be easily removed using the following suggested tool:

PART	QTY
Pipe: 83 mm (3-1/4 in) diameter x 127 mm (5 in)	1
Threaded rod: M10 x 1.25 x 178 mm (7 in)	1
M10 x 1.25 nut	3
Flat bar	1

Remove and discard the needle bearing.

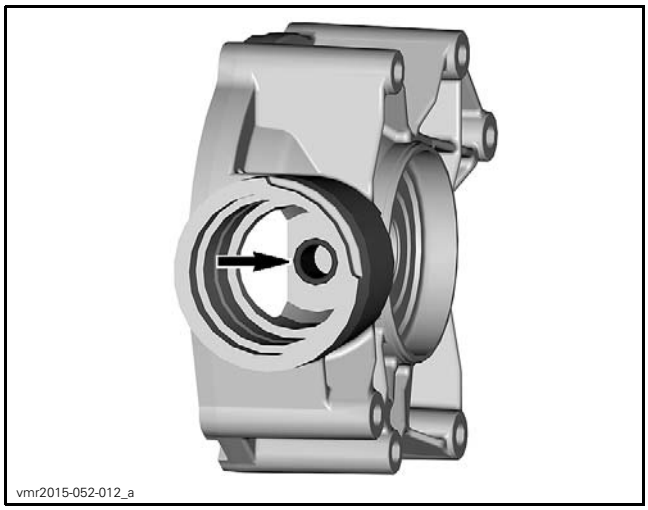

Assembling the Rear Final Drive

Adjustment is required when any of the following part is changed.

– Pinion gear
– Ring gear
– Housing.

As a preliminary setup, install shims according to the following table.

RECOMMENDED SHIM THICKNESS	
PINION GEAR	See procedure for pinion gear shim thickness
BACKLASH	0.5 mm (.02 in) (as a preliminary adjustment)
PRELOAD	

Procedure for pinion gear shim thickness:

1. Remove the old pinion gear and install the new one without the ball bearing. The new pinion will be located at the "zero" location.
2. Measure the distance "A" between outside surface of the gear case and the shim surface of pinion.
3. Measure the distance "B" between outside surface of the gear case and the bearing shoulder of the gear case.
4. The shim thickness will be "A-B-0.53 mm (.021 in)".
5. Select the good combination of shim to match the thickness calculated on step 4.

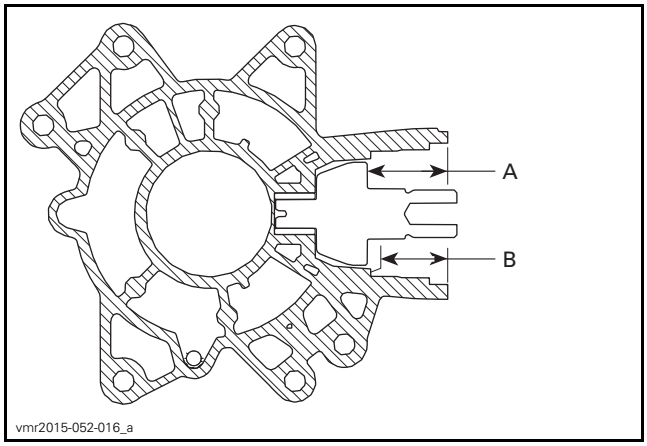

Install shims calculated in *INSPECTING THE REAR FINAL DRIVE (ASSEMBLED)* .

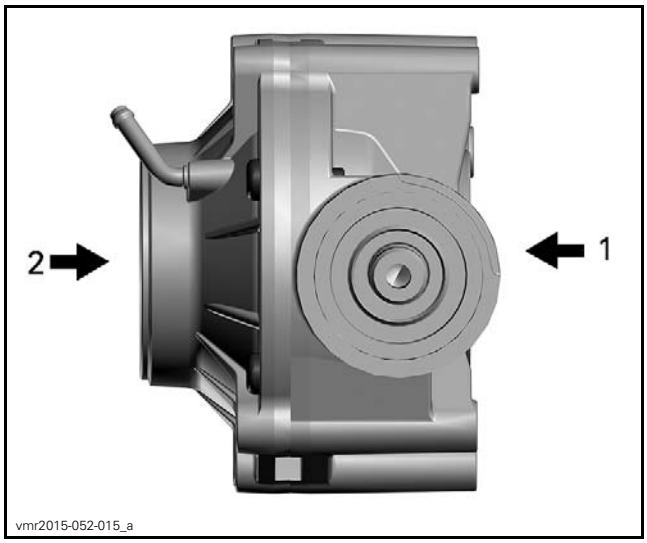

1. Backlash side
2. Preload side

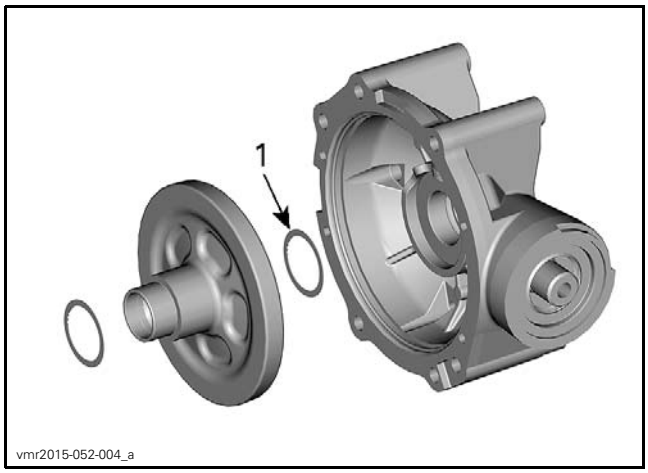

1. Backlash shim

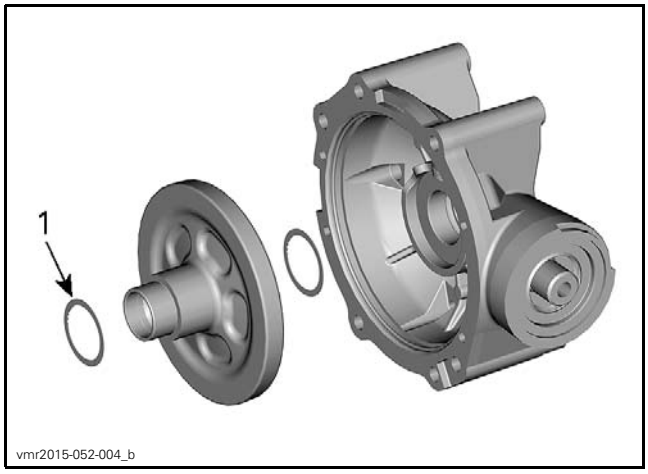

1. Preload shim

Prior to finalizing assembly, proceed in this order:

- Temporarily assemble final drive using recommended torques.
- Do not apply thread locker product.
- Do not install a new pinion nut.
- Check backlash.
- Check preload.

Ring Gear

The installation is the reverse of the removal procedure. However, pay attention to the following:

Check condition of seal. Replace if damaged.

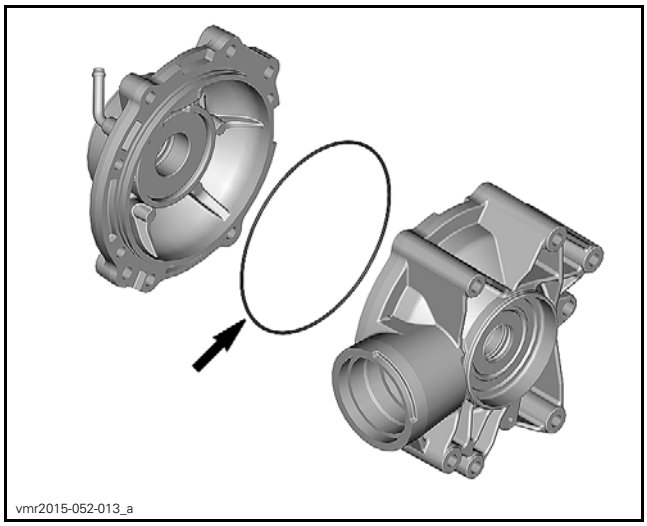

Install NEW bearings.

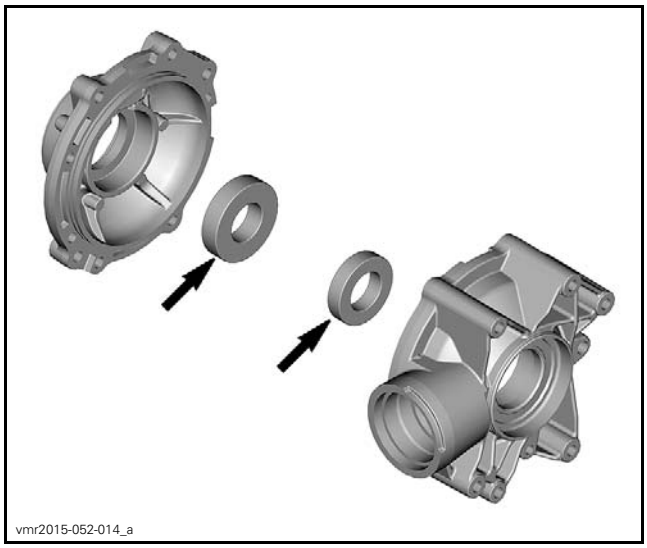

Tighten final drive housing screws as per specification.

TIGHTENING TORQUE	
Final drive housing screws	32 N•m ± 3 N•m (24 lbf•ft ± 2 lbf•ft)

Pinion Gear

The installation is the reverse of the removal procedure. However, pay attention to the following:

Install a NEW needle bearing.

Install the shim(s) then a NEW ball bearing.

install a NEW O-ring.

Apply LOCTITE 271 (RED) (P/N 293 800 005) to pinion nut.

Install and tighten the pinion nut as per specification.

TIGHTENING TORQUE	
Pinion nut (LH THREADS)	180 N•m ± 15 N•m (133 lbf•ft ± 11 lbf•ft) + LOCTITE 271 (RED) (P/N 293 800 005)

Lubricate and install a NEW oil seal.

Installing the Rear Final Drive

The installation is the reverse of the removal procedure. However, pay attention to the following:

Install the lowest rear final drive retaining screws first.

Install all screws and nuts prior to tighten.

Tighten nuts to specification.

TIGHTENING TORQUE	
Final drive retaining nuts	90 N•m ± 5 N•m (66 lbf•ft ± 4 lbf•ft)

Refill the final drive with recommended oil. Refer to *PERIODIC MAINTENANCE PROCEDURES* subsection.

STEERING SYSTEM

SERVICE TOOLS

Description	Part Number	Page
STEERING ALIGNMENT TOOL	529 036 059	5

SERVICE TOOLS – OTHER SUPPLIER

Description	Part Number	Page
SMOOTHFLOW™ TAPERED TIP	16 ga	6

SERVICE PRODUCTS

Description	Part Number	Page
CLUTCH AND PULLEY FLANGE CLEANER PRO S1	779244	6
LOCTITE 406 (GLUE)	293 800 100	7
LOCTITE 767 (ANTISEIZE LUBRICANT)	293 800 070	12, 15, 17
SYNTHETIC GREASE	779162	12, 16

Outlander 450 and 570 Without DPS (except the 570 PRO)

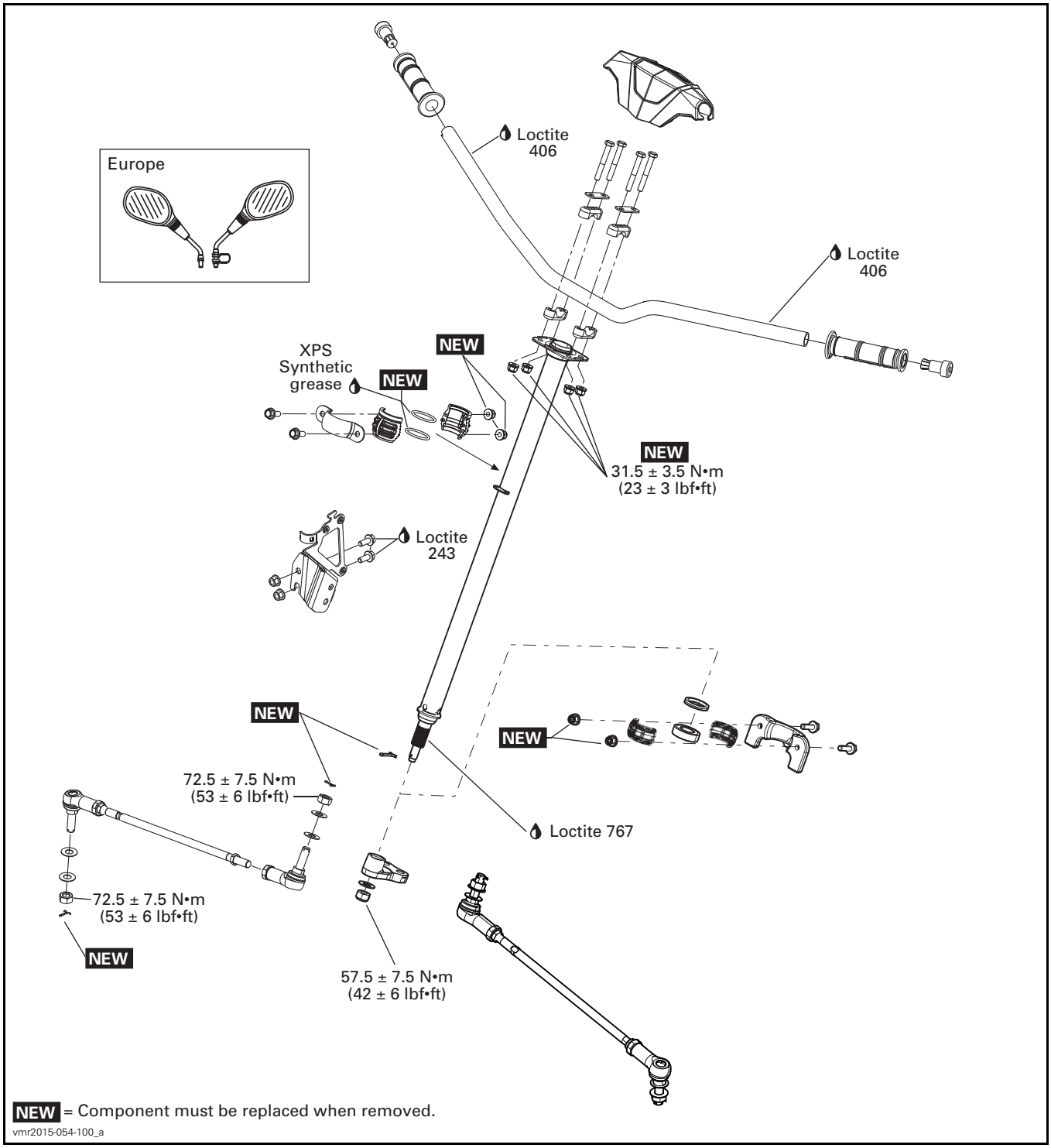

Outlander 570 PRO, Outlander 650/850/1000R and Renegade Without DPS

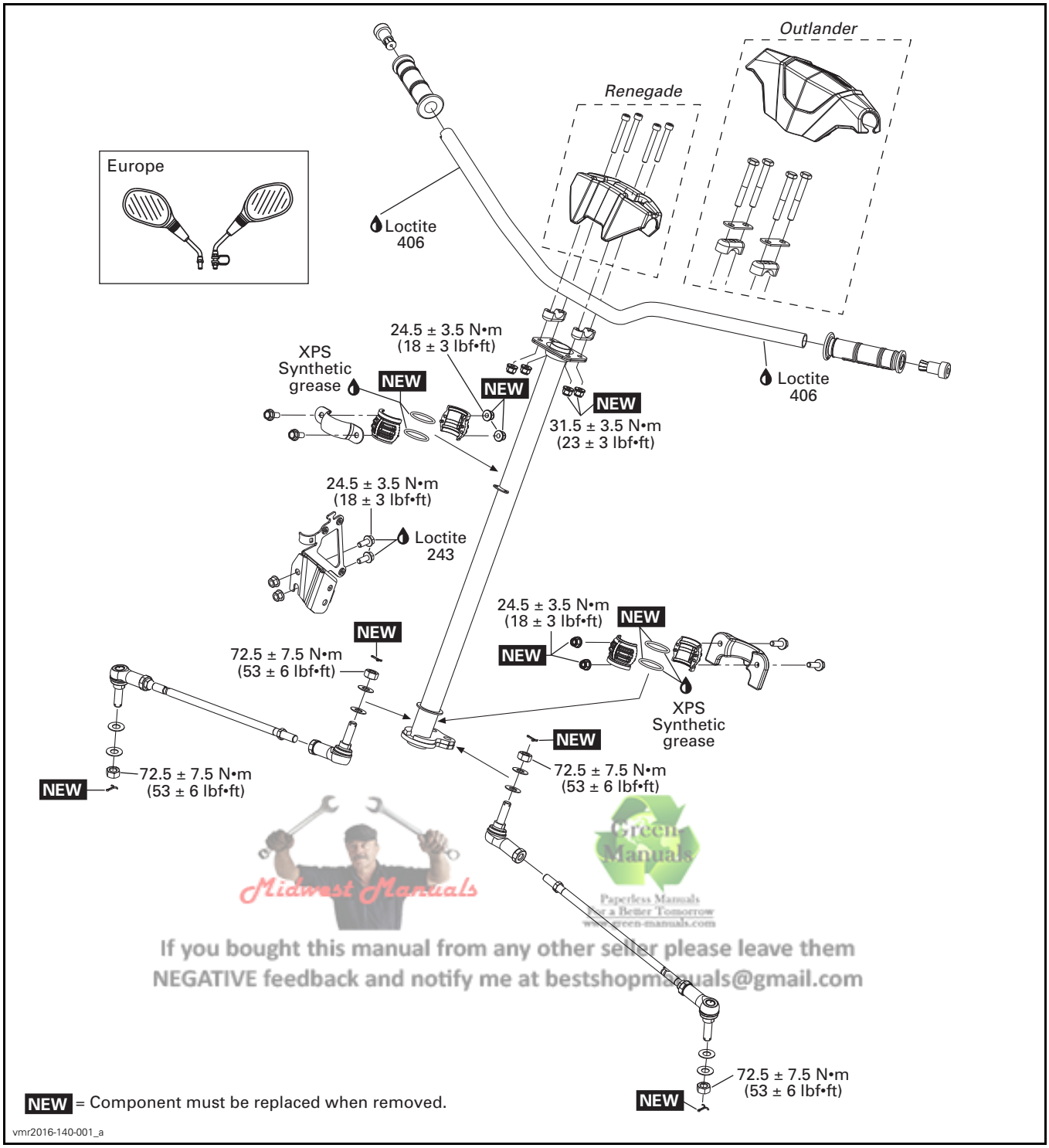

Midwest Manuals
Green Manuals
Paperless Manuals For a Better Tomorrow
www.green-manuals.com
If you bought this manual from any other seller please leave them NEGATIVE feedback and notify me at bestshopmanuals@gmail.com

With DPS

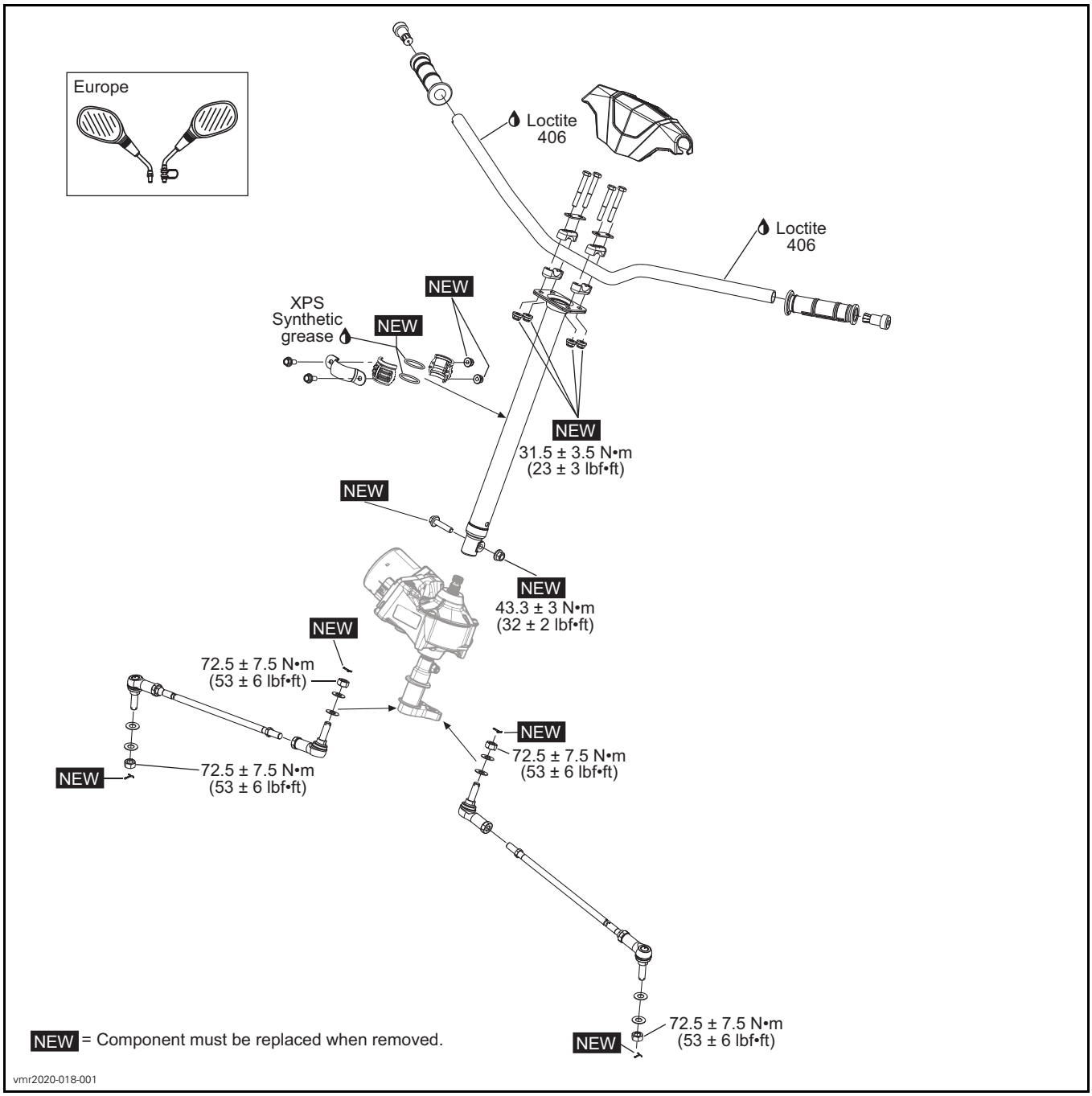
Europe
Loctite 406
Loctite 406
NEW
XPS Synthetic grease
NEW
NEW
31.5 ± 3.5 N•m (23 ± 3 lbf•ft)
NEW
NEW
43.3 ± 3 N•m (32 ± 2 lbf•ft)
NEW
72.5 ± 7.5 N•m (53 ± 6 lbf•ft)
NEW
72.5 ± 7.5 N•m (53 ± 6 lbf•ft)
NEW
72.5 ± 7.5 N•m (53 ± 6 lbf•ft)
NEW = Component must be replaced when removed.
NEW
72.5 ± 7.5 N•m (53 ± 6 lbf•ft)
vmr2020-018-001

GENERAL

The procedures described below are the same for the RH and LH sides, unless otherwise instructed.

ADJUSTMENT

ALIGNING THE WHEELS

1. Place vehicle on a level surface.
2. Check pressure in each tire. Adjust to recommended pressure.
3. Lift and secure vehicle off the ground so that the suspension is fully extended.
4. Remove both inner fenders to have easy access to pitman arm.
5. Center pitman arm by measuring equal distances, ±1mm, between the edges as per the following illustration, on both sides of the pitman arm.

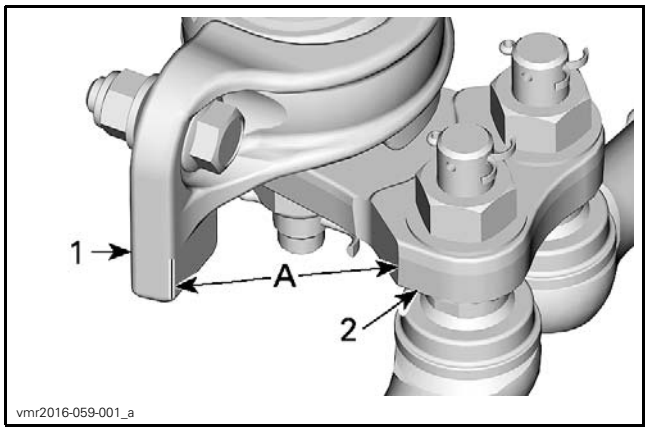

A. Equal distance ± 1 mm (1/32 in) on both sides
1. Steering column lower attach
2. Pitman arm

6. Secure handlebar without moving steering column.
7. Remove two wheel nuts on the LH rear wheel and install the steering alignment tool.

REQUIRED TOOL	
STEERING ALIGNMENT TOOL (P/N 529 036 059)	

8. Place a rope around all four tires using an elastic, link both ends together.

NOTE: The rope must be placed at the center of the wheels.

9. Rotate the front wheel to position the alignment tool level with the rope. Ensure rope passes over the spacer blocks on the alignment tool.

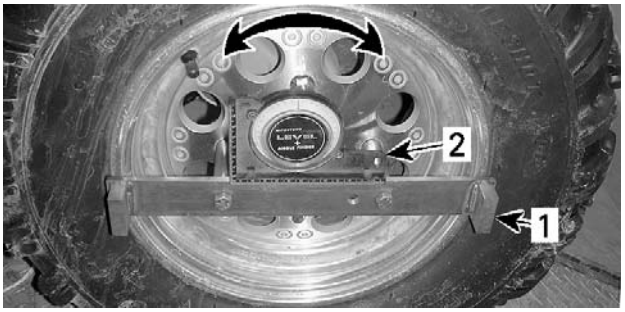

1. Steering adjustment tool
2. Angle gauge or level

10. At the LH front of wheel, near the front of the rim, pull on the rope so that it does not touch the first spacer block on the alignment tool.

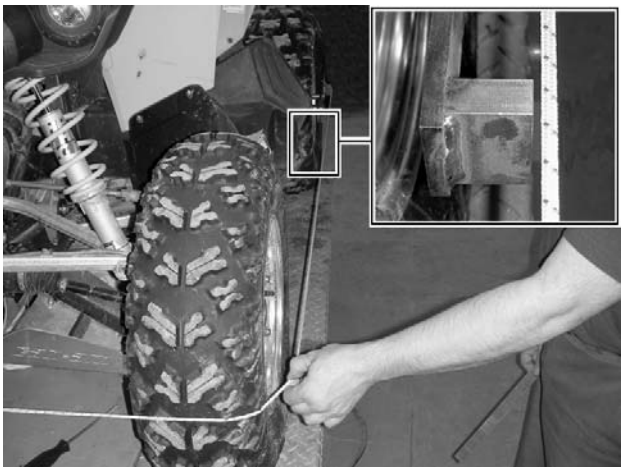

TYPICAL

11. Slowly move rope back until it just makes contact with both spacers.

NOTE: Ensure rope remains in this position as you carry out the following steps.

TYPICAL

12. Measure the distance between the rope and the rim, at the front and at the rear of the wheel rim.

vmr2008-068-008

TYPICAL — FRONT OF WHEEL

vmr2008-068-009

TYPICAL — REAR OF WHEEL

13. Calculate the difference between the front and rear measurements and compare with following specifications.

MODELS	SPECIFICATION
All Outlanders	0 mm to 3 mm (0 in to .118 in) **toe-in**
All Renegades	3 mm to 5.6 mm (.118 in to .22 in) **toe-in**

14. If the wheel toe measurement is out of specification, carry out the following:

    14.1 Loosen tie-rod end lock nuts.

    14.2 Adjust tie-rod length.

    NOTE: For a toe-in adjustment, the distance must be longer at the front of the wheel. Lengthen tie-rod to increase toe-in, and vise-versa.

⚠ WARNING

The maximum unengaged tie-rod length must not exceed 32 mm (1.26 in) Tie rod unengaged length must be the same at both ends of the tie-rod.

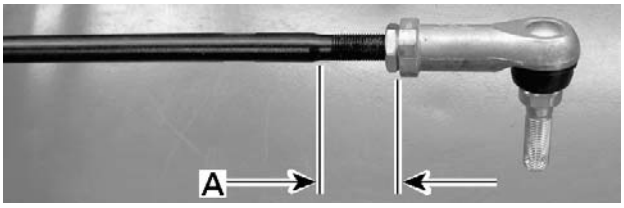

tmr2011-034-107_a

A. Maximum tie-rod end length

    14.3 Tighten tie-rod end lock nuts to specification.

TIGHTENING TORQUE	
Tie-rod end locking nut	34 N•m ± 2 N•m (25 lbf•ft ± 1 lbf•ft)

15. Repeat procedure for other front wheel.
16. Put the vehicle back on the ground.
17. Remove the handlebar securing device.
18. Place the front wheels in straight ahead position and adjust the handlebar in its center position by loosening the 4 bolts clamping the handlebar on the steering column.

PROCEDURES

HANDLEBAR GRIP

Removing the Handlebar Grip

1. Loosen the screw at the end of handlebar grip.
2. Remove the handlebar grip cap.
3. Cut and remove the handlebar grip.

Installing the Handlebar Grip

1. Remove all rubber residues of the old grip before installing the new.
2. Clean the handlebar with recommended cleaner or alcohol to remove any greasy matter on it.

SERVICE PRODUCT
CLUTCH AND PULLEY FLANGE CLEANER PRO S1 (P/N 779244)

3. Install handlebar grip by blowing compressed air between handle grip and handlebar.
4. Install a SMOOTHFLOW™ TAPERED TIP (P/N 16 GA) from Nordson EFD Inc on a bottle of glue.

SERVICE PRODUCT
LOCTITE 406 (GLUE) (P/N 293 800 100)

5. Lift a part of the grip using a small screwdriver and inject glue (about 4 spots per side).

NOTE: The glue dries quickly. Do not apply it before installing grip.

6. Apply pressure on the grip for approximately 30 seconds to set the glue.
7. Install the handlebar grip cap and tighten screws to specification.

TIGHTENING TORQUE	
Handlebar grip cap screw	0.4 N•m (3.5 lbf•**in**)

HANDLEBAR COVER

Removing the Handlebar Cover

Outlander

Pull on plastic handlebar cover to remove it from the handlebar.

Outlander XT

Unscrew both plastic U-clamps that attach handlebar cover to the handlebar.

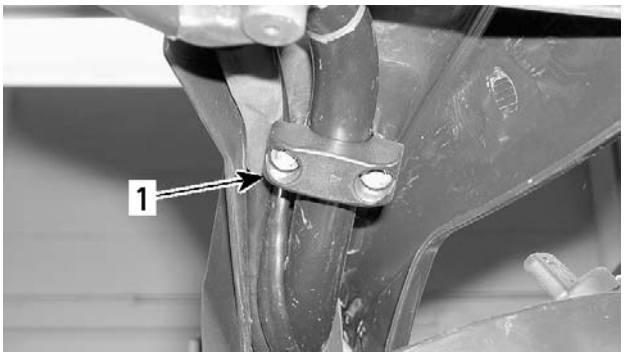

vmr2006-025-005_a

TYPICAL
1. Plastic U-clamp

Renegade

Remove the fabric steering cover, then pull the protective foam from the handlebar.

Inspecting the Handlebar Cover

Check covers for cracks or other damages. Replace if necessary.

Installing the Handlebar Cover

The installation is the reverse of removal procedure.

Renegade X xc 1000

NOTE: Ensure handlebar "U" clamps in handlebar cover are tightened equally (equal distance on each side of clamps).

HANDLEBAR

Removing the Handlebar

All Outlander Models

1. Remove handlebar cover.

NOTE: Remove handlebar grips, throttle handle, brake handle and multifunction switch only if the handlebar is defective and requires replacement.

2. Remove handlebar mounting bolts, stiffener and handlebar clamps.

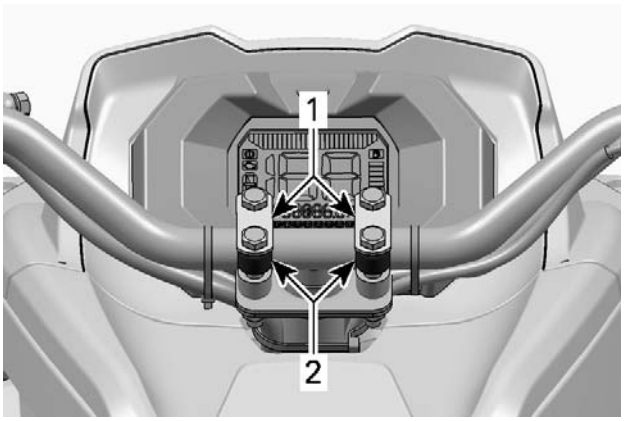

vmr2012-039-004_a

TYPICAL
1. Stiffeners
2. Handlebar clamps

3. Remove the handlebar.

Renegade Models

1. Remove fabric steering cover.
2. Pull foam protector from handlebar.
3. Remove the four socket screws, then remove the handlebar clamps.

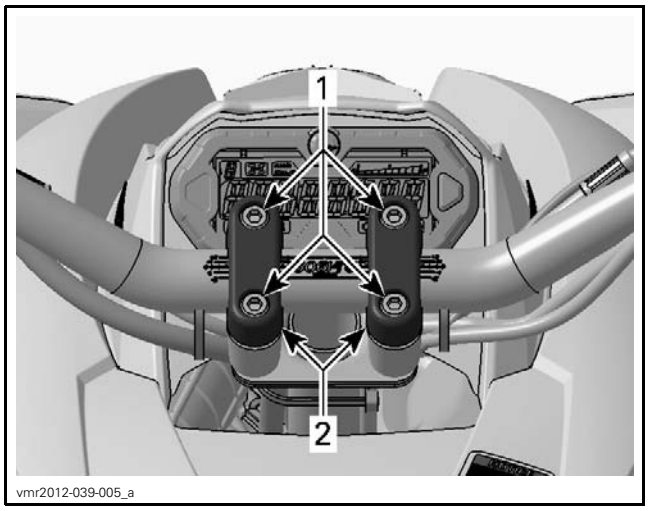

vmr2012-039-005_a

1. *Socket screws*
2. *Handlebar clamps*

Inspecting the Handlebar

Inspect the handlebar for damage, cracks or bending. Replace if any of these problems is detected.

Installing the Handlebar

For the installation, reverse the removal procedure.

NOTE: Ensure handlebar "U" clamps are tightened equally (equal distance on each side of clamps).

STEERING CONNECTORS

Steering Connector Access

1. Remove gauge support, refer to *GAUGE* subsection.

vmo2012-012-033_a

1. *Gauge support*

2. Remove front body module, refer to body subsection.
3. Remove dash board support.

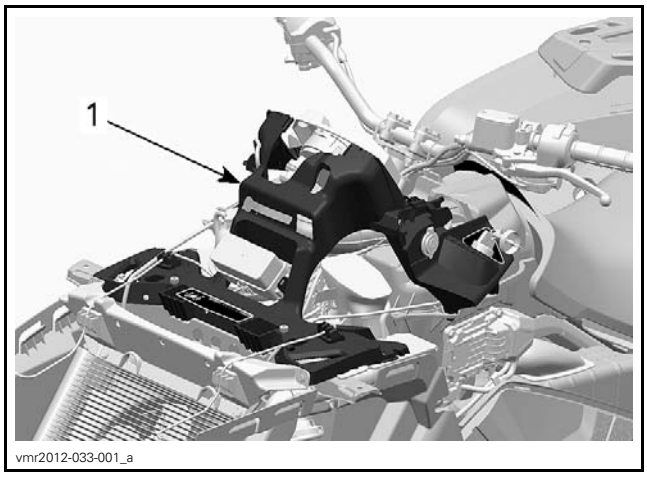

vmr2012-033-001_a

1. *Dash board support*

Steering Connector Identification

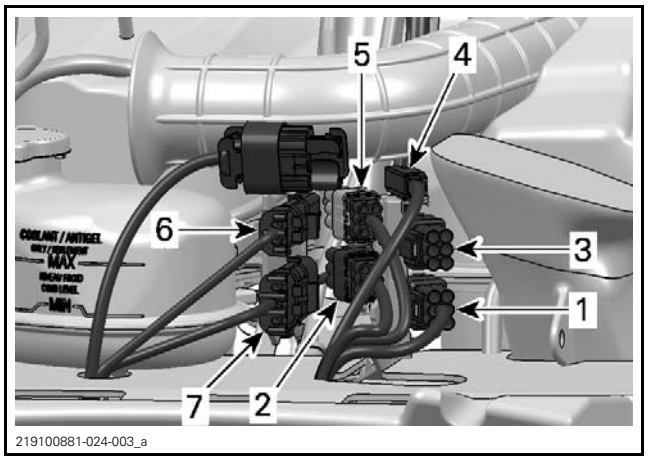

219100881-024-003_a

STEERING CONNECTOR IDENTIFICATION

1. *MG1 (LH multifunction switch)*
2. *MG2 (LH multifunction switch)*
3. *MG3 (LH multifunction switch)*
4. *DC3 (DC power connector)*
5. *HIC (Engine interconnect)*
6. *DC5 (DC Power Interconnect)*
7. *SWW (Switch winch, if equipped)*

MULTIFUNCTION SWITCH

Removing the Multifunction Switch (From the Vehicle)

Remove gauge support. Refer to *GAUGE* subsection.

Carry out steps in *REMOVING THE MULTIFUNCTION SWITCH (AT HANDLEBAR)*.

Removing the Multifunction Switch (At Handlebar)

1. Remove multifunction switch screws.

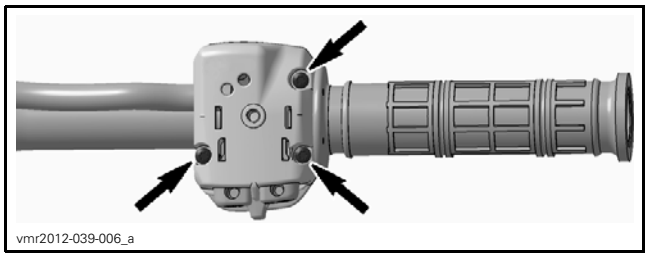

TYPICAL - MULTIFUNCTION SWITCH

2. Separate multifunction switch from handlebar.
3. Disconnect multifunction switch steering connectors, refer to *STEERING CONNECTOR IDENTIFICATION* in this subsection:
   – MG1
   – MG2
   – MG3.
4. Take note of the positions of the locking ties securing the steering harness, then cut them and remove the multifunction switch steering harness from the vehicle.

Installing the Multifunction Switch

For installation, reverse the removal procedure.

NOTICE **Be sure to route and secure the multifunction switch steering harness as noted prior to removal.**

INTELLIGENT THROTTLE CONTROL (ITC) HOUSING

Removing and Installing the ITC Housing

Refer to *INTELLIGENT THROTTLE CONTROL (ITC)* subsection.

BRAKE LEVER

Removing the Brake Lever From the Vehicle

1. Carry out steps in *REMOVING THE BRAKE LEVER (AT HANDLEBAR)*.

NOTICE **Avoid spilling brake fluid on plastic, rubber or painted parts.**

2. Disconnect brake hose, refer to *BRAKES* subsection.

Removing the Brake Lever (At Handlebar)

1. Remove brake lever retaining screws.

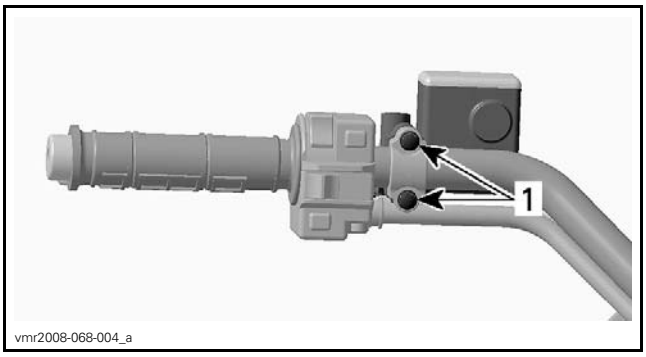

TYPICAL
1. Remove these retaining screws

2. Separate brake lever from handlebar.

Installing the Brake Lever

For installation, reverse the removal procedure however, pay attention to the following.

TIGHTENING TORQUE	
Brake lever mounting screw	6 N•m ± 1 N•m (53 lbf•**in** ± 9 lbf•**in**)

⚠ WARNING

If brake hose was disconnected, bleed brake system. Refer to *BRAKES* subsection.

STEERING COLUMN BEARING

The steering column bearing(s) used on these vehicles are half bushings.

For inspection and replacement of steering column half bushings, refer to *STEERING COLUMN* in this subsection.

STEERING COLUMN

Removing the Steering Column (Without DPS)

1. Remove gauge support, refer to *GAUGE* subsection.
2. Refer to *BODY* subsection to remove the following:
   – Front body module
   – Inner fender panels
3. Remove dash board support.

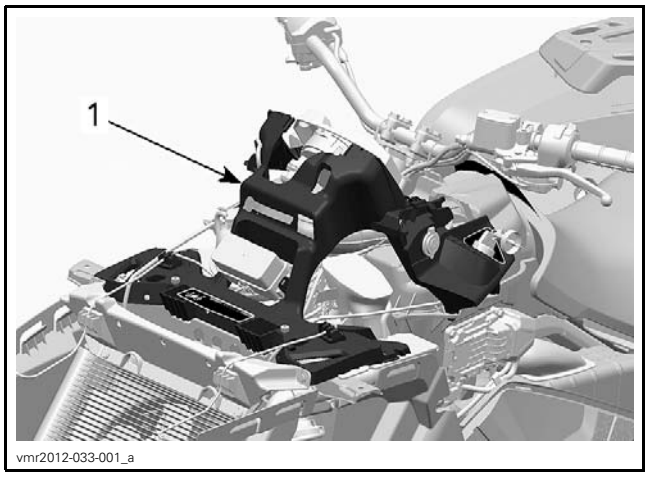

1. *Dash board support*

4. Remove the air intake silencer. Refer to *AIR INTAKE SYSTEM* subsection.
5. Remove handlebar, refer to *REMOVING THE HANDLEBAR* in this subsection. Also remove locking ties and separate wiring harnesses and hoses from the steering column.
6. Disconnect the tie-rods from the pitman arm at the bottom of the steering column. Refer to *TIE-ROD* in this subsection.

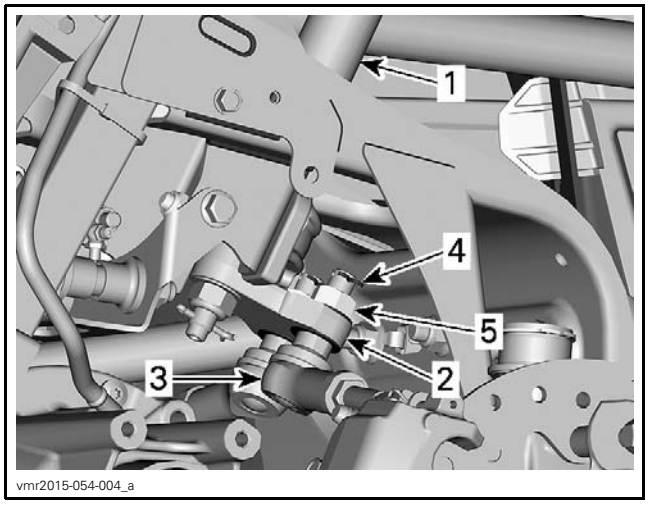

1. *Steering column*
2. *Pitman arm*
3. *Tie-rod end*
4. *Cotter pin*
5. *Tie-rod retaining nut*

NOTE: When removing tie-rods from pitman arm, take note of positions of flat washers for installation.

7. Remove lower half bushing retaining screws and pull retainer off of half bushings.

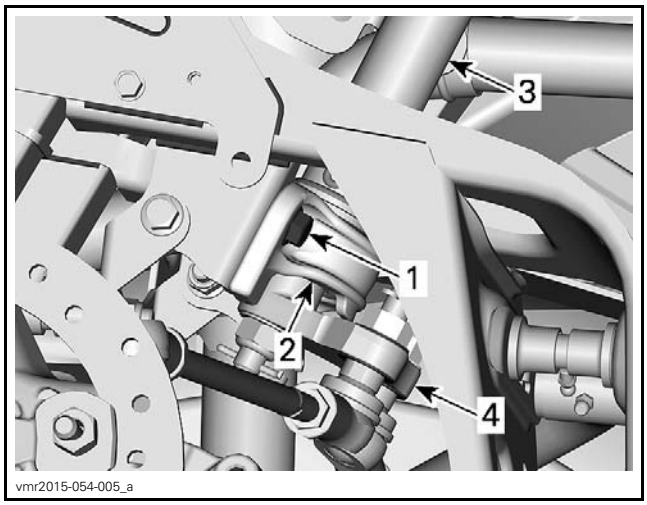

1. *Lower retainer mounting screws (2)*
2. *Lower half bushing retainer*
3. *Steering column*
4. *Pitman arm*

8. Remove upper half bushing retaining screws and pull retainer off of half bushings.

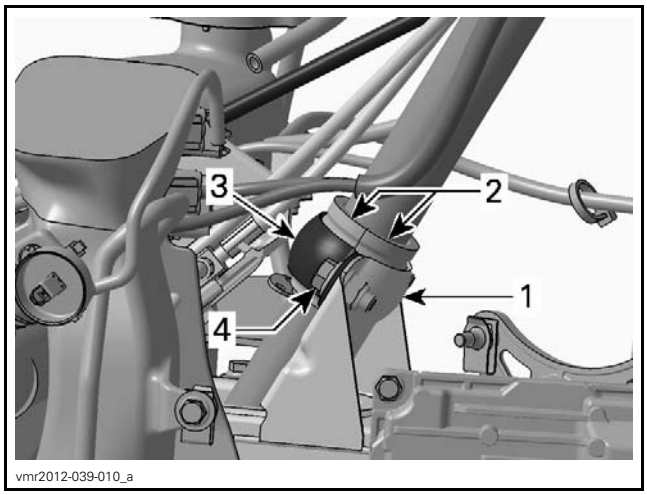

1. *Upper steering column support*
2. *Half bushings*
3. *Half bushing retainer*
4. *Retainer mounting screws (2)*

9. Pull steering column from vehicle.

Removing the Steering Column (With DPS)

1. Remove gauge support, refer to *GAUGE* subsection.
2. Remove the front body module, refer to *BODY* subsection.

Outlander Models

3. Remove dash board support.

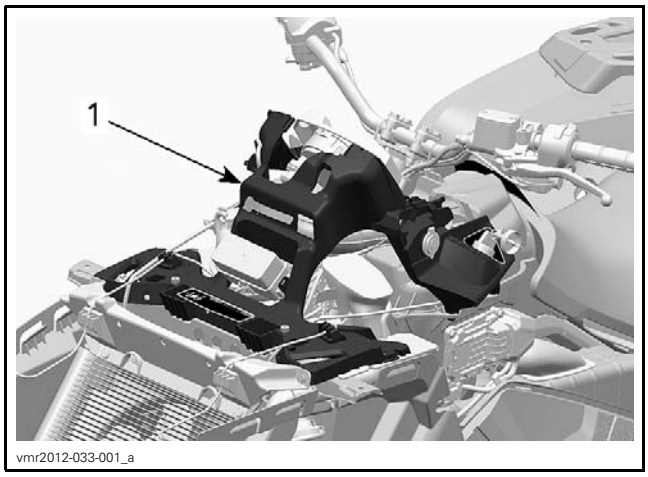

TYPICAL - OUTLANDER MODELS
1. Dash board support

All Models

4. Remove the air intake silencer. Refer to *AIR INTAKE SYSTEM* subsection.
5. Remove handlebar, refer to *REMOVING THE HANDLEBAR* in this subsection. Also remove locking ties and separate wiring harnesses and hoses from the steering column.
6. Remove the pinch bolt.

NOTE: Some parts in following illustration not shown for clarity of illustration.

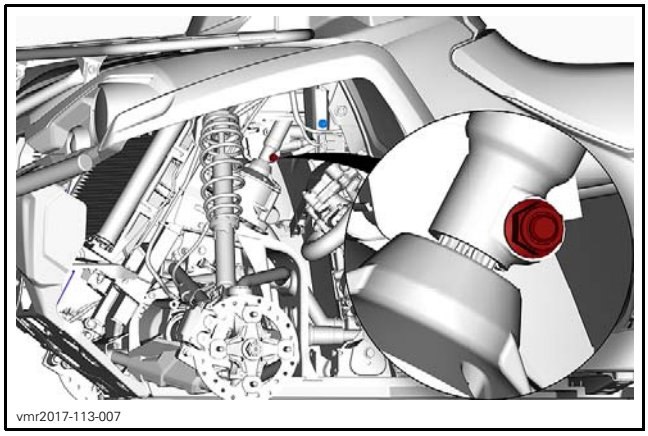

7. Remove upper half bushing retaining bolts and pull retainer off of half bushings.

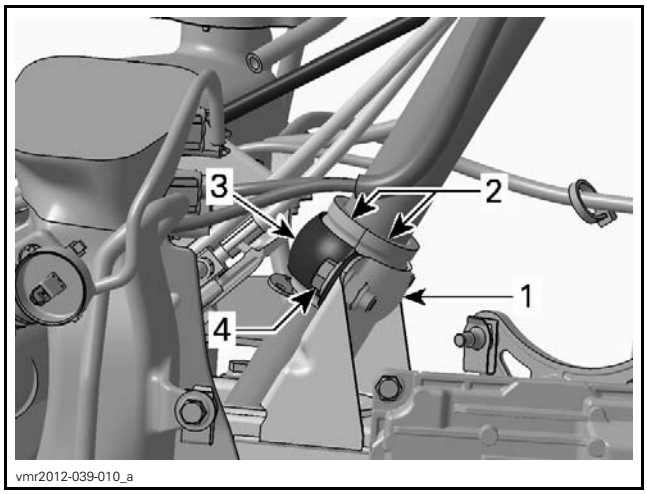

TYPICAL
1. Upper steering column support
2. Half bushings
3. Half bushing retainer
4. Retainer mounting screws (2)

8. Pull steering column from vehicle.

Inspecting the Steering Column

1. Inspect steering column for wear, cracks or bending. Replace if any of these problems is detected.
2. Check steering column O-rings for brittleness, hardness, wear or other damage. Replace if necessary.
3. Clean and check steering column half bushings. If they show signs of wear or cracking, replace them.

Models Without a DPS

4. Check if steering column lower ball bearing turns freely and smoothly. .
   – Outlander 450 and 570 Without DPS (except the 570 PRO) - Replace the bearing if necessary.
   – Outlander 570 PRO, Outlander 650/850/1000R and Renegade Without DPS - Replace steering column if necessary.

Replacing the Steering Column Lower Ball Bearing and Seal (Outlander 450 and 570 Without DPS (except the 570 PRO))

1. Remove the pitman arm. Refer to *PITMAN ARM* in this subsection.
2. Remove ball bearing.

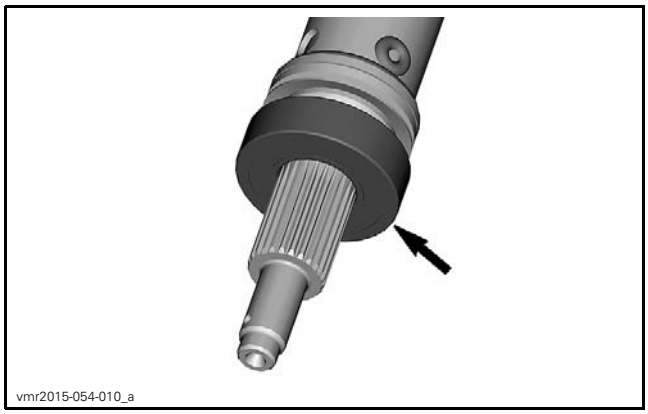

3. Remove seal.

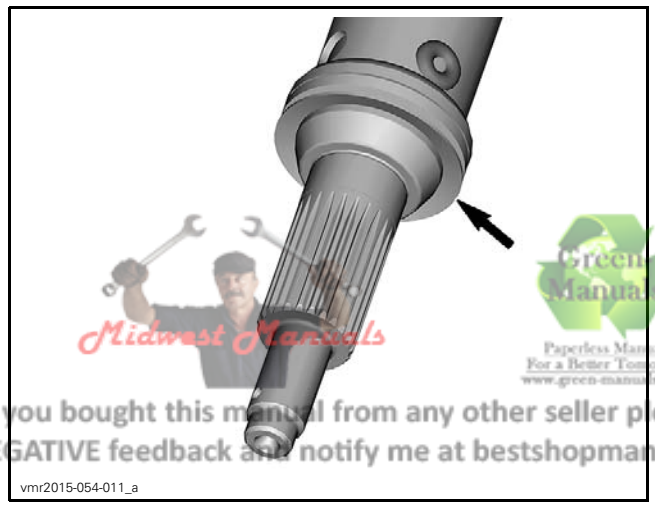

Midwest Manuals
Green Manuals
Paperless Manuals
For a Better Tomorrow
www.green-manuals.com
If you bought this manual from any other seller please leave them
NEGATIVE feedback and notify me at bestshopmanuals@gmail.com

4. Install a **NEW** seal.
5. Install a **NEW** ball bearing.

Installing the Steering Column

The installation is the reverse of the removal procedure. However, pay attention to the following:

SERVICE PRODUCTS	
O-rings and half bushings	SYNTHETIC GREASE (P/N 779162)
DPS input and output shaft splines	LOCTITE 767 (ANTISEIZE LUBRICANT) (P/N 293 800 070)

Install **NEW** cotter pins (as applicable per model). Both ends of cotter pins must be folded.

Install **NEW** elastic nuts where used.

Torque all fasteners as specified in the applicable exploded view.

Carry out a steering alignment, refer to *ALIGNING THE WHEELS* in this subsection.

Reset the torque sensor offset, refer to *RESETTING THE TORQUE OFFSET* in the appropriate *DYNAMIC POWER STEERING (DPS)* subsection.

TIE-ROD

NOTE: Use the same procedure for RH and LH side.

Removing the Tie-Rod

1. Place vehicle on jack stands and remove the applicable wheel.
2. Remove tie-rod end from steering knuckle by removing:
   - Cotter pin (discard)
   - Retaining nut
   - Hardened washers (note position).

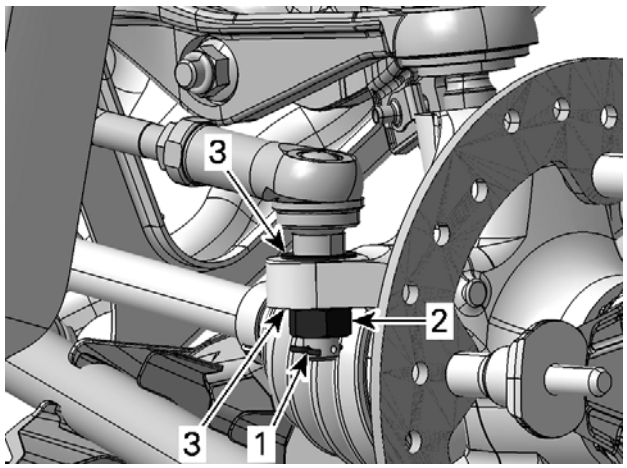

TYPICAL - TIE ROD AT STEERING KNUCKLE
1. *Cotter pin*
2. *Elastic nut*
3. *Hardened washers*

3. If completely removing tie-rod from vehicle, repeat previous step at pitman arm.

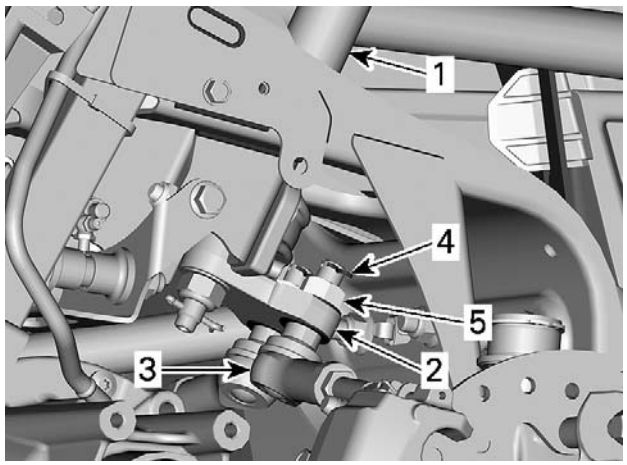

TYPICAL
1. *Steering column*
2. *Pitman arm*
3. *Tie-rod end*
4. *Cotter pin*
5. *Tie-rod end retaining nut*

Inspecting the Tie-Rod

Inspect tie-rod for straightness, cracks and other damages. Replace as required.

Inspect tie-rod ends for wear or excessive play. If excessive, replace the tie-rod end.

Installing the Tie-Rod

For the installation, reverse the removal procedure. Pay attention to the following details.

When installing a new tie-rod or tie-rod end, adjust tie-rod to nominal length.

TIE-ROD NOMINAL LENGTH		
Outlander with metal racks	Dimension "A" - center to center	416.4 mm (16.394 in)
Renegade and Outlander with plastic rack		438.3 mm (17.26 in)

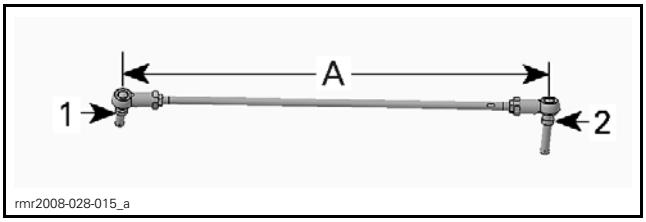

NOMINAL LENGTH
1. *Pitman arm side*
2. *Knuckle side*

A. *Distance to measure*

TIE-ROD MAXIMUM UNENGAGED LENGTH	
Dimension "A" - Shoulder to tie rod end face	32 mm (1.26 in)

⚠ WARNING

Maximum tie-rod unengaged length must not exceed specification. Both tie-rod ends must be engaged equally.

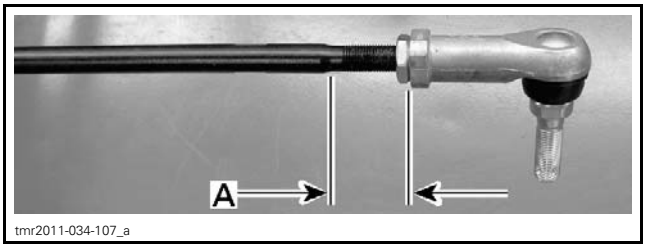

MAXIMUM TIE-ROD UNENGAGED LENGTH
A. *32 mm (1.26 in)*

Install **NEW** cotter pins. Both ends of cotter pins must be folded.

Check the steering alignment, refer to *ALIGNING THE WHEELS* in this subsection.

Apply specified torques.

TIGHTENING TORQUE	
Tie-rod lock nut	34 N•m ± 2 N•m (25 lbf•ft ± 1 lbf•ft)
Tie rod end retaining nut	72 N•m ± 7 N•m (53 lbf•ft ± 5 lbf•ft)

KNUCKLE

Removing the Knuckle

1. Safely lift and support the front of vehicle.
2. Remove front wheel.
3. Detach tie-rod end from knuckle, refer to *TIE-ROD* in this subsection.
4. Remove brake caliper, refer to *BRAKES* subsection.
5. Remove wheel hub, refer to the appropriate *FRONT DRIVE* subsection.

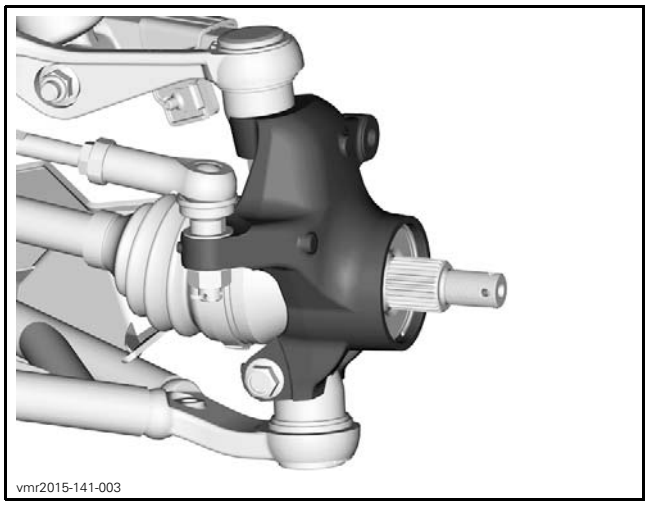
vmr2015-141-003

6. Detach upper suspension arm from knuckle, refer to *FRONT SUSPENSION*.
7. Detach lower suspension arm from knuckle, refer to *FRONT SUSPENSION*.
8. Remove knuckle from vehicle.

Inspecting the Knuckle

Check knuckle for cracks or other damages. Replace if necessary.

Check if wheel bearing turns freely and smoothly. See *WHEEL BEARINGS* in this subsection.

Installing the Knuckle

The installation is the reverse of removal procedure.

WHEEL BEARINGS

Inspecting the Wheel Bearing (Maintenance)

Refer to *PERIODIC MAINTENANCE PROCEDURES* subsection.

Inspecting the Wheel Bearing (During Component Removal)

Whenever the drive axle or knuckle is removed, check wheel bearing as follows:

– Check if wheel bearing turns freely and smoothly.
– Check seal condition.

Replace if necessary.

Removing the Wheel Bearing

1. Remove knuckle from vehicle, refer to *REMOVING THE KNUCKLE* in this subsection.
2. Remove the circlip.

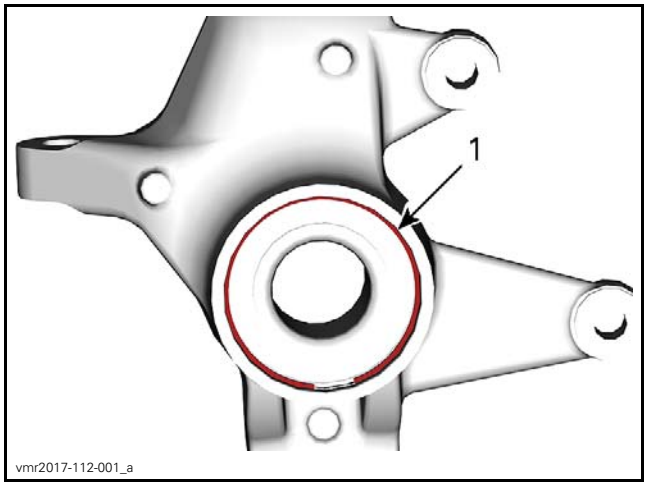

vmr2017-112-001_a

1. Circlip

3. Install knuckle on a press.
4. Remove bearing from knuckle using an appropriate bearing remover.

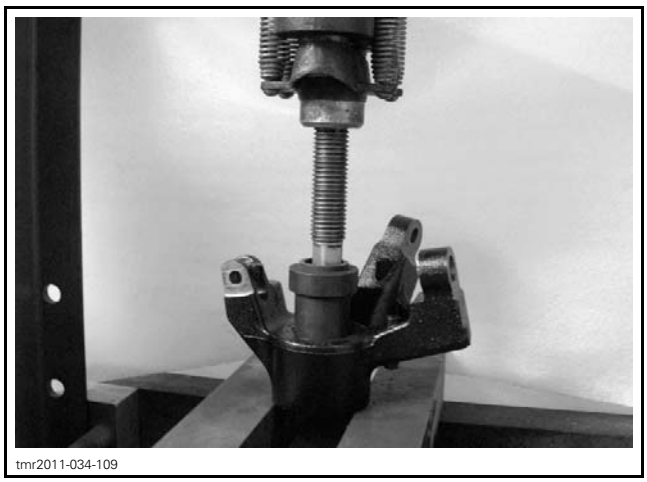
tmr2011-034-109

TYPICAL

NOTE: It may be necessary to heat the knuckle to remove bearing.

⚠ WARNING

Clean all grease from outside and inside of knuckle before heating it.

Installing the Wheel Bearing

The installation is the reverse of the removal procedure. However, pay attention to the following.

To ease wheel bearing installation:

– Place bearing in a freezer for 10 minutes.
– Place knuckle in oven to 100°C (212°F) for 30 minutes maximum.

When knuckle is cooled down, install **NEW** circlip and **NEW** seal.

PITMAN ARM (WITHOUT DPS)

Removing the Pitman Arm

1. Remove tie rod ends from pitman arm. Refer to *TIE ROD* in this subsection.
2. Remove and discard cotter pin.

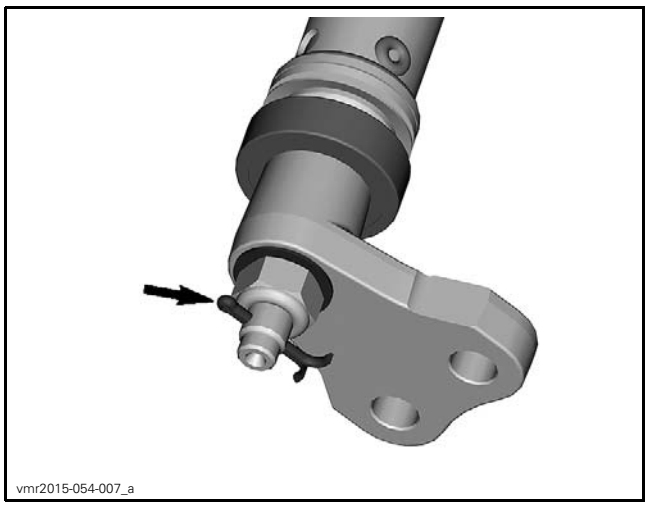
vmr2015-054-007_a

3. Remove pitman arm retaining nut and washer.

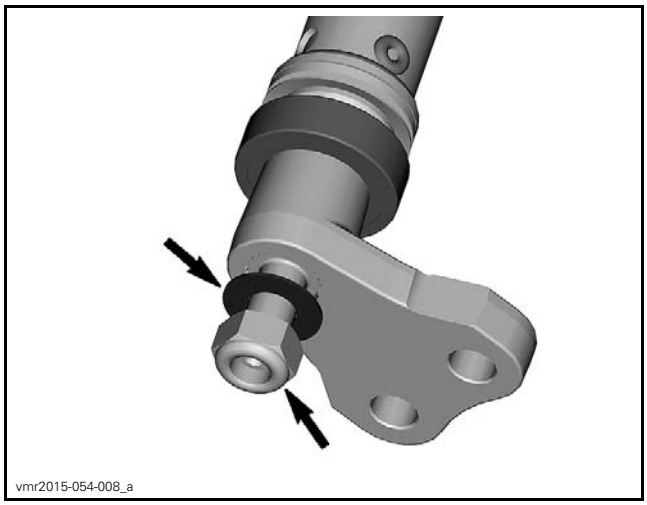
vmr2015-054-008_a

4. Remove pitman arm.

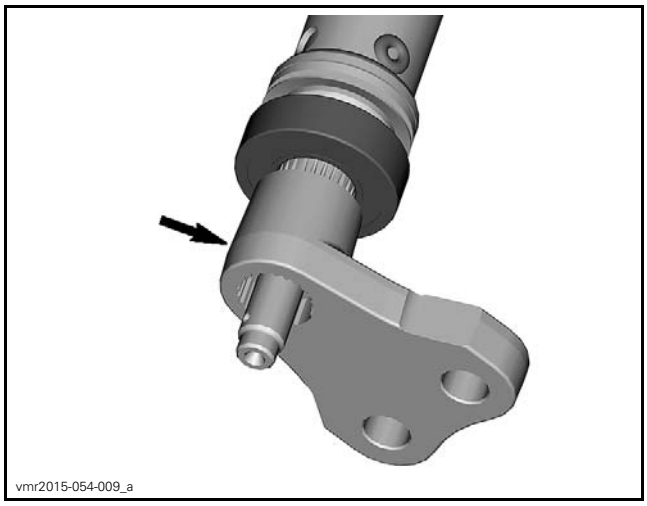
vmr2015-054-009_a

Inspecting the Pitman Arm

Inspect pitman arm for cracks or other damages. Replace if necessary.

Check pitman arm splines for excessive wear. Replace if necessary.

Installing the Pitman Arm

Installation is the reverse of the removal. However, pay attention to the following.

PRODUCT	
Steering column splines	LOCTITE 767 (ANTISEIZE LUBRICANT) (P/N 293 800 070)

Tighten the pitman arm retaining nut to specification.

TIGHTENING TORQUE	
Pitman arm retaining nut	57.5 N•m ± 7.5 N•m (42 lbf•ft ± 6 lbf•ft)

Install a **NEW** cotter pin. Both ends of cotter pins must be folded.

PITMAN ARM (WITH DPS)

Removing the Pitman Arm

1. Remove tie rod ends from pitman arm. Refer to *TIE ROD* in this subsection.
2. Remove the pinch bolt.

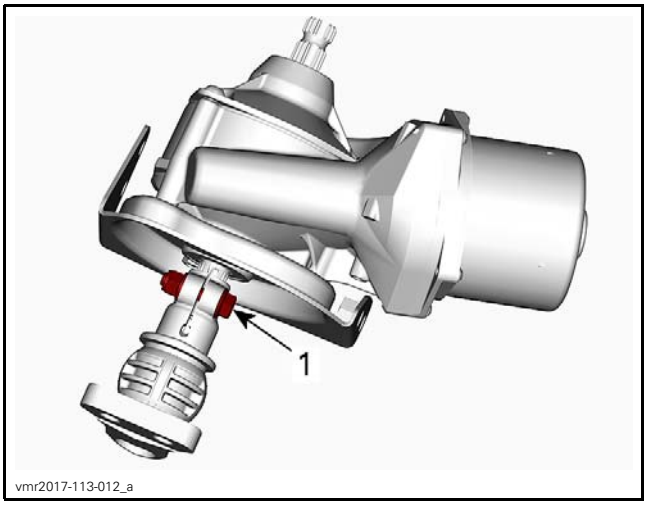

1. Pinch bolt

NOTE: There is no need to mark the parts indexation. There is a master spline on the assembly.

3. Remove the pitman arm by hand or using a soft hammer.

NOTICE **Do not pry between the DPS unit and the pitman arm to avoid damage to the output shaft seal.**

4. Remove the half bushings.

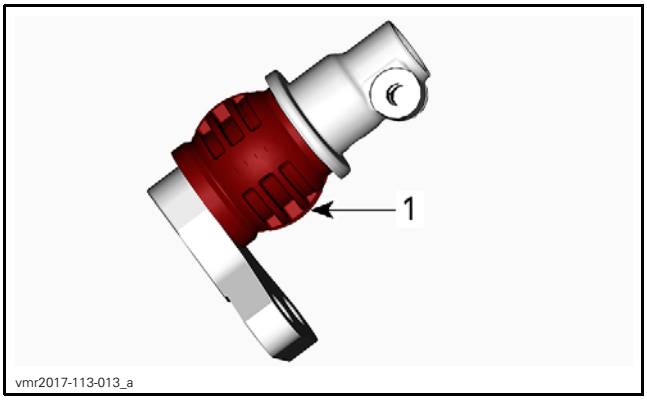

1. Half bushings

5. Inspect the O-rings and replace if required.

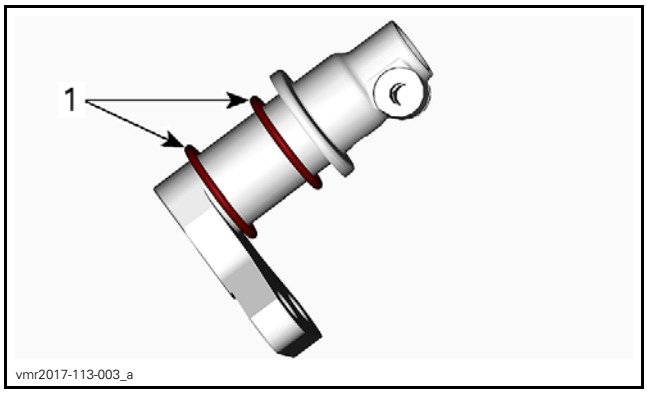

1. O-rings

Installing the Pitman Arm

1. Apply synthetic grease to:
   - The inside half bushings
   - The pitman arm contact surface and "O" rings.

SERVICE PRODUCT
SYNTHETIC GREASE (P/N 779162)

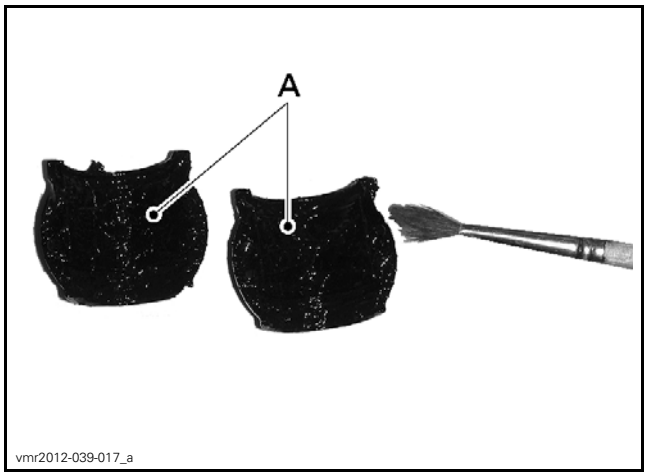

A. Apply grease here

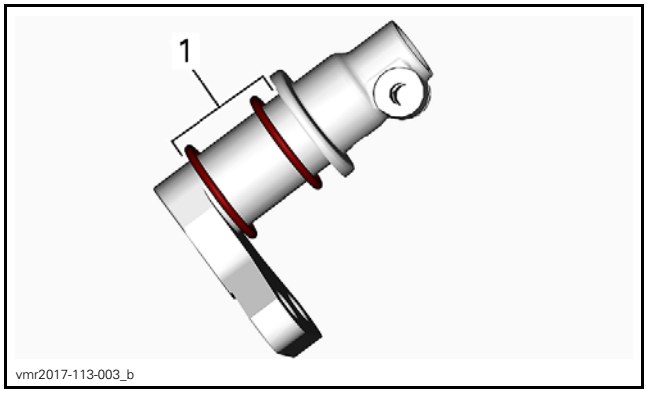

1. Apply grease here

2. Apply lubricant to the DPS outout shaft splines.

SERVICE PRODUCT
LOCTITE 767 (ANTISEIZE LUBRICANT) (P/N 293 800 070)

3. Install pitman arm. Tighten the pinch bolt to the specified torque.

NOTE: Make sure to engage the pinch bolt in the DPS input shaft groove properly.

TIGHTENING TORQUE	
Steering column pinch bolt	43 N•m ± 3 N•m (32 lbf•ft ± 2 lbf•ft)

DYNAMIC POWER STEERING (DPS)

SERVICE PRODUCTS

Description	Part Number	Page
DIELECTRIC GREASE	293 550 004	11
LOCTITE 767 (ANTISEIZE LUBRICANT)	293 800 070	9

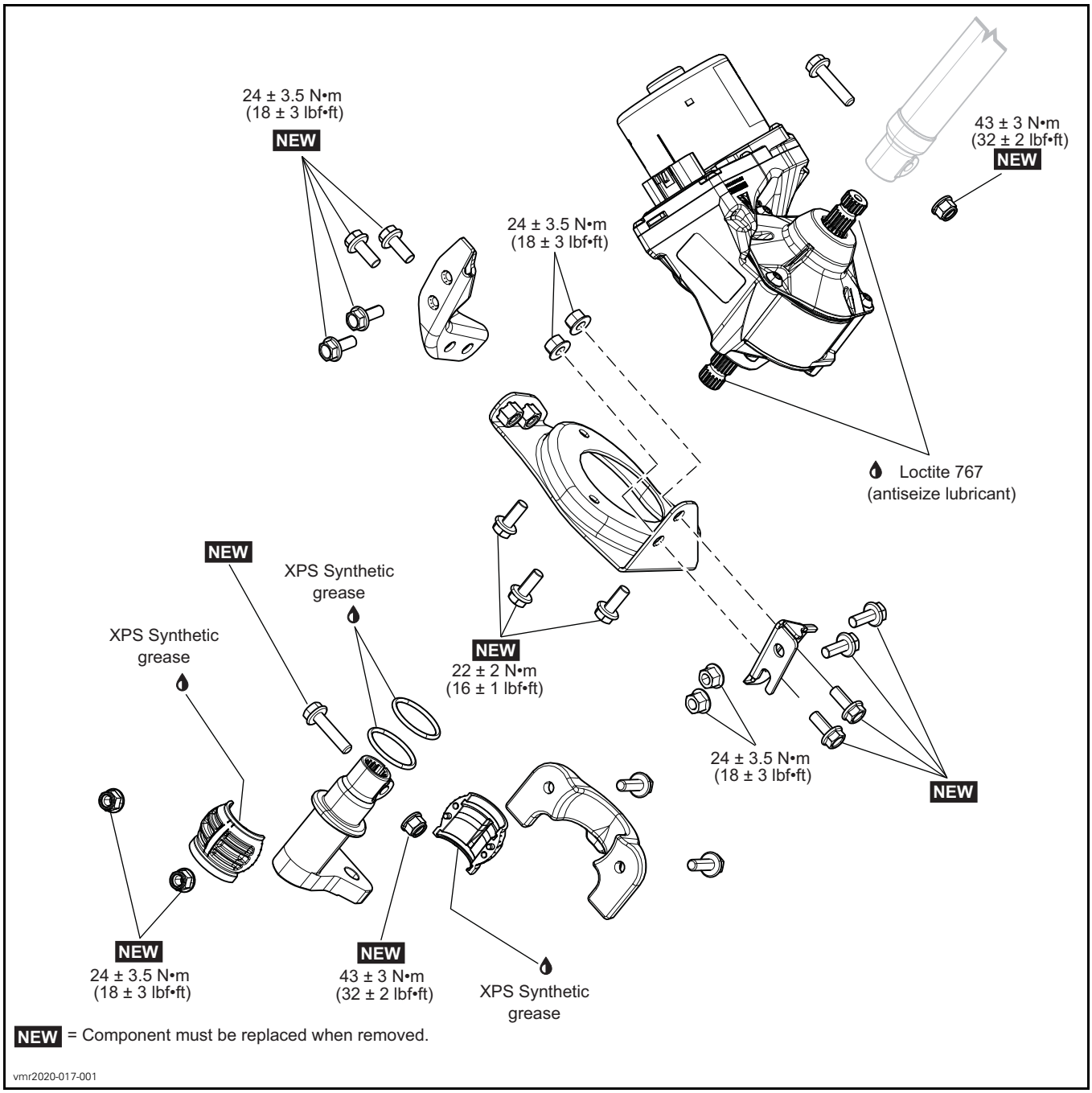

GENERAL

NOTICE **Never perform arc welding in the DPS area. Otherwise, poor DPS operation might occur.**

SYSTEM DESCRIPTION (FEATURES)

The Dynamic Power Steering (DPS) provides a computer controlled, variable power assist, achieved by an electric motor to optimize the amount of steering input required by the rider.

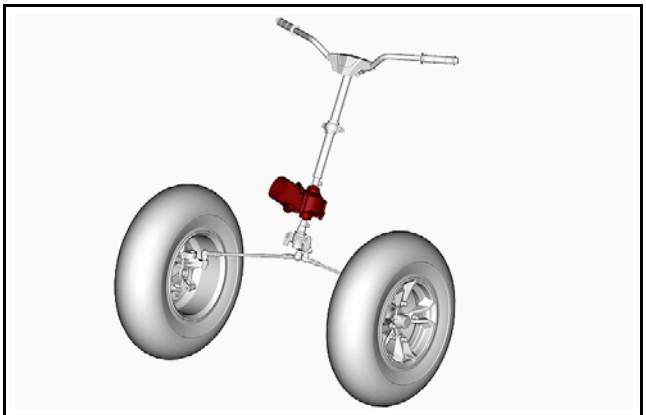

vmr2017-113-004

The DPS system uses the following parameters to determine how much steering assist it provides:

- Engine RPM
- Battery/electrical system voltage
- Vehicle speed
- DPS shaft torque sensor input.
- DPS internal temperature.

The amount of steering assist provided is dependent on the handlebar effort (steering torque), electrical power available, and vehicle speed.

The greater the handlebar effort (torque), the greater the assist will be.

The slower the vehicle speed, the greater the assist will be.

If the electrical system is activated but the engine is not running, DPS assist will be provided for approximately 30 seconds. DPS assist will resume once the engine is started.

After turning the ignition key OFF, DPS assist will be provided for approximately 20 seconds.

When the handlebar is in the straight ahead position, there is no steering assist.

Steering torque may also come from the wheels due to rough terrain. Steering kickback is reduced while providing feedback to the driver.

The greater the power steering assist, the greater the load on the electrical system.

When the electrical system is under high load (battery not at full charge, operating the vehicle for prolonged periods of time at slow speed and low RPM which, requires higher power steering assist), the battery power reserve will gradually decrease. This further increases the load on the charging system and the electrical system voltage will drop. As system voltage drops, so does power steering assist.

NOTE: It is important to maintain the battery at a full state of charge to ensure proper DPS operation. The magneto output is 650 watts to minimize battery drain and system voltage drop.

DPS Assist Mode

The DPS system provides three rider selectable modes of operation.

NOTE: The system automatically adjusts to the speed of the vehicle and driving conditions. the modes are designed to meet the preference of the rider.

The following DPS modes are preset in the vehicle.

DPS MODE	
DPS MAX.	Maximum steering assist
DPS MED.	Medium steering assist
DPS MIN.	Minimum steering assist

A fourth mode of operation is available as an accessory to adjust the steering assist level for operation with an approved BRP track kit.

DPS SYSTEM DESCRIPTION (COMPONENTS)

DPS Unit

The DPS unit is a self contained unit that includes the steering gear, the DPS module, the DPS motor, and the torque sensor.

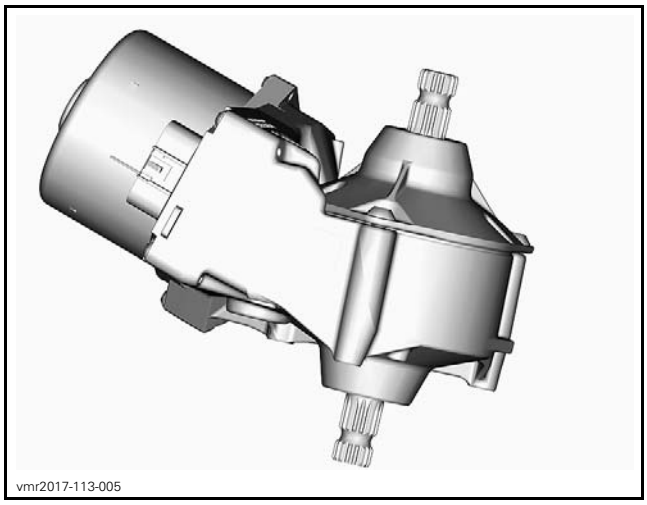
vmr2017-113-005

DPS UNIT

The DPS module provides DC power to the motor. The amount and duration of that DC power is determined by the inputs to the DPS module.

The DPS motor does not "spin", but rather turns in very small increments based on the amount, duration, and direction of DC power delivered by the DPS module.

NOTE: Should the DPS unit fail, the vehicle steering is still available with moderate increase in steering effort.

Steering Torque Sensor

The steering column is connected to the shaft on the DPS unit. A small area of the DPS shaft is magnetized. Inside the DPS unit, a torque sensor surrounds the magnetized area of the DPS shaft.

When the handlebar is turned, torque is applied to the shaft which tends to twist the shaft slightly, deforming the magnetic field in the shaft. The sensor detects the torque by measuring the deviation of the magnetic field.

The torque sensor is very sensitive and can detect very small changes in the magnetic field. The harder the handlebar is turned, the greater the magnetic deviation, the greater the power steering assist.

ADJUSTMENT

RESETTING THE TORQUE OFFSET

When replacing the following parts or adjusting steering alignment, the sensor torque offset MUST be reset to zero for proper system operation.

PART ADJUSTED OR REPLACED	WHAT TO DO
– DPS unit – Steering column half bushings – Steering column – Tie rod – Tie rod end – Knuckle – Wheel bearing – Ball joint – Front suspension arm (lower/upper) – Pitman arm – Steering alignment	Reset Torque Offset in Settings, DPS

1. Ensure steering alignment is correct, refer to *ALIGNING THE WHEELS* in the *STEERING SYSTEM* subsection.
2. Connect the vehicle to the BRP diagnostic software (BUDS2).
3. Check if an update is available and warranted for the DPS. Select:
   – Flash page.
   – DPS or Vehicle button.
   – Flash tab.
   .

If an update is available, install it before resetting the torque offset.

REQUIRED CONDITIONS TO ALLOW THE RESET PROCEDURE
DPS unit temperature above freezing point.
Steering wheel should be free and centered. There MUST NOT be any effort applied to the steering column.
Torque sensor value must be within offset threshold value of ± 10 Nm.
Engine not running.

4. To reset the torque offset, select:
   – Settings page.
   – DPS or Vehicle button.
   – Initialization tab.
5. Select Torque Sensor Offset.

NOTE: Torque reading must be stable and not exceeding 2 Nm during procedure. Torque sensor reset may not be possible if the torque value is over the 10Nm above the original setting.

With the steering wheel centered and no effort is applied, if the indicated Torque Sensor value is over the threshold value of 1.5Nm, a steering imbalance may be noticeable.

If all steering components are undamaged and in good working order, repeated torque offset reset procedures will not solve the problem if the torque offset is greater than ±10 Nm. DPS unit replacement may be required.

NOTICE **Ensure handlebar is free and centered within ±10 degrees of center position. There MUST NOT be any effort applied to the steering column.**

PROCEDURES

DPS UNIT

DPS Unit Fuse Location

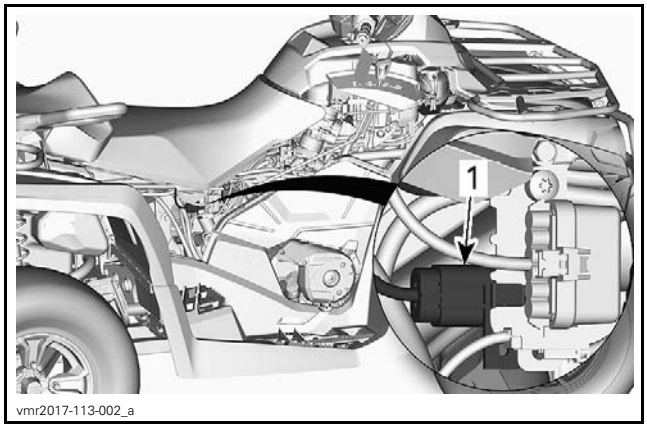

1. DPS (F2) fuse

DPS Wire Identification

For circuit details, refer to *WIRING DIAGRAM*.

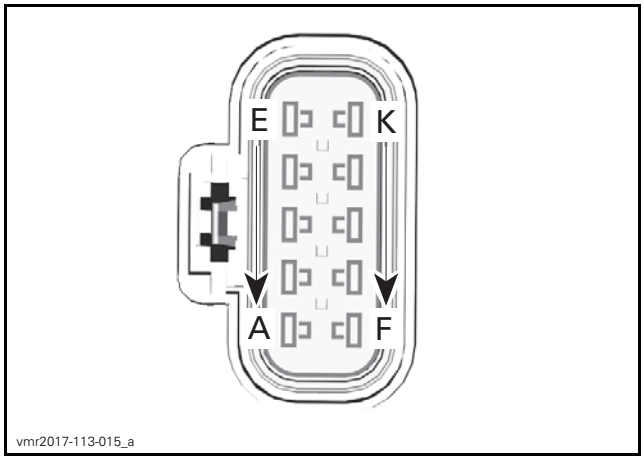

DPS CONNECTOR HARNESS SIDE

DPS CONNECTOR		
FUNCTION	PIN	COLOR
12 volt input (from fuse PF2)	C	RD/PK
12 volt input (from fuse PF2)	D	RD/PK
12 volt input (from fuse PF2)	E	RD/PK
12 volt switched input (from fuse F6)	G	OR/GN
CAN HI	J	WH/BE
CAN LO	K	WH/BK
Ground	A	BK
Ground	B	BK
Ground	F	BK

Testing the DPS Input Voltage

1. Disconnect the DPS connector.

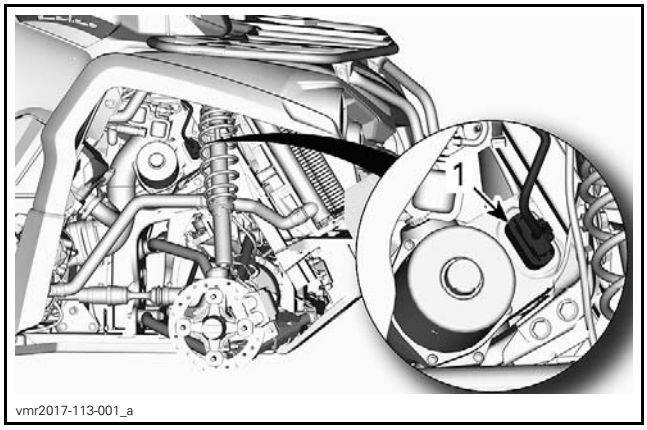

1. DPS connector

2. Test for 12 Vdc DPS motor power at DPS connector as per following table.

MULTIMETER PROBE POSITIONS		VOLTAGE
DPS connector pin C	Battery ground	Battery voltage
DPS connector pin D		
DPS connector pin E		

If NO voltage is measured, test the 40 A DPS fuse (PF2). If good, check wires and connector pins. Replace or repair defective parts and reset fault codes.

If battery voltage is measured, test the DPS ignition signal voltage.

NOTE: This test may also be carried out by connecting a 12 Vdc test light between connector pins (C, D and E), and the battery (-) negative terminal. The test light must come on bright.

Testing the DPS Ignition Signal Voltage

1. Disconnect DPS connector.

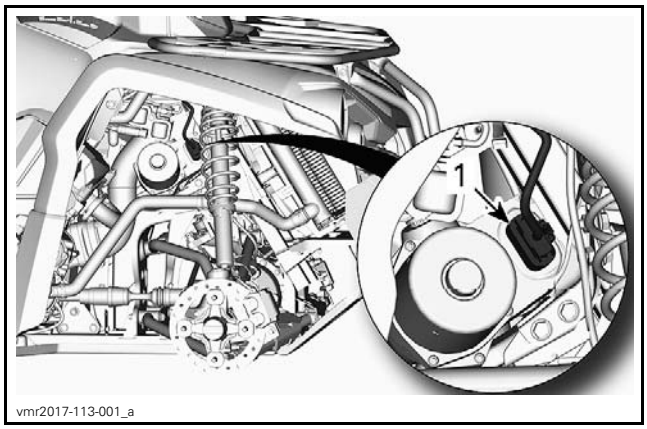

1. DPS connector

2. Set the ignition switch to ON.
3. Set the engine RUN/STOP switch to RUN.
4. Test for 12 Vdc power at the DPS connector as per following table.

MULTIMETER PROBE POSITIONS		VOLTAGE
DPS connector (harness side) pin G	Battery ground	Battery voltage

If NO voltage is measured, check wires and connector pins from the DPS unit to the fuse (F6) in the front fuse box (PF1-F6). Replace or repair defective parts and reset fault codes.

If battery voltage is measured, test the DPS ground circuit.

NOTE: This test may also be carried out by connecting a 12 Vdc test light between the DPS connector (pin G), and the battery (-) negative terminal. The test light must come on bright.

Testing the DPS Ground Circuit

1. Disconnect the DPS connector.

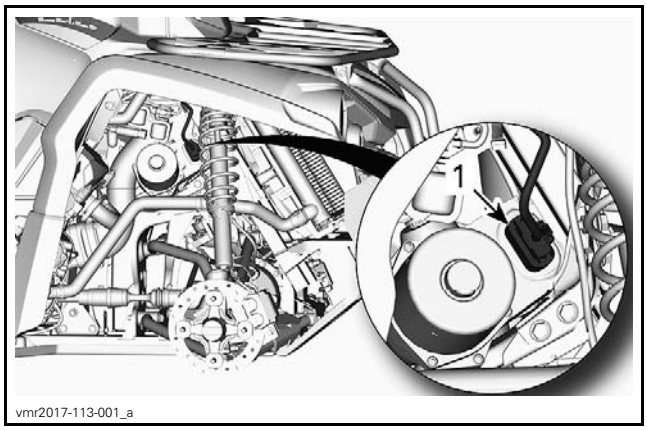

1. DPS connector

2. Test for continuity between DPS connector and battery ground.

MULTIMETER PROBE POSITIONS		READING
DPS connector (harness side) pin A	Battery ground	Continuity (close to 0 Ω)
DPS connector (harness side) pin B		
DPS connector (harness side) pin F		

If there is NO continuity or a high resistance is measured, check wires and connector pins from DPS unit to chassis ground post. Replace or repair defective parts and reset fault codes.

If there is good continuity, carry out: *TESTING THE DPS UNIT COMMUNICATION LINK (CAN) CONTINUITY*.

NOTE: This test may also be carried out by connecting a 12 Vdc test light between each GDN connector pin and the battery (+) positive terminal. The test light must come on bright.

Testing the DPS Communication Link (CAN) Continuity

NOTE: DPS unit must receive an RPM signal to provide power steering assist.

1. Disconnect the DPS connector and the diagnostic connector.
2. Test continuity of CAN Bus Wires as per following table.

MULTIMETER PROBE POSITIONS		RESISTANCE @ 20°C (68°F)
DPS CONNECTOR (HARNESS SIDE)	DIAGNOSTIC CONNECTOR	
Pin J	Pin 1	Less than 1 Ω
Pin K	Pin 2	

If resistance measured is out of specification, check wires and connector pins. Carry out repairs as required and reset fault codes using the BRP diagnostic software (BUDS2) software.

If resistance measured is good, replace the DPS unit and reset fault codes using BUDS2 software.

Testing the DPS System Load

If the charging system cannot sustain normal voltage when the DPS is operating, DPS ASSIST may be greatly reduced or nonexistent. Carry out the following steps.

1. Measure the battery voltage.

NOTE: If battery voltage is low, recharge battery.

2. Ensure the vehicle transmission is set to PARK.
3. Start the engine.
4. Note the voltage on the multimeter with the engine running (charging system voltage).
5. Press the RANGE button repeatedly to select Manual Range 6 0.

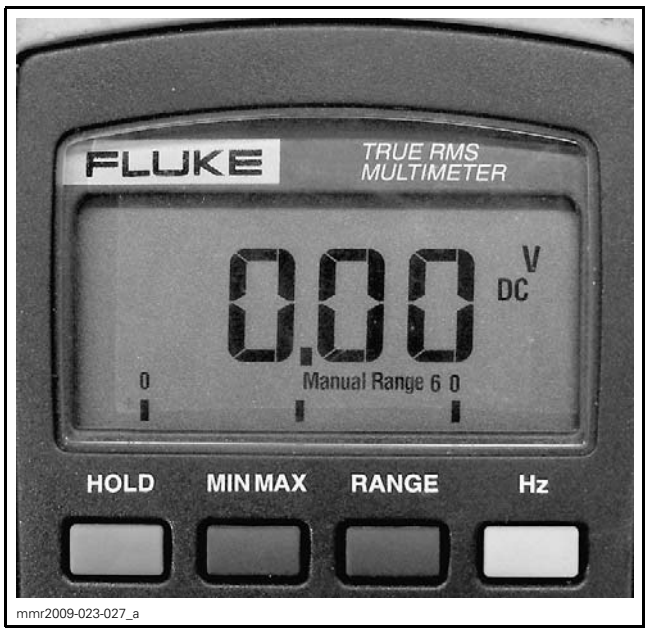

VDC SELECTED TO MANUAL RANGE 6 0

6. Press the MIN MAX button on the multimeter to engage the MIN function.

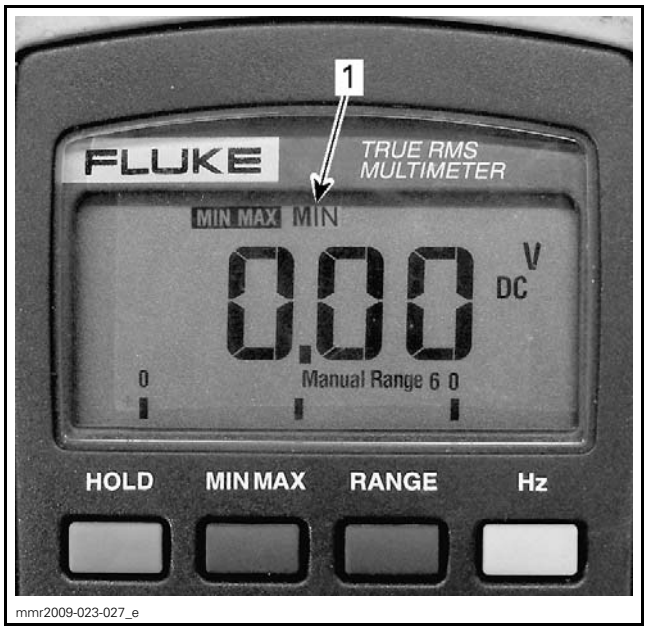

1. MIN function selected

7. Turn the handlebar momentarily against the steering frame stops to each side.

NOTE: Do not hold steering against frame stops for an extended period of time.

8. Read the MIN charging system voltage recorded while the handlebar was turned against each stop.

DPS SYSTEM LOAD TEST			
PROBE POSITIONS		STEERING POSITION	VOLTAGE READING
Battery (-) terminal	DPS fuse holder pin B	LH stop	At least 12 Vdc
		RH stop	

NOTE: Turning the handlebar momentarily against the frame stops generates maximum DPS load (maximum current draw on electrical system). Electrical system must sustain at least 12 Vdc for proper DPS operation.

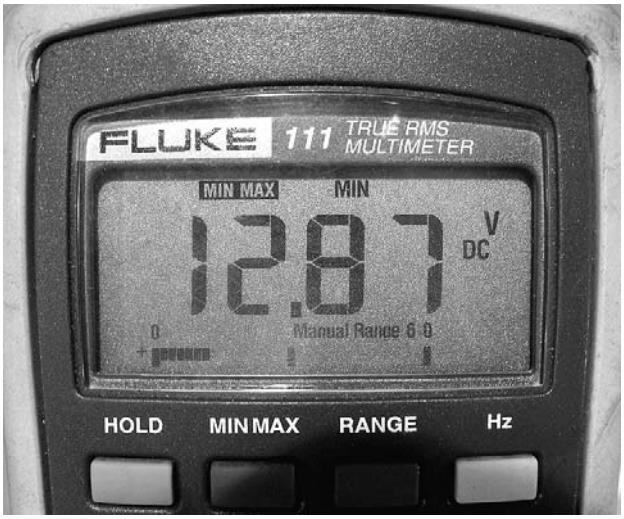

vmr2010-003-007

If the electrical system cannot sustain at least 12 Vdc, check the following:

– Battery
– Battery connections
– DPS unit power and ground connections
– Charging system
– Chassis and engine ground studs.

If the previously listed items are correct, carry out: *TESTING THE DPS UNIT CURRENT*.

Testing the DPS Unit Current

1. Connect the vehicle to the BRP diagnostic software (BUDS2).
2. Go to:
   – Measurements page.
   – DPS button.
   – Custom tab.
3. With the vehicle engine running in PARK and without any steering effort, the reading should be as per following table.

TORQUE SENSOR	DPS CURRENT
0 N•m ± 1 N•m (0 lbf•**in** ± 9 lbf•**in**)	0 Amp

4. Turn the steering wheel side to side, momentarily against each steering hard stop and observe the DPS Torque Sensor value. The torque value should increase with steering effort applied to the steering wheel.

The DPS Current value should increase proportionately to the torque applied, and decrease with the torque as steering assist is provided.

NOTE: The increase and decrease in torque and current readings is very brief as steering assist is quickly provided. Current draw should remain within green scale but may momentarily peak to or exceed 60 amps, then drop off close to 0 amps as torque applied is nulled out by steering assist. If steering is held against hard stops the torque and current readings will remain high.

If current draw tends to remain high, carry out the following:

– *RESETTING THE TORQUE OFFSET*
– DPS unit replacement.

5. Turn steering to LH stop and hold at least 8 Nm. Note DPS current value.
6. Turn steering to RH stop and hold at least 8 Nm. Note DPS current value.
7. Repeat previous two steps while holding at (+ or -) 5 Nm. Note DPS current value.

LH and RH DPS current readings should be the same for the same applied torque.

If the *RESETTING THE TORQUE OFFSET* procedures has been carried out, and the current or steering imbalance is too great, the DPS unit will require replacement to resolve the problem.

Removing the DPS Unit

1. Lift and support the front of the vehicle.
2. Remove the front wheels.
3. Remove both inner fender panels.
4. Disconnect DPS electrical connector.

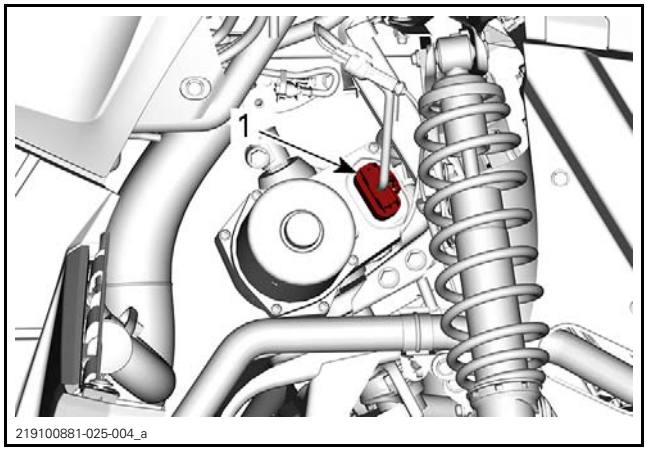

219100881-025-004_a

PARTS REMOVED FOR CLARITY
1. DPS electrical connector

5. Remove DPS mounting bracket retaining screws.

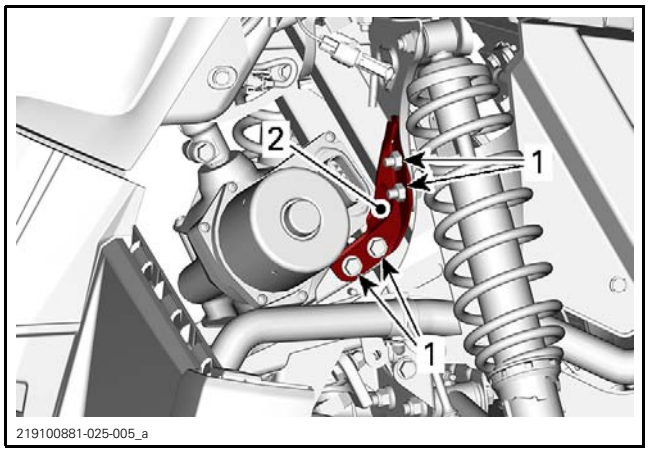

PARTS REMOVED FOR CLARITY
1. *Retaining screws*
2. *DPS mounting bracket*

ABS equipped models

6. Disconnect ABS module.
7. Remove retaining screws and set aside ABS module.

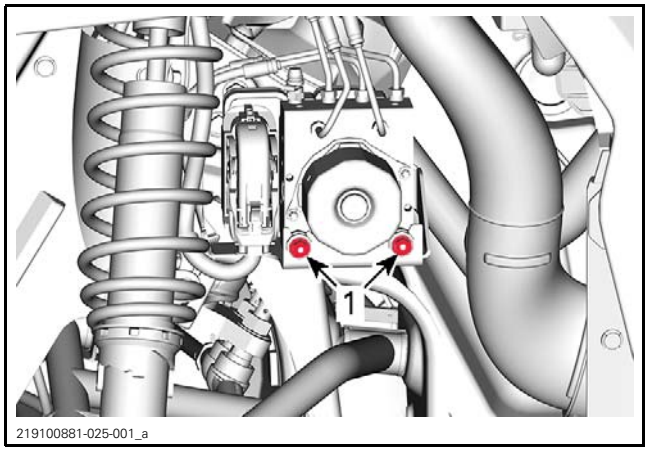

1. *Retaining screw*

8. Remove ABS module mounting bracket.

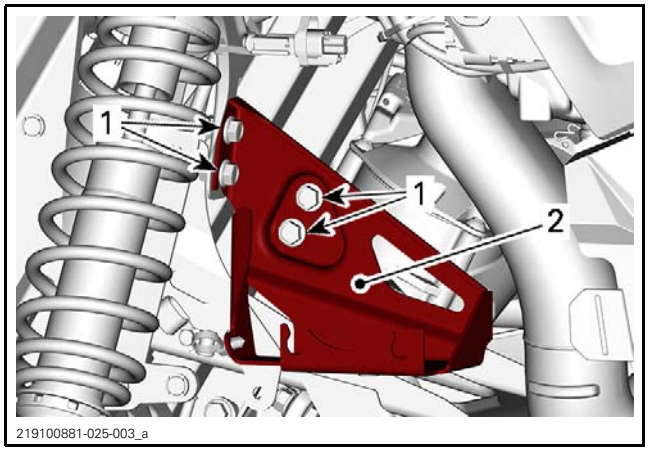

PARTS REMOVED FOR CLARITY
1. *Retaining screws*
2. *ABS module mounting bracket*

All models except ABS equipped

9. Remove DPS mounting bracket retaining screws.

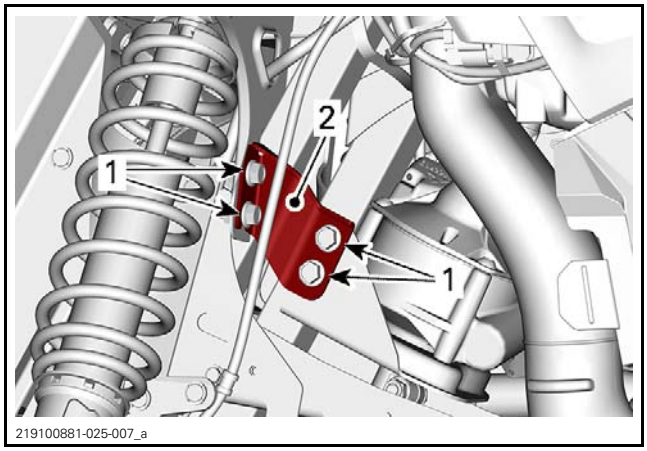

PARTS REMOVED FOR CLARITY
1. *Retaining screws*
2. *DPS mounting bracket*

10. Remove the steering column and pitman arm pinch bolts.

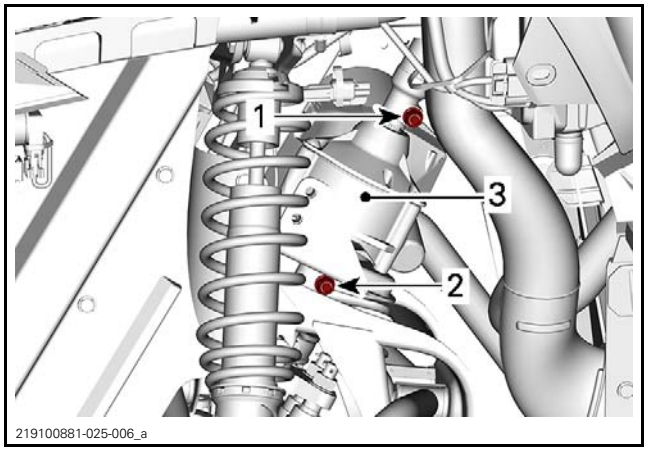

PARTS REMOVED FOR CLARITY
1. *Steering column pinch bolt*
2. *Pitman arm pinch bolt*
3. *DPS*

NOTE: There is no need to mark the parts indexation. There is a master spline on the assembly.

11. Remove the half bushing retainer that secures the pitman arm to the chassis.

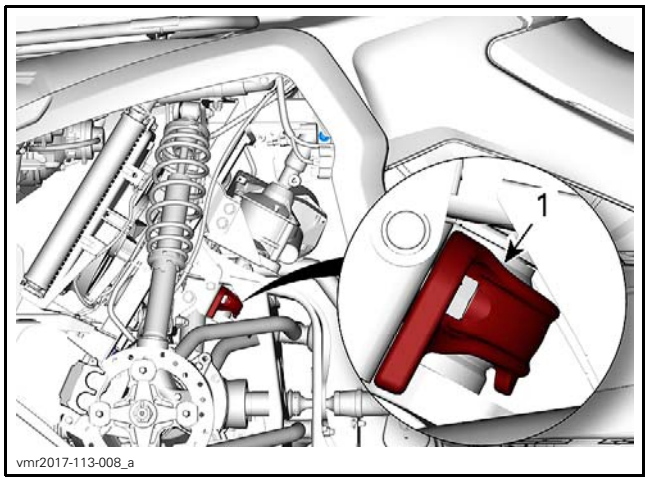

1. Half bushing retainer

12. Disconnect the pitman arm from the DPS by lowering it, then remove the DPS from the steering column.

NOTE: Remove the unit by the left hand side of the vehicle.

If DPS unit is to be replaced, remove the lower support from it.

Installing the DPS

1. Install the lower support on DPS unit using NEW bolts.

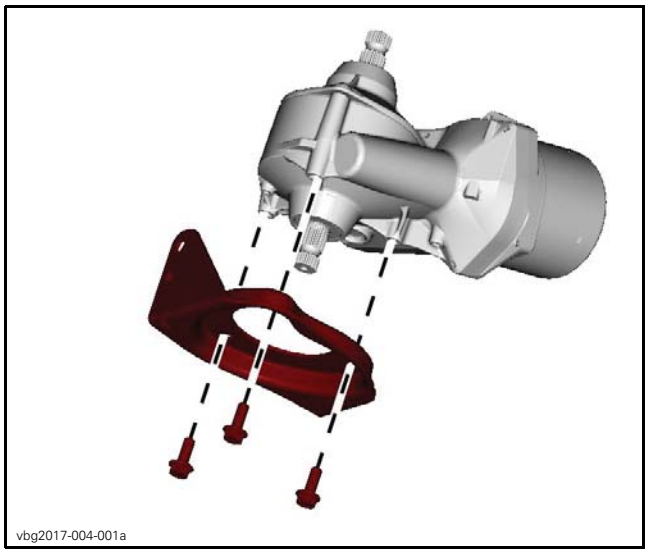

TIGHTENING TORQUE	
Lower support screws	22 N•m ± 2 N•m (16 lbf•ft ± 1 lbf•ft)

2. Apply lubricant to the entire visible portion of the DPS shafts.

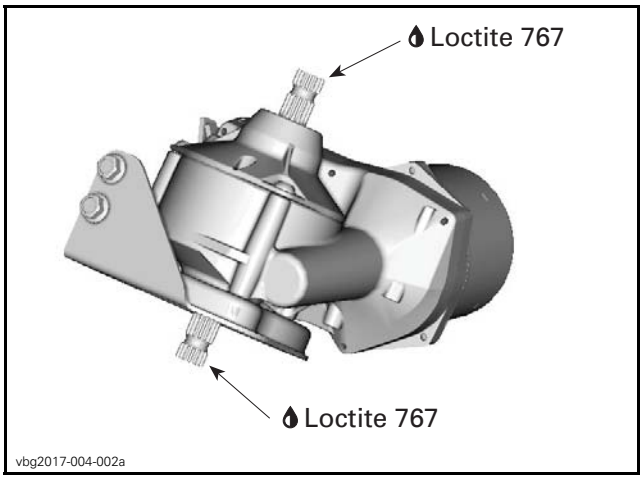

SERVICE PRODUCT
LOCTITE 767 (ANTISEIZE LUBRICANT) (P/N 293 800 070)

3. Engage the steering column on the input shaft.
4. Install the NEW pinch bolt and NEW flanged elastic nut. Hand tight only.

NOTICE **Make sure to properly engage the pinch bolt in the groove of the DPS shaft.**

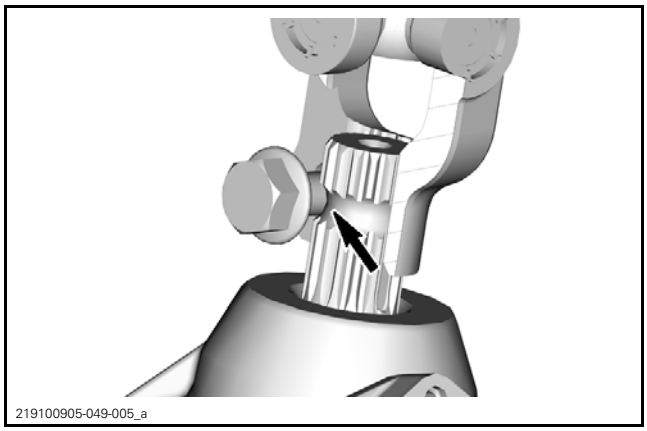

TYPICAL - DPS SHAFT GROOVE

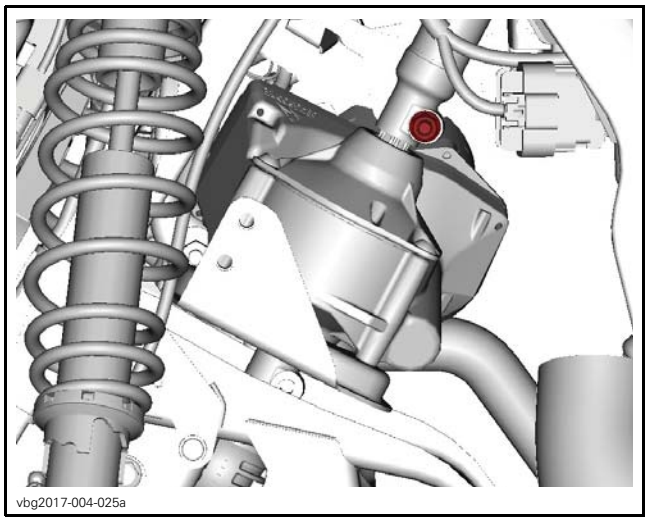
vbg2017-004-025a

5. Position the DPS unit in the chassis and engage the output shaft in the pitman arm.
6. Install the NEW pitman arm pinch bolt and NEW flanged elastic nut. Hand tight only.

NOTICE **Make sure to properly engage the pinch bolt in the groove of the DPS shaft.**

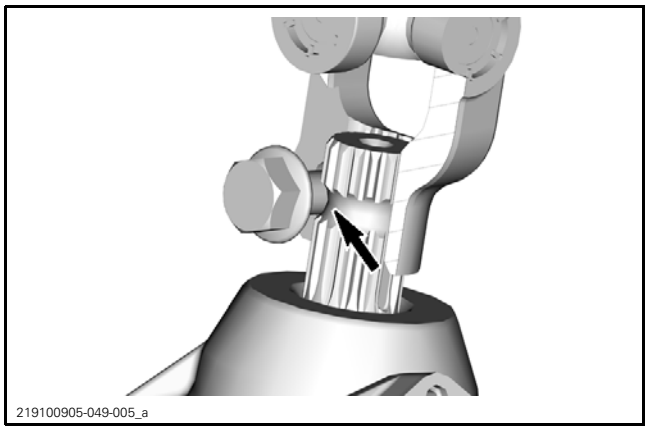
219100905-049-005_a

TYPICAL - DPS SHAFT GROOVE

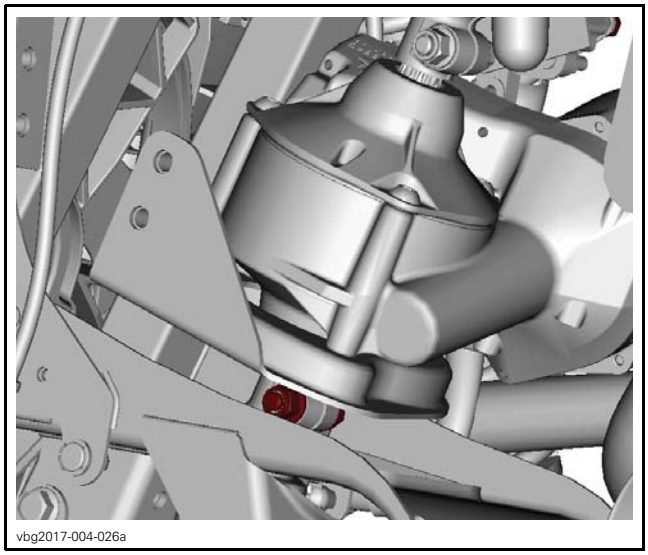
vbg2017-004-026a

7. Install the half bushings retainer bolts and NEW flanged elastic nuts. Hand tight only.

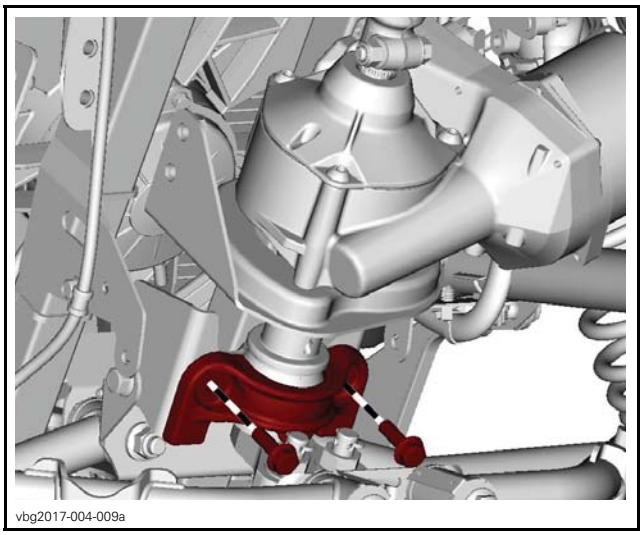
vbg2017-004-009a

8. Install lateral mounting brackets.
   8.1 Install all bolts loosely.

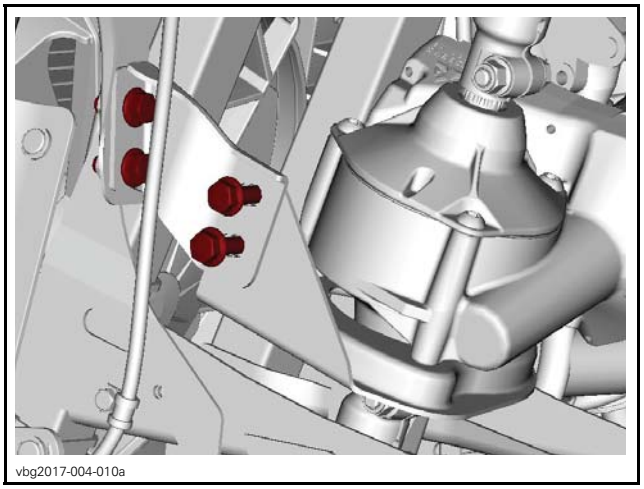
vbg2017-004-010a

LH SIDE SHOWN, RH SIDE SIMILAR

   8.2 On both sides, tighten lateral bolts then unscrew them (1/4 turn), just enough so the support can move slightly into the slotted bracket.

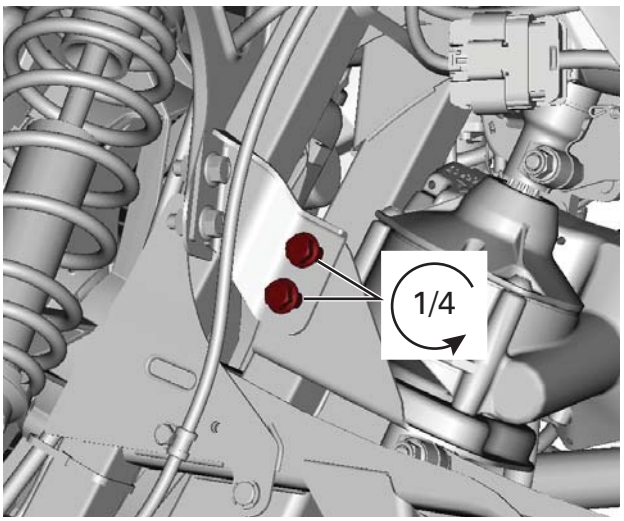

vbg2017-004-027a

NOTICE Tightening sequence must strictly be adhered to.

9. Tighten bolts as per the following sequences.

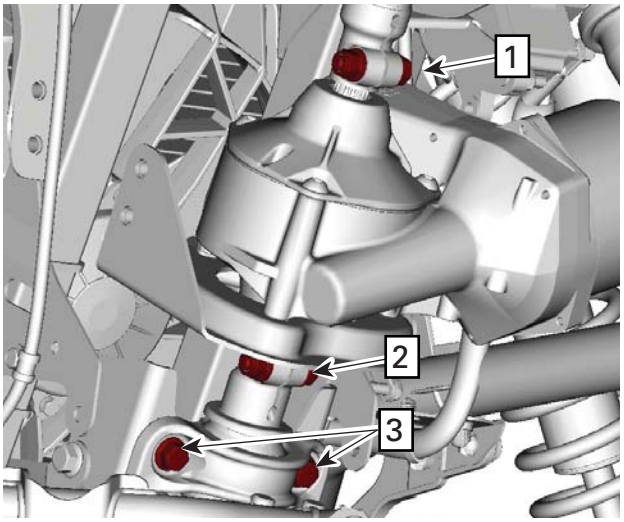

vbg2017-004-015a

TIGHTENING SEQUENCE

NOTE: Tightening torque must be applied on the nut only.

TIGHTENING TORQUE	
Pinch bolt nut	43 N•m ± 3 N•m (32 lbf•ft ± 2 lbf•ft)
Half bushings retainer bolts	24.5 N•m ± 3.5 N•m (18 lbf•ft ± 3 lbf•ft)

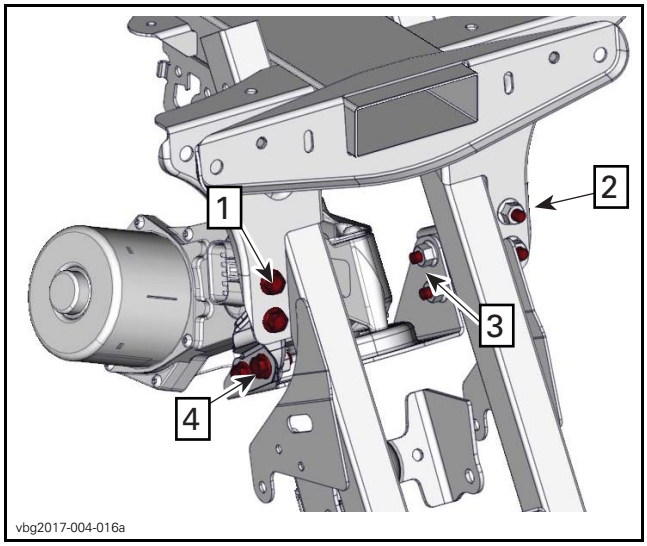

vbg2017-004-016a

TIGHTENING SEQUENCE

TIGHTENING TORQUE	
Front bolts	24.5 N•m ± 3.5 N•m (18 lbf•ft ± 3 lbf•ft)
Lateral bolts	

Apply dielectric grease on harness connector terminals.

SERVICE PRODUCT
DIELECTRIC GREASE (P/N 293 550 004)

10. Connect the electrical connector.

Models with ABS

11. Reinstall ABS module. Ensure the rubber stopper is correctly installed.

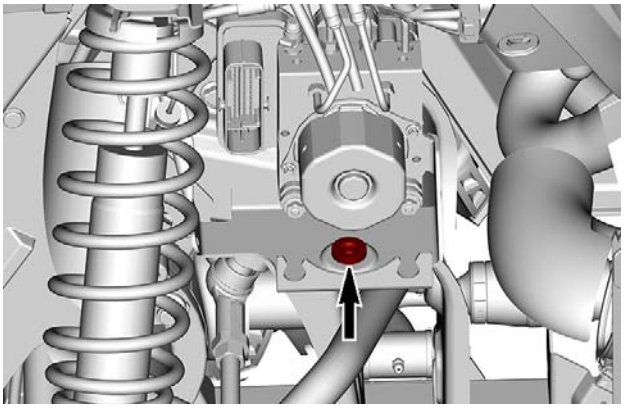
219100881-025-002_a

TIGHTENING TORQUE	
ABS module retaining screw	8 N•m ± 2 N•m (71 lbf•**in** ± 18 lbf•**in**)

All Models

12. Install previously removed parts.

13. Perform *UPDATING THE ELECTRONIC MODULE*.

Updating the Electronic Module

New DPS units do not come with the required software programmed into the unit. A DPS unit fault will be generated when the vehicle is powered up. The check engine light will come on and a DPS FAULT message will appear in the multi-function gauge.

The new DPS unit will require 2 mandatory updates. The first update is required for the DPS to recognize what type of vehicle it is installed in, the second to upload the software required for proper operation on that vehicle.

When DPS unit installation is complete, carry out the following steps.

1. Connect the vehicle to the BRP diagnostic software (BUDS2).
2. Select the Flash page.
3. A message window will appear asking you if you would like to update the DPS module; select YES and follow the instructions. When a second window appears asking you the same question, select YES again.
4. Once the correct DPS software file is installed, go to the Faults page and clear the fault codes.
5. Carry out: *RESETTING THE TORQUE OFFSET* (if required) as described in this subsection.
6. Test drive the vehicle to ensure proper DPS operation.

SUSPENSION ADJUSTMENTS

GENERAL

The procedure described below is the same for the RH and LH sides, unless otherwise instructed.

⚠ WARNING

The left and right shock adjustment on front or rear suspension must always be set to the same position. Never adjust one shock only. Uneven adjustment can cause poor handling and loss of stability, which could lead to an accident.

ADJUSTMENT

Choice of suspension adjustments vary with vehicle load, personal preference, riding speed and terrain condition.

The best way to set up the suspension, is to start from factory settings, then customize each adjustment one at a time.

Front and rear adjustments are interrelated. It may be necessary to readjust the rear shock absorbers after adjusting front shock absorbers for instance.

Test run the vehicle under the same conditions; trail, speed, load, etc. Change one adjustment and retest. Proceed methodically until you are satisfied.

Following are guidelines to fine-tune suspension.

SPRING PRELOAD

NOTE: Spring preload affects ground clearance.

Shorten the spring for a firmer ride and rough riding condition or when pulling a trailer (if equipped with hitch).

Lengthen the spring for a softer ride and smooth riding condition.

Lift the vehicle. Spring length should be measured without load on the wheels.

Do not increase the front/rear spring preload by more than 15 mm (.59 in) over the factory setting.

Shock Absorber With Adjustment Cam

Adjust spring preload by turning adjustment cam.

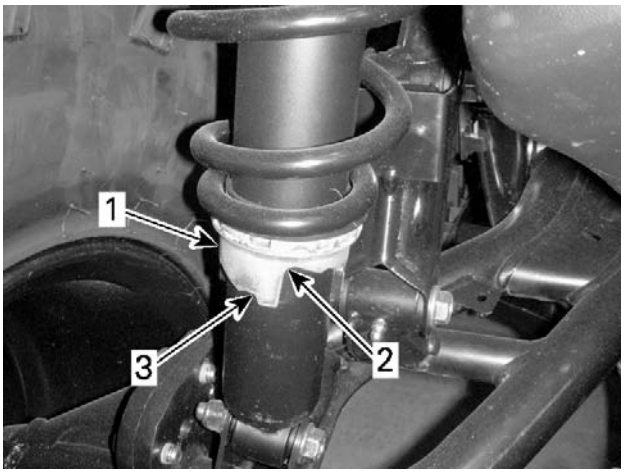

vmo2013-007-015_a

TYPICAL
1. *Adjustment cam*
2. *Softer adjustment*
3. *Firmer adjustment*

Shock Absorber With Adjustment Ring

Adjust spring preload by turning the adjuster ring.

NOTE: Do not increase preload on FOX shocks.

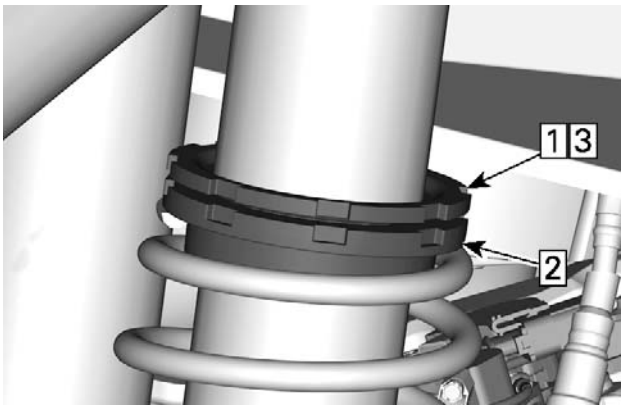

219001761-072_a

TYPICAL
Step 1: Loosen top locking ring
Step 2: Turn adjusting ring accordingly
Step 3: Tighten top locking ring

SHOCK DAMPING ADJUSTMENTS (IF EQUIPPED)

Adjusting the Compression Damping (with single adjustment)

Compression damping controls how the shock absorber reacts in compression when hitting a bump

POSITION	SETTING	RESULT ON BIG BUMPS
1	Soft	Softer compression damping
2	Medium (Factory)	Medium compression damping
3	Hard	Firmer compression damping

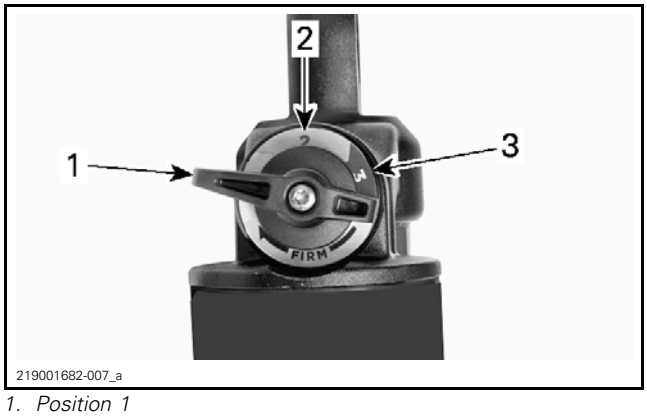

1. *Position 1*
2. *Position 2*
3. *Position 3*

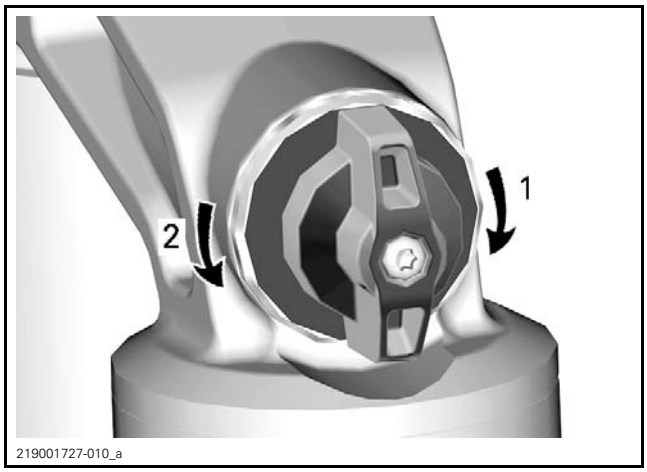

COMPRESSION DAMPING
1. **Increases** *damping (firmer)*
2. **Decreases** *damping (softer)*

Turn adjuster clockwise to **increase** shock damping action (firmer).

Turn adjuster counterclockwise to **decrease** shock damping action (softer).

ACTION	RESULT
Increasing compression damping force	Firmer compression damping
Decreasing compression damping force	Softer compression damping

Adjusting the Compression Damping (with dual adjustements)

Perform adjustments **one** position (click) at a time. Test run the vehicle under the same conditions. Proceed methodically until you are satisfied.

To adjust compression and rebound to factory settings, proceed as follows:

1. Turn adjuster clockwise until it stops.
2. Turn adjuster counterclockwise by the specified amount, see *SUSPENSION FACTORY SETTINGS* table in appropriate *TECHNICAL SPECIFICATION* section.

Low Speed Compression Damping

Low speed compression damping controls how the shock absorber reacts to a low suspension velocity (slow compression strokes, in most cases when riding at lower speeds).

ACTION	RESULT ON BIG BUMPS
Increasing low speed compression damping force	Firmer compression damping (slow compression)
Decreasing low speed compression damping force	Softer compression damping (slow compression)

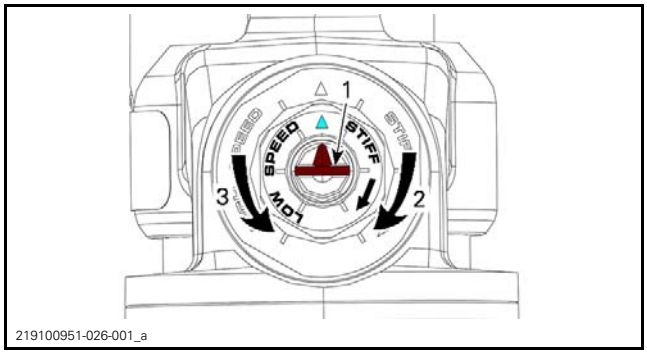

TYPICAL - LOW SPEED COMPRESSION DAMPING
1. *Adjustment screw*
2. **Increases** *damping (firmer)*
3. **Decreases** *damping (softer)*

High Speed Compression Damping

High speed compression damping controls how the shock absorber reacts to a high suspension velocity (quick compression strokes, in most cases when riding at higher speeds).

ACTION	RESULT ON SMALL BUMPS
Increasing high speed compression damping force	Firmer compression damping (fast compression)
Decreasing high speed compression damping force	Softer compression damping (fast compression)

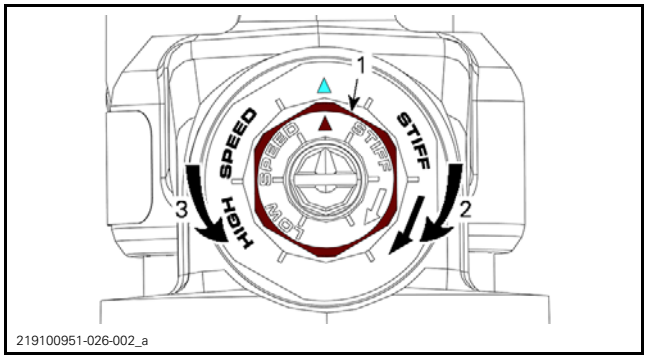

TYPICAL - HIGH SPEED COMPRESSION DAMPING (USE A 17 MM WRENCH)
1. *Adjustment screw*
2. **Increases** *damping (firmer)*
3. **Decreases** *damping (softer)*

Rebound Damping

Rebound damping controls how the shock absorber reacts in extension after hitting a bumps.

ACTION	RESULTS
Increasing rebound damping	Slower Extension
Decreasing rebound damping	Faster extension

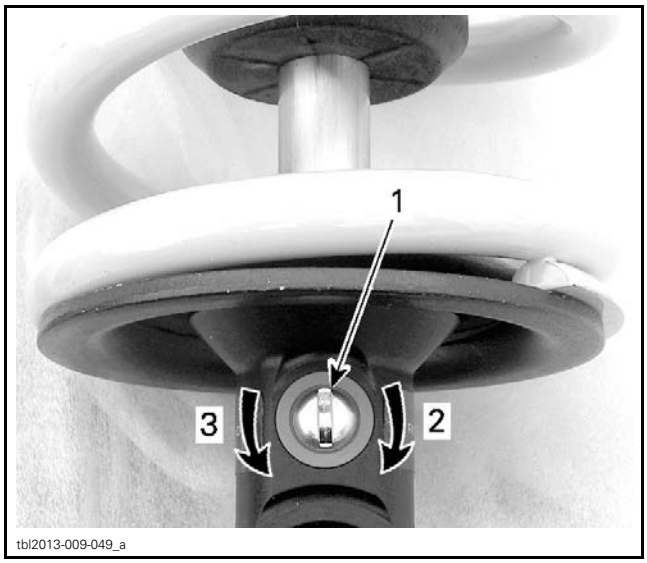

TYPICAL
1. *Rebound adjuster*
2. **Increases** *damping (slower extension)*
3. **Decreases** *damping (faster extension)*

FRONT SUSPENSION

SERVICE TOOLS

Description	Part Number	Page
BALL JOINT REMOVAL TOOL	529 036 310	7

SUSPENSION ARMS AND COMPONENTS

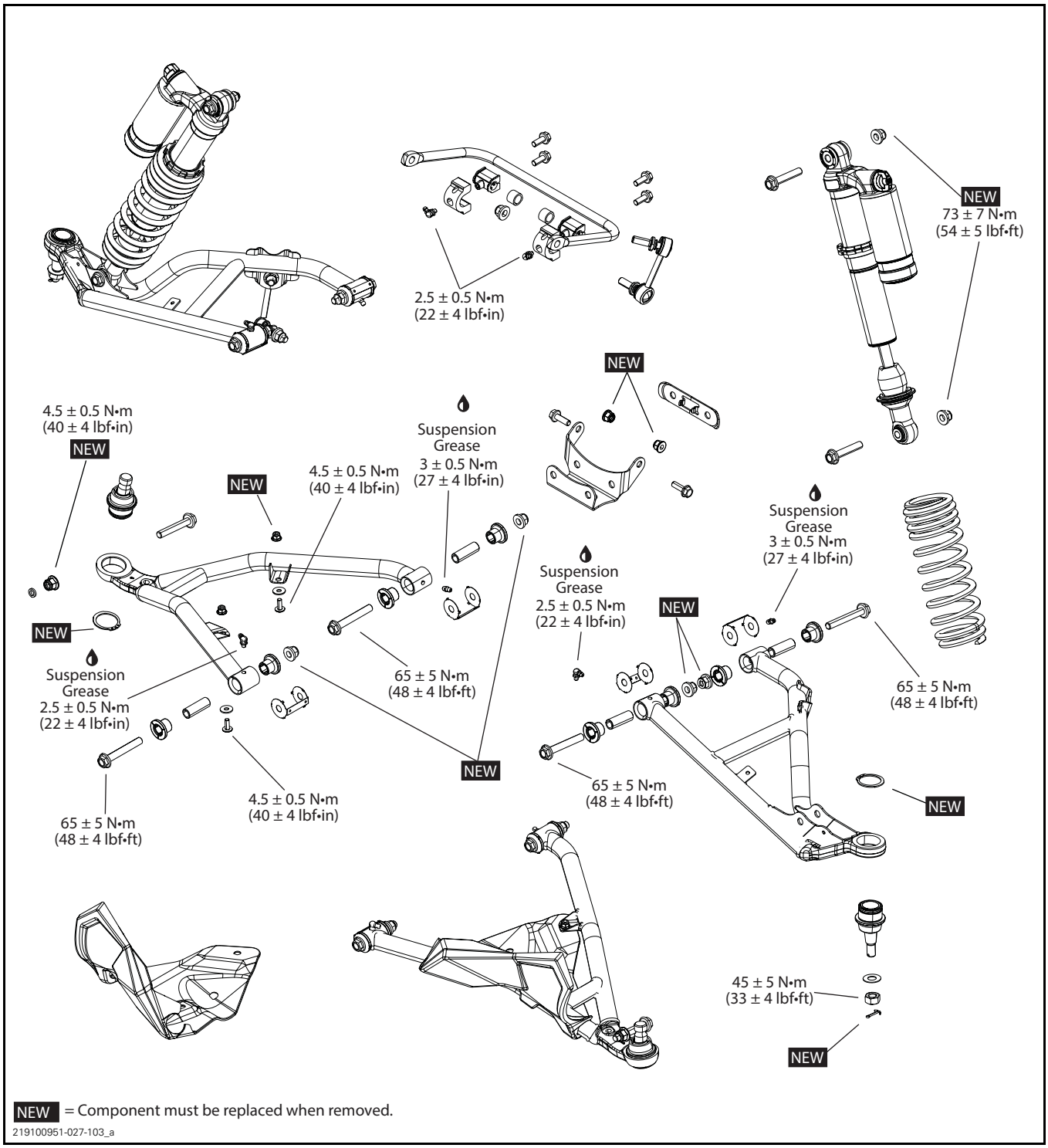

NEW = Component must be replaced when removed.

219100951-027-103_a

GENERAL

The procedure explained below is the same for the RH and LH sides unless otherwise noted.

PROCEDURES

SHOCK ABSORBER

Removing the Shock Absorber

1. Safely lift and support the vehicle off the ground.
2. Remove screws and nuts retaining the shock absorber.

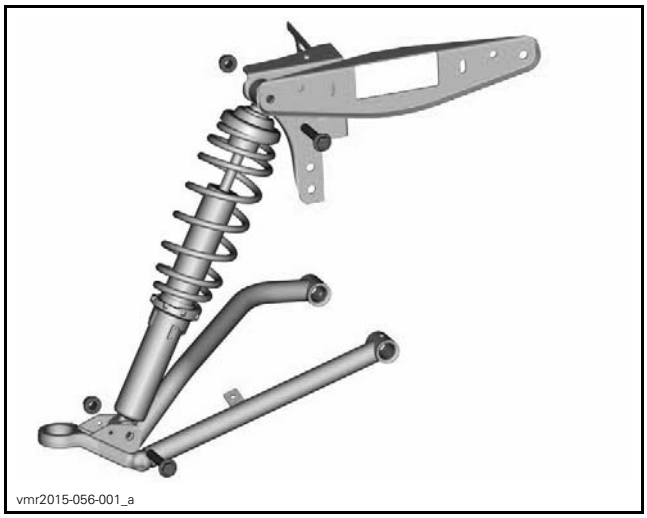

TYPICAL

3. Remove shock absorber.

Inspecting the Shock Absorber

Remove spring from shock absorber. Refer to *SPRINGS* in this subsection.

Secure the end of shock eyelet in a vise with its rod upward.

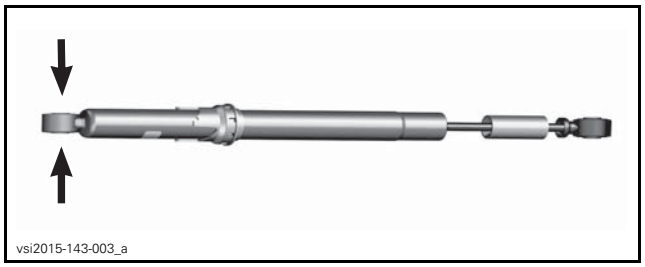

TYPICAL

NOTICE Do not clamp directly on shock body.

Extend and compress the piston several times over its entire stroke. Check that it moves smoothly and with uniform resistance with its rod upward.

Check the following conditions that will denote a defective shock:

- A skip or a hang back when reversing stroke at mid travel.
- Seizing or binding condition except at extreme end of either stroke.
- Oil leakage.
- A gurgling noise, after completing one full compression and extension stroke.

Replace if any faults are present.

Installing the Shock Absorber

The installation is the reverse of the removal procedure. However, pay attention to the following.

Install shock absorber screws from front towards rear of vehicle.

Tighten shock absorber nuts to specification. Refer to exploded views.

SHOCK ABSORBER BUSHINGS

Refer to *SHOCK ABSORBER BUSHINGS* in *REAR SUSPENSION* subsection for complete procedures.

SPRINGS

Refer to *SPRINGS* in *REAR SUSPENSION* subsection for complete procedures.

LOWER SUSPENSION ARM

Removing the Lower Suspension Arm

1. Safely lift and support the vehicle off the ground.
2. Remove wheel, refer to *WHEELS AND TIRES* subsection.
3. Remove screw and nut securing lower ball joint to knuckle.

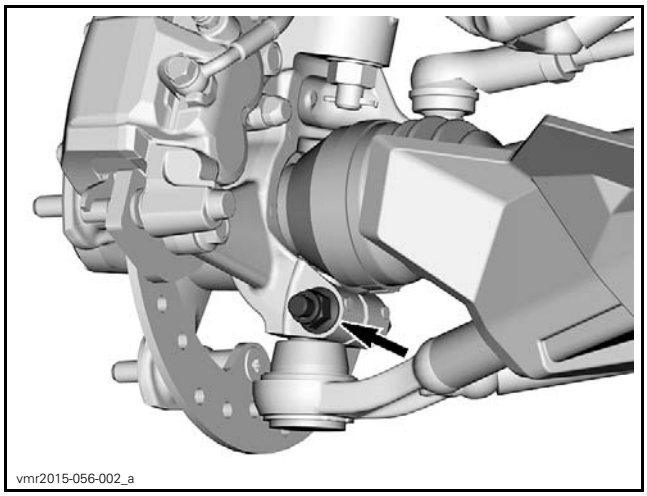

TYPICAL

4. Remove screws and nuts securing suspension arm to frame.

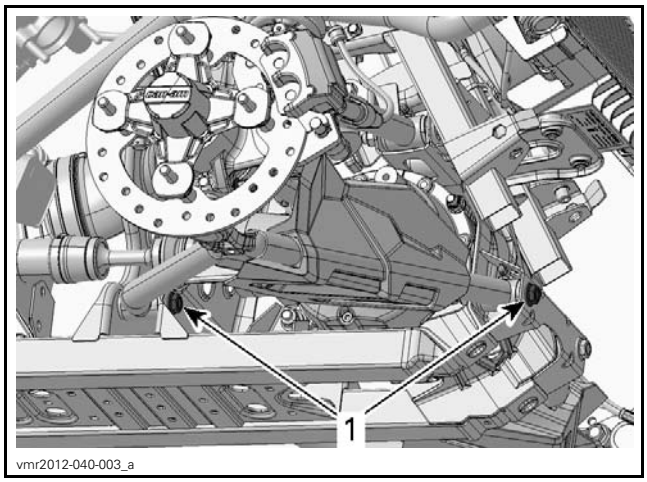

TYPICAL
1. Suspension arm screws

5. Remove suspension arm.

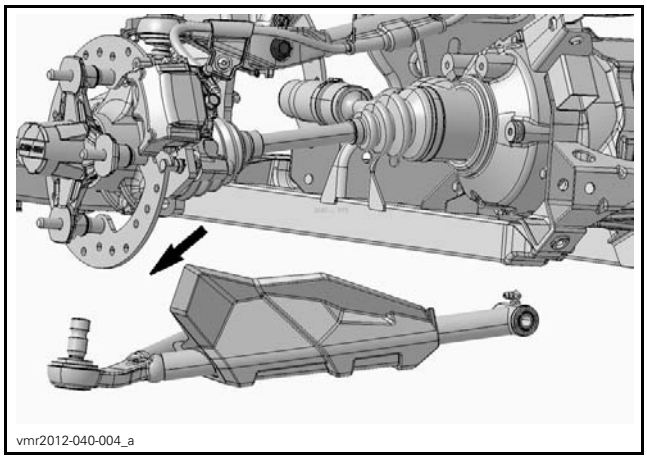

TYPICAL
MOVE OUTWARDS

Installing Lower Suspension Arm

The installation is the reverse of the removal procedure. However, pay attention to the following.

Lubricate suspension arm. Refer to *PERIODIC MAINTENANCE PROCEDURES* subsection.

Tighten ball joint nut to specification. Refer to exploded views.

Perform steering alignment procedure. Refer to *STEERING ALIGNMENT* subsection.

UPPER SUSPENSION ARM

Removing the Upper Suspension Arm

1. Safely lift and support the vehicle off the ground.
2. Remove wheel, refer to *WHEELS AND TIRES* subsection.
3. Remove fasteners retaining brake hose to vehicle.

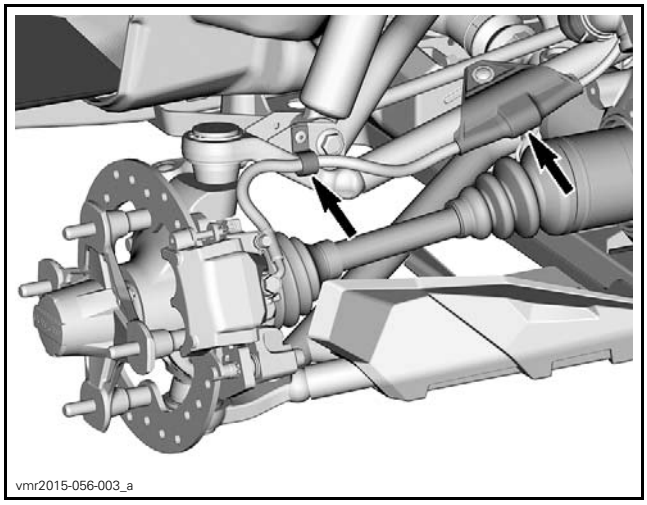

TYPICAL

4. Remove and discard cotter pin retaining ball joint.

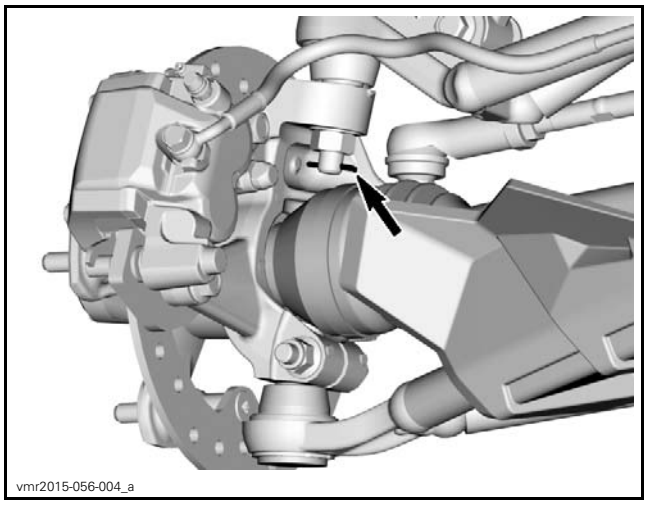

TYPICAL

5. Remove ball joint nut and washer.

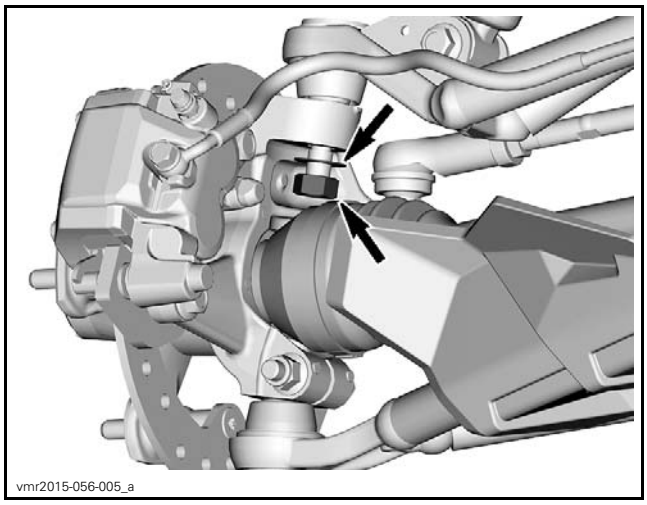

TYPICAL

6. Carefully move brake hose aside.
7. Using a plastic hammer, carefully hit on the knuckle side to separate ball joint from knuckle.

NOTE: A ball joint remover can be used if the ball joint is jammed into knuckle.

NOTICE Never hit on suspension arm to avoid damaging it permanently.

TYPICAL - CAREFULLY HIT ON KNUCKLE SIDE

8. Remove stabilizer bar link nut on both sides than move back the stabilizer bar from upper suspension arms.

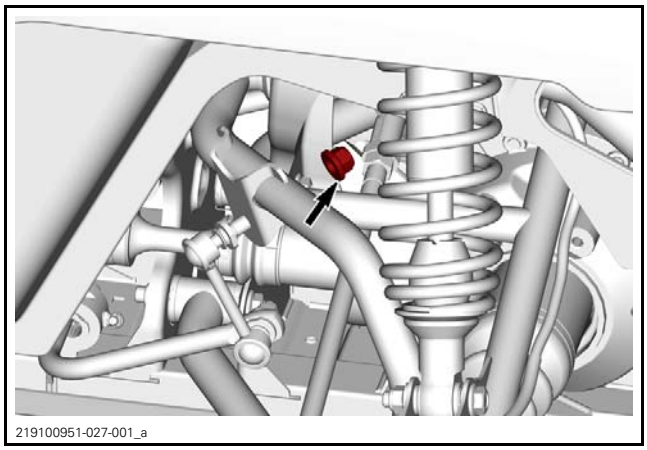

9. Remove screw and nut securing suspension arm to shock absorber.

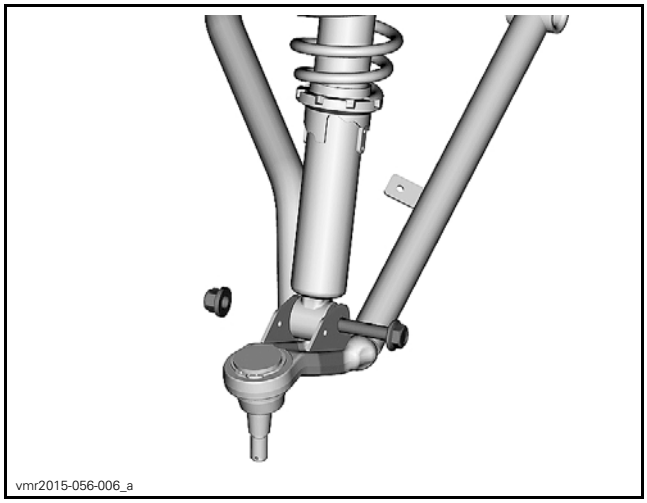

TYPICAL

10. Remove screws and nuts securing suspension arm to frame.

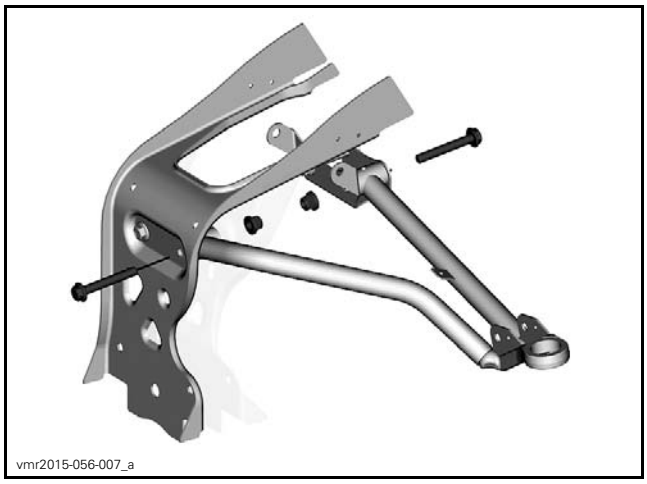

TYPICAL

11. Remove suspension arm.

Installing the Upper Suspension Arm

The installation is the reverse of the removal procedure. However, pay attention to the following.

Lubricate suspension arm. Refer to *PERIODIC MAINTENANCE PROCEDURES* subsection.

Install a **NEW** cotter pin to secure ball joint nut. Both end of cotter pin must be folded.

Tighten shock absorber nut to specification. Refer to exploded views.

Tighten ball joint nut to specification. Refer to exploded views.

Perform steering alignment procedure. Refer to *STEERING ALIGNMENT* subsection.

SUSPENSION ARM BUSHINGS

Removing the Suspension Arm Bushings

1. Remove wear plates, bushings and sleeves from suspension arm.

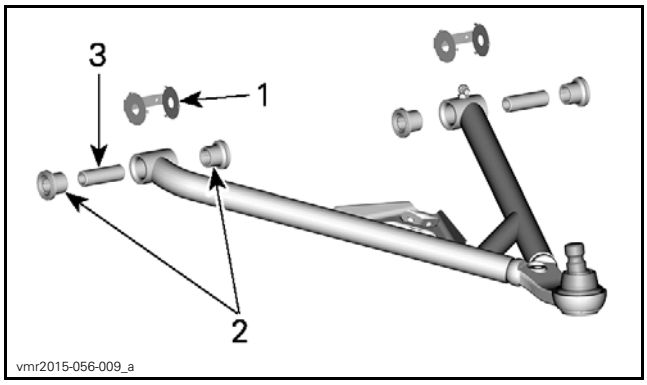

TYPICAL - LOWER SUSPENSION ARM
1. Wear plates
2. Bushings
3. Sleeves

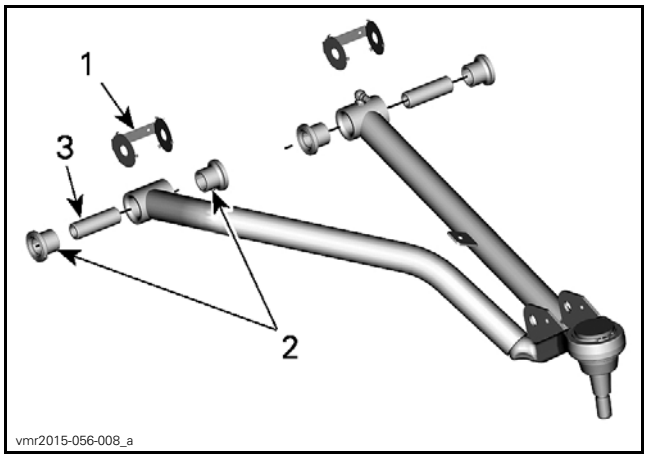

TYPICAL - UPPER SUSPENSION ARM
1. Wear plates
2. Bushings
3. Sleeves

Installing Suspension Arm Bushings

The installation is the reverse of the removal procedure. However, pay attention to the following.

Lubricate suspension arm. Refer to *PERIODIC MAINTENANCE PROCEDURES* subsection.

BALL JOINTS

Removing the Ball Joint

1. Remove suspension arm from vehicle. Refer to *REMOVING SUSPENSION ARM* in this subsection.
2. Remove circlip from ball joint.

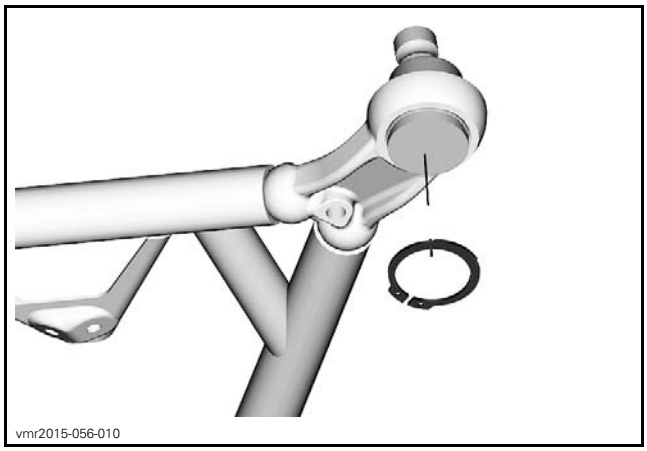

LOWER BALL JOINT

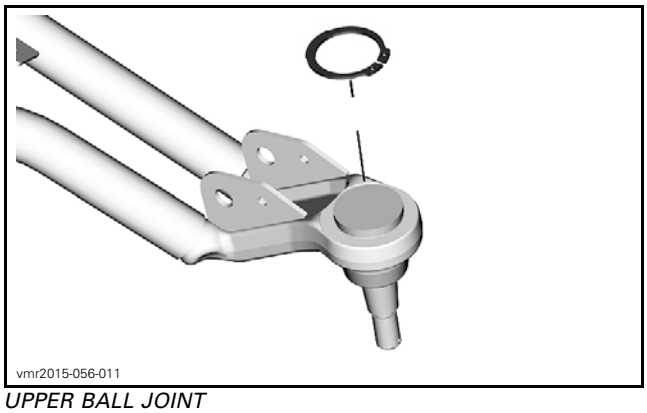

UPPER BALL JOINT

3. Install suspension arm on a press.

NOTICE **Pressing on the center or on the lip of the ball joint will damage it.**

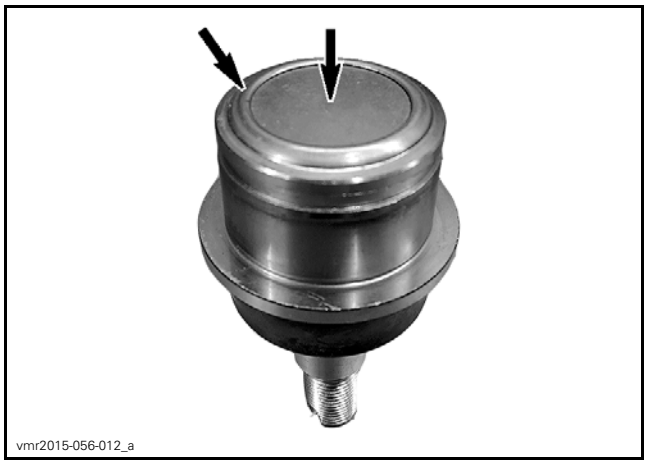

DO NOT PRESS THERE

NOTE: The BALL JOINT REMOVAL TOOL (P/N 529 036 310) is design to apply force only on the outside edge of the ball joint.

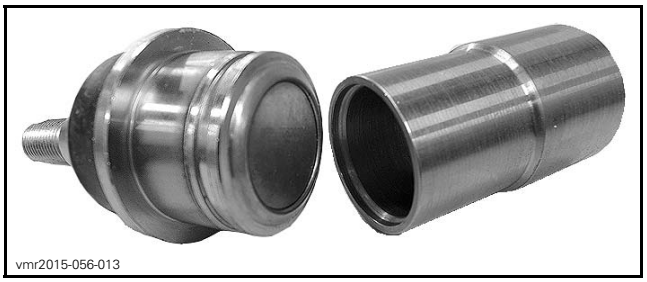

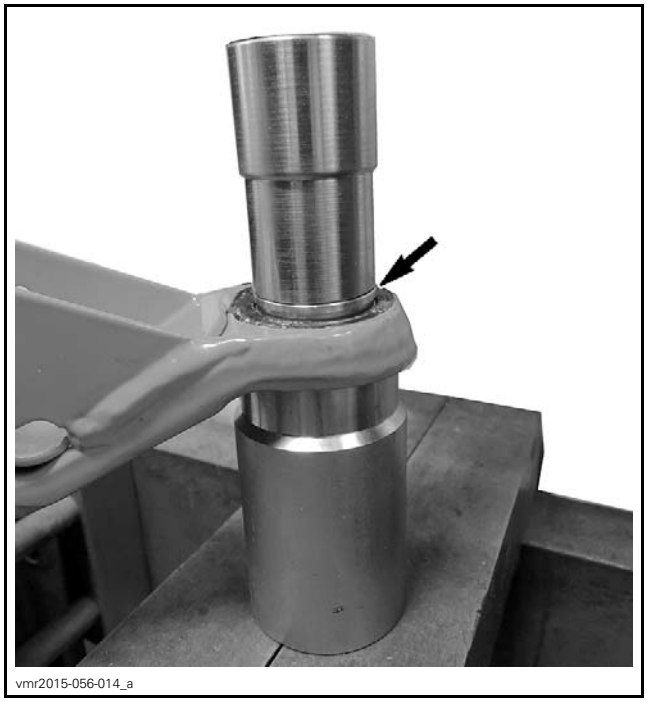

CONTACT BETWEEN TOOL AND BALL JOINT ON THE OUTSIDE EDGE ONLY

4. Remove ball joint from suspension arm.

NOTICE **Make sure that suspension arm is properly supported on the press during ball joint removal.**

Installing Ball Joint

The installation is the reverse of the removal procedure. However, pay attention to the following.

Install a NEW circlip to secure ball joint.

REAR SUSPENSION

SERVICE TOOLS

Description	Part Number	Page
SPRING COMPRESSOR	529 036 184	3

SERVICE PRODUCTS

Description	Part Number	Page
LOCTITE 271 (RED)	293 800 005	7
SYNTHETIC GREASE SUSPENSION	779163	6

TRAILING ARMS, STABILIZER BAR AND SHOCK ABSOBERS

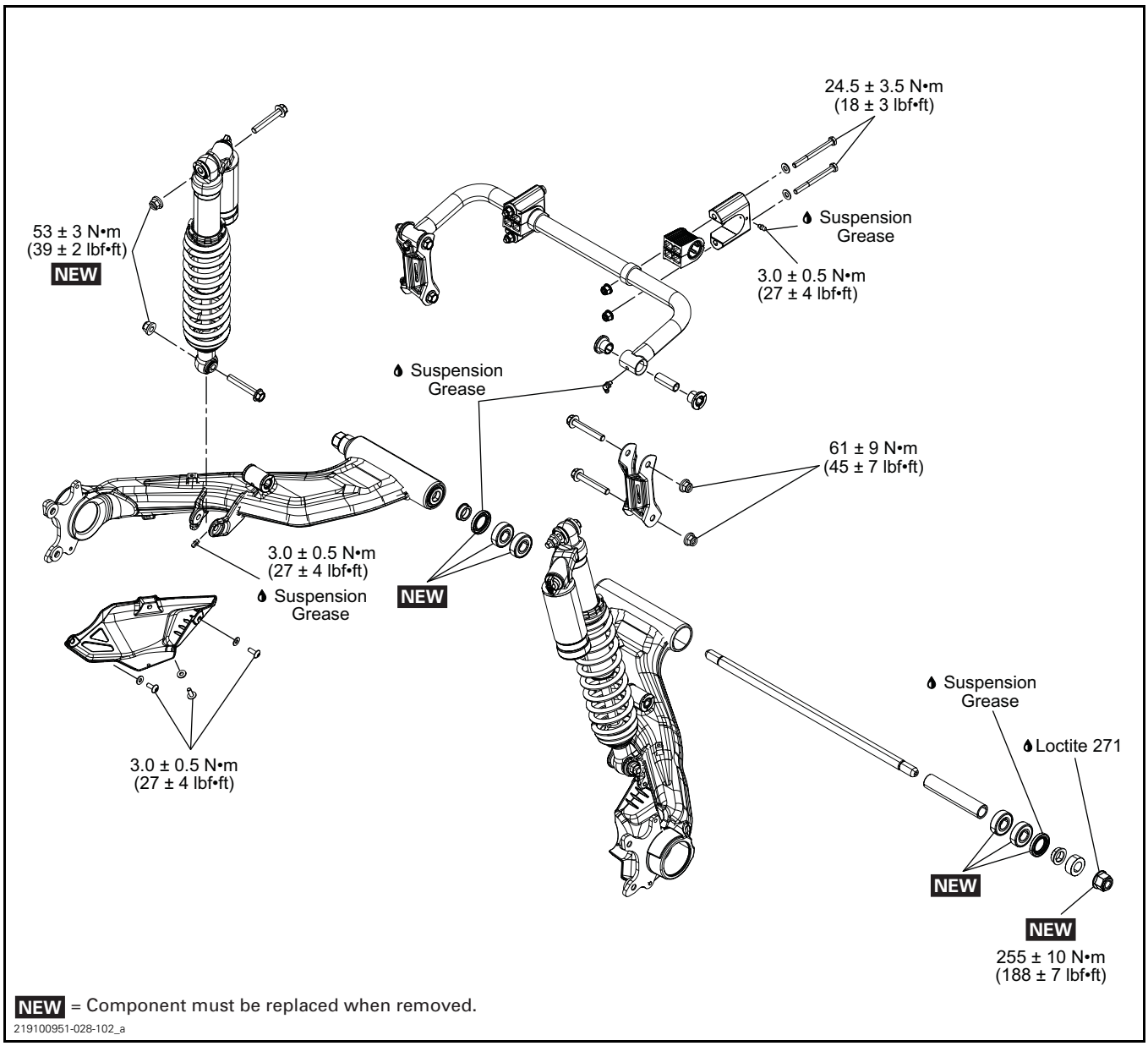

GENERAL

The procedure described below is the same for the RH and LH sides, unless otherwise instructed.

PROCEDURES

SHOCK ABSORBERS

Removing the Shock Absorber

1. Safely lift and support the vehicle off the ground.
2. Remove screws and nuts retaining shock absorber.

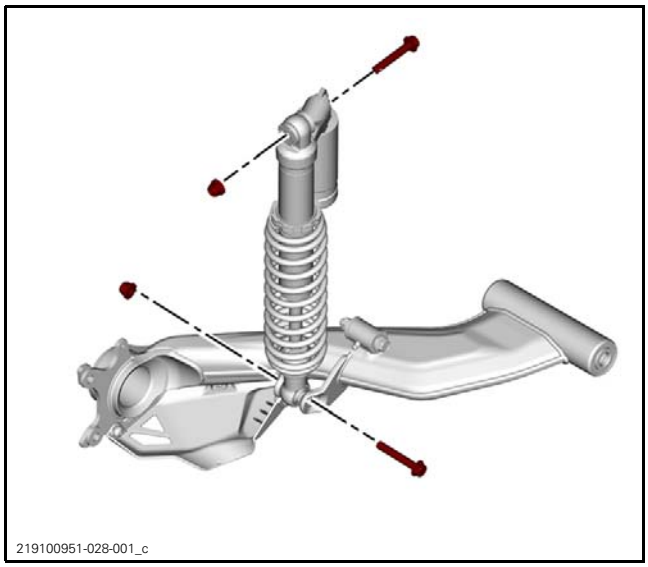

TYPICAL

3. Remove shock absorber.

Inspecting the Shock Absorber

Remove spring from shock absorber. Refer to *SPRINGS* in this subsection.

Secure the end of shock body in a vise with its rod upward.

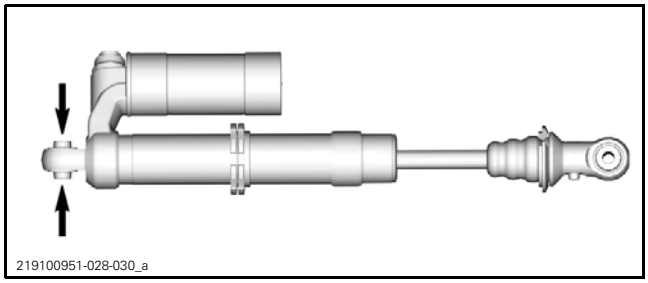

TYPICAL

NOTICE Do not clamp directly on shock body.

Extend and compress the piston several times over its entire stroke. Check that it moves smoothly and with uniform resistance with its rod upward.

Check the following conditions that will denote a defective shock:

- A skip or a hang back when reversing stroke at mid travel
- Seizing or binding condition except at extreme end of either stroke
- Oil leakage
- A gurgling noise, after completing one full compression and extension stroke.

Replace if any faults are present.

Installing the Shock Absorber

The installation is the reverse of the removal procedure. However, pay attention to the following.

Tighten shock absorber nuts to specification.

TIGHTENING TORQUE	
Shock absorber screw	53 N•m ± 3 N•m (39 lbf•ft ± 2 lbf•ft)

SHOCK ABSORBER BUSHINGS

Replacing the Shock Absorber Bushing

1. Remove shock absorber from vehicle. Refer to *SHOCK ABSORBERS* in this subsection.
2. Install shock absorber on a press.
3. Use an appropriate socket to push bushing.

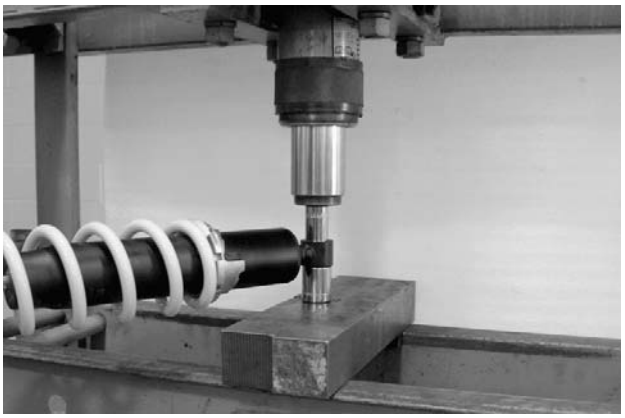

TYPICAL

4. Remove bushing from shock absorber.

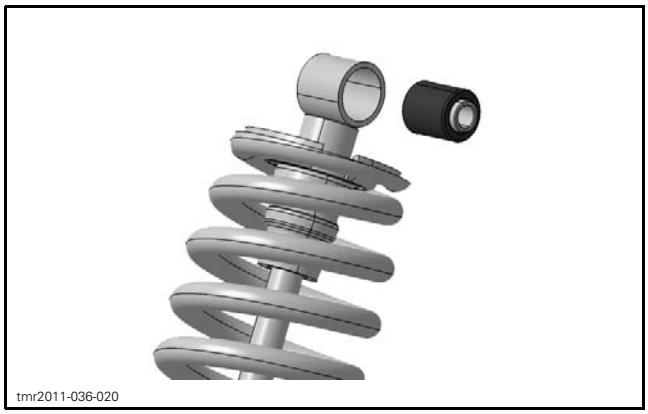

TYPICAL

5. Install a NEW bushing as the reverse of removal.
6. Install shock absorber on vehicle.

SPRINGS

Removing the Spring

1. Remove shock absorber from vehicle. Refer to *SHOCK ABSORBERS* in this subsection.
2. Place the SPRING COMPRESSOR (P/N 529 036 184) in a vise.

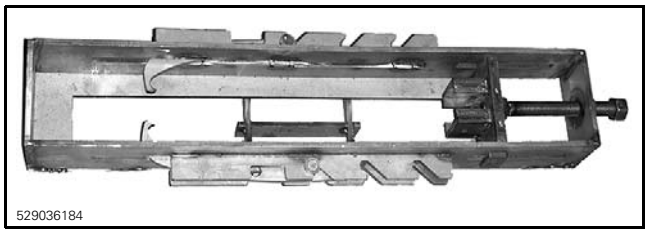

3. Position the shock absorber in the tool.
4. Install the spring compressor pins.
5. Tighten spring remover screw until the spring is sufficiently compressed to remove spring cap.
6. Remove spring cap from shock absorber.
7. Release spring remover screw.
8. Remove spring from shock absorber.

Inspecting the Spring

Inspect the spring for damage.

Replace if necessary.

Installing the Spring

The installation is the reverse of the removal procedure. However, pay attention to the following.

On applicable models, install spring cap opening at 180° from spring stopper opening.

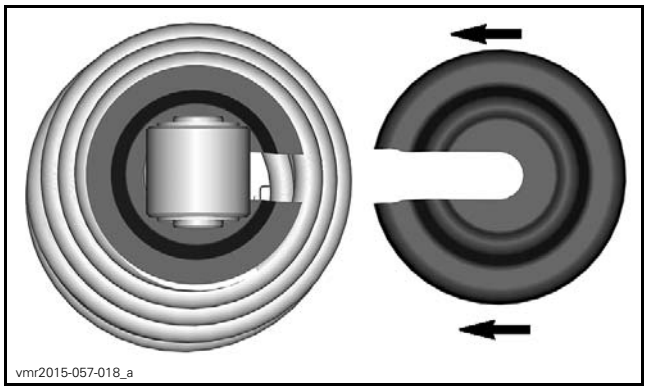

TYPICAL - CAP OPENING AT 180°

STABILIZER BAR

Removing the Stabilizer Bar

1. Safely lift and support the vehicle off the ground.
2. Remove rear wheels. Refer to *WHEELS AND TIRES* subsection.
3. Remove the muffler and the exhaust pipe. Refer to *EXHAUST SYSTEM* subsection.
4. Remove the following inner heat shield.

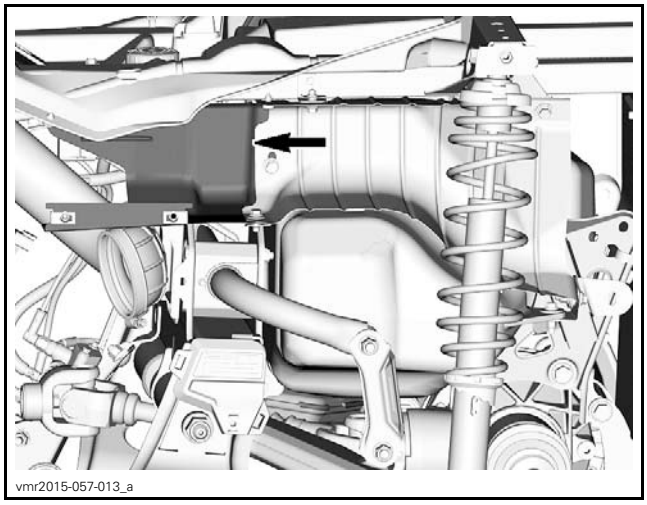

SOME PARTS REMOVED FOR CLARITY

5. Remove fasteners and stabilizer bar bushing holders.

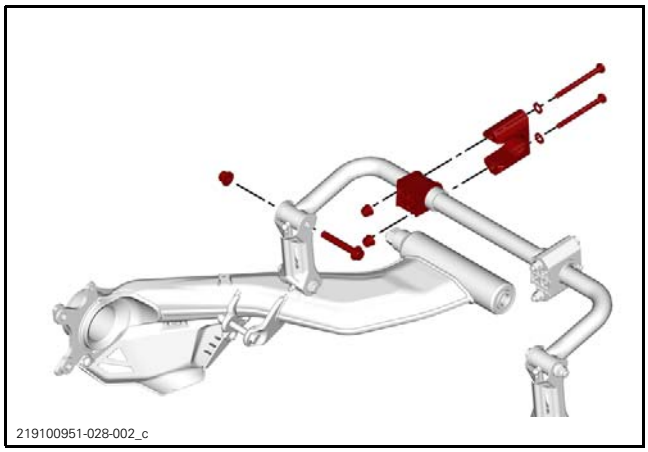

6. Remove stabilizer bar.

Inspecting the Stabilizer Bar

Check stabilizer bar for cracks, bending or other damages.

Replace if necessary.

Installing the Stabilizer Bar

The installation is the reverse of the removal procedure. However, pay attention to the following.

Install all retaining screws of stabilizer bar loosely first.

Position link arm screws with their heads towards inside.

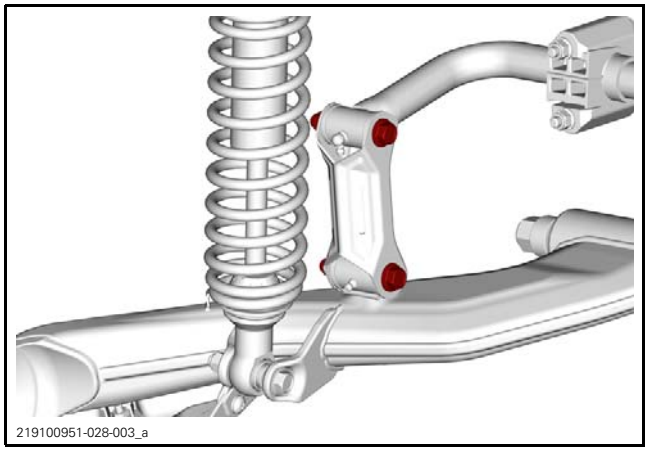

Tighten stabilizer bar retaining screws to specification.

TIGHTENING TORQUE	
Screws securing stabilizer bar to frame	24.5 N•m ± 3.5 N•m (18 lbf•ft ± 3 lbf•ft)
Screws securing stabilizer bar to link arm	61 N•m ± 9 N•m (45 lbf•ft ± 7 lbf•ft)

Lubricate stabilizer bar. Refer to *PERIODIC MAINTENANCE PROCEDURES* subsection.

TRAILING ARM

Removing the Trailing Arm

1. Safely lift and support the vehicle off the ground.
2. Remove wheel hub. Refer to *REAR DRIVE* subsection.
3. Remove protective plate from trailing arm.

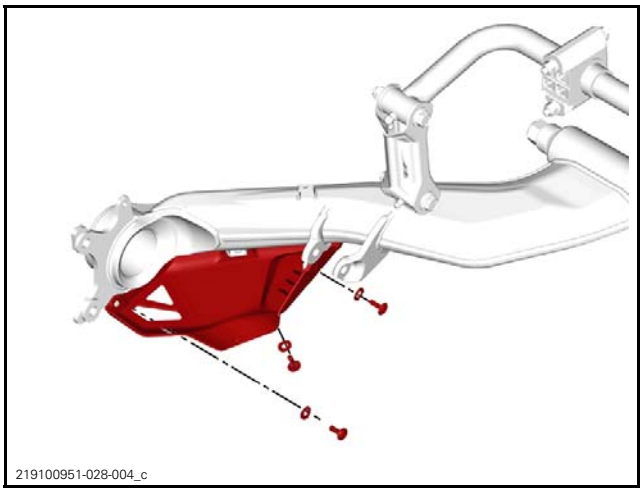

NOTE: If applicable, remove fasteners retaining brake hose to vehicle.

4. Remove nut and washer securing trailing arm pivot shaft.

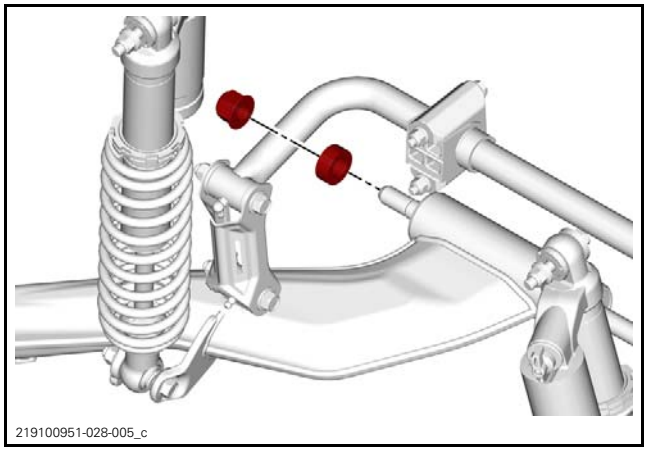

5. Detach trailing arm from link arm and remove lower nut retaining shock absorber.

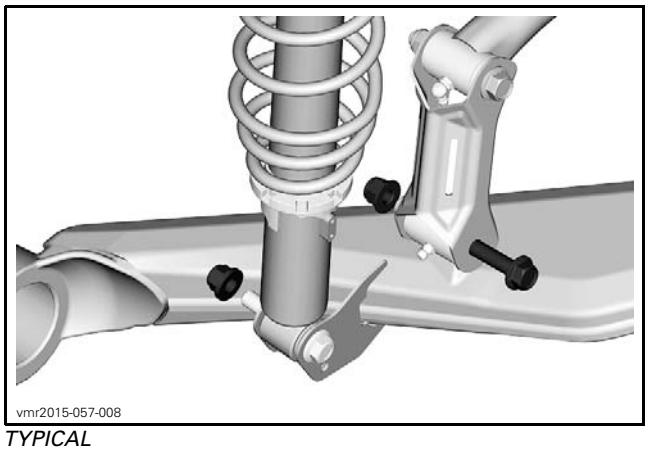

TYPICAL

6. Firmly hold trailing arm then remove:
   – Shock absorber lower screw
   – Trailing arm pivot shaft (pull from opposite side).

NOTE: If only one trailing arm is removed, pull pivot shaft just enough to clear trailing arm.

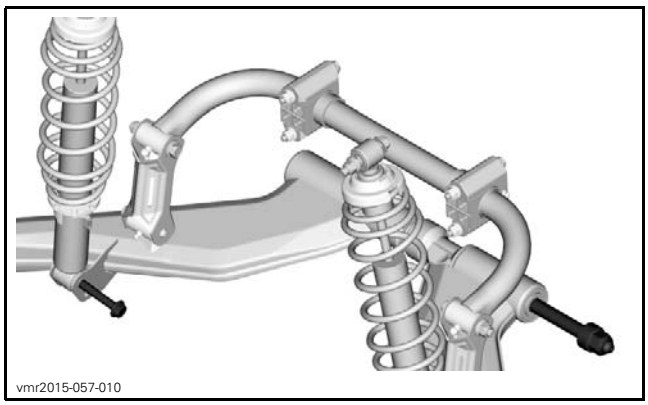

TYPICAL

7. Remove trailing arm from vehicle.

Disassembling the Trailing Arm

Removing the Drive Shaft Bearing

1. Remove circlip securing bearing into trailing arm.

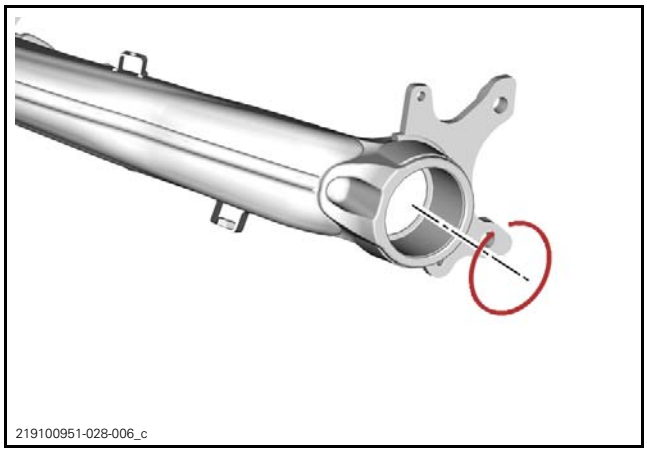

2. Install trailing arm on a press.
3. Use an appropriate bearing remover.
4. Remove drive shaft bearing from trailing arm.

Removing the Link Arm Inner Bushing

Remove both bushings and sleeve from trailing arm.

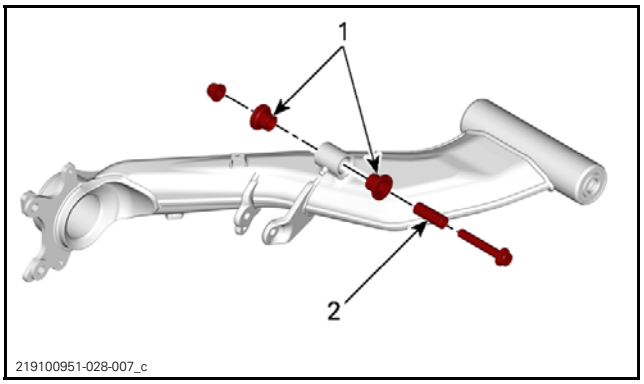

1. *Bushings*
2. *Sleeve*

Removing the Trailing Arm Pivot Bearing

1. Remove both spacers and seals from trailing arm pivot.

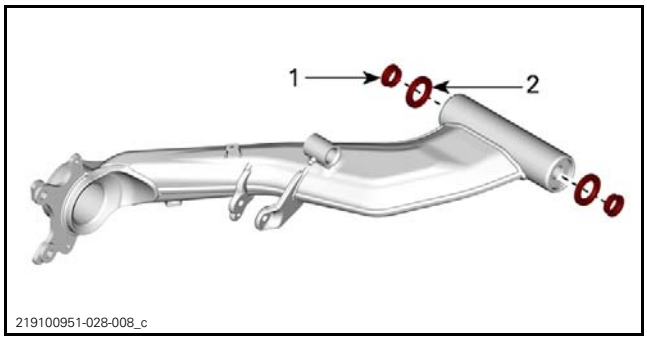

1. *Spacer*
2. *Seal*

2. Remove bearing with an appropriate bearing remover.

NOTE: Remove one bearing at a time.

3. Remove inner spacer from trailing arm.

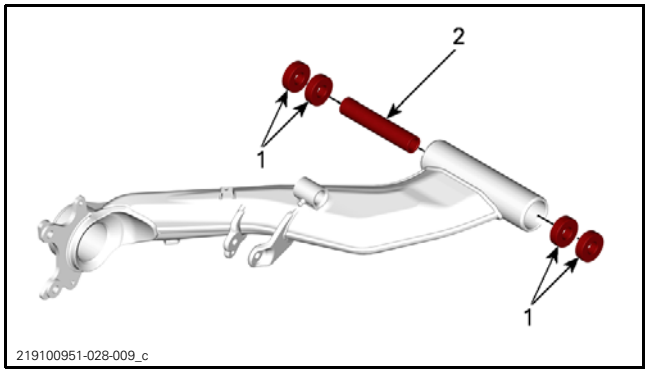

1. Pivot bearings
2. Inner spacer

Inspecting the Trailing Arm

Check trailing arms for:

– Cracks
– Bending.

Check seals condition.

Check inner race of each pivot bearing with your finger. Bearings should turn smoothly and quietly.

Replace all damaged parts.

Assembling and Installing the Trailing Arm

The installation is the reverse of the removal procedure. However, pay attention to the following.

Install the following NEW parts:

– Trailing arm pivot nuts
– Pivot bearings
– Pivot seals
– Circlip.

Use an appropriate shaft to center trailing arm inner spacer during pivot bearings installation.

Install pivot bearings and inner spacer as per the following sequence.

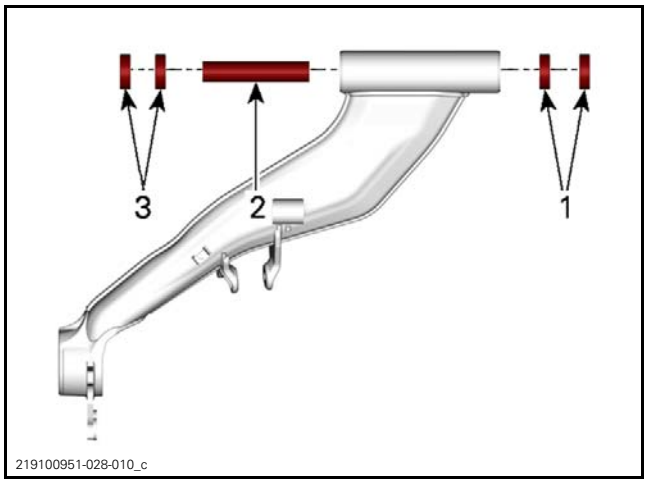

TYPICAL - LH TRAILING ARM
Step 1: Insert bearings on RH side
Step 2: Center inner spacer with RH side bearing using a shaft
Step 3: Insert bearings on LH side

Lubricate trailing arm pivot seals.

LUBRICATION	
Pivot seals	SYNTHETIC GREASE SUSPENSION (P/N 779163)

Install trailing arm pivot seal with its cavity facing inwards.

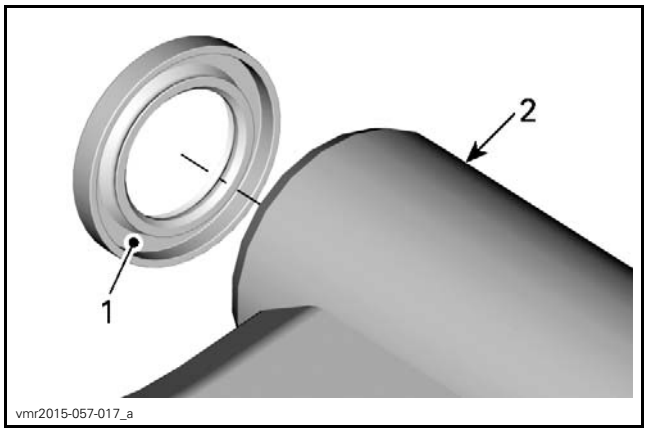

1. Seal cavity
2. Trailing arm

Center trailing arm pivot shaft.

Tighten trailing arm pivot nuts as per the following sequence.

TIGHTENING SEQUENCE		
Trailing arm pivot nuts	RH side nut	Apply LOCTITE 271 (RED) (P/N 293 800 005) on threads of nut. Tighten nut until it reaches end of threads
	LH side nut	255 N•m ± 10 N•m (188 lbf•ft ± 7 lbf•ft)

Position link arm bolts with their heads towards inside.

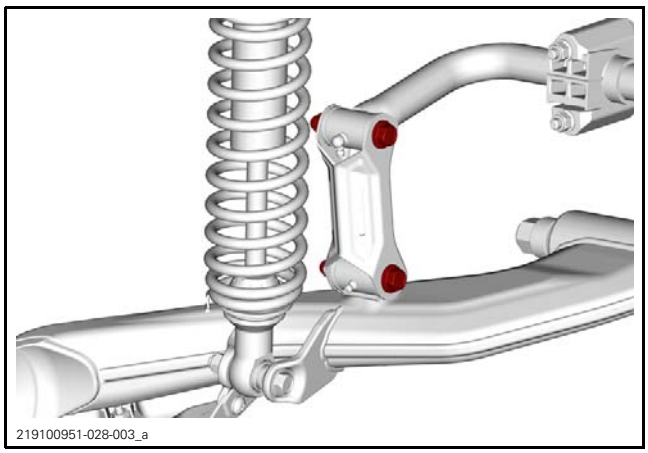

Tighten trailing arm fasteners to specification.

TIGHTENING TORQUE	
Bolts securing trailing arm to link arm	61 N•m ± 9 N•m (45 lbf•ft ± 7 lbf•ft)
Shock absorber nuts	53 N•m ± 3 N•m (39 lbf•ft ± 2 lbf•ft)
Protective plate retaining nuts	4.5 N•m ± 0.5 N•m (40 lbf•**in** ± 4 lbf•**in**)

BRAKES

SERVICE TOOLS

Description	Part Number	Page
ECM ADAPTER TOOL	529 036 166	6

SERVICE PRODUCTS

Description	Part Number	Page
SYNTHETIC GREASE (EUR)	779231	7
SYNTHETIC GREASE	779162	7
XPS BRAKES AND PARTS CLEANER (USA)	219 701 705	9
XPS BRAKES AND PARTS CLEANER	219 701 776	9

FRONT CIRCUIT

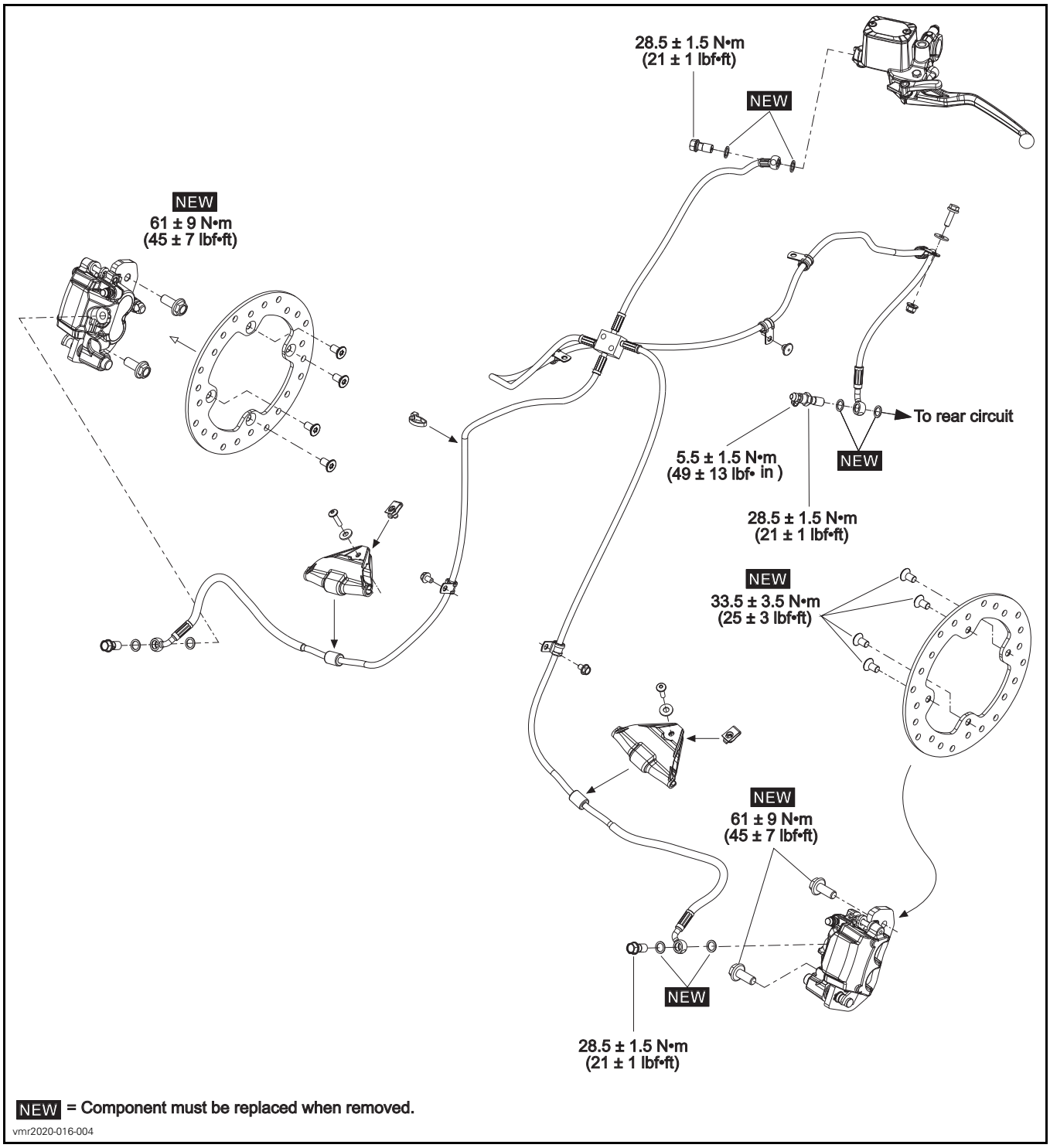

REAR CIRCUIT

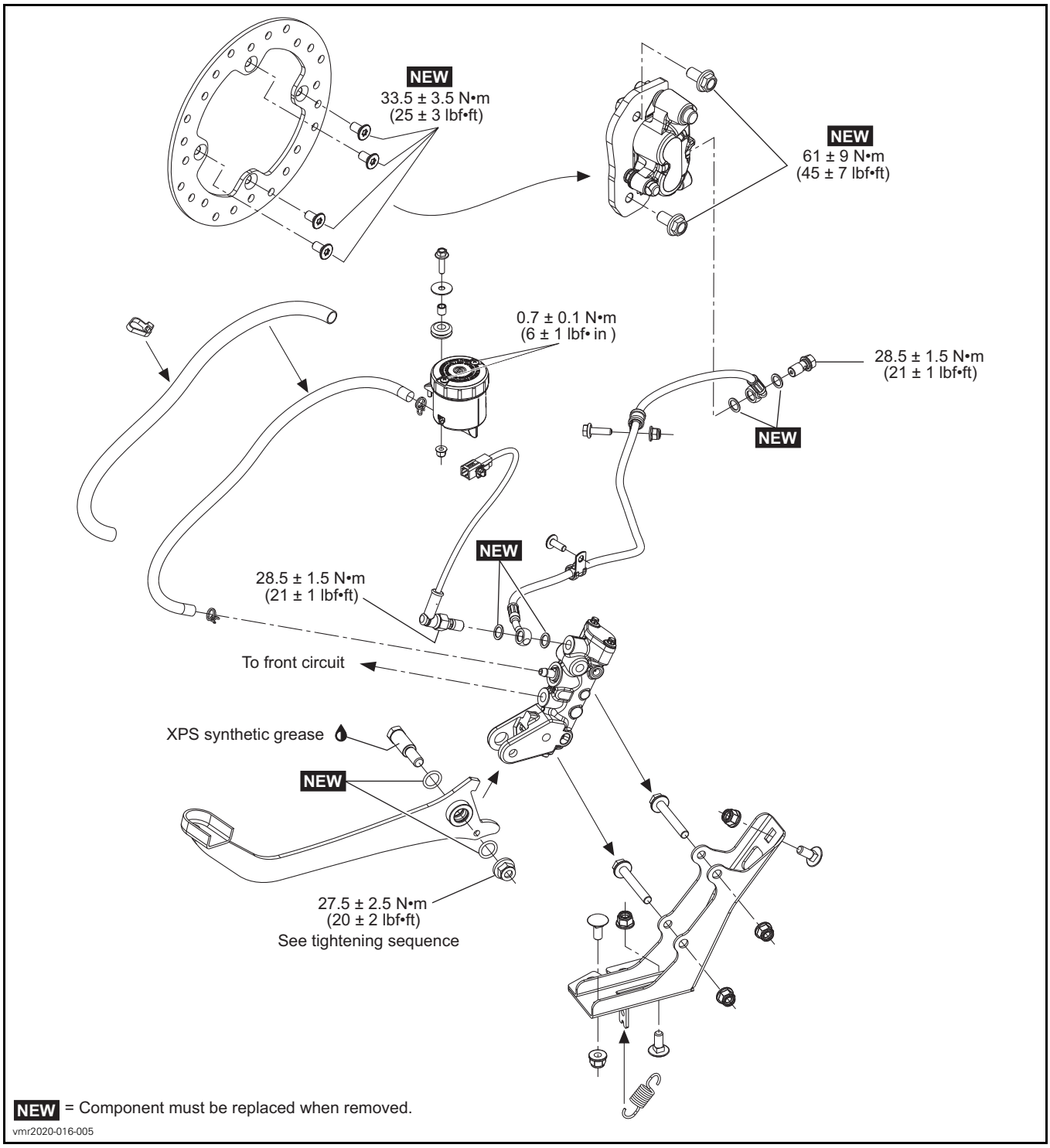

CALIPERS AND BRAKE LEVERS

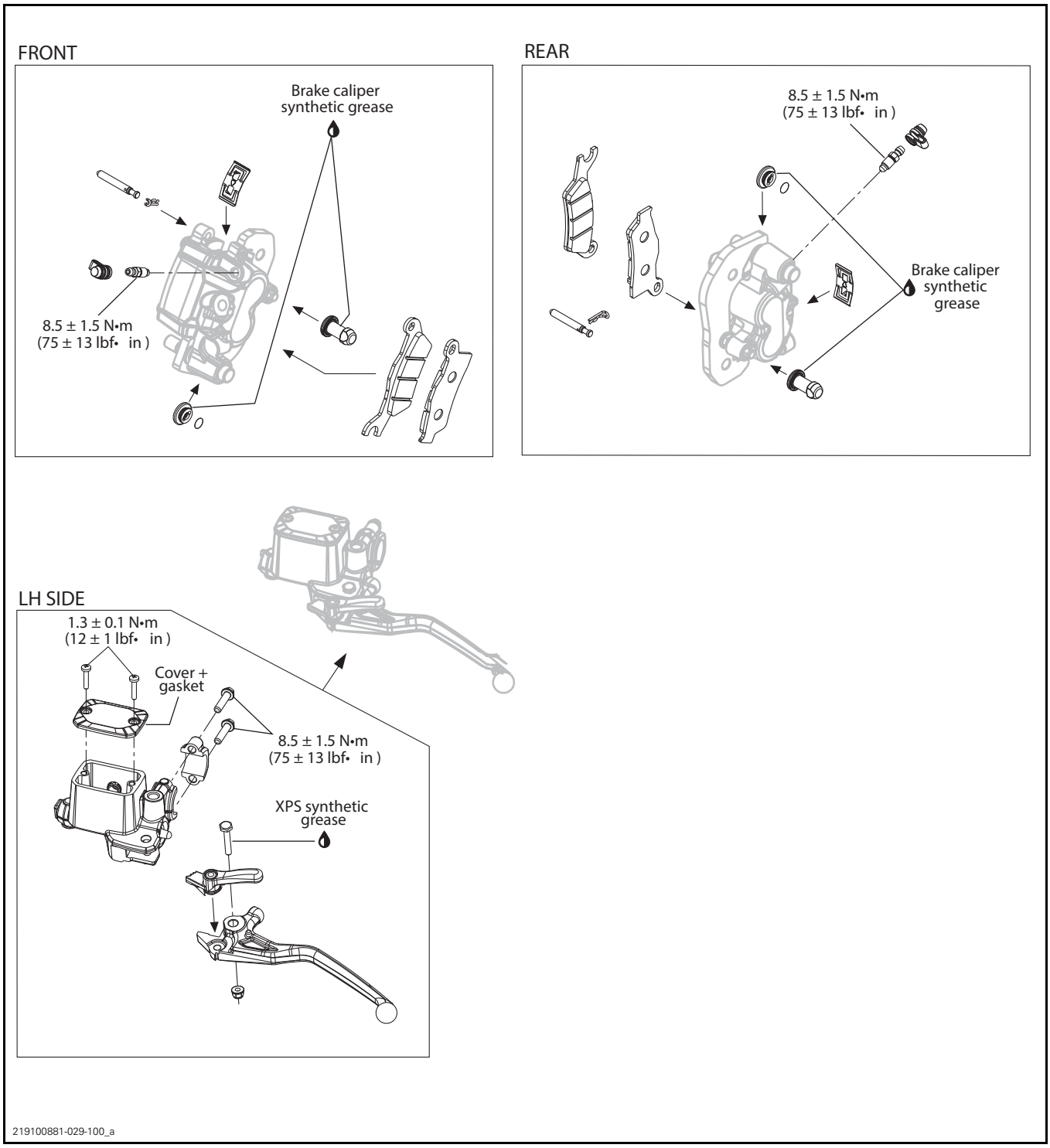

GENERAL

⚠ WARNING

Always check brake system operation after removing or servicing a brake component.

NOTICE Avoid spilling brake fluid on plastic, rubber or painted parts. Protect these parts with a rag when servicing brake system.

NOTICE Sealing washers must be discarded and replaced with new ones every time a Banjo bolt is unscrewed.

NOTICE Always clean the area around a brake component before servicing.

SYSTEM DESCRIPTION

A disc brake system with twin-piston sliding calipers is used.

Disc Brake Configurations

NUMBER OF DISC BRAKES	
FRONT	REAR
2	1

Brake Controls and Circuit Configurations

LH BRAKE LEVER	BRAKE PEDAL
Controls front and rear brakes	Controls rear brake

INSPECTION

BRAKE SYSTEM PRESSURE VALIDATION

Required Tools

Use an appropriate compression force gauge and a ruler.

Brake Lever Verification

NOTE: Do not pump up the brakes repeatedly before doing the validation.

1. Position force gauge perpendicularly on brake lever edge.
2. Position a ruler perpendicularly to handlebar grip.
3. Push brake lever at distance A from handlebar grip using force gauge.

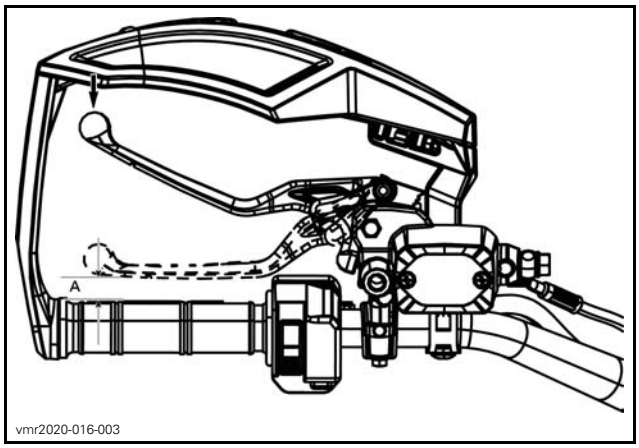

A. Distance from handlebar (refer to table)

4. Read load recorded by the force gauge.
5. Load reading must be as per the following table.

BRAKE LEVER VERIFICATION	
DISTANCE **A**	MINIMUM LOAD
25 mm (1 in)	150 N (34 lbf)

6. If load reading is not in accordance with the specification:
   6.1 Perform a brake system inspection and cleaning.
   6.2 Bleed brake system. Refer to *PERIODIC MAINTENANCE PROCEDURES* subsection.

Brake Pedal Verification

NOTE: Do not pump up the brakes repeatedly before doing the validation.

1. Position force gauge perpendicularly on brake pedal edge.
2. Position a ruler perpendicularly to brake pedal.
3. Push brake pedal from distance A using force gauge.

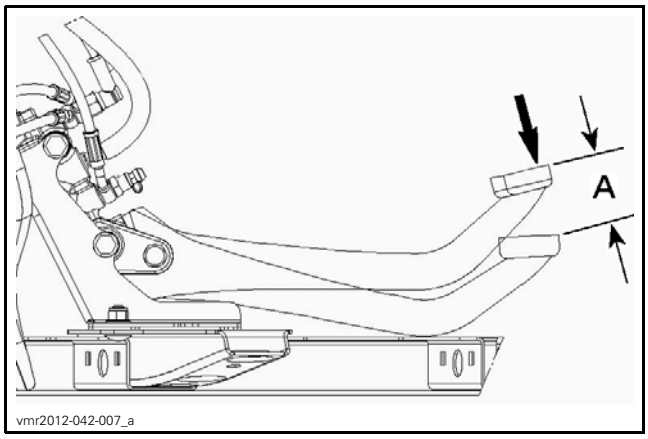

A. Distance to push (refer to table)

4. Read load recorded by the force gauge.
5. Load reading must be as per the following table.

BRAKE PEDAL VERIFICATION	
DISTANCE **A**	MINIMUM LOAD
35 mm (1-3/8 in)	180 N (40 lbf)

6. If load reading is not in accordance with the specification:
   6.1 Perform a brake system inspection and cleaning.
   6.2 Bleed brake system.

   NOTE: Refer to *PERIODIC MAINTENANCE PROCEDURES* subsection.

PROCEDURES

BRAKE LIGHT SWITCH

Brake Light Switch Location

The brake switch is located on the brake pedal master cylinder.

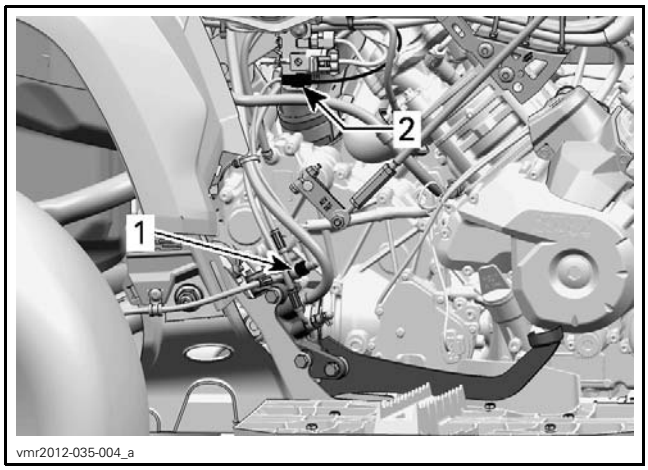

1. Brake light switch
2. Brake light switch connector

Testing the Brake Light Switch Resistance

1. Disconnect brake light switch connector.
2. Check switch operation as follows.

BRAKE LIGHT SWITCH POSITION	PIN		RESISTANCE
Firmly pushed	1	2	Close to 0 Ω
Released			Infinite (OL)

If switch is defective, replace with a new one.

If the switch tests good, verify wire continuity between harness connector and ECM connector. Refer to *WIRING DIAGRAM*.

REQUIRED TOOL	
ECM ADAPTER TOOL (P/N 529 036 166)	

Replacing the Brake Light Switch

Brake Light Switch Located on Master Cylinder

1. Disconnect brake light switch connector.
2. Drain brake line.
3. Remove brake light switch.

NOTE: Use shop rags to catch any spilled brake fluid.

4. Install NEW sealing washers.
5. Install brake light switch.

TIGHTENING TORQUE	
Brake light switch	28.5 N•m ± 1.5 N•m (21 lbf•ft ± 1 lbf•ft)

6. Connect brake light switch connector.
7. Refill and bleed brake system, refer to *PERIODIC MAINTENANCE PROCEDURES* subsection.

BRAKE PEDAL

Removing the Brake Pedal

1. Drain brake system, refer to *PERIODIC MAINTENANCE PROCEDURES* subsection.
2. Remove RH footrest panel. Refer to *BODY* subsection.

NOTE: Loosen brake pedal bolt before removing support from frame.

3. Remove master cylinder support from frame.

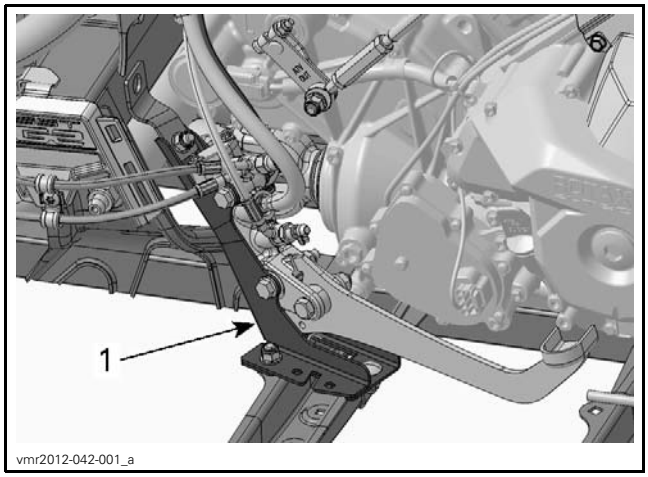

1. Master cylinder support

4. Remove brake pedal spring.

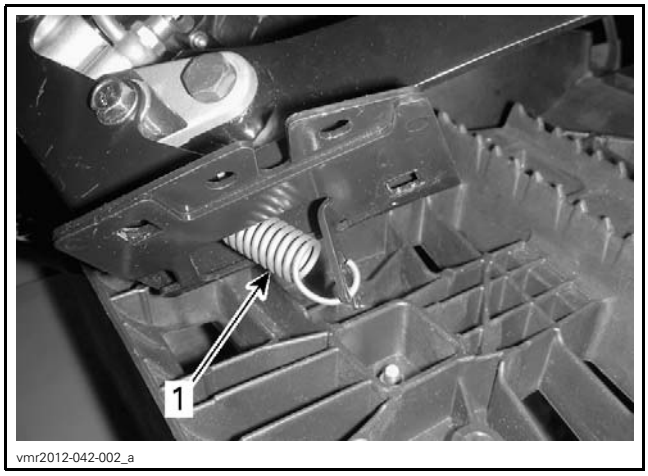

1. Brake pedal spring

5. Remove brake pedal.

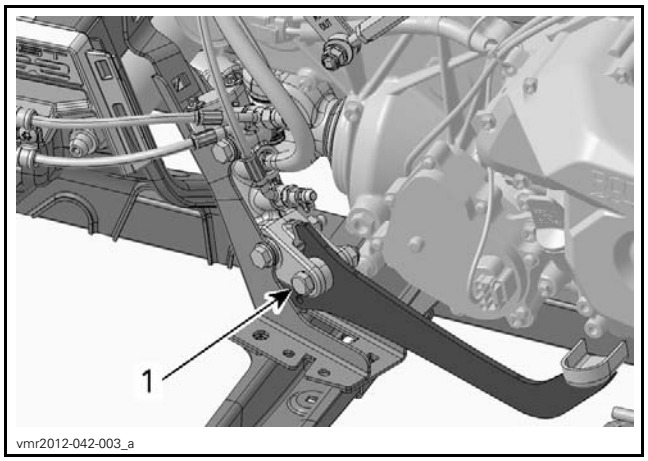

1. Brake pedal pivot bolt

Installing the Brake Pedal

The installation is the reverse of the removal procedure. However, pay attention to the following.

Install **NEW** brake pedal O-ring.

Lubricate brake pedal pivot.

SERVICE PRODUCT	
Scandinavia	SYNTHETIC GREASE (EUR) (P/N 779231)
Other Countries	SYNTHETIC GREASE (P/N 779162)

Tighten brake pedal nut as per the following sequence.

TIGHTENING SEQUENCE		
STEP 1	Brake pedal bolt (pivot)	10 N•m ± 2 N•m (89 lbf•**in** ± 18 lbf•**in**)
STEP 2	Brake pedal nut	27.5 N•m ± 2.5 N•m (20 lbf•ft ± 2 lbf•ft)

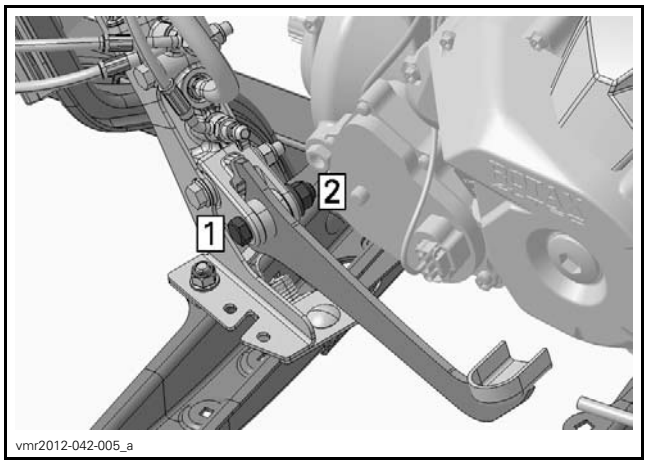

TIGHTENING SEQUENCE
Step 1: Tighten bolt
Step 2: Hold bolt then tighten nut

MASTER CYLINDER

Removing the Master Cylinder

1. Remove *BRAKE PEDAL*. See procedure in this subsection.
2. Remove master cylinder from support.

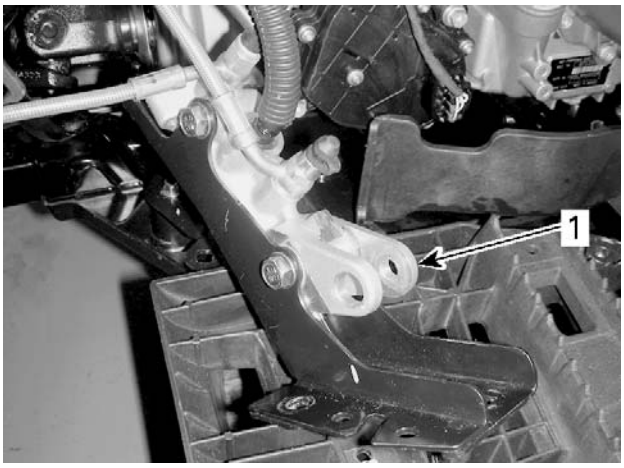

vmr2012-042-004_a

1. Master cylinder

3. Remove hoses and bleeder from master cylinder.

Inspecting the Master Cylinder

Check boot for crack.

Check rod for wear and scratch.

Check master cylinder housing for leak or damage.

Installing the Master Cylinder

The installation is the reverse of the removal procedure. However, pay attention to the following.

Tighten brake hoses and bleeder to specification.

TIGHTENING TORQUE	
Brake hose screw (banjo fitting)	28.5 N•m ± 1.5 N•m (21 lbf•ft ± 1 lbf•ft)
Bleeder	8.5 N•m ± 1.5 N•m (75 lbf•**in** ± 13 lbf•**in**)

Install **NEW** sealing washers.

Refill and bleed brake system, refer to *PERIODIC MAINTENANCE PROCEDURES* subsection.

CALIPER

Removing the Caliper

1. Safely lift and support the vehicle.
2. Remove wheel, refer to *WHEELS AND TIRES* subsection.
3. If caliper is removed from vehicle for replacement:
   - 3.1 Drain brake system, refer to *PERIODIC MAINTENANCE PROCEDURES* subsection.
   - 3.2 Unscrew brake hose from caliper.

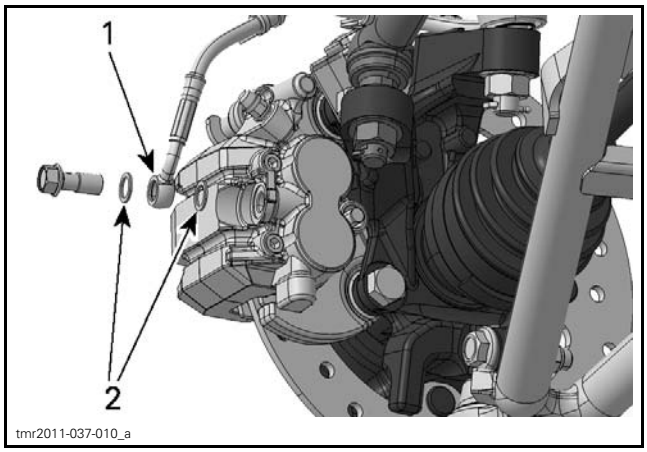

tmr2011-037-010_a

TYPICAL
1. Brake hose
2. Sealing washers

4. Remove fasteners retaining brake hose.
5. Remove screws securing caliper support.

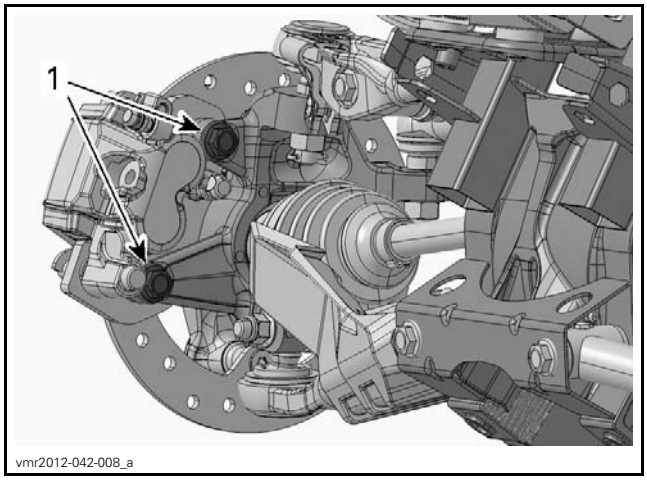

vmr2012-042-008_a

TYPICAL
1. Caliper screws

6. Place caliper assembly onto a support.

NOTICE **Do not let caliper hangs by the hose and do not stretch or twist hose.**

Installing the Caliper

The installation is the reverse of the removal procedure. However, pay attention to the following.

If caliper was removed for replacement:

- Refill and bleed brake system, refer to *PERIODIC MAINTENANCE PROCEDURES* subsection.
- Install **NEW** sealing washers.

Install **NEW** caliper retaining screws.

Tighten caliper retaining screws to specification.

TIGHTENING TORQUE	
Caliper retaining screws	61 N•m ± 9 N•m (45 lbf•ft ± 7 lbf•ft)

BRAKE PADS

Replacing the Brake Pads

1. Remove caliper, refer to *REMOVING THE CALIPER* in this subsection.
2. Remove pin retainer securing brake pad pin.

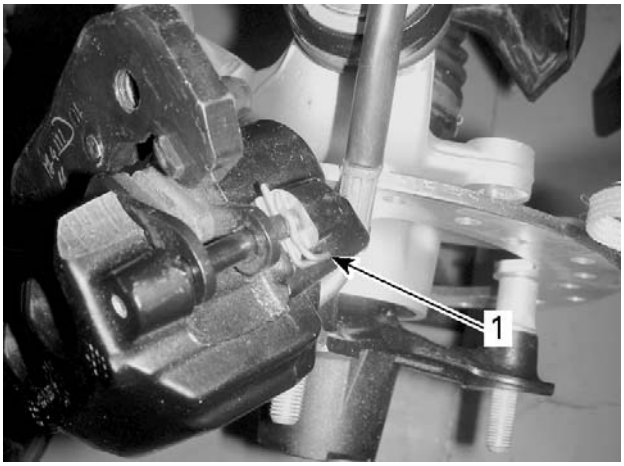

vmr2012-042-009_a

1. Pin retainer

3. Remove brake pad pin from caliper.

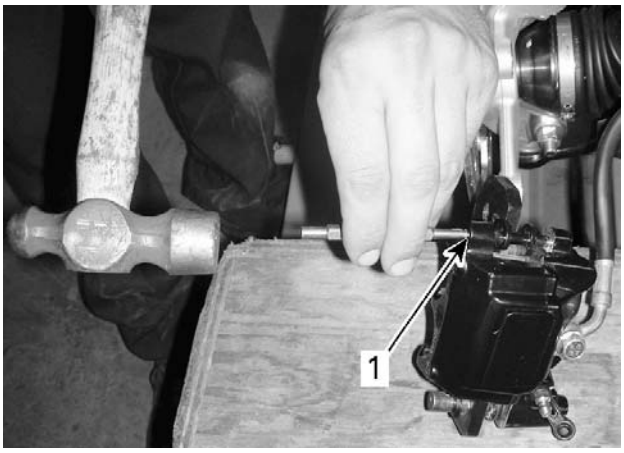

vmr2012-042-010_a

TYPICAL
1. Brake pad pin

4. Carefully remove brake pads.
5. Clean pistons end using the following product or and equivalent.

SERVICE PRODUCT	
United States of America	XPS BRAKES AND PARTS CLEANER (USA) (P/N 219 701 705)
Other countries	XPS BRAKES AND PARTS CLEANER (P/N 219 701 776)

6. Push caliper pistons inward.

NOTE: To avoid damaging pistons, use an old pad to push it into the caliper using a C-clamp.

7. Ensure brake pad spring is properly positioned onto caliper and not damaged.

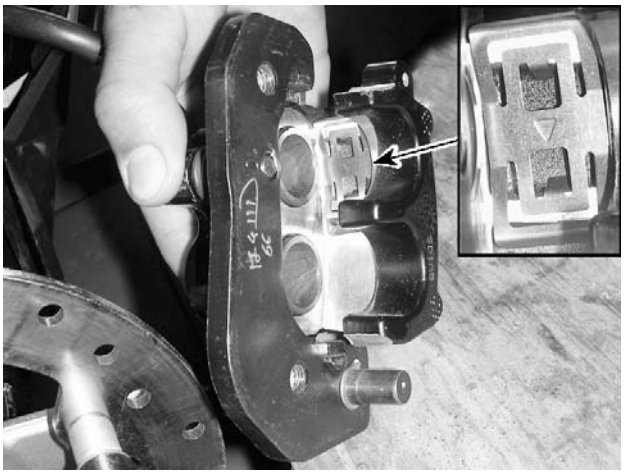

vmr2012-042-011_a

BRAKE PAD SPRING

8. Ensure pad stopper is properly aligned with caliper support protrusion.

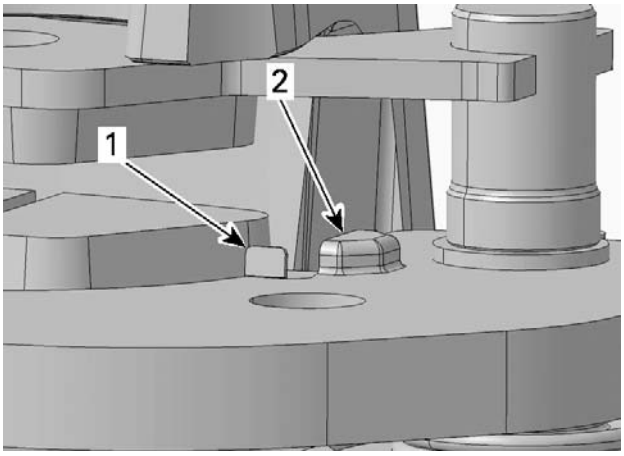

vmr2012-042-012_a

1. Pad stopper
2. Caliper support protrusion

NOTICE **Prior to installing brake pads, pad stopper must be properly positioned and not damaged.**

9. Install NEW brake pads.
10. Clean and install brake pad pin on caliper.
11. Install pin retainer to secure brake pad pin.
12. Slide caliper support completely into caliper.

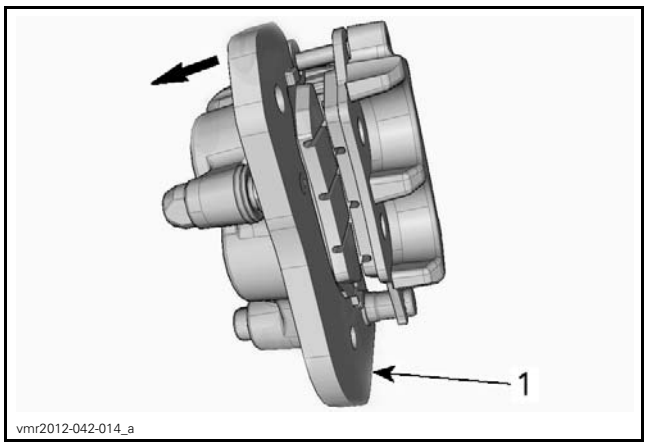

1. Caliper support

13. Install caliper, refer to *INSTALLING THE CALIPER* in this subsection.

BRAKE DISC

Inspecting the Brake Disc

1. Check disc surfaces for scratches or grooves on both sides.
2. Measure thickness of the disc.

DISC MINIMUM THICKNESS	
FRONT	4.0 mm (.157 in)
REAR	4.0 mm (.157 in)

NOTICE **Brake discs must never be machined.**

3. Check warpage of the disc.

MAXIMUM DISC WARPAGE	
FRONT	0.2 mm (.01 in)
REAR	

Replacing the Brake Disc

1. Remove caliper, refer to *REMOVING THE CALIPER* in this subsection.
2. Remove wheel hub, refer to *FRONT DRIVE* or *REAR DRIVE* subsection.
3. Remove screws securing brake disc to wheel hub.

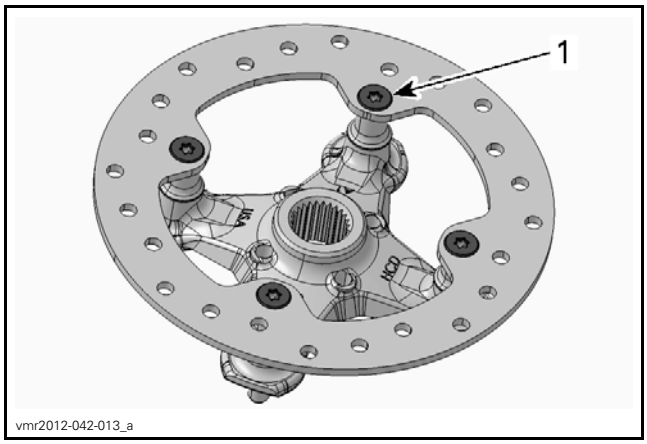

1. Brake disc screw

4. Replace brake disc.
5. Install NEW brake disc screws.
6. Tighten brake disc screws to specification.

TIGHTENING TORQUE	
Brake disc screws	33.5 N•m ± 3.5 N•m (25 lbf•ft ± 3 lbf•ft)

7. Install wheel hub then caliper.
8. Install NEW cotter pin to secure wheel hub nut.

BRAKES (ABS)

SERVICE TOOLS

Description	Part Number	Page
ECM ADAPTER TOOL	529 036 166	8

SERVICE PRODUCTS

Description	Part Number	Page
DEOXIT LUBRICANT	293 550 034	14
SYNTHETIC GREASE (EUR)	779231	9
SYNTHETIC GREASE	779162	9
XPS BRAKES AND PARTS CLEANER	219 701 776	11

FRONT BRAKES

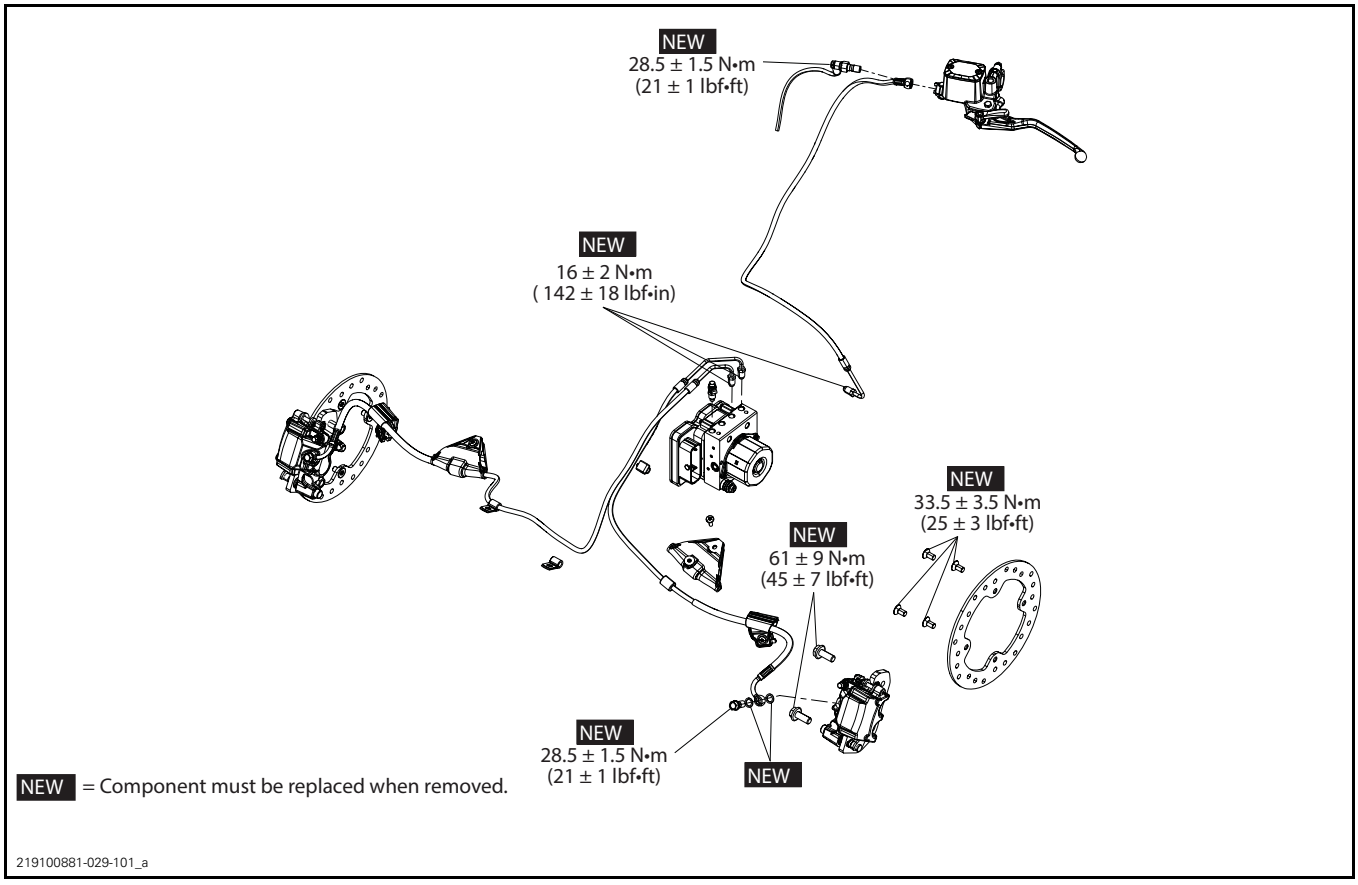

REAR BRAKES

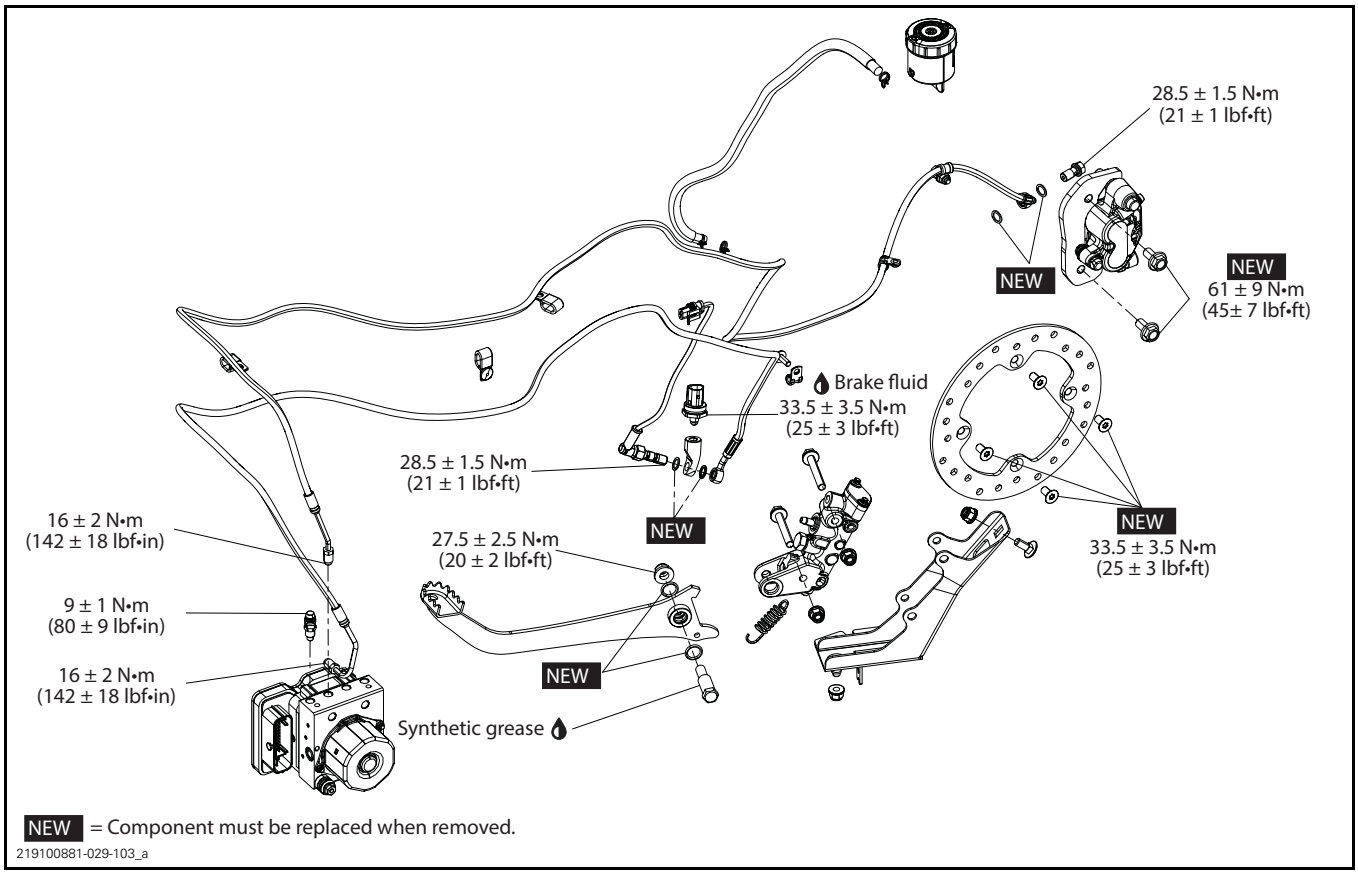
28.5 ± 1.5 N•m
(21 ± 1 lbf•ft)
NEW
NEW
61 ± 9 N•m
(45± 7 lbf•ft)
Brake fluid
33.5 ± 3.5 N•m
(25 ± 3 lbf•ft)
28.5 ± 1.5 N•m
(21 ± 1 lbf•ft)
NEW
16 ± 2 N•m
(142 ± 18 lbf•in)
27.5 ± 2.5 N•m
(20 ± 2 lbf•ft)
NEW
33.5 ± 3.5 N•m
(25 ± 3 lbf•ft)
9 ± 1 N•m
(80 ± 9 lbf•in)
16 ± 2 N•m
(142 ± 18 lbf•in)
NEW
Synthetic grease
NEW = Component must be replaced when removed.
219100881-029-103_a

CALIPERS AND BRAKE LEVERS

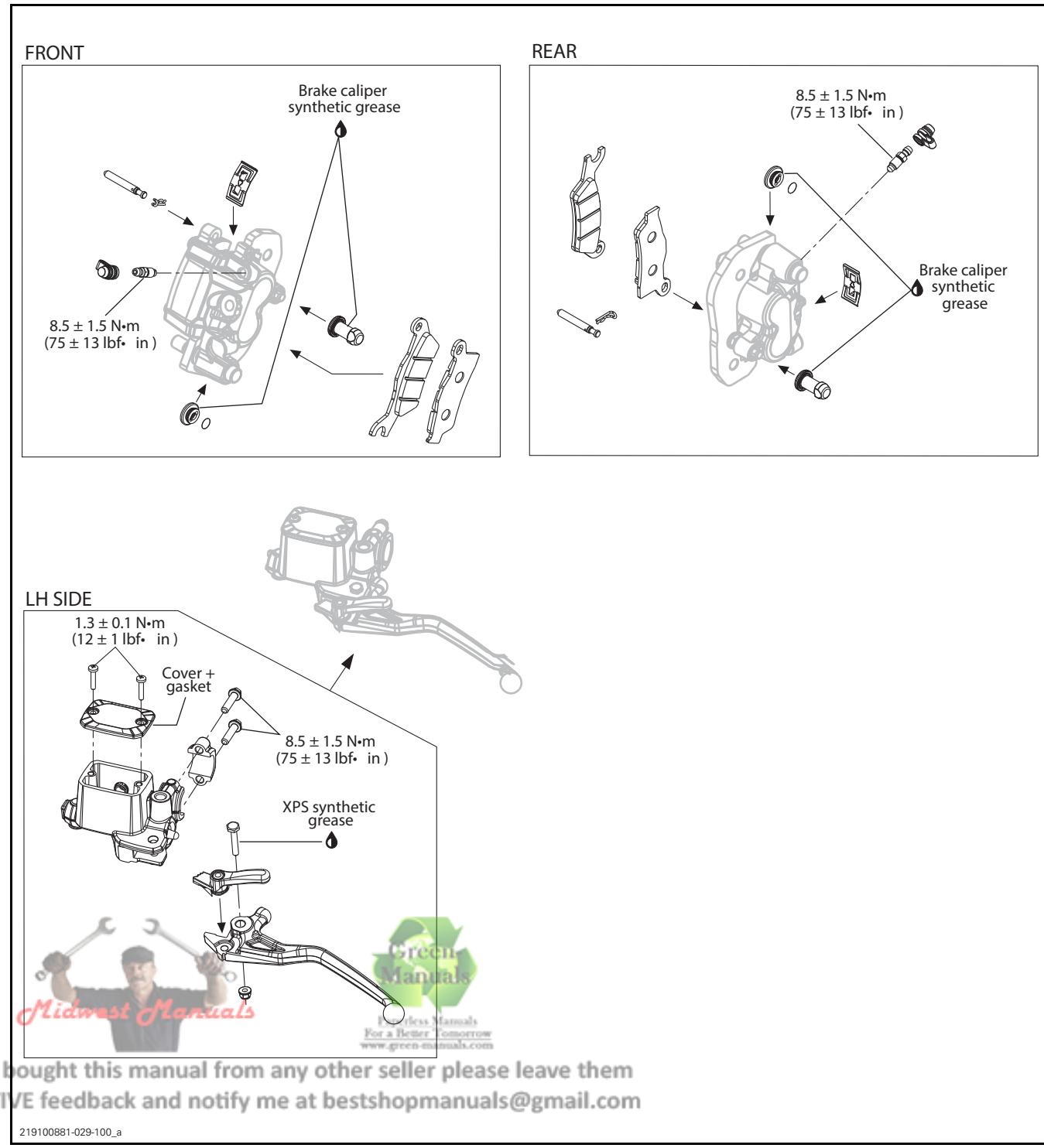

Midwest Manuals
Green Manuals
Priceless Manuals For a Better Tomorrow www.green-manuals.com
If you bought this manual from any other seller please leave them NEGATIVE feedback and notify me at bestshopmanuals@gmail.com

GENERAL

⚠ WARNING

Always check brake system operation after removing or servicing a brake component.

NOTICE **Avoid spilling brake fluid on plastic, rubber or painted parts. Protect these parts with a rag when servicing brake system.**

NOTICE **Sealing washers must be discarded and replaced with new ones every time a Banjo bolt is unscrewed.**

NOTICE **Always clean the area around a brake component before servicing.**

SYSTEM DESCRIPTION

A disc brake system with twin-piston sliding calipers is used.

Anti-Lock Braking System (ABS)

The ABS prevents the wheels to lock while braking. The vehicle configuration allows a single brake point at the right foot or the left lever, to provide the optimal amount of hydraulic brake pressure on all brake discs, under a multitude of braking conditions. The result is maximizing vehicle control while allowing the wheels to remain available to generate steering control force in response to the rider's input.

Disc Brake Configurations

NUMBER OF DISC BRAKES	
Front	2
Rear	1

Brake Controls and Circuit Configurations

BRAKE CONTROLS	
LH brake lever	Controls front and rear brakes
Brake pedal	Controls front and rear brakes

FAULT CODES

For any replacement of parts that involves brake bleeding, it is important to reset the fault codes using the BRP diagnostic software (BUDS2). Refer to *DIAGNOSTIC AND FAULT CODES* subsection.

SYSTEM COMPONENTS DESCRIPTION

ABS Module

The ABS module is the heart of the vehicle anti-lock braking system (ABS). It contains 2 microprocessors, 2 hydraulic pumps, several solenoids and passageways to the 3 brake calipers.

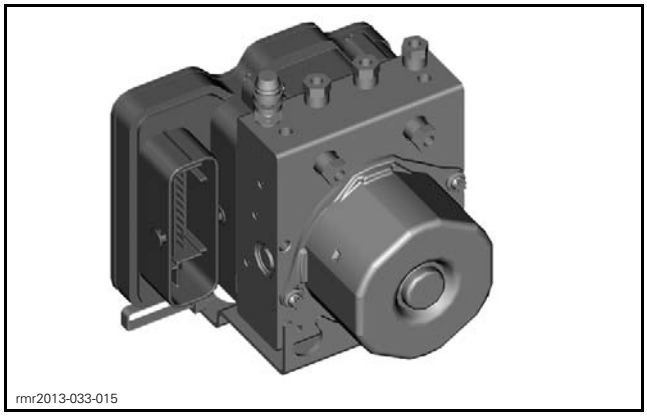

The ABS module receives inputs from wheel sensors (WSS) and performs calculations to cycle the pump and solenoids to apply or relieve hydraulic pressure to or from the vehicle brake calipers.

Wheel Speed Sensor (WSS)

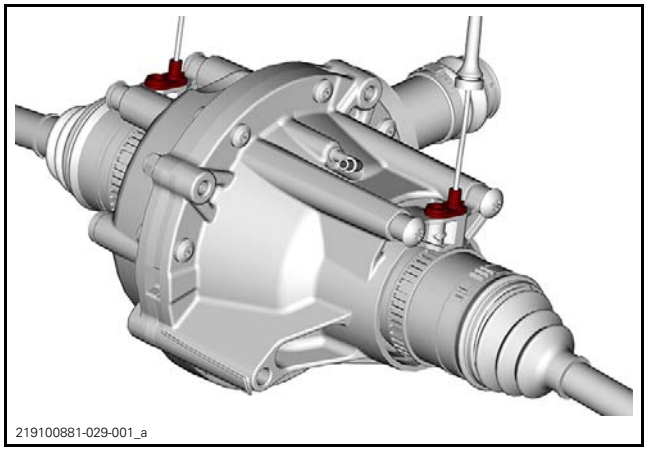

FRONT WHEEL SPEED SENSOR

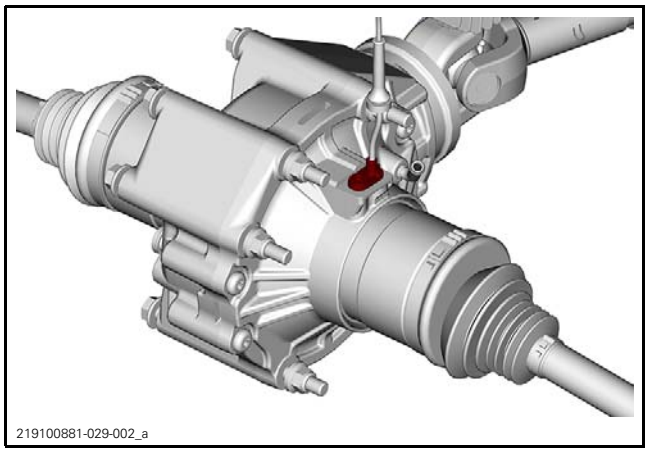

REAR WHEEL SPEED SENSOR

There are 3 speed sensors on the vehicle, two on the front and one on the rear. The speed sensors are hall effect type sensors that send a digital signal to the ABS module.

As the wheel rotates, the teeth on the encoder wheel pass in front of the sensor. The output frequency of the sensor is proportional to the wheel rotation speed.

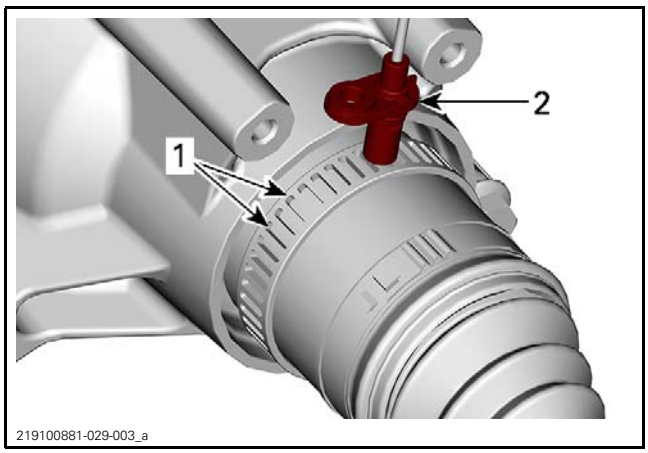

TYPICAL - PARTS REMOVED FOR CLARITY
1. Extrusions on encoder wheel
2. Wheel speed sensor

The signal from the wheel speed sensors are the main inputs looked at by the ABS module for the activation of ABS and other functions.

Brake Pressure Sensor (BPS)

The brake pressure sensor reads the pressure applied on the brake pedal by the user. It sends the value directly to the ABS module. This input is used for precise control.

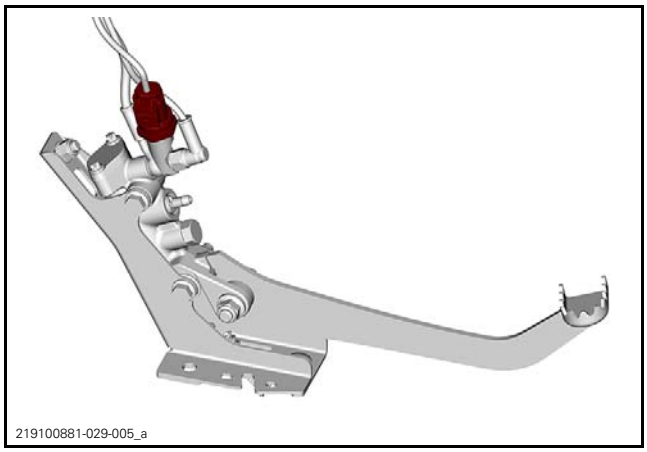

BRAKE PRESSURE SENSOR

Brake Light Switch (BLS)

The brake light switches (BLS) are located close to the master cylinder. They are activated by the brake pedal or the brake lever.

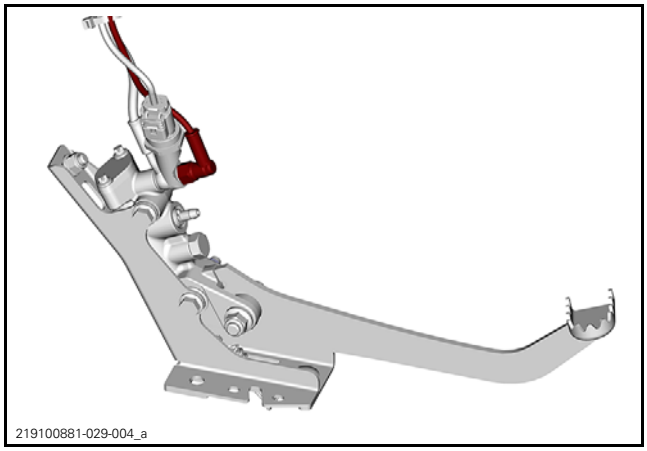

BRAKE LIGHT SWITCH

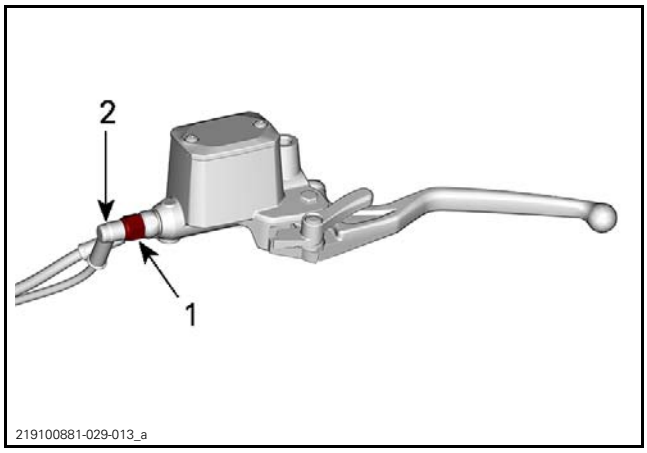

BRAKE LEVER MASTER CYLINDER
1. Brake light switch
2. Brake light switch connector

The BLS turns on the brake lights and supplies the ECM a signal that the operator is applying the brakes. Brake light switches are hard wired to the

ABS module. When the ABS module detect either one of the BLS, it sends a signal to the brake light relay to light up the brake light.

MAINTENANCE

BLEEDING THE BRAKE FLUID

⚠ WARNING

Failure to correctly bleed the braking system may reduce its performance and lead to a loss of control.

Anytime the brake system is opened, the bleeding procedure must be performed.

1. Ensure brake fluid is present in the entire system by topping off the front and rear master cylinders and:
   – Open the bleeder of the rear caliper until fluid drips out and close it.
   – Open the bleeder of the front RH caliper until fluid drips out and close it.
   – Open the bleeder of the front LH caliper until fluid drips out and close it.
2. Connect the vehicle to the BRP diagnostic software (BUDS2) and go to:
   – **Settings** page
   – **ABS** button
   – **Settings** tab
   – **Initializations - Execute bleeding**
3. Follow the on-screen instructions.
4. Ensure brake fluid is present in the entire system by topping off the front and rear master cylinders and:
   – Open the bleeder of the rear caliper until fluid drips out and close it.
   – Open the bleeder of the front RH caliper until fluid drips out and close it.
   – Open the bleeder of the front LH caliper until fluid drips out and close it.

INSPECTION

VERIFYING THE COMPRESSION FORCE

REQUIRED TOOL	
Compression force gauge	

Verifying the Brake Lever Compression Force

IMPORTANT: Do not pump up the brakes repeatedly before doing the validation.

1. Position force gauge perpendicularly on brake lever edge.
2. Position a ruler perpendicularly to handlebar grip.
3. Push brake lever at distance **A** from handlebar grip using force gauge.

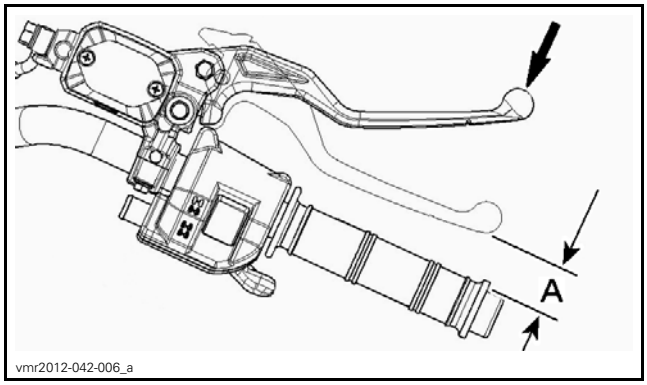

A. Distance from handlebar (refer to table)

4. Read load recorded by the force gauge.
5. Load reading must be as per the following table.

BRAKE LEVER		
LEVER	DISTANCE **A**	MINIMUM LOAD
LH side lever	25 mm (1 in)	150 N (34 lbf)

6. If load reading is not in accordance with the specification:
   6.1 Perform a brake system inspection and cleaning.
   6.2 Bleed brake system, refer to *BLEEDING THE BRAKE FLUID* in this subsection.

Verifying the Brake Pedal Compression Force

IMPORTANT: Do not pump up the brakes repeatedly before doing the validation.

1. Position force gauge perpendicularly on brake pedal edge.
2. Position a ruler perpendicularly to brake pedal.
3. Push brake pedal from distance **A** using force gauge.

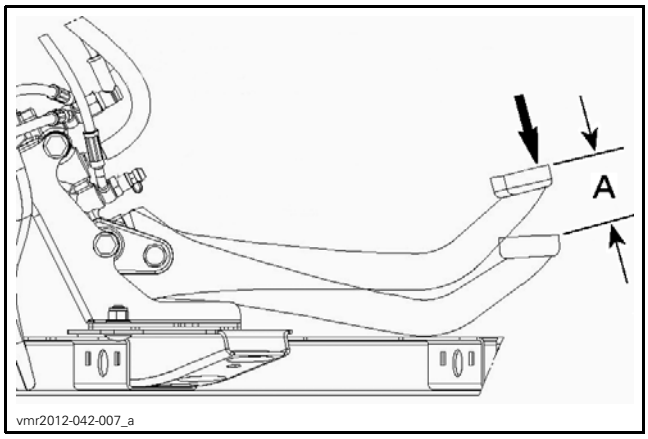

A. Distance to push (refer to table)

4. Read load recorded by the force gauge.
5. Load reading must be as per the following table.

BRAKE PEDAL	
DISTANCE **A**	MINIMUM LOAD
35 mm (1-3/8 in)	180 N (40 lbf)

6. If load reading is not in accordance with the specification:
   6.1 Perform a brake system inspection and cleaning.
   6.2 Bleed brake system, refer to *BLEEDING THE BRAKE FLUID* in this subsection.

TROUBLESHOOTING

Refer to *POWER DISTRIBUTION AND GROUNDS* for fuses and relays information.

Always refer to the *WIRING DIAGRAM* when troubleshooting an electrical circuit.

Install a battery charger on battery terminals (under seat) for any tests that involve a prolonged "key ON" period. If battery voltage gets too low, the ABS module shuts off, some accessories are shut off by the ECM and test results can be altered.

NOTICE **Never force a multimeter probe into an electrical terminal.**

TROUBLESHOOTING TIPS

Start troubleshooting by checking fault codes using the BRP diagnostic software (BUDS2). Make sure fuses are good; follow the service actions in the fault codes section. Refer to *DIAGNOSTIC AND FAULT CODES*.

In BUDS2, the ABS module will not show up in the left menu if the ABS module does not communicate through CAN bus.

Carry out the tests in this subsection according to the fault codes informations. Refer to *DIAGNOSTIC AND FAULT CODES* subsection.

PROCEDURES

BRAKE LIGHT SWITCHES

Brake Light Switch Location

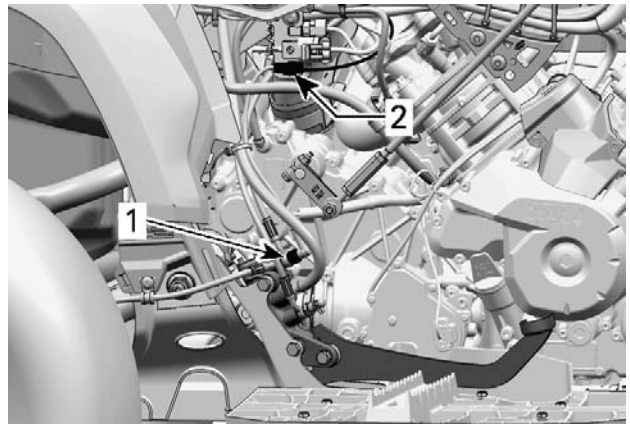

BRAKE PEDAL - -MASTER CYLINDER
1. Brake light switch
2. Brake light switch connector

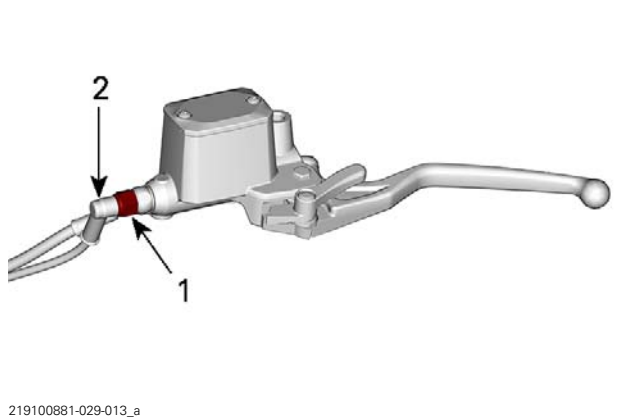

BRAKE LEVER - -MASTER CYLINDER
1. Brake light switch
2. Brake light switch connector

Testing the Brake Light Switch

1. Connect the vehicle to the BRP diagnostic software (BUDS2) and go to:
   – **Functions** page
   – **ABS** button
   – **Functions** tab

Do the **Routines - Brake Light Relay Test** to ensure the proper working of the system. If the brake lights don't light-up, continue testing.

2. Disconnect brake light switch connector.
3. Check switch operation as follows.

BRAKE LIGHT SWITCH POSITION	PIN		RESISTANCE
Firmly pushed	1	2	Close to 0 Ω
Released			Infinite (OL)

If switch is defective, replace with a new one.

If the switch tests good, verify wire continuity between harness connector and ECM connector. Refer to *WIRING DIAGRAM*.

REQUIRED TOOL	
ECM ADAPTER TOOL (P/N 529 036 166)	

Replacing the Brake Light Switch

Brake Light Switch Located on Brake Lever

1. Disconnect brake light switch connector.
2. Drain master cylinder.

NOTE: Use shop rags to catch any spilled brake fluid.

3. Replace brake light switch by a new one using **NEW** sealing washers.
4. Connect brake light switch connector.
5. Refill and bleed brake system, refer to *BLEEDING THE BRAKE FLUID* in this subsection.

Brake Light Switch Located on Master Cylinder

1. Disconnect brake light switch connector.
2. Drain brake line.
3. Remove brake light switch.

NOTE: Use shop rags to catch any spilled brake fluid.

4. Install the brake light switch using **NEW** sealing washers.

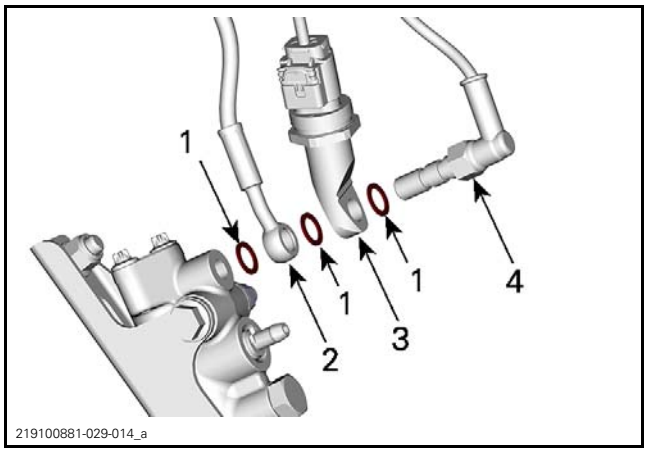

1. New sealing washer
2. Brake line banjo fitting
3. Pressure sensor banjo fitting
4. Brake light switch

TIGHTENING TORQUE	
Brake light switch	28.5 N•m ± 1.5 N•m (21 lbf•ft ± 1 lbf•ft)

5. Connect brake light switch connector.
6. Refill and bleed brake system, refer to *BLEEDING THE BRAKE FLUID* in this subsection.

BRAKE PEDAL

Removing the Brake Pedal

1. Drain brake system, refer to *PERIODIC MAINTENANCE PROCEDURES* subsection.
2. Remove RH footrest panel. Refer to *BODY* subsection.

NOTE: Loosen brake pedal bolt before removing support from frame.

3. Remove master cylinder support from frame.

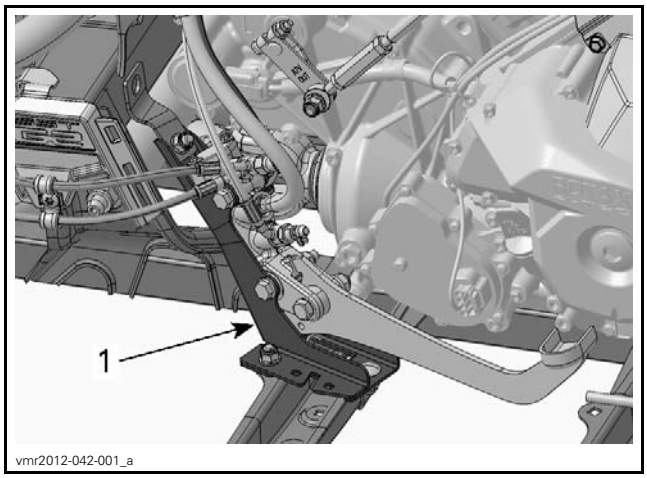

TYPICAL
1. Master cylinder support

4. Remove brake pedal spring.

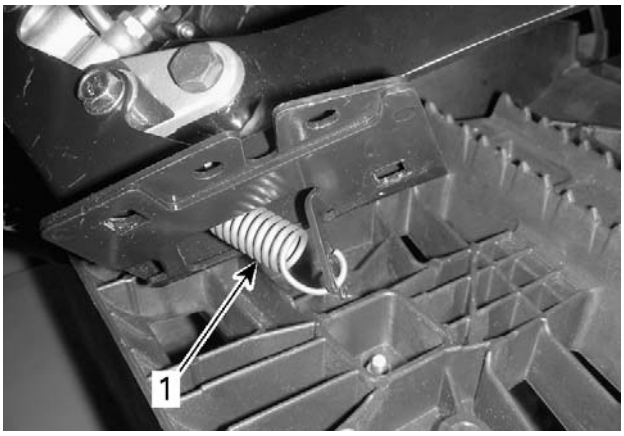

vmr2012-042-002_a

1. Brake pedal spring

5. Remove brake pedal.

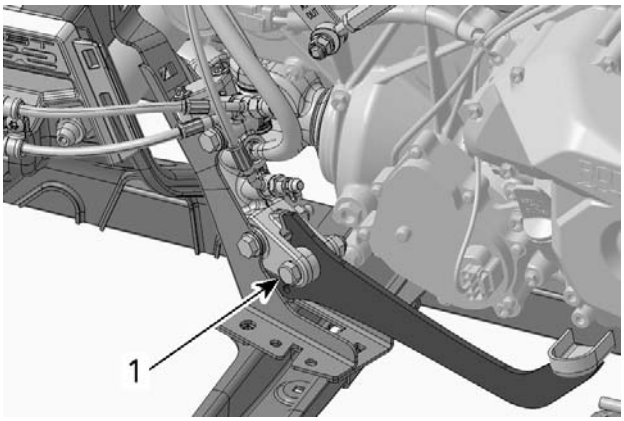

vmr2012-042-003_a

1. Brake pedal pivot bolt

Installing the Brake Pedal

The installation is the reverse of the removal procedure. However, pay attention to the following.

Install **NEW** brake pedal O-ring.

Lubricate brake pedal pivot.

RECOMMENDED SERVICE PRODUCT	
Scandinavia	SYNTHETIC GREASE (EUR) (P/N 779231)
All Other Countries	SYNTHETIC GREASE (P/N 779162)

Tighten brake pedal nut as per the following sequence.

TIGHTENING SEQUENCE		
STEP 1	Brake pedal bolt (pivot)	10 N•m ± 2 N•m (89 lbf•**in** ± 18 lbf•**in**)
STEP 2	Brake pedal nut	27.5 N•m ± 2.5 N•m (20 lbf•ft ± 2 lbf•ft)

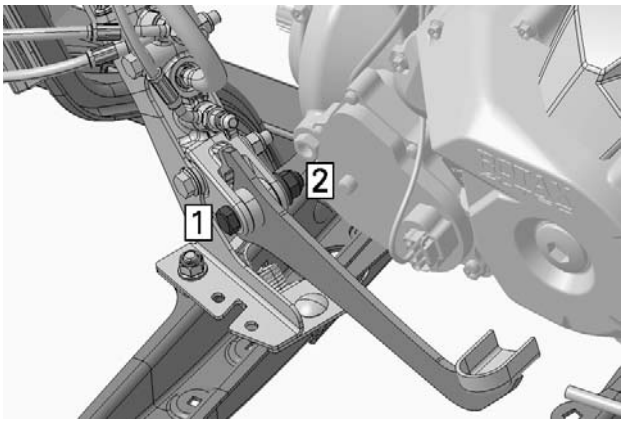

vmr2012-042-005_a

TIGHTENING SEQUENCE
Step 1: Tighten bolt
Step 2: Hold bolt then tighten nut

MASTER CYLINDER

Removing the Master Cylinder

1. Remove *BRAKE PEDAL*. See procedure in this subsection.
2. Remove master cylinder from support.

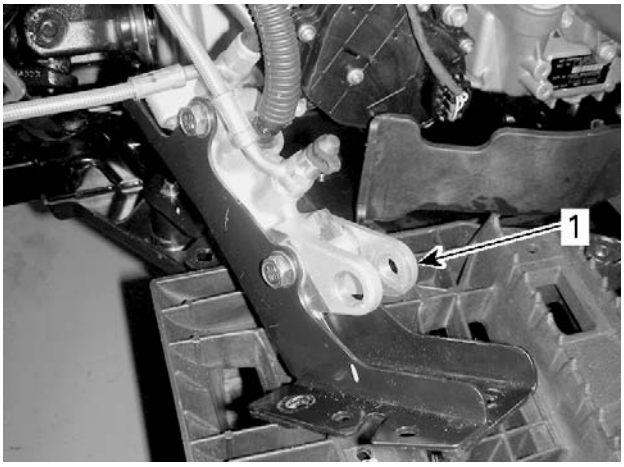

vmr2012-042-004_a

1. Master cylinder

3. Remove hoses and bleeder from master cylinder.
4. Discard sealing washers.

Inspecting the Master Cylinder

Check boot for crack.

Check rod for wear and scratch.

Check master cylinder housing for leak or damage.

Installing the Master Cylinder

The installation is the reverse of the removal procedure. However, pay attention to the following.

Install **NEW** sealing washers.

Tighten brake hoses and bleeder to specification.

TIGHTENING TORQUE	
Brake hose screw (banjo fitting)	28.5 N•m ± 1.5 N•m (21 lbf•ft ± 1 lbf•ft)
Bleeder	8.5 N•m ± 1.5 N•m (75 lbf•**in** ± 13 lbf•**in**)

Refill and bleed brake system, refer to *BLEEDING THE BRAKE FLUID* in this subsection.

CALIPER

Removing the Caliper

1. Safely lift and support the vehicle.
2. Remove wheel, refer to *WHEELS AND TIRES* subsection.
3. If caliper is removed from vehicle for replacement:
   3.1 Drain brake system, refer to *PERIODIC MAINTENANCE PROCEDURES* subsection.
   3.2 Unscrew brake hose from caliper and discard sealing washers.

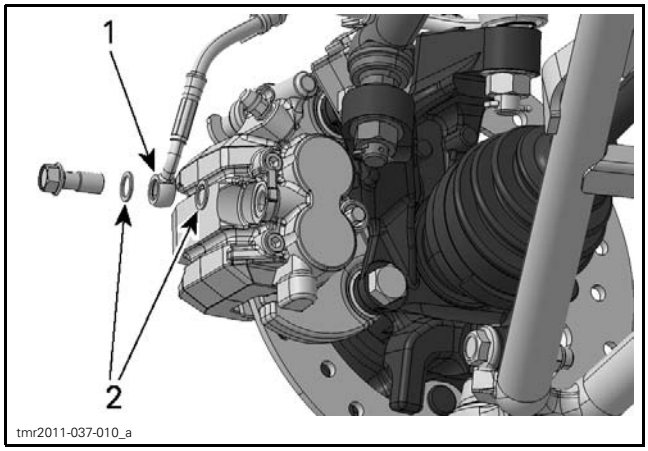

TYPICAL
1. Brake hose
2. Sealing washers (discard)

4. Remove fasteners retaining brake hose.
5. Remove and discard screws securing caliper support.

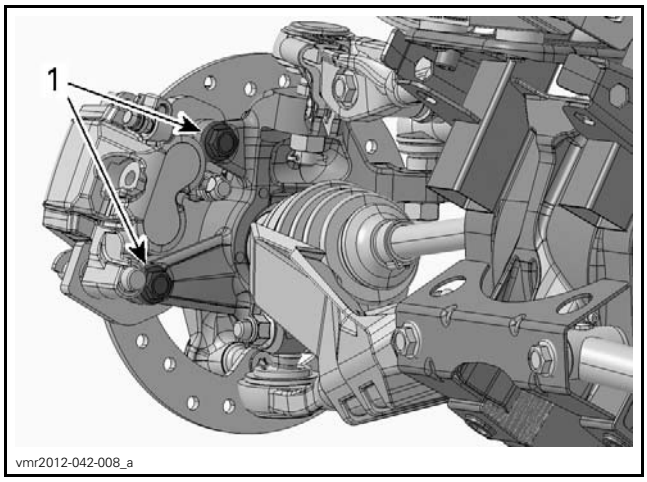

TYPICAL
1. Caliper screws (discard)

6. Place caliper assembly onto a support.

NOTICE **Do not let caliper hangs by the hose and do not stretch or twist hose.**

Installing the Caliper

The installation is the reverse of the removal procedure. However, pay attention to the following.

If caliper was removed for replacement:

– Install **NEW** sealing washers.
– Refill and bleed brake system, refer to *BLEEDING THE BRAKE FLUID* in this section.

Install **NEW** caliper retaining screws.

Tighten caliper retaining screws to specification.

TIGHTENING TORQUE	
Caliper retaining screws	61 N•m ± 9 N•m (45 lbf•ft ± 7 lbf•ft)

BRAKE PADS

Replacing the Brake Pads

1. Remove caliper, refer to *REMOVING THE CALIPER* in this subsection.
2. Remove pin retainer securing brake pad pin.

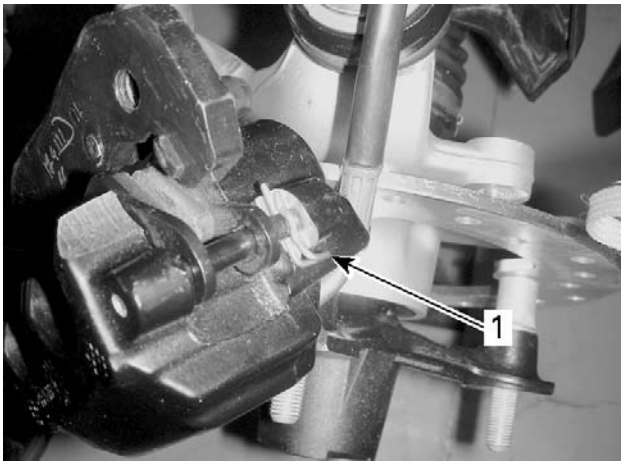

vmr2012-042-009_a

1. Pin retainer

3. Remove brake pad pin from caliper.

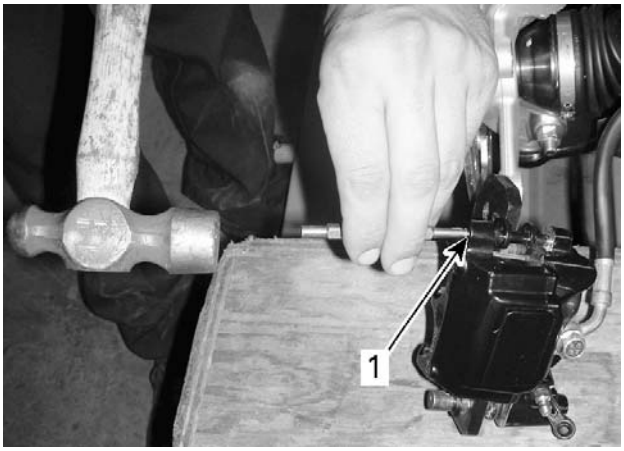

vmr2012-042-010_a

TYPICAL
1. Brake pad pin

4. Carefully remove brake pads.
5. Clean pistons end using the following product or and equivalent.

REQUIRED SERVICE PRODUCT
XPS BRAKES AND PARTS CLEANER (P/N 219 701 776)

6. Using an old pad and a C-clamp, push the caliper piston into the caliper.
7. Ensure brake pad spring is properly positioned onto caliper and not damaged.

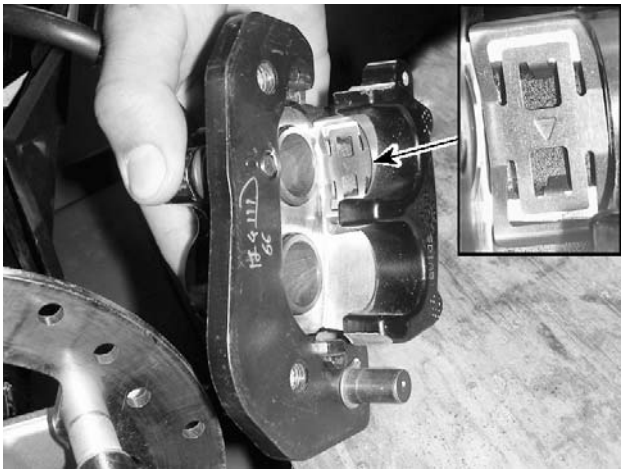

vmr2012-042-011_a

BRAKE PAD SPRING

8. Ensure pad stopper is properly aligned with caliper support protrusion.

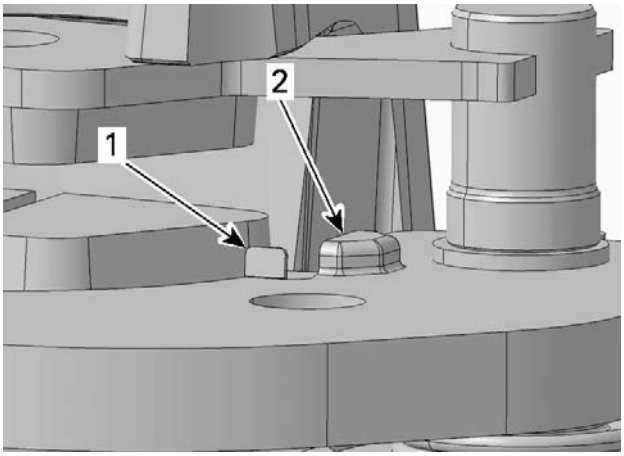

vmr2012-042-012_a

1. Pad stopper
2. Caliper support protrusion

NOTICE **Prior to installing brake pads, pad stopper must be properly positioned and not damaged.**

9. Install NEW brake pads.
10. Clean and install brake pad pin on caliper.
11. Install pin retainer to secure brake pad pin.
12. Slide caliper support completely into caliper.

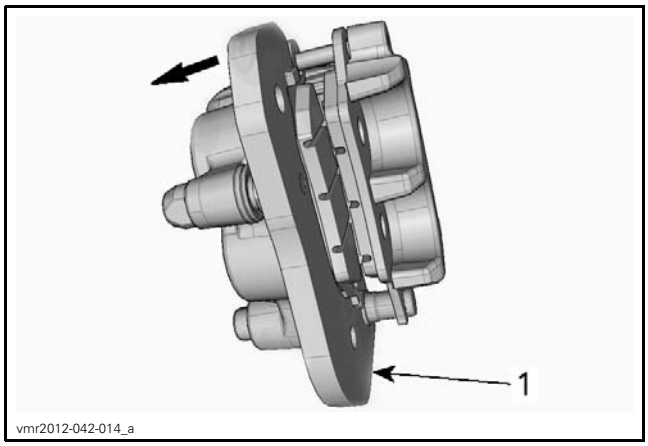

1. Caliper support

13. Install caliper, refer to *INSTALLING THE CALIPER* in this subsection.

BRAKE DISC

Inspecting the Brake Disc

1. Check disc surfaces for scratches or grooves on both sides.
2. Measure thickness of the disc.

DISC MINIMUM THICKNESS	
FRONT	4.0 mm (.157 in)
REAR	

NOTICE Brake discs must never be machined.

3. Check warpage of the disc.

MAXIMUM DISC WARPAGE	
FRONT	0.2 mm (.01 in)
REAR	

Replacing the Brake Disc

1. Remove caliper, refer to *REMOVING THE CALIPER* in this subsection.
2. Remove wheel hub, refer to *FRONT DRIVE* or *REAR DRIVE* subsection.
3. Remove screws securing brake disc to wheel hub.

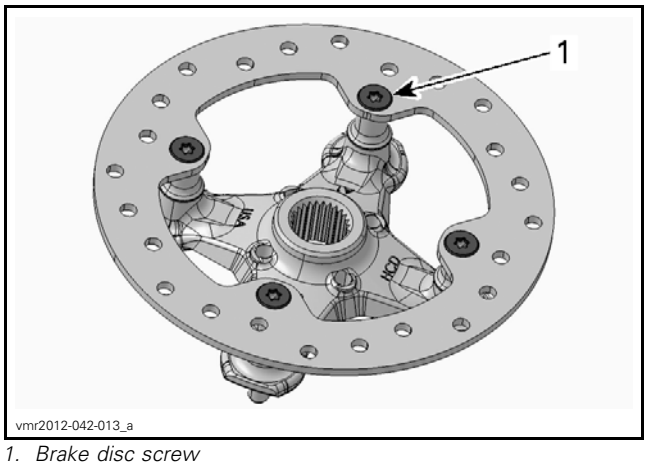

1. Brake disc screw

4. Replace brake disc.
5. Install **NEW** brake disc screws.

TIGHTENING TORQUE	
Brake disc screws	33.5 N•m ± 3.5 N•m (25 lbf•ft ± 3 lbf•ft)

6. Install wheel hub then caliper.
7. Install **NEW** cotter pin to secure wheel hub nut.

WHEEL SPEED SENSOR (WSS)

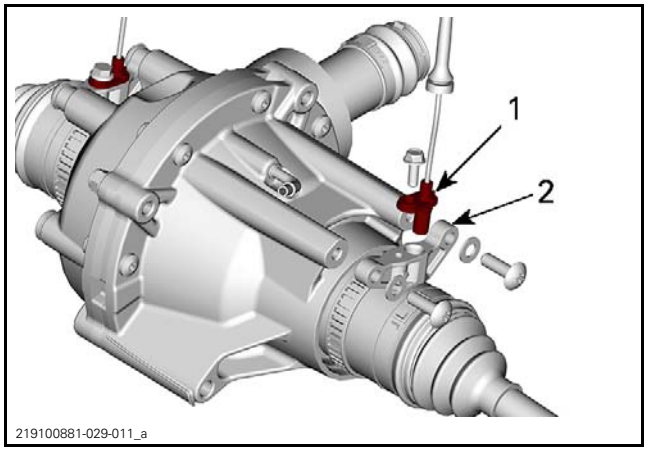

FRONT WHEEL SPEED SENSOR
1. Speed sensor
2. Speed sensor support

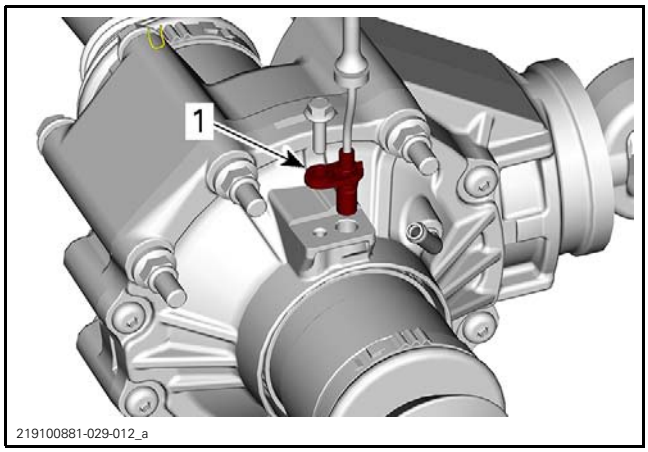

REAR WHEEL SPEED SENSOR
1. Speed sensor

Make sure that wheel sensors:
- Are securely fastened and undamaged.
- Are clean and free from debris.
- Support for the front speed sensors are securely fastened and undamaged.

Testing the WSS with BUDS2

1. Connect the vehicle to the BRP diagnostic software (BUDS2).
2. Go to:
   - **Measurements** page
   - **ABS** button
3. Lift each wheel one at a time and manually rotate wheel.
4. Look in BUDS2 to see if the corresponding sensor needle moves.

Otherwise, perform the electrical tests.

If one of the sensor gauges does not respond to wheel rotation, refer to *TESTING THE WSS WIRING CONTINUITY* .

Testing the WSS Wiring Continuity

1. Disconnect the wheel speed sensor connector to be tested.
2. Disconnect ABS module connector, refer to *ABS MODULE CONNECTOR ACCESS* in this subsection.
3. Set multimeter to Ω.
4. Measure wiring resistance as follows.

NOTICE **To avoid damaging the connector, probe only the terminal tip.**

SENSOR	SENSOR TERMINAL	ABS MODULE CONNECTOR PIN	MEASUREMENT
Front LH	1	19	Close to 0 Ω (continuity)
	2	8	
Front RH	1	16	
	2	4	
Rear	1	17	
	2	29	

If continuity test failed, repair wiring or connectors.

If continuity test succeeded, try a new sensor.

If problem persists, try a new ABS module.

Replacing the WSS

1. Unplug the WSS connector.
2. Remove screw securing the WSS on its support (front) or on the differential (rear).
3. Pull the WSS upwards to remove it.

The installation is the reverse of the removal procedure. However, pay attention to the following.

TIGHTENING TORQUE	
WSS retaining screw	4.5 N•m ± 0.5 N•m (40 lbf•**in** ± 4 lbf•**in**)
WSS support screw	13.5 N•m ± 1.5 N•m (119 lbf•**in** ± 13 lbf•**in**)

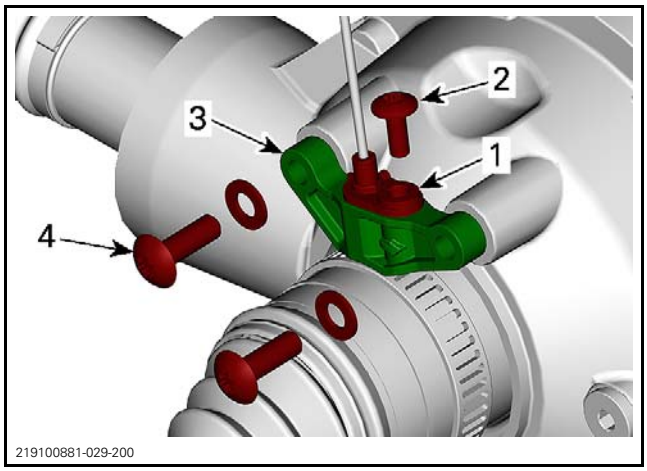

FRONT DIFFERENTIAL
1. WSS
2. WSS retaining screw
3. WSS support
4. WSS support screw

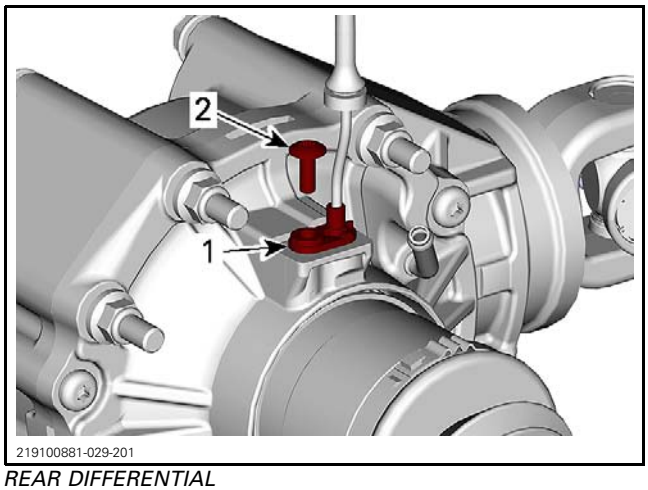

REAR DIFFERENTIAL
1. WSS
2. WSS retaining screw

ABS MODULE (ABS)

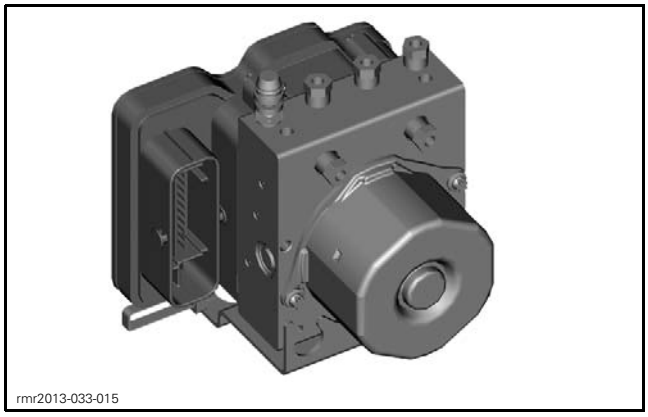

TYPICAL

Troubleshooting the ABS Module

A ABS module failure is not likely to occur. These modules have proven to be very reliable. Prior to replacing a suspected ABS module, take the following into account.

The problem can be related to a hydraulic function, check the following:

– Brake fluid level
– Brake line leaking, bent or pinched
– Brake caliper
– Master cylinder (including piston rod position).

The problem can be related to an electric function, check the following:

– Fault codes
– ABS module electrical connector.
– Wiring harness condition.

If pins or terminals are not clean, check ABS module harness connector seal condition and ensure connector mechanism properly locks connector seal against ABS module.

Try cleaning terminals with DEOXIT LUBRICANT (P/N 293 550 034) before reconnecting the ABS module connector to see if it "cures" the problem.

As a final test, try a new ABS module **without** disconnecting brake lines from the old ABS module. Proceed as follows:

IMPORTANT: Disconnecting brake lines would require the system bleeding.

1. Connect ABS module connector to a new ABS module.
2. Turn ignition switch ON.

NOTE: It is normal that some fault codes appear at this time.

3. Reset learned vehicle variant using BUDS2.
   – Settings page
   – ABS button
   – Settings tab
4. Turn ignition switch OFF for 30 seconds.
5. Turn ignition switch ON.
6. If problem persists, the trouble is elsewhere.
7. If problem is now solved, the ABS module in the vehicle is faulty. Install the new ABS module in the vehicle.

⚠ WARNING

Never ride a vehicle with a ABS module temporarily installed.

ABS Module Connector Access

⚠ WARNING

The ABS module motor and valves are always powered. Always disconnect the battery prior to disconnecting ABS module connector.

Connector can be accessed from the front LH side behind the inner fender as illustrated.

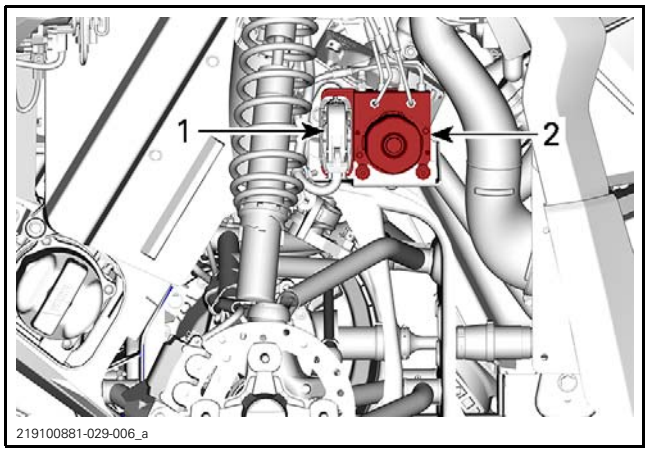

LH SIDE
1. *Connector*
2. *ABS module*

ABS Module Power Supply Pinout

FUNCTION	ABS MODULE CONNECTOR TERMINAL
Power from ignition switch	28
Hydraulic pump power	1
Hydraulic valves power	25
Hydraulic pump ground	13
ECM ground	38
Can high	26
Can low	14
Brake Light Output (to brake relay)	3
5V Output	5
Pressure Signal	37
Analog Ground	6

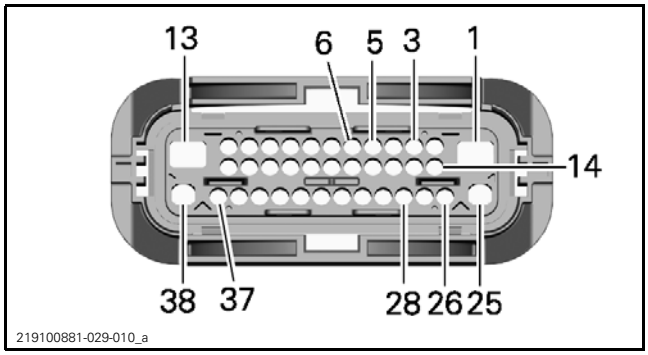

ABS MODULE HARNESS CONNECTOR PINOUT

Testing the ABS Module Input Voltage

1. Disconnect ABS module connector.
2. Turn ignition switch ON.
3. Test for input voltage as follows.

NOTICE **To avoid damaging the connector, probe only the tip of the terminal.**

NOTE: Refer to *ABS MODULE POWER SUPPLY PINOUT* in this subsection for pin identification.

ABS MODULE CONNECTOR	BATTERY	VOLTAGE
Pin 28	Ground	Battery voltage

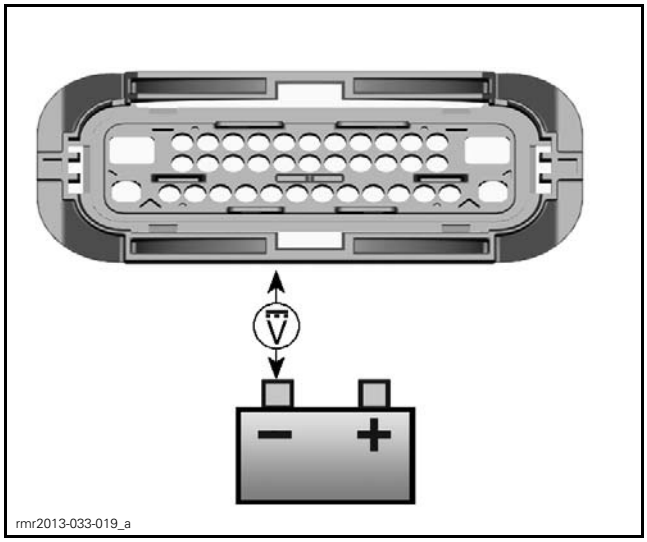

If voltage is not good, check wiring/connectors from battery through ignition switch to ABS module harness connector. Refer to *WIRING DIAGRAM*.

If voltage is good, test for input voltage as follows.

NOTE: Ignition switch can be either ON or OFF.

ABS MODULE CONNECTOR	BATTERY	VOLTAGE
Pin 1	Ground	Battery voltage
Pin 25	Ground	

If voltage is not good, check wiring/connectors from battery to ABS module harness connector. Refer to *WIRING DIAGRAM*.

If voltage is good, carry out the *TESTING THE ABS MODULE GROUND CIRCUIT* in this subsection.

Testing the ABS Module Ground Circuit

1. Connect multimeter RED probe to a positive source such as the battery terminal of the starter solenoid.

2. Probe pin 13, then pin 38 of the ABS module connector with the BLACK (COM) probe of the multimeter.

NOTE: Refer to *ABS MODULE POWER SUPPLY PINOUT* in this subsection for pin identification.

ABS MODULE CONNECTOR	BATTERY	VOLTAGE
Pin 13	Positive source	Battery voltage
Pin 38	Positive source	

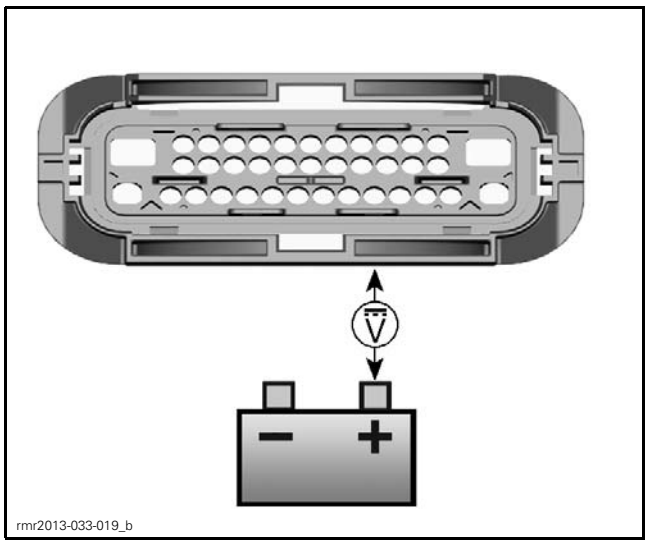

If ground circuits are not good, check wiring from ABS module harness connector to chassis ground located on the front part of the frame. Refer to *WIRING DIAGRAM*.

If ground circuits are good, carry out the *TESTING THE ABS MODULE CAN LINE RESISTOR* in this subsection.

Testing the ABS Module CAN Line Continuity

Read wiring resistance between diagnostic link connector and ABS module.

NOTE: Refer to *ABS MODULE POWER SUPPLY PINOUT* in this subsection for pin identification.

NOTICE **To avoid damaging the connector, probe only the terminal tip.**

ABS MODULE CAN LINE			
CAN*	PROBES		RESULT
High	ABS module connector pin 26	Diagnostic link connector pin 1	Close to 0 Ω (continuity)
Low	ABS module connector pin 14	Diagnostic link connector pin 2	
* CAN: Serial data communication			

If continuity is not good, check wiring and connectors from diagnostic link connector (DLC) to ABS module connector. Refer to applicable *WIRING DIAGRAM*.

If everything tested good and ABS module does not work, try a new ABS module.

Removing the ABS Module

⚠ WARNING

Cleanliness is critical when working with the ABS module and brake lines. All precautions must be taken to prevent any foreign particle from entering the brake system.

NOTE: Before replacing the ABS module, make sure electrical and hydraulic systems are in good condition.

1. Disconnect battery. Refer to *CHARGING SYSTEM* subsection.
2. Remove wheel and inner fender panel.

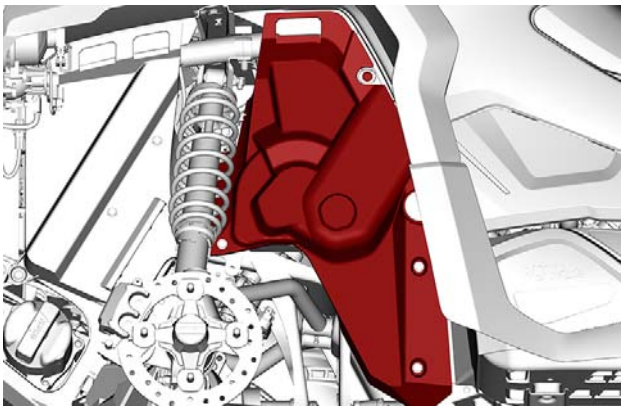

3. Using compressed air, clean:
   – The ABS module and brake line fittings
   – The area around the ABS module.

4. Use XPS Heavy Duty Cleaner to thoroughly clean the parts. Blow compressed air again and thoroughly dry the parts.

NOTICE **Disconnect brake lines from the ABS module only just prior to installing the new ABS module. The shorter the time the brake lines are open, the lesser the possibility of brake system contamination.**

5. Disconnect ABS module connector.
6. Disconnect brake lines.
7. Remove ABS module from frame.
8. Pull assembly out of position to dislodge grommet.

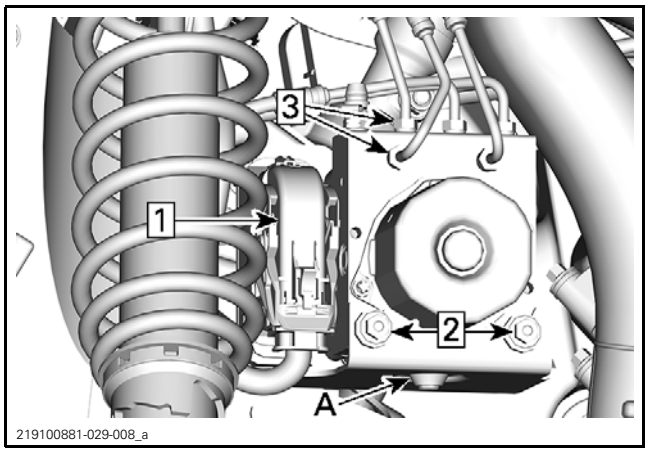

A. Rubber gromet

Step 1: Disconnect ABS module connector
Step 2: Remove retaining screws
Step 3: Disconnect brake lines

9. Pull grommet out of ABS module support and pull out ABS module towards the LH side of vehicle. Discard grommet.

Installing the ABS Module

NOTICE **Keep the protective plugs on new ABS module until brake line installation.**

The installation is the reverse of the removal procedure. However, pay attention to the following:

1. Install **NEW** grommet.
2. Remove protective plugs from ABS module brake line ports.
3. Make sure to reinstall brake lines as illustrated.

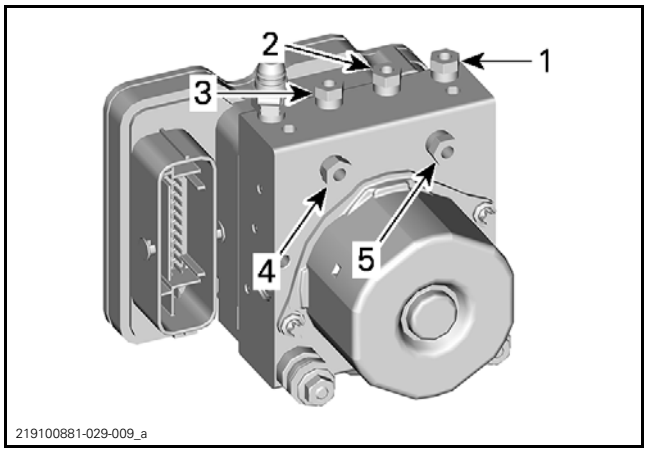

1. To LH front brake caliper
2. To RH front brake caliper
3. To rear brake caliper
4. From brake pedal
5. From brake handle

4. Tighten ABS module mounting screws to specification.

TIGHTENING TORQUE	
ABS module mounting screw	8 N•m ± 2 N•m (71 lbf•**in** ± 18 lbf•**in**)

5. Make sure the ABS module connector is properly installed and locked.
6. Bleed the ABS module, refer to *BLEEDING THE BRAKE FLUID*.

⚠ WARNING

Brake bleeding must be performed to remove any air trapped in the brake system. Refer to *BLEEDING THE BRAKE FLUID*.

After bleeding, refer to *DIAGNOSTIC AND FAULT CODES* and do the following:

– Check and clear fault codes
– Reset ABS module variant if ABS module is used.

BRAKE SYSTEM PRESSURE SENSOR

NOTICE **Do not pump up the brake pedal repeatedly before doing the validation.**

1. Connect the vehicle to the BRP diagnostic software (BUDS2).
2. Go to:
   – **Measurements** page
   – **ABS** button
   – **Presets** tab.

3. Look at **TI Front Pressure Sensor** and **TI Rear Pressure Sensor** for increased pressure when applying the brakes.
4. If no pressure is shown, perform *TESTING PRESSURE SENSOR WIRING CONTINUITY*.

Testing the Pressure Sensor Wiring Continuity

1. Disconnect the pressure sensor connector.
2. Disconnect ABS module connector, refer to *ABS MODULE CONNECTOR ACCESS* in this subsection.
3. Set multimeter to Ω.
4. Measure wiring resistance as follows.

NOTICE **To avoid damaging the connector, probe only the terminal tip.**

SENSOR TERMINAL	ABS MODULE CONNECTOR PIN	MEASUREMENT
PSI - 5	ABS - 5	5 V
PSI - 4	ABS - 37	Signal
PSI - 3	ABS - 6	Ground

If continuity test failed, repair wiring or connectors.

If continuity test succeeded, try a new sensor.

If problem persists, try a new ABS module.

Replacing the Pressure Sensor

1. Remove brake light switch, refer to *BRAKE LIGHT SWITCH LOCATED ON MASTER CYLINDER*.
2. Disconnect pressure sensor electrical connector.
3. Remove pressure sensor with its banjo fitting.
4. Put banjo fitting in a vise fitted with non-marring soft jaws.
5. Apply brake fluid on tip and threads of new sensor and install on banjo fitting.
6. Tighten sensor to specification.

TIGHTENING TORQUE	
Pressure sensor	32.5 N•m ± 2.5 N•m (24 lbf•ft ± 2 lbf•ft)

7. Remove banjo fitting from vise.
8. Install **NEW** sealing washers.
9. Install brake light switch.

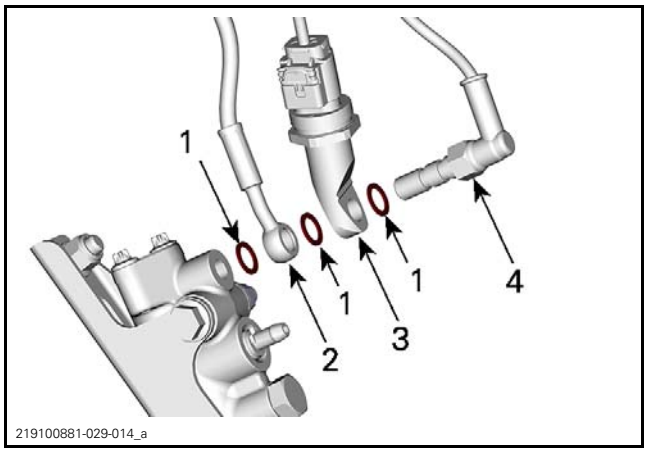

1. Sealing washers
2. Brake line banjo fitting
3. Pressure sensor banjo fitting
4. Brake light switch

TIGHTENING TORQUE	
Brake light switch	28.5 N•m ± 1.5 N•m (21 lbf•ft ± 1 lbf•ft)

10. Connect brake light switch connector.
11. Refill and bleed brake system, refer to *BLEEDING THE BRAKE FLUID* in this subsection.
12. Reset the new sensor, connect the vehicle to the BRP diagnostic software (BUDS2) and go to:
    - **Settings** page
    - **ABS** button
    - **Settings** tab
    - **Initializations - Reset Offset External Pressure Sensor**
13. Follow the on-screen instructions.

BODY

SERVICE TOOLS

Description	Part Number	Page
OETIKER PLIER	295 000 070	11

BODY PARTS NOMENCLATURE (SHORT MODELS)

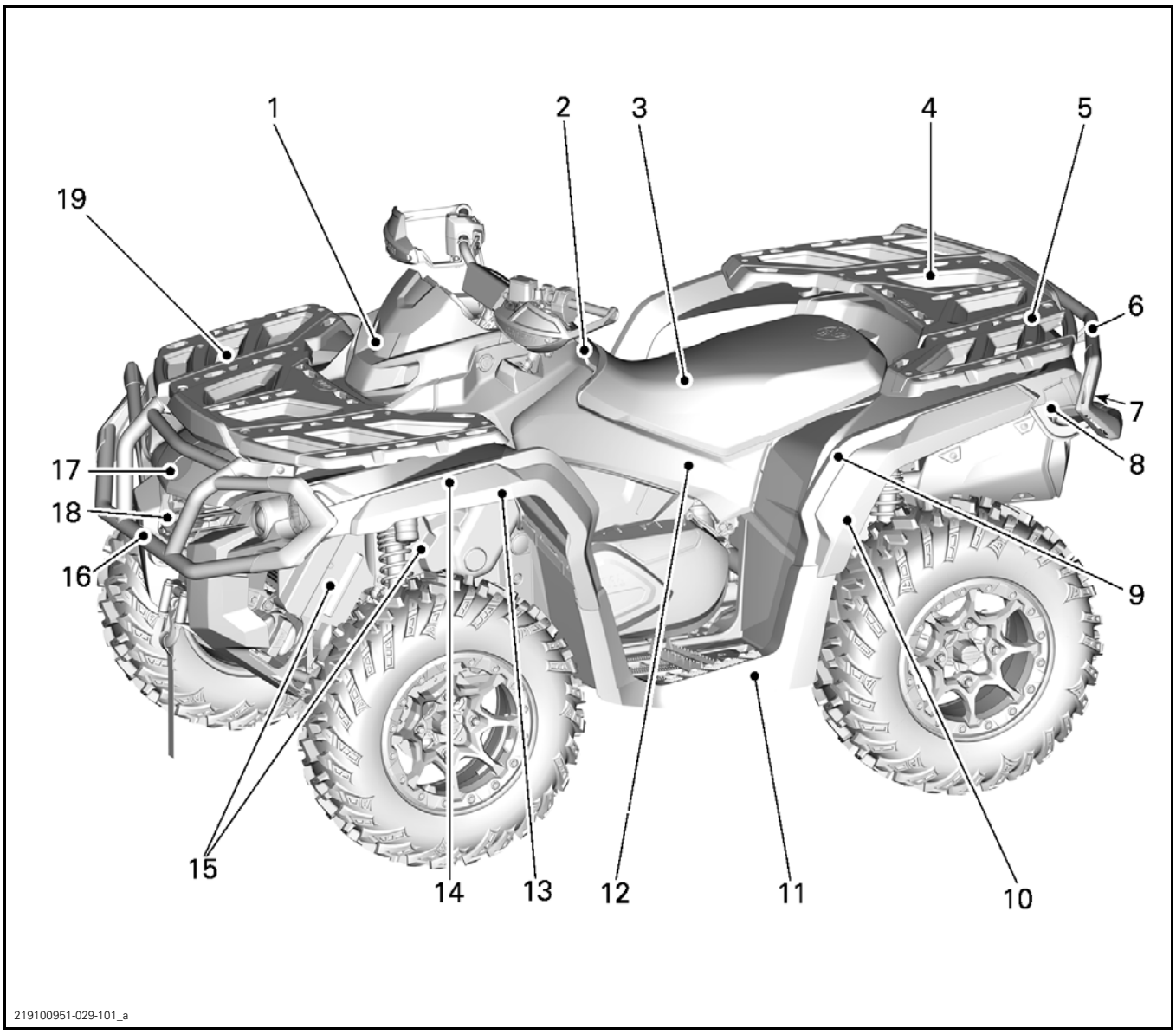

1. Gauge support
2. Console
3. Seat
4. Rear top panel (under rear rack)
5. Rear rack
6. Rear bumper
7. Rear storage compartment
8. Rear fascia
9. Rear fender
10. Rear mud guard
11. Footrest
12. Side panel
13. Front mud guard
14. Front fender
15. Inner fender panels
16. Front bumper
17. Hood
18. Front fascia
19. Front rack

BODY PARTS NOMENCLATURE (MAX MODELS)

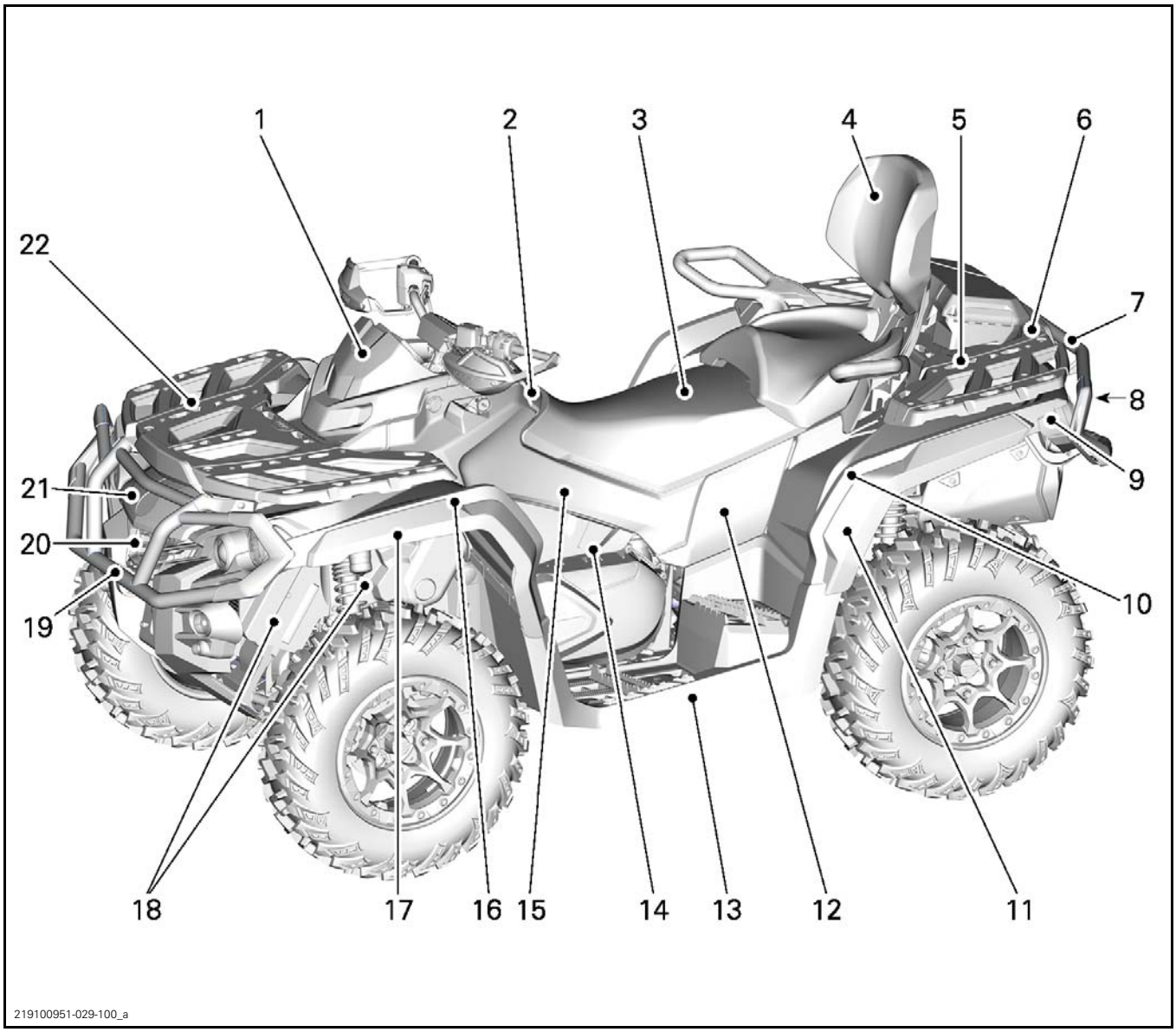

1. *Gauge support*
2. *Console*
3. *Seat*
4. *Passenger seat*
5. *Rear top panel (under rear rack)*
6. *Rear rack*
7. *Rear bumper*
8. *Rear storage compartment*
9. *Rear fascia*
10. *Rear Fender*
11. *Rear mud guard*
12. *Rear side panel extension*
13. *Footrest*
14. *Panel extension*
15. *Side panel*
16. *Front fender*
17. *Front mud guard*
18. *Inner fender panels*
19. *Front bumper*
20. *Front fascia*
21. *Hood*
22. *Front rack*

FRONT AND REAR BODY MODULES (SHORT MODELS)

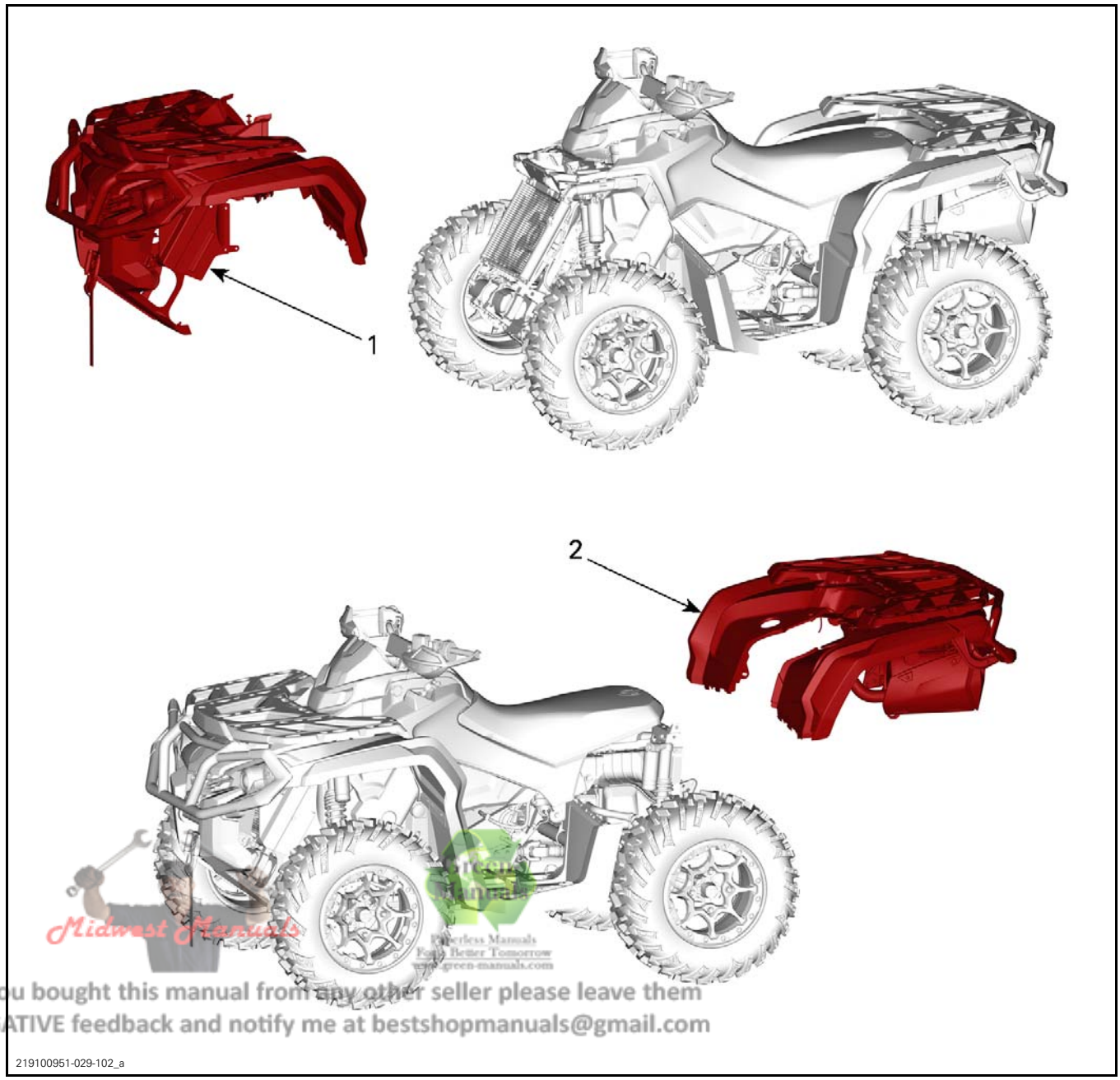

If you bought this manual from any other seller please leave them NEGATIVE feedback and notify me at bestshopmanuals@gmail.com

1. *Front body module*
2. *Rear body module*

FRONT AND REAR BODY MODULES (MAX MODELS)

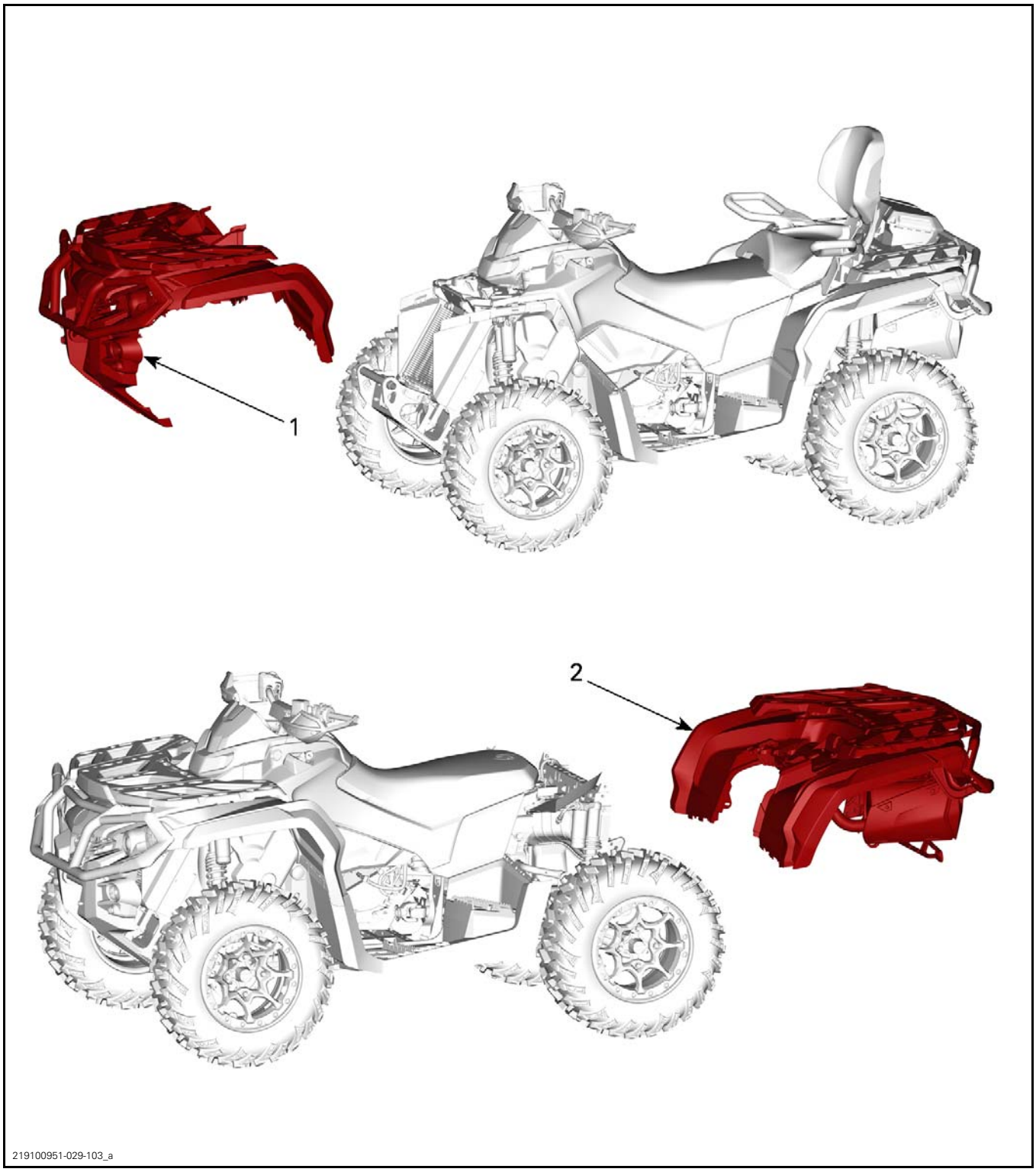

1. *Front body module*
2. *Rear body module*

BODY PARTS (SHORT MODELS)

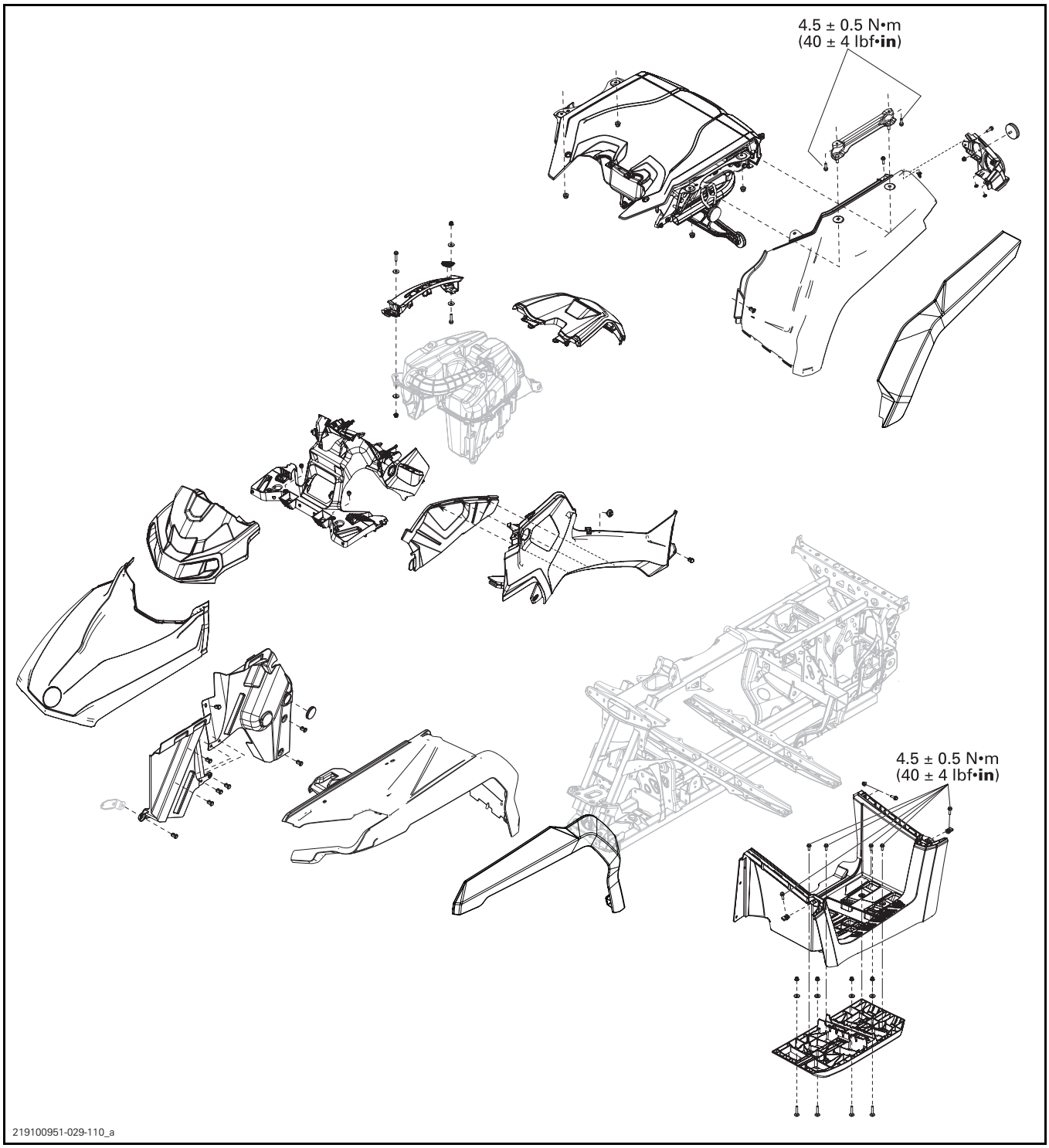

BODY PARTS (MAX MODELS)

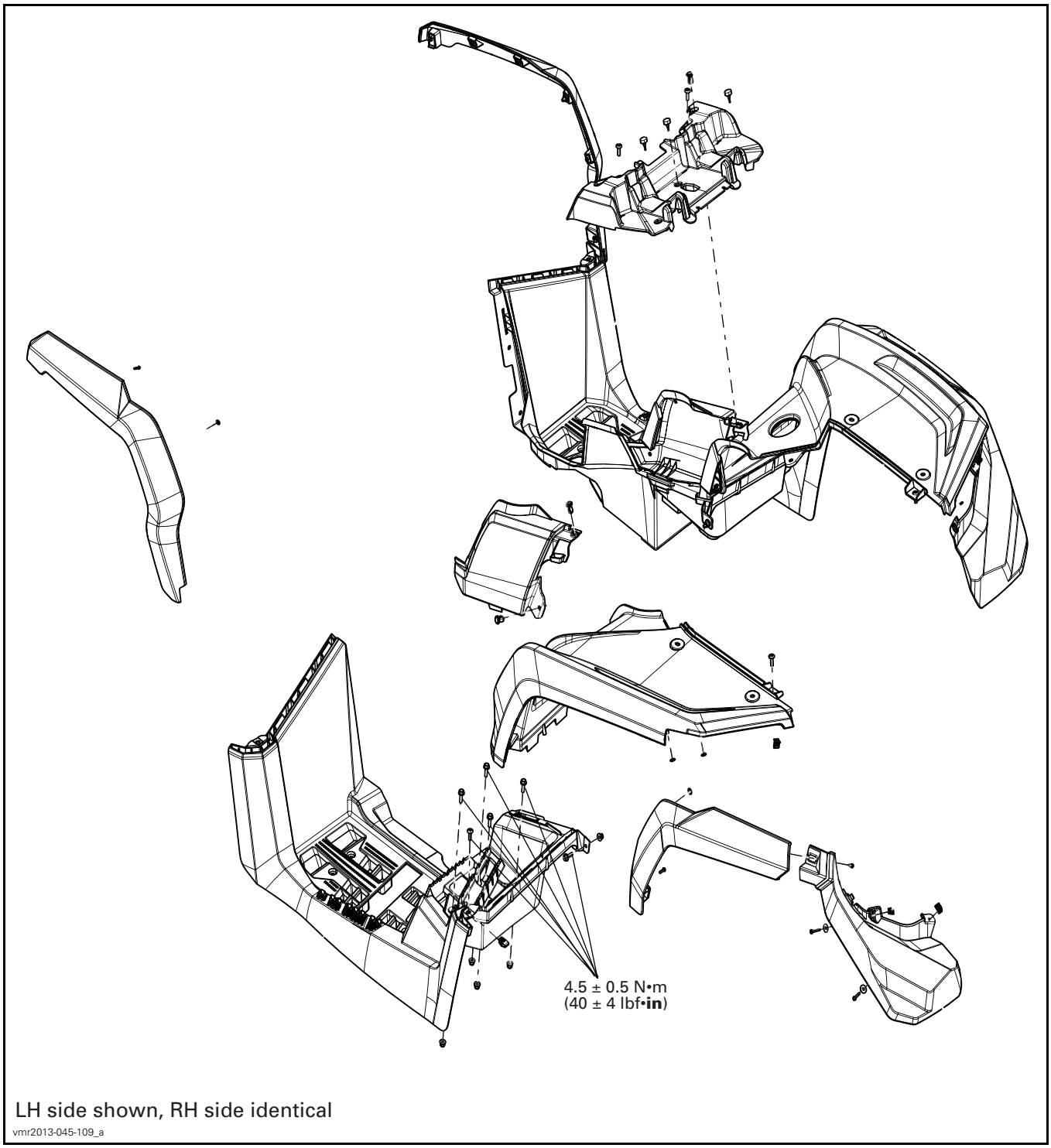

LH side shown, RH side identical

vmr2013-045-109_a

RACKS AND BODY PARTS

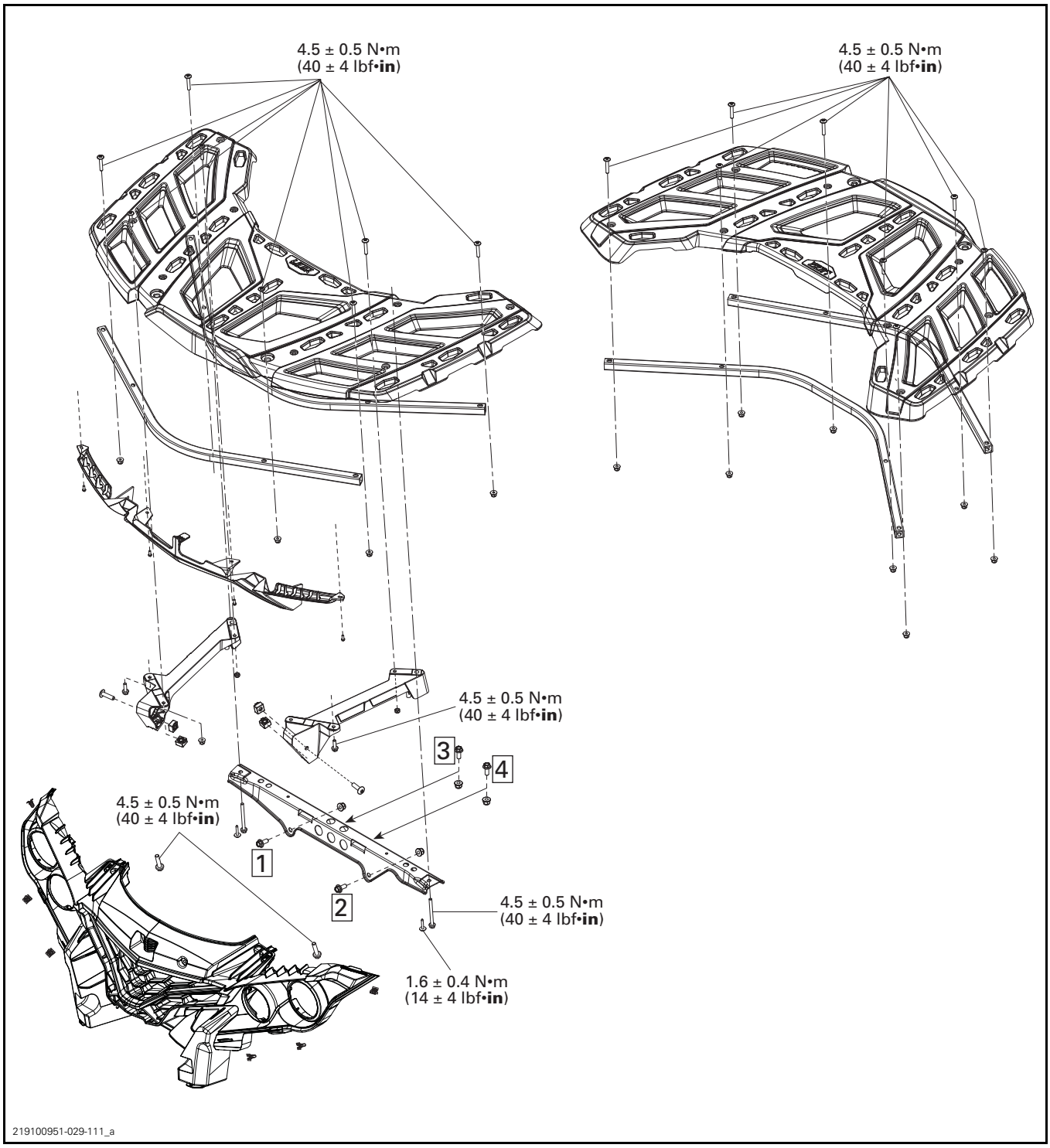

BUMPERS AND BODY PARTS

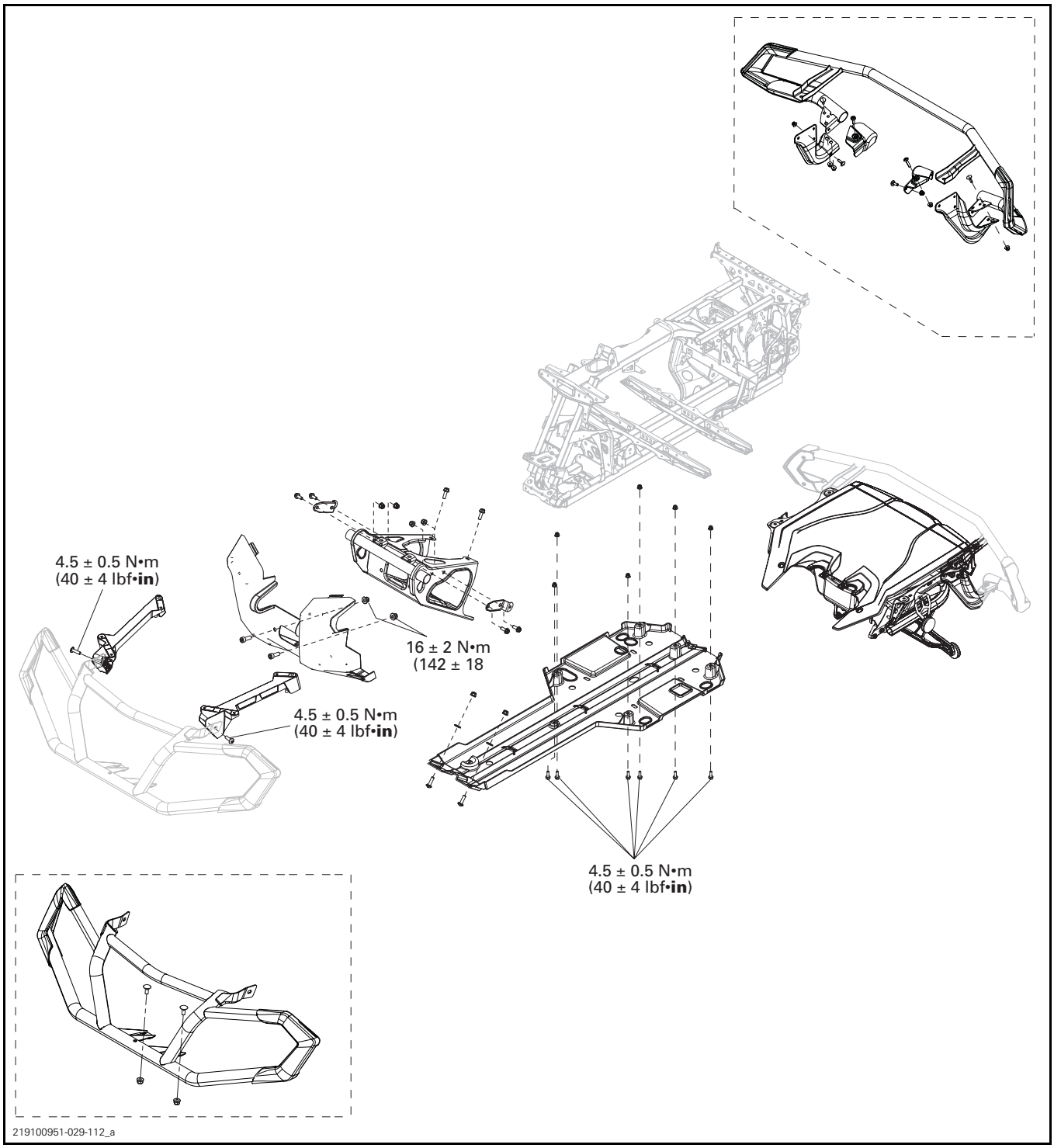

REAR STORAGE COMPARTMENT

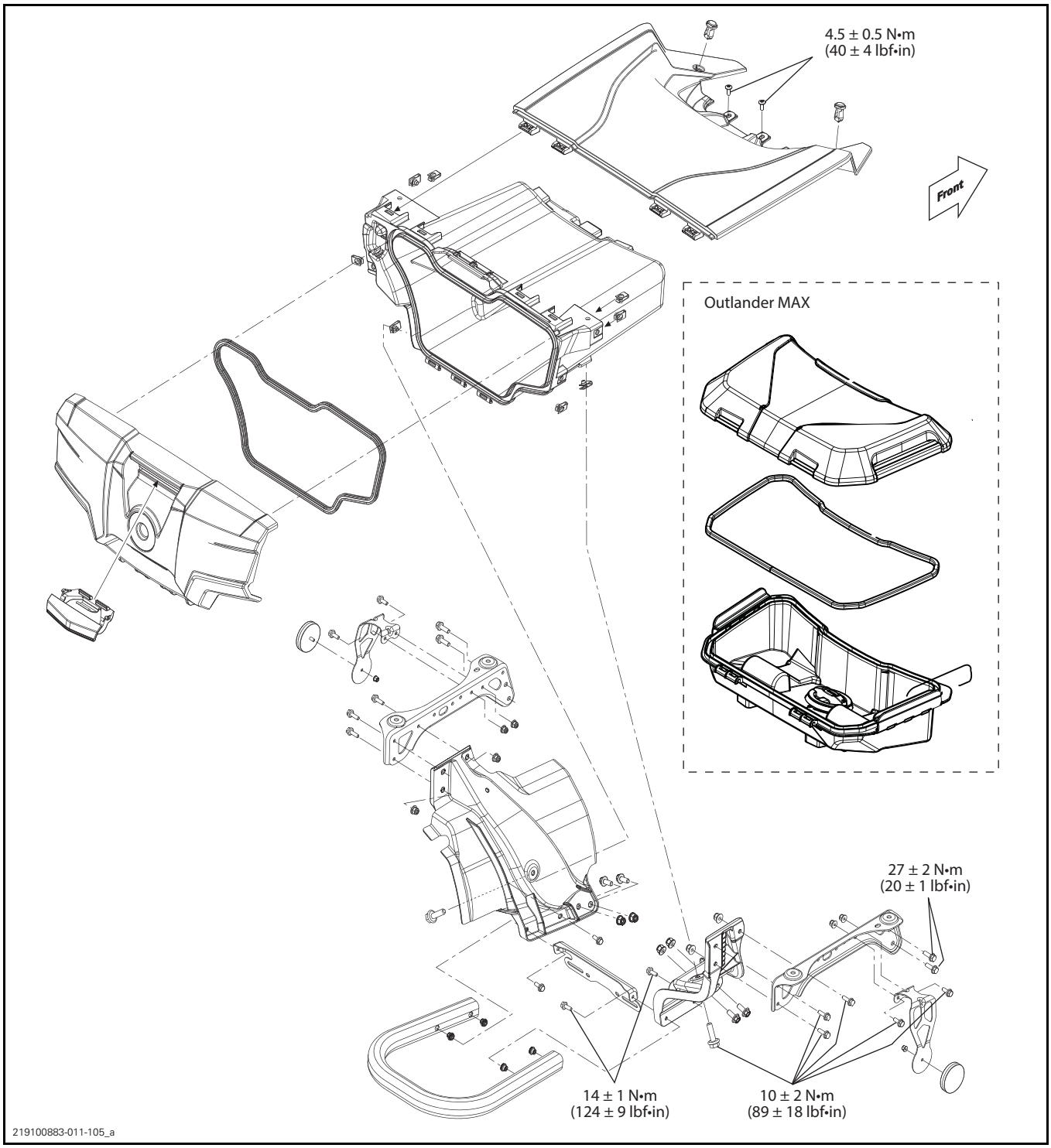

PASSENGER SEAT

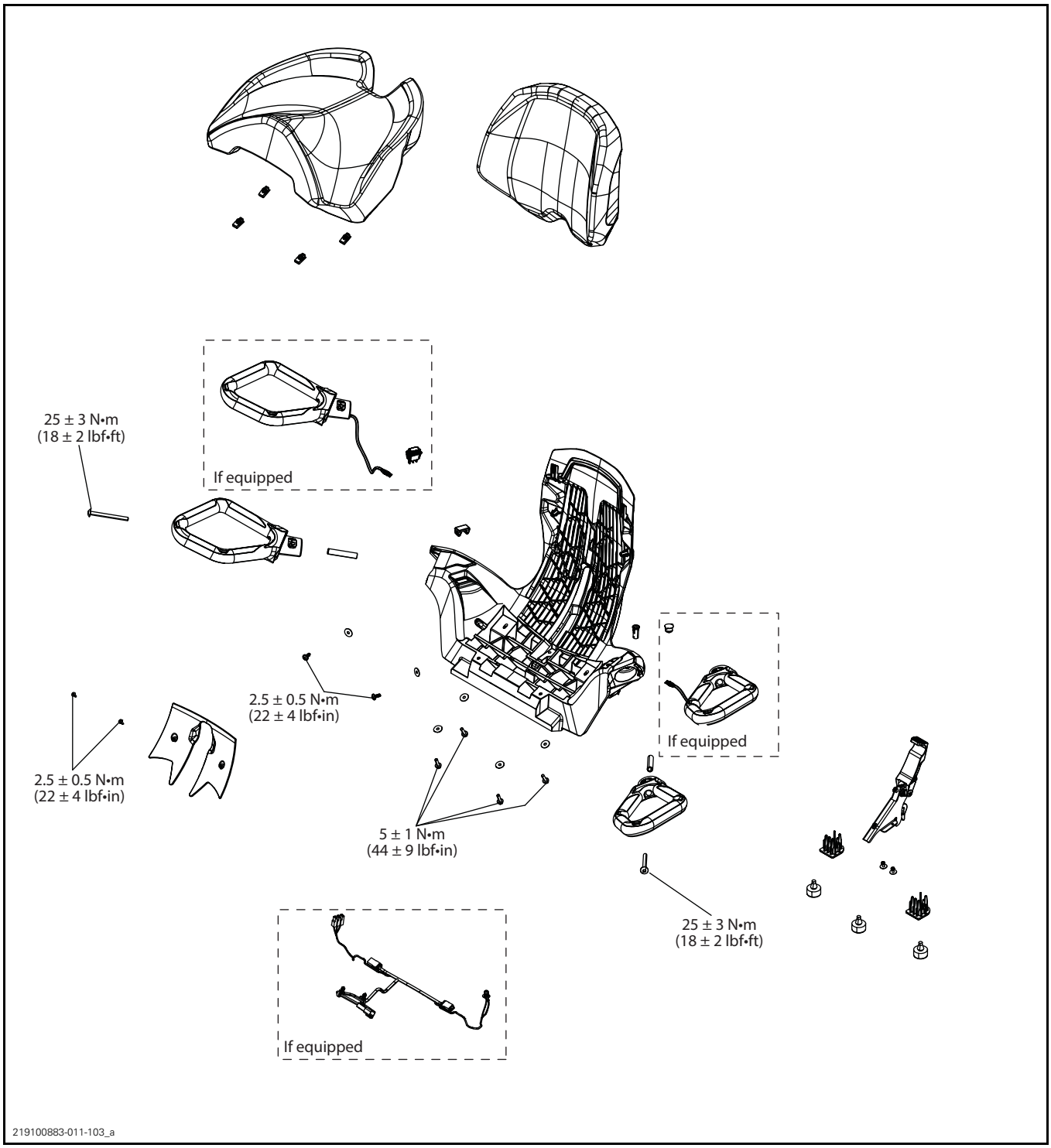

PROCEDURES

PLASTIC RIVET

Plastic rivets are used in the riveting of the various body parts. Plastic rivets can be reused many times. Use the OETIKER PLIER (P/N 295 000 070) to remove them.

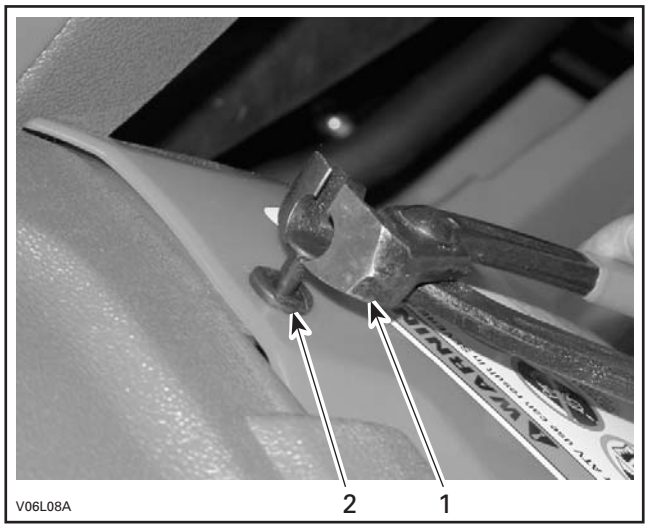

TYPICAL
1. *Pliers*
2. *Plastic rivet*

DECALS

Removing the Decal

Using a heat gun warm up one end of decal for a few seconds until decal can roll off when rubbing with your finger.

Pull decal slowly and when necessary apply more heat to ease removal on the area that has to be peeled off.

If decal tears while pulling off, it has to be heated for a few seconds longer. If decal tends to stretch while pulling off, stop heating and wait a few seconds to let it cool, then peel it off.

Installing the Decal

Using isopropyl alcohol, clean the surface and dry thoroughly.

Apply liquid soap to new decal and carefully position it. Using a sponge or a squeegee, remove the air bubbles and surplus water working from the center toward the edges. Allow to air dry.

NOTICE **Do not apply isopropyl alcohol or solvent directly on decals. Use these products in a well ventilated area.**

FRONT BODY MODULE

Removing the Front Body Module

1. Disconnect battery negative (-) cable.
2. Remove the side panels. Refer to *REMOVING THE SIDE PANEL*.
3. Remove the inner fender panels. Refer to *REMOVING AND INSTALLING THE INNER FENDER*
4. Remove front skid plate retaining screws.

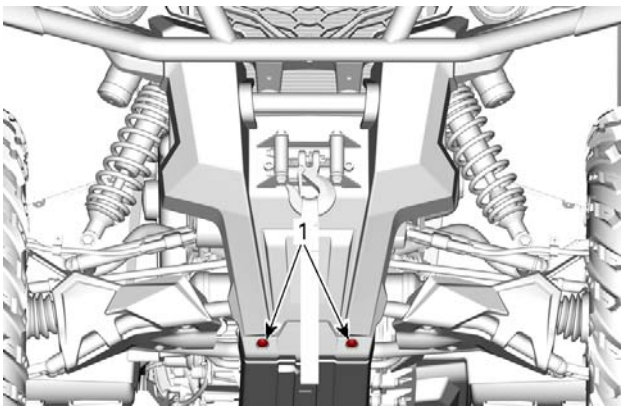

TYPICAL
1. *Front skid plate retaining screws*

5. On applicable models, disconnect winch connectors.

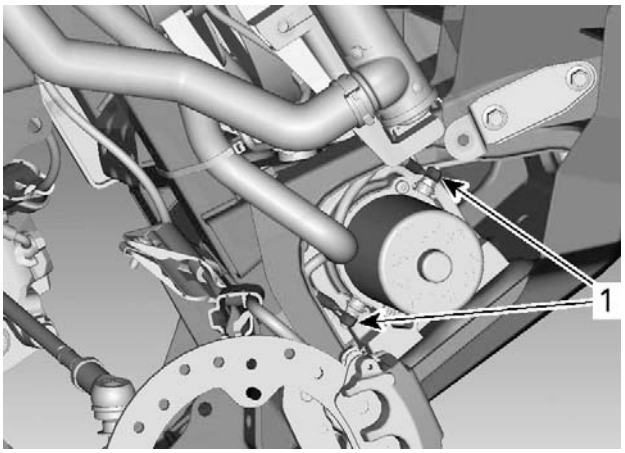

SOME PARTS REMOVED FOR CLARITY
1. *Winch connectors*

6. Disconnect headlights connectors.

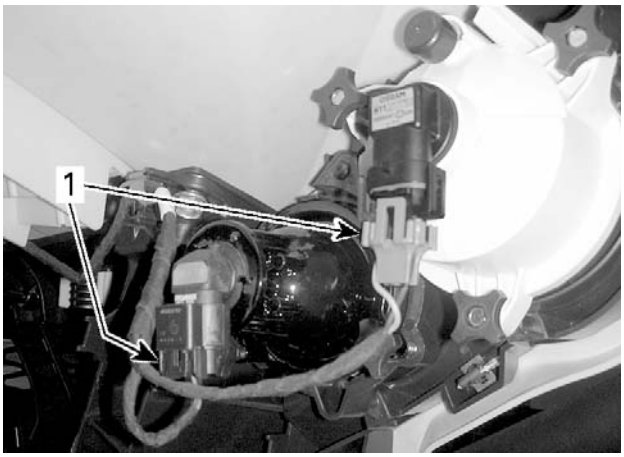

vmr2012-043-003_a

RH SIDE SHOWN
1. *Headlight connectors*

7. Remove screw securing front fender to footrest panel (on both sides).

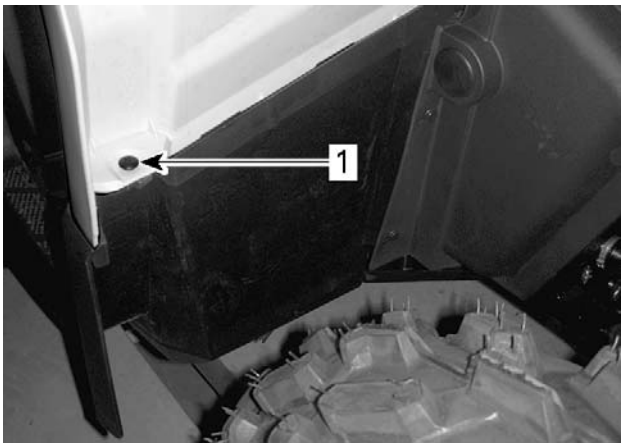

vmr2012-043-004_a

TYPICAL
1. *Screw securing front fender*

8. Detach front fender from footrest panel by releasing retaining tabs (on both sides).

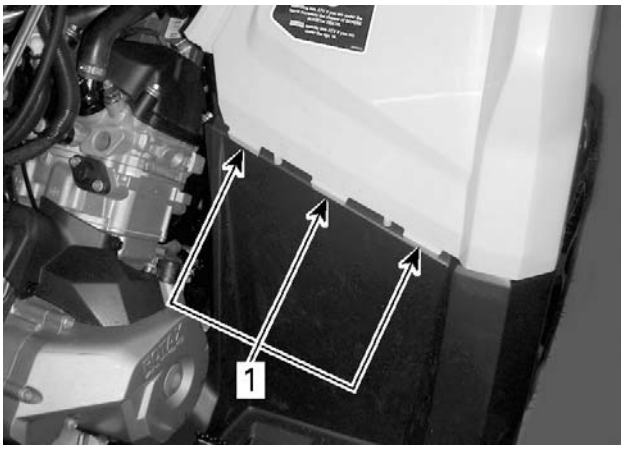

vmr2012-043-005_a

TYPICAL
1. *Front fender retaining tabs*

9. Remove screws securing front body module to frame.

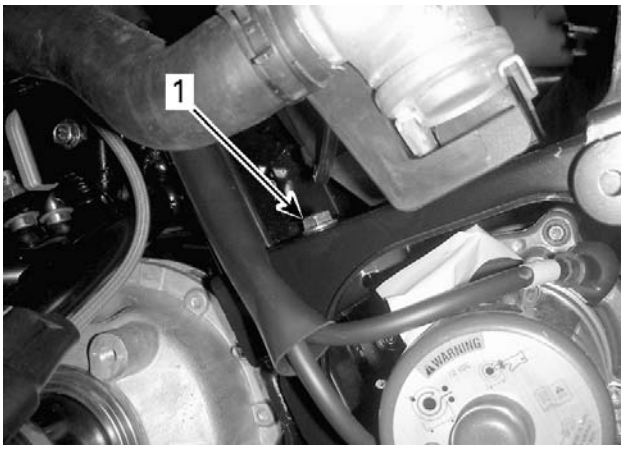

vmr2012-043-006_a

RH SIDE
1. *Front body module retaining screw*

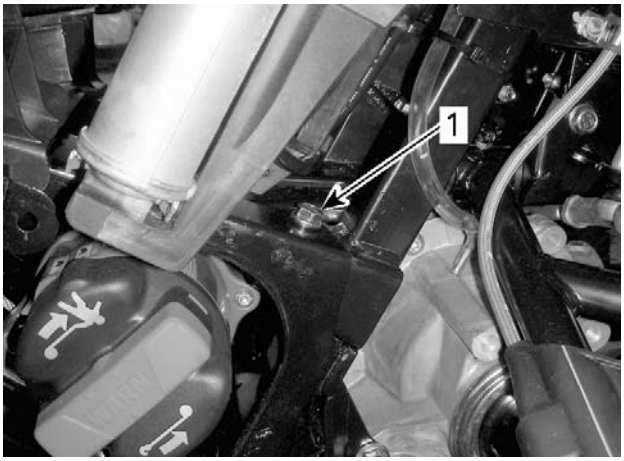

vmr2012-043-007_a

LH SIDE
1. *Front body module retaining screw*

10. Remove screws securing front fenders to frame.

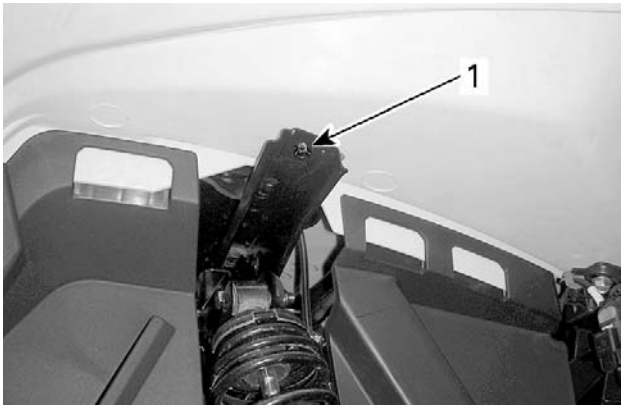

vmr2012-043-008_a

TYPICAL - RH SIDE SHOWN
1. Screw securing front fender

11. With the assistance of a person, pull front body module forward.
12. Install front body module on a stable and clean support.

Installing the Front Body Module

The installation is the reverse of the removal procedure. However, pay attention to the following.

Tighten front fender screws to specification.

TIGHTENING TORQUE	
Screws securing footrest panels to front fenders	4.5 N•m ± 0.5 N•m (40 lbf•**in** ± 4 lbf•**in**)
Screws securing front fenders to frame	4.5 N•m ± 0.5 N•m (40 lbf•**in** ± 4 lbf•**in**)

REAR BODY MODULE

Removing the Rear Body Module

1. Remove seat.
2. Remove the following panels, see procedure in this section.
   – *LUGGAGE TRAY* ***(MAX MODELS)***
   – *SIDE PANEL*.
3. On **Short Models**, remove rear top panel retaining screws.

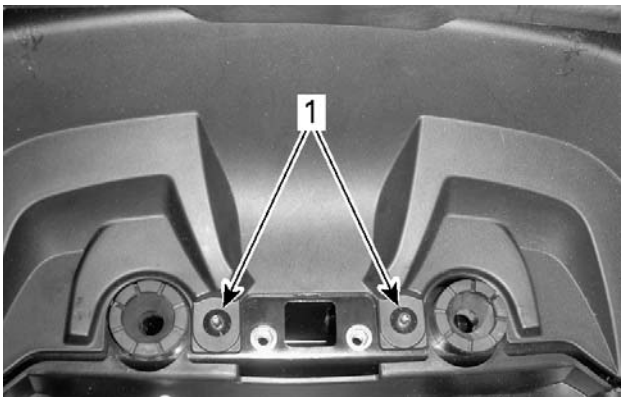

vmr2012-043-009_a

TYPICAL
1. Rear top panel retaining screws

4. Remove both rivets located in the crescent near previously removed retaining screws.
5. Disconnect taillights connectors.

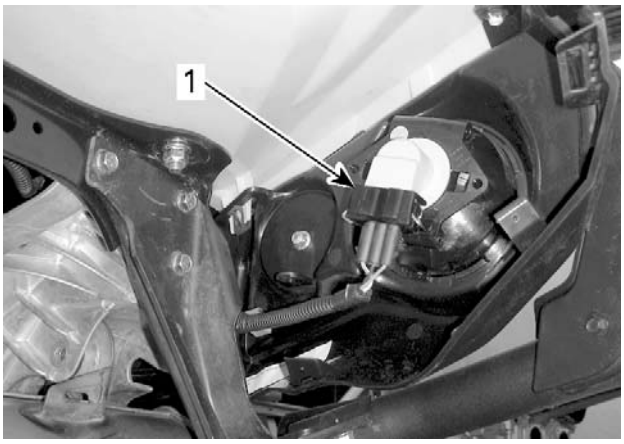

vmr2012-043-010_a

LH SIDE SHOWN
1. Taillight connector

6. Move aside taillight harness from rear body module (on both sides).

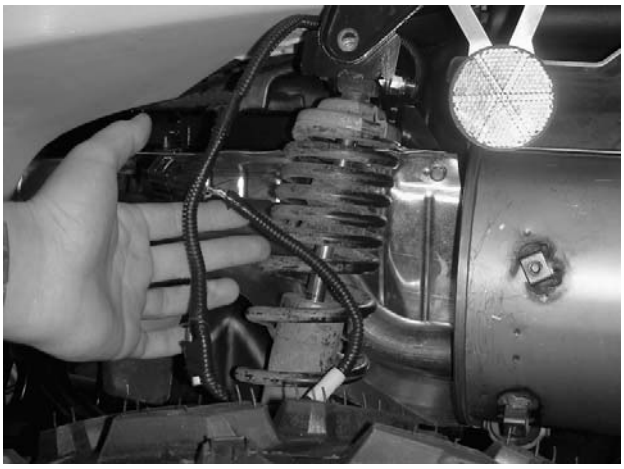

vmr2012-043-029

TYPICAL - LH SIDE TAILLIGHT HARNESS

7. Disconnect connectors from voltage regulator rectifier.

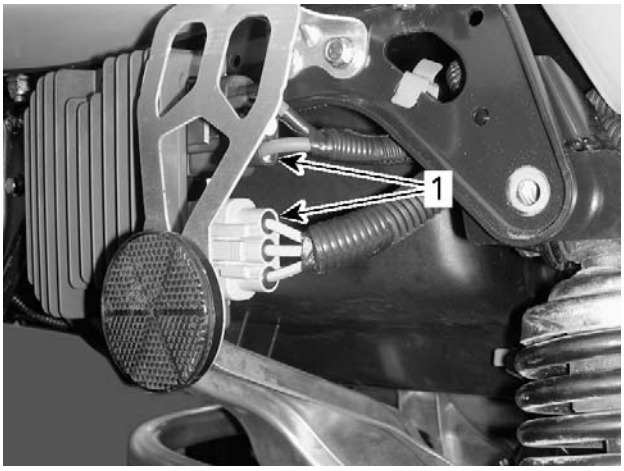

vmr2012-043-013_a

1. Voltage regulator rectifier connectors

8. Remove muffler upper retaining bolt.

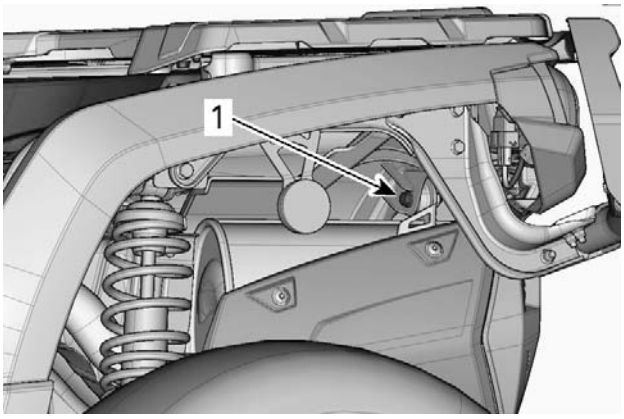

vmr2012-043-014_a

TYPICAL
1. Muffler upper retaining bolt

9. Remove rear body module upper retaining bolts.

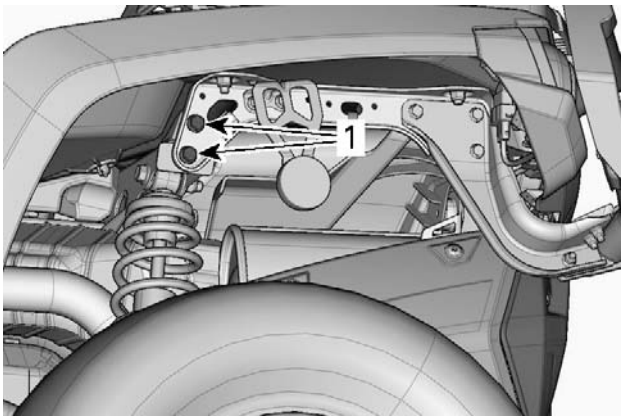

vmr2012-043-015_a

TYPICAL - LH SIDE SHOWN
1. Rear body module upper retaining bolts

10. Remove rear body module lower retaining bolts.

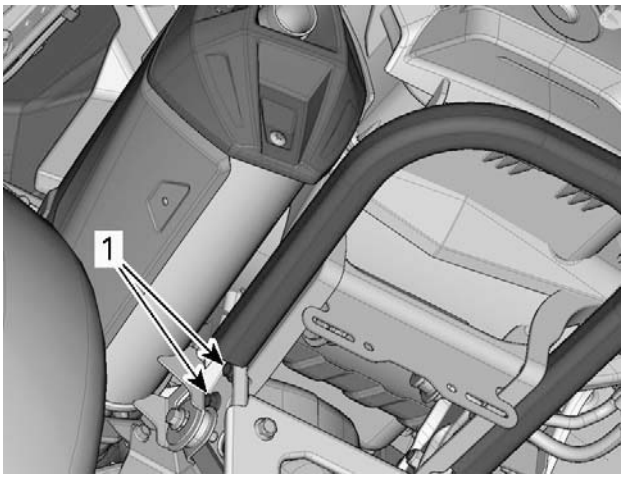

vmr2012-043-016_a

LH SIDE
1. Rear body module lower retaining bolts

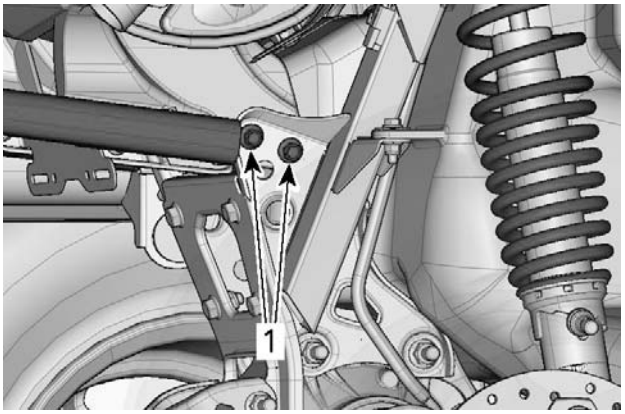

vmr2012-043-017_a

RH SIDE - SOME PARTS REMOVED FOR CLARITY
1. Rear body module lower retaining bolts

11. Remove screw securing rear fender to footrest panel (on both sides).

vmr2012-043-018_a

TYPICAL
1. Screw securing rear fender

12. Detach rear fender from footrest panel by releasing retaining tabs (on both sides).

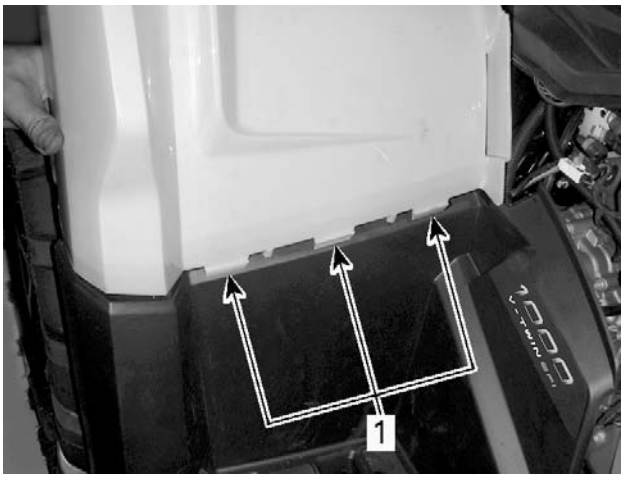

vmr2012-043-019_a

TYPICAL
1. Rear fender retaining tabs

13. Remove fuel tank cap.
14. Place a **clean** rag into fuel tank filler tube.
15. With the assistance of a person, pull rear body module rearward.
16. Install rear body module on a stable and clean support.
17. Remove rag and reinstall fuel tank cap.

⚠ WARNING

Fuel vapors are flammable and explosive under certain conditions. Unless otherwise noted, the fuel tank cap must always be installed on vehicle.

Installing the Rear Body Module

The installation is the reverse of the removal procedure. However, pay attention to the following.

Tighten rear body module retaining bolts to specification.

TIGHTENING TORQUE	
Rear body module **upper** bolts	27 N•m ± 2 N•m (20 lbf•ft ± 1 lbf•ft)
Rear body module **lower** bolts	24.5 N•m ± 3.5 N•m (18 lbf•ft ± 3 lbf•ft)

Tighten rear fender screws to specification.

TIGHTENING TORQUE	
Screws securing footrest panels to rear fenders	4.5 N•m ± 0.5 N•m (40 lbf•**in** ± 4 lbf•**in**)

Tighten rear top panel screws to specification.

TIGHTENING TORQUE	
Rear top panel screws	4.5 N•m ± 0.5 N•m (40 lbf•**in** ± 4 lbf•**in**)

CONSOLE

Removing the Console

1. Remove seat.
2. Lift rear portion of console upwards.

vmr2012-043-020_a

TYPICAL - LIFT REAR PORTION

3. Pull console rearwards.

Installing the Console

The installation is the reverse of the removal procedure. However, pay attention to the following.

Align console front tabs with slots, then push console forward.

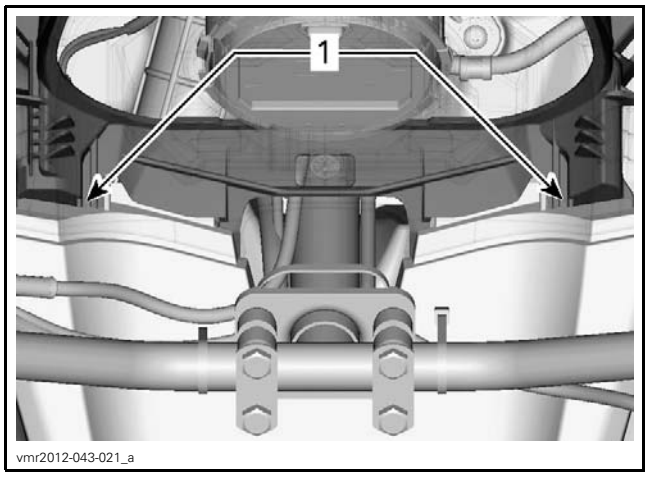

SOME PARTS REMOVED FOR CLARITY
1. Console front tabs

GAUGE SUPPORT

Refer to *GAUGE* subsection.

INNER FENDER PANELS

Removing and Installing the Inner Fender

Remove the following plastic rivets from inner fender panels.

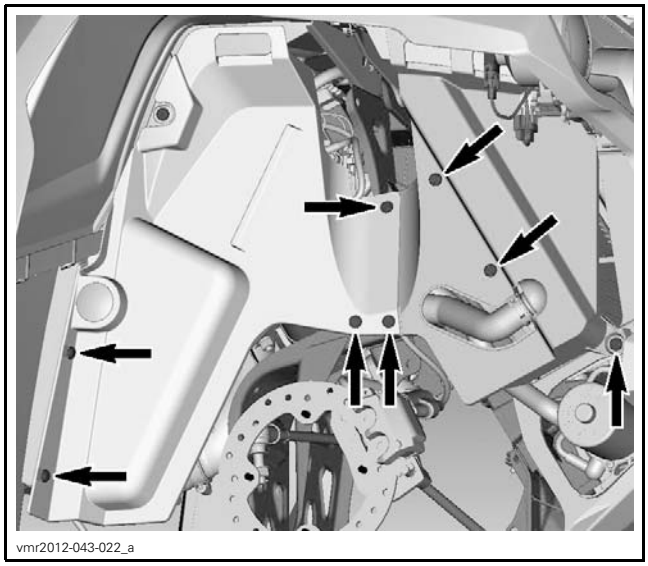

SOME PARTS REMOVED FOR CLARITY

The installation is the reverse of the removal procedure.

SIDE PANELS

Removing the Side Panel

1. Remove console. Refer to *REMOVING THE CONSOLE*.
2. Remove plastic rivet securing side panel to inner fender panel.

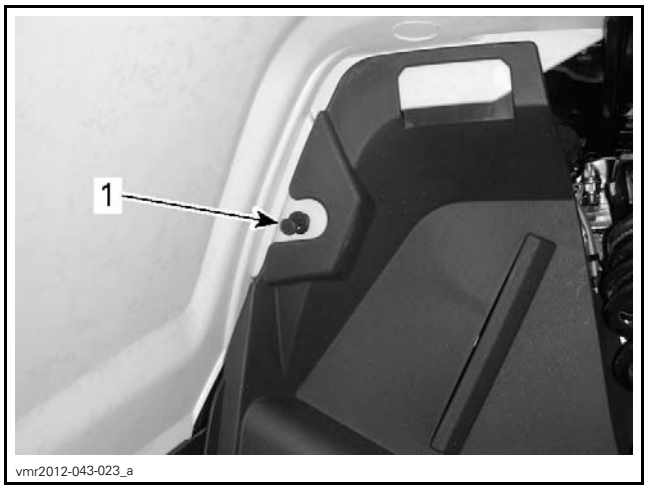

TYPICAL
1. Plastic rivet securing side panel

3. Remove plastic rivet securing side panel to air filter housing.

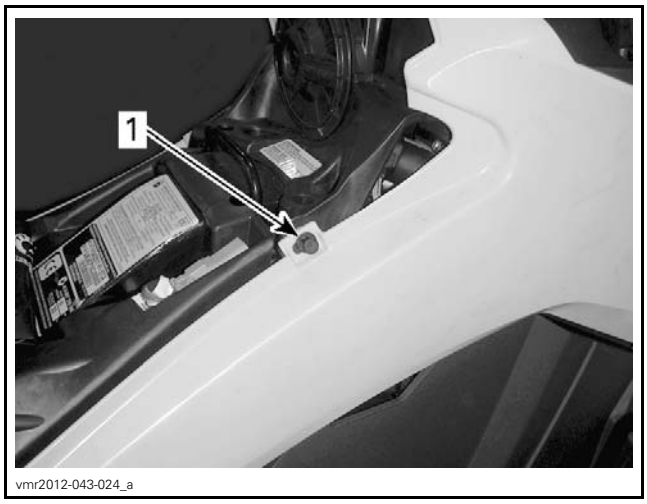

TYPICAL
1. Plastic rivet securing side panel

4. Remove plastic rivet securing side panel **(Short Models)** or rear side panel extension **(MAX Models)** to rear fender.

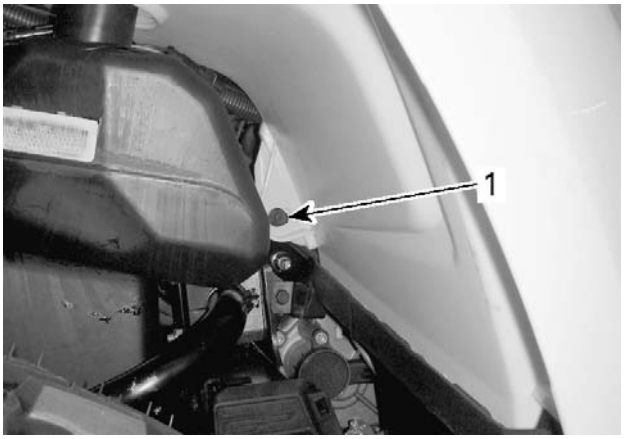

vmr2012-043-025_a

1. Plastic rivet securing side panel

5. Remove luggage tray. Refer to *LUGGAGE TRAY*.
6. Lift rear portion of side panel assembly then pull it towards outside.

NOTE: For **Short Models**, side panel assembly includes side panel and panel extension.

NOTE: For **MAX Models**, side panel assembly includes side panel, panel extension and rear side panel extension.

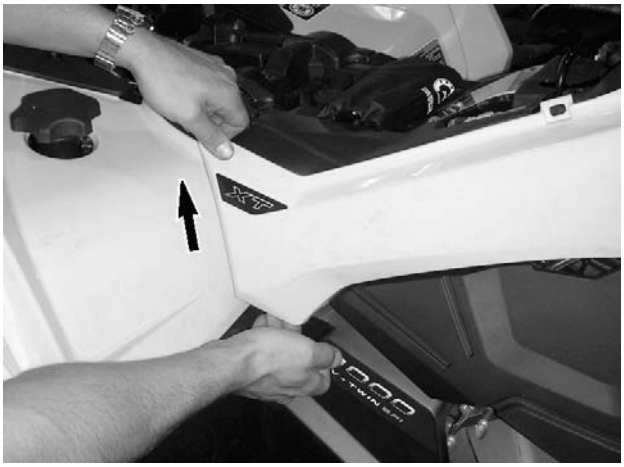
vmr2012-043-026_a

LIFT REAR PORTION

Installing the Side Panel

The installation is the reverse of the removal procedure. However, pay attention to the following.

Align side panel front tab with slot, then push side panel forward.

PANEL EXTENSIONS

Removing the Panel Extension

1. Remove seat.
2. Remove console. Refer to *REMOVING THE CONSOLE*.
3. Remove rear luggage tray. Refer to *LUGGAGE TRAY*.
4. Remove side panel assembly including side panel, panel extension and rear side panel extension. Refer to *REMOVING THE SIDE PANEL*.
5. Undo tabs securing panel extension to side panel.

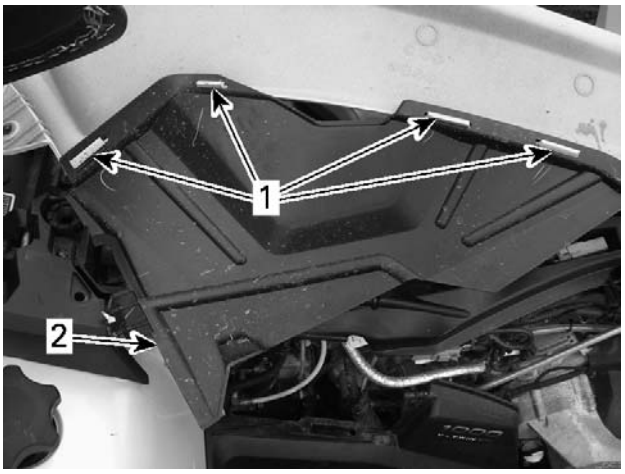

vmr2013-045-002_a

1. Tabs securing panel extension to side panel
2. Side panel extension

6. Remove panel extension.

Installing the Panel Extension

Installation is the reverse of removal.

LUGGAGE TRAY (MAX MODELS)

Removing the Luggage Tray

1. Remove seat.
2. Remove retaining screws and rivets securing luggage tray.

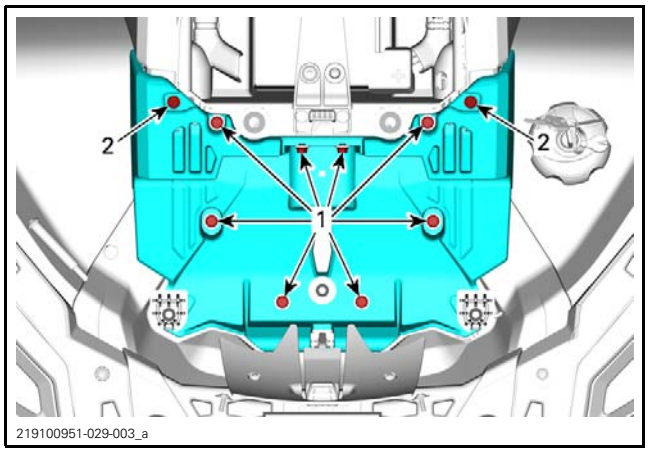

1. *Retaining screws*
2. *Rivets*

Installing the Luggage Tray

Installation is the reverse of removal. However pay attention to the following:

TIGHTENING TORQUE	
Luggage tray retaining screws	4.5 N•m ± 0.5 N•m (40 lbf•**in** ± 4 lbf•**in**)

REAR SIDE PANEL EXTENSIONS (MAX MODELS)

Removing the Rear Side Panel Extension

1. Remove seat.
2. Remove the side panels. Refer to *REMOVING THE SIDE PANEL*.
3. Remove the luggage tray. Refer to *REMOVING THE LUGGAGE TRAY*
4. Remove side panel assembly including side panel, panel extension and rear side panel extension. Refer to *REMOVING THE SIDE PANEL*.
5. Unclip retaining tabs securing rear side panel extension to side panel.

Installing the Rear Side Panel Extension

Installation is the reverse of removal.

REAR TOP PANEL

Removing the Rear Top Panel

1. Remove seat.
2. Remove rear body module. Refer to *REAR BODY MODULE*.
3. Remove rear rack. Refer to *REMOVING THE REAR RACK*.
4. Using a screwdriver, unclip retaining tabs securing rear top panel to rear storage compartment.

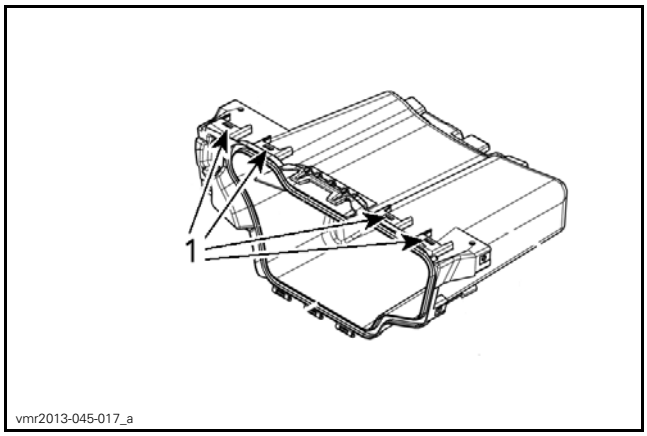

PARTS REMOVED FOR CLARITY
1. *Retaining tab locations*

5. Slide rear top panel forward to free it from rear storage compartment retaining tab.

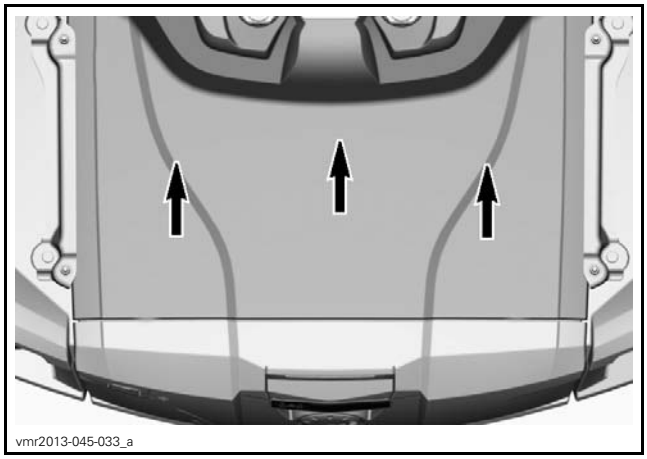

TYPICAL - SLIDING REAR TOP PANEL TOWARDS FRONT

Installing the Rear Top Panel

Installation is the reverse of removal. However pay attention to the following:

TIGHTENING TORQUE	
Rear top panel screws	4.5 N•m ± 0.5 N•m (40 lbf•**in** ± 4 lbf•**in**)

FOOTREST PANELS

Removing the Footrest Panel

Short Models

1. Remove footrest panel retaining screws.

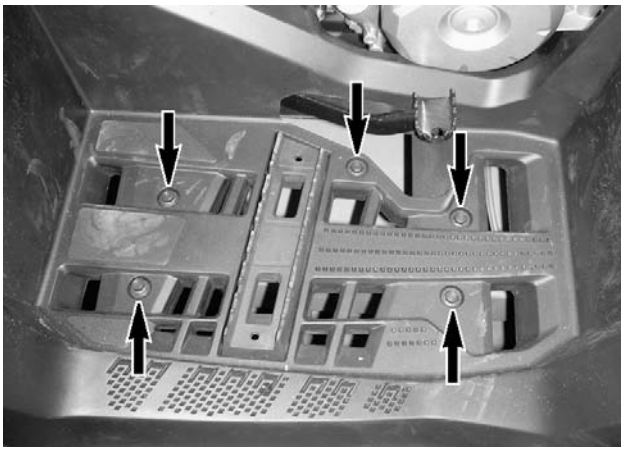

TYPICAL - FOOTREST PANEL RETAINING SCREWS

2. Remove screw securing front fender to footrest panel.

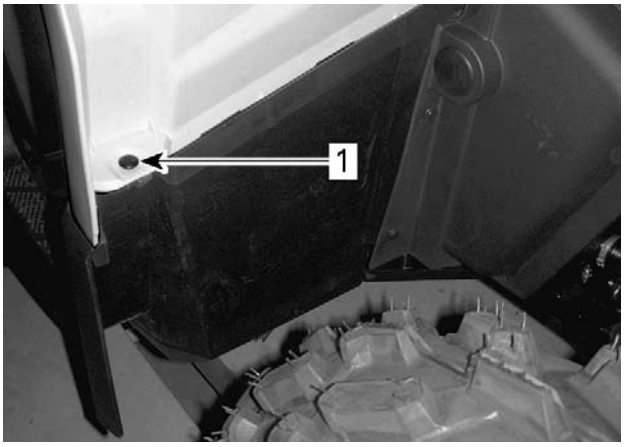

TYPICAL
1. Screw securing front fender

3. Remove both plastic rivet securing inner fender panel to footrest panel.

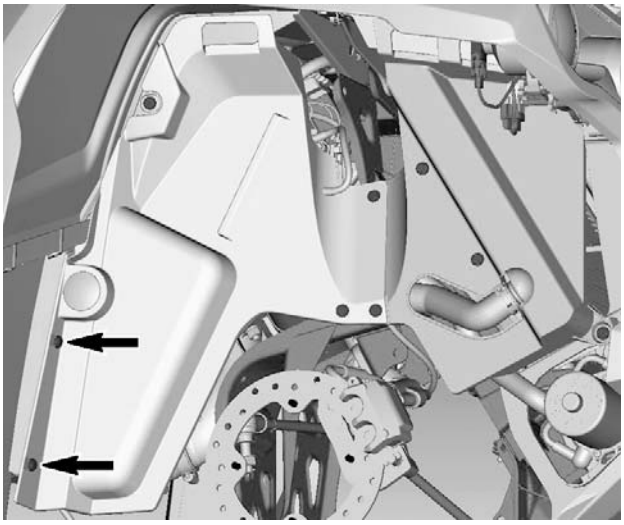

SOME PARTS REMOVED FOR CLARITY

4. Remove screw securing rear fender to footrest panel.

TYPICAL
1. Screw securing rear fender

5. Remove screw securing footrest panel to frame.

TYPICAL
1. Screw securing footrest panel

6. Detach front fender from footrest panel by releasing retaining tabs.

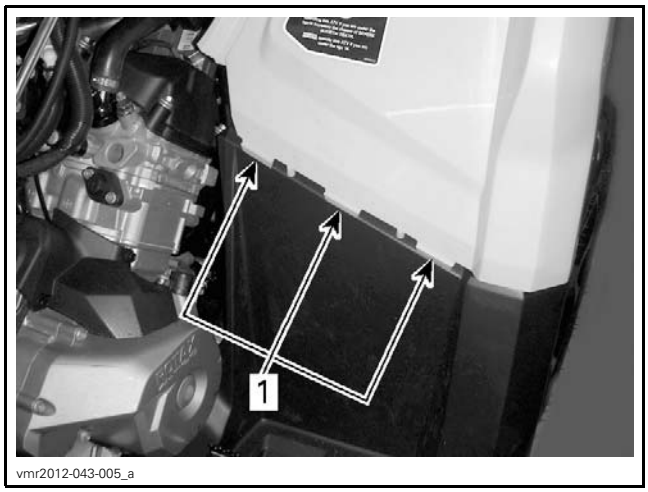

TYPICAL
1. Front fender retaining tabs

7. Detach rear fender from footrest panel by releasing retaining tabs.

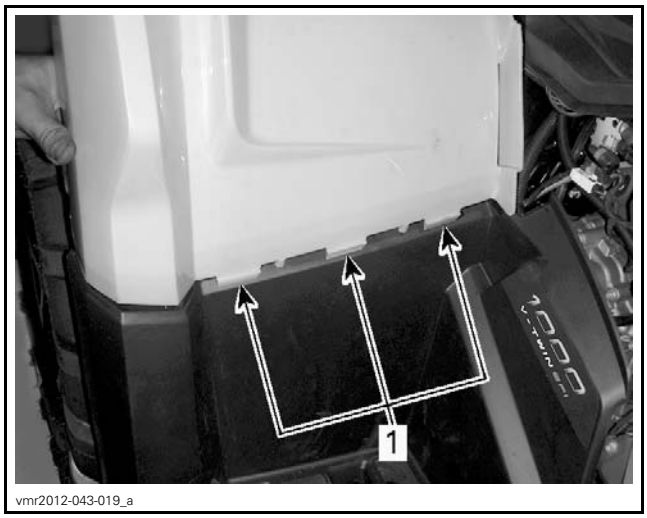

TYPICAL
1. Rear fender retaining tabs

8. Remove footrest panel from vehicle.

MAX Models

1. Remove footrest panel retaining screws.

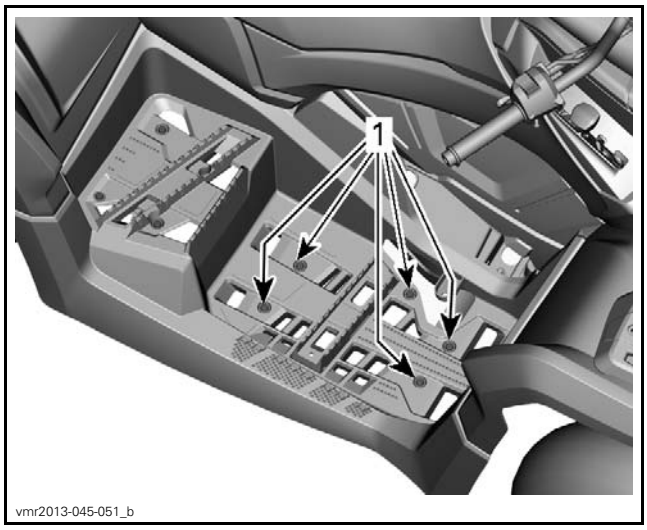

TYPICAL - RH SIDE DOWN
1. Footrest panel retaining screws

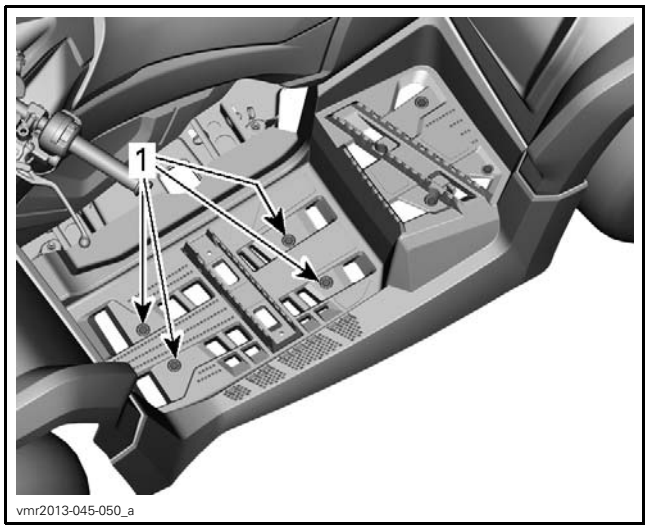

TYPICAL - RH SIDE DOWN
1. Footrest panel retaining screws

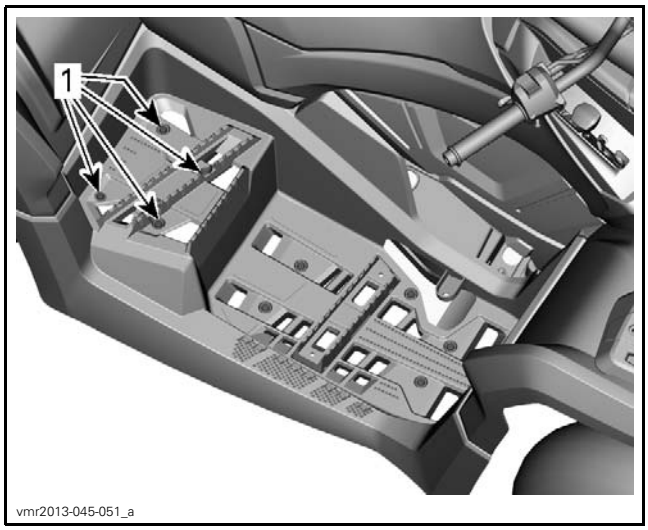

TYPICAL - LH SIDE SHOWN
1. Footrest panel retaining screws

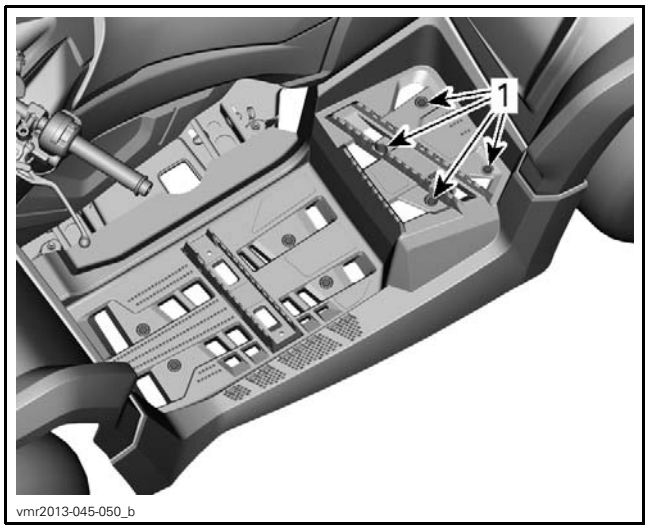

TYPICAL - LH SIDE SHOWN
1. Footrest panel retaining screws

2. Remove screw securing rear fender to footrest panel.
3. Remove plastic rivet securing footrest panel to rear side panel extension.
4. Remove plastic rivet securing footrest panel to frame.

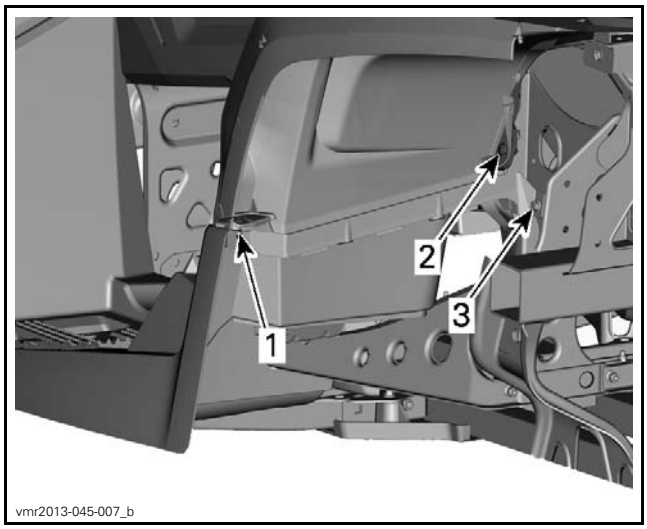

TYPICAL - PARTS REMOVED FOR CLARITY
1. Plastic rivet securing footrest panel to inner fender
2. Plastic rivet securing footrest panel to rear side panel extension
3. Retaining screw securing footrest panel to frame

5. Remove plastic rivet securing footrest panel to panel extension.
6. Remove plastic rivet securing footrest panel to frame.
7. Remove screw securing front fender to footrest panel.

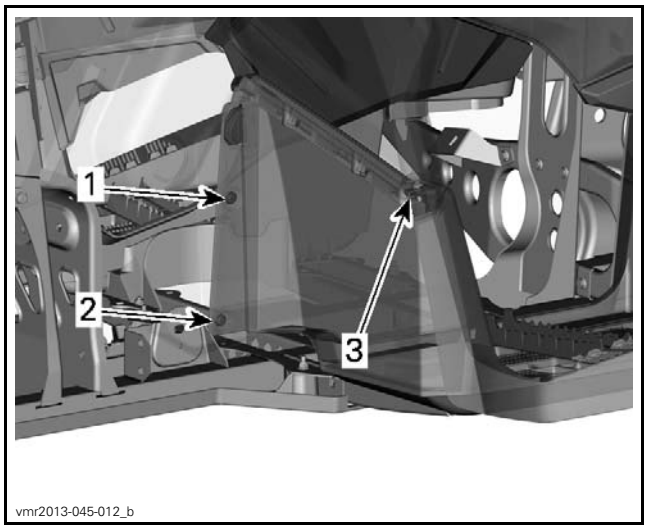

TYPICAL - PARTS REMOVED FOR CLARITY
1. Plastic rivet securing footrest panel to panel extension
2. Plastic rivet securing footrest panel to frame
3. Retaining screw securing footrest panel to front fender

8. Detach front fender from footrest panel by releasing retaining tabs.

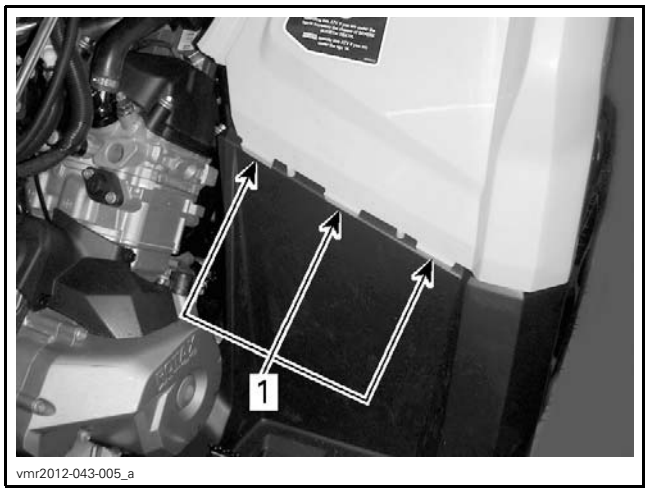

TYPICAL
1. Front fender retaining tabs

9. Detach rear fender from footrest panel by releasing retaining tabs.

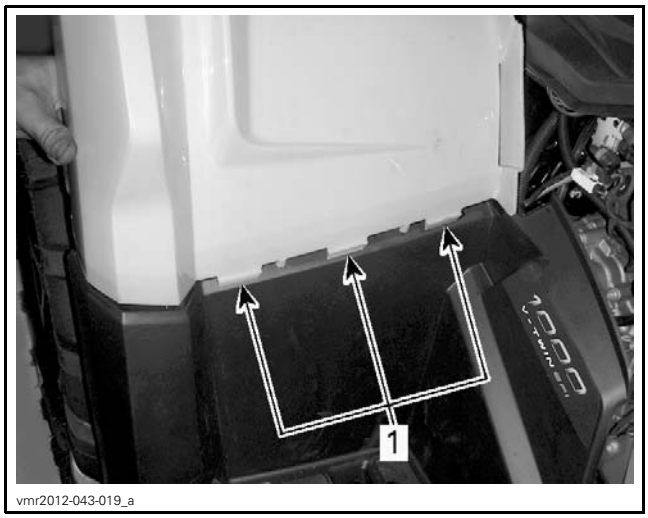

TYPICAL
1. Rear fender retaining tabs

10. Remove footrest panel from vehicle.

Installing the Footrest Panel

The installation is the reverse of the removal procedure. However, pay attention to the following.

Tighten footrest panel screws to specification.

TIGHTENING TORQUE	
Footrest panel retaining screws	4.5 N•m ± 0.5 N•m (40 lbf•**in** ± 4 lbf•**in**)
Screws securing footrest panel to fenders	4.5 N•m ± 0.5 N•m (40 lbf•**in** ± 4 lbf•**in**)

PASSENGER GRIPS

Removing the Passenger Grips

For models with heated passenger grips, refer to *ACCESSORIES* subsection.

1. Remove retaining screw securing passenger grips and remove passenger grips.

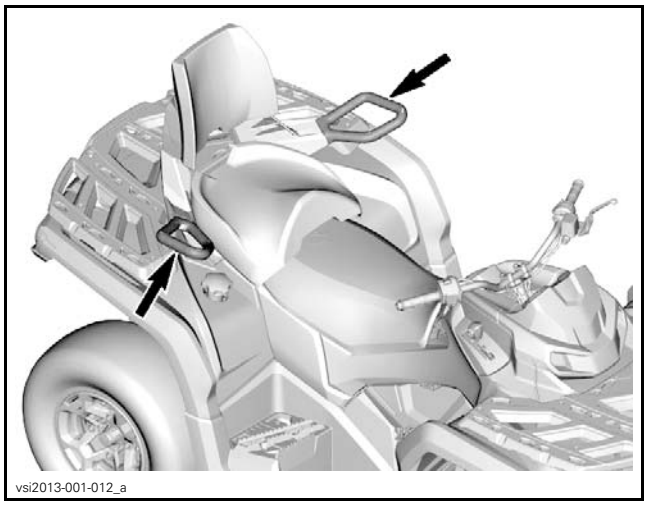

TYPICAL - REAR GRIP SCREWS

Installing the Passenger Grips

Installation is the reverse of removal. However pay attention to the following:

TIGHTENING TORQUE	
Passenger grips retaining screw	25 N•m ± 3 N•m (18 lbf•ft ± 2 lbf•ft)

RACK (FRONT AND REAR)

Removing the Front Rack

1. Remove retaining bolts securing rack assembly to frame.

NOTE: A small wrench will be needed to remove the retaining screw located between the rack support and fender.

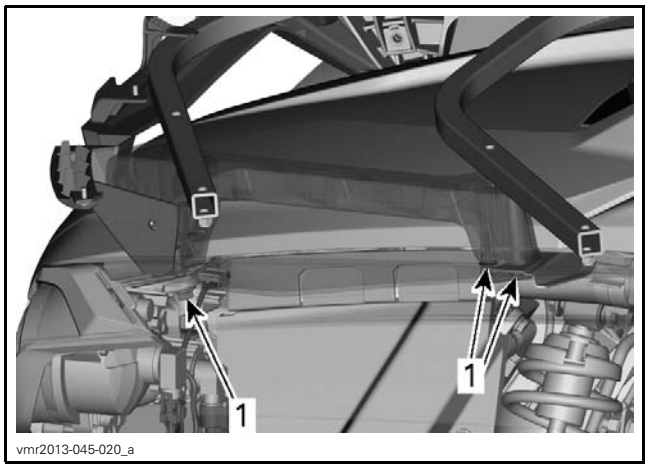

TYPICAL - PARTS REMOVED FOR CLARITY
1. Retaining bolts locations

2. Remove rack assembly from vehicle.
3. Remove the 4 retaining screws securing rack moulding to rack assembly.
4. Remove both retaining screws securing rack moulding to rack supports.

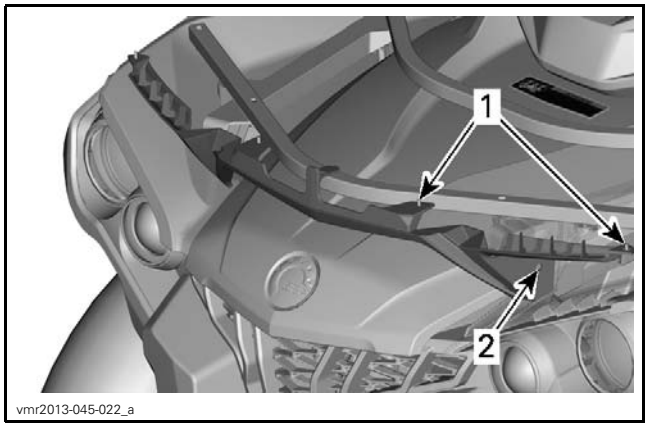

TYPICAL - LH SIDE OF ASSEMBLY SHOWN ON VEHICLE FOR CLARITY
1. LH side retaining screws securing rack moulding to rack assembly
2. LH side retaining screw securing rack moulding to rack support

5. Remove both retaining bolts securing rack supports to rails.

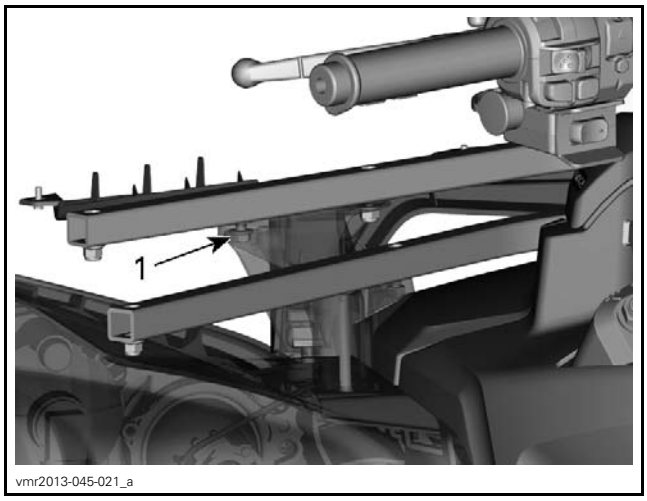

TYPICAL - LH SIDE OF ASSEMBLY SHOWN ON VEHICLE FOR CLARITY
1. Retaining bolt securing rack support to rail

6. Remove retaining screws securing rack to rails.

Installing the Front Rack

The installation is the reverse of the removal procedure. However, pay attention to the following.

TIGHTENING TORQUE	
Screws and nuts securing front rack to rail	4.5 N•m ± 0.5 N•m (40 lbf•**in** ± 4 lbf•**in**)
Bolts securing front rack assembly to frame	4.5 N•m ± 0.5 N•m (40 lbf•**in** ± 4 lbf•**in**)
Retaining screws securing fender to front rack assembly	1.6 N•m ± 0.4 N•m (14 lbf•**in** ± 4 lbf•**in**)
Screws securing rack moulding to rack assembly	4.5 N•m ± 0.5 N•m (40 lbf•**in** ± 4 lbf•**in**)

Removing the Rear Rack

1. Remove retaining bolts and nuts securing rack assembly to frame.

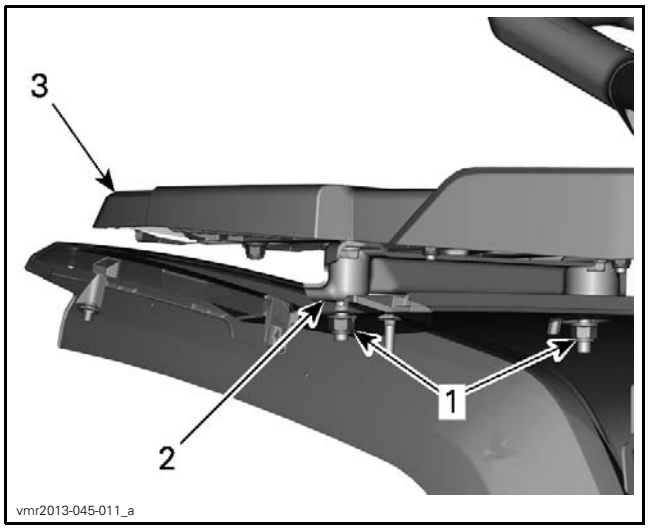

1. *Retaining nuts and bolts securing rack to frame*
2. *Frame*
3. *Rack assembly*

2. Remove rack from vehicle.
3. Remove retaining screws securing rack to rail.

Installing the Rear Rack

The installation is the reverse of the removal procedure. However, pay attention to the following.

TIGHTENING TORQUE	
Screws and nuts securing rear rack to rail	4.5 N•m ± 0.5 N•m (40 lbf•**in** ± 4 lbf•**in**)
Screws an nuts securing rear rack assembly to frame	4.5 N•m ± 0.5 N•m (40 lbf•**in** ± 4 lbf•**in**)

REAR STORAGE COMPARTMENT

REAR STORAGE COMPARTMENT COVER

Replacing the Rear Storage Compartment Cover

1. Open rear storage compartment cover.
2. Push rear storage compartment cover forward to release it from hinges.

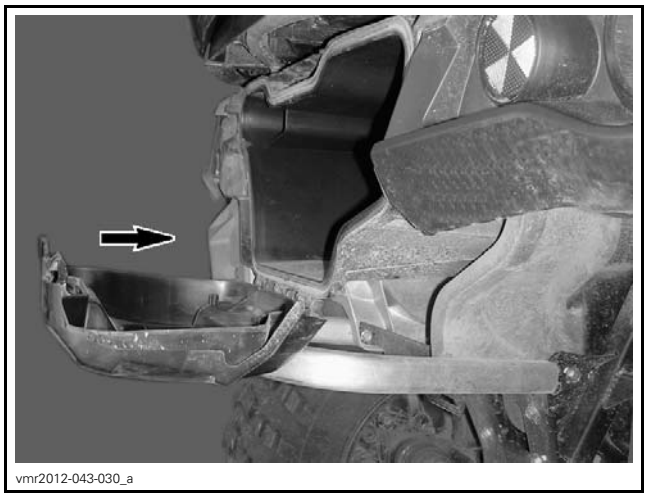

TYPICAL

3. Install a new rear storage compartment cover as the reverse of removal.

Rear Storage Compartment

Removing the Rear storage Compartment

1. Remove rear body module. Refer to *REAR BODY MODULE*.
2. Remove rear rack. Refer to *REMOVING THE REAR RACK*.
3. Remove rear storage compartment cover. Refer to *REAR STORAGE COMPARTMENT COVER*.
4. Remove retaining screws securing bottom of RH rear storage compartment support.

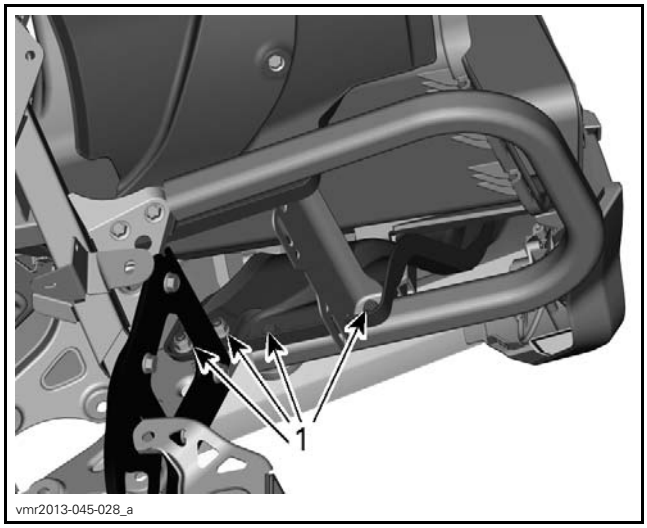

1. *Retaining screws securing bottom of RH rear storage compartment support*

5. Remove retaining screws securing RH rear storage compartment support to RH support.
6. Remove retaining screw securing RH fender to rear storage compartment.

7. Remove retaining screw securing RH rear storage compartment support to rear storage compartment.

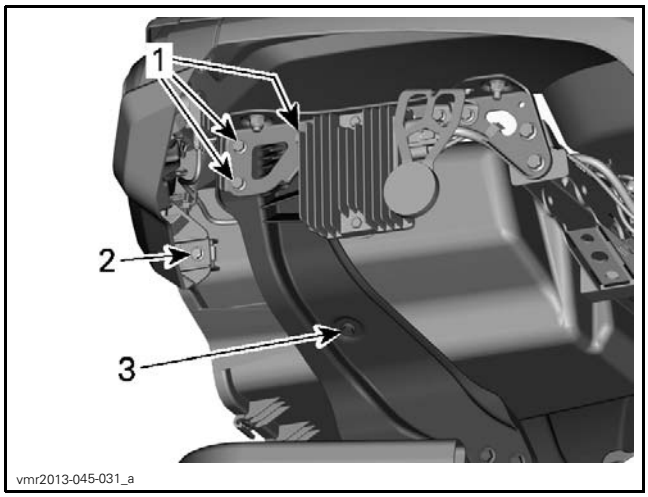

1. Retaining screws securing RH rear storage compartment support to RH support
2. Retaining screw securing RH fender to rear storage compartment
3. Retaining screw securing RH rear storage compartment support to rear storage compartment

8. Remove RH rear storage compartment support.
9. Remove retaining screw securing top of RH fender to top of rear storage compartment.

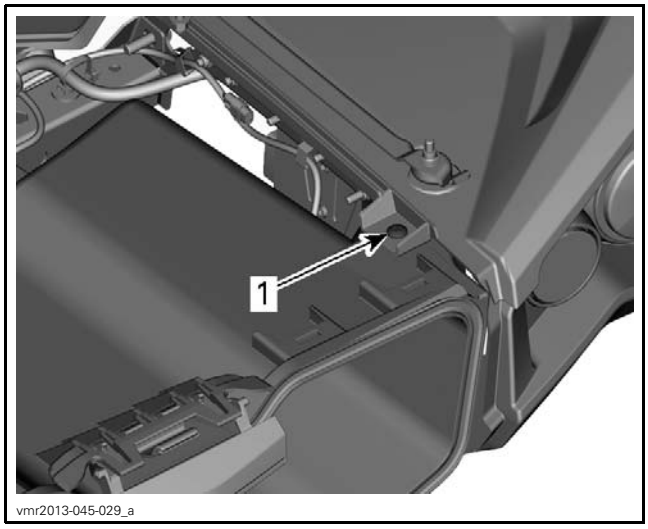

1. Retaining screw securing top of RH fender to top of rear storage compartment

10. Remove retaining screw securing LH rear storage compartment support to rear storage compartment.
11. Remove retaining screw securing LH support and LH rear storage compartment support to rear storage compartment.

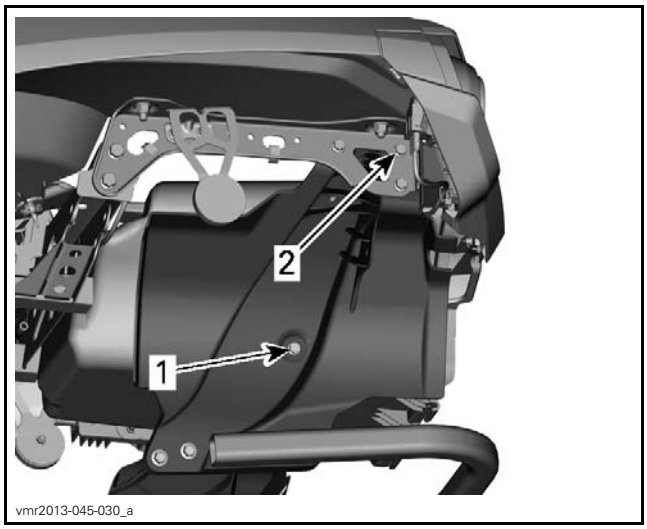

1. Retaining screw securing LH rear storage compartment support to rear storage compartment
2. Retaining screw securing LH support and LH rear storage compartment support to rear storage compartment

12. Remove both retaining screws securing LH fender to rear storage compartment.

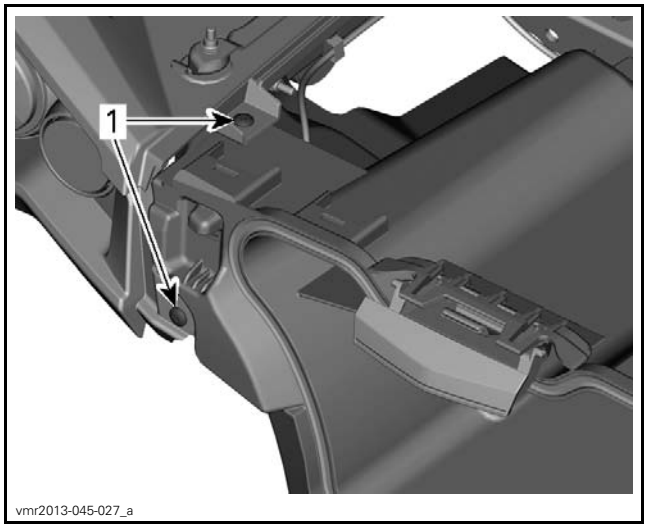

1. Retaining screws securing LH fender to rear storage compartment

13. Remove rear storage compartment.

Installing the Rear Storage Compartment

Installation is the reverse of removal. However pay attention to the following:

TIGHTENING TORQUE	
Rear top panel screws	4.5 N•m ± 0.5 N•m (40 lbf•**in** ± 4 lbf•**in**)
Rear storage compartment retaining screws	10 N•m ± 2 N•m (89 lbf•**in** ± 18 lbf•**in**)

FRAME

Models with Plastic Racks

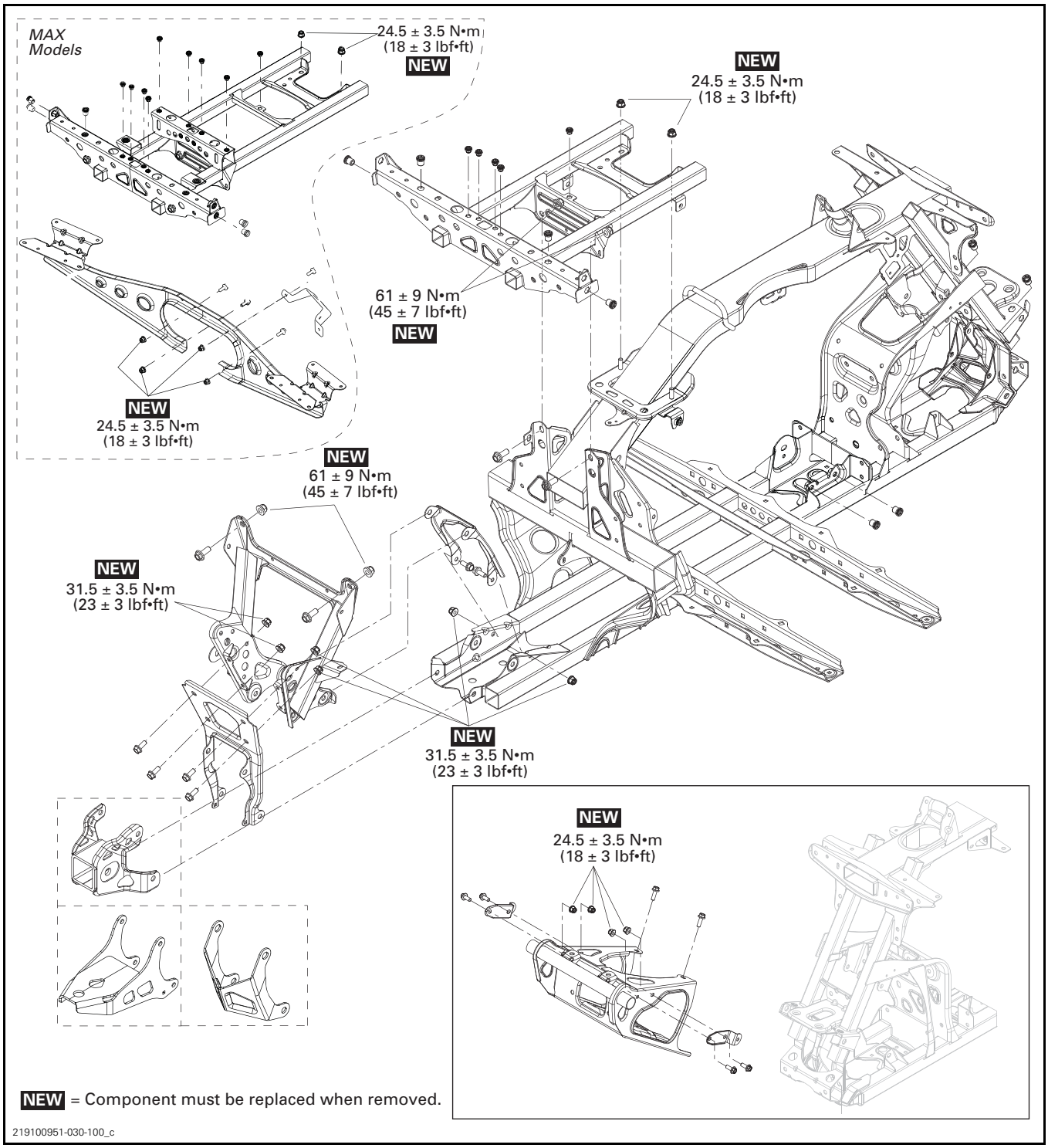

Models with Metal Racks

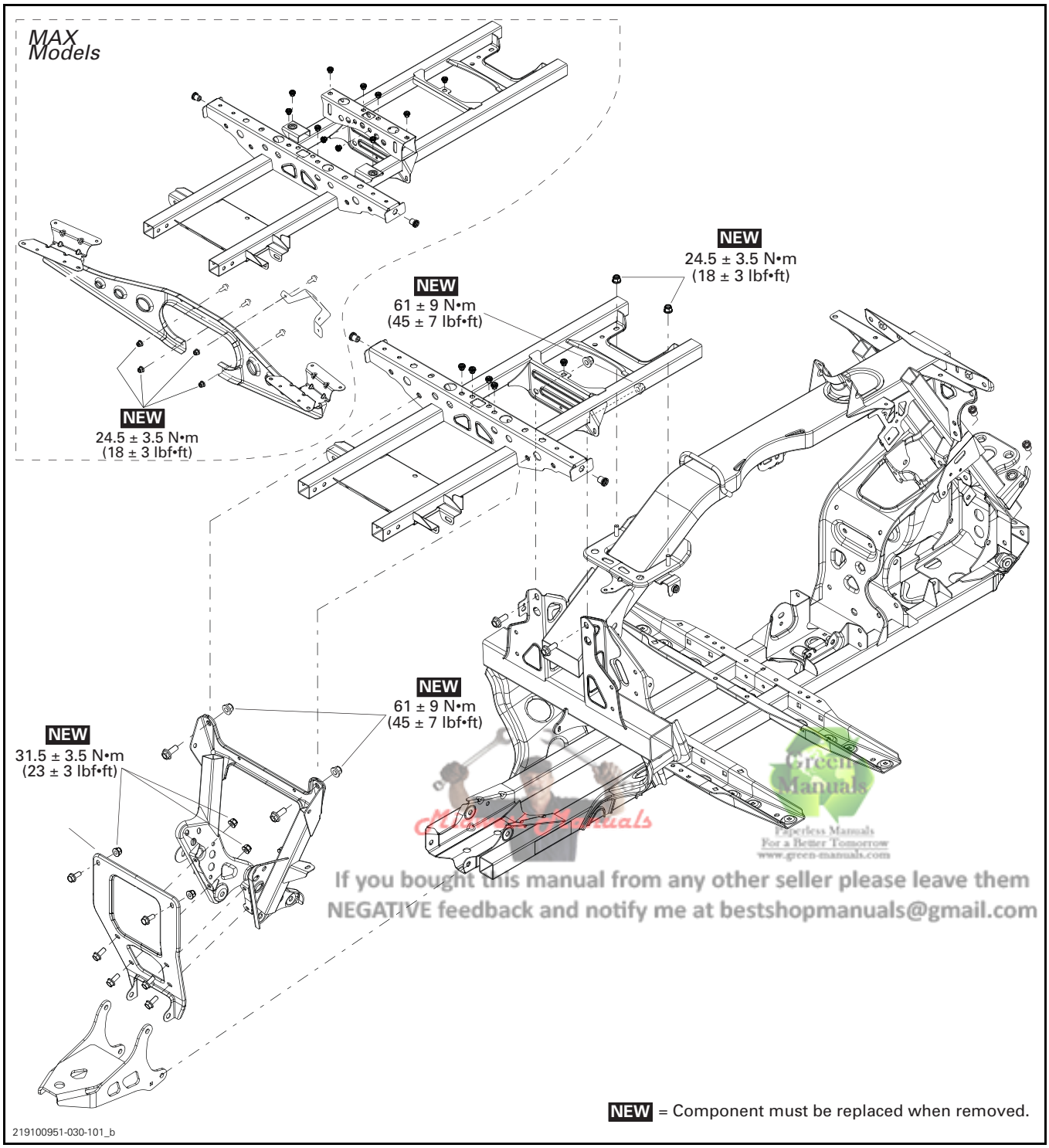

If you bought this manual from any other seller please leave them NEGATIVE feedback and notify me at bestshopmanuals@gmail.com

PROCEDURES

FRAME

Inspecting the Frame

Check frame for bending, cracks, weld damages or any other damage. Replace frame as necessary.

Frame Welding

No welding should be done on frame except if mentioned or required on an approved BRP Bulletin.

Replacing a Frame Insert

To install a new blind threaded insert, use a blind threaded insert installer available at any automotive parts retailer.

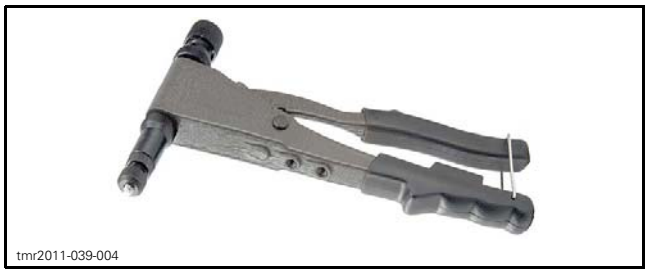

After insert installation, ensure insert can hold the torque applied to the screw it retains and measure the compressed length of the frame insert. Otherwise, install a new insert.

INSERT	COMPRESSED LENGTH
Insert for M6 bolt	9 mm ± 0.5 mm (.354 in ± .02 in)
Insert for M8 bolt	11.5 mm ± 0.5 mm (.453 in ± .02 in)

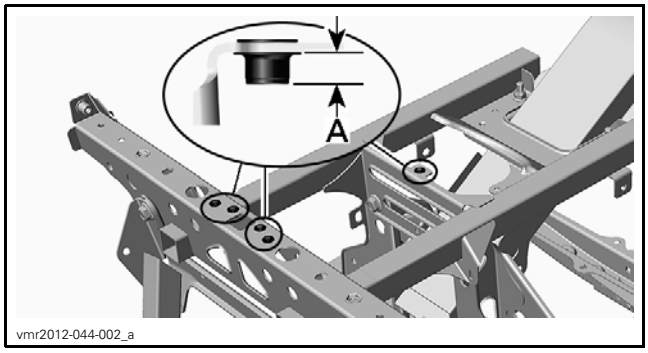

INSERT FOR M6 BOLT SHOWN
A. 9 mm ± 0.5 mm (.354 in ± .02 in)

Replacing the Frame

Blind threaded inserts are not installed on replacement frames. Make sure to order enough inserts when replacing frame. Refer to *ELECTRONIC PARTS CATALOG*.

ENGINE 450

ENGINE			
Engine type			ROTAX 450, 4-stroke, Single Over Head Camshaft (SOHC), liquid cooled
Number of cylinder			1
Number of valves			4 valves (mechanical adjustment)
Bore			94 mm (3.7 in)
Stroke			61.5 mm (2.42 in)
Displacement			426.8 cm^3 (26.04 in^3)
Compression ratio			10.3:1
Maximum HP RPM			7500
Intake valve opening			5° BTDC
Intake valve closing			45° ABDC
Exhaust valve opening			55° BBDC
Exhaust valve closing			5° ATDC
Valve clearance	Intake		0.06 mm to 0.14 mm (.0024 in to .0055 in)
	Exhaust		0.11 mm to 0.19 mm (.0043 in to .0075 in)
Valve stem diameter	Intake	New	5.472 mm to 5.486 mm (.2154 in to .216 in)
		Service limit	5.450 mm (.2146 in)
	Exhaust	New	5.461 mm to 5.476 mm (.215 in to .2156 in)
		Service limit	5.440 mm (.2142 in)
Valve out of round	Intake and Exhaust	New	0.005 mm (.0002 in)
		Service limit	0.060 mm (.0024 in)
Valve guide diameter	Intake and Exhaust	New	5.506 mm to 5.518 mm (.2168 in to .2172 in)
		Service limit	5.568 mm (.2192 in)
Valve spring free length		New	40.41 mm (1.591 in)
		Service limit	39.00 mm (1.535 in)
Valve seat contact width	Intake	New	1.05 mm to 1.35 mm (.041 in to .053 in)
		Service limit	1.80 mm (.071 in)
	Exhaust	New	1.25 mm to 1.55 mm (.049 in to .061 in)
		Service limit	2.00 mm (.079 in)
Piston measurement		New	93.950 mm to 93.966 mm (3.6988 in to 3.6994 in)
		Service limit	93.940 mm (3.6984 in)
Piston/cylinder clearance		New	0.027 mm to 0.057 mm (.0011 in to .0022 in)
		Service limit	0.100 mm (.0039 in)
Piston ring type		1st	Upper compression ring, rectangular
		2nd	Lower compression ring, taper-face
		3rd	Oil scraper ring, standard

ENGINE			
Piston ring end gap	Upper compression ring	New	0.20 mm to 0.35 mm (.008 in to .014 in)
	Lower compression ring		0.35 mm to 0.55 mm (.014 in to .022 in)
	Oil scraper ring		0.20 mm to 0.70 mm (.008 in to .028 in)
	Upper compression ring	Service limit	0.60 mm (.024 in)
	Lower compression ring		0.85 mm (.033 in)
	Oil scraper ring		1.00 mm (.039 in)
Ring/piston groove clearance	Upper compression ring	New	0.03 mm to 0.07 mm (.0012 in to .0028 in)
	Lower compression ring		0.02 mm to 0.06 mm (.0008 in to .0024 in)
	Oil scraper ring		0.01 mm to 0.18 mm (.0004 in to .0071 in)
	Upper compression ring	Service limit	0.150 mm (.0059 in)
	Lower compression ring		0.150 mm (.0059 in)
	Oil scraper ring		0.250 mm (.0098 in)
Rocker arm bore diameter		New	12.036 mm to 12.050 mm (.4739 in to .4744 in)
		Service limit	12.060 mm (.4748 in)
Rocker arm shaft diameter		New	12.00 mm to 12.018 mm (.4724 in to .4731 in)
		Service limit	11.990 mm (.472 in)
Cylinder bore		Nominal new	93.993 mm to 94.007 mm (3.7005 in to 3.7011 in)
Cylinder taper		Maximum new	0.038 mm (.0015 in)
		Service limit	0.090 mm (.0035 in)
Cylinder out of round		Maximum new	0.015 mm (.0006 in)
		Service limit	0.020 mm (.0008 in)
Camshaft main bearing journal	Spark plug side	New	21.959 mm to 21.980 mm (.8645 in to .8654 in)
		Service limit	21.950 mm (.8642 in)
	Timing chain side	New	34.959 mm to 34.975 mm (1.3763 in to 1.377 in)
		Service limit	34.950 mm (1.376 in)
Camshaft main bearing journal bore	Spark plug side	New	22.000 mm to 22.021 mm (.8661 in to .867 in)
		Service limit	22.040 mm (.8677 in)
	Timing chain side	New	35.000 mm to 35.025 mm (1.378 in to 1.3789 in)
		Service limit	35.040 mm (1.3795 in)
Camshaft lobe	Intake	New	32.890 mm to 33.090 mm (1.295 in to 1.303 in)
		Service limit	32.840 mm (1.293 in)
	Exhaust	New	32.950 mm to 33.150 mm (1.297 in to 1.305 in)
		Service limit	32.900 mm (1.295 in)
Crankshaft axial clearance		New	0.1 mm to 0.4 mm (.004 in to .016 in)
		Service limit	0.5 mm (.02 in)
Crankshaft deflection	MAG/PTO side	New	0.05 mm (.002 in)
Crankshaft pin diameter		New	40.001 mm to 40.025 mm (1.5748 in to 1.5758 in)
		Service limit	39.980 mm (1.574 in)

ENGINE			
Crankshaft main journal diameter	MAG/PTO side	New	42.016 mm to 42.040 mm (1.6542 in to 1.6551 in)
		Service limit	42.000 mm (1.6535 in)
Crankcase plain bearing diameter	MAG/PTO side	Service limit	42.100 mm (1.6575 in)
Crankshaft radial play	MAG/PTO side	Service limit	0.07 mm (.0028 in)
Connecting rod big end diameter		Service limit	40.100 mm (1.579 in)
Connecting rod big end radial play		Service limit	0.09 mm (.0035 in)
Connecting rod big end axial play		New	0.100 mm to 0.452 mm (.004 in to .018 in)
		Service limit	0.500 mm (.02 in)
Connecting rod small end diameter		New	20.010 mm to 20.020 mm (.7878 in to .7882 in)
		Service limit	20.060 mm (.7898 in)
Piston pin diameter		New	19.996 mm to 20.000 mm (.7872 in to .7874 in)
		Service limit	19.980 mm (.7866 in)
Connecting rod/piston pin clearance		Service limit	0.080 mm (.0031 in)

LUBRICATION SYSTEM			
Lubrication	Type		Wet sump with replaceable oil filter
	Oil filter		Replaceable cartridge
	Engine oil pressure	Minimum	350 kPa (51 PSI) at 6000 RPM
	Engine oil	Capacity (oil change with filter)	3 L (3.2 qt (U.S. liq.)) (engine/transmission)
		Recommended	For the summer season use XPS 4-stroke synth. blend oil (summer) (P/N 293 600 121). For the summer season use XPS 4-stroke synthetic oil (All climate) (P/N 293 600 112). If not available, use a 4-stroke SAE 5W 40 engine oil that meets the requirements for API service classification SG, SH or SJ
Oil pressure regulator compression spring free length		New nominal	64 mm (2.52 in)
		Service limit	62 mm (2.441 in)
Oil pump inner and outer rotor clearance		Service limit	0.25 mm (.0098 in)
Oil pump axial clearance		Service limit	0.10 mm (.0039 in)

COOLING SYSTEM			
Coolant	Type	Finland, Norway and Sweden	Use Long life antifreeze (P/N 619 590 204)
		All other countries	Use Long life antifreeze (P/N 219 702 685)
		Alternative, or if not available	Coolant specifically designed for aluminum engines Ethyl glycol/distilled water mix (50%/50%).
	Capacity		2.9 L (3.1 qt (U.S. liq.))
Thermostat		Starts to open	65°C (149°F)
		Fully open	75°C (167°F)

TRANSMISSION		
Type		CVT (Continuously Variable Transmission)
Engagement RPM		2000 ± 100 RPM
Drive belt width	Service limit	30.00 mm (1.181 in)
Governor cup roller outer diameter	New	13.80 mm to 14.00 mm (.543 in to .551 in)
	Service limit	13.20 mm (.52 in)
Governor cup roller inner diameter	New	8.025 mm to 8.175 mm (.316 in to .322 in)
	Service limit	9.00 mm (.354 in)
Centrifugal lever pivot bolt diameter	New	6.078 mm to 6.100 mm (.239 in to .24 in)
	Service limit	6.000 mm (.236 in)
Centrifugal lever bore diameter	New	6.035 mm to 6.078 mm (.238 in to .239 in)
	Service limit	6.200 mm (.244 in)
Centrifugal lever pivot bolt bore diameter	New	6.113 mm to 6.171 mm (.241 in to .243 in)
	Service limit	6.300 mm (.248 in)
Drive pulley sliding sheave large bushing	New	55.000 mm to 55.040 mm (2.165 in to 2.167 in)
	Service limit	55.200 mm (2.173 in)
Drive pulley sliding sheave small bushing	New	30.000 mm to 30.040 mm (1.181 in to 1.183 in)
	Service limit	30.200 mm (1.189 in)
Drive pulley spring free length	Service limit	75 mm (2.953 in)
Drive pulley spring squareness	Service limit	4 mm (.157 in)
Spring sleeve length	New	9.2 mm to 9.4 mm (.362 in to .37 in)
	Service limit	9.0 mm (.354 in)
Driven pulley sliding sheave bushing	New	30.060 mm to 30.100 mm (1.183 in to 1.185 in)
	Service limit	30.200 mm (1.189 in)
Driven pulley fixed sheave bushing	New	30.060 mm to 30.100 mm (1.183 in to 1.185 in)
	Service limit	30.200 mm (1.189 in)
Torque gear on driven pulley	Service limit	7.500 mm (.295 in)
Cam width on top surface	Service limit	6.000 mm (.236 in)

TRANSMISSION		
Driven pulley sliding sheave wear on contact surface	Service limit	2.000 mm (.079 in)
Driven pulley spring free length	Service limit	164 mm (6.457 in)
Driven pulley spring squareness	Service limit	3.8 mm (.15 in)

GEARBOX			
Type			Dual range (HI-LO) with park, neutral and reverse
Output shaft axial clearance		New	0.09 mm to 0.18 mm (.004 in to .007 in)
		Service limit	0.30 mm (.012 in)
Bevel gear axial clearance		New	0.02 mm to 0.11 mm (.0008 in to .0043 in)
		Service limit	0.15 mm (.006 in)
Gear groove width		New	5.00 mm to 5.10 mm (.197 in to .201 in)
		Service limit	5.20 mm (.205 in)
Counter shaft	MAG side	Service limit	17.990 mm (.708 in)
	PTO side		24.950 mm (.982 in)
Bevel gear shaft	PTO side	Service limit	24.990 mm (.984 in)
Shift fork claw thickness		New	4.800 mm to 4.860 mm (.189 in to .191 in)
		Service limit	4.750 mm (.187 in)
Overall gear ratio	PRO	High	3.700
		Low	7.509
		Reverse	7.863
	All other	High	3,545
		Low	6,769
		Reverse	7,608

ELECTRICAL SYSTEM		
Magneto generator output	Without DPS	400 W @ 6000 RPM
	With DPS	500 W @ 6000 RPM
	CE version	500 W @ 6000 RPM
Stator resistance (20°C (68°F))		0.15 to 0.30 Ω
Ignition system type		IDI (Inductive Discharge Ignition)
Ignition timing		Not adjustable
Spark plug	Quantity	1
	Make and type	NGK LMAR8D-J
	Gap	0.7 mm to 0.9 mm (.028 in to .035 in)
Engine RPM limiter setting	Forward	8000 RPM
	Reverse	15 km/h (9 MPH) without Override)

FUEL SYSTEM		
Fuel delivery	Type	Electronic Fuel Injection (EFI), 46 mm throttle body, 1 injector per cylinder
Idle speed		1250 RPM ± 50 (not adjustable)

ENGINE 570

ENGINE			
Engine type			ROTAX® 570, 4-stroke, 2 cylinders (V-twin), liquid cooled
Valve train			4 valves/cylinder (mechanical adjustment), single over head camshaft (SOHC) with timing chain
Bore			84 mm (3.31 in)
Stroke			51.4 mm (2.02 in)
Displacement			570 cm³ (34.8 in³)
Compression ratio			10.6:1
Maximum HP RPM			8000 RPM
Exhaust system			Spark arrestor approved by USDA Forest Service
Air filter			Synthetic paper filter with foam
Intake valve opening			3° BTDC
Intake valve closing			34 ABDC
Exhaust valve opening			39° BBDC
Exhaust valve closing			2° BTDC
Valve clearance		Intake	0.06 mm to 0.14 mm (.0024 in to .0055 in)
		Exhaust	0.11 mm to 0.19 mm (.0043 in to .0075 in)
Valve stem diameter	Intake	New	4.966 mm to 4.980 mm (.1955 in to .1961 in)
		Service limit	4.930 mm (.1941 in)
	Exhaust	New	4.956 mm to 4.970 mm (.1951 in to .1957 in)
		Service limit	4.930 mm (.1941 in)
Valve out of round	Intake and exhaust	New	0.005 mm (.0002 in)
		Service limit	0.06 mm (.0024 in)
Valve guide diameter		New	4.998 mm to 5.018 mm (.1968 in to .1976 in)
		Service limit	5.050 mm (.1988 in)
Valve spring free length		New	40.81 mm (1.607 in)
		Service limit	39.00 mm (1.535 in)
Valve seat contact width	Intake	New	1.05 mm to 1.35 mm (.041 in to .053 in)
		Service limit	1.8 mm (.071 in)
	Exhaust	New	1.25 mm to 1.55 mm (.049 in to .061 in)
		Service limit	2 mm (.079 in)

ENGINE			
Rocker arm bore diameter		New	12.036 mm to 12.050 mm (.4739 in to .4744 in)
		Service limit	12.060 mm (.4748 in)
Rocker arm shaft diameter		New	12.000 mm to 12.018 mm (.4724 in to .4731 in)
		Service limit	11.990 mm (.472 in)
Piston diameter		New	83.950 mm to 83.966 mm (3.3051 in to 3.3057 in)
		Service limit	83.850 mm (3.3012 in)
Piston/cylinder clearance		New	0.057 mm to 0.087 mm (.0022 in to .0034 in)
		Service limit	0.130 mm (.0051 in)
Piston ring type		1st	Upper compression ring, rectangular
		2nd	Lower compression ring, tapered face
		3rd	Oil scraper ring
Ring end gap	Rectangular	New	0.10 mm to 0.30 mm (.004 in to .012 in)
		Service limit	0.40 mm (.016 in)
	Tapered face	New	0.35 mm to 0.55 mm (.014 in to .022 in)
		Service limit	0.85 mm (.033 in)
	Oil scraper ring	New	0.20 mm to 0.70 mm (.008 in to .028 in)
		Service limit	1.00 mm (.039 in)
Ring/piston groove clearance	Rectangular	New	0.025 mm to 0.070 mm (.001 in to .0028 in)
		Service limit	0.100 mm (.0039 in)
	Tapered face	New	0.020 mm to 0.060 mm (.0008 in to .0024 in)
		Service limit	0.150 mm (.0059 in)
	Oil scraper ring	New	0.010 mm to 0.180 mm (.0004 in to .0071 in)
		Service limit	0.250 mm (.0098 in)
Cylinder bore		New	84.023 mm to 84.037 mm (3.308 in to 3.3085 in)
Cylinder taper		Maximum new	0.038 mm (.0015 in)
		Service limit	0.090 mm (.0035 in)
Cylinder out of round		Maximum new	0.015 mm (.0006 in)
		Service limit	0.020 mm (.0008 in)

ENGINE			
Camshaft main bearing journal	Timing chain side	New	34.959 mm to 34.975 mm (1.3763 in to 1.377 in)
		Service limit	34.950 mm (1.376 in)
	Spark plug side	New	21.959 mm to 21.980 mm (.8645 in to .8654 in)
		Service limit	21.950 mm (.8642 in)
Camshaft main bearing journal bore	Timing chain side	New	35.000 mm to 35.025 mm (1.378 in to 1.3789 in)
		Service limit	35.040 mm (1.3795 in)
	Spark plug side	New	22.000 mm to 22.021 mm (.8661 in to .867 in)
		Wear limit	22.040 mm (.8677 in)
Camshaft lobe	Intake valve	New	31.830 mm to 32.030 mm (1.2531 in to 1.261 in)
		Service limit	31.810 mm (1.2524 in)
	Exhaust valve	New	31.730 mm to 31.930 mm (1.2492 in to 1.2571 in)
		Service limit	31.710 mm (1.2484 in)
Crankshaft main bearing journal diameter (MAG/PTO side)		New	42.016 mm to 42.040 mm (1.6542 in to 1.6551 in)
		Service limit	42.000 mm (1.6535 in)
Crankshaft radial play (MAG/PTO side)		Service limit	0.07 mm (.0028 in)
Crankshaft bearing journal diameter (in PTO cover)		New	34.004 mm to 34.020 mm (1.3387 in to 1.3394 in)
		Service limit	33.998 mm (1.3385 in)
Crankshaft radial play (PTO cover bearing)		Service limit	0.10 mm (.0039 in)
Crankshaft axial play		New	0.200 mm to 0.500 mm (.0079 in to .0197 in)
		Service limit	0.600 mm (.0236 in)
Crankshaft pin diameter		New	40.001 mm to 40.025 mm (1.5748 in to 1.5758 in)
		Service limit	39.990 mm (1.5744 in)
Crankshaft deflection	MAG/PTO side	New	0.050 mm (.002 in)
Crankcase plain bearing	MAG/PTO side	Service limit	42.100 mm (1.6575 in)
PTO cover plain bearing		Service limit	34.120 mm (1.3433 in)
Connecting rod big end diameter		Service limit	40.100 mm (1.5787 in)
Connecting rod big end radial play		Service limit	0.09 mm (.0035 in)
Connecting rod big end axial play		New	0.200 mm to 0.500 mm (.008 in to .02 in)
		Service limit	0.600 mm (.024 in)

ENGINE		
Connecting rod small end diameter	New	20.010 mm to 20.020 mm (.7878 in to .7882 in)
	Service limit	20.060 mm (.7898 in)
Piston pin diameter	New	19.996 mm to 20.000 mm (.7872 in to .7874 in)
	Service limit	19.980 mm (.7866 in)
Connecting rod/piston pin clearance (radial play)	Service limit	0.080 mm (.0031 in)

LUBRICATION SYSTEM		
Type		Wet sump. Replaceable cartridge oil filter
Oil filter		Replaceable cartridge
Engine oil pressure	Minimum	300 kPa (44 PSI) at 6000 RPM
Engine oil	Capacity (oil change with filter)	2.0 L (2.1 qt (U.S. liq.))
	Recommended	For the summer season, use XPS 4-stroke synth. blend oil (P/N 293 600 121). For the all seasons, use XPS 4-stroke synthetic oil (P/N 293 600 112). If not available, use a 5W40 motor oil that meets the requirements for API service classification SG, SH or SJ

COOLING SYSTEM			
Coolant	Type	Finland, Norway and Sweden	Use Long life antifreeze (P/N 619 590 204)
		All other countries	Use long life antifreeze (P/N 219 702 685)
		Alternative, or if not available	Coolant specifically designed for aluminum engines Ethyl glycol/distilled water mix (50%/50%).
	Capacity		3.4 L (.9 U.S. gal.)
Thermostat		Starts to open	65°C (149°F)
		Fully open	75°C (167°F)

TRANSMISSION		
Type		CVT (Continuously Variable Transmission)
Engagement RPM		1800 RPM
Drive belt width	Service limit	30.00 mm (1.181 in)
Governor cup roller outer diameter	New	13.80 mm to 14.00 mm (.543 in to .551 in)
	Service limit	13.20 mm (.52 in)

TRANSMISSION		
Governor cup roller inner diameter	New	8.025 mm to 8.175 mm (.316 in to .322 in)
	Service limit	9.00 mm (.354 in)
Centrifugal lever pivot bolt diameter	New	6.078 mm to 6.100 mm (.239 in to .24 in)
	Service limit	6.000 mm (.236 in)
Centrifugal lever bore diameter	New	6.035 mm to 6.078 mm (.2376 in to .2393 in)
	Service limit	6.200 mm (.244 in)
Drive pulley sliding half centrifugal lever pivot bolt bore diameter	New	6.113 mm to 6.171 mm (.241 in to .243 in)
	Service limit	6.300 mm (.248 in)
Drive pulley sliding half large bushing	New	55.000 mm to 55.040 mm (2.165 in to 2.167 in)
	Service limit	55.200 mm (2.173 in)
Drive pulley sliding half small bushing	New	32.000 mm to 32.040 mm (1.26 in to 1.261 in)
	Service limit	32.200 mm (1.268 in)
Drive pulley spring free length	Service limit	85 mm (3.35 in)
Drive pulley spring free squareness	Service limit	4 mm (.157 in)
Spring sleeve length	New	9.2 mm to 9.4 mm (.362 in to .37 in)
	Service limit	9.0 mm (.354 in)
Driven pulley sliding half bushing	New	30.060 mm to 30.100 mm (1.183 in to 1.185 in)
	Service limit	30.200 mm (1.189 in)
Driven pulley sliding fixed bushing	New	30.060 mm to 30.100 mm (1.183 in to 1.185 in)
	Service limit	30.200 mm (1.189 in)
Torque gear on driven pulley	Service limit	7.500 mm (.295 in)
Driven pulley spring free length	Service limit	125 mm (4.92 in)
Driven pulley spring free squareness	Service limit	3.8 mm (.15 in)
Cam width in top surface	Service limit	4.50 mm (.177 in)

GEARBOX			
Type			Dual range (HI-LO) with park, neutral and reverse
Gear ratios	PRO	Angle drive sub-transmission	37/15 = 2.467
		Intermediate	45/40 = 1.125
		High	36/27 = 1.33
		Low	46/17 = 2.706
		Reverse	34/12 = 2.833
	All other	Angle drive sub-transmission	32/13 = 2.462
		High	38/28 = 1.357
		Low	46/20 = 2.300
		Reverse	31/14 = 2.214
Overall gear ratio	PRO	High	3.700
		Low	7.509
		Reverse	7.863
	All other	High	3.341
		Low	5.662
		Reverse	5,451
Gearbox oil	Capacity		Approximately 450 ml (15.2 U.S. oz)
	Recommended		XPS synthetic gear oil (75W 140) (P/N 293 600 140) or a 75W140 API GL-5 synthetic gear oil
Output shaft backlash		New	0.10 mm to 0.20 mm (.004 in to .008 in)
		Service limit	0.25 mm (.01 in)
Coupling sleeve groove width		New	5.25 mm to 5.35 mm (.207 in to .211 in)
		Service limit	5.50 mm (.217 in)
Coupling fork claw thickness		New	4.95 mm to 5.05 mm (.195 in to .199 in)
		Service limit	4.80 mm (.189 in)
Shift fork claw thickness (high gear shift fork)		New	4.80 mm to 4.90 mm (.189 in to .193 in)
		Service limit	4.70 mm (.185 in)
Shift fork claw thickness (low and reverse gear shift fork)		New	5.10 mm to 5.20 mm (.201 in to .205 in)
		Service limit	5.0 mm (.197 in)
Shift fork pin diameter		New	6.92 mm to 6.97 mm (.272 in to .274 in)
		Service limit	6.85 mm (.27 in)

GEARBOX			
Width of shift fork engagement groove (low and reverse gear)		New	5.30 mm to 5.40 mm (.209 in to .213 in)
		Service limit	5.50 mm (.217 in)
Width of shift fork engagement groove (high gear)		New	5.00 mm to 5.10 mm (.197 in to .201 in)
		Service limit	5.20 mm (.205 in)
Diameter free pinions		New	29.000 mm to 29.013 mm (1.1417 in to 1.1422 in)
		Service limit	29.015 mm (1.1423 in)
Intermediate gear shaft		New	24.979 mm to 25.000 mm (.9834 in to .9843 in)
		Service limit	24.977 mm (.983 in)
Countershaft	MAG side	New	N.A.
		Service limit	17.990 mm (.7083 in)
	CVT side	New	N.A.
		Service limit	24.970 mm (.9831 in)
	Free pinion bearing	New	N.A.
		Service limit	24.970 mm (.9831 in)
Bevel gear shaft	Free pinion bearing	Service limit	24.984 mm (.9836 in)

ELECTRICAL SYSTEM		
Magneto generator output	Without DPS	400 W @ 6000 RPM
	With DPS	500 W @ 6000 RPM
	CE version	500 W @ 6000 RPM
Stator resistance (20°C (68°F))		0.15 to 0.30 Ω
Ignition system type		IDI (Inductive Discharge Ignition)
Ignition timing		Not adjustable
Spark plug	Quantity	2
	Make and type	NGK DCPR8E
	Gap	0.7 mm to 0.8 mm (.028 in to .031 in)
Engine RPM limiter setting	Forward	8000 RPM
	Reverse	15 km/h (9 MPH) without Override)

FUEL SYSTEM	
Fuel delivery	Electronic Fuel Injection (EFI), 46 mm throttle body, 1 injector per cylinder
Idle speed	1400 ± 50 (not adjustable)

ENGINE - 450 iTC

ENGINE			
Engine type			ROTAX 450, 4-stroke, Single Over Head Camshaft (SOHC), liquid cooled
Number of cylinder			1
Number of valves			4 valves (mechanical adjustment)
Bore			94 mm (3.7 in)
Stroke			61.5 mm (2.42 in)
Displacement			426.8 cm³ (26.04 in³)
Compression ratio			10.3:1
Maximum HP RPM			7500
Intake valve opening			5° BTDC
Intake valve closing			45° ABDC
Exhaust valve opening			55° BBDC
Exhaust valve closing			5° ATDC
Valve clearance	Intake		0.06 mm to 0.14 mm (.0024 in to .0055 in)
	Exhaust		0.11 mm to 0.19 mm (.0043 in to .0075 in)
Valve stem diameter	Intake	New	5.472 mm to 5.486 mm (.2154 in to .216 in)
		Service limit	5.450 mm (.2146 in)
	Exhaust	New	5.461 mm to 5.476 mm (.215 in to .2156 in)
		Service limit	5.440 mm (.2142 in)
Valve out of round	Intake and Exhaust	New	0.005 mm (.0002 in)
		Service limit	0.060 mm (.0024 in)
Valve guide diameter	Intake and Exhaust	New	5.506 mm to 5.518 mm (.2168 in to .2172 in)
		Service limit	5.568 mm (.2192 in)
Valve spring free length		New	40.41 mm (1.591 in)
		Service limit	39.00 mm (1.535 in)
Valve seat contact width	Intake	New	1.05 mm to 1.35 mm (.041 in to .053 in)
		Service limit	1.80 mm (.071 in)
	Exhaust	New	1.25 mm to 1.55 mm (.049 in to .061 in)
		Service limit	2.00 mm (.079 in)
Piston measurement		New	93.950 mm to 93.966 mm (3.6988 in to 3.6994 in)
		Service limit	93.940 mm (3.6984 in)
Piston/cylinder clearance		New	0.027 mm to 0.057 mm (.0011 in to .0022 in)
		Service limit	0.100 mm (.0039 in)
Piston ring type		1st	Upper compression ring, rectangular
		2nd	Lower compression ring, taper-face
		3rd	Oil scraper ring, standard

Midwest Manuals
Green Manuals
Paperless Manuals For a Better Tomorrow
If you bought this manual from any other seller please leave them NEGATIVE feedback and notify me at bestshopmanuals@gmail.com

ENGINE			
Piston ring end gap	Upper compression ring	New	0.20 mm to 0.35 mm (.008 in to .014 in)
	Lower compression ring		0.35 mm to 0.55 mm (.014 in to .022 in)
	Oil scraper ring		0.20 mm to 0.70 mm (.008 in to .028 in)
	Upper compression ring	Service limit	0.60 mm (.024 in)
	Lower compression ring		0.85 mm (.033 in)
	Oil scraper ring		1.00 mm (.039 in)
Ring/piston groove clearance	Upper compression ring	New	0.03 mm to 0.07 mm (.0012 in to .0028 in)
	Lower compression ring		0.02 mm to 0.06 mm (.0008 in to .0024 in)
	Oil scraper ring		0.01 mm to 0.18 mm (.0004 in to .0071 in)
	Upper compression ring	Service limit	0.150 mm (.0059 in)
	Lower compression ring		0.150 mm (.0059 in)
	Oil scraper ring		0.250 mm (.0098 in)
Rocker arm bore diameter		New	12.036 mm to 12.050 mm (.4739 in to .4744 in)
		Service limit	12.060 mm (.4748 in)
Rocker arm shaft diameter		New	12.00 mm to 12.018 mm (.4724 in to .4731 in)
		Service limit	11.990 mm (.472 in)
Cylinder bore		Nominal new	93.993 mm to 94.007 mm (3.7005 in to 3.7011 in)
Cylinder taper		Maximum new	0.038 mm (.0015 in)
		Service limit	0.090 mm (.0035 in)
Cylinder out of round		Maximum new	0.015 mm (.0006 in)
		Service limit	0.020 mm (.0008 in)
Camshaft main bearing journal	Spark plug side	New	21.959 mm to 21.980 mm (.8645 in to .8654 in)
		Service limit	21.950 mm (.8642 in)
	Timing chain side	New	34.959 mm to 34.975 mm (1.3763 in to 1.377 in)
		Service limit	34.950 mm (1.376 in)
Camshaft main bearing journal bore	Spark plug side	New	22.000 mm to 22.021 mm (.8661 in to .867 in)
		Service limit	22.040 mm (.8677 in)
	Timing chain side	New	35.000 mm to 35.025 mm (1.378 in to 1.3789 in)
		Service limit	35.040 mm (1.3795 in)
Camshaft lobe	Intake	New	32.890 mm to 33.090 mm (1.295 in to 1.303 in)
		Service limit	32.840 mm (1.293 in)
	Exhaust	New	32.950 mm to 33.150 mm (1.297 in to 1.305 in)
		Service limit	32.900 mm (1.295 in)

ENGINE			
Crankshaft axial clearance		New	0.1 mm to 0.4 mm (.004 in to .016 in)
		Service limit	0.5 mm (.02 in)
Crankshaft deflection	MAG/PTO side	New	0.05 mm (.002 in)
Crankshaft pin diameter		New	40.001 mm to 40.025 mm (1.5748 in to 1.5758 in)
		Service limit	39.980 mm (1.574 in)
Crankshaft main journal diameter	MAG/PTO side	New	42.016 mm to 42.040 mm (1.6542 in to 1.6551 in)
		Service limit	42.000 mm (1.6535 in)
Crankcase plain bearing diameter	MAG/PTO side	Service limit	42.100 mm (1.6575 in)
Crankshaft radial play	MAG/PTO side	Service limit	0.07 mm (.0028 in)
Connecting rod big end diameter		Service limit	40.100 mm (1.579 in)
Connecting rod big end radial play		Service limit	0.09 mm (.0035 in)
Connecting rod big end axial play		New	0.100 mm to 0.452 mm (.004 in to .018 in)
		Service limit	0.500 mm (.02 in)
Connecting rod small end diameter		New	20.010 mm to 20.020 mm (.7878 in to .7882 in)
		Service limit	20.060 mm (.7898 in)
Piston pin diameter		New	19.996 mm to 20.000 mm (.7872 in to .7874 in)
		Service limit	19.980 mm (.7866 in)
Connecting rod/piston pin clearance		Service limit	0.080 mm (.0031 in)

LUBRICATION SYSTEM			
Lubrication	Type		Wet sump with replaceable oil filter
	Oil filter		Replaceable cartridge
	Engine oil pressure	Minimum	350 kPa (51 PSI) at 6000 RPM
	Engine oil	Capacity (oil change with filter)	3 L (3.2 qt (U.S. liq.)) (engine/transmission)
		Recommended	4T 10W50 Synthetic oil or 4T 5W40 Synthetic blend oil or 4T 0W40 Synthetic oil If not available, use a 5W40 or 10W50 motor oil that meets the requirements for API service classification SJ, SL, SM or SN
Oil pressure regulator compression spring free length		New nominal	64 mm (2.52 in)
		Service limit	62 mm (2.441 in)
Oil pump inner and outer rotor clearance		Service limit	0.25 mm (.0098 in)
Oil pump axial clearance		Service limit	0.10 mm (.0039 in)

COOLING SYSTEM			
Coolant	Type		Ethyl glycol/water mix (50%/50%). Extended life pre-mixed coolant or coolant specifically designed for aluminum engines
	Capacity		2.9 L (3.1 qt (U.S. liq.))
Thermostat		Starts to open	65°C (149°F)
		Fully open	75°C (167°F)

TRANSMISSION		
Type		CVT (Continuously Variable Transmission)
Engagement RPM		2000 ± 100 RPM
Drive belt width	Service limit	30.00 mm (1.181 in)
Governor cup roller outer diameter	New	13.80 mm to 14.00 mm (.543 in to .551 in)
	Service limit	13.20 mm (.52 in)
Governor cup roller inner diameter	New	8.025 mm to 8.175 mm (.316 in to .322 in)
	Service limit	9.00 mm (.354 in)
Centrifugal lever pivot bolt diameter	New	6.078 mm to 6.100 mm (.239 in to .24 in)
	Service limit	6.000 mm (.236 in)
Centrifugal lever bore diameter	New	6.035 mm to 6.078 mm (.238 in to .239 in)
	Service limit	6.200 mm (.244 in)
Centrifugal lever pivot bolt bore diameter	New	6.113 mm to 6.171 mm (.241 in to .243 in)
	Service limit	6.300 mm (.248 in)
Drive pulley sliding sheave large bushing	New	55.000 mm to 55.040 mm (2.165 in to 2.167 in)
	Service limit	55.200 mm (2.173 in)
Drive pulley sliding sheave small bushing	New	30.000 mm to 30.040 mm (1.181 in to 1.183 in)
	Service limit	30.200 mm (1.189 in)
Drive pulley spring free length	Service limit	75 mm (2.953 in)
Drive pulley spring squareness	Service limit	4 mm (.157 in)
Spring sleeve length	New	9.2 mm to 9.4 mm (.362 in to .37 in)
	Service limit	9.0 mm (.354 in)
Driven pulley sliding sheave bushing	New	30.060 mm to 30.100 mm (1.183 in to 1.185 in)
	Service limit	30.200 mm (1.189 in)
Driven pulley fixed sheave bushing	New	30.060 mm to 30.100 mm (1.183 in to 1.185 in)
	Service limit	30.200 mm (1.189 in)
Torque gear on driven pulley	Service limit	7.500 mm (.295 in)
Cam width on top surface	Service limit	6.000 mm (.236 in)

TRANSMISSION		
Driven pulley sliding sheave wear on contact surface	Service limit	2.000 mm (.079 in)
Driven pulley spring free length	Service limit	164 mm (6.457 in)
Driven pulley spring squareness	Service limit	3.8 mm (.15 in)

GEARBOX			
Type			Dual range (HI-LO) with park, neutral and reverse
Output shaft axial clearance		New	0.09 mm to 0.18 mm (.004 in to .007 in)
		Service limit	0.30 mm (.012 in)
Bevel gear axial clearance		New	0.02 mm to 0.11 mm (.0008 in to .0043 in)
		Service limit	0.15 mm (.006 in)
Gear groove width		New	5.00 mm to 5.10 mm (.197 in to .201 in)
		Service limit	5.20 mm (.205 in)
Counter shaft	MAG side	Service limit	17.990 mm (.708 in)
	PTO side		24.950 mm (.982 in)
Bevel gear shaft	PTO side	Service limit	24.990 mm (.984 in)
Shift fork claw thickness		New	4.800 mm to 4.860 mm (.189 in to .191 in)
		Service limit	4.750 mm (.187 in)
Overall gear ratio		High	4,189
		Low	8,000
		Reverse	8,992

ELECTRICAL SYSTEM		
Magneto generator output	Without DPS	400 W @ 6000 RPM
	With DPS T category	500 W @ 6000 RPM
Stator resistance (20°C (68°F))		0.15 to 0.30 Ω
Ignition system type		IDI (Inductive Discharge Ignition)
Ignition timing		Not adjustable
Spark plug	Quantity	1
	Make and type	NGK LMAR8D-J
	Gap	0.7 mm to 0.9 mm (.028 in to .035 in)
Engine RPM limiter setting	Forward	8000 RPM
	Reverse	15 km/h (9 MPH) without Override)

FUEL SYSTEM		
Fuel delivery	Type	Electronic Fuel Injection (EFI), 46 mm throttle body, 1 injector per cylinder
Idle speed		1250 RPM ± 50 (not adjustable)

ENGINES

ENGINE		
Engine type	570	ROTAX® 570, 4-stroke, 2 cylinders (V-twin), liquid cooled
	650	ROTAX 660, 4-stroke, 2 cylinders (V-twin), liquid cooled
	1000	ROTAX 1010, 4-stroke, 2 cylinders (V-twin), liquid cooled
Valve train		4 valves/cylinder (mechanical adjustment), single over head camshaft (SOHC) with timing chain
Bore	570 650	82 mm (3.23 in)
	1000	91 mm (3.58 in)
Stroke	570 650	61.5 mm (2.42 in)
	1000	75 mm (2.95 in)
Displacement	570 650	650 cm³ (39.7 in³)
	1000	976 cm³ (59.6 in³)
Compression ratio	570 650	10.3:1
	1000	10.6:1
Maximum HP RPM	570	7500 RPM
	650	8000 RPM
	1000	7000 RPM
Exhaust system		Spark arrestor approved by USDA Forest Service
Air filter		Synthetic paper filter with foam
Intake valve opening		5° BTDC
Intake valve closing	570 650	45° ABDC
	1000	60° ABDC
Exhaust valve opening	570 650	50° BBDC
	1000	55° BBDC
Exhaust valve closing	570 650	0° ATDC
	1000	5° ATDC
Valve clearance	Intake	0.06 mm to 0.14 mm (.0024 in to .0055 in)
	Exhaust	0.11 mm to 0.19 mm (.0043 in to .0075 in)

ENGINE				
Valve stem diameter	Intake	New		4.966 mm to 4.980 mm (.1955 in to .1961 in)
		Service limit		4.930 mm (.1941 in)
	Exhaust	New		4.956 mm to 4.970 mm (.1951 in to .1957 in)
		Service limit		4.930 mm (.1941 in)
Valve out of round	Intake and exhaust	New		0.005 mm (.0002 in)
		Service limit		0.06 mm (.0024 in)
Valve guide diameter	Intake and Exhaust	New		4.998 mm to 5.018 mm (.1968 in to .1976 in)
		Service limit		5.050 mm (.1988 in)
Valve spring free length		New		40.81 mm (1.607 in)
		Service limit		39.00 mm (1.535 in)
Valve seat contact width	Intake	New		1.05 mm to 1.35 mm (.041 in to .053 in)
		Service limit		1.8 mm (.071 in)
	Exhaust	New		1.25 mm to 1.55 mm (.049 in to .061 in)
		Service limit		2 mm (.079 in)
Rocker arm bore diameter		New		12.036 mm to 12.050 mm (.4739 in to .4744 in)
		Service limit		12.060 mm (.4748 in)
Rocker arm shaft diameter		New		12.000 mm to 12.018 mm (.4724 in to .4731 in)
		Service limit		11.990 mm (.472 in)
Piston diameter		New	570 650	81.950 mm to 81.966 mm (3.2264 in to 3.227 in)
		Service limit		81.850 mm (3.2224 in)
		New	1000	90.950 mm to 90.966 mm (3.5807 in to 3.5813 in)
		Service limit		90.900 mm (3.5787 in)
Piston/cylinder clearance		New	570 650	0.057 mm to 0.087 mm (.0022 in to .0034 in)
		Service limit		0.130 mm (.0051 in)
		New	1000	0.027 mm to 0.057 mm (.0011 in to .0022 in)
		Service limit		0.100 mm (.0039 in)
Piston ring type	1st			Upper compression ring, rectangular
	2nd			Lower compression ring, tapered face
	3rd			Oil scraper ring

ENGINE				
Ring end gap	Rectangular	New		0.20 mm to 0.40 mm (.008 in to .016 in)
		Service limit		0.60 mm (.024 in)
	Tapered face	New		0.20 mm to 0.40 mm (.008 in to .016 in)
		Service limit		0.70 mm (.028 in)
	Oil scraper ring	New		0.20 mm to 0.70 mm (.008 in to .028 in)
		Service limit		1.00 mm (.039 in)
Ring/piston groove clearance	Rectangular	New		0.03 mm to 0.07 mm (.0012 in to .0028 in)
		Service limit		0.15 mm (.0059 in)
	Tapered face	New		0.02 mm to 0.06 mm (.0008 in to .0024 in)
		Service limit		0.15 mm (.0059 in)
	Oil scraper ring	New		0.01 mm to 0.18 mm (.0004 in to .0071 in)
		Service limit		0.25 mm (.0098 in)
Cylinder bore		New	570 650	82.023 mm to 82.037 mm (3.2293 in to 3.2298 in)
			1000	90.993 mm to 91.007 mm (3.5824 in to 3.583 in)
Cylinder taper		Maximum New		0.038 mm (.0015 in)
		Service limit		0.090 mm (.0035 in)
Cylinder out of round		Maximum New		0.015 mm (.0006 in)
		Service limit		0.020 mm (.0008 in)
Camshaft main bearing journal	Timing chain side	New		34.959 mm to 34.975 mm (1.3763 in to 1.377 in)
		Service limit		34.950 mm (1.376 in)
	Spark plug side	New		21.959 mm to 21.980 mm (.8645 in to .8654 in)
		Service limit		21.950 mm (.8642 in)
Camshaft main bearing journal bore	Timing chain side	New		35.000 mm to 35.025 mm (1.378 in to 1.3789 in)
		Service limit		35.040 mm (1.3795 in)
	Spark plug side	New		22.000 mm to 22.021 mm (.8661 in to .867 in)
		Wear limit		22.040 mm (.8677 in)

ENGINE				
Camshaft lobe	Intake valve	New	570 650	32.110 mm to 32.310 mm (1.2642 in to 1.272 in)
		Service limit		32.090 mm (1.2634 in)
		New	1000	32.960 mm to 33.160 mm (1.2976 in to 1.3055 in)
		Service limit		32.940 mm (1.2969 in)
	Exhaust valve	New	570 650	31.940 mm to 32.140 mm (1.257 in to 1.265 in)
		Service limit		31.920 mm (1.2567 in)
		New	1000	32.860 mm to 33.060 mm (1.2937 in to 1.3016 in)
		Service limit		32.840 mm (1.2929 in)
Crankshaft main bearing journal diameter (MAG/PTO side)		New		42.016 mm to 42.040 mm (1.6542 in to 1.6551 in)
		Service limit		42.000 mm (1.6535 in)
Crankshaft radial play (MAG/PTO side)		Service limit		0.07 mm (.0028 in)
Crankshaft bearing journal diameter (in PTO cover)		New		34.004 mm to 34.020 mm (1.3387 in to 1.3394 in)
		Service limit		33.998 mm (1.3385 in)
Crankshaft radial play (PTO cover bearing)		Service limit		0.10 mm (.0039 in)
Crankshaft axial play		New		0.200 mm to 0.500 mm (.0079 in to .0197 in)
		Service limit		0.600 mm (.0236 in)
Crankshaft pin diameter		New	570 650	40.001 mm to 40.025 mm (1.5748 in to 1.5758 in)
			1000	41.986 mm to 42.010 mm (1.653 in to 1.6539 in)
		Service limit	570 650	39.990 mm (1.5744 in)
			1000	41.967 mm (1.6522 in)
Crankshaft deflection	MAG/PTO side	New		0.050 mm (.002 in)
Crankcase plain bearing	MAG/PTO side	Service limit		42.100 mm (1.6575 in)
PTO cover plain bearing		Service limit		34.120 mm (1.3433 in)
Connecting rod big end diameter		Service limit	570 650	40.100 mm (1.5787 in)
			1000	42.100 mm (1.6575 in)
Connecting rod big end radial play		Service limit		0.09 mm (.0035 in)
Connecting rod big end axial play		New	570 650	0.200 mm to 0.500 mm (.008 in to .02 in)
			1000	0.250 mm to 0.550 mm (.0098 in to .0217 in)
		Service limit		0.600 mm (.024 in)

ENGINE			
Connecting rod small end diameter	New	570 650	20.010 mm to 20.020 mm (.7878 in to .7882 in)
		1000	22.010 mm to 22.020 mm (.8665 in to .8669 in)
	Service limit	570 650	20.060 mm (.7898 in)
		1000	22.050 mm (.8681 in)
Piston pin diameter	New	570 650	19.996 mm to 20.000 mm (.7872 in to .7874 in)
		1000	21.996 mm to 22.000 mm (.866 in to .866 in)
	Service limit	570 650	19.980 mm (.787 in)
		1000	21.980 mm (.8654 in)
Connecting rod/piston pin clearance (radial play)	Service limit		0.080 mm (.0031 in)

LUBRICATION SYSTEM		
Type		Wet sump. Replaceable cartridge oil filter
Oil filter		BRP Rotax paper type, replaceable
Engine oil pressure	Minimum	300 kPa (44 PSI) at 6000 RPM
Engine oil	Capacity (oil change with filter)	2.0 L (2.1 qt (U.S. liq.))
	Recommended	For the summer season, use XPS 4-stroke synth. blend oil . For the winter season, use XPS 4-stroke synthetic oil . If XPS engine oil is not available, use a 4-stroke SAE 5W40 engine oil that meets or exceeds the requirements for API service classification SJ, SL, SM or SN.

TRANSMISSION		
Type		CVT (Continuously Variable Transmission), sub-transmission with L/H/N/R/P, standard engine braking
Engagement RPM		1800 ± 100 RPM
Drive belt width	Service limit	30.00 mm (1.181 in)
Governor cup roller outer diameter	New	13.80 mm to 14.00 mm (.543 in to .551 in)
	Service limit	13.20 mm (.52 in)
Governor cup roller inner diameter	New	8.025 mm to 8.175 mm (.316 in to .322 in)
	Service limit	9.000 mm (.354 in)

TRANSMISSION			
Centrifugal lever pivot bolt diameter	New		6.078 mm to 6.100 mm (.239 in to .24 in)
	Service limit		6.000 mm (.236 in)
Centrifugal lever bore diameter	New		6.035 mm to 6.078 mm (.2376 in to .2393 in)
	Service limit		6.200 mm (.244 in)
Drive pulley sliding half centrifugal lever pivot bolt bore diameter	New		6.113 mm to 6.171 mm (.241 in to .243 in)
	Service limit		6.300 mm (.248 in)
Drive pulley sliding half large bushing	New		55.000 mm to 55.040 mm (2.165 in to 2.167 in)
	Service limit		55.200 mm (2.173 in)
Drive pulley sliding half small bushing	New		32.000 mm to 32.040 mm (1.26 in to 1.261 in)
	Service limit		32.200 mm (1.268 in)
Drive pulley spring free length	Service limit	570 650	85 mm (3.346 in)
		1000	100 mm (3.937 in)
Drive pulley spring free squareness	Service limit		4 mm (.157 in)
Spring sleeve length	New		9.2 mm to 9.4 mm (.362 in to .37 in)
	Service limit		9.0 mm (.354 in)
Driven pulley sliding half bushing	New		30.060 mm to 30.100 mm (1.183 in to 1.185 in)
	Service limit		30.200 mm (1.189 in)
Driven pulley sliding fixed bushing	New		30.060 mm to 30.100 mm (1.183 in to 1.185 in)
	Service limit		30.200 mm (1.189 in)
Torque gear on driven pulley	Service limit		7.500 mm (.295 in)
Cam width on top surface	Service limit	570 650	4.5 mm (.177 in)
		1000	9.0 mm (.354 in)
Driven pulley sliding sheave - wear on cam contact surface	Service limit		1.0 mm (.039 in)
Driven pulley spring free length	Service limit	570 650	125 mm (4.921 in)
		1000	130 mm (5.118 in)
Driven pulley spring free squareness	Service limit		3.8 mm (.15 in)

GEARBOX WITH EXTERNAL SWITCHES			
Type			Dual range (HI-LO) with park, neutral and reverse
Gear ratios	Angle drive sub-transmission	570 650	32/13 = 2.462
	High		35/28 = 1.250
	Low		46/20 = 2.300
	Reverse		31/14 = 2.214
	Angle drive sub-transmission	1000	32/13 = 2.462
	High		34/29 = 1.173
	Low		46/20 = 2.300
	Reverse		31/14 = 2.214
Overall gear ratios	High	570 650	3,078
	Low		5.662
	Reverse		5.451
	High	1000	2,886
	Low		5.662
	Reverse		5.451
Gearbox oil	Capacity		400 ml (13.5 U.S. oz)
	Recommended		XPS synthetic gear oil (75W 140) (P/N 293 600 140) or a 75W140 API GL-5 synthetic gear oil
Output shaft backlash	New		0.10 mm to 0.20 mm (.004 in to .008 in)
	Service limit		0.25 mm (.01 in)
Coupling sleeve groove width	New		5.25 mm to 5.35 mm (.207 in to .211 in)
	Service limit		5.50 mm (.217 in)
Coupling fork claw thickness	New		4.95 mm to 5.05 mm (.195 in to .199 in)
	Service limit		4.80 mm (.189 in)
Shift fork claw thickness (high gear shift fork)	New		4.80 mm to 4.90 mm (.189 in to .193 in)
	Service limit		4.70 mm (.185 in)
Shift fork claw thickness (low and reverse gear shift fork)	New		5.10 mm to 5.20 mm (.201 in to .205 in)
	Service limit		5.0 mm (.197 in)
Shift fork pin diameter	New		6.92 mm to 6.97 mm (.272 in to .274 in)
	Service limit		6.85 mm (.27 in)
Width of shift fork engagement groove (low and reverse gear)	New		5.30 mm to 5.40 mm (.209 in to .213 in)
	Service limit		5.50 mm (.217 in)

GEARBOX WITH EXTERNAL SWITCHES			
Width of shift fork engagement groove (high gear)		New	5.00 mm to 5.10 mm (.197 in to .201 in)
		Service limit	5.20 mm (.205 in)
Diameter free pinions		New	29.000 mm to 29.013 mm (1.1417 in to 1.1422 in)
		Service limit	29.015 mm (1.1423 in)
Intermediate gear shaft		New	24.979 mm to 25.000 mm (.9834 in to .9843 in)
		Service limit	24.977 mm (.983 in)
Countershaft	MAG side	New	N.A.
		Service limit	17.990 mm (.7083 in)
	CVT side	New	N.A.
		Service limit	24.970 mm (.9831 in)
	Free pinion bearing	New	N.A.
		Service limit	24.970 mm (.9831 in)
Bevel gear shaft	Free pinion bearing	Service limit	24.984 mm (.9836 in)

GEARBOX WITH GBPS			
Type			Dual range (HI-LO) with park, neutral and reverse
Gear ratios	Angle drive sub-transmission	570 650 (PRO)	37/15 = 2.467
	Intermediate		45/44 = 1.023
	High		36/27 = 1.333
	Low		46/17 = 2.706
	Reverse		34/12 = 2.833
	Angle drive sub-transmission	650 (6x6) 1000 (6x6)	37/15 = 2.467
	Intermediate		45/40 = 1.125
	High		36/27 = 1.333
	Low		46/17 = 2.706
	Reverse		34/12 = 2.833
	Angle drive sub-transmission	1000 (PRO)	37/15 = 2.467
	Intermediate		45/44 = 1.023
	High		37/33 = 1.121
	Low		46/17 = 2.706
	Reverse		34/12 = 2.833

GEARBOX WITH GBPS			
Overall gear ratios	High	570 650 (PRO)	3.364
	Low		6.826
	Reverse		7.148
	High	650 (6x6) 1000 (6x6)	3.700
	Low		7.510
	Reverse		7.863
	High	1000 (PRO)	2.829
	Low		6.826
	Reverse		7.148
Gearbox oil	Capacity		450 ml (15.22 U.S. oz)
	Recommended		XPS synthetic gear oil (75W 140) (P/N 293 600 140) or a 75W140 API GL-5 synthetic gear oil
Coupling sleeve groove width	New		5.25 mm to 5.35 mm (.207 in to .211 in)
	Service limit		5.50 mm (.217 in)
Coupling fork claw thickness	New		4.95 mm to 5.05 mm (.195 in to .199 in)
	Service limit		4.80 mm (.189 in)
Shift fork claw thickness (high gear shift fork)	New		5.10 mm to 5.20 mm (.201 in to .205 in)
	Service limit		5.0 mm (.197 in)
Shift fork claw thickness (low and reverse gear shift fork)	New		5.10 mm to 5.20 mm (.201 in to .205 in)
	Service limit		5.0 mm (.197 in)
Width of shift fork engagement groove (low and reverse gear)	New		5.30 mm to 5.40 mm (.209 in to .213 in)
	Service limit		5.50 mm (.217 in)
Width of shift fork engagement groove (high gear)	New		5.30 mm to 5.40 mm (.209 in to .213 in)
	Service limit		5.50 mm (.217 in)
Diameter free pinions	New		29.000 mm to 29.013 mm (1.1417 in to 1.1422 in)
	Service limit		29.015 mm (1.1423 in)
Intermediate gear shaft	New		24.979 mm to 25.000 mm (.9834 in to .9843 in)
	Service limit		24.977 mm (.983 in)

GEARBOX WITH GBPS			
Countershaft	MAG side	New	19.977 mm to 19.990 mm (.7865 in to .787 in)
		Service limit	19.973 mm (.7863 in)
	CVT side	New	24.977 mm to 24.990 mm (.9833 in to .9839 in)
		Service limit	24.970 mm (.9831 in)
Main shaft	Free pinion bearing	New	24.987 mm to 25.000 mm (.9837 in to .9843 in)
		Service limit	24.984 mm (.9836 in)
	Bearing journal MAG/CVT side	New	16.980 mm to 16.991 mm (.6685 in to .6689 in)
		Service limit	16.976 mm (.6683 in)

ELECTRICAL SYSTEM		
Magneto generator output	570	500 W @ 6000 RPM
	650 1000	625 W @ 6000 RPM
Ignition system type		IDI (Inductive Discharge Ignition)
Ignition timing		Not adjustable
Spark plug	Quantity	2
	Make and type	NGK DCPR8E
	Gap	0.7 mm to 0.8 mm (.028 in to .031 in)
Engine RPM limiter setting	Forward	8000 RPM
	Reverse	15 km/h (9 MPH) (without override)

FUEL SYSTEM		
Fuel delivery		Electronic Fuel Injection (EFI), 46 mm throttle body, 1 injector per cylinder
Fuel pump	Type	Electrical (in fuel tank)
	Operating pressure	350 kPa ± 10 kPa (51 PSI ± 1 PSI)
Idle speed		1250 ± 50 (not adjustable)

OUTLANDER (WITH METAL RACK)

COOLING SYSTEM			
Coolant	Type		Extended life pre-mixed coolant or coolant specifically formulated for aluminum engines
	Quantity	450	2.9 L (.77 U.S. gal.)
		570 except X mr	3.4 L (.9 U.S. gal.)
		X mr	3.5 L (.92 U.S. gal.)
Radiator cap opening pressure			110 kPa (16 PSI)

EXHAUST SYSTEM	
Exhaust system	Spark arrestor approved by USDA Forest Service Catalyst on NRMM models (1)
(1) For NRMM models identification, refer to *INTRODUCTION* section.	

ELECTRICAL SYSTEM (ALL EXCEPT NRMM AND NON-EPA COMPLIANT MODELS)			
Battery	Type		Maintenance free
	Voltage		12 volts
	Nominal rating		18 A•h
	Power starter output		0.7 KW
Headlight	High / Low		HS1 35 W
Taillight			P21/5 W
Fusible links	Main	FL-1	16 AWG
	Fan/accessories	FL-2	16 AWG
Relay	Cooling Fan Relay	RY1	-
	Main Relay	RY2	-
	Accessories Relay	RY3	-
	Fuel Pump Relay	RY4	-
	ECM	RY5	10 A
	Brake Relay	RY8	-

ELECTRICAL SYSTEM (ALL EXCEPT NRMM AND NON-EPA COMPLIANT MODELS)			
Fuses (fuse box 1)	Brake Diagnostic	F4	10 A
	Injectors/Ignition ECM Fuel Pump VSS	F5	10 A
	Key Switch Starter Solenoid Gauge	F8	10 A
	Cooling Fan Diagnostic	F9	20 A
	DC Outlet/Light/Accessories Euro Control (CE) 2WD/4WD	F12	20 A
Fuse in fuse box 2	DPS	F3	40 A

ELECTRICAL SYSTEM (NRMM AND NON-EPA COMPLIANT MODELS)			
Battery	Type		Maintenance free
	Voltage		12 volts
	Nominal rating		18 A•h
	Power starter output		0.7 KW
Headlight	High / Low		HS1 35 W
Taillight			P21/5 W
Fusible links	Main	FL-1	16 AWG
	Fan/accessories	FL-2	16 AWG
Relay	Fan Relay	RY1	-
	Main Relay	RY2	-
	Lights Relay	RY3	-
	Accessories	RY5	-
	Brake Relay	RY6	-

ELECTRICAL SYSTEM (NRMM AND NON-EPA COMPLIANT MODELS)			
Fuses (fuse box 1)	Start Switch	F1	10 A
	Lights	F2	30 A
	Accessories 1	F3	20 A
	Accessories 2	F4	20 A
	Injectors Ignition coils Fuel Pump	F5	10 A
	Relays DPS Gauge	F6	10 A
	Brake lights	F7	10 A
	DESS Key ECM	F8	10 A
	2WD/4WD	F9	10 A
	DC Outlet	F12	25 A
Fuse in fuse box 2	DPS	F3	40 A

FUEL SYSTEM			
Fuel delivery			Electronic Fuel Injection (EFI)
Fuel pump	Type		Electrical (in fuel tank)
	Operating pressure		350 kPa (51 PSI)
Fuel	Type		Regular unleaded gasoline
	Octane rating	Inside North America	87 (R+M)/2 or higher
		Outside North America	92 RON or higher
Fuel tank capacity			20.5 L (5.4 U.S. gal.)
Fuel remaining when low fuel light turns ON			± 5 L (1.3 U.S. gal.)

DRIVE SYSTEM		
Front drive	Base	Visco-lok†auto-locking front differential
	All other models	Visco-lok QE auto-locking front differential
Front drive ratio		3.6:1
Rear drive		Straight bevel gear / Shaft driven final drive
Rear drive ratio		3.6:1
Front differential oil	Capacity	500 ml (17 U.S. oz)
	Recommended	Synthetic gear oil 75W90 API GL-5

DRIVE SYSTEM		
Rear final drive oil	Capacity	250 ml (8.45 U.S. oz)
	Type	Synthetic gear oil 75W140 API GL-5
CV joint grease		CV joint grease or an equivalent
Propeller shaft grease for spline connections		Propeller shaft grease or an equivalent

STEERING		
Turning radius	450	205.7 cm (81 in)
	570 except X mr	212 cm (83 in)
	X mr	256.5 cm (101 in)
	MAX 450	233.7 cm (92 in)
	MAX 570	239 cm (94 in)
Total toe (vehicle on the ground)		0.5° **toe-in**
Camber angle (vehicle on the ground)		0°
Tie-rod maximum length unengaged threads		348.5 mm (13.72 in)

FRONT SUSPENSION		
Suspension type		Double A-arm with dive-control geometry
Suspension travel	X mr	137.16 mm (5.4 in)
	All other models	229 mm (9 in)
Shock absorber	Qty	2
	Type	Oil
Preload adjustment type	X mr	Threaded rings
	All other models	5 positions cam

REAR SUSPENSION		
Suspension type		Trailing arm Independent (TTI) with external stabilizer bar
Suspension travel	X mr	216 mm (8.5 in)
	All other models	224 mm (8.8 in)
Shock absorber	Qty	2
	Type	Oil
Preload adjustment type	X mr	Threaded rings
	All other models	5 position cam

SUSPENSION FACTORY SETTINGS		
Spring preload	Front	Cam position 3
	Rear	Cam position 3

BRAKES		
Front brake	Qty	2
	Type	214 mm cross drilled disc brakes with hydraulic twin-piston calipers
Rear brake	Qty	1
	Type	214 mm cross drilled disc brake with hydraulic twin-piston caliper
Brake fluid	Capacity	260 ml (8.8 U.S. oz)
	Type	DOT 4
Caliper piston diameter		2 x 26 mm
Brake pad material	PRO models	Metallic
	All other models	Organic
Minimum brake pad thickness		1 mm (.04 in)
Minimum brake disc thickness		4 mm (.157 in)
Maximum brake disc warpage		0.2 mm (.01 in)

TIRES			
Front pressure	All models except X mr		48.3 kPa (7 PSI)
	X mr	Maximum	48.3 kPa (7 PSI)
		Minimum	41.4 kPa (6 PSI)
Rear pressure	All models except X mr		48.3 kPa (7 PSI)
	X mr	Maximum	48.3 kPa (7 PSI)
		Minimum	41.4 kPa (6 PSI)
Minimum tire thread depth			3 mm (.118 in)
Size	Front	Base DPS XT	635 x 203 x 305 mm (25 x 8 x 12 in)
		Mossy Oak† Hunting Edition PRO	660 x 203 x 305 mm (26 x 8 x 12 in)
		X mr	711 x 203 x 305 mm (28 x 8 x 12 in)
	Rear	Base DPS XT	635 x 254 x 305 mm (25 x 10 x 12 in)
		Mossy Oak† Hunting Edition PRO	660 x 254 x 305 mm (26 x 10 x 12 in)
		X mr	711 x 254 x 305 mm (28 x 10 x 12 in)

WHEELS			
Type		Base, DPS and PRO	Steel
		All other models	Cast aluminum
Size	Front		305 x 152 mm (12 x 6 in)
	Rear		305 x 191 mm (12 x 7.5 in)
Wheel lug nut torque			80 N•m ± 5 N•m (59 lbf•ft ± 4 lbf•ft)

DIMENSIONS			
Overall length		1-UP	211 cm (83 in)
		MAX	231 cm (91 in)
Overall width			116.8 cm (46 in)
Overall height		1-UP	124 cm (49 in)
		MAX	133 cm (52.5 in)
Wheel base		1-UP	129.5 cm (51 in)
		MAX	149.9 cm (59 in)
Wheel track	Front		97.4 cm (38 in)
	Rear	450	94.3 cm (37.1 in)
		570	92.3 cm (36 in)
Ground clearance		X mr	27.9 cm (11 in)
		Mossy Oak PRO	29.2 cm (11.5 in)
		All other models	26.7 cm (10.5 in)

WEIGHT AND LOADING CAPACITY			
Dry weight	1-UP	450	308 kg (678 lb)
		570 except X mr	319 kg (704 lb)
		X mr	382 kg (843 lb)
	MAX	450	324 kg (715 lb)
		570	336 kg (741 lb)
Front rack		450 570 except X mr	54 kg (120 lb)
		X mr	0 kg (0 lb)
Rear rack			109 kg (240 lb)
Rear storage compartment loading capacity			11 L (2.9 U.S. gal.)or 10 kg (22 lb)
Total vehicle load allowed (including driver, passenger, all other loads and added accessories)		All except X mr, Mossy Oak and MAX	235 kg (517 lb)
		X mr	189 kg (417 lb)
		All MAX and Mossy Oak	272 kg (598 lb)

WEIGHT AND LOADING CAPACITY		
Towing capacity	Canada and United States	750 kg (1,654 lb)
	All other countries	590 kg (1,300 lb)
Tongue capacity	Canada and United States	75 kg (165 lb)
	All other countries	23 kg (50 lb)

OUTLANDER - T CATEGORY (WITH METAL RACK)

COOLING SYSTEM			
Coolant	Type		XPS extended life pre-mixed coolant or coolant specifically formulated for aluminum engines
	Quantity	450	2.9 L (.77 U.S. gal.)
		570	3.4 L (.9 U.S. gal.)
Radiator cap opening pressure			110 kPa (16 PSI)

EXHAUST SYSTEM	
Exhaust system	Spark arrestor approved by USDA Forest Service Catalyst on NRMM models (1)
(1) For NRMM models identification, refer to *INTRODUCTION* section.	

ELECTRICAL SYSTEM			
Battery	Type		Maintenance free
	Voltage		12 volts
	Nominal rating		18 A•h
	Power starter output		0.7 KW
Headlight	High		HS1 35 W
	Low		HS1 35 W
Taillight			P21/5W
Turn signal lights			R10W
Position lights			W5W
Licence plate light			R10W
Fusible links	Main Cooling fan	FL-1	16 gauge
	Lights Accessories	FL-2	16 gauge
Fuse holders	DPS Diagnostic connector	-	40 A
	ABS (Anti-lock Brake System)	-	40 A
Relays	Cooling fan relay	RY1	-
	Main relay	RY2	-
	Lights relay	RY3	-
	Trailer flasher relay	RY4	-
	Accessories relay	RY5	-
	Brake relay	RY6	-

ELECTRICAL SYSTEM			
Fuses	Ignition switch Clock	F1	10 A
	Lights relay	F2	30 A
	Accessory connectors 1 DC1 / DC3	F3	20 A
	Accessory connectors 2 DC5 / DC6	F4	20 A
	Fuel pump Injectors Ignition coils	F5	10 A
	Gauge DPS ABS	F6	10 A
	Tail lights Flashers	F7	10 A
	ECM	F8	10 A
	4WD actuator	F9	10 A
	Hazard	F10	10 A
	Cooling fan	F12	25 A

FUEL SYSTEM		
Fuel delivery		Electronic Fuel Injection (EFI)
Fuel pump	Type	Electrical (in fuel tank)
	Operating pressure	350 kPa (51 PSI)
Fuel	Type	Regular unleaded gasoline
	Octane rating	92 RON or higher
Fuel tank capacity		20.5 L (5.4 U.S. gal.)
Fuel remaining when low fuel light turns ON		± 5 L (1.3 U.S. gal.)

DRIVE SYSTEM		
Front drive	Models without DPS	Visco-lok auto-locking front differential
	Models with DPS without ABS	Visco-lok QE auto-locking front differential
	Models with ABS	Open differential with BTC (Brake Traction Control)
Front drive ratio		3.6:1
Rear drive		Spiral bevel gear / final drive
Rear drive ratio		3.6:1
Front differential oil	Capacity	500 ml (17 U.S. oz)
	Recommended	Synthetic gear oil 75W90 API GL-5

DRIVE SYSTEM		
Rear final drive oil	Capacity	250 ml (8.45 U.S. oz)
	Type	Synthetic gear oil 75W140 API GL-5
CV joint grease		CV joint grease or an equivalent
Propeller shaft grease for spline connections		Propeller shaft grease or an equivalent

STEERING		
Turning radius	450	205.7 cm (81 in)
	570	212 cm (83 in)
	MAX 450	233.7 cm (92 in)
	MAX 570	239 cm (94 in)
Total toe (vehicle on the ground)		0.5° toe-in
Camber angle (vehicle on the ground)		0°
Tie-rod maximum length unengaged threads		348.5 mm (13.72 in)

FRONT SUSPENSION		
Suspension type		Double A-arm with dive-control geometry
Suspension travel		229 mm (9 in)
Shock absorber	Qty	2
	Type	Oil
Preload adjustment type		5 positions cam

REAR SUSPENSION		
Suspension type		Trailing arm Independent (TTI) with external stabilizer bar
Suspension travel		220 mm (8.8 in)
Shock absorber	Qty	2
	Type	Oil
Preload adjustment type		5 position cam

SUSPENSION FACTORY SETTINGS		
Spring preload	Front	Cam position 3
	Rear	

BRAKES		
Front brake	Qty	2
	Type	214 mm cross drilled disc brakes with hydraulic twin-piston calipers
Rear brake	Qty	1
	Type	214 mm cross drilled disc brake with hydraulic twin-piston caliper

BRAKES		
Brake fluid	Capacity	260 ml (8.8 U.S. oz)
	Type	DOT 4
Caliper piston diameter		2 x 26 mm
Brake pad material		Organic
Minimum brake pad thickness		1 mm (.04 in)
Minimum brake disc thickness		4 mm (.157 in)
Maximum brake disc warpage		0.2 mm (.01 in)

TIRES			
Pressure	Front	1-UP with ABS and load less than 155 kg (341 lb)	48.3 kPa (7 PSI)
		1-UP with ABS and load less than 235 kg (517 lb)	62.1 kPa (9 PSI)
		1-UP without ABS	41.4 kPa (6 PSI)
		2-UP with ABS and load less than 125 kg (275 lb)	48.3 kPa (7 PSI)
		2-UP with ABS and load less than 272 kg (598 lb)	62.1 kPa (9 PSI)
		2-UP without ABS	41.4 kPa (6 PSI)
	Rear	1-UP with ABS and load less than 155 kg (341 lb)	48.3 kPa (7 PSI)
		1-UP with ABS and load less than 235 kg (517 lb)	68.9 kPa (10 PSI)
		1-UP without ABS	41.4 kPa (6 PSI)
		2-UP with ABS and load less than 125 kg (275 lb)	48.3 kPa (7 PSI)
		2-UP with ABS and load less than 272 kg (598 lb)	68.9 kPa (10 PSI)
		2-UP without ABS	41.4 kPa (6 PSI)
Minimum tire thread depth			3 mm (.118 in)
Size	Front	PRO and PRO+	205/90-12 MST (26 x 8 x 12 (in))
		Except PRO and PRO+	205/80-12 MST (25 x 8 x 12 (in))
	Rear	PRO and PRO+	255/65-12 MST (26 x 10 x 12 (in))
		Except PRO and PRO+	255/7012 MST (25 x 10 x 12 (in))

WHEELS		
Type	Base, DPS and PRO	Steel
	All other models	Cast aluminum

WHEELS		
Size	Front	305 x 152 mm (12 x 6 in)
	Rear	305 x 191 mm (12 x 7.5 in)
Wheel lug nut torque		80 N•m ± 5 N•m (59 lbf•ft ± 4 lbf•ft)

DIMENSIONS		
Overall length	1-UP	211 cm (83 in)
	MAX	231 cm (91 in)
Overall width		116.8 cm (46 in)
Overall height	1-UP	124 cm (49 in)
	MAX	133 cm (52.5 in)
Wheel base	1-UP	129.5 cm (51 in)
	MAX	149.9 cm (59 in)
Wheel track	Front	97.4 cm (38 in)
	Rear 450	94.3 cm (37.1 in)
	Rear 570	92.3 cm (36 in)
Ground clearance	All models except PRO and PRO+	26.7 cm (10.5 in)
	PRO and PRO+	29.2 cm (11.5 in)

WEIGHT AND LOADING CAPACITY				
Dry weight	1-UP	450		308 kg (678 lb)
		570	Base, DPS and PRO	319 kg (703 lb)
			PRO+	341 kg (752 lb)
	MAX	450		324 kg (715 lb)
		570	DPS and XT	336 kg (741 lb)
			PRO+	375 kg (827 lb)
Front rack				54 kg (120 lb)
Rear rack				109 kg (240 lb)
Rear storage compartment loading capacity				11 L (2.9 U.S. gal.)or 10 kg (22 lb)
Total vehicle load allowed (including driver, passenger, all other loads and added accessories)			1-UP	235 kg (517 lb)
			MAX	272 kg (598 lb)
Towing capacity		Trailer without brakes		395 kg (870 lb)
		Trailer with brakes		750 kg (1,650 lb)
Tongue capacity		Trailer without brakes		75 kg (165 lb)
		Trailer with brakes		75 kg (165 lb)

NOISE AND VIBRATION			
Exterior sound level (dB (A)) According to Annex III (EU) 2015/96	Stationary	450	80
		570	78
	Moving (Without ABS)	450	83
		570	81
	Moving (With ABS)	450	83
		570	83
Driver perceived sound level (dB (A)) According to Annex XIII (EU) 1322/2014		450	80
		570	78
Seat vibration According to Annex XIV (EU) 1322/2014			0.81

WIRING DIAGRAM INFORMATION

GENERAL

WIRING DIAGRAM LOCATION

Wiring diagrams are found in the *WIRING DIAGRAM BOOKLET*.

WIRING DIAGRAM WITH COLORED LINES

The wiring diagram on the *KNOWLEDGE CENTER* is in color.

WIRING DIAGRAM CODES

The wiring diagrams use the following codes.

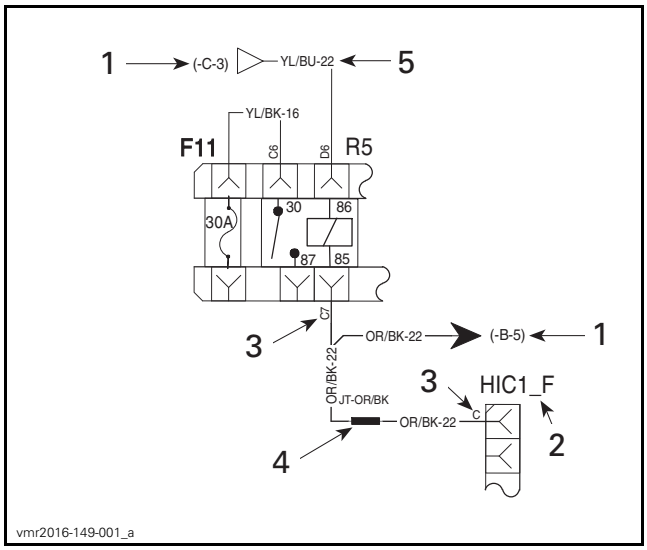

1. *Wiring diagram index*
2. *Connector code*
3. *Connector pin*
4. *Splice*
5. *Color and size*

Wiring Diagram Index

The wiring diagram is separated by rows (letters) and columns (numbers).

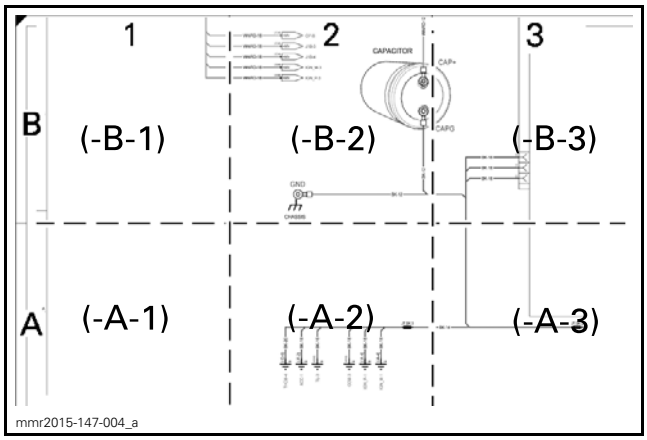

WIRING DIAGRAM INDEX

Connector Code

The wire connects to the indicated connector.

Connector Pin

The wire is the indicated pin in the connector.

NOTE: Could be identified by either a number or by a letter depending on the type of connector used.

FOLLOWING A CIRCUIT

To follow a circuit, search the in section of the wiring diagram shown in the wiring diagram index.

NOTE: The arrow indicates the direction of the power in the circuit.

In this example, the power comes **from** section (-C-3).

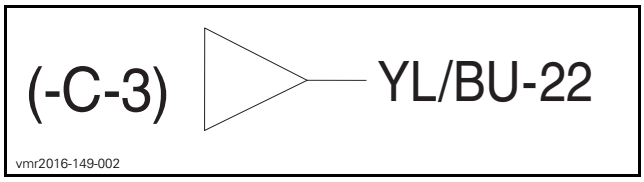

In following example, the power goes **to** the section (-B-5).

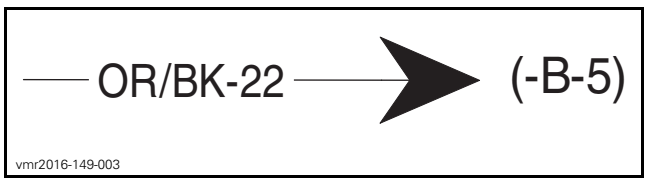

WIRE COLORS AND SIZES

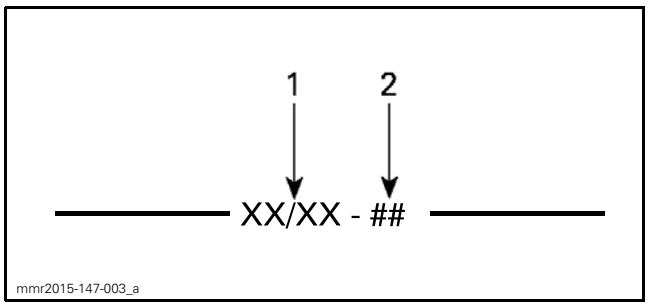

1. Wire color
2. Wire gauge (AWG)

The first color of a wire is the main color, second color is the stripe.

Example: YE/BK is a YELLOW wire with a BLACK stripe.

COLOR CODE					
BG	—	BEIGE	OG	—	ORANGE
BK	—	BLACK	RD	—	RED
BU	—	BLUE	VT	—	VIOLET
BN	—	BROWN	WH	—	WHITE
GN	—	GREEN	YE	—	YELLOW
GY	—	GRAY	PK	—	PINK
LT prefix means a "light" color. E.g: LT GN = Light green.					

SPLICES IN WIRING HARNESS

Splices in wiring harness are indicated on the wiring diagram as follows.

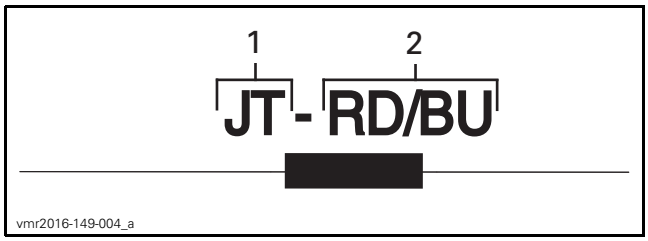

1. JT: Splice indication
2. Spliced wire color

2020 *Outlander*

with metallic racks
(except T3 EU Regulation)

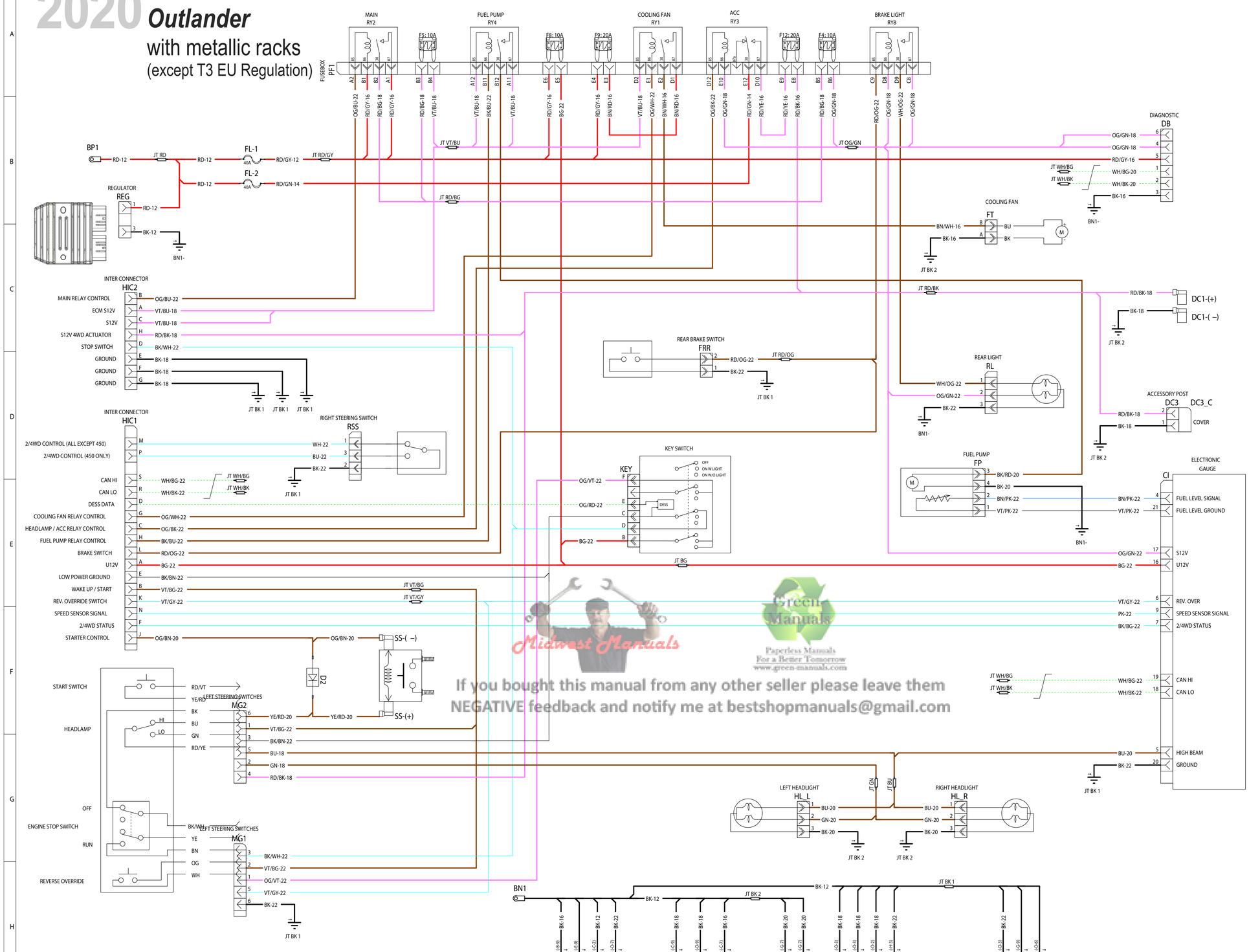

Midwest Manuals
Green Manuals
Paperless Manuals For a Better Tomorrow www.green-manuals.com
If you bought this manual from any other seller please leave them NEGATIVE feedback and notify me at bestshopmanuals@gmail.com

REF: 710006172, 710006173 REV:

2020 Outlander 570 / Renegade 570
with plastic racks
(except T3 EU Regulation)

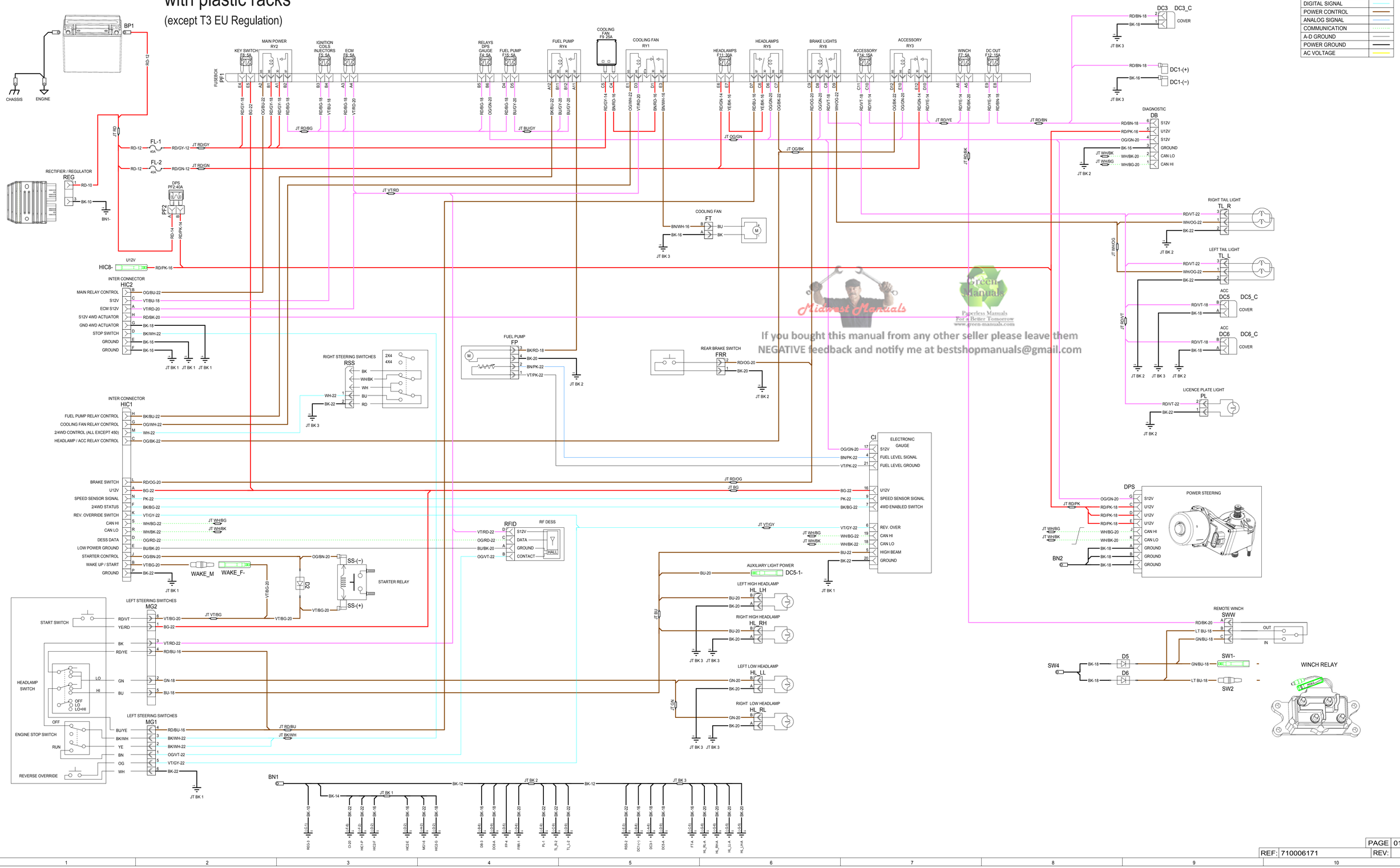

If you bought this manual from any other seller please leave them NEGATIVE feedback and notify me at bestshopmanuals@gmail.com

2020 ABS System

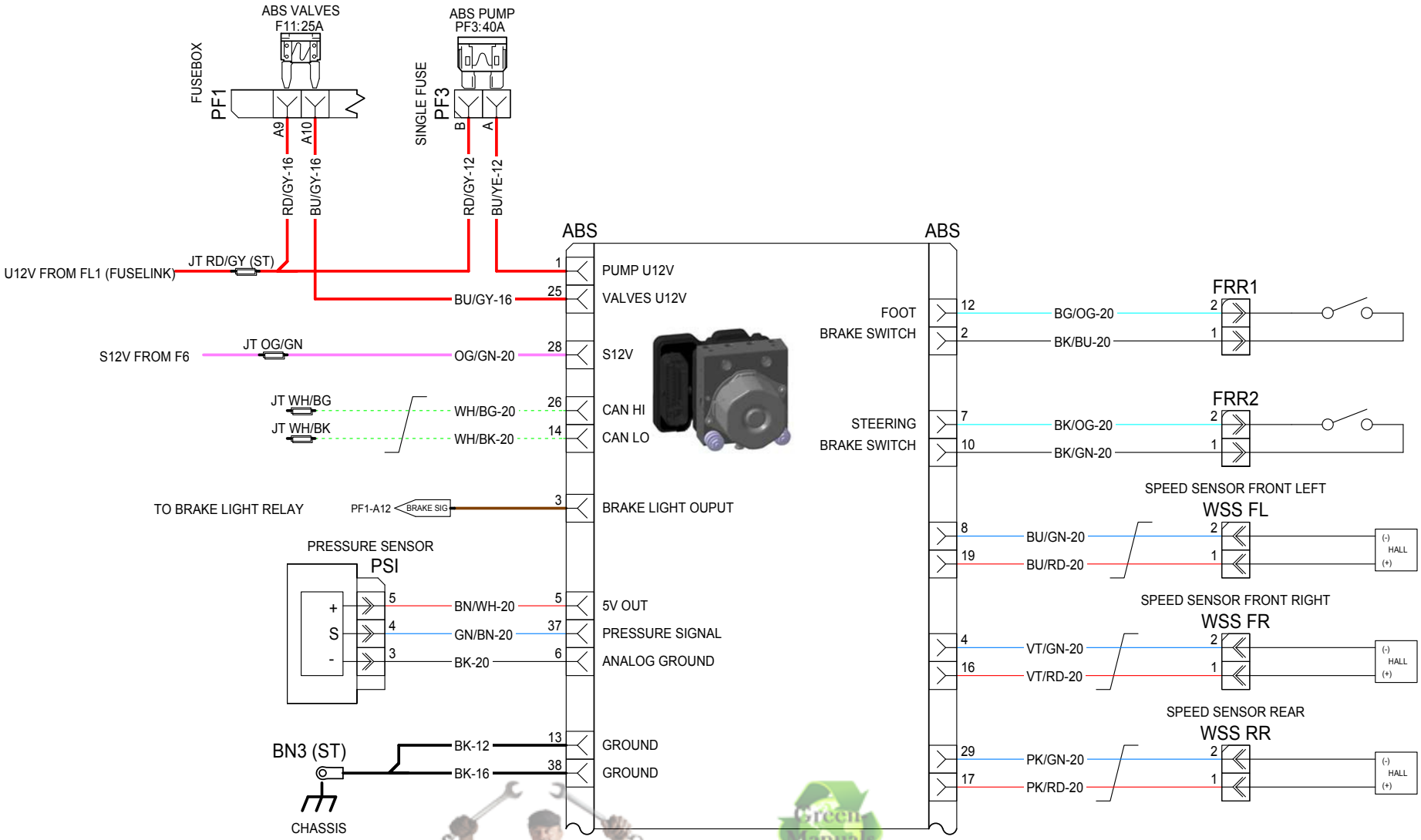

Midwest Manuals

Green Manuals
Paperless Manuals
For a Better Tomorrow
www.green-manuals.com

If you bought this manual from any other seller please leave them
NEGATIVE feedback and notify me at bestshopmanuals@gmail.com

2020 Outlander with Digital Display

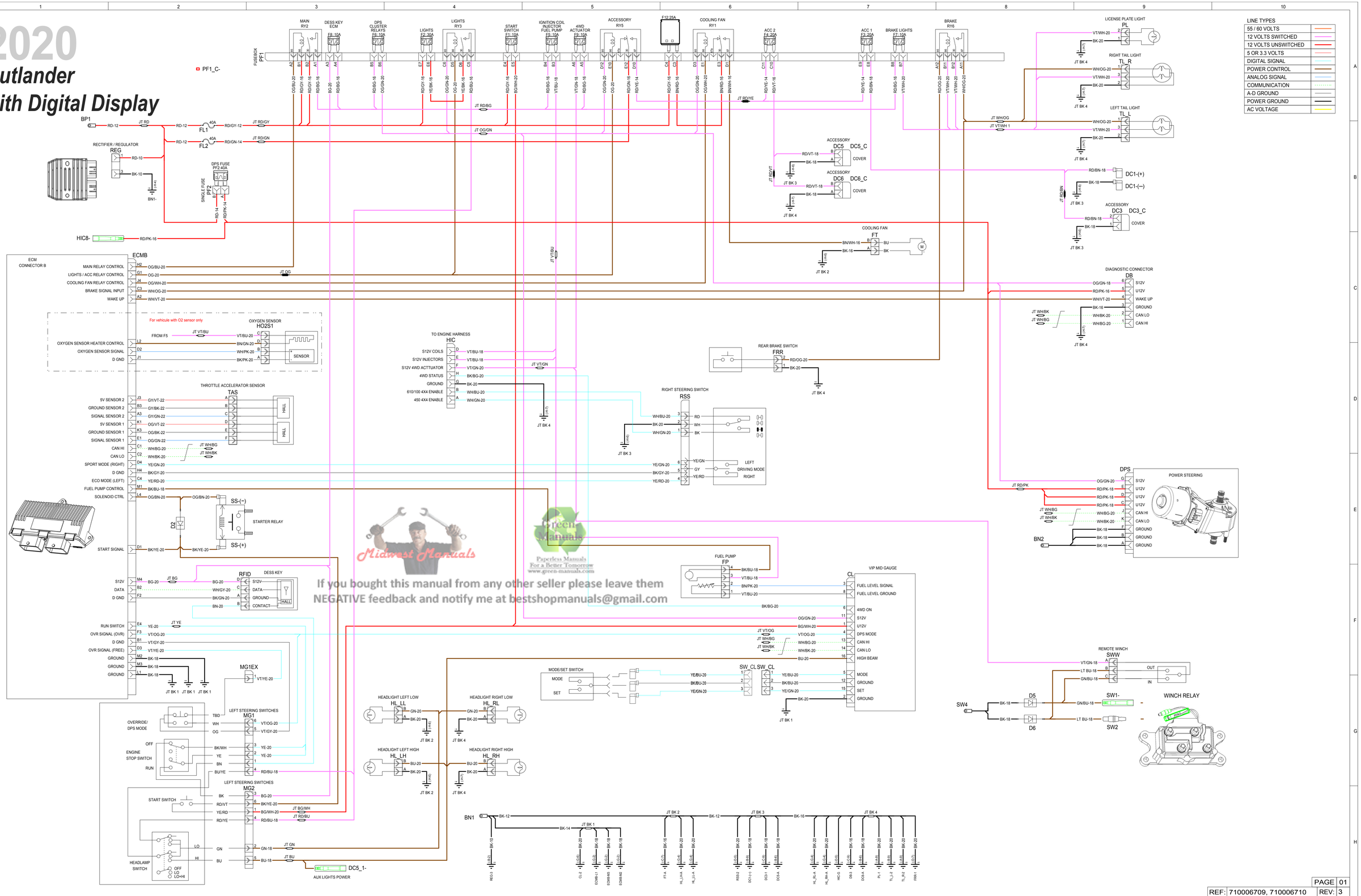

Midwest Manuals
Green Manuals
Paperless Manuals For a Better Tomorrow www.green-manuals.com
If you bought this manual from any other seller please leave them NEGATIVE feedback and notify me at bestshopmanuals@gmail.com

2020
T3 EU REGULATION

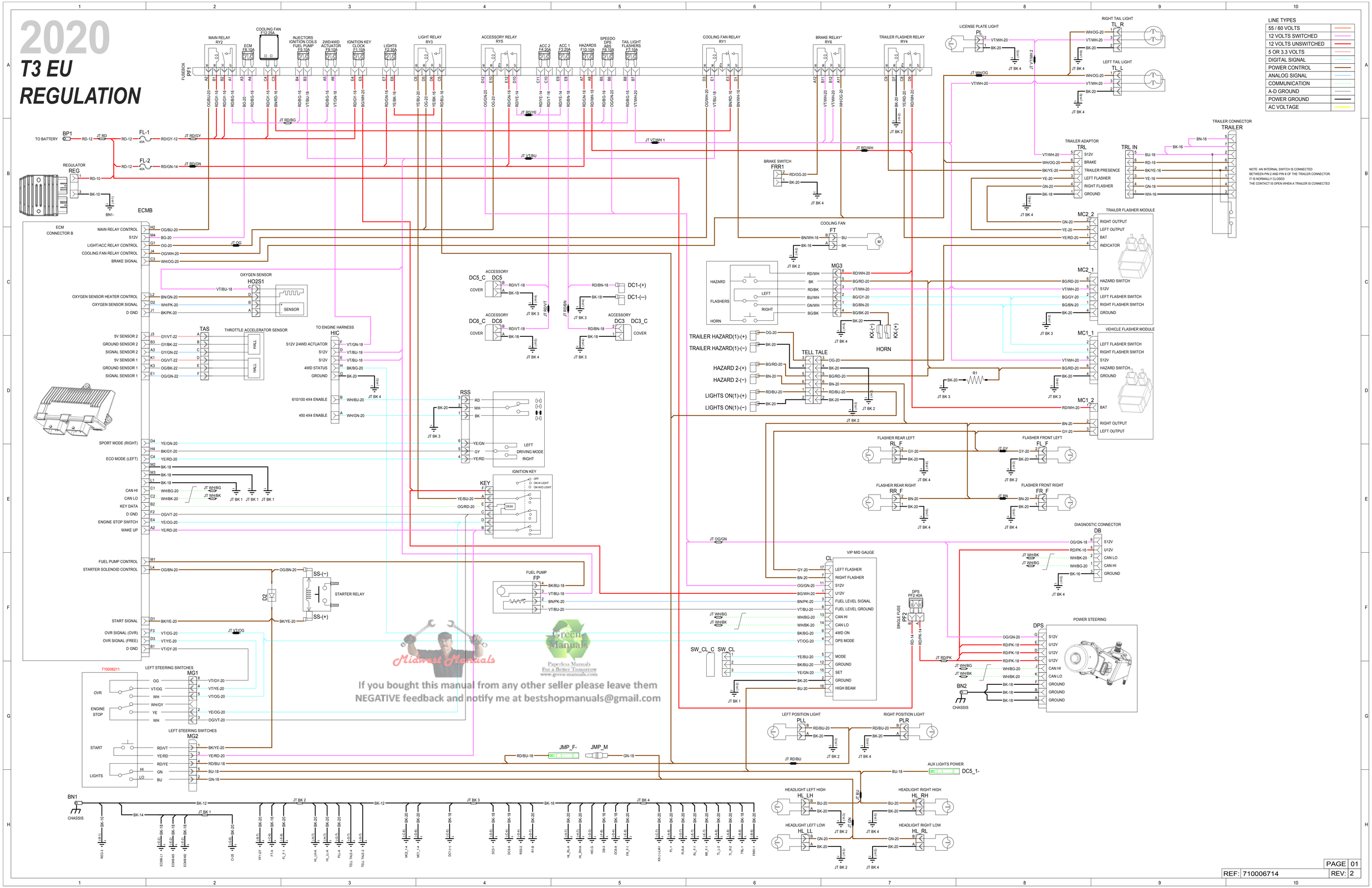

Midwest Manuals
Green Manuals
Paperless Manuals For a Better Tomorrow www.green-manuals.com
If you bought this manual from any other seller please leave them NEGATIVE feedback and notify me at bestshopmanuals@gmail.com

2020 Engine Harness 450
(except T3 EU Regulation)

Midwest Manuals
Green Manuals
Paperless Manuals For a Better Tomorrow www.green-manuals.com
If you bought this manual from any other seller please leave them NEGATIVE feedback and notify me at bestshopmanuals@gmail.com

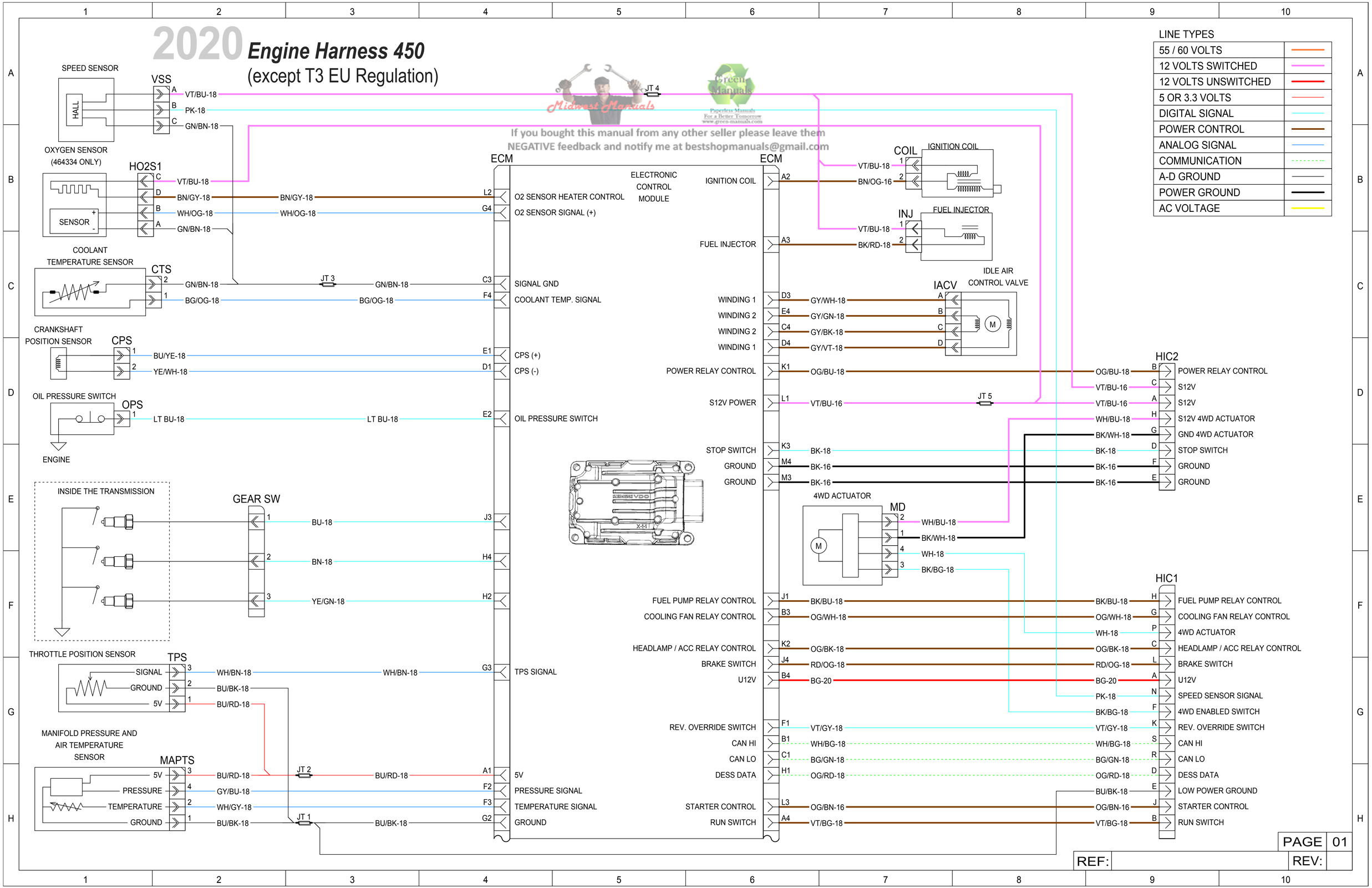

2020 Engine harness 450
(T3 EU Regulation)

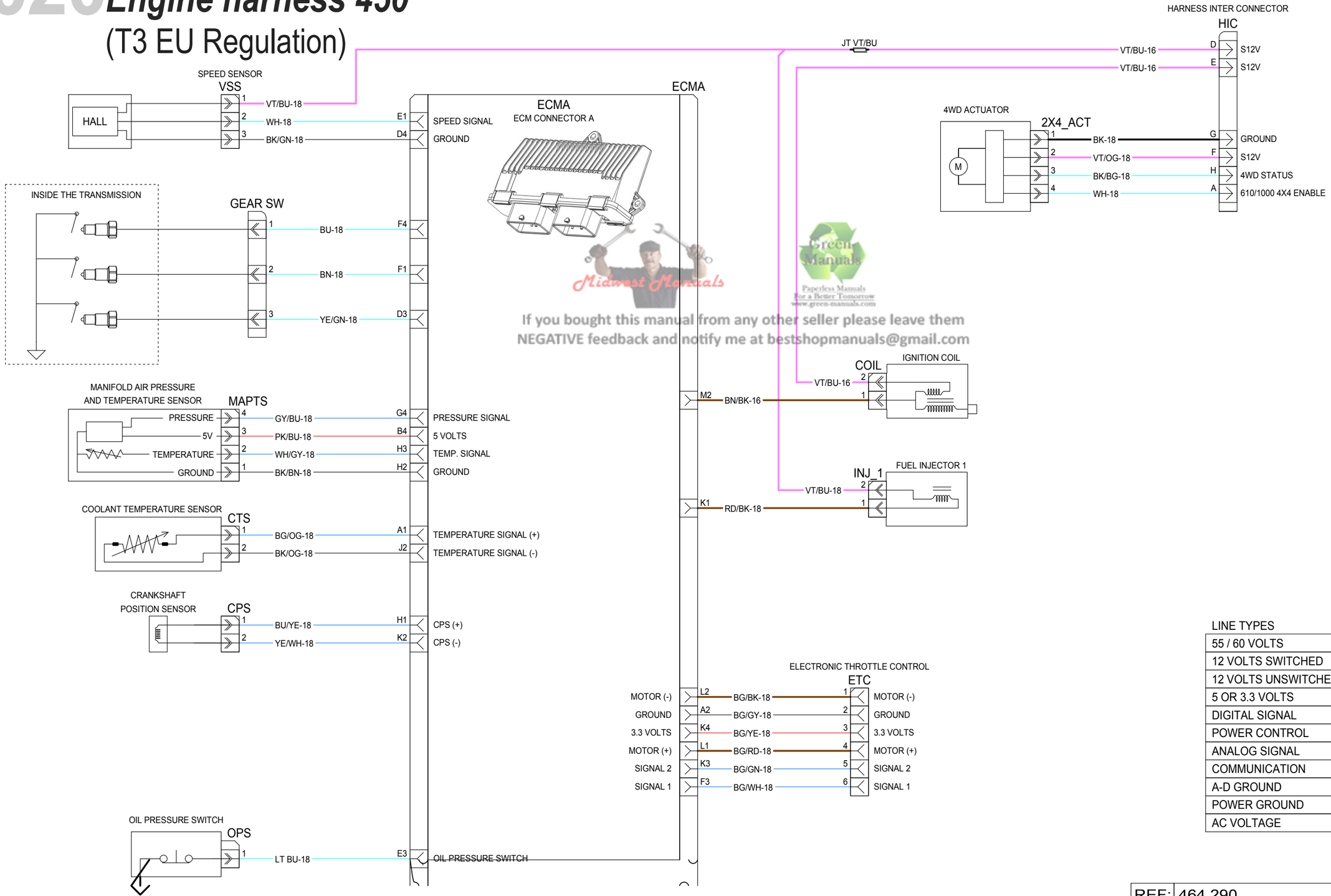

If you bought this manual from any other seller please leave them
NEGATIVE feedback and notify me at bestshopmanuals@gmail.com

LINE TYPES

55 / 60 VOLTS	
12 VOLTS SWITCHED	
12 VOLTS UNSWITCHED	
5 OR 3.3 VOLTS	
DIGITAL SIGNAL	
POWER CONTROL	
ANALOG SIGNAL	
COMMUNICATION	
A-D GROUND	
POWER GROUND	
AC VOLTAGE	

2020 Engine Harness 570/650 (except 6x6)

(gearbox with external switches)

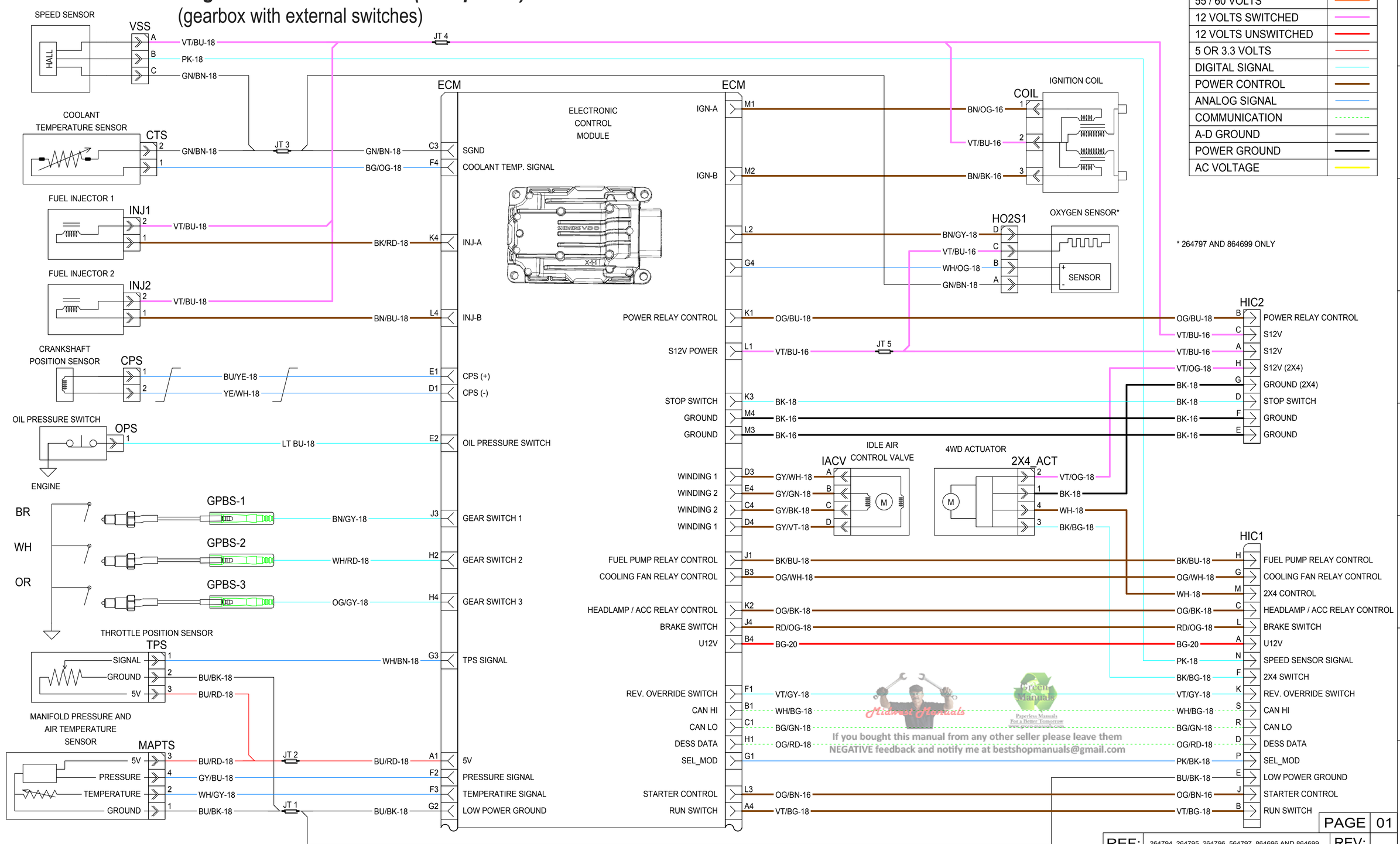

If you bought this manual from any other seller please leave them NEGATIVE feedback and notify me at bestshopmanuals@gmail.com

2020 Engine Harness 570/650 (except 6x6)

(gearbox with GBPS)

Midwest Manuals
Green Manuals
Paperless Manuals For a Better Tomorrow www.green-manuals.com
If you bought this manual from any other seller please leave them NEGATIVE feedback and notify me at bestshopmanuals@gmail.com

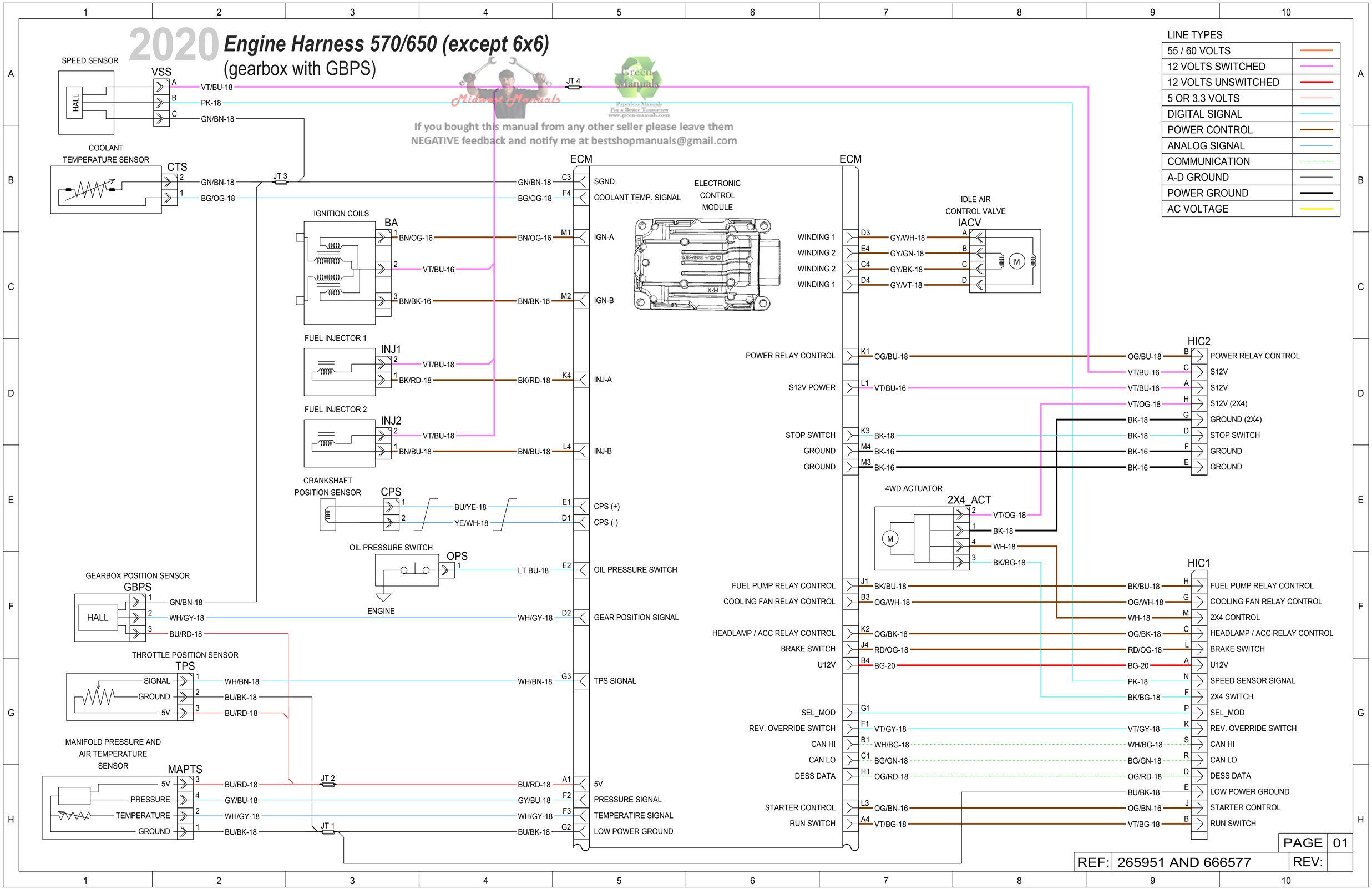

REF: 265951 AND 666577

Flat rate times are what the manufacturer pays the authorized dealer for warranty work, the times listed are usually unrealistic for even the most experienced mechanic and will take longer to actually complete.

Because of this dealers will usually charge more than the times posted.

I cannot be held responsible for any errors BRP has made in these service flat rate or parts manuals.

If you bought this manual from any other seller, they could be reselling my work.

Please leave them negative feedback & email me at bestshopmanuals@gmail.com .

Our goal is to be one of the BEST sellers on the internet by providing you with the BEST customer service and the BEST manuals on the market.

Thank you for choosing us.

Green-Manuals

Paperless Manuals
For a Better Tomorrow

SEARCHABLE MANUAL

Midwest Manuals

INTRODUCTION

This publication governs all warranty labor allowances for 2020 BRP ATV.

1. HOW DOES IT WORK

We follow the procedures detailed in the BRP *ATV Shop Manual*. The flat rate time is the maximum time allowed for a repair involving any given part. FLAT RATE TIME IS NOT CUMULATIVE. You must use the flat rate time given for the longest lasting operation.

NOTE: The *Flat Rate Time Schedule* was prepared by skilled mechanics using the hand tool usually found in workshops and all the special tools mentioned in the *Shop Manual*.

2. COMPILATION

The *Flat Rate Time Schedule* is compiled as follows:

The actual required time to perform the repair plus (+) 30% correction factor up to 3.0 hours or (+) 15% over 3.0 hours time to take into account, among others:

- Vehicle handling
- Obtaining the parts
- Diagnosis
- Cleaning
- Special compensation (rusted bolts).

3. HOW TO USE IT

Refer to the system you need, locate part of series of parts replaced. List JOB CODE in the appropriate column on claim.

SYSTEM		PAGE
01	ENGINE	04
02	CARBURETOR AND FUEL SYSTEM	24
03	IGNITION SYSTEM	27
04	STARTER	30
05	TRANSMISSION SYSTEM	31
06	BRAKE SYSTEM	36
07	STEERING SYSTEM AND FRONT SUSPENSION	38
08	REAR SUSPENSION SYSTEM AND TRACK	44
09	BODY	48
10	ELECTRICAL SYSTEM	53

NOTE: Unless otherwise specified, dismantling order is: top to bottom, exterior to interior, front to rear.

All fractions of hours are in tenths:

0.1 = 6 minutes
0.2 = 12 minutes, and so on

LEGEND:

* REQUIRES PRIOR AUTHORIZATION BY DISTRIBUTOR.
** INDICATE LABOUR TIME ON LINE "LABOUR ONLY" OF CLAIM.
*** INDICATE $$$ AMOUNT ON "SUB-CONTRACTED LABOUR" OF CLAIM.

IMPORTANT: Always use the longest flat rate time applicable to the repair performed.

4. JOB REQUIREMENTS

All the flat rate times mentioned in the following pages include the required operations such as: engine timing (rotary valve and ignition), connecting rod(s) alignment, cylinder head(s) torque or use of parallel bar, use of ignition tester, piston clearance/ring end gap measurement, crankshaft to crankcase measurement, cylinder honing, engine leak test.

5. ILLUSTRATIONS

The illustrations contained in this manual do not necessarily show every components of a given system as *Parts Catalog* do. Their purpose is to facilitate recognition of parts related to a flat rate time. **Item numbers on illustrations correspond to the four digit Job Code.**

6. FLAT RATE TIME SUGGESTION

SEND A WARRANTY CASE ON BOSSWeb INFO CENTER

In the case, you must provide the following information:

Section *Subject*:

- Flat rate time suggestion

Section *Your Question*:

- Model year;
- Model description;
- Description job code;
- Job code;
- Present flat rate;
- Suggested flat rate;
- Detailed repair procedure;

To ensure that your case will be promptly and efficiently processed please indicate the step by step repair procedure you performed.

INTRODUCTION

Cette publication détermine le temps de main-d'oeuvre couvert par la garantie pour les VTT BRP 2020

1. UTILISATION DU MANUEL

En procédant de la façon indiquée dans le *Manuel de réparation VTT* BRP, chaque temps donné représente le maximum permis pour une réparation portant sur cette pièce. LES TEMPS NE SONT PAS CUMULATIFS. On doit inscrire le temps donné pour l'opération qui prend le plus de temps.

REMARQUE: Le *Barème de temps à taux fixe* a été préparé par des mécaniciens compétents utilisant les outils que l'on retrouve normalement dans les ateliers de réparation, en plus de tous les outils spéciaux mentionnés dans le *Manuel de réparation*.

2. COMPILATION

Le *Barème de temps à taux fixe* a été établi en compilant le temps nécessaire pour faire la réparation plus (+) un facteur de correction de 30% lorsqu'un travail dure 3.0 heures et moins, ou (+) 15% lorsqu'un travail dure plus de 3.0 heures. Cette compilation comprend, entre autres, les étapes suivantes:

– Manutention du véhicule
– Nettoyage
– Aller chercher les pièces, essais physiques
– Compensation spéciale (boulons rouillés)
– Diagnostic.

3. UTILISATION DU BARÈME

Se reporter à la section désirée, repérer la pièce ou l'ensemble de pièces remplacées et inscrire le CODE DE TRAVAIL dans la colonne appropriée sur la formule de réclamation.

SYSTÈME		PAGE
01	MOTEUR	4
02	CARBURATEUR ET SYSTÈME D'ALIMENTATION D'ESSENCE	24
03	SYSTÈME D'ALLUMAGE	27
04	DÉMARREUR	30
05	SYSTÈME DE TRANSMISSION	31
06	SYSTÈME DE FREIN	36
07	SYSTÈME DE DIRECTION ET SUSPENSION AVANT	38
08	SYSTÈME DE SUSPENSION ARRIÈRE ET CHENILLE	44
09	CARROSSERIE	48
10	SYSTÈME ÉLECTRIQUE	53

REMARQUE: Sauf indication contraire, le démontage doit s'effectuer de haut en bas, de l'extérieur vers l'intérieur, de l'avant vers l'arrière.

Toutes les fractions d'heures sont exprimées en dixièmes:

0.1 = 6 minutes
0.2 = 12 minutes, et ainsi de suite

LÉGENDE:

* AUTORISATION REQUISE AVANT LE REMPLACEMENT.
** INSCRIRE LE TEMPS À LA LIGNE «MAIN-D'OEUVRE SEULEMENT».
*** INSCRIRE LE MONTANT $$$ À LA LIGNE «OUVRAGE SOUS-CONTRACTÉ».

IMPORTANT: Toujours utiliser le temps donné à l'opération qui nécessite le plus de temps.

4. TRAVAUX REQUIS

Tous les temps mentionnés dans les pages suivantes incluent les opérations telles que: réglage du moteur (valve rotative et allumage), alignement de la ou des bielles, couple de serrage de la ou des culasses ou l'utilisation de barres parallèles, utilisation du vérificateur d'allumage, mesure du jet des pistons/jeu en bout des segments, mesure de l'écart entre le vilebrequin et le carter, rectification du cylindre, vérification de fuite du moteur.

5. ILLUSTRATIONS

Contrairement aux *Catalogues de pièces*, les illustrations de ce manuel ne montrent pas nécessairement chacune des pièces qu'elles représentent, leur raison d'être étant plutôt de faciliter la reconnaissance des pièces reliées à un barème de temps à taux fixe. **Les numéros d'items sur les illustrations correspondent aux quatre derniers chiffres du code de travail.**

6. SUGGESTION DE BARÈME DE TEMPS À TAUX FIXE

ENVOYEZ UNE REQUÊTE GARANTIE BOSSWeb DEPUIS LA SECTION INFO CENTRE

Dans cette requête, vous devez fournir les informations suivantes:

Section *Objet*:

– Suggestion de barème de temps à taux fixe

Section *Votre Question*:

– L'année modèle;
– Description du modèle;
– Description du code de travail;
– Code de travail;
– Temps actuel;
– Temps suggéré;
– Détails de la marche à suivre;

Pour s'assurer que votre demande sera traitée dans les plus brefs délais et efficacement, s.v.p. nous fournir toutes les étapes de réparation dans les détails de la marche à suivre.

2020
ATV / VTT

TABLE	DESCRIPTION	MODEL/ MODÈLE	ENGINE TYPE/ TYPE DE MOTEUR
1	OUTLANDER 450	5ALA/5ALB 5ALC/5ALF 5ALG	450 CVT
	OUTLANDER DPS 450	2WLA/2WLB 2WLC/2WLG	
	OUTLANDER XU 450	3ALB/3NLA 3NLB/3NLC	
2	OUTLANDER MAX 450	5CLA/5CLC	450 CVT
	OUTLANDER MAX DPS 450	2XLA/2XLB 2XLE/2XLF	
3	OUTLANDER 570	2TLA/2TLB 2TLC	570 CVT
	OUTLANDER DPS 570	2CLA/2CLB 2CLC/4ALA 4ALB/4ALC	
	OUTLANDER MOS 570	3ZLA	
	OUTLANDER XU 570	4JLA/4JLB 4JLE	
	OUTLANDER XT 570	2ULA/2ULB	
4	OUTLANDER MAX 570	2ELA/2ELKC	570 CVT
	OUTLANDER MAX DPS 570	2FLA/2FLB 2FLE/5NLA 5NLB	
	OUTLANDER MAX XT 570	2GLA/2GLB 2ZLB	
	OUTLANDER MAX XU 570	3SLA	
5	OUTLANDER XMR 570	3MLA/3MLB	570 CVT

ENGINE SYSTEM
SYSTÈME MOTEUR

SYSTEM SYSTÈME	CODE	DESCRIPTION	OUTLANDER 450	OUTLANDER MAX 450	OUTLANDER 570	OUTLANDER MAX 570	OUTLANDER XMR 570
			1	2	3	4	5
01	**00**	**NO LABOR INVOLVED** **AUCUNE MAIN D'OEUVRE**	**0**	**0**	**0**	**0**	**0**
01 *	01	REMOVE AND REPLACE ENGINE (ASS'Y) REMPLACEMENT DU MOTEUR (COMPLET)	4.5	4.5	4.7	4.7	5.0
01	03	OIL PRESSURE SWITCH INTERRUPTEUR DE PRESSION D'HUILE	0.3	0.3	0.3	0.3	0.3
01	04	HEAT SHIELD AND/OR RUBBER MOUNT DÉFLECTEUR DE CHALEUR ET/OU BUTÉE DE CAOUTCHOUC	0.4	0.4	0.4	0.4	0.4
01	08	FAN AND/OR FAN SUPPORT VENTILATEUR ET/OU SUPPORT DE VENTILATEUR	1.3	1.3	1.3	1.3	0.6
01	17	CYLINDERS AND/OR GASKETS (ALL) CYLINDRES E/O JOINTS (TOUS)	4.5	4.5	4.5	4.5	4.5
01	18	SENDER TEMPERATURE (ENGINE) CAPTEUR DE TEMPÉRATURE (MOTEUR)	0.9	0.9	0.9	0.9	0.9
01	19	THERMOSTAT THERMOSTAT	0.5	0.5	0.5	0.5	0.5
01	37	RADIATOR INLET HOSE BOYAU D'ENTRÉ DU RADIATEUR	0.5	0.5	0.5	0.5	0.5
01	38	WATER PUMP SHAFT (ALL PARTS) ARBRE DE POMPE À L'EAU (TOUTES LES PIÈCES)	5.3	5.3	5.5	5.5	5.5
01	45	ENGINE RUBBER MOUNT TAMPONS D'ANCRAGE DU MOTEUR	3.8	3.8	4.0	4.0	4.0
01	46	RADIATOR AND/OR GROMMMET RADIATEUR ET/OU PASSE-FILS	1.6	1.6	1.6	1.6	1.0
01	50	CRANKSHAFT AND/OR BEARINGS (FRONT/REAR) VILEBREQUIN ET/OU ROULEMENTS (AVANT/ARRIÈRE)			7.0	7.0	7.3
01	56	CRANKCASE COVER GASKET JOINT DE COUVERCLE DE CARTER			1.3	1.3	1.3
01	57	PTO CRANKCASE COVER COUVERCLE DE CARTER PDM			1.3	1.3	1.3
01	58	INTAKE OR EXHAUST VALVE GUIDE (1) GUIDE DE SOUPAPE D'ADMISSION OU D'ÉCHAPPEMENT (1)	2.3	2.3	2.8	2.8	2.8
01	59	INTAKE OR EXHAUST VALVE GUIDES (2) GUIDES DE SOUPAPE D'ADMISSION OU D'ÉCHAPPEMENT (2)	2.4	2.4	2.9	2.9	2.9
01	70	MUFFLER AND/OR EXHAUST GASKET AND/OR CLAMP SILENCIEUX D'ÉCHAPPEMENT ET/OU JOINT D'ÉCHAPPEMENT ET/OU BRIDE DE SERRAGE	0.3	0.3	0.3	0.3	0.3
01	73	EXHAUST MANIFOLD (REAR) CONNECTEUR D'ÉCHAPPEMENT (ARRIÈRE)			0.5	0.5	0.5
01	77	ANTI-VIBRATION RUBBER MOUNT (1 OR 2) (TOP) TAMPON D'ANCRAGE ANTI-VIBRATION (1 OU 2) (HAUT)	1.0	1.0	1.0	1.0	1.0

SYSTEM SYSTÈME	CODE	DESCRIPTION	OUTLANDER 450	OUTLANDER MAX 450	OUTLANDER 570	OUTLANDER MAX 570	OUTLANDER XMR 570
			1	2	3	4	5
01	79	COOLANT HOSE (ENGINE TO TANK) BOYAU DU SYSTÈME DE REFROIDISSEMENT (RÉSERVOIR AU MOTEUR)	0.4	0.4	0.4	0.4	0.4
01	83	EXHAUST MANIFOLD (FRONT) CONNECTEUR D'ÉCHAPPEMENT (AVANT)	0.5	0.5	0.5	0.5	0.5
01	84	TUNE PIPE HEAT SHIELD (1) DÉFLECTEUR DE CHALEUR TUYAU D'ÉCHAPPEMENT (1)	0.3	0.3	0.3	0.3	0.3
01	85	TUNE PIPE HEAT SHIELD (2) DÉFLECTEUR DE CHALEUR TUYAU D'ÉCHAPPEMENT (2)	0.4	0.4	0.4	0.4	0.4
01	86	TUNE PIPE HEAT SHIELD (3) DÉFLECTEUR DE CHALEUR TUYAU D'ÉCHAPPEMENT (3)	0.4	0.4	0.4	0.4	0.4
01	88	RUBBER MOUNT (MUFFLER) TAMPON D'ANCRAGE (SILENCIEUX)	0.3	0.3	0.3	0.3	0.3
01	90	ENGINE OIL FILTER FILTRE À HUILE DU MOTEUR	0.3	0.3	0.3	0.3	0.3
01	96	OIL SIEVE AND/OR O-RING AND/OR COLLECTOR AND/OR RUBBER RING AND/OR COVER CRIBLE D'HUILE ET/OU JOINT TORIQUE ET/OU COLLECTEUR ET/OU ANNEAU DE CAOUTCHOUC ET/OU COUVERCLE	2.0	2.0	6.7	6.7	7.0
01	98	COOLING RESERVOIR RÉSERVOIR D'ANTIGEL	1.0	1.0	1.0	1.0	1.0
01	100	RADIATOR OUTLET HOSE BOYAU DE SORTIE DU RADIATEUR	0.4	0.4	0.4	0.4	0.4
01	101	PISTON, PIN, CIRCLIP, RINGS (1) PISTON, GOUPILLE, CIRCLIP, SEGMENTS (1)	3.0	3.0	3.0	3.0	3.0
01	102	PISTONS, PINS, CIRCLIPS, RINGS (2) PISTONS, GOUPILLES, CIRCLIPS, SEGMENTS (2)			4.7	4.7	4.7
01	109	VALVE COVER AND/OR GASKET COUVERCLE DE SOUPAPE ET/OU JOINT D'ÉTANCHÉITÉ	0.5	0.5	0.5	0.5	0.5
01	111	TIMING GEAR PIGNON DE DISTRIBUTION	1.2	1.2	1.2	1.2	1.2
01	113	ROCKER ARM AND/OR PUSH ROD AND/OR ROCKER ARM SHAFT CULBUTEUR ET/OU TIGE POUSSOIR ET/OU ARBRE DE CULBUTEUR	1.3	1.3	1.3	1.3	1.3
01	114	CYLINDER HEAD CULASSE	3.5	3.5	3.5	3.5	3.5
01	116	EXHAUST AND/OR INLET VALVE AND/OR SPRING AND/OR SEAL VALVE ADMISSION ET/OU ÉCHAPPEMENT ET/OU RESSORT ET/OU ANNEAU D'ÉTANCHÉITÉ	2.7	2.7	2.7	2.7	2.7
01	117	CYLINDER AND/OR GASKET CYLINDRE ET/OU JOINT D'ÉTANCHÉITÉ	2.8	2.8	2.8	2.8	2.8
01	119	WATER PUMP HOUSING AND/OR IMPELLER CARTER DE LA POMPE À EAU ET/OU ROUE À AILETTES	0.4	0.4	0.4	0.4	0.4
01	122	SHIFT SHAFT ASS'Y ARBRE D'EMBRAYAGE COMPLET	5.3	5.3			

ENGINE SYSTEM
SYSTÈME MOTEUR

SYSTEM SYSTÈME	CODE	DESCRIPTION	OUTLANDER 450	OUTLANDER MAX 450	OUTLANDER 570	OUTLANDER MAX 570	OUTLANDER XMR 570
			1	2	3	4	5
01	132	OIL PUMP GEAR ENGRENAGE DE LA POMPE À HUILE	5.2	5.2	1.5	1.5	1.5
01	134	CAMSHAFT ARBRE À CAME	2.3	2.3	2.3	2.3	2.3
01	137	OIL PUMP COVER AND/OR SHAFT AND/OR ROTOR COUVERCLE DE LA POMPE À HUILE ET/OU ARBRE ET/OU ROTOR	5.2	5.2	1.5	1.5	1.5
01	138	CRANKCASE RESEAL OR GASKET RECELLEMENT DU CARTER ET/OU JOINT D'ÉTANCHÉITÉ	6.1	6.1	6.9	6.9	7.2
01	139	CRANKCASE REPLACEMENT REMPLACEMENT DU CARTER	6.6	6.6	7.2	7.2	7.5
01	140	CRANKSHAFT A/O BALANCE SHAFT VILEBREQUIN E/O ARBRE D'EQUILIBRAGE	6.1	6.1			
01	152	DRIVE SHAFT AND/OR BEARINGS AND/OR SEALS ARBRE D'ENTRAÎNEMENT ET/OU ROULEMENT À BILLES ET/OU ANNEAUX D'ÉTANCHÉITÉ	6.3	6.3	6.9	6.9	7.2
01	153	GEARS BOX ASS'Y / MAIN SHAFT BOITE D'ENGRENAGE COMPLET / ARBRE PRINCIPAL	6.3	6.3			
01	154	TIMING CHAIN CHAÎNE D'ENGRENAGE	4.3	4.3	3.1	3.1	3.1
01	155	OUTPUT SHAFT ARBRE DE SORTIE	6.3	6.3			
01	172	SHIFT DRUM TAMBOUR D'EMBRAYAGE	6.4	6.4			
01	179	CHAIN GUIDE GUIDE DE CHAÎNE	1.0	1.0	1.0	1.0	1.0
01	191	CHAIN TENSION GUIDE GUIDE DE TENSION DE CHAÎNE	3.1	3.1	3.1	3.1	3.1
01	192	CHAIN TENSIONER (ASS'Y) TENDEUR DE CHAÎNE (COMPLET)	0.3	0.3	0.3	0.3	0.3
01	196	HEAT SHIELD (RH OR LH) DÉFLECTEUR DE CHALEUR (DR OU GA)		0.5		0.5	
01	200	WATER PUMP GEAR ENGRENAGE DE LA POMPE À EAU	5.1	5.1	1.6	1.6	1.6
01	205	REAR OUTPUT SHAFT SEAL ANNEAU D'ÉTANCHÉITÉ DE L'ARBRE DE SORTIE ARRIÈRE	3.0	3.0	5.2	5.2	5.5
01	209	OUTPUT CRANKSHAFT SEAL ANNEAU D'ÉTANCHÉITÉ SORTIE VILBREQUIN	0.8	0.8			
01	210	MAIN SHAFT SEAL JOIN D'ÉTENCHÉITÉ DE L'ARBRE PRINCIPAL	0.8	0.8			
01	215	OIL DIPSTICK JAUGE À HUILE	0.3	0.3	0.3	0.3	0.3
01	216	PRESSURE CAP BOUCHON À PRESSION	0.3	0.3	0.3	0.3	0.3

SYSTEM SYSTÈME	CODE	DESCRIPTION	OUTLANDER 450	OUTLANDER MAX 450	OUTLANDER 570	OUTLANDER MAX 570	OUTLANDER XMR 570
			1	2	3	4	5
01	217	ENGINE BRACKET AND/OR RUBBER MOUNT ATTACHE MOTEUR ET/OU TAMPON D'ANCRAGE	0.3	0.3	0.3	0.3	0.3
01	220	MAIN DRIVE GEAR AND/OR PIN ROUAGE D'ENTRAÎNEMENT PRINCIPALE ET/OU GOUPILLE	5.2	5.2	1.6	1.6	1.6
01	221	INTERMEDIATE GEAR AND/OR PIN AND/OR THRUST WASHER ROUAGE INTERMEDIAIRE ET/OU GOUPILLE ET/OU RONDELLE D'APPUI	5.2	5.2	1.6	1.6	1.6
01	223	FRONT OUTPUT SHAFT SEAL ANNEAU ÉTANCHÉITÉ ARBRE SORTIE AVANT			2.7	2.7	2.7
01	245	OUTPUT CRANKSHAFT SEAL (PTO SIDE) ANNEAU ÉTANCHÉITÉ SORTIE VILBREQUIN (CÔTÉ PDM)	1.0	1.0	1.0	1.0	1.0
01	246	WATER PUMP GEAR AND/OR SEAL ARBRE POMPE À EAU ET/OU JOINT ÉTANCHÉITÉ	5.5	5.5	5.5	5.5	5.8
01	247	REED VALVE AND/OR STOPPER SOUPAPE À CLAPET ET/OU BUTOIR			1.6	1.6	1.6
01	248	BREATHER GEAR AND/OR V-RING RENIFLARD ET/OU ANNEAU ÉTANCHÉITÉ EN «V»			1.6	1.6	1.6
01	249	CAMSHAFT POSITION SENSOR CAPTEUR DE POSITION DE L'ARBRE À CAME			0.3	0.3	0.3
01	250	CRANKSHAFT POSITION SENSOR (CPS) CAPTEUR DE POSITION DU VILEBREQUIN (CPV)	0.3	0.3	0.3	0.3	0.3
01	255	EXHAUST AND/OR INLET VALVES AND/OR SPRINGS AND/OR SEALS (4) ÉCHAPPEMENT ET/OU VALVES ADMISSION ET/OU RESSORTS ET/OU ANNEAUX D'ÉTANCHÉITÉ (4)	3.3	3.3	3.3	3.3	3.3
01	256	EXHAUST AND/OR INLET VALVES AND/OR SPRINGS AND/OR SEALS (8) ÉCHAPPEMENT ET/OU VALVES ADMISSION ET/OU RESSORTS ET/OU ANNEAUX D'ÉTANCHÉITÉ (8)			6.4	6.4	6.1
01	261	TIMING CHAIN (MAG SIDE) CHAÎNE D'ENGRENAGE (CÔTÉ MAG)	2.8	2.8	2.8	2.8	2.8
01	264	LONG BLOCK ENSEMBLE CARTER - CYLINDRE - CULASSE	6.0	6.0	6.7	6.7	7.0
01	276	CONNECTING ROD ASS'Y (1) BIELLE COMPLET (1)	6.2	6.2			
01	301	WATER PUMP DYNAMIC SEAL AND/OR OIL SEAL ANNEAU D'ÉTANCHÉITÉ DYNAMIQUE DE LA POMPE À EAU			2.1	2.1	2.1
01	303	TIMING CHAINS (ALL) CHAÎNES D'ENGRENAGE (TOUTES)			5.3	5.3	5.3
01	304	CHAINS TENSION GUIDE (ALL) GUIDE DE TENSION DE CHAÎNES (TOUS)			5.3	5.3	5.3
01	305	CHAINS GUIDE (ALL) GUIDE DE CHAÎNES (TOUS)			1.8	1.8	1.8
01	307	VALVE COVERS AND/OR GASKETS (2) COUVERCLES SOUPAPE ET/OU JOINTS D'ÉTANCHÉITÉ (2)			0.6	0.6	0.6

ENGINE SYSTEM
SYSTÈME MOTEUR

SYSTEM SYSTÈME	CODE	DESCRIPTION	OUTLANDER 450	OUTLANDER MAX 450	OUTLANDER 570	OUTLANDER MAX 570	OUTLANDER XMR 570
			1	2	3	4	5
01	308	CYLINDER HEAD GASKET (1) JOINT D'ÉTANCHÉITÉ DE LA CULASSE (1)	1.4	1.4	1.4	1.4	1.4
01	309	CYLINDER HEAD GASKETS (2) JOINTS D'ÉTANCHÉITÉ DE LA CULASSE (2)			2.3	2.3	2.3
01	318	RADIATOR SUPPORT SUPPORT DE RADIATEUR					0.4
01	324	FAN SUPPORT SUPPORT DE VENTILATEUR					0.5
01	329	INJECTOR (1) INJECTEUR(1)	1.8	1.8	1.8	1.8	1.8
01	330	INJECTOR (2) INJECTEUR(2)			1.9	1.9	1.9
01	333	RADIATOR COVER COUVERCLE DE RADIATEUR					0.3
01	334	FILLER NECK AND/OR HOSE GOULOT REMPLISSAGE ET/OU BOYAU					1.1
01	336	COOLANT HOSE (ENGINE INLET) BOYAU DE REFROIDISSEMENT (ENTRÉE DU MOTEUR)	0.4	0.4	0.4	0.4	0.4
01	340	PLUG SCREW BOUCHON FILETÉ			0.5	0.5	0.5
01	352	OXYGEN SENSOR CAPTEUR D'OXYGÈNE	0.3	0.3	0.3	0.3	0.3
01	394	OIL SEAL ANNEAU D'ÉTANCHÉITÉ	5.3	5.3			

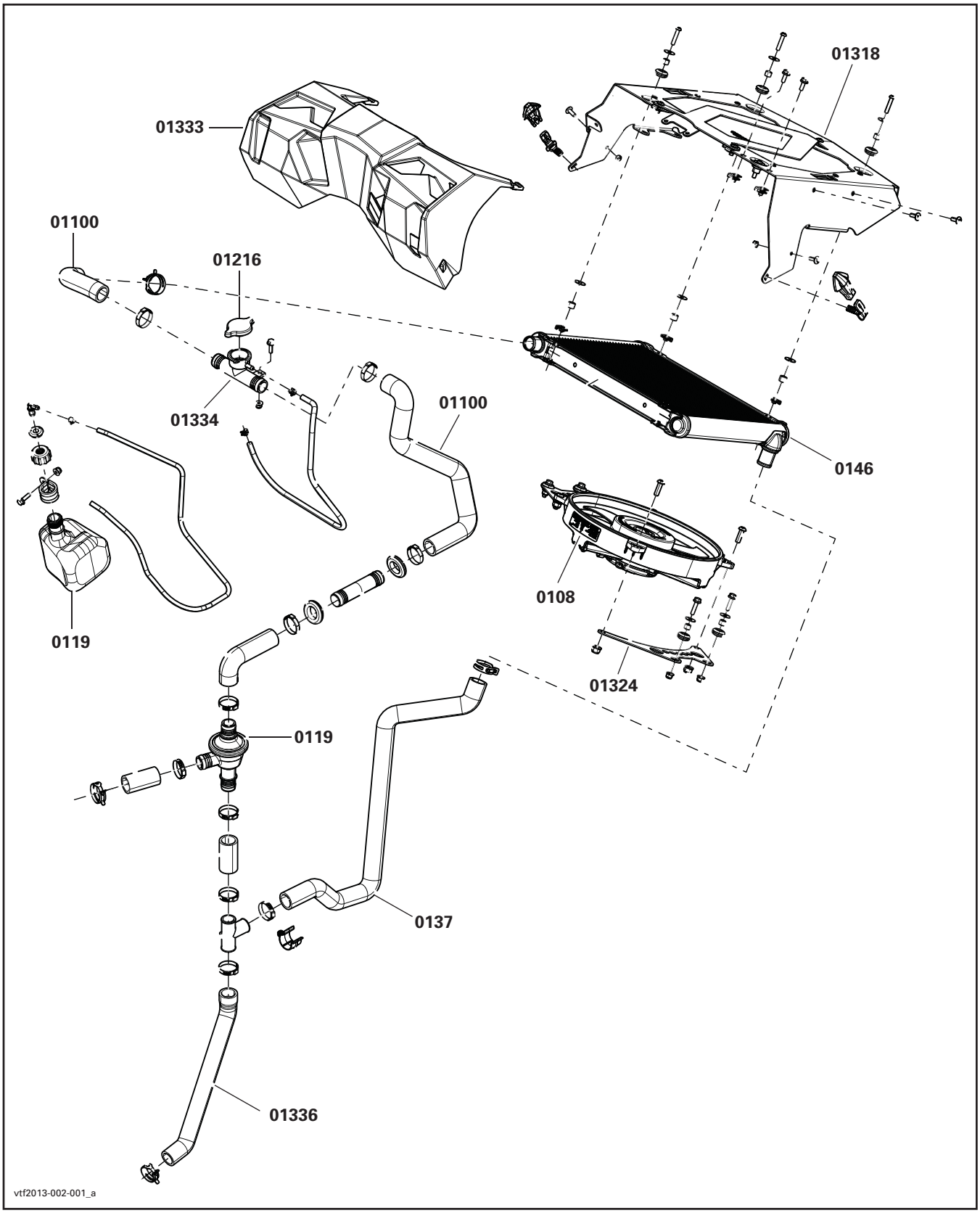
01318
01333
01100
01216
01334
01100
0146
0108
0119
01324
0119
0137
01336
vtf2013-002-001_a

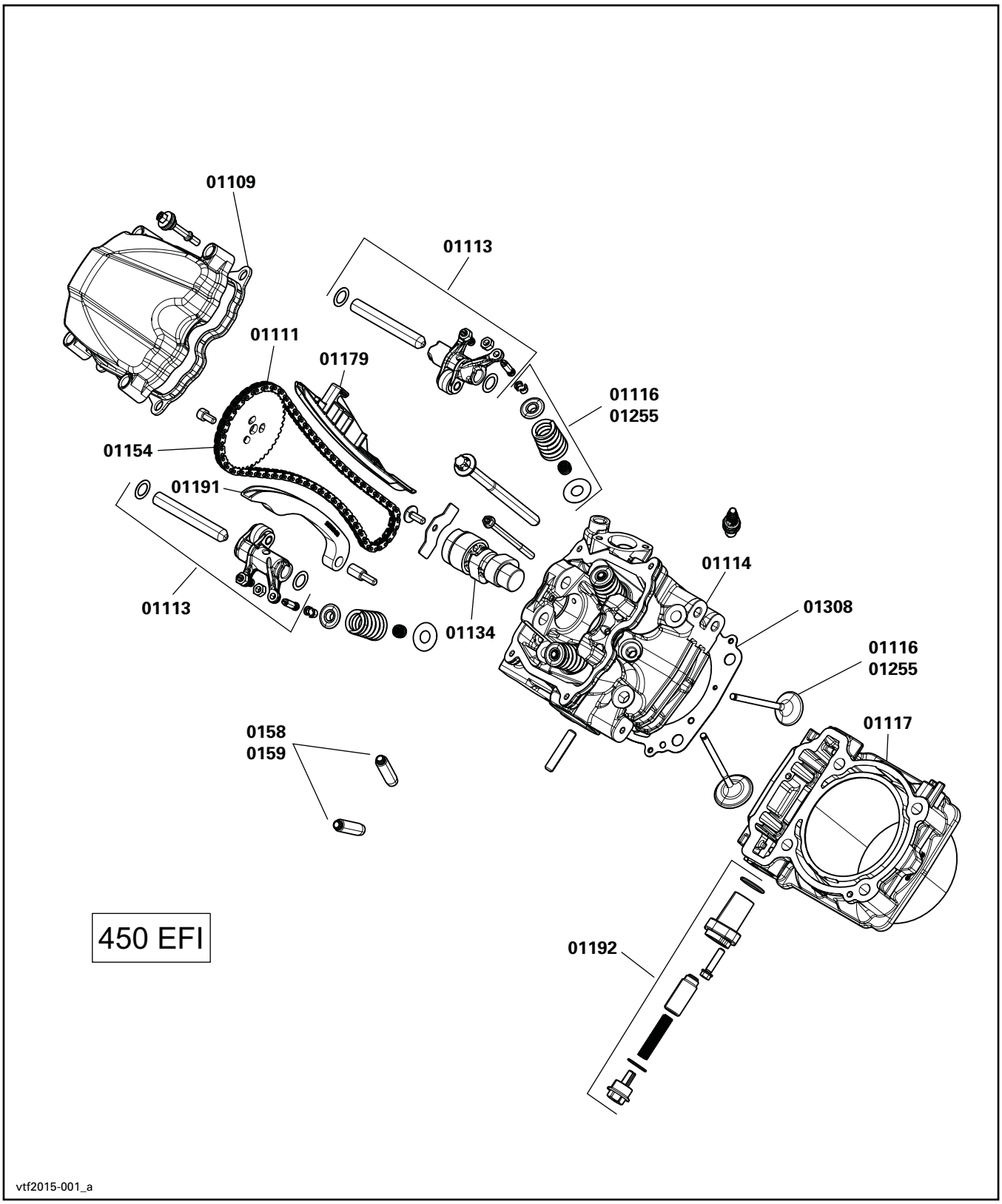
01109
01113
01111
01179
01116
01255
01154
01191
01114
01308
01113
01134
01116
01255
01117
0158
0159
450 EFI
01192
vtf2015-001_a

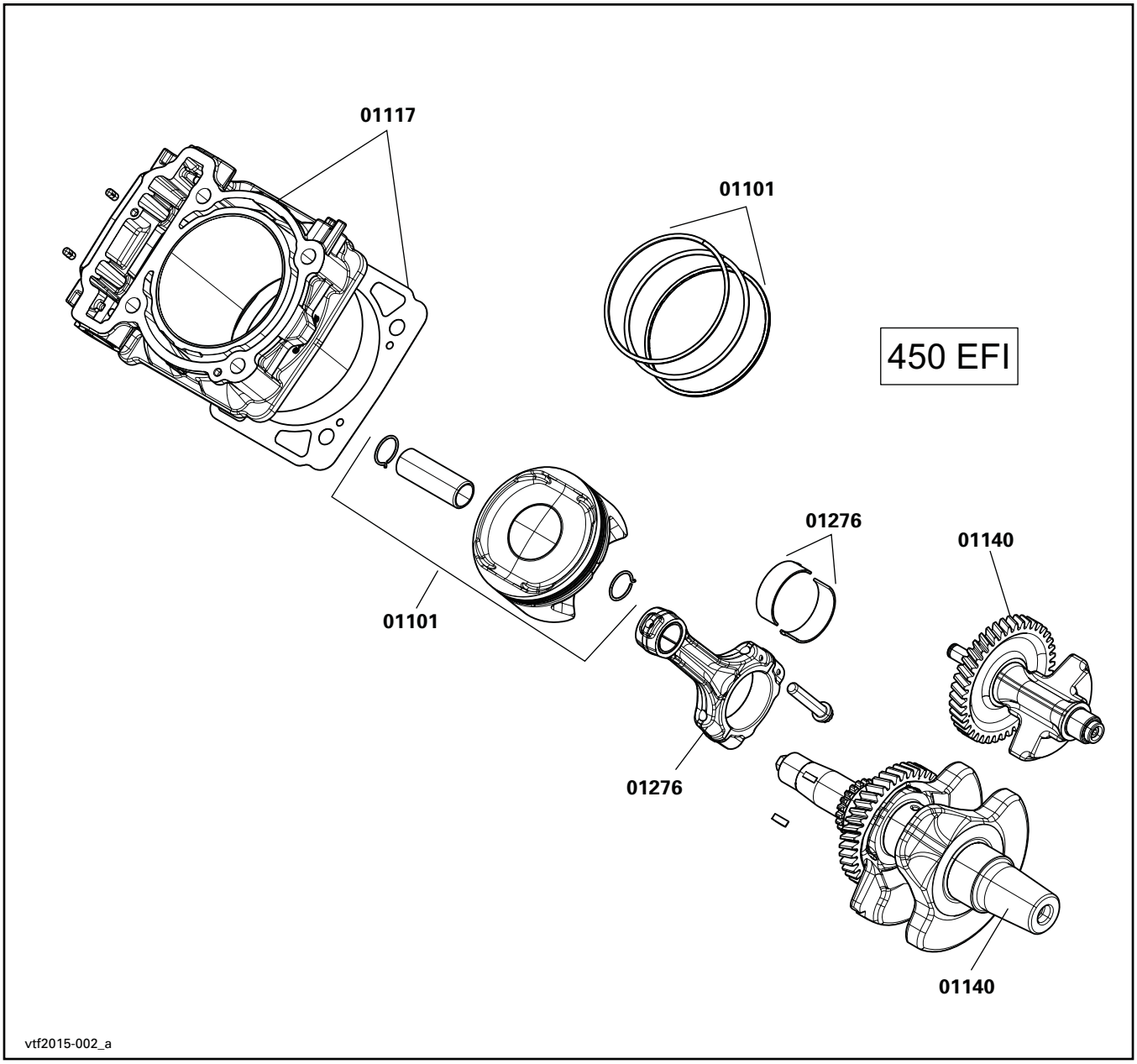
01117
01101
450 EFI
01276
01140
01101
01276
01140
vtf2015-002_a

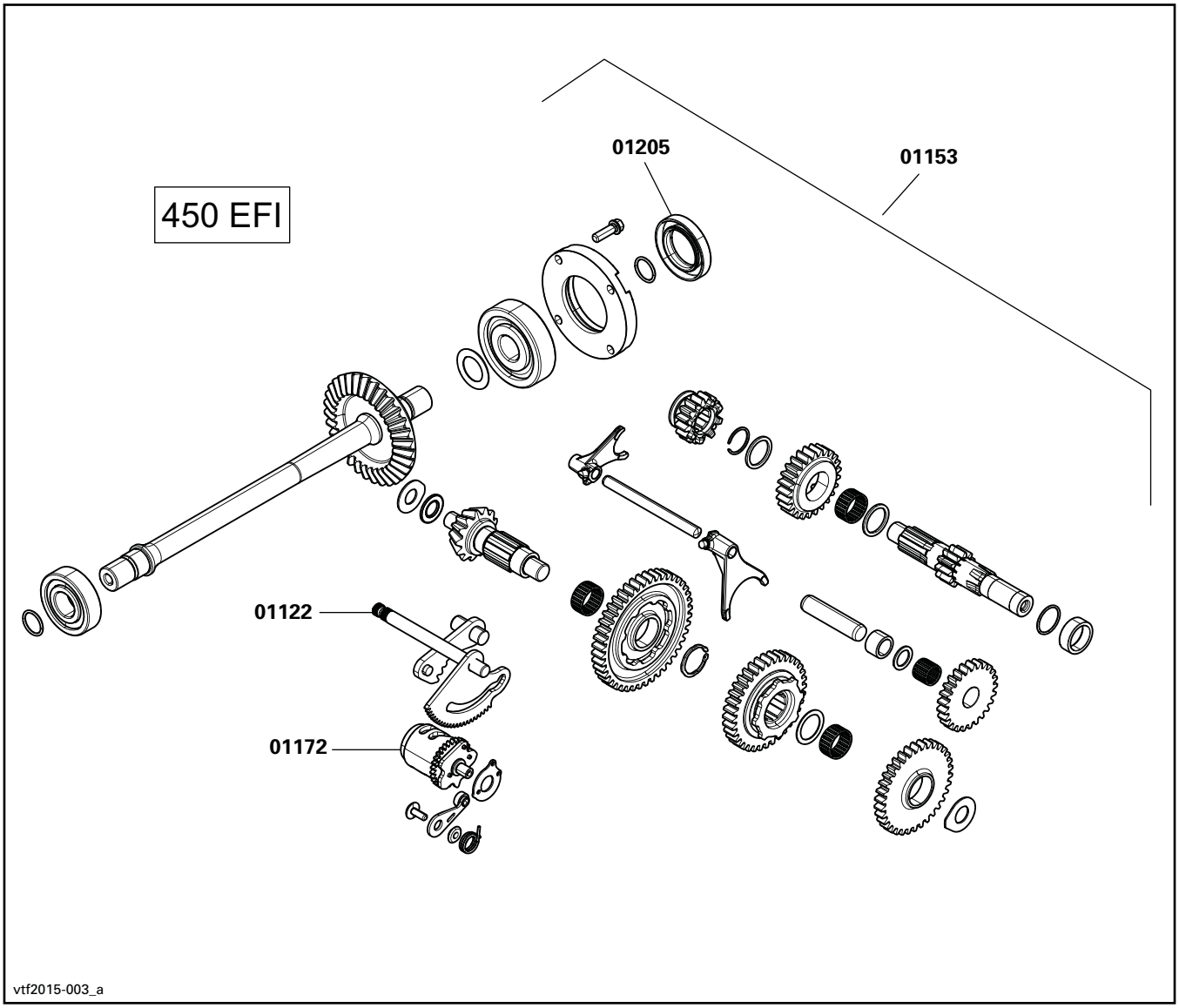
450 EFI
01205
01153
01122
01172
vtf2015-003_a

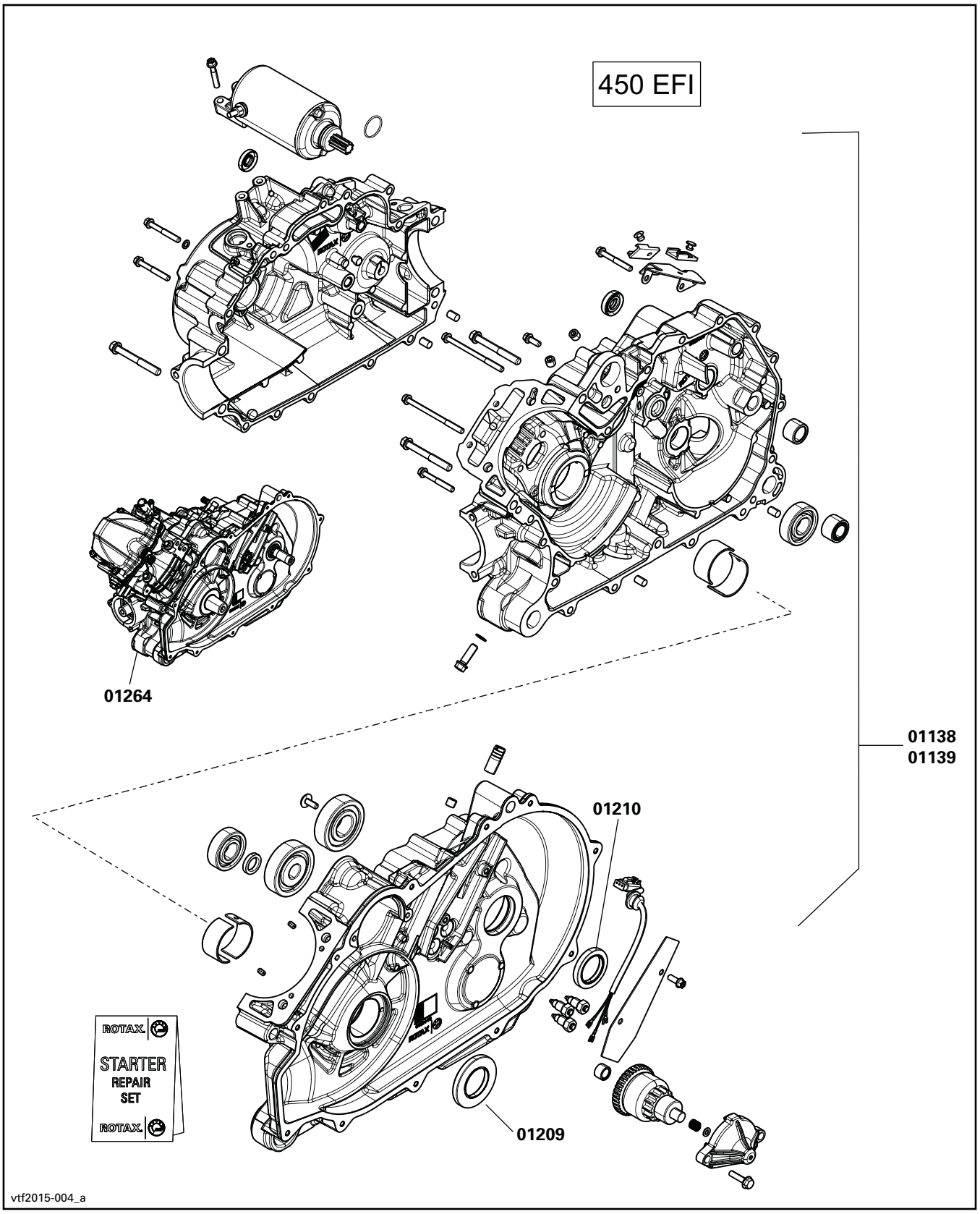
450 EFI
01264
01138
01139
01210
01209
ROTAX
STARTER
REPAIR
SET
ROTAX
vtf2015-004_a

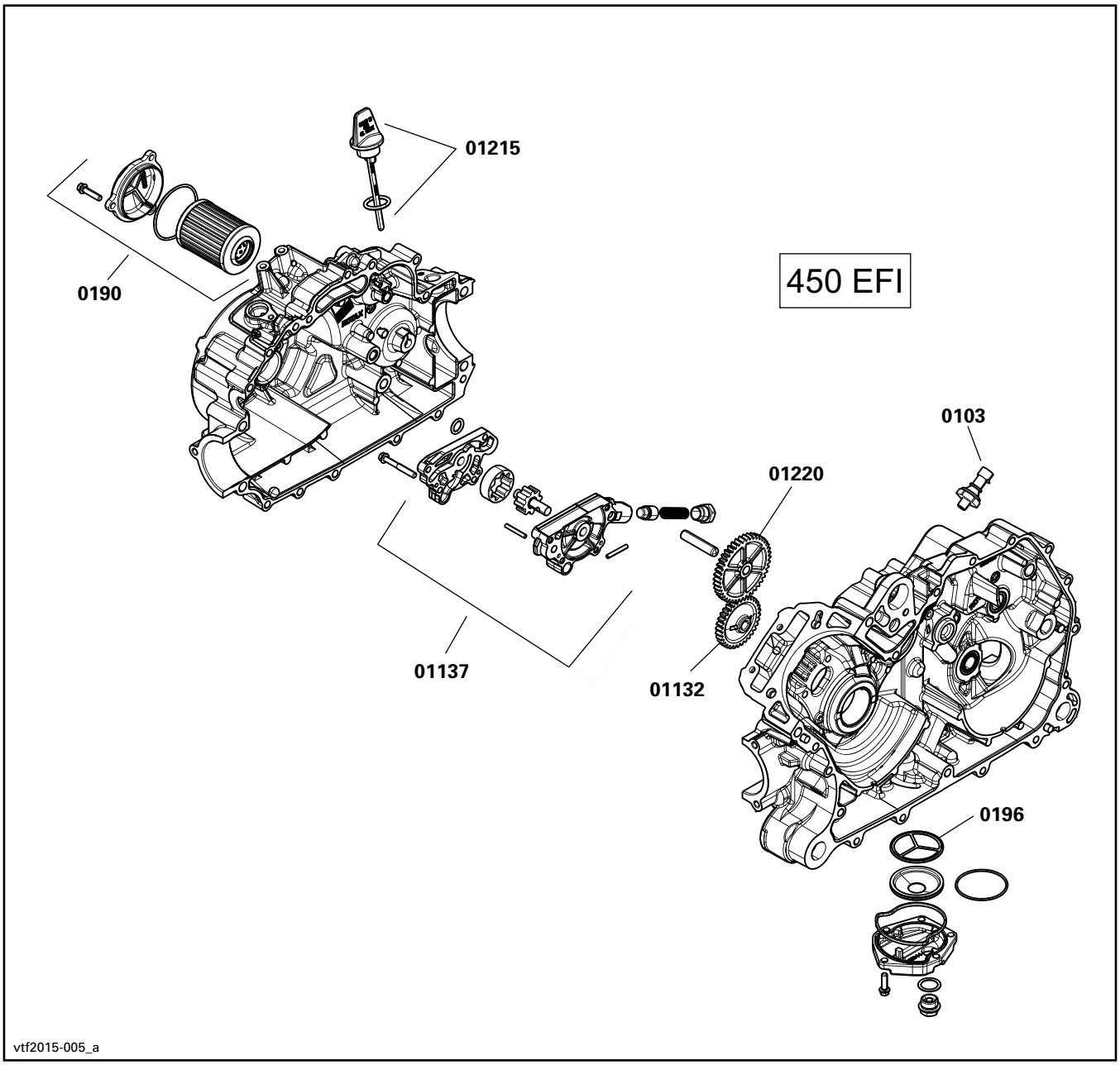
01215
0190
450 EFI
0103
01220
01137
01132
0196
vtf2015-005_a

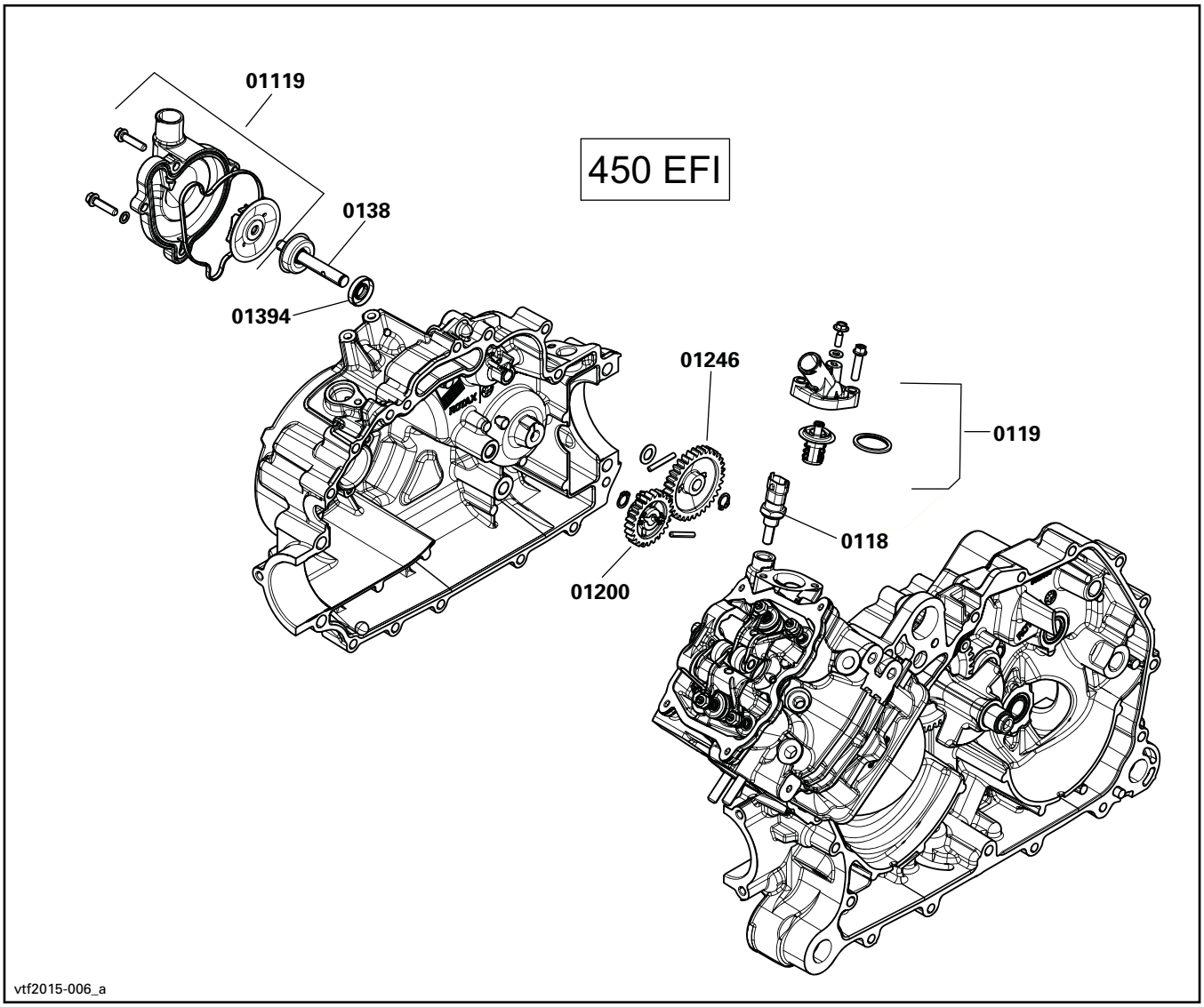
01119
450 EFI
0138
01394
01246
0119
0118
01200
vtf2015-006_a

ENGINE SYSTEM
SYSTÈME MOTEUR

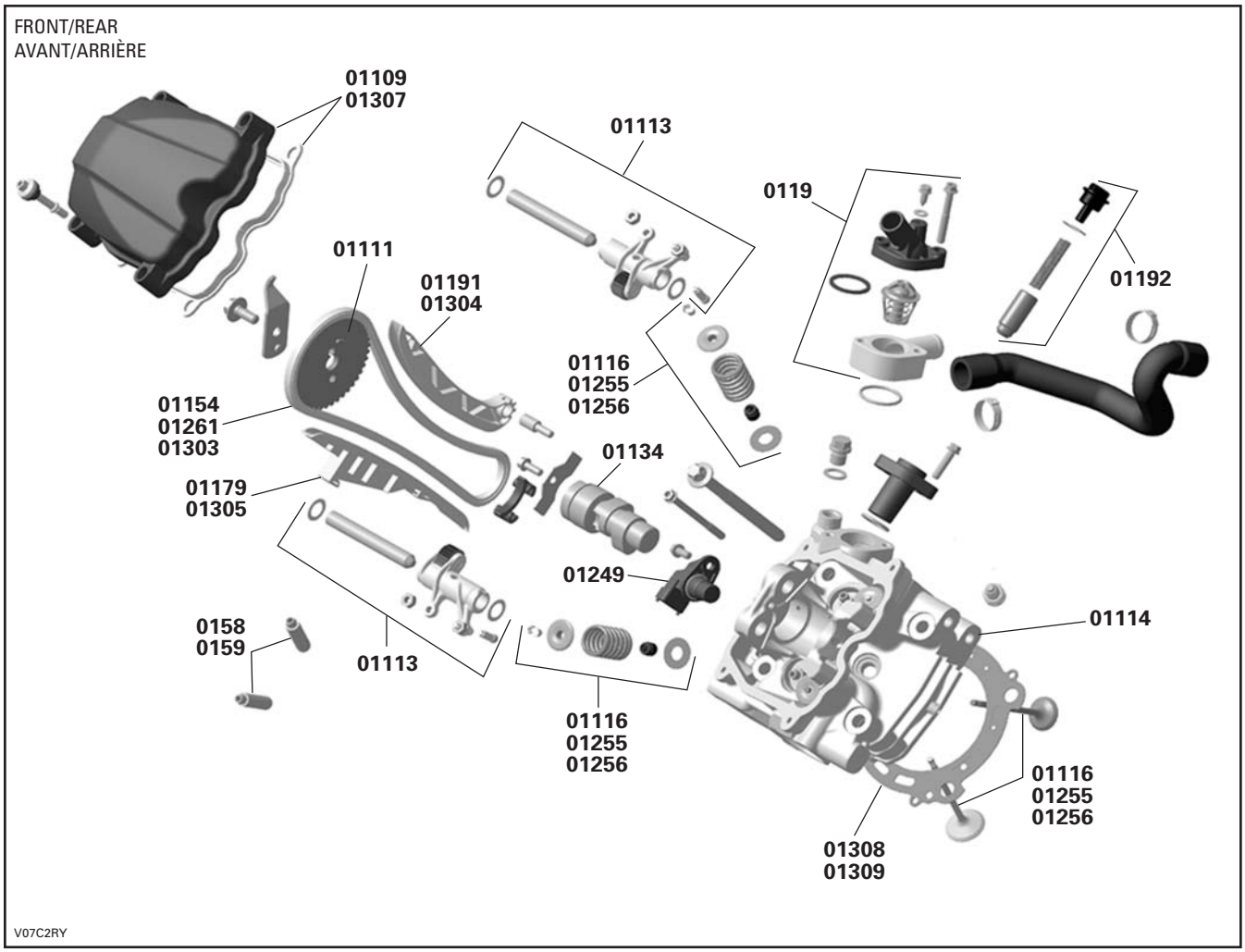

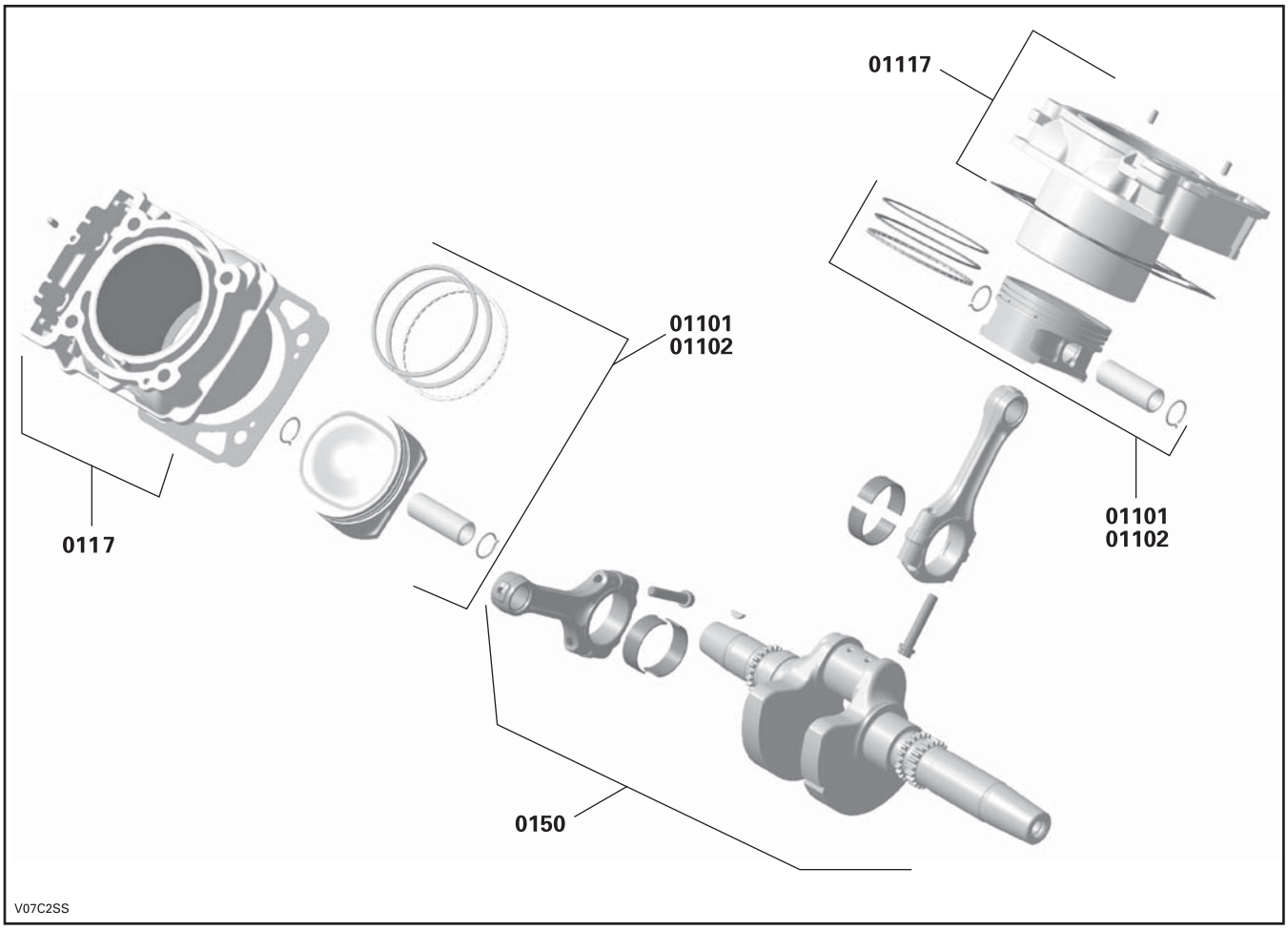
01117
01101
01102
0117
01101
01102
0150
V07C2SS

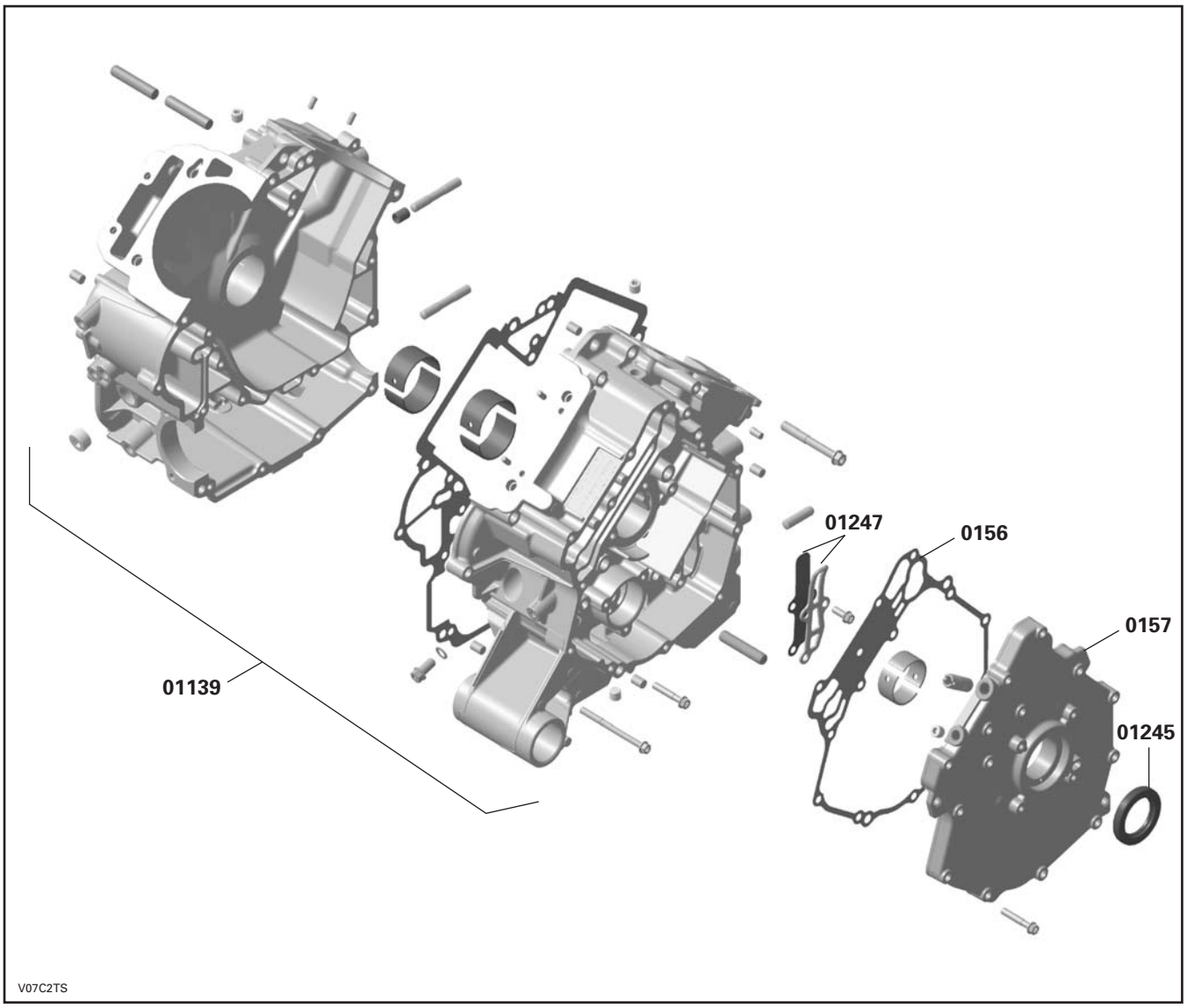
01247
0156
0157
01139
01245
V07C2TS

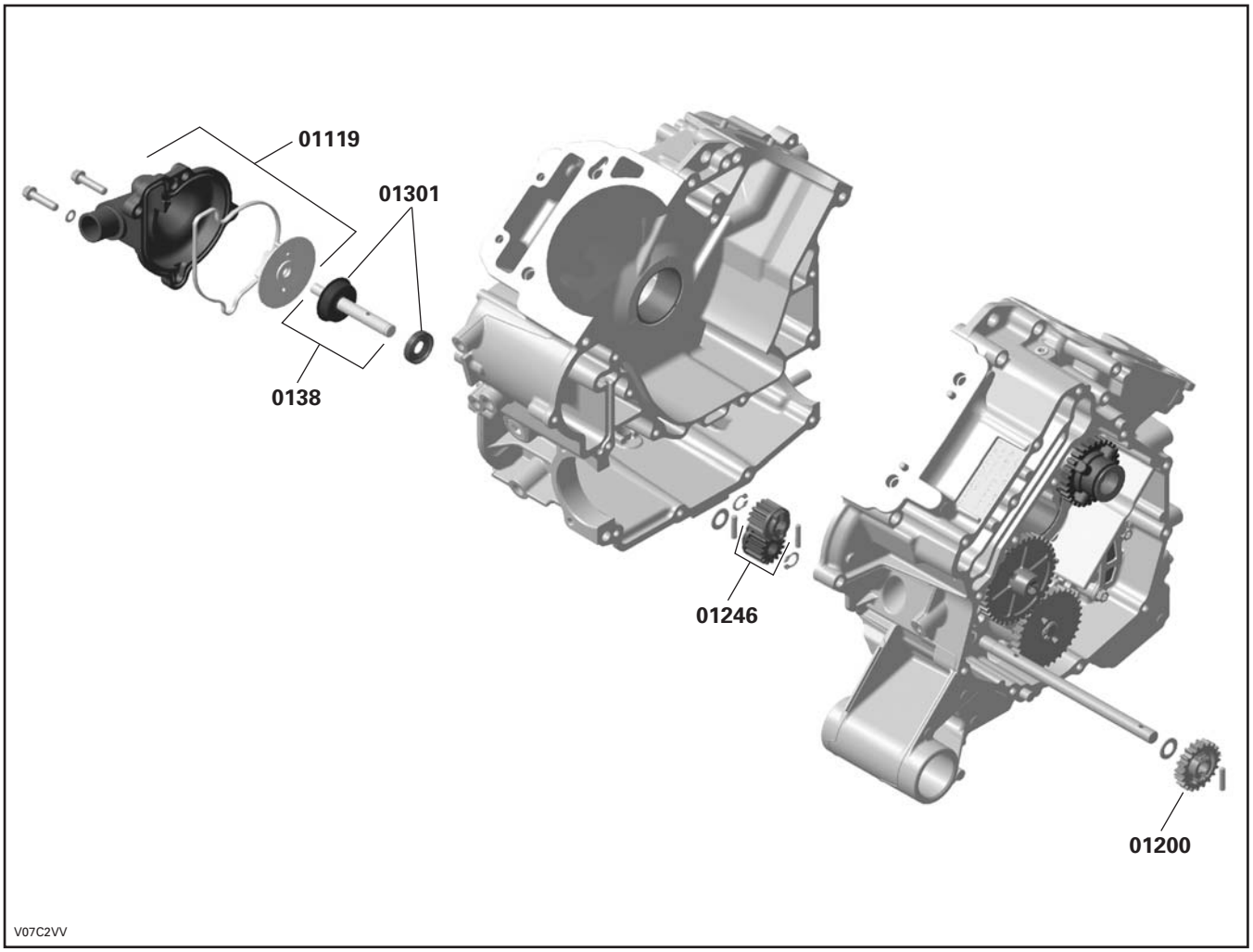
01119
01301
0138
01246
01200
V07C2VV

ENGINE SYSTEM
SYSTÈME MOTEUR

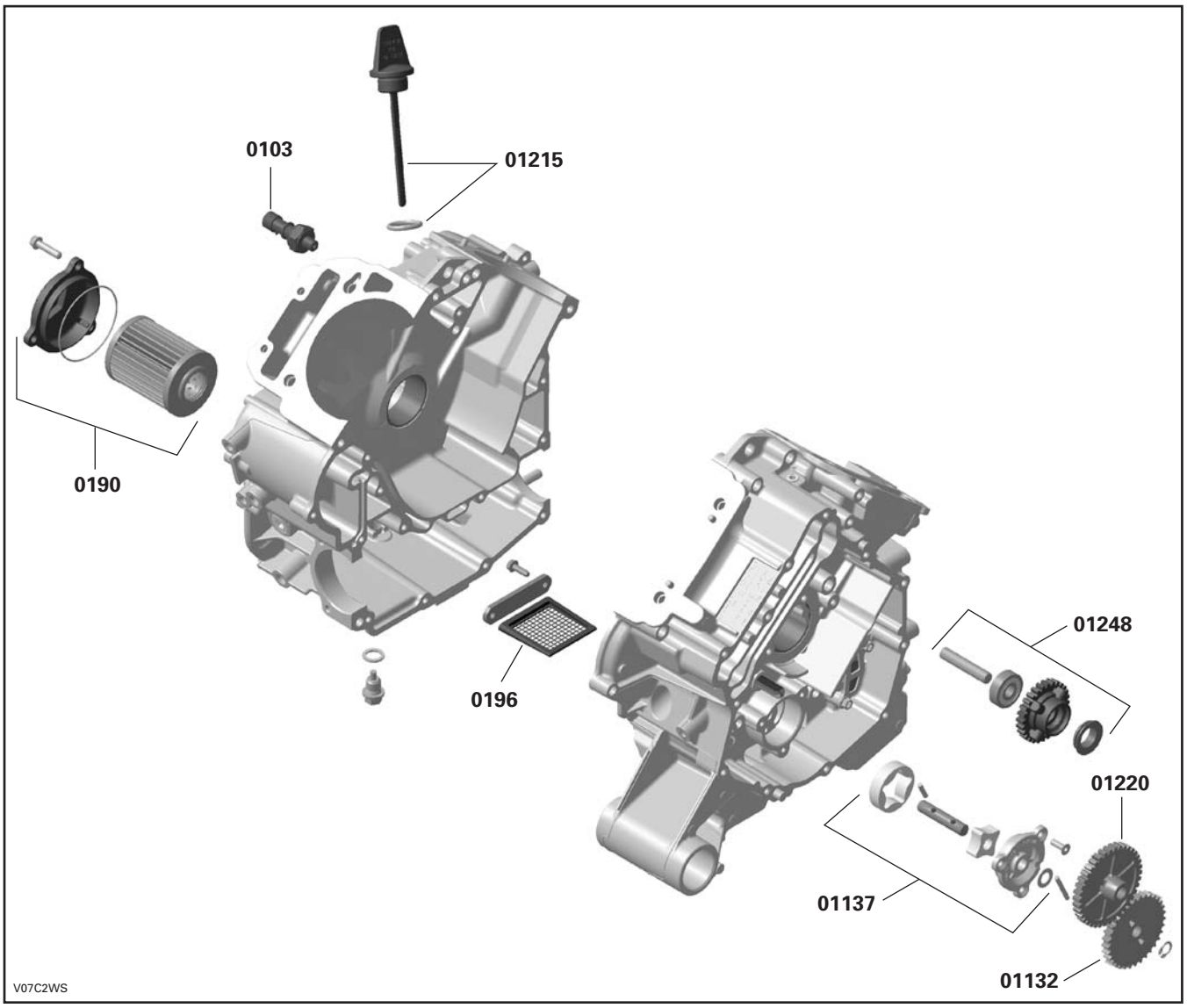

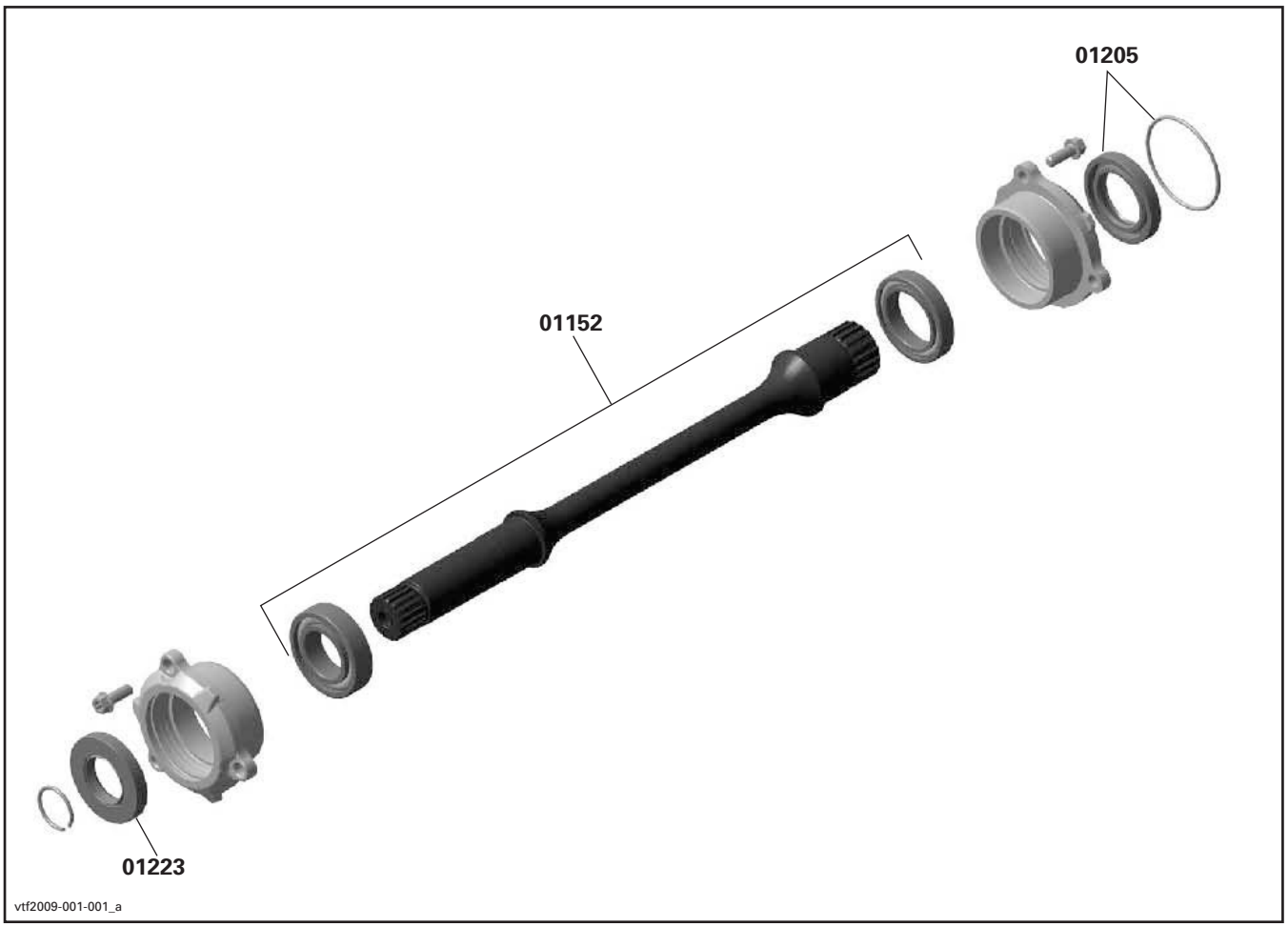
01205
01152
01223
vtf2009-001-001_a

ENGINE SYSTEM
SYSTÈME MOTEUR

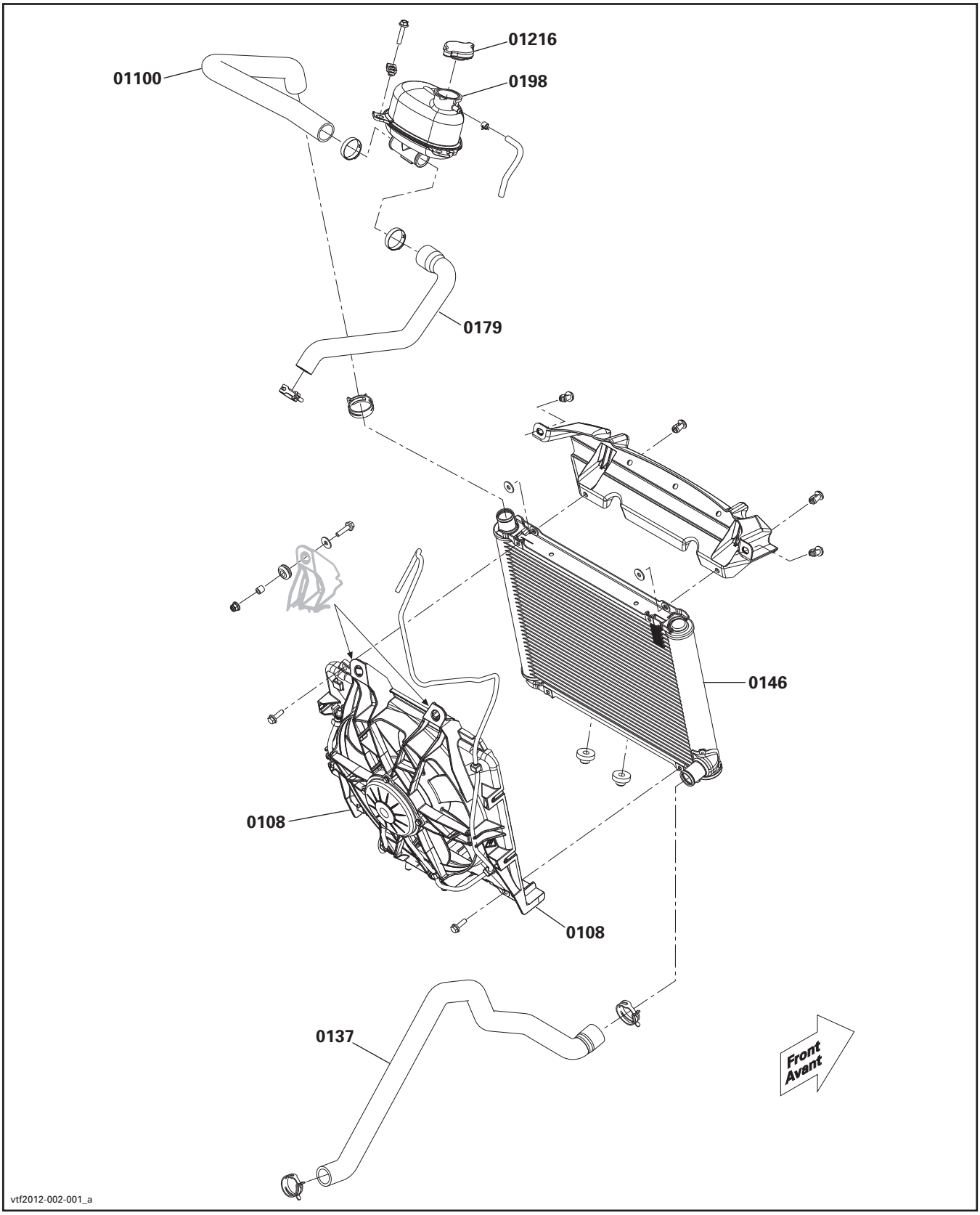

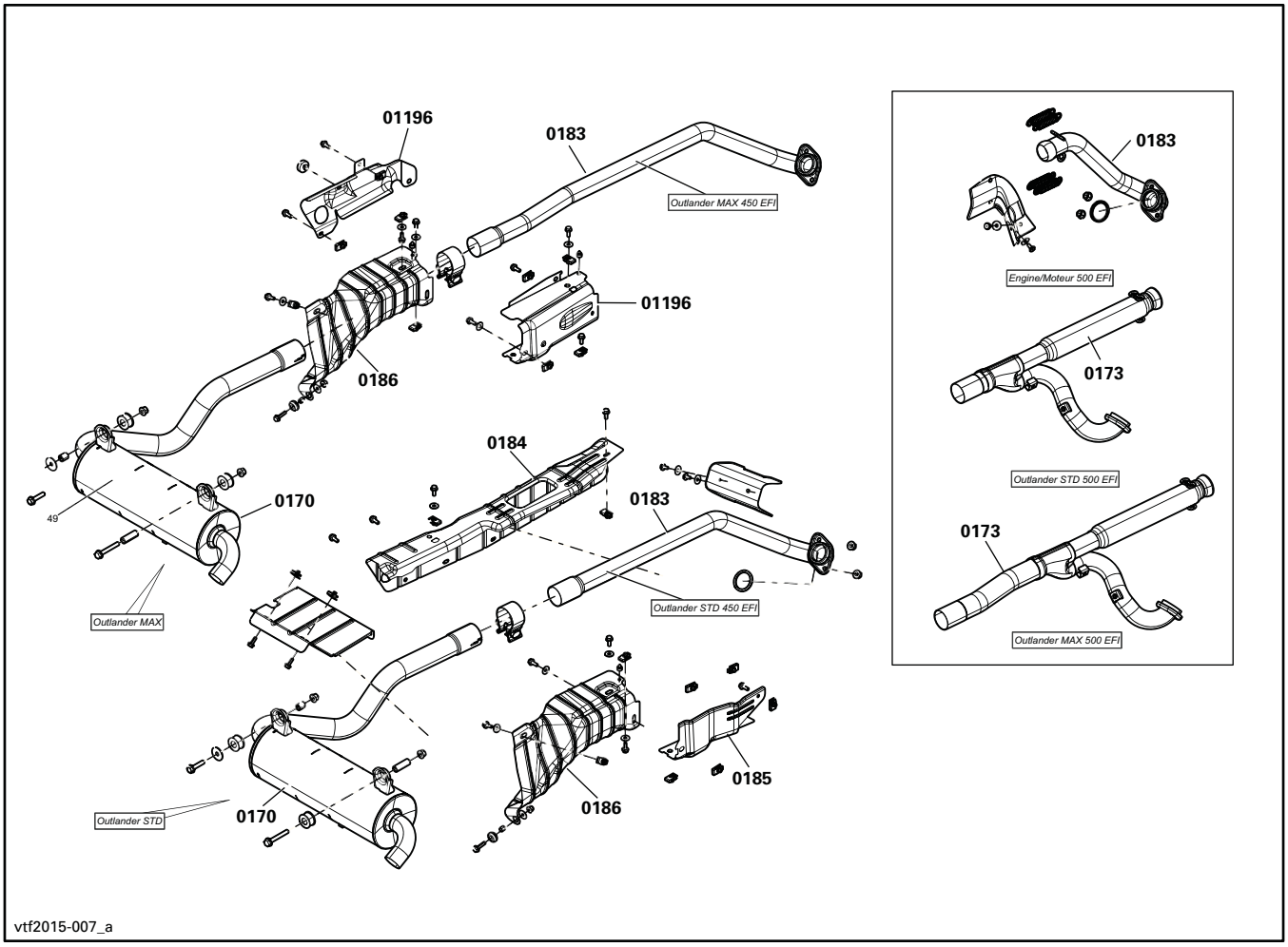
01196
0183
Outlander MAX 450 EFI
01196
0186
0184
0170
49
0183
Outlander MAX
Outlander STD 450 EFI
0185
0186
Outlander STD
0170
0183
Engine/Moteur 500 EFI
0173
Outlander STD 500 EFI
0173
Outlander MAX 500 EFI
vtf2015-007_a

CARBURETOR AND FUEL SYSTEM
CARBURATEUR ET SYSTÈME D'ALIMENTATION D'ESSENCE

SYSTEM SYSTÈME	CODE	DESCRIPTION	OUTLANDER 450	OUTLANDER MAX 450	OUTLANDER 570	OUTLANDER MAX 570	OUTLANDER XMR 570
			1	2	3	4	5
02	**00**	**NO LABOR INVOLVED** **AUCUNE MAIN D'OEUVRE**	**0**	**0**	**0**	**0**	**0**
02	01	AIR INTAKE SILENCER (ASS'Y) SILENCIEUX D'ADMISSION D'AIR (COMPLET)	1.8	1.8	1.8	1.8	1.8
02	06	THROTTLE CABLE CÂBLE D'ACCÉLÉRATEUR	0.6	0.6	0.6	0.6	0.6
02	16	INTAKE ADAPTOR ADAPTATEUR D'ADMISSION	1.0	1.0	1.0	1.0	1.0
02	19	AIR INTAKE TUBE TUYAU D'ADMISSION D'AIR	1.0	1.0	1.0	1.0	1.3
02	23	REAR AIR INTAKE TUBE AND/OR SLEEVE TUYAU D'ADMISSION D'AIR ARRIÈRE ET/OU DOUILLE	1.8	1.8	1.8	1.8	2.2
02	46	AIR TEMPERATURE SENSOR CAPTEUR DE TEMPÉRATURE D'AIR	0.3	0.3	0.3	0.3	0.3
02	57	FUEL FILTER FILTRE À ESSENCE	1.0	1.0	1.0	1.0	1.0
02	58	FUEL TANK RÉSERVOIR D'ESSENCE	1.6	1.6	1.6	1.6	1.6
02	59	INTAKE COVER AND/OR SEAL COUVERCLE D'ADMISSION ET/OU JOINT D'ÉTANCHÉITÉ	0.3	0.3	0.3	0.3	0.3
02	60	FUEL CAP BOUCHON DU RÉSERVOIR À ESSENCE	0.3	0.3	0.3	0.3	0.3
02	69	AIR FILTER FILTRE À AIR	0.3	0.3	0.3	0.3	0.3
02	72	INTAKE MANIFOLD CONNECTEUR D'ADMISSION	1.9	1.9	1.9	1.9	1.9
02	79	FUEL RAIL (1 OR 2) RAMPE D'ESSENCE (1 OU 2)	1.9	1.9	1.9	1.9	1.9
02	81	THROTTLE BODY (ASS'Y) CARTER ACCÉLÉRATEUR (COMPLET)	1.7	1.7	1.7	1.7	2.0
02	82	THROTTLE SENSOR CAPTEUR POSITION D'ACCÉLÉRATEUR	1.5	1.5	1.5	1.5	1.5
02	84	IDLE BY-PASS VALVE VALVE DU RALENTI	1.5	1.5	1.5	1.5	1.5
02	89	FUEL PUMP MODULE MODULE POMPE À ESSENCE	1.0	1.0	1.0	1.0	1.0
02	94	FEMALE QUICK FITTING CONNECTEUR RAPIDE FEMELLE	0.4	0.4	0.4	0.4	0.4
02	99	FUEL INJECTION HOSE (ASS'Y) BOYAU À INJECTION D'ESSENCE (COMPLET)	0.4	0.4	0.4	0.4	0.4

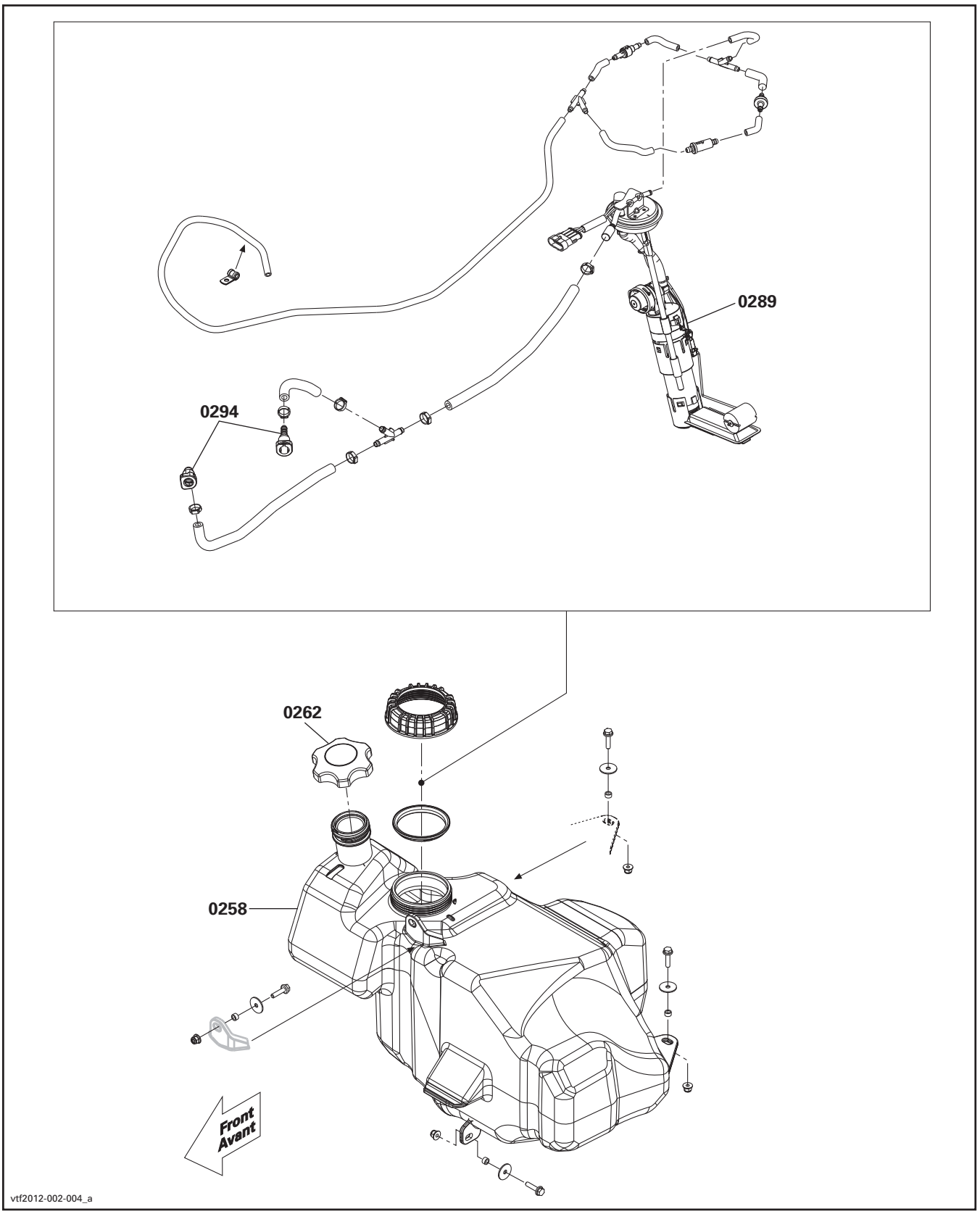
0289
0294
0262
0258
Front
Avant
vtf2012-002-004_a

CARBURETOR AND FUEL SYSTEM
CARBURATEUR ET SYSTÈME D'ALIMENTATION D'ESSENCE

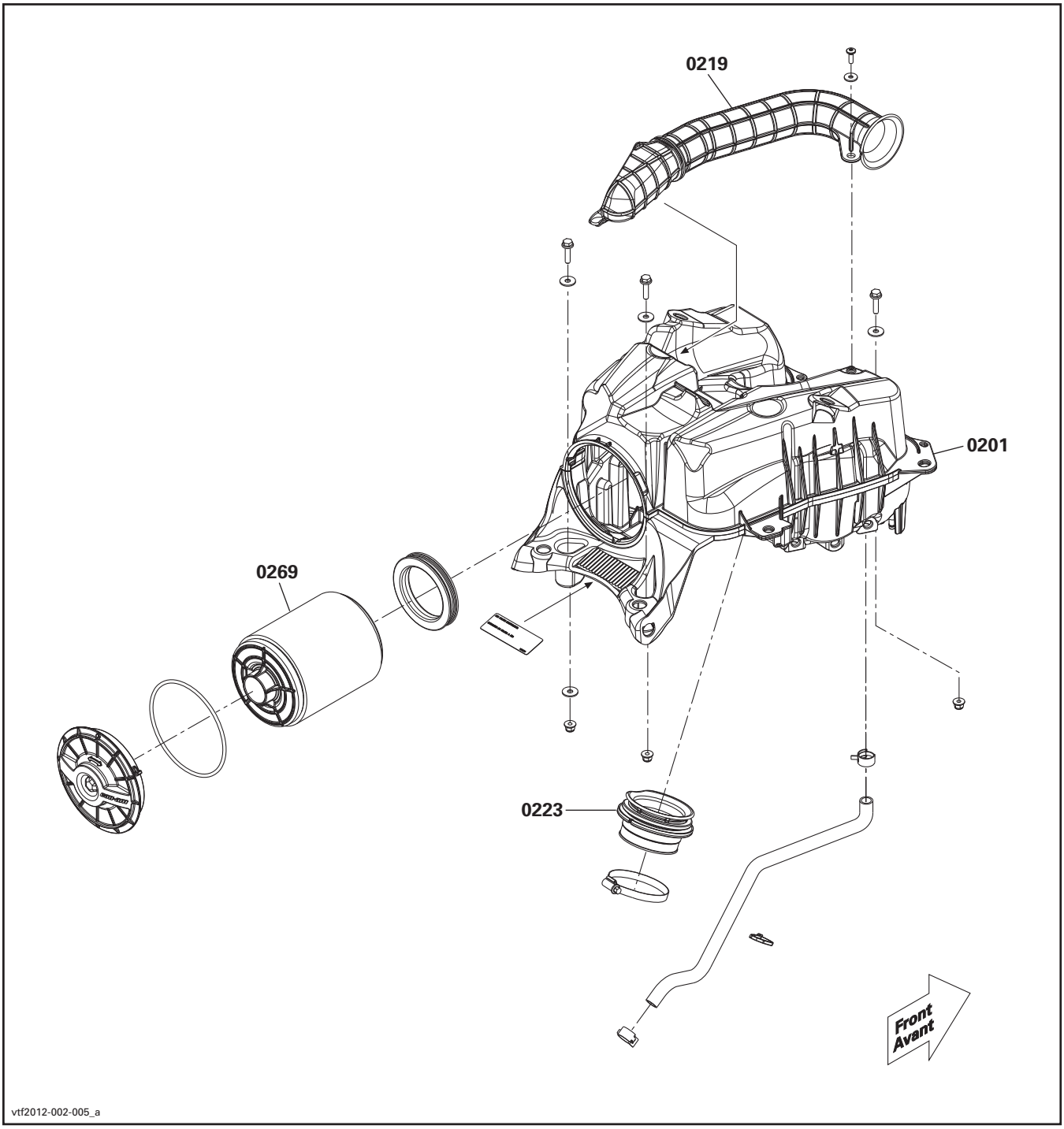

SYSTEM SYSTÈME	CODE	DESCRIPTION	OUTLANDER 450	OUTLANDER MAX 450	OUTLANDER 570	OUTLANDER MAX 570	OUTLANDER XMR 570
			1	2	3	4	5
03	**00**	**NO LABOR INVOLVED AUCUNE MAIN D'OEUVRE**	**0**	**0**	**0**	**0**	**0**
03	02	MAGNETO (ASS'Y) MAGNÉTO (COMPLET)	3.9	3.9	2.3	2.3	2.3
03	08	IGNITION COIL (EACH) BOBINE D'ALLUMAGE (CHAQUE)	0.5	0.5	0.5	0.5	0.5
03	10	IGNITION CABLE CÂBLE D'ALLUMAGE	0.5	0.5	0.5	0.5	0.5
03	27	STATOR (ASS'Y) STATOR (COMPLET)	3.7	3.7	2.0	2.0	2.0
03	29	REAR SPARK PLOG BOUGIE D'ALLUMAGE ARRIÈRE			0.3	0.3	0.3
03	30	FRONT SPARK PLOG BOUGIE D'ALLUMAGE AVANT	0.3	0.3	0.3	0.3	0.3
03	31	SPARK PLOG (2) BOUGIE D'ALLUMAGE (2)			0.4	0.4	0.4
03	32	MAGNETO COVER COUVERCLE DE MAGNÉTO	3.7	3.7	2.1	2.1	2.1
03	33	MAGNETO COVER GASKET JOINT D'ÉTANCHÉITÉ COUVERCLE DE MAGNÉTO			2.0	2.0	2.0

IGNITION SYSTEM
SYSTÈME D'ALLUMAGE

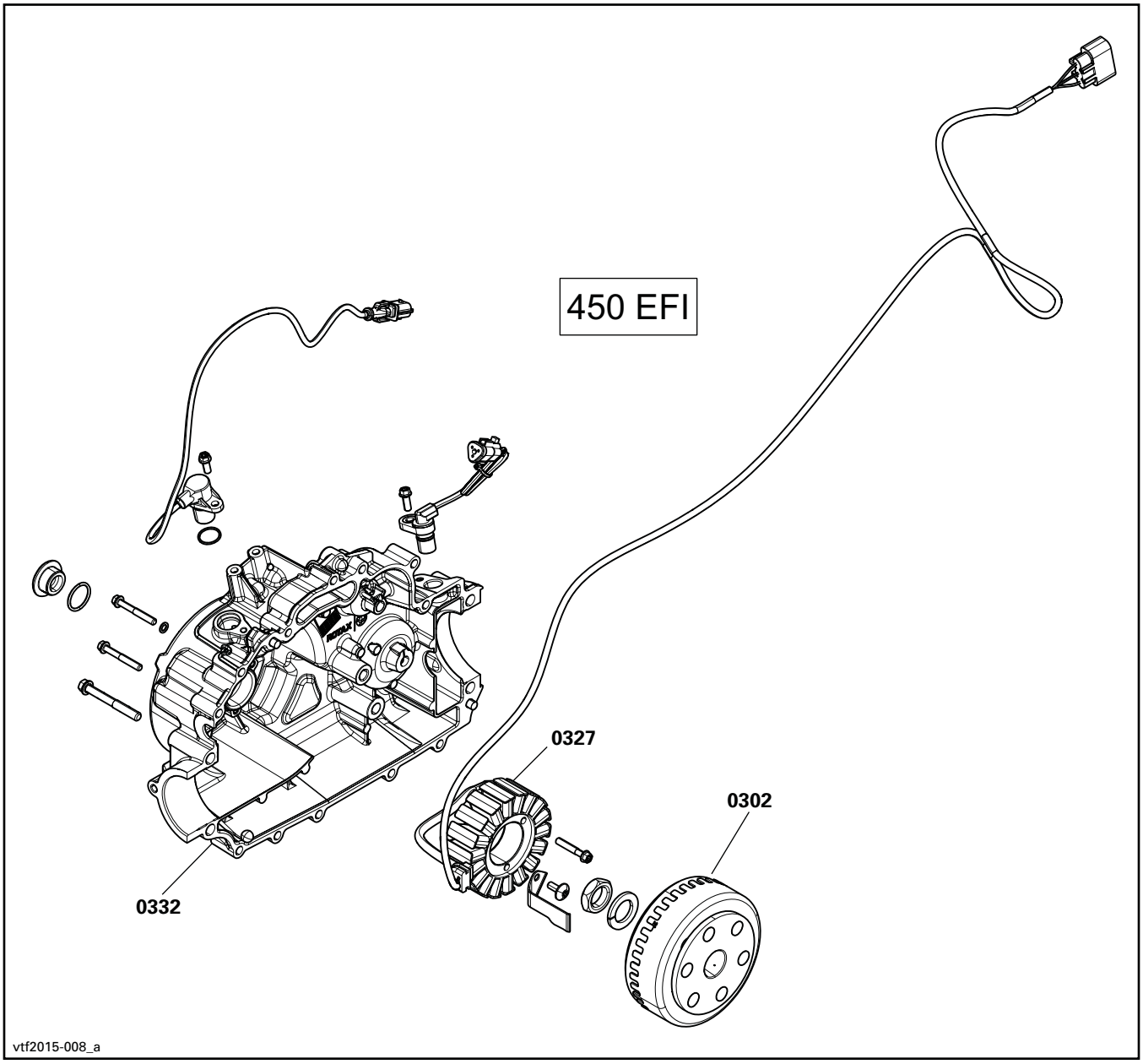

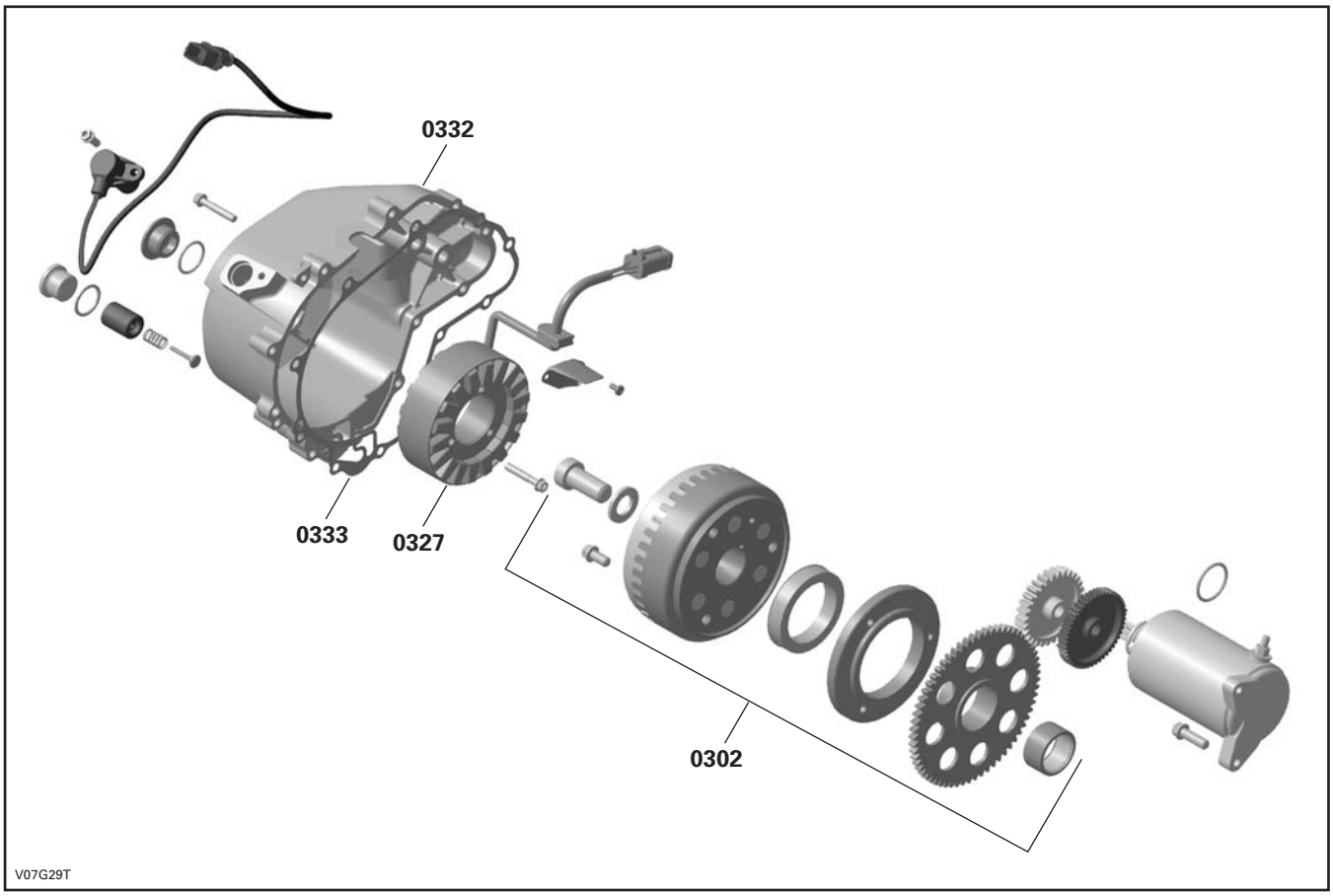
0332
0333
0327
0302
V07G29T

STARTER SYSTEM
SYSTÈME DE DÉMARREUR

SYSTEM SYSTÈME	CODE	DESCRIPTION	OUTLANDER 450	OUTLANDER MAX 450	OUTLANDER 570	OUTLANDER MAX 570	OUTLANDER XMR 570
			1	2	3	4	5
04	**00**	**NO LABOUR INVOLVED AUCUNE MAIN-D'OEUVRE**	**0**	**0**	**0**	**0**	**0**
04	02	ELECTRIC STARTER (ASS'Y) DÉMARREUR (COMPLET)	0.3	0.3	2.0	2.0	2.0
04	03	STARTER RELAY SOLÉNOÏDE DE DÉMARRAGE	0.3	0.3	0.3	0.3	0.3
04	19	STARTER DRIVE LANCEUR DÉMARREUR	1.0	1.0	1.9	1.9	1.9

SYSTEM SYSTÈME	CODE	DESCRIPTION	OUTLANDER 450	OUTLANDER MAX 450	OUTLANDER 570	OUTLANDER MAX 570	OUTLANDER XMR 570
			1	2	3	4	5
05	**00**	**NO LABOR INVOLVED AUCUNE MAIN-D'OEUVRE IMPLIQUÉE**	**0**	**0**	**0**	**0**	**0**
05	12	DRIVEN PULLEY SLIDING HALF DEMI-POULIE MENÉE COULISSANTE	0.5	0.6	0.5	0.6	0.5
05	19	BELT COURROIE	0.4	0.5	0.4	0.5	0.4
05	55	LEVER BUTTON BOUTON DE LEVIER	0.3	0.3	0.3	0.3	0.3
05	56	LEVER (ASS'Y) AND/OR LEVER SPRING LEVIER (COMPLET) ET/OU RESSORT DE LEVIER	0.3	0.3	0.3	0.3	0.3
05	59	SPEED SENSOR CAPTEUR DE VITESSE	0.6	0.6	0.6	0.6	0.6
05	77	LEVER LEVIER	0.7	0.7	0.7	0.7	0.7
05	78	CVT COVER COUVERCLE CVC	0.3	0.4	0.3	0.4	0.3
05	79	GASKET JOINT D'ÉTANCHÉITÉ	0.3	0.4	0.3	0.4	0.3
05	80	GOVERNOR CUP COUPOLE RÉGULATEUR	0.6	0.7	0.6	0.7	0.6
05	81	ONE WAY CLUTCH, FLANGE, RING, SPRING EMBRAYAGE À ROUE LIBRE, FLASQUE, ANNEAU, RESSORT	0.6	0.7	0.6	0.7	0.6
05	82	DRIVE PULLEY (ASS'Y) POULIE MOTRICE (COMPLET)	0.7	0.8	0.7	0.8	0.7
05	83	DRIVE PULLEY FIXED HALF POULIE MOTRICE FIXE	0.7	0.8	0.7	0.8	0.7
05	84	DRIVEN PULLEY OUTER CAM AND/OR SPRING CAME DE POULIE MENÉE EXTERNE ET/OU RESSORT	0.5	0.6	0.5	0.6	0.5
05	85	CENTRIFUGAL LEVER LEVIER CENTRIFUGE	0.8	0.9	0.8	0.9	0.8
05	86	SLIDER SHOES GLISSIÈRES	0.7	0.8	0.7	0.8	0.7
05	87	LEVER SPRING LEVIER À RESSORT	0.3	0.3	0.3	0.3	0.3
05	89	REMOVE AND REPLACE TRANSMISSION (ASS'Y) REMPLACEMENT DE LA TRANSMISSION (COMPLET)			5.1	5.1	5.4
05	91	MAIN SHAFT (ASS'Y) ARBRE DE RENVOI (COMPLET)			6.7	6.7	7.0
05	95	AIR INTAKE (CVT) ENTRÉE D'AIR (CVT)	0.3	0.3	0.3	0.3	0.4
05	96	AIR OUTLET (CVT) SORTIE D'AIR (CVT)	0.3	0.3	0.3	0.3	0.4

SYSTEM SYSTÈME	CODE	DESCRIPTION	OUTLANDER 450	OUTLANDER MAX 450	OUTLANDER 570	OUTLANDER MAX 570	OUTLANDER XMR 570
			1	2	3	4	5
05	97	FLEXIBLE ADAPTOR ADAPTATEUR FLEXIBLE	0.3	0.3	0.3	0.3	0.3
05	98	CAM, PLATE, DRIVEN SHAFT, SPRING CAME, PLAQUE, ARBRE POULIE MENÉE, RESSORT	0.5	0.6	0.5	0.6	0.5
05	99	OUTPUT SHAFT ARBRE DE SORTIE			5.9	5.9	6.2
05	100	REAR OUTPUT SHAFT SEALS ANNEAUX ÉTANCHÉITÉ DE L’ARBRE DE SORTIE ARRIÈRE			2.2	2.2	2.2
05	101	GEARS KIT/MAIN SHAFT ENSEMBLE D'ENGRENAGES/ARBRE PRINCIPAL			6.0	6.0	6.3
05	102	SHIFT SHAFT (ASS'Y) ARBRE D'EMBRAYAGE (COMPLET)			6.0	6.0	6.3
05	103	SHIFT DRUM TAMBOUR D'EMBRAYAGE			6.0	6.0	6.3
05	104	INDEX LEVER (ASS'Y) LEVIER D'INDEXATION (COMPLET)			6.0	6.0	6.3
05	105	MAIN SHAFT SEAL JOINT D'ÉTANCHÉITÉ DE L'ARBRE PRINCIPAL			0.9	0.9	0.9
05	106	LH HOUSING GEAR AND/OR BEARINGS AND/OR GEAR LOGEMENT DE TRANSMISSION GAUCHE ET/OU ROULEMENT À BILLE ET/OU ENGRENAGE			6.0	6.0	6.3
05	107	SPACER AND/OR O-RING ENTRETOISE ET/OU JOINT TORIQUE			0.9	0.9	0.9
05	108	ACTUATOR AND/OR FORK AND/OR SEAL ACTUATEUR ET/OU FOURCHETTE ET/OU JOINT D'ÉTANCHÉITÉ	0.5	0.5	0.5	0.5	0.5
05	109	FORK AND/OR PIN FOURCHETTE ET/OU GOUPILLE	0.7	0.7	0.7	0.7	0.7
05	110	CENTER HOUSING GEAR AND/OR BEARING LOGEMENT DE TRANSMISSION CENTRE ET/OU ROULEMENT			6.0	6.0	6.3
05	111	RH HOUSING GEAR AND/OR BEARING LOGEMENT DE TRANSMISSION DROIT ET/OU ROULEMENT			5.9	5.9	6.2
05	113	SHIFTING SWITCH INTERRUPTEUR D'EMBRAYAGE	0.3	0.3	0.3	0.3	0.3
05	114	SHIFT SHAFT SEAL JOINT D'ÉTANCHÉITÉ D’ARBRE D’EMBRAYAGE			0.7	0.7	0.7
05	115	CVT AIR GUIDE AND/OR O-RINGS GUIDE D'AÉRATION ET/OU JOINT D'ÉTANCHÉITÉ			0.8	0.8	0.8
05	120	GEARBOX POSITION SENSOR CAPTEUR DE POSITION D’ENGRENAGE	0.4	0.4	0.4	0.4	0.4
05	166	SHIFT ARM BASE BASE DU BRAS D’EMBRAYAGE	0.5	0.5	0.5	0.5	0.5

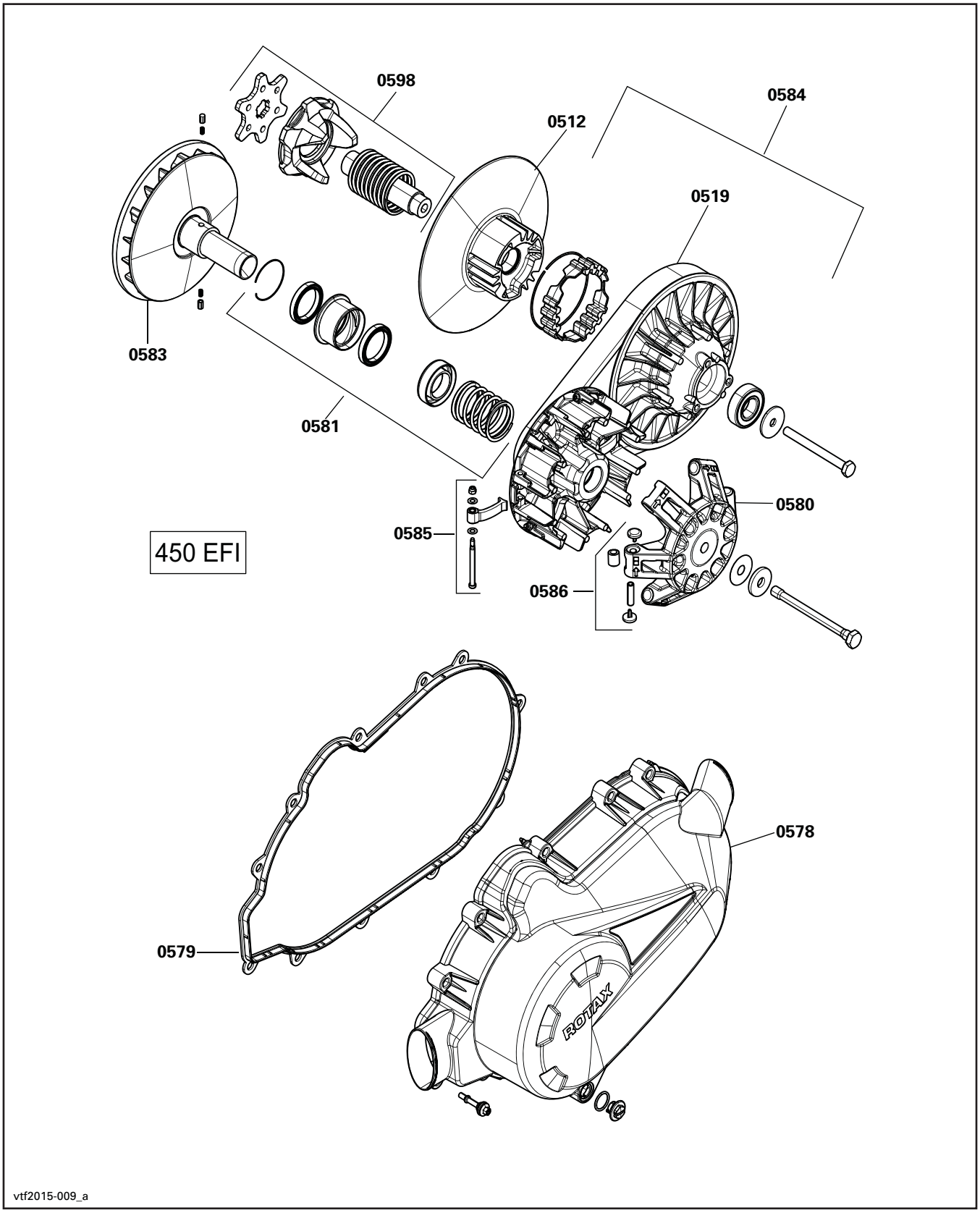
0598
0584
0512
0519
0583
0581
0580
0585
450 EFI
0586
0578
0579
ROTAX
vtf2015-009_a

TRANSMISSION AND LINKAGE SYSTEM
SYSTÈME DE TRANSMISSION ET DE TRINGLERIE

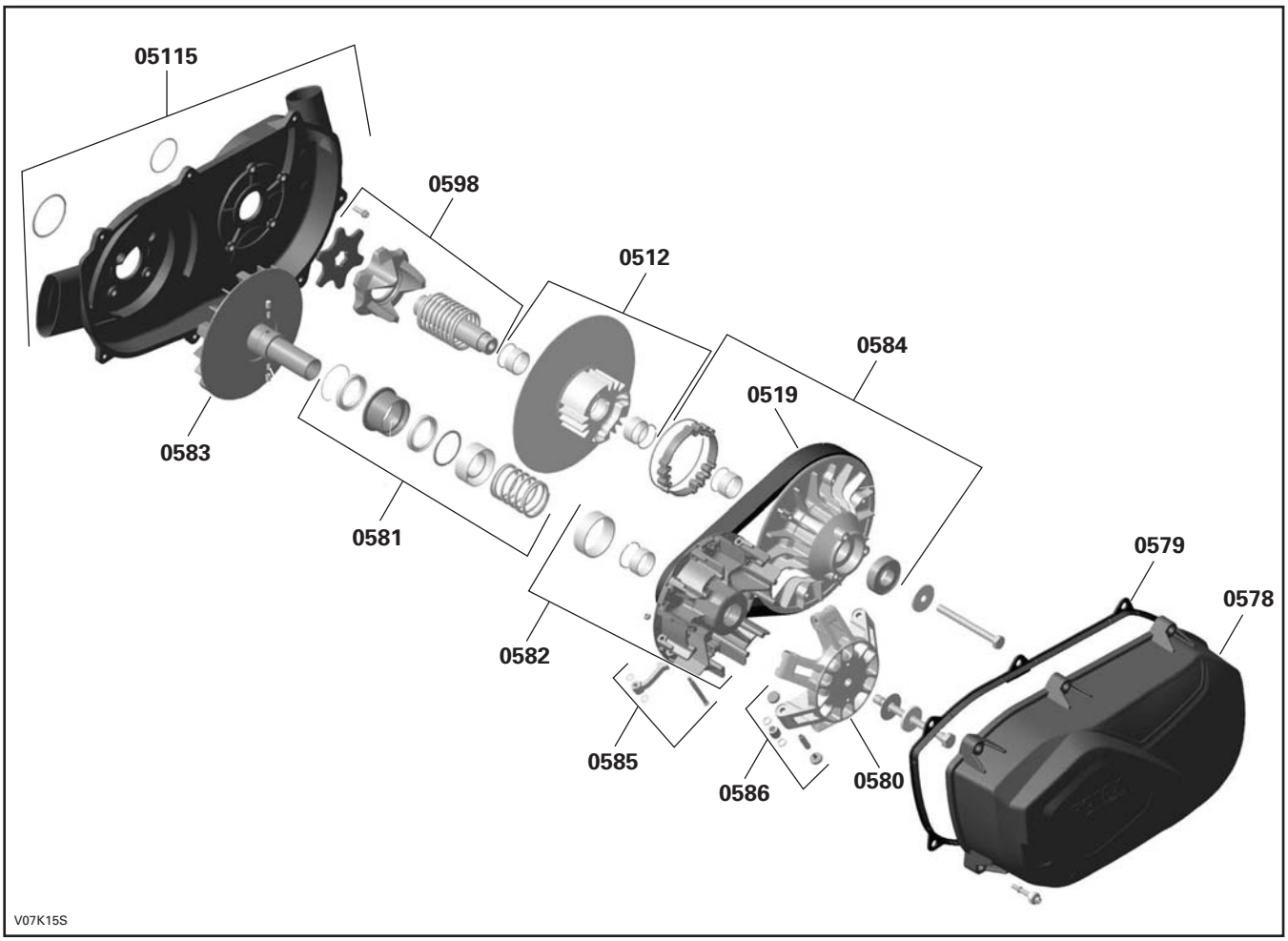

V500/650/800

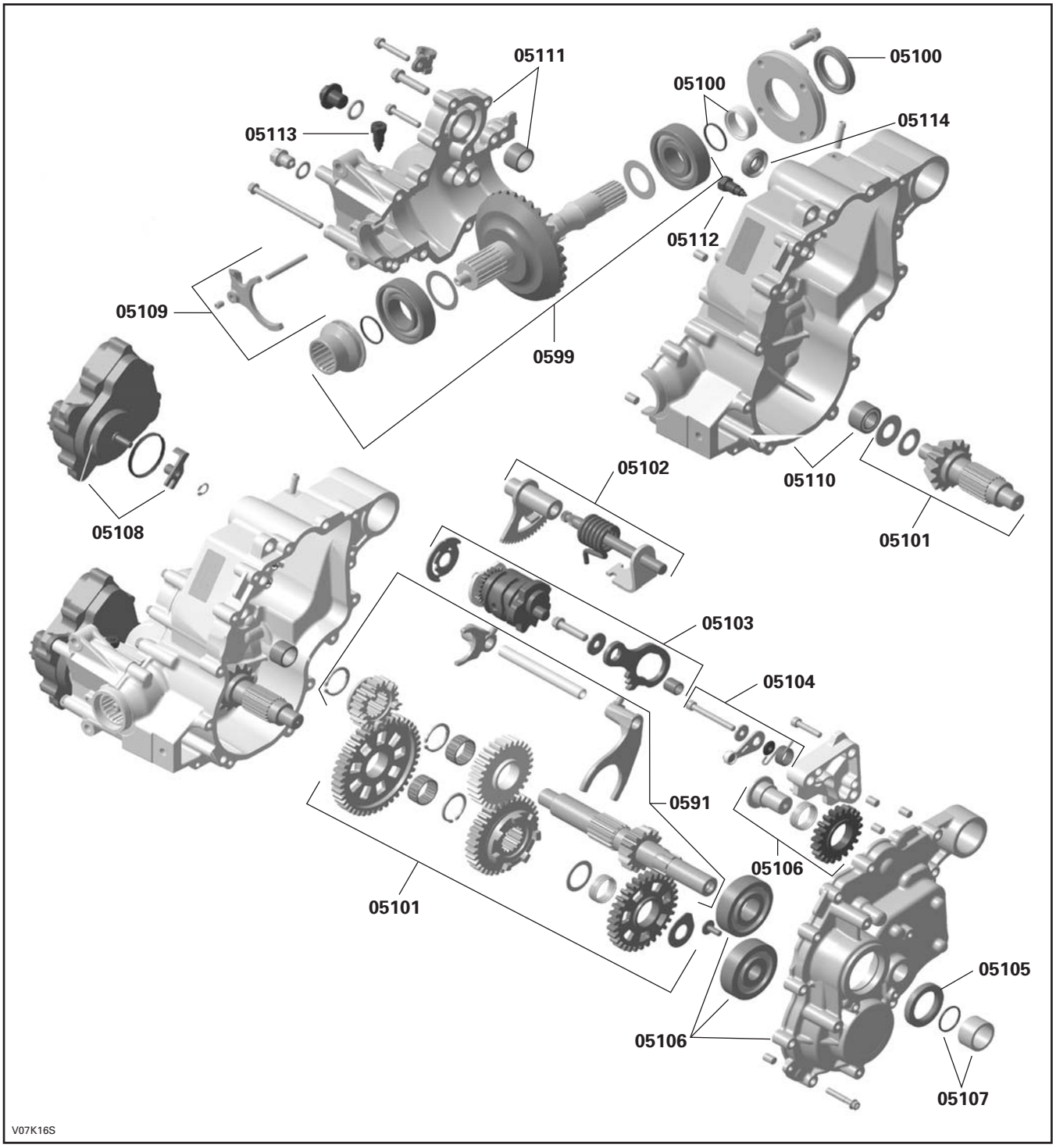
05111
05100
05100
05114
05113
05112
05109
0599
05102
05110
05108
05101
05103
05104
0591
05106
05101
05105
05106
05107
V07K16S

BRAKE SYSTEM
SYSTÈME DE FREIN

SYSTEM SYSTÈME	CODE	DESCRIPTION	OUTLANDER 450	OUTLANDER MAX 450	OUTLANDER 570	OUTLANDER MAX 570	OUTLANDER XMR 570
			1	2	3	4	5
06	**00**	**NO LABOR INVOLVED** **AUCUNE MAIN-D'OEUVRE**	**0**	**0**	**0**	**0**	**0**
06	06	MASTER CYLINDRE MAÎTRE-CYLINDRE	0.3	0.3	0.3	0.3	0.3
06	09	FRONT CALIPER (RH OR LH) ÉTRIER AVANT (DROIT OU GAUCHE)	0.4	0.4	0.4	0.4	0.4
06	10	FRONT BRAKE PAD (RH OR LH) PLAQUETTE DE FREIN AVANT (DROIT OU GAUCHE)	0.3	0.3	0.3	0.3	0.3
06	11	FRONT BRAKE DISC (RH OR LH) DISQUE DE FREIN AVANT (DROIT OU GAUCHE)	0.5	0.5	0.5	0.5	0.5
06	12	FRONT FLEXIBLE BRAKE HOSE BOYAU FLEXIBLE DE FREIN AVANT	0.6	0.6	0.6	0.6	0.6
06	15	FRONT BRAKE HANDLE HOSE BOYAU DE FREIN DE LA MANETTE AVANT	0.6	0.6	0.6	0.6	0.6
06	16	FRONT MASTER CYLINDER MAÎTRE-CYLINDRE AVANT	0.8	0.8	0.8	0.8	0.8
06	17	REAR BRAKE PEDAL PÉDALE DE FREIN ARRIÈRE	0.4	0.4	0.4	0.4	0.4
06	18	REAR BRAKE PEDAL SPRING RESSORT DE LA PÉDALE DE FREIN ARRIÈRE	0.3	0.3	0.3	0.3	0.3
06	19	BRAKE SWITCH INTERRUPTEUR DE FREIN	0.5	0.6	0.5	0.6	0.5
06	22	REAR MASTER CYLINDER MAÎTRE-CYLINDRE ARRIÈRE	0.7	0.7	0.7	0.7	0.7
06	23	REAR OIL HOUSING HOSE BOYAU CARTER D'HUILE ARRIÈRE	0.6	0.6	0.6	0.6	0.6
06	24	REAR OIL HOUSING CARTER D'HUILE ARRIÈRE	0.3	0.3	0.3	0.3	0.3
06	25	REAR BRAKE HOSE BOYAU DE FREIN ARRIÈRE	0.6	0.6	0.6	0.6	0.6
06	26	REAR CALIPER ÉTRIER ARRIÈRE	0.4	0.4	0.4	0.4	0.4
06	27	REAR BRAKE PAD PLAQUETTE DE FREIN ARRIÈRE	0.3	0.3	0.3	0.3	0.3
06	28	REAR BRAKE DISC AND/OR HUB DISQUE DE FREIN ARRIÈRE ET/OU MOYEU	0.5	0.5	0.5	0.5	0.5
06	30	BRAKE LINE BOYAU DE FREIN	3.5	3.5	3.5	3.5	3.8

Europe

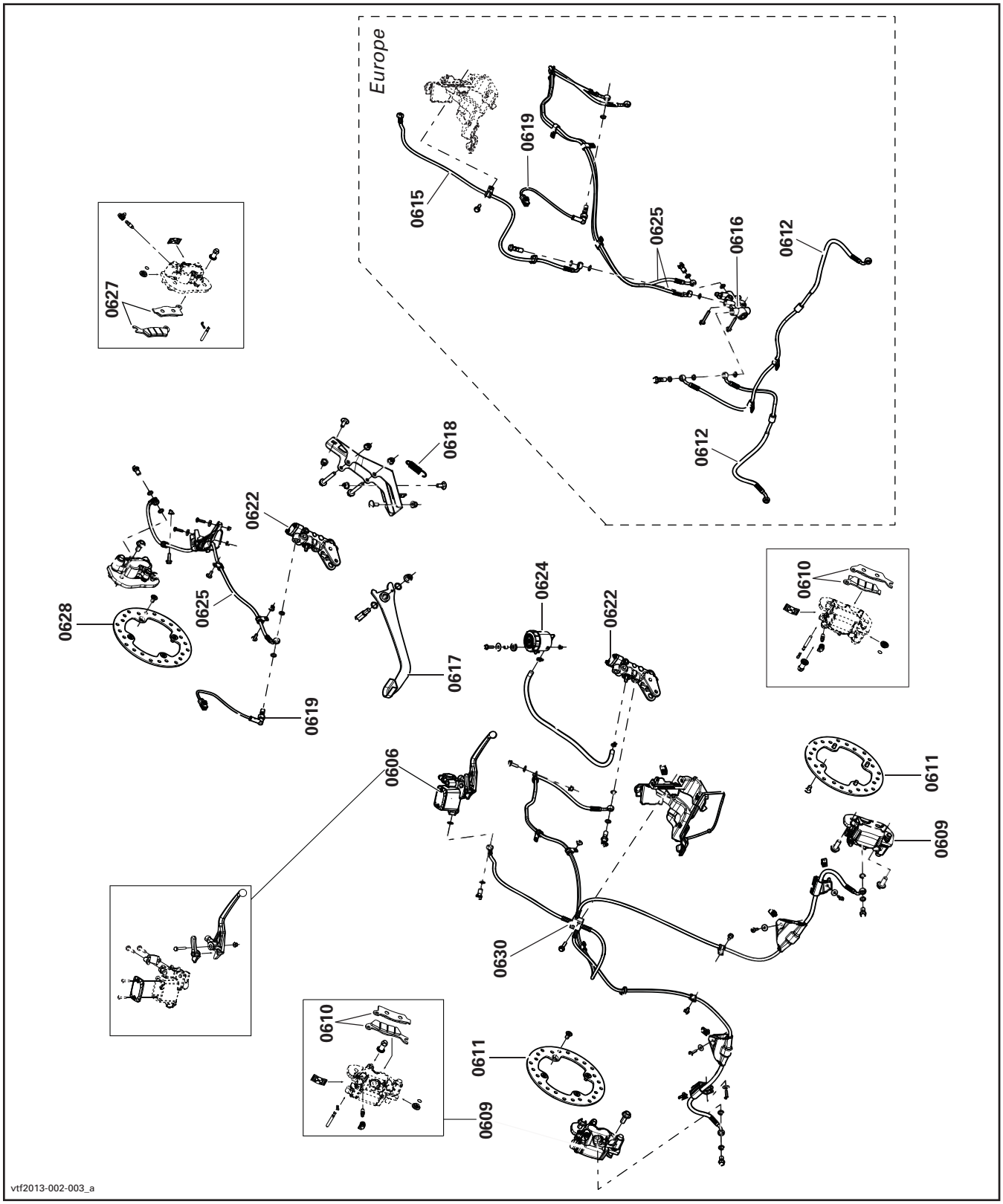
Europe
0615
0619
0625
0616
0612
0612
0627
0618
0622
0628
0625
0619
0617
0624
0622
0610
0606
0611
0609
0630
0610
0611
0609
vtf2013-002-003_a

STEERING - FRONT DRIVE SYSTEM AND SUSPENSION
DIRECTION - SYSTÈME D'ENTRAÎNEMENT AVANT ET SUSPENSION

SYSTEM SYSTÈME	CODE	DESCRIPTION	OUTLANDER 450	OUTLANDER MAX 450	OUTLANDER 570	OUTLANDER MAX 570	OUTLANDER XMR 570
			1	2	3	4	5
07	**00**	**NO LABOR INVOLVED** **AUCUNE MAIN-D'OEUVRE**	**0**	**0**	**0**	**0**	**0**
07	04	ARM PROTECTOR (RH OR LH) PROTECTEUR DE BRAS (DROIT OU GAUCHE)	0.3	0.3	0.3	0.3	0.3
07	05	STEERING CLAMP AND/OR STEERING COVER SUPPORT BRIDE DE DIRECTION ET/OU SUPPORT DU COUVRE-GUIDON	0.4	0.4	0.4	0.4	0.4
07	12	INTERNAL BALL JOINT (RH OR LH) JOINT À ROTULE INTERNE (DROIT AU GAUCHE)	0.9	0.9	0.9	0.9	0.9
07	13	EXTERNAL BALL JOINT (RH OR LH) JOINT À ROTULE EXTERNE (DROIT OU GAUCHE)	0.8	0.8	0.8	0.8	0.8
07	19	TIE ROD (RH OR LH) BARRE D'ACCOUPLEMENT (DROIT OU GAUCHE)	0.9	0.9	0.9	0.9	0.9
07	24	MAIN TUBE TUBE PRINCIPAL	2.6	2.6	2.6	2.6	3.0
07	25	HANDLEBAR GUIDON	1.1	1.1	1.1	1.1	1.1
07	26	HANDLEBAR GRIP KIT (RH AND/OR LH) ENSEMBLE DE GAINE DE GUIDON (DROIT ET/OU GAUCHE)	0.3	0.3	0.3	0.3	0.3
07	27	STEERING COVER COUVRE-GUIDON	0.3	0.3	0.3	0.3	0.3
07	28	HALF HOUSING AND HOUSING BUSHING DEMI-LOGEMENT ET DOUILLE DE LOGEMENT	2.1	2.1	2.1	2.1	2.4
07	29	LOWER STEERING MAIN TUBE BUSHING DOUILLE INFÉRIEURE DE LA COLONNE DE DIRECTION	1.0	1.0	1.0	1.0	1.0
07	32	LOWER ARM AND/OR BALL JOINT (RH OR LH) BRAS INFÉRIEUR ET/OU JOINT À ROTULE (DROIT OU GAUCHE)	0.7	0.7	0.7	0.7	0.7
07	33	UPPER ARM (RH OR LH) BRAS DE SUSPENSION SUPÉRIEUR (DROIT OU GAUCHE)	0.8	0.8	0.8	0.8	0.8
07	35	HANDLE STEERING SUPPORT (ALL) SUPPORT DE GUIDON (TOUS)	0.3	0.3	0.3	0.3	0.3
07	37	FRONT SHOCK AND/OR SPRING AND/OR STOPPER AND/OR PROTECTOR AND/OR SEAT (RH OR LH) AMORTISSEUR AVANT ET/OU RESSORT ET/OU BUTÉE ET/OU SIÈGE ET/OU PROTECTEUR (DROIT OU GAUCHE)	0.7	0.7	0.7	0.7	0.7
07	40	FRONT DIFFERENTIAL (ASS'Y) DIFFÉRENTIEL AVANT (COMPLET)	2.4	2.4	2.4	2.4	2.4
07	42	FRONT PROPELLER SHAFT (ASS'Y) ARBRE DE PROPULSION AVANT (COMPLET)	1.3	1.3	1.3	1.3	1.3
07	45	CV JOINT (RH OR LH) JOINT HOMOCINÉTIQUE (DROIT OU GAUCHE)	0.8	0.8	0.8	0.8	0.8
07	46	FRONT WHEEL HUB (SEAL AND/OR BEARING) (RH OR LH) MOYEU DE ROUE AVANT (JOINT ET/OU ROULEMENT) (DROIT OU GAUCHE)	0.5	0.5	0.5	0.5	0.5
07	47	KNUCKLE (RH OR LH) PORTE-FUSÉE (DROIT OU GAUCHE)	0.8	0.8	0.8	0.8	0.8

SYSTEM SYSTÈME	CODE	DESCRIPTION	OUTLANDER 450	OUTLANDER MAX 450	OUTLANDER 570	OUTLANDER MAX 570	OUTLANDER XMR 570
			1	2	3	4	5
07	50	FRONT RIM AND/OR TIRE JANTE AVANT ET/OU PNEU	0.4	0.4	0.4	0.4	0.4
07	56	THROTTLE HANDLE MANETTE D'ACCÉLÉRATEUR	0.3	0.3	0.3	0.3	0.3
07	65	PITMAN ARM LEVIER DE DIRECTION	2.6	2.6	2.6	2.6	2.6
07	72	INTERNAL BUSHING AND/OR CUSHION (LOWER AND/OR UPPER ARM) (RH OR LH) DOUILLE INTERNE ET/OU COUSSIN (BRAS INFÉRIEUR ET/OU SUPÉRIEUR) (DROIT OU GAUCHE)	0.4	0.4	0.4	0.4	0.4
07	73	BALL JOINTS REPLACEMENT (2) REMPLACEMENT DES JOINTS A ROTULE (2)	1.0	1.0	1.0	1.0	1.0
07	80	FRONT RIM JANTE AVANT	0.4	0.4	0.4	0.4	0.4
07	82	RADIAL BALL BEARINGS ROULEMENTS À BILLE RADIALES	0.8	0.8	0.8	0.8	0.8
07	85	RING GEAR AND/OR CARRIER AND/OR SHIM COURONNE DE LANCEMENT ET/OU SUPPORT ET/OU CALE	3.0	3.0	3.0	3.0	3.0
07	88	RING GEAR DRIVE GEAR AND/OR BEARING AND/OR SHIM PIGNON DE COMMANDE DE LA COURONNE ET/OU ROULEMENT À BILLE ET/OU CALE	2.7	2.7	2.7	2.7	2.7
07	89	COVER AND/OR PINION COVER AND/OR SEAL AND/OR BEARING COUVERCLE ET/OU COUVERCLE DE PIGNON ET/OU JOINT D'ÉTANCHÉITÉ ET/OU ROULEMENT À BILLE	3.0	3.0	3.0	3.0	3.0
07	90	BOOT WHEEL KIT AND/OR CV JOINT (RH OR LH) ENSEMBLE DE SOUFFLET DE ROUE ET/OU JOINT CV (DROIT OU GAUCHE)	0.8	0.8	0.8	0.8	0.8
07	91	BOOT DIFFERENTIAL KIT AND/OR PLUNGING JOINT (RH OR LH) ENSEMBLE DE SOUFFLET DE DIFFÉRENTIEL ET/OU JOINT PLONGEANT (DROIT OU GAUCHE)	0.8	0.8	0.8	0.8	0.8
07	92	SLEEVE AND/OR WEARRING MANCHON ET/OU BAGUE D'USURE	1.3	1.3	1.3	1.3	1.3
07	94	UNIT PACK KIT ENSEMBLE JOINT CARDAN	2.3	2.3	2.3	2.3	2.3
07	96	UPPER ARM BRACKET ATTACHE BRAS SUPÉRIEUR	2.2	2.2	2.2	2.2	2.2
07	99	POWER STEERING SERVODIRECTION	1.9	1.9	1.9	1.9	1.9
07	101	DEFLECTOR (LH OR RH) DÉFLECTEUR (GA OU DR)	0.3	0.3	0.3	0.3	0.3
07	103	DIFFERENTIAL SEAL (1) JOINT D'ÉTANCHÉITÉ DU DIFFÉRENTIEL (1)	0.8	0.8	0.8	0.8	0.8
07	104	DIFFERENTIAL SEALS (2) JOINTS D'ÉTANCHÉITÉ DU DIFFÉRENTIEL (2)	1.5	1.5	1.5	1.5	1.5
07	119	DIFFERENTIAL BELLOWS SOUFFLET DU DIFFÉRENTIEL	0.3	0.3	0.3	0.3	0.3

SYSTEM SYSTÈME	CODE	DESCRIPTION	OUTLANDER 450	OUTLANDER MAX 450	OUTLANDER 570	OUTLANDER MAX 570	OUTLANDER XMR 570
			1	2	3	4	5
07	120	DIFFERENTIAL OIL SEAL ANNEAU D'ÉTANCHÉITÉ DU DIFFÉRENTIEL	2.6	2.6	2.6	2.6	2.6

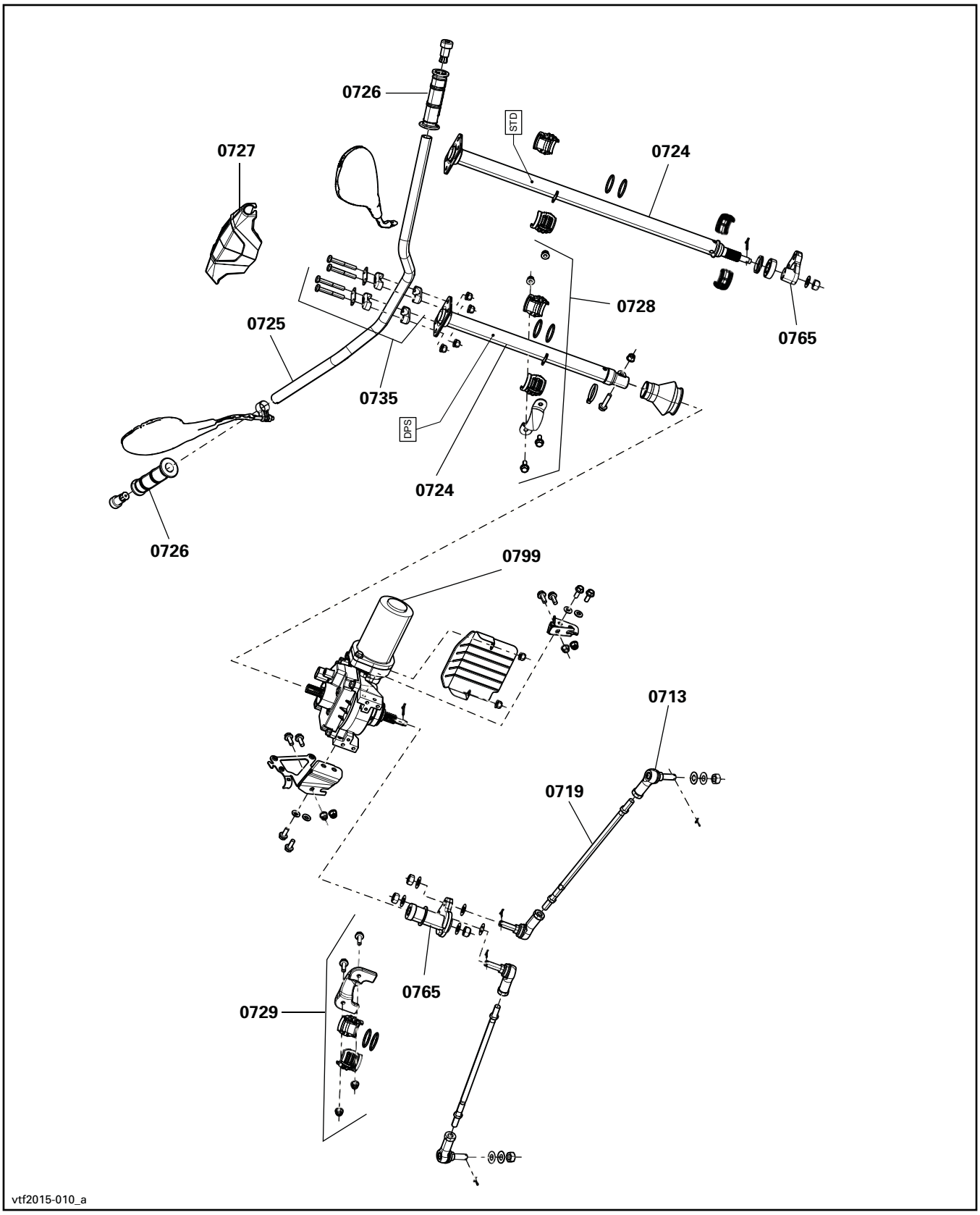
0726
STD
0727
0724
0728
0765
0725
0735
DPS
0724
0726
0799
0713
0719
0765
0729
vtf2015-010_a

STEERING - FRONT DRIVE SYSTEM AND SUSPENSION
DIRECTION - SYSTÈME D'ENTRAÎNEMENT AVANT ET SUSPENSION

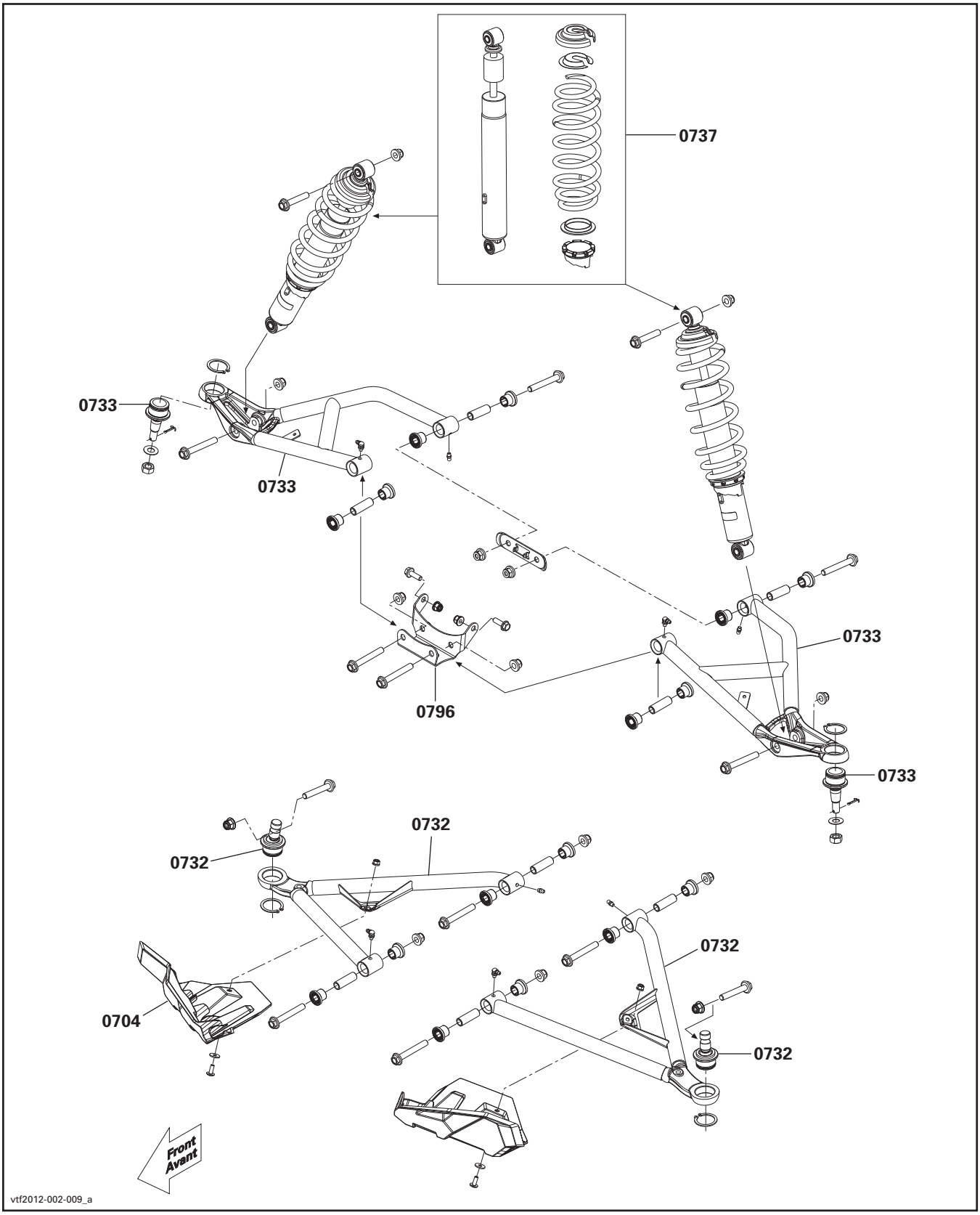

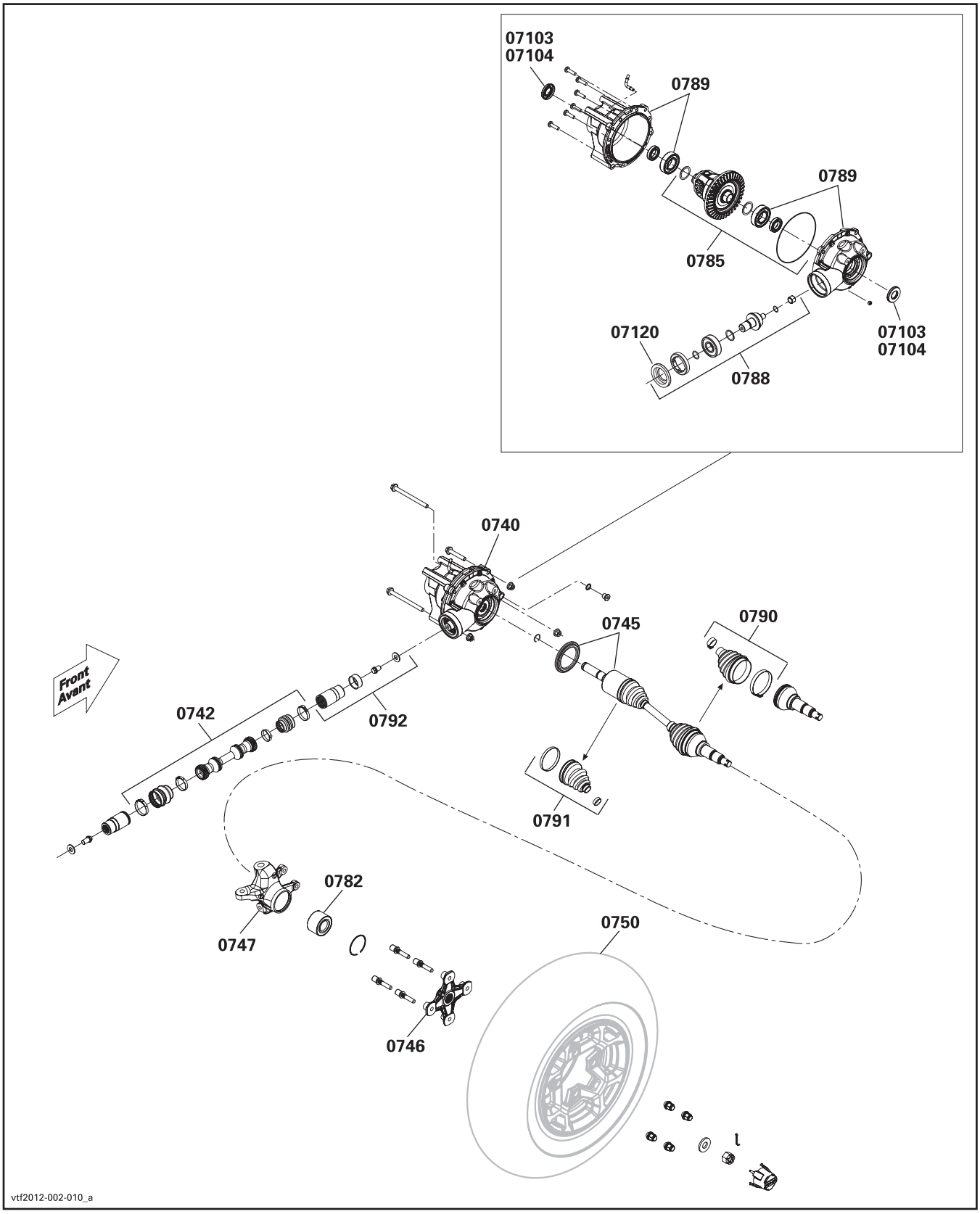
07103
07104
0789
0789
0785
07120
07103
07104
0788
0740
0745
0790
Front
Avant
0742
0792
0791
0782
0747
0750
0746
vtf2012-002-010_a

REAR DRIVE SYSTEM AND SUSPENSION
SYSTÈME D'ENTRAÎNEMENT ARRIÈRE ET SUSPENSION

SYSTEM SYSTÈME	CODE	DESCRIPTION	OUTLANDER 450	OUTLANDER MAX 450	OUTLANDER 570	OUTLANDER MAX 570	OUTLANDER XMR 570
			1	2	3	4	5
08	**00**	**NO LABOR INVOLVED** **AUCUNE MAIN D'OEUVRE**	**0**	**0**	**0**	**0**	**0**
08	05	REAR WHEEL HUB (RH) MOYEU DE ROUE ARRIÈRE (DROIT)	0.5	0.5	0.5	0.5	0.5
08	07	REAR DIFFERENTIAL (ASS'Y) DIFFÉRENTIEL ARRIÈRE (COMPLET)	1.8	1.8	1.8	1.8	1.8
08	26	REAR PROPELLER SHAFT (ASS'Y) ARBRE DE PROPULSION ARRIÈRE (COMPLET)	1.5	1.5	1.5	1.5	1.5
08	62	SWING ARM BRAS OSCILLANT	1.2	1.2	1.2	1.2	1.2
08	101	LH PROTECTOR PROTECTEUR GAUCHE	0.3	0.3	0.3	0.3	0.3
08	102	RH PROTECTOR PROTECTEUR DROIT	0.3	0.3	0.3	0.3	0.3
08	109	REAR WHEEL HUB (LH) MOYEU DE ROUE ARRIÈRE (GAUCHE)	0.3	0.3	0.3	0.5	0.5
08	111	REAR SHOCK (RH OR LH) AMORTISSEUR ARRIÈRE (DROIT OU GAUCHE)	0.4	0.4	0.4	0.4	0.4
08	114	REAR RIM AND/OR TIRE JANTE ARRIÈRE ET/OU PNEU	0.4	0.4	0.4	0.4	0.4
08	115	BAKK BEARING ROULEMENT À BILLES	0.5	0.5	0.5	0.5	0.5
08	120	CV JOINT (RH OR LH) JOINT HOMOCINÉTIQUE (DROIT OU GAUCHE)	0.8	0.8	0.8	0.8	0.8
08	121	STABILIZER BAR BARRE STABILISATRICE	2.3	2.3	2.3	2.3	2.3
08	122	RING GEAR AND/OR SHIM COURONNE ET/OU CALE	3.1	3.1	3.1	3.1	3.1
08	123	RING GEAR DRIVE GEAR AND/OR BEARING AND/OR SHIM PIGNON DE COMMANDE DE LA COURONNE ET/OU ROULEMENT À BILLE ET/OU CALE	3.1	3.1	3.1	3.1	3.1
08	124	COVER AND/OR PINION COVER AND/OR SEAL AND/OR BEARING COUVERCLE ET/OU COUVERCLE DE PIGNON ET/OU JOINT D'ÉTANCHÉITÉ ET/OU ROULEMENT À BILLE	3.3	3.3	3.3	3.3	3.3
08	125	BOOT WHEEL KIT AND/OR CV JOINT (RH OR LH) ENSEMBLE DE SOUFFLET DE ROUE ET/OU JOINT CV (DROIT OU GAUCHE)	0.9	0.9	0.9	0.9	0.9
08	126	BOOT DIFFERENTIAL KIT AND/OR PLUNGING JOINT (RH OR LH) ENSEMBLE DE SOUFFLET DE DIFFÉRENTIEL ET/OU JOINT PLONGENT (DROIT OU GAUCHE)	0.9	0.9	0.9	0.9	0.9
08	127	RADIAL BALL BEARINGS ROULEMENTS À BILLE RADIALES	1.0	1.0	1.0	1.0	1.0
08	128	UNIT PACK KIT ENSEMBLE DE JOINT CARDAN	1.2	1.2	1.2	1.2	1.2

SYSTEM SYSTÈME	CODE	DESCRIPTION	OUTLANDER 450	OUTLANDER MAX 450	OUTLANDER 570	OUTLANDER MAX 570	OUTLANDER XMR 570
			1	2	3	4	5
08	129	UNIT PACK KIT (2) ENSEMBLE DE JOINT CARDAN (2)	1.5	1.5	1.5	1.5	1.5
08	134	DIFFERENTIAL SEAL (1) JOINT D'ÉTANCHÉITÉ DU DIFFÉRENTIEL (1)	0.9	0.9	0.9	0.9	0.9
08	148	DIFFERENTIAL OIL SEAL ANNEAU D'ÉTANCHÉITÉ DU DIFFÉRENTIEL	1.9	1.9	1.9	1.9	1.9
08	135	DIFFERENTIAL SEALS (2) JOINTS D'ÉTANCHÉITÉ DU DIFFÉRENTIEL (2)	1.8	1.8	1.8	1.8	1.8
08	148	DFFERENTIAL OIL SEAL ANNEAU D'ÉTANCHÉITÉ DU DIFFÉRENTIEL	1.9	1.9	1.9	1.9	1.9
08	149	AXIAL PIVOT AXE DE PIVOT	0.5	0.5	0.5	0.5	0.5

REAR DRIVE SYSTEM AND SUSPENSION
SYSTÈME D'ENTRAÎNEMENT ARRIÈRE ET SUSPENSION

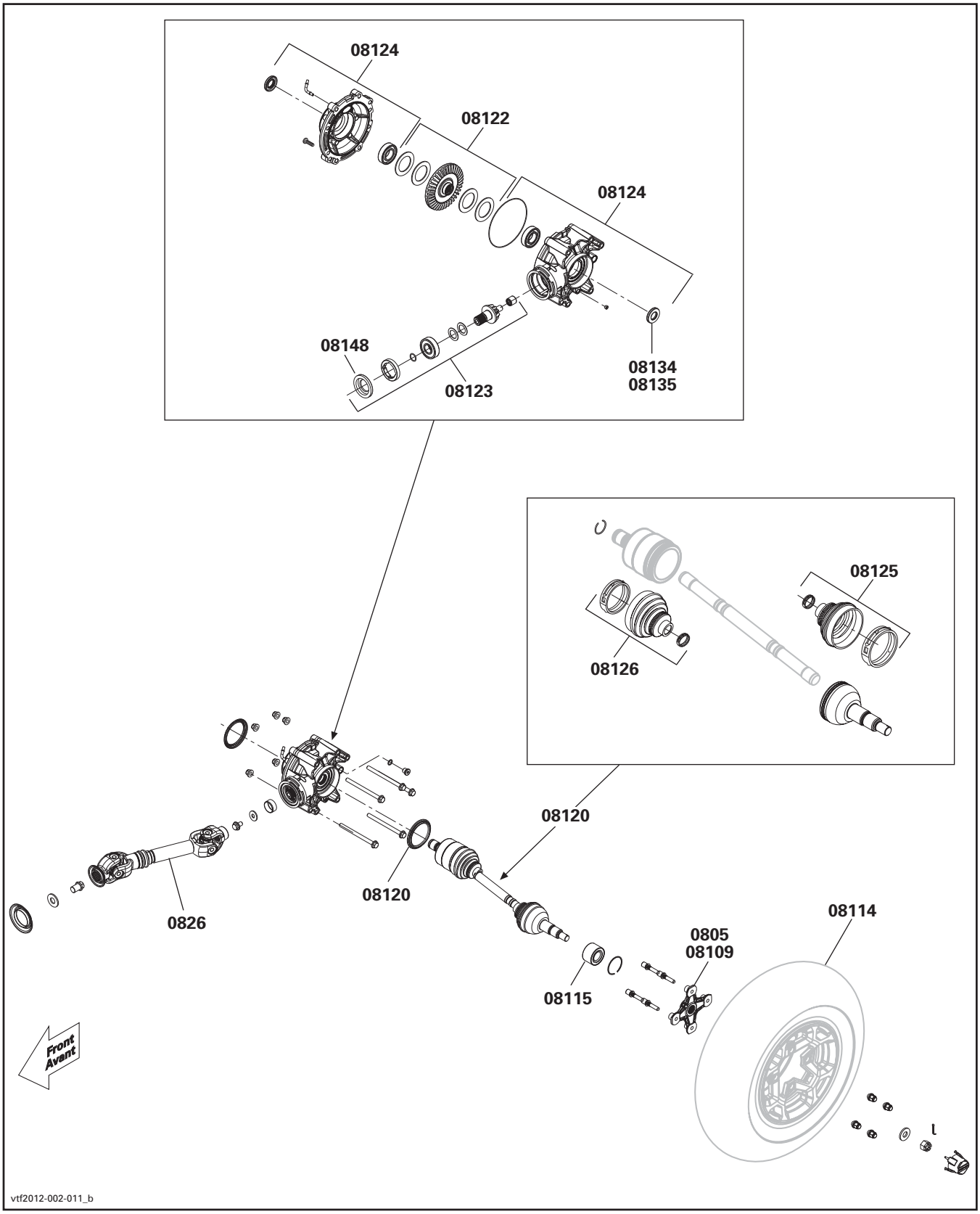

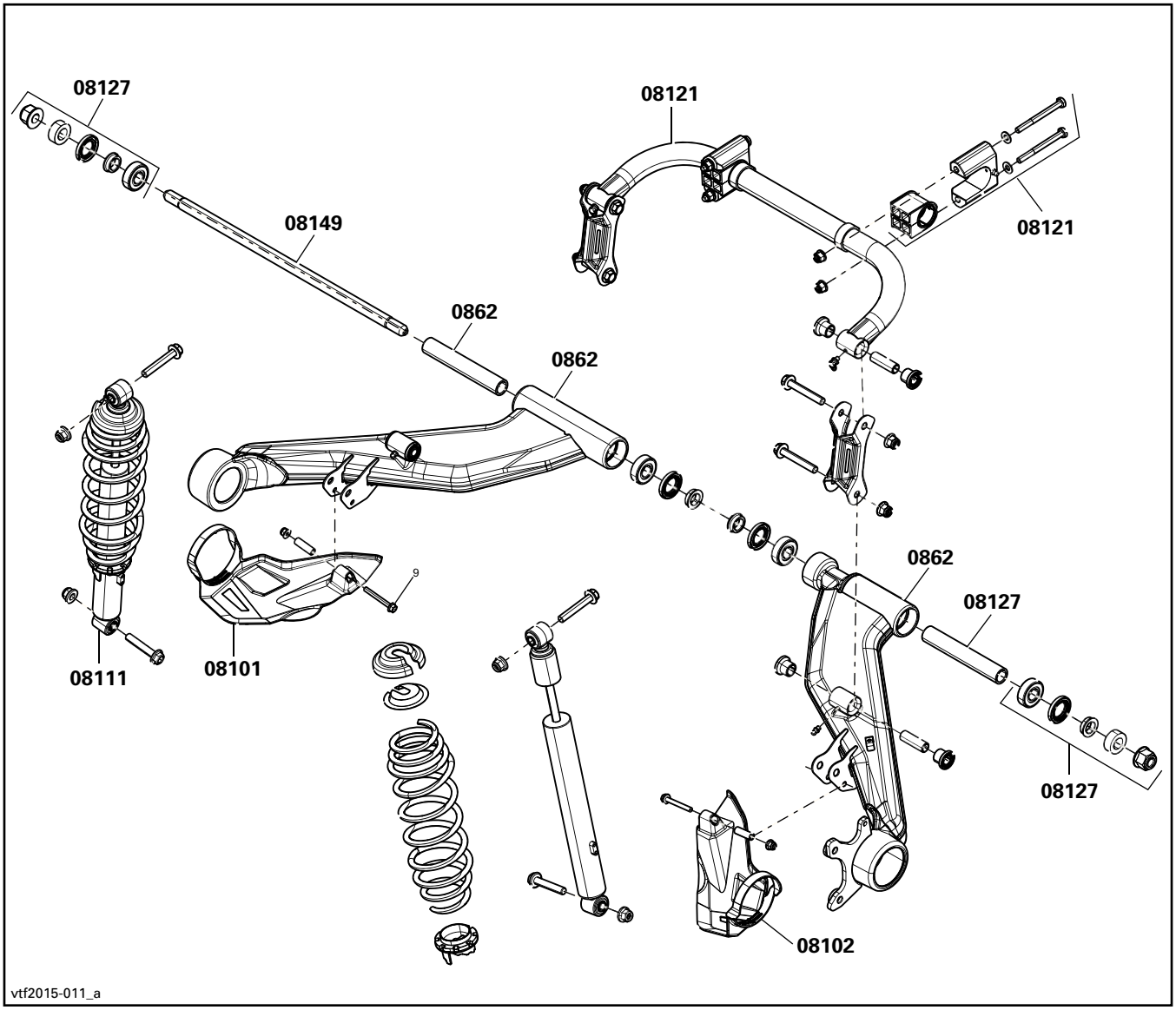
08127
08121
08149
08121
0862
0862
0862
08127
08111
08101
08127
08102
vtf2015-011_a

SYSTEM SYSTÈME	CODE	DESCRIPTION	OUTLANDER 450	OUTLANDER MAX 450	OUTLANDER 570	OUTLANDER MAX 570	OUTLANDER XMR 570
			1	2	3	4	5
09	**00**	**NO LABOR INVOLVED AUCUNE MAIN D'OEUVRE IMPLIQUÉE**	**0**	**0**	**0**	**0**	**0**
09	13	LUGGAGE RACK KIT (FRONT OR REAR) ENSEMBLE DE PORTE-BAGAGES (AVANT OU ARRIÈRE)	0.5	0.5	0.5	0.5	0.5
09	17	CONSOLE CONSOLE	0.3	0.3	0.3	0.3	0.3
09	21	SEAT SIÈGE	0.3	0.3	0.3	0.3	0.3
09	22	SEAT COVER HOUSSE DE SIÈGE	1.0	1.0	1.0	1.0	1.0
09	26	FRONT BUMPER PARE-CHOCS AVANT	0.5		0.5		
09	28	FRONT FASCIA FASCIA AVANT	0.9	0.9	0.9	0.9	0.9
09	29	REAR FASCIA FASCIA ARRIÈRE	0.3	0.3	0.3	0.3	0.3
09	34	REAR BUMPER PARE-CHOCS ARRIÈRE	0.3		0.3		
09	45	REAR HANDLE (RH OR LH) POIGNÉE ARRIÈRE (GAUCHE OU DROITE)		0.3		0.3	
09	48	FOOTREST (RH OR LH) MARCHEPIED (DROIT OU GAUCHE)	0.4	0.5	0.4	0.5	0.4
09 *	49	FRAME CHÂSSIS	12.5	13.0	13.0	13.5	13.5
09	56	REAR FENDER AILE ARRIÈRE	0.9	0.9	0.9	0.9	0.9
09	74	FOOTREST SUPPORT (RH OR LH) SUPPORT DE REPOSE PIED (DROIT OU GAUCHE)	0.4	0.5	0.4	0.5	0.4
09	91	FOOTWELL (RH OR LH) REPOSE-PIED (DROIT OU GAUCHE)	0.3	0.4	0.3	0.4	0.3
09	93	FRONT SKID PLATE PLAQUE DE PROTECTION AVANT	0.5		0.5		
09	95	EACH DECAL (1) CHAQUE AUTOCOLLANT (1)	0.3	0.3	0.3	0.3	0.3
09	108	REAR SEAT ASS'Y SIÈGE ARRIÈRE ASS.		0.4		0.4	
09	149	ENGINE SIDE PANELS (2) PANNEAUX MOTEUR (2)	0.3	0.3	0.3	0.3	0.3
09	157	UPPER CONSOLE CONSOLE SUPÉRIEURE	0.3	0.3	0.3	0.3	0.3
09	158	FRONT FENDER SUPPORT SUPPORT D'AILE AVANT	1.3	1.3	1.3	1.3	1.3

SYSTEM SYSTÈME	CODE	DESCRIPTION	OUTLANDER 450	OUTLANDER MAX 450	OUTLANDER 570	OUTLANDER MAX 570	OUTLANDER XMR 570
			1	2	3	4	5
09	198	BACKREST PARTS PIÈCES DU DOSSIER		0.4		0.4	
09	199	REAR SEAT BASE A/O ALL PARTS BASE SIÈGE ARRIÈRE ET/OU TOUTES LES PIÈCES		1.0		1.0	
09	200	REAR FENDER SUPPORT SUPPORT D'AILE ARRIÈRE	1.9	1.9	1.9	1.9	1.9
09	203	REAR SEAT COVER HOUSSE DE SIÈGE ARRIÈRE		1.0		1.0	
09	244	CONSOLE SUPPORT SUPPORT DE CONSOLE	0.5	0.5	0.5	0.5	0.8
09	283	REAR BOX COFFRE ARRIÈRE	1.1	1.1	1.1	1.1	1.1
09	284	BOX DOOR PORTE DE COFFRE	0.3	0.3	0.3	0.3	0.3
09	304	REAR SUPPORT SUPPORT ARRIÈRE	1.9	1.9	1.9	1.9	1.9
09	305	INNER FENDER (RH OR LH) FAUSSE AILE (DROIT OU GAUCHE)	0.3	0.3	0.3	0.3	0.3
09	316	HITCH ATTACHE	0.3	0.3	0.3	0.3	0.3
09	336	CENTRAL SKID PLAT PLAQUE DE PROTECTION CENTRALE	0.4	0.4	0.4	0.4	0.4
09	367	LOCK VERROU	0.3	0.3	0.3	0.3	0.3
09	438	FRONT FENDER AILE AVANT	1.0	1.0	1.0	1.0	1.0
09	473	GUN BOOT RACK SUPPORT D'ÉTUI D'ARME	0.3		0.3		
09	474	GUN BOOT ÉTUI D'ARME	0.3		0.3		
09	475	MOUNTED GEAR GRIPS PINCES À CLIQUET	0.3		0.3		

BODY AND ACCESSORIES
CARROSSERIE ET ACCESSOIRES

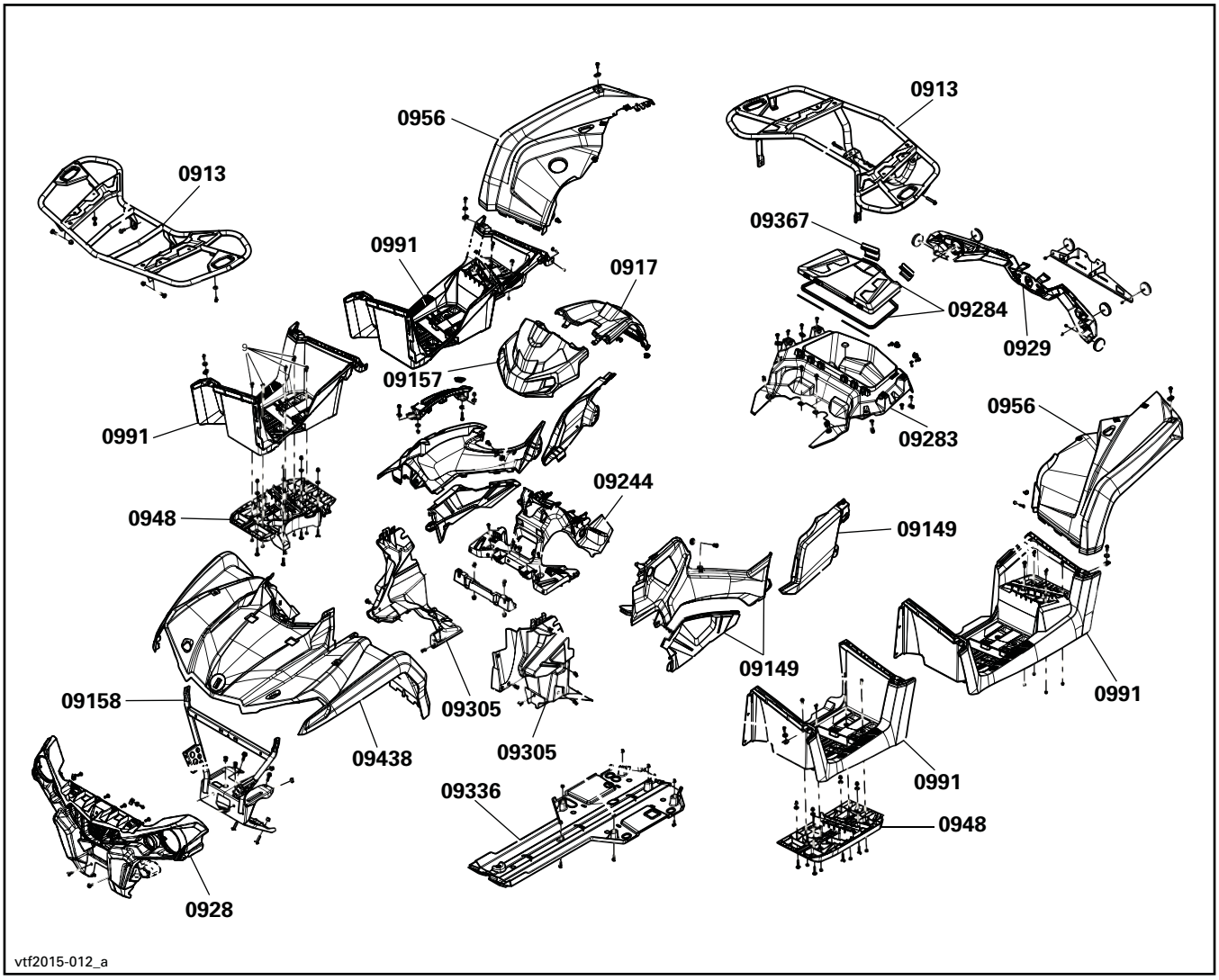

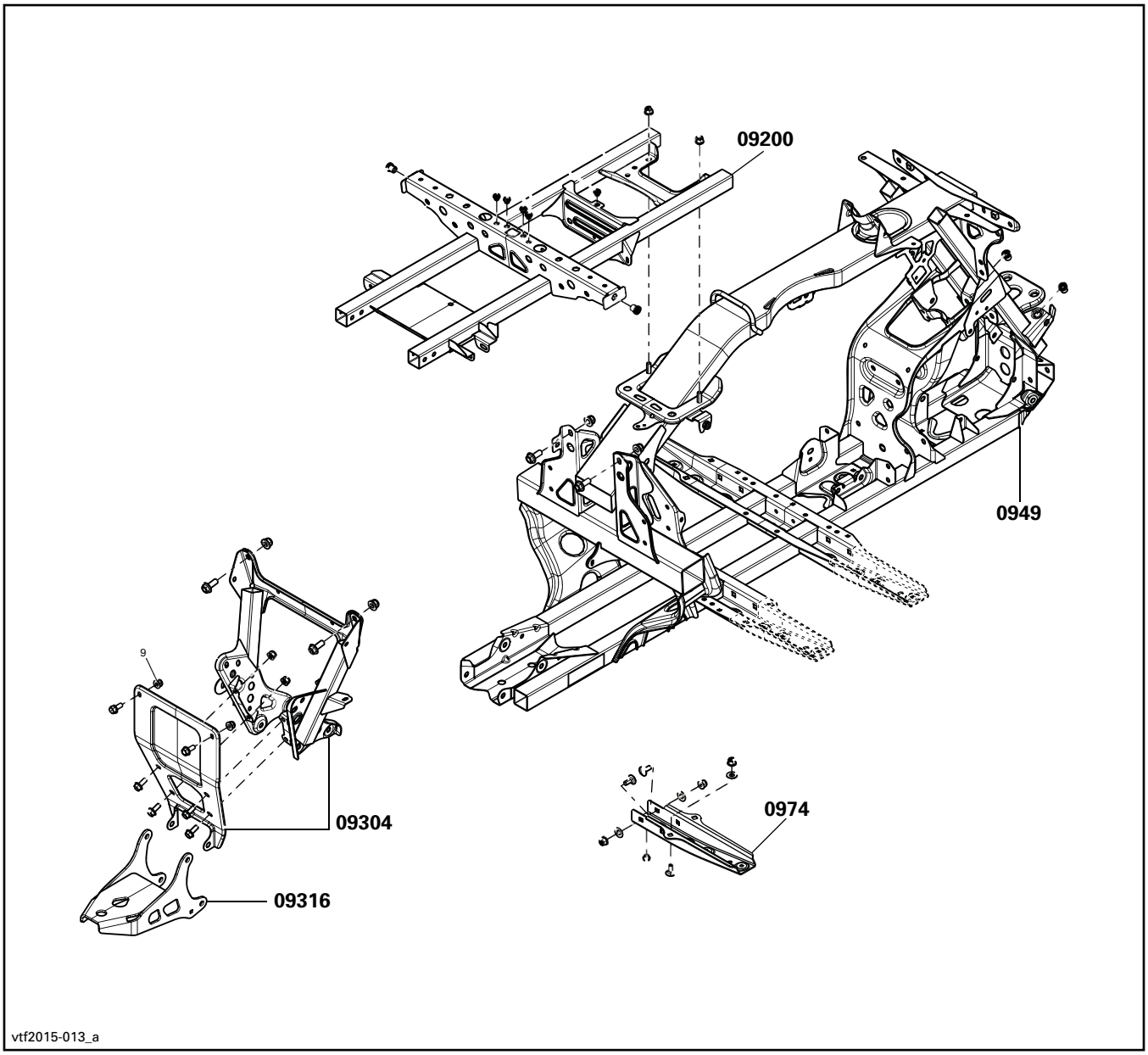
09200
0949
9
09304
09316
0974
vtf2015-013_a

BODY AND ACCESSORIES
CARROSSERIE ET ACCESSOIRES

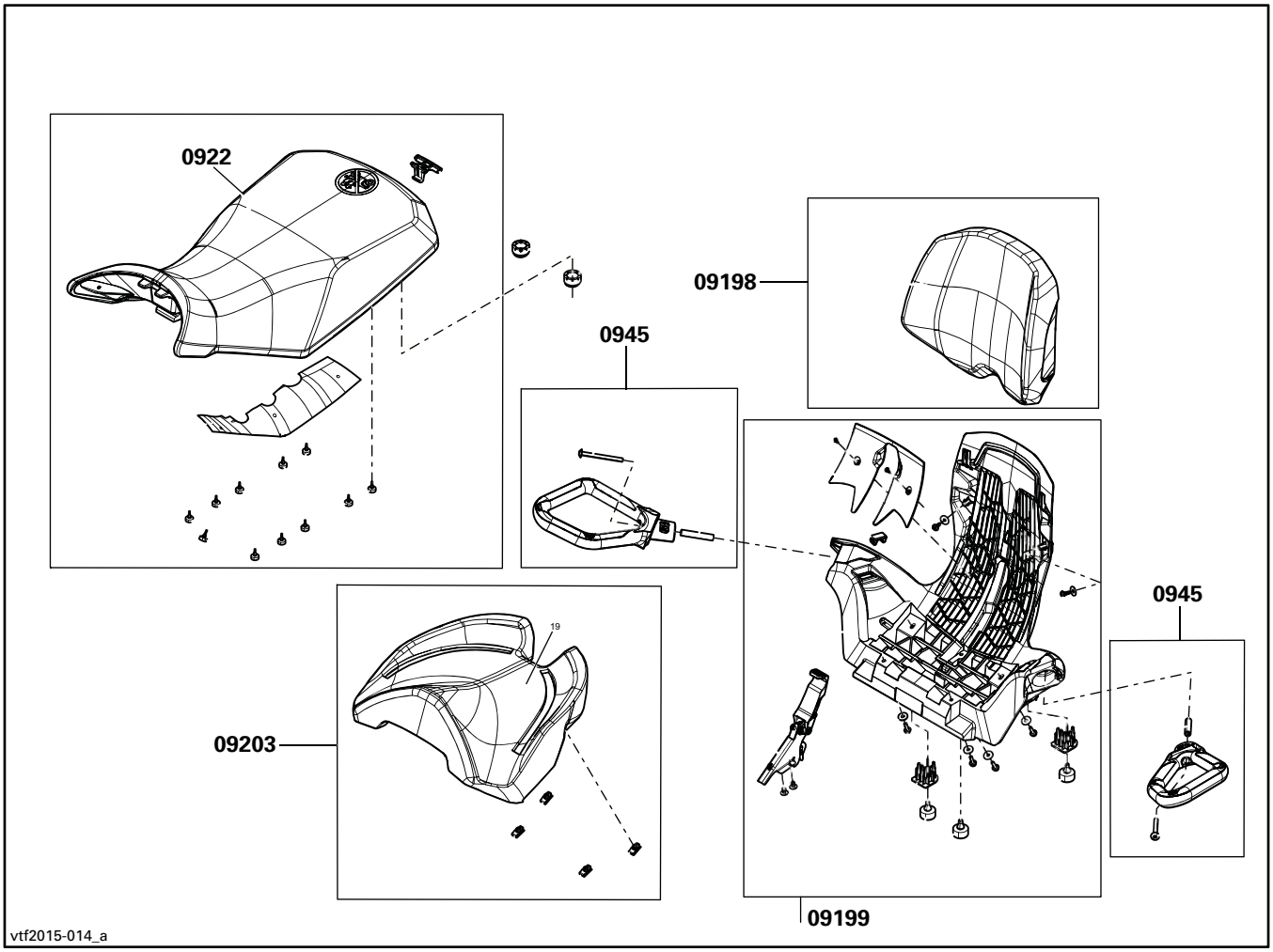

SYSTEM SYSTÈME	CODE	DESCRIPTION	OUTLANDER 450	OUTLANDER MAX 450	OUTLANDER 570	OUTLANDER MAX 570	OUTLANDER XRM 570
			1	2	3	4	5
10	**00**	**NO LABOR INVOLVED** **AUCUNE MAIN-D'OEUVRE**	**0**	**0**	**0**	**0**	**0**
10	01	IGNITION SWITCH INTERRUPTEUR D'ALLUMAGE	0.3	0.3	0.3	0.3	0.3
10	09	HEADLAMP AND/OR HEADLAMP SUPPORT (ASS'Y) (RH OR LH) PHARE AVANT ET/OU SUPPORT (COMPLET) (DROIT OU GAUCHE)	0.3	0.3	0.3	0.3	0.3
10	10	VOLTAGE REGULATOR RÉGULATEUR DE TENSION	0.3	0.3	0.3	0.3	0.3
10	13	BATTERY BATTERIE	0.3	0.3	0.3	0.3	0.3
10	16	BULB AMPOULE	0.3	0.3	0.3	0.3	0.3
10	21	MULTIFUNCTION SWITCH INTERRUPTEUR MULTIFONCTION	0.8	0.8	0.8	0.8	1.1
10	28	SPEEDOMETER/TACHOMETER INDICATEUR DE VITESSE/COMPTE-TOURS	0.3	0.3	0.3	0.3	0.3
10	29	TAIL LAMP HOUSING (ASS'Y) BOÎTIER DE FEU ARRIÈRE (COMPLET)	0.3	0.3	0.3	0.3	0.3
10	31	DC OUTLET PLUG PRISE D'ACCESSOIRE DC	0.3	0.3	0.3	0.3	0.3
10	34	ELECTRONIC MODULE MODULE ÉLECTRONIQUE	0.4	0.4	0.4	0.4	0.4
10	41	ENGINE HARNESS CÂBLAGE DU MOTEUR	1.4	1.4	1.4	1.4	1.4
10	45	WINCH (ASS'Y) TREUIL (COMPLET)	0.4		0.4	0.4	
10	46	WINCH SOLENOID SOLÉNOÏDE DE TREUIL	0.5		0.5	0.5	
10	47	WINCH SWITCH INTERRUPTEUR DE TREUIL	0.4		0.4	0.4	
10	51	MAIN WIRE HARNESS CÂBLAGE PRINCIPAL	2.5	2.7	2.5	2.7	3.0
10	52	STARTING RELAY RELAIS DE DÉMARRAGE	0.3	0.3	0.3	0.3	0.3
10	61	FRONT FLASHERS 1 OR 2 (**CE** ONLY) CLIGNOTANTS AVANT 1 OU 2 (**CE** SEULEMENT)	0.3	0.3	0.3	0.3	
10	62	REAR FLASHERS 1 OR 2 (**CE** ONLY) CLIGNOTANTS ARRIÈRE 1 OU 2 (**CE** SEULEMENT)	0.3	0.3	0.3	0.3	
10	65	12 VOLT RELAY (CE ONLY) RELAIS 12 VOLT (CE SEULEMENT)	0.3	0.3	0.3	0.3	
10	66	HORN AVERTISSEUR	0.3	0.3	0.3	0.3	

SYSTEM SYSTÈME	CODE	DESCRIPTION	OUTLANDER 450	OUTLANDER MAX 450	OUTLANDER 570	OUTLANDER MAX 570	OUTLANDER XRM 570
			1	2	3	4	5
10	67	RELAY RELAIS	0.3	0.3	0.3	0.3	0.3
10	68	ANY BULBS TOUTES LES AMPOULES	0.6	0.6	0.6	0.6	0.6
10	71	LICENSE LIGHT (ASS'Y) (**CE** ONLY) LUMIÈRE D'IMMATRICULATION (COMPLET) (**CE** SEULEMENT)	0.3	0.3	0.3	0.3	
10	101	MULTIFONCTION SWITCH (RH) INTERRUPTEUR MULTIFONCTION (DR)	0.3	0.3	0.3	0.3	0.3
10	122	BATTERY SUPPORT SUPPORT DE BATTERIE	0.5	0.5	0.5	0.5	0.5
10	144	SPOT LIGHT PROJECTEUR			0.3		

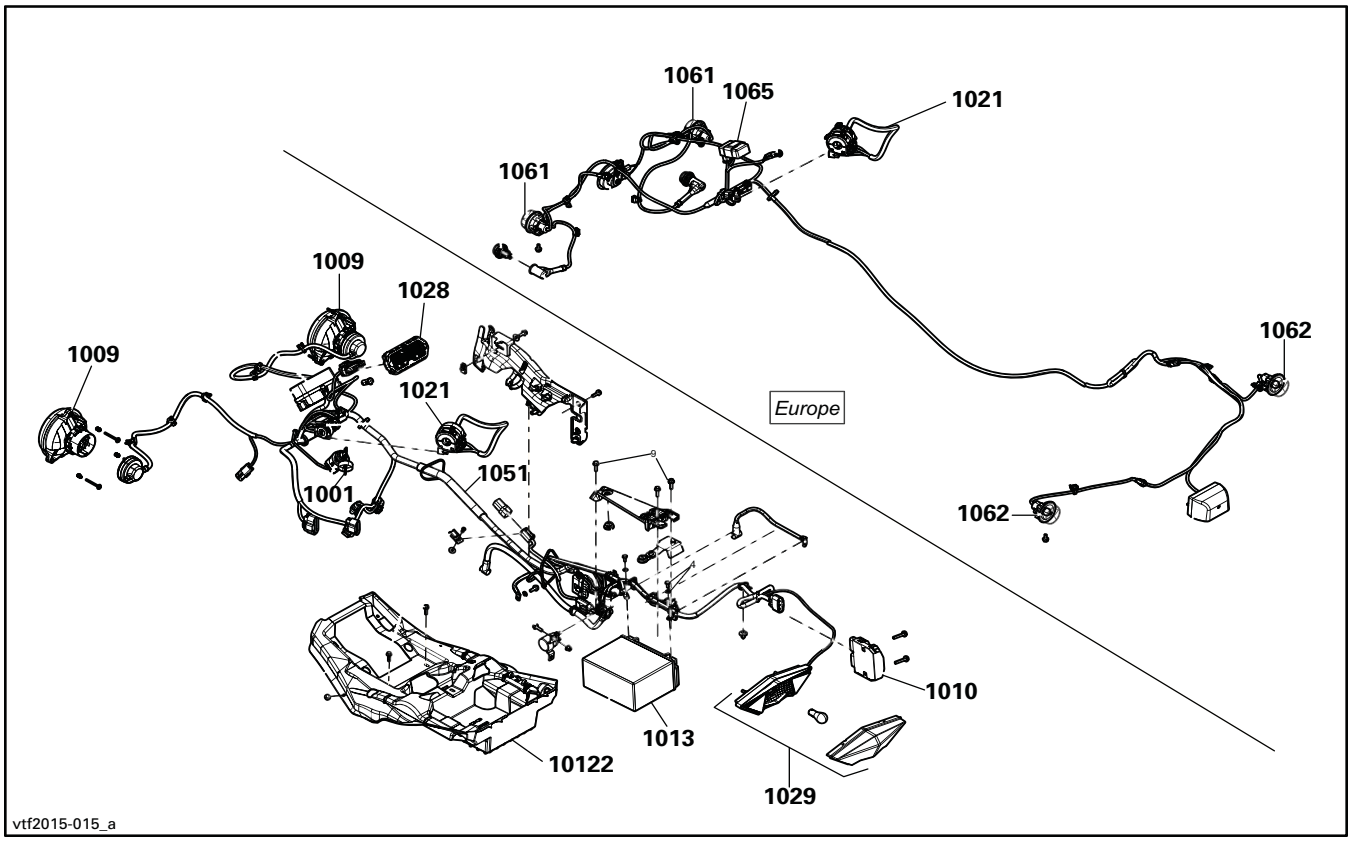
1061
1065
1021
1061
1009
1028
1009
1021
1062
Europe
1051
1001
1062
1010
1013
10122
1029
vtf2015-015_a

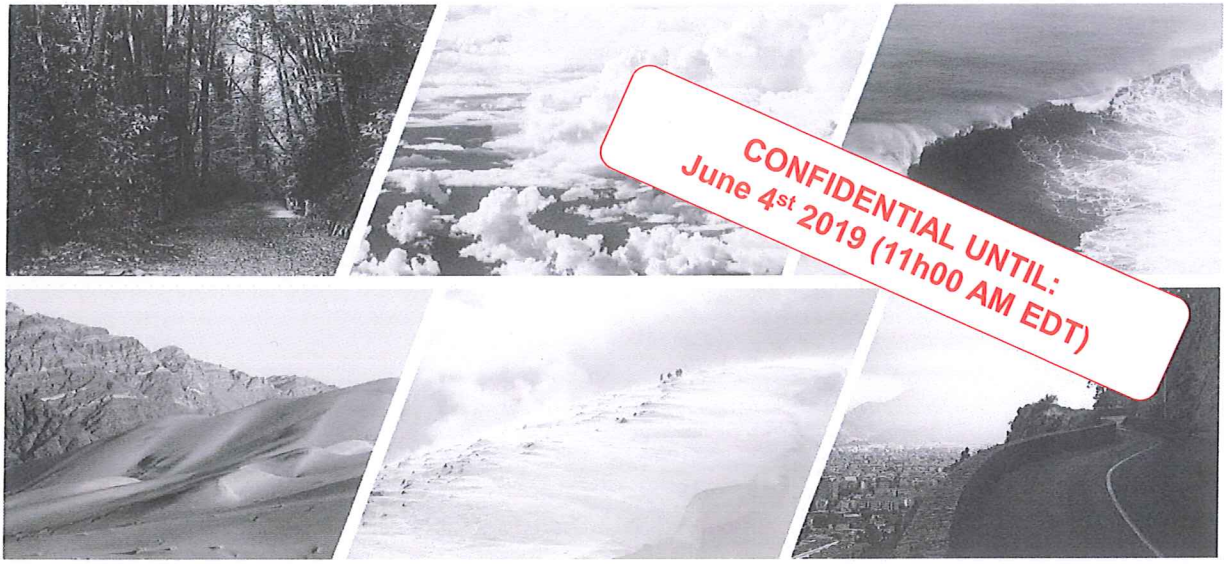

CONFIDENTIAL UNTIL:
June 4st 2019 (11h00 AM EDT)

MY20 SSV What's new – Preliminary version

March 7th , 2019

BRP ADVENTURE BY DESIGN

can-am

WHAT'S NEW
2020

LINEUP OBJECTIVES

1	Elevating Defender to new levels
2	Can-Am SSV reinforces its performance leadership
3	Can-Am ATV improvements & appealing new colorations

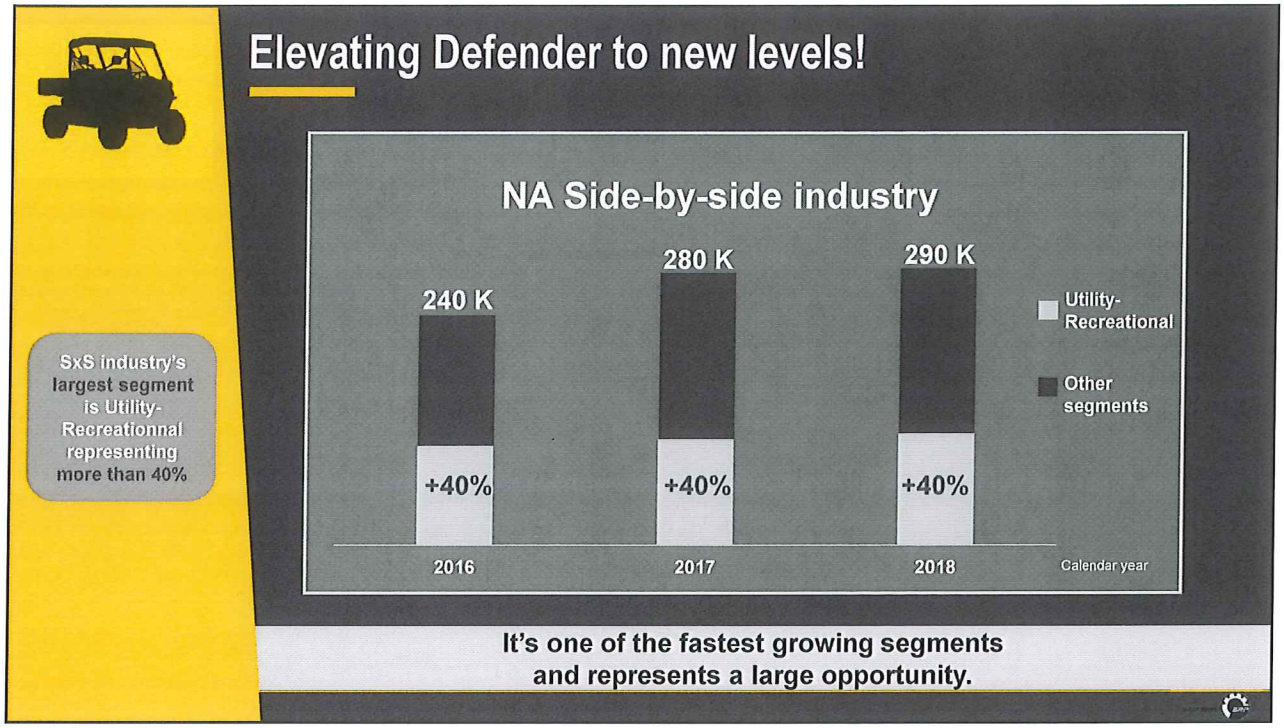
Elevating Defender to new levels!
NA Side-by-side industry
240 K
280 K
290 K
+40%
+40%
+40%
2016
2017
2018
Calendar year
Utility-Recreational
Other segments
SxS industry's largest segment is Utility-Recreationnal representing more than 40%
It's one of the fastest growing segments and represents a large opportunity.

Introducing the new 2020 Defender!
Style and protection
Comfort
Capability

Elevating Defender to new levels!
Style and protection
Comfort
Capability
Premium Can-Am signature look
New fascia
Defender DPS HD10

Elevating Defender to new levels!
Style and protection
Comfort
Capability
Premium Can-Am signature look
New fascia
New 4.5-in. Digital display
Defender DPS HD10

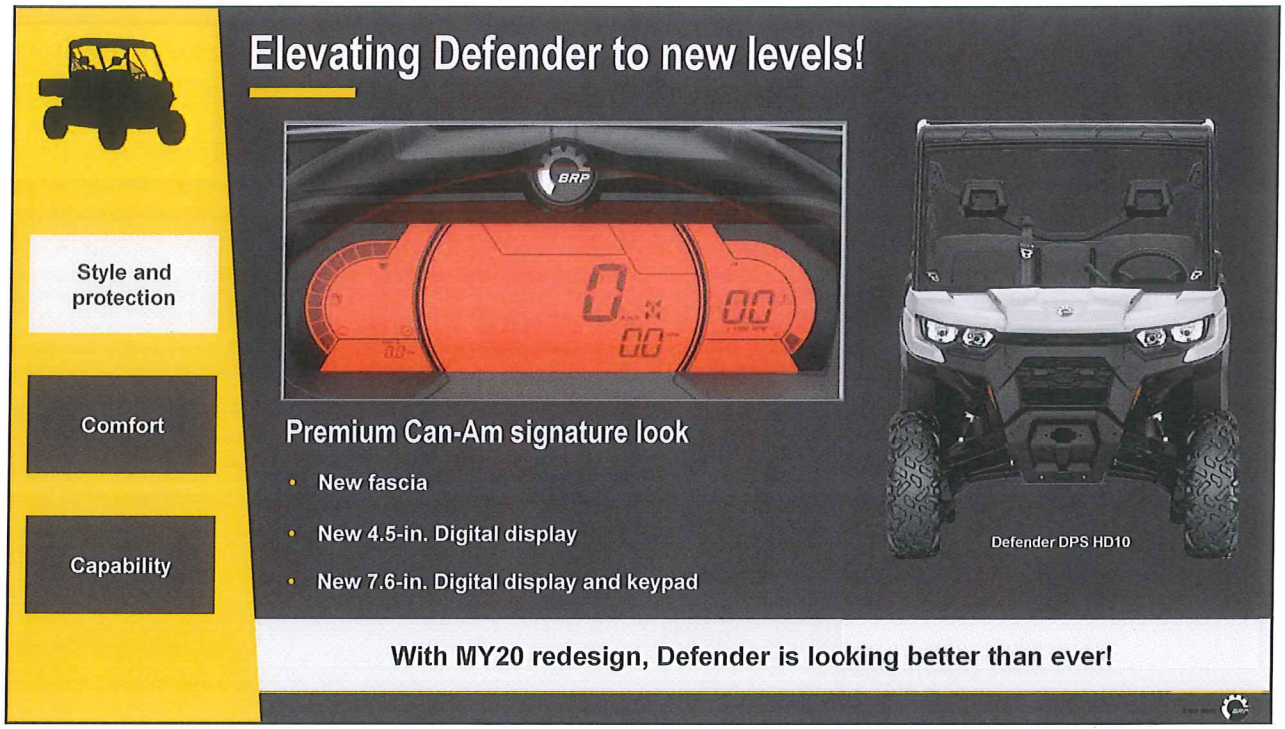
Elevating Defender to new levels!
Style and protection
Comfort
Capability
Premium Can-Am signature look
New fascia
New 4.5-in. Digital display
New 7.6-in. Digital display and keypad
Defender DPS HD10
With MY20 redesign, Defender is looking better than ever!

Elevating Defender to new levels!
Style and protection
Comfort
Capability
Vehicle protection and rigidity
Steel bumper and upper bumper plate
Defender DPS HD10

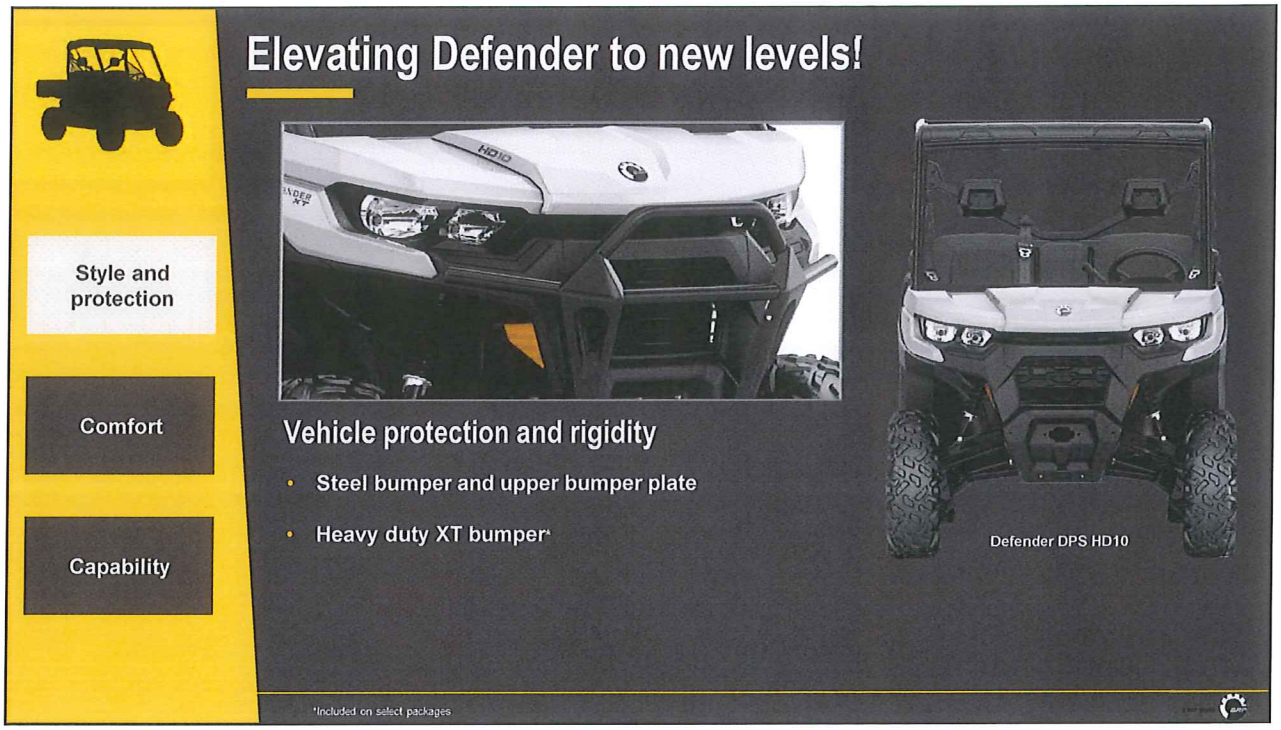
Elevating Defender to new levels!
Style and protection
Comfort
Capability
Vehicle protection and rigidity
Steel bumper and upper bumper plate
Heavy duty XT bumper*
Defender DPS HD10
*Included on select packages

Elevating Defender to new levels!
Style and protection
Comfort
Capability
Vehicle protection and rigidity
Steel bumper and upper bumper plate
Heavy duty XT bumper*
Lighter and reinforced Dual Phase steel frame
Defender DPS HD10
Defender offers an unequaled look with more standard protection!
*Included on select packages

Elevating Defender to new levels!
Style and protection
Comfort
Capability
Improved vehicle sound level
• Thicker firewall
Defender DPS HD10

Elevating Defender to new levels!
Style and protection
Comfort
Capability
Improved vehicle sound level
• Thicker firewall
• Low sound exhaust system*
Defender DPS HD10
*Included on select packages

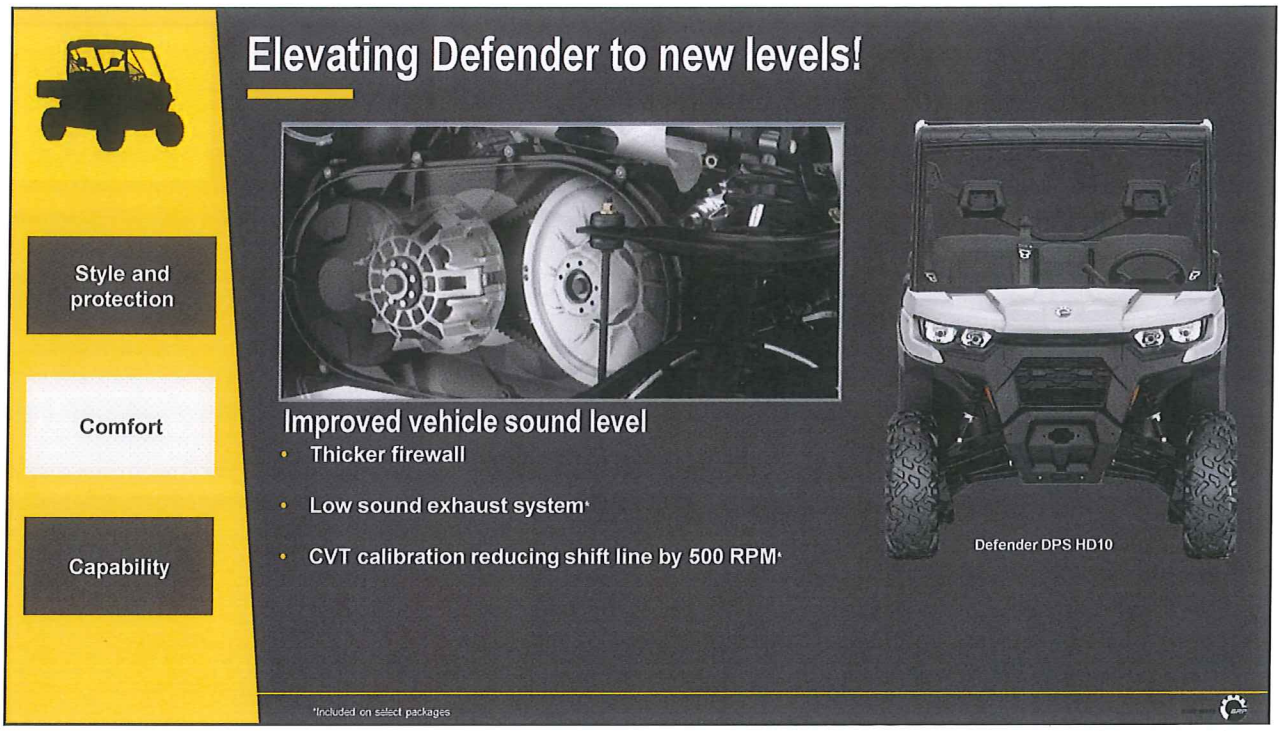
Elevating Defender to new levels!
Style and protection
Comfort
Capability
Improved vehicle sound level
Thicker firewall
Low sound exhaust system*
CVT calibration reducing shift line by 500 RPM*
Defender DPS HD10
*Included on select packages

Elevating Defender to new levels!
Style and protection
Comfort
Capability
Improved vehicle sound level
Thicker firewall
Low sound exhaust system*
CVT calibration reducing shift line by 500 RPM*
New HD10 iTC ECO mode*
Defender DPS HD10
The new Defender has an average sound level improvement of up to 34%**
*Included on HD10 engine
**Sound level to the operator at WOT

Elevating Defender to new levels!
Style and protection
Comfort
Capability
11-in.
Built for long days of riding!
• New suspension calibration*
Defender DPS HD10
*Included on vehicles with HD10 engine
**Included on select packages

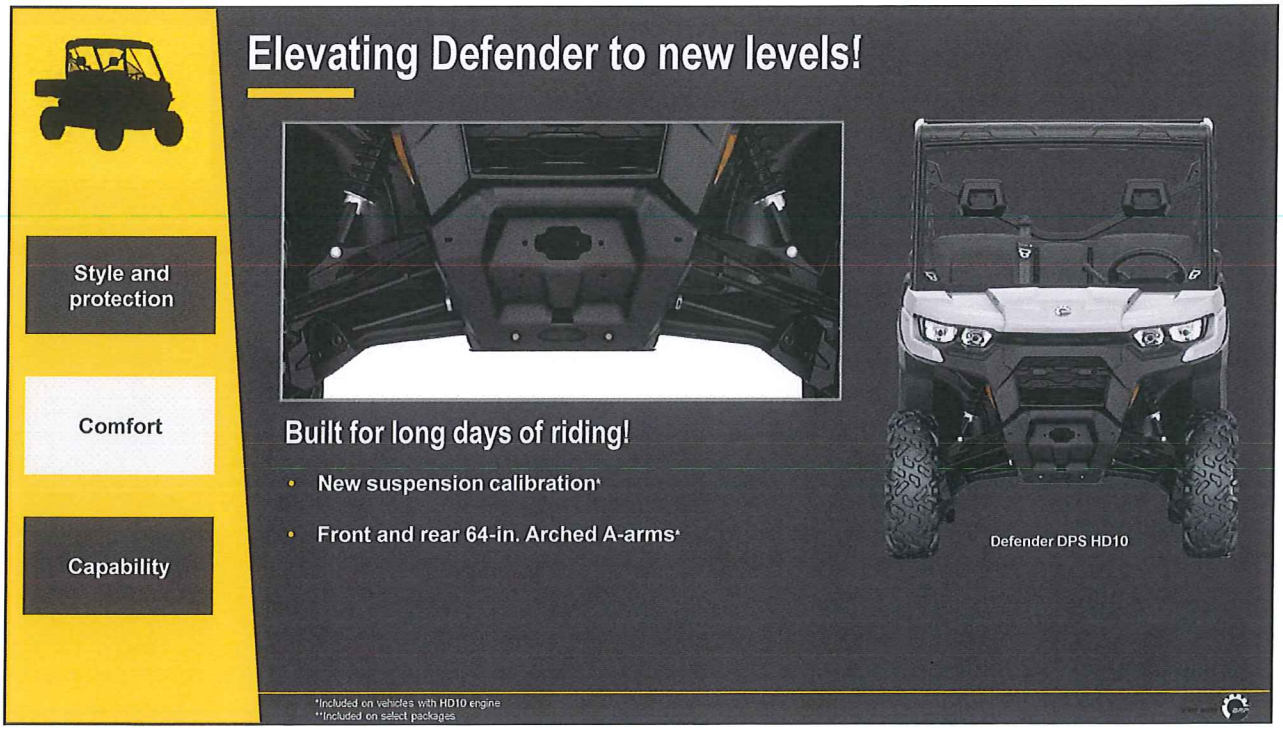
Elevating Defender to new levels!
Style and protection
Comfort
Capability
Built for long days of riding!
• New suspension calibration*
• Front and rear 64-in. Arched A-arms*
Defender DPS HD10
*Included on vehicles with HD10 engine
**Included on select packages

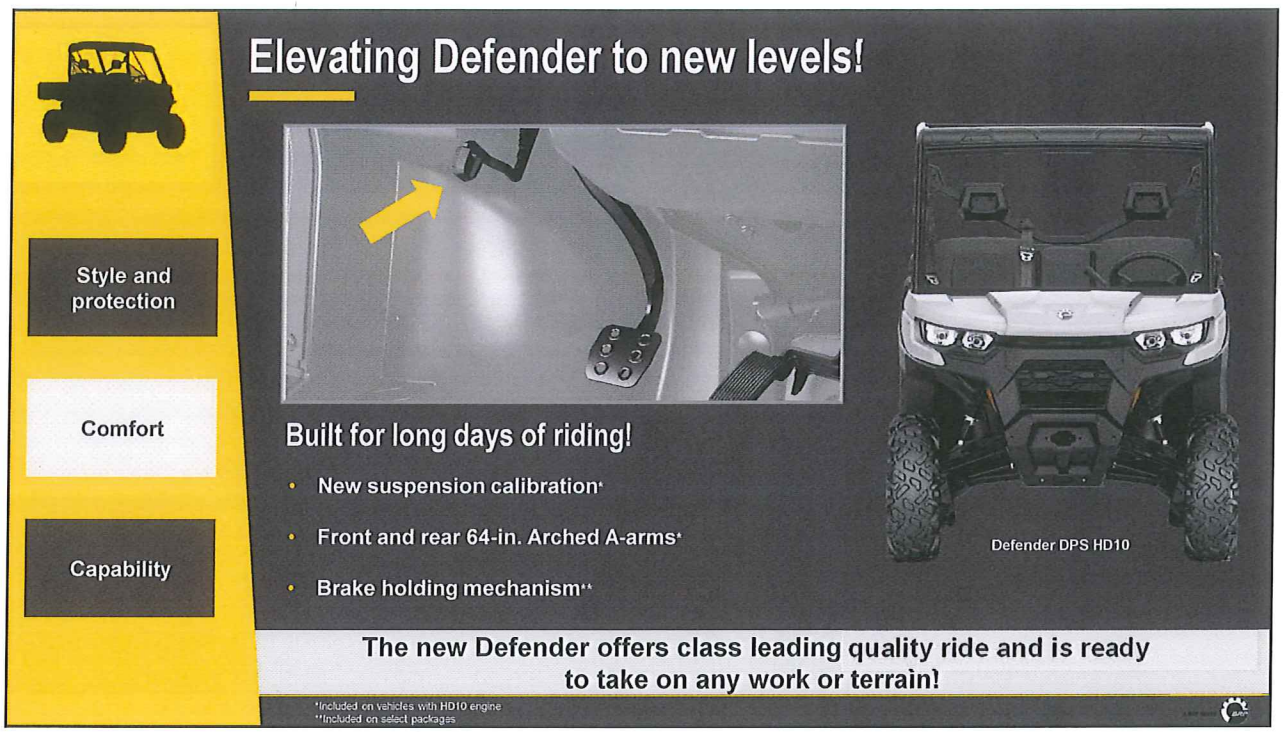
Elevating Defender to new levels!
Style and protection
Comfort
Capability
Built for long days of riding!
New suspension calibration*
Front and rear 64-in. Arched A-arms*
Brake holding mechanism**
Defender DPS HD10
The new Defender offers class leading quality ride and is ready to take on any work or terrain!
*Included on vehicles with HD10 engine
**Included on select packages

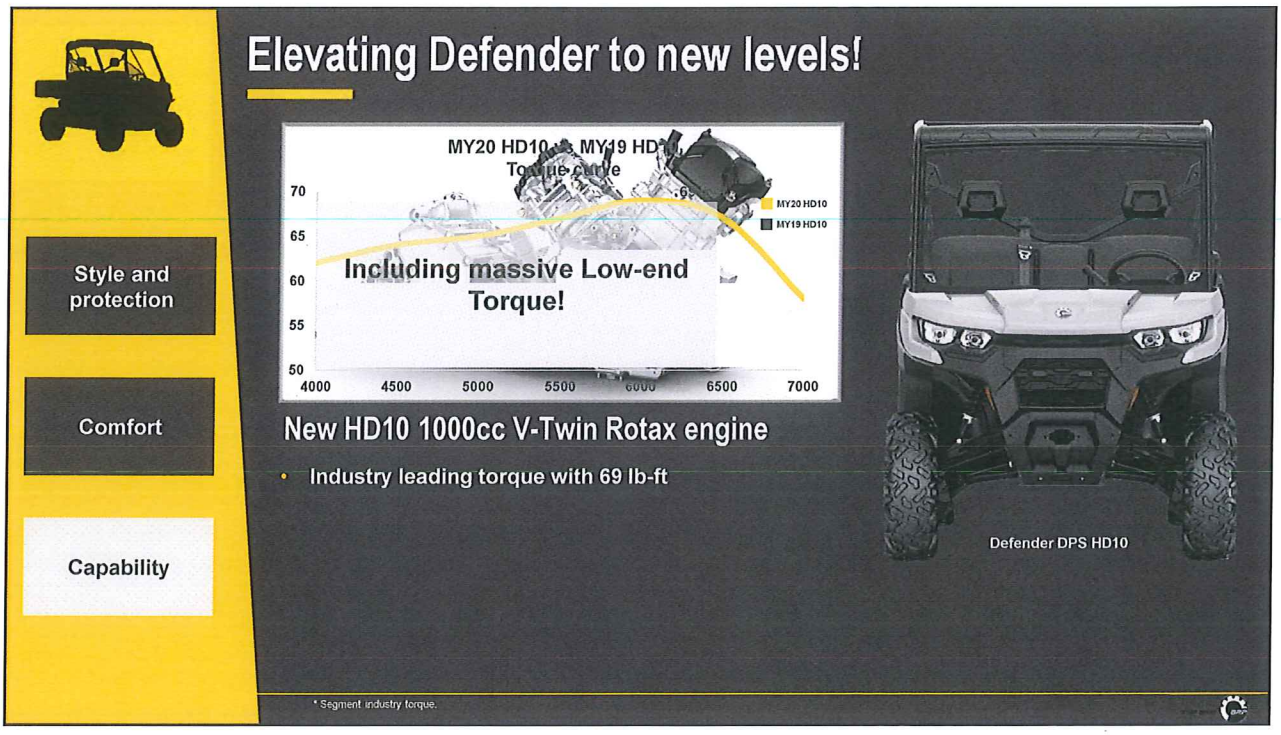
Elevating Defender to new levels!
Style and protection
Comfort
Capability
MY20 HD10
MY19 HD10
70
65
60
55
50
4000
4500
5000
5500
6000
6500
7000
Including massive Low-end Torque!
New HD10 1000cc V-Twin Rotax engine
Industry leading torque with 69 lb-ft
Defender DPS HD10
* Segment industry torque.

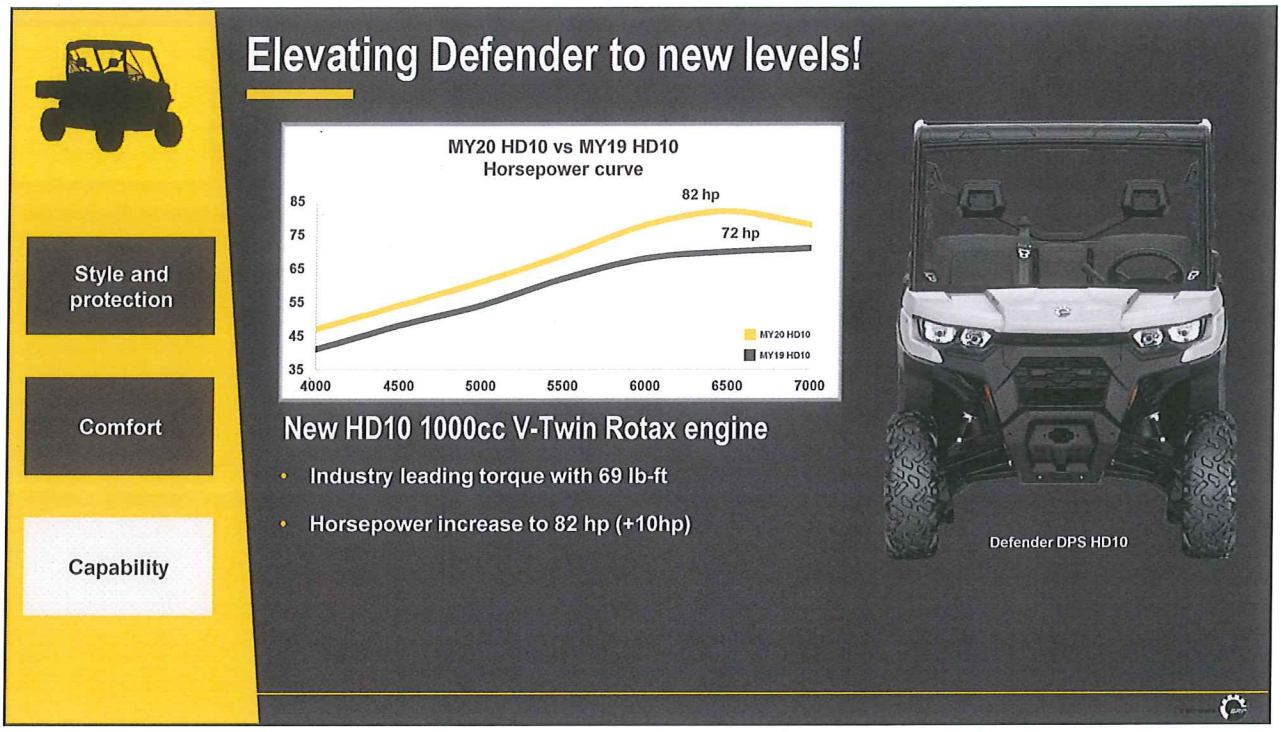
Elevating Defender to new levels!
Style and protection
Comfort
Capability
MY20 HD10 vs MY19 HD10
Horsepower curve
82 hp
72 hp
85
75
65
55
45
35
4000
4500
5000
5500
6000
6500
7000
MY20 HD10
MY19 HD10
New HD10 1000cc V-Twin Rotax engine
Industry leading torque with 69 lb-ft
Horsepower increase to 82 hp (+10hp)
Defender DPS HD10

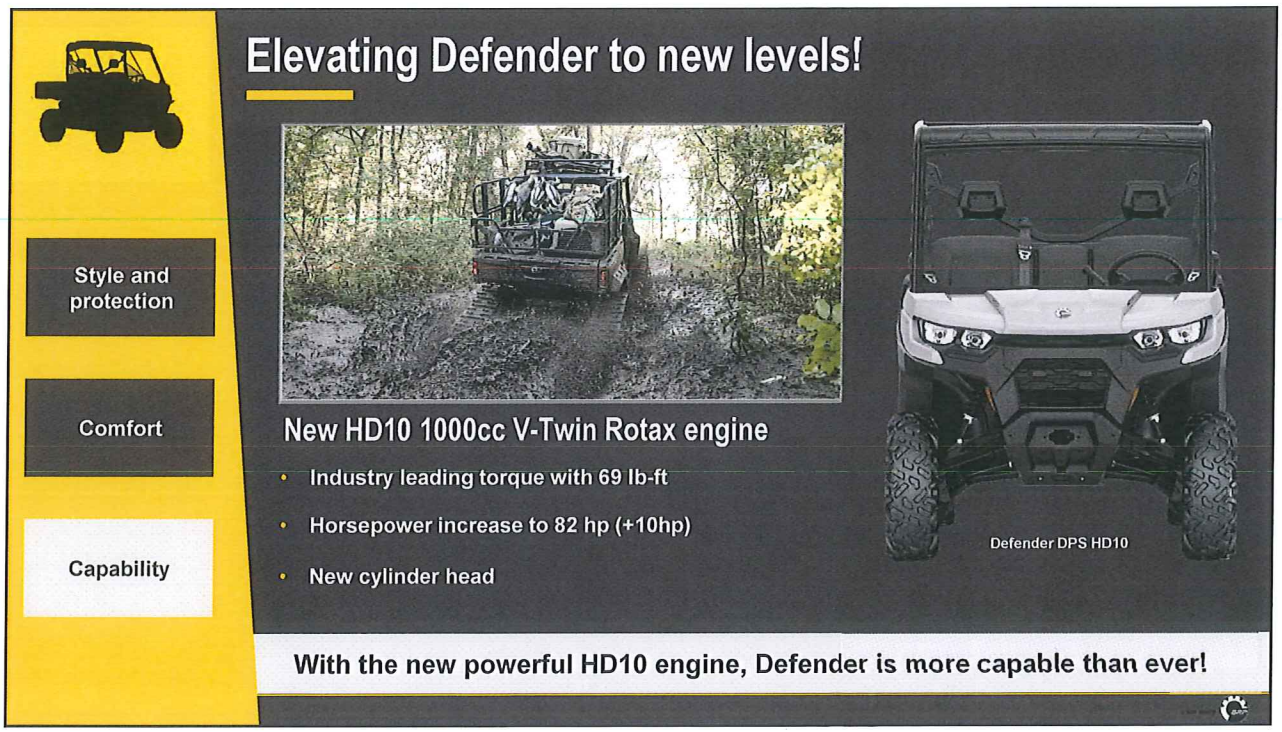
Elevating Defender to new levels!
Style and protection
Comfort
Capability
New HD10 1000cc V-Twin Rotax engine
Industry leading torque with 69 lb-ft
Horsepower increase to 82 hp (+10hp)
New cylinder head
Defender DPS HD10
With the new powerful HD10 engine, Defender is more capable than ever!

Elevating Defender to new levels!
Style and protection
Comfort
Capability
NEW package configuration
Defender XT-P HD10
64-in. wide with Arched A-arm
4,500 lb winch
Heavy-duty bumper
Rock sliders
Full hard roof
Reinforced bolster seats
Brake holding mechanism
7.6-in. display with keypad
NEW package configuration
Defender Mossy Oak HD10
65-in. wide with Arched A-arm
Relocated 4,500 lb winch with synthetic rope
Heavy-duty bumper
Smart-Lok front differential
Rock sliders
28-in. Maxxis Bighorn 2.0
Brake holding mechanism
New package configurations to meet customer usage and improve value.

Elevating Defender to new levels!
Style and protection
Comfort
Capability
1 YEAR
DEFENDER
LIMITED WARRANTY
2020 Defender has the ability to do it all… comfortably and quietly.
*Eligible units are select 2019 Can-Am Defender models, sold and registered in USA or Canada

Looking back over the last years...

"... one new SSV every 6 months
for the next 4 years ..."

September, 2015

Over the last 4 years, Can-Am Side-by-side deployment has been a success

Confidential

Introducing the new Defender 6x6

Capable

Clever and adaptable

Elevating Defender to new levels!
Capable
Clever and adaptable
The Ultimate workhorse machine
• Industry leading 3,000-lb towing capacity
Defender 6x6 DPS HD10

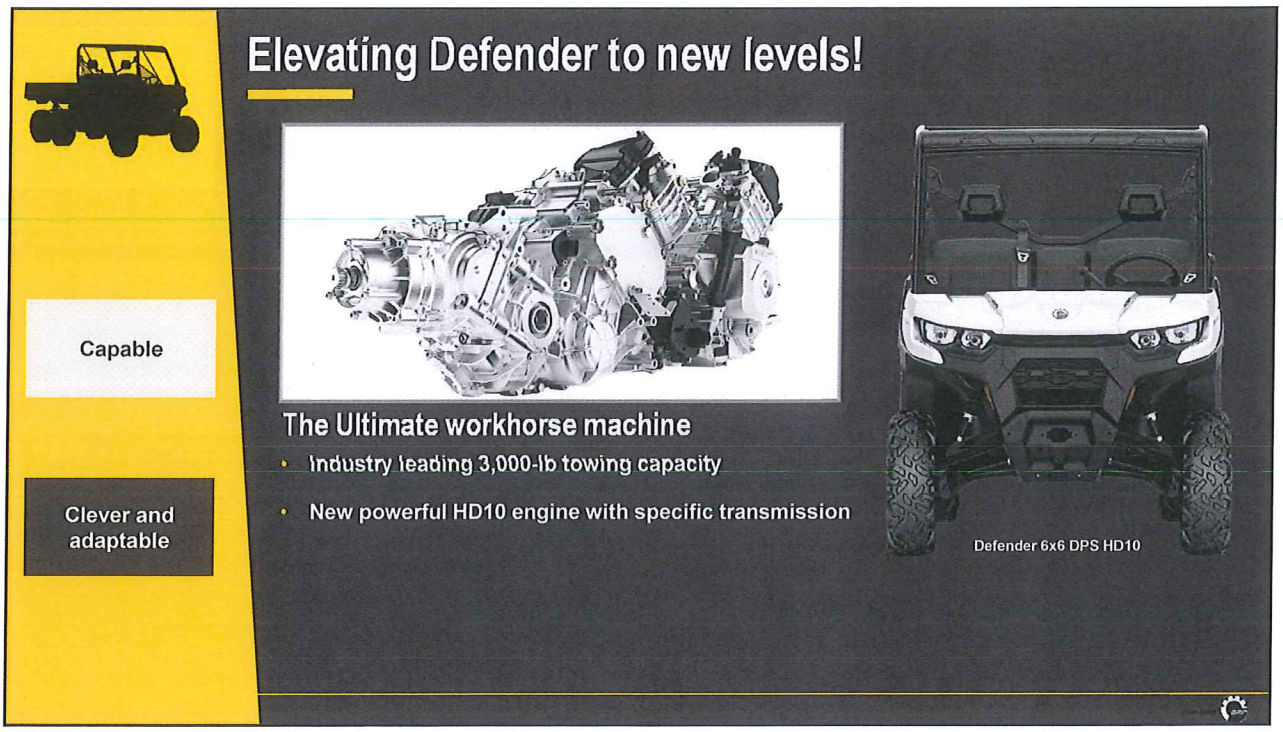
Elevating Defender to new levels!
Capable
Clever and adaptable
The Ultimate workhorse machine
• Industry leading 3,000-lb towing capacity
• New powerful HD10 engine with specific transmission
Defender 6x6 DPS HD10

Elevating Defender to new levels!
Ground clearance
Suspension travel
11-in.
13-in.
Capable
Clever and adaptable
The Ultimate workhorse machine
Industry leading 3,000-lb towing capacity
New powerful HD10 engine with specific transmission
Front and rear 64-in. Arched A-arm
Defender 6x6 DPS HD10

Elevating Defender to new levels!
Capable
Clever and adaptable
The Ultimate workhorse machine
Industry leading 3,000-lb towing capacity
New powerful HD10 engine with specific transmission
Front and rear 64-in. Arched A-arm
Multi Traction mode: 4x6 and 6x6
Defender 6x6 DPS HD10
New Defender 6x6 DPS HD10 offers more work ability and traction while maintaining drivability!

Elevating Defender to new levels!
Capable
Clever and adaptable
Solutions enhancing ease of use
Bed dimension of 4.5 x 6ft long
Defender 6x6 DPS HD10

Elevating Defender to new levels!
Capable
Clever and adaptable
Solutions enhancing ease of use
Bed dimension of 4.5 x 6ft long
Easy flatbed conversion with LinQ system integration
Defender 6x6 DPS HD10

Elevating Defender to new levels!
Capable
Clever and adaptable
Solutions enhancing ease of use
Bed dimension of 4.5 x 6ft long
Easy flatbed conversion with LinQ system integration
Optional power tilt cylinder
Defender 6x6 DPS HD10
Defender 6x6 provides more cargo capacity and allows you to carry anything with ease!

Elevating Defender to new levels!
Capable
Clever and adaptable
1 YEAR
DEFENDER
LIMITED WARRANTY
Aligning class leading work capacity and versatility, Defender 6x6 will accomplish tasks never thought possible.
*Eligible units are select 2019 Can-Am Defender models, sold and registered in USA or Canada

can-am
WHAT'S NEW
2020
LINEUP
OBJECTIVES
1 Elevating Defender to new levels
2 Can-Am SSV reinforces its performance leadership
3 Can-Am ATV improvements & appealing new colorations

Can-Am reinforces its performance leadership!
Powerful engine
Suspension tuning & lineup enhancements
X3 platform affordability

Can-Am reinforces its performance leadership!
Powerful engine
Suspension tuning & lineup enhancements
X3 platform affordability
Other vehicle improvement
New wheels design on X rs
Maverick X3 X rc Turbo RR
can-am

Can-Am reinforces its performance leadership!
Powerful engine
Suspension tuning & lineup enhancements
X3 platform affordability
Other vehicle improvement
New wheels design on X rs
New 15-in. wheels on X rc Turbo RR and 32-in. Liberty tires
Maverick X3 X rc Turbo RR
can-am

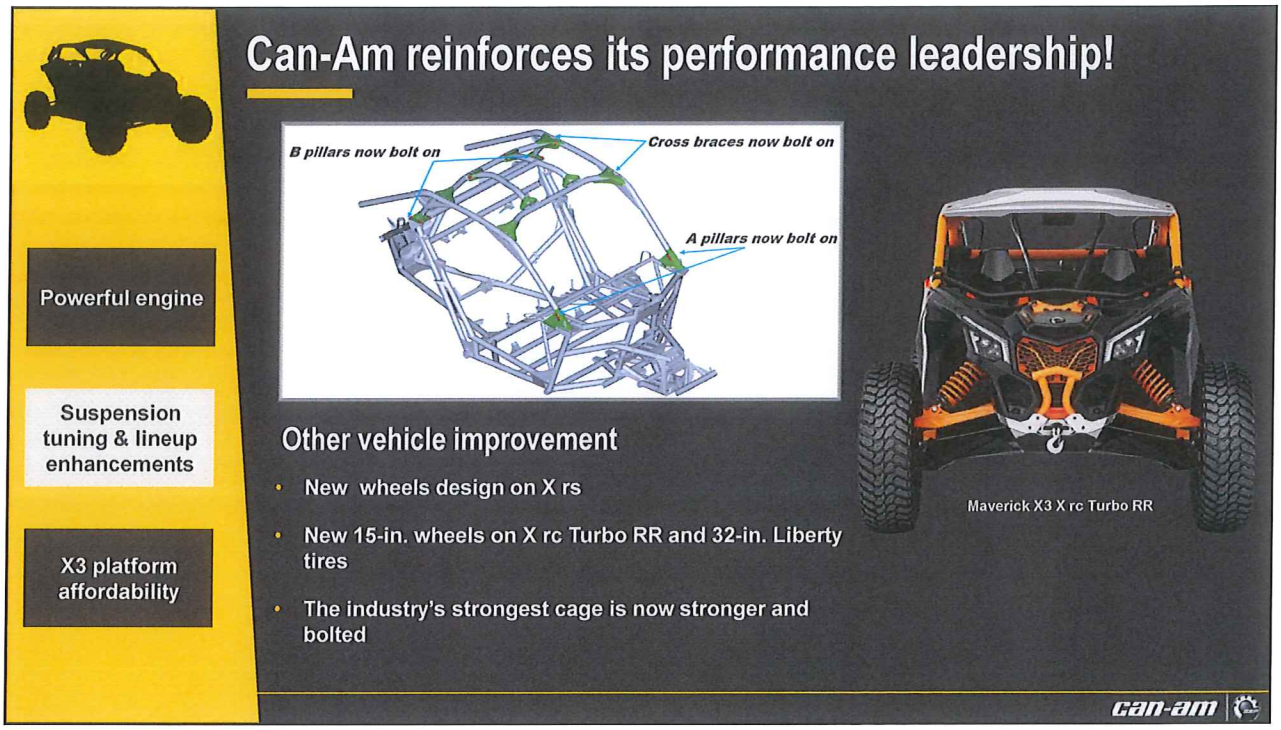
Can-Am reinforces its performance leadership!
B pillars now bolt on
Cross braces now bolt on
A pillars now bolt on
Powerful engine
Suspension tuning & lineup enhancements
X3 platform affordability
Other vehicle improvement
New wheels design on X rs
New 15-in. wheels on X rc Turbo RR and 32-in. Liberty tires
The industry's strongest cage is now stronger and bolted
Maverick X3 X rc Turbo RR
can-am

Can-Am reinforces its performance leadership!
Powerful engine
Suspension tuning & lineup enhancements
X3 platform affordability
Other vehicle improvements
4.5-in. Digital display for base models
Maverick X3 X rc Turbo RR
can-am

Can-Am reinforces its performance leadership!
Powerful engine
Suspension tuning & lineup enhancements
X3 platform affordability
Other vehicle improvements
4.5-in. Digital display for base models
Premium 7.6-in. for X packages
Maverick X3 X rc Turbo RR
can-am

Can-Am reinforces its performance leadership!
Powerful engine
Suspension tuning & lineup enhancements
X3 platform affordability
Other vehicle improvements
4.5-in. Digital display for base models
Premium 7.6-in. for X packages
New keypad on all models
Maverick X3 X rc Turbo RR
can-am

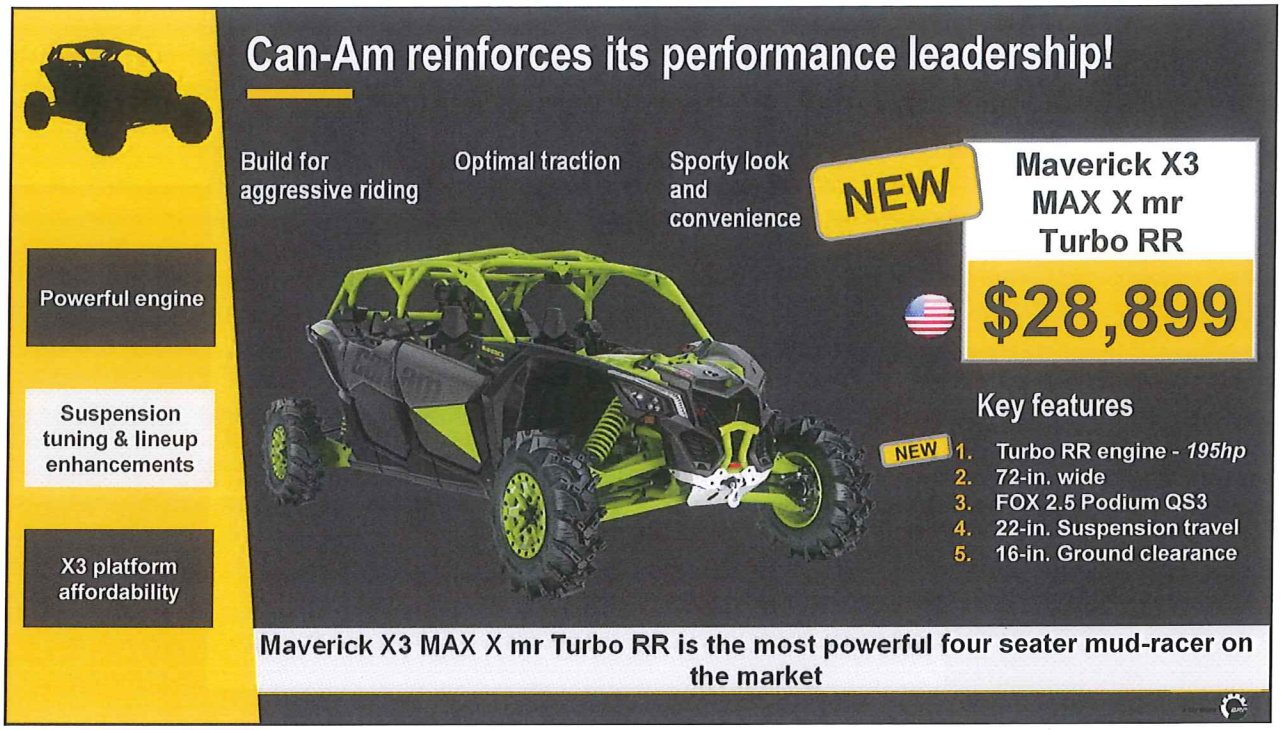
Can-Am reinforces its performance leadership!
Build for aggressive riding
Optimal traction
Sporty look and convenience
NEW
Maverick X3 MAX X mr Turbo RR
$28,899
Powerful engine
Suspension tuning & lineup enhancements
X3 platform affordability
Key features
NEW
1. Turbo RR engine - 195hp
2. 72-in. wide
3. FOX 2.5 Podium QS3
4. 22-in. Suspension travel
5. 16-in. Ground clearance
Maverick X3 MAX X mr Turbo RR is the most powerful four seater mud-racer on the market

Can-Am reinforces its performance leadership!
Optimal performance
Sharpest maneuverability
Bold design
NEW
Maverick Sport X xc 1000R
$20,199
Powerful engine
Suspension tuning & lineup enhancements
X3 platform affordability
Key features
1. 1000R engine - 100hp
2. 64-in. wide
3. FOX 2.5 Podium QS3
4. 14.75-in. Suspension travel
5. 15-in. Ground clearance
Maverick Sport offers an ideal balance between power and agility while being specifically designed for ultimate trail riding experiences

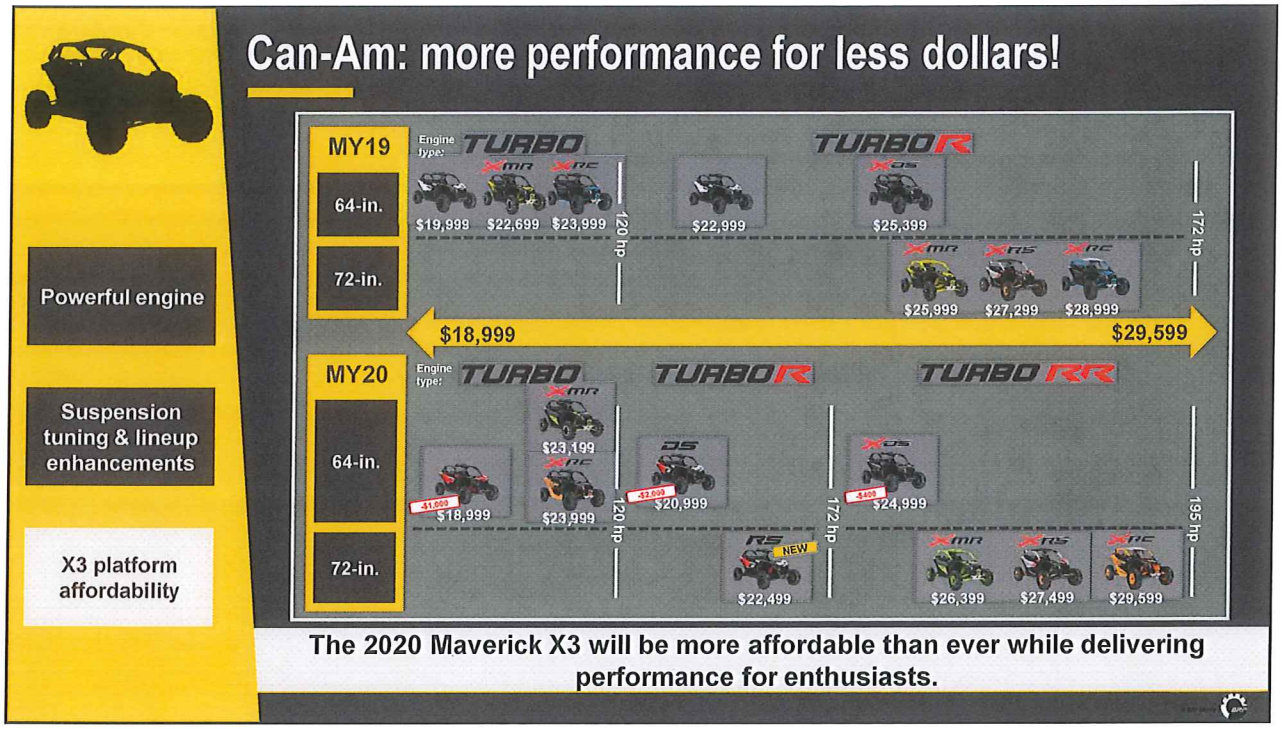
Can-Am: more performance for less dollars!
Powerful engine
Suspension tuning & lineup enhancements
X3 platform affordability
MY19
Engine type:
TURBO
TURBO R
64-in.
72-in.
$19,999
$22,699
$23,999
120 hp
$22,999
$25,399
172 hp
$25,999
$27,299
$28,999
$18,999
$29,599
MY20
TURBO
TURBO R
TURBO RR
$23,199
$18,999
$23,999
$20,999
$24,999
195 hp
NEW
$22,499
$26,399
$27,499
$29,599
The 2020 Maverick X3 will be more affordable than ever while delivering performance for enthusiasts.

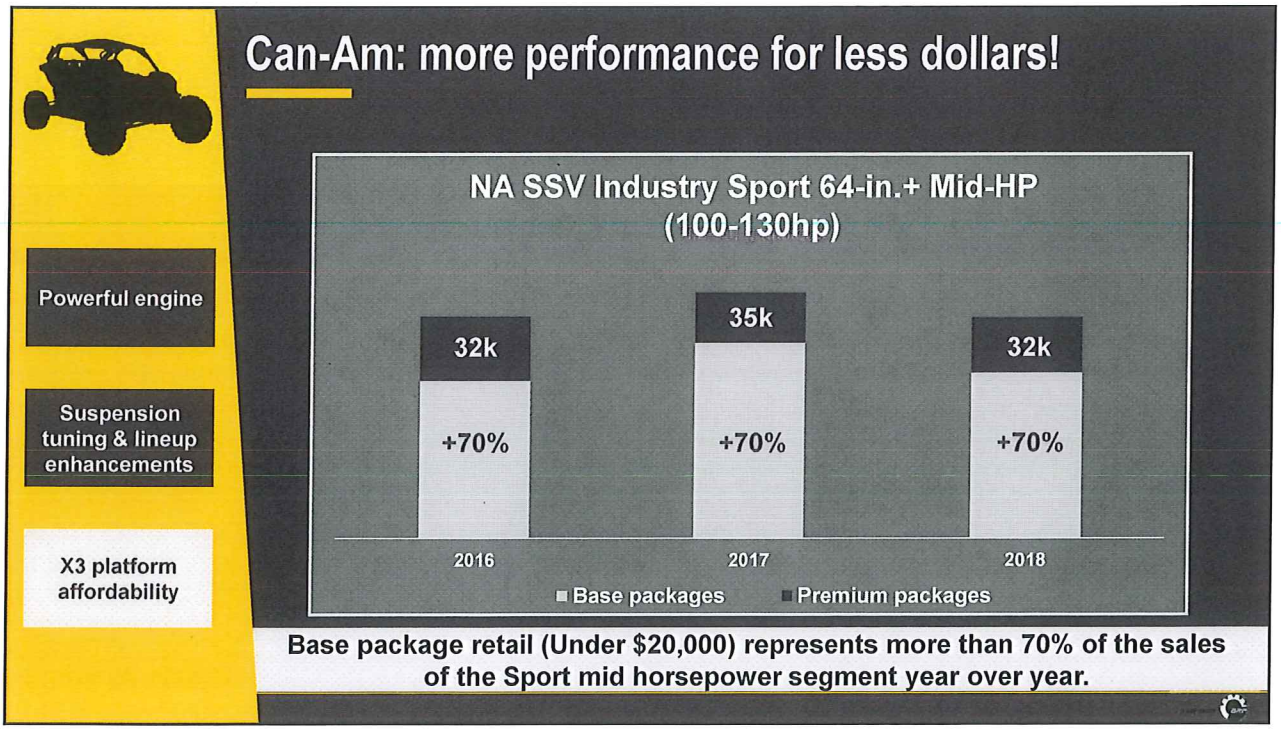
Can-Am: more performance for less dollars!
Powerful engine
Suspension tuning & lineup enhancements
X3 platform affordability
NA SSV Industry Sport 64-in.+ Mid-HP
(100-130hp)
32k
35k
32k
+70%
+70%
+70%
2016
2017
2018
Base packages
Premium packages
Base package retail (Under $20,000) represents more than 70% of the sales of the Sport mid horsepower segment year over year.

Can-Am: more performance for less dollars!
Powerful engine
Suspension tuning & lineup enhancements
X3 platform affordability
-$1,000
Maverick X3 Turbo
Starting at:
$18,999
Key features
1. Turbo engine - 120hp
2. 64-in. wide
3. FOX 2.5 Podium QS3
4. 20-in. Suspension travel
5. 14-in. Ground clearance
The Maverick X3 repricing creates new accessibility to high performance vehicles… with no compromise on quality!

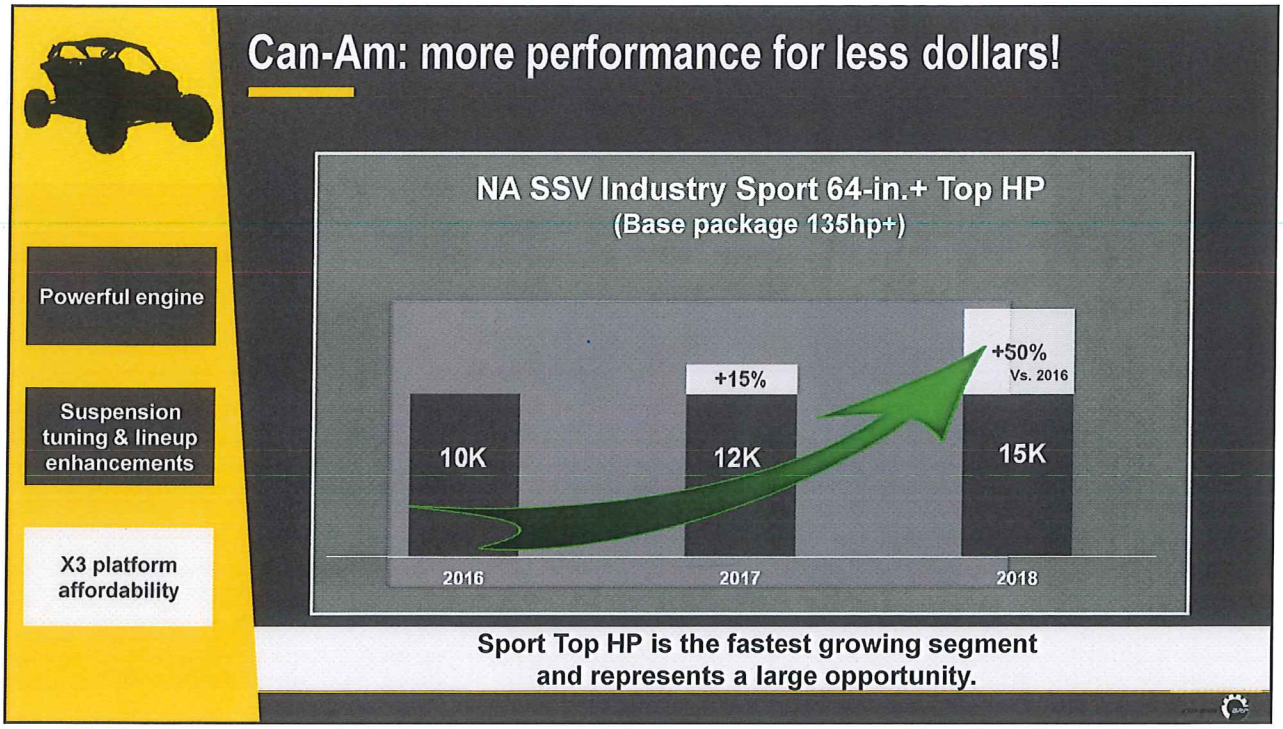
Can-Am: more performance for less dollars!
Powerful engine
Suspension tuning & lineup enhancements
X3 platform affordability
NA SSV Industry Sport 64-in.+ Top HP
(Base package 135hp+)
10K
12K
15K
+15%
+50%
Vs. 2016
2016
2017
2018
Sport Top HP is the fastest growing segment and represents a large opportunity.

Can-Am: more performance for less dollars!
Powerful engine
Suspension tuning & lineup enhancements
X3 platform affordability
Revised
-$2,000
Maverick X3
DS
Turbo R
$20,999
Key features
1. Turbo R engine - 172hp
2. 64-in. wide
3. FOX 2.5 Podium QS3
4. 20-in. Suspension travel
5. 14-in. Ground clearance
New DS 64-in. package offers outstanding performance and value while being more accessible than ever

Can-Am: more performance for less dollars!
Powerful engine
Suspension tuning & lineup enhancements
X3 platform affordability
NEW
Maverick X3
RS
Turbo R
$22,499
Key features
1. Turbo R engine - 172hp
NEW 2. 72-in. wide
3. FOX 2.5 Podium QS3
4. 22-in. Suspension travel
5. 15.5-in. Ground clearance
New RS package is the market's most affordable 72-in. factory vehicle… offering more and selling almost $3,000 less than its closest competitor!

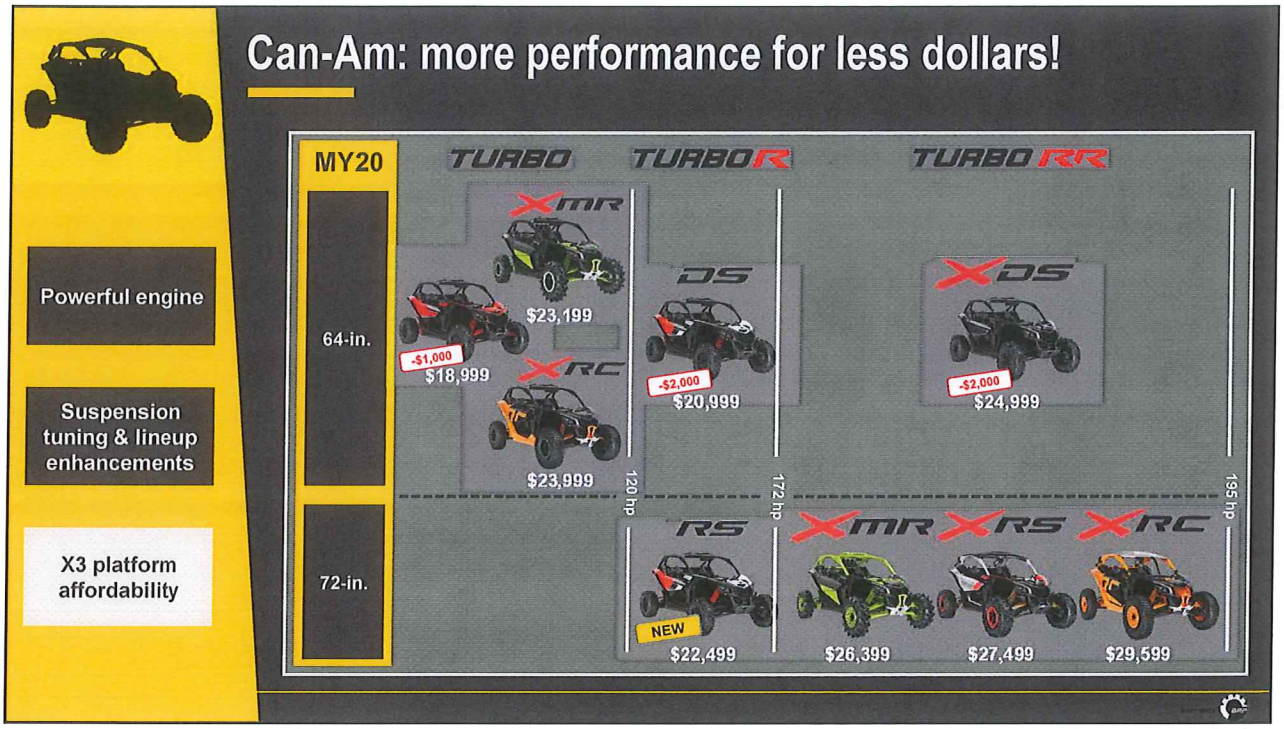
Can-Am: more performance for less dollars!
Powerful engine
Suspension tuning & lineup enhancements
X3 platform affordability
MY20
64-in.
72-in.
TURBO
TURBO R
TURBO RR
X mr
$23,199
-$1,000
$18,999
X rc
$23,999
DS
-$2,000
$20,999
X DS
-$2,000
$24,999
120 hp
172 hp
195 hp
RS
NEW
$22,499
X mr
$26,399
X rs
$27,499
X rc
$29,599

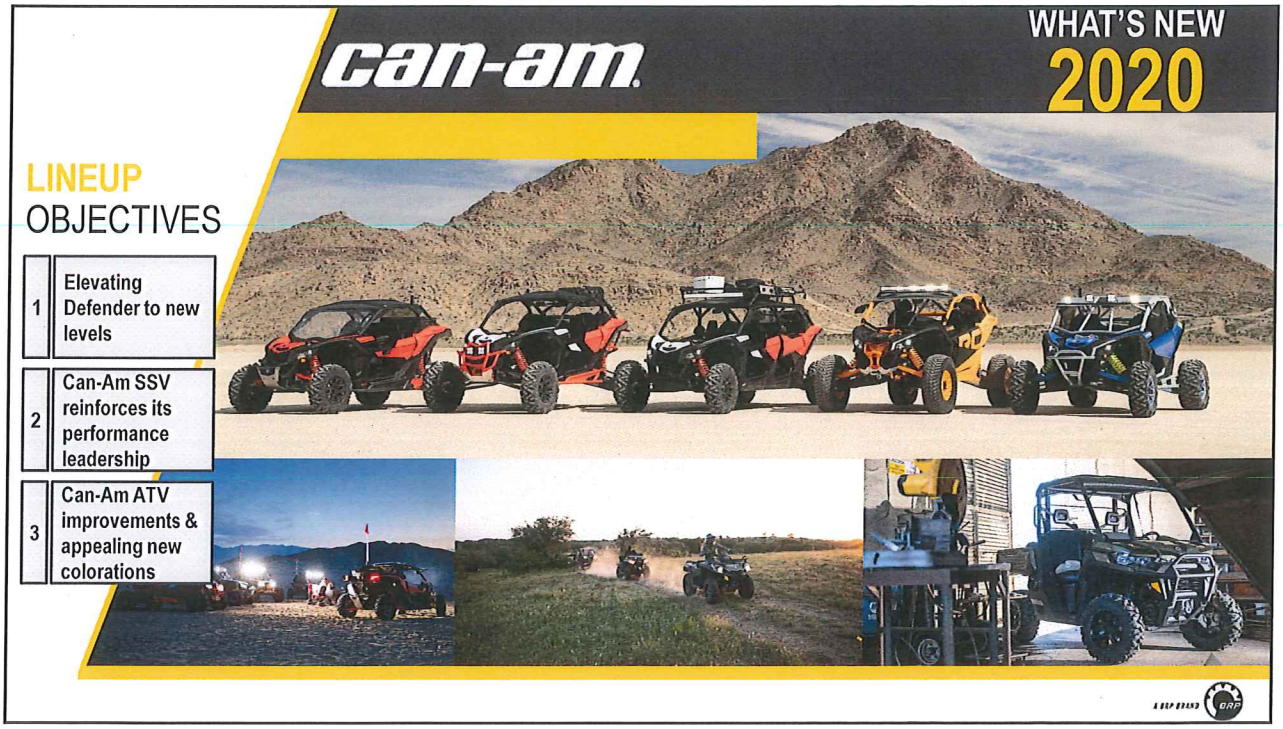
can-am
WHAT'S NEW
2020
LINEUP
OBJECTIVES
1 Elevating Defender to new levels
2 Can-Am SSV reinforces its performance leadership
3 Can-Am ATV improvements & appealing new colorations

Can-Am ATV improvements

Technology

Lineup improvement

New appealing colorations

Can-Am ATV improvements

Technology

Lineup improvement

New appealing colorations

Riding modes expansion to Rotax 850 engines*

- Switch on the fly between 3 modes

*Available on : All Outlander & Renegade equipped with 850 and 1000R engines

Can-Am ATV improvements

Technology

Lineup improvement

New appealing colorations

New digital display on Outlander 850 & 1000R

- 4.5-in digital display expansion to Outlander 850 models*

*Available on : All Outlander & Renegade equipped with 850 and 1000R engines

Can-Am ATV improvements

Technology

Lineup improvement

New appealing colorations

New digital display on Outlander 850 & 1000R

- 4.5-in digital display expansion to Outlander 850 models
- 7.6-in wide digital display replacing the analog & digital gauge*

*Available on : Outlander XT-P, Xxc & Xmr equipped with 850 and 1000R engines

Can-Am ATV improvements

Technology

Lineup improvement

New appealing colorations

Improved air flow

- New inner fenders & side panels*

*Available on - All Outlander 570, 650, 850 & 1000R

Can-Am ATV improvements

Technology

Lineup improvement

New appealing colorations

Other vehicle improvements

- FOX 1.5 Podium QS3 shocks are now offered on Outlander MAX Limited 1000R

Can-Am ATV improvements

Technology

Lineup improvement

New appealing colorations

Other vehicle improvements

- FOX 1.5 Podium QS3 shocks are now offered on Outlander MAX Limited 1000R
- 27-in Maxxis Bighorn 2.0 tires on Outlander MAX Limited 1000R

Can-Am ATV improvements

Technology

Lineup improvement

New appealing colorations

MOSSY OAK®

Other vehicle improvements

- FOX 1.5 Podium QS3 shocks are now offered on Outlander MAX Limited 1000R
- 27-in Maxxis Bighorn 2.0 tires on Outlander MAX Limited 1000R
- NEW Outlander Mossy Oak Edition 650

Can-Am ATV improvements

Technology

Lineup improvement

New appealing colorations

MOSSY OAK®

Other vehicle improvements

- FOX 1.5 Podium QS3 shocks are now offered on Outlander MAX Limited 1000R
- 27-in Maxxis Bighorn 2.0 tires on Outlander MAX Limited 1000R
- NEW Outlander Mossy Oak Edition 650
- And there is more!

Can-Am ATV new appealing colorations

Technology

Lineup improvement

New appealing colorations

Iron Gray & Octane Blue

Granite Gray, Black & Manta Green

Black, Hyper Silver & Can-Am Red

Black & Platinum Silver

Can-Am Red & Black

Can-Am SSV new appealing colorations
Technology
Lineup improvement
New appealing colorations
Stone Gray
Carbon Black & Platinum Satin
Triple Black, Hyper Silver & Can-Am Red

Can-Am SSV new appealing colorations
Technology
Lineup improvement
New appealing colorations
Can-Am Red & White
Iron Gray & Manta Green
Hyper Silver, Intense Blue & Manta Green
Carbon Black & Orange

SPECIFICATIONS SHEETS

ATV TABLE OF CONTENTS	PAGE
Outlander™ 450/570	3
Outlander™ DPS™ 450/570	4
Outlander™ XT™ 570	5
Outlander™ Mossy Oak Edition 450/570	6
Outlander™ 650/850	7
Outlander™ DPS™ 650/850	8
Outlander™ XT™ 650/850/1000R	9
Outlander™ North Edition 850	10
Outlander™ Mossy Oak Edition 650	11
Outlander™ XT-P™ 850/1000R	12
Outlander™ X™ xc 1000R	13
Outlander™ MAX 450/570	14
Outlander™ MAX DPS™ 450/570	15
Outlander™ MAX XT 570	16
Outlander™ MAX DPS™ 650	17
Outlander™ MAX XT™ 650/850/1000R	18
Outlander™ MAX North Edition 850	19
Outlander™ MAX XT-P™ 850/1000R	20
Outlander™ MAX Limited 1000R	21
Outlander™ X™ mr 570	22
Outlander™ X™ mr 650	23
Outlander™ X™ mr 850	24
Outlander™ X™ mr 1000R	25
Outlander™ MAX 6X6 DPS™ 450	26
Outlander™ MAX 6X6 DPS™ 650	27
Outlander™ MAX 6X6 XT™ 1000	28
Renegade® 570/850	29
Renegade® X™ xc 850/1000R	30
Renegade® X™ mr 570	31
Renegade® X™ mr 1000R	32
DS 70™	33
DS 90™	34
DS 90™ X™	35
DS 250®	36

Confidential – Do not copy or distribute. For Dealer's internal use only.

SPECIFICATIONS SHEETS

SSV TABLE OF CONTENTS	PAGE
Defender HD5	**37**
Defender HD8	**38**
Defender DPS™ HD5	**39**
Defender DPS™ HD8	**40**
Defender DPS™ HD10	**41**
Defender XT™ HD8	**42**
Defender XT™ HD10	**43**
Defender XT™ CAB HD8/HD10 **(Updated June 13, 2019)**	**44**
Defender Mossy Oak Edition HD10 **(Updated June 13, 2019)**	**45**
Defender XT-P™ HD10 **(Updated June 13, 2019)**	**46**
Defender X™ mr HD10 **(Updated August 1, 2019)**	**47**
Defender MAX HD8	**48**
Defender MAX DPS™ HD8	**49**
Defender MAX DPS™ HD10	**50**
Defender MAX XT™ HD8	**51**
Defender MAX XT™ HD10	**52**
Defender MAX Lone Star HD10 **(Updated June 13, 2019)**	**53**
Defender MAX XT™ CAB HD10 **(Updated June 13, 2019)**	**54**
Defender MAX X™ mr HD10 **(Updated August 1, 2019)**	**55**
Defender 6X6 DPS™ HD10 **(Updated June 13, 2019)**	**56**
Commander™ 800R	**57**
Commander™ DPS™ 800R/1000R	**58**
Commander™ XT™ 800R/1000R	**59**
Commander™ Limited 1000R	**60**
Commander™ MAX DPS™ 800R	**61**
Commander™ MAX XT™ 1000R	**62**
Commander™ MAX Limited 1000R	**63**
Maverick™ Trail 800/1000	**64**
Maverick™ Trail DPS™ 800/1000	**65**
Maverick™ Sport 1000	**66**
Maverick™ Sport DPS™ 1000/1000R	**67**
Maverick™ Sport X™ rc 1000R **(Updated June 13, 2019)**	**68**
Maverick™ Sport X™ mr 1000R	**69**
Maverick™ Sport X™ xc 1000R	**70**
Maverick™ Sport MAX DPS™ 1000R **(Updated June 13, 2019)**	**71**
Maverick™ X3 Turbo	**72**
Maverick™ X3 X™ mr Turbo	**73**
Maverick™ X3 X™ rc Turbo	**74**
Maverick™ X3 DS Turbo R	**75**
Maverick™ X3 RS Turbo R	**76**
Maverick™ X3 X™ ds Turbo RR	**77**
Maverick™ X3 X™ rs Turbo RR	**78**
Maverick™ X3 X™ mr Turbo RR	**79**
Maverick™ X3 X™ rc Turbo RR	**80**
Maverick™ X3 MAX Turbo	**81**
Maverick™ X3 MAX DS Turbo R	**82**
Maverick™ X3 MAX RS Turbo R	**83**
Maverick™ X3 MAX X™ ds Turbo RR	**84**
Maverick™ X3 MAX X™ rs Turbo RR	**85**
Maverick™ X3 MAX X™ mr Turbo RR	**86**

Confidential – Do not copy or distribute. For Dealer's internal use only.

2020 OUTLANDER™ 450 / 570

HIGHLIGHTS

- Rotax® engine options
- Continuously Variable Transmission (CVT) with engine braking
- Double A-arm front suspension
- Torsional Trailing arm Independent (TTI) rear suspension
- Visco-Lok‡ auto-locking front differential
- 1,300-lb (590 kg) towing capacity
- 5.4-gal (20.5 L) fuel capacity
- 25-in. Carlisle† Trail Wolf tires
- Surrounding Spar Technology (SST) G2L frame with Geometric Contact Control
- Multifunction digital gauge
- Steel racks with LinQ™ quick-attach accessory system and a combined 360 pounds (163.3 kg) capacity
- 2.9-gal (10.9 L) water-resistant rear compartment

Viper Red / 450 / 570
Green / 450 / 570

ENGINES	450	570
Type	38 hp, Rotax 427 cc single cylinder, liquid cooled	48 hp, Rotax 570 cc V-twin, liquid cooled
Fuel Delivery System	Electronic Fuel Injection (EFI)	
Transmission	CVT, P / R / N / H / L, standard engine braking	
Drive Train	Selectable 2WD / 4WD with Visco-Lok auto-locking front differential	
Power Steering	N/A	

SUSPENSIONS	
Front Suspension	Double A-arm 9 in. (22.9 cm) travel
Front Shocks	Oil
Rear Suspension	Torsional Trailing arm Independent (TTI) 8.8 in. (22.4 cm) travel
Rear Shocks	Oil

BRAKES	
Front	Dual 214 mm ventilated disc brakes with hydraulic twin-piston calipers
Rear	Single 214 mm ventilated disc brake with hydraulic twin-piston caliper

TIRES / WHEELS	
Front Tires	Carlisle Trail Wolf 25 x 8 x 12 in. (63.5 x 20.3 x 30.5 cm)
Rear Tires	Carlisle Trail Wolf 25 x 10 x 12 in. (63.5 x 25.4 x 30.5 cm)
Wheels	12-in. steel

DIMENSIONS / CAPACITIES	
L x W x H	83 x 46 x 49 in. (211 x 116.8 x 124 cm)
Wheelbase	51 in. (129.5 cm)
Ground Clearance	10.5 in. (26.7 cm)
Seat Height	33.8 in. (85.8 cm)
Engine / Dry Weight*	450 / 678 lb (308 kg) 570 / 704 lb (319 kg)
Rack Capacity	Front: 120 lb (54.4 kg) Rear: 240 lb (109 kg)
Storage Capacity	Rear: 2.9 gal (10.9 L)
Towing Capacity	1,300 lb (590 kg)
Fuel Capacity	5.4 gal (20.5 L)

FEATURES

Gauge	Multifunction digital: Speedometer, tachometer, odometer, trip & hour meters, fuel, gear position, 4 x 4 indicator, diagnostics, clock	Instrumentation	Lighter type DC outlet in console, standard connector in the back (15-A)
		Lighting	70 W from dual 35-W front light / brake light
Winch	Prewired for available winch	Seat	Standard
Protection	N/A	Anti-theft System	N/A

WARRANTY	
Factory	6-months limited warranty
Extended	Up to 36 months B.E.S.T. coverage

BEST PROTECTION ©2019 Bombardier Recreational Products Inc (BRP). All rights reserved. ™, ® and the BRP logo are registered trademarks of BRP or its affiliates. Products are distributed in the U.S.A. by BRP US Inc. *Base model dry weight shown. ‡Visco-Lok is a trademark of GKN Viscodrive GmbH. †All other trademarks are the property of their respective owners. Because of our ongoing commitment to product quality and innovation, BRP reserves the right at anytime to discontinue or change specifications, price, design, features, models or equipment without incurring any obligation. Ride responsibly. BRP highly recommends that all ATV drivers take a training course. For safety and training information, see your dealer or, in U.S.A. call the ATV Safety Institute at 1 (800) 887-2887. In Canada, call the Canadian Safety Council at 1 (613) 739-1535 ext 227. ATVs can be hazardous to operate. For your safety: the operator and passenger should wear a helmet, eye protection and other protective clothing. Always remember that riding and alcohol / drugs don't mix. Never ride on paved surfaces or public roads. Never engage in stunt driving. Avoid excessive speeds and be particularly careful on difficult terrain. ATVs with engine sizes of greater than 90cc are recommended for use only by those age 16 and older. Never carry passengers on any ATV not specifically designated for such use.

can-am BRP

Can-AmOffroad.com

2020 OUTLANDER™ DPS™ 450 / 570

HIGHLIGHTS

- Rotax® engine options
- Continuously Variable Transmission (CVT) with engine braking
- Tri-Mode Dynamic Power Steering (DPS)
- Double A-arm front suspension
- Torsional Trailing arm Independent (TTI) rear suspension
- Visco-Lok‡ QE auto-locking front differential
- 5.4-gal (20.5 L) fuel capacity
- 1,300-lb (590 kg) towing capacity
- Surrounding Spar Technology (SST) G2 frame with Geometric Contact Control
- 500-W magneto
- Multifunction digital gauge
- Steel racks with LinQ™ quick-attach accessory system and a combined 360 pounds (163.3 kg) capacity
- 2.9-gal (10.9 L) water-resistant rear compartment

Orange / 450 / 570
Green / 450 / 570
Mossy Oak† Break-Up Country Camo† / 450 / 570

ENGINES	450	570
Type	38 hp, Rotax 427 cc single cylinder, liquid cooled	48 hp, Rotax 570 cc V-twin, liquid cooled
Fuel Delivery System	Electronic Fuel Injection (EFI)	
Transmission	CVT, P / R / N / H / L, standard engine braking	
Drive Train	Selectable 2WD / 4WD with Visco-Lok QE auto-locking front differential	
Power Steering	Tri-Mode Dynamic Power Steering (DPS)	

SUSPENSIONS	
Front Suspension	Double A-arm 9 in. (22.9 cm) travel
Front Shocks	Oil
Rear Suspension	Torsional Trailing arm Independent (TTI) 8.8 in. (22.4 cm) travel
Rear Shocks	Oil

BRAKES	
Front	Dual 214 mm ventilated disc brakes with hydraulic twin-piston calipers
Rear	Single 214 mm ventilated disc brake with hydraulic twin-piston caliper

TIRES / WHEELS	
Front Tires	Carlisle† Trail Wolf 25 x 8 x 12 in. (63.5 x 20.3 x 30.5 cm)
Rear Tires	Carlisle Trail Wolf 25 x 10 x 12 in. (63.5 x 25.4 x 30.5 cm)
Wheels	12-in. steel

DIMENSIONS / CAPACITIES	
L x W x H	83 x 46 x 49 in. (211 x 116.8 x 124 cm)
Wheelbase	51 in. (129.5 cm)
Ground Clearance	10.5 in. (26.7 cm)
Seat Height	33.8 in. (85.8 cm)
Engine / Dry Weight*	450 / 678 lb (308 kg) 570 / 704 lb (319 kg)
Rack Capacity	Front: 120 lb (54.4 kg) Rear: 240 lb (109 kg)
Storage Capacity	Rear: 2.9 gal (10.9 L)
Towing Capacity	1,300 lb (590 kg)
Fuel Capacity	5.4 gal (20.5 L)

FEATURES

Gauge	Multifunction digital: Speedometer, tachometer, odometer, trip & hour meters, fuel, gear position, 4 x 4 indicator, diagnostics, clock	Instrumentation	Lighter type DC outlet in console, standard connector in the back (15-A)
		Lighting	70 W from dual 35-W front light / brake light
Winch	Prewired for available winch	Seat	Standard
Protection	N/A	Anti-theft System	N/A

WARRANTY

Factory	6-months limited warranty
Extended	Up to 36 months B.E.S.T. coverage

BEST PROTECTION ©2019 Bombardier Recreational Products Inc (BRP). All rights reserved. ™, ® and the BRP logo are registered trademarks of BRP or its affiliates. Products are distributed in the U.S.A. by BRP US Inc. *Base model dry weight shown. ‡Visco-Lok is a trademark of GKN Viscodrive GmbH. †All other trademarks are the property of their respective owners. Because of our ongoing commitment to product quality and innovation, BRP reserves the right at anytime to discontinue or change specifications, price, design, features, models or equipment without incurring any obligation. Ride responsibly. BRP highly recommends that all ATV drivers take a training course. For safety and training information, see your dealer or, in U.S.A. call the ATV Safety Institute at 1 (800) 887-2887. In Canada, call the Canadian Safety Council at 1 (613) 739-1535 ext 227. ATVs can be hazardous to operate. For your safety: the operator and passenger should wear a helmet, eye protection and other protective clothing. Always remember that riding and alcohol / drugs don't mix. Never ride on paved surfaces or public roads. Never engage in stunt driving. Avoid excessive speeds and be particularly careful on difficult terrain. ATVs with engine sizes of greater than 90cc are recommended for use only by those age 16 and older. Never carry passengers on any ATV not specifically designated for such use.

can-am BRP

Can-AmOffroad.com

2020 OUTLANDER™ XT™ 570

HIGHLIGHTS

- Rotax® V-Twin engine
- Continuously Variable Transmission (CVT) with engine braking
- Tri-Mode Dynamic Power Steering (DPS™)
- 3,000-lb (1,361 kg) WARN† winch with roller fairlead
- Painted plastics for premium look
- Heavy-duty front and rear bumpers
- 12-in. cast-aluminum wheels
- 25-in. Maxxis† M923J radial tires
- Double A-arm front suspension
- Torsional Trailing arm Independent (TTI) rear suspension
- Wind deflectors
- 500-W magneto
- Steel racks with LinQ quick-attach accessory system and a combined 360 pounds (163.3 kg) capacity
- 2.9-gal (10.9 L) water-resistant rear compartment

Iron Gray & Octane Blue / 570
Hyper Silver / 570

ENGINE	570
Type	48 hp, Rotax 570 cc V-twin, liquid cooled
Fuel Delivery System	Electronic Fuel Injection (EFI)
Transmission	CVT, P / R / N / H / L, standard engine braking
Drive Train	Selectable 2WD / 4WD with Visco-Lok‡ QE auto-locking front differential
Power Steering	Tri-Mode Dynamic Power Steering (DPS)

SUSPENSIONS	
Front Suspension	Double A-arm 9 in. (22.9 cm) travel
Front Shocks	Oil
Rear Suspension	Torsional Trailing arm Independent (TTI) 8.8 in. (22.4 cm) travel
Rear Shocks	Oil

BRAKES	
Front	Dual 214 mm ventilated disc brakes with hydraulic twin-piston calipers
Rear	Single 214 mm ventilated disc brake with hydraulic twin-piston caliper

TIRES / WHEELS	
Front Tires	Maxxis M923J 25 x 8 x 12 in. (63.5 x 20.3 x 30.5 cm)
Rear Tires	Maxxis M923J 25 x 10 x 12 in. (63.5 x 25.4 x 30.5 cm)
Wheels	12-in. cast-aluminum

DIMENSIONS / CAPACITIES	
L x W x H	83 x 46 x 49 in. (211 x 116.8 x 124 cm)
Wheelbase	51 in. (129.5 cm)
Ground Clearance	10.5 in. (26.7 cm)
Seat Height	33.8 in. (85.8 cm)
Dry Weight*	704 lb (319 kg)
Rack Capacity	Front: 120 lb (54.4 kg) Rear: 240 lb (109 kg)
Storage Capacity	Rear: 2.9 gal (10.9 L)
Towing Capacity	1,300 lb (590 kg)
Fuel Capacity	5.4 gal (20.5 L)

FEATURES

Gauge	Multifunction digital: Speedometer, tachometer, odometer, trip & hour meters, fuel, gear position, 4 x 4 indicator, diagnostics, clock	Instrumentation	Lighter type DC outlet in console, standard connector in the back (15-A)
		Lighting	70 W from dual 35-W front light / brake light
Winch	3,000-lb (1,361 kg) WARN winch with roller fairlead	Seat	Standard
Protection	Heavy-duty front & rear bumpers Handlebar wind deflectors	Anti-theft System	N/A

WARRANTY

Factory	6-months limited warranty
Extended	Up to 36 months B.E.S.T. coverage

BEST PROTECTION ©2019 Bombardier Recreational Products Inc (BRP). All rights reserved. ™, ® and the BRP logo are registered trademarks of BRP or its affiliates. Products are distributed in the U.S.A. by BRP US Inc. *Base model dry weight shown. ‡Visco-Lok is a trademark of GKN Viscodrive GmbH. †All other trademarks are the property of their respective owners. Because of our ongoing commitment to product quality and innovation, BRP reserves the right at anytime to discontinue or change specifications, price, design, features, models or equipment without incurring any obligation. Ride responsibly. BRP highly recommends that all ATV drivers take a training course. For safety and training information, see your dealer or, in U.S.A. call the ATV Safety Institute at 1 (800) 887-2887. In Canada, call the Canadian Safety Council at 1 (613) 739-1535 ext 227. ATVs can be hazardous to operate. For your safety: the operator and passenger should wear a helmet, eye protection and other protective clothing. Always remember that riding and alcohol / drugs don't mix. Never ride on paved surfaces or public roads. Never engage in stunt driving. Avoid excessive speeds and be particularly careful on difficult terrain. ATVs with engine sizes of greater than 90cc are recommended for use only by those age 16 and older. Never carry passengers on any ATV not specifically designated for such use.

can-am BRP

Can-AmOffroad.com

2020 OUTLANDER™ MOSSY OAK† EDITION 450 / 570

HIGHLIGHTS

- Rotax® engine options
- Continuously Variable Transmission (CVT) with engine braking
- Tri-Mode Dynamic Power Steering (DPS™)
- 3,000-lb (1,361 kg) WARN† winch with roller fairlead
- 12-in. cast-aluminum wheels
- 26-in. Carlisle† ACT HD 6-ply tires
- Heavy-duty front and rear bumpers
- Aluminum A-arm protectors
- Front, center & footwell skid plates
- Heated grips and throttle
- Wind deflectors
- Torsional Trailing arm Independent (TTI) rear suspension
- Steel racks with LinQ™ quick-attach accessory system and a combined 360 pounds (163.3 kg) capacity

Mossy Oak Break-Up Country Camo† / 450 / 570

ENGINES	450	570
Type	38 hp, Rotax 427 cc single cylinder, liquid cooled	48 hp, Rotax 570 cc V-twin, liquid cooled
Fuel Delivery System	Electronic Fuel Injection (EFI)	
Transmission	CVT, P / R / N / H / L, standard engine braking	
Drive Train	Selectable 2WD / 4WD with Visco-Lok‡ QE auto-locking front differential	
Power Steering	Tri-Mode Dynamic Power Steering (DPS)	

SUSPENSIONS	
Front Suspension	Double A-arm 9 in. (22.9 cm) travel
Front Shocks	Oil
Rear Suspension	Torsional Trailing arm Independent (TTI) 8.8 in. (22.4 cm) travel
Rear Shocks	Oil

BRAKES	
Front	Dual 214 mm ventilated disc brakes with hydraulic twin-piston calipers
Rear	Single 214 mm ventilated disc brake with hydraulic twin-piston caliper

TIRES / WHEELS	
Front Tires	Carlisle ACT HD 26 x 8 x 12 in. (66 x 20.3 x 30.5 cm)
Rear Tires	Carlisle ACT HD 26 x 10 x 12 in. (66 x 25.4 x 30.5 cm)
Wheels	12-in. cast-aluminum

DIMENSIONS / CAPACITIES	
L x W x H	83 x 46 x 49 in. (211 x 116.8 x 124 cm)
Wheelbase	51 in. (129.5 cm)
Ground Clearance	11.5 in. (29.2 cm)
Seat Height	33.8 in. (85.8 cm)
Engine / Dry Weight*	450: 678 lb (308 kg) 570: 708 lb (319kg)
Rack Capacity	Front: 120 lb (54.4 kg) Rear: 240 lb (109 kg)
Storage Capacity	Rear: 2.9 gal (10.9 L)
Towing Capacity	1,300 lb (590 kg)
Fuel Capacity	5.4 gal (20.5 L)

FEATURES

Gauge	Multifunction digital: Speedometer, tachometer, odometer, trip & hour meters, fuel, gear position, 4 x 4 indicator, diagnostics, clock	Instrumentation	Lighter type DC outlet in console, standard connector in the back (15-A)
		Lighting	70 W from dual 35-W front light / brake light
Winch	3,000-lb (1,361 kg) WARN winch with roller fairlead	Seat	Reinforced Seat Skin
Protection	Heavy-duty front & rear bumpers, front, central & footwell aluminum skid plates, aluminum a-arms protectors, heated grips & throttle, handlebar wind deflectors	Anti-theft System	N/A

WARRANTY

Factory	6-months limited warranty
Extended	Up to 36 months B.E.S.T. coverage

BEST PROTECTION ©2019 Bombardier Recreational Products Inc (BRP). All rights reserved. ™, ® and the BRP logo are registered trademarks of BRP or its affiliates. Products are distributed in the U.S.A. by BRP US Inc. *Base model dry weight shown. ‡Visco-Lok is a trademark of GKN Viscodrive GmbH. †All other trademarks are the property of their respective owners. Because of our ongoing commitment to product quality and innovation, BRP reserves the right at anytime to discontinue or change specifications, price, design, features, models or equipment without incurring any obligation. Ride responsibly. BRP highly recommends that all ATV drivers take a training course. For safety and training information, see your dealer or, in U.S.A. call the ATV Safety Institute at 1 (800) 887-2887. In Canada, call the Canadian Safety Council at 1 (613) 739-1535 ext 227. ATVs can be hazardous to operate. For your safety: the operator and passenger should wear a helmet, eye protection and other protective clothing. Always remember that riding and alcohol / drugs don't mix. Never ride on paved surfaces or public roads. Never engage in stunt driving. Avoid excessive speeds and be particularly careful on difficult terrain. ATVs with engine sizes of greater than 90cc are recommended for use only by those age 16 and older. Never carry passengers on any ATV not specifically designated for such use.

can-am BRP

Can-AmOffroad.com

2020 OUTLANDER™

HIGHLIGHTS

- Rotax® V-twin engine options
- New arched double A-arm front suspension with front sway bar
- Continuously Variable Transmission (CVT) with engine braking
- Surrounding Spar Technology (SST) G2 frame with Geometric Contact Control
- Torsional Trailing arm Independent (TTI) rear suspension
- Visco-Lok‡ auto-locking front differential
- 230-W lighting from headlights
- High-strength, multifunction racks with LinQ™ quick-attach accessory system
- 5.7-gal (21.4 L) water-resistant rear compartment
- RF Digitally Encoded Security System (D.E.S.S.™)
- Multifunction digital gauge

Viper Red / 650 / 850

ENGINE	650	850
Type	62 hp, Rotax 649.6 cc V-twin, liquid cooled	78 hp, Rotax 854 cc V-twin, liquid cooled
Fuel Delivery System	Electronic Fuel Injection (EFI)	Intelligent Throttle Control (iTC™) with Electronic Fuel Injection (EFI)
Transmission	CVT, P / R / N / H / L, standard engine braking	
Drive Train	Selectable 2WD / 4WD with Visco-Lok auto-locking front differential	
Power Steering	N/A	

SUSPENSIONS	
Front Suspension	Arched double A-arm with front sway bar 9.2 in. (23.3 cm) travel
Front Shocks	Oil
Rear Suspension	Torsional Trailing arm Independent (TTI) 9.9 in. (25.1 cm) travel
Rear Shocks	Oil

BRAKES	
Front	Dual 214 mm ventilated disc brakes with hydraulic twin-piston calipers
Rear	Single 214 mm ventilated disc brake with hydraulic twin-piston caliper

TIRES / WHEELS	
Front Tires	Carlisle† ACT radial 26 x 8 x 12 in. (66 x 20.3 x 30.5 cm)
Rear Tires	Carlisle ACT radial 26 x 10 x 12 in. (66 x 25.4 x 30.5 cm)
Wheels	12-in. steel

DIMENSIONS / CAPACITIES	
L x W x H	86 x 48 x 49.5 in. (218.4 x 121,9 x 126 cm)
Wheelbase	51 in. (129.5 cm)
Ground Clearance	11 in. (27.9 cm)
Seat Height	34.5 in. (87.7 cm)
Engine / Dry Weight*	650: 749 lb (341 kg) 850: 800 lb (363 kg)
Rack Capacity	Front: 100 lb (45 kg) Rear: 200 lb (90 kg)
Storage Capacity	Rear: 5.7 gal (21.4 L)
Towing Capacity	1,650 lb (750 kg)
Fuel Capacity	5.4 gal (20.5 L)

FEATURES

Gauge	Multifunction digital: Speedometer, tachometer (bar graph RPM, bottom bar numerical RPM), odometer, trip & hour meters, diagnostic center, gear position, engine hour meter, 4 x 4 indicator, temperature and engine lights, fuel gauge, clock	4.5-in. digital display: Speedometer, tachometer, odometer, trip & hour meters, gear position, 4 x 4 indicator, temperature, engine lights, electronic fuel gauge & clock
Winch	Prewired for available winch	
Protection	Mudguards	

Instrumentation	Lighter type DC outlet in console, standard connector in the back (15-A)
Lighting	230 W from twin 60-W projectors and dual 55-W reflectors with tail light / brake light
Seat	Standard
Anti-theft System	RF Digitally Encoded Security System (D.E.S.S.)

WARRANTY

Factory	6-months limited warranty
Extended	Up to 36 months B.E.S.T. coverage

BEST PROTECTION ©2019 Bombardier Recreational Products Inc (BRP). All rights reserved. ™, ® and the BRP logo are registered trademarks of BRP or its affiliates. Products are distributed in the U.S.A. by BRP US Inc. *Base model dry weight shown. ‡Visco-Lok is a trademark of GKN Viscodrive GmbH. †All other trademarks are the property of their respective owners. Because of our ongoing commitment to product quality and innovation, BRP reserves the right at anytime to discontinue or change specifications, price, design, features, models or equipment without incurring any obligation. Ride responsibly. BRP highly recommends that all ATV drivers take a training course. For safety and training information, see your dealer or, in U.S.A. call the ATV Safety Institute at 1 (800) 887-2887. In Canada, call the Canadian Safety Council at 1 (613) 739-1535 ext 227. ATVs can be hazardous to operate. For your safety: the operator and passenger should wear a helmet, eye protection and other protective clothing. Always remember that riding and alcohol / drugs don't mix. Never ride on paved surfaces or public roads. Never engage in stunt driving. Avoid excessive speeds and be particularly careful on difficult terrain. ATVs with engine sizes of greater than 90cc are recommended for use only by those age 16 and older. Never carry passengers on any ATV not specifically designated for such use.

can-am BRP

Can-AmOffroad.com

2020 OUTLANDER™ DPS™

HIGHLIGHTS

- Rotax® V-twin engine options
- New arched double A-arm front suspension with front sway bar
- Continuously Variable Transmission (CVT) with engine braking
- Tri-Mode Dynamic Power Steering (DPS)
- Surrounding Spar Technology (SST) G2 frame with Geometric Contact Control
- Torsional Trailing arm Independent (TTI) rear suspension
- Visco-Lok‡ QE auto-locking front differential
- 14-in. cast-aluminum wheels
- 230-W lighting from headlights
- 625-W magneto
- High-strength, multifunction racks with LinQ™ quick-attach accessory system
- 5.7-gal (21.4 L) water-resistant rear compartment
- RF Digitally Encoded Security System (D.E.S.S.™)
- Multifunction digital gauge

Orange / 650 / 850

ENGINES	650	850
Type	62 hp, Rotax 649.6 cc V-twin, liquid cooled	78 hp, Rotax 854 cc V-twin, liquid cooled
Fuel Delivery System	Electronic Fuel Injection (EFI)	Intelligent Throttle Control (iTC™) with Electronic Fuel
Transmission	CVT, P / R / N / H / L, standard engine braking	
Drive Train	Selectable 2WD / 4WD with Visco-Lok QE auto-locking front differential	
Power Steering	Tri-Mode Dynamic Power Steering (DPS)	

SUSPENSIONS

Front Suspension	Arched double A-arm with front sway bar 9.2 in. (23.3 cm) travel
Front Shocks	Oil
Rear Suspension	Torsional Trailing arm Independent (TTI) 9.9 in. (25.1 cm) travel
Rear Shocks	Oil

BRAKES

Front	Dual 214 mm ventilated disc brakes with hydraulic twin-piston calipers
Rear	Single 214 mm ventilated disc brake with hydraulic twin-piston caliper

TIRES / WHEELS

Front Tires	ITP† Terracross 26 x 8 x 14 in. (66 x 20.3 x 35.6 cm)
Rear Tires	ITP Terracross 26 x 10 x 14 in. (66 x 25.4 x 35.6 cm)
Wheels	14-in. cast-aluminum

DIMENSIONS / CAPACITIES

L x W x H	86 x 48 x 49.5 in. (218.4 x 121.9 x 126 cm)
Wheelbase	51 in. (129.5 cm)
Ground Clearance	11 in. (27.9 cm)
Seat Height	34.5 in. (87.7 cm)
Engine / Dry Weight*	650: 749 lb (341kg) 850: 800 lb (363 kg)
Rack Capacity	Front: 100 lb (45 kg) Rear: 200 lb (90 kg)
Storage Capacity	Rear: 5.7 gal (21.4 L)
Towing Capacity	1,650 lb (750 kg)
Fuel Capacity	5.4 gal (20.5 L)

FEATURES

Gauge	Multifunction digital: Speedometer, tachometer (bar graph RPM, bottom bar numerical RPM), odometer, trip & hour meters, diagnostic center, gear position, engine hour meter, 4 x 4 indicator, temperature and engine lights, fuel gauge, clock	4.5-in. digital display: Speedometer, tachometer, odometer, trip & hour meters,gear position, 4 x 4 indicator, temperature, engine lights, electronic fuel gauge & clock
Winch	Prewired for available winch	
Protection	Mudguards	

Instrumentation	Lighter type DC outlet in console, standard connector in the back (15-A)
Lighting	230 W from twin 60-W projectors and dual 55-W reflectors with tail light / brake light
Seat	Standard
Anti-theft System	RF Digitally Encoded Security System (D.E.S.S.)

WARRANTY

Factory	6-months limited warranty
Extended	Up to 36 months B.E.S.T. coverage

©2019 Bombardier Recreational Products Inc (BRP). All rights reserved. ™, ® and the BRP logo are registered trademarks of BRP or its affiliates. Products are distributed in the U.S.A. by BRP US Inc. *Base model dry weight shown. ‡Visco-Lok is a trademark of GKN Viscodrive GmbH. †All other trademarks are the property of their respective owners. Because of our ongoing commitment to product quality and innovation, BRP reserves the right at anytime to discontinue or change specifications, price, design, features, models or equipment without incurring any obligation. Ride responsibly. BRP highly recommends that all ATV drivers take a training course. For safety and training information, see your dealer or, in U.S.A. call the ATV Safety Institute at 1 (800) 887-2887. In Canada, call the Canadian Safety Council at 1 (613) 739-1535 ext 227. ATVs can be hazardous to operate. For your safety: the operator and passenger should wear a helmet, eye protection and other protective clothing. Always remember that riding and alcohol / drugs don't mix. Never ride on paved surfaces or public roads. Never engage in stunt driving. Avoid excessive speeds and be particularly careful on difficult terrain. ATVs with engine sizes of greater than 90cc are recommended for use only by those age 16 and older. Never carry passengers on any ATV not specifically designated for such use.

can-am

Can-AmOffroad.com

2020 OUTLANDER™ XT™

HIGHLIGHTS

- Rotax® V-twin engine options
- New arched double A-arm front suspension with front sway bar
- Continuously Variable Transmission (CVT) with engine braking
- Tri-Mode Dynamic Power Steering (DPS™)
- 3,000-lb (1,361 kg) WARN† winch with roller fairlead
- Heavy-duty front and rear bumpers
- Handlebar wind deflectors
- Painted plastics for premium look
- 14-in. cast-aluminum wheels
- 26-in. ITP† Terracross radial tires
- Surrounding Spar Technology (SST) G2 frame with Geometric Contact Control
- Torsional Trailing arm Independent (TTI) rear suspension
- 625-W magneto
- High-strength, multifunction racks with LinQ™ quick-attach accessory system
- 5.7-gal (21.4 L) water-resistant rear compartment

Iron Gray & Octane Blue / 650 / 850 / 1000R
Black & Can-Am Red / 650 / 850 / 1000R
Mossy Oak† Break-Up Country Camo† / 650 / 850 / 1000R

ENGINES	650	850	1000R
Type	62 hp, Rotax 649.6 cc V-twin, liquid cooled	78 hp, Rotax 854 cc V-twin, liquid cooled	91 hp, Rotax 976 cc V-twin, liquid cooled
Fuel Delivery System	Electronic Fuel Injection (EFI)	Intelligent Throttle Control (iTC™) with Electronic Fuel Injection (EFI)	
Transmission	CVT, P / R / N / H / L, standard engine braking		
Drive Train	Selectable 2WD / 4WD with Visco-Lok‡ QE auto-locking front differential		
Power Steering	Tri-Mode Dynamic Power Steering (DPS)		

TIRES / WHEELS	
Front Tires	ITP Terracross 26 x 8 x 14 in. (66 x 20.3 x 35.6 cm)
Rear Tires	ITP Terracross 26 x 10 x 14 in. (66 x 25.4 x 35.6 cm)
Wheels	14-in. cast-aluminum

SUSPENSIONS	
Front Suspension	Arched double A-arm with front sway bar 9.2 in. (23.3 cm) travel
Front Shocks	Oil
Rear Suspension	Torsional Trailing arm Independent (TTI) 9.9 in. (25.1 cm) travel
Rear Shocks	Oil

DIMENSIONS / CAPACITIES	
L x W x H	86 x 48 x 49.5 in. (218.4 x 121.9 x 126 cm)
Wheelbase	51 in. (129.5 cm)
Ground Clearance	11 in. (27.9 cm)
Seat Height	34.5 in. (87.7 cm)
Engine / Dry Weight*	650: 749 lb (341 kg) 850: 800 lb (363 kg) 1000R: 826 lb (375 kg)
Rack Capacity	Front: 100 lb (45 kg) Rear: 200 lb (90 kg)
Storage Capacity	Rear: 5.7 gal (21.4 L)
Towing Capacity	1,650 lb (750 kg)
Fuel Capacity	5.4 gal (20.5 L)

BRAKES	
Front	Dual 214 mm ventilated disc brakes with hydraulic twin-piston calipers
Rear	Single 214 mm ventilated disc brake with hydraulic twin-piston caliper

FEATURES

Gauge	Multifunction digital: Speedometer, tachometer (bar graph RPM, bottom bar numerical RPM), odometer, trip & hour meters, diagnostic center, gear position, engine hour meter, 4 x 4 indicator, temperature and engine lights, fuel gauge, clock	4.5-in. digital display: Speedometer, tachometer, odometer, trip & hour meters,gear position, 4 x 4 indicator, temperature, engine lights, electronic fuel gauge & clock	
Winch	3,000-lb (1,361 kg) WARN winch with roller fairlead		
Protection	Heavy-duty front & rear bumpers, handlebar wind deflectors, mudguards		

Instrumentation	Lighter type DC outlet in console, standard connector in the back (15-A)
Lighting	230 W from twin 60-W projectors and dual 55-W reflectors with tail light / brake light
Seat	Standard
Anti-theft System	RF Digitally Encoded Security System (D.E.S.S.™)

WARRANTY

Factory	6-months limited warranty
Extended	Up to 36 months B.E.S.T. coverage

BEST PROTECTION ©2019 Bombardier Recreational Products Inc (BRP). All rights reserved. ™, ® and the BRP logo are registered trademarks of BRP or its affiliates. Products are distributed in the U.S.A. by BRP US Inc. *Base model dry weight shown. ‡Visco-Lok is a trademark of GKN Viscodrive GmbH. †All other trademarks are the property of their respective owners. Because of our ongoing commitment to product quality and innovation, BRP reserves the right at anytime to discontinue or change specifications, price, design, features, models or equipment without incurring any obligation. Ride responsibly. BRP highly recommends that all ATV drivers take a training course. For safety and training information, see your dealer or, in U.S.A. call the ATV Safety Institute at 1 (800) 887-2887. In Canada, call the Canadian Safety Council at 1 (613) 739-1535 ext 227. ATVs can be hazardous to operate. For your safety: the operator and passenger should wear a helmet, eye protection and other protective clothing. Always remember that riding and alcohol / drugs don't mix. Never ride on paved surfaces or public roads. Never engage in stunt driving. Avoid excessive speeds and be particularly careful on difficult terrain. ATVs with engine sizes of greater than 90cc are recommended for use only by those age 16 and older. Never carry passengers on any ATV not specifically designated for such use.

can-am BRP

Can-AmOffroad.com

2020 OUTLANDER™ NORTH EDITION

HIGHLIGHTS

- Rotax® V-twin engine
- New arched double A-arm front suspension with front sway bar
- Intelligent Throttle Control (iTC™) with riding modes
- Continuously Variable Transmission (CVT) with engine braking & Extra-Low L Gear
- Tri-Mode Dynamic Power Steering (DPS™)
- 3,000-lb (1,361 kg) WARN† winch with roller fairlead
- 14-in. cast-aluminum wheels
- 26-in. ITP† Terracross radial tires
- Windshield
- Heated grips and visor outlet
- Torsional Trailing arm Independent (TTI) rear suspension
- High-strength, multifunction racks with LinQ™ quick-attach accessory system
- 5.7-gal (21.4 L) water-resistant rear compartment
- 625-W magneto

White / 850

ENGINES	850
Type	78 hp, Rotax 854 cc V-twin, liquid cooled
Fuel Delivery System	Intelligent Throttle Control (iTC) with Electronic Fuel Injection (EFI)
Transmission	CVT, P / R / N / H / Extra-Low L, standard engine braking
Drive Train	Selectable 2WD / 4WD with Visco-Lok‡ QE auto-locking front differential
Power Steering	Tri-Mode Dynamic Power Steering (DPS)
SUSPENSIONS	
Front Suspension	Arched double A-arm with front sway bar 9.2 in. (23.3 cm) travel
Front Shocks	Oil
Rear Suspension	Torsional Trailing arm Independent (TTI) 9.9 in. (25.1 cm) travel
Rear Shocks	Oil
BRAKES	
Front	Dual 214 mm ventilated disc brakes with hydraulic twin-piston calipers
Rear	Single 214 mm ventilated disc brake with hydraulic twin-piston caliper

TIRES / WHEELS	
Front Tires	ITP Terracross 26 x 8 x 14 in. (66 x 20.3 x 35.6 cm)
Rear Tires	ITP Terracross 26 x 10 x 14 in. (66 x 25.4 x 35.6 cm)
Wheels	14-in. cast-aluminum

DIMENSIONS / CAPACITIES	
L x W x H	86 x 48 x 61.4 in. (218.4 x 121.9 x 156 cm)
Wheelbase	51 in. (129.5 cm)
Ground Clearance	11 in. (27.9 cm)
Seat Height	34.5 in. (87.7 cm)
Dry Weight*	850: 800 lb (363 kg)
Rack Capacity	Front: 100 lb (45 kg) Rear: 200 lb (90 kg)
Storage Capacity	Rear: 5.7 gal (21.4 L)
Towing Capacity	1,650 lb (750 kg)
Fuel Capacity	5.4 gal (20.5 L)

FEATURES

Gauge	4.5-in. digital display : Speedometer, tachometer, odometer, trip & hour meters,gear position, 4 x 4 indicator, temperature, engine lights, electronic fuel gauge & clock
Winch	3,000-lb (1,361 kg) WARN winch with roller fairlead
Protection	Heated grips & visor outlet, mudguards, windshield
Instrumentation	Lighter type DC outlet in console, standard connector in the back (15-A)
Lighting	230 W from twin 60-W projectors and dual 55-W reflectors with tail light / brake light
Seat	Standard
Anti-theft System	RF Digitally Encoded Security System (D.E.S.S.™)

WARRANTY

Factory	6-months limited warranty
Extended	Up to 36 months B.E.S.T. coverage

BEST PROTECTION ©2019 Bombardier Recreational Products Inc (BRP). All rights reserved. ™, ® and the BRP logo are registered trademarks of BRP or its affiliates. Products are distributed in the U.S.A. by BRP US Inc. *Base model dry weight shown. ‡Visco-Lok is a trademark of GKN Viscodrive GmbH. †All other trademarks are the property of their respective owners. Because of our ongoing commitment to product quality and innovation, BRP reserves the right at anytime to discontinue or change specifications, price, design, features, models or equipment without incurring any obligation. Ride responsibly. BRP highly recommends that all ATV drivers take a training course. For safety and training information, see your dealer or, in U.S.A. call the ATV Safety Institute at 1 (800) 887-2887. In Canada, call the Canadian Safety Council at 1 (613) 739-1535 ext 227. ATVs can be hazardous to operate. For your safety: the operator and passenger should wear a helmet, eye protection and other protective clothing. Always remember that riding and alcohol / drugs don't mix. Never ride on paved surfaces or public roads. Never engage in stunt driving. Avoid excessive speeds and be particularly careful on difficult terrain. ATVs with engine sizes of greater than 90cc are recommended for use only by those age 16 and older. Never carry passengers on any ATV not specifically designated for such use.

can-am BRP

Can-AmOffroad.com

2020 OUTLANDER™ MOSSY OAK† EDITION 650

HIGHLIGHTS

- Rotax® V-twin engine
- Continuously Variable Transmission (CVT) with engine braking
- Tri-Mode Dynamic Power Steering (DPS™)
- 3,000-lb (1,361 kg) WARN† winch with roller fairlead
- 12-in. cast-aluminum wheels
- 26-in. Carlisle† ACT HD 6-ply tires
- Heavy-duty front and rear bumpers
- Heated grips and throttle
- A-arms & TTI HMWPE protectors
- Torsional Trailing arm Independent (TTI) rear suspension
- Handlebar wind deflectors
- Wind deflectors
- Front, central & footwell aluminum skid plates
- High-strength, multifunction racks with LinQ™ quick-attach accessory system
- RF Digitally Encoded Security System (D.E.S.S.™)
- 5.7-gal (21.4 L) water-resistant rear compartment

Mossy Oak Break-Up Country Camo† / 650

ENGINE	650
Type	62 hp, Rotax 649.6 cc V-twin, liquid cooled
Fuel Delivery System	Electronic Fuel Injection (EFI)
Transmission	CVT, P / R / N / H / L, standard engine braking
Drive Train	Selectable 2WD / 4WD with Visco-Lok‡ QE auto-locking front differential
Power Steering	Tri-Mode Dynamic Power Steering (DPS)

SUSPENSIONS	
Front Suspension	Arched double A-arm with front sway bar 9.2 in. (23.3 cm) travel
Front Shocks	Oil
Rear Suspension	Torsional Trailing arm Independent (TTI) 9.9 in. (25.1 cm) travel
Rear Shocks	Oil

BRAKES	
Front	Dual 214 mm ventilated disc brakes with hydraulic twin-piston calipers
Rear	Single 214 mm ventilated disc brake with hydraulic twin-piston caliper

TIRES / WHEELS	
Front Tires	Carlisle ACT HD 26 x 8 x 12 in. (66 x 20.3 x 30.5 cm)
Rear Tires	Carlisle ACT HD 26 x 10 x 12 in. (66 x 25.4 x 30.5 cm)
Wheels	12-in. cast-aluminum

DIMENSIONS / CAPACITIES	
L x W x H	86 x 48 x 49.5 in. (218.4 x 121.9 x 126 cm)
Wheelbase	51 in. (129.5 cm)
Ground Clearance	12 in. (30.5 cm)
Seat Height	34.5 in. (87.7 cm)
Dry Weight*	749 lb (341 kg)
Rack Capacity	Front: 100 lb (45 kg) Rear: 200 lb (90 kg)
Storage Capacity	Rear: 5.7 gal (21.4 L)
Towing Capacity	1,650 lb (750 kg)
Fuel Capacity	5.4 gal (20.5 L)

FEATURES

Gauge	Multifunction digital: Speedometer, tachometer (bar graph RPM, bottom bar numerical RPM), odometer, trip & hour meters, diagnostic center, gear position, engine hour meter, 4 x 4 indicator, temperature and engine lights, fuel gauge, clock	Instrumentation	Lighter type DC outlet in console, standard connector in the back (15-A)
		Lighting	230 W from twin 60-W projectors and dual 55-W reflectors with tail light / brake light
Winch	3,000-lb (1,361 kg) WARN winch with roller fairlead	Seat	Standard
Protection	Heavy-duty front & rear bumpers, front, central & footwell aluminum skid plates, A-arms and TTI HMWPE protectors, heated grips & throttle, handlebar wind deflectors, mudguards	Anti-theft System	RF Digitally Encoded Security System (D.E.S.S.)

WARRANTY

Factory	6-months limited warranty
Extended	Up to 36 months B.E.S.T. coverage

BEST PROTECTION ©2019 Bombardier Recreational Products Inc (BRP). All rights reserved. ™, ® and the BRP logo are registered trademarks of BRP or its affiliates. Products are distributed in the U.S.A. by BRP US Inc. *Base model dry weight shown. ‡Visco-Lok is a trademark of GKN Viscodrive GmbH. †All other trademarks are the property of their respective owners. Because of our ongoing commitment to product quality and innovation, BRP reserves the right at anytime to discontinue or change specifications, price, design, features, models or equipment without incurring any obligation. Ride responsibly. BRP highly recommends that all ATV drivers take a training course. For safety and training information, see your dealer or, in U.S.A. call the ATV Safety Institute at 1 (800) 887-2887. In Canada, call the Canadian Safety Council at 1 (613) 739-1535 ext 227. ATVs can be hazardous to operate. For your safety: the operator and passenger should wear a helmet, eye protection and other protective clothing. Always remember that riding and alcohol / drugs don't mix. Never ride on paved surfaces or public roads. Never engage in stunt driving. Avoid excessive speeds and be particularly careful on difficult terrain. ATVs with engine sizes of greater than 90cc are recommended for use only by those age 16 and older. Never carry passengers on any ATV not specifically designated for such use.

can-am BRP

Can-AmOffroad.com

2020 OUTLANDER™ XT-P

HIGHLIGHTS

- Rotax® V-twin engine options
- New arched double A-arm front suspension with front sway bar
- Front and rear FOX† 1.5 PODIUM† QS3 shocks
- Intelligent Throttle Control (iTC™) with riding modes
- Continuously Variable Transmission (CVT) with engine braking
- Tri-Mode Dynamic Power Steering (DPS™)
- 3,000-lb (1,361 kg) WARN† winch with roller fairlead
- 14-in. cast-aluminum beadlock wheels
- 26-in. ITP† Terracross radial tires
- Painted plastics for premium look
- Heavy-duty front and rear bumpers
- 625-W magneto
- High-strength, multifunction racks with LinQ™ quick-attach accessory system
- 5.7-gal (21.4 L) water-resistant rear compartment

Carbon Black & Sunburst Yellow / 850 / 1000R

ENGINES	850	1000R
Type	78 hp, Rotax 854 cc V-twin, liquid cooled	91 hp, Rotax 976 cc V-twin, liquid cooled
Fuel Delivery System	Intelligent Throttle Control (iTC) with Electronic Fuel Injection (EFI)	
Transmission	CVT, P / R / N / H / L, standard engine braking	
Drive Train	Selectable 2WD / 4WD with Visco-Lok‡ QE auto-locking front differential	
Power Steering	Tri-Mode Dynamic Power Steering (DPS)	

SUSPENSIONS	
Front Suspension	Arched double A-arm with front sway bar 9.2 in. (23.3 cm) travel
Front Shocks	FOX 1.5 PODIUM QS3
Rear Suspension	Torsional Trailing arm Independent (TTI) 9.9 in. (25.1 cm) travel
Rear Shocks	FOX 1.5 PODIUM QS3

BRAKES	
Front	Dual 214 mm ventilated disc brakes with hydraulic twin-piston calipers
Rear	Single 214 mm ventilated disc brake with hydraulic twin-piston caliper

TIRES / WHEELS	
Front Tires	ITP Terracross 26 x 8 x 14 in. (66 x 20.3 x 35.6cm)
Rear Tires	ITP Terracross 26 x 10 x 14 in. (66 x 25.4 x 35.6 cm)
Wheels	14-in. cast-aluminum beadlock

DIMENSIONS / CAPACITIES	
L x W x H	86 x 48 x 49.5 in. (218.4 x 121,9 x 126 cm)
Wheelbase	51 in. (129.5 cm)
Ground Clearance	11 in. (27.9 cm)
Seat Height	34.5 in. (87.7 cm)
Engine / Dry Weight*	850: 800 lb (363 kg) 1000R: 826 lb (375 kg)
Rack Capacity	Front: 100 lb (45 kg) Rear: 200 lb (90 kg)
Storage Capacity	Rear: 5.7 gal (21.4 L)
Towing Capacity	1,650 lb (750 kg)
Fuel Capacity	5.4 gal (20.5 L)

FEATURES

Gauge	7.6-in wide digital display: Speedometer, tachometer, odometer, trips & hour meters, gear position, 4 x 4 indicator, temperature, engine lights, fuel gauge, clock
Winch	3,000-lb (1,361 kg) WARN winch with roller fairlead
Protection	Heavy-duty front & rear bumpers, aluminum taper-profile handlebar with full wrap handguards, mudguards
Instrumentation	Lighter type DC outlet in console, standard connector in the back (15-A)
Lighting	230 W from twin 60-W projectors and dual 55-W reflectors with tail light / brake light
Seat	Standard
Anti-theft System	RF Digitally Encoded Security System (D.E.S.S.™)

WARRANTY

Factory	6-months limited warranty
Extended	Up to 36 months B.E.S.T. coverage

BEST PROTECTION ©2019 Bombardier Recreational Products Inc (BRP). All rights reserved. ™, ® and the BRP logo are registered trademarks of BRP or its affiliates. Products are distributed in the U.S.A. by BRP US Inc. *Base model dry weight shown. ‡Visco-Lok is a trademark of GKN Viscodrive GmbH. †All other trademarks are the property of their respective owners. Because of our ongoing commitment to product quality and innovation, BRP reserves the right at anytime to discontinue or change specifications, price, design, features, models or equipment without incurring any obligation. Ride responsibly. BRP highly recommends that all ATV drivers take a training course. For safety and training information, see your dealer or, in U.S.A. call the ATV Safety Institute at 1 (800) 887-2887. In Canada, call the Canadian Safety Council at 1 (613) 739-1535 ext 227. ATVs can be hazardous to operate. For your safety: the operator and passenger should wear a helmet, eye protection and other protective clothing. Always remember that riding and alcohol / drugs don't mix. Never ride on paved surfaces or public roads. Never engage in stunt driving. Avoid excessive speeds and be particularly careful on difficult terrain. ATVs with engine sizes of greater than 90cc are recommended for use only by those age 16 and older. Never carry passengers on any ATV not specifically designated for such use.

can-am BRP

Can-AmOffroad.com

2020 OUTLANDER™ X™ XC

HIGHLIGHTS

- Rotax® V-twin engine
- Intelligent Throttle Control (iTC™) with riding modes
- Front and rear FOX† 1.5 PODIUM† RC2 shocks
- 14-in. cast-aluminum beadlock wheels
- 26-in. ITP† Terracross radial tires
- Sport bumper with aluminum pre-runner
- Continuously Variable Transmission (CVT) with engine braking
- Tri-Mode Dynamic Power Steering (DPS™)
- Front, center & footwell aluminum skid plates
- A-arms & TTI HMWPE protectors
- Aluminum taper-profile handlebar with full wrap handguards
- 625-W magneto
- High-strength, multifunction racks with LinQ™ quick-attach accessory system
- 5.7-gal (21.4 L) water-resistant rear compartment
- X package coloration

Black, Hyper Silver & Can-Am Red / 1000R

ENGINE	1000R
Type	91 hp, Rotax 976 cc V-twin, liquid cooled
Fuel Delivery System	Intelligent Throttle Control (iTC) with Electronic Fuel Injection (EFI)
Transmission	CVT, P / R / N / H / L, standard engine braking
Drive Train	Selectable 2WD / 4WD with Visco-Lok‡ QE auto-locking front differential
Power Steering	Tri-Mode Dynamic Power Steering (DPS)

SUSPENSIONS	
Front Suspension	Arched double A-arm with front sway bar 9.2 in. (23.3 cm) travel
Front Shocks	FOX 1.5 PODIUM RC2
Rear Suspension	Torsional Trailing arm Independent (TTI) 9.9 in. (25.1 cm) travel
Rear Shocks	FOX 1.5 PODIUM RC2

BRAKES	
Front	Dual 214 mm ventilated disc brakes with hydraulic twin-piston calipers
Rear	Single 214 mm ventilated disc brake with hydraulic twin-piston caliper

TIRES / WHEELS	
Front Tires	ITP Terracross 26 x 8 x 14 in. (66 x 20.3 x 35.6cm)
Rear Tires	ITP Terracross 26 x 10 x 14 in. (66 x 25.4 x 35.6 cm)
Wheels	14-in. cast-aluminum beadlock

DIMENSIONS / CAPACITIES	
L x W x H	86 x 48 x 49.5 in. (218.4 x 121,9 x 126 cm)
Wheelbase	51 in. (129.5 cm)
Ground Clearance	11 in. (27.9 cm)
Seat Height	34.5 in. (87.7 cm)
Dry Weight*	826 lb (375 kg)
Rack Capacity	Front: 100 lb (45 kg) Rear: 200 lb (90 kg)
Storage Capacity	Rear: 5.7 gal (21.4 L)
Towing Capacity	1,650 lb (750 kg)
Fuel Capacity	5.4 gal (20.5 L)

FEATURES

Gauge	7.6-in wide digital display : Speedometer, tachometer, odometer, trips & hour meters, gear position, 4 x 4 indicator, temperature, engine lights, fuel gauge, clock
Winch	Prewired for available winch
Protection	Front bumper with pre-runner, aluminum taper-profile handlebar with full wrap handguards, front, center & footwell aluminum skid plates, A-arms and TTI HMWPE protectors, mudguards
Instrumentation	Lighter type DC outlet in console, standard connector in the back (15-A)
Lighting	230 W from twin 60-W projectors and dual 55-W reflectors with tail light / brake light
Seat	Standard
Anti-theft System	RF Digitally Encoded Security System (D.E.S.S.™)

WARRANTY

Factory	6-months limited warranty
Extended	Up to 36 months B.E.S.T. coverage

©2019 Bombardier Recreational Products Inc (BRP). All rights reserved. ™, ® and the BRP logo are registered trademarks of BRP or its affiliates. Products are distributed in the U.S.A. by BRP US Inc. *Base model dry weight shown. ‡Visco-Lok is a trademark of GKN Viscodrive GmbH. †All other trademarks are the property of their respective owners. Because of our ongoing commitment to product quality and innovation, BRP reserves the right at anytime to discontinue or change specifications, price, design, features, models or equipment without incurring any obligation. Ride responsibly. BRP highly recommends that all ATV drivers take a training course. For safety and training information, see your dealer or, in U.S.A. call the ATV Safety Institute at 1 (800) 887-2887. In Canada, call the Canadian Safety Council at 1 (613) 739-1535 ext 227. ATVs can be hazardous to operate. For your safety: the operator and passenger should wear a helmet, eye protection and other protective clothing. Always remember that riding and alcohol / drugs don't mix. Never ride on paved surfaces or public roads. Never engage in stunt driving. Avoid excessive speeds and be particularly careful on difficult terrain. ATVs with engine sizes of greater than 90cc are recommended for use only by those age 16 and older. Never carry passengers on any ATV not specifically designated for such use.

can-am

Can-AmOffroad.com

2020 OUTLANDER™ MAX 450 / 570

HIGHLIGHTS

- Rotax® engine options
- Continuously Variable Transmission (CVT) with engine braking
- Double A-arm front suspension
- Torsional Trailing arm Independent (TTI) rear suspension
- 1,300-lb (590 kg) towing capacity
- 25-in. Carlisle† Trail Wolf tires
- Surrounding Spar Technology (SST) G2L frame with Geometric Contact Control
- Multifunction digital gauge
- Steel racks with LinQ™ quick-attach accessory system and a combined 360 pounds (163.3 kg) capacity
- 2.9-gal (10.9 L) water-resistant rear compartment
- Dynamic passenger comfort ergonomics
- Multiposition passenger handgrips
- Raised floorboards

Viper Red / 450 / 570

ENGINES	450	570
Type	38 hp, Rotax 427 cc single cylinder, liquid cooled	48 hp, Rotax 570 cc V-twin, liquid cooled
Fuel Delivery System	Electronic Fuel Injection (EFI)	
Transmission	CVT, P / R / N / H / L, standard engine braking	
Drive Train	Selectable 2WD / 4WD with Visco-Lok‡ auto-locking front differential	
Power Steering	N/A	

SUSPENSIONS	
Front Suspension	Double A-arm 9 in. (22.9 cm) travel
Front Shocks	Oil
Rear Suspension	Torsional Trailing arm Independent (TTI) 8.8 in. (22.4 cm) travel
Rear Shocks	Oil

BRAKES	
Front	Dual 214 mm ventilated disc brakes with hydraulic twin-piston calipers
Rear	Single 214 mm ventilated disc brake with hydraulic twin-piston caliper

TIRES / WHEELS	
Front Tires	Carlisle Trail Wolf 25 x 8 x 12 in. (63.5 x 20.3 x 30.5 cm)
Rear Tires	Carlisle Trail Wolf 25 x 10 x 12 in. (63.5 x 25.4 x 30.5 cm)
Wheels	12-in. steel

DIMENSIONS / CAPACITIES	
L x W x H	91 x 46 x 52.5 in. (231 x 116.8 x 133 cm)
Wheelbase	59 in. (149.9 cm)
Ground Clearance	10.5 in. (26.7 cm)
Seat Height	33.8 in. (85.8 cm)
Engine / Dry Weight*	450 / 715 lb (324 kg) 570 / 741 lb (336 kg)
Rack Capacity	Front: 120 lb (54.4 kg) Rear: 240 lb (109 kg)
Storage Capacity	Rear: 2.9 gal (10.9 L)
Towing Capacity	1,300 lb (590 kg)
Fuel Capacity	5.4 gal (20.5 L)

FEATURES

Gauge	Multifunction digital: Speedometer, tachometer, odometer, trip & hour meters, fuel, gear position, 4 x 4 indicator, diagnostics, clock	Instrumentation	Lighter type DC outlet in console, standard connector in the back (15-A)
		Lighting	70 W from dual 35-W front light / brake light
Winch	Prewired for available winch	Seat	Convertible Rack System (CRS)
Protection	N/A	Anti-theft System	N/A

WARRANTY

Factory	6-months limited warranty
Extended	Up to 36 months B.E.S.T. coverage

BEST PROTECTION ©2019 Bombardier Recreational Products Inc (BRP). All rights reserved. ™, ® and the BRP logo are registered trademarks of BRP or its affiliates. Products are distributed in the U.S.A. by BRP US Inc. *Base model dry weight shown. ‡Visco-Lok is a trademark of GKN Viscodrive GmbH. †All other trademarks are the property of their respective owners. Because of our ongoing commitment to product quality and innovation, BRP reserves the right at anytime to discontinue or change specifications, price, design, features, models or equipment without incurring any obligation. Ride responsibly. BRP highly recommends that all ATV drivers take a training course. For safety and training information, see your dealer or, in U.S.A. call the ATV Safety Institute at 1 (800) 887-2887. In Canada, call the Canadian Safety Council at 1 (613) 739-1535 ext 227. ATVs can be hazardous to operate. For your safety: the operator and passenger should wear a helmet, eye protection and other protective clothing. Always remember that riding and alcohol / drugs don't mix. Never ride on paved surfaces or public roads. Never engage in stunt driving. Avoid excessive speeds and be particularly careful on difficult terrain. ATVs with engine sizes of greater than 90cc are recommended for use only by those age 16 and older. Never carry passengers on any ATV not specifically designated for such use.

can-am BRP

Can-AmOffroad.com

2020 OUTLANDER™ MAX DPS™ 450 / 570

HIGHLIGHTS

- Rotax® engine options
- Continuously Variable Transmission (CVT) with engine braking
- Tri-Mode Dynamic Power Steering (DPS)
- Double A-arm front suspension
- Torsional Trailing arm Independent (TTI) rear suspension
- 5.4-gal (20.5 L) fuel capacity
- 1,300-lb (590 kg) towing capacity
- Surrounding Spar Technology (SST) G2L frame with Geometric Contact Control
- 500-W magneto
- Steel racks with LinQ™ quick-attach accessory system and a combined 360 pounds (163.3 kg) capacity
- 2.9-gal (10.9 L) water-resistant rear compartment
- Dynamic passenger comfort ergonomics
- Multiposition passenger handgrips
- Raised floorboards

Orange / 450 / 570
Green / 450 / 570

ENGINES	450	570
Type	38 hp, Rotax 427 cc single cylinder, liquid cooled	48 hp, Rotax 570 cc V-twin, liquid cooled
Fuel Delivery System	Electronic Fuel Injection (EFI)	
Transmission	CVT, P / R / N / H / L, standard engine braking	
Drive Train	Selectable 2WD / 4WD with Visco-Lok‡ QE auto-locking front differential	
Power Steering	Tri-Mode Dynamic Power Steering (DPS)	

TIRES / WHEELS	
Front Tires	Carlisle† Trail Wolf 25 x 8 x 12 in. (63.5 x 20.3 x 30.5 cm)
Rear Tires	Carlisle Trail Wolf 25 x 10 x 12 in. (63.5 x 25.4 x 30.5 cm)
Wheels	12-in. steel

SUSPENSIONS	
Front Suspension	Double A-arm 9 in. (22.9 cm) travel
Front Shocks	Oil
Rear Suspension	Torsional Trailing arm Independent (TTI) 8.8 in. (22.4 cm) travel
Rear Shocks	Oil

DIMENSIONS / CAPACITIES	
L x W x H	91 x 46 x 52.5 in. (231 x 116.8 x 133 cm)
Wheelbase	59 in. (149.9 cm)
Ground Clearance	10.5 in. (26.7 cm)
Seat Height	33.8 in. (85.8 cm)
Engine / Dry Weight*	450 / 715 lb (324 kg) 570 / 741 lb (336 kg)
Rack Capacity	Front: 120 lb (54.4 kg) Rear: 240 lb (109 kg)
Storage Capacity	Rear: 2.9 gal (10.9 L)
Towing Capacity	1,300 lb (590 kg)
Fuel Capacity	5.4 gal (20.5 L)

BRAKES	
Front	Dual 214 mm ventilated disc brakes with hydraulic twin-piston calipers
Rear	Single 214 mm ventilated disc brake with hydraulic twin-piston caliper

FEATURES

Gauge	Multifunction digital: Speedometer, tachometer, odometer, trip & hour meters, fuel, gear position, 4 x 4 indicator, diagnostics, clock	Instrumentation	Lighter type DC outlet in console, standard connector in the back (15-A)
		Lighting	70 W from dual 35-W front light / brake light
Winch	Prewired for available winch	Seat	Convertible Rack System (CRS)
Protection	N/A	Anti-theft System	N/A

WARRANTY

Factory	6-months limited warranty
Extended	Up to 36 months B.E.S.T. coverage

BEST PROTECTION ©2019 Bombardier Recreational Products Inc (BRP). All rights reserved. ™, ® and the BRP logo are registered trademarks of BRP or its affiliates. Products are distributed in the U.S.A. by BRP US Inc. *Base model dry weight shown. ‡Visco-Lok is a trademark of GKN Viscodrive GmbH. †All other trademarks are the property of their respective owners. Because of our ongoing commitment to product quality and innovation, BRP reserves the right at anytime to discontinue or change specifications, price, design, features, models or equipment without incurring any obligation. Ride responsibly. BRP highly recommends that all ATV drivers take a training course. For safety and training information, see your dealer or, in U.S.A. call the ATV Safety Institute at 1 (800) 887-2887. In Canada, call the Canadian Safety Council at 1 (613) 739-1535 ext 227. ATVs can be hazardous to operate. For your safety: the operator and passenger should wear a helmet, eye protection and other protective clothing. Always remember that riding and alcohol / drugs don't mix. Never ride on paved surfaces or public roads. Never engage in stunt driving. Avoid excessive speeds and be particularly careful on difficult terrain. ATVs with engine sizes of greater than 90cc are recommended for use only by those age 16 and older. Never carry passengers on any ATV not specifically designated for such use.

can-am BRP

Can-AmOffroad.com

2020 OUTLANDER™ MAX XT™ 570

HIGHLIGHTS

- Rotax® V-Twin engine
- Continuously Variable Transmission (CVT) with engine braking
- Tri-Mode Dynamic Power Steering (DPS™)
- 3,000-lb (1,361 kg) WARN† winch with roller fairlead
- Heavy-duty front and rear bumpers
- Painted plastics for premium look
- 12-in. cast-aluminum wheels
- 25-in. Maxxis† M923J radial tires
- Torsional Trailing arm Independent (TTI) rear suspension
- Wind deflectors
- Steel racks with LinQ™ quick-attach accessory system and a combined 360 pounds (163.3 kg) capacity
- 2.9-gal (10.9 L) water-resistant rear compartment
- Dynamic passenger comfort ergonomics
- Multiposition passenger handgrips
- Raised floorboards

Iron Gray & Octane Blue / 570
Hyper Silver / 570

ENGINE	570
Type	48 hp, Rotax 570 cc V-twin, liquid cooled
Fuel Delivery System	Electronic Fuel Injection (EFI)
Transmission	CVT, P / R / N / H / L, standard engine braking
Drive Train	Selectable 2WD / 4WD with Visco-Lok‡ QE auto-locking front differential
Power Steering	Tri-Mode Dynamic Power Steering (DPS)

SUSPENSIONS	
Front Suspension	Double A-arm 9 in. (22.9 cm) travel
Front Shocks	Oil
Rear Suspension	Torsional Trailing arm Independent (TTI) 8.8 in. (22.4 cm) travel
Rear Shocks	Oil

BRAKES	
Front	Dual 214 mm ventilated disc brakes with hydraulic twin-piston calipers
Rear	Single 214 mm ventilated disc brake with hydraulic twin-piston caliper

TIRES / WHEELS	
Front Tires	Maxxis M923J 25 x 8 x 12 in. (63.5 x 20.3 x 30.5 cm)
Rear Tires	Maxxis M923J 25 x 10 x 12 in. (63.5 x 25.4 x 30.5 cm)
Wheels	12-in. cast-aluminum

DIMENSIONS / CAPACITIES	
L x W x H	91 x 46 x 52.5 in. (231 x 116.8 x 133 cm)
Wheelbase	59 in. (149.9 cm)
Ground Clearance	10.5 in. (26.7 cm)
Seat Height	33.8 in. (85.8 cm)
Dry Weight*	741 lb (336 kg)
Rack Capacity	Front: 120 lb (54.4 kg) Rear: 240 lb (109 kg)
Storage Capacity	Rear: 2.9 gal (10.9 L)
Towing Capacity	1,300 lb (590 kg)
Fuel Capacity	5.4 gal (20.5 L)

FEATURES

Gauge	Multifunction digital: Speedometer, tachometer, odometer, trip & hour meters, fuel, gear position, 4 x 4 indicator, diagnostics, clock	Instrumentation	Lighter type DC outlet in console, standard connector in the back (15-A)
		Lighting	70 W from dual 35-W front light / brake light
Winch	3,000-lb (1,361 kg) WARN winch with roller fairlead	Seat	Convertible Rack System (CRS)
Protection	Heavy-duty front & rear bumpers Handlebar wind deflectors	Anti-theft System	N/A

WARRANTY

Factory	6-months limited warranty
Extended	Up to 36 months B.E.S.T. coverage

BEST PROTECTION ©2019 Bombardier Recreational Products Inc (BRP). All rights reserved. ™, ® and the BRP logo are registered trademarks of BRP or its affiliates. Products are distributed in the U.S.A. by BRP US Inc. *Base model dry weight shown. ‡Visco-Lok is a trademark of GKN Viscodrive GmbH. †All other trademarks are the property of their respective owners. Because of our ongoing commitment to product quality and innovation, BRP reserves the right at anytime to discontinue or change specifications, price, design, features, models or equipment without incurring any obligation. Ride responsibly. BRP highly recommends that all ATV drivers take a training course. For safety and training information, see your dealer or, in U.S.A. call the ATV Safety Institute at 1 (800) 887-2887. In Canada, call the Canadian Safety Council at 1 (613) 739-1535 ext 227. ATVs can be hazardous to operate. For your safety: the operator and passenger should wear a helmet, eye protection and other protective clothing. Always remember that riding and alcohol / drugs don't mix. Never ride on paved surfaces or public roads. Never engage in stunt driving. Avoid excessive speeds and be particularly careful on difficult terrain. ATVs with engine sizes of greater than 90cc are recommended for use only by those age 16 and older. Never carry passengers on any ATV not specifically designated for such use.

can-am BRP

Can-AmOffroad.com

2020 OUTLANDER™ MAX DPS™

HIGHLIGHTS

- Rotax® V-twin engine
- New arched double A-arm front suspension with front sway bar
- Continuously Variable Transmission (CVT) with engine braking
- Tri-Mode Dynamic Power Steering (DPS)
- 14-in. cast-aluminum wheels
- Convertible Rack System (CRS) with LinQ™ system
- Torsional Trailing arm Independent (TTI) rear suspension
- Dynamic passenger comfort ergonomics
- Multiposition passenger handgrips
- Raised floorboards
- High-strength, multipurpose racks with LinQ quick-attach accessory system
- 5.7-gal (21.4 L) water-resistant rear compartment
- 625-W magneto

Orange / 650

ENGINE	650
Type	62 hp, Rotax 649.6 cc V-twin, liquid cooled
Fuel Delivery System	Electronic Fuel Injection (EFI)
Transmission	CVT, P / R / N / H / L, standard engine braking
Drive Train	Selectable 2WD / 4WD with Visco-Lok‡ QE auto-locking front differential
Power Steering	Tri-Mode Dynamic Power Steering (DPS)

SUSPENSIONS	
Front Suspension	Arched double A-arm with front sway bar 9.2 in. (23.3 cm) travel
Front Shocks	Oil
Rear Suspension	Torsional Trailing arm Independent (TTI) 9.9 in. (25.1 cm) travel
Rear Shocks	Oil

BRAKES	
Front	Dual 214 mm ventilated disc brakes with hydraulic twin-piston calipers
Rear	Single 214 mm ventilated disc brake with hydraulic twin-piston caliper

TIRES / WHEELS	
Front Tires	ITP† Terracross 26 x 8 x 14 in. (66 x 20.3 x 35.6 cm)
Rear Tires	ITP Terracross 26 x 10 x 14 in. (66 x 25.4 x 35.6 cm)
Wheels	14-in. cast-aluminum

DIMENSIONS / CAPACITIES	
L x W x H	94 x 48 x 53 in. (238.8 x 121.9 x 135 cm)
Wheelbase	59 in. (149.9 cm)
Ground Clearance	11 in. (27.9 cm)
Seat Height	34.5 in. (87.7 cm)
Engine / Dry Weight*	827 lb (375 kg)
Rack Capacity	Front: 100 lb (45 kg) Rear: 200 lb (90 kg)
Storage Capacity	Rear: 5.7 gal (21.4 L)
Towing Capacity	1,650 lb (750 kg)
Fuel Capacity	5.4 gal (20.5 L)

FEATURES

Gauge	Multifunction digital: Speedometer, tachometer (bar graph RPM, bottom bar numerical RPM), odometer, trip & hour meters, diagnostic center, gear position, engine hour meter, 4 x 4 indicator, temperature and engine lights, fuel gauge, clock	Instrumentation	Lighter type DC outlet in console, standard connector in the back (15-A)
		Lighting	230 W from twin 60-W projectors and dual 55-W reflectors with tail light / brake light
		Seat	Convertible Rack System (CRS)
Winch	Prewired for available winch	Anti-theft System	RF Digitally Encoded Security System (D.E.S.S.™)
Protection	Mudguards		

WARRANTY

Factory	6-months limited warranty
Extended	Up to 36 months B.E.S.T. coverage

BEST PROTECTION ©2019 Bombardier Recreational Products Inc (BRP). All rights reserved. ™, ® and the BRP logo are registered trademarks of BRP or its affiliates. Products are distributed in the U.S.A. by BRP US Inc. *Base model dry weight shown. ‡Visco-Lok is a trademark of GKN Viscodrive GmbH. †All other trademarks are the property of their respective owners. Because of our ongoing commitment to product quality and innovation, BRP reserves the right at anytime to discontinue or change specifications, price, design, features, models or equipment without incurring any obligation. Ride responsibly. BRP highly recommends that all ATV drivers take a training course. For safety and training information, see your dealer or, in U.S.A. call the ATV Safety Institute at 1 (800) 887-2887. In Canada, call the Canadian Safety Council at 1 (613) 739-1535 ext 227. ATVs can be hazardous to operate. For your safety: the operator and passenger should wear a helmet, eye protection and other protective clothing. Always remember that riding and alcohol / drugs don't mix. Never ride on paved surfaces or public roads. Never engage in stunt driving. Avoid excessive speeds and be particularly careful on difficult terrain. ATVs with engine sizes of greater than 90cc are recommended for use only by those age 16 and older. Never carry passengers on any ATV not specifically designated for such use.

can-am BRP

Can-AmOffroad.com

2020 OUTLANDER™ MAX XT™

HIGHLIGHTS

- Rotax® V-twin engine options
- New arched double A-arm front suspension with front sway bar
- Continuously Variable Transmission (CVT) with engine braking
- Tri-Mode Dynamic Power Steering (DPS™)
- 3,000-lb (1,361 kg) WARN† winch with roller fairlead
- 14-in. cast-aluminum wheels
- 26-in. ITP† Terracross radial tires
- Painted plastics for premium look
- Handlebar wind deflectors
- Heavy-duty front & rear bumpers
- Convertible Rack System (CRS) with LinQ™ system
- Dynamic passenger comfort ergonomics
- 5.7-gal (21.4 L) water-resistant rear compartment
- 625-W magneto
- Multiposition passenger handgrips
- Raised floorboards

Iron Gray & Octane Blue / 650 / 850 / 1000R
Black & Can-Am Red / 650 / 850 / 1000R
Mossy Oak† Break-Up Country Camo† / 650 / 850

ENGINES	650	850	1000R
Type	62 hp, Rotax 649.6 cc V-twin, liquid cooled	78 hp, Rotax 854 cc V-twin, liquid cooled	91 hp, Rotax 976 cc V-twin, liquid cooled
Fuel Delivery System	Electronic Fuel Injection (EFI)	Intelligent Throttle Control (iTC™) with Electronic Fuel Injection (EFI)	
Transmission	CVT, P / R / N / H / L, standard engine braking		
Drive Train	Selectable 2WD / 4WD with Visco-Lok‡ QE auto-locking front differential		
Power Steering	Tri-Mode Dynamic Power Steering (DPS)		

SUSPENSIONS	
Front Suspension	Arched double A-arm with front sway bar 9.2 in. (23.3 cm) travel
Front Shocks	Oil
Rear Suspension	Torsional Trailing arm Independent (TTI) 9.9 in. (25.1 cm) travel
Rear Shocks	Oil

BRAKES	
Front	Dual 214 mm ventilated disc brakes with hydraulic twin-piston calipers
Rear	Single 214 mm ventilated disc brake with hydraulic twin-piston caliper

TIRES / WHEELS	
Front Tires	ITP Terracross 26 x 8 x 14 in. (66 x 20.3 x 35.6 cm)
Rear Tires	ITP Terracross 26 x 10 x 14 in. (66 x 25.4 x 35.6 cm)
Wheels	14-in. cast-aluminum

DIMENSIONS / CAPACITIES	
L x W x H	94 x 48 x 53 in. (238.8 x 121.9 x 135 cm)
Wheelbase	59 in. (149.9 cm)
Ground Clearance	11 in. (27.9 cm)
Seat Height	34.5 in. (87.7 cm)
Engine / Dry Weight*	650: 827 lb (375 kg) 850: 874 (396 kg) 1000R: 900 lb (408 kg)
Rack Capacity	Front: 100 lb (45 kg) Rear: 200 lb (90 kg)
Storage Capacity	Rear: 5.7 gal (21.4 L)
Towing Capacity	1,650 lb (750 kg)
Fuel Capacity	5.4 gal (20.5 L)

FEATURES

Gauge	Multifunction digital: Speedometer, tachometer (bar graph RPM, bottom bar numerical RPM), odometer, trip & hour meters, diagnostic center, gear position, engine hour meter, 4 x 4 indicator, temperature and engine lights, fuel gauge, clock	4.5-in. digital display: Speedometer, tachometer, odometer, trip & hour meters, gear position, 4 x 4 indicator, temperature, engine lights, electronic fuel gauge & clock	Instrumentation	Lighter type DC outlet in console, standard connector in the back (15-A)
			Lighting	230 W from twin 60-W projectors and dual 55-W reflectors with tail light / brake light
			Seat	Convertible Rack System (CRS)
Winch	3,000-lb (1,361 kg) WARN winch with roller fairlead		Anti-theft System	RF Digitally Encoded Security System (D.E.S.S.™)
Protection	Heavy-duty front & rear bumpers, handlebar wind deflectors, mudguards			

WARRANTY

Factory	6-months limited warranty
Extended	Up to 36 months B.E.S.T. coverage

BEST PROTECTION

©2019 Bombardier Recreational Products Inc (BRP). All rights reserved. ™, ® and the BRP logo are registered trademarks of BRP or its affiliates. Products are distributed in the U.S.A. by BRP US Inc. *Base model dry weight shown. ‡Visco-Lok is a trademark of GKN Viscodrive GmbH. †All other trademarks are the property of their respective owners. Because of our ongoing commitment to product quality and innovation, BRP reserves the right at anytime to discontinue or change specifications, price, design, features, models or equipment without incurring any obligation. Ride responsibly. BRP highly recommends that all ATV drivers take a training course. For safety and training information, see your dealer or, in U.S.A. call the ATV Safety Institute at 1 (800) 887-2887. In Canada, call the Canadian Safety Council at 1 (613) 739-1535 ext 227. ATVs can be hazardous to operate. For your safety: the operator and passenger should wear a helmet, eye protection and other protective clothing. Always remember that riding and alcohol / drugs don't mix. Never ride on paved surfaces or public roads. Never engage in stunt driving. Avoid excessive speeds and be particularly careful on difficult terrain. ATVs with engine sizes of greater than 90cc are recommended for use only by those age 16 and older. Never carry passengers on any ATV not specifically designated for such use.

can-am

Can-AmOffroad.com

BRP

2020 OUTLANDER™ MAX NORTH EDITION

HIGHLIGHTS

- Rotax® V-twin engine
- New arched double A-arm front suspension with front sway bar
- Continuously Variable Transmission (CVT) with engine braking & Extra-Low L Gear
- Tri-Mode Dynamic Power Steering (DPS™)
- 3,000-lb (1,361 kg) WARN† winch with roller fairlead
- 14-in. cast-aluminum wheels
- 26-in. ITP† Terracross radial tires
- Heated grips and visor outlet for driver & passenger
- Windshield
- Surrounding Spar Technology (SST) G2 frame with Geometric Contact Control
- Torsional Trailing arm Independent (TTI) rear suspension
- 5.7-gal (21.4 L) water-resistant rear compartment
- 625-W magneto
- High-strength, multifunction racks with LinQ™ quick-attach accessory system
- Mudguards

White / 850

ENGINES	850
Type	78 hp, Rotax 854 cc V-twin, liquid cooled
Fuel Delivery System	Intelligent Throttle Control (iTC™) with Electronic Fuel Injection (EFI)
Transmission	CVT, P / R / N / H / Extra-Low L, standard engine braking
Drive Train	Selectable 2WD / 4WD with Visco-Lok‡ QE auto-locking front differential
Power Steering	Tri-Mode Dynamic Power Steering (DPS)

SUSPENSIONS	
Front Suspension	Arched double A-arm with front sway bar 9.2 in. (23.3 cm) travel
Front Shocks	Oil
Rear Suspension	Torsional Trailing arm Independent (TTI) 9.9 in. (25.1 cm) travel
Rear Shocks	Oil

BRAKES	
Front	Dual 214 mm ventilated disc brakes with hydraulic twin-piston calipers
Rear	Single 214 mm ventilated disc brake with hydraulic twin-piston caliper

TIRES / WHEELS	
Front Tires	ITP Terracross 26 x 8 x 14 in. (66 x 20.3 x 35.6 cm)
Rear Tires	ITP Terracross 26 x 10 x 14 in. (66 x 25.4 x 35.6 cm)
Wheels	14-in. cast-aluminum

DIMENSIONS / CAPACITIES	
L x W x H	94 x 48 x 61.4 in. (238.8 x 121.9 x 156 cm)
Wheelbase	59 in. (149.9 cm)
Ground Clearance	11 in. (27.9 cm)
Seat Height	34.5 in. (87.7 cm)
Dry Weight*	850: 874 lb (396 kg)
Rack Capacity	Front: 100 lb (45 kg) Rear: 200 lb (90 kg)
Storage Capacity	Rear: 5.7 gal (21.4 L)
Towing Capacity	1,650 lb (750 kg)
Fuel Capacity	5.4 gal (20.5 L)

FEATURES

Gauge	4.5-in. digital display: Speedometer, tachometer, odometer, trip & hour meters, gear position, 4 x 4 indicator, temperature, engine lights, electronic fuel gauge & clock
Winch	3,000-lb (1,361 kg) WARN winch with roller fairlead
Protection	Windshield, mudguards, heated grips and visor outlet for driver & passenger
Instrumentation	Lighter type DC outlet in console, standard connector in the back (15-A)
Lighting	230 W from twin 60-W projectors and dual 55-W reflectors with tail light / brake light
Seat	Convertible Rack System (CRS)
Anti-theft System	RF Digitally Encoded Security System (D.E.S.S.™)

WARRANTY

Factory	6-months limited warranty
Extended	Up to 36 months B.E.S.T. coverage

©2019 Bombardier Recreational Products Inc (BRP). All rights reserved. ™, ® and the BRP logo are registered trademarks of BRP or its affiliates. Products are distributed in the U.S.A. by BRP US Inc. *Base model dry weight shown. ‡Visco-Lok is a trademark of GKN Viscodrive GmbH. †All other trademarks are the property of their respective owners. Because of our ongoing commitment to product quality and innovation, BRP reserves the right at anytime to discontinue or change specifications, price, design, features, models or equipment without incurring any obligation. Ride responsibly. BRP highly recommends that all ATV drivers take a training course. For safety and training information, see your dealer or, in U.S.A. call the ATV Safety Institute at 1 (800) 887-2887. In Canada, call the Canadian Safety Council at 1 (613) 739-1535 ext 227. ATVs can be hazardous to operate. For your safety: the operator and passenger should wear a helmet, eye protection and other protective clothing. Always remember that riding and alcohol / drugs don't mix. Never ride on paved surfaces or public roads. Never engage in stunt driving. Avoid excessive speeds and be particularly careful on difficult terrain. ATVs with engine sizes of greater than 90cc are recommended for use only by those age 16 and older. Never carry passengers on any ATV not specifically designated for such use.

Can-AmOffroad.com

2020 OUTLANDER™ MAX XT-P

PACKAGE HIGHLIGHTS

- Rotax® V-twin engine options
- Front and rear FOX† 1.5 PODIUM† QS3 shocks
- Intelligent Throttle Control (iTC™) with riding modes
- Continuously Variable Transmission (CVT) with engine braking
- Tri-Mode Dynamic Power Steering (DPS™)
- 3,000-lb (1,361 kg) WARN† winch with roller fairlead
- 14-in. cast-aluminum beadlock wheels
- 26-in. ITP† Terracross radial tires
- Painted plastics for premium look
- Aluminum taper-profile handlebar with handguards
- Heavy-duty front and rear bumpers
- Multifunction digital gauge
- Convertible Rack System (CRS) with LinQ™ system
- Dynamic passenger comfort ergonomics
- Multiposition passenger handgrips

Carbon Black & Sunburst Yellow / 850 / 1000R

ENGINES	850	1000R
Type	78 hp, Rotax 854 cc V-twin, liquid cooled	91 hp, Rotax 976 cc V-twin, liquid cooled
Fuel Delivery System	Intelligent Throttle Control (iTC) with Electronic Fuel Injection (EFI)	
Transmission	CVT, P / R / N / H / L, standard engine braking	
Drive Train	Selectable 2WD / 4WD with Visco-Lok‡ QE auto-locking front differential	
Power Steering	Tri-Mode Dynamic Power Steering (DPS)	

SUSPENSIONS

Front Suspension	Arched double A-arm with front sway bar 9.2 in. (23.3 cm) travel
Front Shocks	FOX 1.5 PODIUM QS3
Rear Suspension	Torsional Trailing arm Independent (TTI) 9.9 in. (25.1 cm) travel
Rear Shocks	FOX 1.5 PODIUM QS3

BRAKES

Front	Dual 214 mm ventilated disc brakes with hydraulic twin-piston calipers
Rear	Single 214 mm ventilated disc brake with hydraulic twin-piston caliper

TIRES / WHEELS

Front Tires	ITP Terracross 26 x 8 x 14 in. (66 x 20.3 x 35.6 cm)
Rear Tires	ITP Terracross 26 x 10 x 14 in. (66 x 25.4 x 35.6 cm)
Wheels	14-in. cast-aluminum beadlock

DIMENSIONS / CAPACITIES

L x W x H	94 x 48 x 53 in. (238.8 x 121.9 x 135 cm)
Wheelbase	59 in. (149.9 cm)
Ground Clearance	11 in. (27.9 cm)
Seat Height	34.5 in. (87.7 cm)
Engine / Dry Weight*	850: 874 lb (396 kg) 1000R: 900 lb (408 kg)
Rack Capacity	Front: 100 lb (45 kg) Rear: 200 lb (90 kg)
Storage Capacity	Rear: 5.7 gal (21.4 L)
Towing Capacity	1,650 lb (750 kg)

FEATURES

Gauge	7.6-in. wide digital display: Speedometer, tachometer, odometer, trip & hour meters, gear position, 4 x 4 indicator, temperature, engine lights, fuel gauge, clock
Winch	3,000-lb (1,361 kg) WARN winch with roller fairlead
Protection	Heavy-duty front & rear bumpers, aluminum taper-profile handlebar with full wrap handguards, mudguards
Instrumentation	Lighter type DC outlet in console, standard connector in the back (15-A)
Lighting	230 W from twin 60-W projectors and dual 55-W reflectors with tail light / brake light
Seat	Convertible Rack System (CRS)
Anti-theft System	RF Digitally Encoded Security System (D.E.S.S.™)

WARRANTY

Factory	6-months limited warranty
Extended	Up to 36 months B.E.S.T. coverage

BEST PROTECTION ©2019 Bombardier Recreational Products Inc (BRP). All rights reserved. ™, ® and the BRP logo are registered trademarks of BRP or its affiliates. Products are distributed in the U.S.A. by BRP US Inc. *Base model dry weight shown. ‡Visco-Lok is a trademark of GKN Viscodrive GmbH. †All other trademarks are the property of their respective owners. Because of our ongoing commitment to product quality and innovation, BRP reserves the right at anytime to discontinue or change specifications, price, design, features, models or equipment without incurring any obligation. Ride responsibly. BRP highly recommends that all ATV drivers take a training course. For safety and training information, see your dealer or, in U.S.A. call the ATV Safety Institute at 1 (800) 887-2887. In Canada, call the Canadian Safety Council at 1 (613) 739-1535 ext 227. ATVs can be hazardous to operate. For your safety: the operator and passenger should wear a helmet, eye protection and other protective clothing. Always remember that riding and alcohol / drugs don't mix. Never ride on paved surfaces or public roads. Never engage in stunt driving. Avoid excessive speeds and be particularly careful on difficult terrain. ATVs with engine sizes of greater than 90cc are recommended for use only by those age 16 and older. Never carry passengers on any ATV not specifically designated for such use.

can-am BRP

Can-AmOffroad.com

2020 OUTLANDER™ MAX LIMITED

HIGHLIGHTS

- Rotax® V-twin engine
- Intelligent Throttle Control (iTC™) with riding modes
- Front and rear FOX† 1.5 PODIUM† QS3 shocks
- Continuously Variable Transmission (CVT) with engine braking
- Tri-Mode Dynamic Power Steering (DPS™)
- Garmin† Montana† 650t touchscreen GPS
- 3,000-lb (1,361 kg) WARN† winch with roller fairlead
- Heavy-duty front and rear bumpers
- 14-in. cast-aluminum wheels
- 27-in. Maxxis Bighorn 2.0† tires
- Painted plastics for premium look
- Handlebar wind deflectors
- Multifunction digital gauge
- Mudguards
- Comfort grips

Boreal Green / 1000R

ENGINE	1000R
Type	91 hp, Rotax 976 cc V-twin, liquid cooled
Fuel Delivery System	Intelligent Throttle Control (iTC) with Electronic Fuel Injection (EFI)
Transmission	CVT, P / R / N / H / L, standard engine braking
Drive Train	Selectable 2WD / 4WD with Visco-Lok‡ QE auto-locking front differential
Power Steering	Tri-Mode Dynamic Power Steering (DPS)

SUSPENSIONS	
Front Suspension	Arched double A-arm with front sway bar 9.2 in. (23.3 cm) travel
Front Shocks	FOX 1.5 PODIUM QS3
Rear Suspension	Torsional Trailing arm Independent (TTI) 9.9 in. (25.1 cm) travel
Rear Shocks	FOX 1.5 PODIUM QS3

BRAKES	
Front	Dual 214 mm ventilated disc brakes with hydraulic twin-piston calipers
Rear	Single 214 mm ventilated disc brake with hydraulic twin-piston caliper

TIRES / WHEELS	
Front Tires	Maxxis Bighorn 2.0 27 x 9 x 14 in. (68.6 x 22.9 x 35.6 cm)
Rear Tires	Maxxis Bighorn 2.0 27 x 11 x 14 in. (68.6 x 27.9 x 35.6 cm)
Wheels	14-in. cast-aluminum

DIMENSIONS / CAPACITIES	
L x W x H	94 x 48 x 53 in. (238.8 x 121.9 x 135 cm)
Wheelbase	59 in. (149.9 cm)
Ground Clearance	11 in. (27.9 cm)
Seat Height	34.5 in. (87.7 cm)
Dry Weight*	900 lb (408 kg)
Rack Capacity	Front: 100 lb (45 kg) Rear: 200 lb (90 kg)
Storage Capacity	Rear: 5.7 gal (21.4 L)
Towing Capacity	1,650 lb (750 kg)
Fuel Capacity	5.4 gal (20.5 L)

FEATURES

Gauge	7.6-in wide digital display : Speedometer, tachometer, odometer, trips & hour meters, gear position, 4 x 4 indicator, temperature, engine lights, fuel gauge, clock	Instrumentation	Integrated / removable Garmin Montana 650t touchscreen GPS, Lighter type DC outlet in console, standard connector in the back (15-A)
		Lighting	230 W from twin 60-W projectors and dual 55-W reflectors with tail light / brake light
Winch	3,000-lb (1,361 kg) WARN winch with roller fairlead	Seat	Convertible Rack System (CRS)
Protection	Heavy-duty front & rear bumpers, handlebar wind deflectors, mudguards	Anti-theft System	RF Digitally Encoded Security System (D.E.S.S.™)

WARRANTY

Factory	6-months limited warranty
Extended	Up to 36 months B.E.S.T. coverage

BEST PROTECTION ©2019 Bombardier Recreational Products Inc (BRP). All rights reserved. ™, ® and the BRP logo are registered trademarks of BRP or its affiliates. Products are distributed in the U.S.A. by BRP US Inc. *Base model dry weight shown. ‡Visco-Lok is a trademark of GKN Viscodrive GmbH. †All other trademarks are the property of their respective owners. Because of our ongoing commitment to product quality and innovation, BRP reserves the right at anytime to discontinue or change specifications, price, design, features, models or equipment without incurring any obligation. Ride responsibly. BRP highly recommends that all ATV drivers take a training course. For safety and training information, see your dealer or, in U.S.A. call the ATV Safety Institute at 1 (800) 887-2887. In Canada, call the Canadian Safety Council at 1 (613) 739-1535 ext 227. ATVs can be hazardous to operate. For your safety: the operator and passenger should wear a helmet, eye protection and other protective clothing. Always remember that riding and alcohol / drugs don't mix. Never ride on paved surfaces or public roads. Never engage in stunt driving. Avoid excessive speeds and be particularly careful on difficult terrain. ATVs with engine sizes of greater than 90cc are recommended for use only by those age 16 and older. Never carry passengers on any ATV not specifically designated for such use.

can-am BRP

Can-AmOffroad.com

2020 OUTLANDER™ X™ mr 570

HIGHLIGHTS

- Rotax® V-twin engine
- 28-in. ITP† Mega Mayhem† tires
- 12-in. cast-aluminum wheels
- Tri-Mode Dynamic Power Steering (DPS™)
- Visco-Lok‡ QE auto-locking front differential
- Relocated radiator
- Heavy-duty front bumper
- Mud-riding footrests
- Surrounding Spar Technology (SST) G2L frame with Geometric Contact Control
- Double A-arm front suspension with dive-control geometry
- Torsional Trailing arm Independent (TTI) rear suspension
- 500-W magneto
- X-package coloration, graphics and seat cover

Granite Gray, Black & Manta Green / 570

ENGINE	570
Type	48 hp, Rotax 570 cc V-twin, snorkeled, liquid cooled with relocated radiator
Fuel Delivery System	Electronic Fuel Injection (EFI)
Transmission	CVT, P / R / N / H / L, standard engine braking
Drive Train	Selectable 2WD / 4WD with Visco-Lok QE auto-locking front differential
Power Steering	Tri-Mode Dynamic Power Steering (DPS)

TIRES / WHEELS	
Front Tires	ITP Mega Mayhem 28 x 8 x 12 in. (71.1 x 20.3 x 30.5 cm)
Rear Tires	ITP Mega Mayhem 28 x 10 x 12 in. (71.1 x 25.4 x 30.5 cm)
Wheels	12-in. cast-aluminum

SUSPENSIONS	
Front Suspension	Double A-arm
Front Shocks	Oil
Rear Suspension	Torsional Trailing arm Independent (TTI)
Rear Shocks	Oil

BRAKES	
Front	Dual 214 mm ventilated disc brakes with hydraulic twin-piston calipers
Rear	Single 214 mm ventilated disc brake with hydraulic twin-piston caliper

DIMENSIONS / CAPACITIES	
L x W x H	83 x 46 x 49 in. (211 x 116.8 x 124 cm)
Wheelbase	51 in. (129.5 cm)
Ground Clearance	11.7 in. (29.7 cm)
Seat Height	33.8 in. (85.8 cm)
Dry Weight*	843 lb (382 kg)
Rack Capacity	Rear: 240 lb (109 kg)
Storage Capacity	Rear: 2.9 gal (10.9 L)
Towing Capacity	1,300 lb (590 kg)
Fuel Capacity	5.4 gal (20.5 L)

FEATURES

Gauge	Multifunction digital: Speedometer, tachometer, odometer, trip & hour meters, fuel, gear position, 4 x 4 indicator, diagnostics, clock
Winch	Prewired for available winch
Protection	Heavy-duty front bumper, mud-riding footrests
Instrumentation	Lighter type DC outlet in console, standard connector in the back (15-A)
Lighting	70 W from dual 35-W front light / brake light
Seat	Standard
Anti-theft System	N/A

WARRANTY

Factory	6-months limited warranty
Extended	Up to 36 months B.E.S.T. coverage

BEST PROTECTION ©2019 Bombardier Recreational Products Inc (BRP). All rights reserved. ™, ® and the BRP logo are registered trademarks of BRP or its affiliates. Products are distributed in the U.S.A. by BRP US Inc. *Base model dry weight shown. ‡Visco-Lok is a trademark of GKN Viscodrive GmbH. †All other trademarks are the property of their respective owners. Because of our ongoing commitment to product quality and innovation, BRP reserves the right at anytime to discontinue or change specifications, price, design, features, models or equipment without incurring any obligation. Ride responsibly. BRP highly recommends that all ATV drivers take a training course. For safety and training information, see your dealer or, in U.S.A. call the ATV Safety Institute at 1 (800) 887-2887. In Canada, call the Canadian Safety Council at 1 (613) 739-1535 ext 227. ATVs can be hazardous to operate. For your safety: the operator and passenger should wear a helmet, eye protection and other protective clothing. Always remember that riding and alcohol / drugs don't mix. Never ride on paved surfaces or public roads. Never engage in stunt driving. Avoid excessive speeds and be particularly careful on difficult terrain. ATVs with engine sizes of greater than 90cc are recommended for use only by those age 16 and older. Never carry passengers on any ATV not specifically designated for such use.

can-am

Can-AmOffroad.com

2020 OUTLANDER™ X™ mr 650

HIGHLIGHTS

- Rotax® V-twin engine
- New arched double A-arm front suspension with front sway bar
- 28-in. ITP† Mega Mayhem† tires
- 12-in. cast-aluminum wheels
- Tri-Mode Dynamic Power Steering (DPS™)
- Visco-Lok‡ QE auto-locking front differential
- Relocated radiator
- Heavy-duty front bumper
- Mud-riding footrests
- Surrounding Spar Technology (SST) G2 frame with Geometric Contact Control
- Torsional Trailing arm Independent (TTI) rear suspension
- 625-W magneto
- X-package coloration, graphics and seat cover
- Mudguards

Granite Gray, Black & Manta Green / 650

ENGINE	650
Type	62 hp, Rotax 649.6 cc V-twin, snorkeled, liquid cooled with relocated radiator
Fuel Delivery System	Electronic Fuel Injection (EFI)
Transmission	CVT, P / R / N / H / L, standard engine braking
Drive Train	Selectable 2WD / 4WD with Visco-Lok QE auto-locking front differential
Power Steering	Tri-Mode Dynamic Power Steering (DPS)

TIRES / WHEELS	
Front Tires	ITP Mega Mayhem 28 x 8 x 12 in. (71.1 x 20.3 x 30.5 cm)
Rear Tires	ITP Mega Mayhem 28 x 10 x 12 in. (71.1 x 25.4 x 30.5 cm)
Wheels	12-in. cast-aluminum

SUSPENSIONS	
Front Suspension	Arched double A-arm with front sway bar
Front Shocks	Oil
Rear Suspension	Torsional Trailing arm Independent (TTI)
Rear Shocks	Oil

BRAKES	
Front	Dual 214 mm ventilated disc brakes with hydraulic twin-piston calipers
Rear	Single 214 mm ventilated disc brake with hydraulic twin-piston caliper

DIMENSIONS / CAPACITIES	
L x W x H	88 x 48.5 x 50.5 in. (224 x 123 x 128 cm)
Wheelbase	51 in. (129.5 cm)
Ground Clearance	11.75 in. (29.9 cm)
Seat Height	35.25 in. (89.5 cm)
Dry Weight*	874 lb (396 kg)
Rack Capacity	Rear: 200 lb (90 kg)
Storage Capacity	Rear: 5.7 gal (21.4 L)
Towing Capacity	1,650 lb (750 kg)
Fuel Capacity	5.4 gal (20.5 L)

FEATURES

Gauge	Multifunction digital: Speedometer, tachometer (bar graph RPM, bottom bar numerical RPM), odometer, trip & hour meters, diagnostic center, gear position, engine hour meter, 4 x 4 indicator, temperature and engine lights, fuel gauge, clock
Winch	Prewired for available winch
Protection	Heavy-duty front bumper, mud-riding footrests, mudguards
Instrumentation	Lighter type DC outlet in console, standard connector in the back (15-A)
Lighting	230 W from twin 60-W projectors and dual 55-W reflectors with tail light / brake light
Seat	Standard
Anti-theft System	RF Digitally Encoded Security System (D.E.S.S.™)

WARRANTY

Factory	6-months limited warranty
Extended	Up to 36 months B.E.S.T. coverage

©2019 Bombardier Recreational Products Inc (BRP). All rights reserved. ™, ® and the BRP logo are registered trademarks of BRP or its affiliates. Products are distributed in the U.S.A. by BRP US Inc. *Base model dry weight shown. ‡Visco-Lok is a trademark of GKN Viscodrive GmbH. †All other trademarks are the property of their respective owners. Because of our ongoing commitment to product quality and innovation, BRP reserves the right at anytime to discontinue or change specifications, price, design, features, models or equipment without incurring any obligation. Ride responsibly. BRP highly recommends that all ATV drivers take a training course. For safety and training information, see your dealer or, in U.S.A. call the ATV Safety Institute at 1 (800) 887-2887. In Canada, call the Canadian Safety Council at 1 (613) 739-1535 ext 227. ATVs can be hazardous to operate. For your safety: the operator and passenger should wear a helmet, eye protection and other protective clothing. Always remember that riding and alcohol / drugs don't mix. Never ride on paved surfaces or public roads. Never engage in stunt driving. Avoid excessive speeds and be particularly careful on difficult terrain. ATVs with engine sizes of greater than 90cc are recommended for use only by those age 16 and older. Never carry passengers on any ATV not specifically designated for such use.

Can-AmOffroad.com

2020 OUTLANDER™ X™ mr 850

HIGHLIGHTS

- Rotax® V-twin engine
- New arched double A-arm front suspension with front sway bar
- 30-in. ITP† Cryptid† tires
- 14-in. cast-aluminum wheels
- Tri-Mode Dynamic Power Steering (DPS™)
- Front and rear FOX† 1.5 PODIUM† shocks
- Intelligent Throttle Control (iTC™) with riding modes
- Visco-Lok‡ QE auto-locking front differential
- Relocated radiator
- 3,000-lb (1,361 kg) WARN† winch with roller fairlead
- Heavy-duty front & rear bumpers
- Mud-riding footrests
- Surrounding Spar Technology (SST) G2 frame with Geometric Contact Control
- Torsional Trailing arm Independent (TTI) rear suspension
- 625-W magneto
- X-package coloration, graphics and seat cover
- Mudguards

Granite Gray, Black & Manta Green / 850

ENGINE	850
Type	78 hp, Rotax 854 cc V-twin, snorkeled, liquid cooled with relocated radiator
Fuel Delivery System	Intelligent Throttle Control (iTC) with Electronic Fuel Injection (EFI)
Transmission	CVT, P / R / N / H / L, standard engine braking
Drive Train	Selectable 2WD / 4WD with Visco-Lok QE auto-locking front differential
Power Steering	Tri-Mode Dynamic Power Steering (DPS)

TIRES / WHEELS	
Front Tires	ITP Cryptid 30 x 9 x 14 in. (76.6 x 22.9 x 35.6 cm)
Rear Tires	ITP Cryptid 30 x 9 x 14 in. (76.6 x 22.9 x 35.6 cm)
Wheels	14-in. cast-aluminum

SUSPENSIONS	
Front Suspension	Arched double A-arm with front sway bar
Front Shocks	FOX 1.5 PODIUM
Rear Suspension	Torsional Trailing arm Independent (TTI)
Rear Shocks	FOX 1.5 PODIUM

BRAKES	
Front	Dual 214 mm ventilated disc brakes with hydraulic twin-piston calipers
Rear	Single 214 mm ventilated disc brake with hydraulic twin-piston caliper

DIMENSIONS / CAPACITIES	
L x W x H	88 x 50 x 51.5 in. (224 x 127 x 131 cm)
Wheelbase	51 in. (129.5 cm)
Ground Clearance	13 in. (33 cm)
Seat Height	36.75 in. (93.3 cm)
Dry Weight*	990 lb (450 kg)
Rack Capacity	Rear: 200 lb (90 kg)
Storage Capacity	Rear: 5.7 gal (21.4 L)
Towing Capacity	1,650 lb (750 kg)
Fuel Capacity	5.4 gal (20.5 L)

FEATURES

Gauge	7.6-in wide digital display : Speedometer, tachometer, odometer, trips & hour meters, gear position, 4 x 4 indicator, temperature, engine lights, fuel gauge, clock
Winch	3,000-lb (1,361 kg) WARN winch with roller fairlead
Protection	Heavy-duty front and rear bumpers, mud-riding footrests, mudguards
Instrumentation	Lighter type DC outlet in console, standard connector in the back (15-A)
Lighting	230 W from twin 60-W projectors and dual 55-W reflectors with tail light / brake light
Seat	Standard
Anti-theft System	RF Digitally Encoded Security System (D.E.S.S.™)

WARRANTY

Factory	6-months limited warranty
Extended	Up to 36 months B.E.S.T. coverage

BEST PROTECTION ©2019 Bombardier Recreational Products Inc (BRP). All rights reserved. ™, ® and the BRP logo are registered trademarks of BRP or its affiliates. Products are distributed in the U.S.A. by BRP US Inc. *Base model dry weight shown. ‡Visco-Lok is a trademark of GKN Viscodrive GmbH. †All other trademarks are the property of their respective owners. Because of our ongoing commitment to product quality and innovation, BRP reserves the right at anytime to discontinue or change specifications, price, design, features, models or equipment without incurring any obligation. Ride responsibly. BRP highly recommends that all ATV drivers take a training course. For safety and training information, see your dealer or, in U.S.A. call the ATV Safety Institute at 1 (800) 887-2887. In Canada, call the Canadian Safety Council at 1 (613) 739-1535 ext 227. ATVs can be hazardous to operate. For your safety: the operator and passenger should wear a helmet, eye protection and other protective clothing. Always remember that riding and alcohol / drugs don't mix. Never ride on paved surfaces or public roads. Never engage in stunt driving. Avoid excessive speeds and be particularly careful on difficult terrain. ATVs with engine sizes of greater than 90cc are recommended for use only by those age 16 and older. Never carry passengers on any ATV not specifically designated for such use.

can-am BRP

Can-AmOffroad.com

2020 OUTLANDER™ X™ mr 1000R

HIGHLIGHTS

- Rotax® V-twin engine
- New arched double A-arm front suspension with front sway bar
- Torsional Trailing arm Independent (TTI) rear suspension
- Front and rear FOX† 1.5 PODIUM† shocks
- Intelligent Throttle Control (iTC™) with riding modes
- 30-in. ITP† Cryptid† tires
- 14-in. cast-aluminum wheels
- Tri-Mode Dynamic Power Steering (DPS™)
- Visco-Lok‡ QE auto-locking front differential
- Relocated radiator
- 3,000-lb (1,361 kg) WARN† winch with roller fairlead
- Heavy-duty front and rear bumpers
- Mud-riding footrests
- 59-in. wheelbase
- Multifunction digital gauge
- X-package coloration, graphics and seat cover
- Mudguards

Granite Gray, Black & Manta Green / 1000R
Black & Platinum Silver / 1000R

ENGINE	1000R
Type	91 hp, Rotax 976 cc V-twin, snorkeled, liquid cooled with relocated radiator
Fuel Delivery System	Intelligent Throttle Control (iTC) with Electronic Fuel Injection (EFI)
Transmission	CVT, P / R / N / H / Extra Low L, standard engine braking
Drive Train	Selectable 2WD / 4WD with Visco-Lok QE auto-locking front differential
Power Steering	Tri-Mode Dynamic Power Steering (DPS)

TIRES / WHEELS	
Front Tires	ITP Cryptid 30 x 9 x 14 in. (76.6 x 22.9 x 35.6 cm)
Rear Tires	ITP Cryptid 30 x 9 x 14 in. (76.6 x 22.9 x 35.6 cm)
Wheels	14-in. cast-aluminum

SUSPENSIONS	
Front Suspension	Arched double A-arm with front sway bar
Front Shocks	FOX 1.5 PODIUM
Rear Suspension	Torsional Trailing arm Independent (TTI)
Rear Shocks	FOX 1.5 PODIUM

BRAKES	
Front	Dual 214 mm ventilated disc brakes with hydraulic twin-piston calipers
Rear	Single 214 mm ventilated disc brake with hydraulic twin-piston caliper

DIMENSIONS / CAPACITIES	
L x W x H	97 x 50 x 51.5 in. (246 x 127 x 131 cm)
Wheelbase	59 in. (149.9 cm)
Ground Clearance	13 in. (33 cm)
Seat Height	36.75 in. (93.3 cm)
Dry Weight*	1014 lb (460 kg)
Rack Capacity	Rear: 200 lb (90 kg)
Storage Capacity	Rear: 5.7 gal (21.4 L)
Towing Capacity	1,650 lb (750 kg)
Fuel Capacity	5.4 gal (20.5 L)

FEATURES

Gauge	7.6-in wide digital display : Speedometer, tacometer, odometer, trips & hour meters, gear position, 4 x 4 indicator, temperature, engine lights, fuel gauge, clock
Winch	3,000-lb (1,361 kg) WARN winch with roller fairlead
Protection	Heavy-duty front & rear bumpers, mud-riding footrests, mudguards
Instrumentation	Lighter type DC outlet in console, standard connector in the back (15-A)
Lighting	230 W from twin 60-W projectors and dual 55-W reflectors with tail light / brake light
Seat	Standard
Anti-theft System	RF Digitally Encoded Security System (D.E.S.S.™)

WARRANTY

Factory	6-months limited warranty
Extended	Up to 36 months B.E.S.T. coverage

BEST PROTECTION ©2019 Bombardier Recreational Products Inc (BRP). All rights reserved. ™, ® and the BRP logo are registered trademarks of BRP or its affiliates. Products are distributed in the U.S.A. by BRP US Inc. *Base model dry weight shown. ‡Visco-Lok is a trademark of GKN Viscodrive GmbH. †All other trademarks are the property of their respective owners. Because of our ongoing commitment to product quality and innovation, BRP reserves the right at anytime to discontinue or change specifications, price, design, features, models or equipment without incurring any obligation. Ride responsibly. BRP highly recommends that all ATV drivers take a training course. For safety and training information, see your dealer or, in U.S.A. call the ATV Safety Institute at 1 (800) 887-2887. In Canada, call the Canadian Safety Council at 1 (613) 739-1535 ext 227. ATVs can be hazardous to operate. For your safety: the operator and passenger should wear a helmet, eye protection and other protective clothing. Always remember that riding and alcohol / drugs don't mix. Never ride on paved surfaces or public roads. Never engage in stunt driving. Avoid excessive speeds and be particularly careful on difficult terrain. ATVs with engine sizes of greater than 90cc are recommended for use only by those age 16 and older. Never carry passengers on any ATV not specifically designated for such use.

can-am BRP

Can-AmOffroad.com

2020 OUTLANDER™ MAX 6x6 DPS™ 450

HIGHLIGHTS

- Rotax® single cylinder engine
- Continuously Variable Transmission (CVT) with Extra-Low L Gear
- 26-in. Carlisle† ACT tires
- 12-in. cast-aluminum wheels
- Tri-Mode Dynamic Power Steering (DPS)
- Double A-arm front suspension
- Double Torsional Trailing arm Independent (TTI2) rear suspension
- Relocated air intakes
- RF Digitally Encoded Security System (D.E.S.S.™)
- 2.9-gal (10.9 L) water-resistant rear compartment
- 350-lb (159 kg) capacity rear bed with cargo extenders
- Dynamic passenger comfort ergonomics
- Quick release sway bar

Green / 450

ENGINE	450
Type	38 hp, Rotax 427 cc single cylinder, liquid cooled
Fuel Delivery System	Electronic Fuel Injection (EFI)
Transmission	CVT, P / R / N / H / Extra-Low L, standard engine braking
Drive Train	Selectable 4WD / 6WD with Visco-Lok‡ QE auto-locking front differential
Power Steering	Tri-Mode Dynamic Power Steering (DPS)

SUSPENSIONS	
Front Suspension	Double A-arm 9 in. (22.9 cm) travel
Front Shocks	Oil
Rear Suspension	Torsional Trailing arm Independent (TTI2) with quick-release sway bar 8.8 in. (22.4 cm) travel
Rear Shocks	Oil

BRAKES	
Front	Dual 214 mm ventilated disc brakes with hydraulic twin-piston calipers
Rear	Dual 214 mm ventilated disc brakes with hydraulic twin-piston calipers

TIRES / WHEELS	
Front Tires	Carlisle ACT radial 26 x 8 x 12 in. (66 x 20.3 x 30.5 cm)
Rear Tires	Carlisle ACT radial 26 x 10 x 12 in (66 x 25.4 x 30.5 cm)
Wheels	12-in. cast-aluminum

DIMENSIONS / CAPACITIES	
L x W x H	118 x 46 x 57 in (300 x 117 x 145 cm)
Wheelbase	90 in. (228.5cm)
Ground Clearance	10.5 in. (26.7 cm)
Seat Height	33.8 in. (85.8 cm)
Dry Weight*	1000 lb (454 kg)
Rack Capacity	Front: 120 lb (54.4 kg) Rear: 350 lb (159 kg)
Storage Capacity	Rear: 2.9 gal (10.9 L)
Towing Capacity	1,650 lb (750 kg)
Fuel Capacity	5.4 gal (20.5 L)

FEATURES

Gauge	Multifunction digital: Speedometer, tachometer, odometer, trip & hour meters, fuel, gear position, 4 x 4 indicator, diagnostics, clock	Instrumentation	Lighter type DC outlet in console, standard connector in the back (15-A)
		Lighting	70 W from dual 35-W front light and dual 55-W reflectors with tail light / brake light
		Seat	Convertible Rack System (CRS)
Winch	Prewired for available winch	Anti-theft System	RF Digitally Encoded Security System (D.E.S.S.)
Protection	Central skid plate		

WARRANTY	
Factory	6-months limited warranty
Extended	Up to 36 months B.E.S.T. coverage

BEST PROTECTION ©2019 Bombardier Recreational Products Inc (BRP). All rights reserved. ™, ® and the BRP logo are registered trademarks of BRP or its affiliates. Products are distributed in the U.S.A. by BRP US Inc. *Base model dry weight shown. ‡Visco-Lok is a trademark of GKN Viscodrive GmbH. †All other trademarks are the property of their respective owners. Because of our ongoing commitment to product quality and innovation, BRP reserves the right at anytime to discontinue or change specifications, price, design, features, models or equipment without incurring any obligation. Ride responsibly. BRP highly recommends that all ATV drivers take a training course. For safety and training information, see your dealer or, in U.S.A. call the ATV Safety Institute at 1 (800) 887-2887. In Canada, call the Canadian Safety Council at 1 (613) 739-1535 ext 227. ATVs can be hazardous to operate. For your safety: the operator and passenger should wear a helmet, eye protection and other protective clothing. Always remember that riding and alcohol / drugs don't mix. Never ride on paved surfaces or public roads. Never engage in stunt driving. Avoid excessive speeds and be particularly careful on difficult terrain. ATVs with engine sizes of greater than 90cc are recommended for use only by those age 16 and older. Never carry passengers on any ATV not specifically designated for such use.

can-am BRP

Can-AmOffroad.com

2020 OUTLANDER™ MAX 6x6 DPS™ 650

HIGHLIGHTS

- Rotax® V-twin engine
- New arched double A-arm front suspension with front sway bar
- Continuously Variable Transmission (CVT) with Extra-Low L Gear
- 700-lb (318 kg) capacity Dual-Level™ cargo box with modular accessories
- 1,650-lb (750 kg) towing capacity
- Tri-Mode Dynamic Power Steering (DPS)
- Double Torsional Trailing arm Independent (TTI2) rear suspension
- 12-in. cast-aluminum wheels
- Relocated air intakes
- Quick release rear sway bar
- High-strength, multifunction racks with LinQ™ quick-attach accessory system
- RF Digitally Encoded Security System (D.E.S.S.™)

Green / 650

ENGINE	650
Type	62 hp, Rotax 649.6 cc V-twin, liquid cooled
Fuel Delivery System	Electronic Fuel Injection (EFI)
Transmission	CVT, P / R / N / H / Extra-Low L, standard engine braking
Drive Train	Selectable 4WD / 6WD with Visco-Lok‡ QE auto-locking front differential
Power Steering	Tri-Mode Dynamic Power Steering (DPS)

SUSPENSIONS	
Front Suspension	Arched double A-arm with front sway bar 9.2 in. (23.3 cm) travel
Front Shocks	Oil
Rear Suspension	Double Torsional Trailing arm Independent (TTI2) with quick-release sway bar 9.9 in. (25.1 cm) travel
Rear Shocks	Oil

BRAKES	
Front	Dual 214 mm ventilated disc brakes with hydraulic twin-piston calipers
Rear	Dual 214 mm ventilated disc brakes with hydraulic twin-piston calipers

TIRES / WHEELS	
Front Tires	Carlisle† ACT radial 26 x 8 x 12 in. (66 x 20.3 x 30.5 cm)
Rear Tires	Carlisle ACT radial 26 x 10 x 12 in (66 x 25.4 x 30.5 cm)
Wheels	12-in. cast-aluminum

DIMENSIONS / CAPACITIES	
L x W x H	124.8 x 48.5 x 55.3 in. (317 x 123 x 140 cm)
Wheelbase	90 in. (228.5cm)
Ground Clearance	11 in. (27.9 cm)
Seat Height	34.5 in. (87.7 cm)
Dry Weight*	1100 lb (499 kg)
Rack Capacity	Front: 100 lb (45 kg) Rear: 700 lb (318 kg)
Storage Capacity	Dual-level cargo box with sidewalls and tailgate Rear: 18.5 gal (70 L)
Towing Capacity	1,650 lb (750 kg)
Fuel Capacity	5.4 gal (20.5 L)

FEATURES

Gauge	Multifunction digital: Speedometer, tachometer (bar graph RPM, bottom bar numerical RPM), odometer, trip & hour meters, diagnostic center, gear position, engine hour meter, 4 x 4 indicator, temperature and engine lights, fuel gauge, clock
Winch	Prewired for available winch
Protection	Central skid plate
Instrumentation	Lighter type DC outlet in console, standard connector in the back (15-A)
Lighting	230 W from twin 60-W projectors and dual 55-W reflectors with tail light / brake light
Seat	Convertible Rack System (CRS)
Anti-theft System	RF Digitally Encoded Security System (D.E.S.S.)

WARRANTY

Factory	6-months limited warranty
Extended	Up to 36 months B.E.S.T. coverage

BEST PROTECTION ©2019 Bombardier Recreational Products Inc (BRP). All rights reserved. ™, ® and the BRP logo are registered trademarks of BRP or its affiliates. Products are distributed in the U.S.A. by BRP US Inc. *Base model dry weight shown. ‡Visco-Lok is a trademark of GKN Viscodrive GmbH. †All other trademarks are the property of their respective owners. Because of our ongoing commitment to product quality and innovation, BRP reserves the right at anytime to discontinue or change specifications, price, design, features, models or equipment without incurring any obligation. Ride responsibly. BRP highly recommends that all ATV drivers take a training course. For safety and training information, see your dealer or, in U.S.A. call the ATV Safety Institute at 1 (800) 887-2887. In Canada, call the Canadian Safety Council at 1 (613) 739-1535 ext 227. ATVs can be hazardous to operate. For your safety: the operator and passenger should wear a helmet, eye protection and other protective clothing. Always remember that riding and alcohol / drugs don't mix. Never ride on paved surfaces or public roads. Never engage in stunt driving. Avoid excessive speeds and be particularly careful on difficult terrain. ATVs with engine sizes of greater than 90cc are recommended for use only by those age 16 and older. Never carry passengers on any ATV not specifically designated for such use.

can-am BRP

Can-AmOffroad.com

2020 OUTLANDER™ MAX 6x6 XT™ 1000

HIGHLIGHTS

- Rotax® V-twin engine
- New arched double A-arm front suspension with front sway bar
- Continuously Variable Transmission (CVT) with Extra-Low L Gear
- 700-lb (318 kg) capacity Dual-Level™ cargo box with modular accessories
- 3,000-lb (1,361 kg) WARN† winch with roller fairlead
- 1,650-lb (750 kg) towing capacity
- Tri-Mode Dynamic Power Steering (DPS)
- Double Torsional Trailing arm Independent (TTI2) rear suspension
- 12-in. cast-aluminum wheels
- Relocated air intakes
- Quick release rear sway bar
- High-strength, multifunction racks with LinQ™ quick-attach accessory system
- RF Digitally Encoded Security System (D.E.S.S.™)

Pure Magnesium Metallic / 1000

ENGINE	1000
Type	82 hp, Rotax 976 cc V-twin, liquid cooled
Fuel Delivery System	Electronic Fuel Injection (EFI)
Transmission	CVT, P / R / N / H / Extra-Low L, standard engine braking
Drive Train	Selectable 4WD / 6WD with Visco-Lok‡ QE auto-locking front differential
Power Steering	Tri-Mode Dynamic Power Steering (DPS)

SUSPENSIONS	
Front Suspension	Arched double A-arm with front sway bar 9.2 in. (23.3 cm) travel
Front Shocks	Oil
Rear Suspension	Double Torsional Trailing arm Independent (TTI2) with quick-release sway bar 9.9 in. (25.1 cm) travel
Rear Shocks	Oil

BRAKES	
Front	Dual 214 mm ventilated disc brakes with hydraulic twin-piston calipers
Rear	Dual 214 mm ventilated disc brakes with hydraulic twin-piston calipers

TIRES / WHEELS	
Front Tires	Carlisle† ACT radial 26 x 8 x 12 in. (66 x 20.3 x 30.5 cm)
Rear Tires	Carlisle ACT radial 26 x 10 x 12 in (66 x 25.4 x 30.5 cm)
Wheels	12-in. cast-aluminum

DIMENSIONS / CAPACITIES	
L x W x H	124.8 x 48.5 x 55.3 in. (317 x 123 x 140 cm)
Wheelbase	90 in. (228.5cm)
Ground Clearance	11 in. (27.9 cm)
Seat Height	34.5 in. (87.7 cm)
Dry Weight*	1170 lb (531 kg)
Rack Capacity	Front: 100 lb (45 kg) Rear: 700 lb (318 kg)
Storage Capacity	Dual-level cargo box with sidewalls and tailgate Rear: 18.5 gal (70 L)
Towing Capacity	1,650 lb (750 kg)
Fuel Capacity	5.4 gal (20.5 L)

FEATURES

Gauge	Multifunction digital: Speedometer, tachometer (bar graph RPM, bottom bar numerical RPM), odometer, trip & hour meters, diagnostic center, gear position, engine hour meter, 4 x 4 indicator, temperature and engine lights, fuel gauge, clock
Winch	3,000-lb (1,361 kg) WARN winch with roller fairlead
Protection	Heavy-duty front bumper, handlebar wind deflectors, central skid plate
Instrumentation	Lighter type DC outlet in console, standard connector in the back (15-A)
Lighting	230 W from twin 60-W projectors and dual 55-W reflectors with tail light / brake light
Seat	Convertible Rack System (CRS)
Anti-theft System	RF Digitally Encoded Security System (D.E.S.S.)

WARRANTY

Factory	6-months limited warranty
Extended	Up to 36 months B.E.S.T. coverage

BEST PROTECTION ©2019 Bombardier Recreational Products Inc (BRP). All rights reserved. ™, ® and the BRP logo are registered trademarks of BRP or its affiliates. Products are distributed in the U.S.A. by BRP US Inc. *Base model dry weight shown. ‡Visco-Lok is a trademark of GKN Viscodrive GmbH. †All other trademarks are the property of their respective owners. Because of our ongoing commitment to product quality and innovation, BRP reserves the right at anytime to discontinue or change specifications, price, design, features, models or equipment without incurring any obligation. Ride responsibly. BRP highly recommends that all ATV drivers take a training course. For safety and training information, see your dealer or, in U.S.A. call the ATV Safety Institute at 1 (800) 887-2887. In Canada, call the Canadian Safety Council at 1 (613) 739-1535 ext 227. ATVs can be hazardous to operate. For your safety: the operator and passenger should wear a helmet, eye protection and other protective clothing. Always remember that riding and alcohol / drugs don't mix. Never ride on paved surfaces or public roads. Never engage in stunt driving. Avoid excessive speeds and be particularly careful on difficult terrain. ATVs with engine sizes of greater than 90cc are recommended for use only by those age 16 and older. Never carry passengers on any ATV not specifically designated for such use.

can-am BRP

Can-AmOffroad.com

2020 RENEGADE®

HIGHLIGHTS

- Rotax® V-twin engine options
- New arched double A-arm front suspension with front sway bar
- Continuously Variable Transmission (CVT) with engine braking
- 12-in. cast-aluminum wheels
- 25-in. ITP† Holeshot ATR tires
- Surrounding Spar Technology (SST) G2 frame with Geometric Contact Control
- Torsional Trailing arm Independent (TTI) rear suspension
- Visco-Lok‡ auto-locking front differential
- Multifunction digital gauge
- RF Digitally Encoded Security System (D.E.S.S.™)

Sunburst Yellow / 570 / 850

ENGINES	570	850
Type	48 hp, Rotax 570 cc V-twin, liquid cooled	78 hp, Rotax 854 cc V-twin, liquid cooled
Fuel Delivery System	Electronic Fuel Injection (EFI)	Intelligent Throttle Control (iTC™) with Electronic Fuel Injection (EFI)
Transmission	CVT, P / R / N / H / L, standard engine braking	
Drive Train	Selectable 2WD / 4WD with Visco-Lok auto-locking front differential	
Power Steering	N/A	

SUSPENSIONS		
Front Suspension	Arched double A-arm with front sway bar 9.2 in. (23.3 cm) travel	
Front Shocks	Oil	FOX† 1.5 PODIUM†
Rear Suspension	Torsional Trailing arm Independent (TTI) 9.9 in. (25.1 cm) travel	
Rear Shocks	Oil	FOX† 1.5 PODIUM†

BRAKES	
Front	Dual 214 mm ventilated disc brakes with hydraulic twin-piston calipers
Rear	Single 214 mm ventilated disc brake with hydraulic twin-piston caliper

TIRES / WHEELS	
Front Tires	ITP Holeshot ATR 25 x 8 x 12 in. (63.5 x 20.3 x 30.5 cm)
Rear Tires	ITP Holeshot ATR 25 x 10 x 12 in. (63.5 x 25.4 x 30.5 cm)
Wheels	12-in. cast-aluminum

DIMENSIONS / CAPACITIES	
L x W x H	86 x 48 x 49 in. (218.4 x 121.2 x 124 cm)
Wheelbase	51 in. (129.5 cm)
Ground Clearance	10.5 in. (26.7 cm)
Seat Height	34.5 in. (87.7 cm)
Engine / Dry Weight*	570 / 628 lb (286 kg) 850 / 681 lb (310 kg)
Rack Capacity	Rear: 35 lb (16 kg)
Storage Capacity	N/A
Towing Capacity	1,300 lb (590 kg)
Fuel Capacity	5.4 gal (20.5 L)

FEATURES

Gauge	Multifunction digital: Speedometer, tachometer, odometer, trip & hour meters, fuel, gear position, 4 x 4 indicator, diagnostics, clock	Instrumentation	Lighter type DC outlet in console, standard connector in the back (15-A)
		Lighting	240 W from 4 fender mounted projector beam headlamps (60-W) with tail light / brake light
		Seat	Standard
Winch	Prewired for available winch	Anti-theft System	RF Digitally Encoded Security System (D.E.S.S.)
Protection	Front bumper, optional wind deflectors		

WARRANTY

Factory	6-months limited warranty
Extended	Up to 36 months B.E.S.T. coverage

BEST PROTECTION ©2019 Bombardier Recreational Products Inc (BRP). All rights reserved. ™, ® and the BRP logo are registered trademarks of BRP or its affiliates. Products are distributed in the U.S.A. by BRP US Inc. *Base model dry weight shown. ‡Visco-Lok is a trademark of GKN Viscodrive GmbH. †All other trademarks are the property of their respective owners. Because of our ongoing commitment to product quality and innovation, BRP reserves the right at anytime to discontinue or change specifications, price, design, features, models or equipment without incurring any obligation. Ride responsibly. BRP highly recommends that all ATV drivers take a training course. For safety and training information, see your dealer or, in U.S.A. call the ATV Safety Institute at 1 (800) 887-2887. In Canada, call the Canadian Safety Council at 1 (613) 739-1535 ext 227. ATVs can be hazardous to operate. For your safety: the operator and passenger should wear a helmet, eye protection and other protective clothing. Always remember that riding and alcohol / drugs don't mix. Never ride on paved surfaces or public roads. Never engage in stunt driving. Avoid excessive speeds and be particularly careful on difficult terrain. ATVs with engine sizes of greater than 90cc are recommended for use only by those age 16 and older. Never carry passengers on any ATV not specifically designated for such use.

can-am BRP

Can-AmOffroad.com

2020 RENEGADE® X™ XC

HIGHLIGHTS

- Rotax® V-twin engine options
- Front and rear FOX† 1.5 PODIUM† RC2 shocks
- New arched double A-arm front suspension with front sway bar
- Continuously Variable Transmission (CVT) with engine braking
- Tri-Mode Dynamic Power Steering (DPS™)
- 12-in. cast-aluminum beadlock wheels
- 25-in. ITP† Holeshot ATR tires
- Front & central skid plate
- Aluminum taper-profile handlebar with full wrap handguards
- Surrounding Spar Technology (SST) G2 frame with Geometric Contact Control
- Torsional Trailing arm Independent (TTI) rear suspension
- Visco-Lok‡ QE auto-locking front differential
- Multifunction digital gauge
- X-package coloration, graphics and seat cover

Black & Can-Am red / 1000R
Black, Gray & Sunburst Yellow / 850 / 1000R

ENGINES	850	1000R
Type	78 hp, Rotax 854 cc V-twin, liquid cooled	91 hp, Rotax 976 cc V-twin, liquid cooled
Fuel Delivery System	Intelligent Throttle Control (iTC™) with Electronic Fuel Injection (EFI)	
Transmission	CVT, P / R / N / H / L, standard engine braking	
Drive Train	Selectable 2WD / 4WD with Visco-Lok QE auto-locking front differential	
Power Steering	Tri-Mode Dynamic Power Steering (DPS)	

SUSPENSIONS	
Front Suspension	Arched double A-arm with front sway bar 9.2 in. (23.3 cm) travel
Front Shocks	FOX 1.5 PODIUM RC2
Rear Suspension	Torsional Trailing arm Independent (TTI) 9.9 in. (25.1 cm) travel
Rear Shocks	FOX 1.5 PODIUM RC2

BRAKES	
Front	Dual 214 mm ventilated disc brakes with hydraulic twin-piston calipers
Rear	Single 214 mm ventilated disc brake with hydraulic twin-piston caliper

TIRES / WHEELS	
Front Tires	ITP Holeshot ATR 25 x 8 x 12 in. (63.5 x 20.3 x 30.5 cm)
Rear Tires	ITP Holeshot ATR 25 x 10 x 12 in. (63.5 x 25.4 x 30.5 cm)
Wheels	12-in. cast-aluminum beadlock

DIMENSIONS / CAPACITIES	
L x W x H	86 x 48 x 49 in. (218.4 x 121.9 x 124 cm)
Wheelbase	51 in. (129.5 cm)
Ground Clearance	10.5 in. (26.7 cm)
Seat Height	34.5 in. (87.7 cm)
Engine / Dry Weight*	850 / 686 lb (312 kg) 1000R / 710 lb (323 kg)
Rack Capacity	Rear: 35 lb (16 kg)
Storage Capacity	N/A
Towing Capacity	1,300 lb (590 kg)
Fuel Capacity	5.4 gal (20.5 L)

FEATURES

Gauge	Multifunction digital: Speedometer, tachometer, odometer, trip & hour meters, fuel, gear position, 4 x 4 indicator, diagnostics, clock
Winch	Prewired for available winch
Protection	Front bumper, aluminum taper-profile handlebar with full wrap handguards, front & central skid plate
Instrumentation	Lighter type DC outlet in console, standard connector in the back (15-A)
Lighting	240 W from 4 fender mounted projector beam headlamps (60 W) with tail light / brake light
Seat	Standard
Anti-theft System	RF Digitally Encoded Security System (D.E.S.S.™)

WARRANTY

Factory	6-months limited warranty
Extended	Up to 36 months B.E.S.T. coverage

BEST PROTECTION ©2019 Bombardier Recreational Products Inc (BRP). All rights reserved. ™, ® and the BRP logo are registered trademarks of BRP or its affiliates. Products are distributed in the U.S.A. by BRP US Inc. *Base model dry weight shown. ‡Visco-Lok is a trademark of GKN Viscodrive GmbH. †All other trademarks are the property of their respective owners. Because of our ongoing commitment to product quality and innovation, BRP reserves the right at anytime to discontinue or change specifications, price, design, features, models or equipment without incurring any obligation. Ride responsibly. BRP highly recommends that all ATV drivers take a training course. For safety and training information, see your dealer or, in U.S.A. call the ATV Safety Institute at 1 (800) 887-2887. In Canada, call the Canadian Safety Council at 1 (613) 739-1535 ext 227. ATVs can be hazardous to operate. For your safety: the operator and passenger should wear a helmet, eye protection and other protective clothing. Always remember that riding and alcohol / drugs don't mix. Never ride on paved surfaces or public roads. Never engage in stunt driving. Avoid excessive speeds and be particularly careful on difficult terrain. ATVs with engine sizes of greater than 90cc are recommended for use only by those age 16 and older. Never carry passengers on any ATV not specifically designated for such use.

can-am BRP

Can-AmOffroad.com

2020 RENEGADE® X™ mr 570

HIGHLIGHTS

- Rotax® snorkeled V-Twin engine with relocated CVT intake and outlet
- 28-in. ITP† Mega Mayhem tires
- 12-in. cast-aluminum beadlock wheels
- Front and rear FOX† 1.5 PODIUM† shocks
- Tri-Mode Dynamic Power Steering (DPS™)
- Front & central aluminum skid plates
- Torsional Trailing arm Independent (TTI) rear suspension
- Heavy-duty front and rear bumpers
- Aluminum taper-profile handlebar with grab handle, full wrap handguards
- Continuously Variable Transmission (CVT) with engine braking
- Mudguards
- Multifunction digital gauge
- X-package coloration, graphics and seat cover

Black, Gray & Sunburst Yellow / 570

ENGINE	570
Type	48 hp, Rotax 570 cc V-twin, snorkeled, liquid cooled
Fuel Delivery System	Electronic Fuel Injection (EFI)
Transmission	CVT, P / R / N / H / L, standard engine braking
Drive Train	Selectable 2WD / 4WD with Visco-Lok‡ QE auto-locking front differential
Power Steering	Tri-Mode Dynamic Power Steering (DPS)

SUSPENSIONS	
Front Suspension	Arched double A-arm with front sway bar
Front Shocks	FOX 1.5 PODIUM
Rear Suspension	Torsional Trailing arm Independent (TTI)
Rear Shocks	FOX 1.5 PODIUM

BRAKES	
Front	Dual 214 mm ventilated disc brakes with hydraulic twin-piston calipers
Rear	Single 214 mm ventilated disc brake with hydraulic twin-piston caliper

TIRES / WHEELS	
Front Tires	ITP Mega Mayhem 28 x 8 x 12 in. (71.1 x 20.3 x 30.5 cm)
Rear Tires	ITP Mega Mayhem 28 x 10 x 12 in. (71.1 x 25.4 x 30.5 cm)
Wheels	12-in. cast-aluminum beadlock

DIMENSIONS / CAPACITIES	
L x W x H	83 x 50 x 56 in. (224 x 127 x 131 cm)
Wheelbase	51 in. (129.5 cm)
Ground Clearance	12 in. (30.5 cm)
Seat Height	35.25 in. (89.5 cm)
Dry Weight*	865 lb (393 kg)
Rack Capacity	Rear: 35 lb (16 kg)
Storage Capacity	N/A
Towing Capacity	1,300 lb (590 kg)
Fuel Capacity	5.4 gal (20.5 L)

FEATURES

Gauge	Multifunction digital: Speedometer, tachometer, odometer, trip & hour meters, fuel, gear position, 4 x 4 indicator, diagnostics, clock
Winch	Prewired for available winch
Protection	Front & rear bumpers, aluminum taper-profile handlebar with grab handle, full wrap handguards, mudguards, front & central aluminum skid plate
Instrumentation	Lighter type DC outlet in console, standard connector in the back (15-A)
Lighting	240 W from 4 fender mounted projector beam headlamps (60 W) with tail light / brake light
Seat	Standard
Anti-theft System	RF Digitally Encoded Security System (D.E.S.S.™)

WARRANTY

Factory	6-months limited warranty
Extended	Up to 36 months B.E.S.T. coverage

BEST PROTECTION ©2019 Bombardier Recreational Products Inc (BRP). All rights reserved. ™, ® and the BRP logo are registered trademarks of BRP or its affiliates. Products are distributed in the U.S.A. by BRP US Inc. *Base model dry weight shown. ‡Visco-Lok is a trademark of GKN Viscodrive GmbH. †All other trademarks are the property of their respective owners. Because of our ongoing commitment to product quality and innovation, BRP reserves the right at anytime to discontinue or change specifications, price, design, features, models or equipment without incurring any obligation. Ride responsibly. BRP highly recommends that all ATV drivers take a training course. For safety and training information, see your dealer or, in U.S.A. call the ATV Safety Institute at 1 (800) 887-2887. In Canada, call the Canadian Safety Council at 1 (613) 739-1535 ext 227. ATVs can be hazardous to operate. For your safety: the operator and passenger should wear a helmet, eye protection and other protective clothing. Always remember that riding and alcohol / drugs don't mix. Never ride on paved surfaces or public roads. Never engage in stunt driving. Avoid excessive speeds and be particularly careful on difficult terrain. ATVs with engine sizes of greater than 90cc are recommended for use only by those age 16 and older. Never carry passengers on any ATV not specifically designated for such use.

can-am

Can-AmOffroad.com

2020 RENEGADE® X™ mr 1000R

HIGHLIGHTS

- Rotax® snorkeled V-Twin engine with relocated CVT intake and outlet
- Intelligent Throttle Control (iTC™) with riding modes
- Front and rear FOX† 1.5 PODIUM† QS3
- 30-in. ITP† Cryptid tires
- 14-in. cast-aluminum beadlock wheels
- 3,000-lb (1,361 kg) WARN† winch with roller fairlead
- Front & central aluminum skid plate
- Heavy-duty front and rear bumpers
- Continuously Variable Transmission (CVT) with Extra Low L-Gear
- Aluminum taper-profile handlebar with grab handle and full wrap handguards
- Tri-Mode Dynamic Power Steering (DPS™)
- Torsional Trailing arm Independent (TTI) rear suspension
- Mudguards
- Multifunction digital gauge
- Painted plastics for premium look
- X-package coloration, graphics and seat cover

Iron Gray & Manta Green / 1000R
Black & Platinum Silver / 1000R

ENGINE	1000R
Type	91 hp, Rotax 976 cc V-twin, snorkeled, liquid cooled
Fuel Delivery System	Intelligent Throttle Control (iTC) with Electronic Fuel Injection (EFI)
Transmission	CVT, P / R / N / H / Extra Low L, standard engine braking
Drive Train	Selectable 2WD / 4WD with Visco-Lok‡ QE auto-locking front differential
Power Steering	Tri-Mode Dynamic Power Steering (DPS)
SUSPENSIONS	
Front Suspension	Arched double A-arm with front sway bar
Front Shocks	FOX 1.5 PODIUM QS3
Rear Suspension	Torsional Trailing arm Independent (TTI)
Rear Shocks	FOX 1.5 PODIUM QS3
BRAKES	
Front	Dual 214 mm ventilated disc brakes with hydraulic twin-piston calipers
Rear	Single 214 mm ventilated disc brake with hydraulic twin-piston caliper

TIRES / WHEELS	
Front Tires	ITP Cryptid 30 x 9 x 14 in. (76.6 x 22.9 x 35.6 cm)
Rear Tires	ITP Cryptid 30 x 9 x 14 in. (76.6 x 22.9 x 35.6 cm)
Wheels	14-in. cast-aluminum beadlock

DIMENSIONS / CAPACITIES	
L x W x H	83 x 50 x 56 in. (224 x 127 x 131 cm)
Wheelbase	51 in. (129.5 cm)
Ground Clearance	12.5 in. (31.8 cm)
Seat Height	36.75 in. (93.3 cm)
Dry Weight*	991 lb (450 kg)
Rack Capacity	Rear: 35 lb (16 kg)
Storage Capacity	N/A
Towing Capacity	1,300 lb (590 kg)
Fuel Capacity	5.4 gal (20.5 L)

FEATURES

Gauge	Multifunction digital: Speedometer, tachometer, odometer, trip & hour meters, fuel, gear position, 4 x 4 indicator, diagnostics, clock
Winch	3,000-lb (1,361 kg) WARN winch with roller fairlead
Protection	Front & rear bumpers, aluminum taper-profile handlebar with grab handle, full wrap handguards, mudguards, front & central aluminum skid plate
Instrumentation	Lighter type DC outlet in console, standard connector in the back (15-A)
Lighting	240 W from 4 fender mounted projector beam headlamps (60 W) with tail light / brake light
Seat	Standard
Anti-theft System	RF Digitally Encoded Security System (D.E.S.S.™)

WARRANTY

Factory	6-months limited warranty
Extended	Up to 36 months B.E.S.T. coverage

©2019 Bombardier Recreational Products Inc (BRP). All rights reserved. ™, ® and the BRP logo are registered trademarks of BRP or its affiliates. Products are distributed in the U.S.A. by BRP US Inc. *Base model dry weight shown. ‡Visco-Lok is a trademark of GKN Viscodrive GmbH. †All other trademarks are the property of their respective owners. Because of our ongoing commitment to product quality and innovation, BRP reserves the right at anytime to discontinue or change specifications, price, design, features, models or equipment without incurring any obligation. Ride responsibly. BRP highly recommends that all ATV drivers take a training course. For safety and training information, see your dealer or, in U.S.A. call the ATV Safety Institute at 1 (800) 887-2887. In Canada, call the Canadian Safety Council at 1 (613) 739-1535 ext 227. ATVs can be hazardous to operate. For your safety: the operator and passenger should wear a helmet, eye protection and other protective clothing. Always remember that riding and alcohol / drugs don't mix. Never ride on paved surfaces or public roads. Never engage in stunt driving. Avoid excessive speeds and be particularly careful on difficult terrain. ATVs with engine sizes of greater than 90cc are recommended for use only by those age 16 and older. Never carry passengers on any ATV not specifically designated for such use.

can-am

Can-AmOffroad.com

2020 DS 70™

HIGHLIGHTS

- For ages 6 and up
- 4-stroke air cooled engine
- Fully automatic Continuously Variable Transmission (CVT)
- Independent A-arm front suspension
- Electric start with back-up kick start
- Built-in throttle limiter

Can-Am Red / 70

ENGINE	70
Type	4-stroke single cylinder, air cooled
Fuel Delivery System	Carburetion, Keihin†
Transmission	CVT, F / N / R
Drive Train	Chain driven / solid axle Electric and kick starting system
Power Steering	N/A

SUSPENSIONS	
Front Suspension	Independent A-arm 3.4 in. (8.6 cm) travel
Front Shocks	Oil
Rear Suspension	Swingarm 6.3 in. (16 cm) travel
Rear Shocks	Oil

BRAKES	
Front	Dual drum brakes
Rear	Single drum brake

TIRES / WHEELS	
Front Tires	Duro Thrasher 19 x 7 x 8 in. (48.3 x 17.8 x 20.3 cm)
Rear Tires	Duro Power Trail 18 x 9.5 x 8 in. (45.7 x 24.1 x 20.3 cm)
Wheels	8-in. steel

DIMENSIONS / CAPACITIES	
L x W x H	59.8 x 35.6 x 36.8 in. (152 x 90.5 x 93.5 cm)
Wheelbase	39 in. (100 cm)
Ground Clearance	8.3 in. (21.1 cm) under frame / 4.5 in. (11.4 cm) under rear axle
Seat Height	27 in. (68.5 cm)
Dry Weight*	250 lb (113 kg)
Rack Capacity	N/A
Storage Capacity	Front: 0.7 gal. (2.7 L)
Towing Capacity	N/A
Fuel Capacity	1.6 gal (6 L)

FEATURES

Gauge	Neutral and reverse lights	Instrumentation	N/A
Winch	N/A	Lighting	Day lights
Protection	N/A	Anti-theft System	N/A

WARRANTY

Factory	6-months limited warranty

©2019 Bombardier Recreational Products Inc (BRP). All rights reserved. ™, ® and the BRP logo are registered trademarks of BRP or its affiliates. Products are distributed in the U.S.A. by BRP US Inc. *Base model dry weight shown. ‡Visco-Lok is a trademark of GKN Viscodrive GmbH. †All other trademarks are the property of their respective owners. Because of our ongoing commitment to product quality and innovation, BRP reserves the right at anytime to discontinue or change specifications, price, design, features, models or equipment without incurring any obligation. Ride responsibly. BRP highly recommends that all ATV drivers take a training course. For safety and training information, see your dealer or, in U.S.A. call the ATV Safety Institute at 1 (800) 887-2887. In Canada, call the Canadian Safety Council at 1 (613) 739-1535 ext 227. ATVs can be hazardous to operate. For your safety: the operator and passenger should wear a helmet, eye protection and other protective clothing. Always remember that riding and alcohol / drugs don't mix. Never ride on paved surfaces or public roads. Never engage in stunt driving. Avoid excessive speeds and be particularly careful on difficult terrain. ATVs with engine sizes of greater than 90cc are recommended for use only by those age 16 and older. Never carry passengers on any ATV not specifically designated for such use.

can-am

Can-AmOffroad.com

2020 DS 90™

HIGHLIGHTS

- For ages 10 and up
- 90 cc 4-stroke air cooled engine
- Fully automatic Continuously Variable Transmission (CVT)
- Independent A-arm front suspension
- Electric start with back-up kick start
- Built-in throttle limiter

Can-Am Red / 90

ENGINE	90
Type	89.5 cc 4-stroke single cylinder, air cooled
Fuel Delivery System	Carburetion, Keihin†
Transmission	CVT, F / N / R
Drive Train	Chain driven / solid axle Electric and kick starting system
Power Steering	N/A

SUSPENSIONS	
Front Suspension	Independent A-arm 3.4 in. (8.6 cm) travel
Front Shocks	Oil
Rear Suspension	Swingarm 6.3 in. (16 cm) travel
Rear Shocks	Oil

BRAKES	
Front	Dual drum brakes
Rear	Single drum brake

TIRES / WHEELS	
Front Tires	Duro Thrasher 19 x 7 x 8 in. (48.3 x 17.8 x 20.3 cm)
Rear Tires	Duro Power Trail 18 x 9.5 x 8 in. (45.7 x 24.1 x 20.3 cm)
Wheels	8-in. steel

DIMENSIONS / CAPACITIES	
L x W x H	59.8 x 35.6 x 36.8 in. (152 x 90.5 x 93.5 cm)
Wheelbase	39 in. (100 cm)
Ground Clearance	8.3 in. (21.1 cm) under frame / 4.5 in. (11.4 cm) under rear axle
Seat Height	27 in. (68.5 cm)
Dry Weight*	250 lb (113 kg)
Rack Capacity	N/A
Storage Capacity	Front: 0.7 gal. (2.7 L)
Towing Capacity	N/A
Fuel Capacity	1.6 gal (6 L)

FEATURES

Gauge	Neutral and reverse lights	Instrumentation	N/A
Winch	N/A	Lighting	Day lights
Protection	N/A	Anti-theft System	N/A

WARRANTY

Factory	6-months limited warranty

©2019 Bombardier Recreational Products Inc (BRP). All rights reserved. ™, ® and the BRP logo are registered trademarks of BRP or its affiliates. Products are distributed in the U.S.A. by BRP US Inc. *Base model dry weight shown. ‡Visco-Lok is a trademark of GKN Viscodrive GmbH. †All other trademarks are the property of their respective owners. Because of our ongoing commitment to product quality and innovation, BRP reserves the right at anytime to discontinue or change specifications, price, design, features, models or equipment without incurring any obligation. Ride responsibly. BRP highly recommends that all ATV drivers take a training course. For safety and training information, see your dealer or, in U.S.A. call the ATV Safety Institute at 1 (800) 887-2887. In Canada, call the Canadian Safety Council at 1 (613) 739-1535 ext 227. ATVs can be hazardous to operate. For your safety: the operator and passenger should wear a helmet, eye protection and other protective clothing. Always remember that riding and alcohol / drugs don't mix. Never ride on paved surfaces or public roads. Never engage in stunt driving. Avoid excessive speeds and be particularly careful on difficult terrain. ATVs with engine sizes of greater than 90cc are recommended for use only by those age 16 and older. Never carry passengers on any ATV not specifically designated for such use.

can-am

Can-AmOffroad.com

2020 DS 90™ X™

HIGHLIGHTS

- For ages 10 and up
- 90 cc 4-stroke air cooled engine
- Fully automatic Continuously Variable Transmission (CVT)
- 43-in. (109.2 cm) wide Double A-arm with HPG Piggyback shocks with 7 in. (17.8 cm) of travel
- 41-in. (104.1 cm) wide swingarm with HPG Piggyback shock with 9 in. (22.9 cm) of travel
- Electric start with back-up kick start
- Built-in throttle limiter
- Square race-style handlebar pad
- Handlebar riser block (+1 in.)
- Aluminum front bumper with number plate
- Racing kick-up pegs
- Nerf bars
- Sport-look exhaust
- X-package graphics and seat cover

Black & Can-Am Red / 90

ENGINE	90
Type	89.5 cc 4-stroke single cylinder, air cooled
Fuel Delivery System	Carburetion, Keihin†
Transmission	CVT, F / N / R
Drive Train	Chain driven / solid axle Electric and kick starting system
Power Steering	N/A

SUSPENSIONS	
Front Suspension	Double A-arm 7 in. (17.6 cm) travel
Front Shocks	HPG Piggyback
Rear Suspension	Swingarm 9 in. (22.9 cm) travel
Rear Shocks	HPG Piggyback

BRAKES	
Front	Dual hydraulic disc brakes
Rear	Single hydraulic disc brake

TIRES / WHEELS	
Front Tires	Kenda Claw 20 x 6 x 10 in. (48.3 x 17.8 x 25.4 cm)
Rear Tires	Kenda Claw 18 x 10.5 x 8 in. (45.7 x 26.7 x 20.3 cm)
Wheels	8-in. aluminum

DIMENSIONS / CAPACITIES	
L x W x H	59.8 x 43.7 x 38.2 in. (152 x 111 x 97 cm)
Wheelbase	39 in. (100 cm)
Ground Clearance	8.3 in. (21.1 cm) under frame / 4.5 in. (11.4 cm) under rear axle
Seat Height	27 in. (68.5 cm)
Dry Weight*	250 lb (113 kg)
Rack Capacity	N/A
Storage Capacity	Front: 0.7 gal. (2.7 L)
Towing Capacity	N/A
Fuel Capacity	1.6 gal (6 L)

FEATURES

Gauge	Neutral and reverse lights	Instrumentation	N/A
Winch	N/A	Lighting	N/A
Protection	Aluminum front bumper with number plate, handlebar riser block (+ 1 in.) with square race-style handlebar pad, nerf bars, racing kick-up pegs	Anti-theft System	N/A
		Seat	Standard

WARRANTY

Factory	6-months limited warranty

©2019 Bombardier Recreational Products Inc (BRP). All rights reserved. ™, ® and the BRP logo are registered trademarks of BRP or its affiliates. Products are distributed in the U.S.A. by BRP US Inc. *Base model dry weight shown. ‡Visco-Lok is a trademark of GKN Viscodrive GmbH. †All other trademarks are the property of their respective owners. Because of our ongoing commitment to product quality and innovation, BRP reserves the right at anytime to discontinue or change specifications, price, design, features, models or equipment without incurring any obligation. Ride responsibly. BRP highly recommends that all ATV drivers take a training course. For safety and training information, see your dealer or, in U.S.A. call the ATV Safety Institute at 1 (800) 887-2887. In Canada, call the Canadian Safety Council at 1 (613) 739-1535 ext 227. ATVs can be hazardous to operate. For your safety: the operator and passenger should wear a helmet, eye protection and other protective clothing. Always remember that riding and alcohol / drugs don't mix. Never ride on paved surfaces or public roads. Never engage in stunt driving. Avoid excessive speeds and be particularly careful on difficult terrain. ATVs with engine sizes of greater than 90cc are recommended for use only by those age 16 and older. Never carry passengers on any ATV not specifically designated for such use.

can-am

Can-AmOffroad.com

2020 DS 250®

HIGHLIGHTS

- For ages 14 and up
- 249.4 cc 4-stroke liquid cooled engine
- Fully automatic Continuously Variable Transmission (CVT)
- Double A-arm front suspension
- Preload adjustable front and rear shocks
- Electric start

Black & Can-Am Red / 250

ENGINE	250
Type	249.4 cc 4-stroke single cylinder, liquid cooled
Fuel Delivery System	Keihin† PTG 23
Transmission	CVT, F / N / R
Drive Train	Chain driven / solid axle
Power Steering	N/A

TIRES / WHEELS	
Front Tires	Kenda 22 x 7 x 10 in. (55.9 x 17.8 x 25.4 cm)
Rear Tires	Kenda 20 x 11 x 9 in. (50.8 x 27.9 x 22.9 cm)
Wheels	Front: 10-in. silver steel Rear: 9-in. silver steel

SUSPENSIONS	
Front Suspension	Double A-arm 5.5 in. (14 cm) travel
Front Shocks	Oil
Rear Suspension	Swingarm 6.7 in. (17 cm) travel
Rear Shocks	Oil

DIMENSIONS / CAPACITIES	
L x W x H	72 x 40.5 x 43.5 in. (183 x 103 x 110.5 cm)
Wheelbase	47 in. (118.7 cm)
Ground Clearance	10.2 in. (26 cm) center of ATV
Seat Height	31.5 in. (80 cm)
Dry Weight*	429 lb (195 kg)
Rack Capacity	N/A
Storage Capacity	N/A
Towing Capacity	N/A
Fuel Capacity	3.3 gal (12.5 L)

BRAKES	
Front	Dual hydraulic disc brakes
Rear	Single hydraulic disc brake

FEATURES

Gauge	Neutral light, reverse light and oil / temperature light	Instrumentation	N/A
Winch	N/A	Lighting	2 headlamps (35 W) with tail light and brake light
Protection	N/A	Anti-theft System	N/A

WARRANTY

Factory	6-months limited warranty
Extended	Up to 36 months B.E.S.T. coverage

BEST PROTECTION ©2019 Bombardier Recreational Products Inc (BRP). All rights reserved. ™, ® and the BRP logo are registered trademarks of BRP or its affiliates. Products are distributed in the U.S.A. by BRP US Inc. *Base model dry weight shown. ‡Visco-Lok is a trademark of GKN Viscodrive GmbH. †All other trademarks are the property of their respective owners. Because of our ongoing commitment to product quality and innovation, BRP reserves the right at anytime to discontinue or change specifications, price, design, features, models or equipment without incurring any obligation. Ride responsibly. BRP highly recommends that all ATV drivers take a training course. For safety and training information, see your dealer or, in U.S.A. call the ATV Safety Institute at 1 (800) 887-2887. In Canada, call the Canadian Safety Council at 1 (613) 739-1535 ext 227. ATVs can be hazardous to operate. For your safety: the operator and passenger should wear a helmet, eye protection and other protective clothing. Always remember that riding and alcohol / drugs don't mix. Never ride on paved surfaces or public roads. Never engage in stunt driving. Avoid excessive speeds and be particularly careful on difficult terrain. ATVs with engine sizes of greater than 90cc are recommended for use only by those age 16 and older. Never carry passengers on any ATV not specifically designated for such use.

can-am

Can-AmOffroad.com

2020 DEFENDER HD5

HIGHLIGHTS

PLATFORM FEATURES

- 62-in. wide
- 83-in. wheelbase
- 10.5-in. of ground clearance
- 1,500 lb towing capacity
- Multi-function cargo box with LinQ easy installation accessories
- 12-in. steel wheels with 25-in. Maxxis† M923J† tires
- VERSA-PRO bench seat
- HMWPE central skid plate
- ECO™ / ECO Off / Work modes
- 4.5 in. wide digital display

TOUGH

- Heavy-duty Rotax® engine
- Smooth, durable and responsive transmission
- True Can-Am DNA with a strong identity

CAPABLE

- Work or ride with confidence
- Meaningful and versatile functionality
- Easy handling and capabilities

CLEVER

- Advanced comfort and intuitive cockpit with optimized visibility
- Multifunction cargo box with sturdy tailgate and smart storage
- 1-year maintenance free and easy access to key maintenance components

Green / HD5

ENGINE

ENGINE	HD5
Type	38 hp, Rotax® 427 cc single cylinder, liquid cooled
Fuel Delivery System	Intelligent Throttle Control (iTC™) with Electronic Fuel Injection (EFI)
Transmission	CVT, P / R / N / H / L, standard engine braking
Drive Train	Selectable 2WD / 4WD with Visco-Lok‡ auto-locking front differential
Driving Assistance	Electronic Hill Descent Control ECO / ECO Off / Work modes
Power Steering	N/A

SUSPENSIONS

Front Suspension	Double A-arm / 10 in. (25.4 cm) travel
Front Shocks	Twin tube gas charged shocks
Rear Suspension	TTA with external sway bar / 10 in. (25.4 cm) travel
Rear Shocks	Twin tube gas charged shocks

BRAKES

Front	Dual 220 mm ventilated disc brakes with hydraulic twin-piston calipers
Rear	Single 220 mm ventilated disc brake with hydraulic twin-piston calipers

TIRES / WHEELS

Front Tires	Maxxis M923J 25 x 8 x 12 in. (63.5 x 20.3 x 30.5 cm)
Rear Tires	Maxxis M924J 25 x 10 x 12 in. (63.5 x 25.4 x 30.5 cm)
Wheels	12-in. (30.5 cm) steel

DIMENSIONS / CAPACITIES

L x W x H	121 x 62 x 76 in. (307.1 x 157.5 x 193 cm)
Wheelbase	83 in. (211.5 cm)
Ground Clearance	10.5 in. (26.7 cm)
Estimated Dry Weight	1,305.1 lb (592 kg)
Cage	Profiled cage ROPS approved
Cargo Box Dimensions	38 x 54.5 x 12 in. (96.5 x 138.4 x 30.5 cm)
Cargo Box Capacity	600 lb (272.2 kg)
Tailgate Load Capacity	250 lb (113.4 kg)
Storage Capacity	Total: 3.1 gal (11.7 L) Under dash (enclosed pocket) : 0.4 gal (1.3 L) Dash: 1.8 gal (6.9 L) Armrests and cup holders: 0.9 gal (3.5 L)
Towing Capacity	1,500 lb (680 kg)
Payload Capacity	1,200 lb (544 kg)
Fuel Capacity	10.6 gal (40 L)
Person Capacity	3

FEATURES

Gauge	4.5 in. (11.4 cm) wide digital display: Speedometer, tachometer, odometer, trip and hour meters, fuel, gear position, ECO / ECO Off / Work modes, seat belt, diagnostics, clock, battery voltage, engine temperature	Lighting	Four 35-W reflectors ensuring a wide visiblity and LED tail lights
		Winch	N/A
		Seat	VERSA-PRO bench seat with passenger seats flipping up, underside hooks and contoured bench to improve entrance/exit of the cab
Battery	12 V (18 amp/h)	Protection	Integrated front steel bumper, HMWPE central skid plate
Magneto	500 W	Hitch Type	2-in. hitch receiver
Instrumentation	Lighter type DC outlet in console (20-A)	Steering Wheel	Adjustable tilt steering

WARRANTY

Factory	1-year limited warranty
Extended	Up to 30 months B.E.S.T. coverage

BEST PROTECTION ©2019 Bombardier Recreational Products Inc (BRP). All rights reserved. ™, ® and the BRP logo are trademarks of Bombardier Recreational Products Inc. or its affiliates. In the U.S.A., the products are distributed by BRP US Inc. ‡Visco-Lok is a trademark of GKN Viscodrive GmbH. †All other trademarks are the property of their respective owners. BRP reserves the right, at any time, to discontinue or change specifications, prices, designs, features, models or equipment without incurring obligation. Some models depicted may include optional equipment. Read the side-by-side vehicle (SSV) Operator's Guide and watch the Safety DVD before driving. For your safety: wear a helmet, eye protection and other protective gear. Fasten lateral net and seat belt at all times. Always remember that riding and alcohol/drugs don't mix. SSV is for off-road use only. Never ride on paved surfaces or public roads. Operator must be at least 16 years old. Passenger must be at least 12 years old and able to hold handgrips and plant feet while seated against the backrest. Never engage in stunt driving and avoid excessive speed.

can-am BRP

Can-AmOffroad.com

2020 DEFENDER HD8

HIGHLIGHTS

PLATFORM FEATURES

- 62-in. wide
- 83-in. wheelbase
- 11-in. of ground clearance
- 2,500 lb towing capacity
- Multi-function cargo box with LinQ easy installation accessories
- 12-in. steel wheels with 27-in. Maxxis† Bighorn 2.0†
- Rear differential with Turf mode
- VERSA-PRO bench seat
- HMWPE central skid plate
- ECO™ / ECO Off / Work modes
- 4.5-in. digital display

TOUGH

- Heavy-duty Rotax® engine
- Smooth, durable and responsive transmission
- True Can-Am DNA with a strong identity

CAPABLE

- Work or ride with confidence
- Meaningful and versatile functionality
- Easy handling and capabilities

CLEVER

- Advanced comfort and intuitive cockpit with optimized visibility
- Multifunction cargo box with sturdy tailgate and smart storage
- 1-year maintenance free and easy access to key maintenance components

Green / HD8

ENGINE

ENGINE	HD8
Type	50 hp / 50 lb-ft, Rotax® 799.9 cc, V-twin, liquid cooled
Fuel Delivery System	Intelligent Throttle Control (iTC™) with Electronic Fuel Injection (EFI)
Transmission	PRO-TORQ transmission with Quick Response System (QRS), high airflow ventilation and Electronic Drive Belt Protection Extra-L / H / N / R / P
Drive Train	Selectable Turf Mode / 2WD / 4WD with Visco-Lok‡ auto-locking front differential
Driving Assistance	Electronic Hill Descent Control ECO / ECO Off / Work modes
Power Steering	N/A

SUSPENSIONS

Front Suspension	Double A-arm / 10 in. (25.4 cm) travel
Front Shocks	Twin tube gas charged shocks
Rear Suspension	TTA with external sway bar / 10 in. (25.4 cm) travel
Rear Shocks	Twin tube gas charged shocks

BRAKES

Front	Dual 220 mm ventilated disc brakes with hydraulic twin-piston calipers
Rear	Dual 220 mm ventilated disc brakes with hydraulic single-piston calipers

TIRES / WHEELS

Front Tires	Maxxis Bighorn 2.0 27 x 9 x 12 in. (68.6 x 22.9 x 30.5 cm)
Rear Tires	Maxxis Bighorn 2.0 27 x 11 x 12 in. (68.6 x 27.9 x 30.5 cm)
Wheels	12-in. (30.5 cm) steel

DIMENSIONS / CAPACITIES

L x W x H	121 x 62 x 76 in. (307.1 x 157.5 x 193 cm)
Wheelbase	83 in. (211.5 cm)
Ground Clearance	11 in. (28 cm)
Estimated Dry Weight	1,459.5 lb (662 kg)
Cage	Profiled cage ROPS approved
Cargo Box Dimensions	38 x 54.5 x 12 in. (96.5 x 138.4 x 30.5 cm)
Cargo Box Capacity	1,000 lb (454 kg) / California only: 600 lb (272.2 kg)
Tailgate Load Capacity	250 lb (113.4 kg)
Storage Capacity*	Total: 3.1 gal (11.7 L) Under dash (enclosed pocket) : 0.4 gal (1.3 L) Dash: 1.8 gal (6.9 L) Armrests and cup holders: 0.9 gal (3.5 L)
Towing Capacity	2,500 lb (1134 kg)
Payload Capacity	1,500 lb (680 kg)
Fuel Capacity	10.6 gal (40 L)
Person Capacity	3

FEATURES

Gauge	4.5 in. (11.4 cm) wide digital display: Speedometer, tachometer, odometer, trip and hour meters, fuel, gear position, ECO / ECO Off / Work modes, seat belt, diagnostics, clock, battery voltage, engine temperature	Lighting	140 W lighting output from four 35-W reflectors ensuring a wide visiblity and LED tail lights
		Winch	N/A
		Seat	VERSA-PRO bench seat with passenger seats flipping up, underside hooks and contoured bench to improve entrance/exit of the cab
Battery	12 V (18 amp/h)	Protection	Integrated front steel bumper, HMWPE central skid plate
Magneto	650-W	Hitch Type	2-in. hitch receiver
Instrumentation	Lighter type DC outlet in console (20-A)	Steering Wheel	Adjustable tilt steering

WARRANTY

Factory	1-year limited warranty
Extended	Up to 30 months B.E.S.T. coverage

BEST PROTECTION ©2019 Bombardier Recreational Products Inc (BRP). All rights reserved. ™, ® and the BRP logo are trademarks of Bombardier Recreational Products Inc. or its affiliates. In the U.S.A., the products are distributed by BRP US Inc. ‡Visco-Lok is a trademark of GKN Viscodrive GmbH. †All other trademarks are the property of their respective owners. *HD8 Convenience package/HD10 shown. BRP reserves the right, at any time, to discontinue or change specifications, prices, designs, features, models or equipment without incurring obligation. Some models depicted may include optional equipment. Read the side-by-side vehicle (SSV) Operator's Guide and watch the Safety DVD before driving. For your safety: wear a helmet, eye protection and other protective gear. Fasten lateral net and seat belt at all times. Always remember that riding and alcohol/drugs don't mix. SSV is for off-road use only. Never ride on paved surfaces or public roads. Operator must be at least 16 years old. Passenger must be at least 12 years old and able to hold handgrips and plant feet while seated against the backrest. Never engage in stunt driving and avoid excessive speed.

can-am BRP

Can-AmOffroad.com

2020 DEFENDER DPS™ HD5

HIGHLIGHTS

PLATFORM FEATURES

- 62-in. wide
- 83-in. wheelbase
- 10.5-in. of ground clearance
- 1,500 lb towing capacity
- Multi-function cargo box with LinQ easy installation accessories
- 12-in. steel wheels
- VERSA-PRO bench seat
- HMWPE central skid plate
- ECO™ / ECO Off / Work modes
- 4.5-in. digital display

SPECIFIC TO DPS HD5 PACKAGE

- Dynamic Power Steering (DPS)
- Visco-Lok‡ QE front differential
- 12-in. cast-aluminum wheels
- Mossy Oak† Break-Up Country Camo† water dipped option

TOUGH

- Heavy-duty Rotax® engine
- Smooth, durable and responsive transmission
- True Can-Am DNA with a strong identity

CAPABLE

- Work or ride with confidence
- Meaningful and versatile functionality
- Easy handling and capabilities

CLEVER

- Advanced comfort and intuitive cockpit with optimized visibility
- Multifunction cargo box with sturdy tailgate and smart storage
- 1-year maintenance free and easy access to key maintenance components

Green / HD5

Mossy Oak Break-Up Country Camo / HD5

ENGINE	HD5
Type	38 hp, Rotax® 427 cc, single cylinder, liquid cooled
Fuel Delivery System	Intelligent Throttle Control (iTC™) with Electronic Fuel Injection (EFI)
Transmission	CVT, P / R / N / H / L, standard engine braking and Electronic Drive Belt Protection
Drive Train	Selectable 2WD / 4WD with Visco-Lok QE auto-locking front differential
Driving Assistance	Electronic Hill Descent Control ECO / ECO Off / Work modes
Power Steering	Dynamic Power Steering (DPS)

SUSPENSIONS

Front Suspension	Double A-arm / 10 in. (25.4 cm) travel
Front Shocks	Twin tube gas charged shocks
Rear Suspension	TTA with external sway bar / 10 in. (25.4 cm) travel
Rear Shocks	Twin tube gas charged shocks

BRAKES

Front	Dual 220 mm ventilated disc brakes with hydraulic twin-piston calipers
Rear	Single 220 mm ventilated disc brake with hydraulic twin-piston calipers

TIRES / WHEELS

Front Tires	Maxxis† M923J† 25 x 8 x 12 in. (63.5 x 20.3 x 30.5 cm)
Rear Tires	Maxxis M924J 25 x 10 x 12 in. (63.5 x 25.4 x 30.5 cm)
Wheels	12-in. (30.5 cm) cast-aluminum

DIMENSIONS / CAPACITIES

L x W x H	121 x 62 x 76 in. (307.1 x 157.5 x 193 cm)
Wheelbase	83 in. (211.5 cm)
Ground Clearance	10.5 in. (26.7 cm)
Estimated Dry Weight	1,322.8 lb (600 kg)
Cage	Profiled cage ROPS approved
Cargo Box Dimensions	38 x 54.5 x 12 in. (96.5 x 138.4 x 30.5 cm)
Cargo Box Capacity	600 lb (272.2 kg)
Tailgate Load Capacity	250 lb (113.4 kg)
Storage Capacity	Total: 10.4 gal (39.5 L) Under dash: 6 gal (22.8 L) Dash: 1.8 gal (6.9 L) Water-resistant and removable toolbox: 1.7 gal (6.3 L) Armrests and cup holders: 0.9 gal (3.5 L)
Towing Capacity	1,500 lb (680 kg)
Payload Capacity	1,200 lb (544 kg)
Fuel Capacity	10.6 gal (40 L)
Person Capacity	3

FEATURES

Gauge	4.5 in. (11.4 cm) wide digital display: Speedometer, tachometer, odometer, trip and hour meters, fuel, gear position, ECO / ECO Off / Work modes, seat belt, diagnostics, clock, battery voltage, engine temperature	Lighting	Four 35-W reflectors ensuring a wide visiblity and LED tail lights
		Winch	N/A
		Seat	VERSA-PRO bench seat with passenger seats flipping up, underside hooks and contoured bench to improve entrance/exit of the cab
Battery	12 V (18 amp/h)	Protection	Integrated front steel bumper, HMWPE central skid plate
Magneto	500 W	Hitch Type	2-in. hitch receiver
Instrumentation	Lighter type DC outlet in console (20-A)	Steering Wheel	Adjustable tilt steering

WARRANTY

Factory	1-year limited warranty
Extended	Up to 30 months B.E.S.T. coverage

BEST PROTECTION ©2019 Bombardier Recreational Products Inc (BRP). All rights reserved. ™, ® and the BRP logo are trademarks of Bombardier Recreational Products Inc. or its affiliates. In the U.S.A., the products are distributed by BRP US Inc. ‡Visco-Lok is a trademark of GKN Viscodrive GmbH. †All other trademarks are the property of their respective owners. BRP reserves the right, at any time, to discontinue or change specifications, prices, designs, features, models or equipment without incurring obligation. Some models depicted may include optional equipment. Read the side-by-side vehicle (SSV) Operator's Guide and watch the Safety DVD before driving. For your safety: wear a helmet, eye protection and other protective gear. Fasten lateral net and seat belt at all times. Always remember that riding and alcohol/drugs don't mix. SSV is for off-road use only. Never ride on paved surfaces or public roads. Operator must be at least 16 years old. Passenger must be at least 12 years old and able to hold handgrips and plant feet while seated against the backrest. Never engage in stunt driving and avoid excessive speed.

can-am

Can-AmOffroad.com

2020 DEFENDER DPS™ HD8

HIGHLIGHTS

PLATFORM FEATURES

- 62-in. wide
- 83-in. wheelbase
- 11-in. of ground clearance
- 2,500 lb towing capacity
- Multi-function cargo box with LinQ easy installation accessories
- 27-in. Maxxis† Bighorn 2.0†
- Rear differential with Turf mode
- VERSA-PRO bench seat
- HMWPE central skid plate
- ECO™ / ECO Off / Work modes
- 4.5-in. digital display

SPECIFIC TO DPS HD8 PACKAGE

- Dynamic Power Steering (DPS)
- Visco-Lok‡ QE front differential
- 14-in. cast-aluminum wheels
- Mossy Oak† Break-Up Country Camo† water dipped option

TOUGH

- Heavy-duty Rotax® engine
- Smooth, durable and responsive transmission
- True Can-Am DNA with a strong identity

CAPABLE

- Work or ride with confidence
- Meaningful and versatile functionality
- Easy handling and capabilities

CLEVER

- Advanced comfort and intuitive cockpit with optimized visibility
- Multifunction cargo box with sturdy tailgate and smart storage
- 1-year maintenance free and easy access to key maintenance components

Green / HD8
Boreal Green / HD8
Mossy Oak Break-Up Country Camo / HD8

ENGINES

ENGINES	HD8
Type	50 hp / 50 lb-ft, Rotax® 799.9 cc, V-twin, liquid cooled
Fuel Delivery System	Intelligent Throttle Control (iTC™) with Electronic Fuel Injection (EFI)
Transmission	PRO-TORQ transmission with Quick Response System (QRS), high airflow ventilation and Electronic Drive Belt Protection Extra-L / H / N / R / P
Drive Train	Selectable Turf Mode / 2WD / 4WD with Visco-Lok QE auto-locking front differential
Driving Assistance	Electronic Hill Descent Control ECO / ECO Off / Work modes
Power Steering	Dynamic Power Steering (DPS)

SUSPENSIONS

Front Suspension	Double A-arm / 10 in. (25.4 cm) travel
Front Shocks	Twin tube gas charged shocks
Rear Suspension	TTA with external sway bar / 10 in. (25.4 cm) travel
Rear Shocks	Twin tube gas charged shocks

BRAKES

Front	Dual 220 mm ventilated disc brakes with hydraulic twin-piston calipers
Rear	Dual 220 mm ventilated disc brakes with hydraulic single-piston calipers

TIRES / WHEELS

Front Tires	Maxxis Bighorn 2.0 27 x 9 x 14 in. (68.6 x 22.9 x 35.6 cm)
Rear Tires	Maxxis Bighorn 2.0 27 x 11 x 14 in. (68.6 x 27.9 x 35.6 cm)
Wheels	14-in. (35.6 cm) cast-aluminum

DIMENSIONS / CAPACITIES

L x W x H	121 x 62 x 76 in. (307.1 x 157.5 x 193 cm)
Wheelbase	83 in. (211.5 cm)
Ground Clearance	11 in. (28 cm)
Estimated Dry Weight	1,521.2 lb (690 kg)
Cage	Profiled cage ROPS approved
Cargo Box Dimensions	38 x 54.5 x 12 in. (96.5 x 138.4 x 30.5 cm)
Cargo Box Capacity	1,000 lb (454 kg) / California only: 600 lb (272.2 kg)
Tailgate Load Capacity	250 lb (113.4 kg)
Storage Capacity	Total: 10.4 gal (39.5 L) Under dash: 6 gal (22.8 L) Dash: 1.8 gal (6.9 L) Water-resistant and removable toolbox: 1.7 gal (6.3 L) Armrests and cup holders: 0.9 gal (3.5 L)
Towing Capacity	2,500 lb (1134 kg)
Payload Capacity	1,500 lb (680 kg)
Fuel Capacity	10.6 gal (40 L)
Person Capacity	3

FEATURES

Gauge	4.5 in. (11.4 cm) wide digital display: Speedometer, tachometer, odometer, trip and hour meters, fuel, gear position, ECO / ECO Off / Work modes, seat belt, diagnostics, clock, battery voltage, engine temperature	Lighting	140 W lighting output from four 35-W reflectors ensuring a wide visiblity and LED tail lights
		Winch	N/A
		Seat	VERSA-PRO bench seat with passenger seats flipping up, underside hooks and contoured bench to improve entrance/exit of the cab
Battery	12 V (18 amp/h)	Protection	Integrated front steel bumper, HMWPE central skid plate
Magneto	650 W	Hitch Type	2-in. hitch receiver
Instrumentation	Lighter type DC outlet in console (20-A)	Steering Wheel	Adjustable tilt steering

WARRANTY

Factory	1-year limited warranty
Extended	Up to 30 months B.E.S.T. coverage

BEST PROTECTION ©2019 Bombardier Recreational Products Inc (BRP). All rights reserved. ™, ® and the BRP logo are trademarks of Bombardier Recreational Products Inc. or its affiliates. In the U.S.A., the products are distributed by BRP US Inc. ‡Visco-Lok is a trademark of GKN Viscodrive GmbH. †All other trademarks are the property of their respective owners. BRP reserves the right, at any time, to discontinue or change specifications, prices, designs, features, models or equipment without incurring obligation. Some models depicted may include optional equipment. Read the side-by-side vehicle (SSV) Operator's Guide and watch the Safety DVD before driving. For your safety: wear a helmet, eye protection and other protective gear. Fasten lateral net and seat belt at all times. Always remember that riding and alcohol/drugs don't mix. SSV is for off-road use only. Never ride on paved surfaces or public roads. Operator must be at least 16 years old. Passenger must be at least 12 years old and able to hold handgrips and plant feet while seated against the backrest. Never engage in stunt driving and avoid excessive speed.

can-am BRP

Can-AmOffroad.com

2020 DEFENDER DPS™ HD10

HIGHLIGHTS

PLATFORM FEATURES

- 83-in. wheelbase
- 13-in. of ground clearance
- ECO™ / ECO Off / Work modes
- 2,500 lb towing capacity
- Multi-function cargo box with LinQ easy installation accessories
- 27-in. Maxxis† Bighorn 2.0†
- Rear differential with Turf mode
- VERSA-PRO bench seat
- HMWPE central skid plate
- 4.5-in. digital display

SPECIFIC TO DPS HD10 PACKAGE

- 64-in. wide with Arched A-arm
- Dynamic Power Steering (DPS)
- Visco-Lok‡ QE front differential
- 14-in. cast-aluminum wheels

TOUGH

- Heavy-duty Rotax® engine
- Smooth, durable and responsive transmission
- True Can-Am DNA with a strong identity

CAPABLE

- Work or ride with confidence
- Meaningful and versatile functionality
- Easy handling and capabilities

CLEVER

- Advanced comfort and intuitive cockpit with optimized visibility
- Multifunction cargo box with sturdy tailgate and smart storage
- 1-year maintenance free and easy access to key maintenance components

Green / HD10
Hyper Silver / HD10

ENGINES

ENGINES	HD10
Type	82 hp / 69 lb-tf, Rotax® 976 cc, V-twin, liquid cooled
Fuel Delivery System	Intelligent Throttle Control (iTC™) with Electronic Fuel Injection (EFI)
Transmission	PRO-TORQ transmission with Quick Response System (QRS), high airflow ventilation and Electronic Drive Belt Protection Extra-L / H / N / R / P
Drive Train	Selectable Turf Mode / 2WD / 4WD with Visco-Lok QE auto-locking front differential
Driving Assistance	Electronic Hill Descent Control ECO / ECO Off / Work modes
Power Steering	Dynamic Power Steering (DPS)

SUSPENSIONS

Front Suspension	Arched double A-arm / 11 in. (27.9 cm) travel
Front Shocks	Twin tube gas charged shocks
Rear Suspension	Arched TTA with external sway bar / 11 in. (27.9 cm) travel
Rear Shocks	Twin tube gas charged shocks

BRAKES

Front	Dual 220 mm ventilated disc brakes with hydraulic twin-piston calipers
Rear	Dual 220 mm ventilated disc brakes with hydraulic single-piston calipers

TIRES / WHEELS

Front Tires	Maxxis Bighorn 2.0 27 x 9 x 14 in. (68.6 x 22.9 x 35.6 cm)
Rear Tires	Maxxis Bighorn 2.0 27 x 11 x 14 in. (68.6 x 27.9 x 35.6 cm)
Wheels	14-in. (35.6 cm) cast-aluminum

DIMENSIONS / CAPACITIES

L x W x H	121 x 64 x 78 in. (307.1 x 162.5 x 198.1 cm)
Wheelbase	83 in. (211.5 cm)
Ground Clearance	13 in. (33 cm)
Estimated Dry Weight	1,536.6 lb (697 kg)
Cage	Profiled cage ROPS approved
Cargo Box Dimensions	38 x 54.5 x 12 in. (96.5 x 138.4 x 30.5 cm)
Cargo Box Capacity	1,000 lb (454 kg) / California only: 600 lb (272.2 kg)
Tailgate Load Capacity	250 lb (113.4 kg)
Storage Capacity	Total: 10.4 gal (39.5 L) Under dash: 6 gal (22.8 L) Dash: 1.8 gal (6.9 L) Water-resistant and removable toolbox: 1.7 gal (6.3 L) Armrests and cup holders: 0.9 gal (3.5 L)
Towing Capacity	2,500 lb (1134 kg)
Payload Capacity	1,500 lb (680 kg)
Fuel Capacity	10.6 gal (40 L)
Person Capacity	3

FEATURES

Gauge	4.5 in. (11.4 cm) wide digital display: Speedometer, tachometer, odometer, trip and hour meters, fuel, gear position, ECO / ECO Off / Work modes, seat belt, diagnostics, clock, battery voltage, engine temperature	Lighting	140 W lighting output from four 35-W reflectors ensuring a wide visiblity and LED tail lights
		Winch	N/A
		Seat	VERSA-PRO bench seat with passenger seats flipping up, underside hooks and contoured bench to improve entrance/exit of the cab
Battery	12 V (18 amp/h)	Protection	Integrated front steel bumper, HMWPE central skid plate
Magneto	650 W	Hitch Type	2-in. hitch receiver
Instrumentation	Lighter type DC outlet in console (20-A)	Steering Wheel	Adjustable tilt steering

WARRANTY

Factory	1-year limited warranty
Extended	Up to 30 months B.E.S.T. coverage

©2019 Bombardier Recreational Products Inc (BRP). All rights reserved. ™, ® and the BRP logo are trademarks of Bombardier Recreational Products Inc. or its affiliates. In the U.S.A., the products are distributed by BRP US Inc. ‡Visco-Lok is a trademark of GKN Viscodrive GmbH. †All other trademarks are the property of their respective owners. BRP reserves the right, at any time, to discontinue or change specifications, prices, designs, features, models or equipment without incurring obligation. Some models depicted may include optional equipment. Read the side-by-side vehicle (SSV) Operator's Guide and watch the Safety DVD before driving. For your safety: wear a helmet, eye protection and other protective gear. Fasten lateral net and seat belt at all times. Always remember that riding and alcohol/drugs don't mix. SSV is for off-road use only. Never ride on paved surfaces or public roads. Operator must be at least 16 years old. Passenger must be at least 12 years old and able to hold handgrips and plant feet while seated against the backrest. Never engage in stunt driving and avoid excessive speed.

Can-AmOffroad.com

2020 DEFENDER XT™ HD8

HIGHLIGHTS

PLATFORM FEATURES

- 62-in. wide
- 83-in. wheelbase
- 11-in. of ground clearance
- Dynamic Power Steering (DPS™)
- ECO™ / ECO Off / Work modes
- 2,500 lb towing capacity
- Multi-function cargo box with LinQ easy installation accessories
- 27-in. Maxxis† Bighorn 2.0†
- Rear differential with Turf mode
- 4.5-in. digital display with keypad

SPECIFIC TO XT HD8 PACKAGE

- Visco-Lok‡ QE front differential
- 14-in. cast-aluminum wheels
- VERSA-PRO bench seat with reinforced XT seat skin and adjustable driver seat
- HMWPE full skid plate
- 4,500-lb (2,014 kg) winch
- XT front bumper
- Full hard roof
- Brake holding mechanism
- Mossy Oak† Break-Up Country Camo† water dipped option

TOUGH

- Heavy-duty Rotax® engine
- Smooth, durable and responsive transmission
- True Can-Am DNA with a strong identity

CAPABLE

- Work or ride with confidence
- Meaningful and versatile functionality
- Easy handling and capabilities

CLEVER

- Advanced comfort and intuitive cockpit with optimized visibility
- Multifunction cargo box with sturdy tailgate and smart storage
- 1-year maintenance free and easy access to key maintenance components

Hyper Silver / HD8
Boreal Green / HD8
Mossy Oak Break-Up Country Camo / HD8

ENGINES

ENGINES	HD8
Type	50 hp / 50 lb-ft, Rotax® 799.9 cc, V-twin, liquid cooled
Fuel Delivery System	Intelligent Throttle Control (iTC™) with Electronic Fuel Injection (EFI)
Transmission	PRO-TORQ transmission with Quick Response System (QRS), high airflow ventilation and Electronic Drive Belt Protection Extra-L / H / N / R / P
Drive Train	Selectable Turf Mode / 2WD / 4WD with Visco-Lok QE auto-locking front differential
Driving Assistance	Electronic Hill Descent Control ECO / ECO Off / Work modes
Power Steering	Dynamic Power Steering (DPS)

SUSPENSIONS

Front Suspension	Double A-arm / 10 in. (25.4 cm) travel
Front Shocks	Twin tube gas charged shocks
Rear Suspension	TTA with external sway bar / 10 in. (25.4 cm) travel
Rear Shocks	Twin tube gas charged shocks

BRAKES

Front	Dual 220 mm ventilated disc brakes with hydraulic twin-piston calipers
Rear	Dual 220 mm ventilated disc brakes with hydraulic single-piston calipers
	Brake holding mechanism

TIRES / WHEELS

Front Tires	Maxxis Bighorn 2.0 27 x 9 x 14 in. (68.6 x 22.9 x 35.6 cm)
Rear Tires	Maxxis Bighorn 2.0 27 x 11 x 14 in. (68.6 x 27.9 x 35.6 cm)
Wheels	14-in. (35.6 cm) cast-aluminum

DIMENSIONS / CAPACITIES

L x W x H	125.7 x 62 x 78 in. (319,4 x 157.5 x 198.1 cm)
Wheelbase	83 in. (211.5 cm)
Ground Clearance	11 in. (28 cm)
Estimated Dry Weight	1,585.1 lb (719 kg)
Cage	Profiled cage ROPS approved
Cargo Box Dimensions	38 x 54.5 x 12 in. (96.5 x 138.4 x 30.5 cm)
Cargo Box Capacity	1,000 lb (454 kg) California only: 600 lb (272.2 kg)
Tailgate Load Capacity	250 lb (113.4 kg)
Storage Capacity	Total: 16.2 gal (61.3 L) Under dash: 6 gal (22.8 L) Waterproof and removable box under passenger seat: 5.6 gal (21 L) Dash: 2 gal (7.7 L) Water-resistant and removable toolbox: 1.7 gal (6.3 L) Armrests and cup holders: 0.9 gal (3.5 L)
Towing Capacity	2,500 lb (1134 kg)
Payload Capacity	1,500 lb (680 kg)
Fuel Capacity	10.6 gal (40 L)
Person Capacity	3

FEATURES

Gauge	4.5 in. (11.4 cm) wide digital display with keypad: Speedometer, tachometer, odometer, trip and hour meters, fuel, gear position, ECO / ECO Off / Work modes, seat belt, diagnostics, clock, battery voltage, engine temperature	Lighting	140 W lighting output from four 35-W reflectors ensuring a wide visiblity and LED tail lights
		Winch	4,500-lb (2,041 kg) winch with roller fairlead
		Seat	VERSA-PRO bench seat with passenger seats flipping up, adjustable driver seat, underside hooks, reinforced XT seat skin and contoured bench to improve entrance/exit of the cab
Battery	12 V (30 amp/h)	Protection	XT front bumper , HMWPE full skid plate, full hard roof
Magneto	650 W	Hitch Type	2-in. hitch receiver
Instrumentation	Lighter type DC outlets in the console (20-A) and two USB port in the dash storage	Steering Wheel	Adjustable tilt steering

WARRANTY

Factory	1-year limited warranty
Extended	Up to 30 months B.E.S.T. coverage

BEST PROTECTION ©2019 Bombardier Recreational Products Inc (BRP). All rights reserved. ™, ® and the BRP logo are trademarks of Bombardier Recreational Products Inc. or its affiliates. In the U.S.A., the products are distributed by BRP US Inc. ‡Visco-Lok is a trademark of GKN Viscodrive GmbH. †All other trademarks are the property of their respective owners. BRP reserves the right, at any time, to discontinue or change specifications, prices, designs, features, models or equipment without incurring obligation. Some models depicted may include optional equipment. Read the side-by-side vehicle (SSV) Operator's Guide and watch the Safety DVD before driving. For your safety: wear a helmet, eye protection and other protective gear. Fasten lateral net and seat belt at all times. Always remember that riding and alcohol/drugs don't mix. SSV is for off-road use only. Never ride on paved surfaces or public roads. Operator must be at least 16 years old. Passenger must be at least 12 years old and able to hold handgrips and plant feet while seated against the backrest. Never engage in stunt driving and avoid excessive speed.

can-am BRP

Can-AmOffroad.com

2020 DEFENDER XT™ HD10

HIGHLIGHTS

PLATFORM FEATURES

- 83-in. wheelbase
- 13-in. of ground clearance
- Dynamic Power Steering (DPS™)
- ECO™ / ECO Off / Work modes
- 2,500 lb towing capacity
- Multi-function cargo box with LinQ easy installation accessories
- 27-in. Maxxis† Bighorn 2.0†
- Rear differential with Turf mode
- 4.5-in. digital display with keypad

SPECIFIC TO XT HD10 PACKAGE

- 64-in. wide with Arched A-arm
- Visco-Lok‡ QE front differential
- 14-in. cast-aluminum wheels
- VERSA-PRO bench seat with reinforced XT seat skin and adjustable driver seat
- HMWPE full skid plate
- 4,500-lb (2,014 kg) winch
- XT front bumper
- Full hard roof
- Brake holding mechanism
- Mossy Oak† Break-Up Country Camo† water dipped option

TOUGH

- Heavy-duty Rotax® engine
- Smooth, durable and responsive transmission
- True Can-Am DNA with a strong identity

CAPABLE

- Work or ride with confidence
- Meaningful and versatile functionality
- Easy handling and capabilities

CLEVER

- Advanced comfort and intuitive cockpit with optimized visibility
- Multifunction cargo box with sturdy tailgate and smart storage
- 1-year maintenance free and easy access to key maintenance components

Hyper Silver / HD10
Boreal Green / HD10
Mossy Oak Break-Up Country Camo / HD10

ENGINES	HD10
Type	82 hp / 69 lb-ft, Rotax® 976 cc, V-twin, liquid cooled
Fuel Delivery System	Intelligent Throttle Control (iTC™) with Electronic Fuel Injection (EFI)
Transmission	PRO-TORQ transmission with Quick Response System (QRS), high airflow ventilation and Electronic Drive Belt Protection Extra-L / H / N / R / P
Drive Train	Selectable Turf Mode / 2WD / 4WD with Visco-Lok QE auto-locking front differential
Driving Assistance	Electronic Hill Descent Control ECO / ECO Off / Work modes
Power Steering	Dynamic Power Steering (DPS)

SUSPENSIONS	
Front Suspension	Arched double A-arm / 11 in. (27.9 cm) travel
Front Shocks	Twin tube gas charged shocks
Rear Suspension	Arched TTA with external sway bar / 11 in. (27.9 cm) travel
Rear Shocks	Twin tube gas charged shocks

BRAKES	
Front	Dual 220 mm ventilated disc brakes with hydraulic twin-piston calipers
Rear	Dual 220 mm ventilated disc brakes with hydraulic single-piston calipers
	Brake holding mechanism

TIRES / WHEELS	
Front Tires	Maxxis Bighorn 2.0 27 x 9 x 14 in. (68.6 x 22.9 x 35.6 cm)
Rear Tires	Maxxis Bighorn 2.0 27 x 11 x 14 in. (68.6 x 27.9 x 35.6 cm)
Wheels	14-in. (35.6 cm) cast-aluminum

DIMENSIONS / CAPACITIES	
L x W x H	125.7 x 64 x 80 in. (319,4 x 162.5 x 203.2cm)
Wheelbase	83 in. (211.5 cm)
Ground Clearance	13 in. (33 cm)
Estimated Dry Weight	1,600.6 lb (726 kg)
Cage	Profiled cage ROPS approved
Cargo Box Dimensions	38 x 54.5 x 12 in. (96.5 x 138.4 x 30.5 cm)
Cargo Box Capacity	1,000 lb (454 kg) / California only: 600 lb (272.2 kg)
Tailgate Load Capacity	250 lb (113.4 kg)
Storage Capacity	Total: 16.2 gal (61.3 L) Under dash: 6 gal (22.8 L) Waterproof and removable box under passenger seat: 5.6 gal (21 L) Dash: 2 gal (7.7 L) Water-resistant and removable toolbox: 1.7 gal (6.3 L) Armrests and cup holders: 0.9 gal (3.5 L)
Towing Capacity	2,500 lb (1134 kg)
Payload Capacity	1,500 lb (680 kg)
Fuel Capacity	10.6 gal (40 L)
Person Capacity	3

FEATURES

Gauge	4.5 in. (11.4 cm) wide digital display with keypad: Speedometer, tachometer, odometer, trip and hour meters, fuel, gear position, ECO / ECO Off / Work modes, seat belt, diagnostics, clock, battery voltage, engine temperature	Lighting	140 W lighting output from four 35-W reflectors ensuring a wide visiblity and LED tail lights
		Winch	4,500-lb (2,041 kg) winch with roller fairlead
		Seat	VERSA-PRO bench seat with passenger seats flipping up, adjustable driver seat, underside hooks, reinforced XT seat skin and contoured bench to improve entrance/exit of the cab
Battery	12 V (30 amp/h)	Protection	XT front bumper , HMWPE full skid plate, full hard roof
Magneto	650 W	Hitch Type	2-in. hitch receiver
Instrumentation	Lighter type DC outlets in the console (20-A) and two USB port in the dash storage	Steering Wheel	Adjustable tilt steering

WARRANTY

Factory	1-year limited warranty
Extended	Up to 30 months B.E.S.T. coverage

©2019 Bombardier Recreational Products Inc (BRP). All rights reserved. ™, ® and the BRP logo are trademarks of Bombardier Recreational Products Inc. or its affiliates. In the U.S.A., the products are distributed by BRP US Inc. ‡Visco-Lok is a trademark of GKN Viscodrive GmbH. †All other trademarks are the property of their respective owners. BRP reserves the right, at any time, to discontinue or change specifications, prices, designs, features, models or equipment without incurring obligation. Some models depicted may include optional equipment. Read the side-by-side vehicle (SSV) Operator's Guide and watch the Safety DVD before driving. For your safety: wear a helmet, eye protection and other protective gear. Fasten lateral net and seat belt at all times. Always remember that riding and alcohol/drugs don't mix. SSV is for off-road use only. Never ride on paved surfaces or public roads. Operator must be at least 16 years old. Passenger must be at least 12 years old and able to hold handgrips and plant feet while seated against the backrest. Never engage in stunt driving and avoid excessive speed.

can-am

Can-AmOffroad.com

2020 DEFENDER XT™ CAB

HIGHLIGHTS

PLATFORM FEATURES

- 83-in. wheelbase
- 12-in. of ground clearance
- Dynamic Power Steering (DPS™)
- ECO™ / ECO Off / Work modes
- 2,500 lb towing capacity
- Multi-function cargo box with LinQ easy installation accessories
- 27-in. Maxxis† Bighorn 2.0†
- Rear differential with Turf mode
- 4.5-in. digital display

SPECIFIC TO XT CAB PACKAGE

- 65-in. wide with Arched A-arm
- Visco-Lok‡ QE front differential
- 14-in. cast-aluminum wheels
- VERSA-PRO bench seat with reinforced XT seat skin and adjustable driver seat
- HMWPE full skid plate
- 4,500-lb winch
- XT front bumper
- Full hard roof with liner and interior dome light
- Full cab enclosure with full glass windshield, wiper/washer kit, full doors with electric windows and rear glass
- Integrated heater kit
- Brake holding mechanism
- Mossy Oak† Break-Up Country Camo† water dipped option (HD10)

TOUGH

- Heavy-duty Rotax® engine
- Smooth, durable and responsive transmission
- True Can-Am DNA with a strong identity

CAPABLE

- Work or ride with confidence
- Meaningful and versatile functionality
- Easy handling and capabilities

CLEVER

- Advanced comfort and intuitive cockpit with optimized visibility
- Multifunction cargo box with sturdy tailgate and smart storage
- 1-year maintenance free and easy access to key maintenance components

Hyper Silver / HD8 / HD10

Mossy Oak Break-Up Country Camo / HD10

ENGINES

ENGINES	HD8	HD10
Type	50 hp / 50 lb-tq , Rotax® 799.9 cc, V-twin, liquid cooled	82 hp / 69 lb-tq, Rotax® 976 cc, V-twin, liquid cooled
Fuel Delivery System	Intelligent Throttle Control (iTC™) with Electronic Fuel Injection (EFI)	
Transmission	PRO-TORQ transmission with Quick Response System (QRS), high airflow ventilation and Electronic Drive Belt Protection Extra-L / H / N / R / P	
Drive Train	Selectable Turf Mode / 2WD / 4WD with Visco-Lok QE auto-locking front differential	
Driving Assistance	Electronic Hill Descent Control ECO / ECO Off / Work modes	
Power Steering	Dynamic Power Steering (DPS)	

SUSPENSIONS

Front Suspension	Arched double A-arm with sway bar / 10 in. (25.4 cm) travel
Front Shocks	Twin tube gas charged shocks
Rear Suspension	Arched TTA with external sway bar / 10 in. (25.4 cm) travel
Rear Shocks	Twin tube gas charged shocks

BRAKES

Front	Dual 220 mm ventilated disc brakes with hydraulic twin-piston calipers
Rear	Dual 220 mm ventilated disc brakes with hydraulic single-piston calipers
	Brake holding mechanism

TIRES / WHEELS

Front Tires	Maxxis Bighorn 2.0 27 x 9 x 14 in. (68.6 x 22.9 x 35.6 cm)
Rear Tires	Maxxis Bighorn 2.0 27 x 11 x 14 in. (68.6 x 27.9 x 35.6 cm)
Wheels	14-in. (35.6 cm) cast-aluminum

DIMENSIONS / CAPACITIES

L x W x H	122.2 x 65 x 79 in. (310.5 x 165.1 x 200.6 cm)
Wheelbase	83 in. (211.5 cm)
Ground Clearance	12 in. (30.5 cm)
Estimated Dry Weight	HD8: 1,863 lb (845 kg) HD10: 1,874 lb (850 kg)
Cage	Profiled cage ROPS approved
Cargo Box Dimensions	38 x 54.5 x 12 in. (96.5 x 138.4 x 30.5 cm)
Cargo Box Capacity	1,000 lb (454 kg) / California only: 600 lb (272.2 kg)
Tailgate Load Capacity	250 lb (113.4 kg)
Storage Capacity	Total: 12.7 gal (48.1 L) Waterproof and removable box under passenger seat: 5.6 gal (21 L) Dash: 2 gal (7.7 L) Water-resistant and removable toolbox: 1.7 gal (6.3 L) Under dash: 1.6 gal (6.1 L) Armrests and cup holders: 0.9 gal (3.5 L) Interior doors: 0.8 gal (3.4 L)
Towing Capacity	2,500 lb (1134 kg)
Payload Capacity	1,200 lb (544 kg)
Fuel Capacity	10.6 gal (40 L)
Person Capacity	3

FEATURES

Gauge	4.5 in. (11.4 cm) wide digital display: Speedometer, tachometer, odometer, trip and hour meters, fuel, gear position, ECO / ECO Off / Work modes, seat belt, diagnostics, clock, battery voltage, engine temperature	Protection	XT front bumper, HMWPE full skid plate, full hard roof with liner and interior dome light, full black doors with electric opening windows, 3-position full glass tilt up windshield with wiper/washer kit, rear glass
Instrumentation	Lighter type DC outlets in the console (20-A) and two USB port in the dash storage	Winch	4,500-lb (2,041 kg) winch with roller fairlead
Battery	12 V (30 amp/h)	Lighting	140 W lighting output from four 35-W reflectors ensuring a wide visiblity and LED tail lights
Magneto	650 W		
Steering Wheel	Adjustable tilt steering	Hitch Type	2-in. hitch receiver

WARRANTY

Factory	1-year limited warranty
Extended	Up to 30 months B.E.S.T. coverage

BEST PROTECTION ©2019 Bombardier Recreational Products Inc (BRP). All rights reserved. ™, ® and the BRP logo are trademarks of Bombardier Recreational Products Inc. or its affiliates. In the U.S.A., the products are distributed by BRP US Inc. ‡Visco-Lok is a trademark of GKN Viscodrive GmbH. †All other trademarks are the property of their respective owners. BRP reserves the right, at any time, to discontinue or change specifications, prices, designs, features, models or equipment without incurring obligation. Some models depicted may include optional equipment. Read the side-by-side vehicle (SSV) Operator's Guide and watch the Safety DVD before driving. For your safety: wear a helmet, eye protection and other protective gear. Fasten lateral net and seat belt at all times. Always remember that riding and alcohol/drugs don't mix. SSV is for off-road use only. Never ride on paved surfaces or public roads. Operator must be at least 16 years old. Passenger must be at least 12 years old and able to hold handgrips and plant feet while seated against the backrest. Never engage in stunt driving and avoid excessive speed.

can-am

Can-AmOffroad.com

2020 DEFENDER MOSSY OAK† EDITION

HIGHLIGHTS

PLATFORM FEATURES

- 83-in. wheelbase
- 13-in. of ground clearance
- Dynamic Power Steering (DPS™)
- ECO™ / ECO Off / Work modes
- 2,500 lb towing capacity
- Multi-function cargo box with LinQ easy installation accessories
- Rear differential with Turf mode
- 4.5 in. digital display

SPECIFIC TO MOSSY OAK HUNTING EDITION PACKAGE

- 65-in. wide with Arched A-arm
- Smart-Lok™* front differential
- 14-in. cast-aluminum wheels. with 28-in. with Maxxis† Bighorn 2.0†
- VERSA-PRO bench seat with reinforced two tone seat skin and adjustable driver seat
- HMWPE full skid plate
- 4,500-lb (2,014 kg) winch
- Heavy-duty front steel bumper
- Full hard roof
- Aluminum rock slider
- Brake holding mechanism

TOUGH

- Heavy-duty Rotax® engine
- Smooth, durable and responsive transmission
- True Can-Am DNA with a strong identity

CAPABLE

- Work or ride with confidence
- Meaningful and versatile functionality
- Easy handling and capabilities

CLEVER

- Advanced comfort and intuitive cockpit with optimized visibility
- Multifunction cargo box with sturdy tailgate and smart storage
- 1-year maintenance free and easy access to key maintenance components

Mossy Oak Break-Up Country Camo† / HD10

ENGINE

ENGINE	HD10
Type	82 hp / 69 lb-ft, Rotax® 976 cc, V-twin, liquid cooled
Fuel Delivery System	Intelligent Throttle Control (iTC™) with Electronic Fuel Injection (EFI)
Transmission	PRO-TORQ transmission with Quick Response System (QRS), high airflow ventilation and Electronic Drive Belt Protection Extra-L / H / N / R / P
Drive Train	Selectable Turf Mode / 2WD / 4WD TRAIL with exclusive Smart-Lok* technology. *Smart-Lok was developed in conjunction with TEAM Industries, a market leader in the drive train industry
Driving Assistance	Electronic Hill Descent Control ECO / ECO Off / Work modes
Power Steering	Dynamic Power Steering (DPS)

SUSPENSIONS

Front Suspension	Arched double A-arm with sway bar / 10 in. (25.4 cm) travel
Front Shocks	Twin tube gas charged shocks
Rear Suspension	Arched TTA with external sway bar / 10 in. (25.4 cm) travel
Rear Shocks	Twin tube gas charged shocks

BRAKES

Front	Dual 220 mm ventilated disc brakes with hydraulic twin-piston calipers
Rear	Dual 220 mm ventilated disc brakes with hydraulic single-piston calipers
	Brake holding mechanism

TIRES / WHEELS

Front Tires	Maxxis Bighorn 2.0 28 x 9 x 14 in. (71.1 x 22.9 x 35.6 cm)
Rear Tires	Maxxis Bighorn 2.0 28 x 11 x 14 in. (71.1 x 27.9 x 35.6 cm)
Wheels	14-in. (35.6 cm) cast-aluminum

DIMENSIONS / CAPACITIES

L x W x H	129.4 x 65 x 80 in. (328.6 x 165.1 x 203.1cm)
Wheelbase	83 in. (211.5 cm)
Ground Clearance	13 in. (33 cm)
Estimated Dry Weight	1,646.9 lb (747 kg)
Cage	Profiled cage ROPS approved
Cargo Box Dimensions	38 x 54.5 x 12 in. (96.5 x 138.4 x 30.5 cm)
Cargo Box Capacity	1,000 lb (454 kg) / California only: 600 lb (272.2 kg)
Tailgate Load Capacity	250 lb (113.4 kg)
Storage Capacity	Total: 16.2 gal (61.3 L) Under dash: 6 gal (22.8 L) Waterproof and removable box under passenger seat: 5.6 gal (21 L) Dash: 2 gal (7.7 L) Water-resistant and removable toolbox: 1.7 gal (6.3 L) Armrests and cup holders: 0.9 gal (3.5 L)
Towing Capacity	2,500 lb (1134 kg)
Payload Capacity	1,500 lb (680 kg)
Fuel Capacity	10.6 gal (40 L)
Person Capacity	3

FEATURES

Gauge	4.5 in. (11.4 cm) wide digital display: Speedometer, tachometer, odometer, trip and hour meters, fuel, gear position, ECO / ECO Off / Work modes, seat belt, diagnostics, clock, battery voltage, engine temperature	Seat	VERSA-PRO bench seat with passenger seats flipping up, adjustable driver seat, underside hooks, reinforced vinyl with two-tones stitching and contoured bench to improve entrance/exit of the cab
Battery	12 V (30 amp/h)	Hitch Type	2-in. hitch receiver
Magneto	650 W	Steering Wheel	Adjustable tilt steering
Instrumentation	Lighter type DC outlets in the console (20-A) and two lighted USB port in the dash storage	Protection	Heavy-duty front steel bumper, HMWPE full skid plate, aluminum rock sliders, full hard roof
Lighting	140 W lighting output from four 35-W reflectors ensuring a wide visiblity and LED tail lights	Winch	4,500-lb (2,041 kg) winch with synthetic rope and roller fairlead

WARRANTY

Factory	1-year limited warranty
Extended	Up to 30 months B.E.S.T. coverage

©2019 Bombardier Recreational Products Inc (BRP). All rights reserved. ™, ® and the BRP logo are trademarks of Bombardier Recreational Products Inc. or its affiliates. In the U.S.A., the products are distributed by BRP US Inc. †Visco-Lok is a trademark of GKN Viscodrive GmbH. †All other trademarks are the property of their respective owners. BRP reserves the right, at any time, to discontinue or change specifications, prices, designs, features, models or equipment without incurring obligation. Some models depicted may include optional equipment. Read the side-by-side vehicle (SSV) Operator's Guide and watch the Safety DVD before driving. For your safety: wear a helmet, eye protection and other protective gear. Fasten lateral net and seat belt at all times. Always remember that riding and alcohol/drugs don't mix. SSV is for off-road use only. Never ride on paved surfaces or public roads. Operator must be at least 16 years old. Passenger must be at least 12 years old and able to hold handgrips and plant feet while seated against the backrest. Never engage in stunt driving and avoid excessive speed.

Can-AmOffroad.com

2020 DEFENDER XT-P™

HIGHLIGHTS

PLATFORM FEATURES

- 83-in. wheelbase
- 13-in. of ground clearance
- Dynamic Power Steering (DPS™)
- ECO™ / ECO Off / Work modes
- 2,500 lb towing capacity
- Multi-function cargo box with LinQ easy installation accessories
- Rear differential with Turf mode

SPECIFIC TO XT-P PACKAGE

- 64-in. wide with Arched A-arm
- Visco-Lok‡ QE front differential
- 14-in. cast-aluminum wheels
- VERSA-PRO bench seat with reinforced bolster seat and adjustable driver seat
- HMWPE full skid plate
- 4,500-lb (2,014 kg) winch
- Heavy-duty front steel bumper
- Full hard roof
- Aluminum rock slider
- 7.6 in. digital display with keypad
- Brake holding mechanism

TOUGH

- Heavy-duty Rotax® engine
- Smooth, durable and responsive transmission
- True Can-Am DNA with a strong identity

CAPABLE

- Work or ride with confidence
- Meaningful and versatile functionality
- Easy handling and capabilities

CLEVER

- Advanced comfort and intuitive cockpit with optimized visibility
- Multifunction cargo box with sturdy tailgate and smart storage
- 1-year maintenance free and easy access to key maintenance components

Carbon Black & Platinum Satin / HD10

ENGINE

ENGINE	HD10
Type	82 hp / 69 lb-ft, Rotax® 976 cc, V-twin, liquid cooled
Fuel Delivery System	Intelligent Throttle Control (iTC™) with Electronic Fuel Injection (EFI)
Transmission	PRO-TORQ Transmission with Quick Response System (QRS), high airflow ventilation and Electronic Drive Belt Protection Extra-L / H / N / R / P
Drive Train	Selectable Turf Mode / 2WD / 4WD with Visco-Lok QE auto-locking front differential
Driving Assistance	Electronic Hill Descent Control ECO / ECO Off / Work modes
Power Steering	Dynamic Power Steering (DPS)

SUSPENSIONS

Front Suspension	Arched double A-arm / 11 in. (27.9 cm) travel
Front Shocks	Twin tube gas charged shocks
Rear Suspension	Arched TTA with external sway bar / 11 in. (27.9 cm) travel
Rear Shocks	Twin tube gas charged shocks

BRAKES

Front	Dual 220 mm ventilated disc brakes with hydraulic twin-piston calipers
Rear	Dual 220 mm ventilated disc brakes with hydraulic single-piston calipers
	Brake holding mechanism

TIRES / WHEELS

Front Tires	Maxxis† Bighorn 2.0† 27 x 9 x 14 in. (68.6 x 22.9 x 35.6 cm)
Rear Tires	Maxxis Bighorn 2.0 27 x 11 x 14 in. (68.6 x 27.9 x 35.6 cm)
Wheels	14-in. (35.6 cm) cast-aluminum

DIMENSIONS / CAPACITIES

L x W x H	125.8 x 64 x 80 in. (319.5 x 162.5 x 203.2 cm)
Wheelbase	83 in. (211.5 cm)
Ground Clearance	13 in. (33 cm)
Estimated Dry Weight	1,613.8 lb (732 kg)
Cage	Profiled cage ROPS approved
Cargo Box Dimensions	38 x 54.5 x 12 in. (96.5 x 138.4 x 30.5 cm)
Cargo Box Capacity	1,000 lb (454 kg) California only: 600 lb (272.2 kg)
Tailgate Load Capacity	250 lb (113.4 kg)
Storage Capacity	Total: 16.2 gal (61.3 L) Under dash: 6 gal (22.8 L) Waterproof and removable box under passenger seat: 5.6 gal (21 L) Dash: 2 gal (7.7 L) Water-resistant and removable toolbox: 1.7 gal (6.3 L) Armrests and cup holders: 0.9 gal (3.5 L)
Towing Capacity	2,500 lb (1134 kg)
Payload Capacity	1,500 lb (680 kg)
Fuel Capacity	10.6 gal (40 L)
Person Capacity	3

FEATURES

Gauge	7.6 in. (19.3 cm) wide digital display with keypad: Speedometer, tachometer, odometer, trip and hour meters, fuel, gear position, ECO / ECO Off / Work modes, seat belt, diagnostics, clock, battery voltage, engine temperature
Battery	12 V (30 amp/h)
Magneto	650 W
Instrumentation	Lighter type DC outlets in the console (20-A) and two USB port in the dash storage
Winch	4,500-lb (2,041 kg) winch with roller fairlead
Lighting	140 W lighting output from four 35-W reflectors ensuring a wide visiblity and LED tail lights
Seat	VERSA-PRO bench seat with bolster seats for additional lateral support, passenger seats flipping up, adjustable driver seat, underside hooks, reinforced seat skin and contoured bench to improve entrance/exit of the cab
Protection	Heavy-duty front steel bumper, HMWPE full skid plate, aluminum rock sliders, full hard roof
Hitch Type	2-in. hitch receiver
Steering Wheel	Adjustable tilt steering

WARRANTY

Factory	1-year limited warranty
Extended	Up to 30 months B.E.S.T. coverage

BEST PROTECTION ©2019 Bombardier Recreational Products Inc (BRP). All rights reserved. ™, ® and the BRP logo are trademarks of Bombardier Recreational Products Inc. or its affiliates. In the U.S.A., the products are distributed by BRP US Inc. ‡Visco-Lok is a trademark of GKN Viscodrive GmbH. †All other trademarks are the property of their respective owners. BRP reserves the right, at any time, to discontinue or change specifications, prices, designs, features, models or equipment without incurring obligation. Some models depicted may include optional equipment. Read the side-by-side vehicle (SSV) Operator's Guide and watch the Safety DVD before driving. For your safety: wear a helmet, eye protection and other protective gear. Fasten lateral net and seat belt at all times. Always remember that riding and alcohol/drugs don't mix. SSV is for off-road use only. Never ride on paved surfaces or public roads. Operator must be at least 16 years old. Passenger must be at least 12 years old and able to hold handgrips and plant feet while seated against the backrest. Never engage in stunt driving and avoid excessive speed.

can-am BRP

Can-AmOffroad.com

2020 DEFENDER X™ mr

HIGHLIGHTS

PLATFORM FEATURES

- 83-in. wheelbase
- 15-in. of ground clearance
- Dynamic Power Steering (DPS™)
- ECO™ / ECO Off / Work modes
- 2,500 lb towing capacity
- Multi-function cargo box with LinQ easy installation accessories
- Rear differential with Turf mode

SPECIFIC TO X mr PACKAGE

- 64-in. wide with Arched A-arm
- Smart-Lok front differential™**
- Strategically positioned engine air intake and CVT inlet / outlet
- 14-in. cast-aluminum wheels
- VERSA-PRO bench seat with bolster seats, reinforced seat skin featuring X package trims and adjustable driver seat
- HMWPE full skid plate
- 4,500-lb (2,014 kg) winch
- Heavy-duty front steel bumper
- Aluminum rock slider
- 7.6 in. digital display with keypad
- Brake holding mechanism
- Mossy Oak† Break-Up Country Camo† water dipped option

TOUGH

- Heavy-duty Rotax® engine
- Smooth, durable and responsive transmission
- True Can-Am DNA with a strong identity

CAPABLE

- Work or ride with confidence
- Meaningful and versatile functionality
- Easy handling and capabilities

CLEVER

- Advanced comfort and intuitive cockpit with optimized visibility
- Multifunction cargo box with sturdy tailgate and smart storage
- 1-year maintenance free and easy access to key maintenance components

Iron Gray & Manta Green / HD10
Mossy Oak Break-Up Country Camo / HD10

SMART LOK TECHNOLOGY

ENGINE	HD10
Type	82 hp / 67 lb-ft, Rotax® 976 cc, V-twin, liquid cooled with strategically positioned engine air intake
Fuel Delivery System	Intelligent Throttle Control (iTC™) with Electronic Fuel Injection (EFI)
Transmission	PRO-TORQ Transmission with Quick Response System (QRS), Electronic Drive Belt Protection, lower gearing ratio and high airflow ventilation with strategically positioned CVT air intake and exhaust Extra-L / H / N / R / P
Drive Train	Selectable Turf Mode / 2WD / 4WD TRAIL / 4WD MUD with exclusive Smart-Lok** technology. **Smart-Lok was developed in conjunction with TEAM Industries, a market leader in the drive train industry
Driving Assistance	Electronic Hill Descent Control ECO / ECO Off / Work modes
Power Steering	Dynamic Power Steering (DPS)
SUSPENSIONS	
Front Suspension	Arched double A-arm with sway bar / 10 in. (25.4 cm) travel
Front Shocks	Twin tube gas charged shocks
Rear Suspension	Arched TTA with external sway bar / 10 in. (25.4 cm) travel
Rear Shocks	Twin tube gas charged shocks
BRAKE HOLDING MECHANISM	
Front	Dual 220 mm ventilated disc brakes with hydraulic twin-piston calipers
Rear	Dual 220 mm ventilated disc brakes with hydraulic single-piston calipers
TIRES / WHEELS	
Front Tires	ITP†* Cryptid† 30 x 9 x 14 in. (76.2 x 22.9 x 35.6 cm)
Rear Tires	ITP* Cryptid 30 x 11 x 14 in. (76.2 x 27.9 x 35.6 cm)
Wheels	14-in. (35.6 cm) cast-aluminum

DIMENSIONS / CAPACITIES

L x W x H	129.4 x 64 x 82 in. (328.6 x 162.5 x 208.3 cm)
Wheelbase	83 in. (211.5 cm)
Ground Clearance	15 in. (38.1 cm)
Estimated Dry Weight	1,697.6 lb (770 kg)
Cage	Profiled cage ROPS approved
Cargo Box Dimensions	38 x 54.5 x 12 in. (96.5 x 138.4 x 30.5 cm)
Cargo Box Capacity	1,000 lb (454 kg) / California only: 600 lb (272.2 kg)
Tailgate Load Capacity	250 lb (113.4 kg)
Storage Capacity	Total: 16.2 gal (61.3 L) Under dash: 6 gal (22.8 L) Waterproof and removable box under passenger seat: 5.6 gal (21 L) Dash: 2 gal (7.7 L) Water-resistant and removable toolbox: 1.7 gal (6.3 L) Armrests and cup holders: 0.9 gal (3.5 L)
Towing Capacity	2,500 lb (1134 kg)
Payload Capacity	1,500 lb (680 kg)
Fuel Capacity	10.6 gal (40 L)
Person Capacity	3

FEATURES

Gauge	7.6 in. (19.3 cm) wide digital display with keypad: Speedometer, tachometer, odometer, trip and hour meters, fuel, gear position, ECO / ECO Off / Work modes, seat belt, diagnostics, clock, battery voltage, engine temperature	Seat	VERSA-PRO bench seat with bolster seats for additional lateral support, passenger seats flipping up, adjustable driver seat, underside hooks, reinforced seat skin featuring X package trims and contoured bench to improve entrance / exit of the cab
Lighting	140 W lighting output from four 35-W reflectors ensuring a wide visiblity and LED tail lights	Winch	Relocated 4,500-lb (2,041 kg) winch with synthetic rope and aluminum fairlead
Instrumentation	Two lighter type DC outlets, one in the console (20-A) and one in the under dash storage (20-A)	Protection	Heavy-duty front steel bumper, HMWPE full skid plate, aluminum rock sliders, mudguards
Magneto	650 W	Hitch Type	2-in. hitch receiver
Battery	12 V (30 amp/h)	Steering Wheel	Adjustable tilt steering

WARRANTY

Factory	1-year limited warranty
Extended	Up to 30 months B.E.S.T. coverage

BEST PROTECTION

©2019 Bombardier Recreational Products Inc (BRP). All rights reserved. ™, ® and the BRP logo are trademarks of Bombardier Recreational Products Inc. or its affiliates. In the U.S.A., the products are distributed by BRP US Inc. †All other trademarks are the property of their respective owners. BRP reserves the right, at any time, to discontinue or change specifications, prices, designs, features, models or equipment without incurring obligation.
Some models depicted may include optional equipment. Read the side-by-side vehicle (SSV) Operator's Guide and watch the Safety DVD before driving. For your safety: wear a helmet, eye protection and other protective gear. Fasten lateral net and seat belt at all times. Always remember that riding and alcohol/drugs don't mix. SSV is for off-road use only. Never ride on paved surfaces or public roads. Operator must be at least 16 years old. Passenger must be at least 12 years old and able to hold handgrips and plant feet while seated against the backrest. Never engage in stunt driving and avoid excessive speed. * Vehicles featuring 30" ITP Cryptid tires are limited to 62 mph (100 km/h).

can-am BRP

Can-AmOffroad.com

2020 DEFENDER MAX

HIGHLIGHTS

PLATFORM FEATURES

- 64-in. wide
- 115.5-in. wheelbase
- 11-in. of ground clearance
- 2,500 lb towing capacity
- Multi-function cargo box with LinQ easy installation accessories
- 14-in. cast-aluminum wheels with 27-in. Maxxis† Bighorn 2.0†
- Rear differential with Turf mode
- VERSA-PRO bench seat
- HMWPE central skid plate
- ECO™ / ECO Off / Work modes
- 4.5-in. digital display

TOUGH

- Heavy-duty Rotax® engine
- Smooth, durable and responsive transmission
- True Can-Am DNA with a strong identity

CAPABLE

- Work or ride with confidence
- Meaningful and versatile functionality
- Easy handling and capabilities

CLEVER

- Advanced comfort and intuitive cockpit with optimized visibility
- Multifunction cargo box with sturdy tailgate and smart storage
- 1-year maintenance free and easy access to key maintenance components

Green / HD8

ENGINE

ENGINE	HD8
Type	50 hp / 50 lb-ft, Rotax® 799.9 cc, V-twin, liquid cooled
Fuel Delivery System	Intelligent Throttle Control (iTC™) with Electronic Fuel Injection (EFI)
Transmission	PRO-TORQ transmission with Quick Response System (QRS), high airflow ventilation and Electronic Drive Belt Protection Extra-L / H / N / R / P
Drive Train	Selectable Turf Mode / 2WD / 4WD with Visco-Lok‡ auto-locking front differential
Driving Assistance	Electronic Hill Descent Control ECO / ECO Off / Work modes
Power Steering	N/A

SUSPENSIONS

Front Suspension	Double A-arm / 10 in. (25.4 cm) travel
Front Shocks	Twin tube gas charged shocks
Rear Suspension	TTA with external sway bar / 10 in. (25.4 cm) travel
Rear Shocks	Twin tube gas charged shocks

BRAKES

Front	Dual 220 mm ventilated disc brakes with hydraulic twin-piston calipers
Rear	Dual 220 mm ventilated disc brakes with hydraulic twin-piston calipers

TIRES / WHEELS

Front Tires	Maxxis Bighorn 2.0 27 x 9 x 14 in. (68.6 x 22.9 x 35.6 cm)
Rear Tires	Maxxis Bighorn 2.0 27 x 11 x 14 in. (68.6 x 27.9 x 35.6 cm)
Wheels	14-in. (35.6 cm) cast-aluminum

DIMENSIONS / CAPACITIES

L x W x H	153.4 x 63.5 x 76 in. (389.6 x 161.2 x x 193 cm)
Wheelbase	115.5 in. (294 cm)
Ground Clearance	11 in. (28 cm)
Estimated Dry Weight	1,715.2 lb (778 kg)
Cage	Profiled cage ROPS approved
Cargo Box Dimensions	38 x 54.5 x 12 in. (96.5 x 138.4 x 30.5 cm)
Cargo Box Capacity	1,000 lb (454 kg) / California only: 600 lb (272.2 kg)
Tailgate Load Capacity	250 lb (113.4 kg)
Storage Capacity	Total: 3.1 gal (11.7 L) Under dash: 0.4 gal (1.3 L) Dash: 1.8 gal (6.9 L) Armrests and cup holders: 0.9 gal (3.5 L)
Towing Capacity	2,500 lb (1134 kg)
Payload Capacity	1,750 lb (793.8 kg)
Fuel Capacity	10.6 gal (40 L)
Person Capacity	6

FEATURES

Gauge	4.5 in. (11.4 cm) wide digital display: Speedometer, tachometer, odometer, trip and hour meters, fuel, gear position, ECO / ECO Off / Work modes, seat belt, diagnostics, clock, battery voltage, engine temperature	Lighting	140 W lighting output from four 35-W reflectors ensuring a wide visiblity and LED tail lights
		Winch	N/A
		Seat	Dual VERSA-PRO bench seats with passenger seats flipping up, underside hooks and contoured bench to improve entrance/exit of the cab
Battery	12 V (18 amp/h)	Protection	Integrated front steel bumper, HMWPE central skid plate
Magneto	650 W	Hitch Type	2-in. hitch receiver
Instrumentation	Lighter type DC outlet in console (20-A)	Steering Wheel	Adjustable tilt steering

WARRANTY

Factory	1-year limited warranty
Extended	Up to 30 months B.E.S.T. coverage

BEST PROTECTION ©2019 Bombardier Recreational Products Inc (BRP). All rights reserved. ™, ® and the BRP logo are trademarks of Bombardier Recreational Products Inc. or its affiliates. In the U.S.A., the products are distributed by BRP US Inc. ‡Visco-Lok is a trademark of GKN Viscodrive GmbH. †All other trademarks are the property of their respective owners. BRP reserves the right, at any time, to discontinue or change specifications, prices, designs, features, models or equipment without incurring obligation. Some models depicted may include optional equipment. Read the side-by-side vehicle (SSV) Operator's Guide and watch the Safety DVD before driving. For your safety: wear a helmet, eye protection and other protective gear. Fasten lateral net and seat belt at all times. Always remember that riding and alcohol/drugs don't mix. SSV is for off-road use only. Never ride on paved surfaces or public roads. Operator must be at least 16 years old. Passenger must be at least 12 years old and able to hold handgrips and plant feet while seated against the backrest. Never engage in stunt driving and avoid excessive speed.

can-am

Can-AmOffroad.com

2020 DEFENDER MAX DPS™ HD8

HIGHLIGHTS

PLATFORM FEATURES

- 64-in. wide
- 115.5-in. wheelbase
- 11-in. of ground clearance
- 2,500 lb towing capacity
- Multi-function cargo box with LinQ easy installation accessories
- 27-in. Maxxis† Bighorn 2.0†
- Rear differential with Turf mode
- VERSA-PRO bench seat
- HMWPE central skid plate
- 4.5-in. digital display

SPECIFIC TO DPS HD8 PACKAGE

- Dynamic Power Steering (DPS)
- Visco-Lok‡ QE front differential
- 14-in. cast-aluminum wheels
- Mossy Oak† Break-Up Country Camo† water dipped option

TOUGH

- Heavy-duty Rotax® engine
- Smooth, durable and responsive transmission
- True Can-Am DNA with a strong identity

CAPABLE

- Work or ride with confidence
- Meaningful and versatile functionality
- Easy handling and capabilities

CLEVER

- Advanced comfort and intuitive cockpit with optimized visibility
- Multifunction cargo box with sturdy tailgate and smart storage
- 1-year maintenance free and easy access to key maintenance components

Green / HD8
Boreal Green / HD8
Mossy Oak Break-Up Country Camo / HD8

ENGINES

ENGINES	HD8
Type	50 hp / 50 lb-ft, Rotax® 799.9 cc, V-twin, liquid cooled
Fuel Delivery System	Intelligent Throttle Control (iTC™) with Electronic Fuel Injection (EFI)
Transmission	PRO-TORQ transmission with Quick Response System (QRS), high airflow ventilation and Electronic Drive Belt Protection Extra-L / H / N / R / P
Drive Train	Selectable Turf Mode / 2WD / 4WD with Visco-Lok QE auto-locking front differential
Driving Assistance	Electronic Hill Descent Control ECO™ / ECO Off / Work modes
Power Steering	Dynamic Power Steering (DPS)

SUSPENSIONS

Front Suspension	Double A-arm / 10 in. (25.4 cm) travel
Front Shocks	Twin tube gas charged shocks
Rear Suspension	TTA with external sway bar / 10 in. (25.4 cm) travel
Rear Shocks	Twin tube gas charged shocks

BRAKES

Front	Dual 220 mm ventilated disc brakes with hydraulic twin-piston calipers
Rear	Dual 220 mm ventilated disc brakes with hydraulic twin-piston calipers

TIRES / WHEELS

Front Tires	Maxxis Bighorn 2.0 27 x 9 x 14 in. (68.6 x 22.9 x 35.6 cm)
Rear Tires	Maxxis Bighorn 2.0 27 x 11 x 14 in. (68.6 x 27.9 x 35.6 cm)
Wheels	14-in. (35.6 cm) cast-aluminum

DIMENSIONS / CAPACITIES

L x W x H	153.4 x 63.5 x 76 in. 389.6 x 161.2 x x 193 cm)
Wheelbase	115.5 in. (294 cm)
Ground Clearance	11 in. (28 cm)
Estimated Dry Weight	1,750.5 lb (794 kg)
Cage	Profiled cage ROPS approved
Cargo Box Dimensions	38 x 54.5 x 12 in. (96.5 x 138.4 x 30.5 cm)
Cargo Box Capacity	1,000 lb (454 kg) / California only: 600 lb (272.2 kg)
Tailgate Load Capacity	250 lb (113.4 kg)
Storage Capacity	Total: 11.1 gal (42.1 L) Under dash: 6 gal (22.8 L) Dash: 1.8 gal (6.9 L) Water-resistant and removable toolbox: 1.7 gal (6.3 L) Armrests and cup holders: 1.6 gal (6.1 L)
Towing Capacity	2,500 lb (1134 kg)
Payload Capacity	1,750 lb (793.8 kg)
Fuel Capacity	10.6 gal (40 L)
Person Capacity	6

FEATURES

Gauge	4.5 in. (11.4 cm) wide digital display: Speedometer, tachometer, odometer, trip and hour meters, fuel, gear position, ECO / ECO Off / Work modes, seat belt, diagnostics, clock, battery voltage, engine temperature
Battery	12 V (18 amp/h)
Magneto	650 W
Instrumentation	Lighter type DC outlet in console (20-A)
Lighting	140 W lighting output from four 35-W reflectors ensuring a wide visiblity and LED tail lights
Winch	N/A
Seat	Dual VERSA-PRO bench seats with passenger seats flipping up, underside hooks and contoured bench to improve entrance/exit of the cab
Protection	Integrated front steel bumper, HMWPE central skid plate
Hitch Type	2-in. hitch receiver
Steering Wheel	Adjustable tilt steering

WARRANTY

Factory	1-year limited warranty
Extended	Up to 30 months B.E.S.T. coverage

©2019 Bombardier Recreational Products Inc (BRP). All rights reserved. ™, ® and the BRP logo are trademarks of Bombardier Recreational Products Inc. or its affiliates. In the U.S.A., the products are distributed by BRP US Inc. ‡Visco-Lok is a trademark of GKN Viscodrive GmbH. †All other trademarks are the property of their respective owners. BRP reserves the right, at any time, to discontinue or change specifications, prices, designs, features, models or equipment without incurring obligation. Some models depicted may include optional equipment. Read the side-by-side vehicle (SSV) Operator's Guide and watch the Safety DVD before driving. For your safety: wear a helmet, eye protection and other protective gear. Fasten lateral net and seat belt at all times. Always remember that riding and alcohol/drugs don't mix. SSV is for off-road use only. Never ride on paved surfaces or public roads. Operator must be at least 16 years old. Passenger must be at least 12 years old and able to hold handgrips and plant feet while seated against the backrest. Never engage in stunt driving and avoid excessive speed.

Can-AmOffroad.com

2020 DEFENDER MAX DPS™ HD10

HIGHLIGHTS

PLATFORM FEATURES

- 115.5-in. wheelbase
- 13-in. of ground clearance
- 2,500 lb towing capacity
- Multi-function cargo box with LinQ easy installation accessories
- 27-in. Maxxis† Bighorn 2.0†
- Rear differential with Turf mode
- VERSA-PRO bench seat
- HMWPE central skid plate
- 4.5-in. digital display

SPECIFIC TO DPS HD10 PACKAGE

- 64-in. wide with Arched A-arm
- Dynamic Power Steering (DPS)
- Visco-Lok‡ QE front differential
- 14-in. cast-aluminum wheels

TOUGH

- Heavy-duty Rotax® engine
- Smooth, durable and responsive transmission
- True Can-Am DNA with a strong identity

CAPABLE

- Work or ride with confidence
- Meaningful and versatile functionality
- Easy handling and capabilities

CLEVER

- Advanced comfort and intuitive cockpit with optimized visibility
- Multifunction cargo box with sturdy tailgate and smart storage
- 1-year maintenance free and easy access to key maintenance components

Hyper Silver / HD10

ENGINES

ENGINES	HD10
Type	82 hp / 69 lb-ft, Rotax® 976 cc, V-twin, liquid cooled
Fuel Delivery System	Intelligent Throttle Control (iTC™) with Electronic Fuel Injection (EFI)
Transmission	PRO-TORQ transmission with Quick Response System (QRS), high airflow ventilation and Electronic Drive Belt Protection Extra-L / H / N / R / P
Drive Train	Selectable Turf Mode / 2WD / 4WD with Visco-Lok QE auto-locking front differential
Driving Assistance	Electronic Hill Descent Control ECO™ / ECO Off / Work modes
Power Steering	Dynamic Power Steering (DPS)

SUSPENSIONS

Front Suspension	Arched double A-arm / 11 in. (27.9 cm) travel
Front Shocks	Twin tube gas charged shocks
Rear Suspension	Arched TTA with external sway bar / 11 in. (27.9 cm) travel
Rear Shocks	Twin tube gas charged shocks

BRAKES

Front	Dual 220 mm ventilated disc brakes with hydraulic twin-piston calipers
Rear	Dual 220 mm ventilated disc brakes with hydraulic twin-piston calipers

TIRES / WHEELS

Front Tires	Maxxis Bighorn 2.0 27 x 9 x 14 in. (68.6 x 22.9 x 35.6 cm)
Rear Tires	Maxxis Bighorn 2.0 27 x 11 x 14 in. (68.6 x 27.9 x 35.6 cm)
Wheels	14-in. (35.6 cm) cast-aluminum

DIMENSIONS / CAPACITIES

L x W x H	153.4 x 64 x 77.5 in. (389.6 x 162.5 x 196.9 cm)
Wheelbase	115.5 in. (294 cm)
Ground Clearance	13 in. (33 cm)
Estimated Dry Weight	1,771.2 lb (803.4 kg)
Cage	Profiled cage ROPS approved
Cargo Box Dimensions	38 x 54.5 x 12 in. (96.5 x 138.4 x 30.5 cm)
Cargo Box Capacity	1,000 lb (454 kg) / California only: 600 lb (272.2 kg)
Tailgate Load Capacity	250 lb (113.4 kg)
Storage Capacity	Total: 11.1 gal (42.1 L) Under dash: 6 gal (22.8 L) Dash: 1.8 gal (6.9 L) Water-resistant and removable toolbox: 1.7 gal (6.3 L) Armrests and cup holders: 1.6 gal (6.1 L)
Towing Capacity	2,500 lb (1134 kg)
Payload Capacity	1,750 lb (793.8 kg)
Fuel Capacity	10.6 gal (40 L)
Person Capacity	6

FEATURES

Gauge	4.5 in. (11.4 cm) wide digital display: Speedometer, tachometer, odometer, trip and hour meters, fuel, gear position, ECO / ECO Off / Work modes, seat belt, diagnostics, clock, battery voltage, engine temperature
Battery	12 V (18 amp/h)
Magneto	650 W
Instrumentation	Lighter type DC outlet in console (20-A)
Lighting	140 W lighting output from four 35-W reflectors ensuring a wide visiblity and LED tail lights
Winch	N/A
Seat	Dual VERSA-PRO bench seats with passenger seats flipping up, underside hooks and contoured bench to improve entrance/exit of the cab
Protection	Integrated front steel bumper, HMWPE central skid plate
Hitch Type	2-in. hitch receiver
Steering Wheel	Adjustable tilt steering

WARRANTY

Factory	1-year limited warranty
Extended	Up to 30 months B.E.S.T. coverage

BEST PROTECTION ©2019 Bombardier Recreational Products Inc (BRP). All rights reserved. ™, ® and the BRP logo are trademarks of Bombardier Recreational Products Inc. or its affiliates. In the U.S.A., the products are distributed by BRP US Inc. ‡Visco-Lok is a trademark of GKN Viscodrive GmbH. †All other trademarks are the property of their respective owners. BRP reserves the right, at any time, to discontinue or change specifications, prices, designs, features, models or equipment without incurring obligation. Some models depicted may include optional equipment. Read the side-by-side vehicle (SSV) Operator's Guide and watch the Safety DVD before driving. For your safety: wear a helmet, eye protection and other protective gear. Fasten lateral net and seat belt at all times. Always remember that riding and alcohol/drugs don't mix. SSV is for off-road use only. Never ride on paved surfaces or public roads. Operator must be at least 16 years old. Passenger must be at least 12 years old and able to hold handgrips and plant feet while seated against the backrest. Never engage in stunt driving and avoid excessive speed.

can-am

Can-AmOffroad.com

2020 DEFENDER MAX XT™ HD8

HIGHLIGHTS

PLATFORM FEATURES

- 64-in. wide
- 115.5-in. wheelbase
- 11-in. of ground clearance
- Dynamic Power Steering (DPS™)
- 2,500 lb towing capacity
- Multi-function cargo box with LinQ easy installation accessories
- 27-in. Maxxis† Bighorn 2.0†
- Rear differential with Turf mode
- 4.5-in. digital display

SPECIFIC TO XT HD8 PACKAGE

- Visco-Lok‡ QE front differential
- 14-in. cast-aluminum wheels
- VERSA-PRO bench seat with reinforced XT seat skin and adjustable driver seat
- HMWPE full skid plate
- 4,500-lb (2,014 kg) winch
- XT front bumper
- Full hard roof
- Brake holding mechanism
- Mossy Oak† Break-Up Country Camo† water dipped option

TOUGH

- Heavy-duty Rotax® engine
- Smooth, durable and responsive transmission
- True Can-Am DNA with a strong identity

CAPABLE

- Work or ride with confidence
- Meaningful and versatile functionality
- Easy handling and capabilities

CLEVER

- Advanced comfort and intuitive cockpit with optimized visibility
- Multifunction cargo box with sturdy tailgate and smart storage
- 1-year maintenance free and easy access to key maintenance components

Hyper Silver / HD8

Mossy Oak Break-Up Country Camo / HD8

ENGINES

ENGINES	HD8
Type	50 hp / 50 lb-ft, Rotax® 799.9 cc, V-twin, liquid cooled
Fuel Delivery System	Intelligent Throttle Control (iTC™) with Electronic Fuel Injection (EFI)
Transmission	PRO-TORQ transmission with Quick Response System (QRS), high airflow ventilation and Electronic Drive Belt Protection Extra-L / H / N / R / P
Drive Train	Selectable Turf Mode / 2WD / 4WD with Visco-Lok QE auto-locking front differential
Driving Assistance	Electronic Hill Descent Control ECO™ / ECO Off / Work modes
Power Steering	Dynamic Power Steering (DPS)

SUSPENSIONS

Front Suspension	Double A-arm / 10 in. (25.4 cm) travel
Front Shocks	Twin tube gas charged shocks
Rear Suspension	TTA with external sway bar / 10 in. (25.4 cm) travel
Rear Shocks	Twin tube gas charged shocks

BRAKES

Front	Dual 220 mm ventilated disc brakes with hydraulic twin-piston calipers
Rear	Dual 220 mm ventilated disc brakes with hydraulic twin-piston calipers
	Brake holding mechanism

TIRES / WHEELS

Front Tires	Maxxis Bighorn 2.0 27 x 9 x 14 in. (68.6 x 22.9 x 35.6 cm)
Rear Tires	Maxxis Bighorn 2.0 27 x 11 x 14 in. (68.6 x 27.9 x 35.6 cm)
Wheels	14-in. (35.6 cm) cast-aluminum

DIMENSIONS / CAPACITIES

L x W x H	158.3 x 63.5 x 76 in. (402 x 161.2 x 193cm)
Wheelbase	115.5 in. (294 cm)
Ground Clearance	11 in. (28 cm)
Estimated Dry Weight	1,882.8 lb (854 kg)
Cage	Profiled cage ROPS approved
Cargo Box Dimensions	38 x 54.5 x 12 in. (96.5 x 138.4 x 30.5 cm)
Cargo Box Capacity	1,000 lb (454 kg) / California only: 600 lb (272.2 kg)
Tailgate Load Capacity	250 lb (113.4 kg)
Storage Capacity	Total: 16.9 gal (63.9 L) Under dash: 6 gal (22.8 L) Waterproof and removable box under passenger seat: 5.6 gal (21 L) Dash: 2 gal (7.7 L) Water-resistant and removable toolbox: 1.7 gal (6.3 L) Armrests and cup holders: 1.6 gal (6.1 L)
Towing Capacity	2,500 lb (1134 kg)
Payload Capacity	1,750 lb (793.8 kg)
Fuel Capacity	10.6 gal (40 L)
Person Capacity	6

FEATURES

Gauge	4.5 in. (11.4 cm) wide digital display with keypad: Speedometer, tachometer, odometer, trip and hour meters, fuel, gear position, ECO / ECO Off / Work modes, seat belt, diagnostics, clock, battery voltage, engine temperature	Lighting	140 W lighting output from four 35-W reflectors ensuring a wide visiblity and LED tail lights
		Winch	4,500-lb (2,041 kg) winch with roller fairlead
		Seat	Dual VERSA-PRO bench seats with passenger seats flipping up, adjustable driver seat, underside hooks, reinforced XT seat skin and contoured bench to improve entrance/exit of the cab
Battery	12 V (30 amp/h)	Protection	XT front bumper , HMWPE full skid plate, 2-piece full hard roof
Magneto	650 W	Hitch Type	2-in. hitch receiver
Instrumentation	Lighter type DC outlets in the console (20-A) and two USB port in the dash storage	Steering Wheel	Adjustable tilt steering

WARRANTY

Factory	1-year limited warranty
Extended	Up to 30 months B.E.S.T. coverage

©2019 Bombardier Recreational Products Inc (BRP). All rights reserved. ™, ® and the BRP logo are trademarks of Bombardier Recreational Products Inc. or its affiliates. In the U.S.A., the products are distributed by BRP US Inc. ‡Visco-Lok is a trademark of GKN Viscodrive GmbH. †All other trademarks are the property of their respective owners. BRP reserves the right, at any time, to discontinue or change specifications, prices, designs, features, models or equipment without incurring obligation. Some models depicted may include optional equipment. Read the side-by-side vehicle (SSV) Operator's Guide and watch the Safety DVD before driving. For your safety: wear a helmet, eye protection and other protective gear. Fasten lateral net and seat belt at all times. Always remember that riding and alcohol/drugs don't mix. SSV is for off-road use only. Never ride on paved surfaces or public roads. Operator must be at least 16 years old. Passenger must be at least 12 years old and able to hold handgrips and plant feet while seated against the backrest. Never engage in stunt driving and avoid excessive speed.

can-am

Can-AmOffroad.com

2020 DEFENDER MAX XT™ HD10

HIGHLIGHTS

PLATFORM FEATURES

- 115.5-in. wheelbase
- 13-in. of ground clearance
- Dynamic Power Steering (DPS™)
- 2,500 lb towing capacity
- Multi-function cargo box with LinQ easy installation accessories
- 27-in. Maxxis† Bighorn 2.0†
- Rear differential with Turf mode
- 4.5-in. digital display

SPECIFIC TO XT HD10 PACKAGE

- 64-in. wide with Arched A-arm
- Visco-Lok‡ QE front differential
- 14-in. cast-aluminum wheels
- VERSA-PRO bench seat with reinforced XT seat skin and adjustable driver seat
- HMWPE full skid plate
- 4,500-lb (2,014 kg) winch
- XT front bumper
- Full hard roof
- Brake holding mechanism
- Mossy Oak† Break-Up Country Camo† water dipped option

TOUGH

- Heavy-duty Rotax® engine
- Smooth, durable and responsive transmission
- True Can-Am DNA with a strong identity

CAPABLE

- Work or ride with confidence
- Meaningful and versatile functionality
- Easy handling and capabilities

CLEVER

- Advanced comfort and intuitive cockpit with optimized visibility
- Multifunction cargo box with sturdy tailgate and smart storage
- 1-year maintenance free and easy access to key maintenance components

Hyper Silver / HD10
Boreal Green / HD10
Mossy Oak Break-Up Country Camo / HD10

ENGINES	HD10
Type	82 hp / 69 lb-ft, Rotax® 976 cc, V-twin, liquid cooled
Fuel Delivery System	Intelligent Throttle Control (iTC™) with Electronic Fuel Injection (EFI)
Transmission	PRO-TORQ transmission with Quick Response System (QRS), high airflow ventilation and Electronic Drive Belt Protection Extra-L / H / N / R / P
Drive Train	Selectable Turf Mode / 2WD / 4WD with Visco-Lok QE auto-locking front differential
Driving Assistance	Electronic Hill Descent Control ECO™ / ECO Off / Work modes
Power Steering	Dynamic Power Steering (DPS)

SUSPENSIONS	
Front Suspension	Arched double A-arm / 11 in. (27.9 cm) travel
Front Shocks	Twin tube gas charged shocks
Rear Suspension	Arched TTA with external sway bar / 11 in. (27.9 cm) travel
Rear Shocks	Twin tube gas charged shocks

BRAKES	
Front	Dual 220 mm ventilated disc brakes with hydraulic twin-piston calipers
Rear	Dual 220 mm ventilated disc brakes with hydraulic twin-piston calipers
	Brake holding mechanism

TIRES / WHEELS	
Front Tires	Maxxis Bighorn 2.0 27 x 9 x 14 in. (68.6 x 22.9 x 35.6 cm)
Rear Tires	Maxxis Bighorn 2.0 27 x 11 x 14 in. (68.6 x 27.9 x 35.6 cm)
Wheels	14-in. (35.6 cm) cast-aluminum

DIMENSIONS / CAPACITIES	
L x W x H	158.3 x 64 x 79.5 in. (402 x 162.5 x 202cm)
Wheelbase	115.5 in. (294 cm)
Ground Clearance	13 in. (33 cm)
Estimated Dry Weight	1,902.6 lb (863 kg)
Cage	Profiled cage ROPS approved
Cargo Box Dimensions	38 x 54.5 x 12 in. (96.5 x 138.4 x 30.5 cm)
Cargo Box Capacity	1,000 lb (454 kg) / California only: 600 lb (272.2 kg)
Tailgate Load Capacity	250 lb (113.4 kg)
Storage Capacity	Total: 16.9 gal (63.9 L) Under dash: 6 gal (22.8 L) Waterproof and removable box under passenger seat: 5.6 gal (21 L) Dash: 2 gal (7.7 L) Water-resistant and removable toolbox: 1.7 gal (6.3 L) Armrests and cup holders: 1.6 gal (6.1 L)
Towing Capacity	2,500 lb (1134 kg)
Payload Capacity	1,750 lb (793.8 kg)
Fuel Capacity	10.6 gal (40 L)
Person Capacity	6

FEATURES

Gauge	4.5 in. (11.4 cm) wide digital display: Speedometer, tachometer, odometer, trip and hour meters, fuel, gear position, ECO / ECO Off / Work modes, seat belt, diagnostics, clock, battery voltage, engine temperature	Lighting	140 W lighting output from four 35-W reflectors ensuring a wide visiblity and LED tail lights
		Winch	4,500-lb (2,041 kg) winch with roller fairlead
		Seat	Dual VERSA-PRO bench seats with passenger seats flipping up, adjustable driver seat, underside hooks, reinforced XT seat skin and contoured bench to improve entrance/exit of the cab
Battery	12 V (30 amp/h)	Protection	XT front bumper, HMWPE full skid plate, 2-piece full hard roof
Magneto	650 W	Hitch Type	2-in. hitch receiver
Instrumentation	Lighter type DC outlets in the console (20-A) and two USB port in the dash storage	Steering Wheel	Adjustable tilt steering

WARRANTY

Factory	1-year limited warranty
Extended	Up to 30 months B.E.S.T. coverage

BEST PROTECTION ©2019 Bombardier Recreational Products Inc (BRP). All rights reserved. ™, ® and the BRP logo are trademarks of Bombardier Recreational Products Inc. or its affiliates. In the U.S.A., the products are distributed by BRP US Inc. ‡Visco-Lok is a trademark of GKN Viscodrive GmbH. †All other trademarks are the property of their respective owners. BRP reserves the right, at any time, to discontinue or change specifications, prices, designs, features, models or equipment without incurring obligation. Some models depicted may include optional equipment. Read the side-by-side vehicle (SSV) Operator's Guide and watch the Safety DVD before driving. For your safety: wear a helmet, eye protection and other protective gear. Fasten lateral net and seat belt at all times. Always remember that riding and alcohol/drugs don't mix. SSV is for off-road use only. Never ride on paved surfaces or public roads. Operator must be at least 16 years old. Passenger must be at least 12 years old and able to hold handgrips and plant feet while seated against the backrest. Never engage in stunt driving and avoid excessive speed.

can-am

Can-AmOffroad.com

2020 DEFENDER MAX LONE STAR

HIGHLIGHTS

PLATFORM FEATURES

- 115.5-in. wheelbase
- 13-in. of ground clearance
- Dynamic Power Steering (DPS™)
- 2,500 lb towing capacity
- Multi-function cargo box with LinQ easy installation accessories
- Rear differential with Turf mode

SPECIFIC TO LONE STAR PACKAGE

- 65-in. wide with Arched A-arm
- Visco-Lok‡ QE front differential
- 14-in. cast-aluminum wheels with 28-in with Maxxis† Bighorn 2.0†
- Dual VERSA-PRO bench seats with reinforced seat skin featuring LONE STAR package trims and adjustable driver seat
- HMWPE full skid plate
- 4,500-lb (2,014 kg) winch
- Heavy-duty front steel bumper
- Full hard roof
- 7.6 in. digital display with keypad
- Brake holding mechanism

TOUGH

- Heavy-duty Rotax® engine
- Smooth, durable and responsive transmission
- True Can-Am DNA with a strong identity

CAPABLE

- Work or ride with confidence
- Meaningful and versatile functionality
- Easy handling and capabilities

CLEVER

- Advanced comfort and intuitive cockpit with optimized visibility
- Multifunction cargo box with sturdy tailgate and smart storage
- 1-year maintenance free and easy access to key maintenance components

Stone Gray / HD10

ENGINE

ENGINE	HD10
Type	82 hp / 69 lb-ft, Rotax® 976 cc, V-twin, liquid cooled
Fuel Delivery System	Intelligent Throttle Control (iTC™) with Electronic Fuel Injection (EFI)
Transmission	PRO-TORQ Transmission with Quick Response System (QRS), high airflow ventilation and Electronic Drive Belt Protection Extra-L / H / N / R / P
Drive Train	Selectable Turf Mode / 2WD / 4WD with Visco-Lok QE auto-locking front differential
Driving Assistance	Electronic Hill Descent Control ECO™ / ECO Off / Work modes
Power Steering	Dynamic Power Steering (DPS)

SUSPENSIONS

Front Suspension	Arched double A-arm with sway bar / 10 in. (25.4 cm) travel
Front Shocks	Twin tube gas charged shocks
Rear Suspension	Arched TTA with external sway bar / 10 in. (25.4 cm) travel
Rear Shocks	Twin tube gas charged shocks

BRAKES

Front	Dual 220 mm ventilated disc brakes with hydraulic twin-piston calipers
Rear	Dual 220 mm ventilated disc brakes with hydraulic twin-piston calipers
	Brake holding mechanism

TIRES / WHEELS

Front Tires	Maxxis Bighorn 2.0 28 x 9 x 14 in. (71.1 x 22.9 x 35.6 cm)
Rear Tires	Maxxis Bighorn 2.0 28 x 11 x 14 in. (71.1 x 27.9 x 35.6 cm)
Wheels	14-in. (35.6 cm) cast-aluminum

DIMENSIONS / CAPACITIES

L x W x H	158.9 x 65 x 79.9 in. (403.6 x 165.1 x 203.1 cm)
Wheelbase	115.5 in. (294 cm)
Ground Clearance	13 in. (33 cm)
Estimated Dry Weight	1,929 lb (875 kg)
Cage	Profiled cage ROPS approved
Cargo Box Dimensions	38 x 54.5 x 12 in. (96.5 x 138.4 x 30.5 cm)
Cargo Box Capacity	1,000 lb (454 kg)
Tailgate Load Capacity	250 lb (113.4 kg)
Storage Capacity	Total: 16.9 gal (63.9 L) Under dash: 6 gal (22.8 L) Waterproof and removable box under passenger seat: 5.6 gal (21 L) Dash: 2 gal (7.7 L) Water-resistant and removable toolbox: 1.7 gal (6.3 L) Armrests and cup holders: 1.6 gal (6.1 L)
Towing Capacity	2,500 lb (1134 kg)
Payload Capacity	1,730 lb (784.7 kg)
Fuel Capacity	10.6 gal (40 L)
Person Capacity	6

FEATURES

Gauge	7.6 in. (19.3 cm) wide digital display with keypad: Speedometer, tachometer, odometer, trip and hour meters, fuel, gear position, ECO / ECO Off / Work modes, seat belt, diagnostics, clock, battery voltage, engine temperature
Battery	12 V (30 amp/h)
Magneto	650 W
Instrumentation	Lighter type DC outlets in the console (20-A) and two USB port in the dash storage
Lighting	140 W lighting output from four 35-W reflectors ensuring a wide visiblity and LED tail lights
Winch	4,500-lb (2,041 kg) winch with roller fairlead
Seat	Dual VERSA-PRO bench seats with passenger seats flipping up, adjustable driver seat, underside hooks, reinforced seat skin featuring LONE STAR package trims and contoured bench to improve entrance/exit of the cab
Protection	Heavy-duty front steel bumper, HMWPE full skid plate, 2-piece full hard roof, aluminum rock sliders
Hitch Type	2-in. hitch receiver
Steering Wheel	Adjustable tilt steering

WARRANTY

Factory	1-year limited warranty
Extended	Up to 30 months B.E.S.T. coverage

BEST PROTECTION ©2019 Bombardier Recreational Products Inc (BRP). All rights reserved. ™, ® and the BRP logo are trademarks of Bombardier Recreational Products Inc. or its affiliates. In the U.S.A., the products are distributed by BRP US Inc. ‡Visco-Lok is a trademark of GKN Viscodrive GmbH. †All other trademarks are the property of their respective owners. BRP reserves the right, at any time, to discontinue or change specifications, prices, designs, features, models or equipment without incurring obligation. Some models depicted may include optional equipment. Read the side-by-side vehicle (SSV) Operator's Guide and watch the Safety DVD before driving. For your safety: wear a helmet, eye protection and other protective gear. Fasten lateral net and seat belt at all times. Always remember that riding and alcohol/drugs don't mix. SSV is for off-road use only. Never ride on paved surfaces or public roads. Operator must be at least 16 years old. Passenger must be at least 12 years old and able to hold handgrips and plant feet while seated against the backrest. Never engage in stunt driving and avoid excessive speed.

can-am BRP

Can-AmOffroad.com

2020 DEFENDER MAX XT™ CAB

HIGHLIGHTS

PLATFORM FEATURES

- 115.5-in. wheelbase
- 12-in. of ground clearance
- Dynamic Power Steering (DPS™)
- ECO™ / ECO Off / Work modes
- 2,500 lb towing capacity
- Multi-function cargo box with LinQ easy installation accessories
- 27-in. Maxxis† Bighorn 2.0†
- Rear differential with Turf mode
- 4.5-in. digital display

SPECIFIC TO XT CAB PACKAGE

- 65-in. wide with Arched A-arm
- Visco-Lok‡ QE front differential
- 14-in. cast-aluminum wheels
- VERSA-PRO bench seat with reinforced XT seat skin and adjustable driver seat
- HMWPE full skid plate
- 4,500-lb winch
- XT front bumper
- Full hard roof with liner and interior dome light
- Full cab enclosure with full glass windshield, wiper/washer kit, full doors with electric windows in front and rear glass
- Integrated heater kit
- Brake holding mechanism
- Mossy Oak† Break-Up Country Camo† water dipped option

TOUGH

- Heavy-duty Rotax® engine
- Smooth, durable and responsive transmission
- True Can-Am DNA with a strong identity

CAPABLE

- Work or ride with confidence
- Meaningful and versatile functionality
- Easy handling and capabilities

CLEVER

- Advanced comfort and intuitive cockpit with optimized visibility
- Multifunction cargo box with sturdy tailgate and smart storage
- 1-year maintenance free and easy access to key maintenance components

Hyper Silver / HD10
Mossy Oak Break-Up Country Camo / HD10

ENGINE

ENGINE	HD10
Type	82 hp / 69 lb-ft, Rotax® 976 cc, V-twin, liquid cooled
Fuel Delivery System	Intelligent Throttle Control (iTC™) with Electronic Fuel Injection (EFI)
Transmission	PRO-TORQ transmission with Quick Response System (QRS), high airflow ventilation and Electronic Drive Belt Protection Extra-L / H / N / R / P
Drive Train	Selectable Turf Mode / 2WD / 4WD with Visco-Lok QE auto-locking front differential
Driving Assistance	Electronic Hill Descent Control ECO / ECO Off / Work modes
Power Steering	Dynamic Power Steering (DPS)

SUSPENSIONS

Front Suspension	Arched double A-arm with sway bar / 10 in. (25.4 cm) travel
Front Shocks	Twin tube gas charged shocks
Rear Suspension	Arched TTA with external sway bar / 10 in. (25.4 cm) travel
Rear Shocks	Twin tube gas charged shocks

BRAKES

Front	Dual 220 mm ventilated disc brakes with hydraulic twin-piston calipers
Rear	Dual 220 mm ventilated disc brakes with hydraulic twin-piston calipers
	Brake holding mechanism

TIRES / WHEELS

Front Tires	Maxxis Bighorn 2.0 27 x 9 x 14 in. (68.6 x 22.9 x 35.6 cm)
Rear Tires	Maxxis Bighorn 2.0 27 x 11 x 14 in. (68.6 x 27.9 x 35.6 cm)
Wheels	14-in. (35.6 cm) cast-aluminum

DIMENSIONS / CAPACITIES

L x W x H	158.3 x 65 x 79 in. (402 x 165.1 x 200.6 cm)
Wheelbase	115.5 in. (294 cm)
Ground Clearance	12 in. (30.5 cm)
Estimated Dry Weight	2,301.6 lb (1044 kg)
Cage	Profiled cage ROPS approved
Cargo Box Dimensions	38 x 54.5 x 12 in. (96.5 x 138.4 x 30.5 cm)
Cargo Box Capacity	1,000 lb (454 kg) / California only: 600 lb (272.2 kg)
Tailgate Load Capacity	250 lb (113.4 kg)
Storage Capacity	Total: 14 gal (53 L) Waterproof and removable box under passenger seat: 5.6 gal (21 L) Dash: 2 gal (7.7 L) Water-resistant and removable toolbox: 1.7 gal (6.3 L) Under dash: 1.6 gal (6.1 L) Armrests and cup holders: 1.6 gal (6.1 L) Interior doors: 1.5 gal (5.8 L)
Towing Capacity	2,500 lb (1134 kg)
Payload Capacity	1,300 lb (590 kg)
Fuel Capacity	10.6 gal (40 L)
Person Capacity	6

FEATURES

Gauge	4.5 in. (11.4 cm) wide digital display: Speedometer, tachometer, odometer, trip and hour meters, fuel, gear position, ECO / ECO Off / Work modes, seat belt, diagnostics, clock, battery voltage, engine temperature
Seat	Dual VERSA-PRO bench seats with passenger seats flipping up, adjustable driver seat, underside hooks, reinforced XT seat skin and contoured bench to improve entrance/exit of the cab
Magneto	650 W
Instrumentation	Two lighter type DC outlets, one in the console (20-A) and one in the under dash storage (20-A) I Integrated heater kit
Steering Wheel	Adjustable tilt steering
Winch	4,500-lb (2,041 kg) winch with roller fairlead
Battery	12 V (30 amp/h)
Protection	XT front bumper, HMWPE full skid plate, 2-piece full hard roof, full black doors with electric opening windows in front, 3-position full glass tilt up windshield with wiper/washer kit, rear glass
Hitch Type	2-in. hitch receiver
Lighting	140 W lighting output from four 35-W reflectors ensuring a wide visiblity and LED tail lights

WARRANTY

Factory	1-year limited warranty
Extended	Up to 30 months B.E.S.T. coverage

BEST PROTECTION ©2019 Bombardier Recreational Products Inc (BRP). All rights reserved. ™, ® and the BRP logo are trademarks of Bombardier Recreational Products Inc. or its affiliates. In the U.S.A., the products are distributed by BRP US Inc. ‡Visco-Lok is a trademark of GKN Viscodrive GmbH. †All other trademarks are the property of their respective owners. BRP reserves the right, at any time, to discontinue or change specifications, prices, designs, features, models or equipment without incurring obligation. Some models depicted may include optional equipment. Read the side-by-side vehicle (SSV) Operator's Guide and watch the Safety DVD before driving. For your safety: wear a helmet, eye protection and other protective gear. Fasten lateral net and seat belt at all times. Always remember that riding and alcohol/drugs don't mix. SSV is for off-road use only. Never ride on paved surfaces or public roads. Operator must be at least 16 years old. Passenger must be at least 12 years old and able to hold handgrips and plant feet while seated against the backrest. Never engage in stunt driving and avoid excessive speed.

can-am

Can-AmOffroad.com

2020 DEFENDER MAX X™ mr

HIGHLIGHTS

PLATFORM FEATURES

- 115.5-in. wheelbase
- 15-in. of ground clearance
- Dynamic Power Steering (DPS™)
- ECO™ / ECO Off / Work modes
- 2,500 lb towing capacity
- Multi-function cargo box with LinQ easy installation accessories
- Rear differential with Turf mode

SPECIFIC TO X mr PACKAGE

- 64-in. wide with Arched A-arm
- Smart-Lok™** front differential
- Strategically positioned engine air intake and CVT inlet / outlet
- 14-in. cast-aluminum wheels
- VERSA-PRO bench seat with bolster seats, reinforced seat skin featuring X package trims and adjustable driver seat
- HMWPE full skid plate
- 4,500-lb (2,014 kg) winch
- Heavy-duty front steel bumper
- Aluminum rock slider
- 7.6 in. digital display with keypad
- Brake holding machanism

TOUGH

- Heavy-duty Rotax® engine
- Smooth, durable and responsive transmission
- True Can-Am DNA with a strong identity

CAPABLE

- Work or ride with confidence
- Meaningful and versatile functionality
- Easy handling and capabilities

CLEVER

- Advanced comfort and intuitive cockpit with optimized visibility
- Multifunction cargo box with sturdy tailgate and smart storage
- 1-year maintenance free and easy access to key maintenance components

Mossy Oak† Break-Up Country Camo† / HD10

ENGINES

	HD10
Type	82 hp / 67 lb-ft, Rotax® 976 cc, V-twin, liquid cooled with strategically positioned engine air intake
Fuel Delivery System	Intelligent Throttle Control (iTC™) with Electronic Fuel Injection (EFI)
Transmission	PRO-TORQ transmission with Quick Response System (QRS), high airflow ventilation and Electronic Drive Belt Protection Extra-L / H / N / R / P
Drive Train	Selectable Turf Mode / 2WD / 4WD TRAIL / 4WD MUD with exclusive Smart-Lok** technology. **Smart-Lok was developed in conjunction with TEAM Industries, a market leader in the drive train industry
Driving Assistance	Electronic Hill Descent Control ECO / ECO Off / Work modes
Power Steering	Dynamic Power Steering (DPS)

SUSPENSIONS

Front Suspension	Arched double A-arm with sway bar / 10 in. (25.4 cm) travel
Front Shocks	Twin tube gas charged shocks
Rear Suspension	Arched TTA with external sway bar / 10 in. (25.4 cm) travel
Rear Shocks	Twin tube gas charged shocks

BRAKE HOLDING MECHANISM

Front	Dual 220 mm ventilated disc brakes with hydraulic twin-piston calipers
Rear	Dual 220 mm ventilated disc brakes with hydraulic twin-piston calipers

TIRES / WHEELS

Front Tires	ITP†* Cryptid† 30 x 9 x 14 in. (76.2 x 22.9 x 35.6 cm)
Rear Tires	ITP* Cryptid 30 x 11 x 14 in. (76.2 x 27.9 x 35.6 cm)
Wheels	14-in. (35.6 cm) cast-aluminum

DIMENSIONS / CAPACITIES

L x W x H	161.9 x 64 x 82 in. (411.2 x 162.5 x 208.3 cm)
Wheelbase	115.5 in. (294 cm)
Ground Clearance	15 in. (38.1 cm)
Estimated Dry Weight	2,026.1 lb (919 kg)
Cage	Profiled cage ROPS approved
Cargo Box Dimensions	38 x 54.5 x 12 in. (96.5 x 138.4 x 30.5 cm)
Cargo Box Capacity	1,000 lb (454 kg) / California only: 600 lb (272.2 kg)
Tailgate Load Capacity	250 lb (113.4 kg)
Storage Capacity	Total: 16.9 gal (63.9 L) Under dash: 6 gal (22.8 L) Waterproof and removable box under passenger seat: 5.6 gal (21 L) Dash: 2 gal (7.7 L) Water-resistant and removable toolbox: 1.7 gal (6.3 L) Armrests and cup holders: 1.6 gal (6.1 L)
Towing Capacity	2,500 lb (1134 kg)
Payload Capacity	1,630 lb (739.4 kg)
Fuel Capacity	10.6 gal (40 L)
Person Capacity	6

FEATURES

Gauge	7.6 in. (19.3 cm) wide digital display with keypad: Speedometer, tachometer, odometer, trip and hour meters, fuel, gear position, ECO / ECO Off / Work modes, seat belt, diagnostics, clock, battery voltage, engine temperature	Seat	Dual VERSA-PRO bench seats with bolster seats for additional lateral support, passenger seats flipping up, adjustable driver seat, underside hooks, reinforced seat skin featuring X package trims and contoured bench to improve entrance/exit of the cab
Instrumentation	Lighter type DC outlets in the console (20-A) and two USB port in the dash storage	Lighting	140 W lighting output from four 35-W reflectors ensuring a wide visiblity and LED tail lights
Battery	12 V (30 amp/h)	Protection	Heavy-duty front steel bumper, HMWPE full skid plate, aluminum rock sliders, mudguards
Winch	4,500-lb (2,041 kg) winch with synthetic rope and aluminum fairlead	Hitch Type	2-in. hitch receiver
Magneto	650 W	Steering Wheel	Adjustable tilt steering

WARRANTY

Factory	1-year limited warranty
Extended	Up to 30 months B.E.S.T. coverage

©2019 Bombardier Recreational Products Inc (BRP). All rights reserved. ™, ® and the BRP logo are trademarks of Bombardier Recreational Products Inc. or its affiliates. In the U.S.A., the products are distributed by BRP US Inc. †Visco-Lok is a trademark of GKN Viscodrive GmbH. †All other trademarks are the property of their respective owners. BRP reserves the right, at any time, to discontinue or change specifications, prices, designs, features, models or equipment without incurring obligation. Some models depicted may include optional equipment. Read the side-by-side vehicle (SSV) Operator's Guide and watch the Safety DVD before driving. For your safety: wear a helmet, eye protection and other protective gear. Fasten lateral net and seat belt at all times. Always remember that riding and alcohol/drugs don't mix. SSV is for off-road use only. Never ride on paved surfaces or public roads. Operator must be at least 16 years old. Passenger must be at least 12 years old and able to hold handgrips and plant feet while seated against the backrest. Never engage in stunt driving and avoid excessive speed.

Can-AmOffroad.com

2020 DEFENDER 6X6 DPS™

HIGHLIGHTS

PLATFORM FEATURES

- 115.5-in. wheelbase
- 13-in. of ground clearance
- 2,500 lb towing capacity
- Multi-function cargo box with LinQ easy installation accessories
- 27-in. Maxxis† Bighorn 2.0†
- VERSA-PRO bench seat
- HMWPE central skid plate
- 4.5-in. digital display

SPECIFIC TO DPS PACKAGE 6x6 DPS

- 64-in. wide with Arched A-arm
- Dynamic Power Steering (DPS)
- Visco-Lok‡ QE front differential
- 14-in. cast-aluminum wheels

TOUGH

- Heavy-duty Rotax® engine
- Smooth, durable and responsive transmission
- True Can-Am DNA with a strong identity

CAPABLE

- Work or ride with confidence
- Meaningful and versatile functionality
- Easy handling and capabilities

CLEVER

- Advanced comfort and intuitive cockpit with optimized visibility
- Multifunction cargo box with sturdy tailgate and smart storage
- 1-year maintenance free and easy access to key maintenance components

White / HD10
Mossy Oak Break-Up Country Camo / HD10

ENGINES

ENGINES	HD10
Type	82 hp / 69 lb-ft, Rotax® 976 cc, V-twin, liquid cooled
Fuel Delivery System	Intelligent Throttle Control (iTC™) with Electronic Fuel Injection (EFI)
Transmission	PRO-TORQ transmission with Quick Response System (QRS), high airflow ventilation and Electronic Drive Belt Protection Extra-L / H / N / R / P
Drive Train	Selectable 4WD / 6WD with Visco-Lok QE auto-locking front differential
Driving Assistance	Electronic Hill Descent Control ECO™ / ECO Off / Work modes
Power Steering	Dynamic Power Steering (DPS)

SUSPENSIONS

Front Suspension	Arched double A-arm / 11 in. (27.9 cm) travel
Front Shocks	Twin tube gas charged shocks
Rear Suspension	Arched TTA with external sway bar / 11 in. (27.9 cm) travel
Rear Shocks	Twin tube gas charged shocks

BRAKES

Front	Dual 220 mm ventilated disc brakes with hydraulic twin-piston calipers
Rear	Dual 220 mm ventilated disc brakes with hydraulic twin-piston calipers

TIRES / WHEELS

Front Tires	Maxxis Bighorn 2.0 27 x 9 x 14 in. (68.6 x 22.9 x 35.6 cm)
Rear Tires	Maxxis Bighorn 2.0 27 x 11 x 14 in. (68.6 x 27.9 x 35.6 cm)
Wheels	14-in. (35.6 cm) cast-aluminum

DIMENSIONS / CAPACITIES

L x W x H	153.4 x 64 x 78 in. (389.6 x 162.5 x 198.1 cm)
Wheelbase	115.5 in. (294 cm)
Ground Clearance	13 in. (33 cm)
Estimated Dry Weight	1,944.5 lb (882 kg)
Cage	Profiled cage ROPS approved
Cargo Box Dimensions	72 x 54.5 x 10 in. (180,3 x 138,4 x 25,4 cm)
Cargo Box Capacity	1,000 lb (454 kg) / California only: 600 lb (272.2 kg)
Tailgate Load Capacity	250 lb (113.4 kg)
Storage Capacity	Total: 10.4 gal (39.5 L) Under dash: 6 gal (22.8 L) Dash: 1.8 gal (6.9 L) Water-resistant and removable toolbox: 1.7 gal (6.3 L) Armrests and cup holders: 0.9 gal (3.5 L)
Towing Capacity	3,000 lb (1360.8 kg)
Payload Capacity	1,700 lb (771 kg)
Fuel Capacity	10.6 gal (40 L)
Person Capacity	3

FEATURES

Gauge	4.5 in. (11.4 cm) wide digital display: Speedometer, tachometer, odometer, trip and hour meters, fuel, gear position, ECO / ECO Off / Work modes, seat belt, diagnostics, clock, battery voltage, engine temperature	Lighting	140 W lighting output from four 35-W reflectors ensuring a wide visiblity and LED tail lights
		Winch	N/A
		Seat	VERSA-PRO bench seat with passenger seats flipping up, underside hooks and contoured bench to improve entrance/exit of the cab
Battery	12 V (18 amp/h)	Protection	Integrated front steel bumper, HMWPE central skid plate
Magneto	650 W	Hitch Type	2-in. hitch receiver
Instrumentation	Lighter type DC outlet in console (20-A)	Steering Wheel	Adjustable tilt steering

WARRANTY

Factory	1-year limited warranty
Extended	Up to 30 months B.E.S.T. coverage

©2019 Bombardier Recreational Products Inc (BRP). All rights reserved. ™, ® and the BRP logo are trademarks of Bombardier Recreational Products Inc. or its affiliates. In the U.S.A., the products are distributed by BRP US Inc. ‡Visco-Lok is a trademark of GKN Viscodrive GmbH. †All other trademarks are the property of their respective owners. BRP reserves the right, at any time, to discontinue or change specifications, prices, designs, features, models or equipment without incurring obligation. Some models depicted may include optional equipment. Read the side-by-side vehicle (SSV) Operator's Guide and watch the Safety DVD before driving. For your safety: wear a helmet, eye protection and other protective gear. Fasten lateral net and seat belt at all times. Always remember that riding and alcohol/drugs don't mix. SSV is for off-road use only. Never ride on paved surfaces or public roads. Operator must be at least 16 years old. Passenger must be at least 12 years old and able to hold handgrips and plant feet while seated against the backrest. Never engage in stunt driving and avoid excessive speed.

Can-AmOffroad.com

2020 COMMANDER™

HIGHLIGHTS

- Double A-arm front suspension with sway bar
- Torsional Trailing arm Independent (TTI) rear suspension with external sway bar
- Visco-Lok‡ auto-locking front differential
- Intelligent Throttle Control (iTC™)
- Industry's exclusive Dual-Level™ cargo box
- 27-in. Maxxis Bighorn 2.0† tires
- Adjustable driver's seat and tilt steering

White / 800R

ENGINE	800R
Type	71 hp, Rotax® 799.9 cc, V-twin, liquid cooled
Fuel Delivery System	Intelligent Throttle Control (iTC) with Electronic Fuel Injection (EFI)
Transmission	CVT, L / H / N / R / P, standard engine braking
Drive Train	Selectable 2WD / 4WD with Visco-Lok auto-locking front differential
Power Steering	N/A

SUSPENSIONS	
Front Suspension	Double A-arm with sway bar / 10 in. (25.4 cm) travel
Front Shocks	Twin tube gas charged shocks
Rear Suspension	Torsional Trailing arm Independent (TTI) with external sway bar 10 in. (25.4 cm) travel
Rear Shocks	Twin tube gas charged shocks

BRAKES	
Front	Dual 214 mm ventilated disc brakes with hydraulic twin-piston calipers
Rear	Single 214 mm ventilated disc brake with hydraulic twin-piston caliper

TIRES / WHEELS	
Front Tires	Maxxis Bighorn 2.0 27 x 9 x 12 in. (68.6 x 22.9 x 30.5 cm)
Rear Tires	Maxxis Bighorn 2.0 27 x 11 x 12 in. (68.6 x 27.9 x 30.5 cm)
Wheels	12-in. (30.5 cm) steel

DIMENSIONS / CAPACITIES	
L x W x H	118.3 x 58.6 x 72 in. (300.4 x 148.9 x 182.9 cm)
Wheelbase	75.8 in. (192.4 cm)
Ground Clearance	11 in. (27.9 cm)
Dry Weight	1,291.4 lb (586 kg)
Rack Capacity	600 lb (272 kg) Dual-Level cargo box Upper level: 400 lb (181 kg) Lower level: 200 lb (91 kg)
Storage Capacity	Total: 8.3 gal (31.6 L) Glove box: 4.5 gal (17.2 L) Under driver seat: 3.5 gal (13.1 L) Center console: 0.3 gal (1.3 L)
Towing Capacity	1,500 lb (680 kg)
Fuel Capacity	10 gal (37.8 L)

FEATURES

Gauge	Multifunction digital: Speedometer, tachometer, odometer, trip and hour meters, fuel, gear position, sport mode, ECO™ mode, seat belt and 4 x 4 indicator, diagnostics, clock, auto shut off	Instrumentation	Lighter type DC outlet in console, standard connector in the back (15-A)
		Lighting	240 W from four 60-W projectors with tail lights / brake lights
Winch	N/A	Anti-theft System	Digitally Encoded Security System (D.E.S.S.™)
Protection	N/A		

WARRANTY

Factory	6-months limited warranty
Extended	Up to 30 months B.E.S.T. coverage

BEST PROTECTION ©2019 Bombardier Recreational Products Inc (BRP). All rights reserved. ™, ® and the BRP logo are trademarks of Bombardier Recreational Products Inc. or its affiliates. In the U.S.A., the products are distributed by BRP US Inc. ‡Visco-Lok is a trademark of GKN Viscodrive GmbH. †All other trademarks are the property of their respective owners. BRP reserves the right, at any time, to discontinue or change specifications, prices, designs, features, models or equipment without incurring obligation. Some models depicted may include optional equipment. Read the side-by-side vehicle (SSV) Operator's Guide and watch the Safety DVD before driving. For your safety: wear a helmet, eye protection and other protective gear. Fasten lateral net and seat belt at all times. Always remember that riding and alcohol/drugs don't mix. SSV is for off-road use only. Never ride on paved surfaces or public roads. Operator must be at least 16 years old. Passenger must be at least 12 years old and able to hold handgrips and plant feet while seated against the backrest. Never engage in stunt driving and avoid excessive speed.

can-am

Can-AmOffroad.com

BRP

2020 COMMANDER™ DPS™

HIGHLIGHTS

- Tri-Mode Dynamic Power Steering (DPS™)
- Visco-Lok QE‡ auto-locking front differential
- Double A-arm front suspension with sway bar
- Torsional Trailing arm Independent (TTI) rear suspension with external sway bar
- Intelligent Throttle Control (iTC™)
- Industry's exclusive Dual-Level™ cargo box
- 14-in. cast-aluminum wheels with 27-in. Maxxis Bighorn 2.0† tires
- Adjustable driver's seat and tilt steering

Green / 800R / 1000R

ENGINES	800R	1000R
Type	71 hp, Rotax® 799.9 cc, V-twin, liquid cooled	92 hp, Rotax® 976 cc, V-twin, liquid cooled
Fuel Delivery System	Intelligent Throttle Control (iTC) with Electronic Fuel Injection (EFI)	
Transmission	CVT, L / H / N / R / P, standard engine braking	
Drive Train	Selectable 2WD / 4WD with Visco-Lok QE auto-locking front differential	
Power Steering	Tri-Mode Dynamic Power Steering (DPS)	

SUSPENSIONS	
Front Suspension	Double A-arm with sway bar / 10 in. (25.4 cm) travel
Front Shocks	Twin tube gas charged shocks
Rear Suspension	Torsional Trailing arm Independent (TTI) with external sway bar 10 in. (25.4 cm) travel
Rear Shocks	Twin tube gas charged shocks

BRAKES		
Front	Dual 214 mm ventilated disc brakes with hydraulic twin-piston calipers	Dual 220 mm ventilated disc brakes with hydraulic twin-piston calipers
Rear	Single 214 mm ventilated disc brake with hydraulic twin-piston caliper	

TIRES / WHEELS	
Front Tires	Maxxis Bighorn 2.0 27 x 9 x 14 in. (68.6 x 22.9 x 35.6 cm)
Rear Tires	Maxxis Bighorn 2.0 27 x 11 x 14 in. (68.6 x 27.9 x 35.6 cm)
Wheels	14-in. (35.6 cm) cast-aluminum

DIMENSIONS / CAPACITIES	
L x W x H	118.3 x 61.2 x 72 in. (300.4 x 155.6 x 182.9 cm)
Wheelbase	75.8 in. (192.4 cm)
Ground Clearance	11 in. (27.9 cm)
Dry Weight*	1,291.4 lb (586 kg)
Rack Capacity	600 lb (272 kg) Dual-Level cargo box Upper level: 400 lb (181 kg) Lower level: 200 lb (91 kg)
Storage Capacity	Total: 8.3 gal (31.6 L) Glove box: 4.5 gal (17.2 L) Under driver seat: 3.5 gal (13.1 L) (800R only) Center console: 0.3 gal (1.3 L)
Towing Capacity	1,500 lb (680 kg)
Fuel Capacity	10 gal (37.8 L)

FEATURES

Gauge	Multifunction digital: Speedometer, tachometer, odometer, trip and hour meters, fuel, gear position, sport mode, ECO™ mode, seat belt and 4 x 4 indicator, diagnostics, clock, auto shut off	Instrumentation	Lighter type DC outlet in console, standard connector in the back (15-A)
		Lighting	240 W from four 60-W projectors with tail lights / brake lights
Winch	Prewired for winch	Anti-theft System	Digitally Encoded Security System (D.E.S.S.™)
Protection	N/A		

WARRANTY

Factory	6-months limited warranty
Extended	Up to 30 months B.E.S.T. coverage

BEST PROTECTION ©2019 Bombardier Recreational Products Inc (BRP). All rights reserved. ™, ® and the BRP logo are trademarks of Bombardier Recreational Products Inc. or its affiliates. In the U.S.A., the products are distributed by BRP US Inc. *Base model dry weight shown. ‡Visco-Lok is a trademark of GKN Viscodrive GmbH. †All other trademarks are the property of their respective owners. BRP reserves the right, at any time, to discontinue or change specifications, prices, designs, features, models or equipment without incurring obligation. Some models depicted may include optional equipment. Read the side-by-side vehicle (SSV) Operator's Guide and watch the Safety DVD before driving. For your safety: wear a helmet, eye protection and other protective gear. Fasten lateral net and seat belt at all times. Always remember that riding and alcohol/drugs don't mix. SSV is for off-road use only. Never ride on paved surfaces or public roads. Operator must be at least 16 years old. Passenger must be at least 12 years old and able to hold handgrips and plant feet while seated against the backrest. Never engage in stunt driving and avoid excessive speed.

can-am BRP

Can-AmOffroad.com

2020 COMMANDER™ XT™

HIGHLIGHTS

- Tri-Mode Dynamic Power Steering (DPS™)
- Visco-Lok QE‡ auto-locking front differential
- Double A-arm front suspension with sway bar
- Torsional Trailing arm Independent (TTI) rear suspension with external sway bar
- Intelligent Throttle Control (iTC™)
- Industry's exclusive Dual-Level™ cargo box
- 14-in. cast-aluminum wheels with 27-in. Maxxis Bighorn 2.0† tires
- 4,500-lb (2,041 kg) winch
- Heavy-duty front bumper
- Rugged bed rails
- Mudguards
- Analog / digital gauge

Boreal Green / 800R / 1000R
Black & Octane Blue / 800R / 1000R
Mossy Oak† Break-Up Country Camo† / 1000R

ENGINES	800R	1000R
Type	71 hp, Rotax® 799.9 cc, V-twin, liquid cooled	92 hp, Rotax® 976 cc, V-twin, liquid cooled
Fuel Delivery System	Intelligent Throttle Control (iTC) with Electronic Fuel Injection (EFI)	
Transmission	CVT, L / H / N / R / P, standard engine braking	
Drive Train	Selectable 2WD / 4WD with Visco-Lok QE† auto-locking front differential	
Power Steering	Tri-Mode Dynamic Power Steering (DPS)	

SUSPENSIONS	
Front Suspension	Double A-arm with sway bar / 10 in. (25.4 cm) travel
Front Shocks	Twin tube gas charged shocks
Rear Suspension	Torsional Trailing arm Independen (TTI) with external sway bar 10 in. (25.4 cm) travel
Rear Shocks	Twin tube gas charged shocks

BRAKES		
Front	Dual 214 mm ventilated disc brakes with hydraulic twin-piston calipers	Dual 220 mm ventilated disc brakes with hydraulic twin-piston calipers
Rear	Single 214 mm ventilated disc brake with hydraulic twin-piston caliper	

TIRES / WHEELS	
Front Tires	Maxxis Bighorn 2.0 27 x 9 x 14 in. (68.6 x 22.9 x 35.6 cm)
Rear Tires	Maxxis Bighorn 2.0 27 x 11 x 14 in. (68.6 x 27.9 x 35.6 cm)
Wheels	14-in. (35.6 cm) cast-aluminum

DIMENSIONS / CAPACITIES	
L x W x H	120.2 x 62.5 x 72 in. (305.4 x 158.8 x 182.9 cm)
Wheelbase	75.8 in. (192.4 cm)
Ground Clearance	11 in. (27.9 cm)
Dry Weight*	1,291.4 lb (586 kg)
Rack Capacity	600 lb (272 kg) Dual-Level cargo box Upper level: 400 lb (181 kg) Lower level: 200 lb (91 kg)
Storage Capacity	Total: 8.3 gal (31.6 L) Glove box: 4.5 gal (17.2 L) Under driver seat: 3.5 gal (13.1 L) (800R only) Center console: 0.3 gal (1.3 L)
Towing Capacity	1,500 lb (680 kg)
Fuel Capacity	10 gal (37.8 L)

FEATURES

Gauge	Multifunction analog / digital: Speedometer, tachometer, odometer, trip and hour meters, fuel, gear position, sport mode, ECO™ mode, seat belt and 4 x 4 indicator, diagnostics, clock, auto shut off	Instrumentation	Lighter type DC outlet in console, standard connector in the back (15-A)
		Lighting	240 W from four 60-W projectors with tail lights / brake lights
Winch	4,500-lb (2,041 kg) winch with roller fairlead	Anti-theft System	Digitally Encoded Security System (D.E.S.S.™)
Protection	Heavy-duty front bumper, mudguards, bed rails		

WARRANTY	
Factory	6-months limited warranty
Extended	Up to 30 months B.E.S.T. coverage

©2019 Bombardier Recreational Products Inc (BRP). All rights reserved. ™, ® and the BRP logo are trademarks of Bombardier Recreational Products Inc. or its affiliates. In the U.S.A., the products are distributed by BRP US Inc. *Base model dry weight shown. ‡Visco-Lok is a trademark of GKN Viscodrive GmbH. †All other trademarks are the property of their respective owners. BRP reserves the right, at any time, to discontinue or change specifications, prices, designs, features, models or equipment without incurring obligation. Some models depicted may include optional equipment. Read the side-by-side vehicle (SSV) Operator's Guide and watch the Safety DVD before driving. For your safety: wear a helmet, eye protection and other protective gear. Fasten lateral net and seat belt at all times. Always remember that riding and alcohol/drugs don't mix. SSV is for off-road use only. Never ride on paved surfaces or public roads. Operator must be at least 16 years old. Passenger must be at least 12 years old and able to hold handgrips and plant feet while seated against the backrest. Never engage in stunt driving and avoid excessive speed.

Can-AmOffroad.com

2020 COMMANDER™ LIMITED

HIGHLIGHTS

- Tri-Mode Dynamic Power Steering (DPS™)
- Visco-Lok QE‡ auto-locking front differential
- Double A-arm front suspension with sway bar
- Torsional Trailing arm Independent (TTI) rear suspension with external sway bar
- FOX† 2.0 PODIUM QS3† shocks
- Intelligent Throttle Control (iTC™)
- Industry's exclusive Dual-Level™ cargo box
- 14-in. cast-aluminum with machined finish wheels and 27-in. Maxxis Bighorn 2.0† tires
- Garmin† Montana† 650t touchscreen GPS
- Bluetooth ready sound system with four integrated speakers, iPod†- iPhone† connector with gauge controls, USB port and auxiliary input
- 4,500-lb (2,041 kg) winch
- Heavy-duty front bumper
- Rugged bed rails
- Mudguards
- 2-piece full hard roof, half windshield and rear net
- Analog / digital gauge

Stone Gray / 1000R

ENGINE	1000R
Type	92 hp, Rotax® 976 cc, V-twin, liquid cooled
Fuel Delivery System	Intelligent Throttle Control (iTC) with Electronic Fuel Injection (EFI)
Transmission	CVT, L / H / N / R / P, standard engine braking
Drive Train	Selectable 2WD / 4WD with Visco-Lok QE auto-locking front differential
Power Steering	Tri-Mode Dynamic Power Steering (DPS)

SUSPENSIONS

Front Suspension	Double A-arm with sway bar / 10 in. (25.4 cm) travel
Front Shocks	FOX 2.0 PODIUM QS3 Piggyback with compression adjustment
Rear Suspension	Torsional Trailing arm Independent (TTI) with external sway bar 10 in. (25.4 cm) travel
Rear Shocks	FOX 2.0 PODIUM QS3 Piggyback with compression adjustment

BRAKES

Front	Dual 220 mm ventilated disc brakes with hydraulic twin-piston calipers
Rear	Single 214 mm ventilated disc brake with hydraulic twin-piston caliper

TIRES / WHEELS

Front Tires	Maxxis Bighorn 2.0 27 x 9 x 14 in. (68.6 x 22.9 x 35.6 cm)
Rear Tires	Maxxis Bighorn 2.0 27 x 11 x 14 in. (68.6 x 27.9 x 35.6 cm)
Wheels	14-in. (35.6 cm) cast-aluminum with machined finish

DIMENSIONS / CAPACITIES

L x W x H	120.2 x 62.5 x 72 in. (305.4 x 158.8 x 182.9 cm)
Wheelbase	75.8 in. (192.4 cm)
Ground Clearance	11 in. (27.9 cm)
Dry Weight*	1,291.4 lb (586 kg)
Rack Capacity	600 lb (272 kg) Dual-Level cargo box Upper level: 400 lb (181 kg) Lower level: 200 lb (91 kg)
Storage Capacity	Total: 4.8 gal (18.5 L) Glove box: 4.5 gal (17.2 L) Center console: 0.3 gal (1.3 L)
Towing Capacity	1,500 lb (680 kg)
Fuel Capacity	10 gal (37.8 L)

FEATURES

Gauge	Multifunction analog / digital: Speedometer, tachometer, odometer, trip and hour meters, fuel, gear position, sport mode, ECO™ mode, seat belt and 4 x 4 indicator, diagnostics, clock, auto shut off	Instrumentation	Lighter type DC Outlet in console, standard connector in the back (15-A) I Integrated/removable Garmin Montana 650t touchscreen GPS I Bluetooth ready sound system with four integrated speakers, iPod - iPhone connector with gauge controls, USB port and auxiliary input
Winch	4,500-lb (2,041 kg) winch with roller fairlead	Lighting	240 W from four 60-W projectors with tail lights/ brake lights
Protection	Heavy-duty front bumper, mudguards, bed rails, half windshield, rear net, 2-piece full hard roof	Anti-theft System	Digitally Encoded Security System (D.E.S.S.™)

WARRANTY

Factory	6-months limited warranty
Extended	Up to 30 months B.E.S.T. coverage

BEST PROTECTION ©2019 Bombardier Recreational Products Inc (BRP). All rights reserved. ™, ® and the BRP logo are trademarks of Bombardier Recreational Products Inc. or its affiliates. In the U.S.A., the products are distributed by BRP US Inc. *Base model dry weight shown,. ‡Visco-Lok is a trademark of GKN Viscodrive GmbH. †All other trademarks are the property of their respective owners. BRP reserves the right, at any time, to discontinue or change specifications, prices, designs, features, models or equipment without incurring obligation. Some models depicted may include optional equipment. Read the side-by-side vehicle (SSV) Operator's Guide and watch the Safety DVD before driving. For your safety: wear a helmet, eye protection and other protective gear. Fasten lateral net and seat belt at all times. Always remember that riding and alcohol/drugs don't mix. SSV is for off-road use only. Never ride on paved surfaces or public roads. Operator must be at least 16 years old. Passenger must be at least 12 years old and able to hold handgrips and plant feet while seated against the backrest. Never engage in stunt driving and avoid excessive speed.

can-am BRP

Can-AmOffroad.com

2020 COMMANDER™ MAX DPS™

HIGHLIGHTS

- Tri-Mode Dynamic Power Steering (DPS™)
- Visco-Lok QE‡ auto-locking front differential
- Double A-arm front suspension with sway bar
- Torsional Trailing arm Independent (TTI) rear suspension with external sway bar
- Intelligent Throttle Control (iTC™)
- Industry's exclusive Dual-Level™ cargo box
- 14-in. cast-aluminum wheels with 27-in. Maxxis Bighorn 2.0† tires
- Adjustable driver seat and tilt steering wheel

Green / 800R

ENGINES	800R
Type	71 hp, Rotax® 799.9 cc, V-twin, liquid cooled
Fuel Delivery System	Intelligent Throttle Control (iTC) with Electronic Fuel Injection (EFI)
Transmission	CVT, L / H / N / R / P, standard engine braking
Drive Train	Selectable 2WD / 4WD with Visco-Lok QE auto-locking front differential
Power Steering	Tri-Mode Dynamic Power Steering (DPS)

TIRES / WHEELS	
Front Tires	Maxxis Bighorn 2.0 27 x 9 x 14 in. (68.6 x 22.9 x 35.6 cm)
Rear Tires	Maxxis Bighorn 2.0 27 x 11 x 14 in. (68.6 x 27.9 x 35.6 cm)
Wheels	14-in. (35.6 cm) cast-aluminum

SUSPENSIONS	
Front Suspension	Double A-arm with sway bar / 10 in. (25.4 cm) travel
Front Shocks	Twin tube gas charged shocks
Rear Suspension	Torsional Trailing arm Independen (TTI) with external sway bar 10 in. (25.4 cm) travel
Rear Shocks	Twin tube gas charged shocks

BRAKES	
Front	Dual 220 mm ventilated disc brakes with hydraulic twin-piston calipers
Rear	Dual 214 mm ventilated disc brakes with hydraulic single-piston calipers

DIMENSIONS / CAPACITIES	
L x W x H	148.5 x 61.2 x 76 in. (377.3 x 155.6 x 193 cm)
Wheelbase	106.1 in. (269.4 cm)
Ground Clearance	11 in. (27.9 cm)
Dry Weight	1,572.4 lb (713.2 kg)
Rack Capacity	600 lb (272 kg) Dual-Level cargo box Upper level: 400 lb (181 kg) Lower level: 200 lb (91 kg)
Storage Capacity	Total: 4.8 gal (18.5 L) Glove box: 4.5 gal (17.2 L) Center console: 0.3 gal (1.3 L)
Towing Capacity	1,500 lb (680 kg)
Fuel Capacity	10 gal (37.8 L)

FEATURES

Gauge	Multifunction digital: Speedometer, tachometer, odometer, trip and hour meters, fuel, gear position, sport mode, ECO™ mode, seat belt and 4 x 4 indicator, diagnostics, clock, auto shut off	Instrumentation	Lighter type DC outlet in console, standard connector in the back (15-A)
		Lighting	240 W from four 60-W projectors with tail lights / brake lights
Winch	Prewired for winch	Anti-theft System	Digitally Encoded Security System (D.E.S.S.™)
Protection	N/A		

WARRANTY

Factory	6-months limited warranty
Extended	Up to 30 months B.E.S.T. coverage

BEST PROTECTION ©2019 Bombardier Recreational Products Inc (BRP). All rights reserved. ™, ® and the BRP logo are trademarks of Bombardier Recreational Products Inc. or its affiliates. In the U.S.A., the products are distributed by BRP US Inc. ‡Visco-Lok is a trademark of GKN Viscodrive GmbH. †All other trademarks are the property of their respective owners. BRP reserves the right, at any time, to discontinue or change specifications, prices, designs, features, models or equipment without incurring obligation. Some models depicted may include optional equipment. Read the side-by-side vehicle (SSV) Operator's Guide and watch the Safety DVD before driving. For your safety: wear a helmet, eye protection and other protective gear. Fasten lateral net and seat belt at all times. Always remember that riding and alcohol/drugs don't mix. SSV is for off-road use only. Never ride on paved surfaces or public roads. Operator must be at least 16 years old. Passenger must be at least 12 years old and able to hold handgrips and plant feet while seated against the backrest. Never engage in stunt driving and avoid excessive speed.

can-am

Can-AmOffroad.com

BRP

2020 COMMANDER™ MAX XT™

HIGHLIGHTS

- Tri-Mode Dynamic Power Steering (DPS™)
- Visco-Lok QE‡ auto-locking front differential
- Double A-arm front suspension with sway bar
- Torsional Trailing arm Independent (TTI) rear suspension with external sway bar
- Intelligent Throttle Control (iTC™)
- Industry's exclusive Dual-Level™ cargo box
- 14-in. cast-aluminum wheels with 27-in. Maxxis Bighorn 2.0† tires
- 4,500-lb (2,041 kg) winch
- Heavy-duty front bumper
- Rugged bed rails
- Mudguards
- Analog / digital gauge

Boreal Green / 1000R

ENGINE	1000R
Type	92 hp, Rotax® 976 cc, V-twin, liquid cooled
Fuel Delivery System	Intelligent Throttle Control (iTC) with Electronic Fuel Injection (EFI)
Transmission	CVT, L / H / N / R / P, standard engine braking
Drive Train	Selectable 2WD / 4WD with Visco-Lok QE auto-locking front differential
Power Steering	Tri-Mode Dynamic Power Steering (DPS)

TIRES / WHEELS	
Front Tires	Maxxis Bighorn 2.0 27 x 9 x 14 in. (68.6 x 22.9 x 35.6 cm)
Rear Tires	Maxxis Bighorn 2.0 27 x 11 x 14 in. (68.6 x 27.9 x 35.6 cm)
Wheels	14-in. (35.6 cm) cast-aluminum

SUSPENSIONS	
Front Suspension	Double A-arm with sway bar / 10 in. (25.4 cm) travel
Front Shocks	Twin tube gas charged shocks
Rear Suspension	Torsional Trailing arm Independent (TTI) with external sway bar 10 in. (25.4 cm) travel
Rear Shocks	Twin tube gas charged shocks

BRAKES	
Front	Dual 220 mm ventilated disc brakes with hydraulic twin-piston calipers
Rear	Dual 214 mm ventilated disc brakes with hydraulic single-piston calipers

DIMENSIONS / CAPACITIES	
L x W x H	149.7 x 62.5 x 76 in. (380.2 x 158.8 x 193 cm)
Wheelbase	106.1 in. (269.4 cm)
Ground Clearance	11 in. (27.9 cm)
Dry Weight*	1,572.4 lb (713.2 kg)
Rack Capacity	600 lb (272 kg) Dual-Level cargo box Upper level: 400 lb (181 kg) Lower level: 200 lb (91 kg)
Storage Capacity	Total: 4.8 gal (18.5 L) Glove box: 4.5 gal (17.2 L) Center console: 0.3 gal (1.3 L)
Towing Capacity	1,500 lb (680 kg)
Fuel Capacity	10 gal (37.8 L)

FEATURES

Gauge	Multifunction analog / digital: Speedometer, tachometer, odometer, trip and hour meters, fuel, gear position, sport mode, ECO™ mode, seat belt and 4 x 4 indicator, diagnostics, clock, auto shut off	Instrumentation	Lighter type DC outlet in console, standard connector in the back (15-A)
		Lighting	240 W from four 60-W projectors with tail lights / brake lights
Winch	4,500-lb (2,041 kg) winch with roller fairlead	Anti-theft System	Digitally Encoded Security System (D.E.S.S.™)
Protection	Heavy-duty front bumper, mudguards, bed rails		

WARRANTY

Factory	6-months limited warranty
Extended	Up to 30 months B.E.S.T. coverage

©2019 Bombardier Recreational Products Inc (BRP). All rights reserved. ™, ® and the BRP logo are trademarks of Bombardier Recreational Products Inc. or its affiliates. In the U.S.A., the products are distributed by BRP US Inc. *Commander MAX DPS model dry weight shown. ‡Visco-Lok is a trademark of GKN Viscodrive GmbH. †All other trademarks are the property of their respective owners. BRP reserves the right, at any time, to discontinue or change specifications, prices, designs, features, models or equipment without incurring obligation. Some models depicted may include optional equipment. Read the side-by-side vehicle (SSV) Operator's Guide and watch the Safety DVD before driving. For your safety: wear a helmet, eye protection and other protective gear. Fasten lateral net and seat belt at all times. Always remember that riding and alcohol/drugs don't mix. SSV is for off-road use only. Never ride on paved surfaces or public roads. Operator must be at least 16 years old. Passenger must be at least 12 years old and able to hold handgrips and plant feet while seated against the backrest. Never engage in stunt driving and avoid excessive speed.

Can-AmOffroad.com

2020 COMMANDER™ MAX LIMITED

HIGHLIGHTS

- Tri-Mode Dynamic Power Steering (DPS™)
- Visco-Lok QE‡ auto-locking front differential
- Double A-arm front suspension with sway bar
- Torsional Trailing arm Independent (TTI) rear suspension with external sway bar
- FOX† 2.0 PODIUM QS3† shocks
- Intelligent Throttle Control (iTC™)
- Industry's exclusive Dual-Level™ cargo box
- 14-in. cast-aluminum with machined finish wheels and 27-in. Maxxis Bighorn 2.0† tires
- Garmin† Montana† 650t touchscreen GPS
- Bluetooth ready sound system with four integrated speakers, iPod†- iPhone† connector with gauge controls, USB port and auxiliary input
- 4,500-lb (2,041 kg) winch
- Heavy-duty front bumper
- Rugged bed rails
- Mudguards
- One piece full hard roof with skylight, half windshield and rear net
- Analog / digital gauge

Stone Gray / 1000R

ENGINE	1000R
Type	92 hp, Rotax® 976 cc, V-twin, liquid cooled
Fuel Delivery System	Intelligent Throttle Control (iTC) with Electronic Fuel Injection (EFI)
Transmission	CVT, L / H / N / R / P, standard engine braking
Drive Train	Selectable 2WD / 4WD with Visco-Lok QE auto-locking front differential
Power Steering	Tri-Mode Dynamic Power Steering (DPS)

SUSPENSIONS

Front Suspension	Double A-arm with sway bar / 10 in. (25.4 cm) travel
Front Shocks	FOX 2.0 PODIUM QS3 Piggyback with compression adjustment
Rear Suspension	Torsional Trailing arm Independent (TTI) with external sway bar 10 in. (25.4 cm) travel
Rear Shocks	FOX 2.0 PODIUM QS3 Piggyback with compression adjustment

BRAKES

Front	Dual 220 mm ventilated disc brakes with hydraulic twin-piston calipers
Rear	Dual 214 mm ventilated disc brakes with hydraulic single-piston calipers

TIRES / WHEELS

Front Tires	Maxxis Bighorn 2.0 27 x 9 x 14 in. (68.6 x 22.9 x 35.6 cm)
Rear Tires	Maxxis Bighorn 2.0 27 x 11 x 14 in. (68.6 x 27.9 x 35.6 cm)
Wheels	14-in. (35.6 cm) cast-aluminum with machined finish

DIMENSIONS / CAPACITIES

L x W x H	149.7 x 62.5 x 75.5 in. (380.2 x 158.8 x 191.8 cm)
Wheelbase	106.1 in. (269.4 cm)
Ground Clearance	10 in. (25.4 cm)
Dry Weight*	1,572.4 lb (713.2 kg)
Rack Capacity	600 lb (272 kg) Dual-Level cargo box Upper level: 400 lb (181 kg) Lower level: 200 lb (91 kg)
Storage Capacity	Total: 4.8 gal (18.5 L) Glove box: 4.5 gal (17.2 L) Center console: 0.3 gal (1.3 L)
Towing Capacity	1,500 lb (680 kg)
Fuel Capacity	10 gal (37.8 L)

FEATURES

Gauge	Multifunction analog / digital: Speedometer, tachometer, odometer, trip and hour meters, fuel, gear position, sport mode, ECO™ mode, seat belt and 4 x 4 indicator, diagnostics, clock, auto shut off	Instrumentation	Lighter type DC Outlet in console, standard connector in the back (15-A) I integrated/removable Garmin Montana 650t touchscreen GPS I Bluetooth ready sound system with four integrated speakers, iPod - iPhone connector with gauge controls, USB port and auxiliary input
Winch	4,500-lb (2,041 kg) winch with roller fairlead	Lighting	240 W from four 60-W projectors with tail lights / brake lights
Protection	Heavy-duty front bumper, mudguards, bed rails, half windshield, rear net, one-piece full hard roof with skylight	Anti-theft System	Digitally Encoded Security System (D.E.S.S.™)

WARRANTY

Factory	6-months limited warranty
Extended	Up to 30 months B.E.S.T. coverage

BEST PROTECTION ©2019 Bombardier Recreational Products Inc (BRP). All rights reserved. ™, ® and the BRP logo are trademarks of Bombardier Recreational Products Inc. or its affiliates. In the U.S.A., the products are distributed by BRP US Inc. *Commander MAX DPS model dry weight shown. ‡Visco-Lok is a trademark of GKN Viscodrive GmbH. †All other trademarks are the property of their respective owners. BRP reserves the right, at any time, to discontinue or change specifications, prices, designs, features, models or equipment without incurring obligation. Some models depicted may include optional equipment. Read the side-by-side vehicle (SSV) Operator's Guide and watch the Safety DVD before driving. For your safety: wear a helmet, eye protection and other protective gear. Fasten lateral net and seat belt at all times. Always remember that riding and alcohol/drugs don't mix. SSV is for off-road use only. Never ride on paved surfaces or public roads. Operator must be at least 16 years old. Passenger must be at least 12 years old and able to hold handgrips and plant feet while seated against the backrest. Never engage in stunt driving and avoid excessive speed.

can-am

Can-AmOffroad.com

2020 MAVERICK™ TRAIL

HIGHLIGHTS

PLATFORM FEATURES

- 50-in. wide
- 90.6-in. wheelbase
- 10-in. front / 10.5-in. rear suspension travel
- 4.5 in. digital display
- SPORT / ECO™ modes
- Half door (Only for 1000)
- Ergoprint seats

AGILE

- Sturdy engine and transmission
- Easy Handling and capabilities
- Front and rear suspension designed for trail riding

ADVENTUROUS

- Meaningful functionalities and versatilities
- Enhanced comfort with Ergo-Lok cockpit
- Build your Maverick Trail that fits your needs

CONFIDENT

- Perfectly tuned
- Enhanced protection
- More adventure and less maintenance

White / 800 / 1000

ENGINES

	800	1000
Type	51 hp, Rotax® 799.9 cc, V-twin, liquid cooled	75 hp, Rotax® 976 cc, V-twin, liquid cooled
Fuel Delivery System	Intelligent Throttle Control (iTC™) with Electronic Fuel Injection (EFI)	
Transmission	Quick Response System (QRS) CVT with high airflow ventilation and Electronic Drive Belt Protection Extra-L / H / N / R / P	
Drive Train	Selectable 2WD / 4WD with Visco-Lok† auto-locking front differential	
Driving Assistance	Electronic Hill Descent Control SPORT / ECO modes	
Power Steering	N/A	

SUSPENSIONS

Front Suspension	Double A-arm with sway bar / 10 in. (25.4 cm) travel
Front Shocks	Twin tube gas charged shocks
Rear Suspension	TTA with sway bar / 10.5 in. (26.7 cm) travel
Rear Shocks	Twin tube gas charged shocks

BRAKES

Front	Dual 220 mm ventilated disc brakes with hydraulic twin-piston calipers
Rear	Dual 220 mm ventilated disc brakes with hydraulic twin-piston calipers

TIRES / WHEELS

Front Tires	Carlisle ACT 26 x 8 x 12 in. (66 x 20.3 x 30.5 cm)
Rear Tires	Carlisle ACT 26 x 9 x 12 in. (66 x 22.9 x 30.5 cm)
Wheels	12-in. (30.5 cm) steel

DIMENSIONS / CAPACITIES

L x W x H	118 x 50 x 69.1 in. (300.5 x 127 x 175.5 cm)
Wheelbase	90.6 in. (230.1 cm)
Ground Clearance	10 in. (25.4 cm)
Estimated Dry Weight	800: 1,314 lb (596 kg) 1000: 1,349 lb (611.9 kg)
Chassis / Cage	Profiled cage ROPS approved
Cargo Box Capacity	300 lb (136 kg)
Storage Capacity	Total: 5.3 gal (20.2 L) Glove Box: 4.1 gal (15.6 L) Driver storage: 0.4 gal (1.5 L) Center console and Cup holders: 0.8 gal (3.1 L)
Towing capacity	1,500 lb (680 kg)
Fuel Capacity	10 gal (38 L)

FEATURES

Gauge	4.5 in. (11.4 cm) wide digital display: Speedometer, tachometer, odometer, trip and hour meters, fuel, gear position, SPORT / ECO modes, seat belt, diagnostics, clock, battery voltage, engine temperature
Instrumentation	Lighter type DC outlet in console (20-A)
Magneto	650-W
Lighting	Two 55 W reflectors and LED tail lights
Winch	N/A
Steering Wheel	Adjustable tilt steering
Protection	Integrated front steel bumper, injected full body skid plates, half doors (only for 1000)
Hitch Type	2-in hitch receiver

WARRANTY

Factory	6-months limited warranty
Extended	Up to 30 months B.E.S.T. coverage

BEST PROTECTION ©2019 Bombardier Recreational Products Inc (BRP). All rights reserved. ™, ® and the BRP logo are trademarks of Bombardier Recreational Products Inc. or its affiliates. In the U.S.A., the products are distributed by BRP US Inc. †Visco-Lok is a trademark of GKN Viscodrive GmbH. ‡All other trademarks are the property of their respective owners. BRP reserves the right, at any time, to discontinue or change specifications, prices, designs, features, models or equipment without incurring obligation. Some models depicted may include optional equipment. Read the side-by-side vehicle (SSV) Operator's Guide and watch the Safety DVD before driving. For your safety: wear a helmet, eye protection and other protective gear. Fasten lateral net and seat belt at all times. Always remember that riding and alcohol/drugs don't mix. SSV is for off-road use only. Never ride on paved surfaces or public roads. Operator must be at least 16 years old. Passenger must be at least 12 years old and able to hold handgrips and plant feet while seated against the backrest. Never engage in stunt driving and avoid excessive speed.

can-am

Can-AmOffroad.com

BRP

2020 MAVERICK™ TRAIL DPS™

HIGHLIGHTS

PLATFORM FEATURES

- 50-in. wide
- 90.6-in. wheelbase
- 10-in. front / 10.5-in. rear suspension travel
- 4.5 in. digital display
- SPORT / ECO™ modes
- Half door (Only for 1000)

SPECIFIC TO DPS PACKAGE

- Dynamic Power Steering (DPS)
- Visco-Lok‡ QE front differential
- 12-in. (30.5 cm) aluminum wheels
- Ergoprint seats with color accents
- Painted color options

AGILE

- Sturdy engine and transmission
- Easy Handling and capabilities
- Front and rear suspension designed for trail riding

ADVENTUROUS

- Meaningful functionalities and versatilities
- Enhanced comfort with Ergo-Lok cockpit
- Build your Maverick Trail that fits your needs

CONFIDENT

- Perfectly tuned
- Enhanced protection
- More adventure and less maintenance

- Can-Am Red 800 / 1000
- Triple Black / 1000
- Mossy Oak Break-Up Country Camo / 1000

ENGINES	800	1000
Type	51 hp, Rotax® 799.9 cc, V-twin, liquid cooled	75 hp, Rotax® 976 cc, V-twin, liquid cooled
Fuel Delivery System	Intelligent Throttle Control (iTC™) with Electronic Fuel Injection (EFI)	
Transmission	Quick Response System(QRS) CVT with high airflow ventilation and Electronic Drive Belt Protection Extra-L / H / N / R / P	
Drive Train	Selectable 2WD / 4WD with Visco-Lok QE auto-locking front differential	
Driving assistance	Electronic Hill Descent Control SPORT / ECO modes	
Power Steering	Dynamic Power Steering (DPS)	

SUSPENSIONS

Front Suspension	Double A-arm with sway bar / 10 in. (25.4 cm) travel
Front Shocks	Twin tube gas charged shocks
Rear Suspension	TTA with sway bar / 10.5 in. (26.7 cm) travel
Rear Shocks	Twin tube gas charged shocks

BRAKES

Front	Dual 220 mm ventilated disc brakes with hydraulic twin-piston calipers
Rear	Dual 220 mm ventilated disc brakes with hydraulic twin-piston calipers

TIRES / WHEELS

Front Tires	Carlisle ACT 26 x 8 x 12 in. (66 x 20.3 x 30.5 cm)
Rear Tires	Carlisle ACT 26 x 9 x 12 in. (66 x 22.9 x 30.5 cm)
Wheels	12-in. (30.5 cm) cast-aluminum

DIMENSIONS / CAPACITIES

L x W x H	118 x 50 x 69.1 in. (300.5 x 127 x 175.5 cm)
Wheelbase	90.6 in. (230.1 cm)
Ground Clearance	10 in. (25.4 cm)
Estimated Dry Weight	800: 1,331 lb (603.7 kg) 1000: 1,364 lb (618.7 kg)
Chassis / Cage	Profiled cage ROPS approved
Cargo Box Capacity	300 lb (136 kg)
Storage Capacity	Total: 5.3 gal (20.2 L) Glove Box: 4.1 gal (15.6 L) Driver storage: 0.4 gal (1.5 L) Center console and Cup holders: 0.8 gal (3.1 L)
Towing capcity	1,500 lb (680 kg)
Fuel Capacity	10 gal (38 L)

FEATURES

Gauge	4.5 in. (11.4 cm) wide digital display: Speedometer, tachometer, odometer, trip and hour meters, fuel, gear position, SPORT / ECO modes, seat belt, diagnostics, clock, battery voltage, engine temperature	Winch	N/A
		Steering Wheel	Adjustable tilt steering
Instrumentation	Lighter type DC outlet in console (20-A)	Protection	Integrated front steel bumper, injected full body skid plates, half doors (Only for 1000)
Magneto	650-W		
Lighting	Two 55 W reflectors and LED tail lights	Hitch Type	2-in hitch receiver

WARRANTY

Factory	6-months limited warranty
Extended	Up to 30 months B.E.S.T. coverage

BEST PROTECTION ©2019 Bombardier Recreational Products Inc (BRP). All rights reserved. ™, ® and the BRP logo are trademarks of Bombardier Recreational Products Inc. or its affiliates. In the U.S.A., the products are distributed by BRP US Inc. ‡Visco-Lok is a trademark of GKN Viscodrive GmbH. †All other trademarks are the property of their respective owners. BRP reserves the right, at any time, to discontinue or change specifications, prices, designs, features, models or equipment without incurring obligation. Some models depicted may include optional equipment. Read the side-by-side vehicle (SSV) Operator's Guide and watch the Safety DVD before driving. For your safety: wear a helmet, eye protection and other protective gear. Fasten lateral net and seat belt at all times. Always remember that riding and alcohol/drugs don't mix. SSV is for off-road use only. Never ride on paved surfaces or public roads. Operator must be at least 16 years old. Passenger must be at least 12 years old and able to hold handgrips and plant feet while seated against the backrest. Never engage in stunt driving and avoid excessive speed.

can-am BRP

Can-AmOffroad.com

2020 MAVERICK™ SPORT

HIGHLIGHTS

PLATFORM FEATURES

- 60-in. wide
- 90.6-in. wheelbase
- 12-in. of ground clearance
- Up to 12-in. suspension travel
- FOX† 2.0 PODIUM† shocks
- SPORT / ECO™ modes
- 4.5-in. digital display
- Premium half doors
- Mudguards
- Ergoprint seats

DARING

- Sturdy engine and transmission
- Enhanced comfort and meaningful functionalities
- Can-Am design

PRECISE

- Easy handling and capabilities
- Suspensions designed for performance
- Ultra-resistant chassis

CONFIDENT

- Perfectly tuned
- Enhanced protection
- More adventure and less maintenance

White / 1000

ENGINE

ENGINE	1000
Type	75 hp, Rotax® 976 cc, V-twin, liquid cooled
Fuel Delivery System	Intelligent Throttle Control (iTC) with Electronic Fuel Injection (EFI)
Transmission	Quick Response System (QRS) CVT with high airflow ventilation and Electronic Drive Belt Protection Extra-L / H / N / R / P
Drive Train	Selectable 2WD / 4WD with Visco-Lok auto-locking front differential
Driving Assistance	Electronic Hill Descent Control SPORT / ECO modes
Power Steering	N/A

SUSPENSIONS

Front Suspension	Double A-arm with sway bar / 11.5 in. (29.2 cm) travel
Front Shocks	FOX 2.0 PODIUM
Rear Suspension	TTA with sway bar / 12 in. (30.5 cm) travel
Rear Shocks	FOX 2.0 PODIUM

BRAKES

Front	Dual 220 mm ventilated disc brakes with hydraulic twin-piston calipers
Rear	Dual 220 mm ventilated disc brakes with hydraulic twin-piston calipers

TIRES / WHEELS

Front Tires	Maxxis† Bighorn 2.0† 27 x 9 x 12 in. (68.6 x 22.9 x 30.5 cm)
Rear Tires	Maxxis Bighorn 2.0 27 x 11 x 12 in. (68.6 x 27.9 x 30.5 cm)
Wheels	12-in. (30.5 cm) cast-aluminum

DIMENSIONS / CAPACITIES

L x W x H	119 x 60 x 71.1 in. (302.2 x 152.4 x 180.6 cm)
Wheelbase	90.6 in. (230.1 cm)
Ground Clearance	12 in. (30.5 cm)
Dry Weight	1,390 lb (630.5 kg)
Chassis / Cage	Profiled cage ROPS approved
Cargo Box Capacity	300 lb (136 kg)
Storage Capacity	Total: 5.3 gal (20.2 L) Glove Box: 4.1 gal (15.6 L) Driver storage: 0.4 gal (1.5 L) Center console and Cup holders: 0.8 gal (3.1 L)
Towing capacity	1,500 lb (680 kg)
Fuel Capacity	10 gal (38 L)

FEATURES

Gauge	4.5 in. (11.4 cm) wide digital display: Speedometer, tachometer, odometer, trip and hour meters, fuel, gear position, SPORT / ECO modes, seat belt, diagnostics, clock, battery voltage, engine temperature	Winch	N/A
		Steering Wheel	Adjustable tilt steering
Instrumentation	Lighter type DC outlet in console (20-A)	Protection	Integrated front steel bumper, full skid plates, premium half doors, mudguards
Magneto	650-W		
Lighting	Two 55 W reflectors and LED tail lights	Hitch Type	2-in hitch receiver

WARRANTY

Factory	6-months limited warranty
Extended	Up to 30 months B.E.S.T. coverage

BEST PROTECTION ©2019 Bombardier Recreational Products Inc (BRP). All rights reserved. ™, ® and the BRP logo are trademarks of Bombardier Recreational Products Inc. or its affiliates. In the U.S.A., the products are distributed by BRP US Inc. ‡Visco-Lok is a trademark of GKN Viscodrive GmbH. †All other trademarks are the property of their respective owners. BRP reserves the right, at any time, to discontinue or change specifications, prices, designs, features, models or equipment without incurring obligation. Some models depicted may include optional equipment. Read the side-by-side vehicle (SSV) Operator's Guide and watch the Safety DVD before driving. For your safety: wear a helmet, eye protection and other protective gear. Fasten lateral net and seat belt at all times. Always remember that riding and alcohol/drugs don't mix. SSV is for off-road use only. Never ride on paved surfaces or public roads. Operator must be at least 16 years old. Passenger must be at least 12 years old and able to hold handgrips and plant feet while seated against the backrest. Never engage in stunt driving and avoid excessive speed.

can-am BRP

Can-AmOffroad.com

2020 MAVERICK™ SPORT DPS™

HIGHLIGHTS

PLATFORM FEATURES

- 60-in. wide
- 90.6-in. wheelbase
- 12-in. of ground clearance
- Up to 12-in. suspension travel
- FOX† 2.0 PODIUM† shocks
- SPORT / ECO™ modes
- 4.5-in. digital display
- Premium half doors
- Mudguards

SPECIFIC TO DPS PACKAGE

- Dynamic Power Steering (DPS)
- Visco-Lok‡ QE front differential
- Ergoprint seats with color accents
- Painted color options

DARING

- Sturdy engine and transmission
- Enhanced comfort and meaningful functionalities
- Can-Am design

PRECISE

- Easy handling and capabilities
- Suspensions designed for performance
- Ultra-resistant chassis

CONFIDENT

- Perfectly tuned
- Enhanced protection
- More adventure and less maintenance

Can-Am Red 1000 / 1000R
Triple Black / 1000R

ENGINES

ENGINES	1000	1000R
Type	75 hp, Rotax® 976 cc, V-twin, liquid cooled	100 hp, Rotax® 976 cc, V-twin, liquid cooled
Fuel Delivery System	Intelligent Throttle Control (iTC) with Electronic Fuel Injection (EFI)	
Transmission	Quick Response System (QRS) CVT with high airflow ventilation and Electronic Drive Belt Protection Extra-L / H / N / R / P	
Drive Train	Selectable 2WD / 4WD with Visco-Lok QE auto-locking front differential	
Driving assistance	Electronic Hill Descent Control SPORT / ECO modes	
Power Steering	Dynamic Power Steering (DPS)	

SUSPENSIONS

Front Suspension	Double A-arm with sway bar / 11.5 in. (29.2 cm) travel
Front Shocks	FOX 2.0 PODIUM
Rear Suspension	TTA with sway bar / 12 in. (30.5 cm) travel
Rear Shocks	FOX 2.0 PODIUM

BRAKES

Front	Dual 220 mm ventilated disc brakes with hydraulic twin-piston calipers
Rear	Dual 220 mm ventilated disc brakes with hydraulic twin-piston calipers

TIRES / WHEELS

Front Tires	Maxxis† Bighorn† 2.0 27 x 9 x 12 in. (68.6 x 22.9 x 30.5 cm)
Rear Tires	Maxxis Bighorn 2.0 27 x 11 x 12 in. (68.6 x 27.9 x 30.5 cm)
Wheels	12-in. (30.5 cm) cast-aluminum

DIMENSIONS / CAPACITIES

L x W x H	119 x 60 x 71.1 in. (302.2 x 152.4 x 180.6 cm)
Wheelbase	90.6 in. (230.1 cm)
Ground Clearance	12 in. (30.5 cm)
Dry Weight	1,405 lb (637.3 kg)
Chassis / Cage	Profiled cage ROPS approved
Cargo Box Capacity	300 lb (136 kg)
Storage Capacity	Total: 5.3 gal (20.2 L) Glove Box: 4.1 gal (15.6 L) Driver storage: 0.4 gal (1.5 L) Center console and Cup holders: 0.8 gal (3.1 L)
Towing capcity	1,500 lb (680 kg)
Fuel Capacity	10 gal (38 L)

FEATURES

Gauge	4.5 in. (11.4 cm) wide digital display: Speedometer, tachometer, odometer, trip and hour meters, fuel, gear position, SPORT / ECO modes, seat belt, diagnostics, clock, battery voltage, engine temperature	Winch	N/A
		Steering Wheel	Adjustable tilt steering
Instrumentation	Lighter type DC outlet in console (20-A)	Protection	Integrated front steel bumper, premium half doors, full skid plate, mudguards
Magneto	650-W		
Lighting	Two 55 W reflectors and LED tail lights	Hitch Type	2-in hitch receiver

WARRANTY

Factory	6-months limited warranty
Extended	Up to 30 months B.E.S.T. coverage

BEST PROTECTION ©2019 Bombardier Recreational Products Inc (BRP). All rights reserved. ™, ® and the BRP logo are trademarks of Bombardier Recreational Products Inc. or its affiliates. In the U.S.A., the products are distributed by BRP US Inc. ‡Visco-Lok is a trademark of GKN Viscodrive GmbH. †All other trademarks are the property of their respective owners. BRP reserves the right, at any time, to discontinue or change specifications, prices, designs, features, models or equipment without incurring obligation. Some models depicted may include optional equipment. Read the side-by-side vehicle (SSV) Operator's Guide and watch the Safety DVD before driving. For your safety: wear a helmet, eye protection and other protective gear. Fasten lateral net and seat belt at all times. Always remember that riding and alcohol/drugs don't mix. SSV is for off-road use only. Never ride on paved surfaces or public roads. Operator must be at least 16 years old. Passenger must be at least 12 years old and able to hold handgrips and plant feet while seated against the backrest. Never engage in stunt driving and avoid excessive speed.

can-am

Can-AmOffroad.com

BRP

2020 MAVERICK™ SPORT X rc

HIGHLIGHTS

PLATFORM FEATURES

- 90.6-in. wheelbase
- 15-in of ground clearance
- 14.75-in. suspension travel
- Dynamic Power Steering (DPS™)
- 14-in. cast-aluminum wheels
- SPORT / ECO™ modes
- Premium half doors
- Mudguards

SPECIFIC TO X rc PACKAGE

- 64-in. wide with Arched A-arms
- Smart-Lok** front differential
- FOX† 2.5 PODIUM† QS3 Piggyback shocks
- 30-in. Maxxis† Liberty† tires
- 4,500-lb (2,041 kg) winch with synthetic rope
- Rear sport bumper, front anchor
- HMWPE front skid plate and rock sliders
- UHMWPE front and rear suspension arm protectors
- X-package graphics/seats
- 7.6-in. digital display with keypad
- Premium tail light

DARING

- Sturdy engine and transmission
- Enhanced comfort and meaningful functionalities
- Can-Am design

PRECISE

- Easy handling and capabilities
- Suspensions designed for performance
- Ultra-resistant chassis

CONFIDENT

- Perfectly tuned
- Enhanced protection
- More adventure and less maintenance

Carbon Black & Orange / 1000R

ENGINES

ENGINES	1000R
Type	100 hp, Rotax® 976 cc, V-twin, liquid cooled
Fuel Delivery System	Intelligent Throttle Control (iTC™) with Electronic Fuel Injection (EFI)
Transmission	Quick Response System (QRS) CVT with high airflow ventilation and Electronic Drive Belt Protection Extra-L / H / N / R / P
Drive Train	Lockable front differential with exclusive Smart-Lok* technology. True 4 modes traction system: 2WD / 4WD with front diff. lock / 4WD ROCK / 4WD TRAIL *Smart-Lok was developed in conjunction with TEAM Industries, a market leader in the drive train industry
Driving Assistance	Electronic Hill Descent Control SPORT / ECO™ modes
Power Steering	Dynamic Power Steering (DPS)

SUSPENSIONS

Front Suspension	Arched double A-arm with sway bar / 14.75 in. (37.5 cm) travel
Front Shocks	FOX 2.5 PODIUM Piggyback with QS3 compression adjustment
Rear Suspension	Arched TTA with sway bar / 14.75 in. (37.5 cm) travel
Rear Shocks	FOX 2.5 PODIUM Piggyback with QS3 compression adjustment

BRAKES

Front	Dual 220 mm ventilated disc brakes with hydraulic twin-piston calipers
Rear	Dual 220 mm ventilated disc brakes with hydraulic twin-piston calipers

TIRES / WHEELS

Front Tires	Maxxis Liberty 30 x 10 x 14 in. (76.2 x 25.4 x 35.6 cm)
Rear Tires	Maxxis Liberty 30 x 10 x 14 in. (76.2 x 25.4 x 35.6 cm)
Wheels	14 in. (35.6 cm) cast-aluminum

DIMENSIONS / CAPACITIES

L x W x H	122 x 64 x 74.25 in. (309.8 x 162.6 x 188.6 cm)
Wheelbase	90.6 in. (230.1 cm)
Ground Clearance	15 in. (38.1 cm)
Dry Weight	1593 lb (722.6 kg)
Chassis / Cage	Profiled cage ROPS approved
Cargo Box Capacity	300 lb (136 kg)
Storage Capacity	Total: 5.3 gal (20.2 L) Glove Box: 4.1 gal (15.6 L) Driver storage: 0.4 gal (1.5 L) Center console and Cup holders: 0.8 gal (3.1 L)
Towing capacity	1,500 lb (680 kg)
Fuel Capacity	10 gal (38 L)

FEATURES

Gauge	7.6 in. (19.3 cm) wide digital display with keypad: Speedometer, tachometer, odometer, trip and hour meters, fuel, gear position, SPORT / ECO modes, seat belt, diagnostics, clock, battery voltage, engine temperature	Winch	4,500 lb (2,041 kg) winch with synthetic rope
		Steering Wheel	Adjustable tilt steering
Instrumentation	Lighter type DC outlet in console (20 A)	Protection	Integrated front steel bumper, rear sport bumper, premium half doors, mudguards, front tow hook, full skid plate, UHMWPE rock sliders, HMWPE skid plates: differential and front skid plate / front and rear suspension arm
Magneto	650 W		
Lighting	Two 55 W reflectors with unique Can-Am LED signature and LED tail lights with halo glow effect	Hitch Type	2 in. hitch receiver

WARRANTY

Factory	6-months limited warranty
Extended	Up to 30 months B.E.S.T. coverage

©2019 Bombardier Recreational Products Inc (BRP). All rights reserved. ™, ® and the BRP logo are trademarks of Bombardier Recreational Products Inc. or its affiliates. In the U.S.A., the products are distributed by BRP US Inc. †Visco-Lok is a trademark of GKN Viscodrive GmbH. †All other trademarks are the property of their respective owners. BRP reserves the right, at any time, to discontinue or change specifications, prices, designs, features, models or equipment without incurring obligation. Some models depicted may include optional equipment. Read the side-by-side vehicle (SSV) Operator's Guide and watch the Safety DVD before driving. For your safety: wear a helmet, eye protection and other protective gear. Fasten lateral net and seat belt at all times. Always remember that riding and alcohol/drugs don't mix. SSV is for off-road use only. Never ride on paved surfaces or public roads. Operator must be at least 16 years old. Passenger must be at least 12 years old and able to hold handgrips and plant feet while seated against the backrest. Never engage in stunt driving and avoid excessive speed.

Can-AmOffroad.com

2020 MAVERICK™ SPORT X mr

HIGHLIGHTS

PLATFORM FEATURES

- 90.6-in. wheelbase
- 15-in of ground clearance
- 14.75-in. suspension travel
- Dynamic Power Steering (DPS™)
- 14-in. cast-aluminum wheels
- SPORT / ECO™ modes
- Premium half doors
- Mudguards

SPECIFIC TO X mr PACKAGE

- 64-in. wide with Arched A-arm
- Smart-Lok** front differential
- Snorkeled engine air intake and CVT
- FOX† 2.5 PODIUM† QS3 Piggyback shocks
- 30-in. ITP†* Cryptid† tires
- 4,500-lb (2,041 kg) winch with synthetic cable
- Fender flare extensions
- X-package graphics/seats
- 7.6-in. digital display with keypad
- Premium tail light

DARING

- Sturdy engine and transmission
- Enhanced comfort and meaningful functionalities
- Can-Am design

PRECISE

- Easy handling and capabilities
- Suspensions designed for performance
- Ultra-resistant chassis

CONFIDENT

- Perfectly tuned
- Enhanced protection
- More adventure and less maintenance

Iron Gray & Manta Green / 1000R

ENGINES

	1000R
Type	100 hp, Rotax® 976 cc, V-twin, liquid cooled and with strategically positioned engine air intake
Fuel Delivery System	Intelligent Throttle Control (iTC™) with Electronic Fuel Injection (EFI)
Transmission	Quick Response System (QRS) CVT with high airflow ventilation. Strategically positioned CVT air intakes and exhaust. Lower gearing ratio and Electronic Drive Belt Protection Extra-L / H / N / R / P
Drive Train	Lockable front differential with exclusive Smart-Lok** technology. True 4 modes traction system: 2WD / 4WD with front diff. lock / 4WD MUD / 4WD TRAIL **Smart-Lok was developed in conjunction with TEAM Industries, a market leader in the drive train industry
Driving Assistance	Electronic Hill Descent Control SPORT / ECO modes
Power Steering	Dynamic Power Steering (DPS)

SUSPENSIONS

Front Suspension	Arched double A-arm with sway bar / 14.75 in. (37.5 cm) travel
Front Shocks	FOX 2.5 PODIUM Piggyback with QS3 compression adjustment
Rear Suspension	Arched TTA with sway bar / 14.75 in. (37.5 cm) travel
Rear Shocks	FOX 2.5 PODIUM Piggyback with QS3 compression adjustment

BRAKES

Front	Dual 220 mm ventilated disc brakes with hydraulic twin-piston calipers
Rear	Dual 220 mm ventilated disc brakes with hydraulic twin-piston calipers

TIRES / WHEELS

Front Tires	ITP* Cryptid 30 x 9 x 14 in. (76.2 x 22.9 x 35.6 cm)
Rear Tires	ITP* Cryptid 30 x 11 x 14 in. (76.2 x 27.9 x 35.6 cm)
Wheels	14 in. (35.6 cm) cast-aluminum

DIMENSIONS / CAPACITIES

L x W x H	122 x 64 x 74.25 in. (309.8 x 162.6 x 188.6 cm)
Wheelbase	90.6 in. (230.1 cm)
Ground Clearance	15 in. (38.1 cm)
Dry Weight	1617 lb (733.5 kg)
Chassis / Cage	Profiled cage ROPS approved
Cargo Box Capacity	300 lb (136 kg)
Storage Capacity	Total: 5.3 gal (20.2 L) Glove Box: 4.1 gal (15.6 L) Driver storage: 0.4 gal (1.5 L) Center console and Cup holders: 0.8 gal (3.1 L)
Towing capacity	1,500 lb (680 kg)
Fuel Capacity	10 gal (38 L)

FEATURES

Gauge	7.6 in. (19.3 cm) wide digital display with keypad: Speedometer, tachometer, odometer, trip and hour meters, fuel, gear position, SPORT / ECO modes, seat belt, diagnostics, clock, battery voltage, engine temperature
Instrumentation	Lighter type DC outlet in console (20 A)
Magneto	650 W
Lighting	Two 55 W reflectors with unique Can-Am LED signature and LED tail lights with halo glow effect
Winch	4,500 lb (2,041 kg) winch with synthetic rope
Steering Wheel	Adjustable tilt steering
Protection	Integrated front steel bumper, premium half doors, full skid plate, mudguards, fender flare extensions, front tow hook
Hitch Type	2 in. hitch receiver

WARRANTY

Factory	6 months limited warranty
Extended	Up to 30 months B.E.S.T. coverage

©2019 Bombardier Recreational Products Inc (BRP). All rights reserved. ™, ® and the BRP logo are trademarks of Bombardier Recreational Products Inc. or its affiliates. In the U.S.A., the products are distributed by BRP US Inc. ‡Visco-Lok is a trademark of GKN Viscodrive GmbH. †All other trademarks are the property of their respective owners. BRP reserves the right, at any time, to discontinue or change specifications, prices, designs, features, models or equipment without incurring obligation. Some models depicted may include optional equipment. Read the side-by-side vehicle (SSV) Operator's Guide and watch the Safety DVD before driving. For your safety: wear a helmet, eye protection and other protective gear. Fasten lateral net and seat belt at all times. Always remember that riding and alcohol/drugs don't mix. SSV is for off-road use only. Never ride on paved surfaces or public roads. Operator must be at least 16 years old. Passenger must be at least 12 years old and able to hold handgrips and plant feet while seated against the backrest. Never engage in stunt driving and avoid excessive speed. * Vehicles featuring 30" ITP Cryptid tires are limited to 62 mph (100 km/h).

Can-AmOffroad.com

2020 MAVERICK™ SPORT X xc

HIGHLIGHTS

PLATFORM FEATURES

- 90.6-in. wheelbase
- 15-in of ground clearance
- 14.75-in. suspension travel
- Dynamic Power Steering (DPS™)
- SPORT / ECO™ modes
- Premium half doors
- Mudguards

SPECIFIC TO X xc PACKAGE

- 64-in. wide with Arched A-arms
- Smart-Lok** front differential
- FOX† 2.5 PODIUM† QS3 Piggyback shocks
- 14-in. cast-aluminum beadlock wheels
- 29-in. Maxxis† Bighorn 2.0†
- X-package graphics/seats
- 7.6-in. digital display with keypad
- Premium tail light

DARING

- Sturdy engine and transmission
- Enhanced comfort and meaningful functionalities
- Can-Am design

PRECISE

- Easy handling and capabilities
- Suspensions designed for performance
- Ultra-resistant chassis

CONFIDENT

- Perfectly tuned
- Enhanced protection
- More adventure and less maintenance

Triple Black, Hyper Silver & Can-Am Red / 1000R

ENGINES

ENGINES	1000R
Type	100 hp, Rotax® 976 cc, V-twin, liquid cooled
Fuel Delivery System	Intelligent Throttle Control (iTC™) with Electronic Fuel Injection (EFI)
Transmission	Quick Response System (QRS) CVT with high airflow ventilation and Electronic Drive Belt Protection Extra-L / H / N / R / P
Drive Train	Lockable front differential with exclusive Smart-Lok** technology. True 4 modes traction system: 2WD / 4WD with front diff. lock / 4WD TRAIL ACTIV / 4WD TRAIL **Smart-Lok was developed in conjunction with TEAM Industries, a market leader in the drive train industry
Driving Assistance	Electronic Hill Descent Control SPORT / ECO modes
Power Steering	Dynamic Power Steering (DPS)

SUSPENSIONS

Front Suspension	Arched double A-arm with sway bar / 14.75 in. (37.5 cm) travel
Front Shocks	FOX 2.5 PODIUM Piggyback with QS3 compression adjustment
Rear Suspension	Arched TTA with sway bar / 14.75 in. (37.5 cm) travel
Rear Shocks	FOX 2.5 PODIUM Piggyback with QS3 compression adjustment

BRAKES

Front	Dual 220 mm ventilated disc brakes with hydraulic twin-piston calipers
Rear	Dual 220 mm ventilated disc brakes with hydraulic twin-piston calipers

TIRES / WHEELS

Front Tires	Maxxis Bighorn 2.0 29 x 9 x 14 in. (73.7 x 22.9 x 35.6 cm)
Rear Tires	Maxxis Bighorn 2.0 29 x 11 x 14 in. (73.7 x 27.9 x 35.6 cm)
Wheels	14-in. (35.6 cm) cast-aluminum beadlock

DIMENSIONS / CAPACITIES

L x W x H	122 x 64 x 74.25 in. (309.8 x 162.6 x 188.6 cm)
Wheelbase	90.6 in. (230.1 cm)
Ground Clearance	15 in. (38.1 cm)
Dry Weight	1,428 lb (647.7 kg)
Chassis / Cage	Profiled cage ROPS approved
Cargo Box Capacity	300 lb (136 kg)
Storage Capacity	Total: 5.3 gal (20.2 L) Glove Box: 4.1 gal (15.6 L) Driver storage: 0.4 gal (1.5 L) Center console and Cup holders: 0.8 gal (3.1 L)
Towing capacity	1,500 lb (680 kg)
Fuel Capacity	10 gal (38 L)

FEATURES

Gauge	7.6 in. (19.3 cm) wide digital display with keypad: Speedometer, tachometer, odometer, trip and hour meters, fuel, gear position, SPORT / ECO modes, seat belt, diagnostics, clock, battery voltage, engine temperature
Instrumentation	Lighter type DC outlet in console (20 A)
Magneto	650 W
Lighting	Two 55 W reflectors with unique Can-Am LED signature and LED tail lights with halo glow effect
Winch	N/A
Steering Wheel	Adjustable tilt steering
Protection	Integrated front steel bumper, rear sport bumper, premium half doors, full skid plate, mudguards
Hitch Type	2 in. hitch receiver

WARRANTY

Factory	6 months limited warranty
Extended	Up to 30 months B.E.S.T. coverage

©2019 Bombardier Recreational Products Inc (BRP). All rights reserved. ™, ® and the BRP logo are trademarks of Bombardier Recreational Products Inc. or its affiliates. In the U.S.A., the products are distributed by BRP US Inc. ‡Visco-Lok is a trademark of GKN Viscodrive GmbH. †All other trademarks are the property of their respective owners. BRP reserves the right, at any time, to discontinue or change specifications, prices, designs, features, models or equipment without incurring obligation. Some models depicted may include optional equipment. Read the side-by-side vehicle (SSV) Operator's Guide and watch the Safety DVD before driving. For your safety: wear a helmet, eye protection and other protective gear. Fasten lateral net and seat belt at all times. Always remember that riding and alcohol/drugs don't mix. SSV is for off-road use only. Never ride on paved surfaces or public roads. Operator must be at least 16 years old. Passenger must be at least 12 years old and able to hold handgrips and plant feet while seated against the backrest. Never engage in stunt driving and avoid excessive speed. * Vehicles featuring 30" ITP Cryptid tires are limited to 62 mph (100 km/h).

Can-AmOffroad.com

2020 MAVERICK™ SPORT MAX DPS™

HIGHLIGHTS

PLATFORM FEATURES

- 60-in. wide
- 120.6-in. wheelbase
- Up to 13-in. suspension travel
- FOX† 2.0 PODIUM† QS3 Piggyback shocks
- SPORT / ECO™ modes
- 4.5-in. digital display
- Premium half doors
- Mudguards

SPECIFIC TO DPS PACKAGE

- Dynamic Power Steering (DPS)
- Visco-Lok‡ QE front differential
- Ergoprint seats with color accents
- Painted color options

DARING

- Sturdy engine and transmission
- Enhanced comfort and meaningful functionalities
- Can-Am design

PRECISE

- Easy handling and capabilities
- Suspensions designed for performance
- Ultra-resistant chassis

CONFIDENT

- Perfectly tuned
- Enhanced protection
- More adventure and less maintenance

Can-Am Red / 1000R

TIRES / WHEELS

Front Tires	Maxxis† Bighorn 2.0† 27 x 9 x 12 in. (68.6 x 22.9 x 30.5 cm)
Rear Tires	Maxxis Bighorn 2.0 27 x 11 x 12 in. (68.6 x 27.9 x 30.5 cm)
Wheels	12-in. (30.5 cm) cast-aluminum

DIMENSIONS / CAPACITIES

L x W x H	149 x 60 x 76.2 in (378.4 x 152.4 x 193.5 cm)
Wheelbase	120.6 in. (306.3cm)
Ground Clearance	12 in. (30.5 cm)
Estimated Dry Weight	1,697 lb (769.7 kg)
Chassis / Cage	Profiled cage ROPS approved
Cargo Box Capacity	300 lb (136 kg)
Storage Capacity	Total: 6.5 gal (24.7 L) Glove Box: 4.1 gal (15.6 L) Driver storage: 0.4 gal (1.5 L) Center console and Cup holders: 0.8 gal (3.1 L) Rear console and Cup holders: 1.2 gal (4.5L)
Towing capacity	1,500 lb (680 kg)
Fuel Capacity	10 gal (38 L)

ENGINES

ENGINES	1000R
Type	100 hp, Rotax® 976 cc, V-twin, liquid cooled
Fuel Delivery System	Intelligent Throttle Control (iTC™) with Electronic Fuel Injection (EFI)
Transmission	Quick Response System (QRS) CVT with high airflow ventilation and Electronic Drive Belt Protection Extra-L / H / N / R / P
Drive Train	Selectable 2WD / 4WD with Visco-Lok QE auto-locking front differential
Driving Assistance	Electronic Hill Descent Control SPORT / ECO modes
Power Steering	Dynamic Power Steering (DPS)

SUSPENSIONS

Front Suspension	Double A-arm with sway bar / 12.5 in.travel
Front Shocks	FOX 2.0 PODIUM Piggyback with QS3 compression adjustment
Rear Suspension	TTA with sway bar / 13 in. travel
Rear Shocks	FOX 2.0 PODIUM Piggyback with QS3 compression adjustment

BRAKES

Front	Dual 220 mm ventilated disc brakes with hydraulic twin-piston calipers
Rear	Dual 220 mm ventilated disc brakes with hydraulic twin-piston calipers

FEATURES

Gauge	4.5 in. (11.4 cm) wide digital display: Speedometer, tachometer, odometer, trip and hour meters, fuel, gear position, SPORT / ECO modes, seat belt, diagnostics, clock, battery voltage, engine temperature
Instrumentation	Lighter type DC outlet in console (20-A)
Magneto	650-W
Lighting	TTwo 55 W reflectors and LED tail lights
Winch	N/A
Steering Wheel	Adjustable tilt steering
Protection	Integrated front steel bumper, premium half doors, full skid plate, mudguards
Hitch Type	2-in hitch receiver

WARRANTY

Factory	6-months limited warranty
Extended	Up to 30 months B.E.S.T. coverage

BEST PROTECTION ©2019 Bombardier Recreational Products Inc (BRP). All rights reserved. ™, ® and the BRP logo are trademarks of Bombardier Recreational Products Inc. or its affiliates. In the U.S.A., the products are distributed by BRP US Inc. ‡Visco-Lok is a trademark of GKN Viscodrive GmbH. †All other trademarks are the property of their respective owners. BRP reserves the right, at any time, to discontinue or change specifications, prices, designs, features, models or equipment without incurring obligation. Some models depicted may include optional equipment. Read the side-by-side vehicle (SSV) Operator's Guide and watch the Safety DVD before driving. For your safety: wear a helmet, eye protection and other protective gear. Fasten lateral net and seat belt at all times. Always remember that riding and alcohol/drugs don't mix. SSV is for off-road use only. Never ride on paved surfaces or public roads. Operator must be at least 16 years old. Passenger must be at least 12 years old and able to hold handgrips and plant feet while seated against the backrest. Never engage in stunt driving and avoid excessive speed. * Vehicles featuring 30" ITP Cryptid tires are limited to 62 mph (100 km/h).

can-am

Can-AmOffroad.com

BRP

2020 MAVERICK™ X3 TURBO

HIGHLIGHTS

PLATFORM FEATURES

- 64-in. wide
- 102-in. wheelbase
- 14-in. of ground clearance
- High torque Dynamic Power Steering (DPS™)
- 20-in. suspension travel
- FOX† 2.5 PODIUM† QS3 Piggyback shocks
- 14-in. aluminum wheels
- 28-in. Maxxis† Bighorn 2.0† tires
- 4.5-in. digital display
- Rear tow hook

DEFIANT

- Trademark Can-Am DNA with next generation design
- Low seating position
- Ergo-Lok cockpit with four-way adjustable seats

POWERFUL

- 120 hp turbocharged Rotax® ACE engine
- Advanced airflow dynamics
- QRS-X transmission

PRECISE

- TTX suspension with industry leading travel
- Ultra efficient and lightweight chassis
- Sharpest handling features

- Can-Am Red / TURBO
- White / TURBO
- Hyper Silver & Can-Am Red / TURBO

ENGINE

ENGINE	TURBO
Type	120 hp, Rotax ACE (Advanced Combustion Efficiency) 900 cc Turbocharged Triple-cylinder engine, liquid cooled and high-perfomance air filter
Fuel Delivery System	Intelligent Throttle Control (iTC™) with Electronic Fuel Injection (EFI)
Transmission	Quick Response System X(QRS-X) CVT with high airflow, L / H / N / R / P
Drive Train	Selectable 2WD / 4WD with Visco-Lok‡ auto-locking front differential
Power Steering	High torque Tri-Mode Dynamic Power Steering (DPS)

SUSPENSIONS

Front Suspension	Double A-arm with sway bar / 20-in. (50.8 cm) travel
Front Shocks	FOX 2.5 PODIUM Piggyback with QS3 compression adjustment
Rear Suspension	4-link Torsional Trailing-arm X (TTX) with sway bar, 20-in (50.8 cm) travel
Rear Shocks	FOX 2.5 PODIUM Piggyback with QS3 compression adjustment and bottom-out control

BRAKES

Front	Dual 262 mm ventilated disc brakes with hydraulic twin-piston calipers
Rear	Dual 248 mm ventilated disc brakes with hydraulic twin-piston calipers

TIRES / WHEELS

Front Tires	Maxxis Bighorn 2.0 28 x 9 x 14 in. 71.1 x 22.9 x 35.6 cm)
Rear Tires	Maxxis Bighorn 2.0 28 x 11 x 14 in. (71.1 x 27.9 x 35.6 cm)
Wheels	14-in. (35.6 cm) cast-aluminum

DIMENSIONS / CAPACITIES

L x W x H	132 x 64 x 65.4 in. (335.3 x 162.5 x 166.1 cm)
Wheelbase	102 in. (259.1 cm)
Ground Clearance	14 in. (35.6 cm)
Estimated Dry Weight	1,481 lb (671.9 kg)
Chassis / Cage	Dual-phase 980 steel
Rack Capacity	200 lb (91 kg) with LinQ™ quick-attach
Storage Capacity	Total: 2.5 gal (9.4 L) Glove box: 1.6 gal (6.2 L) Center console: 0.8 gal (2.8 L) Cup holders: 0.1 gal (0.4 L)
Fuel Capacity	10.5 gal (40 L)

FEATURES

Gauge	4.5 in. (11.4 cm) wide digital display with keypad: Speedometer, tachometer, odometer, trip and hour meters, fuel, gear position, SPORT / ECO™ mode, seat belt and 4 x 4 indicator, diagnostics, clock, auto shut off	Protection	Integrated front bumper, quarter-doors, HMWPE full skid plate, rear tow hook
		Instrumentation	Lighter type DC outlet in central console
		Lighting	LED headlights and tail lights
Winch	N/A	Anti-theft System	RF Digitally Encoded Security System (D.E.S.S.™) with Start/ Stop button

WARRANTY

Factory	6-months limited warranty
Extended	Up to 30 months B.E.S.T. coverage

BEST PROTECTION ©2019 Bombardier Recreational Products Inc (BRP). All rights reserved. ™, ® and the BRP logo are trademarks of Bombardier Recreational Products Inc. or its affiliates. In the U.S.A., the products are distributed by BRP US Inc. ‡Visco-Lok is a trademark of GKN Viscodrive GmbH. †All other trademarks are the property of their respective owners. BRP reserves the right, at any time, to discontinue or change specifications, prices, designs, features, models or equipment without incurring obligation. Some models depicted may include optional equipment. Read the side-by-side vehicle (SSV) Operator's Guide and watch the Safety DVD before driving. For your safety: wear a helmet, eye protection and other protective gear. Fasten lateral net and seat belt at all times. Always remember that riding and alcohol/drugs don't mix. SSV is for off-road use only. Never ride on paved surfaces or public roads. Operator must be at least 16 years old. Passenger must be at least 12 years old and able to hold handgrips and plant feet while seated against the backrest. Never engage in stunt driving and avoid excessive speed.

can-am

Can-AmOffroad.com

2020 MAVERICK™ X3 X™ mr TURBO

HIGHLIGHTS

PLATFORM FEATURES

- 64-in. wide
- 102-in. wheelbase
- 14-in. of ground clearance
- High torque Dynamic Power Steering (DPS™)
- 18-in. suspension travel
- FOX† 2.5 PODIUM† QS3 Piggyback shocks
- 14-in. aluminum wheels

SPECIFIC TO X mr PACKAGE

- Smart-Lok™** front differential
- Snorkeled engine air intake and CVT
- 30-in. ITP†* Cryptid† tires
- Front bumper, half-doors
- Front and rear tow hooks
- HMWPE full skid plate
- 4,500-lb (2,041kg) winch with synthetic rope
- X-package graphics/seats
- 7.6-in. digital display with keypad

DEFIANT

- Trademark Can-Am DNA with next generation design
- Low seating position
- Ergo-Lok cockpit with four-way adjustable seats

POWERFUL

- 120 hp turbocharged and intercooled Rotax® ACE engine
- Advanced airflow dynamics
- QRS-X transmission

PRECISE

- TTX suspension with industry leading travel
- Ultra efficient and lightweight chassis
- Sharpest handling features

SMART LOK™ TECHNOLOGY

Iron Gray & Manta Green / TURBO

ENGINE — TURBO

Type	120 hp, Rotax ACE (Advanced Combustion Efficiency) 900 cc Turbocharged Triple-cylinder engine, liquid cooled and high-perfomance air filter
Fuel Delivery System	Intelligent Throttle Control (iTC™) with Electronic Fuel Injection (EFI)
Transmission	Quick Response System X (QRS-X) CVT, high airflow with strategically positioned CVT air intakes and exhaust, L / H / N / R / P
Drive Train	Lockable front differential with exclusive Smart-Lok** technology. True 4 modes traction system: 2WD / 4WD with front diff. lock / 4WD MUD / 4WD TRAIL **Smart-Lok was developed in conjunction with TEAM Industries, a market leader in the drive train industry
Power Steering	High torque Tri-Mode Dynamic Power Steering (DPS)

SUSPENSIONS

Front Suspension	Double arched A-arm with sway bar / 18-in. (45.7 cm) travel
Front Shocks	FOX 2.5 PODIUM Piggyback with QS3 compression adjustment
Rear Suspension	4-link Torsional Trailing-arm X (TTX) with sway bar and arched lower links / 18-in. (45.7 cm) travel
Rear Shocks	FOX 2.5 PODIUM Piggyback with QS3 compression adjustment and bottom-out control

BRAKES

Front	Dual 262 mm ventilated disc brakes with hydraulic twin-piston calipers
Rear	Dual 248 mm ventilated disc brakes with hydraulic twin-piston calipers

TIRES / WHEELS

Front Tires	ITP* Cryptid 30 x 9 x 14 in. (76.2 x 22.9 x 35.6 cm)
Rear Tires	ITP* Cryptid 30 x 11 x 14 in. (76.2 x 27.9 x 35.6 cm)
Wheels	14-in. (35.6 cm) cast-aluminum with machined finish

DIMENSIONS / CAPACITIES

L x W x H	133 x 66.7 x 66.1 in. (337.8 x 169.4 x 167.9 cm)
Wheelbase	102 in. (259.1 cm)
Ground Clearance	14 in. (35.6 cm)
Estimated Dry Weight	1,664 lb (754.8 kg)
Chassis / Cage	Dual-phase 980 steel
Rack Capacity	200 lb (91 kg) with LinQ™ quick-attach
Storage Capacity	Total: 2.5 gal (9.4 L) Glove box: 1.6 gal (6.2 L) Central console: 0.8 gal (2.8 L) Cup holders: 0.1 gal (0.4 L)
Fuel Capacity	10.5 gal (40 L)

FEATURES

Gauge	7.6 in. (19.3 cm) wide digital display with keypad: Speedometer, tachometer, odometer, trip and hour meters, fuel, gear position, SPORT / ECO™ modes, seat belt, diagnostics, clock
Winch	4,500-lb (2,041 kg) winch with synthetic rope
Protection	Front bumper, half-doors, front and rear tow hooks, HMWPE full skid plate
Instrumentation	Lighter type DC Outlet in central console
Lighting	LED headlights and tail lights with unique Can-Am LED signature
Anti-theft System	RF Digitally Encoded Security System (D.E.S.S.™) with Start / Stop button

WARRANTY

Factory	6-months limited warranty
Extended	Up to 30 months B.E.S.T. coverage

BEST PROTECTION ©2019 Bombardier Recreational Products Inc (BRP). All rights reserved. ™, ® and the BRP logo are trademarks of Bombardier Recreational Products Inc. or its affiliates. In the U.S.A., the products are distributed by BRP US Inc. †All other trademarks are the property of their respective owners. BRP reserves the right, at any time, to discontinue or change specifications, prices, designs, features, models or equipment without incurring obligation. Some models depicted may include optional equipment. Read the side-by-side vehicle (SSV) Operator's Guide and watch the Safety DVD before driving. For your safety: wear a helmet, eye protection and other protective gear. Fasten lateral net and seat belt at all times. Always remember that riding and alcohol/drugs don't mix. SSV is for off-road use only. Never ride on paved surfaces or public roads. Operator must be at least 16 years old. Passenger must be at least 12 years old and able to hold handgrips and plant feet while seated against the backrest. Never engage in stunt driving and avoid excessive speed. * Vehicles featuring 30" ITP Cryptid tires are limited to 62 mph (100 km/h).

can-am BRP

Can-AmOffroad.com

2020 MAVERICK™ X3 X™ rc TURBO

HIGHLIGHTS

PLATFORM FEATURES

- 64-in. wide
- 102-in. wheelbase
- 14-in. of ground clearance
- High torque Dynamic Power Steering (DPS™)
- 18-in. suspension travel
- FOX† 2.5 PODIUM† QS3 Piggyback shocks
- 14-in. aluminum wheels

SPECIFIC TO X rc PACKAGE

- Smart-Lok™* front differential
- 30-in. Maxxis† Liberty† tires
- Front bumper, quarter-doors
- Front and rear tow hooks
- HMWPE differential and under bumper skid plates
- HMWPE front and rear suspension arm
- UHMWPE rock sliders
- 4,500-lb (2,041 kg) winch with synthetic rope
- X-package graphics/seats
- 7.6-in. digital display with keypad

DEFIANT

- Trademark Can-Am DNA with next generation design
- Low seating position
- Ergo-Lok cockpit with four-way adjustable seats

POWERFUL

- 120 hp turbocharged and intercooled Rotax® ACE engine
- Advanced airflow dynamics
- QRS-X transmission

PRECISE

- TTX suspension with industry leading travel
- Ultra efficient and lightweight chassis
- Sharpest handling features

Carbon Black & Orange / TURBO

SMART LOK TECHNOLOGY

ENGINE	TURBO
Type	120 hp, Rotax ACE (Advanced Combustion Efficiency) 900 cc Turbocharged Triple-cylinder engine, liquid cooled and high-perfomance air filter
Fuel Delivery System	Intelligent Throttle Control (iTC™) with Electronic Fuel Injection (EFI)
Transmission	Quick Response System X (QRS-X) CVT with high airflow, L / H / N / R / P
Drive Train	Lockable front differential with exclusive Smart-Lok* technology . True 4 modes traction system: 2WD / 4WD with front diff. lock / 4WD ROCK / 4WD TRAIL *Smart-Lok was developed in conjunction with TEAM Industries, a market leader in the drive train industry
Power Steering	High torque Tri-Mode Dynamic Power Steering (DPS)

SUSPENSIONS	
Front Suspension	Double arched A-arm with sway bar / 18-in. (45.7 cm) travel
Front Shocks	FOX 2.5 PODIUM Piggyback with QS3 compression adjustment
Rear Suspension	4-link Torsional Trailing-arm X (TTX) with sway bar and arched lower links / 18-in. (45.7 cm) travel
Rear Shocks	FOX 2.5 PODIUM Piggyback with QS3 compression adjustment and bottom-out control

BRAKES	
Front	Dual 262 mm ventilated disc brakes with hydraulic twin-piston calipers
Rear	Dual 248 mm ventilated disc brakes with hydraulic twin-piston calipers

TIRES / WHEELS	
Front Tires	Maxxis Liberty 30 x 10 x 14 in. (76.2 x 25.4 x 35.6 cm)
Rear Tires	Maxxis Liberty 30 x 10 x 14 in. (76.2 x 25.4 x 35.6 cm)
Wheels	14-in. (35.6 cm) cast-aluminum

DIMENSIONS / CAPACITIES	
L x W x H	133 x 65.6 x 66 in. (337.8 x 166.6 x 167.6 cm)
Wheelbase	102 in. (259.1 cm)
Ground Clearance	14 in. (35.6 cm)
Estimated Dry Weight	1,642 lb (744.8 kg)
Chassis / Cage	Dual-phase 980 steel
Rack Capacity	200 lb (91 kg) with LinQ™ quick-attach
Storage Capacity	Total: 2.5 gal (9.4 L) Glove box: 1.6 gal (6.2 L) Central console: 0.8 gal (2.8 L) Cup holders: 0.1 gal (0.4 L)”
Fuel Capacity	10.5 gal (40 L)

FEATURES

Gauge	7.6 in. (19.3 cm) wide digital display with keypad: Speedometer, tachometer, odometer, trip and hour meters, fuel, gear position, SPORT / ECO™ modes, seat belt, diagnostics, clock	Protection	Front bumper, quarter-doors, UHMWPE rock sliders, HMWPE skidplates: Full heavy duty with differential / Under bumper / Front and rear suspension arm, front and rear tow hooks
Instrumentation	Lighter type DC Outlet in central console	Lighting	LED headlights and tail lights with unique Can-Am LED signature
Winch	4,500-lb (2,041 kg) winch with synthetic rope	Anti-theft System	RF Digitally Encoded Security System (D.E.S.S.™) with Start / Stop button

WARRANTY

Factory	6-months limited warranty
Extended	Up to 30 months B.E.S.T. coverage

BEST PROTECTION ©2019 Bombardier Recreational Products Inc (BRP). All rights reserved. ™, ® and the BRP logo are trademarks of Bombardier Recreational Products Inc. or its affiliates. In the U.S.A., the products are distributed by BRP US Inc. †All other trademarks are the property of their respective owners. BRP reserves the right, at any time, to discontinue or change specifications, prices, designs, features, models or equipment without incurring obligation. Some models depicted may include optional equipment. Read the side-by-side vehicle (SSV) Operator's Guide and watch the Safety DVD before driving. For your safety: wear a helmet, eye protection and other protective gear. Fasten lateral net and seat belt at all times. Always remember that riding and alcohol/drugs don't mix. SSV is for off-road use only. Never ride on paved surfaces or public roads. Operator must be at least 16 years old. Passenger must be at least 12 years old and able to hold handgrips and plant feet while seated against the backrest. Never engage in stunt driving and avoid excessive speed.

can-am BRP

Can-AmOffroad.com

2020 MAVERICK™ X3 DS TURBO R

HIGHLIGHTS

PLATFORM FEATURES

- 64-in. wide
- 102-in. wheelbase
- 14-in. of ground clearance
- High torque Dynamic Power Steering (DPS™)
- 20-in. suspension travel
- FOX† 2.5 PODIUM† QS3 Piggyback shocks
- 14-in. aluminum wheels
- 28-in. Maxxis† Bighorn 2.0† tires
- 4.5-in. digital display
- Rear tow hook

SPECIFIC TO DS PACKAGE

- 172 hp Turbo R engine

DEFIANT

- Trademark Can-Am DNA with next generation design
- Low seating position
- Ergo-Lok cockpit with four-way adjustable seats

POWERFUL

- 172 hp turbocharged and intercooled Rotax® ACE engine
- Advanced airflow dynamics
- QRS-X transmission

PRECISE

- TTX suspension with industry leading travel
- Ultra efficient and lightweight chassis
- Sharpest handling features

Can-Am Red & White / TURBO R

ENGINE

ENGINE	TURBO R
Type	172 hp, Rotax ACE (Advanced Combustion Efficiency) 900 cc Turbocharged Triple-cylinder engine, liquid cooled with integrated intercooler and high-performance air filter
Fuel Delivery System	Intelligent Throttle Control (iTC™) with Electronic Fuel Injection (EFI)
Transmission	Quick Response System X (QRS-X) CVT with high airflow, L / H / N / R / P
Drive Train	Selectable 2WD / 4WD with Visco-Lok‡ auto-locking front differential
Power Steering	High torque Tri-Mode Dynamic Power Steering (DPS)

SUSPENSIONS

Front Suspension	Double A-arm with sway bar / 20 in. (50.8 cm) travel
Front Shocks	FOX 2.5 PODIUM Piggyback with QS3 compression adjustment
Rear Suspension	4-link Torsional Trailing-arm X (TTX) with sway bar 20 in. (50.8 cm) travel
Rear Shocks	FOX 2.5 PODIUM Piggyback with QS3 compression adjustment and bottom-out control

BRAKES

Front	Dual 262 mm ventilated disc brakes with hydraulic twin-piston calipers
Rear	Dual 248 mm ventilated disc brakes with hydraulic twin-piston calipers

TIRES / WHEELS

Front Tires	Maxxis Bighorn 2.0 28 x 9 x 14 in. (71.1 x 22.9 x 35.6 cm)
Rear Tires	Maxxis Bighorn 2.0 28 x 11 x 14 in. (71.1 x 27.9 x 35.6 cm)
Wheels	14-in. (35.6 cm) cast-aluminum

DIMENSIONS / CAPACITIES

L x W x H	132 x 64 x 65.4 in. (335.3 x 162.5 x 166.1 cm)
Wheelbase	102 in. (259.1 cm)
Ground Clearance	14 in. (35.6 cm)
Estimated Dry Weight	1,481 lb (671.9 kg)
Chassis / Cage	Dual-phase 980 steel
Rack Capacity	200 lb (91 kg) with LinQ™ quick-attach
Storage Capacity	Total: 2.5 gal (9.4 L) Glove box: 1.6 gal (6.2 L) Center console: 0.8 gal (2.8 L) Cup holders: 0.1 gal (0.4 L)
Fuel Capacity	10.5 gal (40 L)

FEATURES

Gauge	4.5 in. (11.4 cm) wide digital display with keypad: Speedometer, tachometer, odometer, trip and hour meters, fuel, gear position, SPORT / ECO™ mode, seat belt and 4 x 4 indicator, diagnostics, clock, auto shut off
Winch	N/A
Protection	Integrated front bumper, quarter-doors, HMWPE full skid plate, rear tow hook
Instrumentation	Lighter type DC outlet in central console
Lighting	LED headlights and tail lights
Anti-theft System	RF Digitally Encoded Security System (D.E.S.S.™) with Start/ Stop button

WARRANTY

Factory	6-months limited warranty
Extended	Up to 30 months B.E.S.T. coverage

BEST PROTECTION ©2019 Bombardier Recreational Products Inc (BRP). All rights reserved. ™, ® and the BRP logo are trademarks of Bombardier Recreational Products Inc. or its affiliates. In the U.S.A., the products are distributed by BRP US Inc. ‡Visco-Lok is a trademark of GKN Viscodrive GmbH. †All other trademarks are the property of their respective owners. BRP reserves the right, at any time, to discontinue or change specifications, prices, designs, features, models or equipment without incurring obligation. Some models depicted may include optional equipment. Read the side-by-side vehicle (SSV) Operator's Guide and watch the Safety DVD before driving. For your safety: wear a helmet, eye protection and other protective gear. Fasten lateral net and seat belt at all times. Always remember that riding and alcohol/drugs don't mix. SSV is for off-road use only. Never ride on paved surfaces or public roads. Operator must be at least 16 years old. Passenger must be at least 12 years old and able to hold handgrips and plant feet while seated against the backrest. Never engage in stunt driving and avoid excessive speed.

can-am

Can-AmOffroad.com

BRP

2020 MAVERICK™ X3 RS TURBO R

HIGHLIGHTS

PLATFORM FEATURES

- 72-in. wide
- 102-in. wheelbase
- 15.5-in. of ground clearance
- 14-in. aluminum wheels
- High torque Dynamic Power Steering (DPS™)
- 22-in. suspension travel
- FOX† 2.5 PODIUM† QS3 Piggyback Shocks
- 4.5-in. digital display
- Rear tow hook

SPECIFIC TO RS PACKAGE

- 172 hp Turbo R engine
- 29-in. Maxxis† Bighorn 2.0† tires

DEFIANT

- Trademark Can-Am DNA with next generation design
- Low seating position
- Ergo-Lok cockpit with four-way adjustable seats

POWERFUL

- 172 hp turbocharged and intercooled Rotax® ACE engine
- Advanced airflow dynamics
- QRS-X transmission

PRECISE

- TTX suspension with industry leading travel
- Ultra efficient and lightweight chassis
- Sharpest handling features

Can-Am Red & White / TURBO R

ENGINE

ENGINE	TURBO R
Type	172 hp, Rotax ACE (Advanced Combustion Efficiency) 900 cc Turbocharged Triple-cylinder engine, liquid cooled with integrated intercooler and high-performance air filter
Fuel Delivery System	Intelligent Throttle Control (iTC™) with Electronic Fuel Injection (EFI)
Transmission	Quick Response System X (QRS-X) CVT with high airflow, L / H / N / R / P
Drive Train	Selectable 2WD / 4WD with Visco-Lok‡ auto-locking front differential
Power Steering	High torque Tri-Mode Dynamic Power Steering (DPS)

SUSPENSIONS

Front Suspension	Double A-arm with sway bar / 22-in. (55.9 cm) travel / Trophy truck inspired arms
Front Shocks	FOX 2.5 PODIUM Piggyback with QS3 compression adjustment
Rear Suspension	4-link Torsional Trailing-arm X (TTX) with sway bar 22-in (55.9 cm) travel
Rear Shocks	FOX 2.5 PODIUM Piggyback with QS3 compression adjustment and bottom-out control

BRAKES

Front	Dual 262 mm ventilated disc brakes with hydraulic twin-piston calipers
Rear	Dual 248 mm ventilated disc brakes with hydraulic twin-piston calipers

TIRES / WHEELS

Front Tires	Maxxis Bighorn 2.0 29 x 9 x 14 in (73.7 x 22.9 x 35.6 cm)
Rear Tires	Maxxis Bighorn 2.0 29 x 11 x 14 in (73.7 x 27.9 x 35.6 cm)
Wheels	14-in. (35.6 cm) cast-aluminum

DIMENSIONS / CAPACITIES

L x W x H	132 x 72.4 x 68.5 in. (335.3 x 183.9 x 174 cm)
Wheelbase	102 in. (259.1 cm)
Ground Clearance	15.5 in. (39.4 cm)
Estimated Dry Weight	1,620 lb (735 kg)
Chassis / Cage	Dual-phase 980 steel
Rack Capacity	200 lb (91 kg) with LinQ™ quick-attach
Storage Capacity	Total: 2.5 gal (9.4 L) Glove box: 1.6 gal (6.2 L) Center console: 0.8 gal (2.8 L) Cup holders: 0.1 gal (0.4 L)
Fuel Capacity	10.5 gal (40 L)

FEATURES

Gauge	4.5 in. (11.4 cm) wide digital display with keypad: Speedometer, tachometer, odometer, trip and hour meters, fuel, gear position, SPORT / ECO™ mode, seat belt and 4 x 4 indicator, diagnostics, clock, auto shut off
Winch	N/A
Protection	Integrated front bumper, quarter-doors, HMWPE full skid plate, rear tow hook
Instrumentation	Lighter type DC outlet in central console
Lighting	LED headlights and tail lights
Anti-theft System	RF Digitally Encoded Security System (D.E.S.S.™) with Start/ Stop button

WARRANTY

Factory	6-months limited warranty
Extended	Up to 30 months B.E.S.T. coverage

BEST PROTECTION ©2019 Bombardier Recreational Products Inc (BRP). All rights reserved. ™, ® and the BRP logo are trademarks of Bombardier Recreational Products Inc. or its affiliates. In the U.S.A., the products are distributed by BRP US Inc. ‡Visco-Lok is a trademark of GKN Viscodrive GmbH. †All other trademarks are the property of their respective owners. BRP reserves the right, at any time, to discontinue or change specifications, prices, designs, features, models or equipment without incurring obligation. Some models depicted may include optional equipment. Read the side-by-side vehicle (SSV) Operator's Guide and watch the Safety DVD before driving. For your safety: wear a helmet, eye protection and other protective gear. Fasten lateral net and seat belt at all times. Always remember that riding and alcohol/drugs don't mix. SSV is for off-road use only. Never ride on paved surfaces or public roads. Operator must be at least 16 years old. Passenger must be at least 12 years old and able to hold handgrips and plant feet while seated against the backrest. Never engage in stunt driving and avoid excessive speed.

can-am

Can-AmOffroad.com

2020 MAVERICK™ X3 X™ ds TURBO RR

HIGHLIGHTS

PLATFORM FEATURES

- 64-in. wide
- 102-in. wheelbase
- 14-in. of ground clearance
- High torque Dynamic Power Steering (DPS™)
- 20-in. suspension travel
- Rear tow hook

SPECIFIC TO X ds PACKAGE

- 195 hp Turbo RR engine
- Smart-Lok™* front differential
- FOX† 2.5 PODIUM† RC2 Piggyback shocks
- 14-in. aluminum beadlock wheels
- 29-in. Maxxis† Bighorn 2.0† tires
- X-package graphics/seats
- 7.6-in. digital display with keypad
- Painted color options

DEFIANT

- Trademark Can-Am DNA with next generation design
- Low seating position
- Ergo-Lok cockpit with four-way adjustable seats

POWERFUL

- 195 hp turbocharged and intercooled Rotax® ACE engine
- Advanced airflow dynamics
- QRS-X transmission

PRECISE

- TTX suspension with industry leading travel
- Ultra efficient and lightweight chassis
- Sharpest handling features

Iron Gray & Manta Green / TURBO RR
Phoenix Orange Metallic / TURBO RR
Triple Black / TURBO RR

SMART LOK™ TECHNOLOGY

ENGINE

ENGINE	TURBO RR
Type	195 hp, Rotax ACE (Advanced Combustion Efficiency) 900 cc Turbocharged Triple-cylinder engine, liquid cooled with integrated intercooler and high-perfomance air filter
Fuel Delivery System	Intelligent Throttle Control (iTC™) with Electronic Fuel Injection (EFI)
Transmission	Quick Response System X (QRS-X) CVT with high airflow, L / H / N / R / P
Drive Train	Lockable front differential with exclusive Smart-Lok* technology. True 4 modes traction system: 2WD / 4WD with front diff. lock / 4WD TRAIL ACTIV / 4WD TRAIL *Smart-Lok was developed in conjunction with TEAM Industries, a market leader in the drive train industry
Power Steering	High torque Tri-Mode Dynamic Power Steering (DPS)

SUSPENSIONS

Front Suspension	Double A-arm with sway bar / 20 in. (50.8 cm) travel
Front Shocks	FOX 2.5 PODIUM RC2 Piggyback with dual speed compression and rebound adjustments
Rear Suspension	4-link Torsional Trailing-arm X (TTX) with sway bar 20 in. (50.8 cm) travel
Rear Shocks	FOX 2.5 PODIUM RC2 Piggyback with dual speed compression, rebound adjustments and bottom-out control

BRAKES

Front	Dual 262 mm ventilated disc brakes with hydraulic twin-piston calipers
Rear	Dual 248 mm ventilated disc brakes with hydraulic twin-piston calipers

TIRES / WHEELS

Front Tires	Maxxis Bighorn 2.0 29 x 9 x 14 in. (73.7 x 22.9 x 35.6 cm)
Rear Tires	Maxxis Bighorn 2.0 29 x 11 x 14 in. (73.7 x 27.9 x 35.6 cm)
Wheels	14-in. (35.6 cm) cast-aluminum beadlock

DIMENSIONS / CAPACITIES

L x W x H	132 x 64 x 65.7 in. (335.3 x 162.5 x 166.9 cm)
Wheelbase	102 in. (259.1 cm)
Ground Clearance	14 in. (35.6 cm)
Estimated Dry Weight	1,501 lb (680.9 kg)
Chassis / Cage	Dual-phase 980 steel
Rack Capacity	200 lb (91 kg) with LinQ™ quick-attach
Storage Capacity	Total: 2.5 gal (9.4 L) Glove box: 1.6 gal (6.2 L) Center console: 0.8 gal (2.8 L) Cup holders: 0.1 gal (0.4 L)
Fuel Capacity	10.5 gal (40 L)

FEATURES

Gauge	7.6 in. (19.3 cm) wide digital display with keypad: Speedometer, tachometer, odometer, trip and hour meters, fuel, gear position, SPORT / ECO™ modes, seat belt, diagnostics, clock	Protection	Integrated front bumper, quarter-doors, HMWPE full skid plate, rear tow hook
		Instrumentation	Lighter type DC outlet in central console
		Lighting	LED headlights and tail lights with unique Can-Am LED signature
Winch	N/A	Anti-theft System	RF Digitally Encoded Security System (D.E.S.S.™) with Start/ Stop button

WARRANTY

Factory	6-months limited warranty
Extended	Up to 30 months B.E.S.T. coverage

BEST PROTECTION

©2019 Bombardier Recreational Products Inc (BRP). All rights reserved. ™, ® and the BRP logo are trademarks of Bombardier Recreational Products Inc. or its affiliates. In the U.S.A., the products are distributed by BRP US Inc. †All other trademarks are the property of their respective owners. BRP reserves the right, at any time, to discontinue or change specifications, prices, designs, features, models or equipment without incurring obligation. Some models depicted may include optional equipment. Read the side-by-side vehicle (SSV) Operator's Guide and watch the Safety DVD before driving. For your safety: wear a helmet, eye protection and other protective gear. Fasten lateral net and seat belt at all times. Always remember that riding and alcohol/drugs don't mix. SSV is for off-road use only. Never ride on paved surfaces or public roads. Operator must be at least 16 years old. Passenger must be at least 12 years old and able to hold handgrips and plant feet while seated against the backrest. Never engage in stunt driving and avoid excessive speed.

can-am

Can-AmOffroad.com

BRP

2020 MAVERICK™ X3 X™ rs TURBO RR

HIGHLIGHTS

PLATFORM FEATURES

- 72-in. wide
- 102-in. wheelbase
- 16-in. of ground clearance
- High torque Dynamic Power Steering (DPS™)
- Up to 24-in. suspension travel
- Rear tow hook

SPECIFIC TO X rs PACKAGE

- 195 hp Turbo RR engine
- Smart-Lok™* front differential
- FOX† 3.0 PODIUM† RC2 shocks with bypass
- 14-in. aluminum beadlock wheels
- 30-in. Maxxis† Bighorn 2.0† tires
- 4-point harness with shoulder pads
- HMWPE heavy-duty full skid plate
- X-package graphics/seats
- 7.6-in. digital display with keypad
- Painted color options

DEFIANT

- Trademark Can-Am DNA with next generation design
- Low seating position
- Ergo-Lok cockpit with four-way adjustable seats

POWERFUL

- 195 hp turbocharged and intercooled Rotax® ACE engine
- Advanced airflow dynamics
- QRS-X transmission

PRECISE

- TTX suspension with industry leading travel
- Ultra efficient and lightweight chassis
- Sharpest handling features

Hyper Silver, Intense Blue & Manta Green / TURBO RR
Triple Black / TURBO RR
Gold, Can-Am Red & Hyper Silver / TURBO RR

ENGINE

ENGINE	TURBO RR
Type	195 hp, Rotax ACE (Advanced Combustion Efficiency) 900 cc Turbocharged Triple-cylinder engine, liquid cooled with integrated intercooler and high-perfomance air filter
Fuel Delivery System	Intelligent Throttle Control (iTC™) with Electronic Fuel Injection (EFI)
Transmission	Quick Response System X (QRS-X) CVT with high airflow, L / H / N / R/ P
Drive Train	Lockable front differential with exclusive Smart-Lok* technology. True 4 modes traction system: 2WD / 4WD with front diff. lock / 4WD TRAIL ACTIV / 4WD TRAIL *Smart-Lok was developed in conjunction with TEAM Industries, a market leader in the drive train industry
Power Steering	High torque Tri-Mode Dynamic Power Steering (DPS)

SUSPENSIONS

Front Suspension	Double A-arm with sway bar / 22-in. (55.9 cm) travel / Trophy truck inspired arms
Front Shocks	FOX 2.5 PODIUM RC2 Piggyback with bypass, dual speed compression and rebound adjustments
Rear Suspension	4-link Torsional Trailing-arm X (TTX) with sway bar 24-in. (61 cm) travel
Rear Shocks	FOX 3.0 PODIUM RC2 remote reservoir with bypass, dual speed compression and rebound adjustments

BRAKES

Front	Dual 262 mm ventilated disc brakes with hydraulic twin-piston calipers
Rear	Dual 248 mm ventilated disc brakes with hydraulic twin-piston calipers

TIRES / WHEELS

Front Tires	Maxxis Bighorn 2.0 30 x 9 x 14 in. (76.2 x 22.9 x 35.6 cm)
Rear Tires	Maxxis Bighorn 2.0 30 x 11 x 14 in. (76.2 x 27.9 x 35.6 cm)
Wheels	14-in. (35.6 cm) cast-aluminum beadlock

DIMENSIONS / CAPACITIES

L x W x H	132 x 72.7 x 68.5 in. (335.3 x 184.7 x 174 cm)
Wheelbase	102 in. (259.1 cm)
Ground Clearance	16 in. (40.6 cm)
Estimated Dry Weight	1,627 lb (738 kg)
Chassis / Cage	Dual-phase 980 steel
Rack Capacity	200 lb (91 kg) with LinQ™ quick-attach
Storage Capacity	Total: 2.5 gal (9.4 L) Glove box: 1.6 gal (6.2 L) Center console: 0.8 gal (2.8 L) Cup holders: 0.1 gal (0.4 L)
Fuel Capacity	10.5 gal (40 L)

FEATURES

Gauge	7.6 in. (19.3 cm) wide digital display with keypad: Speedometer, tachometer, odometer, trip and hour meters, fuel, gear position, SPORT / ECO™ modes, seat belt, diagnostics, clock	Protection	Integrated front bumper , quarter-doors, full roof, 4-point harness with shoulder pads, HMWPE heavy-duty full skid plate, rear tow hook
Instrumentation	Lighter type DC outlet in central console	Lighting	LED headlights and tail lights with unique Can-Am LED signature
Winch	N/A	Anti-theft System	RF Digitally Encoded Security System (D.E.S.S.™) with Start/ Stop button

WARRANTY

Factory	6-months limited warranty
Extended	Up to 30 months B.E.S.T. coverage

BEST PROTECTION ©2019 Bombardier Recreational Products Inc (BRP). All rights reserved. ™, ® and the BRP logo are trademarks of Bombardier Recreational Products Inc. or its affiliates. In the U.S.A., the products are distributed by BRP US Inc. †All other trademarks are the property of their respective owners. BRP reserves the right, at any time, to discontinue or change specifications, prices, designs, features, models or equipment without incurring obligation. Some models depicted may include optional equipment. Read the side-by-side vehicle (SSV) Operator's Guide and watch the Safety DVD before driving. For your safety: wear a helmet, eye protection and other protective gear. Fasten lateral net and seat belt at all times. Always remember that riding and alcohol/drugs don't mix. SSV is for off-road use only. Never ride on paved surfaces or public roads. Operator must be at least 16 years old. Passenger must be at least 12 years old and able to hold handgrips and plant feet while seated against the backrest. Never engage in stunt driving and avoid excessive speed.

can-am BRP

Can-AmOffroad.com

2020 MAVERICK™ X3 X™ mr TURBO RR

HIGHLIGHTS

PLATFORM FEATURES

- 72-in. wide
- 102-in. wheelbase
- 16-in. of ground clearance
- High torque Dynamic Power Steering (DPS™)
- Up to 24-in. rear suspension travel
- FOX† 2.5 PODIUM† QS3 Piggyback shocks

SPECIFIC TO X mr PACKAGE

- 195 hp Turbo RR engine
- Smart-Lok™** front differential
- Snorkeled engine air intake and CVT
- 14-in. aluminum beadlock wheels
- 30-in. ITP†* Cryptid† tires
- X-package graphics/seats
- Front bumper, half-doors
- Front and rear tow hooks
- HMWPE full skid plate
- 4,500-lb (2,041kg) winch with synthetic rope
- 7.6-in. digital display with keypad

DEFIANT

- Trademark Can-Am DNA with next generation design
- Low seating position
- Ergo-Lok cockpit with four-way adjustable seats

POWERFUL

- 195 hp turbocharged and intercooled Rotax® ACE engine
- Advanced airflow dynamics
- QRS-X transmission

PRECISE

- TTX suspension with industry leading travel
- Ultra efficient and lightweight chassis
- Sharpest handling features

Iron gray & Manta Green / TURBO RR

SMART LOK TECHNOLOGY

ENGINE — TURBO RR

Type	195 hp, Rotax ACE (Advanced Combustion Efficiency) 900 cc Turbocharged Triple-cylinder engine, liquid cooled with integrated intercooler, high-perfomance air filter and strategically positioned engine air intake
Fuel Delivery System	Intelligent Throttle Control (iTC™) with Electronic Fuel Injection (EFI)
Transmission	Quick Response System X (QRS-X) CVT, high airflow with strategically positioned CVT air intakes and exhaust, L / H / N / R / P
Drive Train	Lockable front differential with exclusive Smart-Lok** technology. True 4 modes traction system: 2WD / 4WD with front diff. lock / 4WD MUD / 4WD TRAIL **Smart-Lok was developed in conjunction with TEAM Industries, a market leader in the drive train industry
Power Steering	High torque Tri-Mode Dynamic Power Steering (DPS)

SUSPENSIONS

Front Suspension	Double arched A-arm with sway bar 22-in. (55.9 cm) travel / Trophy truck inspired arms
Front Shocks	FOX 2.5 PODIUM Piggyback with QS3 compression adjustment
Rear Suspension	4-link Torsional Trailing-arm X (TTX) with sway bar and arched lower links, 22-in. (55.9 cm) travel
Rear Shocks	FOX 2.5 PODIUM Piggyback with QS3 compression adjustment and bottom-out control

BRAKES

Front	Dual 262 mm ventilated disc brakes with hydraulic twin-piston calipers
Rear	Dual 248 mm ventilated disc brakes with hydraulic twin-piston calipers

TIRES / WHEELS

Front Tires	ITP* Cryptid 30 x 9 x 14 in. (76.2 x 22.9 x 35.6 cm)
Rear Tires	ITP* Cryptid 30 x 11 x 14 in. (76.2 x 27.9 x 35.6 cm)
Wheels	14-in. (35.6 cm) cast-aluminum beadlock

DIMENSIONS / CAPACITIES

L x W x H	132.3 x 74.2 x 68 in. (336 x 188.5 x 172.7 cm)
Wheelbase	102 in. (259.1 cm)
Ground Clearance	16 in. (40.6 cm)
Estimated Dry Weight	1,726 lb (782.9 kg)
Chassis / Cage	Dual-phase 980 steel
Rack Capacity	200 lb (91 kg) with LinQ™ quick-attach
Storage Capacity	Total: 2.5 gal (9.4 L) Glove box: 1.6 gal (6.2 L) Central console: 0.8 gal (2.8 L) Cup holders: 0.1 gal (0.4 L)
Fuel Capacity	10.5 gal (40 L)

FEATURES

Gauge	7.6 in. (19.3 cm) wide digital display with keypad: Speedometer, tachometer, odometer, trip and hour meters, fuel, gear position, SPORT / ECO™ modes, seat belt, diagnostics, clock	Protection	Front bumper, half-doors, front and rear tow hooks, HMWPE full skid plate
		Instrumentation	Lighter type DC Outlet in central console
		Lighting	LED headlights and tail lights with unique Can-Am LED signature
Winch	4,500-lb (2,041 kg) winch with synthetic rope	Anti-theft System	RF Digitally Encoded Security System (D.E.S.S.™) with Start/ Stop button

WARRANTY

Factory	6-months limited warranty
Extended	Up to 30 months B.E.S.T. coverage

BEST PROTECTION

©2019 Bombardier Recreational Products Inc (BRP). All rights reserved. ™, ® and the BRP logo are trademarks of Bombardier Recreational Products Inc. or its affiliates. In the U.S.A., the products are distributed by BRP US Inc. †All other trademarks are the property of their respective owners. BRP reserves the right, at any time, to discontinue or change specifications, prices, designs, features, models or equipment without incurring obligation. Some models depicted may include optional equipment. Read the side-by-side vehicle (SSV) Operator's Guide and watch the Safety DVD before driving. For your safety: wear a helmet, eye protection and other protective gear. Fasten lateral net and seat belt at all times. Always remember that riding and alcohol/drugs don't mix. SSV is for off-road use only. Never ride on paved surfaces or public roads. Operator must be at least 16 years old. Passenger must be at least 12 years old and able to hold handgrips and plant feet while seated against the backrest. Never engage in stunt driving and avoid excessive speed. * Vehicles featuring 30" ITP Cryptid tires are limited to 62 mph (100 km/h).

can-am

BRP

Can-AmOffroad.com

2020 MAVERICK™ X3 X™ rc TURBO RR

HIGHLIGHTS

PLATFORM FEATURES

- 72-in. wide
- 102-in. wheelbase
- 16-in. of ground clearance
- High torque Dynamic Power Steering (DPS™)
- Up to 24-in. suspension travel

SPECIFIC TO X rc PACKAGE

- 195hp Turbo RR engine
- Smart-Lok™* front differential
- FOX† 3.0 PODIUM† RC2 shocks with bypass
- 15-in. aluminum beadlock wheels
- 32-in. Maxxis† Liberty† tires
- Front bumper, half-doors, aluminum roof, intrusion bar
- Front and rear tow hooks
- HMWPE differential and under bumper skid plates
- HMWPE front and rear suspension arm
- UHMWPE rock sliders
- 4,500-lb (2,041 kg) winch with synthetic rope
- 4-point harness with shoulder pads
- X-package graphics/seats
- 7.6-in. digital display with keypad

DEFIANT

- Trademark Can-Am DNA with next generation design
- Low seating position
- Ergo-Lok cockpit with four-way adjustable seats

POWERFUL

- 195 hp turbocharged and intercooled Rotax® ACE engine
- Advanced airflow dynamics
- QRS-X transmission

PRECISE

- TTX suspension with industry leading travel
- Ultra efficient and lightweight chassis
- Sharpest handling features

Carbon Black & Orange / TURBO RR

ENGINE

ENGINE	TURBO RR
Type	195 hp, Rotax ACE (Advanced Combustion Efficiency) 900 cc Turbocharged Triple-cylinder engine, liquid cooled with integrated intercooler and high-perfomance air filter
Fuel Delivery System	Intelligent Throttle Control (iTC™) with Electronic Fuel Injection (EFI)
Transmission	Quick Response System X (QRS-X) CVT with high airflow, L / H / N / R / P
Drive Train	Lockable front differential with exclusive Smart-Lok* technology . True 4 modes traction system: 2WD / 4WD with front diff. lock / 4WD ROCK / 4WD TRAIL *Smart-Lok was developed in conjunction with TEAM Industries, a market leader in the drive train industry
Power Steering	High torque Tri-Mode Dynamic Power Steering (DPS)

SUSPENSIONS

Front Suspension	Trophy truck inspired double arched A-arm with sway bar / 22-in. (55.9 cm) travel
Front Shocks	FOX 2.5 PODIUM RC2 Piggyback with bypass, dual speed compression and rebound adjustments
Rear Suspension	4-link Torsional Trailing-arm X (TTX) with sway bar and arched lower links, 24-in (61 cm) travel
Rear Shocks	FOX 3.0 PODIUM RC2 remote reservoir with bypass, dual speed compression and rebound adjustments

BRAKES

Front	Dual 262 mm ventilated disc brakes with hydraulic twin-piston calipers
Rear	Dual 248 mm ventilated disc brakes with hydraulic twin-piston calipers

TIRES / WHEELS

Front Tires	Maxxis Liberty 32 x 10 x 15 in. (81.3 x 25.4 x 38.1 cm)
Rear Tires	Maxxis Liberty 32 x 10 x 15 in. (81.3 x 25.4 x 38.1 cm)
Wheels	15-in. (38.1 cm) cast-aluminum beadlock

DIMENSIONS / CAPACITIES

L x W x H	134.5 x 72.8 x 68.5 in. (341.6 x 184.9 x 174 cm)
Wheelbase	102 in. (259.1 cm)
Ground Clearance	16 in. (40.6 cm)
Estimated Dry Weight	1,811.1 lb (821.5 kg)
Chassis / Cage	Dual-phase 980 steel
Rack Capacity	200 lb (91 kg) with LinQ™ quick-attach
Storage Capacity	Total: 2.5 gal (9.4 L) Glove box: 1.6 gal (6.2 L) Central console: 0.8 gal (2.8 L) Cup holders: 0.1 gal (0.4 L)
Fuel Capacity	10.5 gal (40 L)

FEATURES

Gauge	7.6 in. (19.3 cm) wide digital display with keypad: Speedometer, tachometer, odometer, trip and hour meters, fuel, gear position, SPORT / ECO™ modes, seat belt, diagnostics, clock	Protection	Front bumper, half-doors, aluminum roof, intrusion bar, 4-point harness with shoulder pads, UHMWPE rock sliders, HMWPE skidplates: Full heavy duty with differential / Under bumper / Front and rear suspension arm, front and rear tow hooks
Instrumentation	Lighter type DC Outlet in central console	Lighting	LED headlights and tail lights with unique Can-Am LED signature
Winch	4,500-lb (2,041 kg) winch with synthetic rope	Anti-theft System	RF Digitally Encoded Security System (D.E.S.S.™) with Start/ Stop button

WARRANTY

Factory	6-months limited warranty
Extended	Up to 30 months B.E.S.T. coverage

BEST PROTECTION

©2019 Bombardier Recreational Products Inc (BRP). All rights reserved. ™, ® and the BRP logo are trademarks of Bombardier Recreational Products Inc. or its affiliates. In the U.S.A., the products are distributed by BRP US Inc. †All other trademarks are the property of their respective owners. BRP reserves the right, at any time, to discontinue or change specifications, prices, designs, features, models or equipment without incurring obligation. Some models depicted may include optional equipment. Read the side-by-side vehicle (SSV) Operator's Guide and watch the Safety DVD before driving. For your safety: wear a helmet, eye protection and other protective gear. Fasten lateral net and seat belt at all times. Always remember that riding and alcohol/drugs don't mix. SSV is for off-road use only. Never ride on paved surfaces or public roads. Operator must be at least 16 years old. Passenger must be at least 12 years old and able to hold handgrips and plant feet while seated against the backrest. Never engage in stunt driving and avoid excessive speed.

can-am

BRP

Can-AmOffroad.com

2020 MAVERICK™ X3 MAX TURBO

HIGHLIGHTS

PLATFORM FEATURES

- 64-in. wide
- 135-in. wheelbase
- 13-in. of ground clearance
- High torque Dynamic Power Steering (DPS™)
- 20-in. suspension travel
- FOX† 2.5 PODIUM† QS3 Piggyback shocks
- 14-in. aluminum wheels
- 28-in. Maxxis† Bighorn 2.0† tires
- 4.5-in. digital display
- Rear tow hook

DEFIANT

- Trademark Can-Am DNA with next generation design
- Low seating position
- Ergo-Lok cockpit with four-way adjustable seats

POWERFUL

- 120 hp turbocharged Rotax® ACE engine
- Advanced airflow dynamics
- QRS-X transmission

PRECISE

- TTX suspension with industry leading travel
- Ultra efficient and lightweight chassis
- Sharpest handling features

White / TURBO
Can-Am Red / TURBO
Hyper Silver & Can-Am Red / TURBO

ENGINE

ENGINE	TURBO
Type	120 hp, Rotax ACE (Advanced Combustion Efficiency) 900 cc Turbocharged Triple-cylinder engine, liquid cooled and high-perfomance air filter
Fuel Delivery System	Intelligent Throttle Control (iTC™) with Electronic Fuel Injection (EFI)
Transmission	Quick Response System X (QRS-X) CVT with high airflow L / H / N / R / P
Drive Train	Selectable 2WD / 4WD with Visco-Lok‡ auto-locking front differential
Power Steering	High torque Tri-Mode Dynamic Power Steering (DPS)

SUSPENSIONS

Front Suspension	Double A-arm with sway bar / 20-in. (50.8 cm) travel
Front Shocks	FOX 2.5 PODIUM Piggyback with QS3 compression adjustment
Rear Suspension	4-link Torsional Trailing-arm X (TTX) with sway bar 20-in (50.8 cm) travel
Rear Shocks	FOX 2.5 PODIUM Piggyback with QS3 compression adjustment and bottom-out control

BRAKES

Front	Dual 262 mm ventilated disc brakes with hydraulic twin-piston calipers
Rear	Dual 248 mm ventilated disc brakes with hydraulic twin-piston calipers

TIRES / WHEELS

Front Tires	Maxxis Bighorn 2.0 28 x 9 x 14 in. (71.1 x 22.9 x 35.6 cm)
Rear Tires	Maxxis Bighorn 2.0 28 x 11 x 14 in. (71.1 x 27.9 x 35.6 cm)
Wheels	14-in. (35.6 cm) cast-aluminum

DIMENSIONS / CAPACITIES

L x W x H	164 x 64 x 65.8 in. (416.6 x 162.5 x 167.1 cm)
Wheelbase	135 in. (342.9cm)
Ground Clearance	13 in. (33 cm)
Estimated Dry Weight	1,726 lb (782.9 kg)
Chassis / Cage	Dual-phase 980 steel
Rack Capacity	150 lb (68 kg) with LinQ™ quick-attach
Storage Capacity	Total: 3 gal (11.4 L) Glove box: 1.6 gal (6.2 L) Center console: 1.1 gal (4.1 L) Cup holders: 0.3 gal (1.1 L)
Fuel Capacity	10.5 gal (40 L)

FEATURES

Gauge	4.5 in. (11.4 cm) wide digital display with keypad: Speedometer, tachometer, odometer, trip and hour meters, fuel, gear position, SPORT / ECO™ mode, seat belt and 4 x 4 indicator, diagnostics, clock, auto shut off
Winch	N/A
Protection	Integrated front bumper, quarter-doors, HMWPE full skid plate, rear tow hook
Instrumentation	Lighter type DC outlet in central console
Lighting	LED headlights and tail lights
Anti-theft System	RF Digitally Encoded Security System (D.E.S.S.™) with Start/ Stop button

WARRANTY

Factory	6-months limited warranty
Extended	Up to 30 months B.E.S.T. coverage

BEST PROTECTION ©2019 Bombardier Recreational Products Inc (BRP). All rights reserved. ™, ® and the BRP logo are trademarks of Bombardier Recreational Products Inc. or its affiliates. In the U.S.A., the products are distributed by BRP US Inc. ‡Visco-Lok is a trademark of GKN Viscodrive GmbH. †All other trademarks are the property of their respective owners. BRP reserves the right, at any time, to discontinue or change specifications, prices, designs, features, models or equipment without incurring obligation. Some models depicted may include optional equipment. Read the side-by-side vehicle (SSV) Operator's Guide and watch the Safety DVD before driving. For your safety: wear a helmet, eye protection and other protective gear. Fasten lateral net and seat belt at all times. Always remember that riding and alcohol/drugs don't mix. SSV is for off-road use only. Never ride on paved surfaces or public roads. Operator must be at least 16 years old. Passenger must be at least 12 years old and able to hold handgrips and plant feet while seated against the backrest. Never engage in stunt driving and avoid excessive speed.

can-am

Can-AmOffroad.com

BRP

2020 MAVERICK™ X3 MAX DS TURBO R

HIGHLIGHTS

PLATFORM FEATURES

- 64-in. wide
- 135-in. wheelbase
- 14-in. of ground clearance
- High torque Dynamic Power Steering (DPS™)
- 20-in. suspension travel
- Rear tow hook
- FOX† 2.5 PODIUM† QS3 Piggyback shocks
- 14-in. aluminum wheels
- 28-in. Maxxis† Bighorn 2.0† tires
- 4.5-in. digital display

SPECIFIC TO DS PACKAGE

- 172 hp Turbo R engine

DEFIANT

- Trademark Can-Am DNA with next generation design
- Low seating position
- Ergo-Lok cockpit with four-way adjustable seats

POWERFUL

- 172 hp turbocharged Rotax® ACE engine
- Advanced airflow dynamics
- QRS-X transmission

PRECISE

- TTX suspension with industry leading travel
- Ultra efficient and lightweight chassis
- Sharpest handling features

Can-Am Red & White / TURBO R

ENGINE

ENGINE	TURBO R
Type	172 hp, Rotax ACE (Advanced Combustion Efficiency) 900 cc Turbocharged Triple-cylinder engine, liquid cooled with integrated intercooler and high-perfomance air filter
Fuel Delivery System	Intelligent Throttle Control (iTC™) with Electronic Fuel Injection (EFI)
Transmission	Quick Response System X (QRS-X) CVT with high airflow, L / H / N / R / P
Drive Train	Selectable 2WD / 4WD with Visco-Lok‡ auto-locking front differential
Power Steering	High torque Tri-Mode Dynamic Power Steering (DPS)

SUSPENSIONS

Front Suspension	Double A-arm with sway bar / 20 in. (50.8 cm) travel
Front Shocks	FOX 2.5 PODIUM Piggyback with QS3 compression adjustment
Rear Suspension	4-link Torsional Trailing-arm X (TTX) with sway bar 20 in. (50.8 cm) travel
Rear Shocks	FOX 2.5 PODIUM Piggyback with QS3 compression adjustment and bottom-out control

BRAKES

Front	Dual 262 mm ventilated disc brakes with hydraulic twin-piston calipers
Rear	Dual 248 mm ventilated disc brakes with hydraulic twin-piston calipers

TIRES / WHEELS

Front Tires	Maxxis Bighorn 2.0 28 x 9 x 14 in. (71.1 x 22.9 x 35.6 cm)
Rear Tires	Maxxis Bighorn 2.0 28 x 11 x 14 in. (71.1 x 27.9 x 35.6 cm)
Wheels	14-in. (35.6 cm) cast-aluminum

DIMENSIONS / CAPACITIES

L x W x H	164 x 64 x 65.8 in. (416.6 x 162.5 x 167.1 cm)
Wheelbase	135 in. (342.9cm)
Ground Clearance	13 in. (33 cm)
Estimated Dry Weight	1,726 lb (782.9 kg)
Chassis / Cage	Dual-phase 980 steel
Rack Capacity	150 lb (68 kg) with LinQ™ quick-attach
Storage Capacity	Total: 3 gal (11.4 L) Glove box: 1.6 gal (6.2 L) Center console: 1.1 gal (4.1 L) Cup holders: 0.3 gal (1.1 L)
Fuel Capacity	10.5 gal (40 L)

FEATURES

Gauge	4.5 in. (11.4 cm) wide digital display with keypaD: Speedometer, tachometer, odometer, trip and hour meters, fuel, gear position, SPORT / ECO™ mode, seat belt and 4 x 4 indicator, diagnostics, clock, auto shut off
Winch	N/A
Protection	Integrated front bumper, quarter-doors, HMWPE full skid plate, rear tow hook
Instrumentation	Lighter type DC outlet in central console
Lighting	LED headlights and tail lights
Anti-theft System	RF Digitally Encoded Security System (D.E.S.S.™) with Start/ Stop button

WARRANTY

Factory	6-months limited warranty
Extended	Up to 30 months B.E.S.T. coverage

BEST PROTECTION ©2019 Bombardier Recreational Products Inc (BRP). All rights reserved. ™, ® and the BRP logo are trademarks of Bombardier Recreational Products Inc. or its affiliates. In the U.S.A., the products are distributed by BRP US Inc. ‡Visco-Lok is a trademark of GKN Viscodrive GmbH. †All other trademarks are the property of their respective owners. BRP reserves the right, at any time, to discontinue or change specifications, prices, designs, features, models or equipment without incurring obligation. Some models depicted may include optional equipment. Read the side-by-side vehicle (SSV) Operator's Guide and watch the Safety DVD before driving. For your safety: wear a helmet, eye protection and other protective gear. Fasten lateral net and seat belt at all times. Always remember that riding and alcohol/drugs don't mix. SSV is for off-road use only. Never ride on paved surfaces or public roads. Operator must be at least 16 years old. Passenger must be at least 12 years old and able to hold handgrips and plant feet while seated against the backrest. Never engage in stunt driving and avoid excessive speed.

can-am

Can-AmOffroad.com

BRP

2020 MAVERICK™ X3 MAX RS TURBO R

HIGHLIGHTS

PLATFORM FEATURES

- 72-in. wide
- 135-in. wheelbase
- 15.5-in. of ground clearance
- High torque Dynamic Power Steering (DPS™)
- 22-in. suspension travel
- FOX† 2.5 PODIUM† QS3 Piggyback shocks
- 14-in. aluminum wheels
- 4.5-in. digital display
- Rear tow hook

SPECIFIC TO RS PACKAGE

- 172 hp Turbo R engine
- 29-in. Maxxis† Bighorn 2.0† tires

DEFIANT

- Trademark Can-Am DNA with next generation design
- Low seating position
- Ergo-Lok cockpit with four-way adjustable seats

POWERFUL

- 172 hp turbocharged Rotax® ACE engine
- Advanced airflow dynamics
- QRS-X transmission

PRECISE

- TTX suspension with industry leading travel
- Ultra efficient and lightweight chassis
- Sharpest handling features

Can-Am Red & White / TURBO R

ENGINE	TURBO R
Type	172 hp, Rotax ACE (Advanced Combustion Efficiency) 900 cc Turbocharged Triple-cylinder engine, liquid cooled with integrated intercooler and high-perfomance air filter
Fuel Delivery System	Intelligent Throttle Control (iTC™) with Electronic Fuel Injection (EFI)
Transmission	Quick Response System X (QRS-X) CVT with high airflow, L / H / N / R / P
Drive Train	Selectable 2WD / 4WD with Visco-Lok‡ auto-locking front differential
Power Steering	High torque Tri-Mode Dynamic Power Steering (DPS)

SUSPENSIONS

Front Suspension	Double A-arm with sway bar / 22-in. (55.9 cm) travel / Trophy truck inspired arms
Front Shocks	FOX 2.5 PODIUM Piggyback with QS3 compression adjustment
Rear Suspension	4-link Torsional Trailing-arm X (TTX) with sway bar 22-in. (55.9 cm) travel
Rear Shocks	FOX 2.5 PODIUM Piggyback with QS3 compression adjustment and bottom-out control

BRAKES

Front	Dual 262 mm ventilated disc brakes with hydraulic twin-piston calipers
Rear	Dual 248 mm ventilated disc brakes with hydraulic twin-piston calipers

TIRES / WHEELS

Front Tires	Maxxis Bighorn 2.0 29 x 9 x 14 in. (73.7 x 22.9 x 35.6 cm)
Rear Tires	Maxxis Bighorn 2.0 29 x 11 x 14 in. (73.7 x 27.9 x 35.6 cm)
Wheels	14-in. (35.6 cm) cast-aluminum

DIMENSIONS / CAPACITIES

L x W x H	164 x 72.4 x 68.5 in. (416.6 x 183.9 x 174 cm)
Wheelbase	135 in. (342.9cm)
Ground Clearance	15.5 in. (39.4 cm)
Estimated Dry Weight	1,869.52 lb (848 kg)
Chassis / Cage	Dual-phase 980 steel
Rack Capacity	150 lb (68 kg) with LinQ™ quick-attach
Storage Capacity	Total: 3 gal (11.4 L) Glove box: 1.6 gal (6.2 L) Center console: 1.1 gal (4.1 L) Cup holders: 0.3 gal (1.1 L)
Fuel Capacity	10.5 gal (40 L)

FEATURES

Gauge	4.5 in. (11.4 cm) wide digital display with keypad: Speedometer, tachometer, odometer, trip and hour meters, fuel, gear position, SPORT / ECO™ mode, seat belt and 4 x 4 indicator, diagnostics, clock, auto shut off
Winch	N/A
Protection	Integrated front bumper, quarter-doors, HMWPE full skid plate, rear tow hook
Instrumentation	Lighter type DC outlet in central console
Lighting	LED headlights and tail lights
Anti-theft System	RF Digitally Encoded Security System (D.E.S.S.™) with Start/ Stop button

WARRANTY

Factory	6-months limited warranty
Extended	Up to 30 months B.E.S.T. coverage

BEST PROTECTION ©2019 Bombardier Recreational Products Inc (BRP). All rights reserved. ™, ® and the BRP logo are trademarks of Bombardier Recreational Products Inc. or its affiliates. In the U.S.A., the products are distributed by BRP US Inc. ‡Visco-Lok is a trademark of GKN Viscodrive GmbH. †All other trademarks are the property of their respective owners. BRP reserves the right, at any time, to discontinue or change specifications, prices, designs, features, models or equipment without incurring obligation. Some models depicted may include optional equipment. Read the side-by-side vehicle (SSV) Operator's Guide and watch the Safety DVD before driving. For your safety: wear a helmet, eye protection and other protective gear. Fasten lateral net and seat belt at all times. Always remember that riding and alcohol/drugs don't mix. SSV is for off-road use only. Never ride on paved surfaces or public roads. Operator must be at least 16 years old. Passenger must be at least 12 years old and able to hold handgrips and plant feet while seated against the backrest. Never engage in stunt driving and avoid excessive speed.

can-am

Can-AmOffroad.com

BRP

2020 MAVERICK™ X3 MAX X™ ds TURBO RR

HIGHLIGHTS

PLATFORM FEATURES

- 64-in. wide
- 135-in. wheelbase
- 14-in. of ground clearance
- High torque Dynamic Power Steering (DPS™)
- 20-in. suspension travel
- Rear tow hook

SPECIFIC TO X ds PACKAGE

- 195 hp Turbo RR engine
- Smart-Lok™* front differential
- FOX† 2.5 PODIUM† RC2 Piggyback shocks
- 14-in. aluminum beadlock wheels
- 29-in. Maxxis† Bighorn 2.0† tires
- X-package graphics/seats
- 7.6-in. digital display with keypad
- Painted color options

DEFIANT

- Trademark Can-Am DNA with next generation design
- Low seating position
- Ergo-Lok cockpit with four-way adjustable seats

POWERFUL

- 195 hp turbocharged and intercooled Rotax® ACE engine
- Advanced airflow dynamics
- QRS-X transmission

PRECISE

- TTX suspension with industry leading travel
- Ultra efficient and lightweight chassis
- Sharpest handling features

SMART LOK™ TECHNOLOGY

- Iron Gray & Manta Green / TURBO RR
- Phoenix Orange / TURBO RR
- Triple Black / TURBO RR

ENGINE

ENGINE	TURBO RR
Type	195 hp, Rotax ACE (Advanced Combustion Efficiency) 900 cc Turbocharged Triple-cylinder engine, liquid cooled with integrated intercooler and high-perfomance air filter
Fuel Delivery System	Intelligent Throttle Control (iTC™) with Electronic Fuel Injection (EFI)
Transmission	Quick Response System X (QRS-X) CVT with high airflow, L / H / N / R / P
Drive Train	Lockable front differential with exclusive Smart-Lok* technology. True 4 modes traction system: 2WD / 4WD with front diff. lock / 4WD TRAIL ACTIV / 4WD TRAIL *Smart-Lok was developed in conjunction with TEAM Industries, a market leader in the drive train industry
Power Steering	High torque Tri-Mode Dynamic Power Steering (DPS)

SUSPENSIONS

Front Suspension	Double A-arm with sway bar / 20 in. (50.8 cm) travel
Front Shocks	FOX 2.5 PODIUM RC2 Piggyback with dual speed compression and rebound adjustments
Rear Suspension	4-link Torsional Trailing-arm X (TTX) with sway bar 20 in. (50.8 cm) travel
Rear Shocks	FOX 2.5 PODIUM RC2 Piggyback with dual speed compression, rebound adjustments and bottom-out control

BRAKES

Front	Dual 262 mm ventilated disc brakes with hydraulic twin-piston calipers
Rear	Dual 248 mm ventilated disc brakes with hydraulic twin-piston calipers

TIRES / WHEELS

Front Tires	Maxxis Bighorn 2.0 29 x 9 x 14 in. (73.7 x 22.9 x 35.6 cm)
Rear Tires	Maxxis Bighorn 2.0 29 x 11 x 14 in. (73.7 x 27.9 x 35.6 cm)
Wheels	14-in. (35.6 cm) cast-aluminum beadlock

DIMENSIONS / CAPACITIES

L x W x H	164 x 64 x 66 in. (416.6 x 162.5 x 167.6 cm)
Wheelbase	135 in. (342.9 cm)
Ground Clearance	13 in. (33 cm)
Estimated Dry Weight	1,765.9 lb (801 kg)
Chassis / Cage	Dual-phase 980 steel
Rack Capacity	150 lb (68 kg) with LinQ™ quick-attach
Storage Capacity	Total: 3 gal (11.4 L) Glove box: 1.6 gal (6.2 L) Center console: 1.1 gal (4.1 L) Cup holders: 0.3 gal (1.1 L)
Fuel Capacity	10.5 gal (40 L)

FEATURES

Gauge	7.6 in. (19.3 cm) wide digital display with keypad: Speedometer, tachometer, odometer, trip and hour meters, fuel, gear position, SPORT / ECO™ modes, seat belt, diagnostics, clock	Protection	Integrated front bumper, quarter-doors, HMWPE full skid plate, rear tow hook
		Instrumentation	Lighter type DC outlet in central console
		Lighting	LED headlights and tail lights with unique Can-Am LED signature
Winch	N/A	Anti-theft System	RF Digitally Encoded Security System (D.E.S.S.™) with Start/ Stop button

WARRANTY

Factory	6-months limited warranty
Extended	Up to 30 months B.E.S.T. coverage

BEST PROTECTION ©2019 Bombardier Recreational Products Inc (BRP). All rights reserved. ™, ® and the BRP logo are trademarks of Bombardier Recreational Products Inc. or its affiliates. In the U.S.A., the products are distributed by BRP US Inc. †All other trademarks are the property of their respective owners. BRP reserves the right, at any time, to discontinue or change specifications, prices, designs, features, models or equipment without incurring obligation. Some models depicted may include optional equipment. Read the side-by-side vehicle (SSV) Operator's Guide and watch the Safety DVD before driving. For your safety: wear a helmet, eye protection and other protective gear. Fasten lateral net and seat belt at all times. Always remember that riding and alcohol/drugs don't mix. SSV is for off-road use only. Never ride on paved surfaces or public roads. Operator must be at least 16 years old. Passenger must be at least 12 years old and able to hold handgrips and plant feet while seated against the backrest. Never engage in stunt driving and avoid excessive speed.

can-am BRP

Can-AmOffroad.com

2020 MAVERICK™ X3 MAX X™ rs TURBO RR

HIGHLIGHTS

PLATFORM FEATURES

- 72-in. wide
- 135-in. wheelbase
- 16-in. of ground clearance
- High torque Dynamic Power Steering (DPS™)
- 22-in. suspension travel
- Rear tow hook

SPECIFIC TO X rs PACKAGE

- 195 hp Turbo RR engine
- Smart-Lok™* front differential
- FOX† 3.0 PODIUM† RC2 shocks with bypass
- 14-in. aluminum beadlock wheels
- 30-in. Maxxis† Bighorn 2.0† tires
- 4-point harness with shoulder pads
- HMWPE heavy-duty full skid plate
- X-package graphics/seats
- 7.6-in. digital display with keypad
- Painted color options

DEFIANT

- Trademark Can-Am DNA with next generation design
- Low seating position
- Ergo-Lok cockpit with four-way adjustable seats

POWERFUL

- 195 hp turbocharged and intercooled Rotax® ACE engine
- Advanced airflow dynamics
- QRS-X transmission

PRECISE

- TTX suspension with industry leading travel
- Ultra efficient and lightweight chassis
- Sharpest handling features

- Hyper Silver, Intense Blue & Manta Green / TURBO RR
- Triple Black / TURBO RR
- Gold, Can-Am Red & Hyper Silver / TURBO RR

ENGINE	TURBO RR
Type	195 hp, Rotax ACE (Advanced Combustion Efficiency) 900 cc Turbocharged Triple-cylinder engine, liquid cooled with integrated intercooler and high-perfomance air filter
Fuel Delivery System	Intelligent Throttle Control (iTC™) with Electronic Fuel Injection (EFI)
Transmission	Quick Response System X (QRS-X) CVT with high airflow, L / H / N / R/ P
Drive Train	Lockable front differential with exclusive Smart-Lok* technology. True 4 modes traction system: 2WD / 4WD with front diff. lock / 4WD TRAIL ACTIV / 4WD TRAIL *Smart-Lok was developed in conjunction with TEAM Industries, a market leader in the drive train industry
Power Steering	High torque Tri-Mode Dynamic Power Steering (DPS)

SUSPENSIONS	
Front Suspension	Double A-arm with sway bar / 22-in. (55.9 cm) travel / Trophy truck inspired arms
Front Shocks	FOX 2.5 PODIUM RC2 Piggyback with bypass, dual speed compression and rebound adjustments
Rear Suspension	4-link Torsional Trailing-arm X (TTX) with sway bar 22-in. (55.9 cm) travel
Rear Shocks	FOX 3.0 PODIUM RC2 remote reservoir with bypass, dual speed compression and rebound adjustments

BRAKES	
Front	Dual 262 mm ventilated disc brakes with hydraulic twin-piston calipers
Rear	Dual 248 mm ventilated disc brakes with hydraulic twin-piston calipers

TIRES / WHEELS	
Front Tires	Maxxis Bighorn 2.0 30 x 9 x 14 in. (76.2 x 22.9 x 35.6 cm)
Rear Tires	Maxxis Bighorn 2.0 30 x 11 x 14 in. (76.2 x 27.9 x 35.6 cm)
Wheels	14-in. (35.6 cm) cast-aluminum beadlock

DIMENSIONS / CAPACITIES	
L x W x H	165 x 72.7 x 68.5 in. (419.1 x 184.7 x 174 cm)
Wheelbase	135 in. (342.9 cm)
Ground Clearance	16 in. (40.6 cm)
Estimated Dry Weight	1,858 lb (843 kg)
Chassis / Cage	Dual-phase 980 steel
Rack Capacity	150 lb (68 kg) with LinQ™ quick-attach
Storage Capacity	Total: 3 gal (11.4 L) Glove box: 1.6 gal (6.2 L) Center console: 1.1 gal (4.1 L) Cup holders: 0.3 gal (1.1 L)
Fuel Capacity	10.5 gal (40 L)

FEATURES

Gauge	7.6 in. (19.3 cm) wide digital display with keypad: Speedometer, tachometer, odometer, trip and hour meters, fuel, gear position, SPORT / ECO™ modes, seat belt, diagnostics, clock	Protection	Integrated front bumper, quarter-doors, full roof, 4-point harness with shoulder pads, HMWPE heavy-duty full skid plate, rear tow hook
		Instrumentation	Lighter type DC outlet in central console
		Lighting	LED headlights and tail lights with unique Can-Am LED signature
Winch	N/A	Anti-theft System	RF Digitally Encoded Security System (D.E.S.S.™) with Start/ Stop button

WARRANTY

Factory	6-months limited warranty
Extended	Up to 30 months B.E.S.T. coverage

BEST PROTECTION ©2019 Bombardier Recreational Products Inc (BRP). All rights reserved. ™, ® and the BRP logo are trademarks of Bombardier Recreational Products Inc. or its affiliates. In the U.S.A., the products are distributed by BRP US Inc. †All other trademarks are the property of their respective owners. BRP reserves the right, at any time, to discontinue or change specifications, prices, designs, features, models or equipment without incurring obligation. Some models depicted may include optional equipment. Read the side-by-side vehicle (SSV) Operator's Guide and watch the Safety DVD before driving. For your safety: wear a helmet, eye protection and other protective gear. Fasten lateral net and seat belt at all times. Always remember that riding and alcohol/drugs don't mix. SSV is for off-road use only. Never ride on paved surfaces or public roads. Operator must be at least 16 years old. Passenger must be at least 12 years old and able to hold handgrips and plant feet while seated against the backrest. Never engage in stunt driving and avoid excessive speed.

can-am BRP

Can-AmOffroad.com

2020 MAVERICK™ X3 MAX X™ mr TURBO RR

HIGHLIGHTS

PLATFORM FEATURES

- 72-in. wide
- 135-in. wheelbase
- 16-in. of ground clearance
- High torque Dynamic Power Steering (DPS™)
- 22-in. suspension travel
- FOX† 2.5 PODIUM† QS3 Piggyback shocks

SPECIFIC TO X mr PACKAGE

- 195 hp Turbo RR engine
- Smart-Lok™** front differential
- Snorkeled engine air intake and CVT
- 14-in. aluminum beadlock wheels
- 30-in. ITP†* Cryptid† tires
- X-package graphics/seats
- 7.6-in. digital display with keypad
- Front bumper, half-doors
- Front and rear tow hooks
- HMWPE full skid plate
- 4,500-lb (2,041kg) winch with synthetic rope

DEFIANT

- Trademark Can-Am DNA with next generation design
- Low seating position
- Ergo-Lok cockpit with four-way adjustable seats

POWERFUL

- 195 hp turbocharged and intercooled Rotax® ACE engine
- Advanced airflow dynamics
- QRS-X transmission

PRECISE

- TTX suspension with industry leading travel
- Ultra efficient and lightweight chassis
- Sharpest handling features

Iron Gray & Manta Green / TURBO RR

ENGINE

ENGINE	TURBO RR
Type	195 hp, Rotax ACE (Advanced Combustion Efficiency) 900 cc Turbocharged Triple-cylinder engine, liquid cooled with integrated intercooler, high-perfomance air filter and strategically positioned engine air intake
Fuel Delivery System	Intelligent Throttle Control (iTC™) with Electronic Fuel Injection (EFI)
Transmission	Quick Response System X (QRS-X) CVT, high airflow with strategically positioned CVT air intake and exhaust, L / H / N / R / P
Drive Train	Lockable front differential with exclusive Smart-Lok** technology. True 4 modes traction system: 2WD / 4WD with front diff. lock / 4WD TRAIL ACTIV / 4WD TRAIL **Smart-Lok was developed in conjunction with TEAM Industries, a market leader in the drive train industry
Power Steering	High torque Tri-Mode Dynamic Power Steering (DPS)

SUSPENSIONS

Front Suspension	Double A-arm with sway bar / 22-in. (55.9 cm) travel / Trophy truck inspired arms
Front Shocks	FOX 2.5 PODIUM Piggyback with QS3 compression adjustment
Rear Suspension	4-link Torsional Trailing-arm X (TTX) with sway bar 22-in. (55.9 cm) travel
Rear Shocks	FOX 2.5 PODIUM Piggyback with QS3 compression adjustment and bottom-out control

BRAKES

Front	Dual 262 mm ventilated disc brakes with hydraulic twin-piston calipers
Rear	Dual 248 mm ventilated disc brakes with hydraulic twin-piston calipers

TIRES / WHEELS

Front Tires	ITP* Cryptid 30 x 9 x 14 in. (76.2 x 22.9 x 35.6 cm)
Rear Tires	ITP* Cryptid 30 x 11 x 14 in. (76.2 x 27.9 x 35.6 cm)
Wheels	14-in. (35.6 cm) cast-aluminum beadlock

DIMENSIONS / CAPACITIES

L x W x H	165 x 74.2 x 68 in. (419.1 x 188.5 x 172.7 cm)
Wheelbase	135 in. (342.9 cm)
Ground Clearance	16 in. (40.6 cm)
Estimated Dry Weight	1,940 lb (880 kg)
Chassis / Cage	Dual-phase 980 steel
Rack Capacity	150 lb (68 kg) with LinQ™ quick-attach
Storage Capacity	Total: 3 gal (11.4 L) Glove box: 1.6 gal (6.2 L) Center console: 1.1 gal (4.1 L) Cup holders: 0.3 gal (1.1 L)
Fuel Capacity	10.5 gal (40 L)

FEATURES

Gauge	7.6 in. (19.3 cm) wide digital display with keypad: Speedometer, tachometer, odometer, trip and hour meters, fuel, gear position, SPORT / ECO™ modes, seat belt, diagnostics, clock	Protection	Front bumper, half-doors, front and rear tow hooks, HMWPE full skid plate
		Instrumentation	Lighter type DC outlet in central console
		Lighting	LED headlights and tail lights with unique Can-Am LED signature
Winch	4,500-lb (2,041 kg) winch with synthetic rope	Anti-theft System	RF Digitally Encoded Security System (D.E.S.S.™) with Start/ Stop button

WARRANTY

Factory	6-months limited warranty
Extended	Up to 30 months B.E.S.T. coverage

©2019 Bombardier Recreational Products Inc (BRP). All rights reserved. ™, ® and the BRP logo are trademarks of Bombardier Recreational Products Inc. or its affiliates. In the U.S.A., the products are distributed by BRP US Inc. †All other trademarks are the property of their respective owners. BRP reserves the right, at any time, to discontinue or change specifications, prices, designs, features, models or equipment without incurring obligation. Some models depicted may include optional equipment. Read the side-by-side vehicle (SSV) Operator's Guide and watch the Safety DVD before driving. For your safety: wear a helmet, eye protection and other protective gear. Fasten lateral net and seat belt at all times. Always remember that riding and alcohol/drugs don't mix. SSV is for off-road use only. Never ride on paved surfaces or public roads. Operator must be at least 16 years old. Passenger must be at least 12 years old and able to hold handgrips and plant feet while seated against the backrest. Never engage in stunt driving and avoid excessive speed.

Can-AmOffroad.com

can-am®

OUTLANDER™ Series

Operator's Guide 2020

Includes
Safety, Vehicle
and Maintenance Information

⚠ WARNING

Read this guide thoroughly. It contains important safety information.
Minimum recommended age: Operator: 16 years old. Keep this Operator's Guide in the vehicle.

2 1 9 0 0 2 0 3 6

Original Instructions

⚠ WARNING

YOUR VEHICLE CAN BE HAZARDOUS TO OPERATE. A collision or rollover can occur quickly, if you fail to take proper precautions, even during routine maneuvers such as turning and driving on hills or over obstacles.
For your safety, understand and follow all the warnings contained in this Operator's Guide and on the labels on your vehicle. **Failure to follow these warnings can result in SEVERE INJURY OR DEATH!**
Keep this Operator's Guide with the vehicle at all times.

⚠ WARNING

Disregarding any of the safety precautions and instructions contained in this Operator's Guide, *SAFETY VIDEO* and on-product safety labels could result in an injury including the possibility of death!

⚠ WARNING

This vehicle may exceed the performance of other vehicles you may have ridden in the past. Take time to familiarize yourself with your new vehicle.

CALIFORNIA PROPOSITION 65 WARNING

⚠ **WARNING:** Operating, servicing and maintaining an off-road vehicle can expose you to chemicals including engine exhaust, carbon monoxide, phthalates, and lead, which are known to the State of California to cause cancer and birth defects or other reproductive harm. To minimize exposure, avoid breathing exhaust, do not idle the engine except as necessary, service your vehicle in a well-ventilated area and wear gloves or wash your hands frequently when servicing your vehicle. For more information go to www.p65warnings.ca.gov/products/passenger-vehicle.

In Canada, products are distributed by Bombardier Recreational Products Inc. (BRP). In USA, products are distributed by BRP US Inc.

The following trademarks are the property of Bombardier Recreational Products Inc.:

Can-Am® DPS™ Outlander™ Rotax® TTI™ XPS™

This document contains the trademarks of the following companies:
– Mossy Oak is a trademark of Hass Outdoors, Inc.
– Visco-lok is a trademark of GKN Viscodrive GmbH.

FOREWORD

OPERATOR'S GUIDE 2020
Outlander 450 Outlander 570 Outlander DPS 450 Outlander DPS 570 Outlander PRO 450 Outlander PRO 570 Outlander XT 570 Outlander Mossy Oak Hunting Edition 450 Outlander Mossy Oak Hunting Edition 570 Outlander MAX 450 Outlander MAX 570 Outlander MAX DPS 450 Outlander MAX DPS 570 Outlander MAX XT 570

Deutsch	Dieses Handbuch ist möglicherweise in Ihrer Landessprache verfügbar. Bitte wenden Sie sich an Ihren Händler oder besuchen Sie: **www.operatorsguides.brp.com**
English	This guide may be available in your language. Check with your dealer or go to: **www.operatorsguides.brp.com**
Español	Es posible que este manual esté disponible en su idioma. Consulte a su distribuidor o visite: **www.operatorsguides.brp.com**
Français	Ce guide peut être disponible dans votre langue. Vérifier avec votre concessionnaire ou aller à: **www.operatorsguides.brp.com**
Italiano	Questa guida potrebbe essere disponibile nella propria lingua. Contattare il concessionario o consultare: **www.operatorsguides.brp.com**
中文	本手册可能有您的语种的翻译版本。请向经销商问询，或者登录 **www.operatorsguides.brp.com** 查询。
日本語	このガイドは、言語によって翻訳版が用意されています。. ディーラーに問い合わせるか、次のアドレスでご確認ください： **www.operatorsguides.brp.com**
Nederlands	Deze handleiding kan beschikbaar zijn in uw taal. Vraag het aan uw dealer of ga naar: **www.operatorsguides.brp.com**
Norsk	Denne boken kan finnes tilgjengelig på ditt eget språk. Kontakt din forhandler eller gå til: **www.operatorsguides.brp.com**
Português	Este manual pode estar disponível em seu idioma. Fale com sua concessionária ou visite o site: **www.operatorsguides.brp.com**
Русский	Воспользуйтесь руководством на вашем языке. Узнайте о его наличии у дилера или на странице по адресу **www.operatorsguides.brp.com**
Suomi	Käyttöohjekirja voi olla saatavissa omalla kielelläsi. Tarkista jälleenmyyjältä tai käy osoitteessa: **www.operatorsguides.brp.com**
Svenska	Denna bok kan finnas tillgänglig på ditt språk. Kontakta din återförsäljare eller gå till: **www.operatorsguides.brp.com**

Congratulations on your purchase of a new Can-Am® ATV. It is backed by the BRP warranty and a network of authorized Can-Am dealers ready to provide the parts, service or accessories you may require.

Your dealer is committed to your satisfaction. He has taken training to perform the initial setup and inspection of your vehicle as well as completed the final adjustment before you took possession. If you need more complete servicing information, please ask your dealer.

At delivery, you were also informed of the warranty coverage and signed the *PREDELIVERY CHECK LIST* to ensure your new vehicle was prepared to your entire satisfaction.

Know Before you Go

To learn how to reduce the risk for you or bystanders being injured or killed, read this Operator's Guide before you operate the vehicle.

Also, read all safety labels on your ATV and watch attentively the *SAFETY VIDEO* located at https://can-am.brp.com/off-road/safety.

This vehicle is for off road use only. It is mainly for general recreational use but it may also be used for utility purposes.

Failure to follow the warnings contained in this Operator's Guide can result in SERIOUS INJURY or DEATH.

Age Recommendation

This vehicle is a category G, always follow this age recommendation:

- A person under 16 years old should never operate this vehicle.
- Passenger on 2-UP models must be capable of keeping his feet on the footrests and his hands on grab handles at all times when seated on this vehicle.

Training Course

Never operate this vehicle without proper instruction. **Take a training course.** All operators should receive training from a certified instructor.

For more information about ATV safety, contact an authorized Can-Am dealer to find out about available training courses nearest you.

In the United States, call the Specialty Vehicle Institute of America (SVIA) at 1 800 887–2887 or in Canada, the Canada Safety Council (CSC) at 1 613 739–1535.

Safety Messages

The types of safety messages, what they look like and how they are used in this guide are explained as follows:

The safety alert symbol ⚠ indicates a potential injury hazard.

⚠ WARNING

Indicates a potential hazard, if not avoided, could result in serious injury or death.

⚠ CAUTION **Indicates a hazard situation which, if not avoided, could result in minor or moderate injury.**

NOTICE **Indicates an instruction which, if not followed, could severely damage vehicle components or other property.**

About this Operator's Guide

This Operator's Guide has been prepared to acquaint the owner/operator of a new vehicle with the various vehicle controls, maintenance and safe operating instructions. It is indispensable for the proper use of the product.

⚠ WARNING

Throughout this Operator's Guide, the term "1-UP" refers to vehicles designed to carry the operator only while the term "2-UP" refers to vehicles designed to carry also a passenger.
Make sure to identify and follow the warnings and instructions that are applicable to your specific model.

Note that this guide is available in several languages. In the event of any discrepancy, the English version shall prevail.

Keep this Operator's Guide in the vehicle as you can refer to it for things such as maintenance, troubleshooting and instructing others.

If you want to view and/or print an extra copy of your Operator's Guide, simply visit the following website **www.operatorsguides.brp.com**.

The information contained in this document are correct at the time of publication. However, BRP maintains a policy of continuous improvement of its products without imposing upon itself any obligation to install them on products previously manufactured. Due to late changes, some differences between the manufactured product and the descriptions and/or specifications in this guide may occur. BRP reserves the right at any time to discontinue or change specifications, designs, features, models or equipment without incurring any obligation upon itself.

This Operator's Guide should remain with the vehicle when it is sold.

While reading this Operator's Guide, remember that:

⚠ WARNING

Indicates a potential hazard that, if not avoided, could result in serious injury or death.

TABLE OF CONTENTS

FOREWORD **1**
Know Before you Go 3
Safety Messages 3
About this Operator's Guide 3

SAFETY INFORMATION

GENERAL PRECAUTIONS **10**
Avoid Carbon Monoxide Poisoning 10
Avoid Gasoline Fires and Other Hazards 10
Avoid Burns from Hot Parts 10
Accessories and Modifications 10
SPECIAL SAFETY MESSAGES **11**
OPERATION WARNINGS **14**
PRE-RIDE INSPECTION **42**
Pre-Ride Inspection Check List 42
RIDING THE VEHICLE **45**
Riding Gear 46
Carrying a Passenger 46
Recreational Riding 47
Environment 47
Design Limitation 48
Off-Road Operation 48
Riding Techniques 48
MOVING LOADS AND DOING WORK **60**
Working with your Vehicle 60
Carrying Loads 60
Loading the Cargo Racks 61
Hauling a Load (if Equipped with Hitch) 61
Pulling a Trailer (if Equipped with Hitch) 62
IMPORTANT ON-PRODUCT LABELS(CANADA/UNITED STATES) **63**
Hang Tag 63
Vehicle Safety Labels 65
Compliance Labels 72
Technical Information Labels 72
IMPORTANT ON-PRODUCT LABELS (ALL COUNTRIES EXCEPT CANADA/UNITED STATES) **73**
Hang Tag 73
Vehicle Safety Labels 75
Compliance Labels 82
Technical Information Labels 82

VEHICLE INFORMATION

CONTROLS **84**
1) Throttle Lever 84
2) Brake Lever 85
3) Parking Brake Lever 85
4) Brake Pedal 85
5) Shift Lever 86
6) Ignition Switch and Keys 87
7) Multifunction Switch 88
8) 2WD/4WD and Driving Modes (if equipped) Selector Switch 90

MULTIFUNCTION GAUGE (LCD) **93**
Multifunction Gauge Description 93
Multifunction Gauge Modes 94
Driving Modes (If equipped) 95
Navigating in the LCD Gauge 96
Gauge Setup 96

EQUIPMENT **98**
1) Operator's Seat 100
2) Passenger's Seat (2-UP Models) 100
3) Footpegs 101
4) Grab Handles (2-UP Models) 102
5) 12-Volt Power Outlet 102
6) Rear Storage Compartment 102
7) Cargo Racks 103
8) Trailer Hitch 103
9) Tool Kit 103
10) Recovery Hooks 103

ADDITIONAL ACCESSORIES **105**
1) Full Underbody Aluminum Skid Plate 105
2) Winch 105
3) Roller Fairlead 106

FUEL **107**
Fuel Requirements 107
Vehicle Fueling Procedure 107

BREAK-IN PERIOD **109**
Operation During Break-In 109

BASIC PROCEDURES **110**
Starting the Engine 110
Operating the Shift Lever 110
Stopping the Engine and Parking the Vehicle 110

SPECIAL PROCEDURES **111**
What to Do if Water Entered the CVT 111
What to Do if Water Entered the Air Filter Housing 111
What to Do if Vehicle is Turned Over 112
What to Do if Vehicle is Immersed in Water 112

TUNE YOUR RIDE **113**
Suspension Adjustment 113
Dynamic Power Steering (DPS) Assist Level Adjustment 113
TRANSPORTING THE VEHICLE **115**
Using vehicle power to climb onto trailering equipment 115
Using a winch to pull vehicle onto trailering equipment 116
Securing vehicle for transport 116
Getting vehicle out of trailer 117

MAINTENANCE

MAINTENANCE SCHEDULE **120**
SEVERE DUSTY CONDITIONS 120
MAINTENANCE SCHEDULE LEGEND 120
MAINTENANCE SCHEDULE 121
MAINTENANCE PROCEDURES **123**
Air Filter 123
Engine Oil 126
Oil Filter 128
Radiator 129
Engine Coolant 130
Muffler Spark Arrester 132
Gearbox Oil (570 Models) 133
Throttle Cable 134
Spark Plugs 136
CVT Cover 137
Installing the CVT Cover (450 models) 139
Installing the CVT Cover (All other models) 139
Drive Belt 139
Drive and Driven Pulleys 140
Battery 141
Fuses 141
Lights 143
Drive Shaft Boot and Protector 144
Wheel Bearing 145
Wheels and Tires 145
Steering 146
Suspension 146
Brakes 147
VEHICLE CARE **149**
Post-Operation Care 149
Vehicle Cleaning and Protection 149
STORAGE AND PRESEASON PREPARATION **151**

TECHNICAL INFORMATION

VEHICLE IDENTIFICATION **154**
Vehicle Identification Number 154
Engine Identification Number (EIN) 154
Compliance Label 154
NOISE EMISSION CONTROL SYSTEM REGULATION (CANADA/UNITED STATES) **156**
NOISE EMISSION AND VIBRATION VALUES (ALL COUNTRIES EXCEPT CANADA/UNITED STATES) **157**
EC-DECLARATION OF CONFORMITY **158**
EAC DECLARATION OF CONFORMITY **160**
SPECIFICATIONS **161**

TROUBLESHOOTING

TROUBLESHOOTING GUIDELINES **176**
MULTIFUNCTION GAUGE MESSAGES **180**

WARRANTY

BRP LIMITED WARRANTY USA AND CANADA: 2020 CAN-AM® ATV **182**
US EPA EMISSION-RELATED WARRANTY **185**
BRP INTERNATIONAL LIMITED WARRANTY: 2020 CAN-AM® ATV **188**
BRP LIMITED WARRANTY FOR THE EUROPEAN ECONOMIC AREA, THE COMMONWEALTH OF THE INDEPENDENT STATES AND TURKEY: 2020 CAN-AM® ATV **192**

SAFETY INFORMATION

GENERAL PRECAUTIONS

Avoid Carbon Monoxide Poisoning

All engine exhaust contains carbon monoxide, a deadly gas. Breathing carbon monoxide can cause headaches, dizziness, drowsiness, nausea, confusion and eventually death.

Carbon monoxide is a colorless, odorless, tasteless gas that may be present even if you do not see or smell any engine exhaust. Deadly levels of carbon monoxide can collect rapidly, and you can quickly be overcome and unable to save yourself. Also, deadly levels of carbon monoxide can linger for hours or days in enclosed or poorly ventilated areas. If you experience any symptoms of carbon monoxide poisoning, leave the area immediately, get fresh air and seek medical treatment.

To prevent serious injury or death from carbon monoxide:

– Never run the vehicle in poorly ventilated or partially enclosed areas such as garages, carports or barns. Even if you try to ventilate engine exhaust with fans or open windows and doors, carbon monoxide can rapidly reach dangerous levels.
– Never run the vehicle outdoors where engine exhaust can be drawn into a building through openings such as windows and doors.

Avoid Gasoline Fires and Other Hazards

Gasoline is extremely flammable and highly explosive. Fuel vapors can spread and be ignited by a spark or flame many feet away from the engine. To reduce the risk of fire or explosion, follow these instructions:

– Use only an approved red gasoline container to store fuel.
– - Never fill a gasoline container on the vehicle. An electrical static discharge may ignite the fuel.
– For refueling, strictly adhere to instructions in *FUEL*.
– Never start or operate the engine if the fuel cap is not properly installed.

Gasoline is poisonous and can cause injury or death.

– Never siphon gasoline by mouth.
– If you swallow gasoline, get any in your eye(s), or inhale gasoline vapor, see your doctor immediately.

If gasoline spills on you, wash with soap and water and change your clothes.

Avoid Burns from Hot Parts

Certain components become hot during operation. Avoid contact with those parts during and shortly after operation to avoid burns.

Accessories and Modifications

Any modifications or addition of accessories may affect the handling of your vehicle. It is important to take the time to get familiar with the vehicle once modifications are made to understand how to adapt your driving behavior accordingly.

Do not temper with unauthorized modifications or install equipment not specifically certified by BRP for the vehicle. These modifications have not been tested by BRP and they may increase the risk of injury or loss of control, or render the vehicle illegal to ride. As an example, tempering with tire specifications may affect the behavior of the vehicle and increase the risk of a loss of control.

Ask your authorized BRP dealer for suitable available accessories for your vehicle.

SPECIAL SAFETY MESSAGES

THIS VEHICLE IS NOT A TOY AND CAN BE HAZARDOUS TO OPERATE.

– This vehicle handles differently from other vehicles including motorcycles and cars. A collision or rollover can occur quickly, if you fail to take proper precautions, even during routine maneuvers such as turning and driving on hills or over obstacles.

SEVERE INJURY OR DEATH can result if you do not comply with the following instructions:

– Read this Operator's Guide and all on-product safety labels carefully and follow the operating procedures described. Watch and pay attention to the *SAFETY VIDEO* before operating the vehicle.
– Always follow this age recommendation: A person under 16 years old should never operate this vehicle.
– Never take place on this vehicle without wearing an approved helmet of the proper size and other required riding gears. Refer to *RIDING GEAR* in *RIDING THE VEHICLE* for detailed information.
– Never carry a passenger on this vehicle unless you are operating a 2-UP model. Passenger(s) affect balance and steering and increase risk of losing control.
– On 1-UP models, do not make any modifications to accommodate a passenger or use racks to carry a passenger.
– This vehicle is not designed to ride on paved surfaces; if you must shortly use the vehicle on such surfaces, avoid abrupt inputs to steering, accelerator and brakes. Reduce your speed.
– This vehicle is not designed for riding on roads or highways (in most places it is an illegal practice). Riding your vehicle on roads or highways could cause a collision with another vehicle.
– Never use this vehicle if you are tired, ill or with drugs or alcohol. Your reaction time and judgement is greatly affected under these conditions.
– Never attempt wheelies, jumps, or other stunts.
– Never operate at excessive speeds. Always go at a speed that is proper for the terrain, visibility, operating conditions, and your experience.
– Always go slowly and be extra careful when operating on unfamiliar terrain. Always be alert to changing terrain conditions when operating this vehicle.
– Never operate on excessively rough, slippery or loose terrain until you have learned and practiced the skills necessary to control this vehicle on such terrain. Always be especially cautious on these kinds of terrain.
– Always follow proper procedures for turning as described in *RIDING TECHNIQUES*.
– Never operate this vehicle on hills too steep for the vehicle or for your abilities.
– Always follow proper procedures for climbing hills as described in *RIDING TECHNIQUES*. Check the terrain carefully before you start up any hill. Never climb hills with excessively slippery or loose surfaces.
– Always follow proper procedures for going down hills and for braking on hills as described in *RIDING TECHNIQUES*. Check the terrain carefully before you start down any hill.
– Always follow proper procedures for crossing the side of a hill as described in *RIDING TECHNIQUES*. Avoid hills with excessively slippery or loose surfaces.

- Always use proper procedures if you stall or roll backwards when climbing a hill. To avoid stalling, use low gear and maintain a steady speed when climbing a hill. If you stall or roll backwards, follow the driving technique procedures as described in *RIDING TECHNIQUES*.
- Always check for obstacles before operating in a new area. Never attempt to operate over large obstacles, such as large rocks or fallen trees. Always follow proper procedures when operating over obstacles as described in *RIDING TECHNIQUES*.
- Always be careful when skidding or sliding. Learn to safely control skidding or sliding by practicing at low speeds and on level smooth terrain. On extremely slippery surfaces, such as ice, go slowly and be very cautious in order to reduce the chance of skidding out of control. If you are operating a 2-UP model and have a passenger on-board, never attempt skidding or sliding; overturn or passenger ejection may occur.
- Never operate this vehicle through deep or fast flowing water. Water should never exceed footrests. Remember that wet brakes may have reduced stopping ability. Test your brakes after leaving water, mud or snow. If necessary, apply them several times to let friction dry out the pads.
- Always keep in mind that braking distance is readily affected by but not limited to; weather and terrain conditions, braking system and tire conditions, vehicle speed and attitude, and vehicle load including towing. Remember to adjust your driving accordingly.
- Always be sure there are no obstacles or people behind the vehicle when you operate in reverse. When it is safe to proceed in reverse, go slowly. Take into account that on a 2-UP model the passenger can obstruct your view.
- BRP recommends sitting on your ATV when operating in reverse. Avoid standing up. Your weight could shift forward against throttle lever, causing an unexpected acceleration and may lead to a loss of control.
- Never exceed the stated load limits for this vehicle including operator, passenger (2-UP models), all other loads and added accessories. Cargo should be properly distributed and securely attached. Reduce speed and follow instructions in this guide for carrying cargo or pulling a trailer. Allow greater distance for braking.
- Always inspect and confirm the safe operating condition of your vehicle prior to ride. Refer to *PRE-RIDE INSPECTION*. Always follow the maintenance schedules as described in this Operator's Guide. Refer to *MAINTENANCE* section.
- Never operate the vehicle if the controls do not function normally.
- Always maintain proper tire pressure. When replacing tires, use only the recommended tire size and type. For tire information, refer to *SPECIFICATIONS*.
- Riding your vehicle too fast for your skills or the conditions may result in injury. Apply only enough throttle to proceed safely. Statistics show that mishaps and injury usually result from high speed turns. Always remember that this vehicle is heavy! Its pure weight alone may entrap you should it fall, resulting in injury.
- This vehicle is not designed for jumping, nor can it fully absorb the high impact energy generated during manoeuvres such as jumping which, can be passed on to you, the operator. Performing wheelies can cause the vehicle to flip over onto you. Both practices have a high risk for you and your passenger (2-UP models) and should be avoided at all times.
- The tires of this vehicle are not suited for paved road use.

2-UP Models

Driver must:

- Not forget he is responsible for the safety of the passenger.
- Inform the passenger concerning the basic rules for a safe ride.
- Instruct the passenger to read the vehicle's safety labels and to watch the *SAFETY VIDEO*.
- Always practice the maneuvers described in this Operator's Guide without and with a passenger. Greater skills are required with a passenger.
- Always remember that the vehicle handling and stability may be affected when riding with a passenger. Safely reduce speed. Use proper judgement. If in doubt, do not attempt and disembark the passenger before executing any maneuver.
- Always remember that the vehicle braking distance may be longer when riding with a passenger. Allow greater distance for braking.
- Never carry passenger on a 2-UP model if the passenger seat is not properly installed.
- Never carry more than one (1) passenger. Do not allow passenger to sit anywhere else than the designated passenger seat.
- Never carry a passenger if you judge his ability or judgement insufficient to concentrate on the terrain conditions and adapt accordingly.
- Never carry a passenger who has used drugs or alcohol, or is tired or ill. These slow reaction time and impair judgment.

Passenger must:

- Be capable of resting his feet on the footrests and his hands on grab handles when seated on this vehicle.
- Never take place on this vehicle without wearing an approved helmet (including a chin guard) that fits properly. The passenger should also wear eye protection (goggles or face shield), gloves, boots, long sleeved shirt or jacket, and long pants.
- Be seated on the designated passenger's seat.
- Always keep hands on grab handles and feet on the footrests during operation. Never hold on to the operator.
- Never get up during vehicle operation. An excessive movement could cause loss of control.
- Pay attention to vehicle and operator movements.
- Not wait and tell the driver to slow down or stop if you feel uncomfortable or insecure for any reason.

OPERATION WARNINGS

The following warning and their format have been requested by the United States Consumer Product Safety Commission and are required to be in the Operator's Guide for all ATVs.

NOTE: The following illustrations are general representations only. Your model may differ.

⚠ WARNING

POTENTIAL HAZARD

Operating this vehicle without proper instruction.

WHAT CAN HAPPEN

The risk of an accident is greatly increased if the operator does not know how to operate this vehicle properly in different situations and on different types of terrain.

HOW TO AVOID THE HAZARD

Beginners and inexperienced operators should complete a training course. They should then regularly practice the skills learned during the course as well as the operating techniques described in this Operator's Guide.

For more information about a training course, contact an authorized Can-Am dealer.

⚠ WARNING

V00A1AQ

POTENTIAL HAZARD

Failure to follow the age recommendations for this vehicle.

WHAT CAN HAPPEN

A lack of respect for this age recommendation can lead to severe injury or death of the child.

Even though a child may be within the age group for which this vehicle is recommended, he may not have the skills, abilities, or judgment needed to operate this vehicle safely and may be involved in a serious accident.

HOW TO AVOID THE HAZARD

No one under 16 should operate this vehicle.

2-UP Models Only

⚠ WARNING

vmo2014-005-100

POTENTIAL HAZARD

Failure to respect the physical limitations of the passenger on 2-UP models.

WHAT CAN HAPPEN

A passenger that cannot completely lean his feet on footrests can be ejected when riding on uneven terrain.

HOW TO AVOID THE HAZARD

The passenger must be capable of keeping his feet on the footrests and his hands on grab handles at all times when he is seated on the vehicle.

1-UP Models Only

⚠ WARNING

V00A02Q

POTENTIAL HAZARD

Carrying a passenger on this vehicle.

WHAT CAN HAPPEN

Greatly reduces your ability to balance and control this vehicle.

Could cause an accident, resulting in harm to you and/or your passenger.

HOW TO AVOID THE HAZARD

Never carry passenger. Even with a long seat that provides unrestricted operator movement, it is not designed nor intended to carry passenger(s).

2-UP Models Only

⚠ WARNING

V00A1CQ

POTENTIAL HAZARD

Carrying more than one (1) passenger on this vehicle.

WHAT CAN HAPPEN

Carrying more than one (1) passenger reduces your ability to balance and control this vehicle.

Could cause an accident, resulting in harm to you and/or your passengers.

HOW TO AVOID THE HAZARD

Never carry more than one (1) passenger. Even with a long seat that provides unrestricted operator movement, the vehicle is not designed nor intended to carry more than one (1) operator and one (1) passenger. The passenger must use the designated passenger's seat when he is seated on the vehicle with feet firmly planted on footrests and always hold on to the grab handles.

⚠ WARNING

V00A2DQ

POTENTIAL HAZARD

Allowing passenger(s) to sit on front or rear racks on this vehicle.

WHAT CAN HAPPEN

Allowing a passenger could:

- Impair vehicle stability which could lead to a loss of control.
- Result in injury to passenger(s) from impact on hard surfaces.
- Cause an accident, resulting in harm to you and/or your passenger(s).

HOW TO AVOID THE HAZARD

Never allow any passenger to sit on front or rear racks on this vehicle.

⚠ WARNING

POTENTIAL HAZARD

Operating this vehicle on public streets, roads or highways.

WHAT CAN HAPPEN

You can collide with another vehicle.

HOW TO AVOID THE HAZARD

Never operate this vehicle on any public street, road or highway, even a dirt or gravel one. In many states it is illegal to operate this vehicle on public streets, roads and highways.

⚠ WARNING

POTENTIAL HAZARD

Riding this vehicle without wearing an approved helmet, eye protection and protective gear. On 2-UP models, passenger should also have an approved helmet with a rigid chin guard.

WHAT CAN HAPPEN

- Riding without an approved helmet increases the chances of a severe head injury or death in the event of an accident.
- Riding without eye protection can result in an accident and increases the chances of a severe injury in the event of an accident.
- Riding without protective gear increases the chances of severe injury in the event of an accident.

HOW TO AVOID THE HAZARD

Always wear an approved helmet that fits properly. You should also wear:

- Eye protection (goggles or face shield)
- Rigid chin guard
- Gloves and boots
- Long sleeved shirt or jacket
- Long pants.

⚠ WARNING

V00A07Q

POTENTIAL HAZARD

Using this vehicle with drugs or alcohol.

WHAT CAN HAPPEN

Could cause the passenger to fall off (2-UP models).

Could seriously affect your judgment.

Could cause you to react more slowly.

Could affect your balance and perception.

Could result in an accident or death.

HOW TO AVOID THE HAZARD

The operator and the passenger (2-UP models) should never use this vehicle with drugs or alcohol.

⚠ WARNING

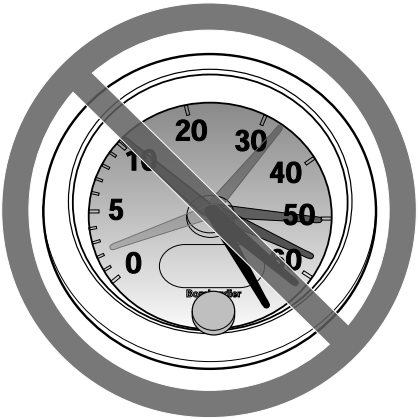

V00A08Q

POTENTIAL HAZARD

Operating this vehicle at excessive speeds.

WHAT CAN HAPPEN

Increases your chances of losing control of the vehicle, which can result in an accident.

HOW TO AVOID THE HAZARD

Always travel at a speed which is appropriate for the terrain, visibility and operating conditions, and your experience.

On 2-UP models, the vehicle handling, stability and braking distance may be affected when riding with a passenger. Safely reduce speed when riding with a passenger. Allow greater distance for braking.

⚠ WARNING

POTENTIAL HAZARD

Attempting wheelies, jumps and other stunts.

WHAT CAN HAPPEN

Increases the chance of an accident, for the operator and the passenger (2-UP models), including an overturn.

HOW TO AVOID THE HAZARD

Never attempt stunts, such as wheelies or jumps. Do not try to show off.

⚠ WARNING

POTENTIAL HAZARD

Failure to inspect the vehicle before operating.

Failure to properly maintain the vehicle.

WHAT CAN HAPPEN

Increases the possibility of an accident or equipment damage.

HOW TO AVOID THE HAZARD

Always inspect your vehicle prior to ride to make sure the vehicle is in safe operating condition.

Always follow the maintenance schedule described in this Operator's Guide.

⚠ WARNING

POTENTIAL HAZARD

Riding on frozen waterways.

WHAT CAN HAPPEN

Breaking through the ice can lead to severe injury or death.

HOW TO AVOID THE HAZARD

Never ride this vehicle on a frozen surface before you are sure the ice is thick enough and sound enough to support the vehicle and its load, as well as the force that is created by a moving vehicle.

⚠ WARNING

POTENTIAL HAZARD

Removing hands from handlebars for the operator and from grab handles for the passenger (2-UP models), or feet from the footrests during operation.

WHAT CAN HAPPEN

Removing even one hand or foot can reduce your ability to control the vehicle or could cause you to lose your balance and fall off the vehicle. If you remove a foot from the footrests, your foot or leg may come into contact with the rear wheels, which could injure you or cause an accident.

HOW TO AVOID THE HAZARD

Operator must always keep both hands on the handlebars and passenger (2-UP models) on grab handles. Both feet (operator and passenger on 2-UP models) must rest on the footrests during vehicle operation.

⚠ WARNING

POTENTIAL HAZARD

Failure to use extra care when operating this vehicle on unfamiliar terrain.

WHAT CAN HAPPEN

You can come upon hidden rocks, bumps, or holes, without enough time to react.

Could result in the vehicle overturning, passenger ejection (2-UP models) or loss of control.

HOW TO AVOID THE HAZARD

Go slowly and be extra careful when operating on unfamiliar terrain.

Always be alert to changing terrain conditions when operating the vehicle.

Do not forget, on 2-UP models, the operator is responsible for the safety of his passenger. Safely reduce speed when riding with a passenger.

⚠ WARNING

POTENTIAL HAZARD

Failure to use extra care when operating on excessively rough, slippery or loose terrain.

WHAT CAN HAPPEN

Could cause loss of traction or vehicle control, which could result in an accident, including an overturn or passenger ejection (2-UP models).

HOW TO AVOID THE HAZARD

Do not operate on excessively rough, slippery or loose terrain until you have learned and practiced the skills necessary to control this vehicle on such terrain.

Always be especially cautious on these kinds of terrain.

Do not forget, on 2-UP models, the operator is responsible for the safety of the passenger. In doubt, disembark him before operating on these terrains.

⚠ WARNING

POTENTIAL HAZARD

Turning improperly.

WHAT CAN HAPPEN

Vehicle could go out of control, causing a collision or an overturn or a passenger ejection (2-UP models).

HOW TO AVOID THE HAZARD

Always follow proper procedures for turning as described in this Operator's Guide. Practice turning at low speeds before attempting to turn at faster speeds.

Do not forget, on 2-UP models, the operator is responsible for the safety of the passenger. Never perform this maneuver with a passenger. Always remember that the vehicle handling, stability and braking distance may be affected when riding with a passenger.

Do not turn at excessive speed.

⚠ WARNING

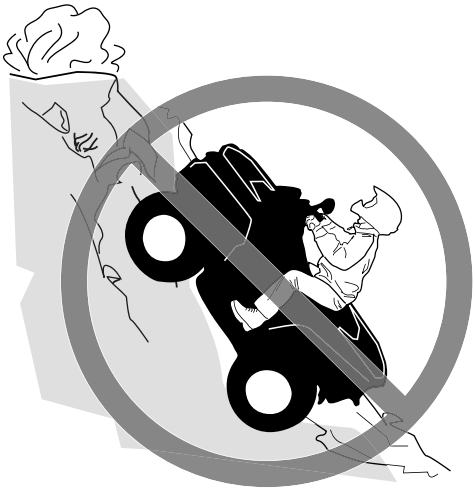

POTENTIAL HAZARD

Operating on excessively steep hills.

WHAT CAN HAPPEN

The vehicle can overturn more easily on extremely steep hills than on level surfaces or small hills.

HOW TO AVOID THE HAZARD

Never operate this vehicle on hills too steep for the vehicle or for your abilities.

Practice, without and with passenger (2-UP models), on smaller hills before attempting larger hills.

Always remember that, on 2-UP models, even if this vehicle can climb some steep hills, it is not recommended to climb such hills with a passenger; always disembark him before attempting this maneuver. Show good judgement.

⚠ WARNING

POTENTIAL HAZARD

Climbing hills improperly.

WHAT CAN HAPPEN

Could cause loss of control, passenger ejection (2-UP models) or cause vehicle to overturn.

HOW TO AVOID THE HAZARD

Always follow proper procedures for climbing hills as described in this Operator's Guide.

Always check the terrain carefully before you start up any hill. Do not forget, on 2-UP models, the operator is responsible for the safety of the passenger. In doubt, disembark him before climbing hill. Always remember that the vehicle handling, stability and braking distance may be affected when riding with a passenger.

Never climb hills with excessively slippery or loose surfaces.

Shift your weight forward (operator and passenger on 2-UP models).

Never open the throttle suddenly or make sudden gear changes. The vehicle could flip over backwards.

Never go over the top of any hill at high speed. An obstacle, a sharp drop, or another vehicle or person could be on the other side of the hill.

⚠ WARNING

POTENTIAL HAZARD

Going down a hill improperly.

WHAT CAN HAPPEN

Could cause loss of control, passenger ejection (2-UP models) or cause vehicle to overturn.

HOW TO AVOID THE HAZARD

Always follow proper procedures for going down hills as described in this Operator's Guide.

NOTE: A special technique is required when braking as you go down a hill.

Always check the terrain carefully before you start down any hill. Do not forget, on 2-UP models, the operator is responsible for the safety of the passenger. In doubt, disembark him before going down hill. Always remember that the vehicle handling, stability and braking distance may be affected when riding with a passenger.

Shift your weight backward (operator and passenger on 2-UP models).

Never go down a hill at high speed.

Avoid going down a hill at an angle which would cause the vehicle to lean sharply to one side. Go straight down the hill where possible.

⚠ WARNING

POTENTIAL HAZARD

Improperly crossing hills or turning on hills.

WHAT CAN HAPPEN

Could cause loss of control, passenger ejection (2-UP models) or cause vehicle to overturn.

HOW TO AVOID THE HAZARD

Never attempt this maneuver on 2-UP models when the passenger is on board. Always disembark him before executing.

Never attempt to turn the vehicle around on any hill until you have mastered the turning technique as described in this Operator's Guide on level ground. Be very careful when turning on any hill.

Avoid crossing the side of a steep hill if possible.

When crossing the side of a hill:

Always follow proper procedures as described further in this Operator's Guide.

Avoid hills with excessively slippery or loose surfaces.

Operator and passenger (2-UP models) must shift weight to the uphill side of the vehicle.

⚠ WARNING

V00A1PQ

POTENTIAL HAZARD

Stalling, rolling backwards or improperly dismounting while climbing a hill.

WHAT CAN HAPPEN

Could result in vehicle overturning.

HOW TO AVOID THE HAZARD

Use low gear and maintain steady speed when climbing a hill.

If you lose all forward speed:

Operator and passenger (2-UP models) must keep their weight uphill. Never open the throttle suddenly or make sudden gear changes. The vehicle could flip over backwards.

Apply the brakes.

Lock parking brake after you have stopped.

Disembark on uphill side, or to a side if pointed straight uphill (passenger first on 2-UP models).

If you begin rolling backwards:

Operator and passenger (2-UP models) must keep their weight uphill. Never open the throttle suddenly or make sudden gear changes. The vehicle could flip over backwards.

Never apply the rear brake while rolling backwards.

Apply the front brake gradually.

When fully stopped, apply rear brake as well and lock parking brake.

Disembark on uphill side, or to a side if pointed straight uphill (passenger first on 2-UP models).

Turn the vehicle around and remount, following the procedure described further in this Operator's Guide.

⚠ WARNING

POTENTIAL HAZARD

Improperly operating over obstacles.

WHAT CAN HAPPEN

Could cause loss of control (passenger ejection on 2-UP models), or a collision.

Could cause the vehicle to overturn.

HOW TO AVOID THE HAZARD

Before operating in a new area, check for obstacles.

Never attempt to ride over large obstacles, such as large rocks or fallen trees.

On 2-UP models, the operator is responsible for the safety of his passenger. In doubt, disembark him before riding over obstacles. Always remember that the vehicle handling and stability may be affected when riding with a passenger.

When you go over obstacles, always follow proper procedures as described in this Operator's Guide.

⚠ WARNING

POTENTIAL HAZARD

Skidding or sliding improperly.

WHAT CAN HAPPEN

You may lose control of this vehicle.

You may also regain traction unexpectedly, which may cause the vehicle to overturn or passenger ejection (2-UP models).

HOW TO AVOID THE HAZARD

Learn to safely control skidding or sliding by practicing at low speeds and on level smooth terrain.

On 2-UP models, never slide or skid with passenger. Always remember that the vehicle handling and stability may be affected when riding with a passenger.

On extremely slippery surfaces, such as ice, go slowly and be very cautious in order to reduce the chance of skidding or sliding out of control.

⚠ WARNING

POTENTIAL HAZARD

Operating this vehicle through deep or fast flowing water.

WHAT CAN HAPPEN

Tires may float, causing loss of traction and loss of control, which could lead to an accident.

HOW TO AVOID THE HAZARD

Never operate this vehicle in fast flowing water or in deep water.

Check water depth and current before you attempt to cross any water. Water should not go above footrests.

Remember that wet brakes may have reduced stopping ability. Test your brakes after leaving water. If necessary, apply them several times to let friction dry out the pads.

⚠ WARNING

POTENTIAL HAZARD

Improperly operating in reverse.

WHAT CAN HAPPEN

You could hit an obstacle or person behind the vehicle, resulting in serious injury.

HOW TO AVOID THE HAZARD

When you select reverse gear, make sure there are no obstacles or people behind the vehicle. When it is safe to proceed, go slowly. On 2-UP models, take account that the passenger can obstruct your view.

⚠ WARNING

POTENTIAL HAZARD

Operating this vehicle with improper tires, or with improper or uneven tire pressure.

WHAT CAN HAPPEN

Use of improper tires on this vehicle, or operation of this vehicle with improper or uneven tire pressure, may cause loss of control, tire blow outs, tire to move around on its rim, and increases the risk of an accident.

HOW TO AVOID THE HAZARD

Always use the size and type of tires specified in this Operator's Guide for this vehicle.

Always maintain proper tire pressure as described in this Operator's Guide.

Always replace wheels or tires that are damaged.

⚠ WARNING

POTENTIAL HAZARD

Operating this vehicle with improper modifications.

WHAT CAN HAPPEN

Improper installation of accessories or modification of this vehicle may cause changes in handling which in some situations could lead to an accident.

HOW TO AVOID THE HAZARD

Never modify this vehicle through improper installation or use of accessories. All parts and accessories added to this vehicle should be approved by BRP and should be installed and used according to instructions. If you have questions, consult an authorized Can-Am dealer.

NEVER install a passenger seat (1-UP models) or use the racks to carry a passenger.

Modification of the vehicle to increase speed and performance may violate the terms and conditions of your vehicle limited warranty. In addition, certain modifications including the removal of engine or exhaust components are illegal under most laws.

⚠ WARNING

POTENTIAL HAZARD

Overloading this vehicle, carrying or towing cargo improperly.

WHAT CAN HAPPEN

Could cause changes in vehicle handling which could lead to an accident.

HOW TO AVOID THE HAZARD

Never exceed the stated load capacity for this vehicle including operator and passenger (2-UP models) as well as other loads and added accessories.

Cargo should be properly distributed and securely attached.

Reduce speed when carrying cargo or pulling a trailer. Allow greater distance for braking.

Always follow the instructions in this Operator's Guide for carrying cargo or pulling a trailer.

⚠ WARNING

V03M01Q

POTENTIAL HAZARD

Transporting flammable or dangerous material can lead to explosions.

WHAT CAN HAPPEN

This can cause serious injury or death.

HOW TO AVOID THE HAZARD

Never transport flammable or dangerous material.

PRE-RIDE INSPECTION

⚠ WARNING

Perform a pre-ride inspection before each ride to detect any potential problem that could occur during operation. The pre-ride inspection can help you monitor component wear and deterioration before they become a problem. Correct any problem that you discover to reduce the risk of a breakdown or crash.

Before using this vehicle, the operator should always perform the following pre-ride inspection check list.

Pre-Ride Inspection Check List

What to Do Before Starting the Engine (Key OFF)

ITEMS TO BE INSPECTED	INSPECTION TO PERFORM	✔
Engine oil	Check engine oil level.	
Coolant	Check coolant level.	
Brake fluid	Check brake fluid level	
Leaks	Check for any leaks under vehicle	
Throttle lever	Activate throttle lever several times to ensure it operates freely. It must return to idle position when released	
Parking brake	Apply parking brake and check if it operates properly	
Tires	Check tire pressure and condition. Refer to *SPECIFICATIONS* and adjust according to load.	
Wheels	Check wheels for damage and for abnormal play, and Make sure that lug nuts are tightened. Refer to *WHEELS AND TIRES* in *MAINTENANCE PROCEDURES* for torque specification.	
Radiator	Check cleanliness of the radiator	
Drive shaft boots	Check drive shaft boots and protectors condition	
Seat(s)	Check if operator seat is in place and properly latched	
	Check if passenger seat is in place and properly latched (2-UP Models)	
	Check the passenger backrest and grab handles condition (2-UP Models)	

ITEMS TO BE INSPECTED	INSPECTION TO PERFORM	✔
Cargo	If you transport a cargo, respect the load capacity. Refer to *LOADING THE CARGO RACKS* Ensure cargo is properly secured to the racks	
	If you are pulling a trailer or another equipment: – Check hitch and trailer ball condition – Respect the tongue capacity and towing capacity as indicated on the label affixed to the hitch or refer to *SPECIFICATIONS* – Ensure trailer is properly secured to hitch	
Storage compartment	Check if rear storage compartment is properly latched	
Chassis and suspension	Check underneath vehicle for any debris on chassis or suspension and clean them properly	

What to Do Before Starting the Engine (Key ON)

ITEMS TO BE INSPECTED	INSPECTION TO PERFORM	✔
Multifunction gauge	Check operation of indicator lamps in multifunction gauge (during first few seconds of key ON)	
	Check for messages on multifunction gauge	
Lights	Check operation and cleanliness of headlights and taillight	
	Check operation of low and high beams	
	Check operation of brake light	
Fuel level	Check the fuel level.	

What to Do After the Engine is Started

ITEMS TO BE INSPECTED	INSPECTION TO PERFORM	✔
Steering	Check if steering operates freely by completely turning it from side to side	
Shift lever	Check operation of shift lever (P, R, N, H and L)	
2WD/4WD selector	Check operation of 2WD/4WD selector	

ITEMS TO BE INSPECTED	INSPECTION TO PERFORM	✔
Brakes	Drive forward slowly a few feet and apply brake lever and brake pedal individually. The brakes must fully apply. Lever and pedal must fully return when released	
Engine stop switch	Check that the engine stop switch is working properly	
Ignition switch	Check if ignition switch is working properly by restarting and stopping the engine	

RIDING THE VEHICLE

To fully appreciate the pleasures and excitement of riding this vehicle, there are some basic rules and tips that you MUST follow. Some may be new to you while others may be common sense or obvious.

Please take the time to study this Operator's Guide and all on-product safety labels as well as the *SAFETY VIDEO* located at https://can-am.brp.com/off-road/safety. They more completely describe what you should know about this vehicle before riding it.

Whether you are a new user or an experienced rider, it is important for your personal safety that you know the controls and features of this vehicle. Equally important is knowing how to properly ride.

This is a high performance ATV for off-road use only. Inexperienced riders may overlook risks and be surprised by the specific behavior of this ATV in any terrain condition.

We recommend following the age recommendation indicated on the safety label affixed on the unit. Even though a person may be within the age group for which this vehicle is recommended, he may not have the skills, abilities, or judgment needed to operate this vehicle safely and may be involved in a serious accident.

Individuals with cognitive or physical impairments or who are high risk takers have an increased exposure to overturns or collisions which may result in injury including death.

Not all vehicles are the same. Each has its own unique performance characteristics, controls and features. Each will ride and handle differently.

Become completely familiar with the operational controls and the general operation of the vehicle before venturing into off road conditions. Practice driving in a suitable area free of hazards and feel the response of each control. Drive at low speeds. Higher speeds require greater experience, knowledge and suitable riding conditions.

Riding conditions vary from place to place. Each is subject to weather conditions which may radically change from time to time and from season to season.

Riding on sand is different than riding on snow or through forests or marshes. Each location may require a greater degree of awareness and skill. Show good judgement. Always proceed with caution. Please do not take any unnecessary risks that could leave you stranded or possibly injured.

Never assume that the vehicle will go everywhere safely. Sudden changes in terrain caused by holes, depressions, banks, softer or harder “ground” or other irregularities may cause the vehicle to topple or become unstable. To avoid this, slow down and always observe the terrain ahead. If the vehicle does begin to topple or tip over, the best advice is to immediately get off AWAY from the direction of the tip over!

We encourage you to have an Annual Safety Inspection of your vehicle. Please contact an authorized BRP dealer for further details. Though not required, it is recommended that an authorized BRP dealer performs the preseason preparation of your vehicle. Each visit to your authorized BRP dealer is a great opportunity for your dealer to verify if your vehicle is included in any safety campaign. We also urge you to visit your authorized BRP dealer in a timely manner if you become aware of any safety related campaigns.

See an authorized BRP dealer for available accessories you may require.

Riding Gear

Actual weather conditions should help you decide how to dress. Dress for the coldest weather expected. Thermal underwear next to the skin also provides a good insulation. It is important that the operator always wears the appropriate protective riding gear and apparel, including an approved helmet, eye protection, boots, gloves, a long sleeved shirt and pants. This type of clothing will provide you protection from some of the minor hazards you may encounter en route. The operator must never wear loose clothing such as a scarf that may get entangled in the vehicle or on tree branches and shrubs. Depending on conditions, anti-fogging goggles or sunglasses may be required. Different colored lenses available for goggles or sunglasses help you distinguish terrain variations. Sunglasses should only be worn during the daytime.

V00A0RN

Riders with appropriate riding gear

Carrying a Passenger

1-UP Models

This vehicle is designed to carry ONE (1) operator only. Do not install passenger seat or use the racks to carry a passenger.

2-UP Models

This vehicle is designed specifically to carry an operator and ONE (1) passenger only. The passenger must be seated on the designated passenger's seat and hold on to the grab handles at all times. NEVER install other passenger's seat other than the one recommended by BRP. Do not use the racks or their location to carry passenger(s). Carrying more than one (1) passenger may affect the stability and your control of the vehicle. When the passenger seat is not installed, the vehicle becomes a ONE-RIDER vehicle (1-UP model) and NO PASSENGER must be allowed on it.

Recreational Riding

Respect the rights and limitations of others. Stay away from areas designated for other types of off road use. This includes snowmobile trails, equestrian trails, cross country ski trails, mountain bike trails, etc. Never assume there are no other users on the trail. Always stay to the complete right of the trail and do not zigzag to one side of the trail then the other. Be prepared to stop or pull off to the side if another trail user appears in front of you.

Join a local ATV club. It will provide you with a map and advice or inform you where you can ride. If a club does not exist in your area, help to start one. Group riding and club activities provide a pleasurable, social experience.

Always keep a safe distance from other riders. Your judgment of speed, terrain conditions, weather, mechanical condition of your vehicle and the "trust in judgment" you have in others around you will help you make a better choice of appropriate safe distance. This vehicle, like any other motorized vehicle, cannot stop "on a dime". Allow greater distance for braking. On 2-UP models, the vehicle handling, stability and braking distance may be affected when riding with a passenger. Safely reduce speed when riding with a passenger.

Before you ride, tell someone where you are planning to travel and your expected time of return.

Depending on the length of your ride, carry additional tools , drinking water, food and emergency equipment. Find out where you can get additional gasoline and oil. Be prepared for the possible conditions you may encounter.

First aid kit	Adjustable wrench
Mobile phone	Knife
Friction tape	Flashlight
A rope	Colored lens goggles
Spare light bulbs	Trail map
Provided tool kit	Snack

Environment

One of the benefits of this vehicle is that it can take you off the beaten path away from most communities. However, you should always respect nature and the rights of others to enjoy it. Do not ride in environmentally sensitive areas. Do not drive over forest crops or shrubs nor cut down trees or take down fencing nor spin your wheels and destroy the terrain. "Tread Lightly".

This vehicle can cause OHV wildfires if debris builds up near the exhaust or other engine hot spots and ignites then falls off into dry grass. Avoid riding in wet areas, through muskeg or tall grass, where debris can build up. Should you ride in those areas, inspect and remove all debris from your engine and hot spots.

Chasing wildlife is in many areas illegal. Wildlife can die of exhaustion after being chased by a motorized vehicle. If you encounter animals on the trail, stop and observe quietly and with caution. It will be one of the better memories of your life.

Observe the rule "what you take in, carry out". Do not litter. Do not start campfires unless you have permission to do so and then only away from dry areas. The hazards you may create on the trail may cause injury to others or yourself, even at a later date.

Respect farm lands. Always obtain the permission of the landowner before riding on private land. Respect crops, farm animals and property lines. If you come to a closed gate, close it again behind you.

Finally, do not pollute streams, lakes or rivers and do not modify the engine or exhaust system, or remove any of its components.

Design Limitation

Although the vehicle is exceptionally rugged for its class, it is still a light vehicle by definition and its operation must be restricted to its proper purpose.

The addition of weight to any part of the vehicle changes its gravitational stability and modifies its performance.

Off-Road Operation

The very nature of off-road operation is dangerous. Any terrain, which has not been specially prepared to carry vehicles, presents an inherent danger where angularity, terrain substance and exact steepness are unpredictable. The terrain itself presents a continual element of danger, which must be knowingly accepted by anyone venturing over it.

An operator who takes a vehicle off-road should always exercise the utmost care in selecting the safest path and keeping close watch on the terrain ahead of him. On no account should the vehicle be operated by anyone who is not completely familiar with the driving instructions applicable to the vehicle, nor should it be operated on steep or treacherous terrain.

Riding Techniques

Information in this guide is limited. Increase your knowledge and improve your skills by following a certified training course.

Care, caution, experience and driving skill are the best precautions against the hazards of vehicle operation.

Respect and follow all posted trail signs. They are there to help you and others.

In off-road operation, power and traction, not speed, are important. Never drive faster than visibility and your own ability to select a safe route permits.

Constantly watch the terrain ahead for sudden changes in slopes or obstacles, such as rocks or stumps, that may cause loss of stability, resulting in tip over or rollover.

It is also wise to know the terrain condition on the other side of a hill or bank. All too often there exists a sharp drop-off that is impossible to negotiate or descend.

Whenever there is the slightest doubt that the vehicle can safely negotiate an obstacle or a particular piece of terrain, always choose an alternate route.

Always use proper riding techniques to avoid vehicle overturns on hills and rough terrain and in turns.

Body Position

To maintain proper control, it is strongly advised that you keep your hands on the handlebar and within easy reach of all controls. The same holds true for your feet on the footpegs. To minimize the possibility of a leg or foot injury, keep your feet on the footpegs at all times. Do not direct your toes outwards nor extend your feet out to assist in turning as they can be hit or be snagged on passing obstacles, or may come into contact with the wheels.

Even though there is a suspension on this vehicle, there are "washboard" or rough terrain conditions that will make you feel uncomfortable and can even cause a back injury. "Posting" or riding in a crouched position will often be required. Slow down and allow your flexed legs to absorb part of the impact energy.

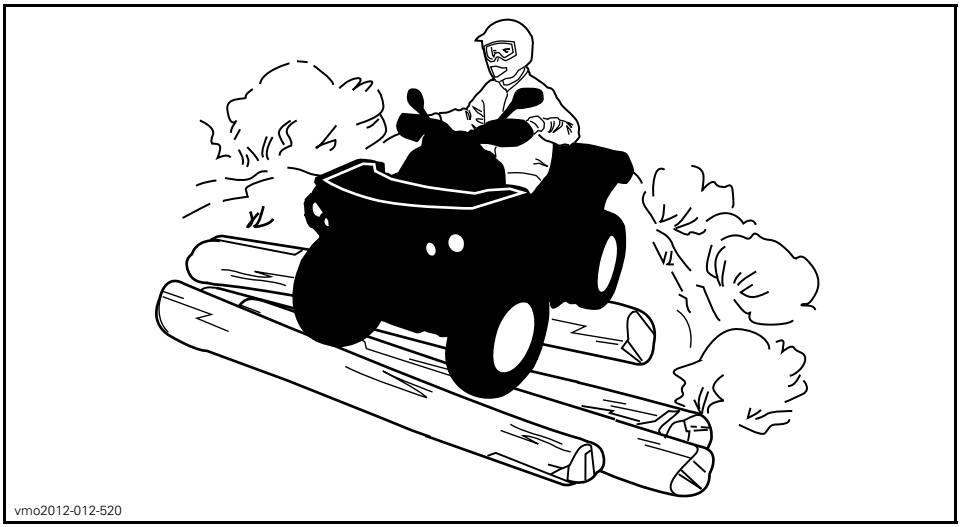

2-UP Models

The passenger must keep his hands on the grab handles and his feet on footrests at all times.

The passenger must synchronize his movements with the operator.

Crossing Roads

If you have to cross a road, the lead driver should get off his vehicle, then observe and give directions to the other riders. The last person after crossing then assists the lead driver to cross. Do not travel on sidewalks. They are designated for pedestrian use.

Turning

Practice turning at low speeds before attempting to turn at faster speeds.

Keep both hands on handlebars and feet on footpegs.

Maintain a constant speed or a slight acceleration during turn.

To reduce the risk of rollovers:

– Use care when turning.
  - Do not turn the handlebar too far or too fast for your speed and environment. Adjust steering inputs accordingly.
  - Slow down before entering a turn. Avoid hard braking during a turn.
  - Avoid sudden or hard acceleration when turning, even from a stop or low speed.
– Never attempt donuts, skids, slides, fishtails, jumps, or other stunts. If vehicle starts to skid or slide, steer in the direction of the skid or slide. Never slam the brakes and lock the wheels.
– Avoid paved surfaces. This vehicle is not designed to operate on paved surfaces and is more likely to roll over. If you must drive on pavement, turn gradually, go slowly, and avoid abrupt acceleration and braking.

Avoid sudden inputs to steering, throttle or brakes while turning.

⚠ WARNING

Do not attempt turns at excessive speed.

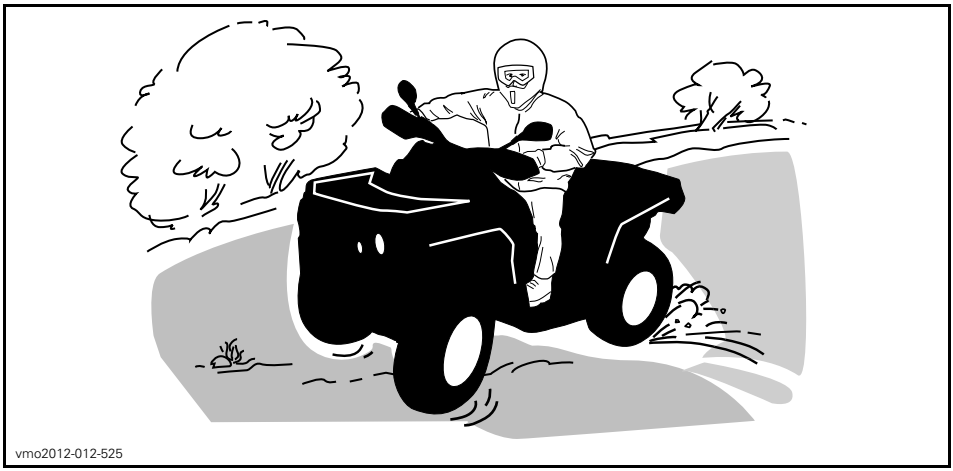

If you do get into a slide or skid, it may help to turn the handlebar in the direction of the skid until you regain control. Never jam the brakes and lock the wheels.

⚠ WARNING

The tires of this vehicle are not suited for paved road use. Also this vehicle is not equipped with a rear differential (rear wheels are always turning at the same speed). For these reasons, pavement may seriously affect the handling and control of the vehicle.

Braking

Always keep both hands on handlebars and feet on footpegs when braking.

Practice braking to get familiar with the brake response.

- Do it at low speed first, then increase the speed.
- Practice braking in straight line at different speeds and different braking force.
- Practice emergency braking; optimal braking is obtained in straight line, with high force applied, without locking the wheels.

Remember, braking distance depends on vehicle speed, load and the type of surface. Also, the tires and brakes conditions play a major role.

NOTE: If going forward the vehicle weight is transferred to the front wheels when braking. To obtain greater stopping efficiency, the brake system distributes more braking force to the front wheels. This will affect vehicle handling and steering control when braking vigorously. Take it into account when braking.

Reverse Operation

When operating in reverse, check that the path behind the vehicle is free of people or obstacles. Proceed slowly and avoid sharp turns.

When riding on a 2-UP model, take into account that the passenger can obstruct your view. Disembark the passenger if necessary.

We recommend sitting on your ATV when operating in reverse. Avoid standing up. Your weight could shift forward against throttle lever, causing an unexpected acceleration.

Obstacles

Obstacles in the "trail" should be traversed with caution. This includes loose rocks, fallen trees, slippery surfaces, fences, posts, and embankments and depressions. You should avoid them whenever possible. Remember that some obstacles are too large or dangerous to cross and should be avoided. Small rocks or fallen trees may be safely crossed approach at a 90° angle. Stand on the footrests while keeping your knees flexed. Adjust speed without losing momentum and do not "gun" the throttle. Hold handlebar (operator) or grab handles (passenger on 2-UP models) firmly. Place body weight rearwards (operator and passenger 2-UP models) and proceed. Do not try to lift the vehicle front wheels off the ground. Be aware that the object may be slippery or may move while crossing.

When riding on 2-UP models, the operator is responsible for the safety of the passenger; in doubt, disembark the passenger before proceeding.

Uphill Driving

1-UP Models

Before trying to climb a hill, keep these things in mind. Hill Climbing should only be attempted by experienced operators. Start on shallow slopes. Always drive straight uphill and keep your body weight forward towards the top of the hill. Keep your feet on the footrests, shift your ATV into a lower gear and accelerate before you start to climb. Try to keep a steady speed and go easy on the throttle to avoid acceleration. Abrupt slope or terrain variation or rolling one wheel over an obstacle could have a big impact on the stability as it will lift the front of the vehicle increasing the risk of tipping over. Some hills are too steep to safely stop or recover from after an unsuccessful climbing attempt. Try to avoid steep inclines. If you're not careful, you could tip over when going up hills. If the hill is too steep and you cannot proceed or the vehicle begins to roll backwards, apply the brake, being careful not to slide. Dismount then use the “K” turn (while walking back, next to the vehicle on the up hill side and with a hand on the brake lever, slowly back the rear of the vehicle toward the top of the hill then drive downhill). Always walk or dismount on the upside of the slope while keeping clear of the vehicle and its rotating wheels. Do not try to hold on to the vehicle if it begins to topple. Stay clear. Do not ride over the crest of the hill at high speed. Obstacles, including sharp drop-offs, may exist.

vmo2012-012-526

2-UP Models

The passenger must synchronize his movements with the operator. The passenger must remain seated at all times.

Do not forget, the operator is responsible for the safety of the passenger. In doubt, disembark the passenger before climbing a hill.

Before trying to climb a hill, keep these things in mind. Hill Climbing should only be attempted by experienced operators. Start on shallow slopes. Always drive straight uphill. Operator and passenger must keep their body weight forward, towards the top of the hill. Keep feet on the footrests, shift the ATV into a lower gear and accelerate before you start to climb. Try to keep a steady speed and go easy on the throttle to avoid acceleration. Abrupt slope or terrain variation or rolling one wheel over an obstacle could have a big impact on the stability as it will lift the front of the vehicle increasing the risk of tipping over. Some hills are

too steep to safely stop or recover from after an unsuccessful climbing attempt. Try to avoid steep inclines. If you're not careful, you could tip over when going up hills. If the hill is too steep and you cannot proceed or the vehicle begins to roll backwards, apply the brake, being careful not to slide. Dismount, passenger first, then use the "K" turn (while walking back, next to the vehicle on the up hill side and with a hand on the brake lever, slowly back the rear of the vehicle toward the top of the hill then drive downhill). Always walk or dismount on the upside of the slope while keeping clear of the vehicle and its rotating wheels. Do not try to hold on to the vehicle if it begins to topple. Stay clear. Do not ride over the crest of the hill at high speed. Obstacles, including sharp drop-offs, may exist. The passenger should get on the vehicle only when the vehicle has returned to a safe location.

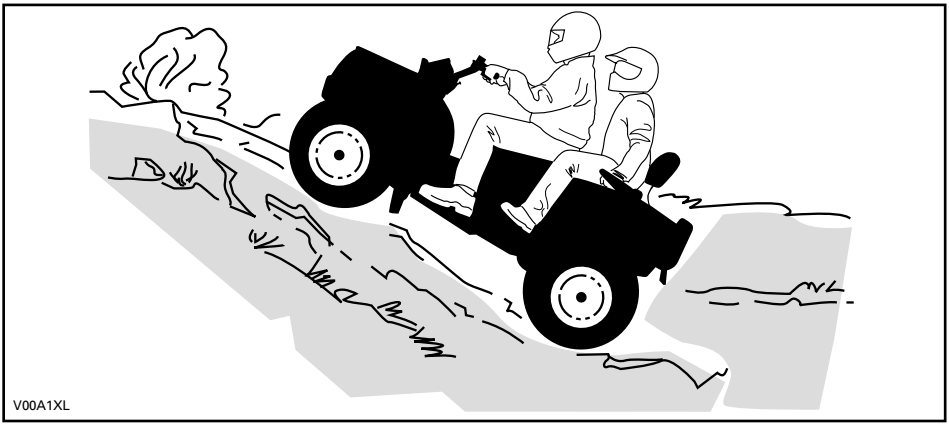

Vehicle Behaviors

Due to configuration, this vehicle has excellent climbing ability, so much so that it is possible to tip over before traction is lost. For example, it is common to encounter terrain situations where the top of the hill has eroded to a point that the hill peak rises very sharply. The vehicle can readily negotiate such a condition, however, in doing so, when the front of the vehicle is driven to a point that the vehicle's balance moves rearward, a tip over can occur.

The same situation may apply if an embedded object causes the front of the vehicle to climb more than desired. If such a situation occurs take an alternate route. Be aware of side hilling dangers when doing so. Refer to *SIDE HILLING*.

vmo2012-012-526

Downhill Driving

1-UP Models

Keep your body weight rearwards. Stay seated. Apply the brake gradually to prevent skidding. Do not "coast" down the slope using solely engine compression or in neutral gear.

Decelerating while negotiating a slippery downhill slope could "toboggan" the vehicle. Maintain steady speed and/or accelerate slightly to regain control. Try to avoid steep inclines. If you're not careful, you could tip over when going down hills.

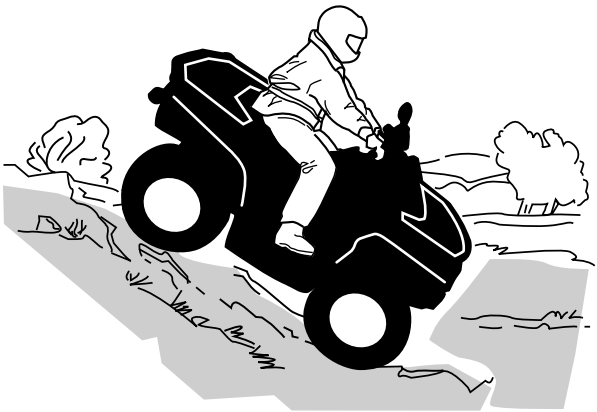

vmo2012-012-523

2-UP Models

The operator is responsible for the safety of the passenger; in doubt, disembark the passenger before proceeding.

Always remember that the vehicle handling, stability and braking distance may be affected when riding with a passenger.

The passenger must synchronize his movements with the operator. The passenger must remain seated at all times.

Operator and passenger must keep their body weight rearwards. Apply the brake gradually to prevent skidding. Do not "coast" down the slope using solely engine compression or in neutral gear. Try to avoid steep inclines. If you're not careful, you could tip over when going down hills.

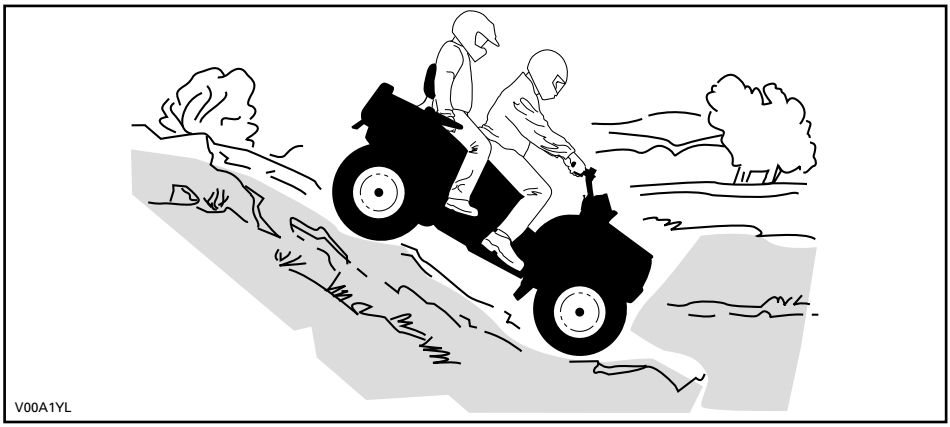

Vehicle Behaviors

This vehicle can climb slopes that are steeper than it can safely descend. Therefore, it is essential to ensure that a safe route exists to descend a slope before you climb it.

Side Hilling

This is one of the **most risky** types of riding since it may drastically change the balance of the vehicle. It should be avoided whenever possible. However, if it is necessary to do so , it is important that you ALWAYS keep your body weight on the upside of the slope and be prepared to dismount on that side should the vehicle begin to topple.

Avoid all objects or depressions that will intensify the raising of one side of the vehicle higher than the other, thus causing rollover.

⚠ WARNING

Do not try to stop or save the vehicle from damage.

⚠ WARNING

Be careful when loading and transporting liquid reservoirs. They can affect vehicle stability when side hilling by pulling downhill and increasing the risk of a roll over.

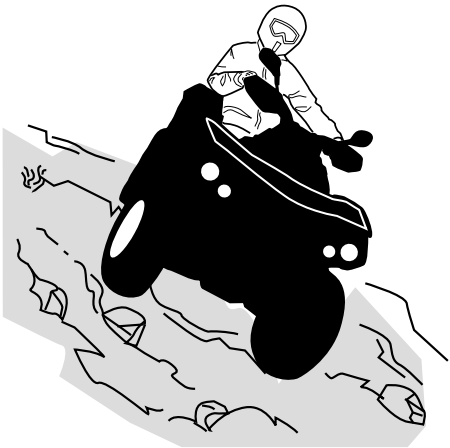

vmo2012-012-527

2-UP Models

The passenger must synchronize his movements with the operator. The passenger must remain seated at all times.

The operator is responsible for the safety of the passenger; in doubt, disembark the passenger before proceeding.

Drop-Offs

This vehicle will "bottom-out" and usually stop if either the front or rear wheels are driven over a drop-off. If the drop is sharp or deep, the vehicle will nose dive and tip over.

When riding on a 2-UP model, the operator is responsible for the safety of the passenger; in doubt, disembark the passenger before proceeding.

⚠ WARNING

Avoid negotiating drop-offs. Reverse and select an alternate route.

Crossing Water

Water can be a unique hazard. If it is too deep the vehicle may "float" and topple. Check the water depth and current before you attempt to cross any water. Water should not go above the footrest. Be wary of slippery surfaces such as rocks, grass, logs, etc., both in the water and on its banks. A loss of traction may occur. Do not attempt to enter the water at high speed. The water will act as a brake and could throw you off the vehicle, on the ground.

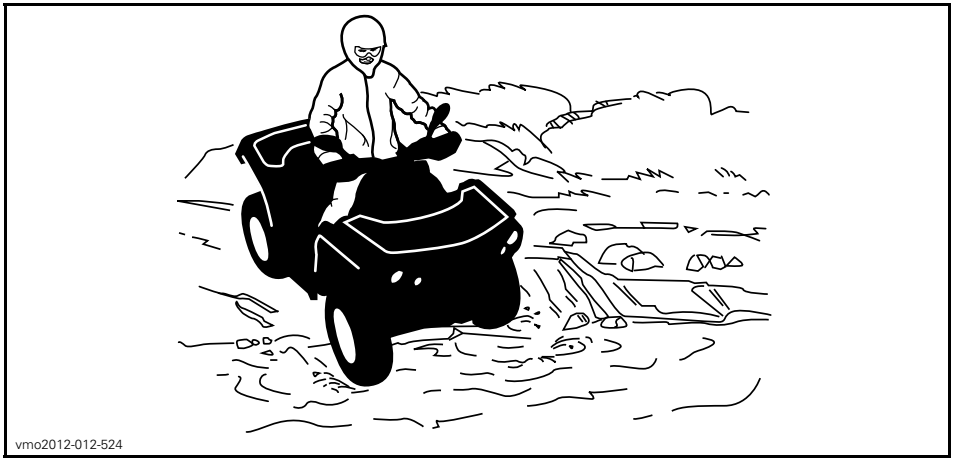

Wet brakes will affect the braking ability of your vehicle. Make sure you dry the brakes by applying them several times after the vehicle leaves the water, mud or snow. Allow greater distance for braking.

Mud or marsh lands may be encountered near water. Be prepared for sudden "holes" or changes in depth. Similarly so, be watchful of hazards such as rocks, logs, etc., partially covered by vegetation.

Riding on Ice

If your route crosses frozen waterways, make sure the ice is thick enough and sound enough to support the total weight of yourself, your passenger (2-UP models), the vehicle and its load. Be ever watchful of open water it is a sure indication that the ice thickness will vary.

On 2-UP models, the operator is responsible for the safety of the passenger; in doubt, do not attempt to cross.

Ice will also affect the control of the vehicle. Slow down and do not "gun" the throttle. This will only result in spinning of the tires and possible tip over of the vehicle or passenger ejection (2-UP models). Avoid rapid braking. This again will possibly result in an uncontrolled slide and tip over of the vehicle or passenger ejection (2-UP models). Slush should be avoided at all times since it could block the operation or controls of the vehicle.

Riding on Snow Covered Surfaces

When performing the pre-ride inspection, pay special attention to locations on the vehicle where snow and/or ice accumulations may obstruct visibility of the taillight and reflectors, clog ventilation openings, block the radiator and fan, and interfere with the movement of control levers, switches and brake pedal. Before starting with your ATV check the steering, throttle and brake lever and pedal controls for interference free operation.

Whenever an ATV is ridden on a snow covered drive path the tire grip is generally reduced causing the vehicle to react differently to control inputs from the operator. On low grip surfaces, the steering responses are not as crisp and precise, stopping distances are lengthened and acceleration becomes sluggish. Slow down and do not "gun" the throttle. This will only result in spinning of the tires and possibly in an

over steering slide of the vehicle. Avoid hard braking. This will possibly result in a straight line slide of the vehicle. Again, the best advice is to safely reduce speed in anticipation of a maneuver so to give yourself time and distance to regain total vehicle control before it spins out of your control.

As you drive your ATV over a loose snow covered surface, snow dust will be picked up in the wake turbulence of the moving vehicle and transported to contact and accumulate or melt on some exposed components including rotating parts like brake discs. Water, snow or ice may affect the response time of the brake system of your ATV. Even when not required to reduce vehicle speed apply brakes frequently to prevent ice or snow accumulation and to dry brake pads and discs. While doing so in low risk driving situations you will test for grip level and keep yourself alerted to how the vehicle reacts to your control inputs. Always keep brake pedal, footrests, floor boards, brake and throttle levers free of snow and ice. Frequently wipe snow off seat, hand grips, headlights, taillights and reflectors.

The depth of the snow cover may hide rocks, tree stumps or other objects and if it is wet may totally impede the driveability as the vehicle becomes bogged down or completely looses traction in slushy snow. Look far ahead and always be watchful of any visible clues that might indicate the presence of such obstacles. In doubt steer clear. Avoid driving on any frozen body of water before checking that the ice will safely support the ATV, its riders and its load of cargo. Remember that a given thickness of ice may be sufficient to support a snowmobile but not an ATV of an identical weight because of the smaller load bearing surface of the four tire contact patches as compared to that of a snowmobile track and skis.

To maximize comfort and avoid frostbite, always wear clothing and ATV protective equipment appropriate for the weather conditions you will be exposed to during your ride.

At the end of each ride it is a good practice to clean the vehicle body and all moving components (brakes, steering components, drivelines, controls, radiator fan etc.) from any snow or ice accumulations. Wet snow will turn to ice during the shut down period and become more difficult to remove at the next pre-ride inspection.

Riding in snow may reduce the brakes stopping capability. Safely reduce speed and allow greater distance for braking. Snow projection may cause ice build up or snow accumulation on brake components and controls. Apply brakes frequently to prevent ice or snow accumulation.

Riding on Sand

Riding on sand, sand dunes or on snow is another unique experience, but there are some basic precautions that should be observed. Wet, deep or fine sand/snow may create a loss of traction and cause the vehicle to slide, drop off or become "bogged" down. If this occurs look for a firmer base. Again, the best advice is to slow down and be watchful of the conditions. When you ride with a passenger (2-UP models), slow down even more.

When riding in sand dunes it is advisable to equip the vehicle with an antenna type safety flag. This will help make your location more visible to others over the next sand dune. Proceed carefully should you see another safety flag ahead. Since the antenna type safety flag can snag and rebound on your body if caught, do not use it in areas where there are low hanging branches or obstacles. Always remember when riding on a 2-UP model that the vehicle handling and stability may be affected when riding with a passenger.

Riding on Loose Stones

Riding on loose stones or gravel is very similar to riding on ice. They will affect the steering of vehicle possibly causing it to slide or tip over especially at high speeds (resulting in operator and passenger ejection (2-UP models).

Again, the best advice is to slow down and be watchful of the conditions. When you ride with a passenger (2-UP models), slow down even more.

In addition, braking distance may be affected. Remember that "gunning" the throttle or sliding may cause loose stones to be ejected rearwards into the path of another rider. Never do it deliberately.

MOVING LOADS AND DOING WORK

Working with your Vehicle

Your vehicle can help you perform a number of different LIGHT tasks ranging from snow removal to pulling wood or carrying cargo. A variety of accessories are available from your authorized Can-Am dealer. To prevent possible injury, follow the instructions and warnings that accompany the accessory. Always respect the load limits of the vehicle. Overloading the vehicle can overstress the components and cause failure. Avoid overexerting yourself if you lift or pull heavy loads or manually push the vehicle.

Carrying Loads

⚠ WARNING

- **On 1-UP models, NEVER exceed 90 km/h (55 MPH) if total load is more than 164 kg (360 lb).**
- **On 2-UP models, NEVER exceed 90 km/h (55 MPH) if total load is more than 132 kg (290 lb).**
- **On 2-UP models, NEVER exceed 90 km/h with a passenger.**

Any load carried on the vehicle including a passenger (2-UP models) and/or the carrying rack(s) will affect the handling, stability and braking distance of the vehicle. Do not exceed the total load allowed for this vehicle, including the weight of operator and passenger cargo, accessories and trailer tongue weight. Refer to *SPECIFICATIONS*. Always make sure the cargo is secured, properly distributed (1/3 of cargo weight in front and 2/3 of cargo weight in back) and cannot interfere with your proper control. Always be aware that the "cargo" may slide or fall off and cause an accident. Avoid cargo that may protrude sideways and get snagged or caught in bushes or other obstacles. Avoid covering and obstructing the headlights or taillight with the cargo.

Always be aware that the "load" may slide or fall off and cause an accident.

⚠ WARNING

The vehicle handling, stability and braking distance are affected when loading racks and using the vehicle. Correct loading and weight distribution are therefore important. Never overload, tow or carry cargo improperly. Always ensure the cargo is safely secured and properly distributed on the rack(s) before operating the vehicle. Safely reduce speed according to terrain conditions when carrying cargo or pulling a trailer, and avoid hills and rough terrain. Allow greater distance for braking, especially on inclined surfaces and when a passenger (2-UP models) is on board. Be careful not to skid or slide. Always secure cargo as low as possible on the rack(s) to reduce the effect of a higher center of gravity. Failure to follow the recommendations here could cause changes in vehicle handling which could lead to an accident.

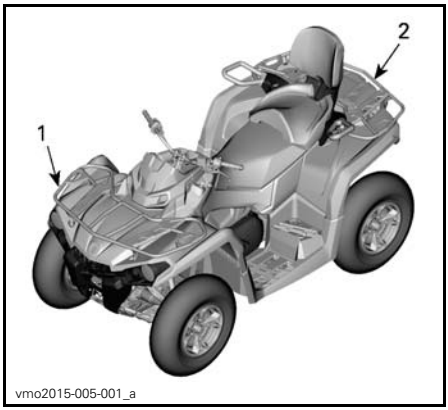

1. 1/3 of cargo weight
2. 2/3 of cargo weight

MAXIMUM LOAD TABLE			
TOTAL LOAD ALLOWED	1-UP MODELS	235 kg (517 lb)	Includes weight of operator, passenger, cargo, accessories and trailer tongue weight.
	Mossy Oak and 2-UP MODELS	272 kg (598 lb)	
FRONT LOAD		54 kg (120 lb)	Evenly distributed.
REAR LOAD		109 kg (240 lb)	Evenly distributed. Includes rear rack, rear glove box (if equipped) and tongue load.

EXAMPLE OF SUITABLE VEHICLE TOTAL LOADS (MODELS WITH 235 kg (517 lb) TOTAL LOAD)				
OPERATOR AND PASSENGER	FRONT RACK	REAR RACK	TONGUE WEIGHT	TOTAL VEHICLE LOAD
92 kg (202 lb)	40 kg (88 lb)	80 kg (176 lb)	23 kg (50 lb)	235 kg (517 lb)

Loading the Cargo Racks

NOTICE **When loading or unloading, do not exceed the weight limit of 109 kg (240 lb) for rear load and 54 kg (120 lb) for front load.**

Load cargo as low as possible – a higher load can raise the vehicle's center of gravity, which can reduce stability. Position cargo on the rack as evenly distributed as possible.

Secure the load on the cargo rack. Do not secure cargo to other parts of the vehicle. If it is not properly secured, a load may slide or fall off, possibly striking occupants or bystanders; or it may shift during riding, affecting the handling of the vehicle.

Objects that are high may affect visibility for the driver and may act as projectiles in case of an accident. Loads that protrude sideways can get snagged or caught in bush, branches or other obstacles. Avoid covering and obstructing the brake lights with the cargo. Ensure no cargo protrudes outside the cargo rack and that cargo will not interfere with your visibility or control of the vehicle.

Do not overload cargo rack.

Never carry gasoline container(s) or any dangerous liquids on the cargo rack.

Hauling a Load (if Equipped with Hitch)

Never pull a load by attaching it to the bumper or any other accessories; this can cause the vehicle to tip over. Use only the trailer hitch (if installed) to pull a load.

In an emergency situation, use the recovery hook to recover a stuck vehicle. Refer to *RECOVERY HOOKS* in *EQUIPMENT*.

When pulling loads with a chain or cable, ensure that there is no slack before starting and maintain tension while pulling.

When pulling loads with a chain or cable, be sure to brake progressively. The inertia of the load could lead to an impact.

When hauling a load, respect the maximum hauling capacity. See *PULLING A TRAILER*.

⚠ WARNING

A slack in the chain or cable can cause it to break and snap back.

When pulling another vehicle, be sure that someone is controlling the pulled vehicle. They must brake and steer to prevent the vehicle from going out of control.

Reduce your speed when hauling a load and turn gradually. Avoid hills and rough terrain. Never attempt steep hills. Allow more distance for braking, especially on inclined surfaces and when a passenger (2-up models) is on board. Be careful not to skid or slide.

Pulling a Trailer (if Equipped with Hitch)

NOTICE **A BRP approved rear hitch must be properly installed on the vehicle for hauling trailers.**

Riding this vehicle with a trailer substantially increases the risk of toppling, especially on inclined slopes. If a trailer is used behind the vehicle make sure that its hitch is compatible with the one on the vehicle. Make sure the trailer is horizontal with the vehicle. (In some instances a special extension may have to be installed on the vehicle hitch). Use security chains or cables to secure the trailer with the vehicle.

Reduce your speed when pulling a trailer and turn gradually. Avoid hills and rough terrain. Never attempt steep hills. Allow more distance for braking, especially on inclined surfaces and when a passenger (2-up models) is on board. Be careful not to skid or slide.

Improperly loading a trailer may cause a loss of control. Make sure there is at least some weight on the tongue.

Always make sure load is evenly distributed and safely secured on the trailer; an evenly balanced trailer is easier to control.

Always put the shift lever to L (low range) for hauling a trailer – in addition to providing more torque, operating in low range helps account for the increased load on the rear tires.

When stopped or parked, block the vehicle and trailer wheels from possible movement.

Use caution when disconnecting a loaded trailer; it or its load may topple on you or others.

When hauling a trailer, respect the maximum hauling capacity indicated on the label on the hitch and mentioned in *SPECIFICATION*.

Make sure there is at least some weight on the tongue.

IMPORTANT ON-PRODUCT LABELS (CANADA/UNITED STATES)

Canada/United States

Hang Tag

This vehicle comes with a hang tag and labels containing important safety information.

Any person who rides this vehicle should read and understand this information before riding.

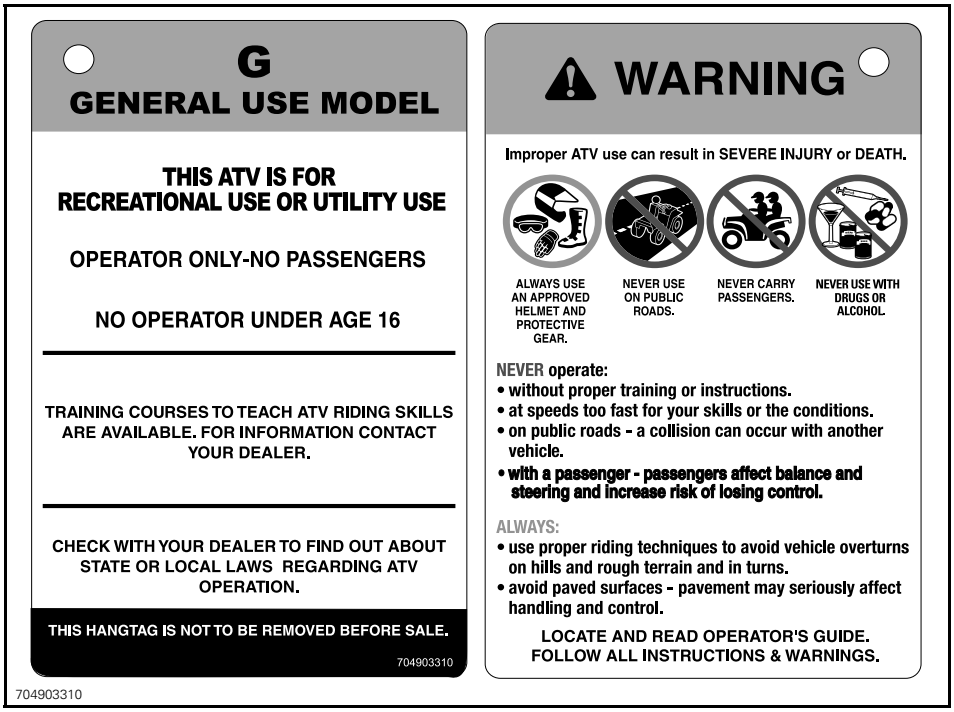

TYPICAL - 1-UP MODELS

G
GENERAL USE MODEL

THIS ATV IS FOR
RECREATIONAL USE OR UTILITY USE.

NO OPERATOR UNDER AGE 16

TRAINING COURSES TO TEACH
ATV RIDING SKILLS ARE AVAILABLE.
FOR INFORMATION CONTACT
YOUR DEALER.
MAKE SURE TO WATCH SAFETY VIDEO.

CHECK WITH YOUR DEALER TO
FIND OUT ABOUT STATE OR LOCAL
LAWS REGARDING ATV
OPERATION.

This hangtag is not to be removed before sale.

704903314

⚠ WARNING

Improper use can result in SEVERE INJURY or DEATH

ALWAYS USE AN APPROVED HELMET AND PROTECTIVE GEAR FOR DRIVER AND PASSENGER.

NEVER USE ON PUBLIC ROADS.

NEVER CARRY MORE THAN 1 PASSENGER.

NEVER USE WITH DRUGS OR ALCOHOL.

NEVER operate:
- without proper ATV training or instructions.
- at speeds too fast for your skills or the conditions.
- on public roads - a collision can occur with another vehicle.
- with a passenger unless passenger seat is securely in place.

THE OPERATOR MUST ALWAYS:
- use proper riding techniques to avoid overturns on hills and rough terrain and in turns.
- avoid paved surfaces - pavement may seriously affect handling and control.
- reduce speed and use extra caution at all times when carrying a passenger - dismount passenger when conditions require.
- make sure passenger reads and understands this label and passenger safety label.

LOCATE AND READ OPERATOR'S GUIDE.
FOLLOW ALL INSTRUCTIONS & WARNINGS.

This hangtag is not to be removed before sale. 704903314

TYPICAL - 2-UP MODELS

⚠ **WARNING**. Operating, servicing and maintaining an off-road vehicle can expose you to chemicals including engine exhaust, carbon monoxide, phthalates, and lead, which are known to the State of California to cause cancer and birth defects or other reproductive harm.
To minimize exposure, avoid breathing exhaust, do not idle the engine except as necessary, service your vehicle in a well-ventilated area and wear gloves or wash your hands frequently when servicing your vehicle.

For more information go to www.P65Warnings.ca.gov/products/passenger-vehicle

704906872

EN-704906872-DEC

VEHICLE ENGINE DESCRIPTION:

XXXXX

EPA CERTIFIED

NER (NORMALIZED EMISSION RATE) = X
ON A 0 TO 10 SCALE, 0 BEING THE CLEANEST
***NOT TO BE REMOVED PRIOR TO SALE**

704901107

vmo2006-005-009_en

TYPICAL

Vehicle Safety Labels

Read and understand all the safety labels on your vehicle.

These labels are affixed to the vehicle for the safety of the operator, passenger (2-UP) or bystanders.

The safety labels on your vehicle should be considered permanent parts of the vehicle. If missing or damaged, they can be replaced free of charge. See an authorized Can-Am dealer.

NOTE: In the event of any discrepancy between this guide and the vehicle, the safety labels on the vehicle have precedence over the labels in this guide.

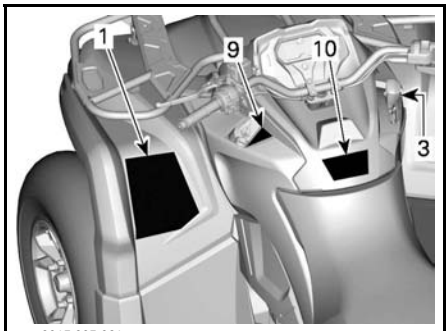

vmo2015-005-061_a

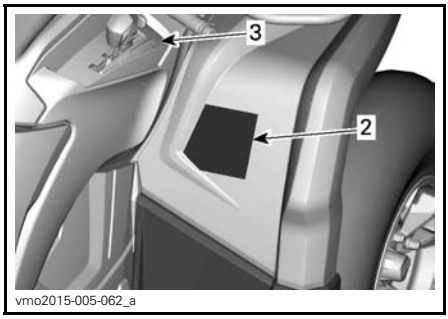

vmo2015-005-062_a

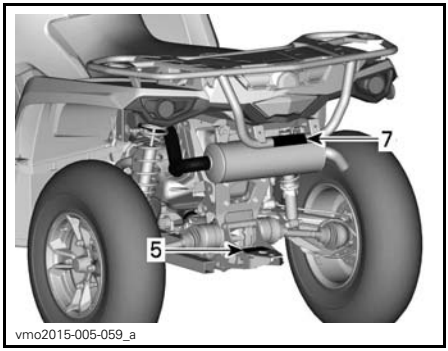

vmo2015-005-059_a

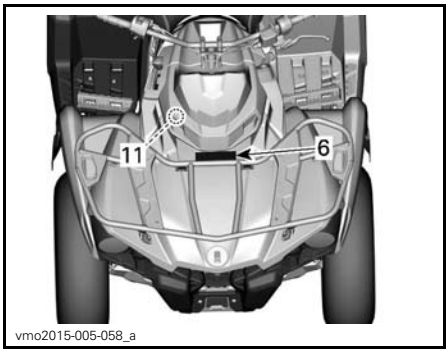

vmo2015-005-058_a

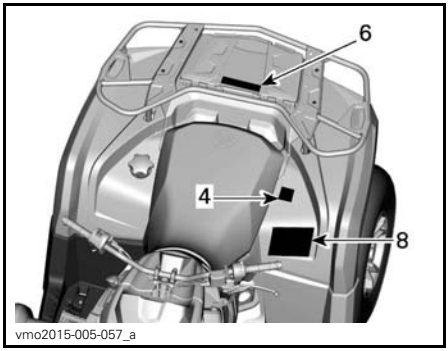

vmo2015-005-057_a

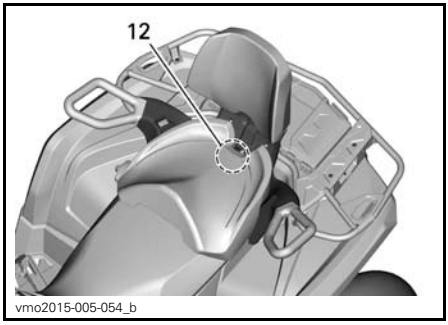

MAX MODELS ONLY

LABEL 1 - 1-UP MODELS

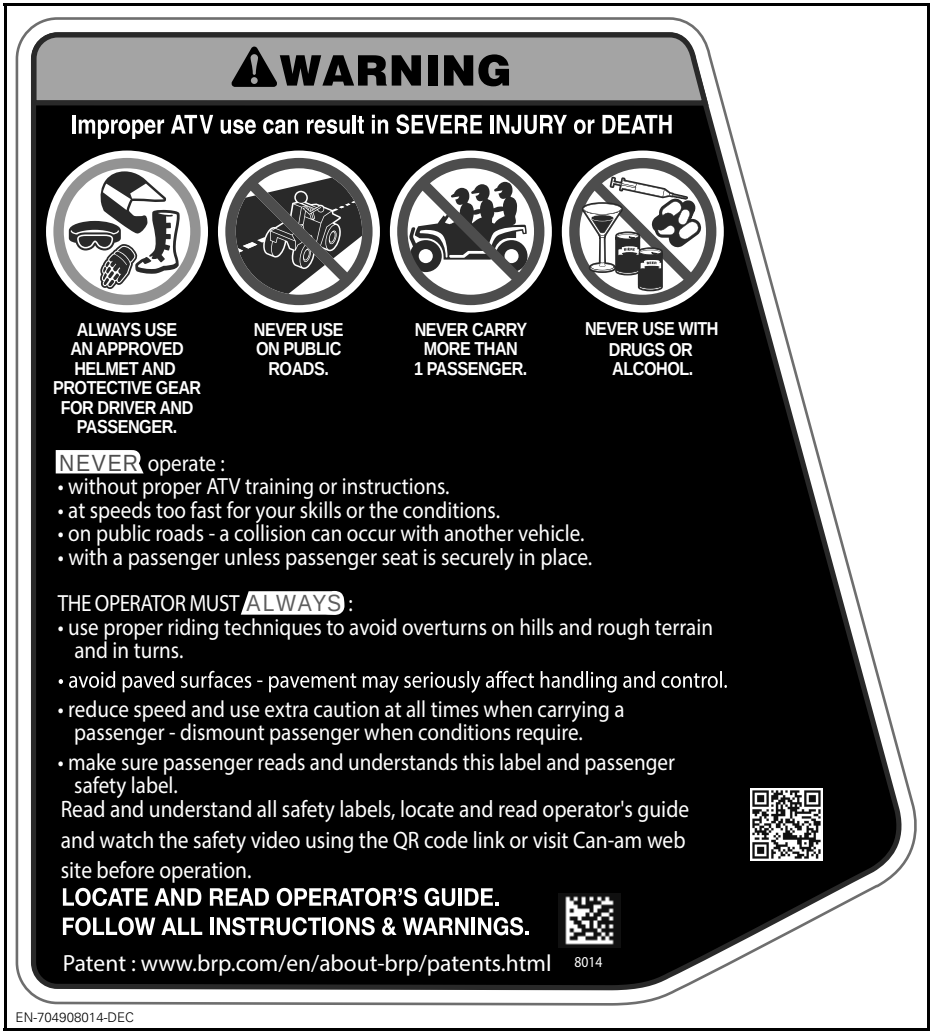

LABEL 1 - 2-UP MODELS

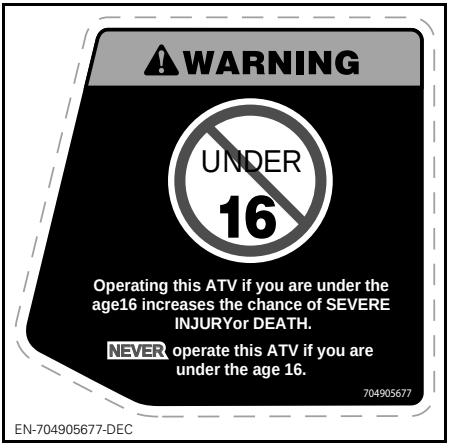

LABEL 2 - 1-UP MODELS

LABEL 4 - 1-UP MODELS

LABEL 2 - 2-UP MODELS

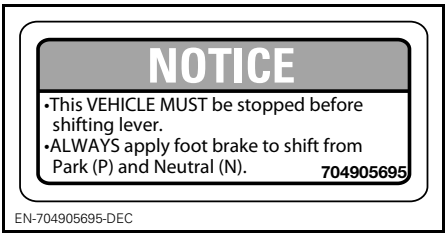

LABEL 3

LABEL 4 - 2-UP MODELS

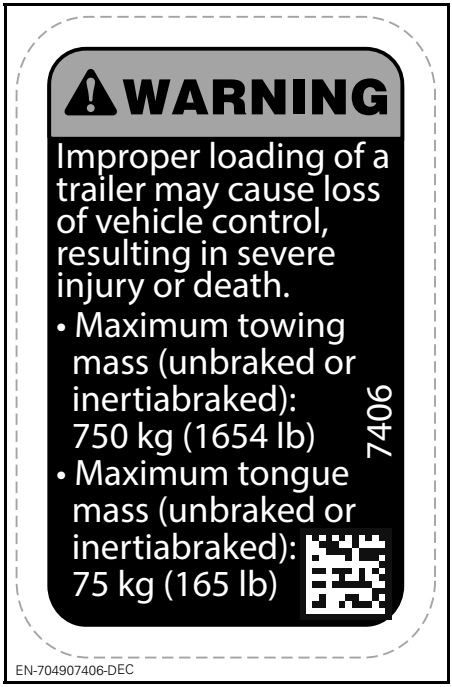

LABEL 5

LABEL 6

LABEL 7

⚠ WARNING

Improper tire pressure or overloading can cause loss of control, resulting in SEVERE INJURY or DEATH.

ALWAYS maintain proper tire pressure according to the load on the vehicle. Refer to table.

NEVER • underinflate tire as it could cause the tire to disloge from the rim.

NEVER • exceed the vehicle load capacity of 235 kg (517 lb), Mossy Oak configuration 272 kg (598 lb), including weight of operator, cargo, accessories and trailer tongue weight.

NEVER • exceed 90 km/h if total load is more than 164 kg (360 lb), Mossy Oak configuration 132 kg (290 lb)

ATV LOADING and TRAILER TOWING

- Cargo loading or trailer towing can affect stability and handling. Load must be proprely distributed on racks.
- When loaded with cargo or towing a trailer:
  - reduce speed.
  - allow more distance to stop.
  - avoid hills and rough terrain.

COLD TIRE PRESSURE	
FRONT	48.3 kPa (7 psi)
REAR	48.3 kPa (7 psi)

704906970

EN-704906970-DEC

LABEL 8 - 1-UP MODELS

⚠ WARNING

Improper tire pressure or overloading can cause loss of control, resulting in SEVERE INJURY or DEATH.

ALWAYS maintain proper tire pressure according to the load on the vehicle. Refer to table.

NEVER • underinflate tire as it could cause the tire to disloge from the rim.

- exceed the vehicle load capacity of 272 kg (600 lb), including weight of operator, cargo, accessories and trailer tongue weight.
- exceed 90 km/h if total load is more than 132 kg (290 lb)
- exceed 90 km/h with a passenger

ATV LOADING and TRAILER TOWING

- Cargo loading or trailer towing can affect stability and handling. Load must be proprely distributed on racks.
- When loaded with cargo or towing a trailer:
  - reduce speed.
  - allow more distance to stop.
  - avoid hills and rough terrain.

COLD TIRE PRESSURE	
FRONT	48.3 kPa (7 psi)
REAR	48.3 kPa (7 psi)

704906307

704906307

LABEL 8 - 2-UP MODELS

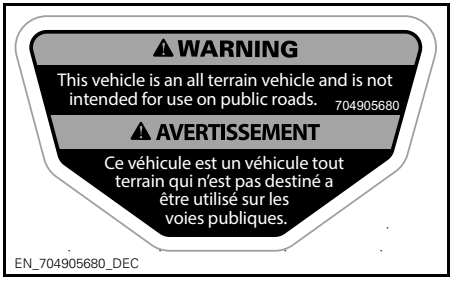

LABEL 9

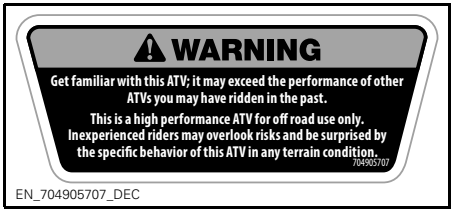

LABEL 10

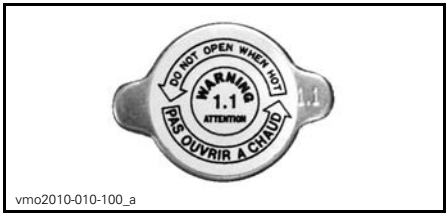

LABEL 11

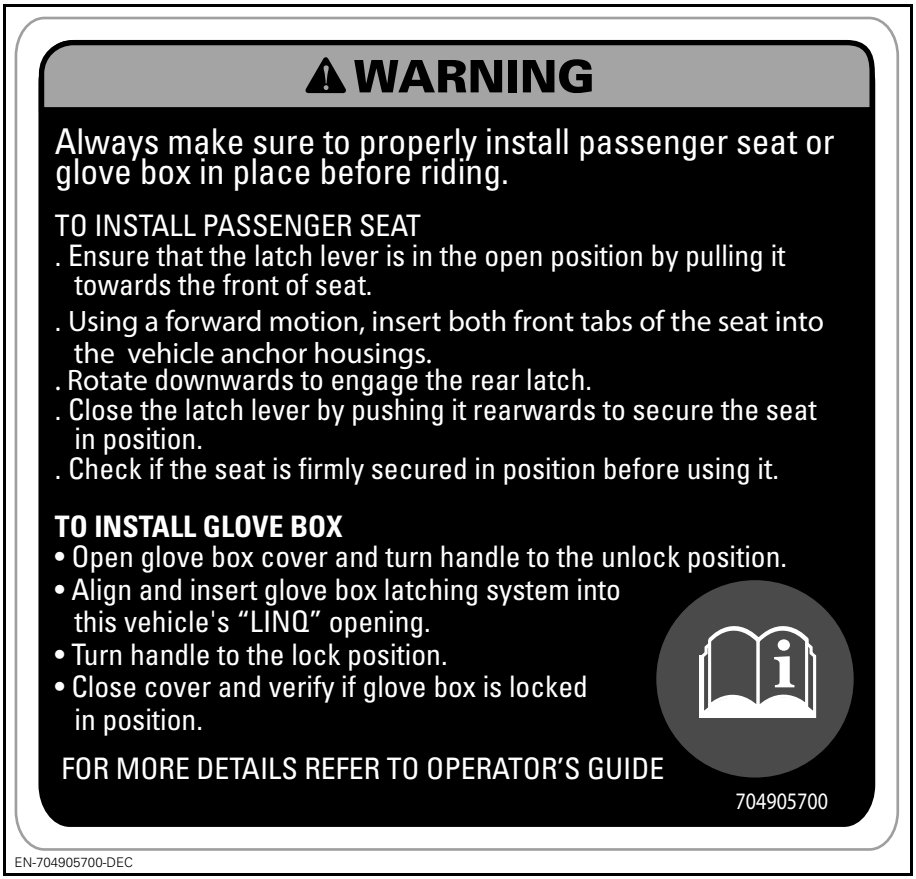

LABEL 12 - 2-UP MODELS

Compliance Labels

These labels indicate vehicle's compliance.

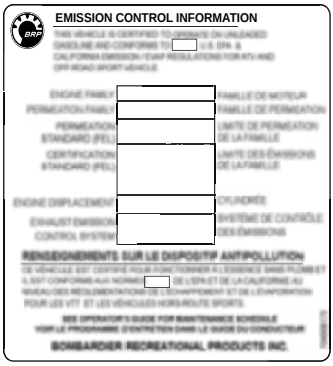

EN-EPA-DEC

TYPICAL - UNDER SEAT

EN-704907635-DEC

REAR FENDER

Technical Information Labels

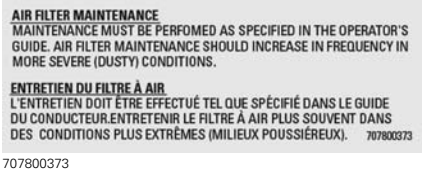

707800373

LOCATION: UNDER SEAT, ON THE UPPER FRAME MEMBER

IMPORTANT ON-PRODUCT LABELS (ALL COUNTRIES EXCEPT CANADA/UNITED STATES)

All Countries Except Canada/United States

Hang Tag

This vehicle comes with a hang tag and labels containing important safety information.

Any person who rides this vehicle should read and understand this information before riding.

⚠ WARNING

- Locate and read operator's guide. Improper ATV use can result in SEVERE INJURY or DEATH. Follow all instructions and warnings.
- Always wear ear protection.
- Always use an approved helmet and protective gear.
- Never use on public roads.
- Never carry passengers on 1-up models and NEVER carry more than one passenger on 2-up models.
- Never use with drugs or alcohol.

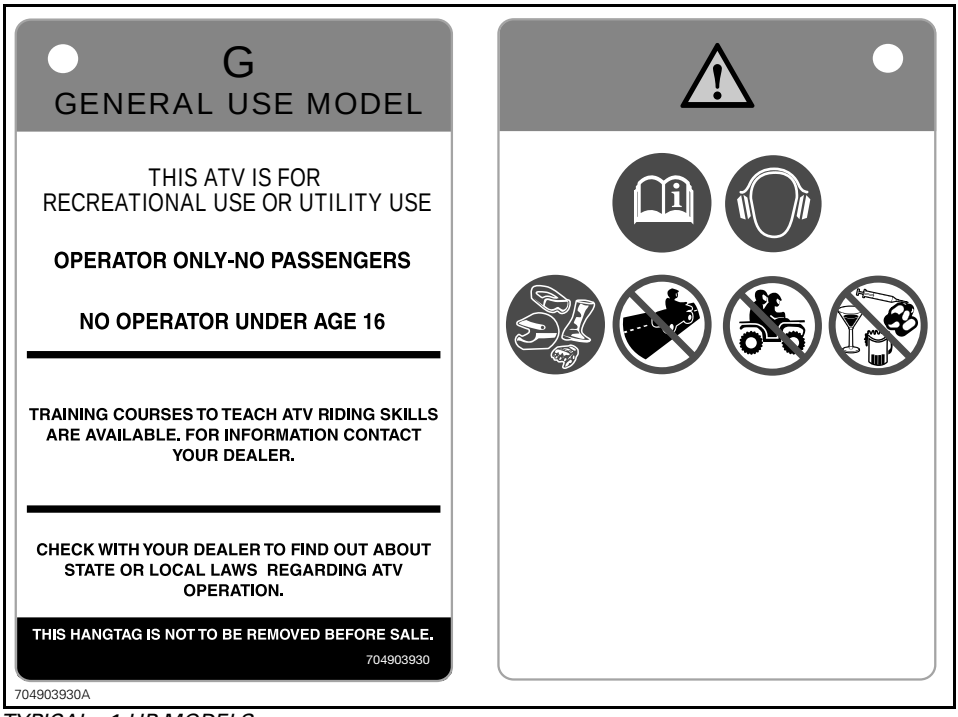

TYPICAL - 1-UP MODELS

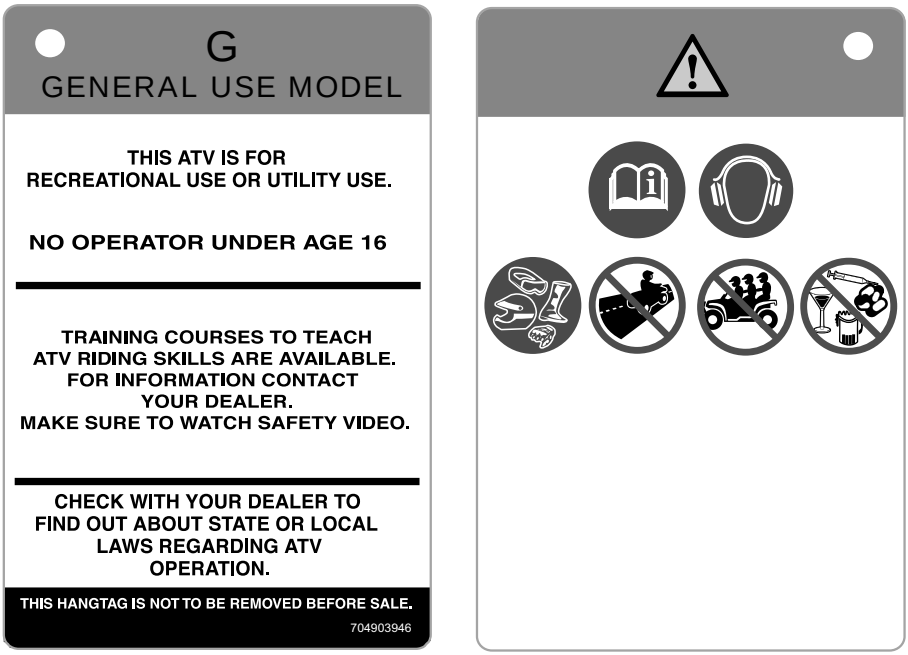

704903946

TYPICAL - 2-UP MODELS

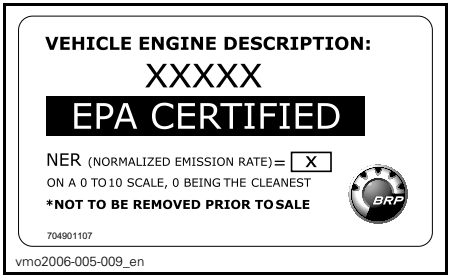

vmo2006-005-009_en

TYPICAL: APPLICABLE WHEN EQUIVALENT TO A MODEL CERTIFIED TO US EPA STANDARDS

Vehicle Safety Labels

Read and understand all the safety labels on your vehicle.

These labels are affixed to the vehicle for the safety of the operator, passenger (2-UP) or bystanders.

The safety labels on your vehicle should be considered permanent parts of the vehicle. If missing or damaged, they can be replaced free of charge. See an authorized Can-Am dealer.

NOTE: In the event of any discrepancy between this guide and the vehicle, the safety labels on the vehicle have precedence over the labels in this guide.

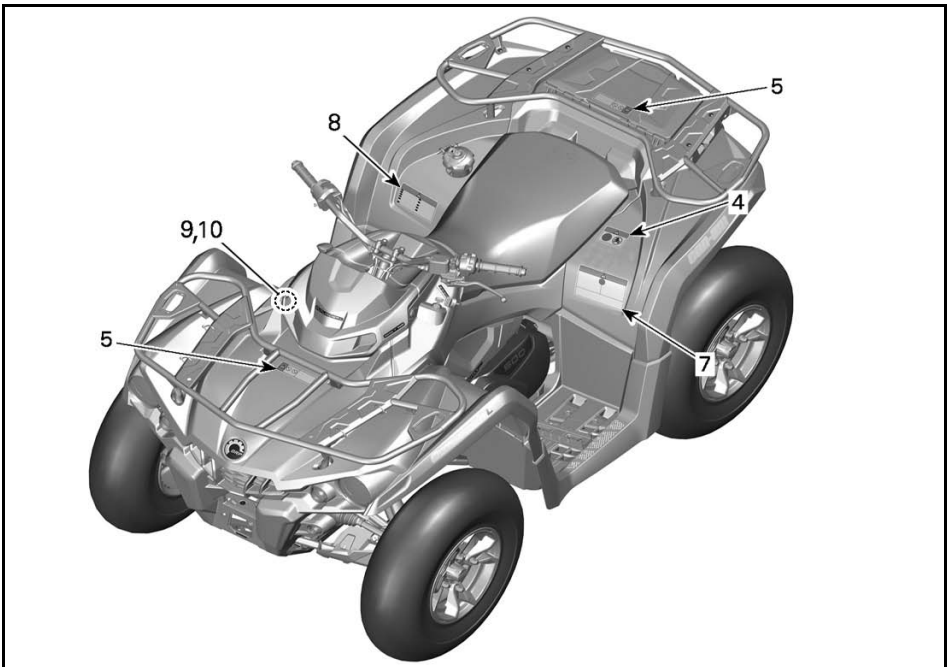

vmo2015-006-401_b

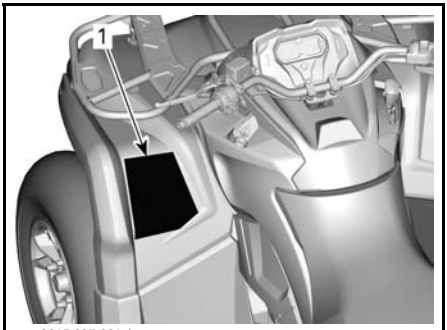

vmo2015-005-061_b

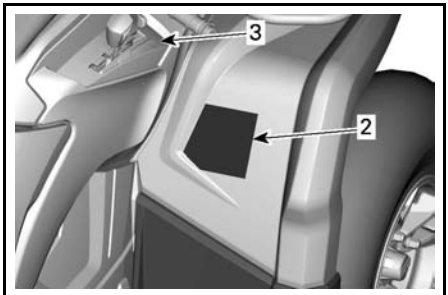

vmo2015-005-062_a

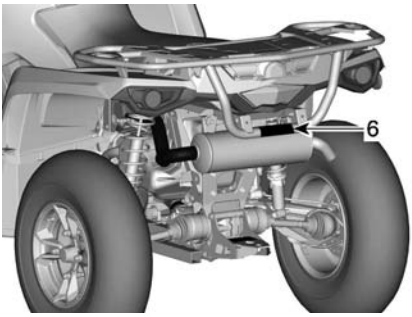

vmo2015-005-059_d

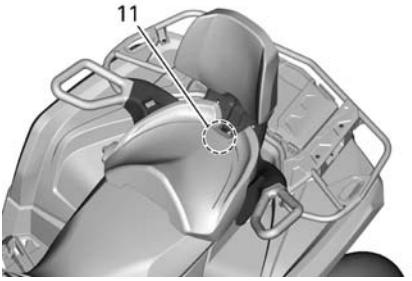

vmo2015-005-054_e

MAX MODELS ONLY

Label 1

⚠ WARNING

- Locate and read operator's guide. Improper ATV use can result in SEVERE INJURY or DEATH. Follow all instructions and warnings.
- Always wear ear protection.
- Always use an approved helmet and protective gear.
- Never use on public roads.
- Never carry a passenger on 1-up models and NEVER carry more than one passenger on 2-up models.
- Never use with drugs or alcohol.

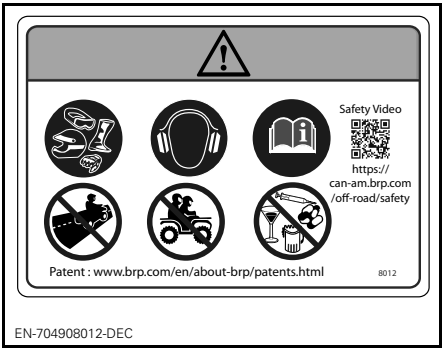

LABEL 1 - 1-UP MODELS

LABEL 1 - 2-UP MODELS

Label 2

⚠ WARNING

Operating this ATV if you are under the age of 16 increases the chance of SEVERE INJURY or DEATH to the operator, and to both the operator and passenger on 2-up models. NEVER operate this ATV if you are under age 16.

LABEL 2

Label 3

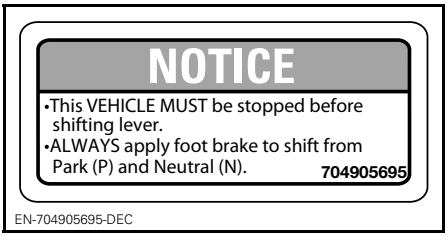

LABEL 3

Label 4

⚠ WARNING

- Locate and read operator's guide.
- NEVER carry a passenger on 1-up models and NEVER carry more than 1 passenger on 2-up models.
- Passenger on 2-up models must always use an approved helmet and protective gear.
- Passenger on 2-up models must NEVER ride after using drugs or alcohol.

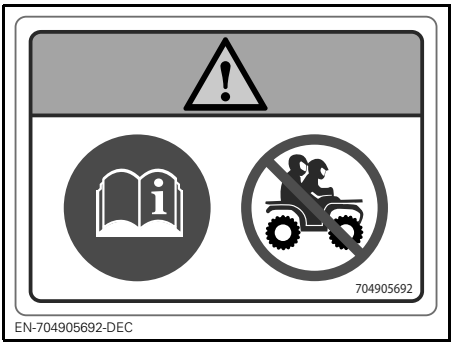

LABEL 4 - 1-UP MODELS

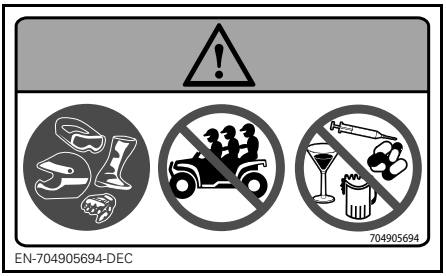

LABEL 4 - 2-UP MODELS

Label 5

⚠ WARNING

- NEVER carry a passenger on this carrier.
- MAXIMUM FRONT LOAD: 54 kg (120 lb) evenly distributed.
- MAXIMUM REAR LOAD: 109 kg (240 lb) evenly distributed (including trailer tongue weight if applicable).

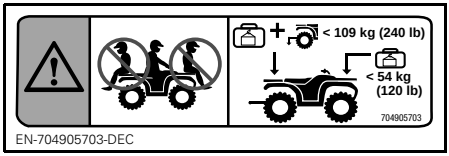

LABEL 5

Label 6

⚠ WARNING

NEVER attach here or on the luggage rack to pull a load This can cause the vehicle to tip over. ALWAYS use the trailer hitch or the recovery hook to pull a load.

LABEL 6

Label 7

⚠ WARNING

- Locate and read operator's guide. Improper tire pressure or overloading can cause loss of control, resulting in SEVERE INJURY or DEATH.
- ALWAYS maintain proper tire pressure as shown.
- On 1-up models, NEVER exceed the load capacity of 235 kg (517 lb) including weight of operator, cargo, accessories, and trailer tongue weight.
- On 2-up models, NEVER exceed the load capacity of 272 kg (598 lb) including weight of operator, cargo, accessories, and trailer tongue weight.
- ALWAYS pull a load using the trailer hitch or recovery hook.
- NEVER exceed the maximum towing weight of 590 kg (1,300 lb).
- NEVER exceed the maximum tongue weight of 23 kg (50 lb).
- On 1-up models, NEVER exceed 90 km/h (55 MPH) if total load is more than 164 kg (360 lb).
- On 2-up models, NEVER exceed 90 km/h (55 MPH) if total load is more than 132 kg (290 lb).
- On 2-up models, NEVER exceed 90 km/h (55 MPH) with a passenger.

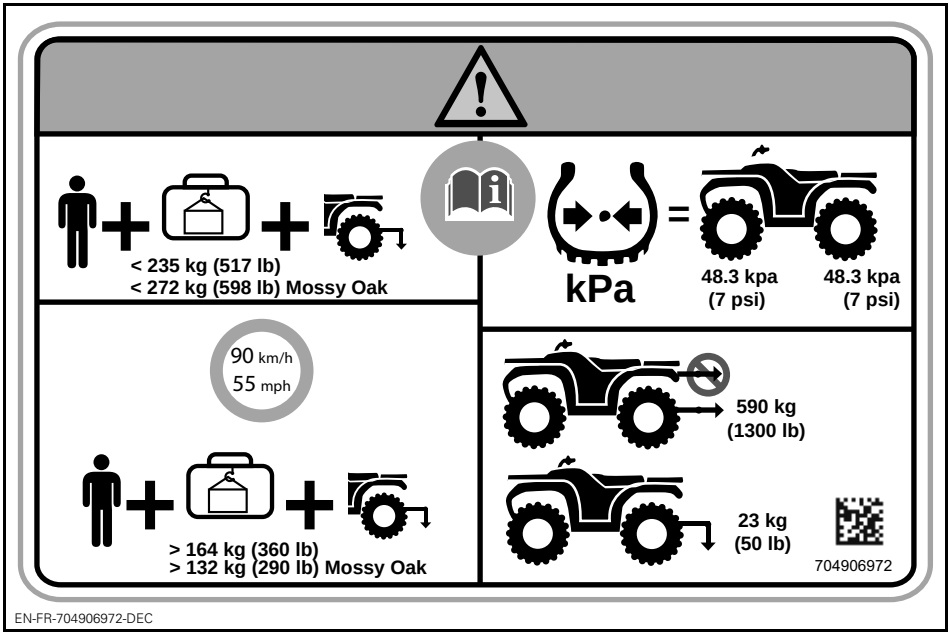

LABEL 7 - 1-UP MODELS

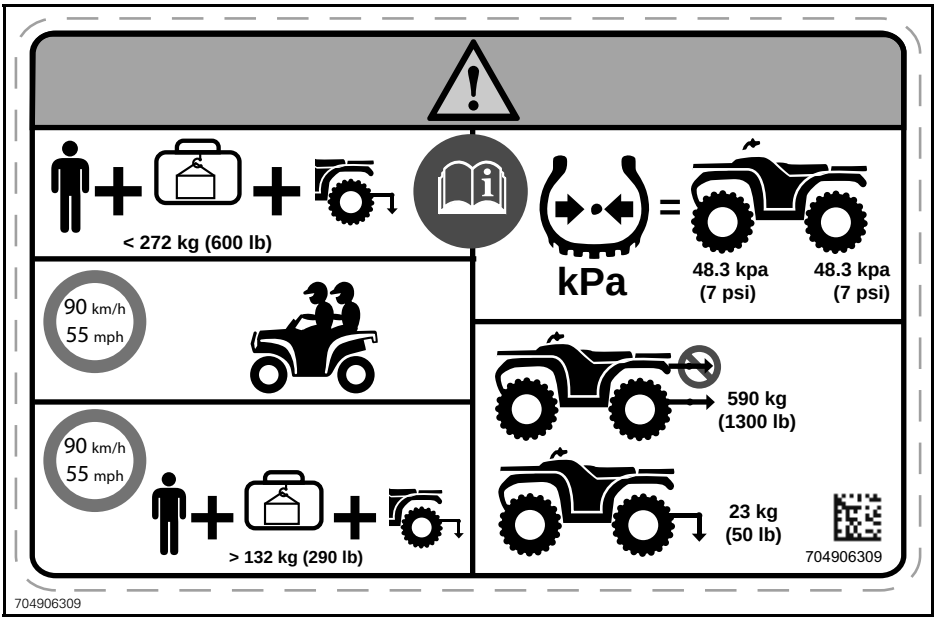

LABEL 7 - 2-UP MODELS

Label 8

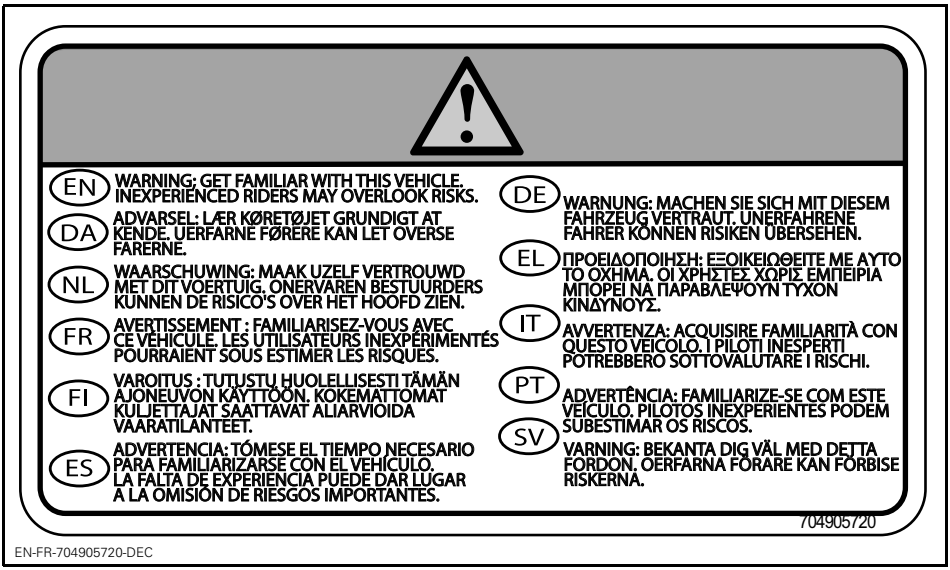

LABEL 8

Label 9

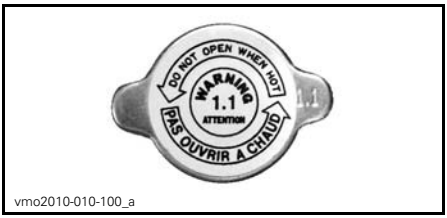

LABEL 9

Label 10

⚠ WARNING

Do not open when hot.

LABEL 10

Label 11

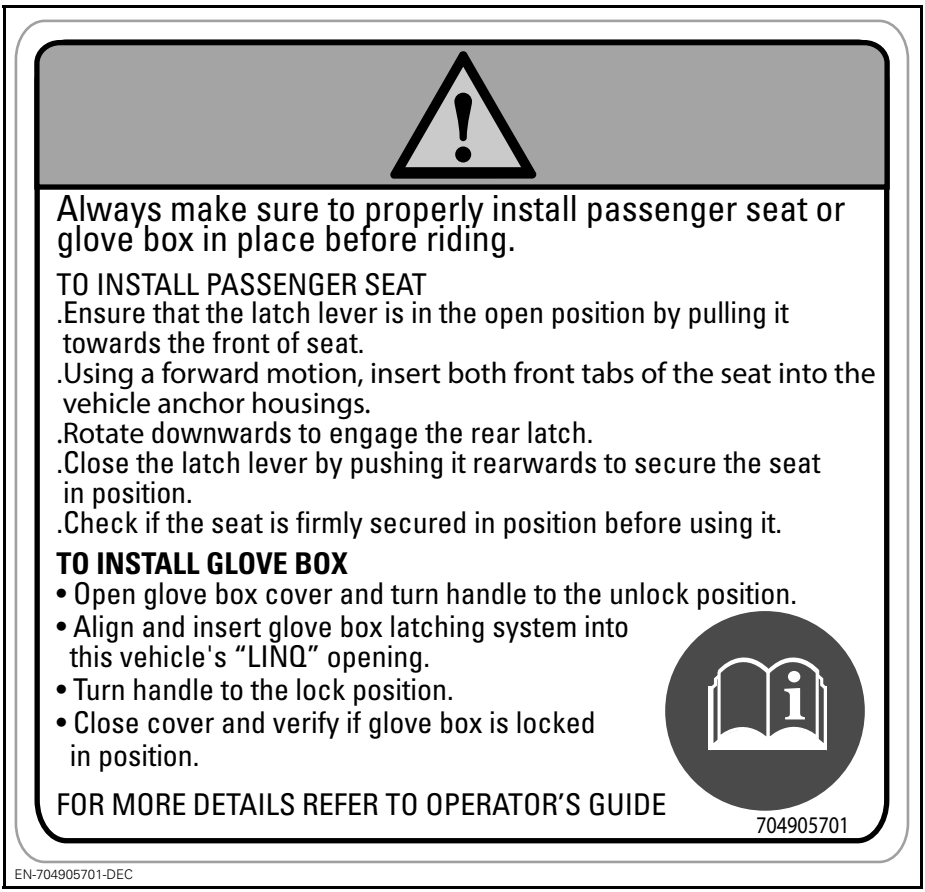

LABEL 11 - 2-UP MODELS

Compliance Labels

These labels indicate vehicle's compliance.

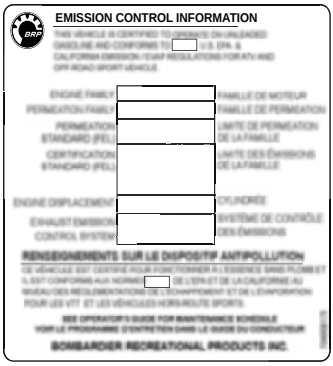

EN-EPA-DEC

TYPICAL - WHEN APPLICABLE - UNDER SEAT

704907278-DEC

NEAR GAS CAP

Technical Information Labels

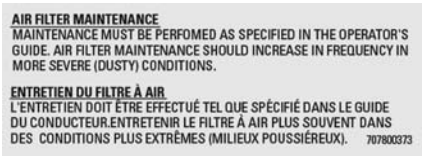

AIR FILTER MAINTENANCE
MAINTENANCE MUST BE PERFOMED AS SPECIFIED IN THE OPERATOR'S GUIDE. AIR FILTER MAINTENANCE SHOULD INCREASE IN FREQUENCY IN MORE SEVERE (DUSTY) CONDITIONS.

ENTRETIEN DU FILTRE À AIR
L'ENTRETIEN DOIT ÊTRE EFFECTUÉ TEL QUE SPÉCIFIÉ DANS LE GUIDE DU CONDUCTEUR.ENTRETENIR LE FILTRE À AIR PLUS SOUVENT DANS DES CONDITIONS PLUS EXTRÊMES (MILIEUX POUSSIÉREUX). 707800373

707800373

LOCATION: UNDER SEAT, ON THE UPPER FRAME MEMBER

VEHICLE INFORMATION

NOTE: Some vehicle safety labels are not shown on illustrations. For information on vehicle safety labels, refer to *IMPORTANT ON-PRODUCT LABELS*.

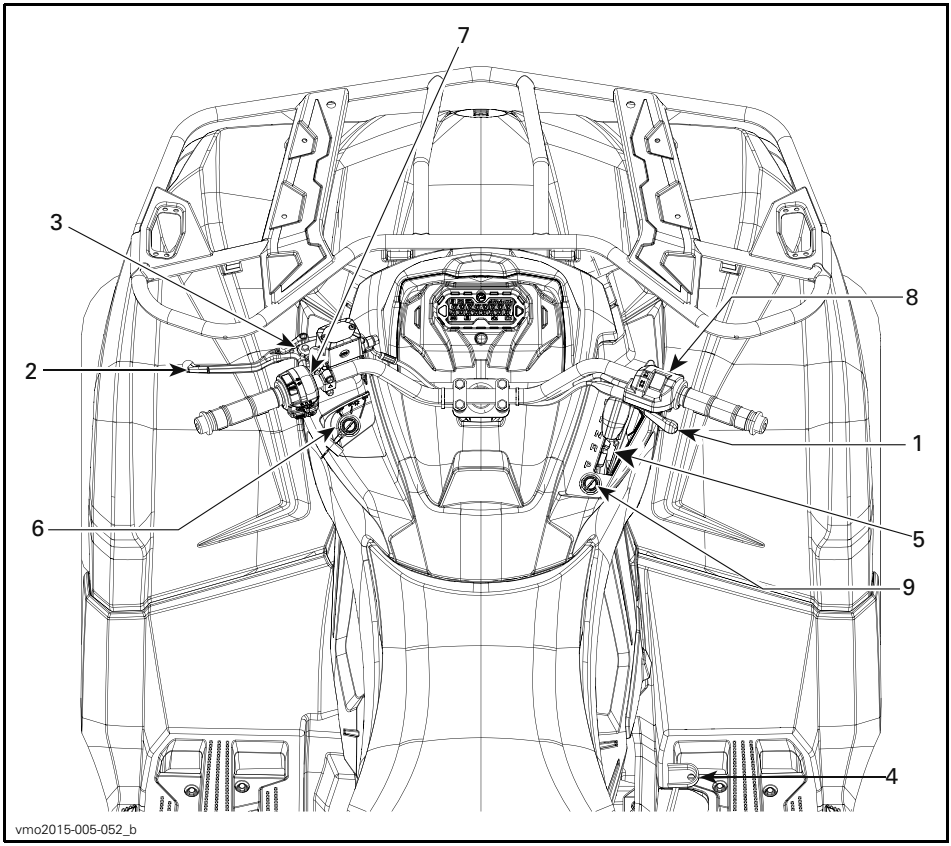

1) Throttle Lever

The throttle lever is located on the RH side of the handlebar.

The throttle lever controls the engine speed.

To increase or maintain vehicle speed, press the throttle lever with your right thumb.

To decrease vehicle speed, release the throttle lever.

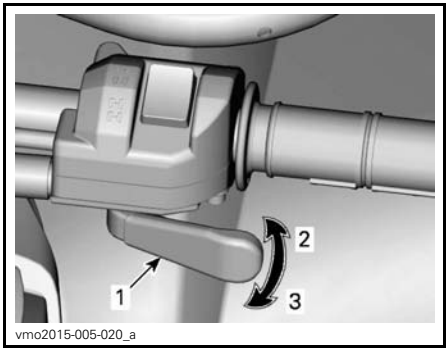

TYPICAL
1. *Throttle lever*
2. *To accelerate*
3. *To decelerate*

2) Brake Lever

The LH brake lever is located on the LH side of the handlebar.

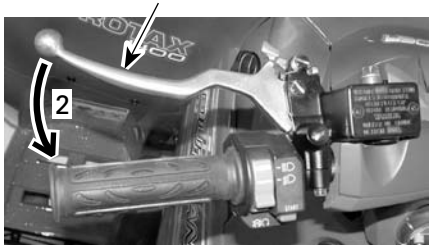

V07K01Y

TYPICAL
1. *Brake lever*
2. *To apply brakes*

The brake lever function is to slow down or stop the vehicle.

When the brake lever is compressed, the front and rear brakes are applied.

Braking effect is proportional to the force applied on the lever.

3) Parking Brake Lever

The parking brake lever is located on the LH side of the handlebar.

The parking brake function is to apply brake to all wheels to prevent vehicle from moving when parked.

⚠ WARNING

Always use the parking brake and engage the PARK position on the shift lever when the vehicle is not in operation.

To engage parking brake: Squeeze brake lever and maintain while moving lever lock. Brake lever is now compressed and applying all brakes.

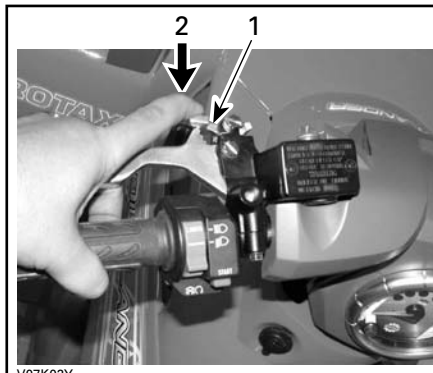

V07K02Y

TYPICAL
1. *Brake lever lock*
2. *Press to apply parking brakes*

NOTE: The parking brake lever can be set to several positions.

NOTICE **When the parking brake is applied, make sure the vehicle stays securely in place.**

To release the parking brake, simply squeeze the brake lever. It should return to the rest position.

⚠ WARNING

Make sure parking brake is released before operating the vehicle. If parking brake is left ON while riding, it may cause damage to the brake system and cause loss of braking capacity and/or fire.

4) Brake Pedal

The brake pedal is located on the RH side of the vehicle near engine.

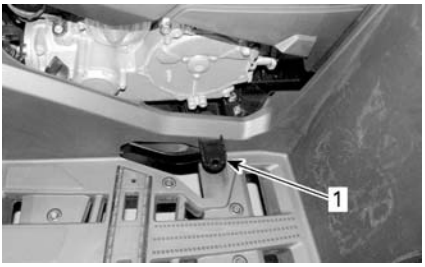

vmo2015-005-003_a

1. Brake pedal

The brake pedal function is to slow down or stop the vehicle.

When the brake pedal is pressed down, the rear brake is applied.

When released, the brake pedal should return to its original position.

Braking effect is proportional to the force applied on the pedal.

NOTE: The brake will have also an effect on front wheels through the drive train when 4WD is engaged.

Should the brake lever system fail, the rear brake can be used by depressing the brake pedal.

5) Shift Lever

The shift lever is located on the RH side of the vehicle near steering column.

vmo2015-005-005_a

SHIFT LEVER LOCATION

The shift lever is used to change the gearbox position.

The shift lever has 5 positions:

SHIFT LEVER POSITIONS	
POSITION	GEAR
P	Park
R	Reverse
N	Neutral
H	High range (forward)
L	Low range (forward)

vmo2012-012-036

TYPICAL - SHIFT PATTERN

The vehicle must be stopped and brakes applied prior to selecting any gear.

NOTICE This gearbox is not designed to shift while vehicle is moving.

P: Park

The park position locks the gearbox to help prevent vehicle movement.

⚠ WARNING

Always use the PARK (P) position when the vehicle is not in operation. The vehicle can roll if the shift lever is not set to P (PARK).

R: Reverse

The reverse position allows the vehicle to go backwards.

NOTE: In reverse operation, the engine's RPM is limited, thus limiting the vehicle reverse speed.

⚠ WARNING

When driving downhill in reverse, gravity can increase the vehicle speed above the set limited reverse speed.

Neutral

The neutral position disengages the gearbox.

⚠ WARNING

Always use the PARK (P) position when the vehicle is not in operation. The vehicle can roll if the shift lever is set to N (NEUTRAL).

High Range (Forward)

This position selects the high speed range of the gearbox. It is the normal driving speed range. It allows the vehicle to reach its maximum speed.

Low Range (Forward)

This position selects the low speed range of the gearbox. It allows the vehicle to move slowly with maximum torque at the wheels.

NOTICE Use the low speed range to pull a trailer, carry heavy cargo, go over obstacles or drive uphill and downhill.

6) Ignition Switch and Keys

The ignition switch is located on the LH side of the central panel below the handlebar.

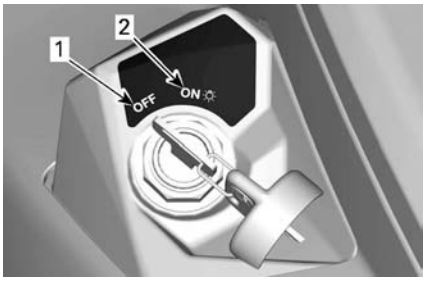

IGNITION SWITCH POSITIONS
1. OFF
2. ON "with light"

OFF

The key can be inserted or removed in this position only.

In OFF position, the electrical system of the vehicle is disabled.

The engine is shut down by turning the ignition switch to OFF position.

NOTE: While the engine can be stopped by turning the ignition key to OFF position, we recommend the engine be stopped by setting the engine stop switch to the STOP position.

NOTE: When turning the key to OFF position, the vehicle electrical system will take a few seconds to shut down.

ON with Lights

When the key is turned in this position, the electrical system of the vehicle is activated.

The gauge should wake-up.

The vehicle lights are turned on.

The engine can be started.

Keys

Basic Key (All Models Except Pro Models)

The vehicle is delivered with a basic ignition key.

Digitally Encoded Security System (D.E.S.S.) (Pro Models)

The ignition keys contain an electronic circuit that gives it a unique electronic serial number.

The D.E.S.S. system reads the key code and allows engine starting for keys it recognizes.

Types of Keys

This vehicle can be operated using 2 different types of keys:

– Normal key (grey)
– Performance key (black)

The key type is differentiated by its color.

⚠ WARNING

Rollovers, tipovers, collisions and loss of control resulting in serious injury or death are possible with the performance or normal. Using the normal key is not a substitute for the operator being prepared, qualified, and operating with care.

Normal Key

The vehicle is delivered with a normal key.

The normal key limits the vehicle speed to 70 km/h (44 MPH).

⚠ WARNING

On steep downhills, the engine speed limiter may not prevent the vehicle from accelerating beyond this speed.

This key may be useful for riders who prefer more gradual acceleration, or for riding in environments where full speed and high acceleration are not desirable. For example, in narrow, winding trails, operators may prefer the normal key.

Performance Key

The vehicle is delivered with a performance key, which allows the user to access the full torque of the engine as well as the top speed of the vehicle.

This may be useful for riders who prefer crisper throttle response, and for environments where higher speeds and greater acceleration are appropriate. For example, in wide-open straight trails, operators may prefer the performance key.

7) Multifunction Switch

The multifunction switch is located on the LH side of the handlebar.

The controls located on this multifunction switch are:

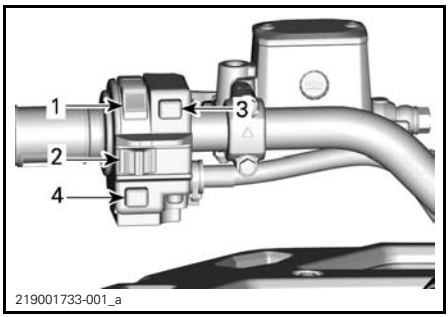

TYPICAL — MULTIFUNCTION SWITCH
1. *Headlight switch*
2. *Engine stop switch*
3. *Engine start button*
4. *Override/DPS button (if applicable)*

Low/High/OFF Headlight Switch

This switch is used to select either the headlights low or high beams or to turn them OFF.

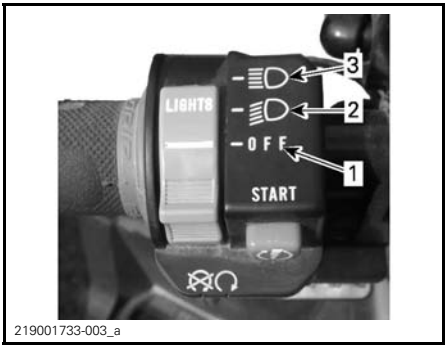

HEADLIGHT SWITCH FUNCTIONS
1. *Lights OFF*
2. *Low beam and taillight*
3. *High beam and taillight*

Engine Stop Switch

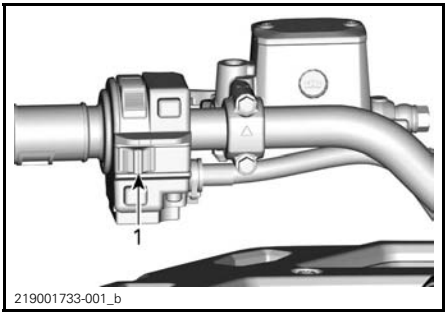

TYPICAL
1. *Engine stop switch*

This switch can be used to stop the engine and as an emergency control.

To stop engine, set the engine stop switch to the STOP position.

NOTE: While the engine can be stopped by turning the ignition key to OFF position, we recommend the engine be stopped by setting the engine stop switch to the STOP position.

Engine Start Button

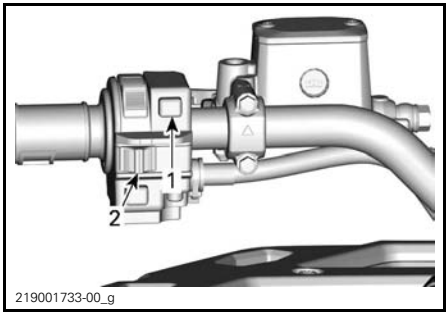

TYPICAL
1. *Engine start button*
2. *Engine stop switch*

When engine start button is pressed and held, it starts the engine.

NOTE: To allow engine starting, the ignition switch must be in the ON position and the engine stop button set to RUN.

Override/DPS Button

Depending on the vehicle model, this button has up to 2 functions.

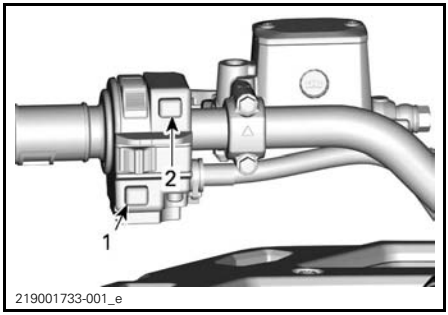

TYPICAL
1. *Override/DPS button*
2. *Engine start button*

While reading this Operator's Guide, remember that:

⚠ WARNING

Indicates a potential hazard that, if not avoided, could result in serious injury or death.

Override Function

The override switch main function is to bypass the engine speed limiter in reverse operation by allowing maximum engine torque.

⚠ WARNING

Only use the override to help get the vehicle unstuck from mud or other soft terrain. Do not use the override for normal operation in reverse. This would allow driving in reverse at excessive speeds and can increase the risk of losing control.

To engage the override function, proceed as follows:

While the shift lever is set to REVERSE position.

1. Ensure that the vehicle is stopped.
2. Press and hold the override switch then press the throttle lever gradually.

NOTE: When using the override function, the gauge will scroll an OVERRIDE message to confirm that the function is activated.

3. To disengage the override function, simply release the override switch.

DPS Function (Models with DPS)

This button is also used to change the Dynamic Power Steering (DPS) mode.

To change DPS mode, refer to *TUNE YOUR RIDE*.

8) 2WD/4WD and Driving Modes (if equipped) Selector Switch

The 2WD/4WD selector is located on the RH side of the handlebar.

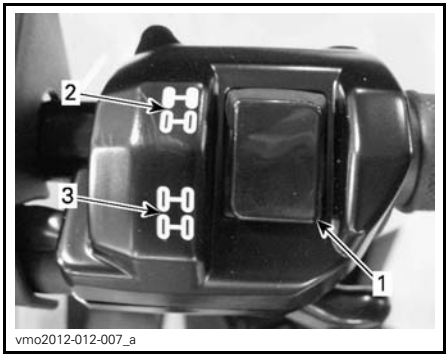

TYPICAL
1. *Selector*
2. *2WD position*
3. *4WD position*

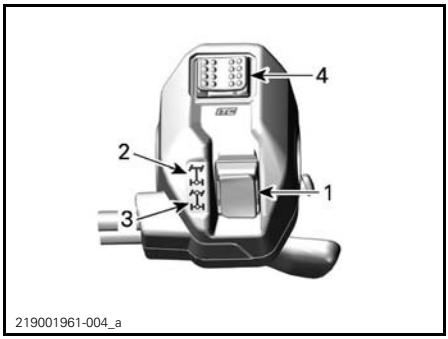

4WD MODE - TYPICAL

TYPICAL
1. *2WD/4WD Selector*
2. *2WD position*
3. *4WD position*
4. *Driving modes selector*

This switch selects 2 wheel drive or 4 wheel drive mode when the vehicle is stopped and the engine is running.

NOTICE **The vehicle must be stopped to engage or disengage 2WD/4WD switch. Mechanical damage may occur if switch is engaged or disengaged while driving.**

The 4WD mode is engaged when the switch is pushed downwards.

4WD MODE - TYPICAL

2WD MODE - TYPICAL

4WD MODE - TYPICAL

The 2WD mode is engaged when the switch is pushed upwards. The vehicle is then rear wheel drive only.

2WD MODE - TYPICAL

This switch is used to select the driving modes. (If equipped)

DRIVING MODE SELECTOR - TYPICAL

Choose between NORMAL, SPORT and WORK on select modes by pushing the selector on the left or right.

MODES				
Work	Push right	Normal	Push right	Sport
	Push left		Push left	

The SPORT mode provides a crisper throttle response.

NOTE: The SPORT mode can be activated with all key types and provides the maximum power with the used key.

The WORK mode is limited to a maximum speed of 70 km/h (43 MPH).

NOTE: Use NORMAL mode on bumpy trails to provide smoother ride conditions.

While reading this Operator's Guide, remember that:

⚠ WARNING

Indicates a potential hazard that, if not avoided, could result in serious injury or death.

MULTIFUNCTION GAUGE (LCD)

The multifunction gauge is located in the gauge support.

⚠ WARNING

Reading the multifunction gauge display can distract from the operation of the vehicle, particularly from constantly scanning the environment.

Multifunction Gauge Description

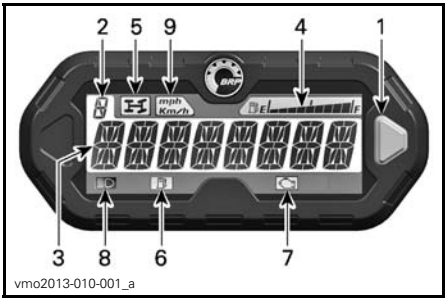

1. *Selector button*
2. *Gearbox position display*
3. *Main screen*
4. *Fuel level display*
5. *4WD indicator lamp*
6. *Low fuel level indicator lamp*
7. *Check engine indicator lamp*
8. *High beam indicator lamp*
9. *MPH, Km/h indicator lamp*

1) Selector Button

The selector button is used to navigate or change settings in the multifunction gauge.

2) Gearbox Position Display

This display will show gearbox position.

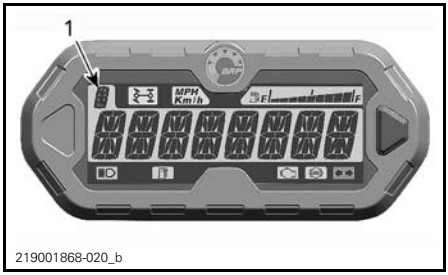

1. *Gearbox position*

DISPLAY	FUNCTION
P	Park
R	Reverse
N	Neutral
H	High range
L	Low range

3) Main Screen

The main screen is used to display numerous functions of the multifunction gauge.

Refer to *MULTIFUNCTION GAUGE MODES* for the different available modes:

4) Fuel Level Display

Bar gauge continuously indicates the level of fuel in the fuel tank while riding.

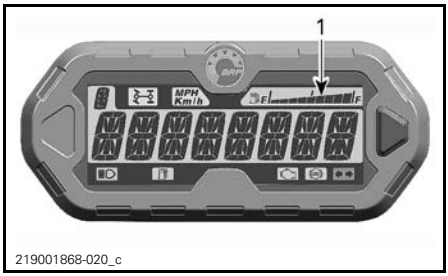

1. *Fuel level display*

5) 4WD Indicator Lamp

When this indicator is ON, it indicates the **4WD** mode is selected.

6) Low Fuel Level Indicator Lamp

When this indicator is ON, it indicates that there is approximately 5 L (1.3 U.S. gal.) of fuel left in fuel tank.

7) Check Engine Indicator Lamp

When this indicator is ON, it indicates an engine fault code, look for a message at the LCD display.

When this indicator blinks, it indicates that the **LIMP HOME** mode is activated.

Refer to *TROUBLESHOOTING* section for more details.

8) High Beam Indicator Lamp

When this indicator is ON, it indicates that **high beam** is selected on the headlights and that ignition key is in ON with lights position.

9) KM/H or MPH Indicator Lamp

mph
Km/h

The proper lamp turns on to indicate the unit the speedometer uses.

Multifunction Gauge Modes

Speed Mode

In this mode, the main screen shows the speed of the vehicle either in km/h or in mph.

vdd2008-001-084

RPM Mode

In this mode, the main screen shows the engine RPM.

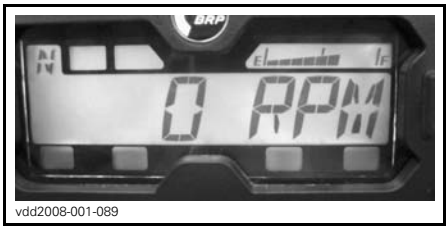

vdd2008-001-089

Combined Mode

In this mode, the main screen shows the speed of the vehicle and the engine RPM.

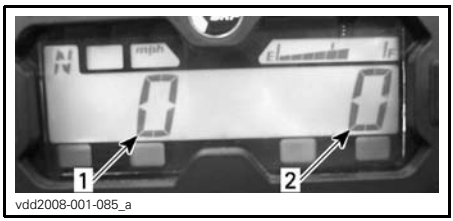

vdd2008-001-085_a

1. *Vehicle speed*
2. *Engine RPM*

Odometer (OD)

Odometer records the total distance travelled either in miles or kilometers.

vsi2009-018-030

Clock

Displays current time.

vmo2011-008-001

Refer to *GAUGE SETUP* to set current time.

Trip Meter (TP)

The trip meter records the travelled distance since it has been reset. Distance travelled is displayed either in kilometers or miles.

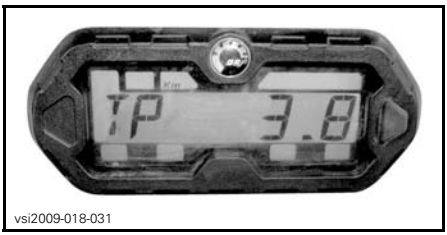

vsi2009-018-031

Press and HOLD the selector button for 2 seconds to reset the trip meter.

Trip Hour Meter (TH)

The trip hour meter records vehicle running time when the electrical system is activated. It can be used to establish traveling time between 2 places.

vsi2009-018-032

Press and HOLD the selector button for 2 seconds to reset the hour meter.

Engine Hour Meter (EH)

The engine hour meter records engine running time.

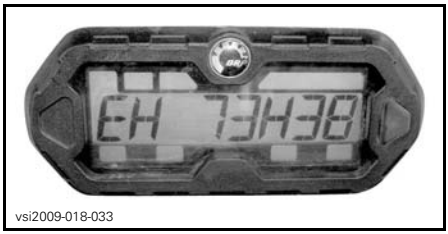

vsi2009-018-033

Message Display Mode

If an abnormal engine condition occurs, a message may scroll across the main screen in conjunction with a pilot lamp. Refer to *TROUBLESHOOTING* section for details.

Fault Code Mode

Switch to HI beam and select engine hour meter display. Press and hold selector button while switching high and low beam (three cycles) to access diagnostic fault codes.

Driving Modes (If equipped)

Some models are equipped with a driving mode selector.

1. Driving mode selector

A message of the selected mode will be displayed at activation and deactivation as follow:

DRIVE MODE	MESSAGE AT ACTIVATION
Sport	SPORT MODE
Normal	NORMAL MODE
Work	WORK MODE

Navigating in the LCD Gauge

Default Display Mode

After vehicle startup, the default display mode is either:

– Vehicle speed
– Engine revolutions per minute (RPM)
– Both parameters simultaneously (combined mode).

To change from one display to the other, proceed as follows.

1. Turn ignition key to ON to power-up the system.
2. Wait until the "greeting message" has been displayed.
3. Press and release selector button once to display OD (odometer).
4. Press and HOLD selector button for 2 seconds.

This will change the Mode to either Speed, RPM or Combined.

5. To select another mode, repeat steps 3 and 4 until the desired mode is displayed.

Temporary Display Mode

In the temporary display mode, the following functions are available:

– Odometer
– Clock
– Trip meter (resettable)
– Trip Hour meter (resettable)
– Engine hour meter.

Press and release selector button to change the default display mode to the temporary mode.

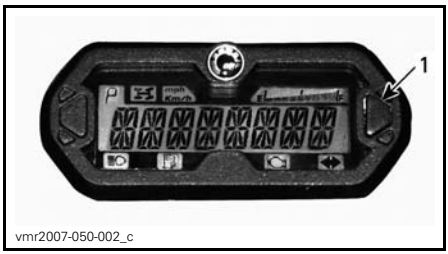

1. Selector button

The gauge will display the selected mode for 10 seconds then will return to the normal display mode.

While in a resettable mode, push and HOLD selector button for 2 seconds to reset it.

Gauge Setup

Clock Setting Using Gauge Selector Button

To set current time, proceed as follows:

1. Select the clock display.

vmo2011-008-001_a

1. *Selector button*
2. *Time*

2. Press and HOLD selector button.

NOTE: The display will flash.

3. Choose the 12-hour (12H) or 24-hour (24H) format by pressing button.
4. If the 12-hour format was selected, choose Am (A) or Pm (P) by pressing button.
5. Choose hour first digit by pressing button.
6. Choose hour second digit by pressing button.
7. Choose minutes first digit by pressing button.
8. Choose minutes second digit by pressing button.

NOTE: The gauge will display the current time for 10 seconds then will return to the normal display mode.

Unit Selection (km/h vs mph)

The speedometer, odometer and trip meter are factory preset in **miles** but it is possible to change them to **kilometer** reading. Contact an authorized Can-Am dealer.

Language Selection

The gauge display language can be changed. Refer to an authorized Can-Am dealer for language availability and setup the gauge to your preference.

While reading this Operator's Guide, remember that:

⚠ WARNING

Indicates a potential hazard that, if not avoided, could result in serious injury or death.

NOTE: Some vehicle safety labels are not shown on illustrations. For information on vehicle safety labels, refer to *IMPORTANT ON-PRODUCT LABELS*.

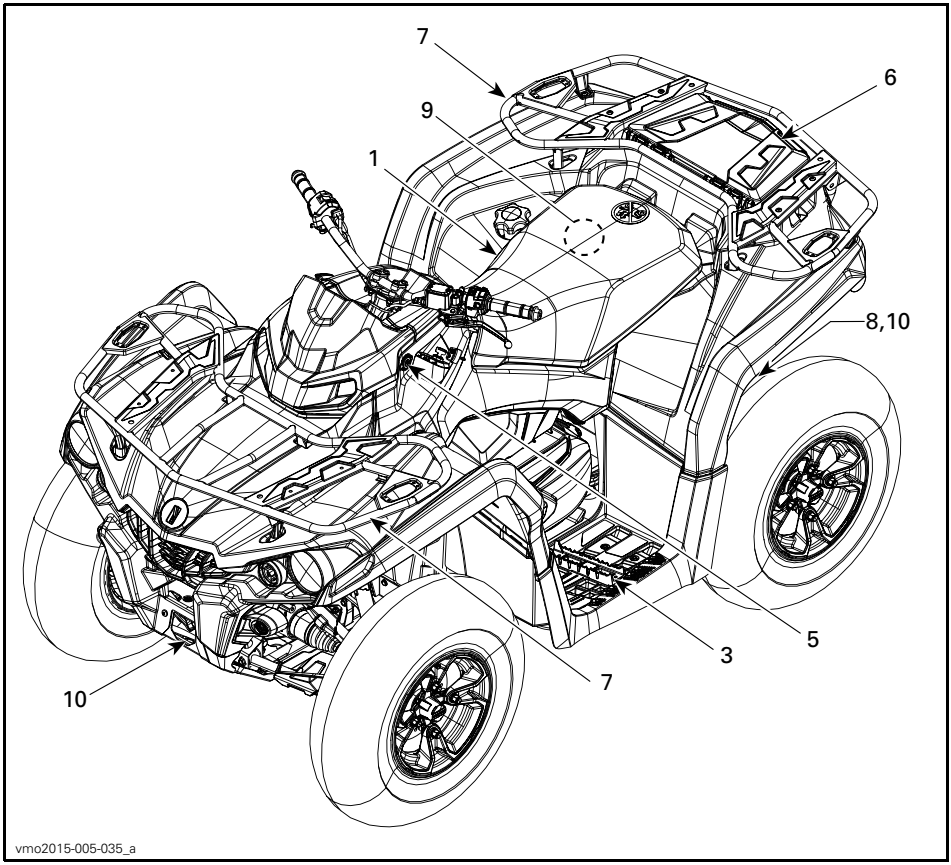

TYPICAL - 1-UP MODEL

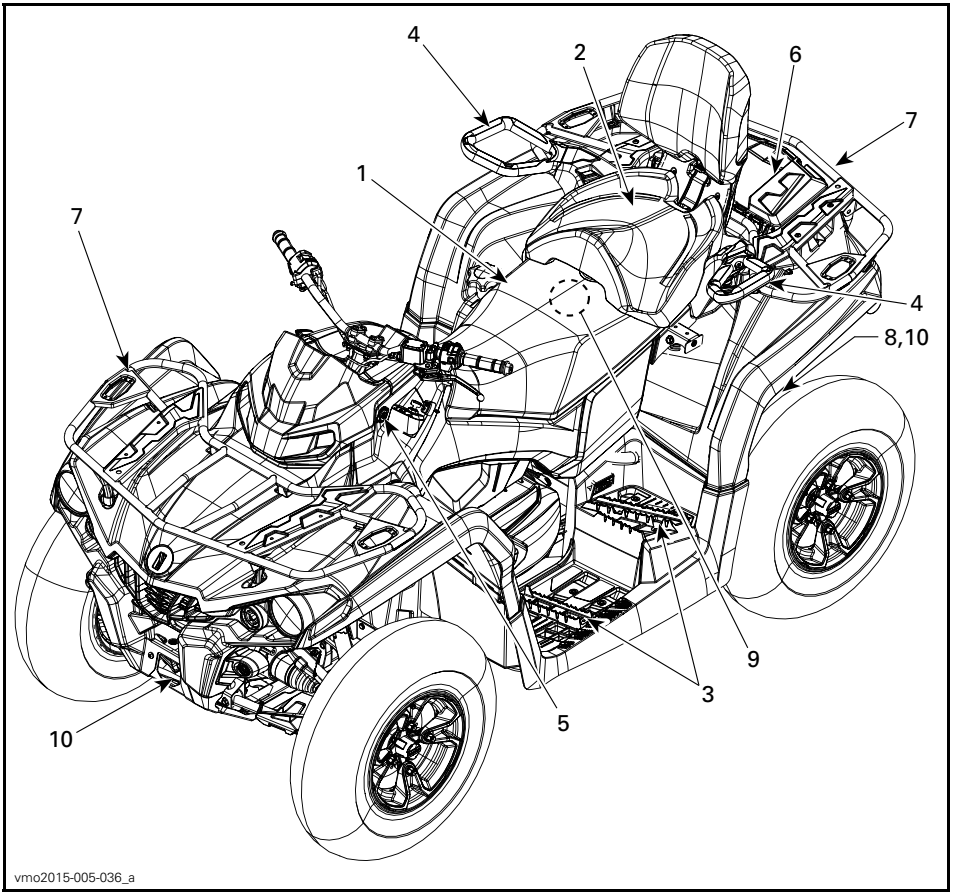

TYPICAL - 2-UP MODEL

1) Operator's Seat

The seat is designed for an operator only.

⚠ WARNING

Never allow anyone to seat as a passenger on the operator's seat.

Seat Removal

To remove the operator's seat, push its latch upward. This latch is located underneath the rear of seat.

vmo2015-005-007_a

1. Seat latch

Pull seat rearward. Continue lifting movement until you can release the front retaining device then completely remove seat.

Seat Installation

Insert front tabs of seat on U-rod welded to frame. When seat rests in its position, firmly push seat down to latch.

NOTE: A distinctive snap will be felt. Double check that the seat is secure by giving it a tug to confirm proper latching.

⚠ WARNING

Confirm that the operator's seat is properly locked in position by pulling back and up several times.

2) Passenger's Seat (2-UP Models)

⚠ WARNING

Never operate the vehicle without passenger's seat or glove box (if equipped) installed.

The passenger's seat is designed for a passenger only. The integrated backrest supports his back during the ride.

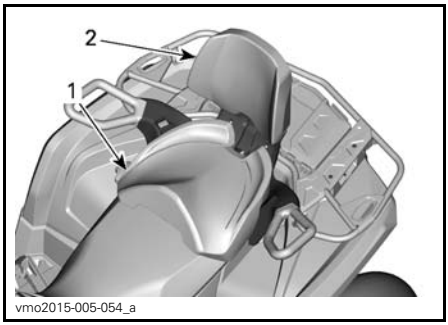

vmo2015-005-054_a

1. Passenger's seat
2. Integrated backrest

⚠ WARNING

Without its passenger's seat, the vehicle becomes a ONE RIDER vehicle (1-UP model) and NO PASSENGER must be allowed on vehicle.

While reading this Operator's Guide, remember that:

⚠ WARNING

Indicates a potential hazard that, if not avoided, could result in serious injury or death.

Passenger's Seat Removal

1. To unlock latch, pull the passenger's seat latch lever toward the front of the seat.

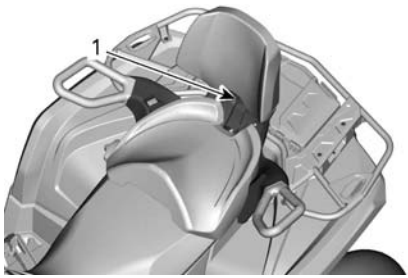

vmo2015-005-054_c

1. Seat handle

2. While maintaining latch lever pulled towards the front, apply downward pressure on the back of latch lever to clear rear latch from pin and toggle seat towards front using backrest.
3. Pull seat rearward and up out of location to clear the front tabs.

Passenger's Seat Installation

1. Ensure the latch lever is in the open position by pulling it towards the front of seat.
2. Using a forward motion, insert both front tabs of the seat into the vehicle anchor housings.
3. Rotate downwards to engage the rear latch.
4. Close the latch lever by pushing it rearwards to secure seat in position.
5. Check if the seat is firmly secured in position before using it.

⚠ WARNING

It is of the upmost importance for the passenger's safety that you confirm that the passenger's seat is properly locked in position by pulling back and up several times.

3) Footpegs

The operator footpegs are located on the RH and LH side of the vehicle.

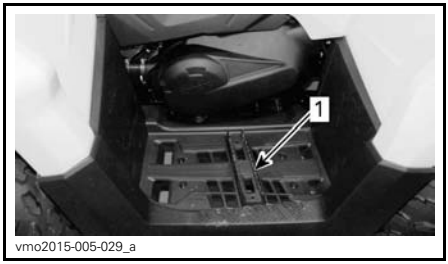

vmo2015-005-029_a

TYPICAL - 1-UP SHOWN
1. Operator's LH footpeg

⚠ WARNING

Operator must have both feet on footpegs at all time during vehicle operation.

2-UP Models

The passenger footpegs are located on the RH and LH side of the vehicle behind the operator footpegs.

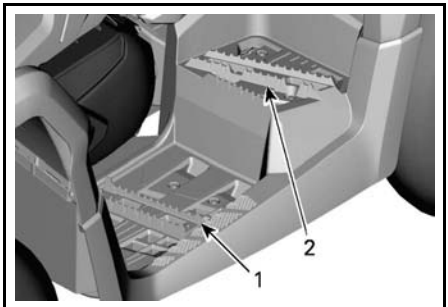

vmo2015-005-008_a

TYPICAL
1. Operator's LH footpeg
2. Passenger's LH footpeg

⚠ WARNING

Operator and passenger must have both feet on footpegs at all time during vehicle operation.

4) Grab Handles (2-UP Models)

The grab handles are located on the RH and LH side of the passenger's seat.

The grab handles must be used by the passenger to hold on firmly during vehicle operation.

⚠ WARNING

The passenger must always hold on to the passenger grab handles, not the operator. He must also have both feet resting firmly against the footrests.

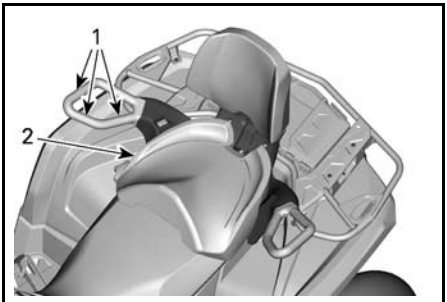

vmo2015-005-054_d

TYPICAL
1. *Grab handles*
2. *Passenger's seat*

5) 12-Volt Power Outlet

Convenient for handheld spotlight or other portable equipment.

vmo2012-012-018_a

1. *12 V power outlet*

Remove protective cap to use. Always reinstall it after use to protect against weather.

Do not exceed the rating capacity. Refer to *FUSES* in *MAINTENANCE*.

6) Rear Storage Compartment

Convenient location to carry personal articles.

vmo2015-005-009_a

1. *Rear storage compartment cover*

⚠ WARNING

Always engage the PARK position on the shift lever before opening cover. Never leave any heavy or loose breakable objects in the storage area. Always latch cover before riding.

To Open Rear Storage Compartment

Unlatch cover and gently lift cover.

vmo2015-005-009_a

1. *Rear storage compartment latch*

To Close Rear Storage Compartment

Gently lower and latch cover.

7) Cargo Racks

Cargo racks are convenient for carrying equipment and various other cargo. They must never be used to carry a passenger.

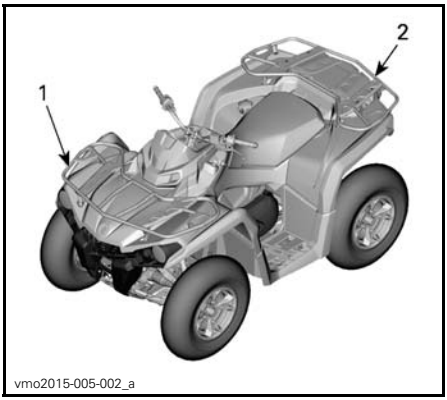

TYPICAL
1. *Front cargo rack*
2. *Rear cargo rack*

⚠ WARNING

- Never carry a passenger on a cargo rack.
- Cargo must never interfere with the drivers line of sight or affect his ability to properly steer the vehicle.
- Do not overload the vehicle.
- Always ensure all cargo is properly secured and does not extend out pass the racks.

Refer to *SPECIFICATIONS* for cargo weight recommendations.

8) Trailer Hitch

Convenient hitch to install a ball to tow a trailer or other equipment. Install the proper ball size as per trailer manufacturer recommendations. Refer to *SPECIFICATIONS* for carrying loads and towing recommendations.

TYPICAL
1. *Trailer hitch*

⚠ WARNING

Ensure to install the proper ball size that matches the equipment you will tow.

NOTE: Follow manufacturer's instructions for proper attachment.

9) Tool Kit

The tool kit is located under seat. It contains tools for basic maintenance.

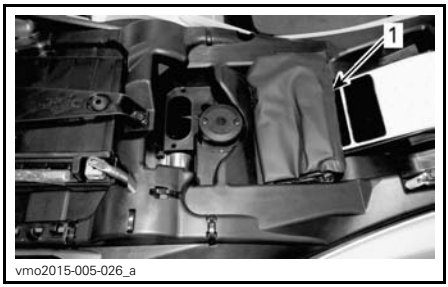

1. *Tool kit*

10) Recovery Hooks

Convenient hook that can be use to recover a stuck ATV.

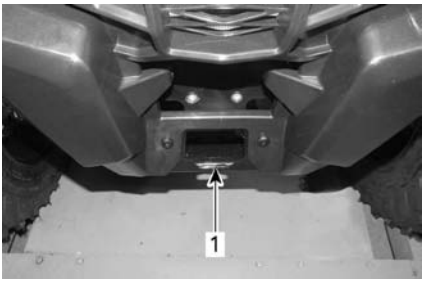

vmo2015-005-012_a

1. Front recovery hook

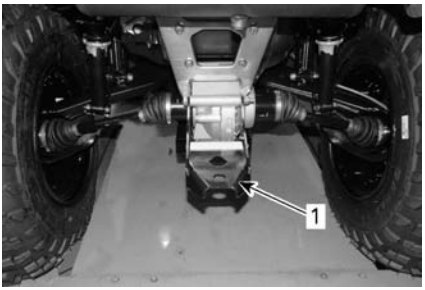

vmo2015-005-010_a

1. Recovery hook

ADDITIONAL ACCESSORIES

Some models are equipped with factory installed accessories.

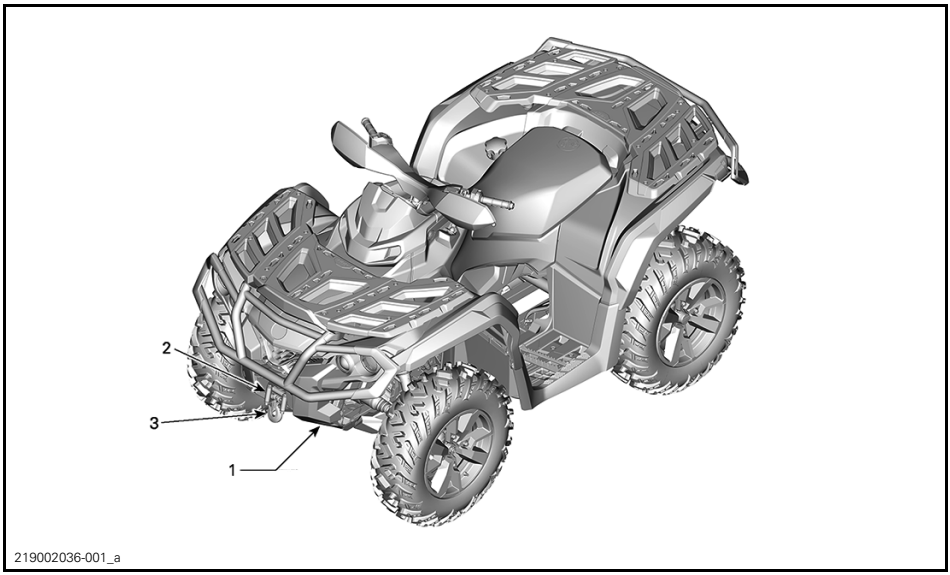

1) Full Underbody Aluminum Skid Plate

Aluminum plates provide essential protection.

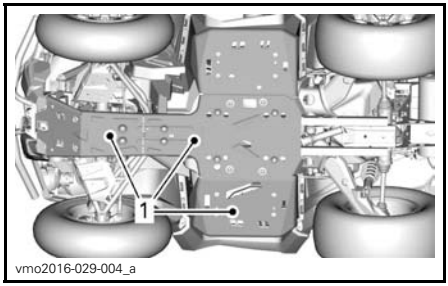

1. Full underbody skid plate

2) Winch

The winch can be actuated using the winch control switch or with the remote control (sold separately).

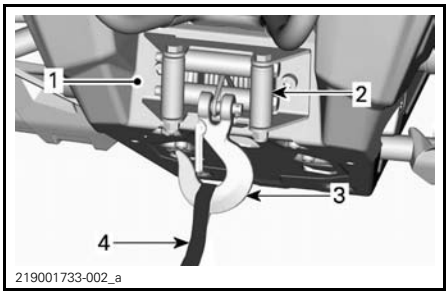

1. Winch
2. Roller fairlead
3. Winch hook
4. Hook strap

NOTE: Using the winch intensively over a long period of time may discharge the battery.

The following tips will help to reduce the risk of discharging the battery:

Always unreel manually: Unlock the cable using the handle then pull on the hook strap to unreel.

It is recommended to let the vehicle run while winching. Do not stop vehicle immediately after winching to let battery recharge.

Also, when winching for more than 30 seconds, it is recommended to increase engine RPM in the range of 3000 RPM to increase charging power to the battery.

NOTE: Make sure vehicle is in NEUTRAL (N) before increasing engine RPM.

Refer to *WINCH GUIDE*, supplied with the vehicle, for more information about the winch.

3) Roller Fairlead

The roller fairlead is used to prevent damages to the vehicle and guide the wire rope into the winch.

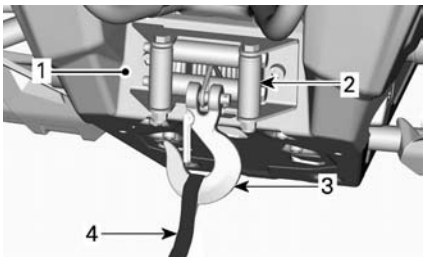

219001733-002_a

1. *Winch*
2. *Roller fairlead*
3. *Winch hook*
4. *Hook strap*

Fuel Requirements

NOTICE **Always use fresh gasoline. Gasoline will oxidize; the result is loss of octane, volatile compounds, and the production of gum and varnish deposits which can damage the fuel system.**

Alcohol fuel blending varies by country and region. Your vehicle has been designed to operate using the recommended fuels, however, be aware of the following:

- Use of fuel containing alcohol above the percentage specified by government regulations is not recommended and can result in the following problems in the fuel system components:
  - Starting and operating difficulties.
  - Deterioration of rubber or plastic parts.
  - Corrosion of metal parts.
  - Damage to internal engine parts.
- Inspect frequently for the presence of fuel leaks or other fuel system abnormalities if you suspect the presence of alcohol in gasoline exceeds the current government regulations.
- Alcohol blended fuels attract and hold moisture which may lead to fuel phase separation and can result in engine performance problems or engine damage.

Recommended Fuel

Use common unleaded gasoline with an AKI (R+M)/2 octane rating of 87, or an RON octane rating of 92.

Use unleaded gasoline containing MAXIMUM 10% ethanol. The gasoline must have the following minimum octane requirements:

E10

NOTICE **Never experiment with other fuels. Engine or fuel system damages may occur with the use of an inadequate fuel.**

NOTICE **Do NOT use fuel from fuel pumps labeled E85.**

Use of fuel labeled E15 is prohibited by U.S. EPA Regulations.

Vehicle Fueling Procedure

WARNING

- **Fuel is flammable and explosive under certain conditions.**
- **Never use an open flame to check fuel level.**
- **Never smoke or allow flame or spark in vicinity.**
- **Always work in a well-ventilated area.**

1. Stop engine.

WARNING

Always stop engine before refueling.

2. Have operator get off vehicle.

WARNING

Do not allow anyone to remain on the vehicle while fueling. If there is a fire or explosion during fueling, a vehicle occupant could be unable to quickly leave the area.

3. Unscrew slowly the fuel reservoir cap counterclockwise to remove it.

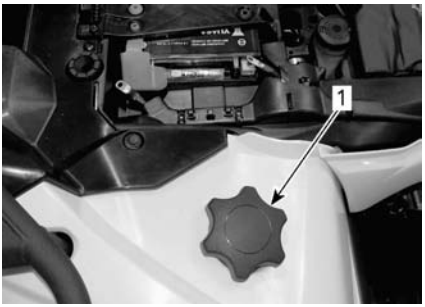

vmo2015-005-027_a

1. Fuel reservoir cap

⚠ WARNING

If a differential pressure condition is noticed (whistling sound heard when loosening fuel reservoir cap) have vehicle inspected and/or repaired before further operation.

4. Insert the spout into the filler neck.
5. Pour fuel slowly so that air can escape from the tank and prevent fuel flow back. Be careful not to spill fuel.
6. Stop filling when the fuel reaches the bottom of filler neck. **Do not overfill.**

⚠ WARNING

Never top up the fuel tank before placing the vehicle in a warm area. As temperature increases, fuel expands and may overflow.

7. Fully tighten fuel reservoir cap clockwise.

⚠ WARNING

Always wipe off any fuel spillage from the vehicle.

Operation During Break-In

A break-in period of 10 operating hours or 300 km (200 mi) is required for the vehicle.

Engine

During the break-in period:

- Avoid full throttle operation
- Maximum throttle should not exceed 3/4
- Avoid sustained accelerations
- Avoid prolonged cruising speeds
- Avoid engine overheating.

However, brief accelerations and speed variations contribute to a good break-in.

NOTE: It is normal that the engine will not operate at its maximum efficiency until the break-in period is completed.

Brakes

⚠ WARNING

New brakes will not operate at their maximum efficiency until their break-in is completed. Use extra caution.

Drive Belt

A new drive belt requires a break in period of 50 km (30 mi).

During the break-in period:

- Avoid strong acceleration and deceleration
- Avoid pulling a load
- Avoid high speed cruising.

Starting the Engine

The shift lever must be set to PARK or NEUTRAL.

NOTE: For your convenience, an override mode allows the engine to be started with the shift lever in any position. Press and hold the brake lever or the brake pedal while pressing the engine start button.

Insert key in ignition switch and turn to ON position.

Set the engine stop switch to RUN.

Press the engine start button and hold until the engine starts.

Release the engine start button immediately when the engine has started.

NOTICE **If engine does not start after a few seconds, do not hold the engine start button more than 10 seconds. Refer to TROUBLESHOOTING section.**

Operating the Shift Lever

Apply brakes and immobilize vehicle, then select the desired shift lever position.

Release brakes.

NOTICE **When changing gear selection, always completely stop the vehicle and apply the brakes prior to moving the shift lever. Otherwise damage to the gearbox may occur.**

Gradually press the throttle lever to increase engine speed and thus engaging the continuously variable transmission (CVT).

At the opposite, when the throttle lever is released, the engine speed decreases.

Stopping the Engine and Parking the Vehicle

⚠ WARNING

Avoid parking on steep slope as the vehicle may roll away.

⚠ WARNING

Always put the vehicle in PARK when stopped or parked to prevent rolling.

⚠ WARNING

Avoid parking in places where hot parts can start a fire.

When stopped or parked always bring shift lever to park position. This is especially important when parking on a slope. On very steep inclines or if the vehicle is carrying a cargo, the wheels should be blocked using rocks or bricks.

Select the flattest terrain available for parking.

Release throttle and use brakes to completely stop the vehicle.

Set shift lever in PARK position.

Turn key in ignition switch to OFF position.

Remove key from ignition switch.

If you must park on a steep incline or if the vehicle is carrying cargo, block the wheels using rocks or bricks.

What to Do if Water Entered the CVT

The CVT drain plug is located on the CVT cover. It is accessible from the rear LH fender.

450 Models

Remove the CVT drain plug to validate if water is present.

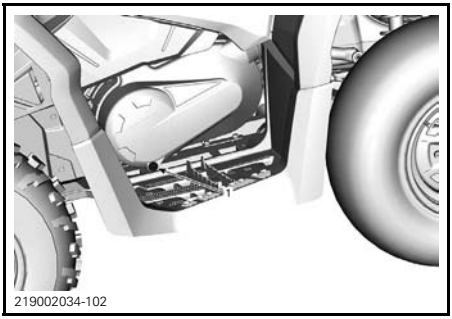

450 MODELS
1. CVT drain plug

570 Models

Inspect the CVT drain plug to validate if water is present.

If water is present, remove CVT drain plug to expel water.

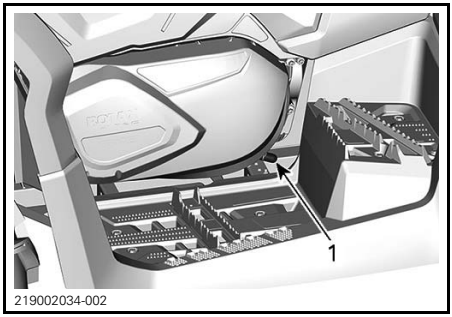

570 MODELS
1. CVT drain plug

All Models

NOTICE **If water is present in the CVT, it could result in belt slippage. The engine will accelerate but the vehicle will remain still.**

450 Models

Reinstall slotted hexagonal 15 mm (19/32 in) drain plug.

570 Models

Reinstall the drain plug and secure it using the spring clamp.

NOTE: Make sure hose is properly inserted on CVT cover nipple.

NOTICE **See an authorized Can-Am dealer to have the CVT inspected and cleaned.**

What to Do if Water Entered the Air Filter Housing

Remove the LH side panel.

Inspect the drain reservoir underneath the air filter housing to validate if water is present.

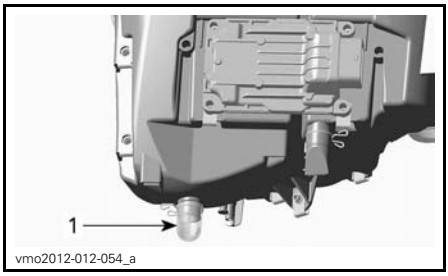

TYPICAL
1. Air filter housing drain reservoir

If water is present, press clamp and remove reservoir to drain water from air filter housing.

If one of the following conditions is met, bring the vehicle to your nearest authorized Can-Am dealer to have the vehicle serviced:

– If more than 50 ml (2 U.S. oz) of water (approximately 5 drain reservoirs) is found in the air filter housing.
– If any deposits are present in the drain reservoir.

In such a case, the vehicle must be serviced for:

- Vents
- CVT cleaning
- Fuel tank breather replacement
- Lubricant inspection and replacement as required (engine, gearbox and rear final drive).

NOTICE **Failure to have vehicle serviced may lead to permanent damage to the following components but not limited to:**

- **Engine and gearbox**
- **Fuel pump**
- **CVT**
- **Front differential**
- **Rear final drive.**

What to Do if Vehicle is Turned Over

When vehicle is turned over or stays tilted on the side, put the vehicle back on its wheel. Inspect vehicle for damages.

⚠ WARNING

Never operate the vehicle if damaged. Refer to an authorized Can-Am dealer.

If vehicle has no damage, refer to *MAINTENANCE PROCEDURES* section and inspect the following.

- Inspect air filter housing for oil accumulation, if any oil is found, clean air filter and air filter housing.
- Check engine oil level and refill if necessary.
- Check engine coolant level and refill if necessary.
- Check gearbox oil level and refill if necessary. (570 Models)
- Check rear final drive oil level and refill if necessary.
- Start engine. If the oil pressure light stays on, stop engine immediately. See an authorized Can-Am dealer.

Whenever the vehicle is turned over, it should be inspected by an authorized Can-Am dealer.

What to Do if Vehicle is Immersed in Water

Should the vehicle become immersed, immediately stop the engine. Do not use:

- Any electrical equipments
- Winch (if equipped)

It will be necessary to take the vehicle to an authorized Can-Am dealer as soon as possible. NEVER ATTEMPT TO START THE ENGINE!

NOTICE **Immersion of the vehicle can cause serious damage if the correct restart procedure is not followed.**

As soon as vehicle is pulled out of water, carry out the following:

- Drain CVT. See procedure in *WHAT TO DO IF WATER IS IN THE CVT*.
- Drain air filter housing. Refer to *WHAT TO DO IF WATER ENTERED THE AIR FILTER HOUSING* in this section.

NOTICE **The vehicle should be serviced as soon as possible by an authorized Can-Am dealer.**

⚠ WARNING

Suspension adjustment could affect vehicle handling. Always take time to familiarize yourself with the vehicle's behavior after any suspension adjustment have been made.

Suspension Adjustment

Suspension adjustment and loading can have an effect on your vehicle handling and comfort.

Choice of suspension adjustments vary with driver's weight, personal preference, riding speed and field condition.

NOTE: Factory settings are suitable for almost all conditions. Take into consideration that an increase in ground clearance can affect the handling of the vehicle.

FRONT SUSPENSION FACTORY PRELOAD SETTINGS		
ADJUSTMENT	MODEL	FACTORY SETTING
Spring preload	All models	Cam position 3

REAR SUSPENSION FACTORY PRELOAD SETTINGS		
ADJUSTMENT	MODEL	FACTORY SETTING
Spring preload	All models	Cam position 3

Spring Preload Adjustment

⚠ WARNING

The left and right shock adjustment on front or rear suspension must always be set to the same position. Never adjust one only. Uneven adjustment can cause poor handling and loss of stability, which could lead to an accident.

Shorten the springs for a firmer ride and rough conditions.

Lengthen the springs for a softer ride and smooth conditions.

Adjust spring preload by turning adjustment cam. Use tool from vehicle tool kit.

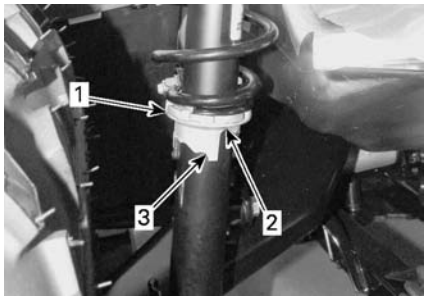

vmo2015-005-040_a

1. *Adjustment cam*
2. *Softer adjustment*
3. *Firmer adjustment*

Dynamic Power Steering (DPS) Assist Level Adjustment

All Models Except Base Models

The Tri-Mode Dynamic Power Steering (DPS) offers easy steering assistance to the rider. The level of assistance will automatically adapt according to the vehicle's speed and rider's demand, in order to provide maximum steering power at lower speed where the demand is normally higher. As

speed increases, the assistance is progressively reduced to keep maximum steering feel and precision to the rider.

It is possible to choose between three modes of assistance: Minimum, Medium and Maximum. Each mode will continue to automatically adapt to the vehicle's speed and rider's demand, so it does not require to be changed when riding. These modes are used to set the level of assistance to match each rider's preferences.

The following DPS modes are preset in the vehicle.

DPS MODE	
DPS MAX.	Maximum steering assist
DPS MED.	Medium steering assist
DPS MIN.	Minimum steering assist

To show the active DPS mode, proceed as follows:

1. Press and release **DPS** button.

1. DPS button

2. Check the multifunction gauge to confirm the active DPS mode.

1. DPS mode display

To change the DPS mode, proceed as follows:

1. Press and hold **DPS** button for 2 seconds to go to the next setting.
2. Release **DPS** button.
3. Repeat until desired setting is selected.

NOTE: The DPS adjustment will not be possible if the vehicle gearbox is set to **REVERSE**.

TRANSPORTING THE VEHICLE

When contacting a towing or transporting service, be sure to ask if they have a flatbed trailer, loading ramp or power ramp to safely lift the vehicle and tie-down straps. Ensure the vehicle is properly transported as specified in this section.

NOTICE **Do not tow this vehicle — towing can seriously damage the vehicle's drive system.**

NOTICE **Avoid using chains to tie the vehicle — they may damage the surface finish or plastic components.**

⚠ WARNING

Make sure no loose objects are present inside vehicle during vehicle transportation.

⚠ WARNING

Always transport the vehicle facing forward to avoid damaging the windshield or other components. Parts may detach during transport.

⚠ WARNING

Before attempting to mount vehicle onto a platform or a trailer, make sure to respect the following safety precautions.

SAFETY PRECAUTIONS	
Carrying equipment	The carrying item (platform or trailer or flat bed) must be of appropriate dimensions and capacity to safely support and transport the vehicle.
Hauling vehicle	Do not exceed vehicle hauling capacity and specifications. Ensure the trailer or platform is properly secured to the hauling vehicle hitch.
Visibility	Ensure you have a good visibility during the entire maneuver.
Terrain	The hauling vehicle and trailer must be on a leveled surface. Use wheel chocks on trailer and hauling vehicle to avoid any movement.
Ramps	Use ramps with proper rating and secure ramps to the trailer or platform. Avoid steep ramps.
Bystanders	Always make sure bystanders are not close to the vehicle or the trailering equipment while climbing up.

Using vehicle power to climb onto trailering equipment

When vehicle can climb on its own power, proceed as follows;

Wear protective gear.

Use low gear only (if equipped).

If vehicle has 4wd (or 6wd) option, use it.

When driving remain seated at all times.

Ensure proper alignment on rails or platform.

1. Start from a sufficient distance from the trailer to align the vehicle in a straight line with the ramps. Never attempt to turn while getting closer to the ramp. Rear wheels might not be aligned once you get to the ramp and vehicle may fall off.
2. Slowly climb the front wheels onto the ramp to verify alignment.

3. Back off the vehicle, verify ramps are still secure, then proceed at proper speed.
4. Carefully drive vehicle onto platform or trailer. Use sufficient speed to climb without spinning or abruptly accelerating. Avoid acceleration while on ramps to prevent ramps movement.
5. If trailer is inclined towards front, simply let vehicle roll in without acceleration.
6. Once vehicle is climbed, put shift lever to Park. Apply parking brake.

When vehicle cannot move on its own power, or in case overshooting is a risk or if any dangerous condition prevents for embarking on its own power, proceed using a winch;

Using a winch to pull vehicle onto trailering equipment

When vehicle cannot climb on its own power, proceed as follows;

⚠ WARNING

Have the help of an assistant. One person should be in vehicle to have access to vehicle steering, brakes and winch switch, while the other person controls the environment and safety of the maneuver.

⚠ WARNING

Ensure the winch hook can be safely attached to a proper anchoring point. Use proper rigging.

NOTE: If vehicle can be started safely, let engine idle during winching to avoid draining the battery.

1. Place shift lever to NEUTRAL (N).
2. If the vehicle is equipped with a winch, use the winch to roll the vehicle on the platform.
3. If the vehicle is not equipped with a winch, proceed as follows:
   3.1 Attach strap to lower front bumper anchor.
   3.2 Attach the strap to the winch cable of the towing vehicle.
   3.3 Pull the vehicle on the flatbed trailer with the winch.
4. Put shift lever to Park. Apply parking brake.

Securing vehicle for transport

When transporting this vehicle, secure it to a trailer or in pickup box with suitable tie-downs. Use of ordinary ropes is not recommended.

⚠ WARNING

Do not tow this vehicle behind a car or other vehicle. Use a trailer. Never tip this vehicle on end for transporting. The vehicle must be in its normal operating position (on all wheels).

Remember to:

– Unload vehicle racks before transportation.
– Set shift lever to PARK position.
– Set the parking brake.
– Secure the vehicle by the front and rear tie-down points.

vmo2013-007-014_a

TYPICAL
1. Front tie-down point location

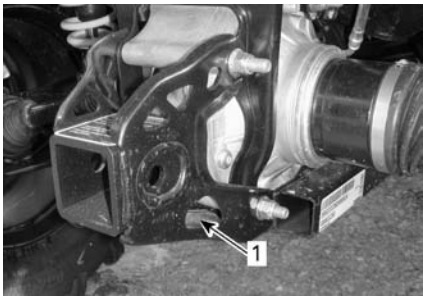

vmo2013-007-003_a

TYPICAL
1. Rear tie-down point location

NOTICE Securing vehicle at other locations may damage the vehicle.

Getting vehicle out of trailer

⚠ WARNING

Vehicle may have moved during transport. Ensure vehicle is properly aligned with ramps before proceeding.

⚠ WARNING

Visibility will be greatly reduced when backing off from the trailer. Have the help of an assistant to ensure proper alignment and safe environment.

This page is intentionally blank

MAINTENANCE

MAINTENANCE SCHEDULE

Maintenance is very important for keeping your vehicle in safe operating condition.

The maintenance schedule does not exempt the pre-ride inspection.

⚠ WARNING

Failure to properly maintain the vehicle according to the maintenance schedule and procedures can make it unsafe to operate.

EPA Regulation - Canadian and USA Vehicles

A repair shop or person of the owner's choosing may maintain, replace, or repair emission control devices and systems. These instructions do not require components or service by BRP or authorized Can-Am Off-Road dealers.

Although an authorized Can-Am Off-Road dealer has an in-depth technical knowledge and tools to service your vehicle, the emission-related warranty is not conditioned on the use of an authorized Can-Am Off-Road dealer or any other establishment with which BRP has a commercial relationship.

Proper maintenance is the owner's responsibility. A warranty claim may be denied if, among other things, the owner or operator caused the problem through improper maintenance or use.

For emission-related warranty claims, BRP is limiting the diagnosis and repair of emission-related parts to the authorized Can-Am Off-Road dealers. For more information, please refer to the *US EPA EMISSION-RELATED WARRANTY* contained in the *WARRANTY* section.

You must follow the instructions for fuel requirements in the fueling section of this manual. Even if gasoline containing greater than ten volume percent ethanol is readily available, the US EPA issued a prohibition against the use of gasoline containing greater than 10 vol% ethanol that applies to this vehicle. The use of gasoline containing greater than 10 vol% ethanol with this engine may harm the emission control system.

SEVERE DUSTY CONDITIONS

Engine Air Filter Maintenance Guideline

Air filter maintenance should be adjusted according to riding conditions.

Air filter maintenance must be increased in frequency in the following dusty conditions:

- Riding on dry sand
- Riding on dry dirt covered surfaces
- Riding on dry gravel roads or similar conditions.

NOTE: Riding in a group in these conditions would increase even more the air filter maintenance.

MAINTENANCE SCHEDULE LEGEND

Operation in trail riding conditions
Operation in severe riding conditions (dusty or muddy) or carrying heavy loads condition

MAINTENANCE SCHEDULE

Make sure to perform proper maintenance at recommended intervals as indicated in the tables. Some items of the maintenance schedule must be performed in function of the calendar, regardless of the distance or time of operation.

EVERY 1 500 KM (1,000 MI) OR 50 HOURS (whichever comes first)
EVERY 750 KM (500 MI) OR 25 HOURS (whichever comes first)
Verify and clean engine air filter. Replace as needed
Verify battery connections
Lubricate rear propeller shaft joint
Inspect tie rod ends and ball joints for play and boots condition
Lubricate front suspension arm bushings
Lubricate rear stabilizer bar bushings
Inspect the drive shaft boots and protectors
Inspect brake pads. Replace as needed
Inspect wheel bearings for abnormal play

EVERY 3 000 KM (2,000 MI) OR 100 HOURS (whichever comes first)
EVERY 1 500 KM (1,000 MI) OR 50 HOURS (whichever comes first)
Adjust valve clearance
Clean muffler spark arrester
Verify and clean throttle body
Replace fuel vent breather filter
Verify CVT drive belt and clean CVT pulleys
Lubricate the one way bearing of the drive pulley
The following must be performed at least once a year:
Change engine oil and filter
Lubricate throttle cable
Inspect and clean brake system
Inspect battery condition
Verify steering system for abnormal play
Verify front differential and rear final drive oil level and look for contamination
Verify gearbox oil level and look for contamination (570)

PERFORM AT THE FIRST 3 000 KM (2,000 MI)AND AT 6 000 KM (4,000 MI) THEN FOLLOW THE REGULAR SCHEDULE
PERFORM AT THE FIRST 1 500 KM (1,000 MI) AND AT 3 000 KM (2,000 MI) THEN FOLLOW THE REGULAR SCHEDULE
Replace gearbox oil (570)
Clean the vehicle speed sensor (VSS) (570)

EVERY 6 000 KM (4,000 MI) OR 200 HOURS (whichever comes first)
EVERY 3 000 KM (2,000 MI) OR 100 HOURS (whichever comes first)
Verify the cooling system
Test engine coolant strength
Verify fuel system for leaks
Verify fuel pump pressure
Replace spark plugs
Replace front differential oil
Replace rear final drive oil
Replace gearbox oil (570 only)
Inspect input and output shaft seals (gearbox, differential and final drive)
Clean vehicle speed sensor
Clean and lubricate lower and upper steering column half bushings
The following must be performed every 2 years:
Replace the brake fluid

EVERY 12 000 KM (8,000 MI) OR 5 YEARS (whichever comes first)
EVERY 6 000 KM (4,000 MI) OR 5 YEARS (whichever comes first)
Replace engine coolant

This section includes instructions for basic maintenance procedures.

⚠ WARNING

Unless otherwise indicated, always turn ignition switch to OFF position and remove key before performing any maintenance.

⚠ WARNING

Should removal of a locking device be required (e.g. lock tab, self-locking fastener, etc.), always replace it with a new one.

Air Filter

Air Filter Maintenance Guideline

As with any ATV, air filter maintenance is critical to ensure proper engine performance and life span.

Air filter maintenance should be adjusted according to riding conditions.

Air filter maintenance must be increased in frequency and oil must be added to the foam filter for the following dusty conditions:

- Riding on dry sand.
- Riding on dry dirt covered surfaces.
- Riding on dry gravel trails or similar conditions.

NOTE: Riding in a group in these conditions would increase even more the air filter maintenance. Refer to *AIR FILTER CLEANING AND OILING* for maintenance procedure.

NOTE: An accessory pre-filter for "dusty conditions" may be used. Contact an authorized Can-Am dealer for details.

Air Filter Removal

NOTICE **Never remove or modify any component in the air filter housing. Otherwise, engine performance degradation or damage can occur. The engine is calibrated to operate specifically with these components.**

Remove seat.

Lift rear portion of console upwards until the studs are released from the grommets.

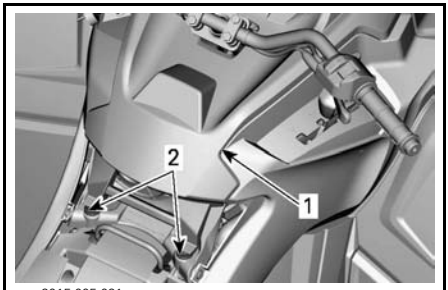

vmo2015-005-021_a

TYPICAL
1. *Console*
2. *Studs and grommets*

Pull console rearwards.

Rotate air filter cover counterclockwise to remove.

NOTE: A socket wrench may be used to ease removal.

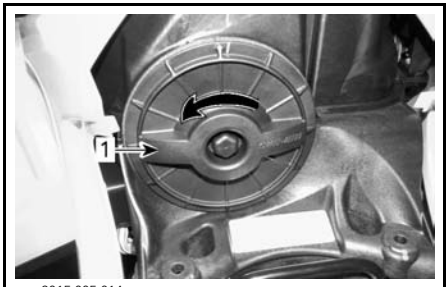

vmo2015-005-014_a

1. *Air filter cover*

Remove air filter.

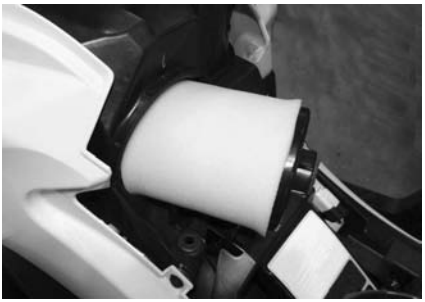
vmo2015-005-015_a

AIR FILTER REMOVAL

Engine Air Filter Housing Inspection and Draining

1. Remove LH side panel.
2. Drain air filter housing inlet drain tube.

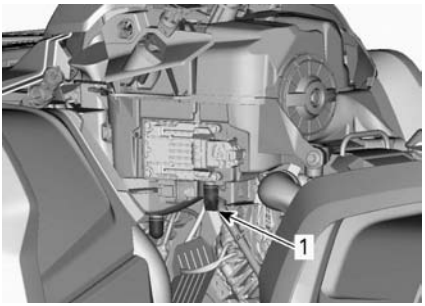

vmr2012-010-017_a

TYPICAL - SOME PARTS REMOVED FOR CLARITY
1. Air filter housing inlet drain tube

3. Check air filter dirty chamber for cleanliness.
   – If any debris or water are found, clean air filter chamber using a vacuum cleaner.

NOTICE **Do not blow compressed air into air filter chamber.**

4. Check air filter drain tube (clean chamber).
   – If any debris or water are found, refer to *SPECIAL PROCEDURES*.
   – Investigate for contamination source.

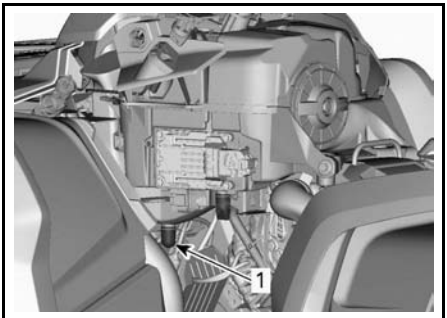

vmr2012-010-017_b

TYPICAL - SOME PARTS REMOVED FOR CLARITY
1. Air filter drain tube

Air Filter Cleaning and Oiling

⚠ CAUTION **Always wear appropriate skin and eye protection. Chemicals can cause a skin rash and eye injury.**

Paper Filter Cleaning

1. Ensure that the foam filter is removed from paper filter.
2. Tap out heavy dust from the paper filter.

This will allow dirt and dust to get out of the paper filter.

NOTE: Paper filter have a limited life span; replace filter if too dirty or clogged.

NOTICE **It is not recommended to blow compressed air on the paper filter; this could damage the paper fibers and reduce its filtration ability when used in dusty environments.**

NOTICE **Do not wash the paper filter with any cleaning solution.**

Foam Filter Cleaning

1. Spray the foam filter inside and out with a good air filter cleaner and follow manufacturer's instructions.

vbs2009-012-015_a

TYPICAL - SPRAY THE FOAM FILTER

2. Dry the foam filter completely.

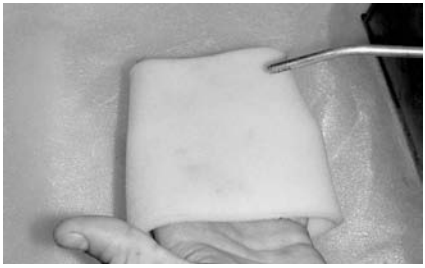
vbs2009-012-005

TYPICAL - DRY

NOTE: A second application may be necessary for heavily soiled elements.

Foam Filter Oiling

1. Make sure filter is clean. Refer to *FOAM FILTER CLEANING*.
2. Spray AIR FILTER OIL (P/N 219 700 340) or equivalent on the foam filter previously dried.

SERVICE PRODUCT	
AIR FILTER OIL (P/N 219 700 340)	

vbs2009-012-014

TYPICAL - OIL THE FOAM FILTER

3. Let stand for 3 to 5 minutes.
4. Remove any excess of oil that could transfer to the paper filter by wrapping the foam filter into an absorbent cloth and squeezing gently. This will also ensure a full oil coverage on foam filter.
5. Reinstall the foam filter over the paper filter.

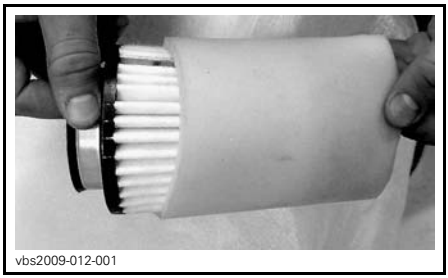
vbs2009-012-001

TYPICAL

Air Filter Installation

Slightly grease O-ring seal and plastic body of air filter.

Install air filter as the reverse of removal.

Ensure air filter cover is properly locked onto the air filter housing. See indications on filter cover and housing.

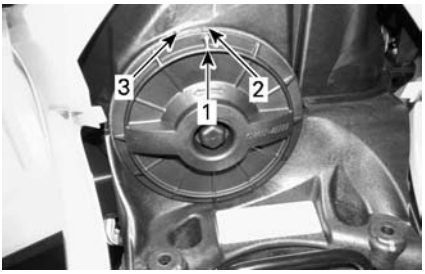

vmo2015-005-014_b

1. *Cover position arrow*
2. *Locked*
3. *Unlocked*

Install console as the reverse of removal. However, pay attention to the following.

Align console front tabs with slots, then push console forward.

Then align and insert studs with grommets on rear portion of console until studs engage with grommets.

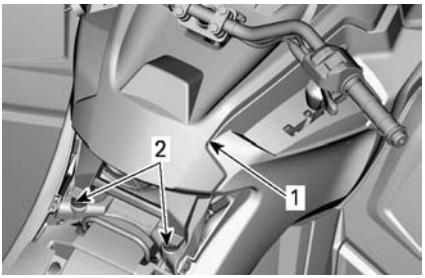

vmo2015-005-021_a

TYPICAL
1. *Console*
2. *Studs and grommets*

Engine Oil

Engine Oil Level

NOTICE Check level frequently and refill if necessary. **Do not overfill.** Operating the engine/gearbox with an improper level may severely damage engine/gearbox. Wipe off any spillage.

NOTE: While checking the oil level, visually inspect engine area for leaks.

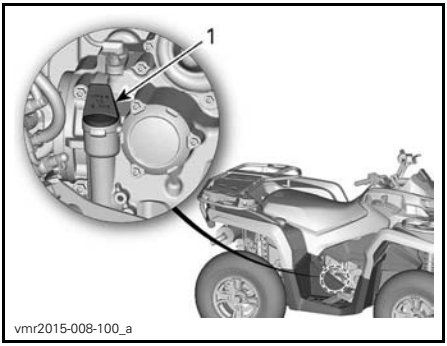

vmr2015-008-100_a

450 MODEL - RH SIDE OF ENGINE
1. *Dipstick*

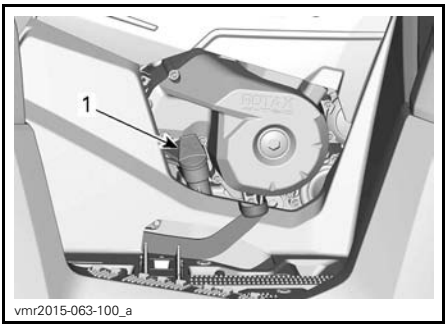

vmr2015-063-100_a

570 MODEL - RH SIDE OF ENGINE
1. *Dipstick*

NOTE: Do not lose the O-ring placed on the dipstick.

With vehicle on a level surface and engine cold, not running, check the oil level as follows:

1. Unscrew dipstick then remove it and wipe clean.
2. Reinstall dipstick, screw in it completely.
3. Remove and check oil level. It should be near or equal to the upper mark.

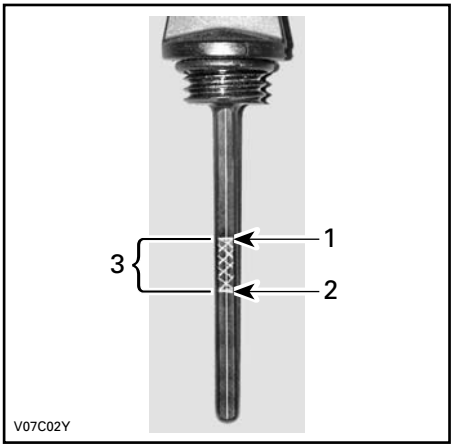

TYPICAL
1. *Full*
2. *Add*
3. *Operating range*

To add oil, remove dipstick. Place a funnel into the dipstick tube to avoid spillage.

Add a small amount of recommended oil and recheck oil level.

Repeat the above procedures until oil level reaches the dipstick's upper mark. **Do not overfill.**

Properly tighten dipstick.

Recommended Engine Oil

Rotax® engines were developed and validated using the XPS™ oil. BRP recommends the use of its XPS engine oil or an equivalent at all time. Damages caused by the use of an oil not suitable for the engine may not be covered by the BRP Limited Warranty.

XPS RECOMMENDED ENGINE OIL	
General purpose	**Scandinavia:** 4T 5W40 SYNTHETIC BLEND OIL (EUR) (P/N 779290) **Other Countries:** 4T 5W40 SYNTHETIC BLEND OIL (P/N 779133)
Cold temperature	**Scandinavia:** 4T 0W40 SYNTHETIC OIL (EUR) (P/N 779286) **Other Countries:** 4T 0W40 SYNTHETIC OIL (P/N 779139)
Warm temperature	**Scandinavia:** 4T 10W50 SYNTHETIC OIL (EUR) (P/N 779240) **Other Countries:** 4T 10W50 SYNTHETIC OIL (P/N 779234)

IF THE RECOMMENDED XPS ENGINE OIL IS NOT AVAILABLE
Use a 4-stroke SAE engine oil meeting or exceeding the following lubricant industry specifications. Always check the API service label certification on the oil container, it must contain at least one of the indicated standards. – **API service classification SJ, SL, SM or SN**

NOTICE Damages caused by the use of oil not suitable for this engine may not be covered by the BRP limited warranty.

Engine Oil Change

CAUTION The engine oil can be very hot. Wait until engine oil is warm.

NOTICE Engine oil and oil filter must be replaced at the same time.

Bring engine to its normal operating temperature.

Ensure vehicle is on a level surface.

Remove dipstick.

Clean the oil drain plug area.

Place a drain pan under the oil drain plug area.

Unscrew oil drain plug.

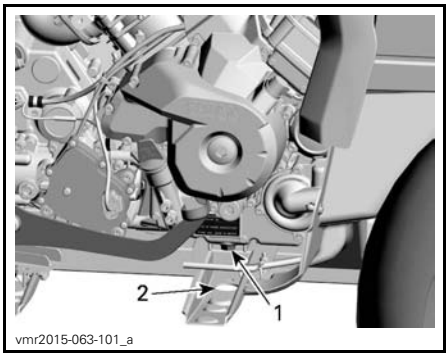

TYPICAL - SOME PARTS REMOVED FOR CLARITY
1. *Drain plug*
2. *Access through frame*

Allow enough time for oil to flow out of oil filter.

Replace the oil filter. Refer to *OIL FILTER*.

Change gasket on oil drain plug.

Clean gasket area on engine and oil drain plug then reinstall plug.

Refill engine at the proper level with the recommended oil.

Refer to *SPECIFICATIONS* for oil capacity.

Start engine and let idle for a few minutes.

Ensure oil filter area and oil drain plug areas are not leaking.

Stop engine.

Wait a while to allow oil to flow down to crankcase then check oil level.

Refill as necessary.

Dispose of oil as per your local environmental regulations.

Oil Filter

Oil Filter Removal

To reach oil filter, remove the following parts:
- Seat
- Console
- RH side panel and extension(s)
- RH footrest panel.

1. Clean oil filter area.
2. Remove oil filter cover.
3. Remove oil filter.

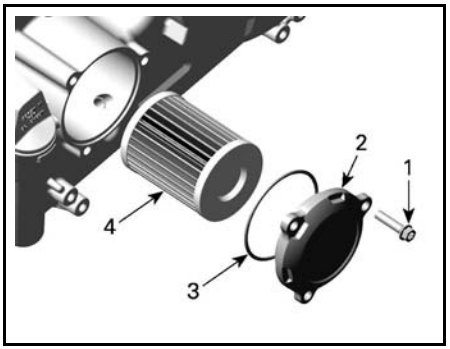

1. *Oil filter screw*
2. *Oil filter cover*
3. *O-ring*
4. *Oil filter*

Oil Filter Installation

1. Check and clean the oil filter inlet and outlet area of dirt and other contaminations.

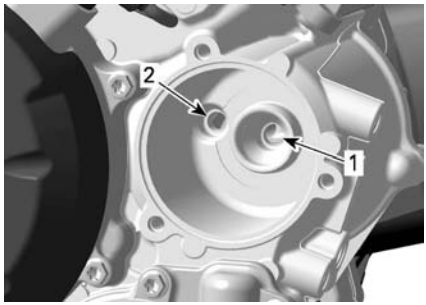

vmr2015-063-003_a

1. *Inlet bore from the oil pump to the oil filter*
2. *Outlet bore to the engine oil providing system*

2. Install a NEW O-ring on oil filter cover.
3. Install the new filter into the cover.
4. Apply engine oil on O-ring and on end of filter.

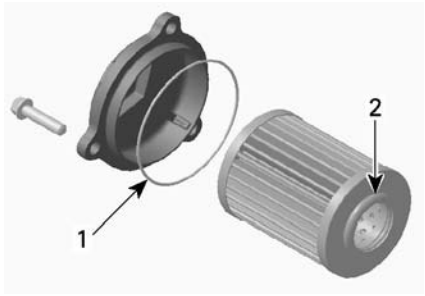

vmr2006-008-001_a

1. *Slightly oil*
2. *Slightly oil*

5. Install the cover on the engine.

NOTICE Pay attention to avoid pinching the O-ring during filter and cover installation.

6. Tighten oil filter cover screws to recommended specification.

TIGHTENING TORQUE	
Oil filter cover screws	10 N•m ± 1 N•m (89 lbf•**in** ± 9 lbf•**in**)

7. Reinstall remaining parts if applicable.
8. Wipe off any oil spillage on engine.

Radiator

Radiator Inspection

Periodically check the radiator area for cleanliness.

vmo2012-012-041

TYPICAL - PARTS REMOVED FOR CLARITY

Inspect radiator and hoses for leaks or any damage.

Inspect radiating fins. They must be clean, free of mud, dirt, leaves and any other deposit that would prevent the radiator to cool properly.

Remove as much deposits as you can with your hands. If water is available in proximity, try rinsing the radiating fins.

If available, use a garden hose to rinse the radiating fins.

CAUTION Never clean radiator with your hands when it is hot. Let the radiator cool down before cleaning.

NOTICE Be careful not to damage the radiating fins when cleaning. Do not use any object/tool that could damage the fins. The fins are purposely thin parts to allow efficient cooling. WHEN HOSING, USE LOW PRESSURE ONLY, NEVER USE A HIGH PRESSURE WASHER.

See an authorized Can-Am dealer, repair shop or person of your own choosing to check the performance of the cooling system.

Engine Coolant

Engine Coolant Level Verification

⚠ WARNING

Check coolant level with engine cold. Never add coolant in cooling system when engine is hot.

Place vehicle on a level surface.

Remove the gauge support.

219001850-700

Remove engine coolant reservoir cap.

With vehicle on a level surface, liquid should be between MIN. and MAX. level marks of coolant reservoir.

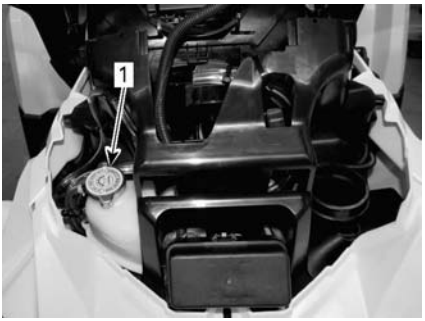

vmo2015-005-017_a

1. Engine coolant reservoir

NOTE: When checking level at temperature lower than 20°C (68°F), it may be slightly lower than MIN. mark.

Add coolant if required.

Use a funnel to avoid spillage. **Do not overfill.**

Properly reinstall and tighten reservoir cap.

Reinstall gauge support.

⚠ WARNING

In order to avoid potential burns, do not remove the radiator cap if the engine is hot.

NOTE: A cooling system that frequently requires coolant is the indication of leaks or engine problems. See an authorized Can-Am dealer.

Recommended Engine Coolant

NOTICE **Always use ethylene-glycol antifreeze containing corrosion inhibitors specifically for internal combustion aluminum engines.**

COUNTRY	RECOMMENDED COOLANT
Scandinavia	EXTENDED LIFE PRE-MIXED COOLANT (EUR) (P/N 779223)
All other countries	EXTENDED LIFE PRE-MIXED COOLANT (P/N 779150)
Alternative, or if not available	Distilled water and antifreeze solution (50% distilled water, 50% antifreeze)

Engine Coolant Replacement

Cooling System Draining

Remove the gauge support.

Remove the coolant reservoir cap.

⚠ WARNING

Warning: To avoid potential burns, do not remove the pressure cap if the engine is hot.

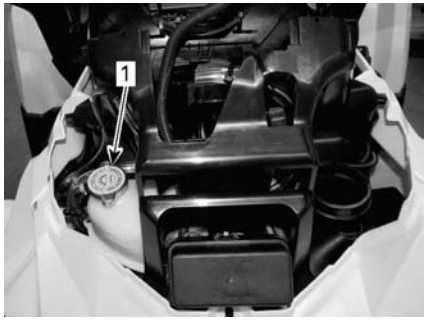

vmo2015-005-017_a

1. Engine coolant reservoir cap

Unscrew the coolant drain plug and drain the coolant into a suitable container.

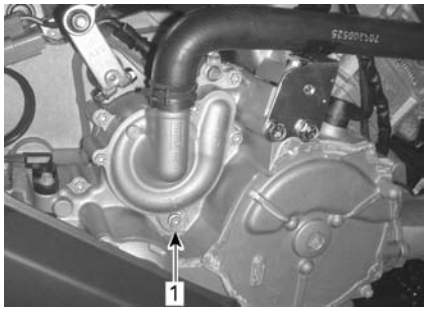

vmr2015-016-105_a

TYPICAL - SOME PARTS REMOVED FOR CLARITY
1. Coolant drain plug

NOTE: Do not unscrew the coolant drain plug completely.

Disconnect the lower radiator hose and drain the remaining coolant into a suitable container.

NOTE: Take note of the position of the hose clamp on the lower radiator hose at the radiator.

Reinstall radiator hose as noted prior to removal.

Reinstall cooling system drain plug with a new gasket ring.

Tighten the coolant drain plug.

TIGHTENING TORQUE	
Cooling system drain plug	9 N•m to 11 N•m (80 lbf•**in** to 97 lbf•**in**)

Bleed cooling system, refer to *COOLING SYSTEM FILLING AND BLEEDING*.

Cooling System Filling and Bleeding

1. Unscrew bleed screws above both front and rear cylinders.

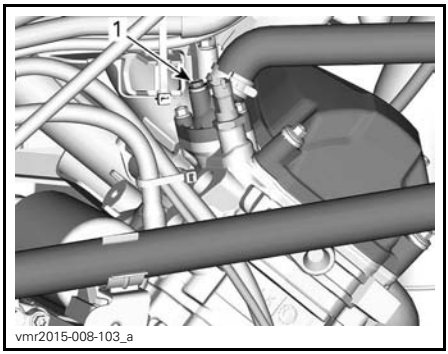

vmr2015-008-103_a

TYPICAL
1. Front cylinder bleed screw

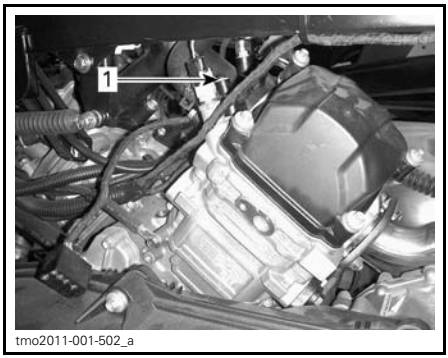

tmo2011-001-502_a

TYPICAL - 570 MODELS ONLY
1. Rear cylinder bleed screw

2. Fill the cooling system until coolant comes out of the bleed screw.
3. Squeeze the top of the coolant hose between the radiator and coolant pump several times until all air is bled from the highest point of the hose.
4. Install the bleed screw using a NEW gasket ring and tighten to specification.

TIGHTENING TORQUE	
Bleed screws	5.0 N•m ± 0.6 N•m (44 lbf•**in** ± 5 lbf•**in**)

5. Continue adding coolant until system is full up to the pressure cap.
6. Refill coolant tank up to MAX level mark.
7. Run engine at idle with the radiator cap off. Slowly add coolant if necessary.
8. At this point, wait until engine reaches normal operating temperature.
9. Depress the throttle lever two or three times; then add coolant if required.
10. Stop the engine and let it cool down.
11. Install coolant reservoir cap.
12. Inspect all connections for leaks and check coolant level in the reservoir.

Muffler Spark Arrester

The muffler must be periodically purged of accumulated carbon.

⚠ WARNING

Never run engine in an enclosed area. Never perform this operation immediately after the engine has been run because exhaust system is very hot. Make sure that there are no combustible materials in the area. Wear eye protection and gloves. Never stand behind the vehicle while purging exhaust system. Respect all applicable laws and regulations.

Select a well-ventilated area and make sure the muffler is cool.

Place gearbox on PARK position.

Remove the clean out plug of the muffler.

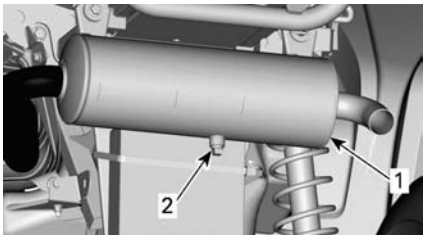

vmo2015-005-037_a

TYPICAL
1. Muffler
2. Clean out plug

Block the end of the muffler with a shop rag and start engine.

Momentarily increase engine RPM several times to purge accumulated carbon out of the muffler.

Stop engine and allow muffler to cool.

Reinstall the clean out plug.

Gearbox Oil (570 Models)

Recommended Gearbox Oil

RECOMMENDED GEARBOX OIL	
Scandinavia	75W140 SYNTHETIC GEAR OIL (EUR) (P/N 779215)
All other countries	75W140 SYNTHETIC GEAR OIL (P/N 779160)

NOTE: The XPS oil is specially formulated to meet the lubrication requirements of this gearbox. BRP strongly recommends the use of its XPS oil. However, if the XPS synthetic gear oil is not available, use the following lubricant:

GEARBOX OIL REQUIREMENT
75W 140 API GL-5 synthetic gear oil

Gearbox Oil Level Verification

NOTE: Prior checking the gearbox oil level, ensure vehicle is on a level surface.

1. To access gearbox oil level plug, remove the following parts:
   - Seat
   - Console
   - RH side panel and extension(s)
   - RH footrest panel

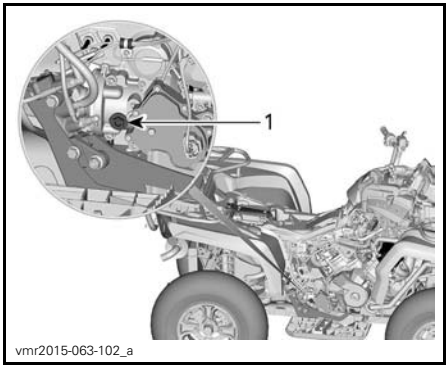

1. Oil level plug

2. Remove the gearbox oil level plug.

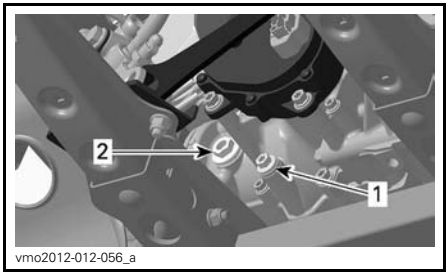

1. Drain plug
2. Oil level plug

3. Check oil level.

The oil should be level with the bottom of the oil level hole.

NOTICE **Operating the gearbox with an improper oil level may severely damage gearbox.**

Gearbox Oil Replacement

Gearbox Oil Draining Procedure

1. Start engine and operate vehicle to warm-up the gearbox oil.

NOTE: Running engine at idle is not sufficient, vehicle gearbox must be operated.

2. Position vehicle on a level surface.
3. Place a drain pan under the gearbox drain plug area.
4. Clean drain plug area.

5. Remove magnetic drain plug and sealing ring. Discard sealing ring.

⚠ WARNING

The gearbox oil can be very hot.

6. Remove oil level plug and its O-ring.

NOTE: Allow oil to completely flow out of gearbox.

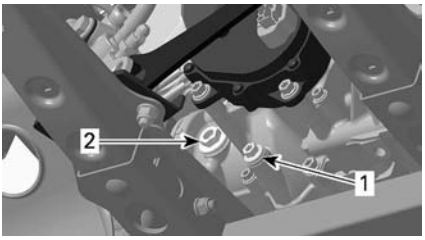

vmo2012-012-056_a

1. Magnetic drain plug
2. Oil level plug

7. Clean magnetic drain plug and pay attention to any debris present on drain plug.

NOTE: Presence of excessive debris provides an indication of a gearbox problem.

8. Reinstall magnetic drain plug with a NEW sealing ring and tighten to specification.

TIGHTENING TORQUE	
Drain plug	20 N•m ± 2 N•m (15 lbf•ft ± 1 lbf•ft)

9. Dispose gearbox oil as per your local environmental regulations.

Gearbox Oil Filling Procedure

1. Fill the gearbox through the oil level hole until the oil reaches the bottom of the oil level hole.
2. Install the oil level plug with its O-ring. Tighten plug to specification.

TIGHTENING TORQUE	
Oil level plug	5 N•m ± 0.6 N•m (44 lbf•**in** ± 5 lbf•**in**)

Throttle Cable

Throttle Cable Lubrication

The throttle cable must be lubricated with silicone based lubricant or an equivalent.

⚠ WARNING

Always use a silicone-based lubricant. Using another lubricant (like a water-based lubricant) could cause the throttle lever/cable to become sticky and stiff.

Open the throttle lever housing.

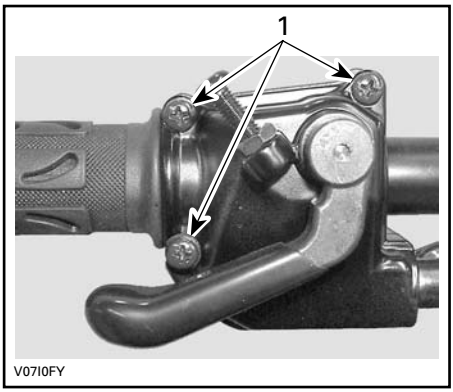

V07I0FY

1. Remove these screws

Separate the housing.

Slide rubber protector back to expose throttle cable adjuster.

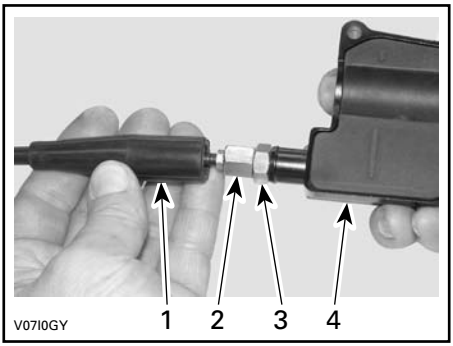

1. *Cable protector*
2. *Throttle cable adjuster*
3. *Lock nut*
4. *Throttle lever housing*

Screw in the throttle cable adjuster.

Remove inner housing protector.

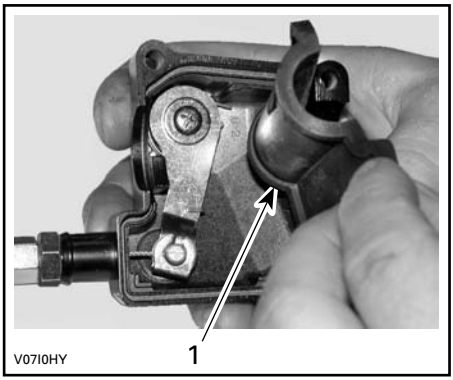

1. *Inner housing protector*

Remove the cable from the throttle lever housing.

NOTE: Slide cable in clip slot and remove the end of cable from clip.

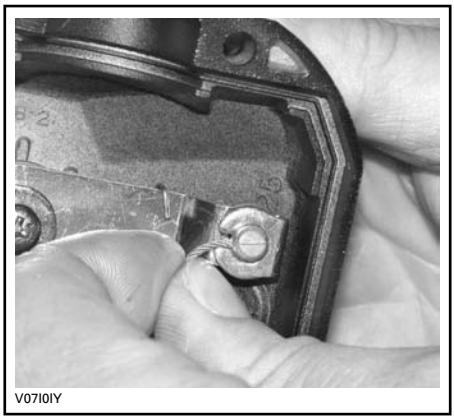

Remove the throttle body side cover.

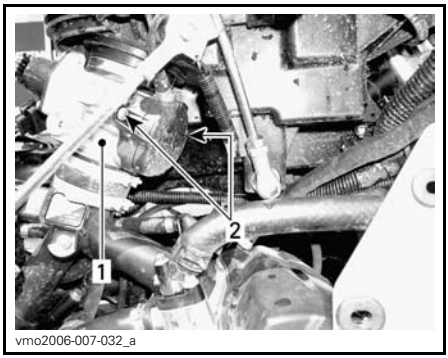

1. *Throttle body*
2. *Side cover screws*

Insert the needle of the lubricant can in the end of throttle cable adjuster.

⚠ CAUTION Always wear appropriate skin and eye protection. Chemicals can cause a skin rash and eye injury.

TYPICAL

NOTE: Place a rag around the throttle cable adjuster to prevent the lubricant from splashing.

Add lubricant until it runs out at throttle body end of the throttle cable.

Reinstall and adjust the cable.

Throttle Cable Adjustment

Slide rubber protector back to expose throttle cable adjuster.

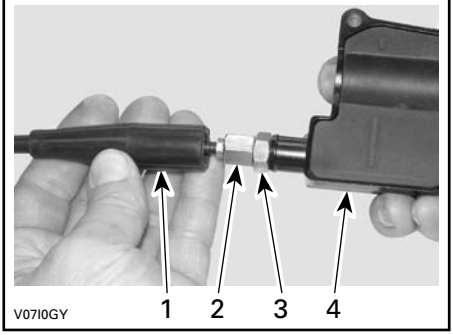

1. *Cable protector*
2. *Throttle cable adjuster*
3. *Lock nut*
4. *Throttle lever housing*

Loosen lock nut then turn the adjuster to obtain correct throttle lever free play.

Measure throttle free play at the tip of throttle lever.

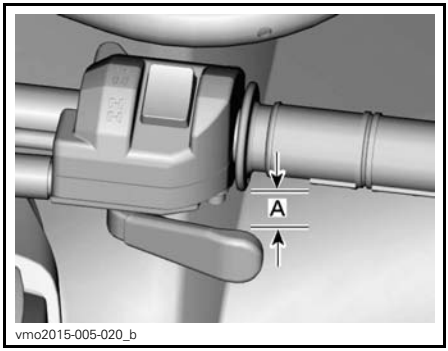

A. 2 mm (.079 in)

Tighten lock nut and reinstall protector.

With the shift lever on PARK position, start the engine.

Check if the throttle cable is adjusted correctly by turning handlebar fully to the right then fully to the left. If the engine RPM increases, readjust the throttle lever free play.

Spark Plugs

Spark Plug Access

Remove side panels.

Unplug spark plug cable(s).

Spark Plug Removal

Unscrew spark plugs one turn.

⚠ CAUTION Always wear safety goggles when using pressurized air.

Clean spark plugs and cylinder heads with pressurized air if possible.

Unscrew spark plugs completely using a spark plug socket, then remove them.

570 Models Only

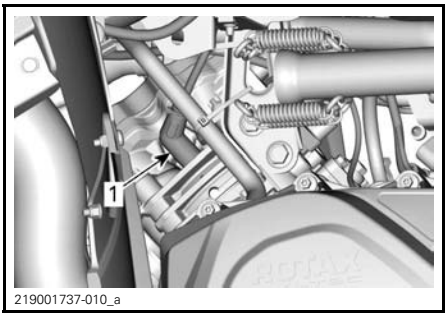

LH SIDE — FRONT CYLINDER
1. Spark plug

All Models

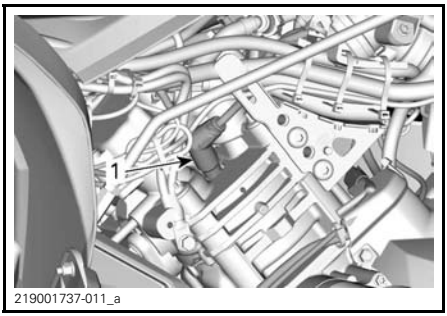

RH SIDE — REAR CYLINDER
1. Spark plug

Spark Plug Installation

Prior to installation, make sure that contact surfaces of cylinder heads and spark plugs are free of grime.

Using a feeler gauge, set the spark plug gap.

SPARK PLUG GAP	
450	0.7 mm - 0.9 mm (.028 in - .035 in)
570	0.7 mm to 0.8 mm (.028 in to .031 in)

Apply a small amount of copper-based anti-seize lubricant over spark plug threads to prevent a possible seizure.

Screw spark plugs into cylinder heads by hand and tighten with a torque wrench and a proper socket.

⚠ CAUTION Do not overtighten spark plugs, engine damage can occur.

TIGHTENING TORQUE	
Spark plug	20 N•m ± 2.4 N•m (15 lbf•ft ± 2 lbf•ft)

CVT Cover

This CVT is lubrication free. Never lubricate any components except drive pulley bearing.

⚠ WARNING

Never touch CVT while engine is running. Never drive vehicle when CVT cover is removed.

⚠ WARNING

Engine must be cool before cover is removed. Always wear protective gloves when removing cover.

Place the vehicle on a level surface. Select PARK position.

Accessing the CVT Cover

The CVT cover is located on the LH side of the vehicle.

Remove the following:
- LH side and extension panels
- LH footboard panel.

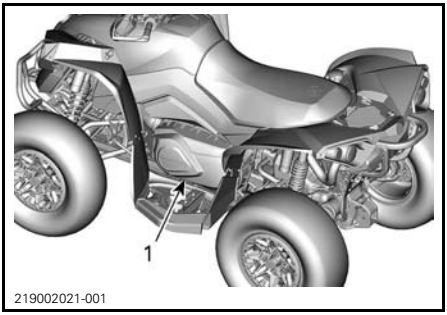

TYPICAL
1. *CVT cover*

Removing the CVT Cover (450 models)

Disconnect CVT cooling air ducts.

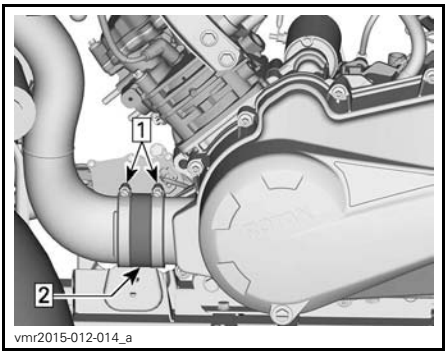

CVT AIR INLET DUCT DISCONNECT
1. *Loosen clamps*
2. *Remove CVT air inlet adapter*

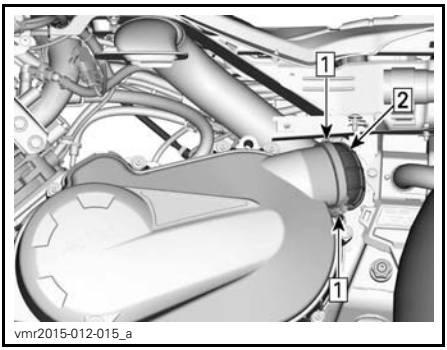

CVT AIR OUTLET DUCT DISCONNECT
Step 1: Loosen clamps
Step 2: Remove CVT air outlet adapter

Remove:
- Retaining screws
- CVT cover
- Gasket.

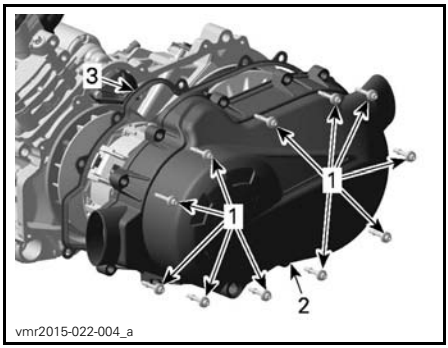

1. *Retaining screws*
2. *CVT cover*
3. *Gasket*

NOTE: To support the cover remove the center top screw last.

Removing the CVT Cover (All other models)

Remove all CVT cover retaining screws.

Remove the center top screw last to support the cover during removal.

NOTICE **Do not use an impact tool to remove CVT cover screws.**

Remove the CVT cover and its gasket.

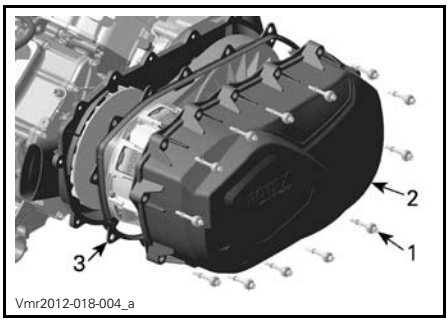

1. *CVT cover screw*
2. *CVT cover*
3. *Gasket*

Installing the CVT Cover (450 models)

Install the center top screw of first.

Install the other screws then torque them in a crisscross sequence.

Tighten the CVT cover screws as per following sequence.

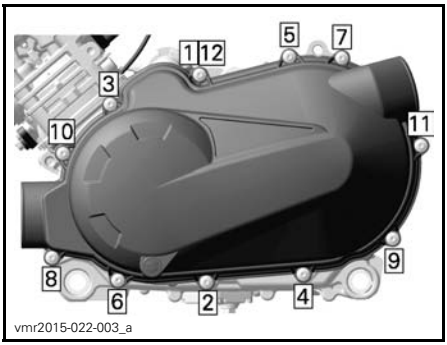

CVT COVER TIGHTENING SEQUENCE

TIGHTENING TORQUE	
CVT cover screws	7 N•m ± 0.8 N•m (62 lbf•**in** ± 7 lbf•**in**)

Installing the CVT Cover (All other models)

Install the center top screw of first.

NOTE: Do not use and impact tool to install CVT cover screws.

Tighten the CVT cover screws as per following sequence.

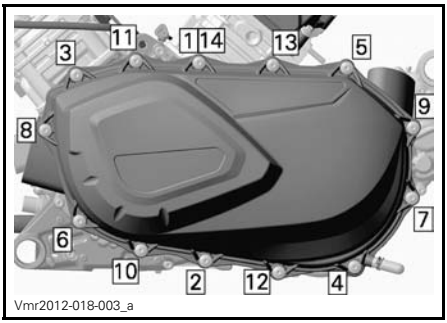

CVT COVER TIGHTENING SEQUENCE

TIGHTENING TORQUE	
CVT cover screws	7 N•m ± 0.8 N•m (62 lbf•**in** ± 7 lbf•**in**)

Drive Belt

Removing the Drive Belt

NOTICE **In case of a drive belt failure, the CVT, cover, drain reservoir and air outlet must be cleaned and inspected for obstruction.**

Remove *CVT COVER*.

Open driven pulley.

REQUIRED TOOL	
PULLER/LOCKING TOOL (P/N 529 036 098)	

Screw tool in the threaded hole of driven pulley and tighten to open the pulley.

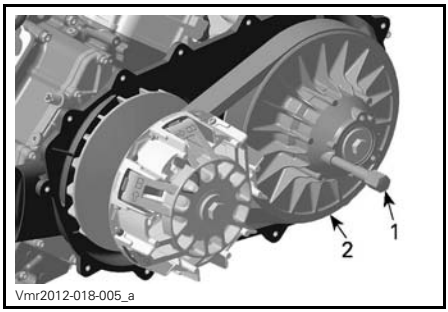

1. *Puller/locking tool*
2. *Fixed sheave of driven pulley*

Slide the belt over the top edge of fixed sheave to remove it.

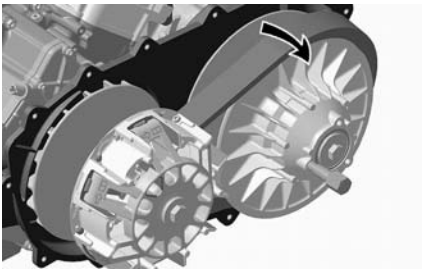
Vmr2012-018-006_a

Installing the Drive Belt (450 models)

For installation, reverse the removal procedure. Pay attention to the following details.

The maximum drive belt life span is obtained when the drive belt has the proper rotation direction. Install it so that the arrow printed on belt is pointing towards front of the vehicle, viewed from top.

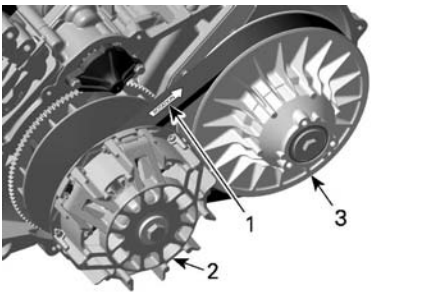

vmr2015-022-007_a

1. *Arrow towards the back of the vehicle*
2. *Drive pulley (front)*
3. *Driven pulley (rear)*

Installing the Drive Belt (All other models)

For installation, reverse the removal procedure. Pay attention to the following details.

The maximum drive belt life span is obtained when the drive belt has the proper rotation direction. Install it so that the arrow printed on belt is pointing towards front of the vehicle, viewed from top.

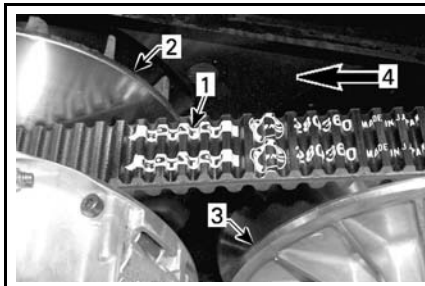

vmr2007-051-006_a

1. *Arrow printed on belt*
2. *Drive pulley (front)*
3. *Driven pulley (rear)*
4. *Rotation direction*

Turn the driven pulley until the lowest portion of the cogs on the external surface of drive belt is even with the driven pulley edge.

tmo2013-003-060_a

1. *Lowest portion of cogs even with external surface of drive belt*

Drive and Driven Pulleys

Drive and Driven Pulleys Inspection

This inspection must be performed by an authorized Can-Am dealer, repair shop, or person of your own choosing for maintenance, repair, or replacement.

Drive Pulley

Inspect the bushings of the sliding sheave of the drive pulley, replace worn parts.

Driven Pulley

Inspect the bushings of the cam and of the sliding sheave of the driven pulley, replace worn parts.

Battery

CAUTION Never charge a battery while installed in vehicle.

These vehicles are equipped with a VRLA battery (Valve Regulated Lead Acid). It is a maintenance-free type battery, there is no need to add water to adjust electrolyte level.

NOTICE Never remove the battery sealing cap.

Battery Removal

Disconnect BLACK (-) cable first then RED (+) cable.

NOTICE Always disconnect BLACK (-) battery cable first.

Remove retaining screws, battery holder then pull the battery out of frame.

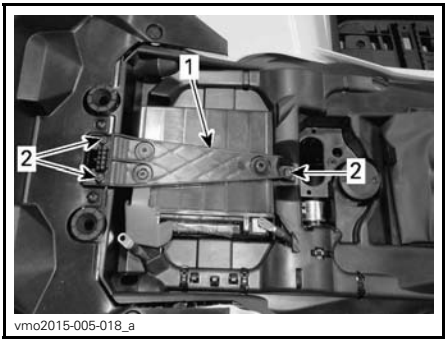

1. Battery holder
2. Retaining screws

Battery Cleaning

Clean battery, battery casing and battery posts using a solution of baking soda and water.

Remove corrosion from battery cable terminals and battery posts using a firm wire brush.

Battery Installation

Battery installation is the reverse of the removal procedure.

NOTICE Always connect RED (+) battery cable first.

Fuses

CAUTION Always turn the ignition switch to OFF position before replacing a defective fuse.

Fuse Inspection

Check if filament is melted.

If filament is melted, replace damaged fuse, refer to *FRONT FUSE BOX* for location and proper rating.

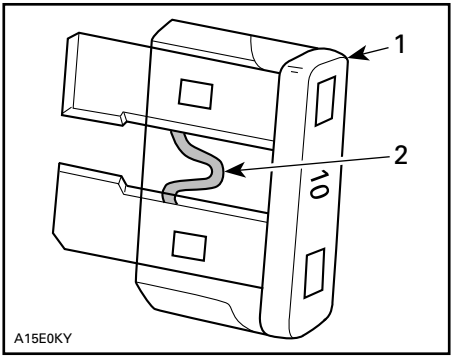

TYPICAL
1. Fuse
2. Check if melted

NOTICE Do not use a higher rated fuse as this can cause severe damage.

Front Fuse Box Location

Pull upwards and front to remove the gauge support from its location.

vmo2015-005-019_a

1. *Gauge support*

vmo2015-005-022_a

1. *Front fuse box*
2. *Front fuse box cover*

NOTE: Check inside fuse box cover to know fuses location.

NOTICE Do not store any objects in the front service compartment.

Front Fuse Box Description (Except NRMM and Non-EPA Compliant Models)

FRONT FUSE BOX		
NO.	DESCRIPTION	RATING
RY1	Cooling Fan Relay	-
RY2	Main Relay	-
RY3	Accessories Relay	-
RY4	Fuel Pump Relay	-
RY5	ECM	10 A
R8	Brake Relay	-
F4	Brake Diagnostic	10 A
F5	Injectors/Ignition, ECM, Fuel Pump, VSS	10 A
F8	Key Switch, Starter Solenoid, Gauge	10 A
F9	Cooling Fan Diagnostic	20 A
F12	DC Outlet/Light/Accessories Euro Control (CE), 2WD/4WD	20 A

NRMM and non-EPA Compliant Models

FRONT FUSE BOX		
NO.	DESCRIPTION	RATING
RY1	Fan Relay	-
RY2	Main Relay	-
RY3	Lights Relay	-
RY5	Accessories	-
RY6	Brake Relay	-
F1	Start Switch	10 A
F2	Lights	30 A
F3	Accessories 1	20 A
F4	Accessories 2	20 A
F5	Injectors Ignition coils Fuel Pump	10 A
F6	Relays DPS Gauge	10 A
F7	Brake lights	10 A

FRONT FUSE BOX		
NO.	DESCRIPTION	RATING
F8	DESS Key, ECM	10 A
F9	2WD/4WD	10 A
F12	DC Outlet	25 A

Fuse Links and Fuse Box 2

The fuse links and fuse box 2 are located behind the RH side panel

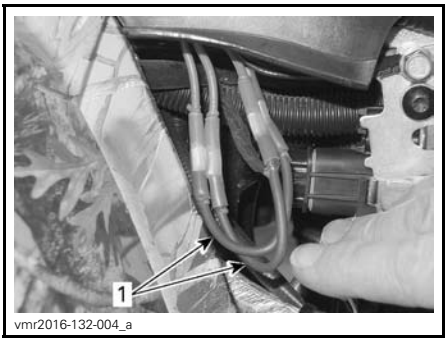

1. Fuse links

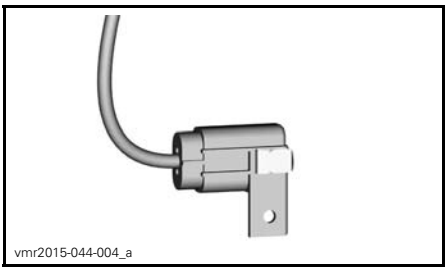

FUSE BOX 2

Rear Fuse Identification

FUSE LINK IDENTIFICATION			
Fuse links	1	Main	16 awg
	2	Fan/accessories	16 awg
FUSE IN FUSE BOX 2 IDENTIFICATION			
Fuse	3	DPS/ACS (dynamic power steering)	40 A

Lights

Always check light operation after replacement.

Headlight Bulb Replacement

NOTICE **Never touch glass portion of a halogen bulb with bare fingers, it shortens its operating life. If glass is touched, clean it with isopropyl alcohol which will not leave a film on the bulb.**

1. Remove cover.
2. Unplug connector.
3. Remove bulb.

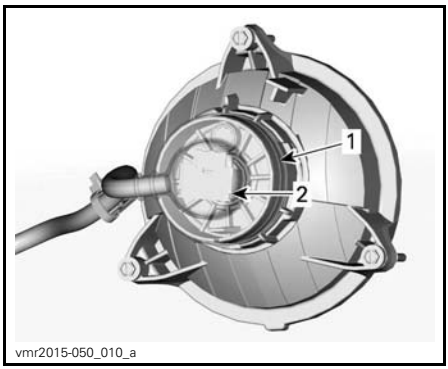

1. Cover
2. Connector

4. Properly reinstall removed parts in the reverse order of their removal.
5. Validate headlight operation.

Headlight Beam Aiming

Turn adjustment knobs to adjust beam height and side orientation to specification.

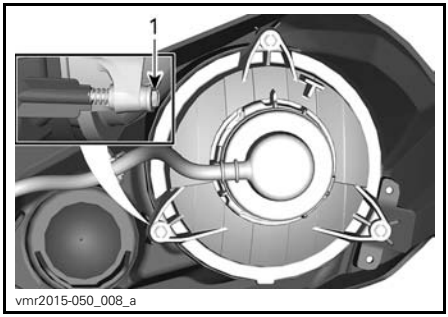

LOW BEAM
1. *Adjustment knobs*

Taillight/Brake Light Bulb Replacement

1. Unplug connector from bulb.
2. Rotate light bulb counterclockwise to remove it from taillight.

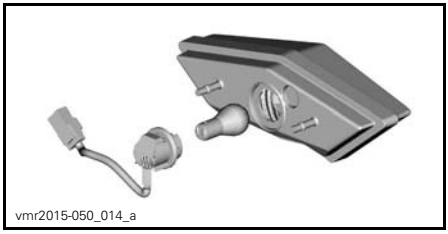

3. Remove bulb socket from taillight.

Installation is the reverse of the removal procedure.

Drive Shaft Boot and Protector

Drive Shaft Boot and Protector Inspection

Visually inspect drive shaft protectors and boots conditions.

Check protectors for damage or rubbing against shafts.

Check boots for cracks, tears, leaking grease etc.

Repair or replace damaged parts as necessary.

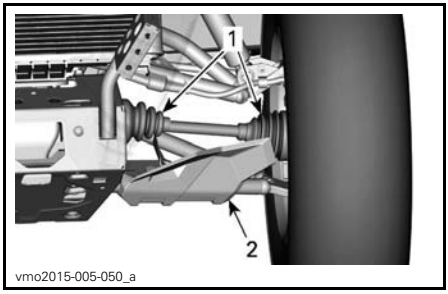

TYPICAL — FRONT OF VEHICLE
1. *Drive shaft boots*
2. *Drive shaft protector*

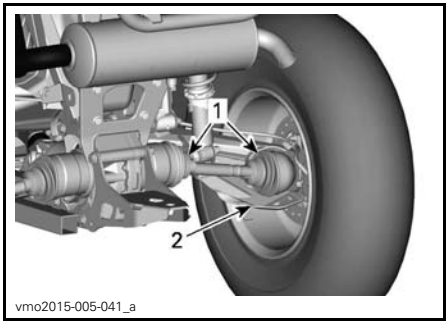

TYPICAL — REAR OF VEHICLE
1. *Drive shaft boots*
2. *Drive shaft protector*

Wheel Bearing

Wheel Bearing Inspection

Place vehicle on a level surface.

Apply the parking brake.

Lift and support vehicle.

Secure vehicle on jack stands.

Push and pull the wheels from the upper edge to feel the play.

See an authorized Can-Am dealer if there is any play.

tmo2011-001-131_a

TYPICAL

Wheels and Tires

Tire Pressure

⚠ WARNING

Tire pressure greatly affects vehicle handling and stability. Insufficient pressure may cause tire to deflate and rotate on wheel. Overpressure may burst the tire. Always follow recommended pressure. NEVER set tire pressure below minimum. It could cause the tire to dislodge from the rim. Since tires are low-pressure types, a manual pump should be used.

Check pressure when tires are **cold** before using the vehicle. Tire pressure changes with temperature and altitude. Recheck pressure if one of these conditions has changed.

For your convenience, a pressure gauge is supplied in tool kit.

Refer to *SPECIFICATIONS* for proper pressure.

Although the tires are specifically designed for off-road use, a flat may still occur. Therefore, it is recommended to carry a tire pump and a repair kit.

Tire Inspection

Check tire for damage and wear. Replace if necessary.

Do not rotate tires. The front and rear tires have a different size. The tires are directional and their rotation must be kept in a specific direction for proper operation.

While reading this Operator's Guide, remember that:

⚠ WARNING

Indicates a potential hazard that, if not avoided, could result in serious injury or death.

Tire Replacement

Tires replacement should be performed by an authorized Can-Am dealer.

⚠ WARNING

- Replace tires only with the same type and size as original tires.
- For unidirectional tread pattern, ensure that the tires are installed in the correct direction of rotation.
- Tires should be replaced, by an experienced person, in accordance with tire industry standards and tools.

Wheel Removal

Place vehicle on a level surface.

Engage 4WD mode.

Apply the parking brake.

Loosen lug nuts then lift vehicle.

Secure vehicle on jack stands.

Remove lug nuts then remove wheel.

Wheel Installation

At installation, it is recommended to apply anti-seize lubricant on threads.

If tires are unidirectional, make sure to install wheel according to tire rotation.

Carefully tighten lug nuts in a criss-cross sequence then tighten to specification.

TIGHTENING TORQUE	
Wheel lug nut	80 N•m ± 5 N•m (59 lbf•ft ± 4 lbf•ft)

NOTICE **Always use the recommended wheel lug nuts according to the type of wheel. Using a different lug nut could cause damage to the rim or studs.**

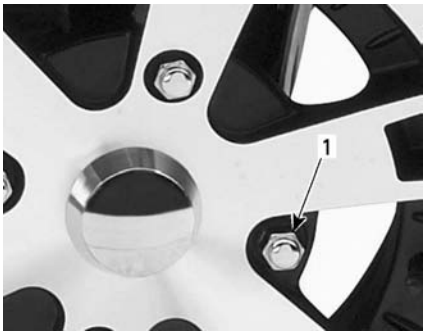

TYPICAL — ALUMINUM WHEEL
1. Wheel lug nut (closed end type)

Steering

Steering Inspection

Tie-Rod Ends

Place vehicle on a level surface.

Apply parking brake.

Lift vehicle.

Secure vehicle on jack stands.

Inspect tie-rod boots for cracks.

Push and pull the wheels from the front or rear edge to feel the play.

See an authorized Can-Am dealer if there is an abnormal play or the boot is cracked.

⚠ WARNING

The tie-rod end must be replaced if the boot is cracked or shows an abnormal play.

Suspension

Front Suspension Lubrication

Lubricate front suspension arms at grease fittings.

SUSPENSION GREASE	
Scandinavia	SYNTHETIC SUSPENSION GREASE (EUR) (P/N 779226)
All other countries	SYNTHETIC SUSPENSION GREASE (P/N 779163)

Rear Suspension Lubrication

Lubricate rear stabilizer bar links and pivot bushing at grease fittings.

SUSPENSION GREASE	
Scandinavia	SYNTHETIC SUSPENSION GREASE (EUR) (P/N 779226)
All other countries	SYNTHETIC SUSPENSION GREASE (P/N 779163)

Suspension Inspection

Shock Absorbers

Inspect shock absorber for oil leaks or other damage.

Check tightness of fasteners.

See an authorized Can-Am dealer as necessary.

Ball Joints

Place vehicle on a level surface.

Apply parking brake.

Lift vehicle.

Secure vehicle on jack stands.

Inspect ball joint boots for cracks.

Push and pull the wheels from the upper and lower edge to feel the play.

See an authorized Can-Am dealer if there is an abnormal play or the boot is cracked.

tmo2011-001-131_a

TYPICAL

⚠ WARNING

The ball joint must be replaced if the boot is cracked or it shows an abnormal play.

Front suspension Arms

Check suspension arms for cracks, bending or other damage.

See an authorized Can-Am dealer as necessary.

Rear Trailing Arms

Check trailing arms for distortion, cracks or bending.

See an authorized Can-Am dealer if any problem is detected.

Brakes

Brake Fluid Reservoir Level Verification

With vehicle on a level surface, check brake fluid in reservoirs for proper level.

NOTE: A low level may indicate leaks or worn brake pads.

Front Brake Reservoir

Turn steering in the straight-ahead position to ensure reservoir is level.

Check the brake fluid level, the reservoir is full when the fluid reaches of the top of window.

Visually inspect lever boot condition.

Check for cracks, tears, etc. Replace if damaged.

vmo2012-012-046_a

TYPICAL

Rear Brake Reservoir

Remove the seat.

With vehicle on a level surface, liquid should be between MIN. and MAX. level marks of brake pedal fluid reservoir.

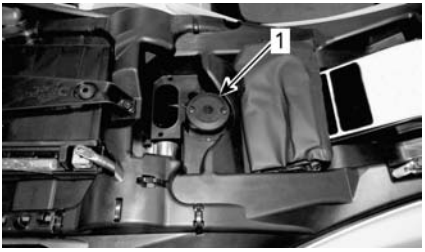

vmo2015-005-026_b

1. Rear brake fluid reservoir

Adding Brake Fluid

Clean filler cap.

⚠ WARNING

Clean filler cap before removing.

Remove screws retaining the reservoir cap.

Remove reservoir cap.

Add fluid as required using a clean funnel. **Do not overfill.**

NOTICE **Brake fluid can damage plastic and painted surface. Wipe off and clean any spillage.**

Reinstall reservoir cap and tighten screws.

NOTE: Ensure filler cap diaphragm is pushed inside the cap before closing the brake fluid reservoir.

Recommended Brake Fluid

Always use brake fluid meeting the specification DOT 4 only from a sealed container.

⚠ WARNING

To avoid damage to the braking system, do not use other brake fluid types.

Brake Inspection

⚠ CAUTION **The brakes can be very hot after prolonged use of the vehicle and can cause burns. Wait for the brakes to cool down.**

The brake inspection, maintenance and repair should be performed by an authorized Can-Am dealer.

However, verify the following between visits to your dealer:

- Brake fluid level
- Brake system for fluid leaks
- Brake cleanliness.

⚠ WARNING

The brake fluid replacement or brake system maintenance and repairs should be performed by an authorized Can-Am dealer.

Post-Operation Care

When vehicle is used in salt-water environment (beach area, launching and loading boats etc.), rinsing the vehicle with fresh water is necessary to preserve vehicle and its components. Metallic parts lubrication is highly recommended. Use anti-corrosive lubricant or an equivalent. This must be performed at the end of each operating day.

When vehicle is operated in muddy conditions, rinsing the vehicle is recommended to preserve vehicle and its components and to keep lights clean.

SERVICE PRODUCT
LUBRICANT AND ANTI-CORROSIVE (P/N 779168)

Vehicle Cleaning and Protection

NOTICE **Never use a high pressure washer to clean the vehicle. USE LOW PRESSURE ONLY (like a garden hose).**

Pay attention to certain areas where mud or debris can accumulate and potentially cause wear, interferences or promote corrosion.

Wash the vehicle with a soapy water solution.

NOTICE **Never clean polypropylene body parts with any petroleum base cleaning products, as it will alter the glossy finish.**

Non Compatible Cleaning Products

MATERIAL TYPE	NON-COMPATIBLE CLEANING PRODUCTS
Polypropylene	ANY PETROLEUM BASE CLEANING PRODUCTS
	XP-S ATV Finishing Spray (P/N 219 701 704)
	XP-S ATV Cleaning Kit (P/N 219 701 713) (it contains the above XP-S ATV Finishing Spray)

vbs2012-006-002_a

DO NOT USE ON POLYPROPYLENE

Compatible Cleaning Products

MATERIAL TYPE	COMPATIBLE CLEANING PRODUCT
Polypropylene	XPS ATV Wash (P/N 219 701 702)
	Soapy water

vbs2012-006-001

SAFE FOR POLYPROPYLENE

STORAGE AND PRESEASON PREPARATION

When a vehicle is not in use for more than (4) months, proper storage is a necessity.

When using your vehicle after storage, a preparation is required.

See an authorized Can-Am dealer, repair shop or person of your own choosing to have your vehicle prepared for either storage or the preseason.

This page is intentionally blank

TECHNICAL INFORMATION

VEHICLE IDENTIFICATION

The main components of your vehicle (engine and frame) are identified using different serial numbers. It may sometimes become necessary to locate these numbers for warranty purposes or to trace your vehicle in the event of loss. These numbers are also required by the authorized Can-Am dealer to complete warranty claims properly. We strongly recommend that you take note of all the serial numbers on your vehicle and supply them to your insurance company.

Vehicle Identification Number

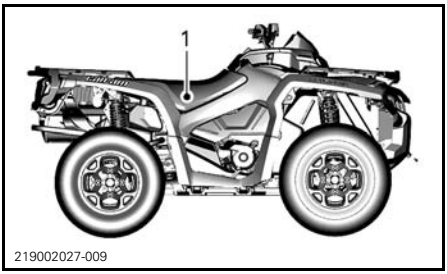

TYPICAL
1. *VIN Label - On the frame under the seat*

TYPICAL - VIN LABEL

Engine Identification Number (EIN)

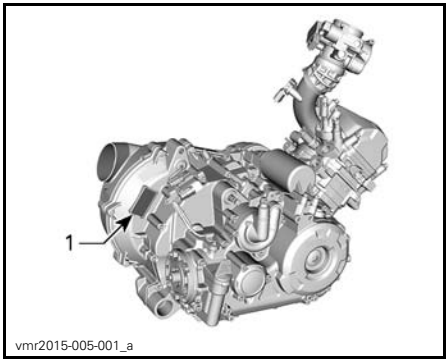

BACK OF 450 ENGINE
1. *EIN (Engine Identification Number)*

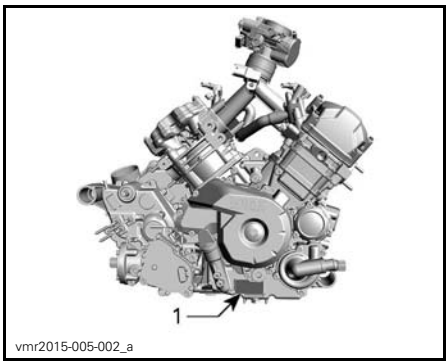

RH SIDE OF 570 ENGINE
1. *EIN (Engine Identification Number)*

Compliance Label

Regulation (EU) 2016/1628 applicable for Non-Road Mobile Machineries

Vehicles who comply to Regulation (EU) 2016/1628 (NRMM) are identified on the engine valve cover as well as on the frame under the seat.

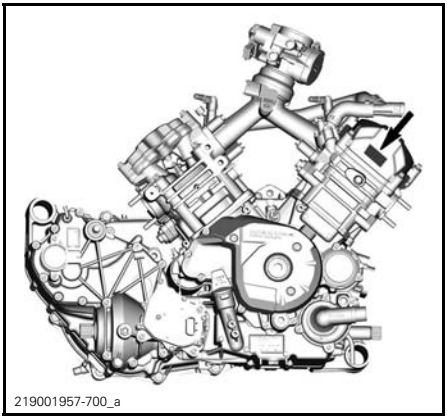

TYPICAL

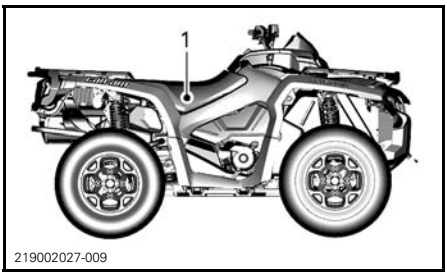

TYPICAL

1. NRMM Label - On the frame under the seat

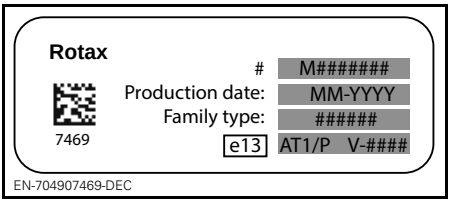

TYPICAL - NRMM IDENTIFICATION LABEL

NOISE EMISSION CONTROL SYSTEM REGULATION (CANADA/UNITED STATES)

Tampering with Noise Control System Is Prohibited!

U.S. Federal law and Canadian provincial laws may prohibit the following acts or the causing there of:

1. The removal or rendering inoperative by any person other than for purposes of maintenance, repair or replacement of any device or element of design incorporated into any new vehicle for the purpose of noise control prior to its sale or delivery to the ultimate purchaser or while it is in use or
2. The use of the vehicle after such device or element of design has been removed or rendered inoperative by any person.

Among those Acts Presumed to Constitute Tampering Are the Acts Listed Below:

1. Removal or alteration or the puncturing of the muffler or any engine component which conducts removal of engine exhaust gases.
2. Removal or alteration or the puncturing of any part of the intake system.
3. Replacing any moving parts of the vehicle or parts of the exhaust or intake system, with parts other than those specified by the manufacturer.
4. Lack of proper maintenance.

NOISE EMISSION AND VIBRATION VALUES (ALL COUNTRIES EXCEPT CANADA/UNITED STATES)

MODEL		450	570
NOISE EMISSION AND VIBRATION VALUES[1]			
Noise	Sound pressure (L_{pA})	83 dB @ 3600 RPM (Uncertainty (K_{pA}) 3dB)	81 dB @ 4000 RPM (Uncertainty (K_{WA}) 3dB)
	Sound power level (L_{WA})	95 dB @ 3600 RPM (Uncertainty (K_{WA}) 3dB)	96 dB @ 4000 RPM (Uncertainty (K_{WA}) 3dB)
Vibration	Hand-arm system	<2.5 m/s^2 @ 3600 RPM	<2.5 m/s^2 @ 4000 RPM
	Whole body at seat	<0.5 m/s^2 @ 3600 RPM	<0.5 m/s^2 @ 4000 RPM

[1]: Noise emission and Vibration values are measured in accordance with Standard EN 15997:2011 on a paved surface, at Neutral.

EC-DECLARATION OF CONFORMITY

The EC-Declaration of Conformity does not appear in this version of the Operator's Guide.

Please refer to the printed version that was delivered with your vehicle.

The EC-Declaration of Conformity does not appear in this version of the Operator's Guide.

Please refer to the printed version that was delivered with your vehicle.

EAC DECLARATION OF CONFORMITY

Left blank for Eurasian Conformity mark where applicable

SPECIFICATIONS

450 Models

ENGINE		450
Engine type		ROTAX 450, 4-stroke, Single Over Head Camshaft (SOHC), liquid cooled
Number of cylinder		1
Number of valves		4 valves (mechanical adjustment)
Valve clearance	Intake	0.06 mm to 0.14 mm (.0024 in to .0055 in)
	Exhaust	0.11 mm to 0.19 mm (.0043 in to .0075 in)
Bore		94 mm (3.7 in)
Stroke		61.5 mm (2.42 in)
Displacement		426.8 cm^3 (26.04 in^3)
Exhaust system		Spark arrester approved by USDA Forest Service Catalyst on NRMM models
Engine air filter		Synthetic paper filter with foam

LUBRICATION SYSTEM			450
Lubrication	Type		Wet sump with replaceable oil filter
	Oil filter		Replaceable cartridge
	Engine oil	Capacity (oil change with filter)	3 L (3.2 qt (U.S. liq.)) (engine/transmission)
		Recommended oil Scandinavia	4T 10W50 SYNTHETIC OIL (EUR) (P/N 779240). or 4T 5W40 SYNTHETIC BLEND OIL (EUR) (P/N 779290) or 4T 0W40 SYNTHETIC OIL (EUR) (P/N 779286)
		Recommended oil All other countries	.4T 10W50 SYNTHETIC OIL (P/N 779234) or 4T 5W40 SYNTHETIC BLEND OIL (P/N 779133) or 4T 0W40 SYNTHETIC OIL (P/N 779139)
		Alternate oil if XPS products are not available	5W40 or 10W50 motor oil that meets the requirements for API service classification SJ, SL, SM or SN

COOLING SYSTEM		450
Coolant	Type	Scandinavia: EXTENDED LIFE PRE-MIXED COOLANT (EUR) (P/N 779223) All other countries: EXTENDED LIFE PRE-MIXED COOLANT (P/N 779150) or coolant specifically designed for aluminum engines
	Capacity	2.9 L (3.1 qt (U.S. liq.))

TRANSMISSION	450
Type	CVT (Continuously Variable Transmission)
Engagement RPM	2000 RPM

GEARBOX	450
Type	Dual range (HI-LO) with park, neutral and reverse

ELECTRICAL SYSTEM		450
Magneto generator output		500 W @ 6000 RPM
Ignition system type		IDI (Inductive Discharge Ignition)
Ignition timing		Not adjustable
Spark plug	Quantity	1
	Make and type	NGK LMAR8D-J or equivalent
	Gap	0.7 mm to 0.9 mm (.028 in to .035 in)
Engine RPM limiter setting	Forward	8000 RPM
	Reverse	15 km/h (9 MPH) without Override)
Battery	Type	Maintenance free
	Voltage	12 Vdc
	Nominal rating	18 A•h
	Power starter output	0.7 KW

ELECTRICAL SYSTEM		450
Headlights	High	HS1 35 W
	Low	HS1 35 W
Taillights		P21/5W
Fuses		Refer to *FUSES* in the *MAINTENANCE* section

FUEL SYSTEM			450
Fuel delivery		Type	Electronic Fuel Injection (EFI), 46 mm throttle body, 1 injector per cylinder
Fuel pump		Type	Electrical (in fuel tank)
Idle speed			1250 RPM (not adjustable)
Fuel	Type		Regular unleaded gasoline Refer to *FUEL REQUIREMENTS*
	Minimum octane rating	Inside North America	87 (R+M)/2 or higher
		Outside North America	92 RON or higher (E10)
Fuel tank capacity			20.5 L (5.4 U.S. gal.)
Fuel remaining when low fuel light turns ON			± 5 L (1.3 U.S. gal.)

DRIVE SYSTEM			450
Drive system type			Selectable 2WD/4WD
Front differential oil/ rear final drive oil	Capacity	Front	500 ml (17 U.S. oz)
		Rear	250 ml (8.5 U.S. oz)
	Type	Front	Scandinavia:75W90 SYNTHETIC GEAR OIL (EUR) (P/N 779212) All other countries: 75W90 SYNTHETIC GEAR OIL (P/N 779158) or synthetic gear oil 75W90 API GL-5
		Rear	Scandinavia: 75W140 SYNTHETIC GEAR OIL (EUR) (P/N 779215) All other countries: 75W140 SYNTHETIC GEAR OIL (P/N 779160) or synthetic gear oil 75W140 API GL-5
Front drive		Base	Straight gear Visco-Lok† auto-locking front differential
		All models except Base	Straight gear Visco-lok† QE auto-locking front differential
Front drive ratio			3.6:1
Rear drive			Bevel Straight gear / final drive
Rear drive ratio			3.6:1
CV joint grease			CV JOINT GREASE (P/N 293 550 062) or an equivalent
Propeller shaft grease			PROPELLER SHAFT GREASE (P/N 293 550 063) or an equivalent

STEERING	450
Camber angle (vehicle on ground)	0°

FRONT SUSPENSION	450
Suspension type	Double A-arm with dive-control geometry
Suspension travel	229 mm (9 in)

FRONT SUSPENSION		450
Shock absorber	Quantity	2
	Type	Oil
Preload adjustment type		5 positions cam

REAR SUSPENSION		450
Suspension type		Trailing arm Independent (TTI) with external stabilizer bar
Suspension travel		22.4 cm (8.8 in)
Shock absorber	Quantity	2
	Type	Oil
Preload adjustment type		5 positions cam

BRAKES		450
Front brakes	Type	Dual 214 mm cross drilled disc brakes with hydraulic twin-piston calipers
Rear brake	Type	Single 214 mm cross drilled disc brake with hydraulic twin-piston caliper
Brake fluid	Capacity	260 ml (8.8 U.S. oz)
	Type	DOT 4
Caliper		Floating twin pistons (2 x 26 mm)
Brake pad material		Organic (Metallic on PRO Int and PRO NRMM)
Minimum brake pad thickness		1 mm (.039 in)
Minimum brake disc thickness		4.0 mm (.157 in)
Maximum brake disc warpage		0.2 mm (.008 in)

TIRES			450
Pressure	Front	1-UP	48.3 kPa (7 PSI)
		2-UP	48.3 kPa (7 PSI)
	Rear	1-UP	48.3 kPa (7 PSI)
		2-UP	48.3 kPa (7 PSI)
Minimum tire thread depth			3 mm (.118 in)

TIRES			450
Tire size	Standard DPS	Front	635 x 203 x 305 mm (25 x 8 x 12 in)
		Rear	635 x 254 x 305 mm (25 x 10 x 12 in)
	Pro Mossy Oak	Front	660 x 203 x 305 mm (26 x 8 x 12 in)
		Rear	660 x 254 x 305 mm (26 x 10 x 12 in)

WHEELS		450
Type	Base, DPS and PRO	Steel
	All except base, DPS and PRO models	Cast Aluminum
Rim size	Front	305 x 152 mm (12 x 6 in)
	Rear	305 x 191 mm (12 x 7.5 in)
Wheel lug nut torque		80 N•m ± 5 N•m (59 lbf•ft ± 4 lbf•ft)

DIMENSIONS		450
Overall length	1-UP	211 cm (83 in)
	2-UP	231 cm (91 in)
Overall width		116.8 cm (46 in)
Overall height	1-UP	124 cm (49 in)
	2-UP	133 cm (52.5 in)
Wheelbase	1-UP	129.5 cm (51 in)
	2-UP	149.9 cm (59 in)
Wheel track	Front	97.4 cm (38.3 in)
	Rear	94.3 cm (37.1 in)
Ground clearance	All models except Pro	26.7 cm (10.5 in)
	Pro	29.2 cm (11.5 in)

LOADING CAPACITY AND WEIGHT		450
Dry weight	1-UP	308 kg (678 lb)
	2-UP	324 kg (715 lb)
Front rack capacity		54 kg (120 lb)
Rear rack capacity		109 kg (240 lb)

LOADING CAPACITY AND WEIGHT		450
Rear storage compartment loading capacity		10 kg (22 lb)
Total vehicle load allowed (including driver, all other loads and added accessories)	1-UP	235 kg (517 lb)
	2-UP and Mossy Oak	272 kg (598 lb)
Towing capacity (Canada and United States)		750 kg (1,654 lb)
Towing capacity (All other countries)		590 kg (1,300 lb)
Tongue capacity (Canada and United States)		75 kg (165 lb)
Tongue capacity (All other countries)		23 kg (50 lb)

570 Models (Except NRMM Models)

ENGINE		570
Engine type		ROTAX® 570, 4-stroke, 2 cylinders (V-twin), liquid cooled
Valve train		4 valves/cylinder (mechanical adjustment), single over head camshaft (SOHC) with timing chain
Valve clearance	Intake	0.06 mm to 0.14 mm (.0024 in to .0055 in)
	Exhaust	0.11 mm to 0.19 mm (.0043 in to .0075 in)
Bore		84 mm (3.31 in)
Stroke		51.4 mm (2.02 in)
Displacement		570 cm^3 (34.8 in^3)
Exhaust system		Spark arrestor approved by USDA Forest Service
Air filter		Synthetic paper filter with foam

570 Models (NRMM Models)

ENGINE		570
Engine type		ROTAX® 570, 4-stroke, 2 cylinders (V-twin), liquid cooled
Valve train		4 valves/cylinder (mechanical adjustment), single over head camshaft (SOHC) with timing chain
Valve clearance	Intake	0.06 mm to 0.14 mm (.0024 in to .0055 in)
	Exhaust	0.11 mm to 0.19 mm (.0043 in to .0075 in)
Bore		82 mm (3.23 in)
Stroke		61.5 mm (2.42 in)
Displacement		650 cm^3 (39.7 in^3)
Exhaust system		Catalyst and spark arrestor approved by USDA Forest Service
Air filter		Synthetic paper filter with foam

LUBRICATION SYSTEM		570
Type		Wet sump. Replaceable cartridge oil filter
Oil filter		Replaceable cartridge
Engine oil	Capacity (oil change with filter)	2.0 L (2.1 qt (U.S. liq.))
	Recommended oil Scandinavia	4T 10W50 SYNTHETIC OIL (EUR) (P/N 779240) or 4T 5W40 SYNTHETIC BLEND OIL (EUR) (P/N 779290) or 4T 0W40 SYNTHETIC OIL (EUR) (P/N 779286)
	Recommended oil All other countries	4T 10W50 SYNTHETIC OIL (P/N 779234) or 4T 5W40 SYNTHETIC BLEND OIL (P/N 779133) or 4T 0W40 SYNTHETIC OIL (P/N 779139)
	Alternate oil if XPS products are not available	5W40 or 10W50 motor oil that meets the requirements for API service classification SJ, SL, SM or SN

COOLING SYSTEM		570
Coolant	Type	Scandinavia: EXTENDED LIFE PRE-MIXED COOLANT (EUR) (P/N 779223) All other countries: EXTENDED LIFE PRE-MIXED COOLANT (EUR) (P/N 779223) or coolant specifically designed for aluminum engines
	Capacity	3.4 L (.9 U.S. gal.)

TRANSMISSION	570
Type	CVT (Continuously Variable Transmission)
Engagement RPM	1800 RPM

GEARBOX		570
Type		Dual range (HI-LO) with park, neutral and reverse
Gearbox oil	Capacity	450 ml (15.2 U.S. oz)
	Recommended	Scandinavia: 75W140 SYNTHETIC GEAR OIL (EUR) (P/N 779215) All other countries: 75W140 SYNTHETIC GEAR OIL (P/N 779160) 75W140 SYNTHETIC GEAR OIL (P/N 779160) or a 75W140 API GL-5 synthetic gear oil

ELECTRICAL SYSTEM		570
Magneto generator output		500 W @ 6000 RPM
Ignition system type		IDI (Inductive Discharge Ignition)
Ignition timing		Not adjustable
Spark plug	Quantity	2
	Make and type	NGK DCPR8E or equivalent
	Gap	0.7 mm to 0.8 mm (.028 in to .031 in)
Engine RPM limiter setting	Forward	8000 RPM
	Reverse	15 km/h (9 MPH) without Override)
Battery	Type	Maintenance free
	Voltage	12 Vdc
	Nominal rating	18 A•h
	Power starter output	0.7 KW
Headlights	High	HS1 35 W
	Low	HS1 35 W
Taillights		P21/5W
Fuses		Refer to *FUSES* in the *MAINTENANCE* section

FUEL SYSTEM			570
Fuel delivery		Type	Electronic Fuel Injection (EFI), 46 mm throttle body, 1 injector per cylinder
Fuel pump		Type	Electrical (in fuel tank)
Idle speed			1400 RPM (not adjustable)
Fuel	Type		Regular unleaded gasoline Refer to *FUEL REQUIREMENTS*
	Minimum octane rating	Inside North America	87 (R+M)/2 or higher
		Outside North America	92 RON or higher
Fuel tank capacity			20.5 L (5.4 U.S. gal.)
Fuel remaining when low fuel light turns ON			± 5 L (1.3 U.S. gal.)

DRIVE SYSTEM			570
Drive system type			Selectable 2WD/4WD
Front differential oil/ rear final drive oil	Capacity	Front	500 ml (17 U.S. oz)
		Rear	250 ml (8.5 U.S. oz)
	Type	Front	Scandinavia:75W90 SYNTHETIC GEAR OIL (EUR) (P/N 779212) All other countries: 75W90 SYNTHETIC GEAR OIL (P/N 779158) OR synthetic oil 75W 90 API GL5)
		Rear	Scandinavia: 75W140 SYNTHETIC GEAR OIL (EUR) (P/N 779215) All other countries: 75W140 SYNTHETIC GEAR OIL (P/N 779160) or a 75W140 API GL-5 synthetic gear oil
Front drive		Base	Straight gear Visco-Lok† auto-locking front differential
		All models except Base	Straight gear Visco-lok† QE auto-locking front differential
Front drive ratio			3.6:1

DRIVE SYSTEM		570
Rear drive		Bevel straight gear / final drive
Rear drive ratio		3.6:1
CV joint grease		CV JOINT GREASE (P/N 293 550 062) or an equivalent
Propeller shaft grease		PROPELLER SHAFT GREASE (P/N 293 550 063) or an equivalent

STEERING		570
Camber angle (vehicle on ground)		0°

FRONT SUSPENSION		570
Suspension type		Double A-arm with dive-control geometry
Suspension travel		229 mm (9 in)
Shock absorber	Quantity	2
	Type	Oil
Preload adjustment type		5 positions cam

REAR SUSPENSION		570
Suspension type		Trailing arm Independent (TTI) with external stabilizer bar
Suspension travel		22.4 cm (8.8 in)
Shock absorber	Quantity	2
	Type	Oil
Preload adjustment type		5 positions cam

BRAKES		570
Front brakes	Type	Dual 214 mm cross drilled disc brakes with hydraulic twin-piston calipers
Rear brake	Type	Single 214 mm cross drilled disc brake with hydraulic twin-piston caliper
Brake fluid	Capacity	260 ml (8.8 U.S. oz)
	Type	DOT 4
Caliper		Floating twin pistons (2 x 26 mm)

BRAKES	570
Brake pad material	Organic (Metallic on PRO Int and PRO NRMM)
Minimum brake pad thickness	1 mm (.039 in)
Minimum brake disc thickness	4.0 mm (.157 in)
Maximum brake disc warpage	0.2 mm (.008 in)

TIRES			570
Pressure	Front	1-UP	48.3 kPa (7 PSI)
		2-UP	48.3 kPa (7 PSI)
	Rear	1-UP	48.3 kPa (7 PSI)
		2-UP	48.3 kPa (7 PSI)
Minimum tire thread depth			3 mm (.118 in)
Tire size	Base DPS XT	Front	635 x 203 x 305 mm (25 x 8 x 12 in)
		Rear	635 x 254 x 305 mm (25 x 10 x 12 in)
	Mossy Oak† Hunting Edition Pro	Front	660 x 203 x 305 mm (26 x 8 x 12 in)
		Rear	660 x 254 x 305 mm (26 x 10 x 12 in)

WHEELS		570
Type	Base, DPS and PRO	Steel
	All except base, DPS and PRO models	Cast Aluminum
Rim size	Front	305 x 152 mm (12 x 6 in)
	Rear	305 x 191 mm (12 x 7.5 in)
Wheel lug nut torque		80 N•m ± 5 N•m (59 lbf•ft ± 4 lbf•ft)

DIMENSIONS		570
Overall length	1-UP	211 cm (83 in)
	2-UP	231 cm (91 in)
Overall width		116.8 cm (46 in)
Overall height	1-UP	124 cm (49 in)
	2-UP	133 cm (52.5 in)

DIMENSIONS		570
Wheelbase	1-UP	129.5 cm (51 in)
	2-UP	149.9 cm (59 in)
Wheel track	Front	97.4 cm (38 in)
	Rear	92.3 cm (36 in)
Ground clearance	All models except Mossy Oak Hunting Edition and Pro	26.7 cm (10.5 in)
	Mossy Oak Hunting Edition Pro	29.2 cm (11.5 in)

LOADING CAPACITY AND WEIGHT		570
Dry weight	1-UP	319 kg (704 lb)
	2-UP	336 kg (741 lb)
Front rack capacity		54 kg (120 lb)
Rear rack capacity		109 kg (240 lb)
Rear storage compartment loading capacity		10 kg (22 lb)
Total vehicle load allowed (including driver, all other loads and added accessories)	1-UP	235 kg (517 lb)
	2-UP and Mossy Oak	272 kg (598 lb)
Towing capacity (Canada and United States)		750 kg (1,654 lb)
Towing capacity (All other countries)		590 kg (1,300 lb)
Tongue capacity (Canada and United States)		75 kg (165 lb)
Tongue capacity (All other countries)		23 kg (50 lb)

TROUBLESHOOTING

TROUBLESHOOTING GUIDELINES

ENGINE DOES NOT TURN

1. Ignition switch is in the OFF position.
   – *Place switch to the ON position.*
2. Engine stop switch.
   – *Make sure that engine stop switch is in ON position.*
3. Gearbox is not set on PARK or NEUTRAL.
   – *Set gearbox either in PARK or in NEUTRAL or press the brake lever.*
4. Burnt fuse.
   – *Check main, ignition or ECM fuse condition.*
5. Weak battery or loose connections.
   – *Check charging system.*
   – *Check connections and terminals condition.*
   – *Have the battery checked.*
   – *Contact an authorized Can-Am dealer.*
6. Weak starter or loose connections.
   – *Check starter connections.*
   – *Check starter relay.*

ENGINE TURNS OVER BUT FAILS TO START

1. Flooded engine (spark plug wet when removed).
   – *(Drowned mode) If the engine does not start and it is fuel-flooded, this special mode can be activated to prevent fuel injection and to cut ignition while cranking. Proceed as follows:*
   • Insert key in ignition switch and turn to ON position.
   • Move shift lever in park position.
   • Press completely and HOLD throttle lever.
   • Press the engine START button.
   The engine should be cranked for 20 seconds. Release engine START button.
   Release throttle lever and start/crank engine again to allow starting.
   If it does not work:
   • Clean the spark plug caps area then remove them.
   • Remove the spark plugs.
   • Unplug injector electrical connector.
   • Crank engine several times.
   • Install new spark plugs if possible or clean and dry spark plugs.
   • Start engine as explained above.
   If engine continues to flood, seek service from an authorized Can-Am dealer, repair shop or person of your own choosing for maintenance, repair or replacement. Please refer to the US EPA Emissions-related warranty contained herein for information about warranty claims.
   NOTE: *Make sure to verify that there is no fuel in engine oil, if so, replace engine oil.*

ENGINE TURNS OVER BUT FAILS TO START (cont'd)

2. No fuel to the engine (spark plug dry when removed).
   - *Check fuel tank level.*
   - *A failure of the fuel pump may have occurred.*
   - *Check fuel pump fuse and relay.*
   - *Seek service from an authorized Can-Am dealer, repair shop or person of your own choosing for maintenance, repair or replacement. Please refer to the US EPA Emissions-related warranty contained herein for information about warranty claims.*
3. Spark plug/ignition (no spark).
   - *Remove spark plug then reconnect to ignition coil.*
   - *Start engine with spark plug grounded to the engine away from spark plug hole. If no spark appears, replace spark plug.*
   - *If trouble persists, seek service from an authorized Can-Am dealer, repair shop or person of your own choosing for maintenance, repair or replacement. Please refer to the US EPA Emissions-related warranty contained herein for information about warranty claims.*
4. Multifunction gauge CHECK ENGINE indicator lamp is on and display shows CHECK ENGINE.
   - *Seek service from an authorized Can-Am dealer, repair shop or person of your own choosing for maintenance, repair or replacement. Please refer to the US EPA Emissions-related warranty contained herein for information about warranty claims.*
5. Engine is under a protection (limp home) mode.
   - *Multifunction gauge CHECK ENGINE indicator lamp is on and display shows CHECK ENGINE, seek service from an authorized Can-Am dealer, repair shop or person of your own choosing for maintenance, repair or replacement. Please refer to the US EPA Emissions-related warranty contained herein for information about warranty claims.*

ENGINE LACKS ACCELERATION OR POWER

1. Fouled or defective spark plug.
   - *Refer to ENGINE TURNS OVER BUT FAILS TO START.*
2. Lack of fuel to engine.
   - *Refer to ENGINE TURNS OVER BUT FAILS TO START.*
3. Engine is overheating. (CHECK ENGINE indicator light will turn on and HI TEMP will appear in the multifunction display.)
   - *Refer to ENGINE OVERHEATS.*
4. Air filter/housing clogged or dirty.
   - *Check air filter and clean if necessary.*
   - *Check deposits in air filter housing drain.*
   - *Check the position of the air intake tube.*
5. CVT dirty or worn-out.
   - *Contact an authorized Can-Am dealer.*

ENGINE LACKS ACCELERATION OR POWER (cont'd)

6. Engine is under a protection (limp home) mode.
   - *Check multifunction gauge display for messages.*
   - *Multifunction gauge CHECK ENGINE indicator lamp is on and display shows CHECK ENGINE or LIMP HOME, seek service from an authorized Can-Am dealer, repair shop or person of your own choosing for maintenance, repair or replacement. Please refer to the US EPA Emissions-related warranty contained herein for information about warranty claims.*

ENGINE OVERHEATS

1. Low coolant in cooling system.
   - *Check engine coolant, refer to ENGINE COOLANT in MAINTENANCE PROCEDURES.*
2. Dirty radiator fins.
   - *Clean radiator fins, refer to RADIATOR in MAINTENANCE PROCEDURES section.*
3. Cooling fan inoperative.
   - *Check cooling fan fuse or relay, refer to MAINTENANCE PROCEDURES section. If the fuse is good, seek service from an authorized Can-Am dealer, repair shop or person of your own choosing for maintenance, repair or replacement. Please refer to the US EPA Emissions-related warranty contained herein for information about warranty claims.*

ENGINE BACKFIRE

1. Exhaust system leakage.
   - *Seek service from an authorized Can-Am dealer, repair shop or person of your own choosing for maintenance, repair or replacement. Please refer to the US EPA Emissions-related warranty contained herein for information about warranty claims.*
2. Engine is running too hot.
   - *Refer to ENGINE LACKS ACCELERATION OR POWER.*
3. Ignition timing is incorrect or there is an ignition system failure.
   - *Seek service from an authorized Can-Am dealer, repair shop or person of your own choosing for maintenance, repair or replacement. Please refer to the US EPA Emissions-related warranty contained herein for information about warranty claims.*

ENGINE MISFIRE

1. Fouled/defective/worn spark plug.
   - *Clean/verify spark plug and heat range. Replace as required.*
2. Water in fuel.
   - *Drain fuel system and refill with fresh fuel.*

VEHICLE CANNOT REACH FULL SPEED

1. Engine.
   - *Refer to ENGINE LACKS ACCELERATION OR POWER.*

VEHICLE CANNOT REACH FULL SPEED (cont'd)

2. Parking Brake.
   – *Ensure parking brake is completely removed.*
3. Air filter/housing plugged or dirty.
   – *Check air filter and clean if necessary.*
   – *Check deposits in air filter housing drain.*
   – *Check the position of the air intake tube.*
4. CVT dirty or worn-out.
   – *Contact an authorized Can-Am dealer.*
5. Engine is under a protection (limp home) mode.
   – *Check multifunction gauge display for messages.*
   – *Multifunction gauge CHECK ENGINE indicator lamp is on and display shows CHECK ENGINE or LIMP HOME, seek service from an authorized Can-Am dealer, repair shop or person of your own choosing for maintenance, repair or replacement. Please refer to the US EPA Emissions-related warranty contained herein for information about warranty claims.*

SHIFT LEVER IS HARD TO MOVE

1. Gearbox gears are in a position that prevents the shift lever to work.
   – *Rock the vehicle back and forth to move the gears in the gearbox and allow the shift lever to be set.*
2. CVT dirty or worn-out.
   – *Contact an authorized Can-Am dealer.*

THE RPM INCREASES BUT THE VEHICLE DOES NOT MOVE

1. The gearbox is on PARK or NEUTRAL position.
   – *Select the R, HI or LO position.*
2. CVT dirty or worn-out.
   – *Contact an authorized Can-Am dealer.*
3. Water in the CVT housing.
   – *Contact an authorized Can-Am dealer.*

REDUCED POWER STEERING ASSIST

1. When DPS is subjected to sustained severe steering conditions, the assistance provided by the DPS motor may be reduced to protect the system.
   – *Once the load is reduced, the normal steering assistance will return.*
2. CHECK ENGINE INDICATOR LAMP is ON and display shows CHECK DPS
   – *Seek service from an authorized Can-Am dealer, repair shop or person of your own choosing for maintenance, repair or replacement.*

MULTIFUNCTION GAUGE MESSAGES

MESSAGE	PILOT LAMP(S) ON	DESCRIPTION
BRAKE	None	Displayed when brake is applied for more than 15 seconds (while riding).
LO BATT VOLT	Check engine	Low battery voltage, check battery voltage and charging system.
HIGH BATT VOLT	Check engine	High battery voltage, check battery voltage and charging system.
LOW OIL (1)	Check engine	Engine low oil pressure, stop engine immediately.
HI TEMP	Check engine	Engine is overheating, refer to *ENGINE OVERHEATS* in *TROUBLESHOOTING* section.
LIMP HOME	Check engine	Serious fault on the engine that can change the normal operation of the engine, CHECK ENGINE indicator lamp will also blink, refer to *TROUBLESHOOTING* section.
CHECK ENGINE	Check engine	Engine fault, CHECK ENGINE indicator lamp will also be ON, refer to *TROUBLESHOOTING* section.
ECM NOT RECOGNIZED	Check engine	Communication error between speedometer and engine control module (ECM).
CHECK DPS (models with DPS)	Check engine	Indicates that the DPS (Dynamic Power Steering) does not work properly. See an authorized Can-Am dealer.
MAINTENANCE REQUIRED (2)	None	Displayed in gauge when vehicle is due for a maintenance.
TPS FAULT PRESS OVERRIDE BUTTON TO LIMP HOME	Check engine	Throttle position sensor does not work properly. Seek service from an authorized Can-Am dealer, repair shop or person of your own choosing for maintenance, repair or replacement. Please refer to the US EPA Emissions-related warranty contained herein for information about warranty claims.

NOTICE (1) **If the message and the check engine light stay on after engine starting, stop engine. Check engine oil level. Refill if necessary. If the oil level is good, seek service from an authorized Can-Am dealer, repair shop or person of your own choosing for maintenance, repair or replacement. Please refer to the US EPA Emissions-related warranty contained herein for information about warranty claims. . Do not use the vehicle until repaired.**

(2) To erase the MAINTENANCE REQUIRED message, proceed as follows:

1. From main display (vehicle speed), press SET and HOLD.
2. Alternate between LOW beam and HIGH beam 3 times.

NOTE: Step 2 must be completed within **2 seconds**.

3. Release SET button.

WARRANTY

BRP LIMITED WARRANTY USA AND CANADA: 2020 CAN-AM® ATV

SCOPE OF THE LIMITED WARRANTY

Bombardier Recreational Products Inc. ("BRP")* warrants its 2020 Can-Am ATV sold by authorized Can-Am ATV dealers (as hereinafter defined) in the United States of America ("USA") and in Canada from defects in material or workmanship for the period and under the conditions described below. This limited warranty will become null and void if: (1) the ATV was used for racing or any other competitive activity, at any point, even by a previous owner; or (2) the ATV has been altered or modified in such a way so as to adversely affect its operation, performance or durability, or has been altered or modified to change its intended use.

Non-factory installed parts and accessories are not covered under this limited warranty. Please refer to the applicable parts and accessories limited warranty text.

LIMITATIONS OF LIABILITY

THIS WARRANTY IS EXPRESSLY GIVEN AND ACCEPTED IN LIEU OF ANY AND ALL OTHER WARRANTIES, EXPRESSED OR IMPLIED, INCLUDING WITHOUT LIMITATION ANY WARRANTY OF MERCHANTABILITY OR FITNESS FOR A PARTICULAR PURPOSE TO THE EXTENT THAT THEY CANNOT BE DISCLAIMED, THE IMPLIED WARRANTIES ARE LIMITED IN DURATION TO THE LIFE OF THE EXPRESS WARRANTY. INCIDENTAL AND CONSEQUENTIAL DAMAGES ARE EXCLUDED FROM COVERAGE UNDER THIS WARRANTY SOME STATES/PROVINCES DO NOT ALLOW FOR THE DISCLAIMERS, LIMITATIONS AND EXCLUSIONS IDENTIFIED ABOVE, AS A RESULT, THEY MAY NOT APPLY TO YOU. THIS WARRANTY GIVES YOU SPECIFIC RIGHTS, AND YOU MAY ALSO HAVE OTHER LEGAL RIGHTS WHICH MAY VARY FROM STATE TO STATE, OR PROVINCE TO PROVINCE.

Neither the distributor, any BRP dealer nor any other person has been authorized to make any affirmation, representation or warranty regarding the product, other than those contained in this limited warranty, and if made, shall not be enforceable against BRP. BRP reserves the right to modify this limited warranty at any time, being understood that such modification will not alter the warranty conditions applicable to the products sold while this warranty is in effect.

EXCLUSIONS – ARE NOT WARRANTED

The following are not warranted under any circumstances:

- Normal wear and tear;
- Routine maintenance items, tune ups, adjustments;
- Damage caused by failure to provide proper maintenance and/or storage, as described in the Operator's Guide;
- Damage resulting from removal of parts, improper repairs, service, maintenance, modifications or use of parts not manufactured or approved by BRP or resulting from repairs done by a person that is not an authorized servicing Can-Am ATV dealer;
- Damage caused by abuse, abnormal use, neglect or operation of the product in a manner inconsistent with the recommended operation described in the Can-Am ATV Operator’s Guide;
- Damage resulting from accident, submersion, fire, theft, vandalism or any act of God;

– Operation with fuels, oils or lubricants which are not suitable for use with the product (see the Operator's Guide);
– Damages from rust, corrosion or exposure to the elements;
– Damage resulting from water or snow ingestion;
– Incidental or consequential damages, or damages of any kind including without limitation towing, storage, telephone, rental, taxi, inconvenience, insurance coverage, loan payments, loss of time, loss of income.

WARRANTY COVERAGE PERIOD

This limited warranty will be in effect from (1) the date of delivery to the first retail consumer or (2) the date the product is first put into use, whichever occurs first and for the applicable period below:

SIX (6) CONSECUTIVE MONTHS, for private use or commercial use owners. For emission-related components; please also refer to the *US EPA EMISSION-RELATED WARRANTY* contained herein.

The repair or replacement of parts or the performance of service under this warranty does not extend the life of this warranty beyond its original expiration date.

CONDITIONS TO HAVE WARRANTY COVERAGE

This warranty coverage is available **only** if **each** of the following conditions has been fulfilled:
– The 2020 Can-Am ATV must be purchased as new and unused by its first owner from a Can-Am ATV dealer authorized to distribute Can-Am ATVs in the country in which the sale occurred ("Can-Am ATV dealer");
– The BRP specified pre-delivery inspection process must be completed and documented and signed by the purchaser;
– The 2020 Can-Am ATV must have undergone proper registration by an authorized Can-Am ATV dealer;
– The 2020 Can-Am ATV must be purchased in the country in which the purchaser resides;
– Routine maintenance outlined in the Operator's Guide must be timely performed in order to maintain warranty coverage. BRP reserves the right to make warranty coverage contingent upon proof of proper maintenance.

BRP will not honor this limited warranty to any private use owner or commercial use owner if one of the preceding conditions has not been met. Such limitations are necessary in order to allow BRP to preserve both the safety of its products, and also that of its consumers and the general public.

WHAT TO DO TO OBTAIN WARRANTY COVERAGE

The customer must cease using the Can-Am ATV upon the appearance of an anomaly. The customer must notify a servicing BRP dealer within three (3) days of the appearance of a defect, and provide it with reasonable access to the product and reasonable opportunity to repair it. The customer must also present to the authorized BRP dealer, proof of purchase of the product and must sign the repair/work order prior to starting the repair in order to validate the warranty repair. All parts replaced under this limited warranty become the property of BRP.

WHAT BRP WILL DO

BRP's obligations under this warranty are limited to, at its sole discretion, repairing parts found defective under normal use, maintenance and service, or replacing such parts with new genuine Can-Am ATV parts without charge for parts and labor, at any authorized BRP dealer during the warranty coverage period under the conditions described herein. No claim of breach of warranty shall be cause for cancellation or rescission of the sale of the Can-Am ATV to the owner.

In the event that service is required outside of the country of original sale, the owner will bear responsibility for any additional charges due to local practices and conditions, such as, but not limited to, freight, insurance, taxes, license fees, import duties, and any and all other financial charges, including those levied by governments, states, territories and their respective agencies.

BRP reserves the right to improve or modify products from time to time without assuming any obligation to modify products previously manufactured.

ADDITIONAL SUPPLIER WARRANTIES

A GPS receiver may be supplied by BRP as standard equipment on certain 2020 Can-Am ATV's. The GPS receiver is covered under BRP's limited warranty policy. Additional warranty coverage if offered by the GPS receiver "supplier" that is longer than BRP's limited warranty is to be dealt by the dealer or consumer directly with the GPS receiver "supplier".

TRANSFER

If the ownership of a product is transferred during the warranty coverage period, this limited warranty, subject to its terms and conditions, shall also be transferred and be valid for the remaining coverage period provided BRP or an authorized Can-Am ATV Distributor/Dealer receives a proof that the former owner agreed to the transfer of ownership, in addition to the co-ordinates of the new owner.

CONSUMER ASSISTANCE

In the event of a controversy or a dispute in connection with this limited warranty, BRP suggests that you try to resolve the issue at the dealership level. We recommend discussing the issue with the authorized dealer's service manager or owner.

If the matter still remains unresolved, contact BRP by filling out the customer contact form at www.brp.com or contact BRP by mail at one of the addresses listed under the *CONTACT US* section of this guide.

* In the USA, products are distributed and serviced by BRP US Inc.

© 2019 Bombardier Recreational Products Inc. All rights reserved.
™ trademark of Bombardier Recreational Products Inc. or its affiliates.
® Registered trademark of Bombardier Recreational Products Inc.

US EPA EMISSION-RELATED WARRANTY

Bombardier Recreational Products Inc. (“BRP”)* warrants to the ultimate purchaser and each subsequent purchaser that this new vehicle, including all parts of its exhaust emission control system and its evaporative emission control system, meets two conditions:

1. It is designed, built, and equipped so it conforms at the time of sale to the ultimate purchaser with the requirements of 40 CFR 1051 and 40 CFR 1060.
2. It is free from defects in materials and workmanship that may keep it from meeting the requirements of 40 CFR 1051 and 40 CFR 1060.

Where a warrantable condition exists, BRP will repair or replace, as it elects, any part or component with a defect in materials or workmanship that would increase the engine’s emissions of any regulated pollutant within the stated warranty period at no cost to the owner, including expenses related to diagnosing and repairing or replacing emission-related parts. All defective parts replaced under this warranty become the property of BRP.

For all emission-related warranty claims, BRP is limiting the diagnosis and repair of emission-related parts to the authorized Can-Am dealers, unless for emergency repairs as required by item 2 of the following list.

As a certifying manufacturer, BRP will not deny emission-related warranty claims based on any of the following:

1. Maintenance or other service BRP or BRP's authorized facilities performed.
2. Engine/equipment repair work that an operator performed to correct an unsafe, emergency condition attributable to BRP as long as the operator tries to restore the engine/equipment to its proper configuration as soon as possible.
3. Any action or inaction by the operator unrelated to the warranty claim.
4. Maintenance that was performed more frequently than BRP specify.
5. Anything that is BRP fault or responsibility.
6. The use of any fuel that is commonly available where the equipment operates unless BRP written maintenance instructions state that this fuel would harm the equipment’s emission control system and operators can readily find the proper fuel. See maintenance information section and fuel requirements of fueling section.

Emission-Related Warranty Period

The emission-related warranty is valid for the following period whichever comes first:

	HOURS	MONTHS	KILOMETERS
Exhaust emission-related components	500	30	5000
Evaporative emission-related components	N/A	24	N/A

Components Covered

The emission-related warranty covers all components whose failure would increase an engine's emissions of any regulated pollutant, including the following listed components:

1. For exhaust emissions, emission-related components include any engine parts related to the following systems:
   - Air-induction system
   - Fuel system
   - Ignition system
   - Exhaust gas recirculation systems
2. The following parts are also considered emission-related components for exhaust emissions:
   - Aftertreatment devices
   - Crankcase ventilation valves
   - Sensors
   - Electronic control units
3. The following parts are considered emission-related components for evaporative emissions:
   - Fuel tank
   - Fuel cap
   - Fuel line
   - Fuel line fittings
   - Clamps*
   - Pressure relief valves*
   - Control valves*
   - Control solenoids*
   - Electronic controls*
   - Vacuum control diaphragms*
   - Control cables*
   - Control linkages*
   - Purge valves
   - Vapor hoses
   - Liquid/vapor separator
   - Carbon canister
   - Canister mounting brackets
   - Carburetor purge port connector
4. Emission-related components also include any other part whose only purpose is to reduce emissions or whose failure will increase emissions without significantly degrading engine/equipment performance.

*As related to the evaporative emission control system

Limited Applicability

As a certifying manufacturer, BRP may deny emission-related warranty claims for failures that have been caused by the owner's or operator's improper maintenance or use, by accidents for which the manufacturer has no responsibility, or by acts of God. For example, an emission-related warranty claim need not be honored for failures that have been directly caused by the operator's abuse of the engine/equipment or the operator's use of the engine/equipment in a manner for which it was not designed and are not attributable to the manufacturer in any way.

If you have any question regarding your warranty rights and responsibility, you should contact Bombardier Recreational Products at 1-888-272-9222.

* In the USA, products are distributed and serviced by BRP US Inc.

BRP INTERNATIONAL LIMITED WARRANTY: 2020 CAN-AM® ATV

1) SCOPE OF THE LIMITED WARRANTY

Bombardier Recreational Products Inc. ("BRP")* warrants its 2020 Can-Am ATV sold by Can-Am ATV distributors or dealers authorized by BRP to distribute Can-Am ATVs ("Can-Am ATV Distributor/Dealer") outside of the United States of America ("USA"), Canada, member states of the European Economic Area (which is comprised of the states of the European Union plus Norway, Iceland and Liechtenstein) ("EEA"), Turkey, member states of the Commonwealth of the Independent States (including Ukraine and Turkmenistan) ("CIS") and Turkey, from defects in material or workmanship for the period and under the conditions described below.

Non-factory installed parts and accessories are not covered under this limited warranty. Please refer to the applicable parts and accessories limited warranty text.

This limited warranty will become null and void if: (1) The ATV was used for racing or any other competitive activity, at any point, even by a previous owner; or (2) the ATV has been altered or modified in such a way so as to adversely affect its operation, performance or durability, or has been altered or modified to change its intended use.

2) LIMITATIONS OF LIABILITY

TO THE EXTENT PERMITTED BY LAW, THIS WARRANTY IS EXPRESSLY GIVEN AND ACCEPTED IN LIEU OF ANY AND ALL OTHER WARRANTIES, EXPRESSED OR IMPLIED, INCLUDING WITHOUT LIMITATION ANY WARRANTY OF MERCHANTABILITY OR FITNESS FOR A PARTICULAR PURPOSE. TO THE EXTENT THAT THEY CANNOT BE DISCLAIMED, THE IMPLIED WARRANTIES ARE LIMITED IN DURATION TO THE LIFE OF THE EXPRESS WARRANTY. INCIDENTAL AND CONSEQUENTIAL DAMAGES ARE EXCLUDED FROM COVERAGE UNDER THIS WARRANTY. SOME JURISDICTIONS DO NOT ALLOW FOR THE DISCLAIMERS, LIMITATIONS AND EXCLUSIONS IDENTIFIED ABOVE, AS A RESULT, THEY MAY NOT APPLY TO YOU. THIS WARRANTY GIVES YOU SPECIFIC RIGHTS AND YOU MAY ALSO HAVE OTHER LEGAL RIGHTS WHICH MAY VARY FROM COUNTRY TO COUNTRY. (FOR PRODUCTS PURCHASED IN AUSTRALIA SEE CLAUSE 4 BELOW).

Neither the Can-Am ATV Distributor/Dealer nor any other person has been authorized to make any affirmation, representation or warranty regarding the product, other than those contained in this limited warranty, and if made, shall not be enforceable against BRP.

BRP reserves the right to modify this warranty at any time, being understood that such modification will not alter the warranty conditions applicable to the products sold while this warranty is in effect.

3) EXCLUSIONS – ARE NOT WARRANTED

The following are not warranted under this limited warranty under any circumstances:

- Normal wear and tear;
- Routine maintenance items, tune ups, adjustments;
- Damage caused by negligence or failure to provide proper maintenance and/or storage, as described in the Operator's Guide;

– Damage resulting from removal of parts, improper repairs, service, maintenance, modifications or use of parts or accessories not manufactured or approved by BRP which in its reasonable judgement are either incompatible with the product or adversely affect its operation, performance and durability, or resulting from repairs done by a person that is not an authorized servicing Can-Am ATV Distributor/Dealer;
– Damage caused by abuse, abnormal use, neglect, racing or operation of the product in a manner inconsistent with the recommended operation described in the Operator's Guide;
– Damage resulting from accident, submersion, fire, snow or water ingestion, theft, vandalism or any act of God;
– Operation with fuels, oils or lubricants which are not suitable for use with the product (see the Operator's Guide);
– Damage resulting from rust, corrosion or exposure to the elements;
– Incidental or consequential damages, or damages of any kind including without limitation towing, storage, transportation expenses, telephone, rental, taxi, inconvenience, insurance coverage, loan payments, loss of time, loss of income; or time missed for downtime experience due to service work.

4) WARRANTY COVERAGE PERIOD

This warranty will be in effect from (1) the date of delivery to the first retail consumer or (2) the date the product is first put into use, whichever occurs first and for a period of:

SIX (6) CONSECUTIVE MONTHS for private use or commercial use.

The repair or replacement of parts or the performance of service under this warranty does not extend the life of this warranty beyond its original expiration date.

Note that the duration and any other modalities of the warranty coverage are subject to the applicable national or local legislation in the customer's country.

FOR PRODUCTS SOLD IN AUSTRALIA ONLY

Nothing in these Warranty terms and conditions should be taken to exclude, restrict or modify the application of any condition, warranty, guarantee, right or remedy conferred or implied under the Competition and Consumer Act 2010 (Cth), including the Australian Consumer Law or any other law, where to do so would contravene that law, or cause any part of these terms and conditions to be void. The benefits given to you under this limited warranty are in addition to other rights and remedies that you have under Australian law.

Our goods come with guarantees that cannot be excluded under the Australian Consumer Law. You are entitled to a replacement or refund for a major failure and for compensation for any other reasonably foreseeable loss or damage. You are also entitled to have the goods repaired or replaced if the goods fail to be of acceptable quality and the failure does not amount to a major failure.

5) CONDITIONS TO HAVE WARRANTY COVERAGE

This warranty coverage is available **only** if **each** of the following conditions has been fulfilled:

- The 2020 Can-Am ATV must be purchased as new and unused by its first owner from a Can-Am ATV Distributor/Dealer authorized to distribute Can-Am ATVs in the country in which the sale occurred;
- The BRP specified pre-delivery inspection process must be completed and documented;
- The product must have undergone proper registration by an authorized Can-Am ATV Distributor/Dealer;
- The 2020 Can-Am ATV must be purchased in the country or union of countries in which the purchaser resides; and
- Routine maintenance outlined in the Operator's Guide must be timely performed in order to maintain warranty coverage. BRP reserves the right to make warranty coverage contingent upon proof of proper maintenance.

BRP will not honour this limited warranty to any private use owner or commercial use owner if one of the preceding conditions has not been met. Such limitations are necessary in order to allow BRP to preserve both the safety of its products, and also that of its consumers and the general public.

6) WHAT TO DO TO OBTAIN WARRANTY COVERAGE

The customer must cease using the ATV upon the appearance of an anomaly. The customer must notify a servicing Can-Am ATV Distributor/Dealer within two (2) days of the appearance of a defect, and provide it with reasonable access to the product and reasonable opportunity to repair it. The customer must also present to the authorized Can-Am ATV Distributor/Dealer proof of purchase of the product and must sign the repair/work order prior to starting the repair in order to validate the warranty repair. All parts replaced under this limited warranty become the property of BRP.

Note that the notification period is subject to the applicable national or local legislation in customer's country.

7) WHAT BRP WILL DO

To the extent permitted by law, BRP's obligations under this warranty are limited to, at its sole discretion, repairing parts found defective under normal use, maintenance and service, or replacing such parts with new genuine Can-Am ATV parts without charge for parts and labour, at any authorized Can-Am ATV Distributor/Dealer during the warranty coverage period under the conditions described herein. BRP's responsibility is limited to making the required repairs or replacements of parts. No claim of breach of warranty shall be cause for cancellation or rescission of the sale of the Can-Am ATV to the owner. You may have other legal rights which may vary from country to country.

In the event that service is required outside of the country of original sale, the owner will bear responsibility for any additional charges due to local practices and conditions, such as, but not limited to, freight, insurance, taxes, license fees, import duties, and any and all other financial charges, including those levied by governments, states, territories and their respective agencies.

BRP reserves the right to improve or modify products from time to time without assuming any obligation to modify products previously manufactured.

8) TRANSFER

If the ownership of a product is transferred during the warranty coverage period, this warranty shall also be transferred and be valid for the remaining coverage period provided BRP or an authorized Can-Am ATV Distributor/Dealer receives a proof that the former owner agreed to the transfer of ownership, in addition to the co-ordinates of the new owner.

9) CONSUMER ASSISTANCE

In the event of a controversy or a dispute in connection with this limited warranty, BRP suggests that you try to resolve the issue at the Can-Am ATV Distributor/Dealer level. We recommend discussing the issue with the authorized Can-Am ATV Distributor/Dealer's service manager or owner.

If the matter still remains unresolved, contact BRP by filling out the customer contact form at www.brp.com or contact BRP by mail at one of the addresses listed under the *CONTACT US* section of this guide.

* For the territory covered by this limited warranty, products are distributed and serviced by Bombardier Recreational Products Inc. or its affiliates.

© 2019 Bombardier Recreational Products Inc. All rights reserved.
™ Trademark of Bombardier Recreational Products Inc. or its affiliates.
® Registered trademark of Bombardier Recreational Products Inc.

BRP LIMITED WARRANTY FOR THE EUROPEAN ECONOMIC AREA, THE COMMONWEALTH OF THE INDEPENDENT STATES AND TURKEY: 2020 CAN-AM® ATV

1) SCOPE OF THE LIMITED WARRANTY

Bombardier Recreational Products Inc. ("BRP")* warrants its 2020 Can-Am ATVs sold by distributors or dealers authorized by BRP to distribute Can-Am ATVs ("Can-Am ATV Distributor/Dealer") in member states of the European Economic Area (which is comprised of the member states of the European Union plus Norway, Iceland and Liechtenstein) ("EEA"), in member states of the Commonwealth of the Independent States (including Ukraine and Turkmenistan) ("CIS") and Turkey from defects in material or workmanship for the period and under the conditions described below.

Non-factory installed parts and accessories are not covered under this limited warranty. Please refer to the applicable parts and accessories limited warranty text.

This limited warranty will become null and void if: (1) The ATV was used for racing or any other competitive activity, at any point, even by a previous owner; or (2) the ATV has been altered or modified in such a way so as to adversely affect its operation, performance or durability, or has been altered or modified to change its intended use.

2) LIMITATIONS OF LIABILITY

TO THE EXTENT PERMITTED BY LAW, THIS WARRANTY IS EXPRESSLY GIVEN AND ACCEPTED IN LIEU OF ANY AND ALL OTHER WARRANTIES, EXPRESSED OR IMPLIED, INCLUDING WITHOUT LIMITATION ANY WARRANTY OF MERCHANTABILITY OR FITNESS FOR A PARTICULAR PURPOSE. TO THE EXTENT THAT THEY CANNOT BE DISCLAIMED, THE IMPLIED WARRANTIES ARE LIMITED IN DURATION TO THE LIFE OF THE EXPRESS WARRANTY. INCIDENTAL AND CONSEQUENTIAL DAMAGES ARE EXCLUDED FROM COVERAGE UNDER THIS WARRANTY. SOME JURISDICTIONS DO NOT ALLOW FOR THE DISCLAIMERS, LIMITATIONS AND EXCLUSIONS IDENTIFIED ABOVE, AS A RESULT, THEY MAY NOT APPLY TO YOU. THIS WARRANTY GIVES YOU SPECIFIC RIGHTS AND YOU MAY ALSO HAVE OTHER LEGAL RIGHTS WHICH MAY VARY FROM COUNTRY TO COUNTRY.

Neither the Can-Am ATV Distributor/Dealer nor any other person has been authorized to make any affirmation, representation or warranty regarding the product, other than those contained in this limited warranty, and if made, shall not be enforceable against BRP.

BRP reserves the right to modify this warranty at any time, being understood that such modification will not alter the warranty conditions applicable to the products sold while this warranty is in effect.

3) EXCLUSIONS – ARE NOT WARRANTED

The following are not warranted under this limited warranty under any circumstances:

– Normal wear and tear;
– Routine maintenance items, tune ups, adjustments;

– Damage caused by negligence or failure to provide proper maintenance and/or storage, as described in the Operator's Guide;
– Damage resulting from removal of parts, improper repairs, service, maintenance, modifications or use of parts or accessories not manufactured or approved by BRP which in its reasonable judgement are either incompatible with the product or adversely affect its operation, performance and durability, or resulting from repairs done by a person that is not an authorized servicing Can-AmCan-Am ATV Distributor/Dealer;
– Damage caused by abuse, abnormal use, neglect, racing or operation of the product in a manner inconsistent with the recommended operation described in the Operator’s Guide;
– Damage resulting from accident, submersion, fire, snow or water ingestion, theft, vandalism or any act of God;
– Operation with fuels, oils or lubricants which are not suitable for use with the product (see the Operator’s Guide);
– Damage resulting from rust, corrosion or exposure to the elements;
– Incidental or consequential damages, or damages of any kind including without limitation towing, transportation expenses, storage, telephone, rental, taxi, inconvenience, insurance coverage, loan payments, loss of time, loss of income or time missed for downtime experience due to service work.

4) WARRANTY COVERAGE PERIOD

This warranty will be in effect from (1) the date of delivery to the first retail consumer or (2) the date the product is first put into use, whichever occurs first and for a period of:

TWENTY-FOUR (24) CONSECUTIVE MONTHS for private use.

SIX (6) CONSECUTIVE MONTHS for commercial use or rental use.

The product is used commercially when it is used in connection with any work or employment that generates income during any part of the warranty period. The product is also used commercially when, at any point during the warranty period, it is licensed for commercial use.

The repair or replacement of parts or the performance of service under this warranty does not extend the life of this warranty beyond its original expiration date.

Note that the duration and any other modalities of the warranty coverage are subject to the applicable national or local legislation in the customer's country.

5) CONDITIONS TO HAVE WARRANTY COVERAGE

This warranty coverage is available **only** if **each** of the following conditions has been fulfilled:
– The 2020 Can-Am ATV must be purchased as new and unused by its first owner from a Can-Am ATV Distributor/Dealer authorized to distribute Can-Am ATVs in the country in which the sale occurred;
– The BRP specified pre-delivery inspection process must be completed and documented;
– The product must have undergone proper registration by an authorized Can-Am ATV Distributor/Dealer;

– The 2020 Can-Am ATV must be purchased within the EEA by an EEA resident, in the CIS for residents of the countries comprised in such area and in Turkey for residents of Turkey; and
– Routine maintenance outlined in the Operator's Guide must be timely performed in order to maintain warranty coverage. BRP reserves the right to make warranty coverage contingent upon proof of proper maintenance.

BRP will not honour this limited warranty to any private use owner or commercial use owner if one of the preceding conditions has not been met. Such limitations are necessary in order to allow BRP to preserve both the safety of its products, and also that of its consumers and the general public.

6) WHAT TO DO TO OBTAIN WARRANTY COVERAGE

The customer must cease using the ATV upon the appearance of an anomaly. The customer must notify a servicing Can-Am ATV Distributor/Dealer within two (2) months of the appearance of a defect and provide it with reasonable access to the product and reasonable opportunity to repair it. The customer must also present to the authorized Can-Am ATV Distributor/Dealer, proof of purchase of the product and must sign the repair/work order prior to starting the repair in order to validate the warranty repair. All parts replaced under this limited warranty become the property of BRP.

Note that the notification period is subject to the applicable national or local legislation in customer's country.

7) WHAT BRP WILL DO

To the extent permitted by law, BRP's obligations under this warranty are limited to, at its sole discretion, repairing parts found defective under normal use, maintenance and service, or replacing such parts with new genuine Can-Am ATV parts without charge for parts and labour, at any authorized Can-Am ATV Distributor/Dealer during the warranty coverage period under the conditions described herein. BRP's responsibility is limited to making the required repairs or replacements of parts. No claim of breach of warranty shall be cause for cancellation or rescission of the sale of the Can-Am ATV to the owner. You may have other legal rights which may vary from country to country.

In the event that service is required outside of the EEA, CIS or Turkey, the owner will bear responsibility for any additional charges due to local practices and conditions, such as, but not limited to, freight, insurance, taxes, license fees, import duties, and any and all other financial charges, including those levied by governments, states, territories and their respective agencies.

BRP reserves the right to improve or modify products from time to time without assuming any obligation to modify products previously manufactured.

8) TRANSFER

If the ownership of a product is transferred during the warranty coverage period, this warranty shall also be transferred and be valid for the remaining coverage period provided BRP or an authorized Can-Am ATV Distributor/Dealer receives a proof that the former owner agreed to the transfer of ownership, in addition to the co-ordinates of the new owner.

9) CONSUMER ASSISTANCE

In the event of a controversy or a dispute in connection with this limited warranty, BRP suggests that you try to resolve the issue at the Can-Am ATV Distributor/Dealer level. We recommend discussing the issue with the authorized Can-Am ATV Distributor/Dealer's service manager or owner.

If the matter still remains unresolved, contact BRP by filling out the customer contact form at www.brp.com or contact BRP by mail at one of the addresses listed under the *CONTACT US* section of this guide.

ADDITIONAL TERMS AND CONDITIONS FOR FRANCE ONLY

The following terms and conditions are applicable to products sold in France only:

The seller shall deliver goods that are complying with the contract and shall be responsible for defects existing upon delivery. The seller shall also be responsible for defects resulting from packaging, assembling instructions or the installation when it is its responsibility per the contract or if accomplished under its responsibility. To be compliant with the contract, the good shall:

1. Be fit for normal use for goods similar thereto and, if applicable:
   - Correspond to the description provided by the seller and have the qualities presented to the buyer though sample or model;
   - Have the qualities that a buyer may legitimately expect considering the public declarations of the seller, the manufacturer of its representative, including in advertising or labeling; or
2. Have the characteristics mutually agreed upon as between the parties or be fit for the specific use intended by the buyer and brought to the attention of the seller and which accepted by the seller.

The action for failure to comply is prescribed after two years after delivery of the goods. The seller is responsible for the warranty for hidden defects of the good sold if such hidden defects are rendering the good unfit for the intended use, or if they diminish its use in such a way that the buyer would not have acquired the good or would have given a lesser price, had he known. The action for such hidden defects shall be taken by the buyer within 2 years of the discovery of the defect.

CUSTOMER INFORMATION

PRIVACY INFORMATION

BRP wishes to inform you that your coordinates will be used for safety and warranty related purposes. Furthermore, BRP and its affiliates may use its customer list to distribute marketing and promotional information about BRP and related products.

To exercise your right to consult or correct your data, or to be removed from the addressee-list for direct marketing, please contact BRP.

CHANGE OF ADDRESS/OWNERSHIP

If your address has changed or if you are the new owner of the ATV, be sure to no-tify BRP:

CHANGE OF ADDRESS ☐ CHANGE OF OWNERSHIP ☐

VEHICLE IDENTIFICATION NUMBER

Model Number Vehicle Identification Number (V.I.N.)

OLD ADDRESS OR PREVIOUS OWNER:

NAME

NO. STREET APT

CITY STATE/PROVINCE ZIP/POSTAL CODE

COUNTRY TELEPHONE

NEW ADDRESS OR NEW OWNER:

NAME

NO. STREET APT

CITY STATE/PROVINCE ZIP/POSTAL CODE

COUNTRY TELEPHONE

V00A2F

E-MAIL ADDRESS

CHANGE OF ADDRESS ☐ CHANGE OF OWNERSHIP ☐

VEHICLE IDENTIFICATION NUMBER

Model Number Vehicle Identification Number (V.I.N.)

OLD ADDRESS OR PREVIOUS OWNER:

NAME

NO. STREET APT

CITY STATE/PROVINCE ZIP/POSTAL CODE

COUNTRY TELEPHONE

NEW ADDRESS OR NEW OWNER:

NAME

NO. STREET APT

CITY STATE/PROVINCE ZIP/POSTAL CODE

COUNTRY TELEPHONE

V00A2F

E-MAIL ADDRESS

This page is intentionally blank

CHANGE OF ADDRESS ☐ CHANGE OF OWNERSHIP ☐

VEHICLE IDENTIFICATION NUMBER

Model Number Vehicle Identification Number (V.I.N.)

OLD ADDRESS OR PREVIOUS OWNER:

NAME

NO. STREET APT

CITY STATE/PROVINCE ZIP/POSTAL CODE

COUNTRY TELEPHONE

NEW ADDRESS OR NEW OWNER:

NAME

NO. STREET APT

CITY STATE/PROVINCE ZIP/POSTAL CODE

COUNTRY TELEPHONE

V00A2F

E-MAIL ADDRESS

CHANGE OF ADDRESS ☐ CHANGE OF OWNERSHIP ☐

VEHICLE IDENTIFICATION NUMBER

Model Number Vehicle Identification Number (V.I.N.)

OLD ADDRESS OR PREVIOUS OWNER:

NAME

NO. STREET APT

CITY STATE/PROVINCE ZIP/POSTAL CODE

COUNTRY TELEPHONE

NEW ADDRESS OR NEW OWNER:

NAME

NO. STREET APT

CITY STATE/PROVINCE ZIP/POSTAL CODE

COUNTRY TELEPHONE

V00A2F

E-MAIL ADDRESS

This page is intentionally blank

NOTES

NOTES

NOTES

NOTES

ATV MODEL No. _____

VEHICLE
IDENTIFICATION NUMBER (V.I.N.) _____

ENGINE
IDENTIFICATION NUMBER (E.I.N.) _____

Owner: _____
NAME

_____
No. STREET APT

_____
CITY STATE/PROVINCE ZIP/POSTAL CODE

Purchase Date _____ | _____ | _____ | _____ | _____
YEAR MONTH DAY

Warranty Expiry Date _____ | _____ | _____ | _____ | _____
YEAR MONTH DAY

To be completed by the dealer at the time of the sale.

DEALER IMPRINT AREA

V00A2IL

Please verify with your dealer to ensure your vehicle has been registered with BRP.

While reading this Operator's Guide, remember that:

⚠ WARNING

Indicates a potential hazard that, if not avoided, could result in serious injury or death.

⚠ WARNING

THIS VEHICLE CAN BE HAZARDOUS TO OPERATE.
A collision or rollover can occur quickly, even during routine maneuvers such as turning and driving on hills or over obstacles, if you fail to take proper precautions.

SEVERE INJURY OR DEATH
can result if you do not follow these instructions:

- **BEFORE YOU OPERATE THIS VEHICLE, READ THIS OPERATOR'S GUIDE, ALL ON PRODUCT SAFETY LABELS AND WATCH THE SAFETY VIDEO.**
- **NEVER OPERATE THIS VEHICLE WITHOUT PROPER INSTRUCTIONS.** Complete a certified training course.
- **DO NOT EXCEED VEHICLE SEATING CAPACITY**
- **FOR 1UP MODELS, NEVER CARRY A PASSENGER.** You increase your risk of losing control if you carry a passenger.
- **NEVER OPERATE THIS VEHICLE ON A PAVED SURFACE.** You increase your risk of losing control if you operate this vehicle on pavement.
- **NEVER OPERATE THIS VEHICLE ON PUBLIC ROADS.** You can collide with another vehicle if you operate this vehicle on a public road.
- **OPERATOR AND PASSENGER (MAX models) SHOULD ALWAYS WEAR AN APPROVED HELMET,** eye protection, and protective clothing.
- **NEVER USE WITH DRUGS OR ALCOHOL.** They slow reaction time and impair judgment.
- **NEVER OPERATE THIS VEHICLE AT EXCESSIVE SPEEDS.** You increase your risk of losing control if you operate this vehicle at speeds too fast for the terrain, visibility conditions, or your experience.
- **NEVER ATTEMPT WHEELIES, JUMPS, OR OTHER STUNTS.**

BRP

ski-doo LYNX SEA-DOO EVINRUDE ROTAX can-am