2021 Can-Am Defender/Traxter HD5, HD8 & HD10 Series

If you're on a computer and don't see the clickable index on the left, please see the directions that were sent in the email with the download link, please check your junk mail if you don't see it.

This manual is made up of the base manual with all needed supplements organized into one easy to use manual.

If you bought this manual from any other seller, they are reselling our work. Please leave them negative feedback & email me at bestshopmanuals@gmail.com.

Our goal is to be one of the BEST sellers on eBay and the internet by providing you with the BEST customer service and the BEST manuals on the market.

Thank you for choosing us.

Green-Manuals

Paperless Manuals
For a Better Tomorrow

Hi-Definition Manual

Midwest Manuals

SAFETY NOTICE

This manual has been prepared as a guide to correctly service and repair the Can-Am® DEFENDER Series (excluding European Union) and TRAXTER Series.

This edition was primarily published to be used by mechanical technicians who are already familiar with all service procedures relating to BRP products. Mechanical technicians should attend training courses given by BRPTI.

Please note that the instructions in this manual will apply only if proper hand tools and special service tools are used.

The contents of this manual depicts parts and/or procedures applicable to a particular product at the time of writing. Service and warranty bulletins may be published to update the content of this manual. Dealer modifications that were carried out after manufacturing of the product, whether or not authorized by BRP, are not included.

In addition, the sole purpose of the illustrations throughout the manual, is to assist identification of the general configuration of the parts. They are not to be interpreted as technical drawings or exact replicas of the parts.

The use of BRP parts is most strongly recommended when considering replacement of any component. Dealer and/or distributor assistance should be sought in case of doubt.

The engines and the corresponding components identified in this document should not be utilized on product(s) other than those mentioned in this document.

It is understood that certain modifications may render use of the vehicle illegal under existing federal, provincial and state regulations.

This manual emphasizes particular information which, is denoted by the following wording and symbols:

⚠ WARNING

Indicates a potential hazard that, if not avoided, could result in serious injury or death.

⚠ CAUTION Indicates a hazardous situation which, if not avoided, could result in minor or moderate injury.

NOTICE Indicates an instruction which, if not followed, could result in severe damage to vehicle components or other property.

NOTE: Indicates supplementary information required to fully complete an instruction.

Although the mere reading of such information does not eliminate the hazard, your understanding of the information provided will promote its correct use.

Always observe common shop safety practice.

Unless otherwise noted, the engine must be stopped and the tether cord must be removed prior to perform any services.

Torque wrench tightening specifications must be strictly adhered to. Use the torque values and service products as in the exploded views or in the procedures when noted.

Locking devices when removed must be replaced (e.g.: locking tabs, elastic stop nuts, self-locking fasteners, cotter pins, etc.).

Hoses, cables and locking ties removed during a procedure must be reinstalled as per factory standards.

When ordering parts always refer to the specific model *PARTS CATALOGS*.

We strongly recommend that any services be carried out and/or verified by a highly skilled professional mechanic.

It is understood that this manual may be translated into another language. In the event of any discrepancy, the English version shall prevail.

BRP disclaims liability for all damages and/or injuries resulting from the improper use of the contents of this publication.

IMPORTANT SAFETY PRECAUTIONS

We do not provide warnings about many basic shop safety practices (e.g.: Use Grinding Wheel – wear safety glasses). If you have not received shop safety training or do not feel confident about your knowledge of safe servicing practices, we recommend that you do not attempt to perform the procedures described in BRP shop manuals.

You should have a clear understanding of all basic shop safety practices. You should be wearing the appropriate clothing, using appropriate safety

equipment and taking all necessary safety precautions. Please be especially careful of the following:

- Read and understand all instructions before you begin a procedure or repair.
- Ensure you have the proper tools, any necessary replacement parts and the skills to perform the tasks safely and completely.
- Protect your eyes by using approved and properly fitted safety glasses.
- Use other protective wear when necessary, for example safety shoes and gloves.
- Unless the service procedure requires that the engine remain running, make sure the engine is off **before** beginning service.
- Be sure there is adequate ventilation whenever you run the engine, to avoid the risk of Carbon Monoxide poisoning.
- To avoid injury from moving parts, make sure your hands, fingers and clothing are out of the way when the engine is running.
- Gasoline vapors and hydrogen gases from batteries are explosive. Keep all cigarettes, sparks and flames away from the battery, fuel-related components and other enclosed compartments.
- Never use gasoline to clean parts, always use an approved non-flammable solvent.
- Never drain or store gasoline in an open container.

⚠ WARNING

The foregoing list represents general safety practices. For details on workplace health and safety requirements in your area, consult your local workplace health and safety agency or association.

We have provided you with some of the most important general service safety precautions, above. We cannot, however, warn you of every conceivable hazard that can arise in performing the service and repair procedures depicted in BRP manuals. Only you can decide whether or not you should perform a given task.

INTRODUCTION

The information and component/system descriptions contained in this manual are correct at time of writing. BRP however, maintains a policy of continuous improvement of its products without imposing upon itself any obligation to install them on products previously manufactured.

Due to late changes, there may be some differences between the manufactured product and the description and/or specifications in this document.

BRP reserves the right at any time to discontinue or change specifications, designs, features, models or equipment without incurring obligation.

VEHICLE INFORMATION

VEHICLE IDENTIFICATION NUMBER (VIN)

The VIN (Vehicle Identification Number) decal is located under the glove box on the passenger side.

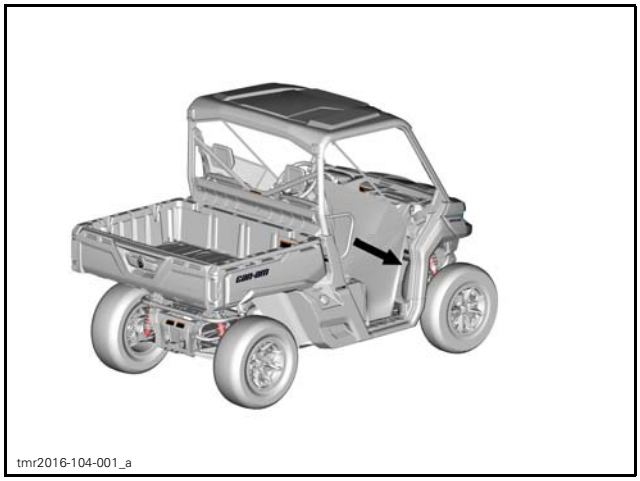

TYPICAL - VIN (VEHICLE IDENTIFICATION NUMBER) LOCATION

VIN Decal Description

TYPICAL — VEHICLE IDENTIFICATION NUMBER LABEL
1. *VIN (Vehicle Identification Number)*
2. *Model number*
3. *Manufacturing date*

ENGINE IDENTIFICATION NUMBER (EIN)

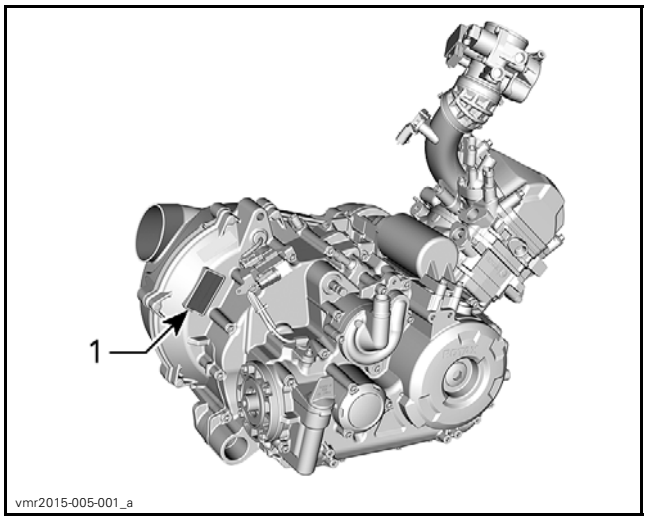

TYPICAL HD5 — ENGINE SERIAL NUMBER LABEL
1. *EIN (Engine Identification Number)*

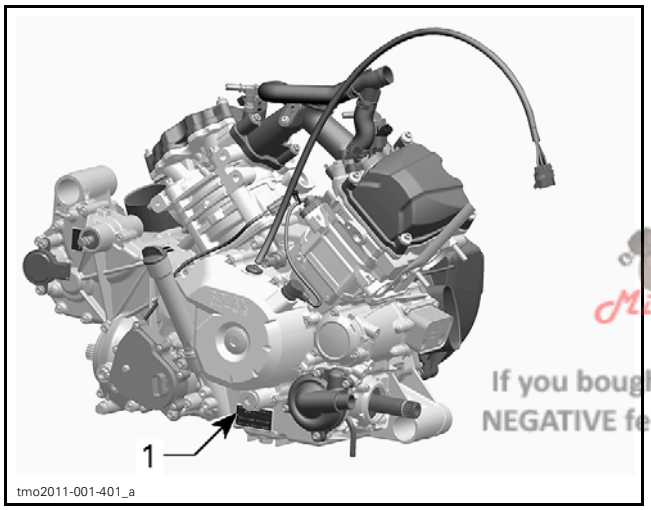

TYPICAL HD8 AND HD10 — ENGINE SERIAL NUMBER LABEL
1. EIN (Engine Identification Number)

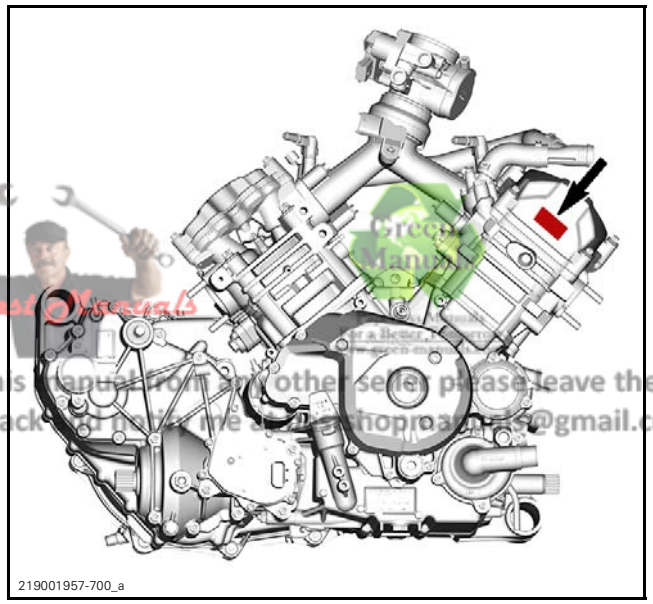

TYPICAL HD8 AND HD10

Midwest Manuals
If you bought this manual from any other seller please leave them NEGATIVE feedback and notify me at shopmanuals@gmail.com

COMPLIANCE LABEL

Regulation (EU) 2016/1628 applicable for Non-Road Mobile Machineries

Vehicles who comply to Regulation (EU) 2016/1628 (NRMM) are identified on the engine valve cover.

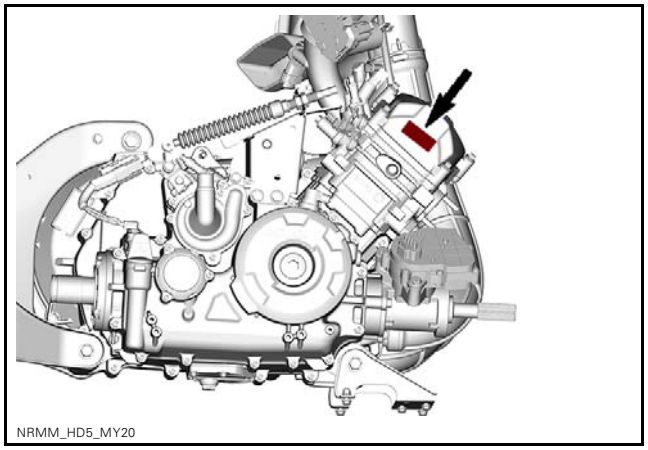

TYPICAL HD5

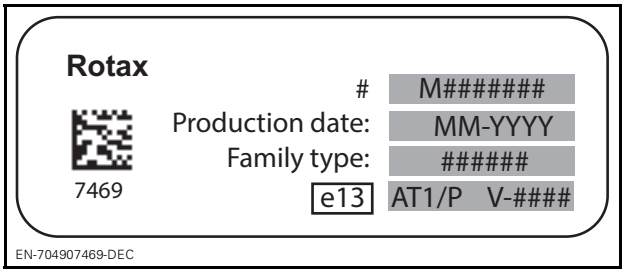

TYPICAL NRMM IDENTIFICATION

NOTE: Any tampering with the engine or its components will void the EU type-approval of the vehicle.

LIFTING AND SUPPORTING THE VEHICLE

Front of Vehicle

Place vehicle on a flat non slippery ground.

Ensure vehicle shift lever is set to PARK.

Install an hydraulic jack under front skid plate.

Lift front of vehicle and install a jack stand on each side under frame section.

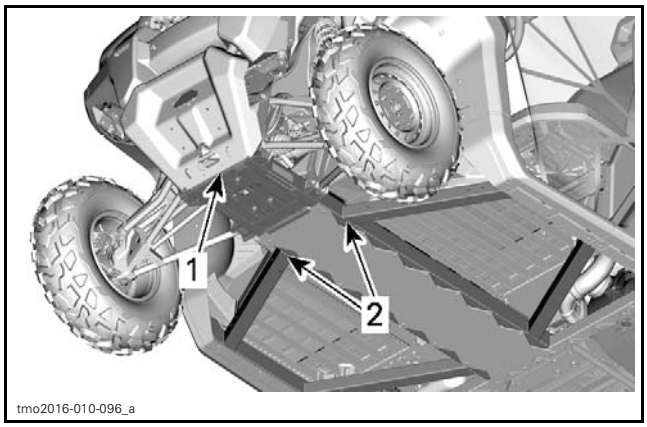

TYPICAL
1. *Front of vehicle*
2. *Frame section*

Lower hydraulic lift and ensure vehicle is supported safely onto both jack stands.

Rear of Vehicle

Place vehicle on a flat non slippery ground.

Activate 4WD mode.

Ensure vehicle shift lever is set to PARK.

Install an hydraulic jack under the trailer hitch.

Lift rear of vehicle and install a jack stand on each side under frame section in front of rear wheel.

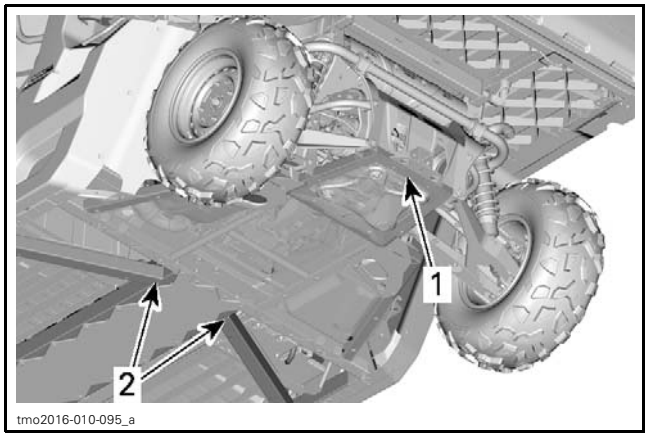

TYPICAL
1. *Lifting location under trailer hitch*
2. *Frame section to install jacks under.*

Lower hydraulic lift and ensure vehicle is supported safely onto both jack stands.

LIFTING THE VEHICLE WITH A LIFTING TABLE

Roll vehicle above lifting table.

Install two 4 x 4 horizontally across vehicle as close as possible to lifting points.

NOTICE **Ensure 4 x 4 are as close to lifting points as possible.**

Lift vehicle using table.

NOTE: If repositioning of vehicle is needed, lift either front or rear of vehicle using the lower portion of applicable bumper.

⚠ WARNING

Do not allow anyone in the vehicle while it is being lifted.

HOISTING THE VEHICLE

NOTICE **To avoid cab damages, never try to hoist by the cage a vehicle with a cab.**

The vehicle may be lifted off the ground by the cage using a hoist and a lifting strap.

Remove the roof if equipped.

NOTICE **Lifting the vehicle with the roof in place may cause irreversible damage to the roof.**

Place the strap as per the following illustrations.

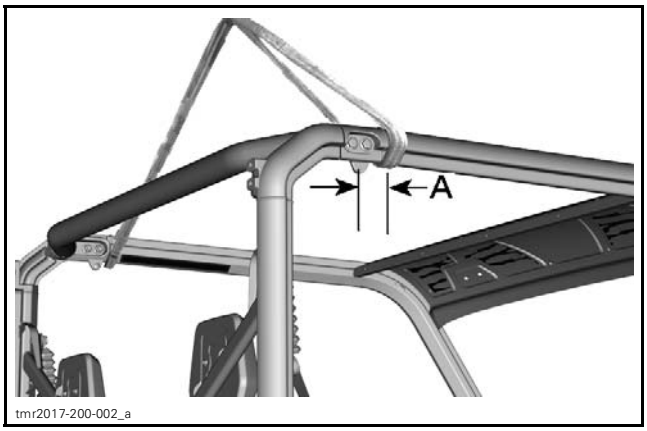

3-UP MODELS
A. 25 mm to 50 mm (1 in to 2 in) from the protection net anchor.

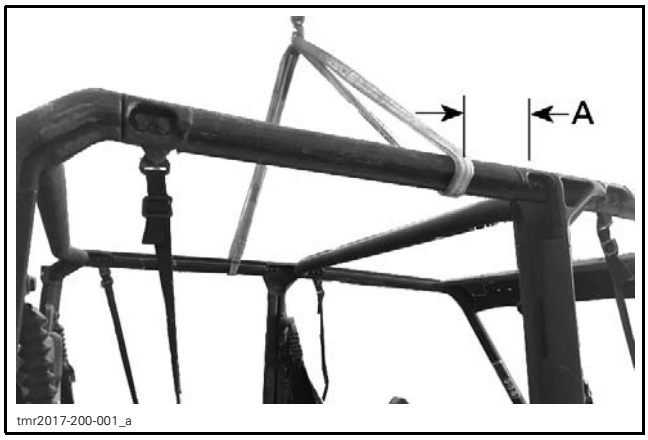

MAX MODELS
A. 125 mm to 175 mm (5 in to 7 in) from the first screw of mid pillar.

⚠ WARNING

- **Ensure hoist and lifting strap are rated for lifting the total vehicle weight. Refer to applicable manufactures instructions.**
- **Ensure lifting strap is in good condition before lifting vehicle.**
- **Do not allow anyone in the vehicle or under any portion of the vehicle while it is suspended by a hoist.**
- **Do not perform any work on the vehicle while it is suspended by a hoist.**

TRANSPORTING THE VEHICLE

If the vehicle needs to be transported, it should be properly secured on a flatbed trailer of the appropriate size and capacity.

NOTICE **Do not tow this vehicle — towing can seriously damage the vehicle's drive system.**

NOTICE **Avoid using chains to tie the vehicle — they may damage the surface finish or plastic components.**

NOTICE **If the vehicle is equipped with a windshield, transport it facing forward to avoid damaging the windshield.**

To load the vehicle on a platform for transport, proceed as follow:

1. Shift the vehicle into NEUTRAL (N).
2. If the vehicle is equipped with a winch, use the winch to roll the vehicle on the platform.
3. If the vehicle is not equipped with a winch, proceed as follows:
   - 3.1 Put a strap around the lower arm of each front suspension.
   - 3.2 Attach the straps to the winch cable of the towing vehicle.
   - 3.3 Pull the vehicle on the flatbed trailer with the winch.
4. Shift the vehicle into PARK (P).
5. Remove the key from the ignition switch.
6. Strap the front tires by using tire towing straps.
7. Pass a tie-down strap inside each rear wheel.
8. Firmly attach the rear wheels tie-down straps to both sides of the rear of the trailer with ratchets.
9. Ensure that both the front and rear wheels are firmly attached to the trailer.

⚠ WARNING

Make sure no loose objects are present inside vehicle during vehicle transportation.

ENGINE EMISSIONS INFORMATION

MANUFACTURER'S RESPONSIBILITY

Manufacturers of engines must determine the exhaust emission levels for each engine horsepower family and certify these engines with the United States of America Environmental Protection Agency (EPA). An emissions control information label, showing emission levels and engine specifications, must be placed on each vehicle at the time of manufacture.

DEALER RESPONSIBILITY

When servicing any vehicle that carry an emissions control information label, adjustments must be kept within published factory specifications.

Replacement or repair of any emission related component must be executed in a manner that maintains emission levels within the prescribed certification standards.

Dealers are not to modify the engine in any manner that would alter the horsepower or allow emission levels to exceed their predetermined factory specifications.

Exceptions include manufacturer's prescribed changes.

OWNER RESPONSIBILITY

The owner/operator is required to have engine maintenance performed to maintain emission levels within prescribed certification standards.

The owner/operator is not to, and should not allow anyone else to modify the engine in any manner that would alter the horsepower or allow emissions levels to exceed their predetermined factory specifications.

EMISSION REGULATIONS

The vehicle you are servicing may have been certified to applicable emission regulations in your country or state. Not as an exhaustive list; this may include standards for engine exhaust emissions, crankcase emissions, permeation emissions and evaporative emissions. Servicing procedures in this manual must be strictly followed in order to keep the vehicle within the factory specifications. Failure to follow servicing procedures in this manual may lead a vehicle to be out of compliance with applicable emission regulations.

When servicing any vehicle; adjustments must be kept within published factory specifications. Replacement or repair of any emission related component must be executed in a manner that maintains emission levels within the applicable certification standards. Nobody is allowed to modify the engine in any manner that would alter the horsepower or allow emission levels to exceed their predetermined factory specifications. Exceptions include manufacturer's prescribed changes.

The owner/operator is required to have engine maintenance performed to maintain emission levels within the prescribed certification standards. The owner/operator is allowed and should not allow anyone else to modify the engine in any manner that would alter the horsepower or allow emissions levels to exceed their predetermined factory specifications.

MANUAL INFORMATION

MANUAL PROCEDURES

Many of the procedures in this manual are interrelated. Before undertaking any task, you should read and thoroughly understand the entire section or subsection in which the procedure is contained.

⚠ WARNING

Unless otherwise specified, the engine should be turned OFF and cold for all maintenance and repair procedures.

A number of procedures throughout the book require the use of special tools. Before starting any procedure, be sure that you have on hand all required tools, or their approved equivalents.

The use of RIGHT and LEFT indications in the text are always referenced to the driving position (sitting on the vehicle).

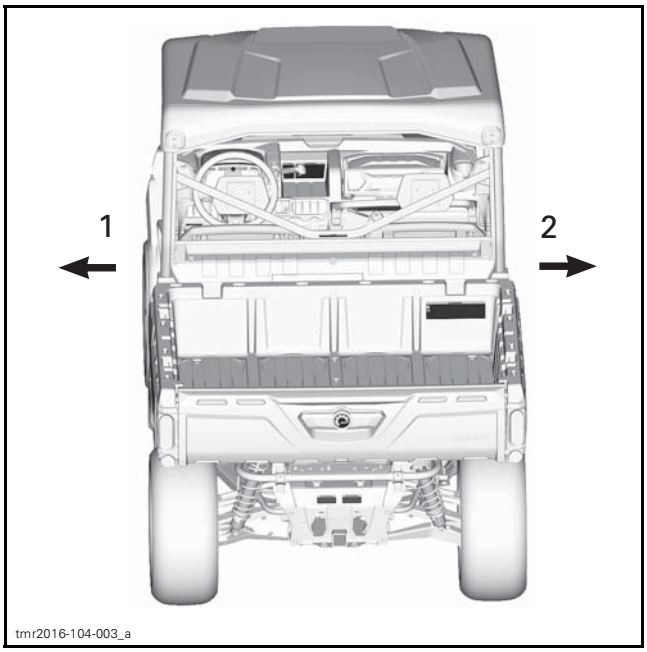

TYPICAL
1. Left
2. Right

This manual uses technical terms which may be different from the ones of the *PARTS CATALOGS*.

When ordering parts always refer to the specific model *PARTS CATALOGS*.

NOTICE **Most fasteners are metric, and most components are built with parts dimensioned using the metric system. Consult the appropriate *PARTS CATALOG* to obtain and use the correct parts and fasteners. Mismatched or incorrect fasteners could cause damage to the vehicle.**

MANUAL LAYOUT

This manual is divided into many major sections as can be seen in the main table of contents at the beginning of the manual.

Each section is divided into various subsections, and again, each subsection has one or more divisions.

Illustrations and photos show the typical construction of various assemblies and, in all cases, may not reproduce the full detail or exact shape of the parts used in a particular model vehicle. However, they represent parts which have the same or a similar function.

TYPICAL PAGE

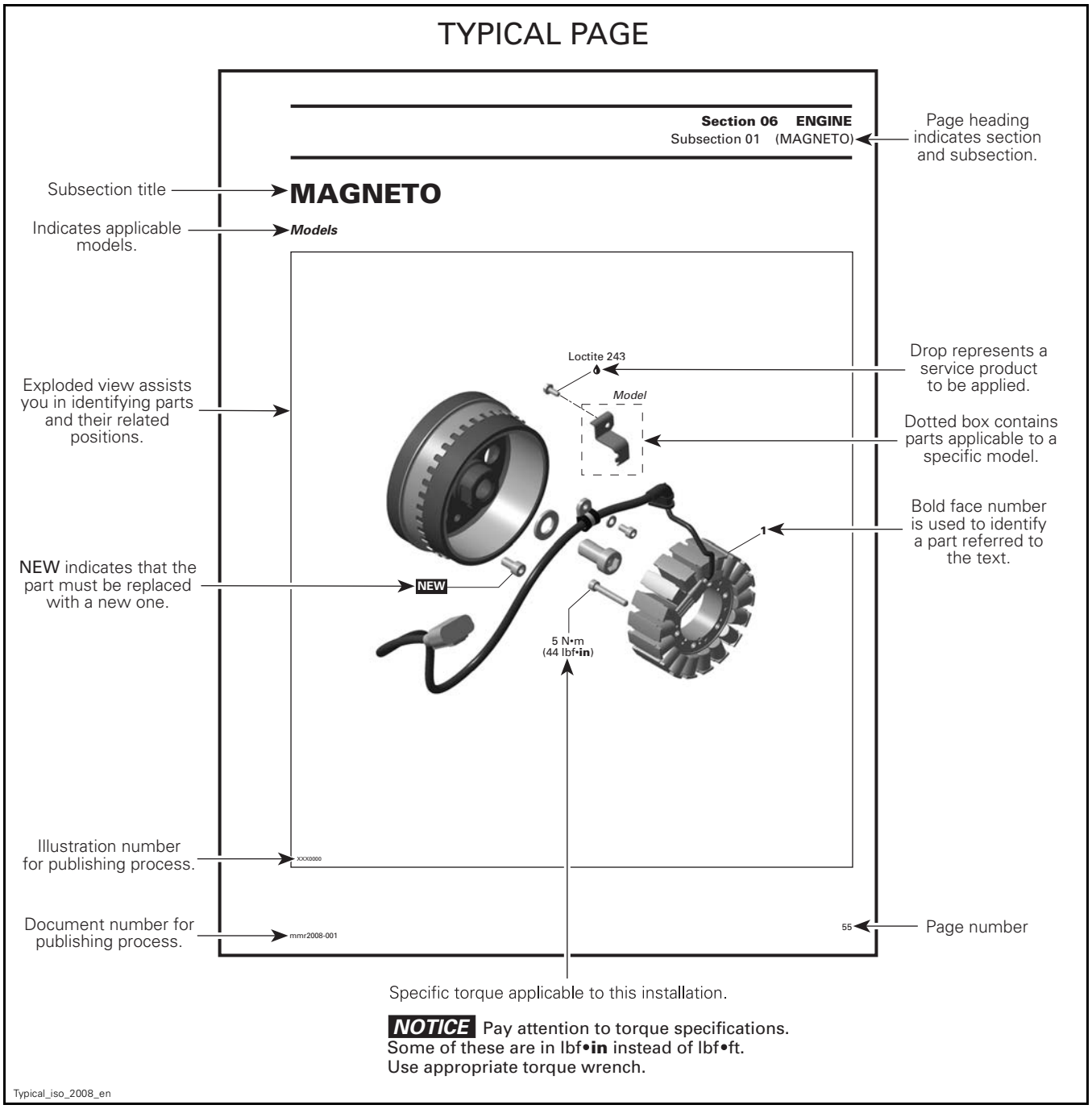

TYPICAL PAGE

Section 03 ENGINE
Subsection 09 (MAGNETO SYSTEM)

Tittle in bold indicates category of information to be carried out.

GENERAL

NOTE: The following procedures can be done without removing the engine.

During assembly/installation, use the torque values and service products as in the exploded views.

Clean threads before applying a threadlocker. Refer to *SELF-LOCKING FASTENERS* and *LOCTITE APPLICATION* sections at the beginning of this manual for complete procedure.

Reference to a specific section or subsection.

⚠ WARNING

Torque wrench tightening specifications must be strictly adhered to.
Locking devices (e.g.: locking tabs, elastic stop nuts, self-locking fasteners, etc.) must be replaced with new ones.

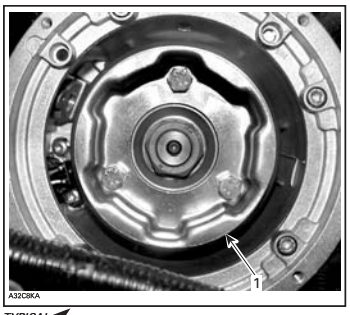

TYPICAL
1. Starting pulley

"TYPICAL" indicates a general view which may not represent exact details.

Call-outs pertaining to above illustration.

PROCEDURES

Indicates component procedures apply to.

MAGNETO FLYWHEEL

Magneto Flywheel Cleaning

Clean all metal components in a non-ferrous metal cleaner.

CAUTION: Clean magneto flywheel using only a clean cloth.

Indicates specific procedure to be carried out.

Magneto Flywheel Removal

Remove muffler, refer to the *EXHAUST SYSTEM* section.

Remove acoustic panel.

Remove rewind starter.

Remove starting pulley **no. 2**.

NOTE: To remove starting pulley bolts, hold magneto flywheel with a socket as shown.

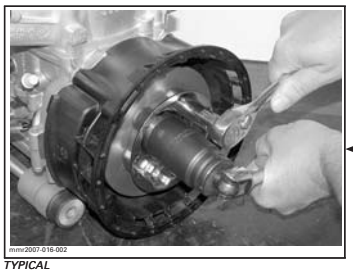

TYPICAL

Illustration always follows text to which it applies.

Models

Remove the connecting flange retaining the rewind starter to the engine housing.

Italic bold face typesetting indicates a procedure applicable to a specific model(s).

mmr2008-001 57

Bold face number following part name refers to exploded view at beginning of subsection.

typical_txt_2008_en

TIGHTENING TORQUE

Tighten fasteners to the torque specified in the exploded view(s) and/or in the written procedure. When a torque is not specified, refer to the following table.

⚠ WARNING

Torque wrench tightening specifications must be strictly adhered to.
Locking devices when removed (e.g.: locking tabs, elastic stop nuts, self-locking fasteners, cotter pins, etc.) must be replaced.

In order to avoid a poor assembly, tighten screws, bolts, or nuts in accordance with the following procedure:

1. Manually screw all screws, bolts and/or nuts.
2. Apply half the recommended torque value.
3. Tighten fastener to the recommended torque value.

NOTICE **Be sure to use the recommended tightening torque for the specified fastener used.**

NOTE: When possible, always apply torque on the nut.

NOTE: Always torque screws, bolts and/or nuts using a crisscross pattern when multiple fasteners are used to secure a part (eg. a cylinder head). Some parts must be torqued according to a specific sequence and torque pattern as detailed in the installation procedure.

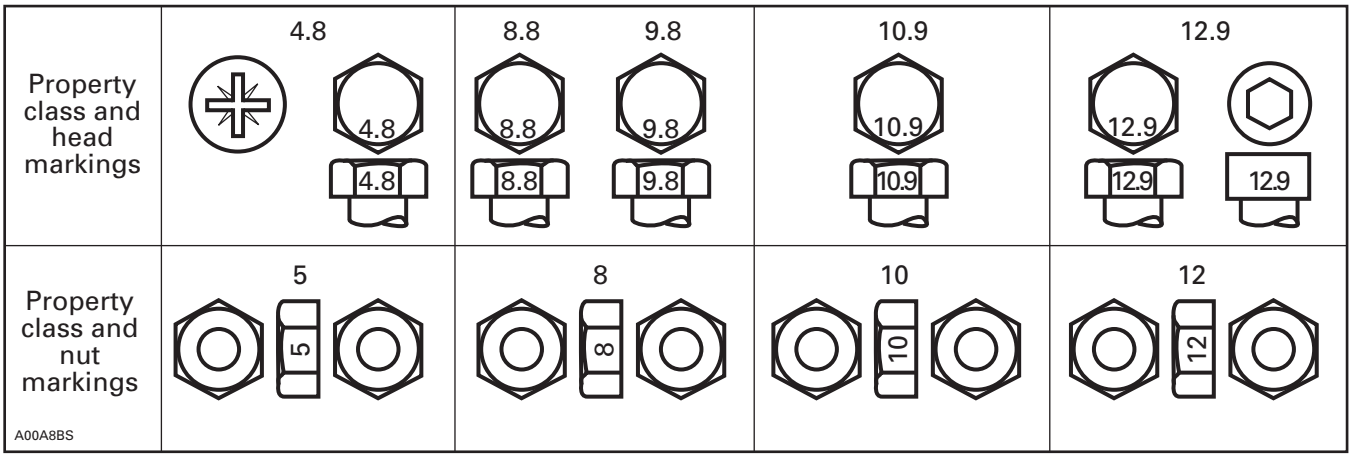

FASTENER SIZE	FASTENER GRADE/TORQUE			
	5.8 Grade	8.8 Grade	10.9 Grade	12.9 Grade
M4	1.5 – 2 N•m (13 – 18 lbf•**in**)	2.5 – 3 N•m (22 – 27 lbf•**in**)	3.5 N•m - 4 N•m (31 lbf•**in** - 35 lbf•**in**)	4 N•m - 5 N•m (35 lbf•**in** - 44 lbf•**in**)
M5	3 N•m - 3.5 N•m (27 lbf•**in** - 31 lbf•**in**)	4.5 N•m - 5.5 N•m (40 lbf•**in** - 49 lbf•**in**)	7 N•m - 8.5 N•m (62 lbf•**in** - 75 lbf•**in**)	8 N•m - 10 N•m (71 lbf•**in** - 89 lbf•**in**)
M6	6.5 N•m - 8.5 N•m (58 lbf•**in** - 75 lbf•**in**)	8 N•m - 12 N•m (71 lbf•**in** - 106 lbf•**in**)	10.5 – 15 N•m (93 – 133 lbf•**in**)	16 N•m (142 lbf•**in**)
M8	15 N•m (133 lbf•**in**)	25 N•m (18 lbf•ft)	32 N•m (24 lbf•ft)	40 N•m (30 lbf•ft)
M10	29 N•m (21 lbf•ft)	48 N•m (35 lbf•ft)	61 N•m (45 lbf•ft)	73 N•m (54 lbf•ft)
M12	52 N•m (38 lbf•ft)	85 N•m (63 lbf•ft)	105 N•m (77 lbf•ft)	128 N•m (94 lbf•ft)
M14	85 N•m (63 lbf•ft)	135 N•m (100 lbf•ft)	170 N•m (125 lbf•ft)	200 N•m (148 lbf•ft)

FASTENER INFORMATION

NOTICE Most components in the vehicles are built with parts dimensioned in the metric system. Most fasteners are metric and must not be replaced by customary fasteners or vice-versa. Mismatched or incorrect fasteners could cause damage to the vehicle or possible personal injury.

SELF-LOCKING FASTENERS PROCEDURE

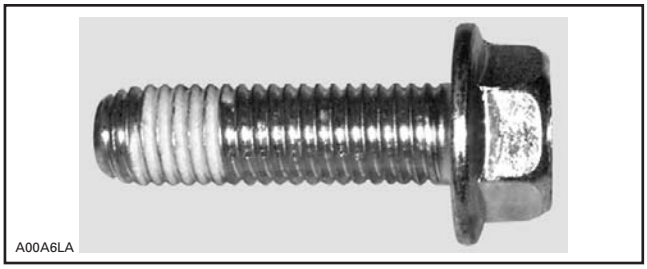

TYPICAL — SELF-LOCKING FASTENER

The following describes common procedures used when working with self-locking fasteners.

Use a metal brush or a tap to properly clean a threaded hole, then use a solvent. Allow the solvent time to act, approximately 30 minutes, then wipe off. Solvent utilization is to ensure proper adhesion of the product used for locking the fastener.

LOCTITE® APPLICATION PROCEDURE

The following describes common procedures used when working with Loctite products.

NOTE: Always use proper strength Loctite product as recommended in this Shop Manual.

Threadlocker Application for Uncovered Holes (Bolts and Nuts)

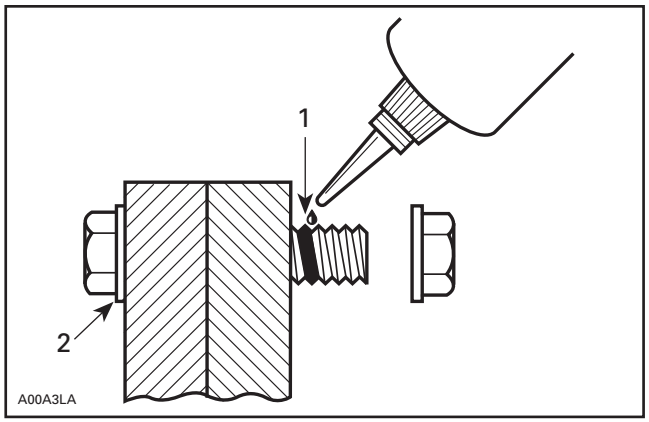

1. Apply here
2. Do not apply

1. Clean threads (bolt and nut) with solvent.
2. Apply *LOCTITE 7649 (PRIMER)* on threads and allow to dry.
3. Choose proper strength Loctite threadlocker.
4. Fit bolt in the hole.
5. Apply a few drops of threadlocker at proposed tightened nut engagement area.
6. Position nut and tighten as required.

Threadlocker Application for Blind Holes

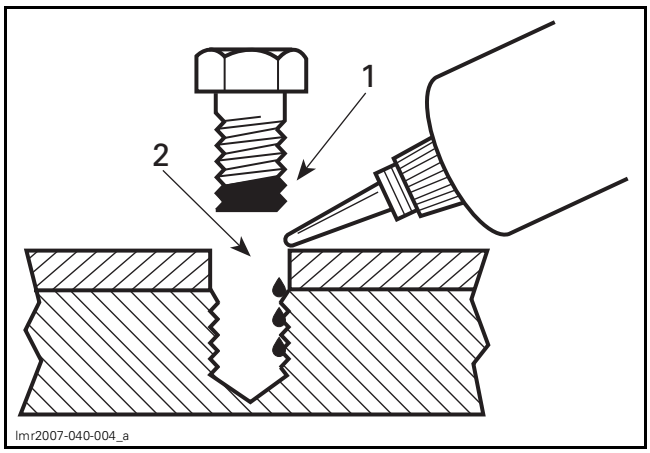

1. On fastener threads
2. On threads and at the bottom of hole

1. Clean threads (bolt and hole) with solvent.
2. Apply *LOCTITE 7649 (PRIMER)* on threads (bolt and nut) and allow to dry for 30 seconds.
3. Choose proper strength Loctite threadlocker.
4. Apply several drops along the threaded hole and at the bottom of the hole.

5. Apply several drops on bolt threads.
6. Tighten as required.

Threadlocker Application for Stud Installation in Blind Holes

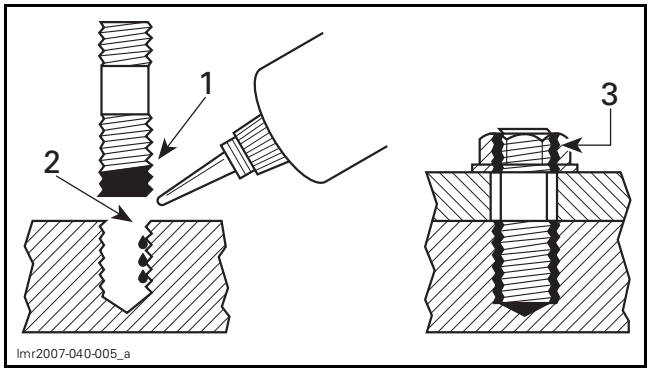

1. On stud threads
2. On threads and in the hole
3. On retaining nut threads

1. Clean threads (stud and hole) with solvent.
2. Apply *LOCTITE 7649 (PRIMER)* on threads and allow to dry.
3. Put 2 or 3 drops of proper strength Loctite threadlocker on female threads and in hole.

NOTE: To avoid a hydro lock situation, do not apply too much Loctite.

4. Apply several drops of proper strength Loctite on stud threads.
5. Install stud.
6. Install cover, part, etc.
7. Apply a few drops of proper strength Loctite on uncovered stud threads.
8. Install and tighten retaining nut(s) as required.

Threadlocker Application for Pre-Assembled Parts

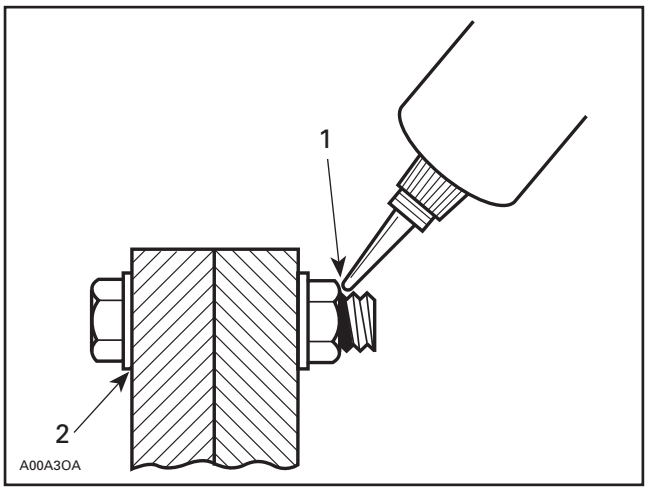

1. Apply here
2. Do not apply

1. Clean bolts and nuts with solvent.
2. Assemble components.
3. Tighten nuts.
4. Apply a few drops of proper strength Loctite on bolt/nut contact surfaces.
5. Avoid touching metal with tip of flask.

NOTE: For preventive maintenance on existing equipment, retighten nuts and apply proper strength Loctite on bolt/nut contact surfaces.

Threadlocker Application for an Adjustment Screw

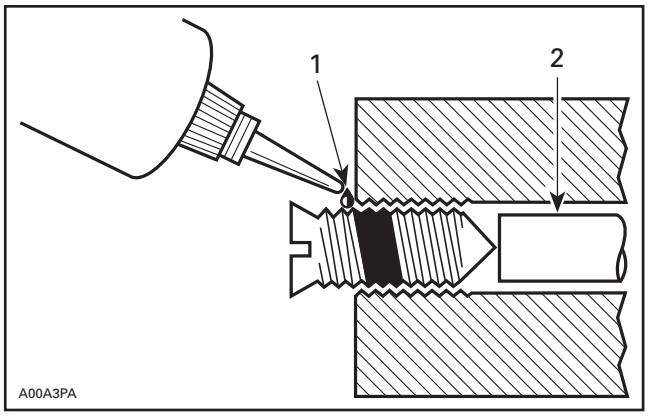

1. Apply here
2. Plunger

1. Adjust screw to proper setting.
2. Apply a few drops of proper strength Loctite threadlocker on screw/body contact surfaces.
3. Avoid touching metal with tip of flask.

NOTE: If it is difficult to readjust, heat screw with a soldering iron (232°C (450°F)).

Application for Stripped Thread Repair

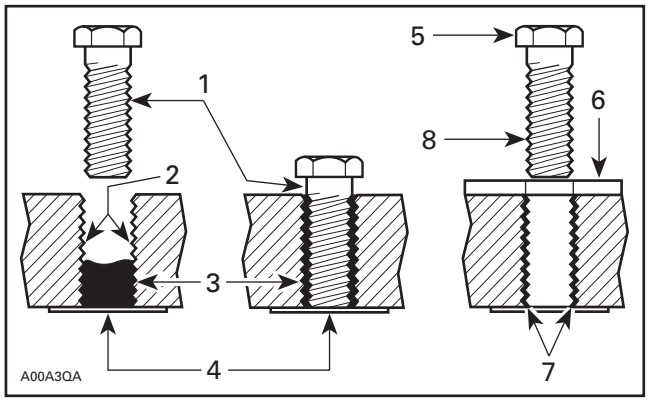

1. *Release agent*
2. *Stripped threads*
3. *Form-A-Thread*
4. *Tapes*
5. *Cleaned bolt*
6. *Plate*
7. *New threads*
8. *Threadlocker*

Standard Thread Repair

Follow instructions on Loctite FORM-A-THREAD 81668 package.

If a plate is used to align bolt:

1. Apply release agent on mating surfaces.
2. Put waxed paper or similar film on the surfaces.
3. Twist bolt when inserting it to improve thread conformation.

NOTE: NOT intended for engine stud repairs.

Repair of Small Holes/Fine Threads

Option 1: Enlarge damaged hole, then follow *STANDARD THREAD REPAIR* procedure.

Option 2: Apply FORM-A-THREAD on the screw and insert in damaged hole.

Permanent Stud Installation (Light Duty)

1. Use a stud of the desired thread length.
2. DO NOT apply release agent on stud.
3. Follow Standard Thread Repair procedure.
4. Allow 30 minutes for Loctite FORM-A-THREAD to cure.
5. Complete part assembly.

Gasket Compound Application

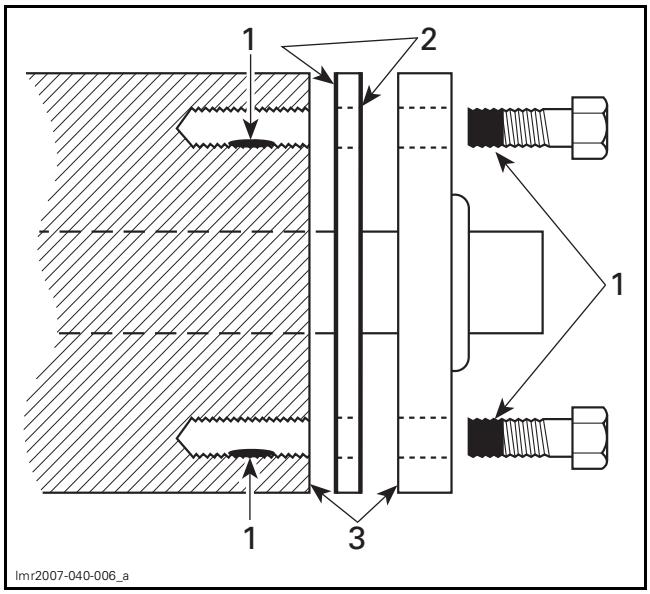

1. *Proper strength Loctite*
2. *Loctite Primer N and Gasket Eliminator 518 on both sides of gasket*
3. *Loctite Primer N only*

1. Remove old gasket and other contaminants using *LOCTITE CHISEL (GASKET REMOVER)*. Use a mechanical means only if necessary.

NOTE: Avoid grinding.

2. Clean both mating surfaces with solvent.
3. Spray Loctite Primer N on both mating surfaces and on both sides of gasket and allow to dry 1 or 2 minutes.
4. Apply *LOCTITE 518* on both sides of gasket, using a clean applicator.
5. Place gasket on mating surfaces and assemble parts immediately.

NOTE: If the cover is bolted to blind holes, apply proper strength Loctite in the hole and on threads. Tighten fastener.

If holes are sunken, apply proper strength Loctite on bolt threads.

6. Tighten as usual.

Threadlocker Application for Mounting on a Shaft

Mounting with a Press

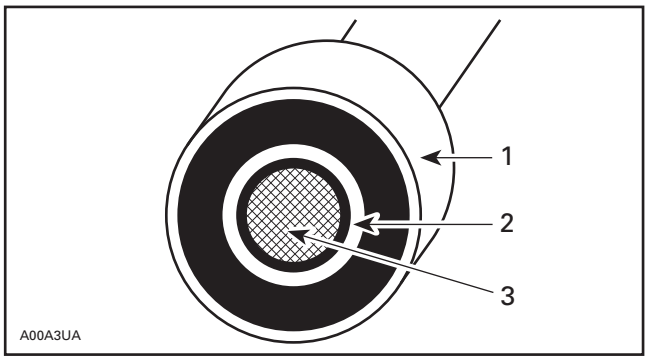

1. *Bearing*
2. *Proper strength Loctite*
3. *Shaft*

1. Clean shaft external contact surface.
2. Clean internal contact surface of part to be installed on shaft.
3. Apply a strip of proper strength Loctite on circumference of shaft contact surface at insertion or engagement point.

NOTE: Retaining compound is always forced out when applied on shaft.

4. DO NOT use antiseize Loctite or any similar product.
5. No curing period is required.

Mounting in Tandem

1. Apply retaining compound on internal contact surface (bore) of parts to be installed.
2. Continue parts assembly as per previous illustration.

Threadlocker Application for Case-In Components (Metallic Gaskets)

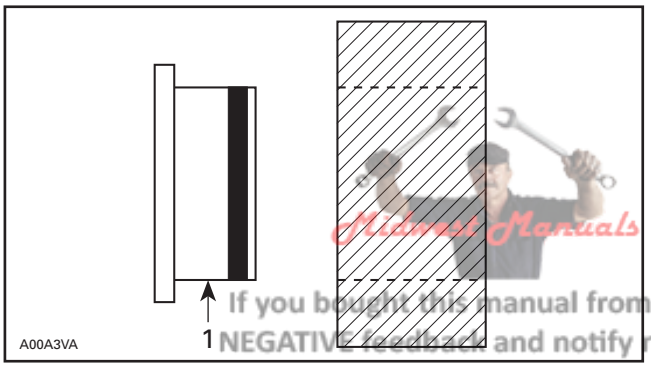

1. *Proper strength Loctite*

1. Clean inner housing diameter and outer gasket diameter.
2. Spray housing and gasket with *LOCTITE 7649 (PRIMER)*.
3. Apply a strip of proper strength Loctite on leading edge of outer metallic gasket diameter.

NOTE: Any Loctite product can be used here. A low strength liquid is recommended as normal strength and gap are required.

4. Install according to standard procedure.
5. Wipe off excess product.
6. Allow 30 minutes for product to cure.

NOTE: Normally used on worn-out housings to prevent leaking or sliding.

It is generally not necessary to remove gasket compound applied on outer gasket diameter.

Midwest Manuals
Green Manuals
Paperless Manuals
For a Better Tomorrow
www.green-manuals.com
If you bought this manual from any other seller please leave them NEGATIVE feedback and notify me at bestshopmanuals@gmail.com

PERIODIC MAINTENANCE SCHEDULE

Maintenance is very important for keeping your vehicle in safe operating condition. Proper maintenance is the owner's responsibility. The vehicle should be serviced as per the maintenance schedule.

The following message appears in the gauge after every 200 hours of operation, to remind you of maintenance requirements: **MAINTENANCE REQUIRED**. To erase message, use the BRP diagnostic software (BUDS2).

⚠ WARNING

Failure to properly maintain the vehicle according to the maintenance schedule and procedures can make it unsafe to operate.

EPA Regulation - Canadian and USA Vehicles

A repair shop or person of the owner's choosing may maintain, replace, or repair emission control devices and systems. These instructions do not require components or service by BRP or authorized Can-Am Off-Road dealers.

Although an authorized Can-Am Off-Road dealer has an in-depth technical knowledge and tools to service your vehicle, the emission-related warranty is not conditioned on the use of an authorized Can-Am Off-Road dealer or any other establishment with which BRP has a commercial relationship.

Proper maintenance is the owner’s responsibility. A warranty claim may be denied if, among other things, the owner or operator caused the problem through improper maintenance or use.

You must follow the instructions for fuel requirements in the fueling section of this manual. Even if gasoline containing greater than ten volume percent ethanol is readily available, the US EPA issued a prohibition against the use of gasoline containing greater than 10 vol% ethanol that applies to this vehicle. The use of gasoline containing greater than 10 vol% ethanol with this engine may harm the emission control system.

Operation in trail riding conditions
Operation in severe riding conditions (dusty or muddy) or carrying heavy loads condition

EVERY YEAR OR EVERY 3 000 KM (2,000 MI) OR 200 HOURS (whichever comes first)
EVERY YEAR OR EVERY 1 500 KM (1,000 MI) OR 100 HOURS (whichever comes first)
Check fault codes
Perform all items indicated in the pre-ride inspection.
Replace engine oil and filter
Inspect gearbox oil level (HD8 and HD10 models) and look for contamination (every 3000 km)
Replace gearbox oil (HD8 and HD10 models) (Perform at the first 3000 km)
Inspect and clean engine air filter. Replace if needed
Inspect steering system for abnormal play and damages (column, rack and pinion, bellows)
Inspect the tie rod ends and ball joints for play and inspect boots condition
Inspect wheel bearings for abnormal play
Inspect shock absorber bushings, suspension arm bushing and wear plates. Replace if needed.
Inspect CV joints and rubber boots condition (check for abnormal play in the joints and for cuts in the rubber boots)
Lubricate suspension arms and stabilizer bar bushings
Inspect and clean the brake system (fluid level, pads, discs, lines, calipers)
Check front differential oil level and look for contamination and overall condition (vents, mount bolt torque, seals)

EVERY YEAR OR EVERY 3 000 KM (2,000 MI) OR 200 HOURS (whichever comes first)
EVERY YEAR OR EVERY 1 500 KM (1,000 MI) OR 100 HOURS (whichever comes first)
Inspect rear final drive oil level (HD5 models) and look for contamination and overall condition (vents, mount bolt torque, seals)
Inspect battery condition and connections
Inspect propeller shaft U-joints for abnormal play. On HD5, inspect rubber boot condition
Clean exhaust pipes and muffler area
Clean muffler spark arrester
Adjust valve clearance
Replace fuel vent breather filter
Inspect CVT drive belt
Clean CVT pulleys
Inspect centrifugal levers, rollers, of drive pulley
Inspect, clean and lubricate drive pulley bearing (HD5)
Inspect drive pulley hub needle bearing (HD8/HD10)
Inspect input and output shaft seals (engine, gearbox (HD8 and HD10 models), rear final drive (HD5 models), front differential)
Tighten cage fasteners
Tighten suspension fasteners
Inspect and clean seat belts retractors and buckles
Verify coolant level and adjust if needed
Lubricate door latches (On Cab models)

EVERY TWO YEAR OR EVERY 6 000 KM (4,000 MI) OR 400 HOURS (whichever comes first)
EVERY TWO YEAR OR EVERY 3 000 KM (2,000 MI) OR 200 HOURS (whichever comes first)
Check fault codes
Perform all items indicated in the pre-ride inspection.
Replace front differential oil
Replace gearbox oil (HD8 and HD10 models)
Replace rear final drive oil (HD5 models)
Replace brake fluid (must be performed every 2 years)
Verify cooling system
Test engine coolant strength + level
Verify fuel system for leaks (including evaporative emission system components if equipped)
Verify fuel pump pressure (idle and WOT)
Replace spark plugs
Clean vehicle speed sensor
Replace canister vent pre-filter (evaporative emission system) if equipped

EVERY 5 YEARS OR EVERY 12 000 KM (8,000 MI) (whichever comes first)
EVERY 5 YEARS OR EVERY 6 000 KM (4,000 MI) (whichever comes first)
Replace engine coolant

PERIODIC MAINTENANCE PROCEDURES (HD5)

SERVICE TOOLS

Description	Part Number	Page
TEST CAP	529 035 991	7
VACUUM/PRESSURE PUMP	529 021 800	7, 17

SERVICE PRODUCTS

Description	Part Number	Page
4T 0W40 SYNTHETIC OIL (EUR)	779286	4
4T 0W40 SYNTHETIC OIL	779139	4
4T 10W50 SYNTHETIC OIL (EUR)	779240	4
4T 10W50 SYNTHETIC OIL	779234	4
4T 5W40 SYNTHETIC BLEND OIL (EUR)	779290	4
4T 5W40 SYNTHETIC BLEND OIL	779133	4
75W90 SYNTHETIC GEAR OIL (EUR)	779212	10, 13
75W90 SYNTHETIC GEAR OIL	779158	10, 13
BRAKE AND PARTS CLEANER PRO S2	779245	11, 16
BRAKE FLUID DOT 4 (EUR)	779207	17
BRAKE FLUID DOT 4	779151	17
COSMO RUBBER GREASE	715 900 399	16
EXTENDED LIFE PRE-MIXED COOLANT (EUR)	779223	5
EXTENDED LIFE PRE-MIXED COOLANT	779150	5
LOCTITE 767 (ANTISEIZE LUBRICANT)	293 800 070	12
SYNTHETIC GREASE	779162	16
SYNTHETIC SUSPENSION GREASE (EUR)	779226	14–15
SYNTHETIC SUSPENSION GREASE	779163	14–15
XPS BRAKES AND PARTS CLEANER (USA)	219 701 705	16

GENERAL

This subsection provides:

– Fluid level verifications
– Maintenance procedures.

The following systems should be serviced according to the *PERIODIC MAINTENANCE SCHEDULE*.

PROCEDURES

AIR INTAKE SYSTEM

Replacing the Air Filter

NOTICE **Never modify the air intake system. Otherwise, engine performance degradation or damage can occur. The engine is calibrated to operate specifically with these components.**

Air Filter Replacement Guideline

Air filter replacement should be adjusted according to riding conditions as it is critical to ensure proper engine performance and life span.

Air filter replacement frequency must be increased for the following dusty conditions:

– Riding on dry sand
– Riding on dry dirt covered surfaces
– Riding on dry gravel roads or similar conditions.
– Riding in areas with high concentration of seeds or crop husks.
– Riding in severe snow conditions.

NOTICE **When riding in dusty conditions or sand, the air box needs to be cleaned before every ride.**

NOTE: Riding in a group in these conditions would increase even more the air filter replacement requirement.

Removing the Air Filter

Tilt cargo box.

Unlatch air filter cover and remove air filter.

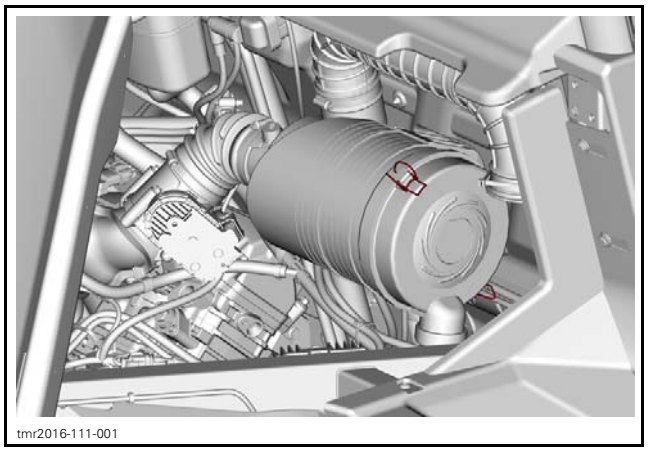
tmr2016-111-001

The filter fits tightly over the outlet tube and there will be some initial resistance. Gently move the end of the filter back and forth to break the seal, then rotate while pulling straight out. Avoid knocking the filter against the housing.

Replace air filter if clogged. Always use the recommended air filter or an equivalent.

Cleaning the Duckbill Valve

Visually check and physically squeeze the duckbill valve. Make sure the valve is flexible and not inverted, damaged or plugged.

Installing the Air Filter

Insert the filter carefully. Seat the filter by hand, making certain it is inserted completely into the air cleaner housing. Apply pressure by hand at the outer rim of the filter, not the flexible center.

Secure air filter cover with latches.

EVAPORATIVE EMISSION SYSTEM PRE-FILTER (IF EQUIPPED)

Evaporative Emission System Pre-Filter Replacement

1. Tilt cargo box.
2. Remove the hose clamps.
3. Remove the retaining screws.
4. Remove the pre-filter assembly.

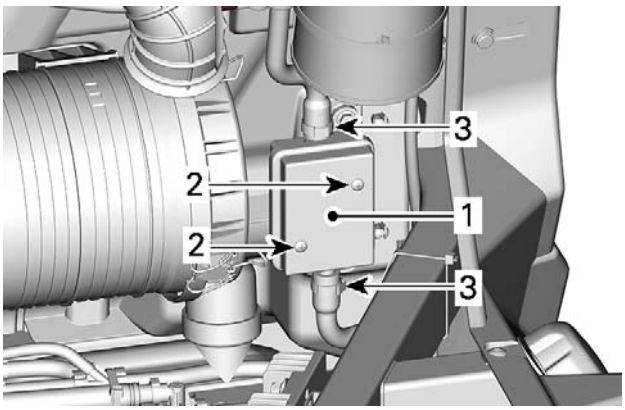

219001807-003_a

1. *Pre-Filter*
2. *Retaining screw*
3. *Clamps*

5. Install a new pre-filter assembly.

TIGHTENING TORQUE	
Pre-filter retaining screw	2.5 N•m ± 0.5 N•m (22 lbf•**in** ± 4 lbf•**in**)

6. Secure hoses with clamps.

EXHAUST SYSTEM

Cleaning and Inspecting the Muffler

Purge the muffler from accumulated carbon as follows.

Place the vehicle in a well ventilated area.

Stop engine and let muffler cool down.

⚠ WARNING

Never run engine in an enclosed area. Never perform this operation immediately after the engine has been running because exhaust system is very hot. Make sure that there are no combustible materials in the area. Wear eye protection and gloves. Never stand behind the vehicle while purging exhaust system. Respect all applicable laws and regulations.

Remove the muffler cleanout plug.

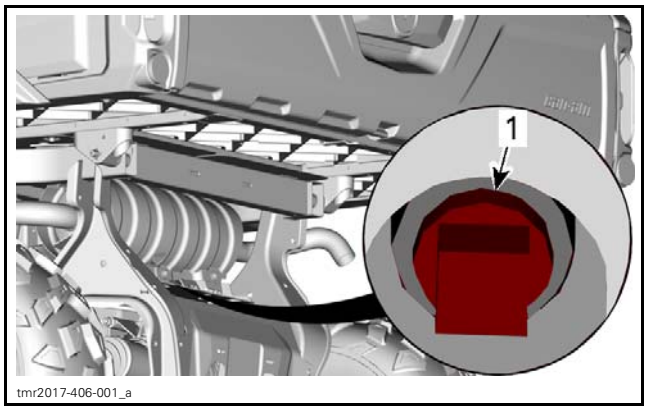

UNDERNEATH THE MUFFLER
1. Muffler cleanout plug

Start engine (shift lever in Park).

Block the end of the mufflers with a shop rag.

Quickly increase throttle several times.

Stop engine and let muffler cool down.

Reinstall the cleanout plug.

LUBRICATION SYSTEM

Verifying the Engine Oil Level

NOTICE Operating the engine with an improper level may severely damage engine.

With vehicle on a level surface and engine cold, check the oil level as follows:

1. Place vehicle on a level surface.
2. Open cargo box.
3. Remove dipstick and wipe it clean.

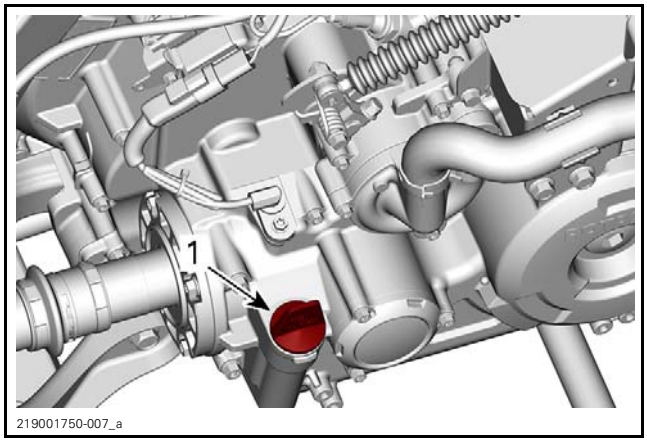

1. Dipstick

4. Reinstall dipstick, screw in it completely.
5. Remove dipstick and check oil level. It should be near or equal to the upper mark.

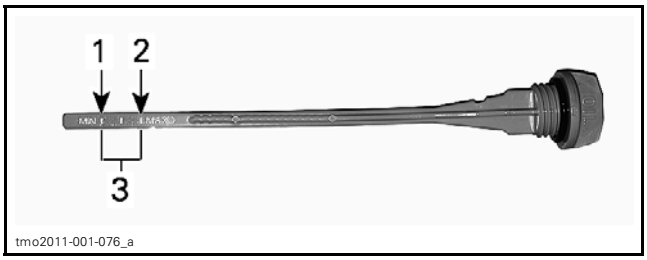

TYPICAL
1. MIN.
2. MAX.
3. Operating range

To add oil, remove the dipstick. Place a funnel into the dipstick tube.

Add a small amount of recommended oil and recheck oil level.

Repeat the above procedures until oil level reaches the dipstick's upper mark.

NOTE: Do not overfill. Wipe off any spillage.

Properly tighten dipstick.

Close cargo box.

Changing the Engine Oil

NOTICE Engine oil and oil filter must be replaced at the same time.

Oil change and oil filter replacement should be done with a warm engine.

⚠ CAUTION The engine oil can be very hot. Wait until engine oil is warm.

Ensure vehicle is on a level surface.

Remove dipstick.

Place a drain pan under the engine drain plug area.

Clean the drain plug area.

Unscrew magnetic drain plug and discard the gasket ring.

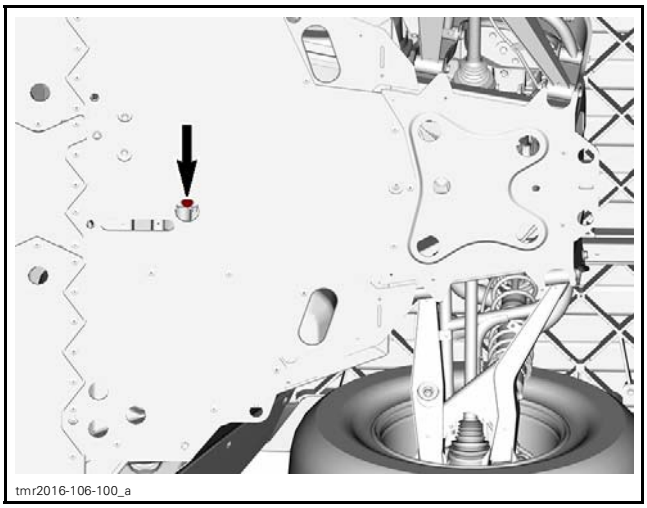

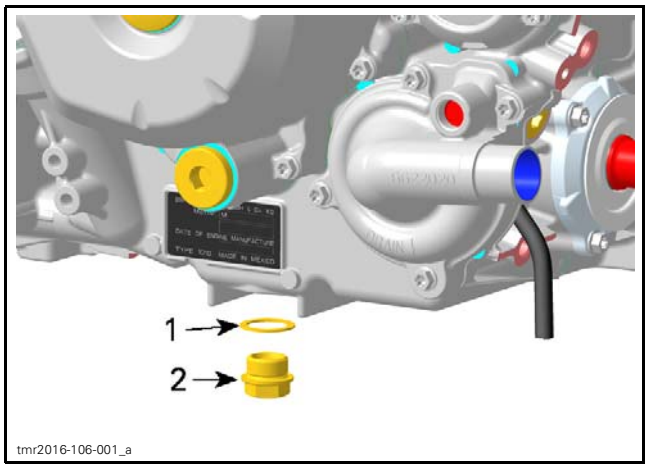

1. *Gasket ring*
2. *Magnetic drain plug*

Allow oil to drain completely from the crankcase.

Clean the magnetic drain plug from metal shavings and residue. Presence of debris gives an indication of internal engine damage.

Install a **NEW** gasket ring on the magnetic drain plug.

NOTICE **Never use the gasket ring a second time. Always replace by a NEW one.**

Tighten magnetic drain plug to the specification.

TIGHTENING TORQUE	
Magnetic drain plug	30 N•m ± 2 N•m (22 lbf•ft ± 1 lbf•ft)

Replace oil filter. Refer to *REPLACING THE ENGINE OIL FILTER* in this subsection.

Refill engine with recommended engine oil.

ENGINE OIL CAPACITY
2 L (2.11 qt (U.S. liq.))

RECOMMENDED ENGINE OIL (GENERAL PURPOSE)	
Scandinavia	4T 5W40 SYNTHETIC BLEND OIL (EUR) (P/N 779290)
All other countries	4T 5W40 SYNTHETIC BLEND OIL (P/N 779133)

RECOMMENDED ENGINE OIL (WARM TEMPERATURE)	
Scandinavia	4T 10W50 SYNTHETIC OIL (EUR) (P/N 779240)
All other countries	4T 10W50 SYNTHETIC OIL (P/N 779234)

RECOMMENDED ENGINE OIL (COLD TEMPERATURE)	
Scandinavia	4T 0W40 SYNTHETIC OIL (EUR) (P/N 779286)
All other countries	4T 0W40 SYNTHETIC OIL (P/N 779139)

If recommended XPS oil is not available, use a 4-stroke SAE 5W40 or 10W50 engine oil that meets or exceeds the requirements for API service classification SM, SL or SJ. Always check the API service label certification on the oil container, it must contain at least one of the above standards.

After filling, check the oil level, refer to *VERIFYING THE ENGINE OIL LEVEL* in this subsection.

Start engine and let it idle for a few minutes.

Ensure oil filter and drain plug areas are not leaking.

Stop engine.

Wait a while to allow oil to flow down to crankcase, then check oil level again.

Dispose oil and filter as per your local environmental regulations.

Replacing the Engine Oil Filter

Removing the Oil Filter

Clean oil filter area.

Remove:
- Oil filter cover screws
- Oil filter cover
- O-ring
- Oil filter.

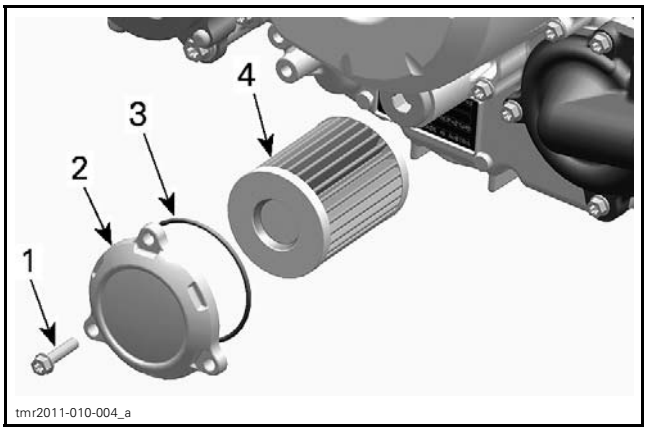

1. *Oil filter cover screw*
2. *Oil filter cover*
3. *O-ring*
4. *Oil filter*

Installing the Oil Filter

Check and clean the oil filter inlet and outlet area for dirt and other contaminations.

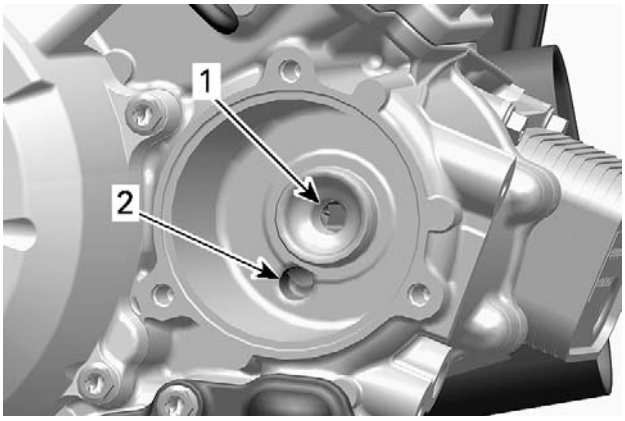

tmr2011-010-005_a

1. *Outlet bore to the engine oil providing system*
2. *Inlet bore from the oil pump to the oil filter*

Install a NEW O-ring on oil filter cover.

Install the new filter into the cover.

Apply engine oil on O-ring and oil filter seal.

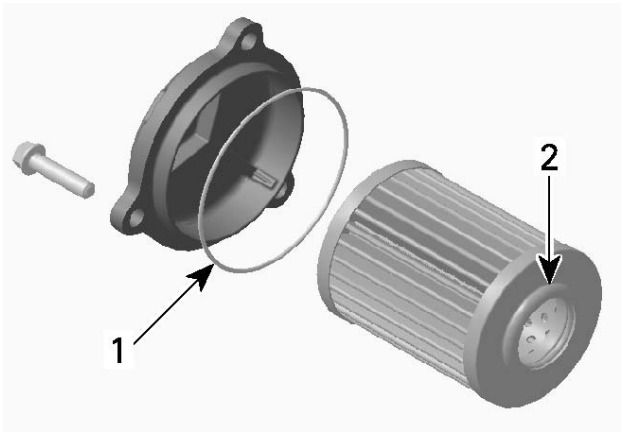

vmr2006-008-001_a

1. *Slightly oil*
2. *Slightly oil*

NOTICE **Pay attention to avoid pinching the O-ring during filter and cover installation.**

Install the cover on the engine.

Tighten oil filter cover screws to specification.

TIGHTENING TORQUE	
Oil filter cover screws	10 N•m ± 1 N•m (89 lbf•**in** ± 9 lbf•**in**)

Wipe off any oil spillage on engine.

COOLING SYSTEM

Recommended Engine Coolant

COUNTRIES	RECOMMENDED COOLANT
Scandinavia	EXTENDED LIFE PRE-MIXED COOLANT (EUR) (P/N 779223)
All other countries	EXTENDED LIFE PRE-MIXED COOLANT (P/N 779150)
Alternative, or if not available	Distilled water and antifreeze solution (50% distilled water, 50% antifreeze)

NOTICE **Always use ethylene-glycol antifreeze containing corrosion inhibitors specifically formulated for internal combustion aluminum engines.**

Verifying the Engine Coolant Level

⚠ WARNING

Check coolant level with engine cold.

1. Place vehicle on a level surface.
2. Tilt cargo box.

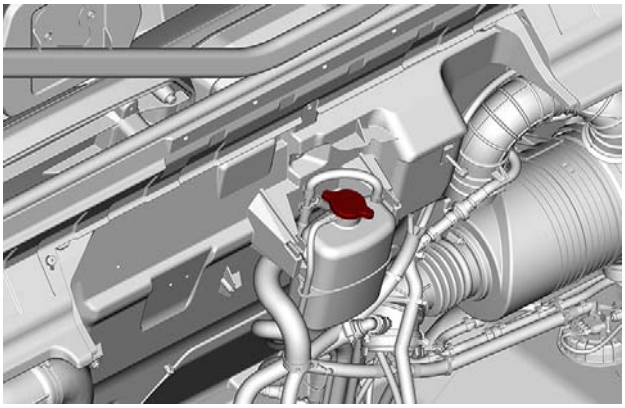

219001807-008

3. Remove the pressure cap.

⚠ WARNING

In order to avoid potential burns, do not remove the pressure cap if the engine is hot.

4. Ensure cooling system is full up to the MAX line.

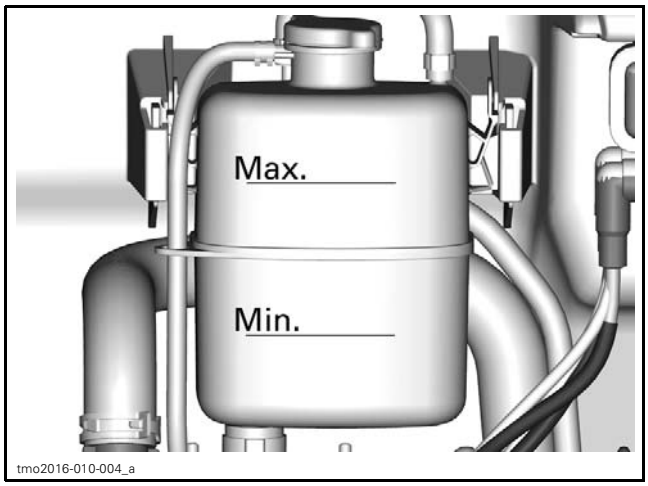

5. Add coolant in system as necessary. **Do not overfill**.
6. Properly reinstall pressure cap.
7. Close the cargo box.

NOTE: A cooling system that frequently requires addition of coolant is an indication of leaks or engine problems.

Checking the Engine Coolant Specific Gravity

Remove pressure cap.

Use an antifreeze tester to test coolant strength.

MINIMUM RECOMMENDED COOLANT STRENGTH
-30°C (-22°F)

Replacing the Engine Coolant

Draining the Cooling System

⚠ WARNING

In order to avoid potential burns, do not remove the pressure cap or loosen the coolant drain plug if the engine is hot.

1. Tilt the cargo box.
2. Remove the cooling system pressure cap.

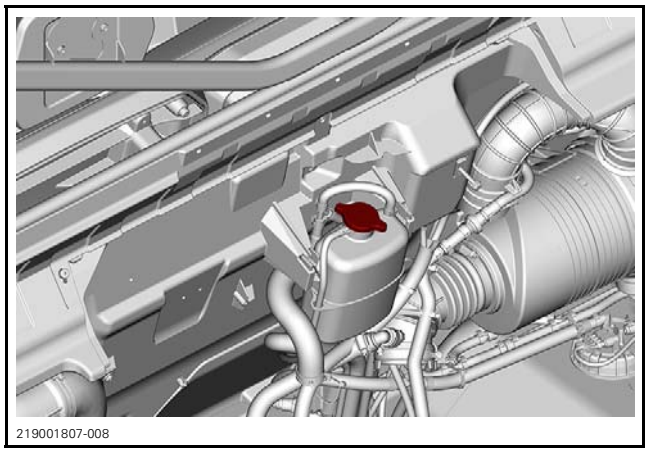

3. Place a drain pan underneath the vehicle.
4. Unscrew coolant drain plug and drain the coolant into a suitable container.

NOTE: Do not unscrew the coolant drain plug completely.

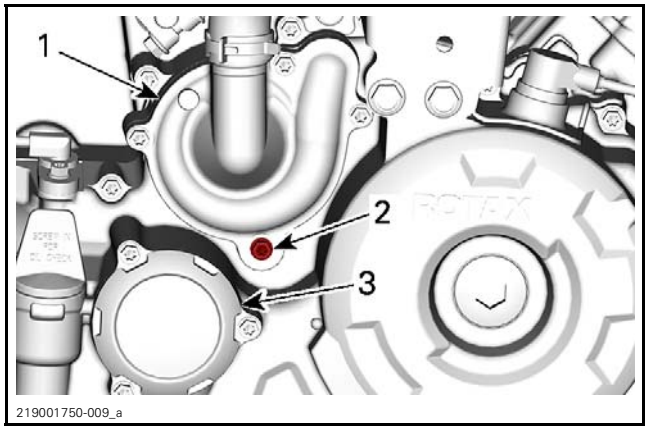

1. Water pump cover
2. Coolant drain plug
3. Oil filter cover

5. Disconnect the lower radiator hose and drain the remaining coolant into a suitable container.

NOTE: Take note of the position of the hose clamp on the lower radiator hose at the radiator.

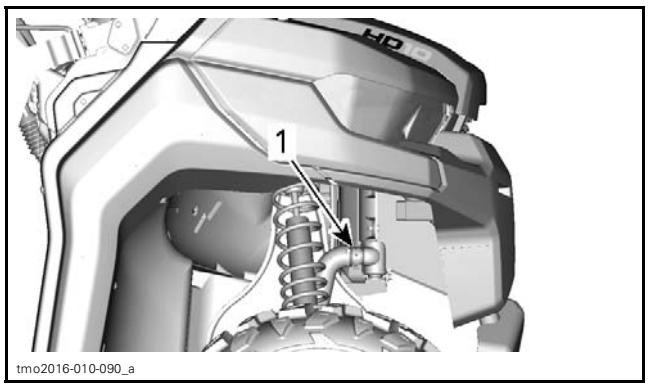

1. Lower radiator hose to disconnect

6. Drain cooling system completely.

7. Reinstall coolant drain plug.

TIGHTENING TORQUE	
Coolant drain plug	10 N•m ± 1 N•m (89 lbf•**in** ± 9 lbf•**in**)

8. Reinstall radiator hose as noted prior to removal.

TIGHTENING TORQUE	
Radiator hose clamp	3 N•m ± 0.5 N•m (27 lbf•**in** ± 4 lbf•**in**)

9. Fill cooling system with coolant, refer to *BLEEDING THE COOLING SYSTEM* procedure.

Bleeding the Cooling System

1. Remove the pressure cap.
2. Fill the cooling system until coolant is full up to the MAX line of the coolant reservoir.
3. Install pressure cap.
4. Run engine at idle with the pressure cap ON until the cooling fan cycles on for a second time.
5. Stop the engine and let it cool down.

⚠ WARNING

In order to avoid potential burns, do not remove the pressure cap if the engine is hot.

6. When the engine is cool, check coolant level. Add coolant if required.
7. After the next ride following this procedure, check coolant level. Add coolant as required. Refer to *VERIFYING THE ENGINE COOLANT LEVEL* in this subsection.

Inspecting the Cooling System

1. Check general condition of hoses and clamps for tightness.
2. Carry out the *CHECKING THE ENGINE COOLANT SPECIFIC GRAVITY* as detailed in this subsection.
3. Carry out the *TESTING THE PRESSURE CAP* as detailed in this subsection.
4. Replace engine coolant if contaminated.

NOTE: Engine coolant should be replaced every 5 years or if contaminated.

Performing a Cooling System Leak Test

⚠ WARNING

To avoid potential burns, do not remove the pressure cap or loosen the cooling system drain plug if the engine is hot.

1. Tilt the cargo box
2. Replace the pressure cap by the following test cap.
3. Install the vacuum/pressure pump on the test cap.

REQUIRED TOOL	
TEST CAP (P/N 529 035 991)	
VACUUM/PRESSURE PUMP (P/N 529 021 800)	

4. Pressurize cooling system.

COOLING SYSTEM LEAK TEST
103 kPa (15 PSI)

If there is no pressure drop after 10 minutes, there is no leak in the cooling system.

If the pressure drops, check all hoses, radiator, cylinders and engine base for coolant leaks or air bubbles.

Testing the Pressure Cap

Test the pressure cap using a cooling system tester.

Replace the cap if it does not hold the pressure, or if it opens at a relief pressure that is too low or too high.

PRESSURE CAP RELIEF PRESSURE
Approximately 110 kPa (16 PSI)

TOP END

Inspecting and Adjusting the Engine Valve Clearance

NOTE: Check and adjust valve clearance only when engine is cold.

Remove valve covers, refer to *TOP END* subsection.

Turn crankshaft to TDC ignition of the respective cylinder, refer to *CAMSHAFT TIMING GEAR* in the *TIMING CHAIN* subsection.

Using feeler gauge, check the valve clearance.

VALVE CLEARANCE	
EXHAUST	0.11 mm to 0.19 mm (.0043 in to .0075 in)
INTAKE	0.06 mm to 0.14 mm (.0024 in to .0055 in)

If the valve clearance is out of specification, adjust valves as follows.

NOTE: Use mean value of exhaust/intake to ensure a proper valve adjustment.

Hold the adjustment screw at the proper position and tighten the locking nut.

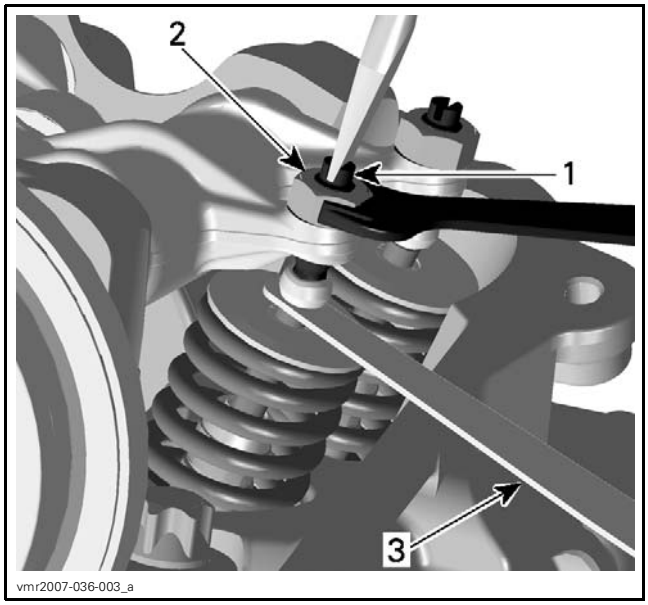

1. *Adjustment screw*
2. *Locking nut*
3. *Feeler gauge*

Repeat the procedure for each valve.

Before installing valve covers, recheck valve clearance.

CONTINUOUSLY VARIABLE TRANSMISSION (CVT)

CVT Air Filter Cleaning

Removing the CVT Air Filter

1. Tilt the cargo box.
2. Press the filter tabs to release it.

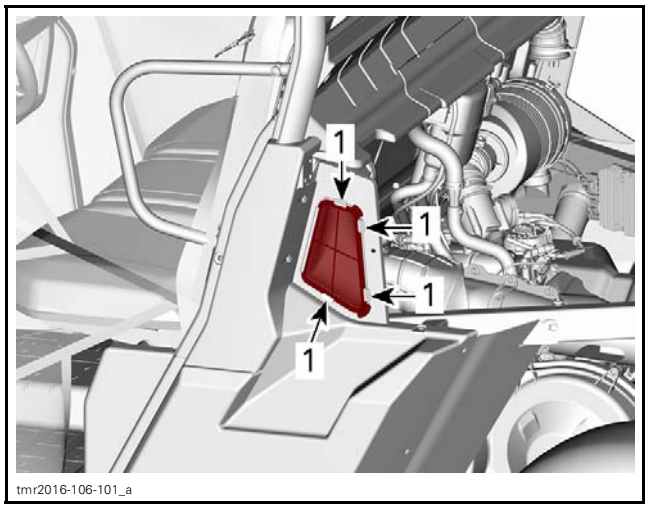

1. *Press here*

Cleaning the CVT Air Filter

1. Inspect filter and replace if damaged.
2. Gently clean using a solution of soft soap and water, then rinse filter.
3. Gently shake off excess water and allow filter to dry at room temperature.
4. Clean inside the CVT air inlet end.

Installing the CVT Air Filter

The installation is the reverse of the removal procedure.

Inspecting the Drive Belt

Inspect belt for cracks, fraying or abnormal wear. Replace if necessary.

Check drive belt width at cord level. Replace if it is out of specification (see table below).

DRIVE BELT WIDTH	
Service limit	30 mm (1.181 in)

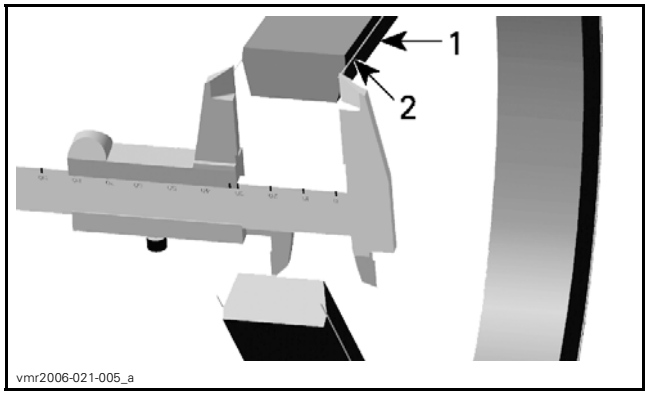

1. *Drive belt*
2. *Cord in drive belt*

Cleaning the CVT Air Inlet/Outlet

1. Remove CVT cover, refer to *CONTINUOUSLY VARIABLE TRANSMISSION (CVT)* subsection.
2. Inspect and clean the air inlet and outlet openings from inside the CVT air guide.

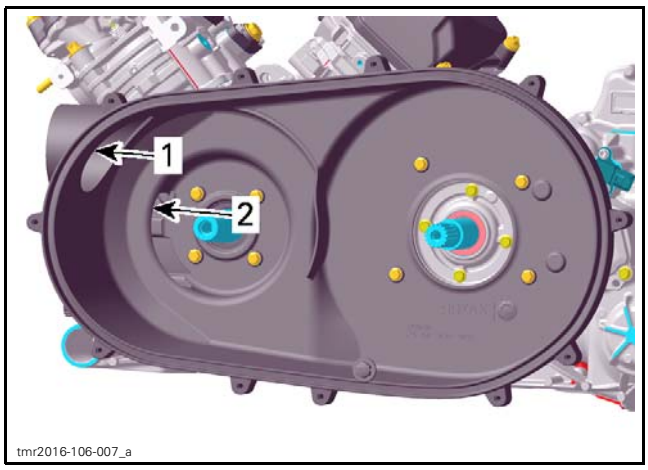

1. *CVT air inlet*
2. *CVT air outlet*

3. Inspect and clean the CVT air inlet end.

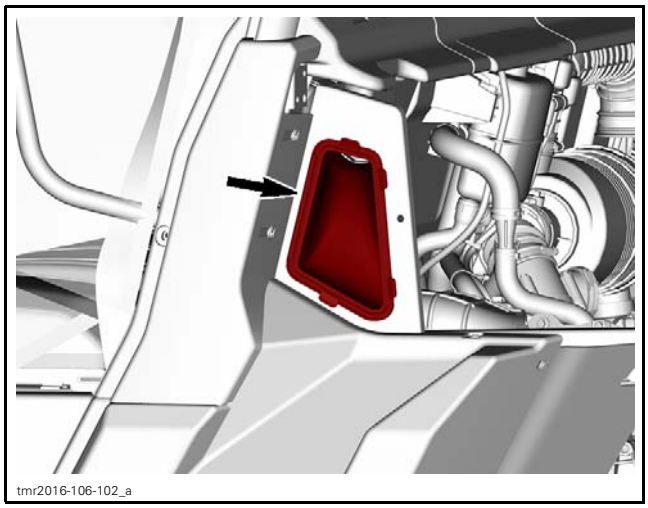

NOTE: If a lot of debris or grime are found in the CVT system, it may be necessary to remove the ducts and thoroughly clean them.

4. Reinstall CVT cover.

Drive Pulley, Driven Pulley and Hub Needle Bearing Maintenance

Drive and Driven Pulley

Clean and inspect drive and drive pulley sheaves. Refer to *CONTINUOUSLY VARIABLE TRANSMISSION (CVT)* subsection.

Hub

Inspect drive pulley hub needle bearing. Refer to *CONTINUOUSLY VARIABLE TRANSMISSION (CVT)* subsection.

GEARBOX

Verifying the Gearbox Oil Level

Tilt the cargo box.

Unscrew and remove the gearbox oil dipstick wipe clean.

NOTICE **Pay attention not to loose O-ring on oil dipstick.**

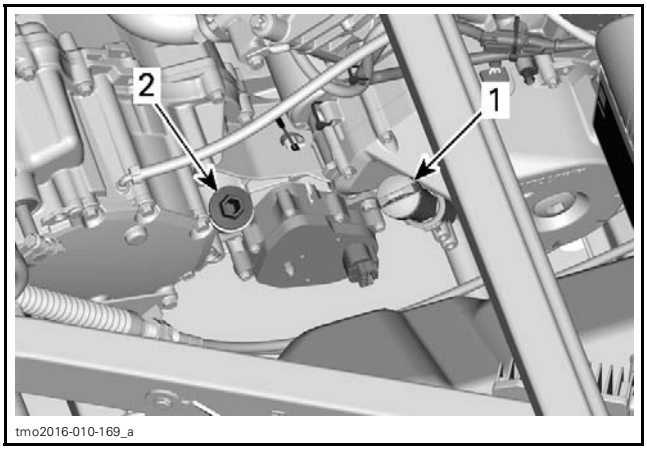

1. *Engine oil dipstick*
2. *Gearbox oil dipstick*

Reinstall dipstick, screw in it completely.

Remove dipstick again and check oil level. It should be near or equal to the upper mark.

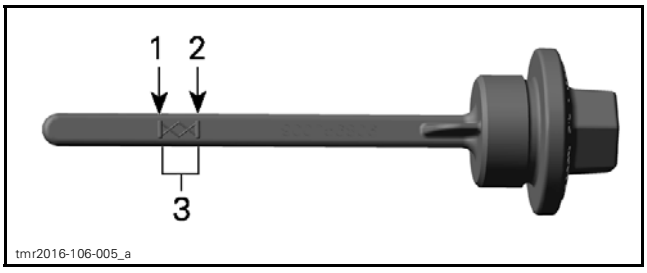

1. *MIN.*
2. *MAX.*
3. *Operating range*

To add oil, place a funnel into the dipstick hole.

Add a small amount of recommended oil and recheck oil level.

Repeat the above procedures until oil level reaches the dipstick's upper mark.

NOTICE **Operating the gearbox with an improper oil level may severely damage gearbox.**

NOTE: Do not overfill. Wipe off any spillage.

Properly tighten oil dipstick.

Rear Final Drive Oil (HD5)

Verifying Rear Final Drive Oil Level

Place the vehicle on a level surface. Select PARK position.

Check the oil level by removing the filler plug.

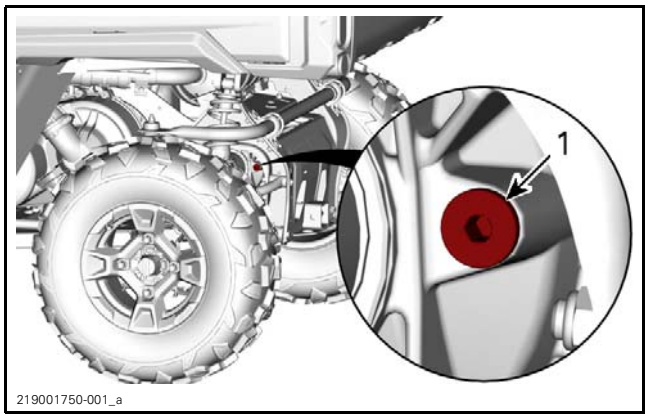

LH REAR SIDE OF VEHICLE
1. Filler plug

Insert a wire in the oil filler hole.

The oil level must be within the following specification.

OIL LEVEL
20 mm ± 5 mm (9/16 in ± 3/16 in) below the oil filler plug hole bottom edge

Reinstall filler plug with a NEW sealing ring.

TIGHTENING TORQUE	
Filler plug	22.5 N•m ± 2.5 N•m (17 lbf•ft ± 2 lbf•ft)

NOTICE **Operating the vehicle with an improper oil level may severely damage the rear final drive.**

Recommended Rear Final Drive Oil

RECOMMENDED REAR FINAL DRIVE OIL	
Scandinavia	75W90 SYNTHETIC GEAR OIL (EUR) (P/N 779212)
All other countries	75W90 SYNTHETIC GEAR OIL (P/N 779158)

NOTE: The XPS oil is specially formulated to meet the lubrication requirements of this gearbox. BRP strongly recommends the use of its XPS oil. However, if the XPS synthetic gear oil is not available, use the following lubricant:

REAR FINAL DRIVE MINIMUM OIL REQUIREMENT
75W 90 API GL-5 synthetic gear oil

NOTICE **Do not use another type of oil when servicing.**

Rear Final Drive Oil Change

Place the vehicle on a level surface.

Clean drain plug area.

Clean the filler plug area.

Under the vehicle, place a drain pan underneath the oil drain plug area.

Remove the filler plug.

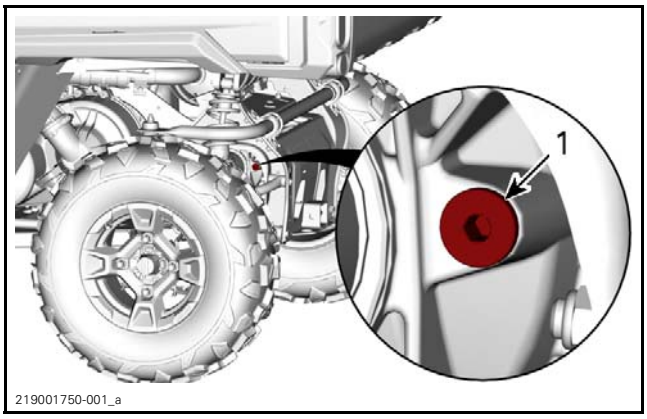

LH REAR SIDE OF VEHICLE
1. Filler plug

Remove the drain plug.

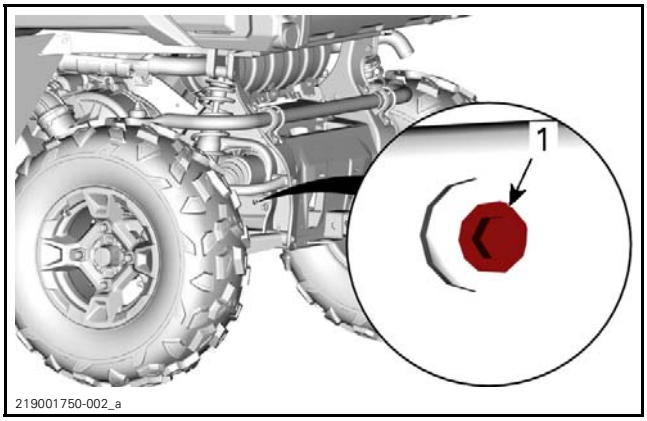

LH REAR SIDE OF VEHICLE
1. Drain plug

Allow oil to drain completely

Clean the drain plug.

Install the drain plug.

TIGHTENING TORQUE	
Drain plug	7.5 N•m ± 0.5 N•m (66 lbf•**in** ± 4 lbf•**in**)

Fill the final drive unit to the proper level, refer to *REAR FINAL DRIVE OIL LEVEL VERIFICATION*.

For the final drive oil capacity, refer to *SPECIFICATIONS*.

NOTICE **Use ONLY the recommended type of oil.**

NOTICE **Do not overfill.**

Reinstall the filler plug with a NEW sealing ring.

TIGHTENING TORQUE	
Filler plug	7.5 N•m ± 0.5 N•m (66 lbf•**in** ± 4 lbf•**in**)

Wipe off any spillage.

Cleaning the Vehicle Speed Sensor (VSS)

Remove the VSS. Refer to *REMOVING THE VSS* in the appropriate *GEARBOX AND 4X4 COUPLING UNIT* subsection.

Remove all metal particles and oil from the VSS magnet.

NOTE: A dirty VSS will cause erratic speedometer readings.

FUEL SYSTEM

Inspecting the Throttle Body

1. Visually inspect throttle plate and throttle body venturi for cleanliness.
2. Clean inside throttle body using a common throttle body cleaner if necessary.

Replacing Fuel Tank Vent Breather Filter

Ensure breather filter is installed with the flow arrow pointing towards the vent hose.

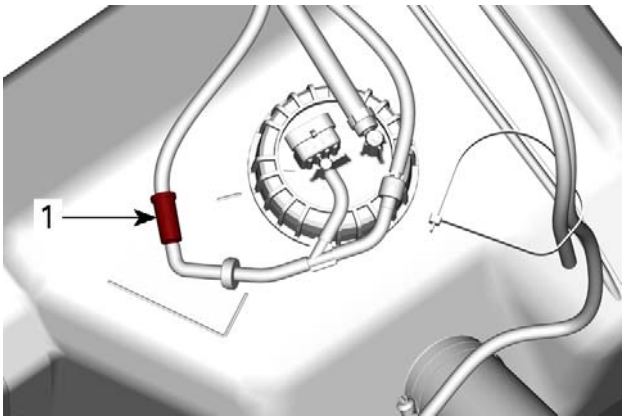

1. Fuel tank vent breather filter

Inspecting Fuel System

1. Visually inspect fuel tank for cracks, wear marks, signs of leakage or any other damages.
2. Visually inspect fuel system hoses for proper rooting, cracking, wear marks, signs of leakage or any other damages.
3. Carry out a *FUEL TANK LEAK TEST*, refer to *FUEL TANK AND FUEL PUMP* subsection.

⚠ WARNING

All fuel system leaks must be repaired. Damaged, worn or leaking fuel system components should be replaced to ensure fuel system tightness.

Fuel Pump Pressure Test

Refer to *FUEL TANK AND FUEL PUMP* subsection for procedure.

Cleaning Fuel Pump Prefilter

1. Remove fuel pump from fuel tank, refer to *FUEL PUMP REMOVAL* in *FUEL TANK AND FUEL PUMP* subsection.
2. Clean the fuel pump prefilter (strainer) using the recommended products and low pressure air.

RECOMMENDED PRODUCTS
BRAKE AND PARTS CLEANER PRO S2 (P/N 779245)

3. If the fuel pump prefilter is heavily soiled, clogged or damaged:
   – Replace it with a new one. Refer to *FUEL PUMP STRAINER REPLACEMENT* in the *FUEL TANK AND FUEL PUMP* subsection.
   – Inspect inside of fuel tank for contaminants.

– Clean fuel tank as required.
– Inspect fuel tank vent breather filter. Replace as necessary. Refer to *FUEL TANK VENT BREATHER FILTER* in *FUEL TANK AND FUEL PUMP* subsection.

ELECTRICAL SYSTEM

Inspecting the Battery

Visually inspect battery casing for cracks or other damage. If casing is damaged, replace battery and thoroughly clean battery rack with water and baking soda.

Inspect battery posts condition, battery rack mounting, straps and strap attachment points.

For battery testing, refer to *CHARGING SYSTEM* subsection.

Replacing the Spark Plug

Removing the Spark Plug

Unplug the spark plug cable.

Clean the spark plug area with pressurized air.

Unscrew spark plug using a spark plug socket.

Installing the Spark Plug

Prior to installation make sure that contact surfaces of the cylinder head and spark plug are free of grime.

1. Using a wire feeler gauge, verify the electrode gap as specified in *TECHNICAL SPECIFICATIONS*.
2. Apply antiseize lubricant over the spark plug threads to prevent possible seizure.
3. Hand screw spark plug into cylinder head, then tighten with a torque wrench and an appropriate spark plug socket.

CAUTION **Do not overtighen spark plugs, engine damage can occur.**

TIGHTENING TORQUE	
Service product	LOCTITE 767 (ANTISEIZE LUBRICANT) (P/N 293 800 070)
Spark plug	20 N•m ± 2 N•m (15 lbf•ft ± 1 lbf•ft)

DRIVE SYSTEM

Verifying the Front Differential Oil Level

Clean filler plug prior to checking oil level.

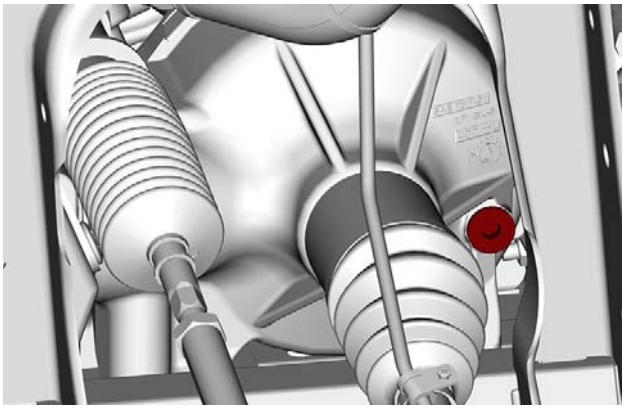

TYPICAL - FRONT RIGHT SIDE OF VEHICLE

With vehicle on a level surface, check oil level by removing filler plug. Oil level must reach the lower edge.

Reinstall filler plug.

TIGHTENING TORQUE	
Filler plug	16.5 N•m ± 2.5 N•m (146 lbf•**in** ± 22 lbf•**in**)

Replacing the Front Differential Oil

Place vehicle on a level surface. Set gearbox in park position.

From underneath of vehicle, clean drain plug area.

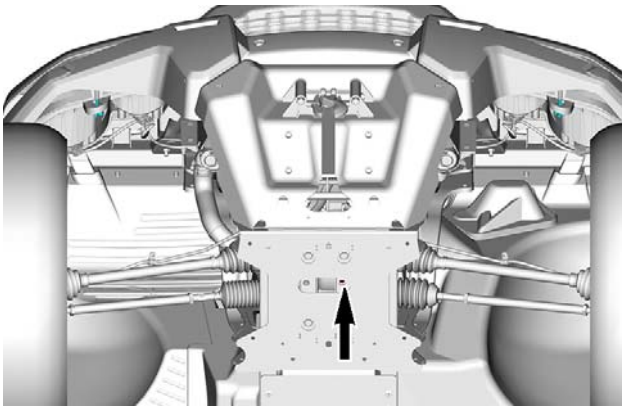

TYPICAL
1. Drain plug access hole

Place a drain pan under the front differential.

Remove drain plug.

Unscrew filler plug.

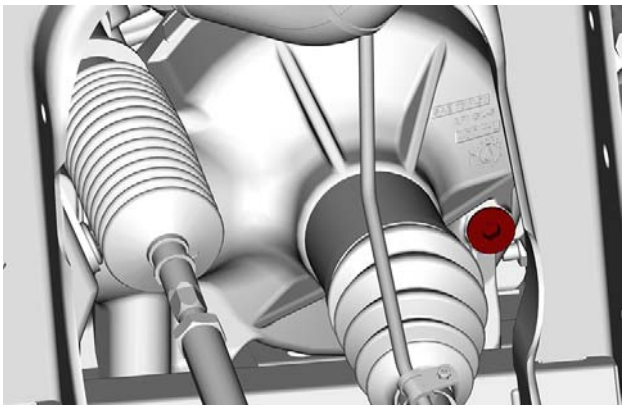

219001807-006

TYPICAL - FRONT RIGHT SIDE OF VEHICLE

Install drain plug.

TIGHTENING TORQUE	
Drain plug	2.7 N•m ± 0.3 N•m (24 lbf•**in** ± 3 lbf•**in**)

Refill front differential with recommended oil.

COUNTRIES	RECOMMENDED OIL
Scandinavia	75W90 SYNTHETIC GEAR OIL (EUR) (P/N 779212)
All other countries	75W90 SYNTHETIC GEAR OIL (P/N 779158)

NOTE: The XPS oil is specially formulated to meet the lubrication requirements of this gearbox. BRP strongly recommends the use of its XPS oil. However, if the XPS synthetic gear oil is not available, use the following lubricant:

FRONT DIFFERENTIAL MINIMUM OIL REQUIREMENT
75W 90 API GL-5 synthetic gear oil

CAPACITY
500 ml (17 U.S. oz)

NOTICE **Do not use another type of oil when servicing.**

Reinstall filler plug.

TIGHTENING TORQUE	
Filler plug	16.5 N•m ± 2.5 N•m (146 lbf•**in** ± 22 lbf•**in**)

Inspecting the Drive Shaft Boot and Protector

Visually inspect each drive shaft boot for grease leak, cracks or opening.

Check if the drive shaft boot protector are fixed firmly, not torn or otherwise damaged.

Replace if necessary.

Inspecting the Drive Shaft Joint

Turn and move drive shaft to detect excessive play.

Inspecting the Propeller Shaft U-Joint

Check yoke U-joints for wear, backlash or axial play, replace if necessary.

WHEELS AND TIRES

Wheel Lug Nut Torque Verification

Tighten wheel lug nuts to specification using the illustrated sequence.

TIGHTENING TORQUE	
Wheel lug nuts	100 N•m ± 10 N•m (74 lbf•ft ± 7 lbf•ft)

tmo2011-001-081_a

TIGHTENING SEQUENCE

STEERING SYSTEM

Inspecting the Wheel Bearing

1. Safely lift and support the front of vehicle. Refer to *INTRODUCTION* subsection.
2. Hold wheel by the top and the bottom and move it. Check for any play.

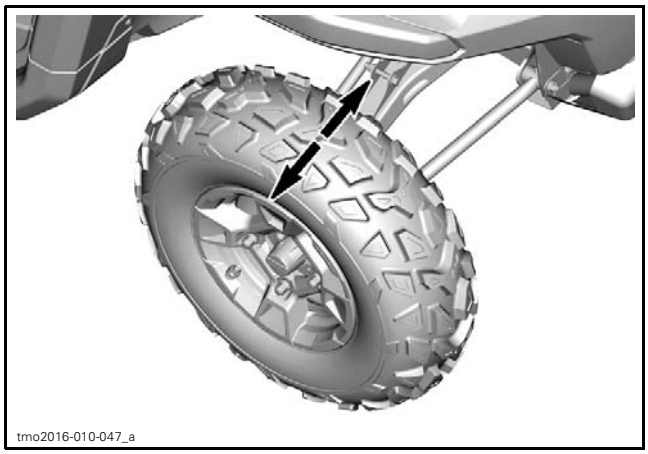

TYPICAL

3. If there is any loose, replace wheel bearing, refer to *STEERING SYSTEM* subsection.

NOTE: To properly locate play during this inspection, be sure to check other components for wear or loose (ball joints, suspension pivots, etc). If necessary repair or replace all defective parts before checking the wheel bearing condition. Be careful not to misjudge loose in the ball joint and loose in the wheel bearing.

Inspecting the Steering System

Steering Column

Turn and move steering column to detect any play.

Rack and Pinion

Check rack and pinion boots for:
- Damage
- Cracks.

Replace if necessary.

Tie-Rod End

Check tie-rod end ball joint for:
- Damage
- Pitting
- Play.

Replace if necessary.

SUSPENSION

Inspecting the Shock Absorber

Check shock absorber for any leaks, replace if necessary.

Lubricating the Suspension Arm and Stabilizer Bar Bushings (if equipped)

Lubricate suspension arm and stabilizer bar bushings (if equipped) at grease fittings.

SUSPENSION GREASE	
Scandinavia	SYNTHETIC SUSPENSION GREASE (EUR) (P/N 779226)
All other countries	SYNTHETIC SUSPENSION GREASE (P/N 779163)

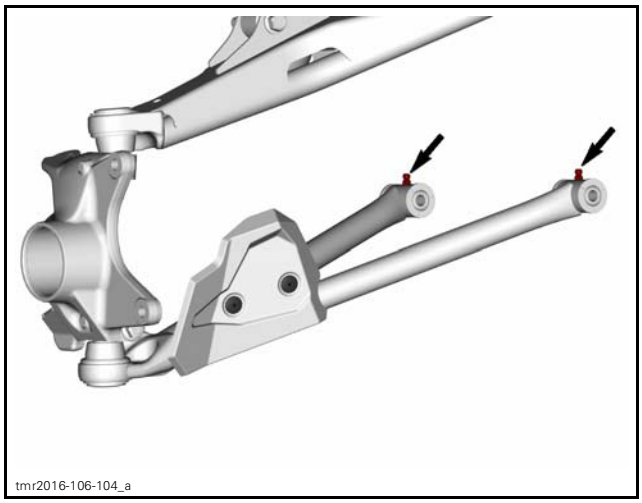

LOWER SUSPENSION ARM

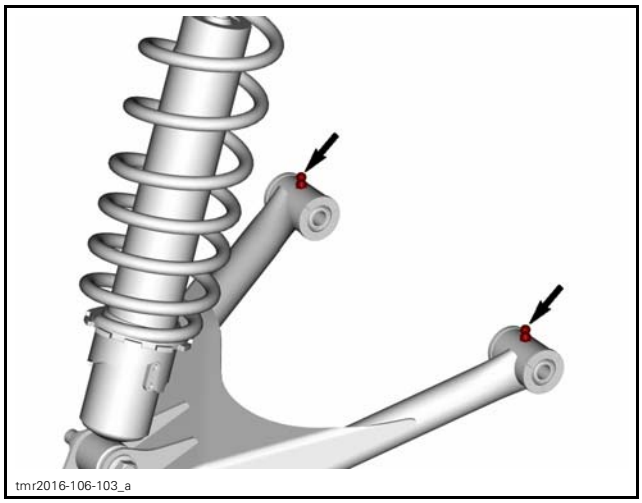

UPPER SUSPENSION ARM

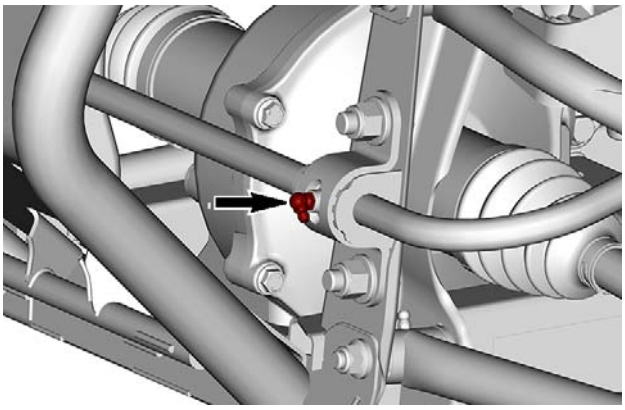

FRONT STABILIZER BAR BUSHINGS

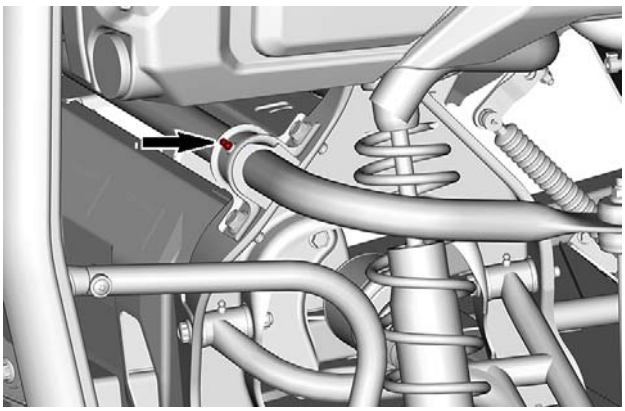

REAR STABILIZER BAR BUSHINGS

Lubricating the Rear Knuckle

KNUCKLE LUBRICATION	
Scandinavia	SYNTHETIC SUSPENSION GREASE (EUR) (P/N 779226)
All other countries	SYNTHETIC SUSPENSION GREASE (P/N 779163)

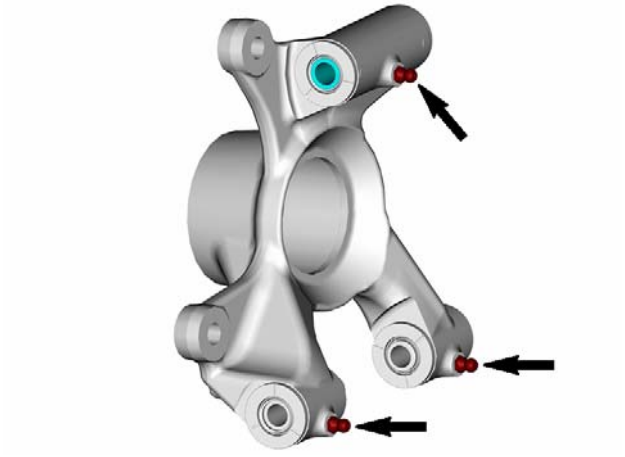

Inspecting the Suspension Arm

Check suspension arm for:
- Cracks
- Pitting
- Bending
- Distortion.

Check suspension arm for abnormal play:
- Side to side
- Up and down.

If any play is detected, inspect:
- Bushings
- Cushions
- Wear plates.

Check ball joint for:
- Damage
- Pitting
- Play.

Check ball joint bellows for:
- Damage
- Cracks.

BRAKES

Cleaning and Inspecting the Brake System

NOTICE **Do not clean brake components in petroleum based solvent. Use brake system cleaner only. Soiled brake pads must be replaced with new ones.**

Brake Pads

1. Measure brake pad lining thickness. Refer to *TECHNICAL SPECIFICATIONS*.

NOTE: The brake pad grooves are wear indicators.

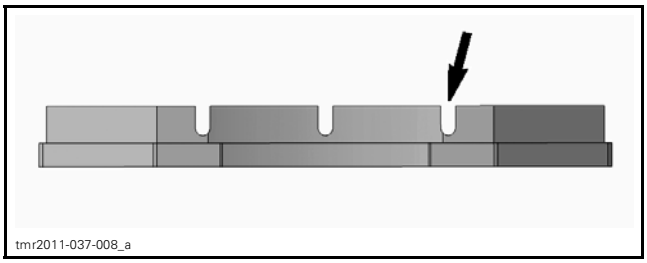

BRAKE PAD GROOVE

⚠ WARNING

Brake pads must always be replaced in pairs.

Brake Caliper

1. Remove calipers then check the following components:
   - Check brake pad pins
   - Check caliper boot for cracks
   - Check caliper movement on its support
   - Check pistons movement
   - Check pistons for scratches, rust or other damages.
2. Clean the following components using the recommended products.:
   - Brake pads
   - Caliper support and slider
   - Caliper pistons, spring and pins.

RECOMMENDED PRODUCTS
XPS BRAKES AND PARTS CLEANER (USA) (P/N 219 701 705) or BRAKE AND PARTS CLEANER PRO S2 (P/N 779245)

NOTE: Do not remove pistons from caliper for cleaning them.

3. Lubricate caliper sliders and pins using an appropriate brake caliper synthetic grease.

Brake Disc

1. Check brake disc as follows:
   - Check disc thickness
   - Check disc surfaces
   - Check disc warpage.

NOTE: Refer to *TECHNICAL SPECIFICATIONS* for details.

2. Clean brake disc using the recommended products..

RECOMMENDED PRODUCTS
XPS BRAKES AND PARTS CLEANER (USA) (P/N 219 701 705) or BRAKE AND PARTS CLEANER PRO S2 (P/N 779245)

Master Cylinder

1. Check master cylinder as follows:
   - Check cleanliness of master cylinder rod and boot.
   - Check master cylinder boot for cracks or damage.
2. If required, clean then lubricate master cylinder rod and boot using COSMO RUBBER GREASE (P/N 715 900 399).

Brake Pedal

1. Check brake pedal as follows:
   - Brake pedal pivot movement
   - Brake pedal pivot cleanliness.
2. If required, clean then lubricate brake pedal pivot using SYNTHETIC GREASE (P/N 779162).

Brake Hoses

1. Check hoses for leaks, crushed, deformations, cracking or scrapes.

NOTE: Any deformation can restrict the proper flow of fluid and cause braking problems.

Replacing the Brake Fluid

Draining the Brake Fluid

1. Clean and remove reservoir cover with its diaphragm.
2. Connect a clear hose into caliper bleeder.

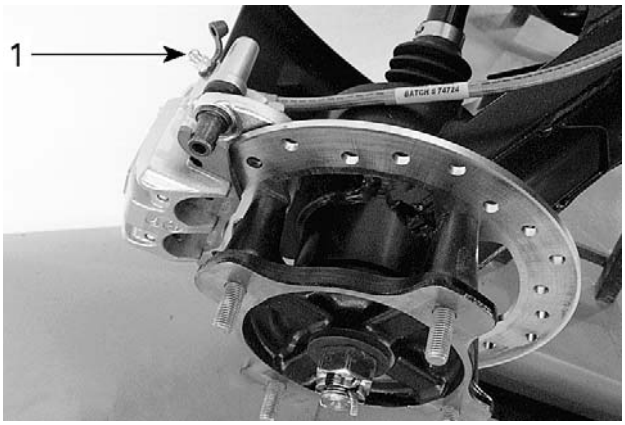

1. Caliper bleeder

3. Loosen caliper bleeder.
4. Pump brake pedal until no more fluid flows out.
5. Repeat draining procedure for the other caliper bleeders.

Filling the Brake Fluid

1. Add recommended brake fluid to MAX. mark. Do not overfill.

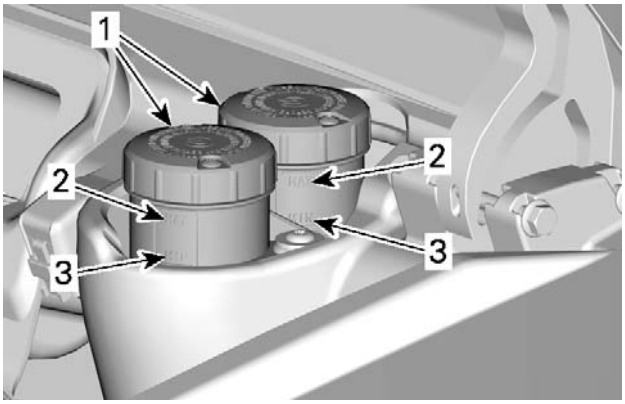

tmo2016-010-050_a

1. *Brake fluid reservoirs*
2. *MAX*
3. *MIN*

RECOMMENDED BRAKE FLUID	
Scandinavia	BRAKE FLUID DOT 4 (EUR) (P/N 779207)
All other countries	BRAKE FLUID DOT 4 (P/N 779151)

⚠ WARNING

- **Use only DOT 4 brake fluid from a sealed container.**
- **Do not use brake fluid from an old or already opened container.**

Bleeding the Brake System (Vacuum Pump)

NOTE: Brake fluid reservoir must be kept full to prevent air from being pumped into the system.

1. On each caliper, unscrew bleeder until brake fluid comes out then close it.
2. Install the vacuum pump onto caliper bleeder.

REQUIRED TOOL	
VACUUM/PRESSURE PUMP (P/N 529 021 800)	

3. Place pump to vacuum position.
4. Pump vacuum pump a few times.
5. Loosen bleeder.
6. Continue to pump until no more air bubbles appear in clear hose.
7. Close then tighten bleeder.

TIGHTENING TORQUE	
Bleeder	5.5 N•m ± 1.5 N•m (49 lbf•**in** ± 13 lbf•**in**)

8. Add recommended brake fluid to MAX. mark. Do not overfill.
9. Perform bleeding procedure for the other caliper bleeders.
10. Check brake pedal operation:
    - If brake pedal feels spongy, bleed system again then carry out the *BRAKE SYSTEM PRESSURE VALIDATION* as detailed in *BRAKES* subsection.

Bleeding the Brake System (Manual)

NOTE: Brake fluid reservoir must be kept full to prevent air from being pumped into the system.

1. Connect a clear hose onto caliper bleeder.
2. Pump up system pressure with brake pedal until pedal resistance is felt.
3. Depress and hold brake pedal.
4. Open bleeder and then close it.
5. Release brake pedal slowly.

NOTE: Do not release brake pedal until bleeder has been closed.

6. Repeat procedure until fluid flows out without any air bubbles.
7. Tighten bleeder.

TIGHTENING TORQUE	
Bleeder	5.5 N•m ± 1.5 N•m (49 lbf•**in** ± 13 lbf•**in**)

8. Perform bleeding procedure for the other caliper bleeders.
9. Check brake pedal operation:
    - If brake pedal feels spongy, bleed system again then carry out the *BRAKE SYSTEM PRESSURE VALIDATION* as detailed in *BRAKES* subsection.

PASSENGER HANDHOLDS

Passenger Handhold Condition

Check if the passenger handholds are fixed firmly, not bent or otherwise damaged.

Replace if necessary.

TOW HITCH

Inspecting the Tow Hitch

Ensure tow hitch receptacle module is solidly mounted.

Inspect hitch for cracks and other damages.

Repair or replace as necessary.

STORAGE PROCEDURE

SERVICE PRODUCTS

Description	Part Number	Page
BRP HEAVY DUTY CLEANER	293 110 001	2
CLEANER AND DEGREASER PRO C1	779262	2
FUEL STABILIZER (EUR)	779183	1
FUEL STABILIZER	779171	1
LUBRICANT AND ANTI-CORROSIVE (EUR)	779224	2
LUBRICANT AND ANTI-CORROSIVE	779168	2
OIL STORAGE (USA)	779182	1
OIL STORAGE	779173	1

GENERAL

If the vehicle is not used or is to be stored for an extended period of time, more than 4 months, be sure to perform the storage procedures described below.

Where applicable, refer to the appropriate subsections in this manual for the required tasks outlined in these procedures.

PROCEDURES

To facilitate the inspection and ensure adequate lubrication of components, it is recommended to clean the entire vehicle. Refer to *CLEANING THE VEHICLE* in this subsection.

FUEL SYSTEM

Protecting the Fuel System

With the new fuel additives, it is critical to use fuel stabilizer or an equivalent to prevent fuel deterioration and fuel system gumming. Follow the manufacturer's instructions for proper use.

SERVICE PRODUCT	
Scandinavia	FUEL STABILIZER (EUR) (P/N 779183)
All other countries	FUEL STABILIZER (P/N 779171)

NOTICE **Fuel stabilizer should be added prior to engine lubrication to ensure fuel system components protection against varnish deposits.**

Pour fuel stabilizer in fuel tank. Fill up fuel tank.

ENGINE

Lubricating the Engine Internal Parts

Engine internal parts must be lubricated to protect them from rust formation during the storage period.

Proceed as follows:

1. Remove spark plug(s).
2. Spray storage oil into cylinder(s).

SERVICE PRODUCT	
Except USA	OIL STORAGE (P/N 779173)
USA	OIL STORAGE (USA) (P/N 779182)

3. Crank the engine over, 1 or 2 seconds maximum, to lubricate cylinders.
4. Reinstall the spark plugs.

NOTE: Do not run engine during storage period.

5. Block muffler outlet, engine air inlet and CVT outlet with a rags.

NOTICE **To avoid causing damage to vehicle, use memory aid to make sure rags are removed from their installed location.**

Protecting the CVT

Remove drive belt. Refer to the appropriate *CONTINUOUSLY VARIABLE TRANSMISSION (CVT)* subsection.

Close CVT cover.

Block CVT outlet with a rag.

NOTE: To reach the CVT outlet, detach it from exhaust heat shield.

ELECTRICAL SYSTEM

Removing the Battery

Remove the battery.

Charge and store battery.

CHASSIS

Lubrication

Lubricate front and rear suspension and rear sway bar.

Tire Pressure

Inflate tires to the recommended pressure.

Cleaning the Vehicle

Wash and dry the vehicle.

NOTICE **Never use a high pressure washer to clean the vehicle. USE LOW PRESSURE ONLY (like a garden hose). The high pressure can cause electrical or mechanical damages.**

Remove any dirt or rust.

To clean the vinyl or plastic parts, use only flannel clothes with following recommended service product.

SERVICE PRODUCT
CLEANER AND DEGREASER PRO C1 (P/N 779262)

NOTICE **It is necessary to use flannel cloths on plastic parts to avoid damaging surfaces. Never clean plastic parts with strong detergent, degreasing agent, paint thinner, acetone, products containing chlorine, etc.**

To clean the entire vehicle, including metallic parts use following recommended service product.

SERVICE PRODUCT
BRP HEAVY DUTY CLEANER (P/N 293 110 001)

Inspect the vehicle and repair any damage. Touch up all metal spots where paint has been scratched off. Spray all metal parts with following recommended service product.

SERVICE PRODUCT	
Scandinavia	LUBRICANT AND ANTI-CORROSIVE (EUR) (P/N 779224)
All other countries	LUBRICANT AND ANTI-CORROSIVE (P/N 779168)

Protecting the Vehicle

Protect the vehicle with a cover to prevent dust accumulation during storage.

NOTICE **The vehicle has to be stored in a cool and dry place and covered with an opaque tarpaulin. This will prevent sun rays and grime from affecting plastic components and vehicle finish.**

PRESEASON PREPARATION

Proper vehicle preparation is required after a storage period.

Any worn, broken or damaged parts found must be replaced.

Remove rags that were installed for storage: engine air inlet hose, CVT outlet hose and muffler.

Clean drive and driven pulleys to remove storage protective lubricant, then reinstall drive belt. Refer to *CONTINUOUSLY VARIABLE TRANSMISSION (CVT)*.

Remove parts required to allow inspection of entire engine air inlet system. Check for animal nests and other foreign material. Reinstall removed parts.

Drain fuel tank and fill with fresh fuel if a fuel stabilizer was not used for storage.

Reinstall battery. Refer to *CHARGING SYSTEM* subsection.

Inflate tires to the recommended pressure.

NOTE: Perform any due maintenance items as per the *MAINTENANCE SCHEDULE*.

Test drive vehicle.

SPECIAL PROCEDURES

SERVICE PRODUCTS

Description	Part Number	Page
LUBRICANT AND ANTI-CORROSIVE	779168	2

GENERAL

Component failures resulting from these events are not warrantable.

Refer to the appropriate subsections in this manual for the required tasks outlined in these procedures.

ROLLED OVER VEHICLE

In the event the vehicle was rolled over, check the following.

Inspect suspension components and steering system components.

Inspect body and chassis for damage (welded joints, bent or cracked parts).

Pay particular attention to the cage, shoulder protector, side nets, seat belts and their mechanisms.

⚠ WARNING

Do not use vehicle if any of the safety devices are damaged or inoperative.

Check all fluids level before restarting engine.

NOTICE **Check for oil accumulation in the air intake system. Check air filter.**

After restarting engine, check multifunction gauge if any malfunction is detected.

Troubleshoot and repair as required before using vehicle.

SUBMERGED VEHICLE

In the event the vehicle was submerged, proceed with the following.

NOTICE **A submerged vehicle may cause several damages (short and long term) if not serviced adequately or soon enough. Do not crank or start engine.**

Drain the entire air intake system. Inspect the throttle body. Remove parts as required.

Replace the air filter.

Drain, inspect and clean the CVT.

Empty muffler (removal required).

Unplug ECM, multifunction gauge and DPS connectors, and open fuse boxes. Check for presence of water. Dry as necessary.

Inspect all lights for water intrusion. Dry as required.

Replace the engine oil (without starting the engine).

Remove spark plugs. Crank engine in drowned mode to expel any water.

⚠ **CAUTION** **Keep away from spark plug holes to avoid to be splashed when cranking engine.**

Add a small quantity of engine oil in cylinders (approximately 2 teaspoonfuls).

Install spark plugs (replace if required).

Look for water in fuel tank, in doubt, flush fuel tank and refill with new gas.

Look for water in brake system. Replace brake fluid as required.

NOTICE **Before starting engine, use the BRP diagnostic software and check for fault codes.**

Start the engine and allow it to run at idle speed until the engine reaches its operating temperature.

Stop the engine.

Change engine oil and filter.

NOTE: Change oil as many times as necessary, until there is no whitish appearance in engine oil.

Check gearbox oil (HD8 and HD10). Replace oil if contaminated with water.

Replace oil of front differential.

Replace oil of final drive (HD5).

Check vent tubes. Clean if required.

Lubricate front and rear suspensions and propeller shaft joints. Refer to *FRONT SUSPENSION* and *REAR SUSPENSION* subsections.

Spray all metal parts with lubricant and anti-corrosive.

SERVICE PRODUCT
LUBRICANT AND ANTI-CORROSIVE (P/N 779168)

Test drive to confirm proper operation.

ENGINE REMOVAL AND INSTALLATION

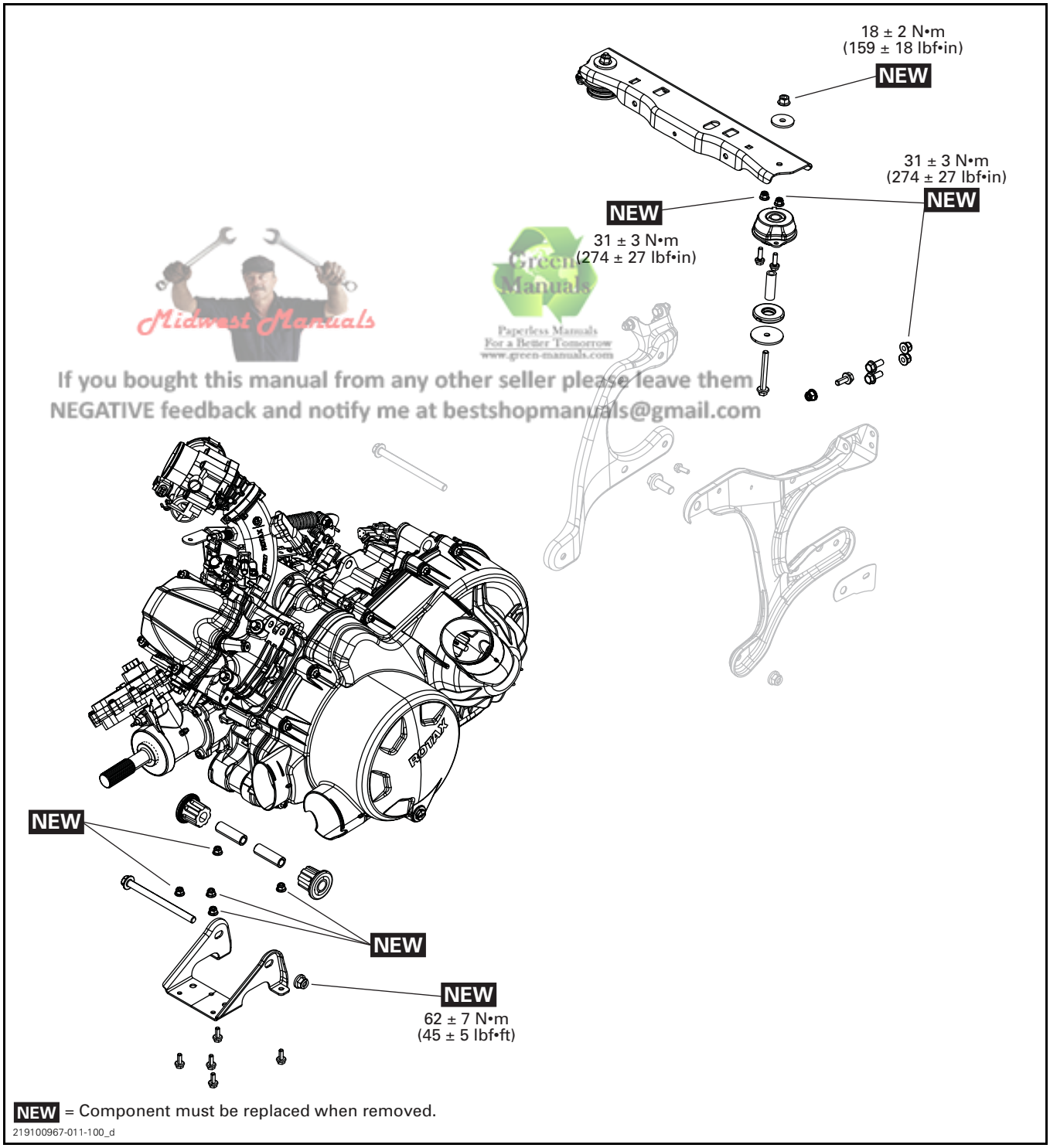

Midwest Manuals
Green Manuals
Paperless Manuals
For a Better Tomorrow
www.green-manuals.com
If you bought this manual from any other seller please leave them
NEGATIVE feedback and notify me at bestshopmanuals@gmail.com

PROCEDURES

REMOVING THE ENGINE

Preparing the Vehicle and Engine

1. Place vehicle on a workstation that will have access to an engine-lifting hoist.
2. Safely lift and support the vehicle. Refer to *INTRODUCTION* subsection.
3. Disconnect the battery.

NOTICE **Always disconnect the battery cables exactly in the specified order, the BLACK (-) cable first.**

4. Remove rear drive shafts. Refer to *REAR DRIVE* subsection.
5. Remove cargo box.
6. Remove the muffler tail pipe.
7. Remove the bolts retaining the rear engine support to the chassis.

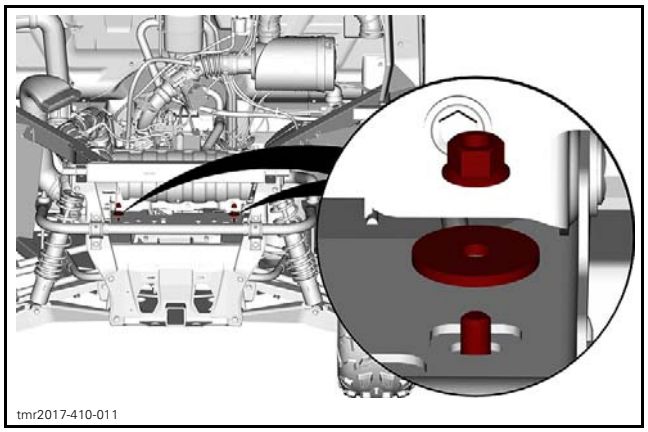

TYPICAL

8. Drain engine oil. Refer to *LUBRICATION SYSTEM* subsection.

NOTE: Drain engine oil only if engine overhaul is necessary.

9. Drain the engine coolant.
   9.1 Pinch the coolant hoses near the engine using a large hose pincher.

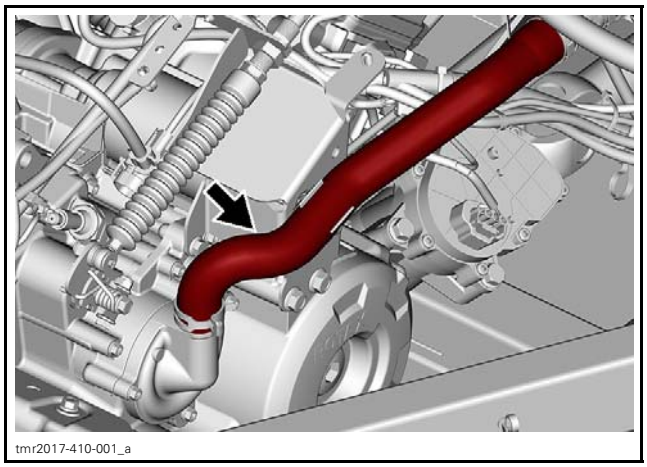

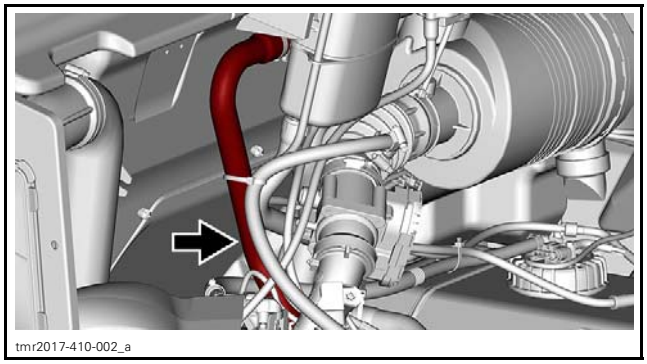

   9.2 Open coolant drain plug and drain coolant.

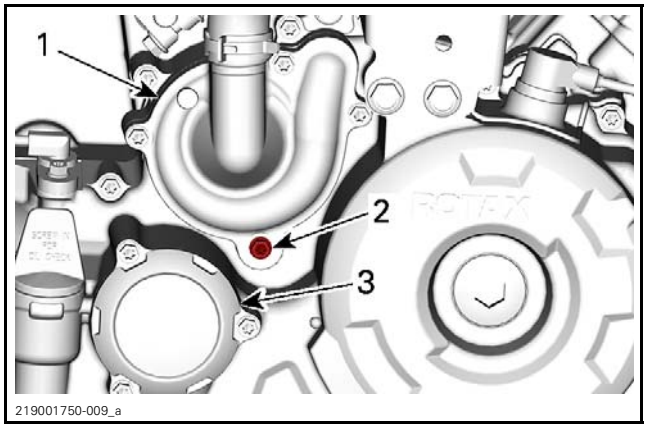

1. *Water pump cover*
2. *Coolant drain plug*
3. *Oil filter cover*

10. Disconnect engine coolant hoses from the engine.
11. Disconnect the crankcase vent from the air intake bellows.

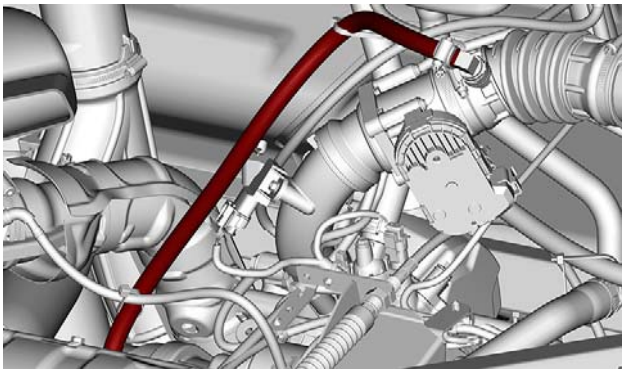

tmr2017-410-003

12. Disconnect the air intake bellows from the air filter housing.
13. Remove the CVT ducts.
14. Detach the shifter cable from its bracket and remove it.

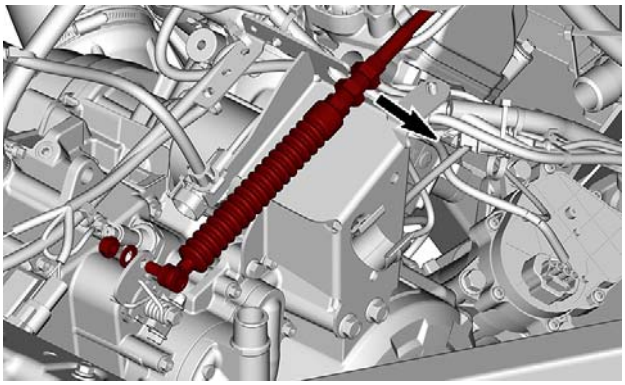

tmr2017-410-004_a

15. Remove the front engine support **nut**.
16. Remove the 4X4 coupling unit. Refer to the *GEARBOX AND 4X4 COUPLING UNIT* subsection.
17. Disconnect voltage regulator.

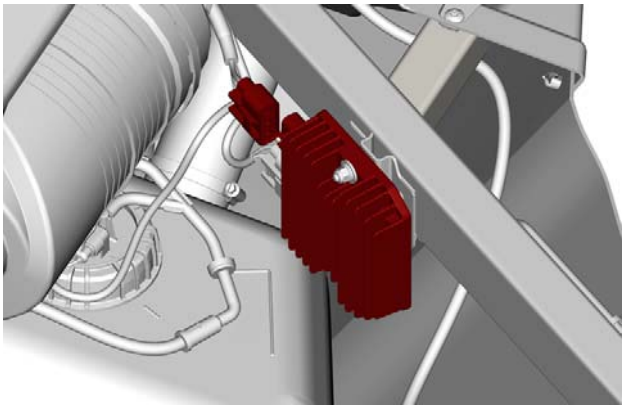

tmr2016-110-105

18. Disconnect the following connectors and cables from engine. Note the locking ties location for reinstallation.
    - HIC (Engine Harness Connector)
    - HO2S (Oxygen Sensor)
    - OPS (Oil Pressure Sensor)
    - VSS (Vehicle Speed Sensor)
    - GBPS (Gearbox Position Sensor)
    - CPS (Crankshaft Position Sensor)
    - Engine ground cable
    - Spark plug
    - Fuel injector
    - MAPTS (Manifold Absolute Pressure and Temperature Sensor)
    - Throttle body
    - CTS (Coolant Temperature Sensor)
    - Starter cable (retaining nut on starter motor)
    - Magneto
    - Ignition coil.

Lifting the Engine

1. Install a hook and strap through the rear engine lifting hole.

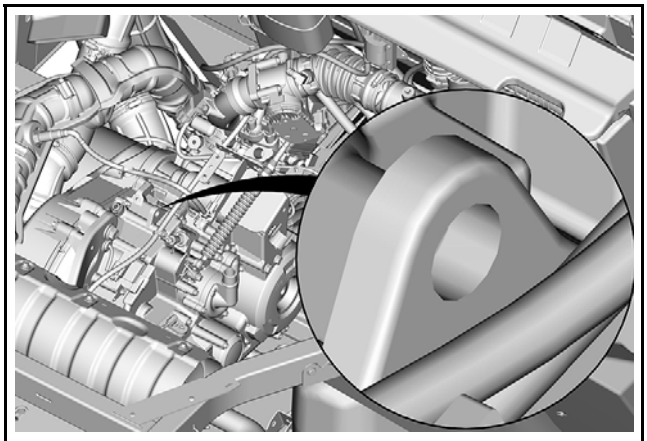

tmr2017-410-005

2. Slightly lift engine to ease removal of front engine support bolt.
3. Remove the front engine support bolt.
4. Remove engine from vehicle.
5. Remove the final drive unit from the engine, refer to the *REAR FINAL DRIVE* subsection.

INSTALLING THE ENGINE

The installation is the reverse of the removal procedure. However, pay attention to the following.

Prior to install engine, inspect condition of engine mounts.

Install all engine supports bolts, then tighten bolts.

Final Assembly Procedure

1. Fill engine with the recommended oil and quantity. Refer to *LUBRICATION SYSTEM* subsection.
2. Fill and bleed cooling system. Refer to *COOLING SYSTEM* subsection.
3. Check for any leaks.
4. Test drive vehicle to confirm proper operation.

ENGINE MOUNTS

Removing the Engine Mount

Insert a punch into engine mount bushing and push the opposite engine mount out.

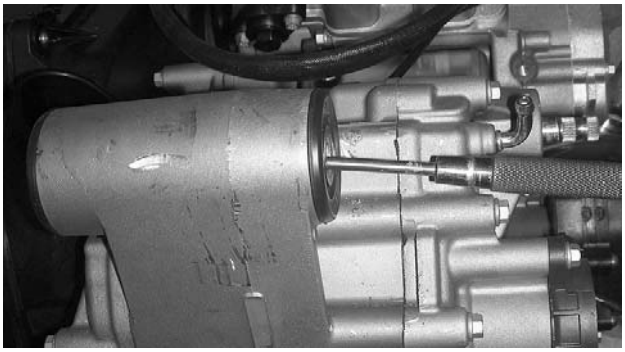

tmr2011-007-011

TYPICAL

Installing the Engine Mount

The installation is the reverse of the removal procedure.

ENGINE REMOVAL AND INSTALLATION

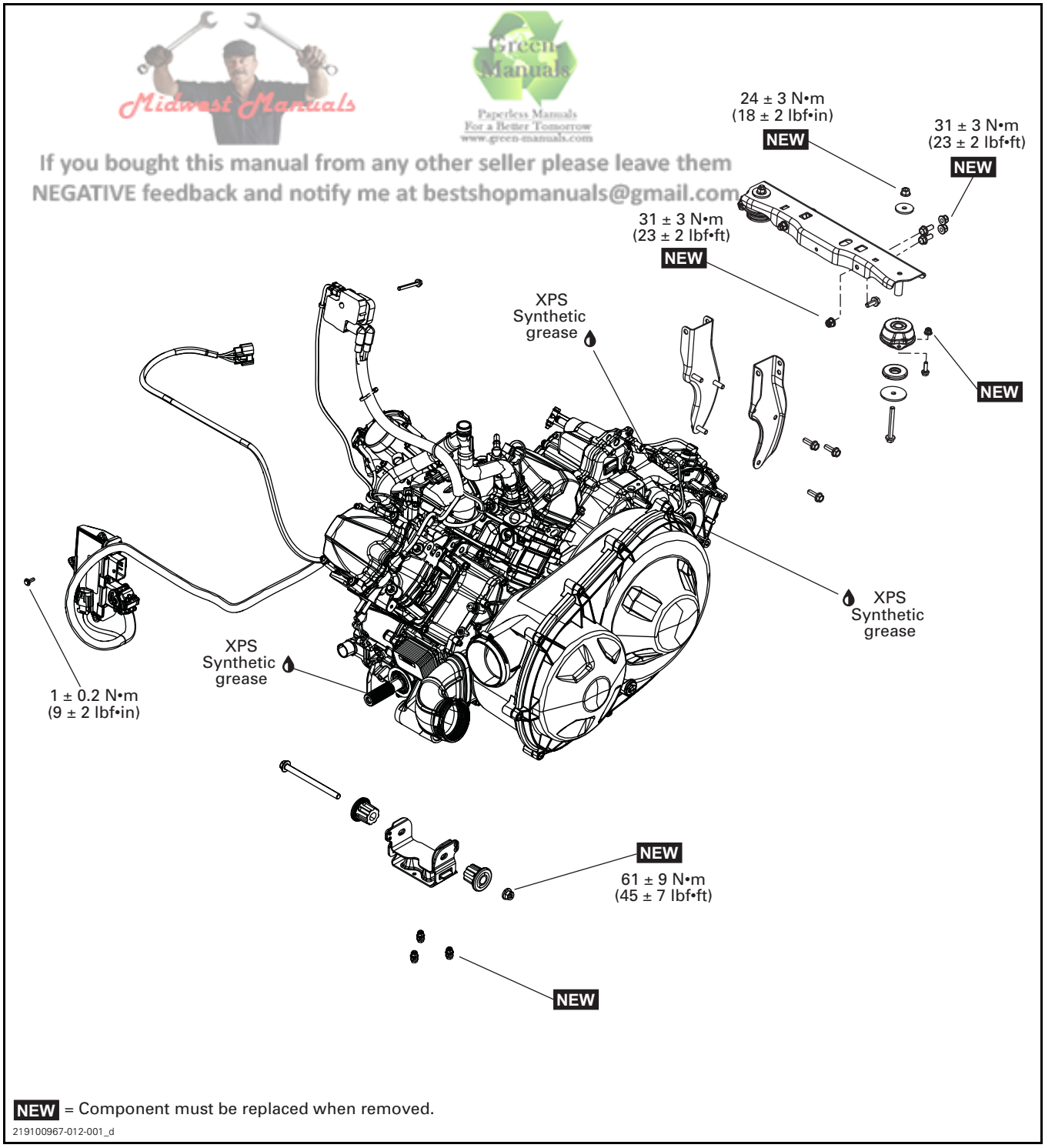

Midwest Manuals
Green Manuals
Paperless Manuals
For a Better Tomorrow
www.green-manuals.com
If you bought this manual from any other seller please leave them
NEGATIVE feedback and notify me at bestshopmanuals@gmail.com

PROCEDURES

ENGINE REMOVAL

Preparing the Vehicle and Engine

1. Place vehicle on a workstation that will have access to an engine-lifting hoist.
2. Safely lift and support the vehicle. Refer to *INTRODUCTION* subsection.
3. Disconnect the battery.

NOTICE **Always disconnect the battery cables exactly in the specified order, the BLACK (-) cable first.**

4. Remove rear drive shafts. Refer to *REAR DRIVE* subsection.
5. Remove cargo box.
6. Remove exhaust. Refer to *EXHAUST SYSTEM* subsection.

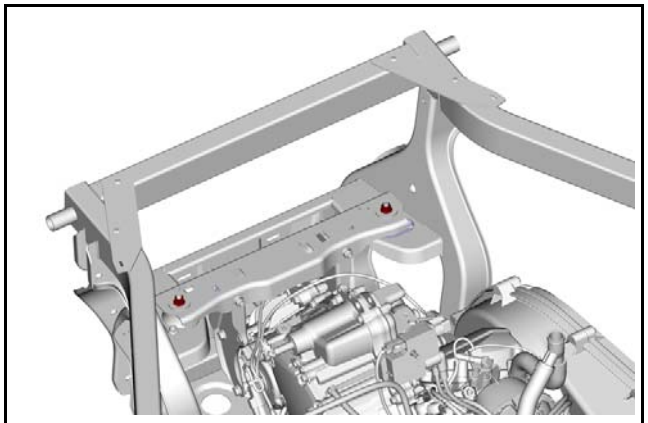

tmr2016-110-107

NOTE: Remove screws securing exhaust support bracket to frame. Leave muffler support bracket attached to rear engine support brackets.

7. Remove rear engine support bolts.
8. Drain engine oil. Refer to *LUBRICATION SYSTEM* subsection.

NOTE: Drain engine oil only if engine overhaul is necessary.

9. Drain the engine coolant.
   9.1 Pinch coolant hose near water pump.

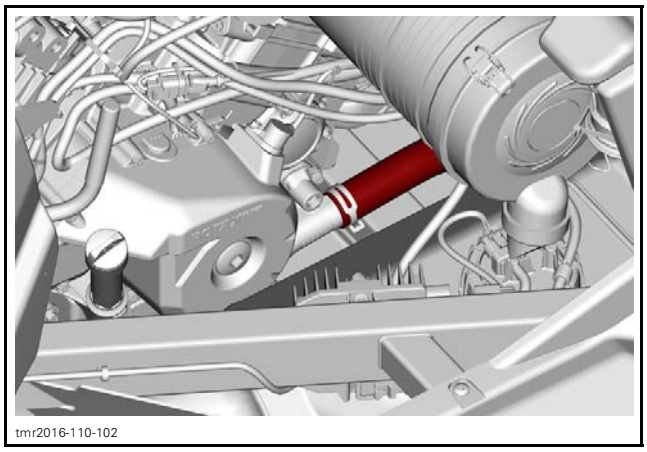

tmr2016-110-102

   9.2 Pinch coolant hose near coolant bottle above Y fitting.

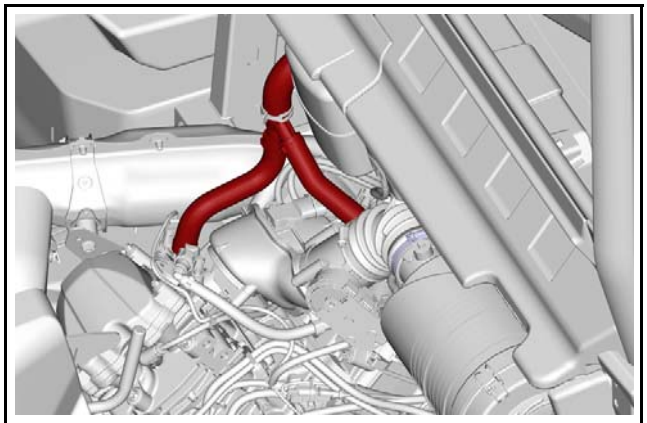

tmr2016-110-101

   9.3 Open coolant drain plug.

NOTE: Completely drain engine coolant only if engine overhaul is necessary. Refer to *COOLING SYSTEM* subsection.

10. Remove fuel tank. Refer to *FUEL TANK AND FUEL PUMP* subsection.
11. Disconnect engine coolant hose above the Y fitting connecting to both cylinder heads.
12. Remove the air intake bellow.

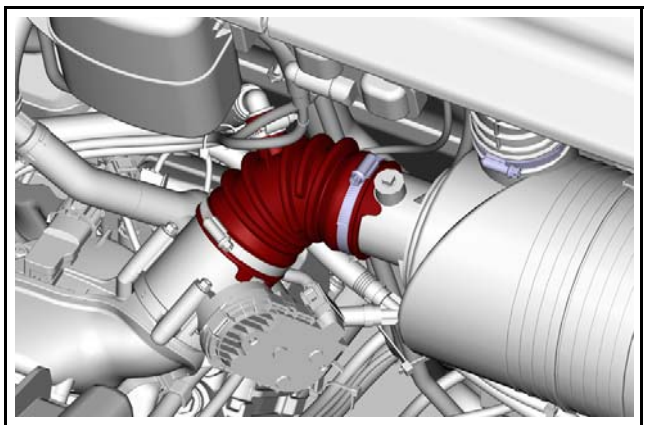

tmr2016-110-106

NOTE: DO NOT Remove the front and rear head pipes from engine.

13. Disconnect the coolant hose at water pump.
14. Disconnect the gearbox vent hose.

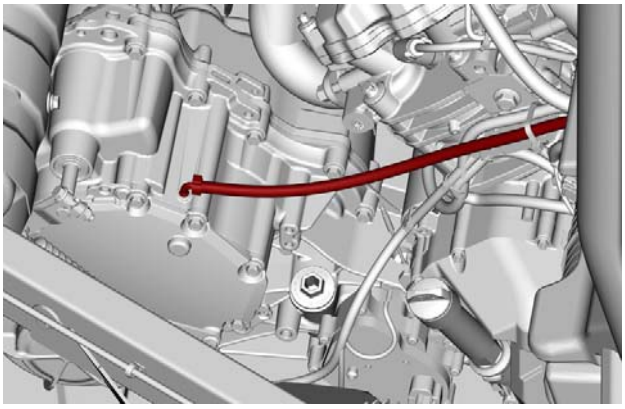

tmr2016-110-103

15. Remove the CVT outlet duct.
16. Remove the CVT inlet duct.
17. Unplug and remove the CTS (coolant temperature sensor).
18. Detach the shifter cable from its bracket and remove it.

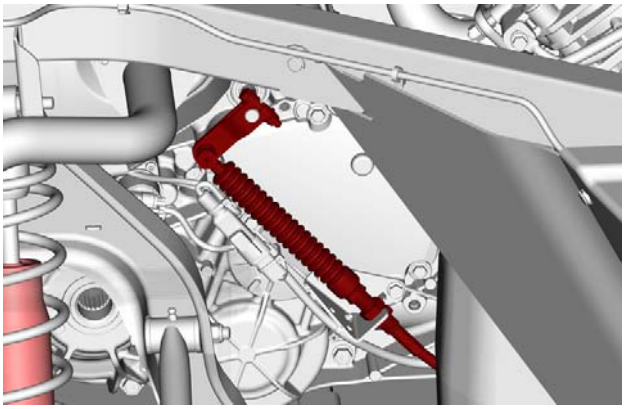

tmr2016-110-104

19. Remove the front engine support nut.
20. Disconnect the crankcase vent hose.
21. Disconnect voltage regulator.

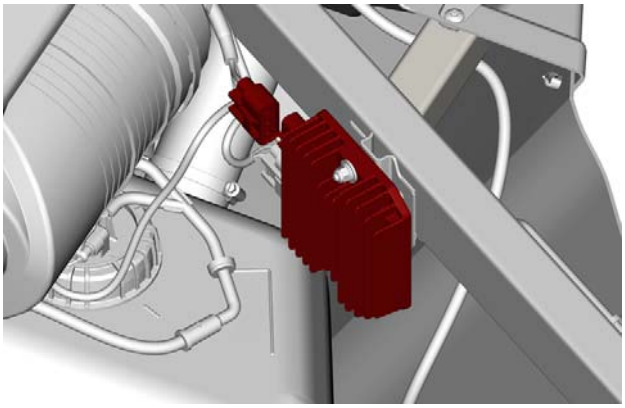

tmr2016-110-105

22. Unplug all remaining connectors and remove required cables from engine. Cut all necessary locking ties.
    - Starter cable (retaining nut on starter body)
    - GBPS (Gear Box Position Sensor)
    - Vehicle speed sensor
    - Actuator connector
    - Neutral switch
    - 2WD/4WD and differential lock actuator
    - OPS (Oil Pressure Sensor)
    - CPS (Crankshaft Position Sensor)
    - Engine ground cable
    - Magneto.

Lifting Engine

1. Install a hook and strap through the rear engine lifting holes and route a second lifting strap under the front cilynder.
2. Remove retaining screws on front and rear propeller shafts.
3. Slightly lift engine to ease removal of front engine support bolt.
4. Remove the front engine support bolt.
5. Raise the front of engine to separate front propeller shaft from engine.

NOTE: If the propeller shaft cannot be removed easily, remove bolts retaining the front differential to create more space. Refer to *FRONT DRIVE* subsection.

6. Remove engine from vehicle.

ENGINE INSTALLATION

The installation is the reverse of the removal procedure. However, pay attention to the following.

Prior to install engine, inspect condition of engine mounts.

Connect the front propeller shaft to engine output shaft while lowering engine.

Install rear and front engine mounting bolts then torque all mounting bolts.

Install air intake bellow. Ensure alignment marks are properly positioned and torque to specification. Refer to *AIR INTAKE SYSTEM*.

Install exhaust. Refer to *EXHAUST SYSTEM*.

Final Assembly Procedure

1. Fill engine with the recommended oil and quantity. Refer to *LUBRICATION SYSTEM* subsection.
2. Fill and bleed cooling system. Refer to *COOLING SYSTEM* subsection.
3. Check for any leaks.
4. Test drive vehicle to confirm proper operation.

ENGINE MOUNTS

Removing the Front Engine Mount

Insert a punch into front engine mount bushing and push the opposite engine mount out.

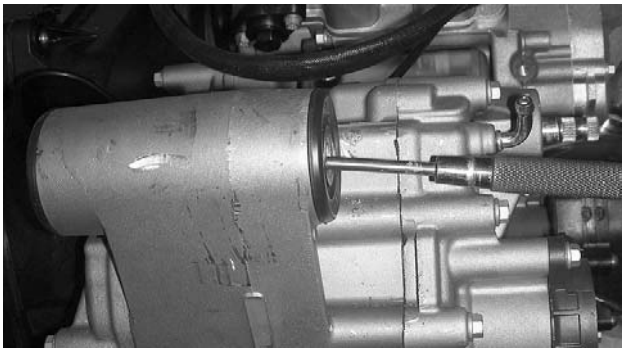

tmr2011-007-011

TYPICAL

Installing the Engine Mount

The installation is the reverse of the removal procedure.

ENGINE REMOVAL AND INSTALLATION

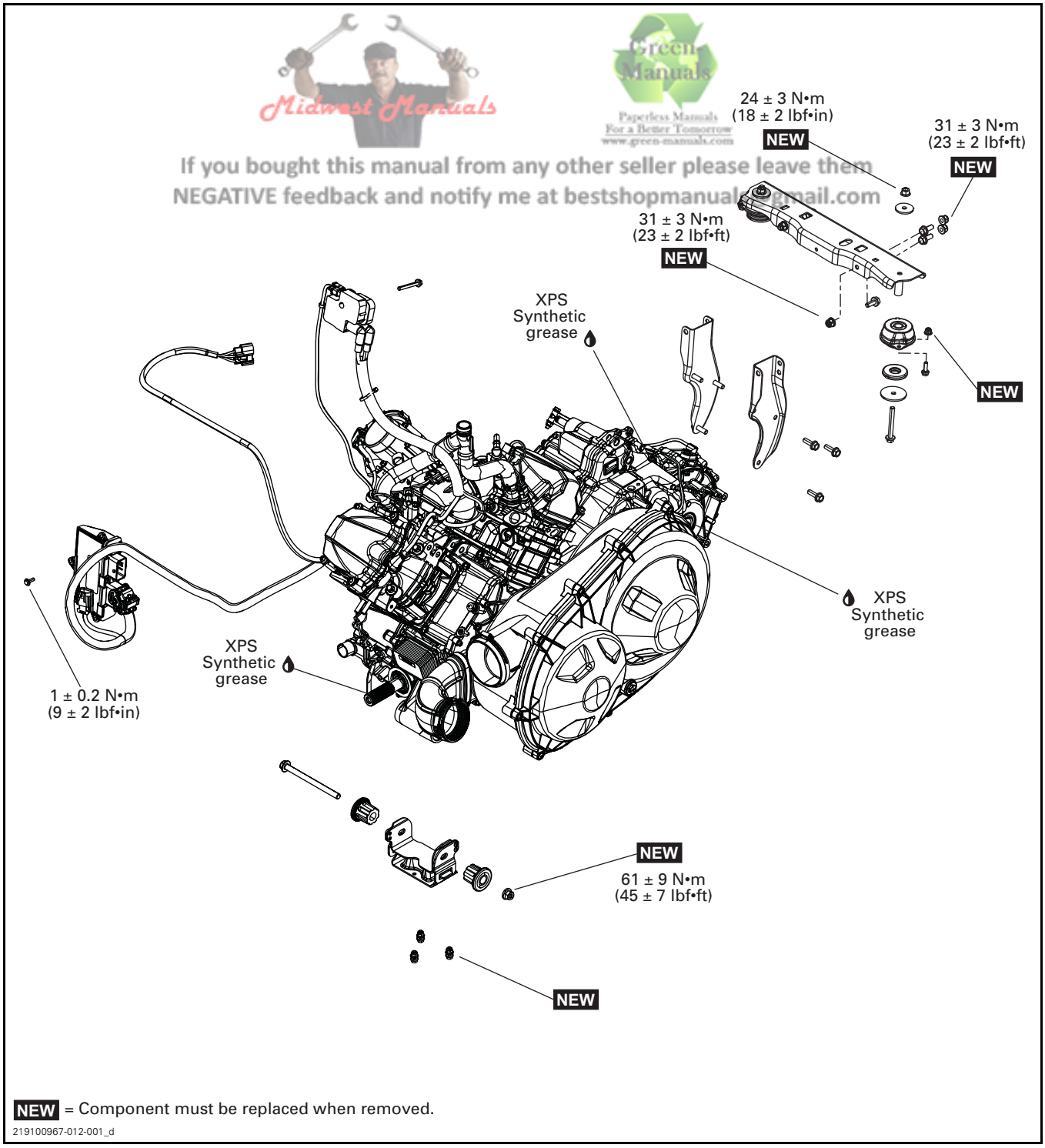

Midwest Manuals
Green Manuals
Paperless Manuals For a Better Tomorrow www.green-manuals.com
If you bought this manual from any other seller please leave them NEGATIVE feedback and notify me at bestshopmanuals@gmail.com

PROCEDURES

ENGINE REMOVAL

Preparing the Vehicle and Engine

1. Place vehicle on a workstation that will have access to an engine-lifting hoist.
2. Safely lift and support the vehicle. Refer to *INTRODUCTION* subsection.
3. Disconnect the battery.

NOTICE **Always disconnect the battery cables exactly in the specified order, the BLACK (-) cable first.**

4. Remove rear drive shafts. Refer to *REAR DRIVE* subsection.
5. Remove cargo box.
6. Remove exhaust. Refer to *EXHAUST SYSTEM* subsection.

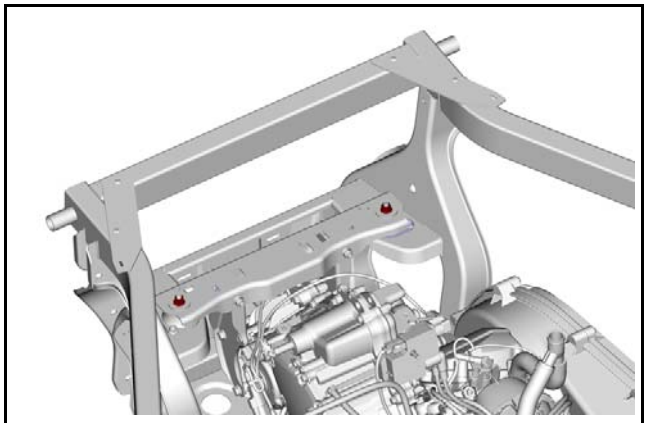

tmr2016-110-107

NOTE: Remove screws securing exhaust support bracket to frame. Leave muffler support bracket attached to rear engine support brackets.

Limited Models

7. Detach the A/C compressor from the engine. Refer to *AIR CONDITIONING - ENGINE COMPONENTS* subsection.

All Modesl

8. Remove rear engine support bolts.
9. Drain engine oil. Refer to *LUBRICATION SYSTEM* subsection.

NOTE: Drain engine oil only if engine overhaul is necessary.

10. Drain the engine coolant.

    10.1 Pinch coolant hose near water pump.

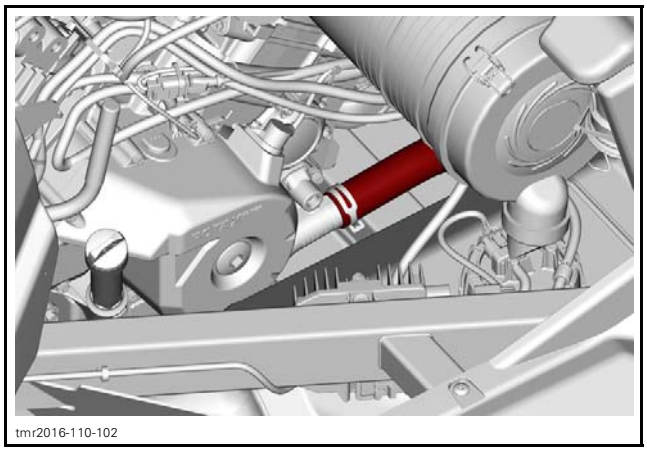

tmr2016-110-102

    10.2 Pinch coolant hose near coolant bottle above Y fitting.

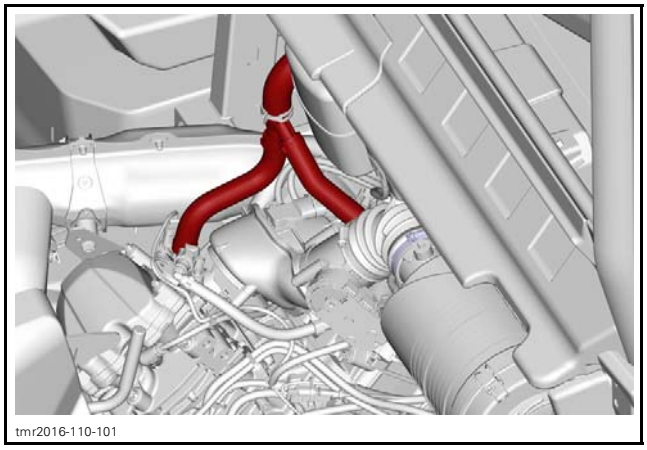

tmr2016-110-101

    10.3 Open coolant drain plug.

NOTE: Completely drain engine coolant only if engine overhaul is necessary. Refer to *COOLING SYSTEM* subsection.

11. Remove fuel tank. Refer to *FUEL TANK AND FUEL PUMP* subsection.
12. Disconnect engine coolant hose above the Y fitting connecting to both cylinder heads.
13. Remove the air intake bellow.

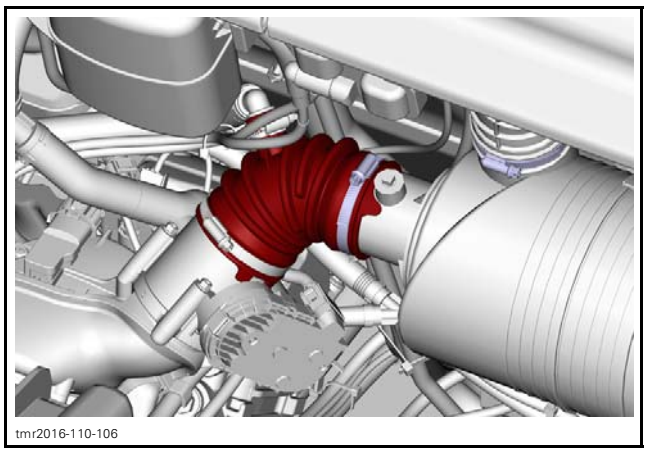

tmr2016-110-106

NOTE: DO NOT Remove the front and rear head pipes from engine.

14. Disconnect the coolant hose at water pump.
15. Disconnect the gearbox vent hose.

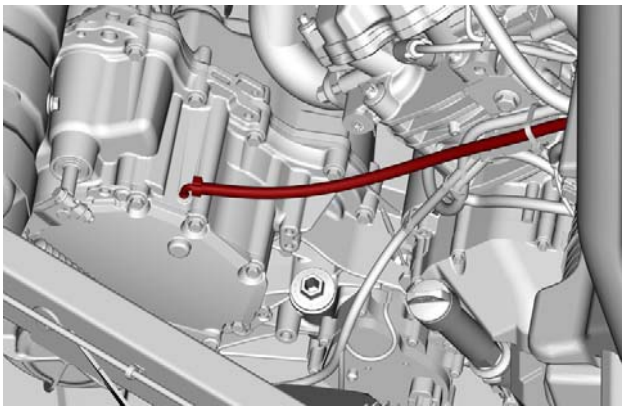

tmr2016-110-103

16. Remove the CVT outlet duct.
17. Remove the CVT inlet duct.
18. Unplug and remove the CTS (coolant temperature sensor).
19. Detach the shifter cable from its bracket and remove it.

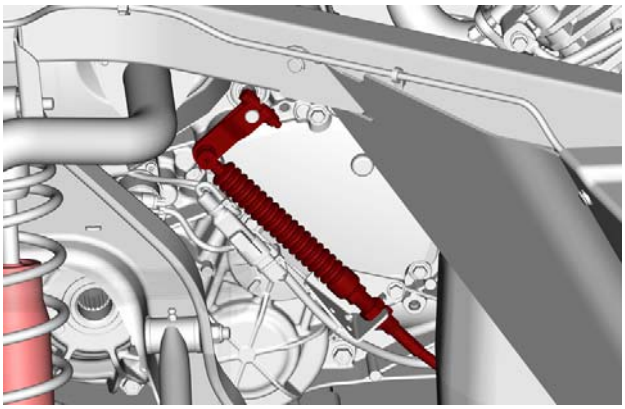

tmr2016-110-104

20. Remove the front engine support nut.
21. Disconnect the crankcase vent hose.
22. Disconnect voltage regulator.

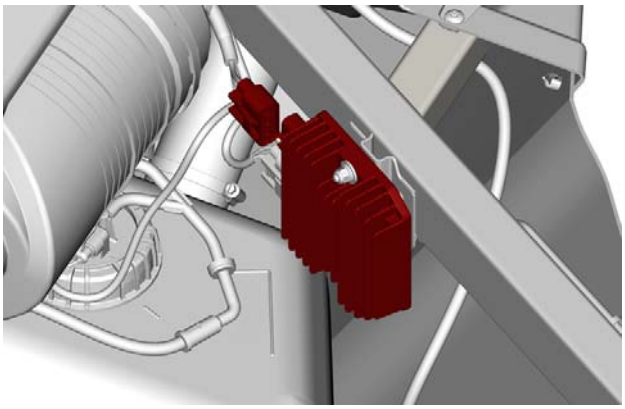

tmr2016-110-105

23. Unplug all remaining connectors and remove required cables from engine. Cut all necessary locking ties.
    - Starter cable (retaining nut on starter body)
    - GBPS (Gear Box Position Sensor)
    - Vehicle speed sensor
    - Actuator connector
    - Neutral switch
    - 2WD/4WD and differential lock actuator
    - OPS (Oil Pressure Sensor)
    - CPS (Crankshaft Position Sensor)
    - Engine ground cable
    - Magneto.

Lifting Engine

1. Install a hook and strap through the rear engine lifting holes and route a second lifting strap under the front cylinder.
2. Remove retaining screws on front and rear propeller shafts.
3. Slightly lift engine to ease removal of front engine support bolt.
4. Remove the front engine support bolt.
5. Raise the front of engine to separate front propeller shaft from engine.

NOTE: If the propeller shaft cannot be removed easily, remove bolts retaining the front differential to create more space. Refer to *FRONT DRIVE* subsection.

6. Remove engine from vehicle.

ENGINE INSTALLATION

The installation is the reverse of the removal procedure. However, pay attention to the following.

Prior to install engine, inspect condition of engine mounts.

Connect the front propeller shaft to engine output shaft while lowering engine.

Install rear and front engine mounting bolts then torque all mounting bolts.

Install air intake bellow. Ensure alignment marks are properly positioned and torque to specification. Refer to *AIR INTAKE SYSTEM*.

Install exhaust. Refer to *EXHAUST SYSTEM*.

Final Assembly Procedure

1. Fill engine with the recommended oil and quantity. Refer to *LUBRICATION SYSTEM* subsection.
2. Fill and bleed cooling system. Refer to *COOLING SYSTEM* subsection.
3. Check for any leaks.
4. Test drive vehicle to confirm proper operation.

ENGINE MOUNTS

Removing the Front Engine Mount

Insert a punch into front engine mount bushing and push the opposite engine mount out.

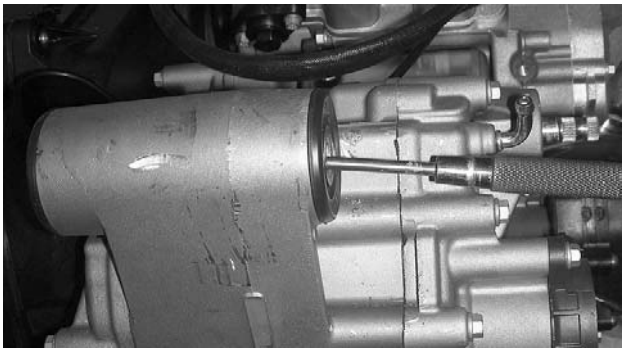

tmr2011-007-011

TYPICAL

Installing the Engine Mount

The installation is the reverse of the removal procedure.

AIR INTAKE SYSTEM

AIR FILTER HOUSING

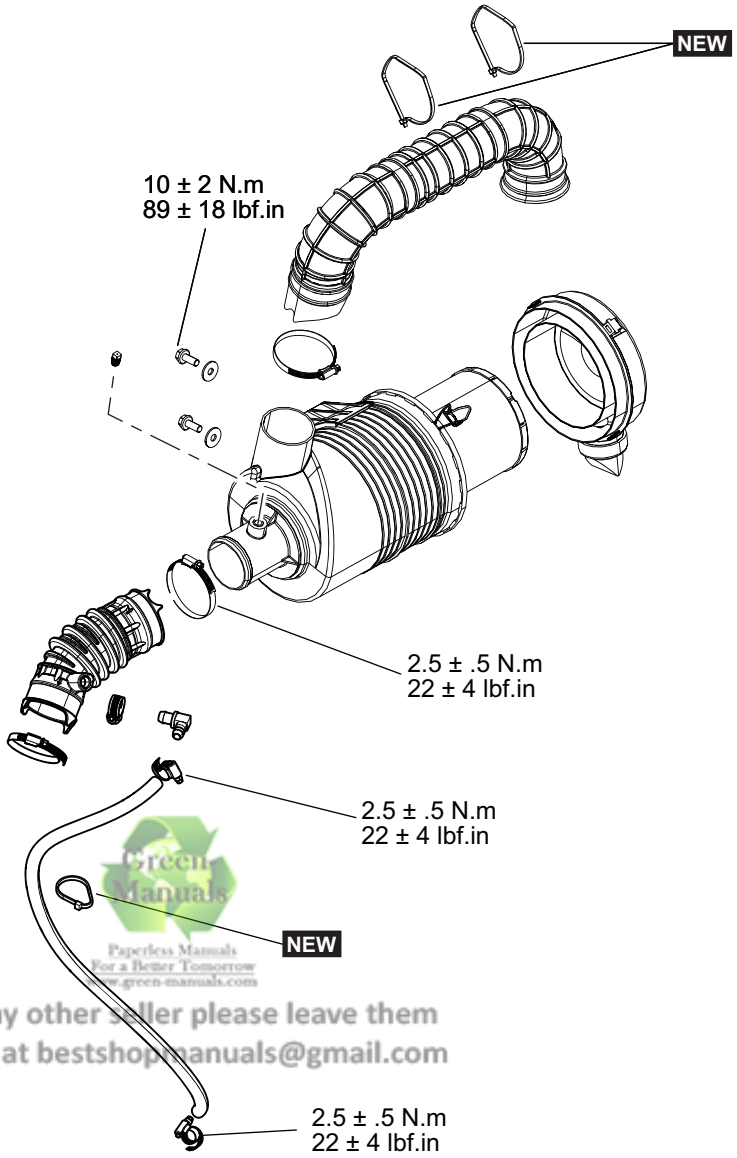

NEW = Component must be replaced when removed.

tmr2107-411-101

Midwest Manuals
Green Manuals
Paperless Manuals
For a Better Tomorrow
www.green-manuals.com
If you bought this manual from any other seller please leave them
NEGATIVE feedback and notify me at bestshopmanuals@gmail.com

GENERAL

NOTICE **Never modify the air intake system. Otherwise, engine performance degradation or damage can occur. The engine is calibrated to operate specifically with these components.**

PROCEDURES

AIR INTAKE SYSTEM

Replacing the Air Filter

NOTICE **Never modify the air intake system. Otherwise, engine performance degradation or damage can occur. The engine is calibrated to operate specifically with these components.**

Air Filter Replacement Guideline

Air filter replacement should be adjusted according to riding conditions as it is critical to ensure proper engine performance and life span.

Air filter replacement frequency must be increased for the following dusty conditions:

- Riding on dry sand
- Riding on dry dirt covered surfaces
- Riding on dry gravel roads or similar conditions.
- Riding in areas with high concentration of seeds or crop husks.
- Riding in severe snow conditions.

NOTICE **When riding in dusty conditions or sand, the air box needs to be cleaned before every ride.**

NOTE: Riding in a group in these conditions would increase even more the air filter replacement requirement.

Removing the Air Filter

Tilt cargo box.

Unlatch air filter cover and remove air filter.

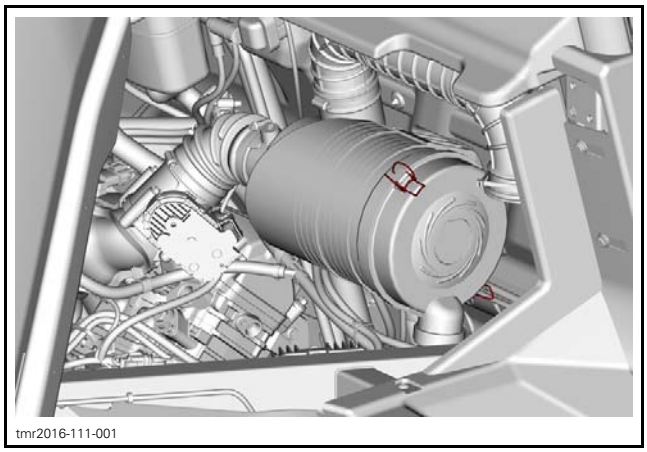

The filter fits tightly over the outlet tube and there will be some initial resistance. Gently move the end of the filter back and forth to break the seal, then rotate while pulling straight out. Avoid knocking the filter against the housing.

Replace air filter if clogged. Always use the recommended air filter or an equivalent.

Cleaning the Duckbill Valve

Visually check and physically squeeze the duckbill valve. Make sure the valve is flexible and not inverted, damaged or plugged.

Installing the Air Filter

Insert the filter carefully. Seat the filter by hand, making certain it is inserted completely into the air cleaner housing. Apply pressure by hand at the outer rim of the filter, not the flexible center.

Secure air filter cover with latches.

AIR FILTER HOUSING

Removing Air Filter Housing

Release clamps and remove air filter cover and filter.

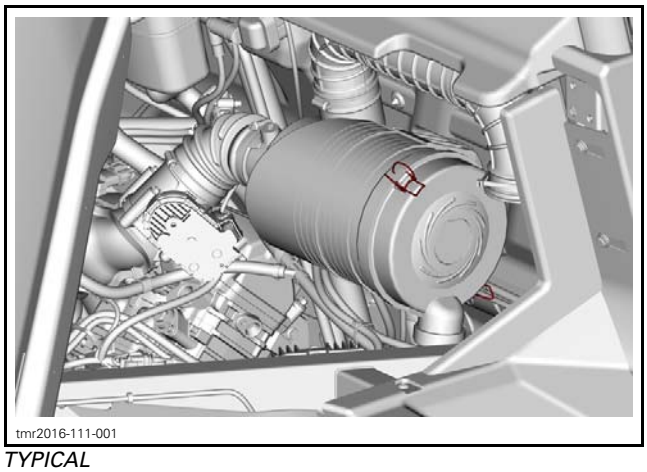

TYPICAL

Remove fasteners behind passenger seat.

tmr2016-111-002

Installing Air Filter Housing

For installation, reverse the removal procedure but pay attention to the following.

Align installation marks on throttle body, air box and housing vent hose and make sure bellow is not crushed.

Do not overtighten.

TIGHTENING TORQUE	
Air filter housing screws	10 N•m ± 2 N•m (89 lbf•**in** ± 18 lbf•**in**)

AIR INTAKE SYSTEM

AIR FILTER HOUSING

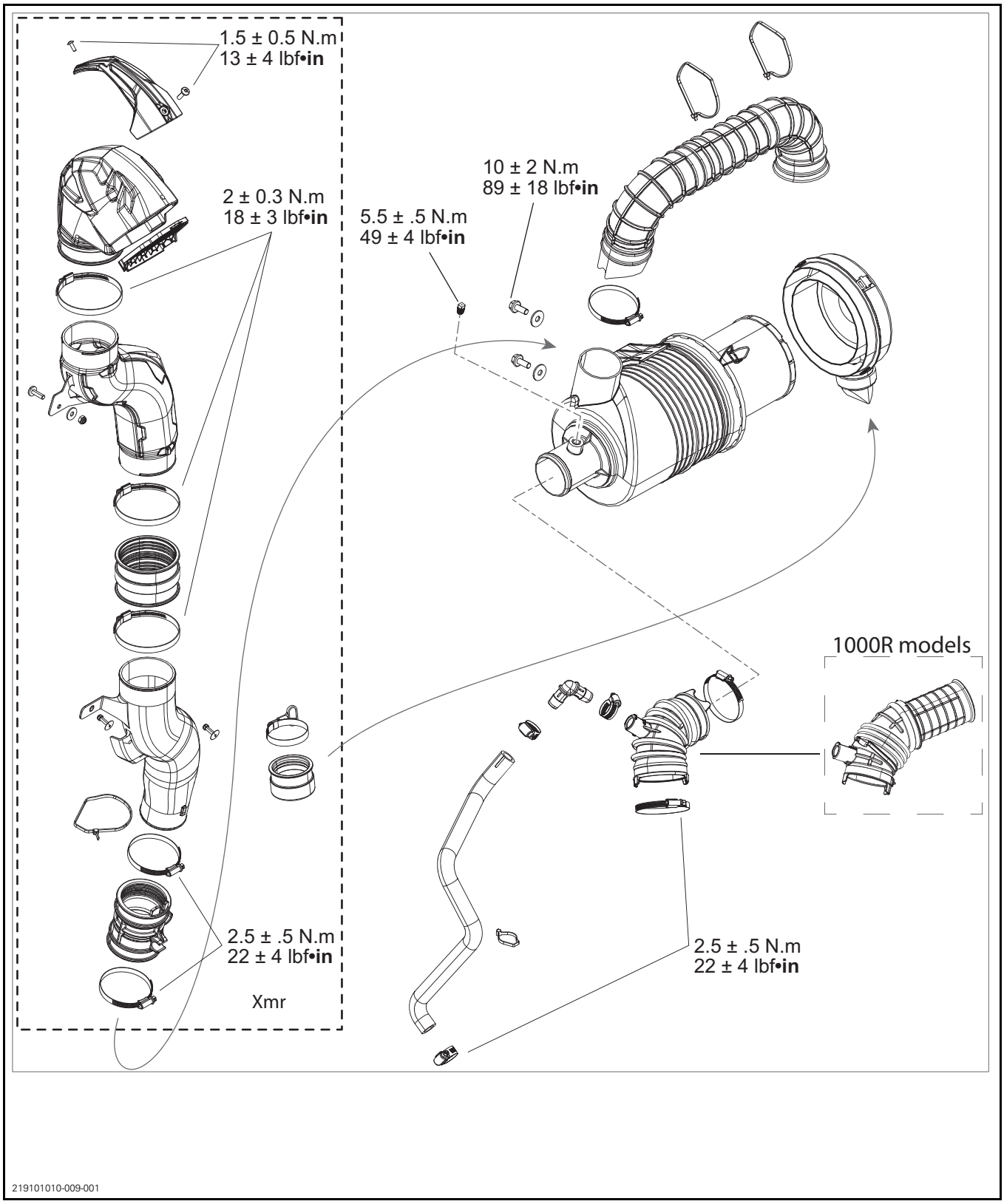

GENERAL

NOTICE **Never modify the air intake system. Otherwise, engine performance degradation or damage can occur. The engine is calibrated to operate specifically with these components.**

PROCEDURES

AIR INTAKE SYSTEM

Replacing the Air Filter

NOTICE **Never modify the air intake system. Otherwise, engine performance degradation or damage can occur. The engine is calibrated to operate specifically with these components.**

Air Filter Replacement Guideline

Air filter replacement should be adjusted according to riding conditions as it is critical to ensure proper engine performance and life span.

Air filter replacement frequency must be increased for the following dusty conditions:

- Riding on dry sand
- Riding on dry dirt covered surfaces
- Riding on dry gravel roads or similar conditions.
- Riding in areas with high concentration of seeds or crop husks.
- Riding in severe snow conditions.

NOTICE **When riding in dusty conditions or sand, the air box needs to be cleaned before every ride.**

NOTE: Riding in a group in these conditions would increase even more the air filter replacement requirement.

Removing the Air Filter

Tilt cargo box.

Unlatch air filter cover and remove air filter.

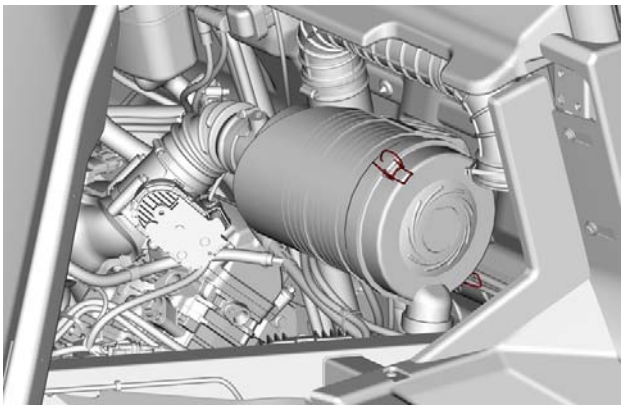

tmr2016-111-001

The filter fits tightly over the outlet tube and there will be some initial resistance. Gently move the end of the filter back and forth to break the seal, then rotate while pulling straight out. Avoid knocking the filter against the housing.

Replace air filter if clogged. Always use the recommended air filter or an equivalent.

Cleaning the Duckbill Valve

Visually check and physically squeeze the duckbill valve. Make sure the valve is flexible and not inverted, damaged or plugged.

Installing the Air Filter

Insert the filter carefully. Seat the filter by hand, making certain it is inserted completely into the air cleaner housing. Apply pressure by hand at the outer rim of the filter, not the flexible center.

Secure air filter cover with latches.

AIR FILTER HOUSING

Removing Air Filter Housing

Release clamps and remove air filter cover and filter.

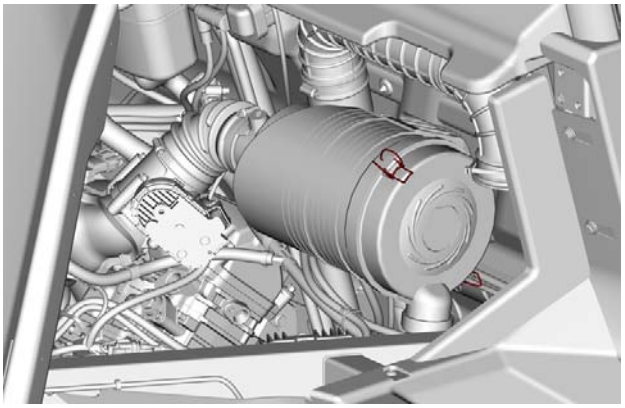

tmr2016-111-001

Remove fasteners behind passenger seat.

tmr2016-111-002

Installing Air Filter Housing

The installation is the reverse of the removal procedure. However, pay attention to the following.

Align installation marks on throttle body, air box and housing vent hose and make sure bellow is not crushed.

TIGHTENING TORQUE	
Air filter housing screws	10 N•m ± 2 N•m (89 lbf•**in** ± 18 lbf•**in**)

EXHAUST SYSTEM (HD5)

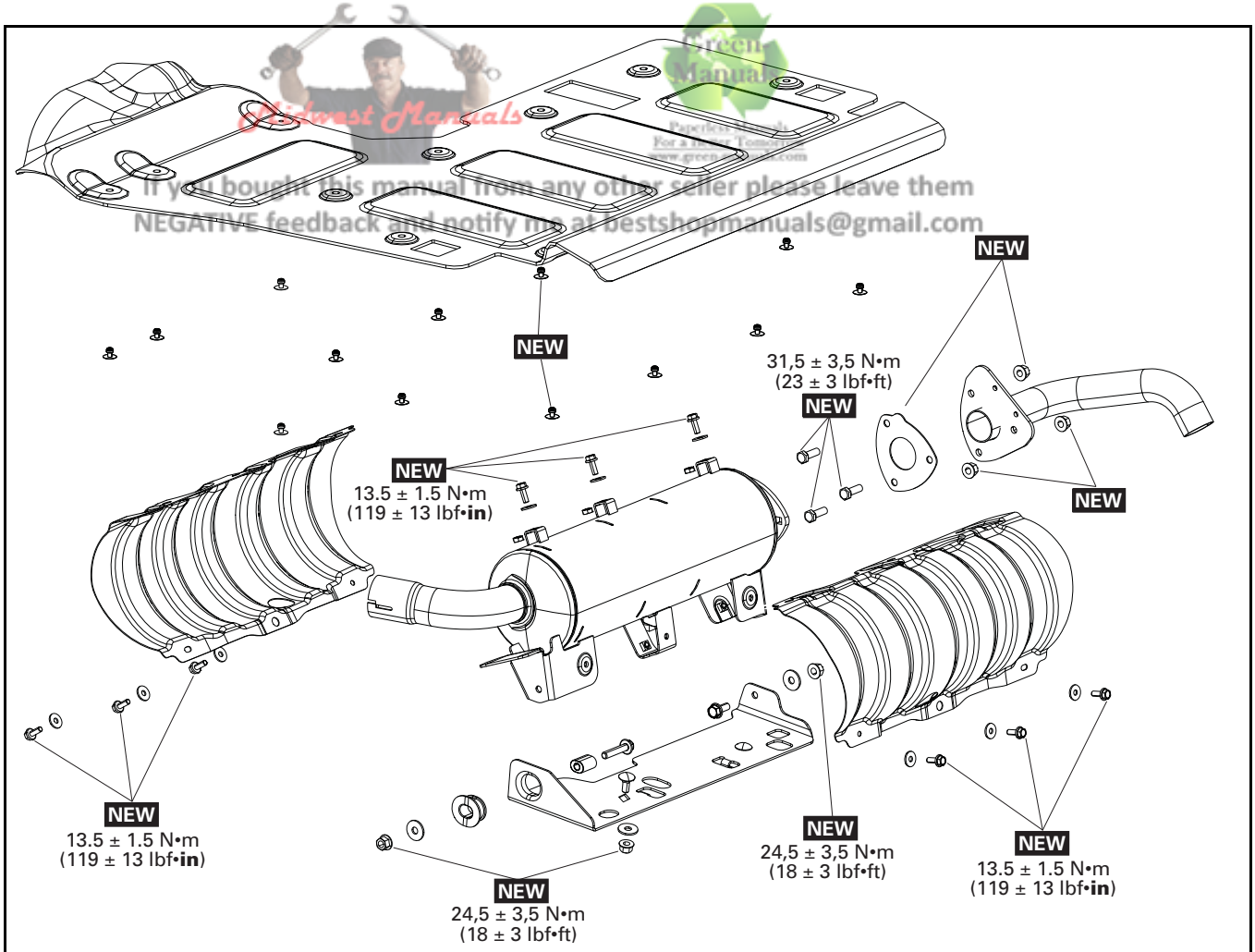

If you bought this manual from any other seller please leave them NEGATIVE feedback and notify me at bestshopmanuals@gmail.com

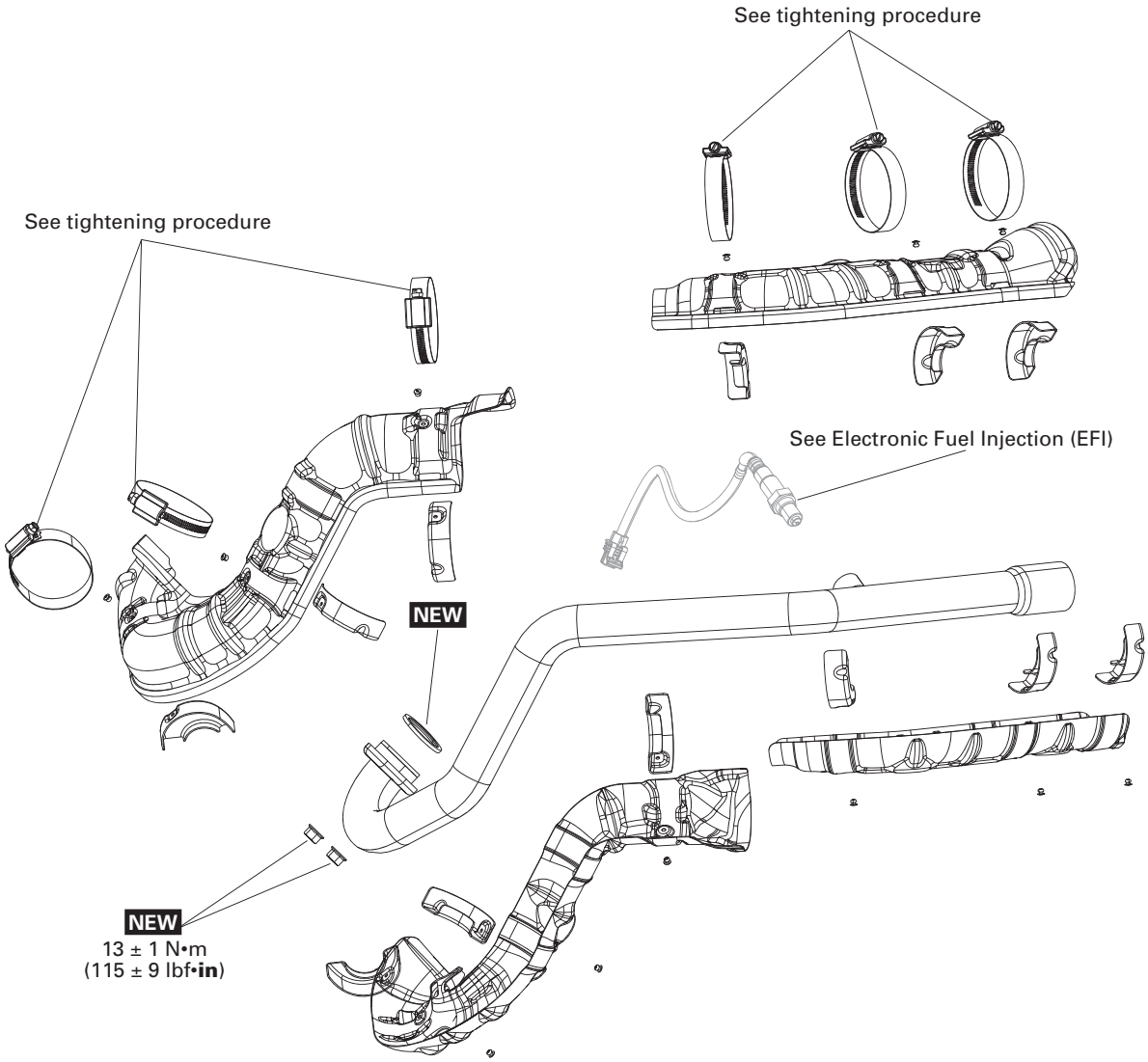

NEW = Component must be replaced when removed.

tmr2017-412-102_a

GENERAL

⚠ WARNING

Never touch exhaust system components immediately after the engine has been running.

PROCEDURES

MUFFLER

Cleaning the Muffler

For muffler cleaning procedure, refer to *PERIODIC MAINTENANCE PROCEDURES* subsection.

Removing the Muffler

1. Loosen the muffler clamp.

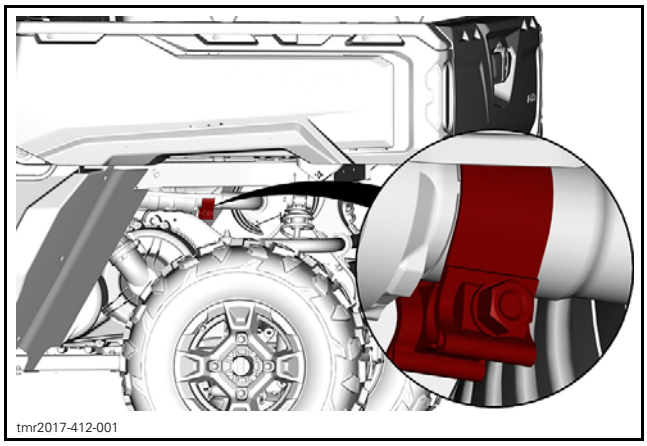

2. Remove engine support and muffler support retaining bolts and washers.

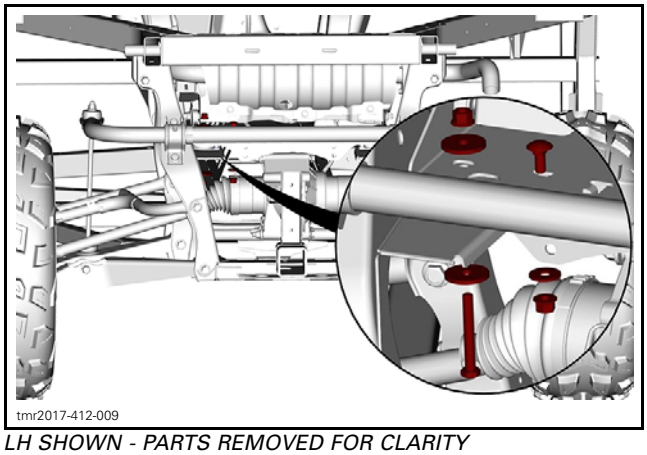

LH SHOWN - PARTS REMOVED FOR CLARITY

3. Remove the muffler support and heat shields if necessary.

Inspecting the Muffler

Check muffler for cracks or other damages. Replace if necessary.

Check heat shields for cracks or other damages. Replace if necessary.

Check if the rubber supports are brittle, hard or otherwise damaged. Replace if needed.

Installing the Muffler

1. Install the heat shields on the muffler.

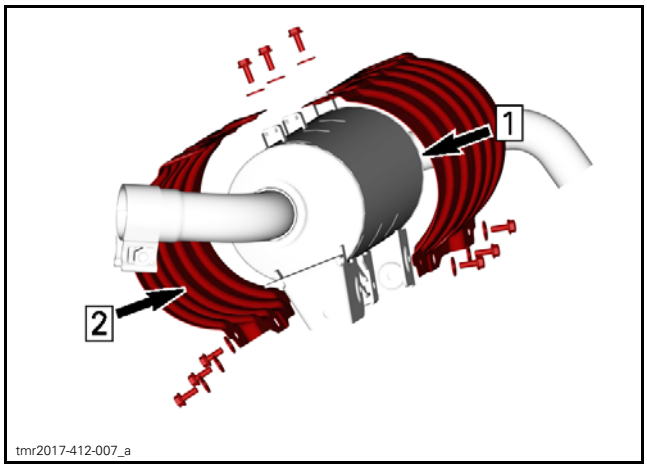

NOTE: Tighten the top screws last.

2. Install the support on the muffler. Do not tighten bolts yet.

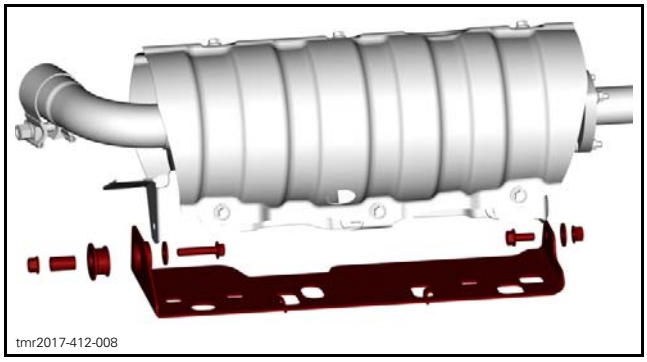

3. Install the head pipe if required, refer to *INSTALLING THE HEAD PIPE*. Do not tighten nuts yet.
4. Connect the muffler to the head pipe. Do not tighten the clamp yet.

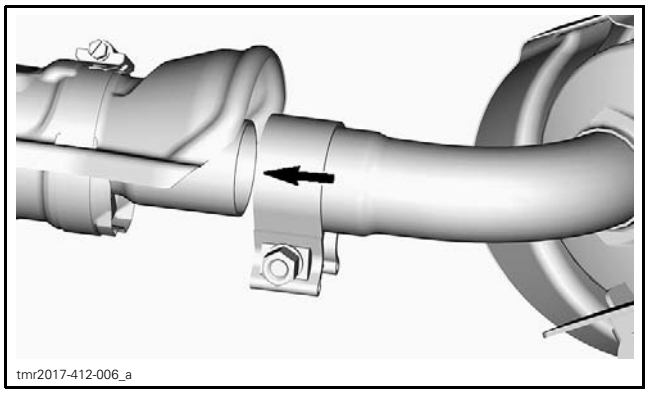
tmr2017-412-006_a

5. Tighten the RH muffler retaining bolt.

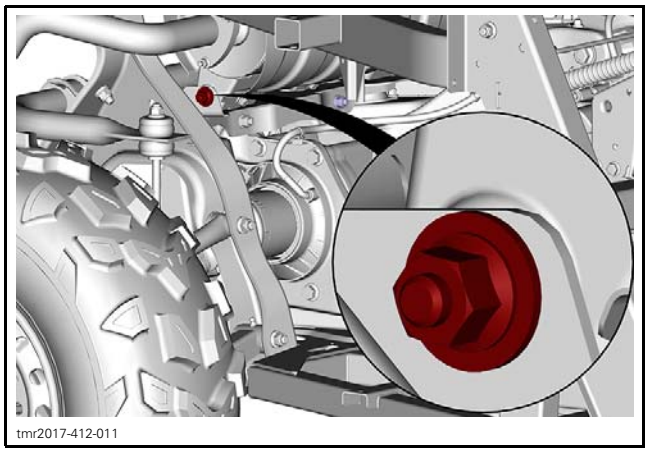
tmr2017-412-011

6. Push the LH side of muffler towards front while tightening the LH retaining bolt.

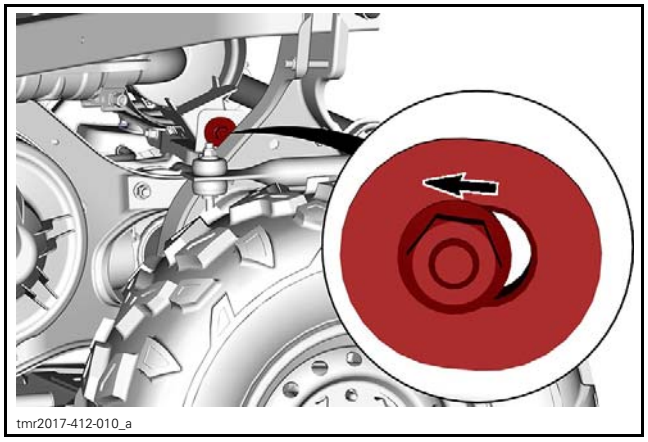
tmr2017-412-010_a

7. Tighten the remaining fasteners in this order:
   1. Head pipe nuts
   2. Muffler clamp
   3. Remaining muffler support bolts.

HEAD PIPE

Removing the Head Pipe

1. Loosen the muffler clamp.

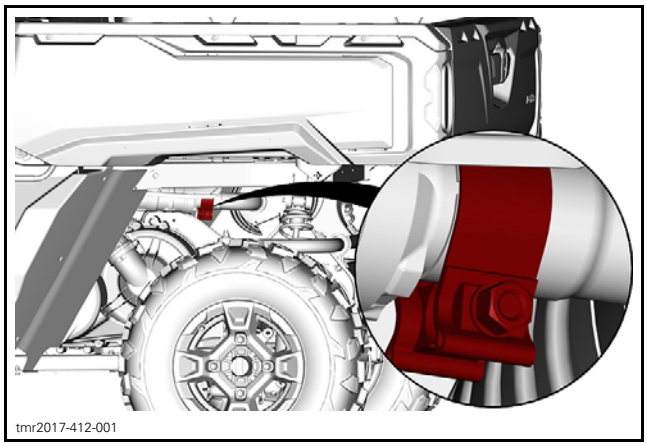
tmr2017-412-001

2. Disconnect the oxygen sensor connector.
3. Remove the front heat shield.

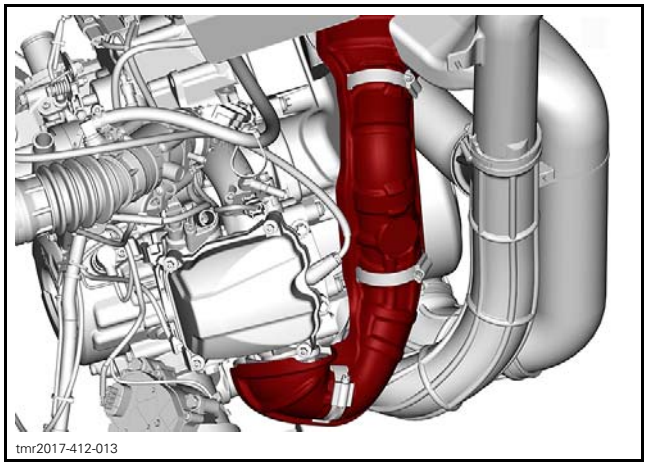
tmr2017-412-013

4. Remove the retaining nuts

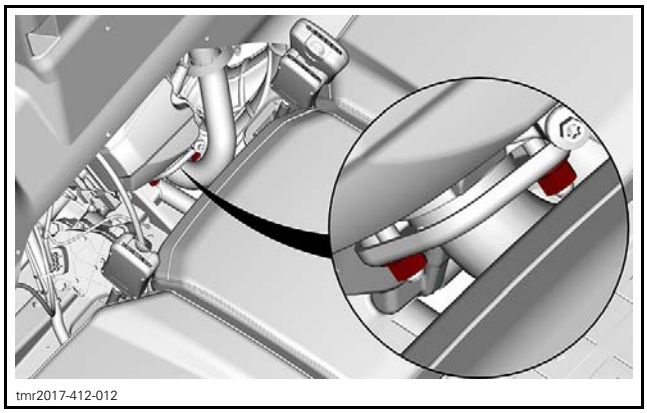
tmr2017-412-012

5. Pull the head pipe out of the muffler and cylinder head, then remove it from the vehicle.
6. Remove the rear heat shields.

Inspecting the Head Pipe

Check head pipe for cracks, bending or other damages. Replace if need.

Installing the Head Pipe

1. Place the rear heat shields on the head pipe.

NOTE: Use the oxygen sensor opening as a guideline.

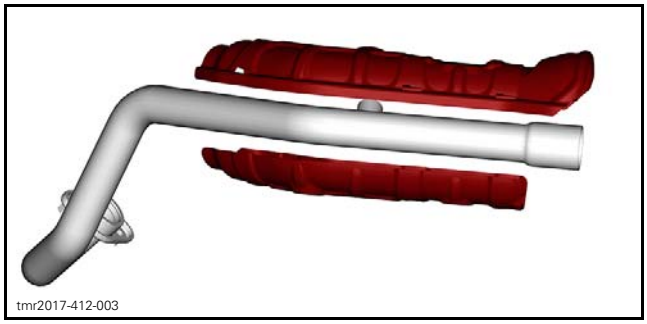

2. Pass the clamps through the openings in the upper shield and attach the shield halves together.

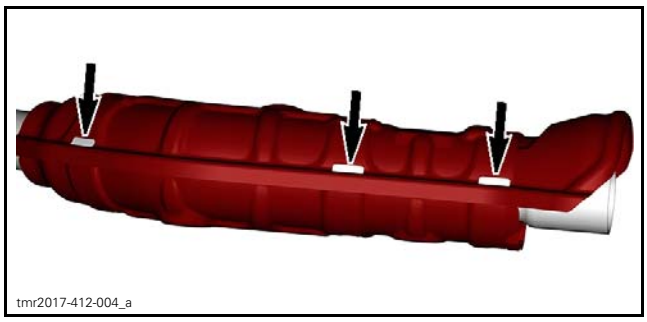

3. Tighten the clamps in the illustrated sequence.

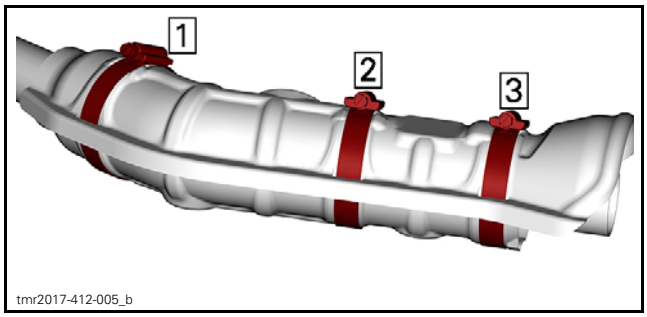

CLAMPS TIGHTENING SEQUENCE - REAR OF HEAD PIPE

TIGHTENING TORQUE	
Heat shield clamps	4 N•m ± 0.5 N•m (35 lbf•**in** ± 4 lbf•**in**)

4. Install the head pipe with a NEW gasket.

If muffler was removed, leave the retaining nuts and muffler clamp loose. Install muffler as described in *INSTALLING THE MUFFLER*.

If muffler was not removed, tighten the retaining nuts, then the muffler clamp.

5. Install the front heat shield.
6. Tighten the clamps in the illustrated sequence.

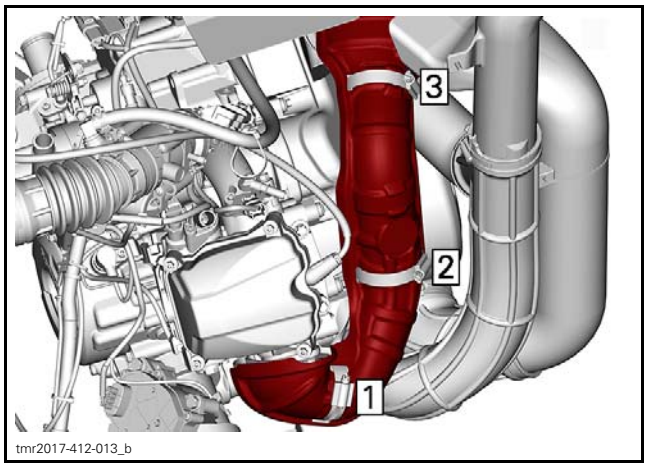

CLAMPS TIGHTENING SEQUENCE - FRONT OF HEAD PIPE

TIGHTENING TORQUE	
Heat shield clamps	4 N•m ± 0.5 N•m (35 lbf•**in** ± 4 lbf•**in**)

Retighten all clamps in the illustrated sequence.

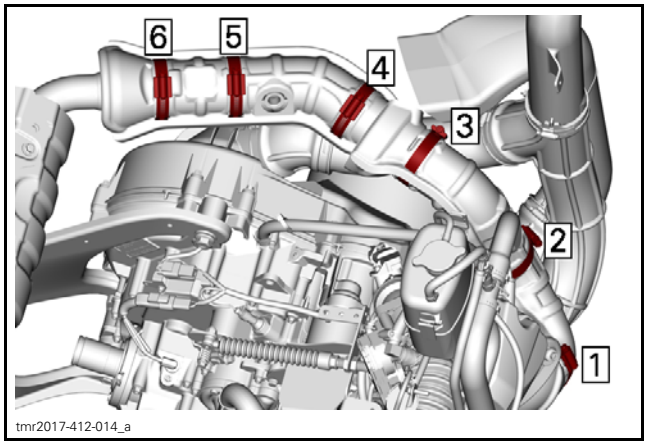

CLAMPS FINAL TIGHTENING SEQUENCE

TIGHTENING TORQUE	
Heat shield clamps (final torque)	9 N•m ± 1 N•m (80 lbf•**in** ± 9 lbf•**in**)

EXHAUST SYSTEM

HD8 models

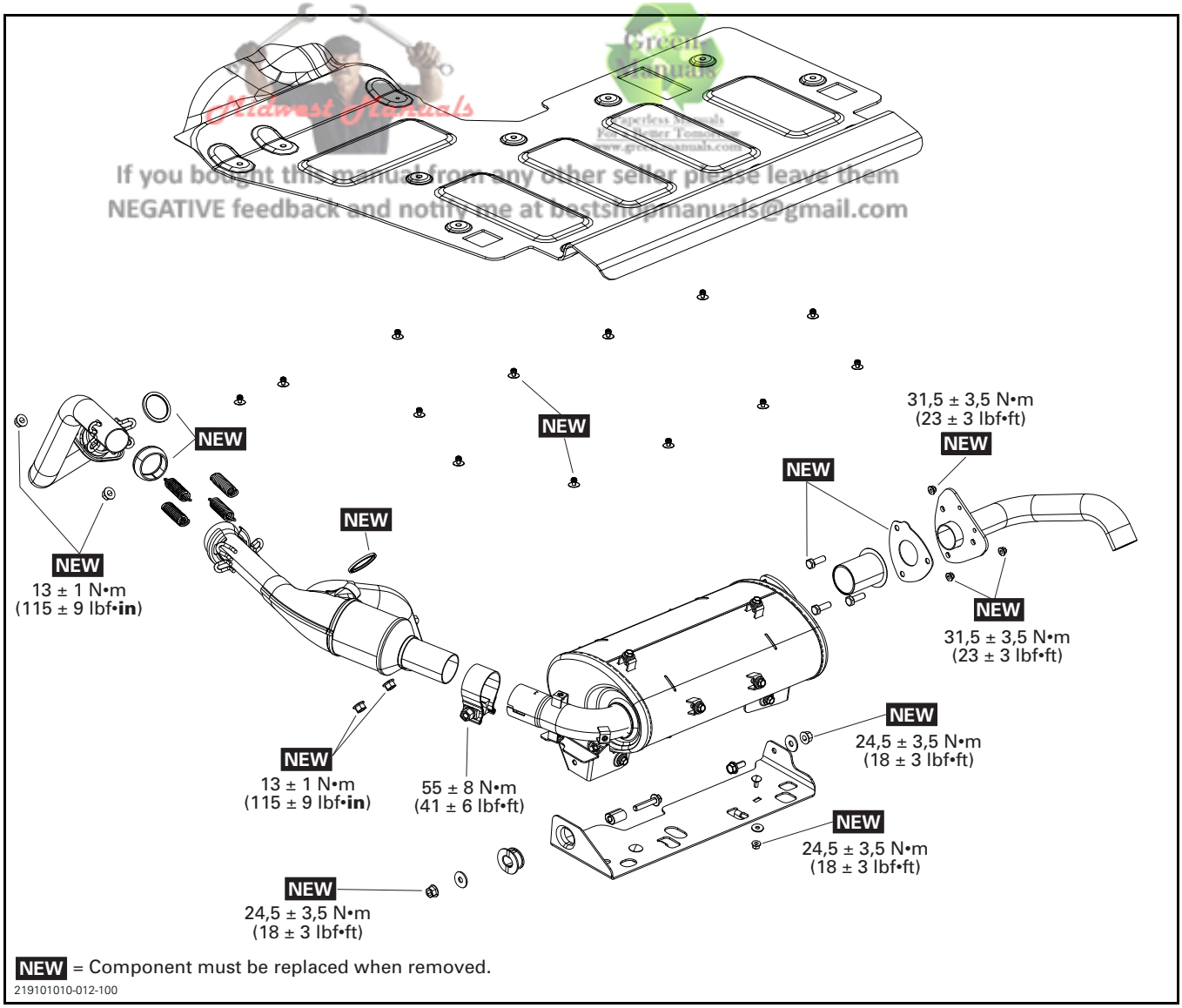

If you bought this manual from any other seller please leave them NEGATIVE feedback and notify me at bestshopmanuals@gmail.com

NEW = Component must be replaced when removed.

219101010-012-100

HD8 models

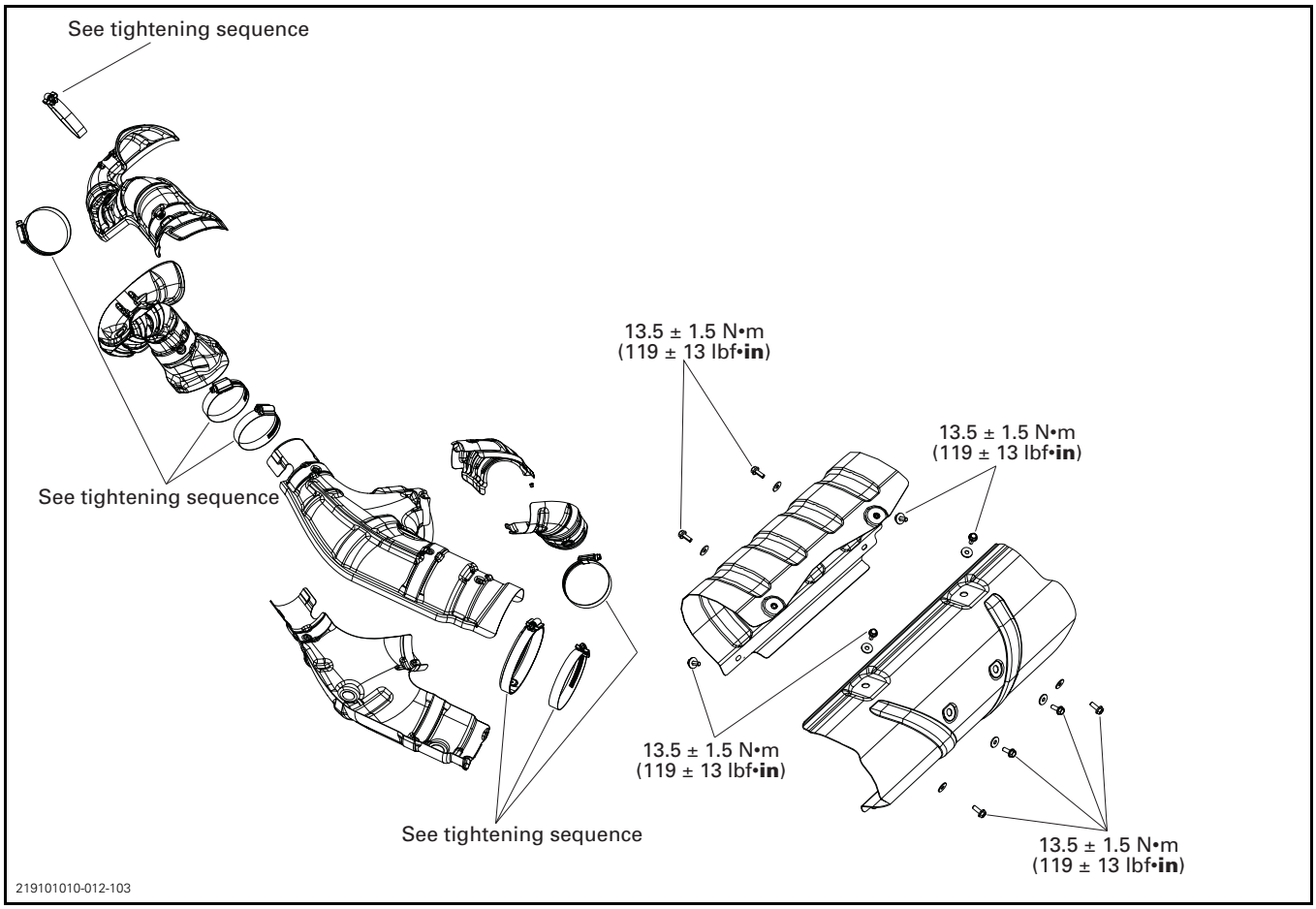
See tightening sequence
13.5 ± 1.5 N•m
(119 ± 13 lbf•in)
13.5 ± 1.5 N•m
(119 ± 13 lbf•in)
See tightening sequence
13.5 ± 1.5 N•m
(119 ± 13 lbf•in)
See tightening sequence
13.5 ± 1.5 N•m
(119 ± 13 lbf•in)
219101010-012-103

HD10 models

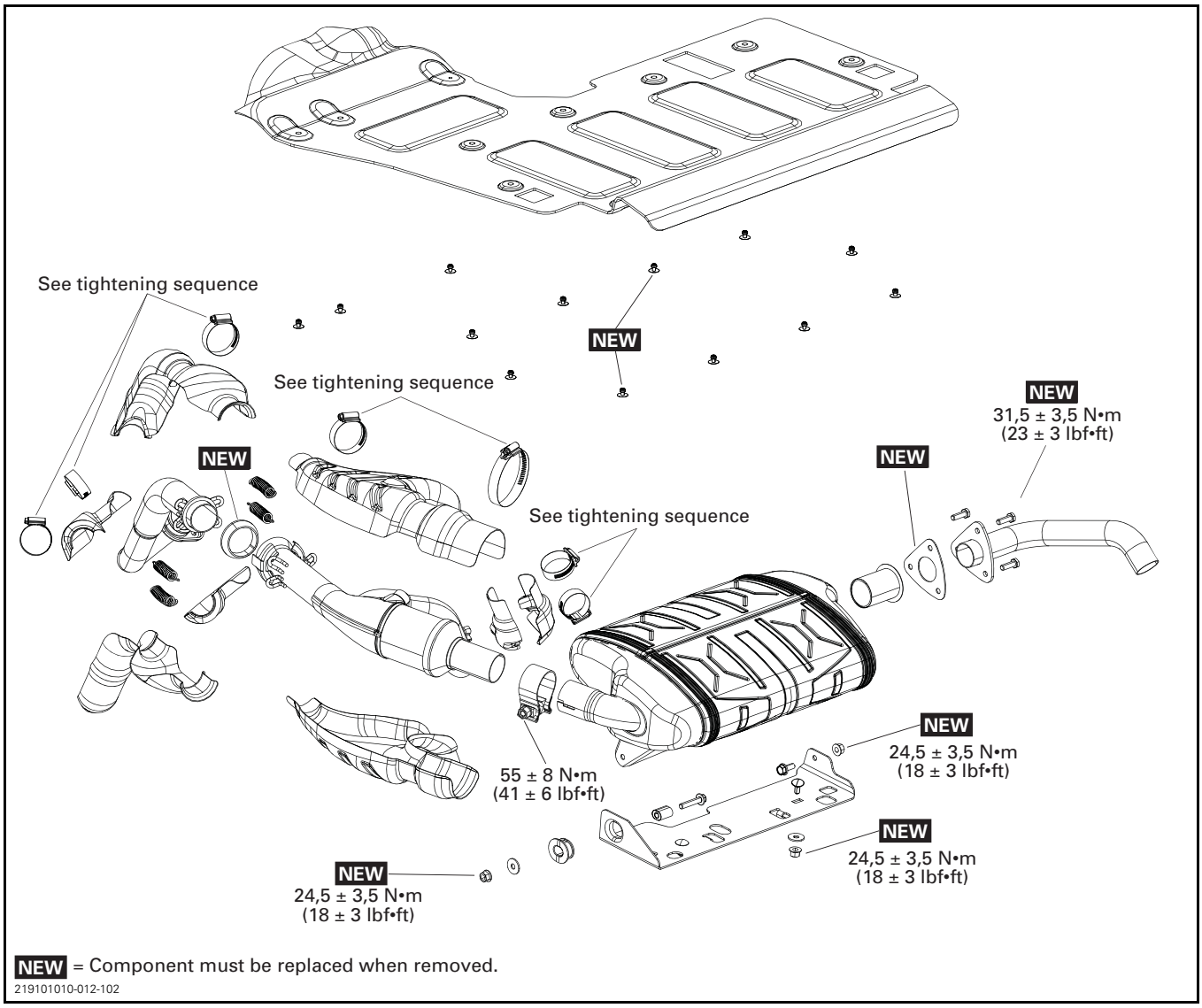
See tightening sequence
NEW
See tightening sequence
NEW
31,5 ± 3,5 N•m
(23 ± 3 lbf•ft)
NEW
NEW
See tightening sequence
NEW
24,5 ± 3,5 N•m
(18 ± 3 lbf•ft)
55 ± 8 N•m
(41 ± 6 lbf•ft)
NEW
24,5 ± 3,5 N•m
(18 ± 3 lbf•ft)
NEW
24,5 ± 3,5 N•m
(18 ± 3 lbf•ft)
NEW = Component must be replaced when removed.
219101010-012-102

GENERAL

⚠ WARNING

Never touch exhaust system components immediately after the engine has run.

PROCEDURES

SPARK ARRESTER

For spark arrester servicing, refer to *PERIODIC MAINTENANCE PROCEDURES* subsection.

MUFFLER

Removing Muffler

1. Loosen exhaust pipe clamp.

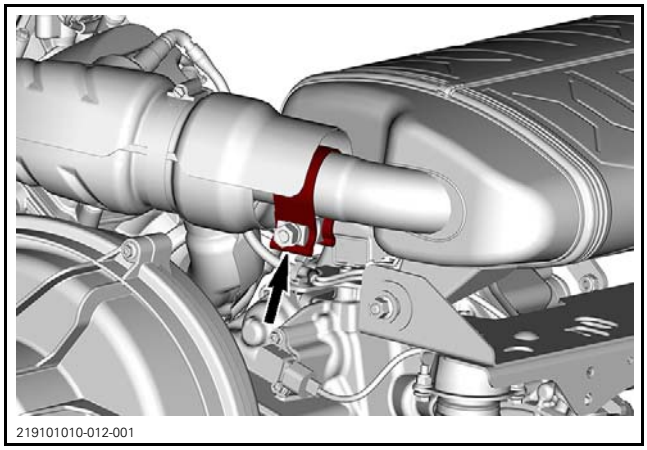

219101010-012-001

TYPICAL

2. Remove engine support retaining bolts. Refer to *ENGINE REMOVAL AND INSTALLATION*.

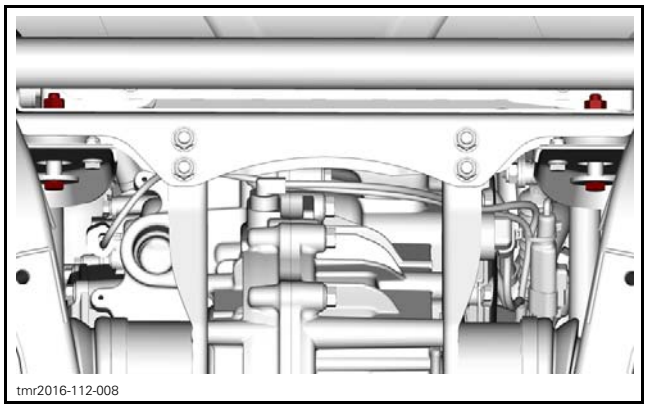

tmr2016-112-008

3. Remove muffler support bracket retaining nuts and washers.

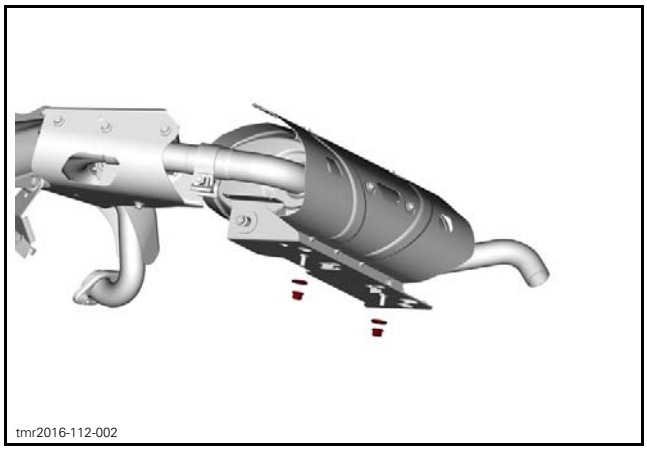

tmr2016-112-002

4. Remove muffler from support bracket if necessary.
5. Remove muffler heat shields if necessary.

NOTE: If head pipes are removed as well, follow tightening sequence when re-assembling.

Inspecting Muffler

Check muffler for cracks or other damages. Replace if necessary.

Check heat shields for cracks or other damages. Replace if necessary.

Check if the rubber supports are brittle, hard or otherwise damaged. Replace if needed.

Installing Muffler

Head Pipes Not Removed

The installation is the reverse of the removal procedure.

NOTE: Push muffler LH side towards front into rubber grommet.

Head Pipes Removed

NOTE: Do not tighten any components until indicated in tightening sequence.

1. Reinstall head pipes and springs with new gaskets, muffler and muffler bracket.

NOTE: All heat shields can be reinstalled except the front cylinder head pipe shield.

2. Tighten retaining nut then push the muffler LH side towards the front of vehicle.
3. Tighten rear cylinder head pipe then front cylinder head pipe retaining nuts as per following sequence.

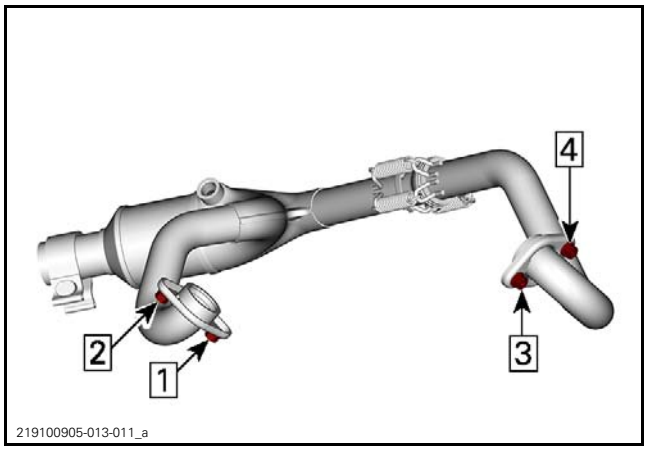

TIGHTENING TORQUE	
Cylinder head pipe retaining nuts	13 N•m ± 1 N•m (115 lbf•**in** ± 9 lbf•**in**)

4. While keeping muffler LH side pushed towards the front of vehicle, tighten the exhaust pipe clamp.
5. Tighten the RH muffler retaining nut, then the muffler bracket to the frame.

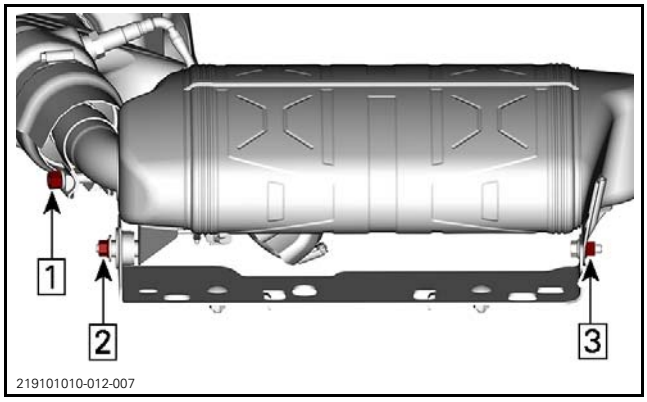

TIGHTENING TORQUE	
Exhaust clamp	55 N•m ± 8 N•m (41 lbf•ft ± 6 lbf•ft)
Muffler retaining nut	24.5 N•m ± 3.5 N•m (18 lbf•ft ± 3 lbf•ft)

6. Tighten engine support retaining bolts. Refer to *ENGINE REMOVAL AND INSTALLATION*.

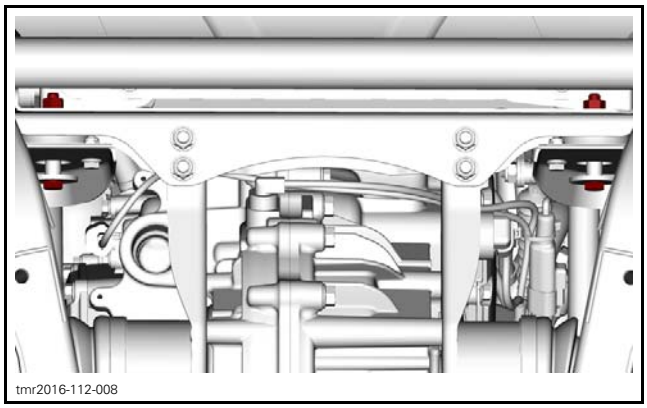

HEAD PIPE (FRONT CYLINDER)

Removing Front Head Pipe

1. Remove muffler. Refer to *REMOVING MUFFLER*.
2. Remove heat shields covering front head pipe by removing the gear clamps.

HD8

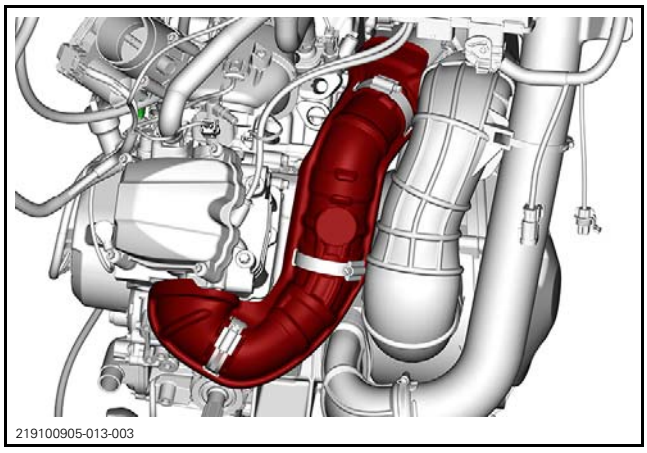

HD10

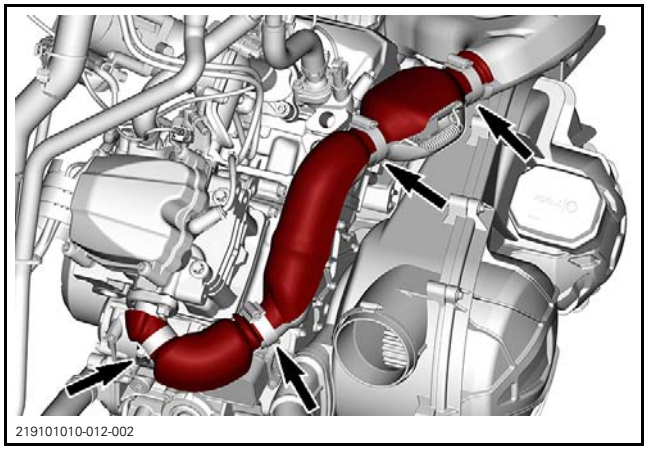

3. Remove springs securing rear head pipe to front head pipe. Discard gasket.

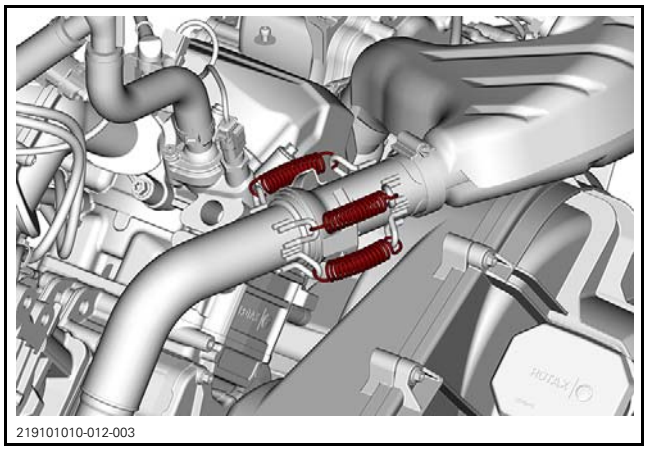
219101010-012-003

4. Remove retaining nuts from front cylinder head pipe flange. Discard nuts and gaskets.

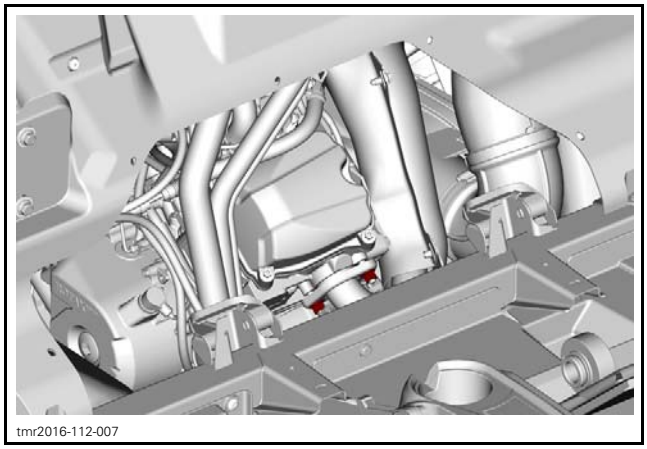
tmr2016-112-007

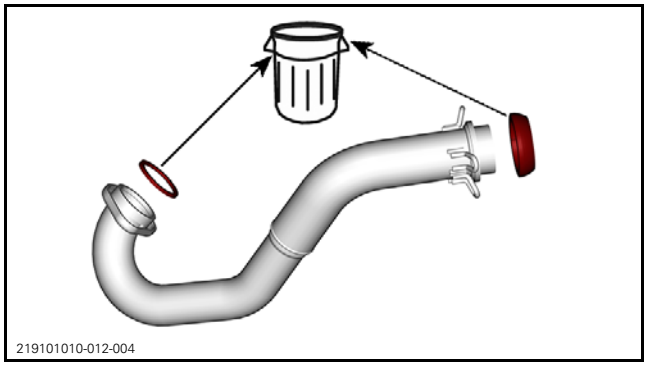
219101010-012-004

TYPICAL

5. Remove front cylinder head pipe.

Inspecting Front Head Pipe

Check head pipe for cracks, bending or other damages. Replace if needed.

Installing Front Head Pipe

1. The installation is the reverse of the removal procedure. However, pay attention to the following.

Install NEW exhaust gaskets and nuts.

Measure front head pipe springs. If spring length exceeds specification, replace spring.

SPECIFICATION	
Spring maximum length	67.5 mm (2.66 in)

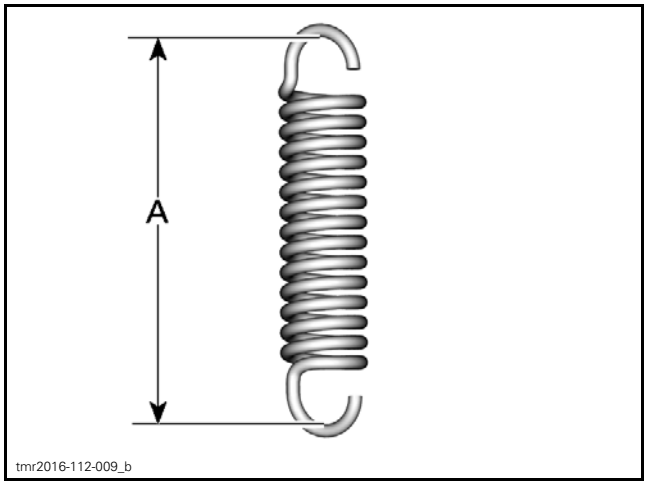

tmr2016-112-009_b

A. Maximum length

2. Install muffler. Refer to *INSTALLING MUFFLER*.
3. Reinstall heat shields of front head pipe, tighten gear clamps following the tightening sequence and specification.

HD8

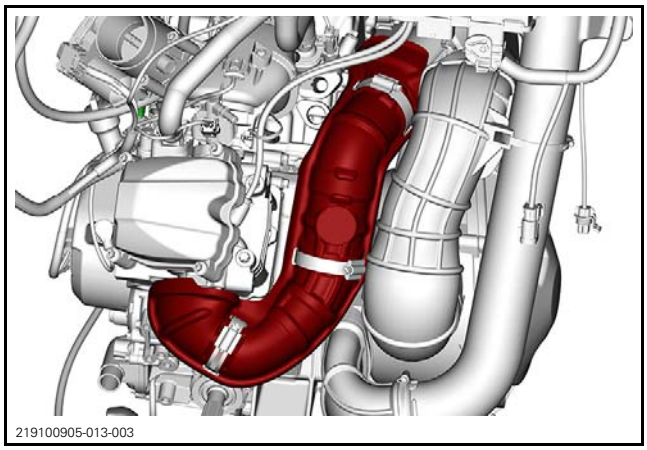
219100905-013-003

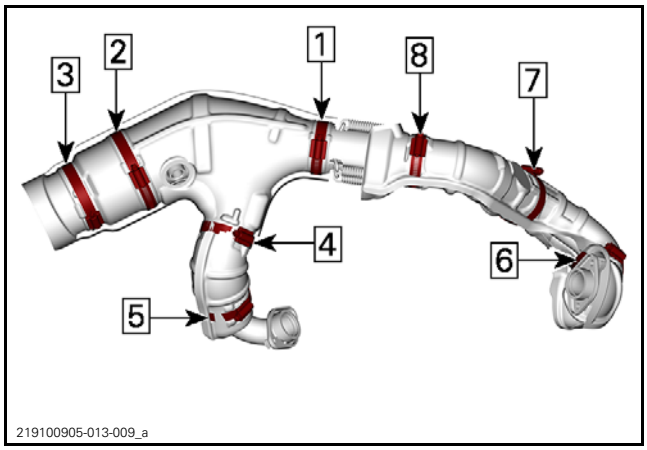

TIGHTENING SEQUENCE

HD10

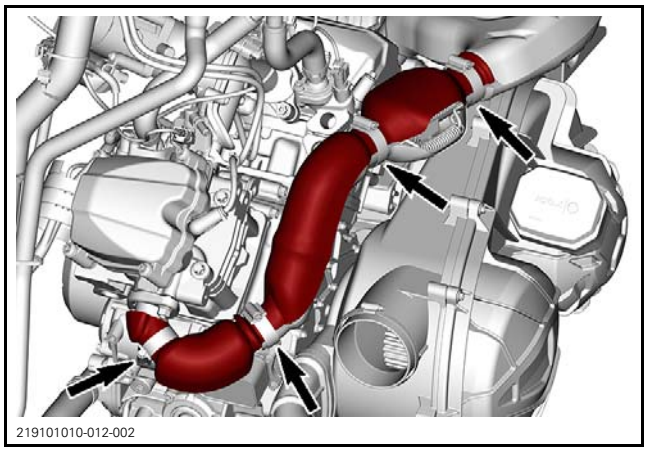

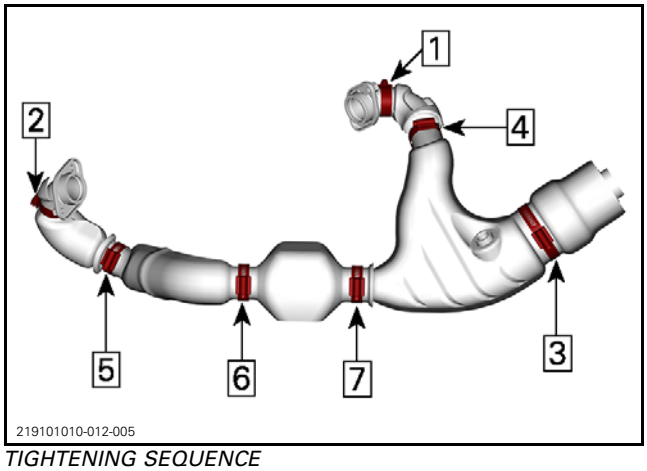

TIGHTENING SEQUENCE

TIGHTENING TORQUE	
Gear clamp (HD8)	4 N•m ± 0.5 N•m (35 lbf•**in** ± 4 lbf•**in**)
Gear clamp (HD10)	9 N•m ± 1 N•m (80 lbf•**in** ± 9 lbf•**in**)

HEAD PIPE (REAR CYLINDER)

Removing Rear Head Pipe

1. Remove muffler. Refer to *REMOVING MUFFLER*.
2. Remove heat shield covering front head pipe by removing the gear clamps.

HD8

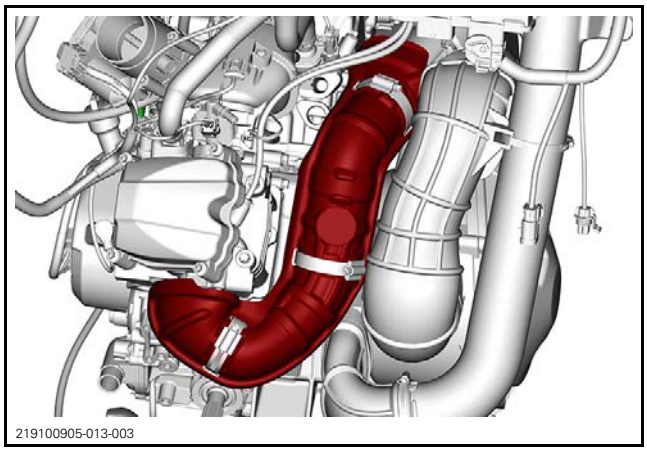

HD10

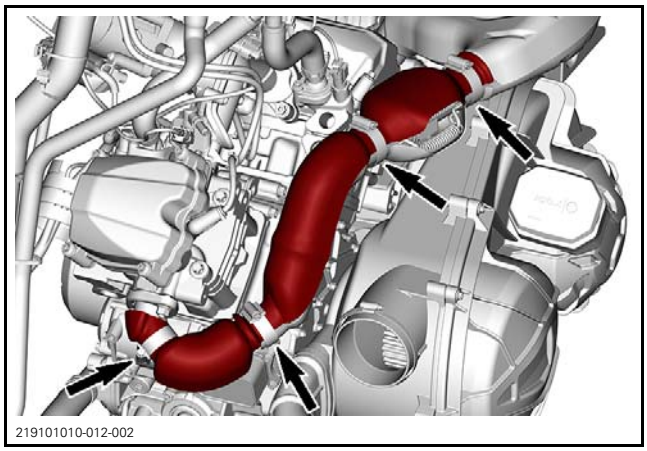

3. Remove springs securing rear head pipe to front head pipe.

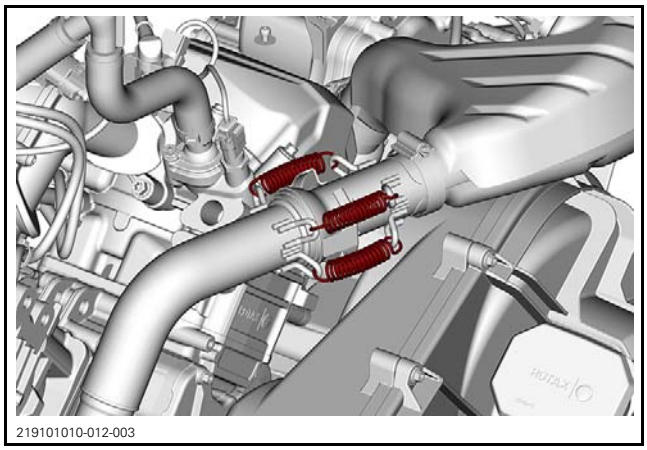
219101010-012-003

4. Remove both retaining nuts from rear cylinder head pipe flange. Discard nuts.

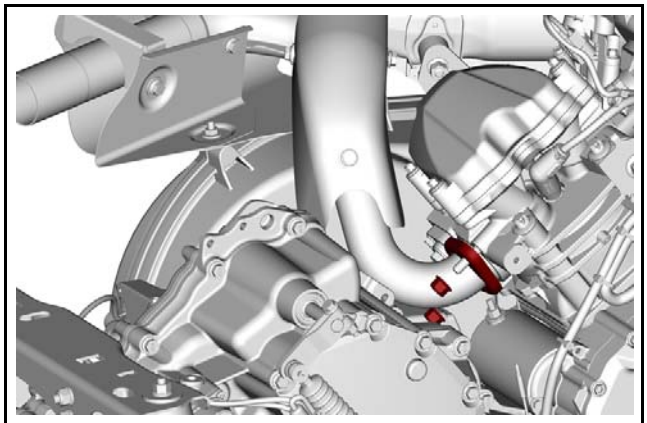
tmr2016-112-005

TYPICAL

5. Remove rear head pipe with "Y" exhaust pipe, and heat shields. Discard gasket and nuts.

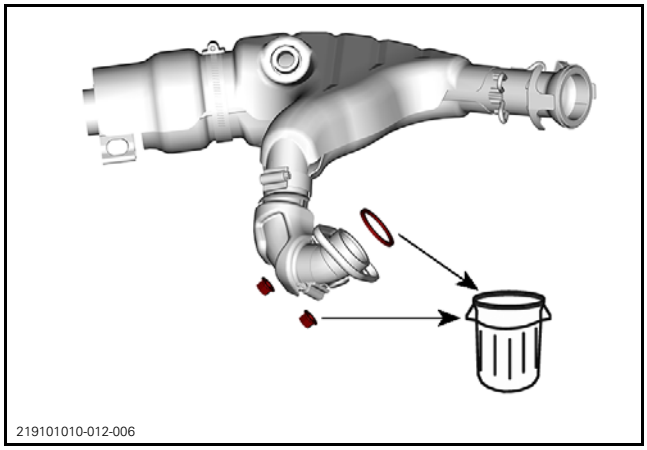
219101010-012-006

Inspecting Rear Head Pipe

Check head pipe for cracks, bending or other damages. Replace if need.

Installing Rear Head Pipe

The installation is the reverse of the removal procedure. However, pay attention to the following.

Do not tighten yet. Strictly adhere to tightening sequence. Refer to *FRONT HEAD PIPE*.

Install NEW exhaust gasket.

Install muffler. Refer to *INSTALLING MUFFLER*.

LUBRICATION SYSTEM

SERVICE TOOLS

Description	Part Number	Page
DISCONNECT TOOL	529 035 714	5
OIL PRESSURE HOSE	529 036 394	5
PRESSURE GAUGE	529 036 395	5

SERVICE PRODUCTS

Description	Part Number	Page
4T 0W40 SYNTHETIC OIL (EUR)	779286	3
4T 0W40 SYNTHETIC OIL	779139	3
4T 10W50 SYNTHETIC OIL (EUR)	779240	3
4T 10W50 SYNTHETIC OIL	779234	3
4T 5W40 SYNTHETIC BLEND OIL (EUR)	779290	3
4T 5W40 SYNTHETIC BLEND OIL	779133	3
LOCTITE 243 (BLUE)	293 800 060	7

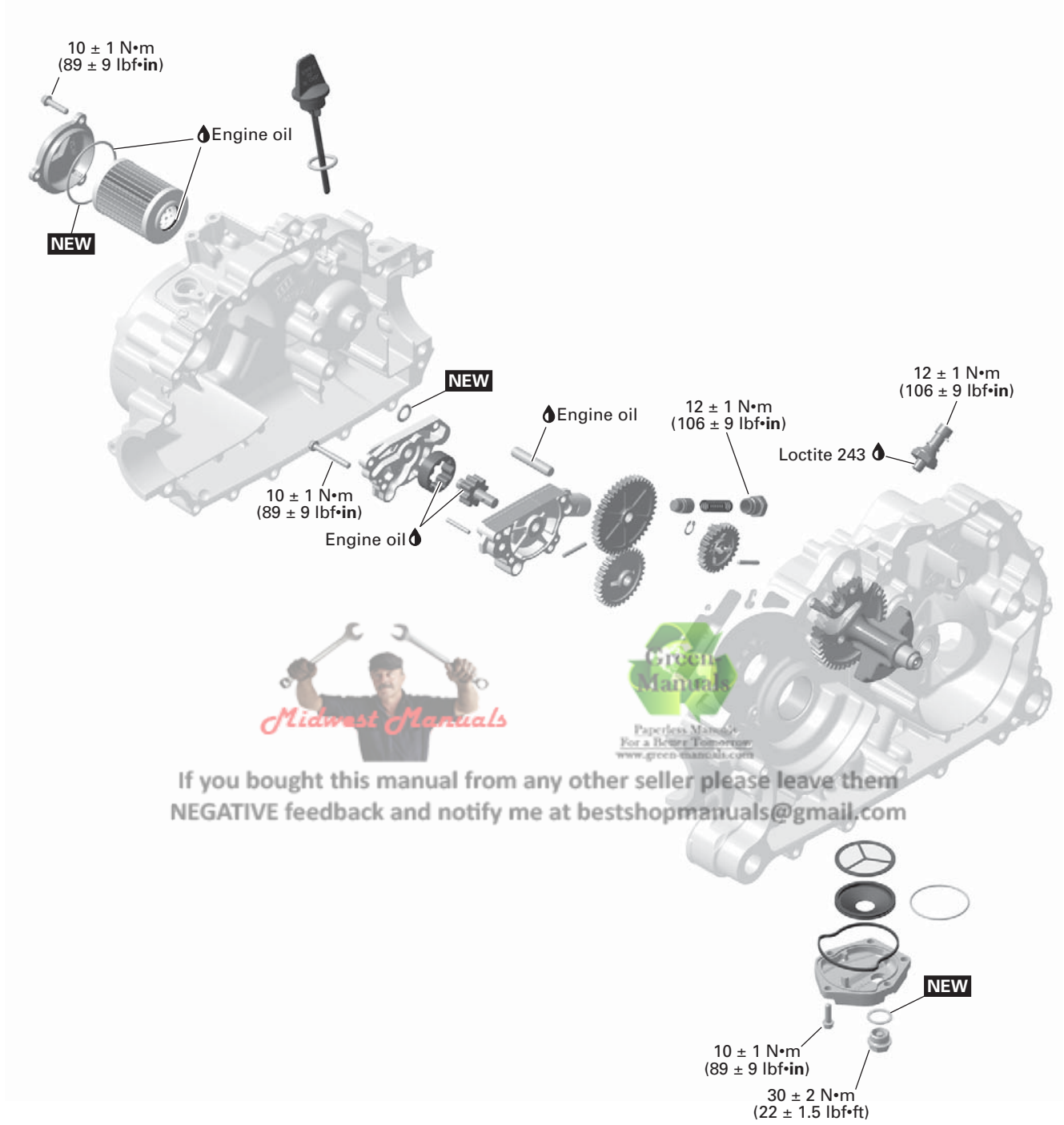

Midwest Manuals
Green Manuals
Paperless Manuals
For a Better Tomorrow
www.green-manuals.com
If you bought this manual from any other seller please leave them
NEGATIVE feedback and notify me at bestshopmanuals@gmail.com

NEW = Component must be replaced when removed.

vmr2015-015-001_a

MAINTENANCE

RECOMMENDED ENGINE OIL

Rotax® engines were developed and validated using the XPS™ oil. BRP recommends the use of its XPS engine oil or an equivalent at all time. Damages caused by the use of an oil not suitable for the engine may not be covered by the BRP Limited Warranty.

XPS RECOMMENDED ENGINE OIL	
General purpose	**Scandinavia:** 4T 5W40 SYNTHETIC BLEND OIL (EUR) (P/N 779290) **Other Countries:** 4T 5W40 SYNTHETIC BLEND OIL (P/N 779133)
Cold temperature	**Scandinavia:** 4T 0W40 SYNTHETIC OIL (EUR) (P/N 779286) **Other Countries:** 4T 0W40 SYNTHETIC OIL (P/N 779139)
Warm temperature	**Scandinavia:** 4T 10W50 SYNTHETIC OIL (EUR) (P/N 779240) **Other Countries:** 4T 10W50 SYNTHETIC OIL (P/N 779234)
IF THE RECOMMENDED XPS ENGINE OIL IS NOT AVAILABLE	
Use a 4-stroke SAE engine oil meeting or exceeding the following lubricant industry specifications. Always check the API service label certification on the oil container, it must contain at least one of the indicated standards. – **API service classification SJ, SL, SM or SN**	

VERIFYING THE ENGINE OIL LEVEL

NOTICE **Operating the engine with an improper level may severely damage engine.**

With vehicle on a level surface and engine cold, check the oil level as follows:

1. Place vehicle on a level surface.
2. Open cargo box.
3. Remove dipstick and wipe it clean.

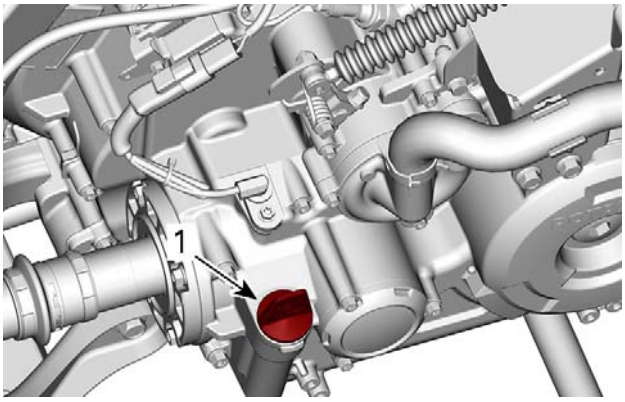

1. Dipstick

4. Reinstall dipstick, screw in it completely.
5. Remove dipstick and check oil level. It should be near or equal to the upper mark.

TYPICAL
1. MIN.
2. MAX.
3. Operating range

To add oil, remove the dipstick. Place a funnel into the dipstick tube.

Add a small amount of recommended oil and recheck oil level.

Repeat the above procedures until oil level reaches the dipstick's upper mark.

NOTE: Do not overfill. Wipe off any spillage.

Properly tighten dipstick.

Close cargo box.

CHANGING THE ENGINE OIL

NOTICE **Engine oil and oil filter must be replaced at the same time.**

Oil change and oil filter replacement should be done with a warm engine.

⚠ CAUTION **The engine oil can be very hot. Wait until engine oil is warm.**

Ensure vehicle is on a level surface.

Remove dipstick.

Place a drain pan under the engine drain plug area.

Clean the drain plug area.

Unscrew magnetic drain plug and discard the gasket ring.

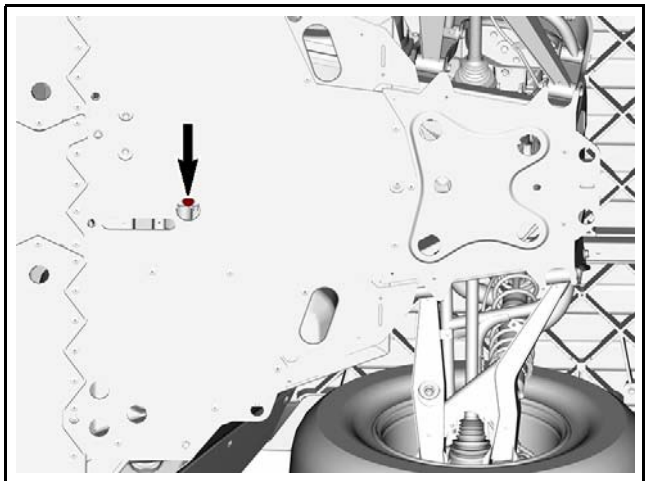

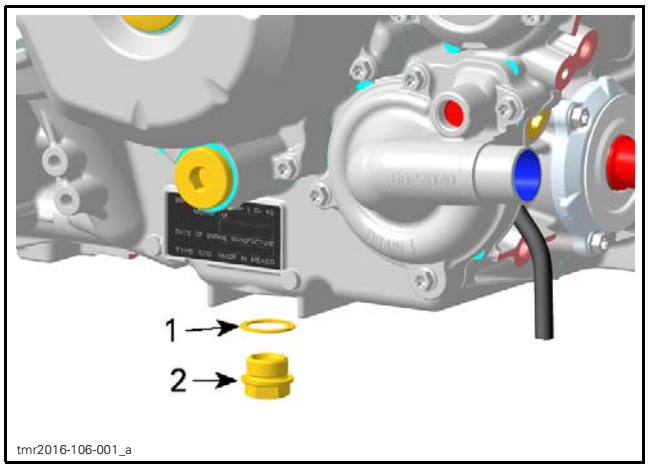

1. *Gasket ring*
2. *Magnetic drain plug*

Allow oil to drain completely from the crankcase.

Clean the magnetic drain plug from metal shavings and residue. Presence of debris gives an indication of internal engine damage.

Install a **NEW** gasket ring on the magnetic drain plug.

NOTICE **Never use the gasket ring a second time. Always replace by a NEW one.**

Tighten magnetic drain plug to the specification.

TIGHTENING TORQUE	
Magnetic drain plug	30 N•m ± 2 N•m (22 lbf•ft ± 1 lbf•ft)

Replace oil filter. Refer to *REPLACING THE ENGINE OIL FILTER* in this subsection.

Refill engine with recommended engine oil.

After filling, check the oil level, refer to *VERIFYING THE ENGINE OIL LEVEL* in this subsection.

Start engine and let it idle for a few minutes.

Ensure oil filter and drain plug areas are not leaking.

Stop engine.

Wait a while to allow oil to flow down to crankcase, then check oil level again.

Dispose oil and filter as per your local environmental regulations.

REPLACING THE ENGINE OIL FILTER

Removing the Oil Filter

Clean oil filter area.

Remove:
- Oil filter cover screws
- Oil filter cover
- O-ring
- Oil filter.

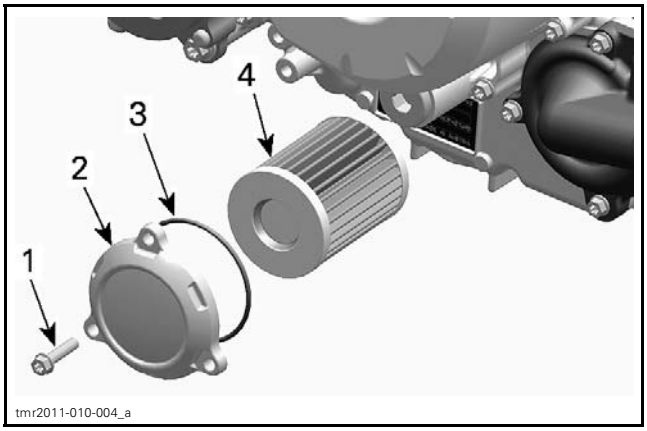

1. *Oil filter cover screw*
2. *Oil filter cover*
3. *O-ring*
4. *Oil filter*

Installing the Oil Filter

Check and clean the oil filter inlet and outlet area for dirt and other contaminations.

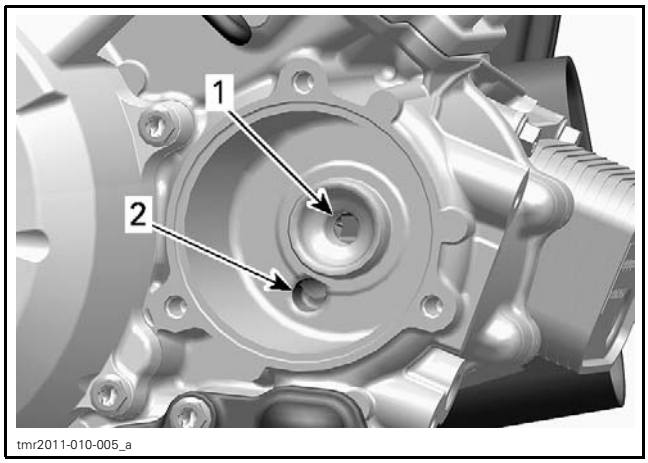

1. Outlet bore to the engine oil providing system
2. Inlet bore from the oil pump to the oil filter

Install a **NEW** O-ring on oil filter cover.

Install the new filter into the cover.

Apply engine oil on O-ring and oil filter seal.

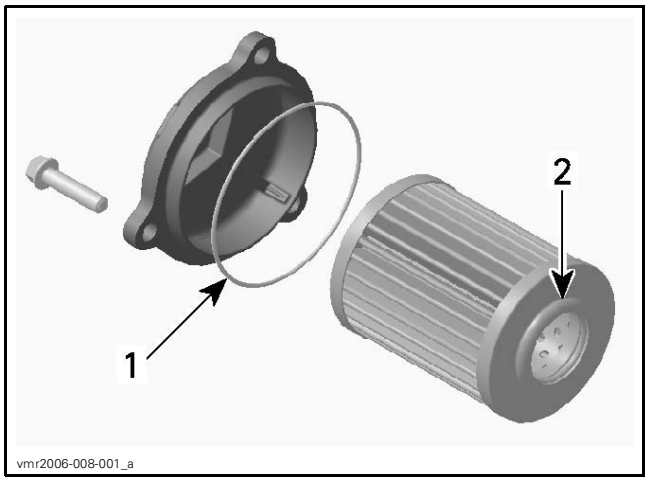

1. Slightly oil
2. Slightly oil

NOTICE **Pay attention to avoid pinching the O-ring during filter and cover installation.**

Install the cover on the engine.

Tighten oil filter cover screws to specification.

TIGHTENING TORQUE	
Oil filter cover screws	10 N•m ± 1 N•m (89 lbf•**in** ± 9 lbf•**in**)

Wipe off any oil spillage on engine.

INSPECTION

ENGINE OIL PRESSURE

NOTE: The engine oil pressure test should be done with a warm engine (100°C (212°F)) and the recommended oil.

Remove the oil pressure switch, refer to *OIL PRESSURE SWITCH* in this subsection.

Install the pressure test gauge with the proper adapter hose in the oil pressure switch bore.

REQUIRED TOOL	
PRESSURE GAUGE (P/N 529 036 395)	
OIL PRESSURE HOSE (P/N 529 036 394)	

Start engine and read oil pressure.

The engine oil pressure should be within the following values.

PRESSURE	1300 RPM	6000 RPM
Minimal	70 kPa (10 PSI)	350 kPa (51 PSI)
Nominal	300 kPa (44 PSI)	450 kPa (65 PSI)
Maximal	550 kPa (80 PSI)	700 kPa (102 PSI)

If the engine oil pressure is out of specifications, check the points described in *TROUBLESHOOTING* in this subsection.

Remove oil pressure gauge and adapter hose.

NOTE: To remove adapter hose from oil pressure gauge, use the disconnect tool.

REQUIRED TOOL	
DISCONNECT TOOL (P/N 529 035 714)	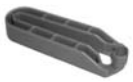

Reinstall the oil pressure switch.

TROUBLESHOOTING

LOW OR NO OIL PRESSURE

1. Oil level is too low
   - *Refill engine with recommended engine oil. Refer to OIL LEVEL VERIFICATION in the appropriate PERIODIC MAINTENANCE PROCEDURES subsection.*
   - *Check for high oil consumption, refer to HIGH OIL CONSUMPTION in the TROUBLESHOOTING subsection.*
   - *Check for engine oil leaks. For leak indicator hole, refer to COOLING SYSTEM INSPECTION in the appropriate PERIODIC MAINTENANCE PROCEDURES subsection. Repair if necessary.*
2. Use of unsuitable engine oil type.
   - *Replace engine oil by the recommended engine oil.*
3. Clogged oil filter.
   - *Replace oil and oil filter at the same time.*
4. Defective oil pressure switch.
   - *Test oil pressure switch, see procedure in this subsection.*
5. Defective or worn oil pump.
   - *Check oil pump, see procedure in this subsection.*
6. Defective engine oil pressure regulator.
   - *Check engine oil pressure regulator, see procedure in this subsection.*
7. Worn plain bearings in crankcase.
   - *Check plain bearings clearance, refer to BOTTOM END subsection.*
8. Clogged engine oil strainer.
   - *Clean engine oil strainer, see procedure in this subsection.*

OIL CONTAMINATION

1. Defective water pump seal ring or rotary seal.
   - *Check for oil or coolant leak from indicator hole near water pump, refer to COOLING SYSTEM INSPECTION in the appropriate PERIODIC MAINTENANCE PROCEDURES subsection. Replace seals if necessary.*
2. Cylinder head or cylinder base gasket leak.
   - *Retighten cylinder head to specified torque, refer to TOP END subsection. Replace gasket if tightening does not solve the problem.*
3. Engine internal damage.
   - *Repair engine.*

HIGH OIL CONSUMPTION

1. Leaking breather oil seal.
   - *Check if the oil seal of the breather (underneath PTO side ball bearing of balancer shaft) is brittle, hard or damaged. Refer to BOTTOM END subsection.*
2. Valve stem seals worn or damaged.
   - *Replace valve stem seals. Refer to TOP END subsection.*
3. Worn piston rings (blue exhaust smoke).
   - *Replace piston rings. Refer to TOP END subsection.*

PROCEDURES

OIL PRESSURE SWITCH (OPS)

Oil Pressure Switch Access

Open cargo box.

Oil Pressure Switch Location

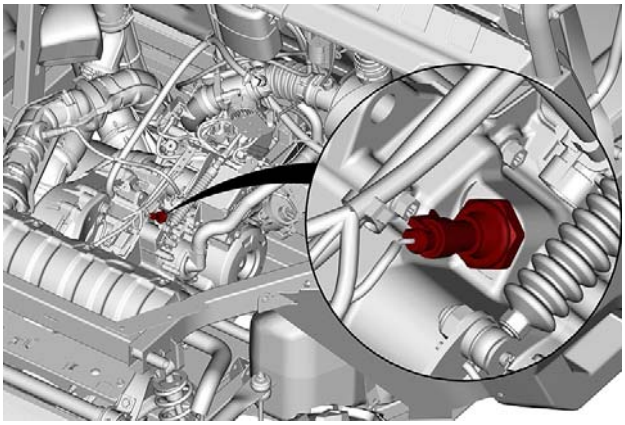

RHD5MY17-001-201

Oil Pressure Switch Activation

The oil pressure switch activates when the engine oil pressure is lower than following specified pressure range.

OIL PRESSURE SWITCH ACTIVATION RANGE
30 kPa ± 10 kPa (4.35 PSI ± 1.45 PSI)

To check the function of the oil pressure switch, an oil pressure test has to be performed. Refer to *ENGINE OIL PRESSURE* in this subsection.

If the engine oil pressure is good, perform the oil pressure switch resistance test.

Testing the Oil Pressure Switch Resistance

Disconnect the connector from the oil pressure switch.

Using a multimeter set to Ω, check the OPS resistance as per following table.

OPS CONNECTOR		ENGINE NOT RUNNING	ENGINE NOT RUNNING
PIN		RESISTANCE (Ω)	
1	Engine ground	Close to 0 Ω (normally closed switch)	Close to 0 Ω (normal closed switch

OPS CONNECTOR		ENGINE NOT RUNNING	ENGINE RUNNING
PIN		RESISTANCE (Ω)	
1	Engine ground	Close to 0 Ω (normally closed switch)	Infinitely high when pressure reaches 30 kPa ± 10 kPa (4.35 PSI ± 1.45 PSI)

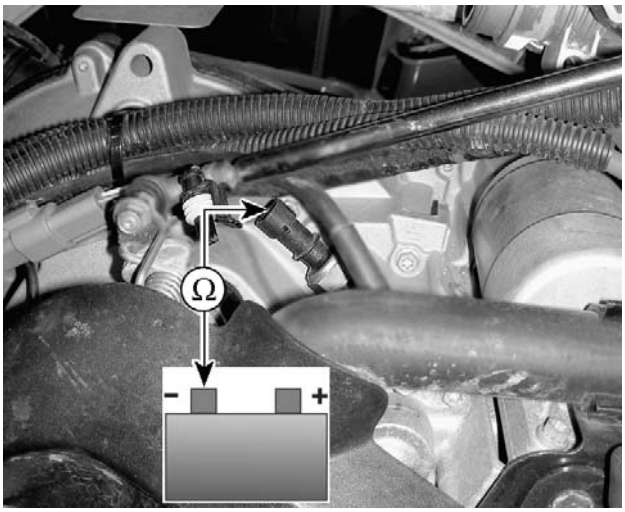

vmr2008-124-104_a

TYPICAL

If resistance values are incorrect, replace the oil pressure switch.

If the values are correct, check the continuity of the wiring harness.

Disconnect the ECM connector and check continuity of circuit between switch and ECM.

OPS CIRCUIT		MEASUREMENT
OPS PIN	ECM pin	Resistance (Ω) @ 20°C (68°F)
1	E3	Close to 0 Ω

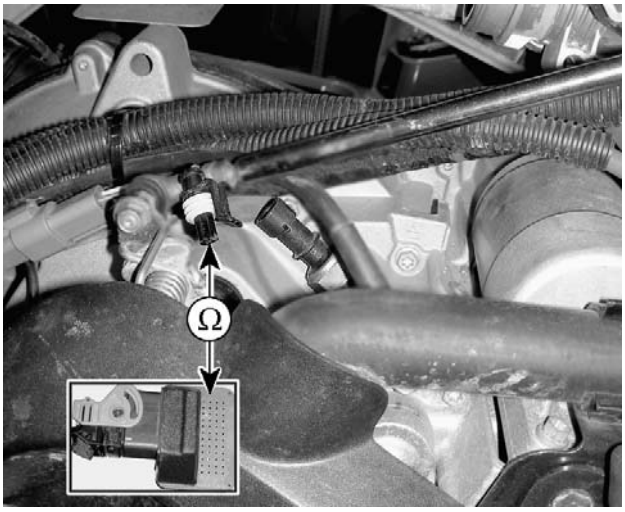

vmr2008-124-104_b

TYPICAL

Removing the Oil Pressure Switch

Disconnect and unscrew oil pressure switch.

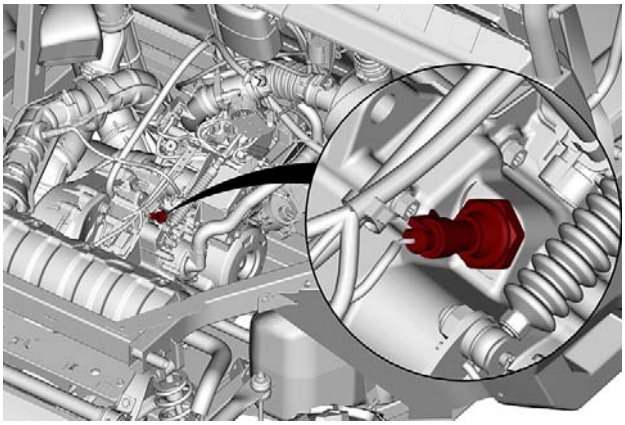
RHD5MY17-001-201

Installing the Oil Pressure Switch

Tighten oil pressure switch to specification.

TIGHTENING TORQUE	
Oil pressure switch	12 N•m ± 1 N•m (106 lbf•**in** ± 9 lbf•**in**) + LOCTITE 243 (BLUE) (P/N 293 800 060)

Plug switch connector.

OIL STRAINER

Oil Strainer Access

Engine must be lifted or removed to access the oil strainer. Refer to the appropriate *ENGINE REMOVAL AND INSTALLATION* subsection.

Removing the Oil Strainer

Drain engine oil, refer to *ENGINE OIL CHANGE* in the appropriate *PERIODIC MAINTENANCE PROCEDURES* subsection.

Remove:
- Retaining screws
- Oil strainer cover
- Gasket.

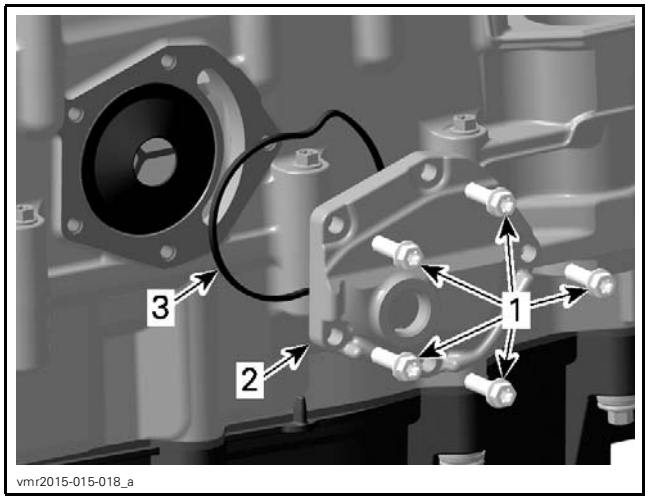

1. *Retaining screws*
2. *Oil strainer cover*
3. *Gasket*

Remove:
- Oil collector with O-ring
- Oil strainer.

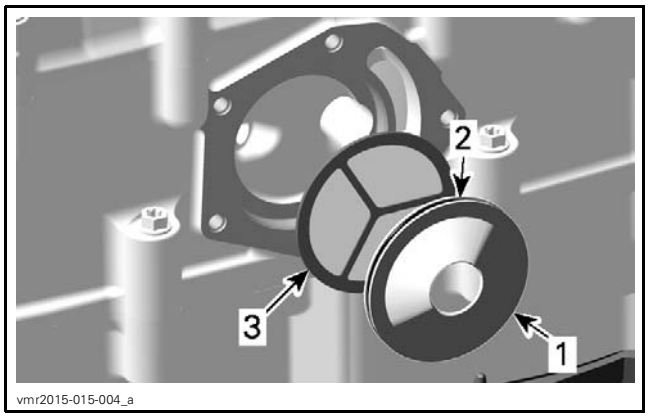

1. *Oil collector*
2. *O-ring*
3. *Oil strainer*

Cleaning and Inspecting the Oil Strainer

Clean oil strainer with a part cleaner then use an air gun to dry it.

⚠ WARNING

Always wear eye protector. Chemicals can cause a rash break out in and an injury to your eyes.

Check engine oil strainer for cracks or other damage. Replace if damaged.

Inspect O-ring on the oil collector and rubber ring on the oil strainer cover if brittle, cracked or hard. Replace the defective parts.

Clean both contact surfaces of oil strainer cover.

Check and clean the oil inlet and outlet area for dirt and other contaminations.

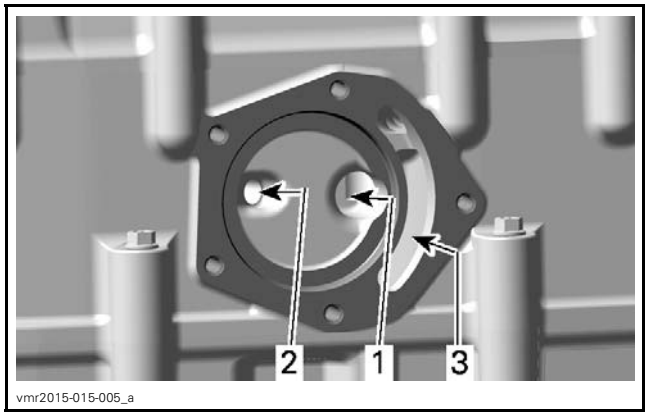

1. *Oil inlet to the oil pump*
2. *Oil return from the oil pressure regulator system*
3. *Oil return from the engine oil circulation*

Installing the Oil Strainer

For installation, reverse the removal procedure.

Tighten oil strainer cover screws as per following sequence.

TIGHTENING TORQUE	
Oil strainer cover screws	10 N•m ± 1 N•m (89 lbf•**in** ± 9 lbf•**in**)

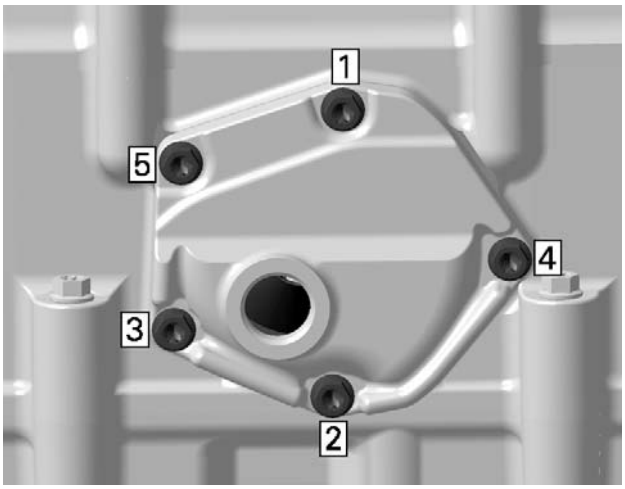

TIGHTENING SEQUENCE

Install **NEW** gasket ring.

Tighten magnetic drain plug to specification.

TIGHTENING TORQUE	
Magnetic drain plug	30 N•m ± 2 N•m (22 lbf•ft ± 1 lbf•ft)

Reinstall engine in vehicle, refer to the appropriate *ENGINES REMOVAL AND INSTALLATION* subsection.

Refill engine at the proper level with the recommended oil, refer to the appropriate *PERIODIC MAINTENANCE PROCEDURES* subsection.

Start engine and let idle for a few minutes.

Ensure oil filter and magnetic drain plug areas are not leaking.

Stop engine.

Wait a while to allow oil to flow down to crankcase then check oil level. Refill as necessary.

ENGINE OIL PRESSURE REGULATOR

Oil Pressure Regulator Location

The oil pressure regulator is located in the oil pump housing (engine MAG side, behind magneto cover).

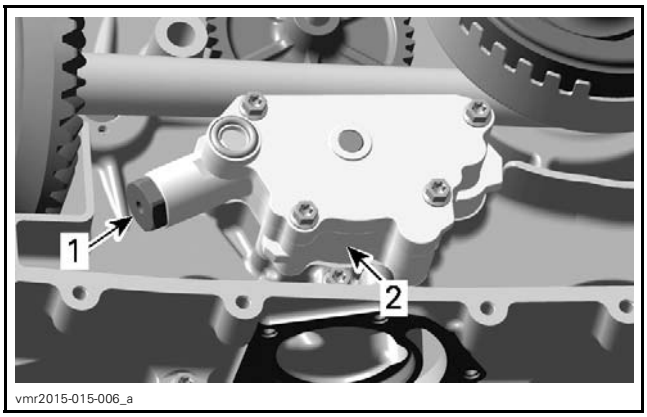

1. *Oil pressure regulator plug*
2. *Oil pump housing*

NOTE: The oil pressure regulator system works when the oil pressure exceeds 500 kPa (73 PSI).

Removing the Oil Pressure Regulator

Remove:

– Engine from vehicle (refer to the appropriate *ENGINE REMOVAL/INSTALLATION* subsection)
– Water pump cover (refer to the appropriate *COOLING SYSTEM* subsection)
– Magneto cover (refer to the appropriate *MAGNETO AND STARTER* subsection).

Remove:

– Oil pressure regulator plug
– Compression spring
– Valve piston.

NOTE: Oil pressure regulator plug on oil pump housing is spring loaded.

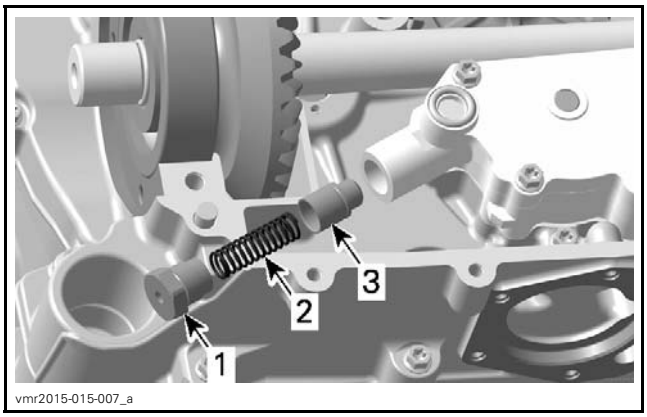

1. *Oil pressure regulator plug*
2. *Compression spring*
3. *Valve piston*

Inspecting the Oil Pressure Regulator

Inspect valve piston for scoring or other damages.

Check compression spring for free length.

COMPRESSION SPRING FREE LENGTH	
NEW NOMINAL	64 mm (2.52 in)
SERVICE LIMIT	62 mm (2.441 in)

Replace both parts if important wear or damage are present.

Clean bore and threads in the oil pump housing from metal shavings and other contaminations.

Installing the Oil Pressure Regulator

For installation, reverse the removal procedure.

Tighten oil pressure regulator plug screw to specification.

TIGHTENING TORQUE	
Oil pressure regulator plug screw	12 N•m ± 1 N•m (106 lbf•**in** ± 9 lbf•**in**)

OIL PUMP

The oil pump is located on the engine MAG side (refer to *ENGINE OIL PRESSURE REGULATOR*).

Removing the Oil Pump

Remove:
- Engine from vehicle (refer to the appropriate *ENGINE REMOVAL AND INSTALLATION* subsection)
- Water pump cover (refer to the appropriate *COOLING SYSTEM* subsection)
- Magneto cover (refer to the appropriate *MAGNETO AND STARTER* subsection).

Remove only if necessary:
- Retaining ring (discard it)
- Drive gear
- Needle pin.

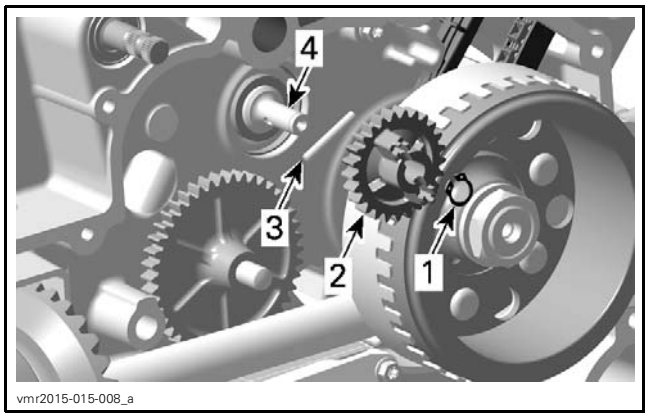

1. *Retaining ring (discard)*
2. *Drive gear*
3. *Needle pin*
4. *Balancer shaft*

NOTICE **Never use the retaining ring a second time. Always replace by a NEW one.**

Remove only if necessary:
- Pin
- Intermediate gear.

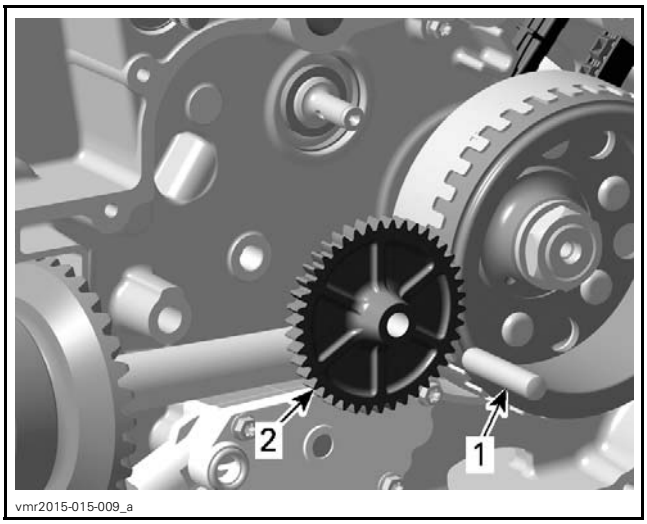

1. *Pin*
2. *Intermediate gear*

Remove:
- Oil pump cover screws
- Oil pump module with O-ring.

NOTICE **Do not loose oil pump cover O-ring.**

NOTICE **Pay attention not to drop the dowel pins inside the engine.**

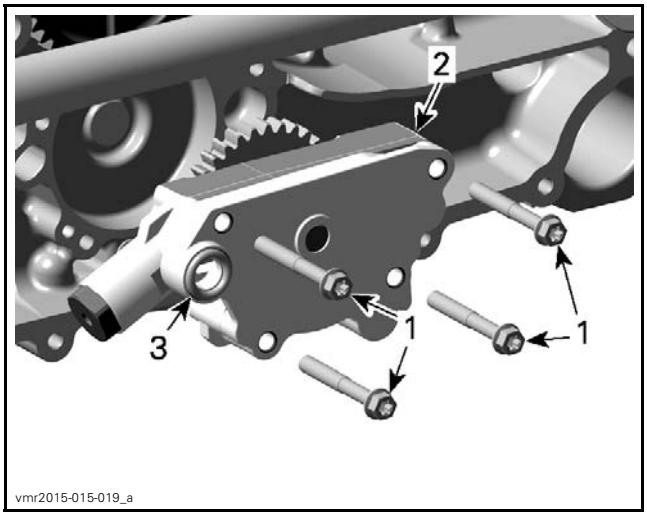

1. *Oil pump cover screws*
2. *Oil pump module*
3. *O-ring, sealing to crankcase MAG side*

Remove:
- O-ring

– Oil pump cover
– Dowel pins.

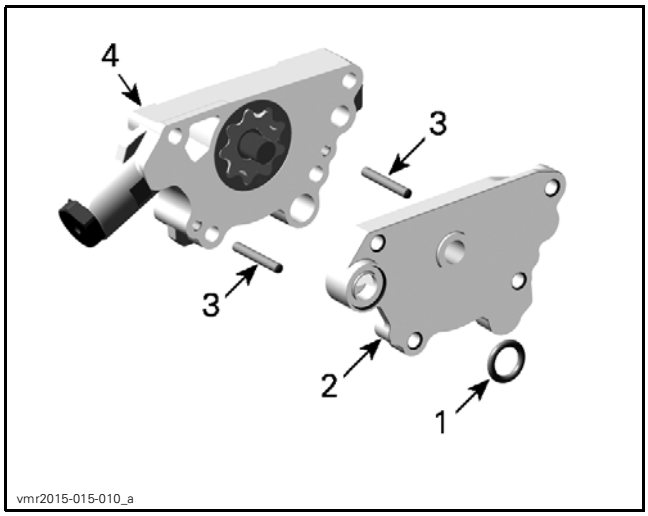

1. O-ring
2. Oil pump cover
3. Dowel pins
4. Oil pump housing

Use screwdrivers to remove oil pump gear.

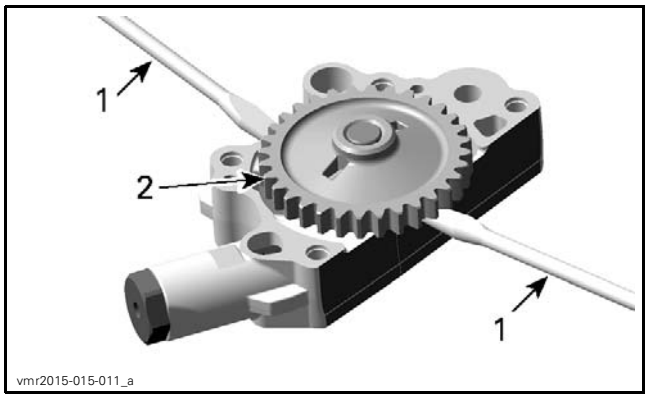

1. Flat screwdrivers
2. Oil pump gear

Remove:
– Needle pin.

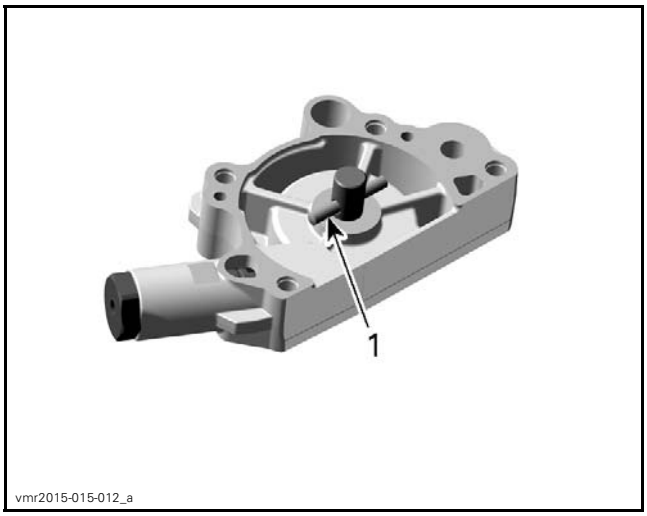

1. Needle pin

Remove:
– Oil pump shaft assembly
– Outer rotor.

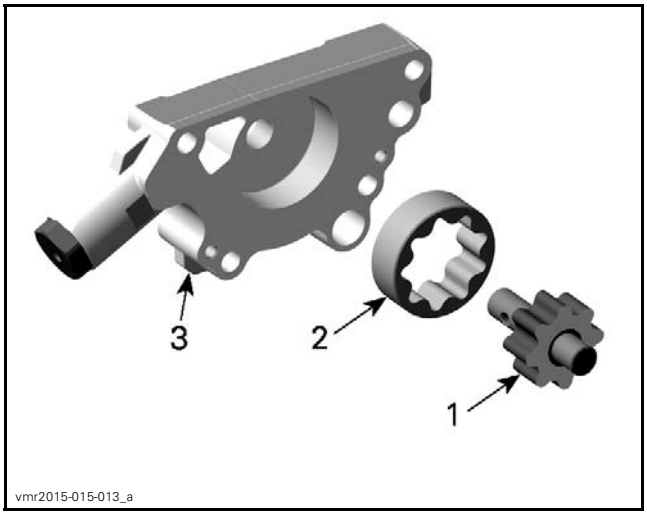

1. Oil pump shaft assembly
2. Outer rotor
3. Oil pump housing

Inspecting the Oil Pump

Inspect oil pump shaft assembly, housing and cover for marks or other damages.

Replace O-ring if damaged, brittle or hard.

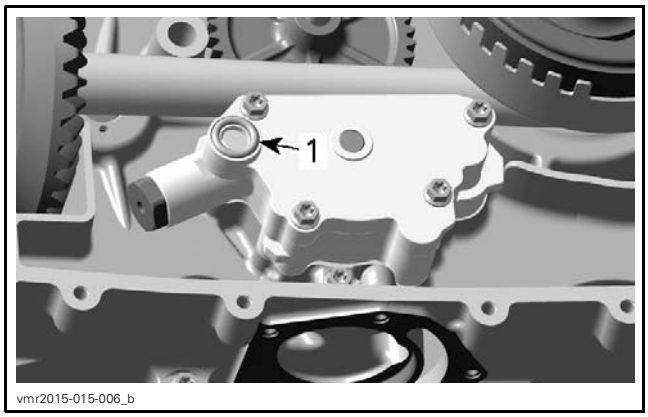

1. O-ring

Check inner rotor for corroded pin holes or other damages. If so, replace oil pump shaft assembly.

Check the inside of oil pump housing and its cover for scoring or other damages. If so, change the complete oil pump assembly.

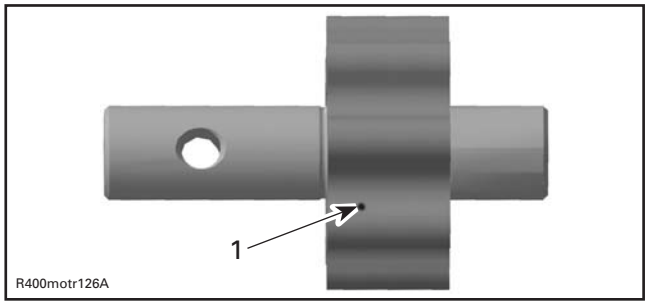

1. Pittings on the teeth

Clean oil passages and make sure they are not clogged.

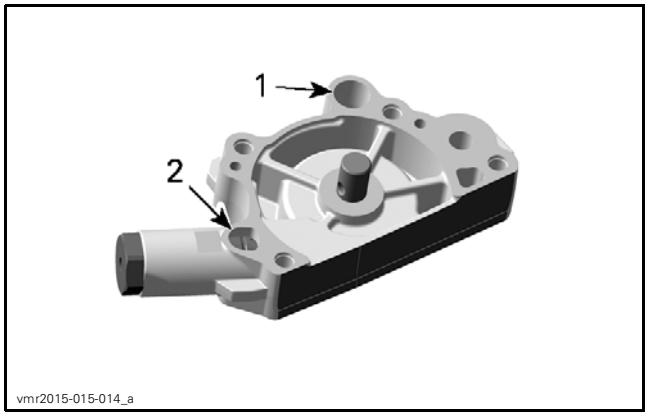

OIL PUMP HOUSING
1. Suction side of the oil pump
2. Outlet from the engine oil pressure regulator valve

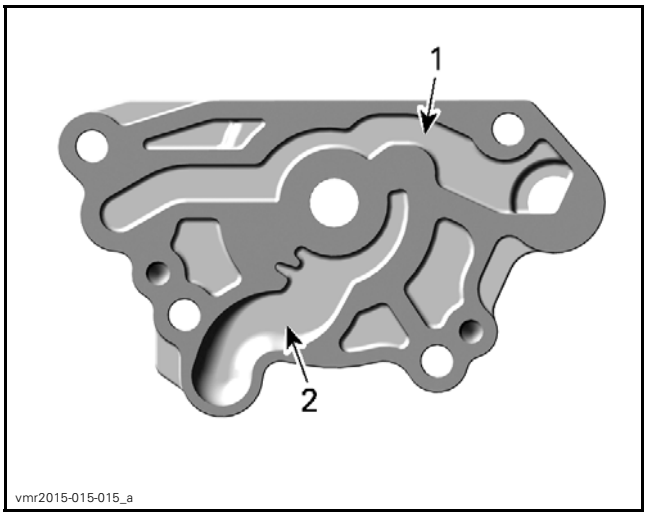

OIL PUMP COVER
1. Oil from the pump to the oil filter in the magneto cover
2. Oil from the pump suction side to the oil pump

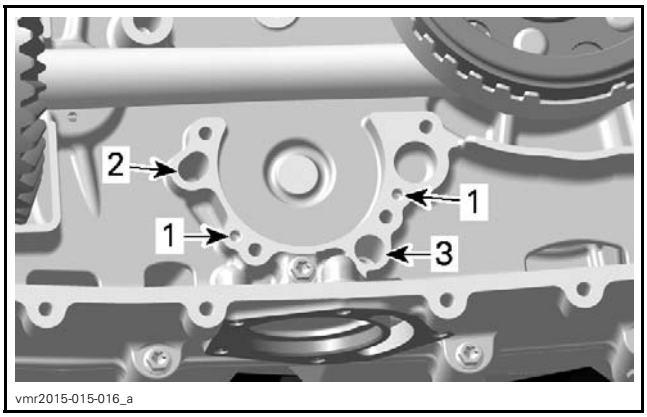

CRANKCASE MAG SIDE
1. Bores for dowel pins
2. Oil return from the oil pressure regulator system
3. Oil inlet to the oil pump (leads to strainer on engine bottom)

Using a feeler gauge, measure the clearance between inner and outer rotor.

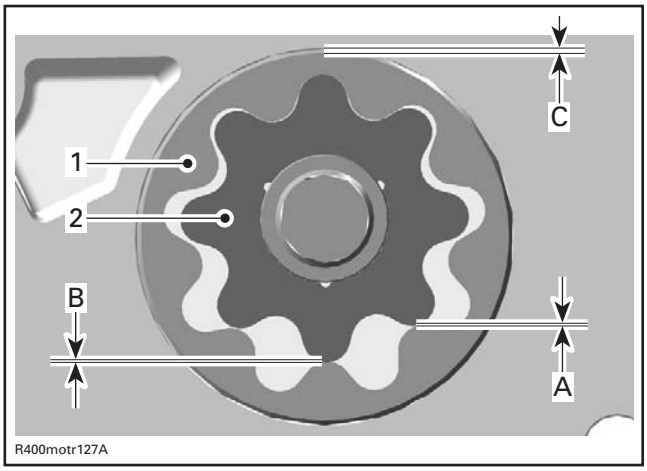

1. Outer rotor
2. Inner rotor

OUTER AND INNER ROTOR CLEARANCE	
SERVICE LIMIT	
A	0.25 mm (.0098 in)
B	
C	

If clearance between inner and outer rotor exceeds the tolerance, replace oil pump shaft assembly. Ensure to also check oil pump housing and cover. If damaged, replace the complete oil pump assembly.

If clearance between outer rotor and its bore in oil pump exceeds the tolerance, replace the complete oil pump assembly.

Measure the axial clearance of the oil pump as shown.

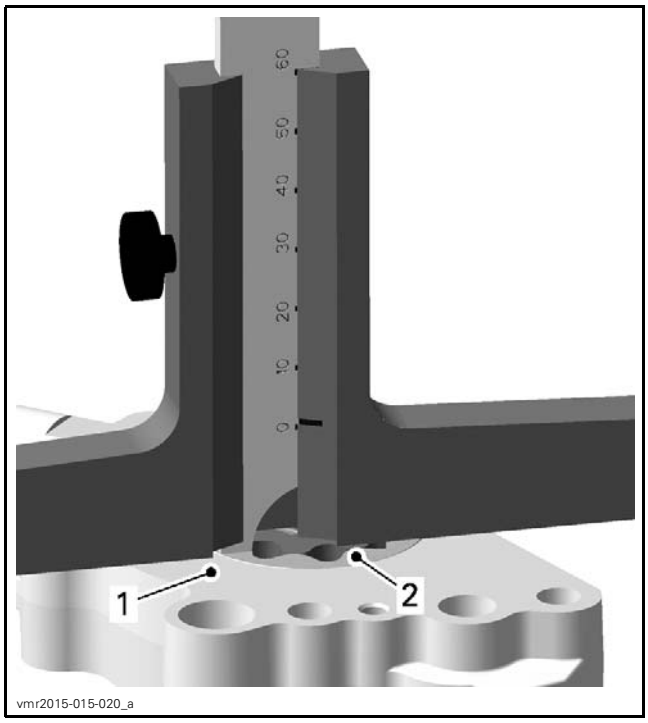

MEASUREMENT "A"
1. *Oil pump housing surface*
2. *Oil pump rotor surface*

Check oil pump cover for damages and for surface straightness with a straight edge and a feeler gauge.

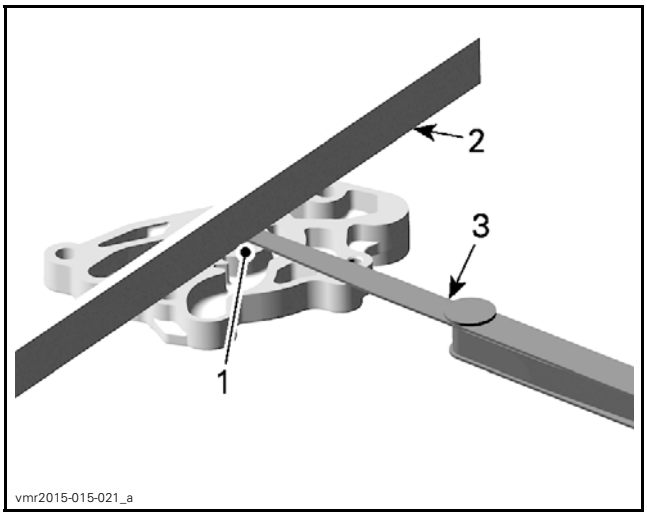

MEASUREMENT "B"
1. *Oil pump cover surface*
2. *Straight edge*
3. *Feeler gauge*

Add measurement A to measurement B to obtain axial clearance.

OIL PUMP AXIAL CLEARANCE	
SERVICE LIMIT	0.10 mm (.0039 in)

NOTE: When the axial clearance of the oil pump shaft assembly increases, the oil pressure decreases.

Installing the Oil Pump

For installation, reverse the removal procedure.

When installing the oil pump rotors, make sure both markings are on the same side.

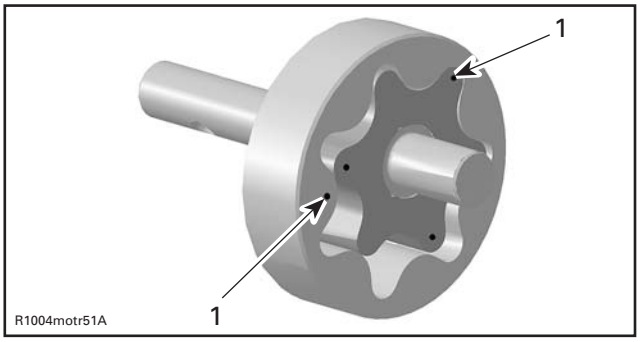

1. *Markings on inner and outer rotor*

NOTICE **Never apply any sealing compound on split surfaces of oil pump.**

Tightening oil pump cover screws as per following sequence.

TIGHTENING TORQUE	
Oil pump cover screws	10 N•m ± 1 N•m (89 lbf•**in** ± 9 lbf•**in**)

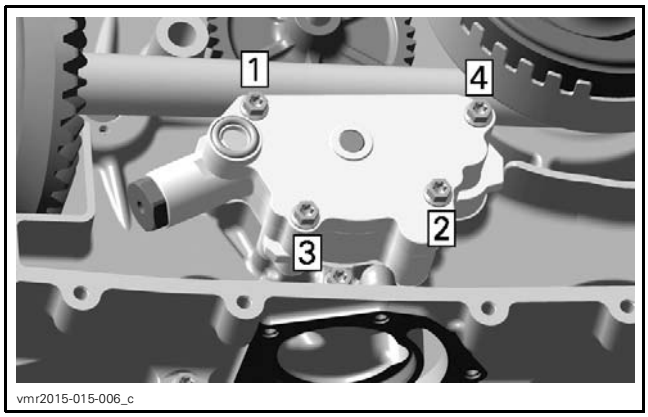

TIGHTENING SEQUENCE

NOTE: After tightening the oil pump cover screws check for smooth operation of the oil pump assembly.

Install the O-ring on oil pump cover.

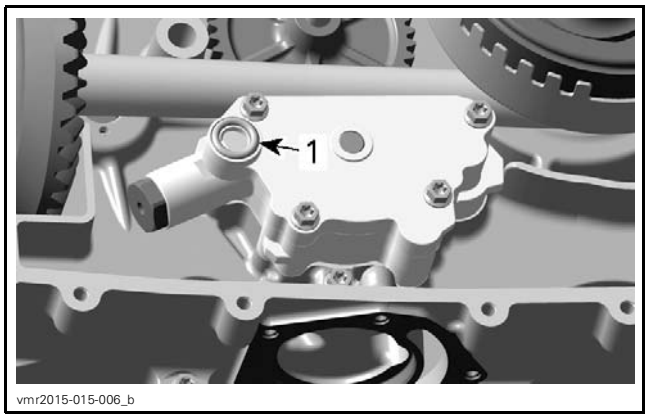

1. O-ring

After engine is completely reassembled, start engine and make sure oil pressure is within specifications (refer to *TESTING THE ENGINE OIL PRESSURE* in this subsection).

LUBRICATION SYSTEM

SERVICE TOOLS

Description	Part Number	Page
DISCONNECT TOOL	529 035 714	7
OIL PRESSURE HOSE	529 036 394	6
PRESSURE GAUGE	529 036 395	6

SERVICE PRODUCTS

Description	Part Number	Page
4T 0W40 SYNTHETIC OIL (EUR)	779286	4
4T 0W40 SYNTHETIC OIL	779139	4
4T 10W50 SYNTHETIC OIL (EUR)	779240	4
4T 10W50 SYNTHETIC OIL	779234	4
4T 5W40 SYNTHETIC BLEND OIL (EUR)	779290	4
4T 5W40 SYNTHETIC BLEND OIL	779133	4
LOCTITE 243 (BLUE)	293 800 060	9, 12

Midwest Manuals
Green Manuals
Paperless Manuals
For a Better Tomorrow
www.green-manuals.com
If you bought this manual from any other seller please leave them
NEGATIVE feedback and notify me at bestshopmanuals@gmail.com

COMPONENTS

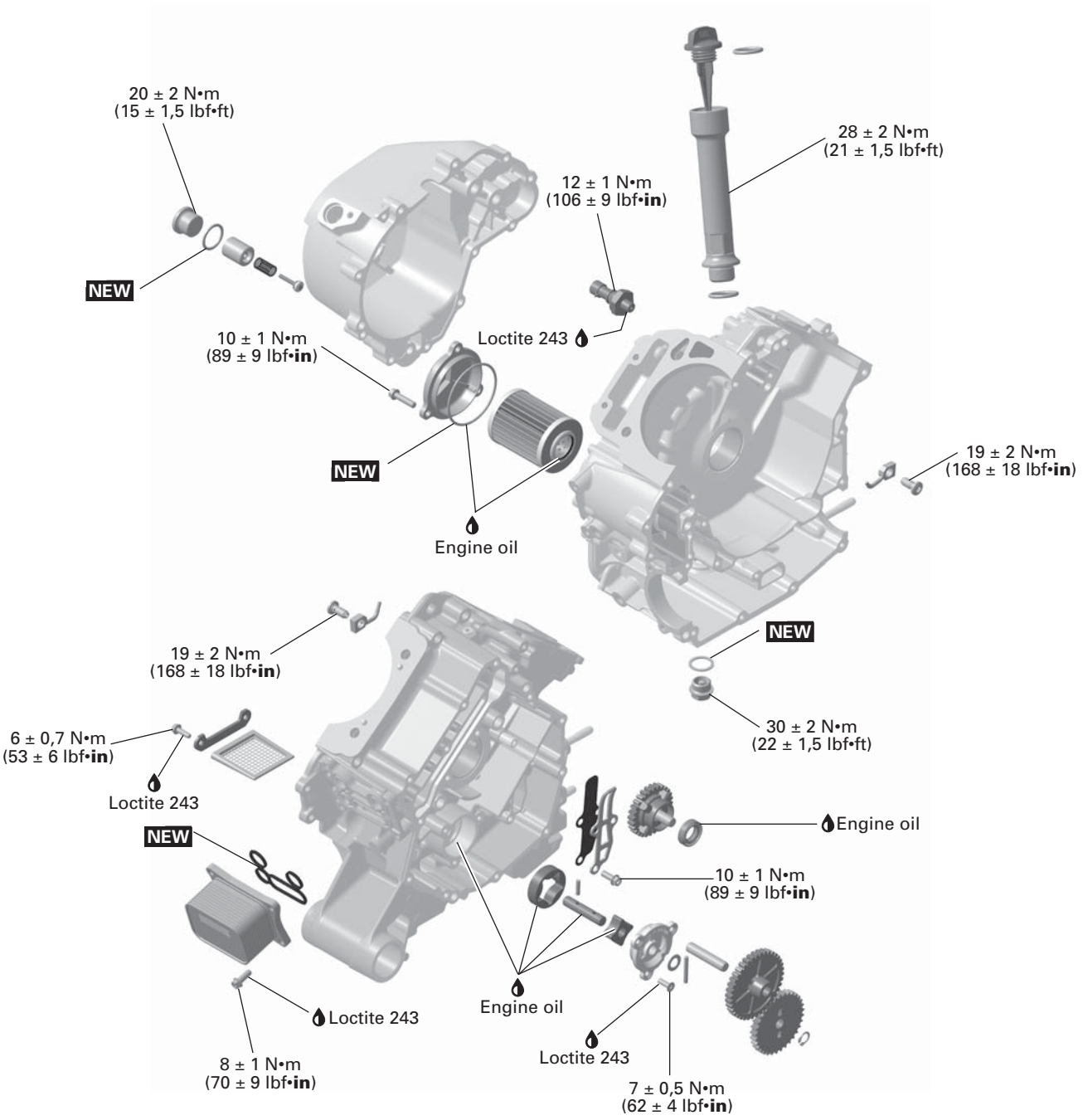

NEW = Component must be replaced when removed.

tmr2013-064-100_a

ENGINE LUBRICATION CIRCUIT

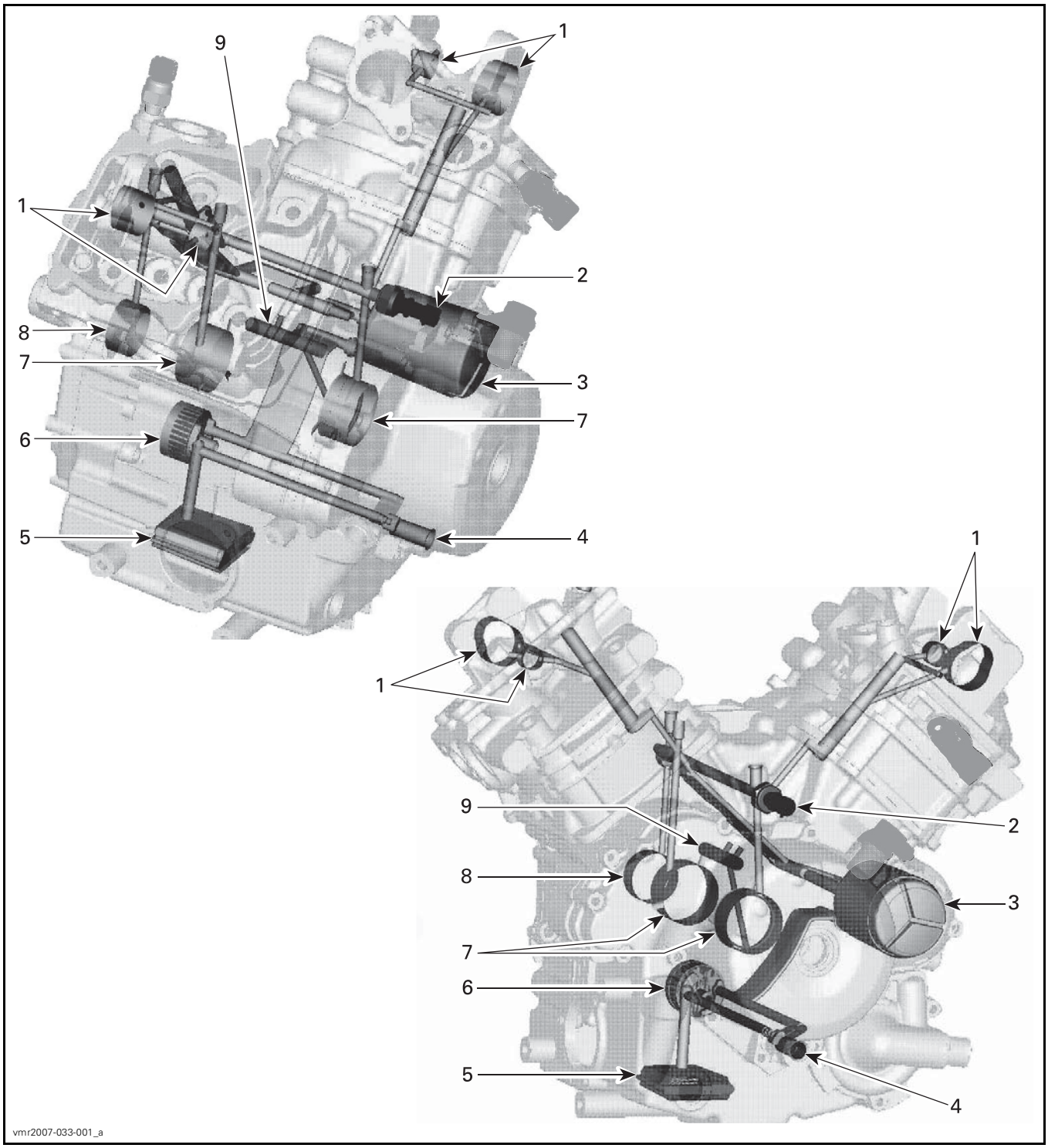

1. *Camshaft bearings*
2. *Oil pressure switch*
3. *Oil filter*
4. *Oil pressure regulator valve*
5. *Oil strainer*
6. *Oil pump*
7. *Crankshaft main bearings*
8. *Crankshaft support bearing*
9. *Connecting rod bearings*

MAINTENANCE

RECOMMENDED ENGINE OIL

Rotax® engines were developed and validated using the XPS™ oil. BRP recommends the use of its XPS engine oil or an equivalent at all time. Damages caused by the use of an oil not suitable for the engine may not be covered by the BRP Limited Warranty.

XPS RECOMMENDED ENGINE OIL	
General purpose	**Scandinavia:** 4T 5W40 SYNTHETIC BLEND OIL (EUR) (P/N 779290) **Other Countries:** 4T 5W40 SYNTHETIC BLEND OIL (P/N 779133)
Cold temperature	**Scandinavia:** 4T 0W40 SYNTHETIC OIL (EUR) (P/N 779286) **Other Countries:** 4T 0W40 SYNTHETIC OIL (P/N 779139)
Warm temperature	**Scandinavia:** 4T 10W50 SYNTHETIC OIL (EUR) (P/N 779240) **Other Countries:** 4T 10W50 SYNTHETIC OIL (P/N 779234)
IF THE RECOMMENDED XPS ENGINE OIL IS NOT AVAILABLE	
Use a 4-stroke SAE engine oil meeting or exceeding the following lubricant industry specifications. Always check the API service label certification on the oil container, it must contain at least one of the indicated standards. – **API service classification SJ, SL, SM or SN**	

VERIFYING THE ENGINE OIL LEVEL

NOTICE **Operating the engine with an improper level may severely damage engine.**

With vehicle on a level surface and engine cold, check the oil level as follows:

1. Open cargo box.
2. Remove dipstick and wipe it clean.

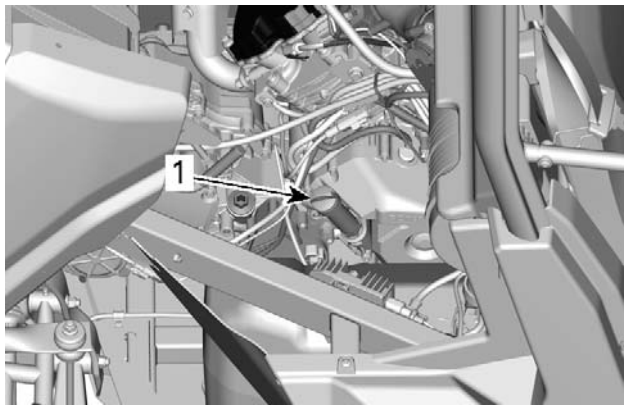

tmo2016-010-030_a

1. Dipstick

3. Reinstall dipstick, screw in it completely.
4. Remove dipstick and check oil level. It should be near or equal to the upper mark.

tmo2011-001-076_a

TYPICAL
1. MIN.
2. MAX.
3. Operating range

To add oil, remove the dipstick. Place a funnel into the dipstick tube.

Add a small amount of recommended oil and recheck oil level.

Repeat the above procedures until oil level reaches the dipstick's upper mark.

NOTE: Do not overfill. Wipe off any spillage.

Properly tighten dipstick.

Close cargo box.

CHANGING THE ENGINE OIL

NOTICE **Engine oil and oil filter must be replaced at the same time.**

Oil change and oil filter replacement should be done with a warm engine.

⚠ CAUTION **The engine oil can be very hot. Wait until engine oil is warm.**

Ensure vehicle is on a level surface.

Remove dipstick.

Place a drain pan under the engine drain plug area.

Clean the drain plug area.

Unscrew magnetic drain plug and discard the gasket ring.

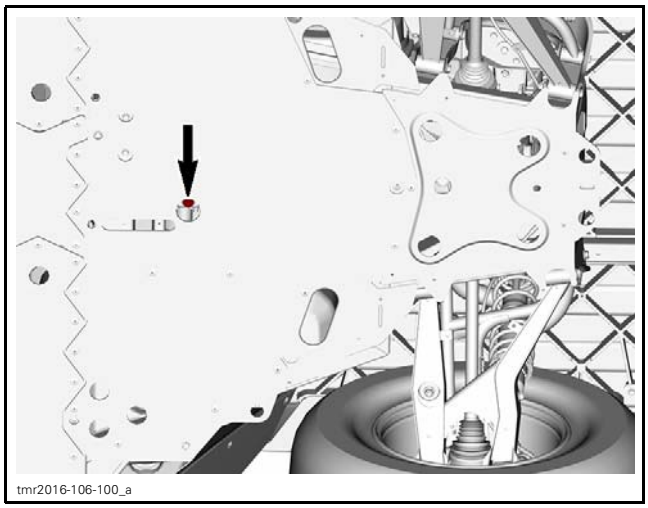

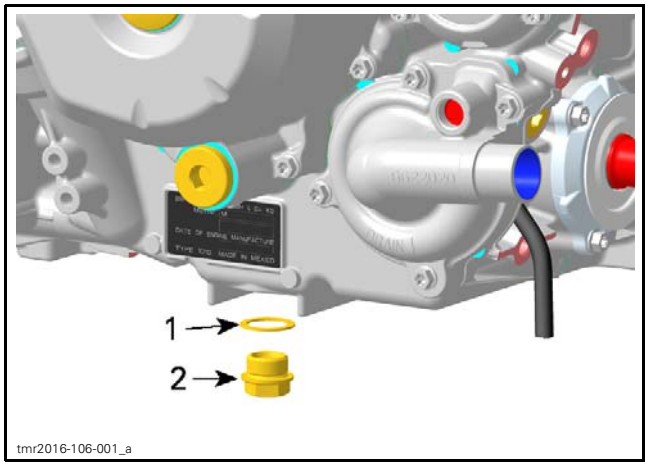

1. *Gasket ring*
2. *Magnetic drain plug*

Allow oil to drain completely from the crankcase.

Clean the magnetic drain plug from metal shavings and residue. Presence of debris gives an indication of internal engine damage.

Install a **NEW** gasket ring on the magnetic drain plug.

NOTICE **Never use the gasket ring a second time. Always replace by a NEW one.**

Tighten magnetic drain plug to the specification.

TIGHTENING TORQUE	
Magnetic drain plug	30 N•m ± 2 N•m (22 lbf•ft ± 1 lbf•ft)

Replace oil filter. Refer to *REPLACING THE ENGINE OIL FILTER* in this subsection.

Refill engine with recommended engine oil.

After filling, check the oil level, refer to *VERIFYING THE ENGINE OIL LEVEL* in this subsection.

Start engine and let it idle for a few minutes.

Ensure oil filter and drain plug areas are not leaking.

Stop engine.

Wait a while to allow oil to flow down to crankcase, then check oil level again.

Dispose oil and filter as per your local environmental regulations.

REPLACING THE ENGINE OIL FILTER

Removing the Oil Filter

Clean oil filter area.

Remove:

- Oil filter cover screws
- Oil filter cover
- O-ring
- Oil filter.

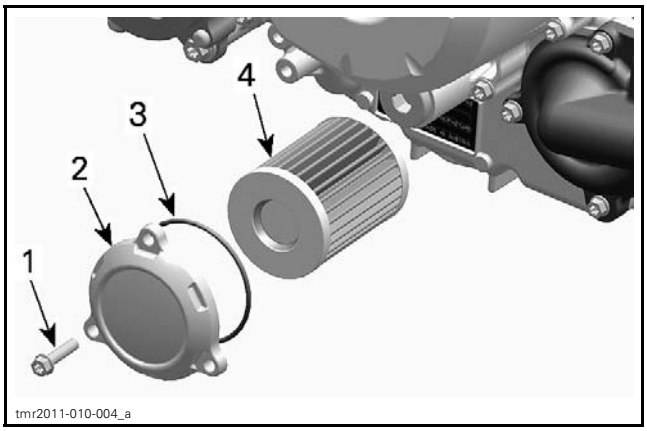

1. *Oil filter cover screw*
2. *Oil filter cover*
3. *O-ring*
4. *Oil filter*

Installing the Oil Filter

Check and clean the oil filter inlet and outlet area for dirt and other contaminations.

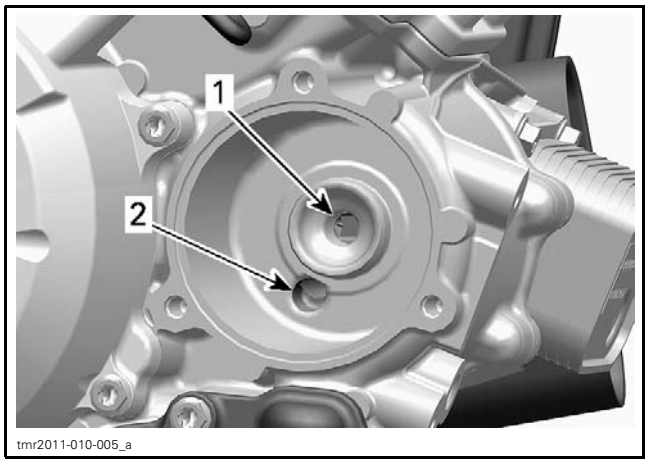

1. *Outlet bore to the engine oil providing system*
2. *Inlet bore from the oil pump to the oil filter*

Install a **NEW** O-ring on oil filter cover.

Install the new filter into the cover.

Lubricate O-ring and oil filter seal.

SERVICE PRODUCT
Engine oil

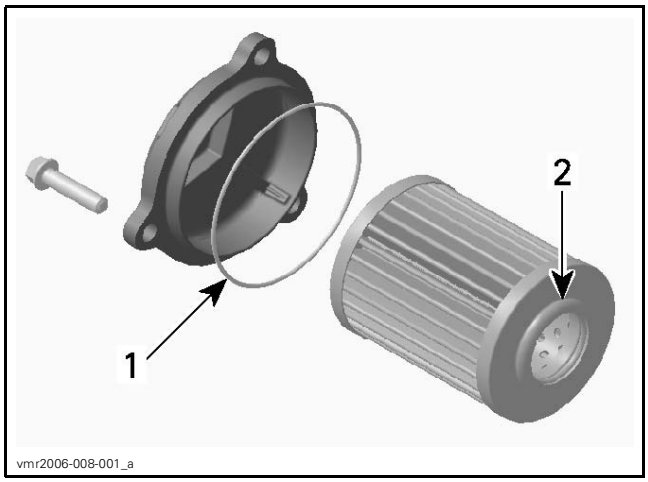

1. *Slightly oil*
2. *Slightly oil*

NOTICE **Pay attention to avoid pinching the O-ring during filter and cover installation.**

Install the cover on the engine.

Tighten oil filter cover screws to specification.

TIGHTENING TORQUE	
Oil filter cover screws	10 N•m ± 1 N•m (89 lbf•**in** ± 9 lbf•**in**)

Wipe off any oil spillage on engine.

INSPECTION

ENGINE OIL PRESSURE

NOTE: The engine oil pressure test should be done with a warm engine 100°C (212°F) and the recommended oil.

Remove the oil pressure switch. Refer to *OIL PRESSURE SWITCH* in this subsection.

Use the pressure gauge with the proper adapter hose.

REQUIRED TOOLS	
PRESSURE GAUGE (P/N 529 036 395)	
OIL PRESSURE HOSE (P/N 529 036 394)	

The engine oil pressure should be within the following values.

OIL PRESSURE	1250 RPM	6000 RPM
MINIMAL	70 kPa (10 PSI)	300 kPa (44 PSI)
NOMINAL	150 kPa (22 PSI)	350 kPa (51 PSI)
MAXIMAL	250 kPa (36 PSI)	450 kPa (65 PSI)

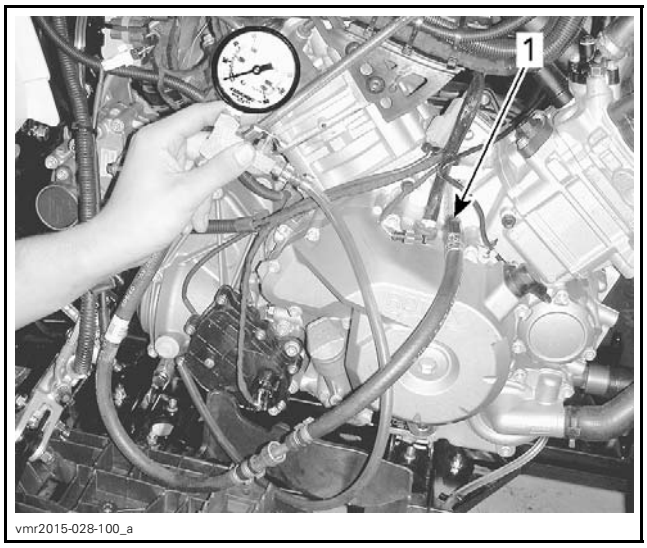

If the engine oil pressure is out of specifications, check the points described in *TROUBLESHOOTING* in this subsection.

Remove oil pressure gauge and adapter hose.

NOTE: To remove adapter hose from oil pressure gauge, use the disconnect tool.

REQUIRED TOOL	
DISCONNECT TOOL (P/N 529 035 714)	

Reinstall the oil pressure switch.

TROUBLESHOOTING

LOW OR NO OIL PRESSURE

1. **Oil level is too low.**
   - *Refill engine with recommended engine oil. Refer to VERIFYING THE OIL LEVEL in this subsection.*
   - *Check for high oil consumption, refer to HIGH OIL CONSUMPTION in this TROUBLESHOOTING.*
   - *Check for engine oil leaks. For leak indicator hole location, refer to INSPECTING THE COOLING SYSTEM in the appropriate PERIODIC MAINTENANCE PROCEDURES subsection. Repair if necessary.*
2. **Use of unsuitable engine oil type.**
   - *Replace engine oil by the recommended engine oil.*
3. **Clogged oil filter.**
   - *Replace oil and oil filter at the same time.*
4. **Defective oil pressure switch.**
   - *Test oil pressure switch, see procedure in this subsection.*
5. **Defective or worn oil pump.**
   - *Check oil pump, see procedure in this subsection.*
6. **Defective engine oil pressure regulator.**
   - *Check engine oil pressure regulator, see procedure in this subsection.*
7. **Worn plain bearings in crankcase.**
   - *Check plain bearings clearance, refer to CYLINDER BLOCK subsection.*
8. **Clogged engine oil strainer.**
   - *Clean engine oil strainer, see procedure in this subsection.*

OIL CONTAMINATION

1. **Defective water pump seal ring or rotary seal.**
   - *Check for oil or coolant leak from indicator hole near water pump, refer to INSPECTING THE COOLING SYSTEM INSPECTION in the appropriate PERIODIC MAINTENANCE PROCEDURES subsection. Replace seal if necessary.*
2. **Cylinder head or cylinder base gasket leak.**
   - *Retighten cylinder head to specified torque, refer to CYLINDER HEAD subsection. Replace gasket if tightening does not solve the problem.*
3. **Engine internal damage.**
   - *Repair engine.*
4. **Oil cooler gasket leak.**
   - *Replace oil cooler gasket and change engine oil.*

HIGH OIL CONSUMPTION

1. **Leaking breather oil seal.**
   - *Check if the oil seal of the breather is brittle, hard or damaged. Refer to CYLINDER BLOCK subsection.*
2. **Valve stem seals worn or damaged.**
   - *Replace valve stem seals.*
3. **Worn piston rings (blue exhaust smoke).**
   - *Replace piston rings.*

PROCEDURES

OIL COOLER

Oil Cooler Access

Remove the fuel tank to reach the oil cooler. Refer to *FUEL TANK AND FUEL PUMP* subsection.

Removing the Oil Cooler

Drain the following:

– Engine oil, see procedure in this subsection
– Coolant, refer to the *VEHICLE COOLING SYSTEM* subsection.

Remove oil cooler retaining screws.

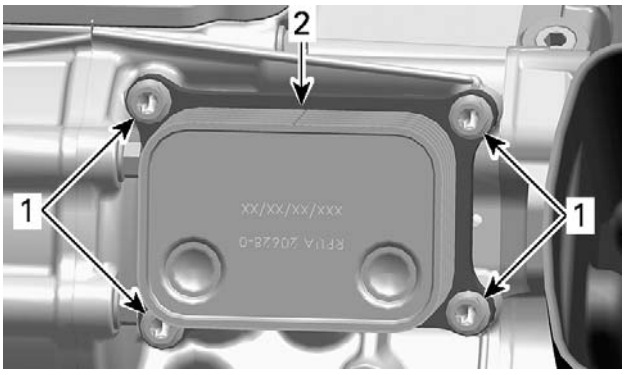

1. Retaining screws
2. Oil cooler

Place rags or towels under oil cooler to catch remaining oil and coolant.

Remove oil cooler and discard gasket.

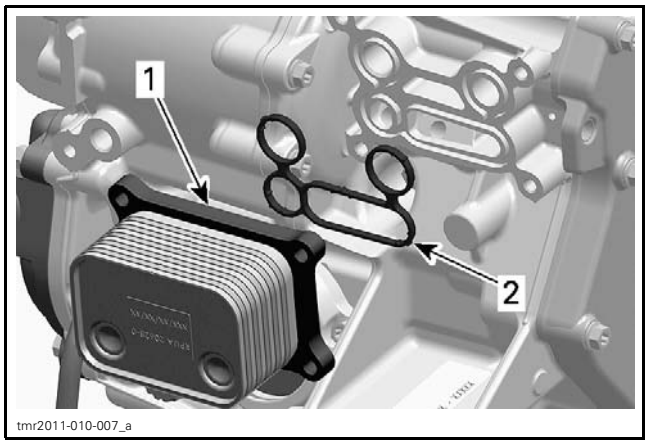

1. *Oil cooler*
2. *Gasket*

Inspecting the Oil Cooler

Check oil cooler for cracks or other damage.

Replace if necessary.

Installing the Oil Cooler

The installation is the reverse of the removal procedure. However, pay attention to the following details.

Wipe off any oil and coolant spillage.

Install a **NEW** gasket.

Refill engine oil with recommended oil and at the proper oil lever.

Refill and bleed cooling system.

OIL PRESSURE SWITCH (OPS)

Oil Pressure Switch Location

The oil pressure switch is located at engine MAG side above the magneto cover.

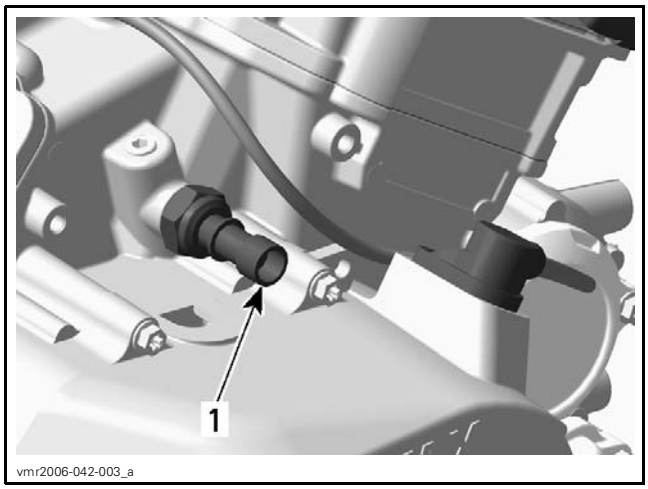

1. *Oil pressure switch*

Oil Pressure Switch Activation

The oil pressure switch activates when the engine oil pressure is lower than following specified pressure range.

OIL PRESSURE SWITCH OPERATING PRESSURE
30 kPa ± 10 kPa (4.35 PSI ± 1.45 PSI)

To check the function of the oil pressure switch, an oil pressure test has to be performed. Refer to *ENGINE OIL PRESSURE* in this subsection.

If the engine oil pressure is good perform the oil pressure switch resistance test.

Testing the Oil Pressure Switch Resistance

Disconnect the connector from the oil pressure switch.

Use a multimeter to check the resistance between as shown.

OPS CONNECTOR		ENGINE NOT RUNNING	ENGINE RUNNING
PIN		RESISTANCE (Ω)	
1	Engine ground	Close to 0 Ω (normally closed switch)	Infinite (open) when pressure reaches 30 kPa ± 10 kPa (4.35 PSI ± 1.45 PSI)

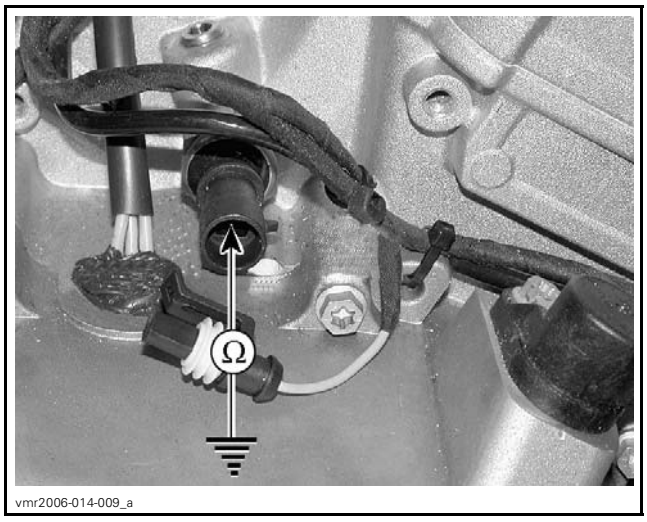

If resistance values are incorrect, replace the oil pressure switch.

If the values are correct, check wiring.

Removing the Oil Pressure Switch

Unplug the oil pressure switch connector.

Unscrew and remove oil pressure switch.

Installing the Oil Pressure Switch

Tighten oil pressure switch to specified torque.

TIGHTENING TORQUE	
Oil pressure switch	12 N•m ± 1 N•m (106 lbf•**in** ± 9 lbf•**in**) + LOCTITE 243 (BLUE) (P/N 293 800 060)

ENGINE OIL PRESSURE REGULATOR

Oil Pressure Regulator Location

The oil pressure regulator is located on the engine magneto side (inside magneto cover).

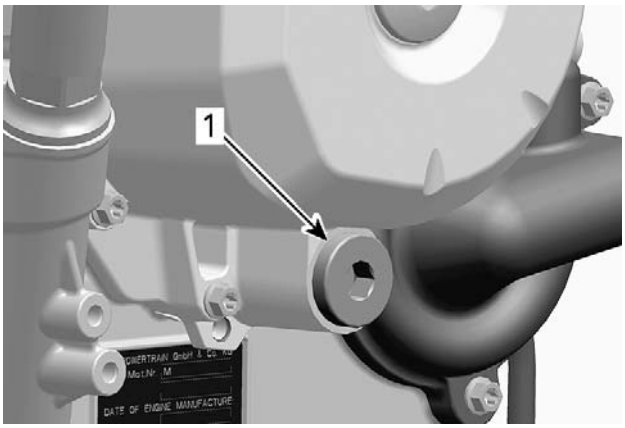

tmr2011-010-010_a

1. Engine oil pressure regulator

NOTE: The oil pressure regulator system works when the oil pressure exceeds 400 kPa (58 PSI).

Removing the Oil Pressure Regulator

Remove plug screw and pull oil pressure regulator out.

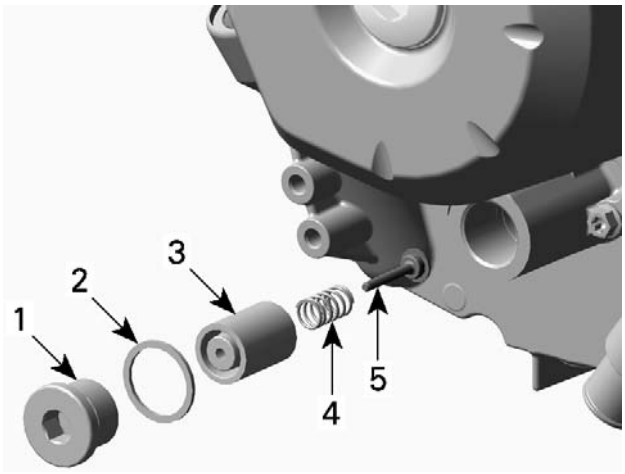

vmr2006-042-008_a

1. Plug screw
2. Gasket ring
3. Pressure regulator housing
4. Spring
5. Pressure regulator valve

Inspecting the Oil Pressure Regulator

Inspect pressure regulator housing and valve for scoring or other damages.

Check spring for free length.

SPRING FREE LENGTH	
New	39 mm (1.535 in)
Service limit	37 mm (1.457 in)

NOTE: Replace worn or damaged components.

Clean bore and thread in the magneto housing from metal shavings and other contaminations.

Installing the Oil Pressure Regulator

The installation is the reverse of the removal procedure. However, pay attention to the following.

At installation always replace the gasket ring of the plug screw by a new one.

OIL PUMP

Oil Pump Location

The oil pump is located on the engine PTO side (behind PTO cover).

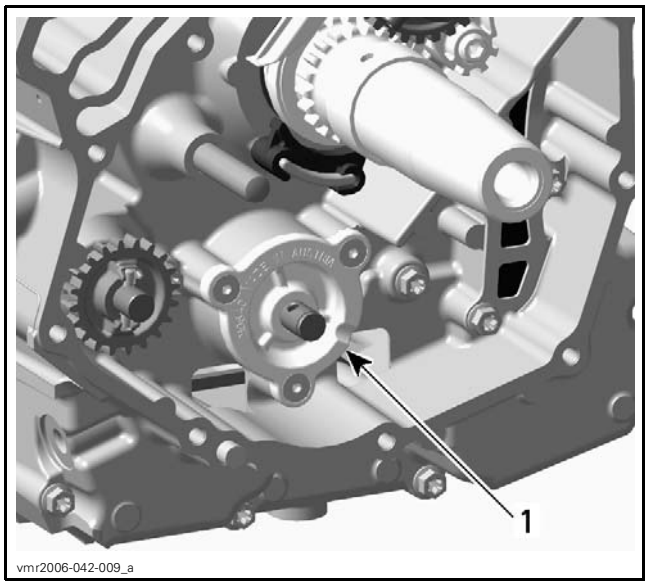

1. Oil pump

Removing the Oil Pump

Remove the PTO cover. Refer to *PTO COVER* in the *CYLINDER BLOCK* subsection.

1. Remove:
   - Retaining ring
   - Oil pump gear
   - Needle pin
   - Thrust washer.

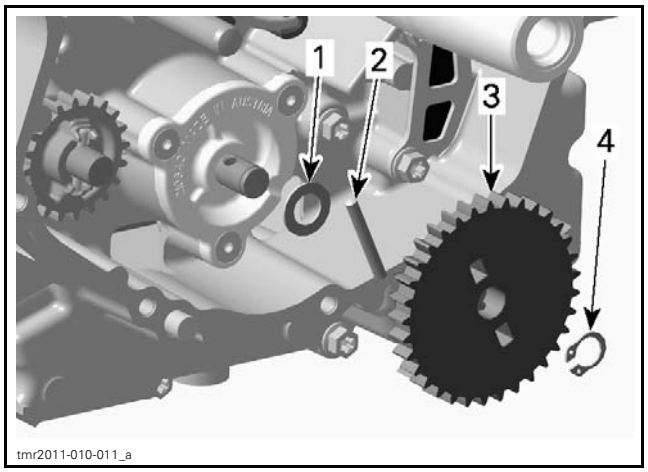

1. Thrust washer
2. Needle pin
3. Oil pump gear
4. Retaining ring

2. Remove oil pump cover screws and pull oil pump cover out.

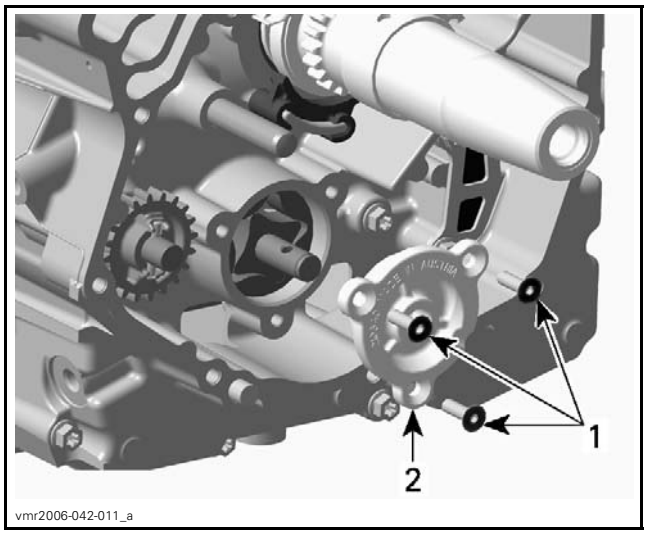

1. Retaining screws
2. Oil pump cover

3. Remove oil pump shaft with needle pin and inner rotor.
4. Remove outer rotor.

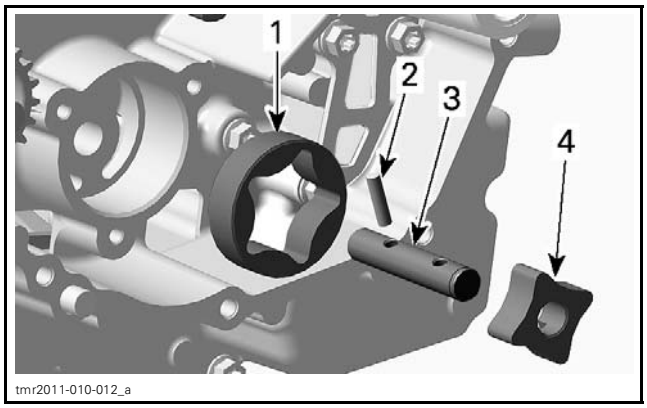

1. Outer rotor
2. Needle pin
3. Oil pump shaft
4. Inner rotor

Inspecting the Oil Pump

Inspect oil pump and oil pump cover bore for marks, scratches or other damages. Check for scratches in crankcase between outer rotor and oil pump bore. If so, replace damaged parts.

Check oil pump cover for damages and for surface straightness with a straightedge.

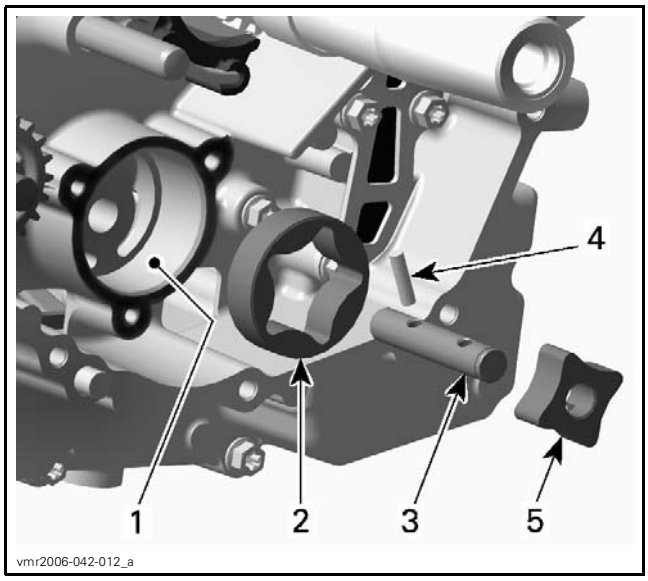

1. *Oil pump bore*
2. *Outer rotor*
3. *Oil pump shaft*
4. *Needle pin*
5. *Inner rotor*

Check inner rotor for corrosion pin holes or other damages. If so, replace oil pump shaft assembly.

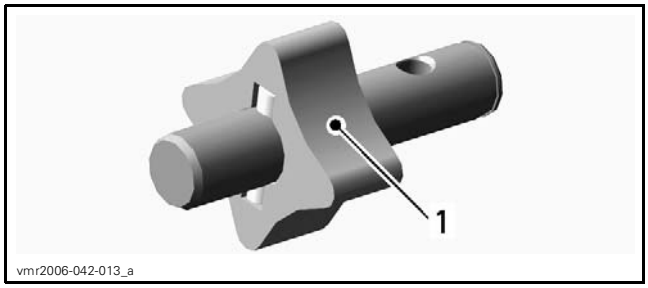

1. *Pittings on the teeth*

Inner and Outer Rotor Clearance

Using a feeler gauge, measure the clearance of inner and outer rotors as shown.

CLEARANCE OF INNER AND OUTER ROTOR	
Service limit	0.25 mm (.0098 in)

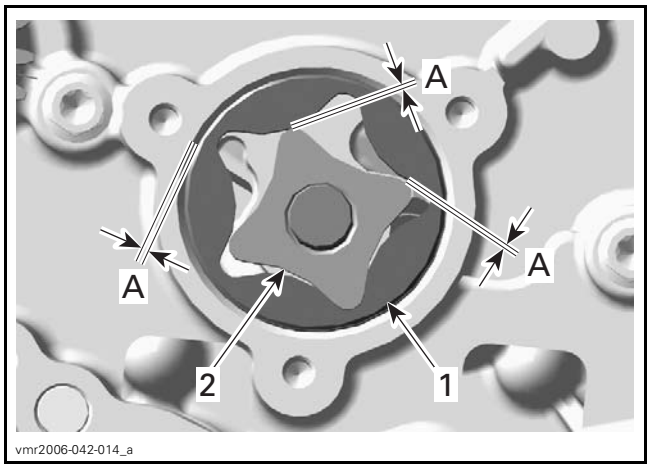

1. *Outer rotor*
2. *Inner rotor*

A. *0.25 mm (.0098 in)*

If clearance of inner and outer rotors exceeds the tolerance, replace oil pump rotors. Ensure to also check oil pump cover. If damaged, replace the complete oil pump assembly.

If clearance between outer rotor and its bore in crankcase exceeds the tolerance, replace the complete oil pump rotors and/or the crankcase.

Oil Pump Axial Clearance

Using a depth gauge, measure the axial clearance of the oil pump as shown.

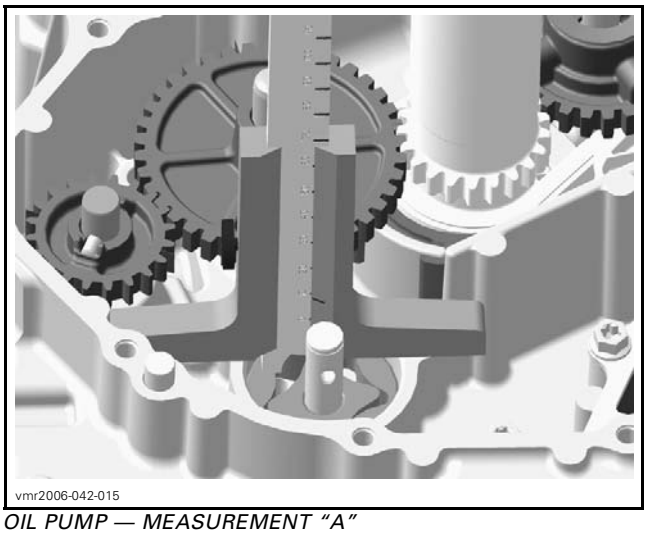

OIL PUMP — MEASUREMENT "A"

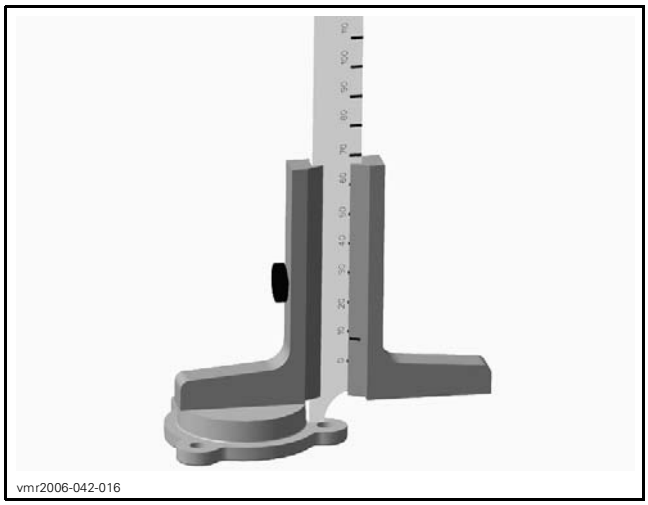

OIL PUMP COVER — MEASUREMENT "B"

Substract measurement "B" from measurement "A" to obtain axial clearance.

OIL PUMP AXIAL CLEARANCE	
Service limit	0.20 mm (.0079 in)

NOTE: When the axial clearance of the oil pump shaft assembly increases, the oil pressure decreases.

Installing the Oil Pump

The installation is the reverse of the removal procedure. However, pay attention to the following.

When installing the oil pump rotors, make sure both markings are on the outer side.

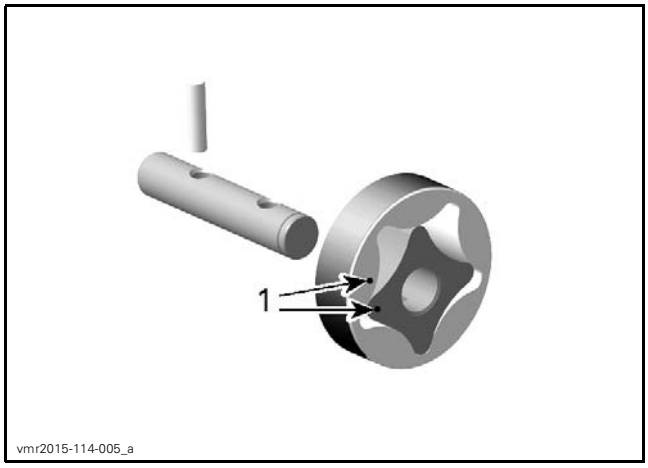

1. *Markings*

After reinstallation of the remaining parts, check for smooth operation of the oil pump assembly.

Testing the Oil Pump Function

After engine is completely reassembled, start engine and make sure oil pressure is within specifications (refer to *ENGINE OIL PRESSURE* in this subsection).

ENGINE OIL STRAINER

Oil Strainer Location

The engine oil strainer is located between both crankcase halves.

Removing the Oil Strainer

Separate crankcase halves. Refer to *CYLINDER BLOCK* subsection.

Remove the engine oil strainer.

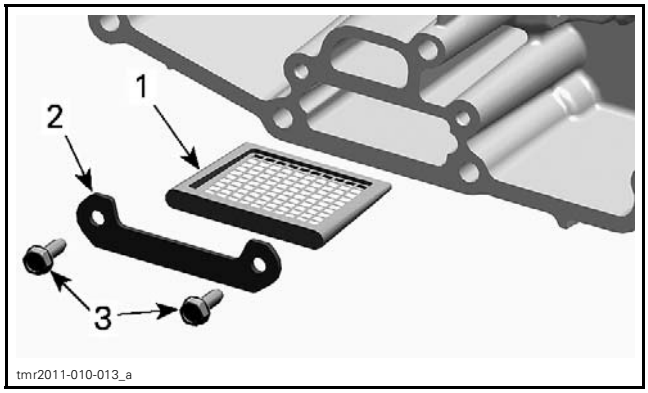

1. *Engine oil strainer*
2. *Retaining plate*
3. *Screws*

Cleaning and Inspecting the Oil Strainer

Clean engine oil strainer with a part cleaner then use an air gun to dry it.

Check engine oil strainer for cracks or other damage. Replace if damaged.

Installing the Oil Strainer

The installation is the reverse of the removal procedure.

TIGHTENING TORQUE	
Oil strainer retaining screws	6 N•m ± 0.7 N•m (53 lbf•**in** ± 6 lbf•**in**) + LOCTITE 243 (BLUE) (P/N 293 800 060)

REED VALVE

The engine is equipped with a reed valve which prevents accumulation of larger oil quantities in the crankcase. The reed valve is fitted into the crankcase.

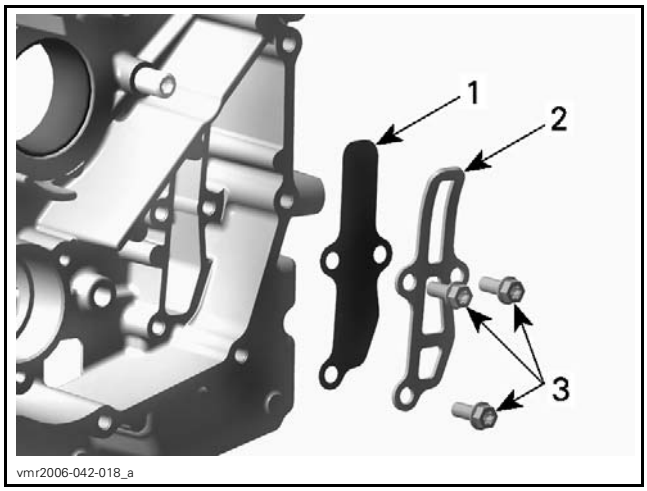

1. *Reed valve*
2. *Stopper*
3. *Screws*

Removing the Reed Valve

Remove:

– PTO cover (refer to *PTO COVER* in the *CYLINDER BLOCK* subsection)
– Reed valve retaining screws
– Stopper plate
– Reed valve.

Inspecting the Reed Valve

Check reed valve for cracks or other damage.

Replace reed valve if damaged.

Installing the Reed Valve

The installation is the reverse of the removal procedure.

TIGHTENING TORQUE	
Reed valve retaining screws	10 N•m ± 1 N•m (89 lbf•**in** ± 9 lbf•**in**)

OIL NOZZLES

Oil Nozzle Location

The oil nozzles are located inside the crankcase, MAG and PTO side.

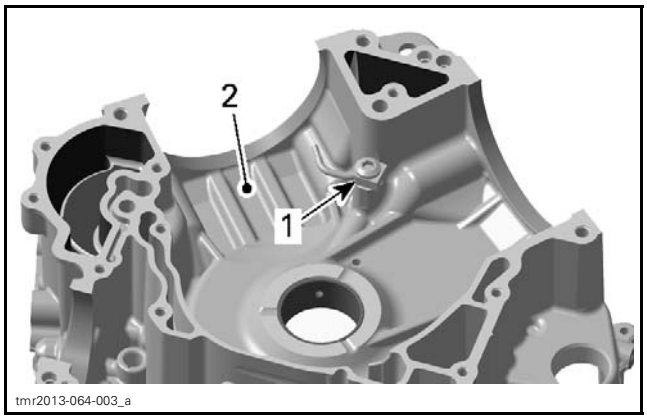

1. *Oil nozzle*
2. *Crankcase MAG side*

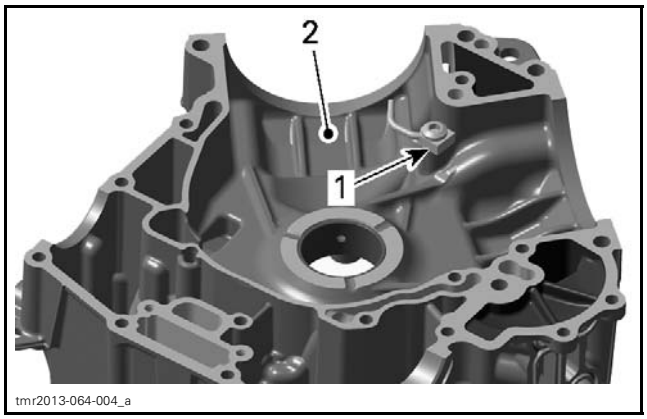

1. *Oil nozzle*
2. *Crankcase PTO side*

NOTE: If the engine has to be dismantled within the scope of repair work, take this opportunity to clean the oil nozzles.

Removing the Oil Nozzle

Separate crankcase halves. Refer to *CYLINDER BLOCK* subsection.

Remove banjo bolt retaining the oil nozzle to crankcase.

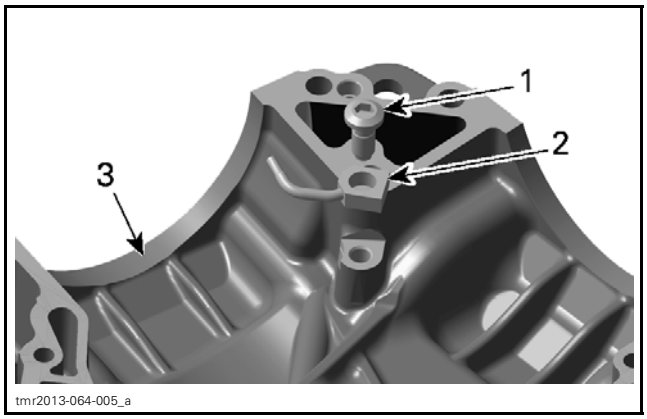

1. *Banjo bolt*
2. *Oil nozzle*
3. *Crankcase*

Cleaning and Inspecting the Oil Nozzle

Clean oil nozzle with a parts cleaner, then use an air gun and dry the parts.

If the oil nozzles are damaged or bent during work in the crankcase, they must be replaced immediately.

Check if ball inside Banjo bolt moves freely.

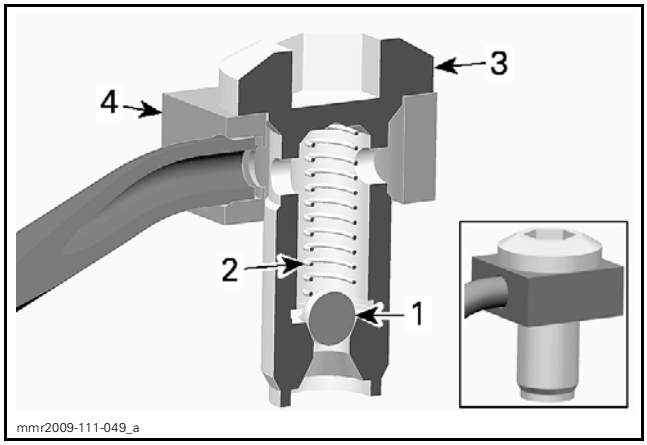

1. *Ball*
2. *Spring*
3. *Banjo bolt*
4. *Oil nozzle*

Installing the Oil Nozzle

CAUTION At assembly make sure the contact surface of the oil nozzles are well fitted onto the crankcase. If this is not ensured, the oil spray direction will change, causing potential engine damage.

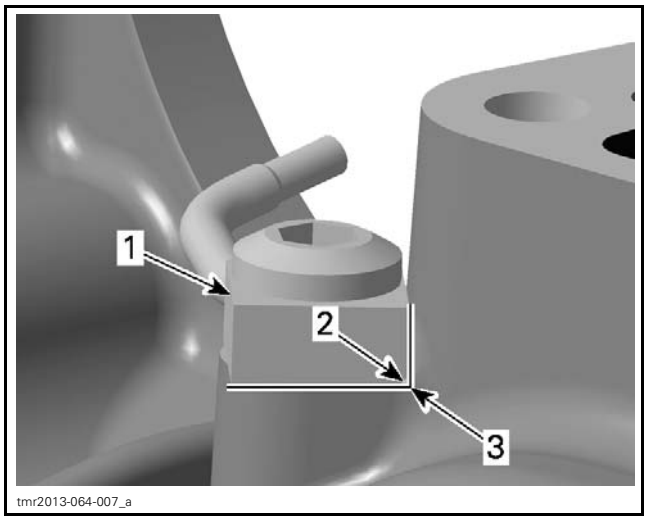

1. *Oil nozzle*
2. *Chamfer on oil nozzle body*
3. *Corner in crankcase*

Tighten banjo bolts to the specified torque.

TIGHTENING TORQUE	
Banjo bolt	19 N•m ± 2 N•m (168 lbf•**in** ± 18 lbf•**in**)

LUBRICATION SYSTEM

SERVICE TOOLS

Description	Part Number	Page
DISCONNECT TOOL	529 035 714	6
OETIKER PLIER	295 000 070	9
OIL PRESSURE HOSE	529 036 394	6
PRESSURE GAUGE	529 036 395	6

SERVICE PRODUCTS

Description	Part Number	Page
4T 0W40 SYNTHETIC OIL (EUR)	779286	4
4T 0W40 SYNTHETIC OIL	779139	4
4T 10W50 SYNTHETIC OIL (EUR)	779240	4
4T 10W50 SYNTHETIC OIL	779234	4
4T 5W40 SYNTHETIC BLEND OIL (EUR)	779290	4
4T 5W40 SYNTHETIC BLEND OIL	779133	4
LOCTITE 243 (BLUE)	293 800 060	11, 15
LOCTITE 5910	293 800 081	8

COMPONENTS

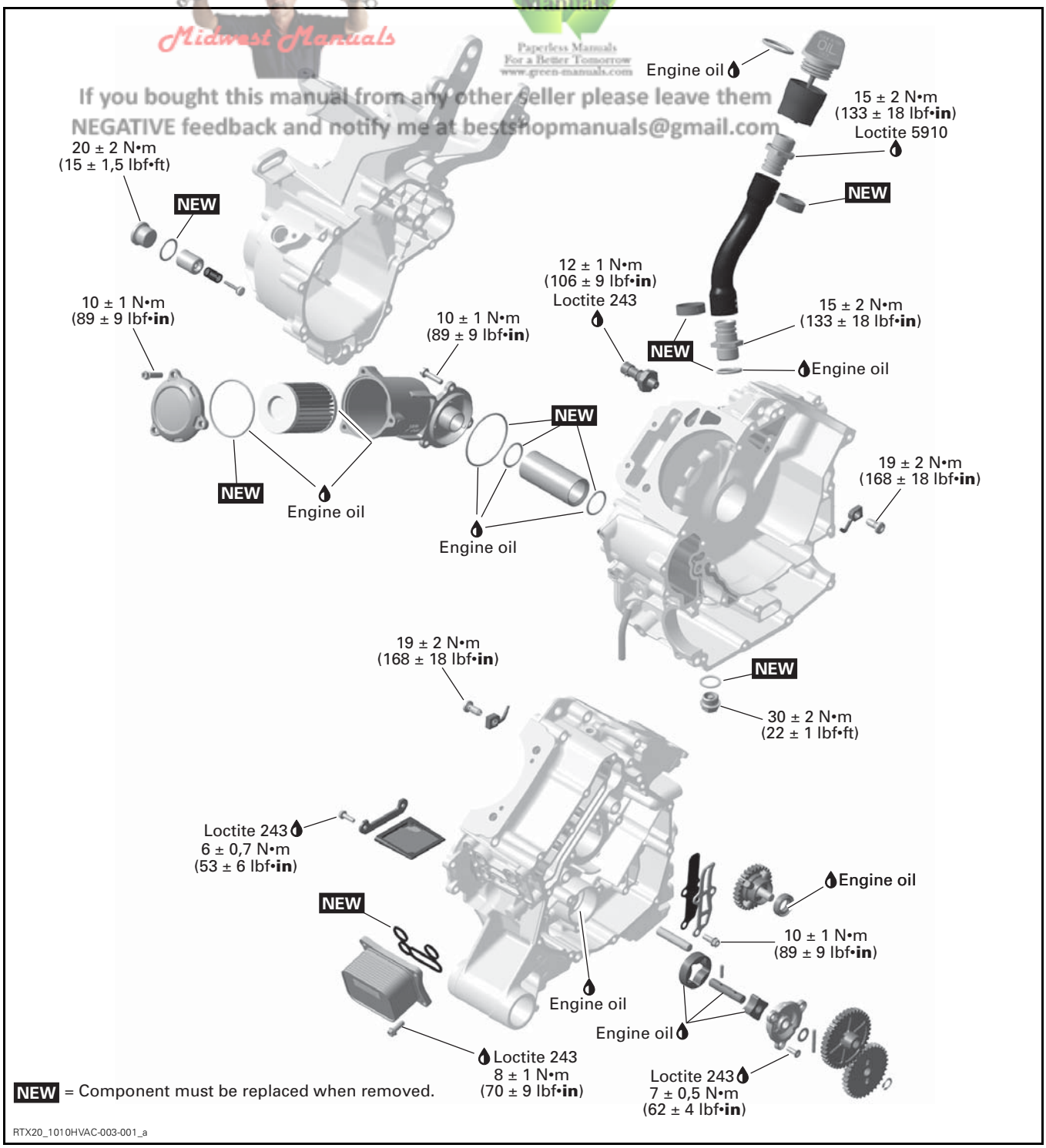

Midwest Manuals
Green Manuals
Paperless Manuals For a Better Tomorrow www.green-manuals.com
If you bought this manual from any other seller please leave them NEGATIVE feedback and notify me at bestshopmanuals@gmail.com

ENGINE LUBRICATION CIRCUIT

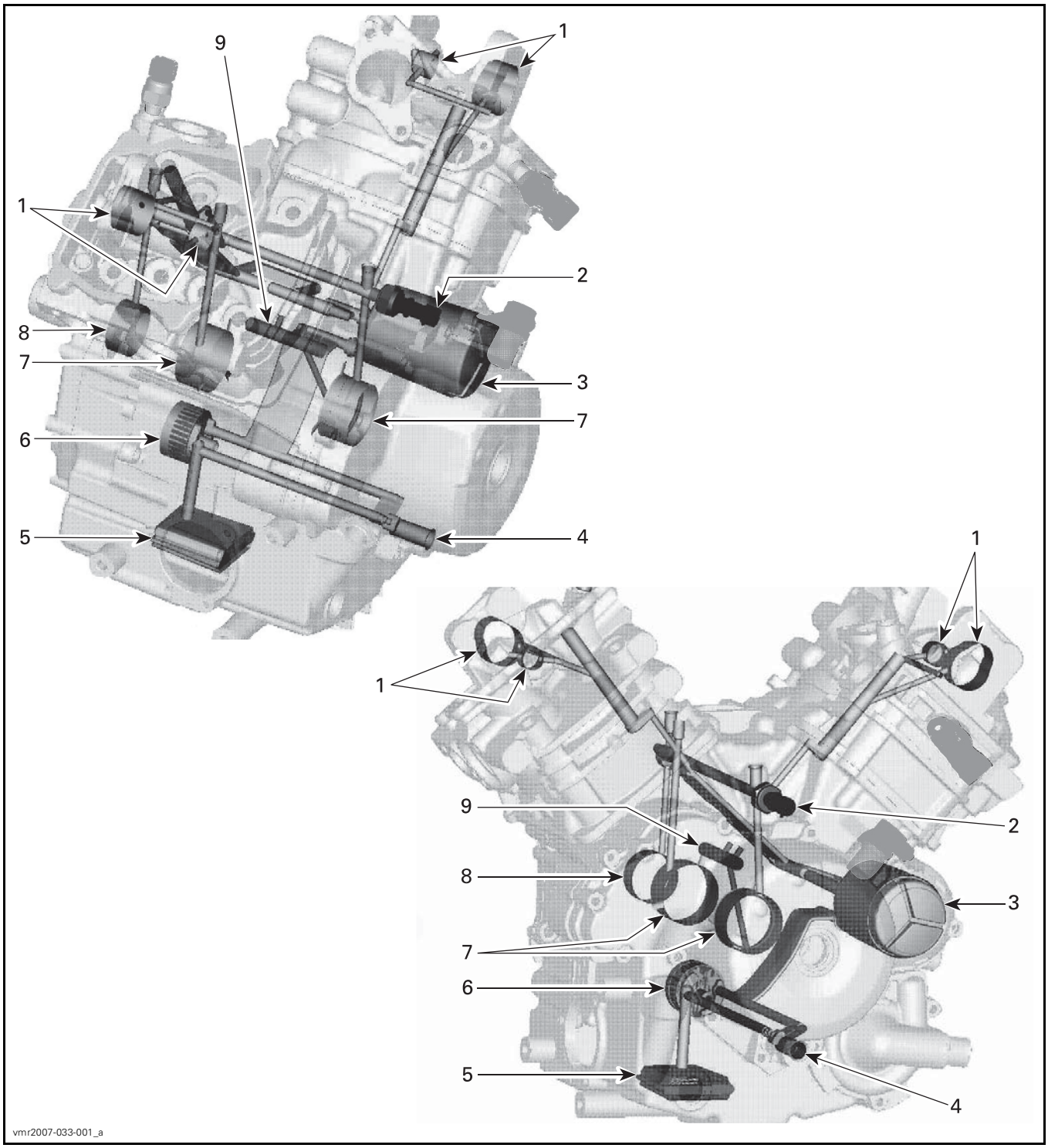

1. *Camshaft bearings*
2. *Oil pressure switch*
3. *Oil filter*
4. *Oil pressure regulator valve*
5. *Oil strainer*
6. *Oil pump*
7. *Crankshaft main bearings*
8. *Crankshaft support bearing*
9. *Connecting rod bearings*

MAINTENANCE

RECOMMENDED ENGINE OIL

Rotax® engines were developed and validated using the XPS™ oil. BRP recommends the use of its XPS engine oil or an equivalent at all time. Damages caused by the use of an oil not suitable for the engine may not be covered by the BRP Limited Warranty.

XPS RECOMMENDED ENGINE OIL	
General purpose	**Scandinavia:** 4T 5W40 SYNTHETIC BLEND OIL (EUR) (P/N 779290) **Other Countries:** 4T 5W40 SYNTHETIC BLEND OIL (P/N 779133)
Cold temperature	**Scandinavia:** 4T 0W40 SYNTHETIC OIL (EUR) (P/N 779286) **Other Countries:** 4T 0W40 SYNTHETIC OIL (P/N 779139)
Warm temperature	**Scandinavia:** 4T 10W50 SYNTHETIC OIL (EUR) (P/N 779240) **Other Countries:** 4T 10W50 SYNTHETIC OIL (P/N 779234)
IF THE RECOMMENDED XPS ENGINE OIL IS NOT AVAILABLE	
Use a 4-stroke SAE engine oil meeting or exceeding the following lubricant industry specifications. Always check the API service label certification on the oil container, it must contain at least one of the indicated standards. – **API service classification SJ, SL, SM or SN**	

VERIFYING THE ENGINE OIL LEVEL

NOTICE **Operating the engine with an improper level may severely damage engine.**

With vehicle on a level surface and engine cold, check the oil level as follows:

1. Open cargo box.
2. Remove dipstick and wipe it clean.
3. Reinstall dipstick, screw in it completely.
4. Remove dipstick and check oil level. It should be near or equal to the upper mark.

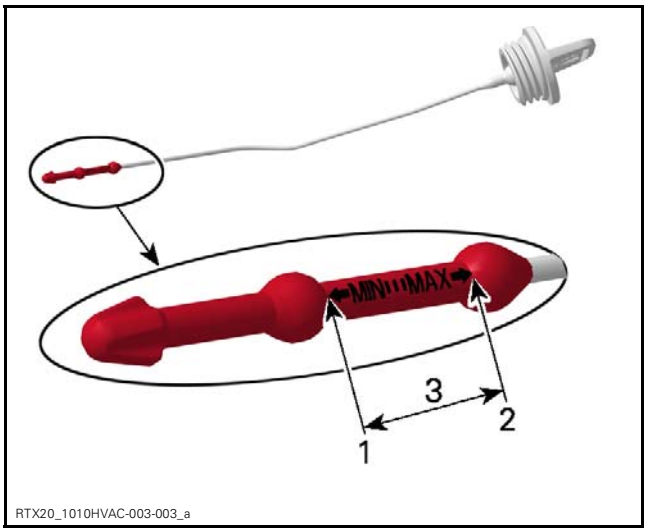

1. MIN.
2. MAX.
3. Operating range

To add oil, remove the dipstick. Place a funnel into the dipstick tube.

Add a small amount of recommended oil and recheck oil level.

Repeat the above procedures until oil level reaches the dipstick's upper mark.

NOTE: Do not overfill. Wipe off any spillage.

Properly tighten dipstick by hand.

Close cargo box.

CHANGING THE ENGINE OIL

NOTICE **Engine oil and oil filter must be replaced at the same time.**

Oil change and oil filter replacement should be done with a warm engine.

⚠ CAUTION **The engine oil can be very hot. Wait until engine oil is warm.**

Ensure vehicle is on a level surface.

Remove dipstick.

Place a drain pan under the engine drain plug area.

Clean the drain plug area.

Unscrew magnetic drain plug and discard the gasket ring.

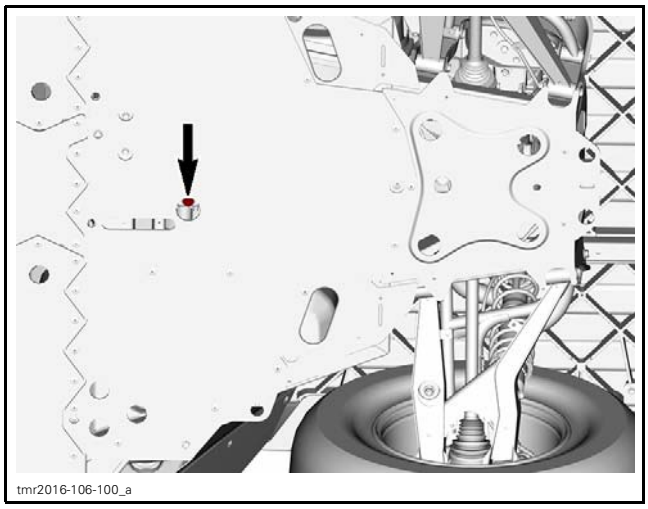
tmr2016-106-100_a

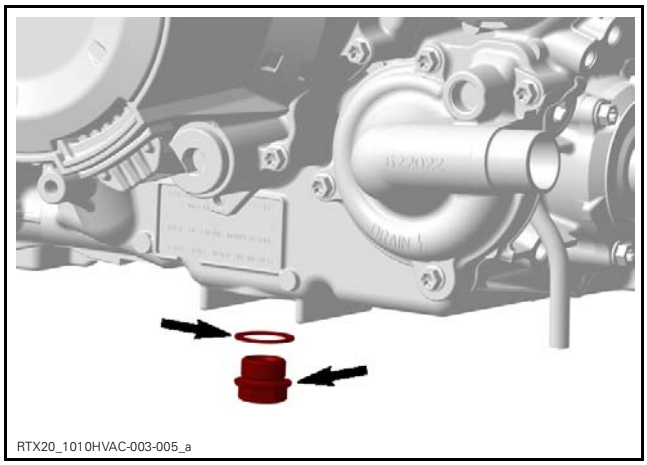
RTX20_1010HVAC-003-005_a

Allow oil to drain completely from the crankcase.

Clean the magnetic drain plug from metal shavings and residue. Presence of debris gives an indication of internal engine damage.

Install a **NEW** gasket ring on the magnetic drain plug.

NOTICE **Never use the gasket ring a second time. Always replace by a NEW one.**

Tighten magnetic drain plug to the specification.

TIGHTENING TORQUE	
Magnetic drain plug	30 N•m ± 2 N•m (22 lbf•ft ± 1 lbf•ft)

Replace oil filter. Refer to *REPLACING THE ENGINE OIL FILTER* in this subsection.

Refill engine with recommended engine oil.

After filling, check the oil level, refer to *VERIFYING THE ENGINE OIL LEVEL* in this subsection.

Start engine and let it idle for a few minutes.

Ensure oil filter and drain plug areas are not leaking.

Stop engine.

Wait a while to allow oil to flow down to crankcase, then check oil level again.

Dispose oil and filter as per your local environmental regulations.

REPLACING THE ENGINE OIL FILTER

Removing the Oil Filter

Clean oil filter area.

Remove the oil filter.

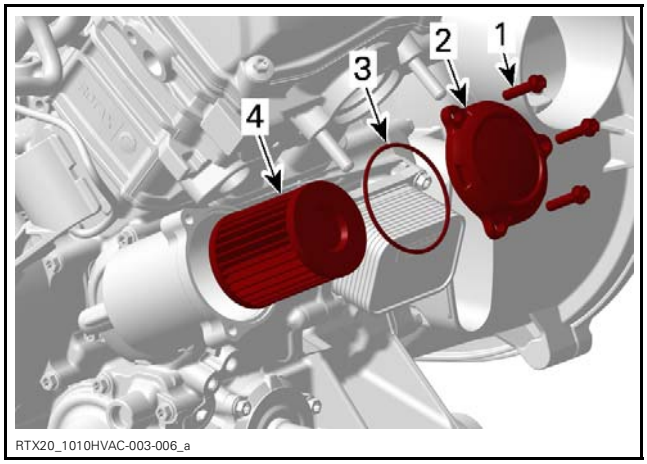

RTX20_1010HVAC-003-006_a

1. *Oil filter cover screw*
2. *Oil filter cover*
3. *O-ring*
4. *Oil filter*

Installing the Oil Filter

Check and clean the oil filter inlet and outlet area for dirt and other contaminations.

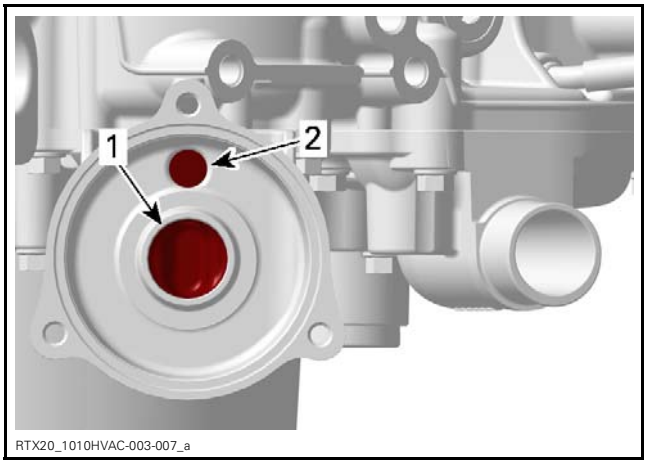

RTX20_1010HVAC-003-007_a

1. *Outlet bore to the engine oil providing system*
2. *Inlet bore from the oil pump to the oil filter*

Install a **NEW** O-ring on oil filter cover.

Install the new filter into the cover.

Lubricate O-ring and oil filter seal.

SERVICE PRODUCT
Engine oil

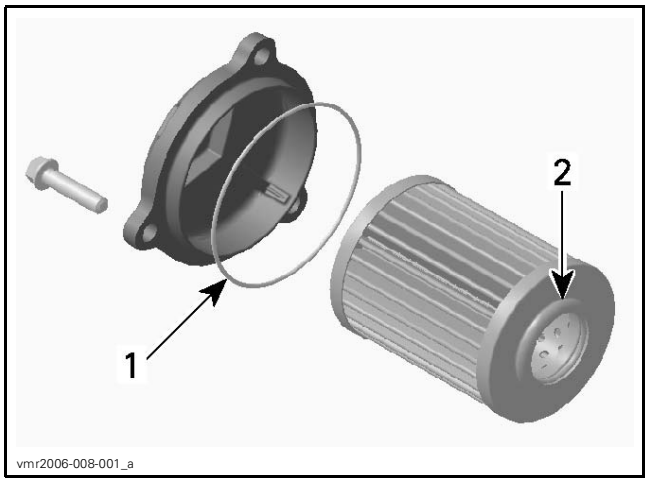

1. *Slightly oil*
2. *Slightly oil*

NOTICE **Pay attention to avoid pinching the O-ring during filter and cover installation.**

Install the cover on the engine.

Tighten oil filter cover screws to specification.

TIGHTENING TORQUE	
Oil filter cover screws	10 N•m ± 1 N•m (89 lbf•**in** ± 9 lbf•**in**)

Wipe off any oil spillage on engine.

INSPECTION

ENGINE OIL PRESSURE

NOTE: The engine oil pressure test should be done with a warm engine 100°C (212°F) and the recommended oil.

Remove the oil pressure switch. Refer to *OIL PRESSURE SWITCH* in this subsection.

Use the pressure gauge with the proper adapter hose.

REQUIRED TOOLS	
PRESSURE GAUGE (P/N 529 036 395)	
OIL PRESSURE HOSE (P/N 529 036 394)	

The engine oil pressure should be within the following values.

OIL PRESSURE	1250 RPM	6000 RPM
MINIMAL	70 kPa (10 PSI)	300 kPa (44 PSI)
NOMINAL	150 kPa (22 PSI)	350 kPa (51 PSI)
MAXIMAL	250 kPa (36 PSI)	450 kPa (65 PSI)

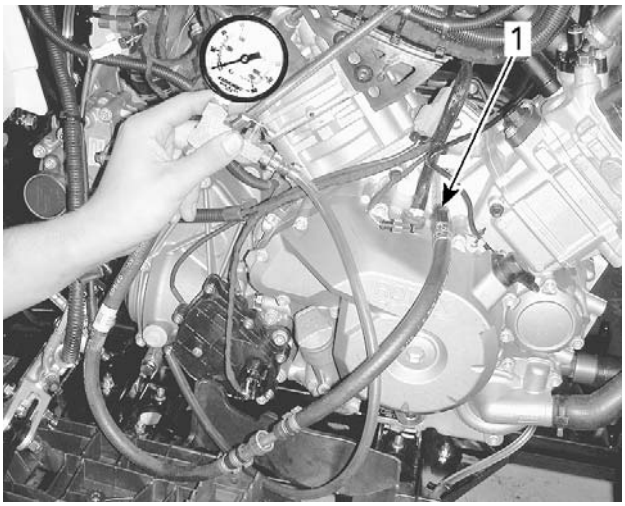

TYPICAL

If the engine oil pressure is out of specifications, check the points described in *TROUBLESHOOTING* in this subsection.

Remove oil pressure gauge and adapter hose.

NOTE: To remove adapter hose from oil pressure gauge, use the disconnect tool.

REQUIRED TOOL	
DISCONNECT TOOL (P/N 529 035 714)	

Reinstall the oil pressure switch.

TROUBLESHOOTING

LOW OR NO OIL PRESSURE

1. **Oil level is too low.**
   - *Refill engine with recommended engine oil. Refer to VERIFYING THE OIL LEVEL in this subsection.*
   - *Check for high oil consumption, refer to HIGH OIL CONSUMPTION in this TROUBLESHOOTING.*
   - *Check for engine oil leaks. For leak indicator hole location, refer to INSPECTING THE COOLING SYSTEM in the ENGINE COOLING SYSTEM subsection. Repair if necessary.*

2. Use of unsuitable engine oil type.
   - *Replace engine oil by the recommended engine oil.*
3. Clogged oil filter.
   - *Replace oil and oil filter at the same time.*
4. Defective oil pressure switch.
   - *Test oil pressure switch, see procedure in this subsection.*
5. Defective or worn oil pump.
   - *Check oil pump, see procedure in this subsection.*
6. Defective engine oil pressure regulator.
   - *Check engine oil pressure regulator, see procedure in this subsection.*
7. Worn plain bearings in crankcase.
   - *Check plain bearings clearance, refer to CYLINDER BLOCK subsection.*
8. Clogged engine oil strainer.
   - *Clean engine oil strainer, see procedure in this subsection.*

OIL CONTAMINATION

1. Defective water pump seal ring or rotary seal.
   - *Check for oil or coolant leak from indicator hole near water pump, refer to INSPECTING THE COOLING SYSTEM in the appropriate ENGINE COOLING SYSTEM subsection. Replace seal if necessary.*
2. Cylinder head or cylinder base gasket leak.
   - *Retighten cylinder head to specified torque, refer to CYLINDER HEAD subsection. Replace gasket if tightening does not solve the problem.*
3. Engine internal damage.
   - *Repair engine.*
4. Oil cooler gasket leak.
   - *Replace oil cooler gasket and change engine oil.*

HIGH OIL CONSUMPTION

1. Leaking breather oil seal.
   - *Check if the oil seal of the breather is brittle, hard or damaged. Refer to CYLINDER BLOCK subsection.*
2. Valve stem seals worn or damaged.
   - *Replace valve stem seals.*
3. Worn piston rings (blue exhaust smoke).
   - *Replace piston rings.*

PROCEDURES

OIL DIPSTICK TUBE

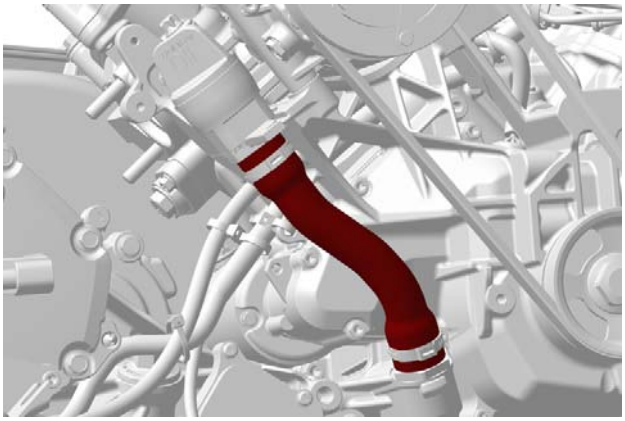

RTX20_1010HVAC-003-011

PARTS REMOVED FOR CLARITY

Removing the Oil Dipstick Tube

Remove belt cover, refer to *AIR CONDITIONING* subsection.

Remove oil dipstick with O-ring.

Cut Oetiker clamps.

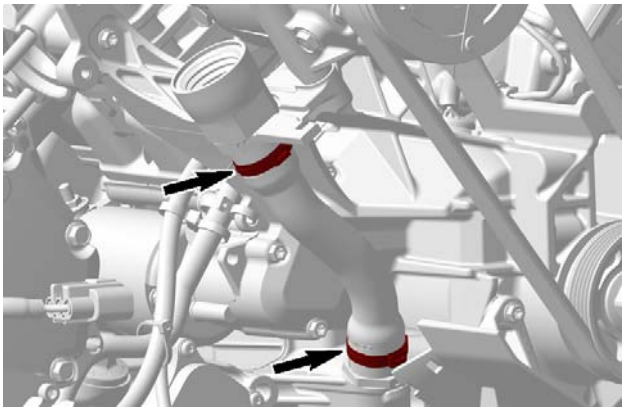

RTX20_1010HVAC-003-012_a

Remove oil dipstick tube from upper and lower tube adapter.

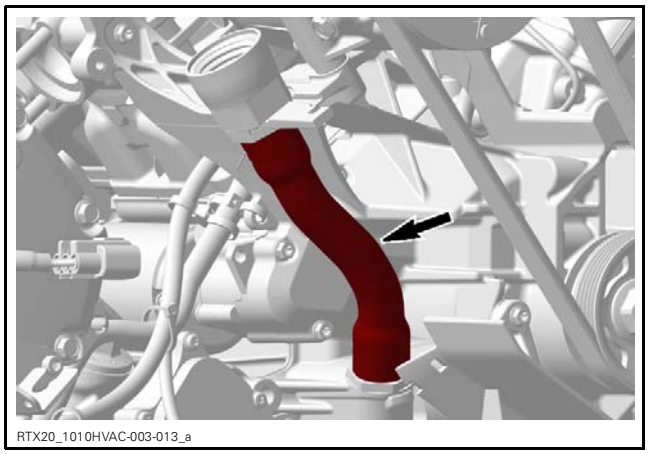
RTX20_1010HVAC-003-013_a

Unscrew tube adapter from oil dip stick adapter.

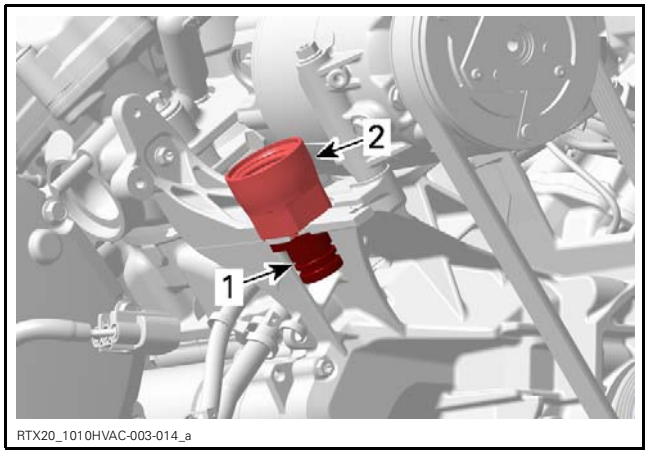

RTX20_1010HVAC-003-014_a

1. *Tube adapter*
2. *Oil dip stick adapter*

Inspecting the Oil Dipstick Tube

Check if oil dipstick tube is brittle, hard or damaged. Replace if necessary.

Installing the Oil Dipstick Tube

Engage oil dip stick adapter properly in the magneto housing bracket.

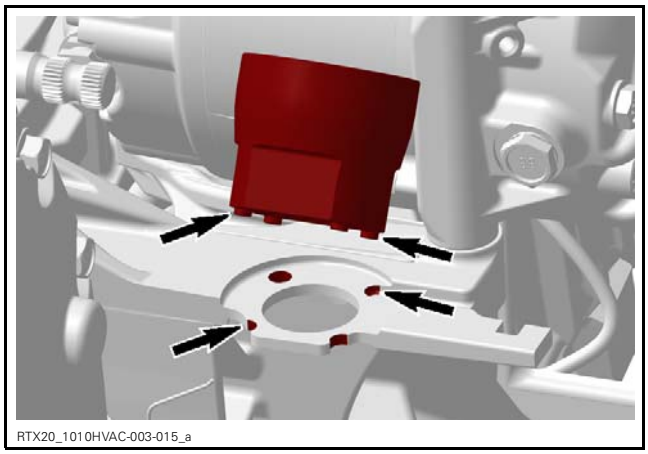
RTX20_1010HVAC-003-015_a

Tighten oil dip stick adapter to specification.

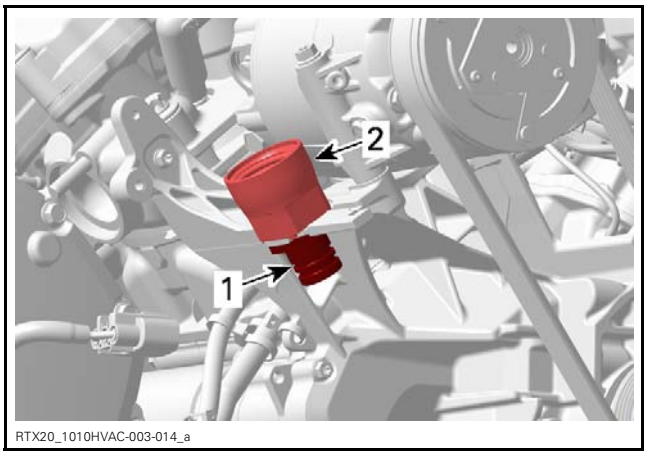

RTX20_1010HVAC-003-014_a

1. *Tube adapter*
2. *Oil dip stick adapter*

TIGHTENING TORQUE	
Upper tube adapter	15 N•m ± 2 N•m (133 lbf•**in** ± 18 lbf•**in**) + LOCTITE 5910 (P/N 293 800 081)

Install oil dipstick tube with **NEW** Oetiker clamps on lower and upper adapter.

NOTICE **Ensure proper installation of the tube, refer to orientation markings. Take care tube is not twisted. Parting line of the tube must be aligned as illustrated.**

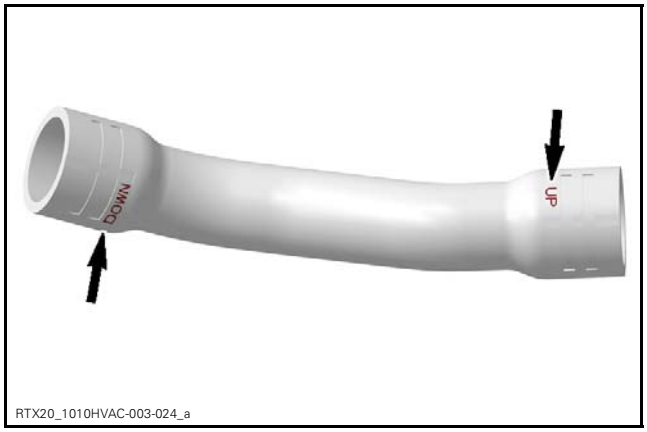

RTX20_1010HVAC-003-024_a

Crimp Oetiker clamps.

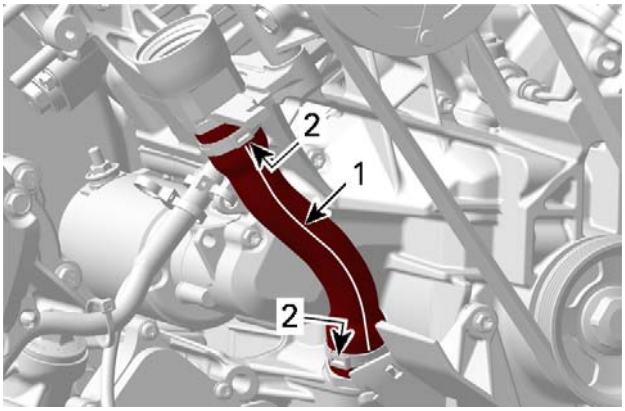

RTX20_1010HVAC-003-017_a

1. *Parting line of the hose*
2. *Orientation of the Oetiker clamps*

REQUIRED TOOL	
OETIKER PLIER (P/N 295 000 070)	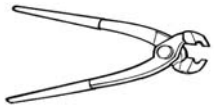

OIL FILTER HOUSING

Removing the Oil Filter Housing

Remove the engine oil filter.

Remove oil filter housing screws and withdraw housing.

NOTICE **Place a drain pan underneath to catch up spilling out engine oil. Up to 150 ml (5.1 U.S. oz) of oil could flow**

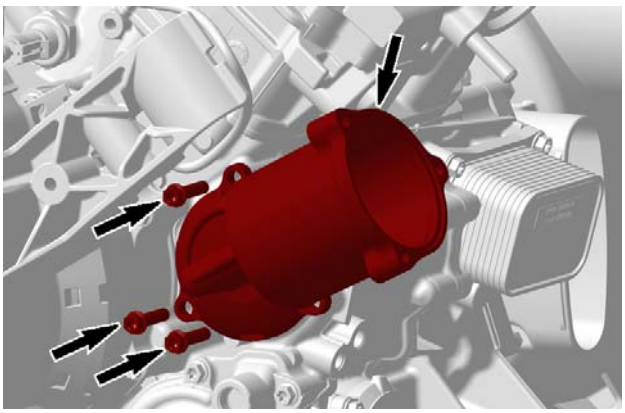
RTX20_1010HVAC-003-018_a

Remove O-rings and oil tube.

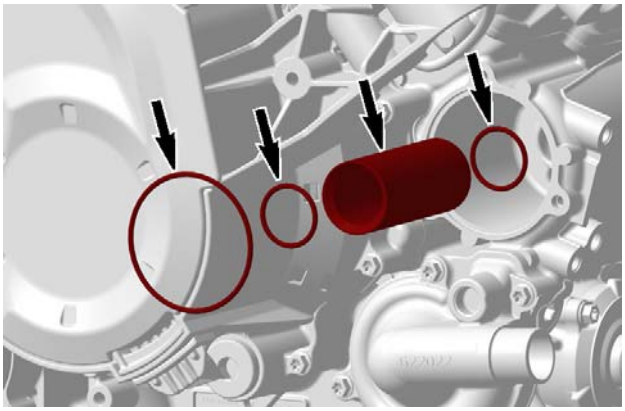
RTX20_1010HVAC-003-019_a

Inspecting the Oil Filter Housing

Inspect the oil filter housing for cracks or any other damages. Replace if necessary.

Clean oil orifices.

Installing the Oil Filter Housing

Lubricate O-ring and install it in crankcase.

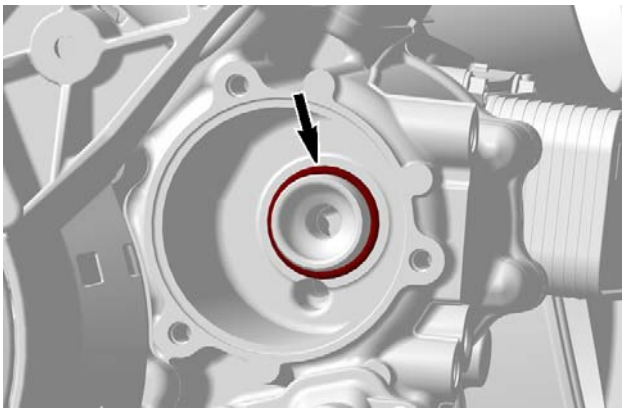
RTX20_1010HVAC-003-020_a

Lubricate O-rings and install them on the oil filter housing.

RTX20_1010HVAC-003-021_a

Install oil tube.

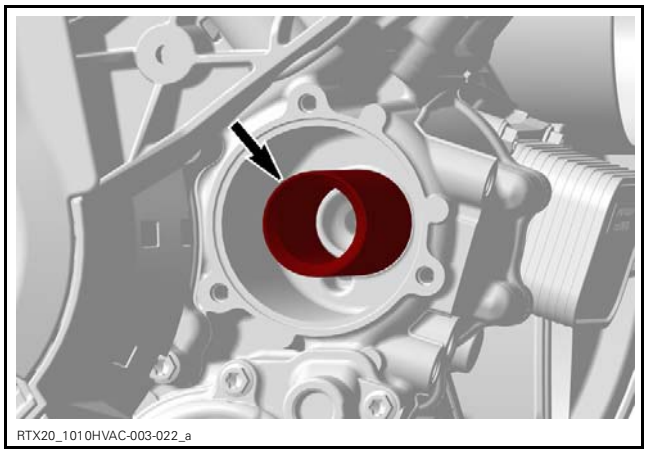
RTX20_1010HVAC-003-022_a

NOTICE **Ensure not squeezing or damaging the O-rings during tube and cover installation.**

Install oil filter housing and tighten screws to specification.

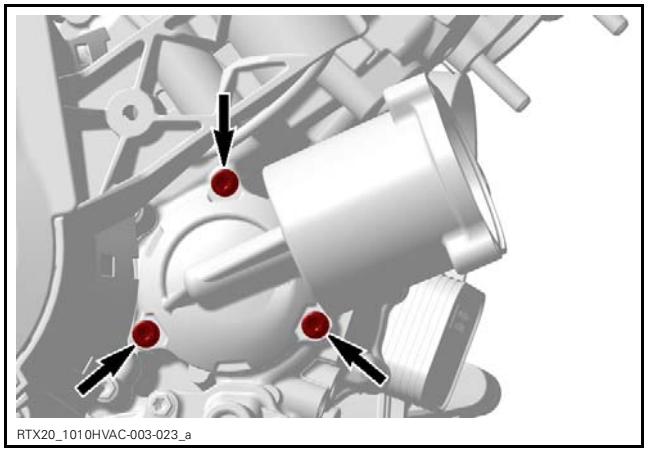
RTX20_1010HVAC-003-023_a

TIGHTENING TORQUE	
Oil filter housing screws	10 N•m ± 1 N•m (89 lbf•**in** ± 9 lbf•**in**)

Refill engine oil and check oil level, refer procedures in this subsection.

OIL COOLER

Oil Cooler Access

Remove the fuel tank to reach the oil cooler. Refer to *FUEL TANK AND FUEL PUMP* subsection.

Removing the Oil Cooler

Drain the following:

– Engine oil, see procedure in this subsection
– Coolant, refer to the *COOLING SYSTEM - VEHICLE COMPONENTS* subsection.

Remove oil cooler retaining screws.

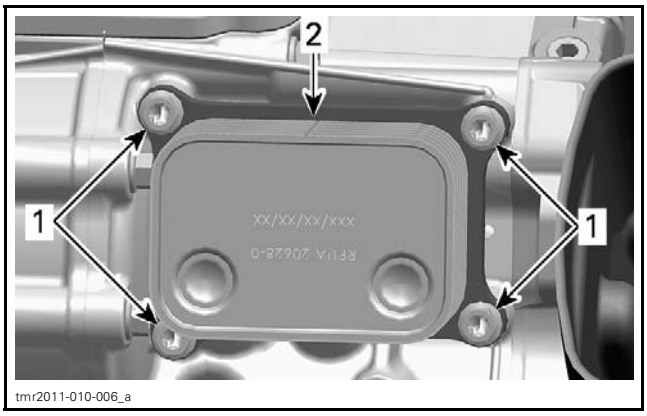

tmr2011-010-006_a

1. *Retaining screws*
2. *Oil cooler*

Place rags or towels under oil cooler to catch remaining oil and coolant.

Remove oil cooler and discard gasket.

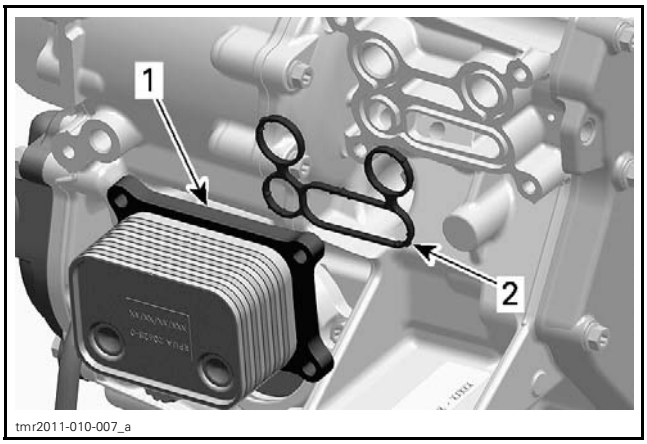

tmr2011-010-007_a

1. *Oil cooler*
2. *Gasket*

Inspecting the Oil Cooler

Check oil cooler for cracks or other damage.

Replace if necessary.

Installing the Oil Cooler

The installation is the reverse of the removal procedure. However, pay attention to the following details.

Wipe off any oil and coolant spillage.

Install a **NEW** gasket.

Refill engine oil with recommended oil and at the proper oil lever.

Refill and bleed cooling system.

OIL PRESSURE SWITCH (OPS)

Oil Pressure Switch Location

The oil pressure switch is located at engine MAG side above the magneto cover.

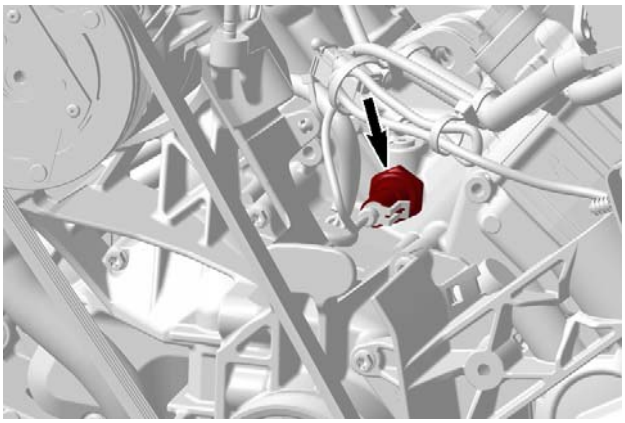

RTX20_1010HVAC-003-008_a

Oil Pressure Switch Activation

The oil pressure switch activates when the engine oil pressure is lower than following specified pressure range.

OIL PRESSURE SWITCH OPERATING PRESSURE
30 kPa ± 10 kPa (4.35 PSI ± 1.45 PSI)

To check the function of the oil pressure switch, an oil pressure test has to be performed. Refer to *ENGINE OIL PRESSURE* in this subsection.

If the engine oil pressure is good perform the oil pressure switch resistance test.

Testing the Oil Pressure Switch Resistance

Disconnect the connector from the oil pressure switch.

Use a multimeter to check the resistance between as shown.

OPS CONNECTOR		**ENGINE NOT RUNNING**	**ENGINE RUNNING**
PIN		RESISTANCE (Ω)	
1	Engine ground	Close to 0 Ω (normally closed switch)	Infinite (open) when pressure reaches 30 kPa ± 10 kPa (4.35 PSI ± 1.45 PSI)

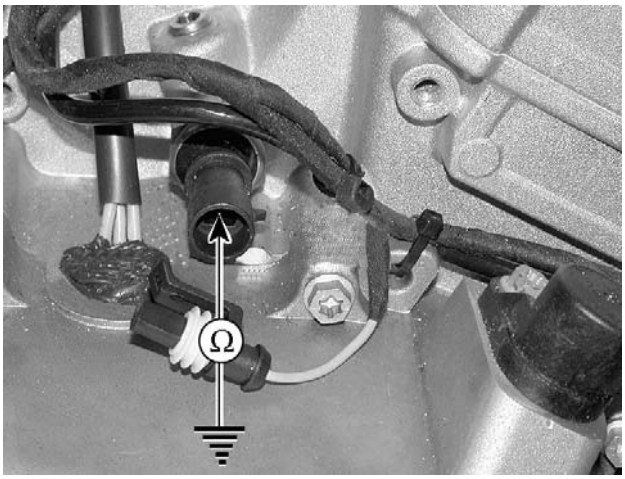

vmr2006-014-009_a

If resistance values are incorrect, replace the oil pressure switch.

If the values are correct, check wiring.

Removing the Oil Pressure Switch

Unplug the oil pressure switch connector.

Unscrew and remove oil pressure switch.

Installing the Oil Pressure Switch

Tighten oil pressure switch to specified torque.

TIGHTENING TORQUE	
Oil pressure switch	12 N•m ± 1 N•m (106 lbf•**in** ± 9 lbf•**in**) + LOCTITE 243 (BLUE) (P/N 293 800 060)

ENGINE OIL PRESSURE REGULATOR

Oil Pressure Regulator Location

The oil pressure regulator is located on the engine magneto side (inside magneto cover).

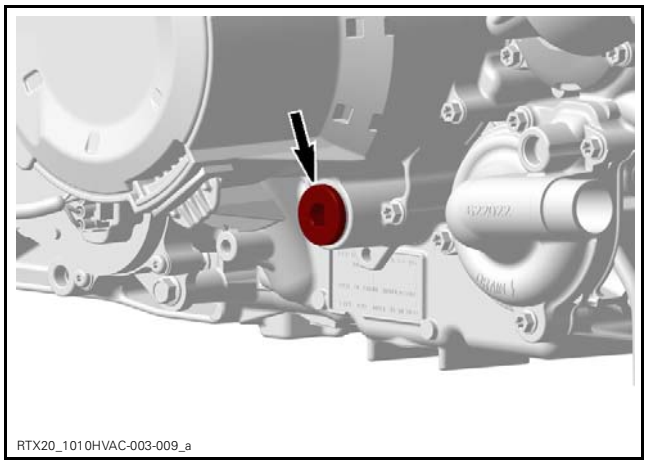

NOTE: The oil pressure regulator system works when the oil pressure exceeds 400 kPa (58 PSI).

Removing the Oil Pressure Regulator

Remove plug screw and pull oil pressure regulator out.

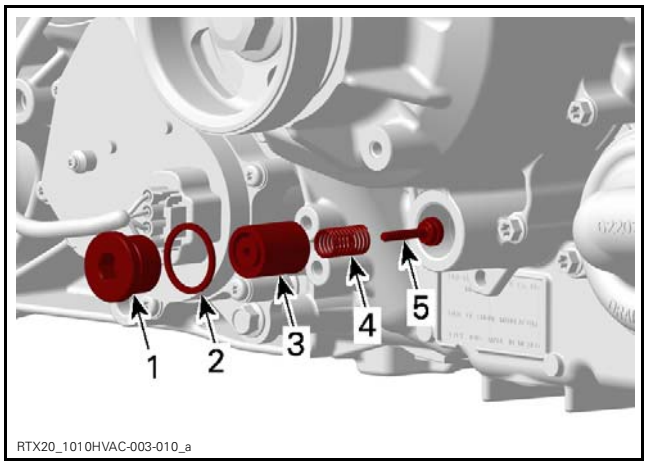

1. *Plug screw*
2. *Gasket ring*
3. *Pressure regulator housing*
4. *Spring*
5. *Pressure regulator valve*

Inspecting the Oil Pressure Regulator

Inspect pressure regulator housing and valve for scoring or other damages.

Check spring for free length.

SPRING FREE LENGTH	
New	39 mm (1.535 in)
Service limit	37 mm (1.457 in)

NOTE: Replace worn or damaged components.

Clean bore and thread in the magneto housing from metal shavings and other contaminations.

Installing the Oil Pressure Regulator

The installation is the reverse of the removal procedure. However, pay attention to the following.

At installation always replace the gasket ring of the plug screw by a new one.

OIL PUMP

Oil Pump Location

The oil pump is located on the engine PTO side (behind PTO cover).

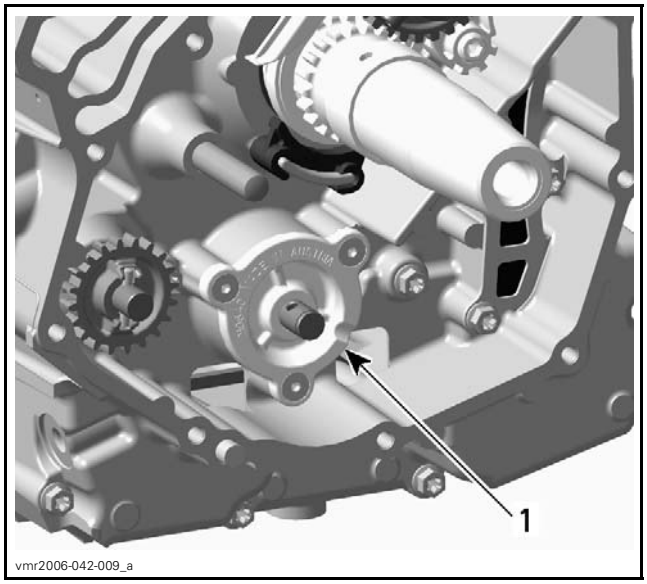

1. *Oil pump*

Removing the Oil Pump

Remove the PTO cover. Refer to *PTO COVER* in the *CYLINDER BLOCK* subsection.

1. Remove:
   - Retaining ring
   - Oil pump gear
   - Needle pin
   - Thrust washer.

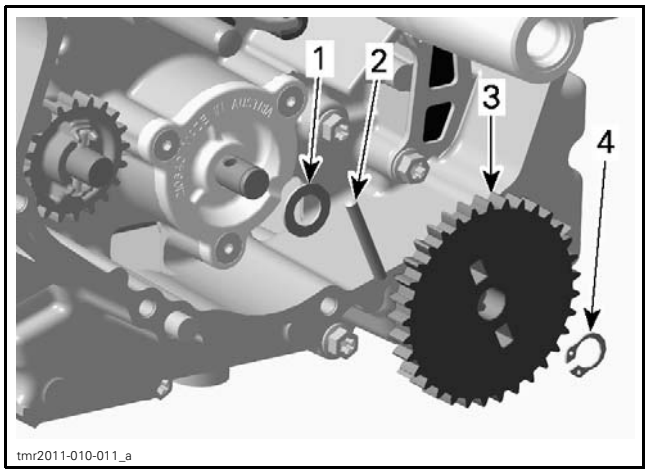

1. *Thrust washer*
2. *Needle pin*
3. *Oil pump gear*
4. *Retaining ring*

2. Remove oil pump cover screws and pull oil pump cover out.

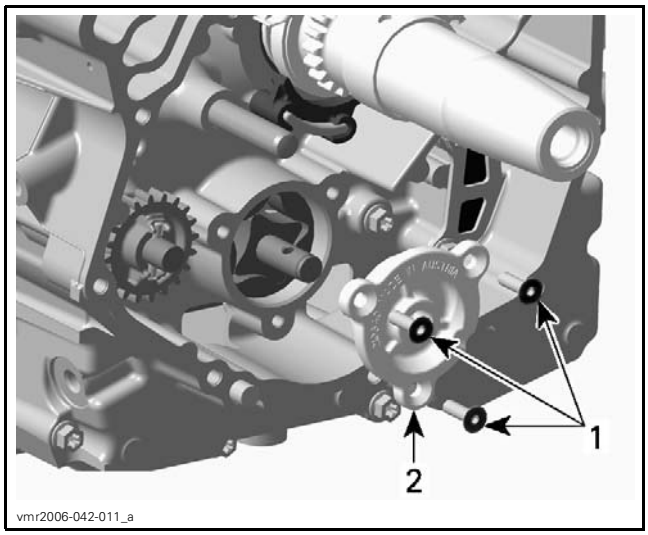

1. *Retaining screws*
2. *Oil pump cover*

3. Remove oil pump shaft with needle pin and inner rotor.
4. Remove outer rotor.

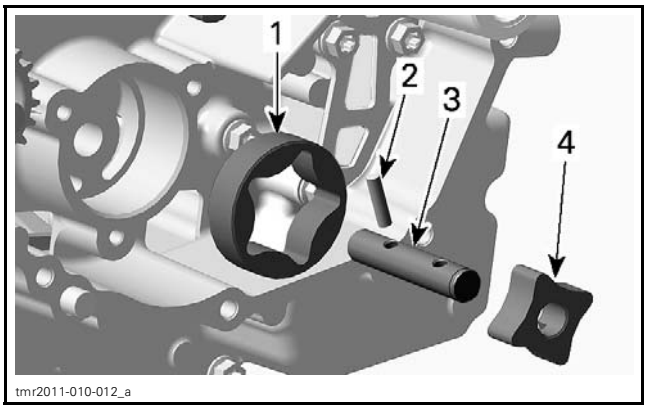

1. *Outer rotor*
2. *Needle pin*
3. *Oil pump shaft*
4. *Inner rotor*

Inspecting the Oil Pump

Inspect oil pump and oil pump cover bore for marks, scratches or other damages. Check for scratches in crankcase between outer rotor and oil pump bore. If so, replace damaged parts.

Check oil pump cover for damages and for surface straightness with a straightedge.

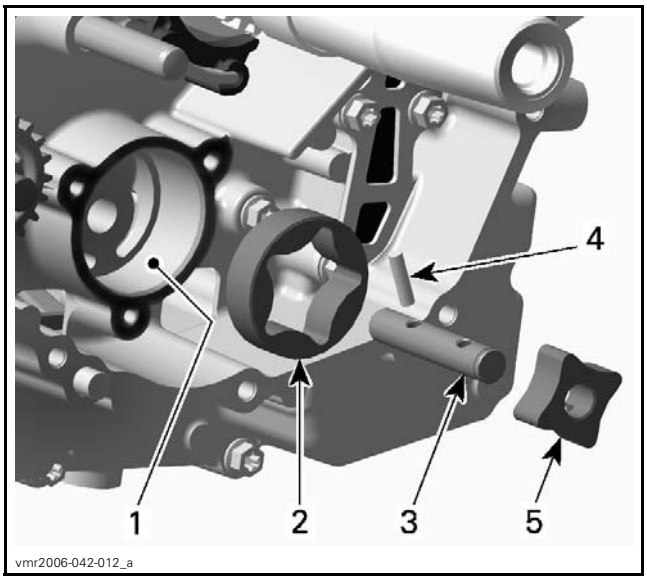

1. *Oil pump bore*
2. *Outer rotor*
3. *Oil pump shaft*
4. *Needle pin*
5. *Inner rotor*

Check inner rotor for corrosion pin holes or other damages. If so, replace oil pump shaft assembly.

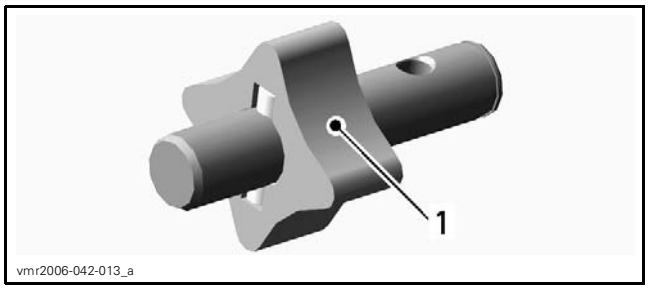

1. Pittings on the teeth

Inner and Outer Rotor Clearance

Using a feeler gauge, measure the clearance of inner and outer rotors as shown.

CLEARANCE OF INNER AND OUTER ROTOR	
Service limit	0.25 mm (.0098 in)

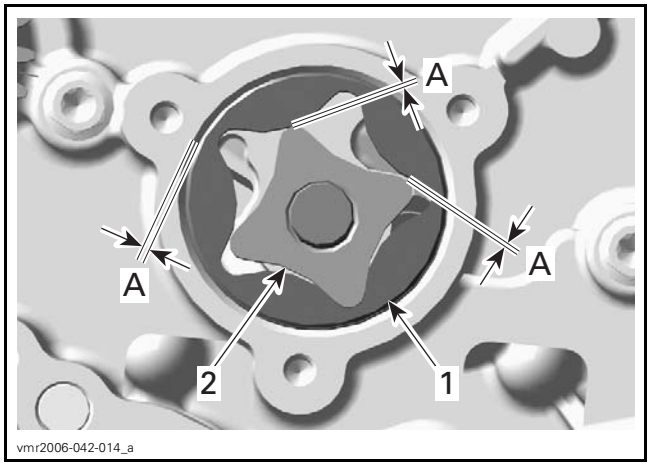

1. Outer rotor
2. Inner rotor
A. 0.25 mm (.0098 in)

If clearance of inner and outer rotors exceeds the tolerance, replace oil pump rotors. Ensure to also check oil pump cover. If damaged, replace the complete oil pump assembly.

If clearance between outer rotor and its bore in crankcase exceeds the tolerance, replace the complete oil pump rotors and/or the crankcase.

Oil Pump Axial Clearance

Using a depth gauge, measure the axial clearance of the oil pump as shown.

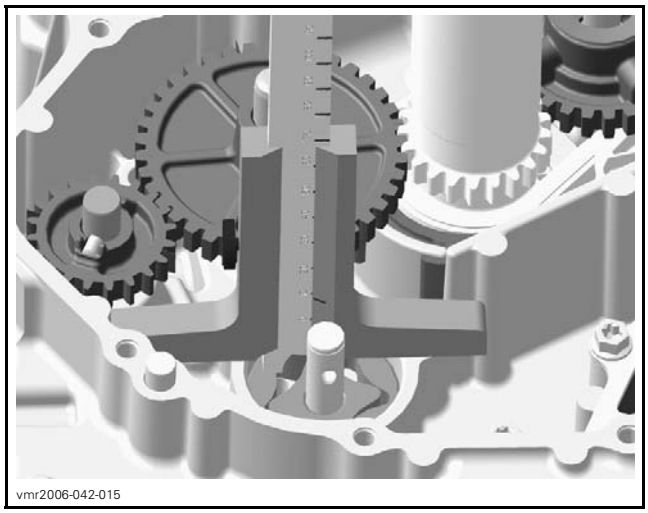

OIL PUMP — MEASUREMENT "A"

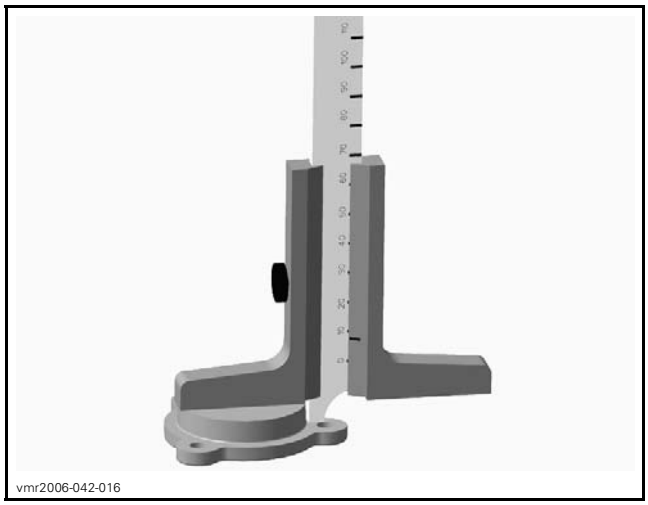

OIL PUMP COVER — MEASUREMENT "B"

Substract measurement "B" from measurement "A" to obtain axial clearance.

OIL PUMP AXIAL CLEARANCE	
Service limit	0.20 mm (.0079 in)

NOTE: When the axial clearance of the oil pump shaft assembly increases, the oil pressure decreases.

Installing the Oil Pump

The installation is the reverse of the removal procedure. However, pay attention to the following.

When installing the oil pump rotors, make sure both markings are on the outer side.

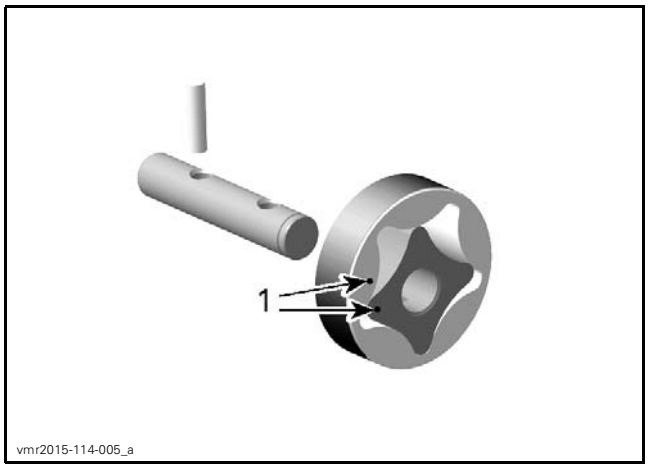

1. Markings

After reinstallation of the remaining parts, check for smooth operation of the oil pump assembly.

Testing the Oil Pump Function

After engine is completely reassembled, start engine and make sure oil pressure is within specifications (refer to *ENGINE OIL PRESSURE* in this subsection).

ENGINE OIL STRAINER

Oil Strainer Location

The engine oil strainer is located between both crankcase halves.

Removing the Oil Strainer

Separate crankcase halves. Refer to *CYLINDER BLOCK* subsection.

Remove the engine oil strainer.

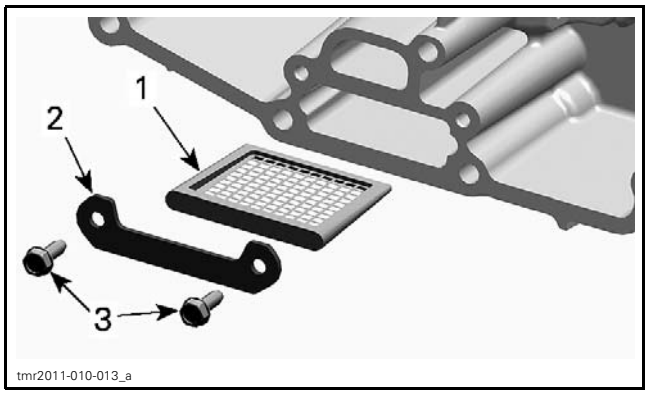

1. Engine oil strainer
2. Retaining plate
3. Screws

Cleaning and Inspecting the Oil Strainer

Clean engine oil strainer with a part cleaner then use an air gun to dry it.

Check engine oil strainer for cracks or other damage. Replace if damaged.

Installing the Oil Strainer

The installation is the reverse of the removal procedure.

TIGHTENING TORQUE	
Oil strainer retaining screws	6 N•m ± 0.7 N•m (53 lbf•**in** ± 6 lbf•**in**) + LOCTITE 243 (BLUE) (P/N 293 800 060)

REED VALVE

The engine is equipped with a reed valve which prevents accumulation of larger oil quantities in the crankcase. The reed valve is fitted into the crankcase.

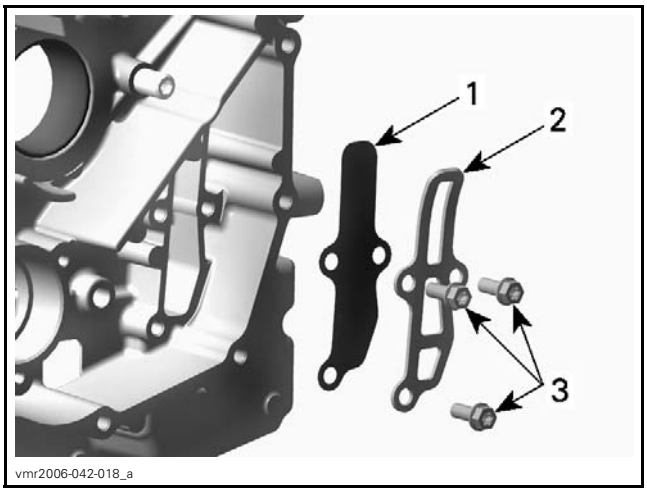

1. Reed valve
2. Stopper
3. Screws

Removing the Reed Valve

Remove:

- PTO cover (refer to *PTO COVER* in the *CYLINDER BLOCK* subsection)
- Reed valve retaining screws
- Stopper plate
- Reed valve.

Inspecting the Reed Valve

Check reed valve for cracks or other damage.

Replace reed valve if damaged.

Installing the Reed Valve

The installation is the reverse of the removal procedure.

TIGHTENING TORQUE	
Reed valve retaining screws	10 N•m ± 1 N•m (89 lbf•**in** ± 9 lbf•**in**)

OIL NOZZLES

Oil Nozzle Location

The oil nozzles are located inside the crankcase, MAG and PTO side.

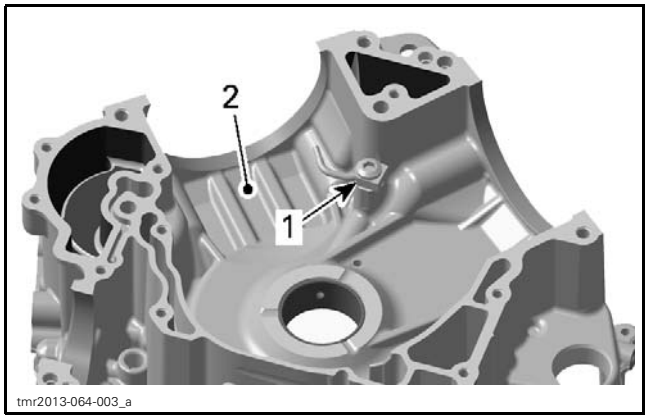

1. *Oil nozzle*
2. *Crankcase MAG side*

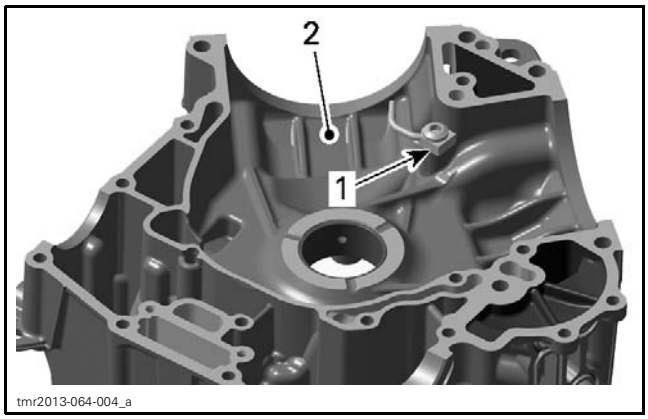

1. *Oil nozzle*
2. *Crankcase PTO side*

NOTE: If the engine has to be dismantled within the scope of repair work, take this opportunity to clean the oil nozzles.

Removing the Oil Nozzle

Separate crankcase halves. Refer to *CYLINDER BLOCK* subsection.

Remove banjo bolt retaining the oil nozzle to crankcase.

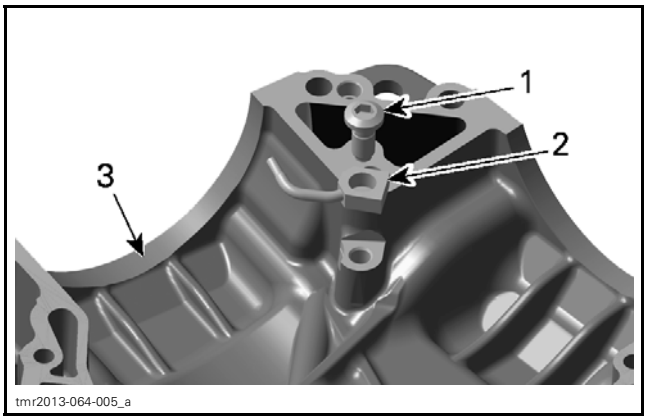

1. *Banjo bolt*
2. *Oil nozzle*
3. *Crankcase*

Cleaning and Inspecting the Oil Nozzle

Clean oil nozzle with a parts cleaner, then use an air gun and dry the parts.

If the oil nozzles are damaged or bent during work in the crankcase, they must be replaced immediately.

Check if ball inside Banjo bolt moves freely.

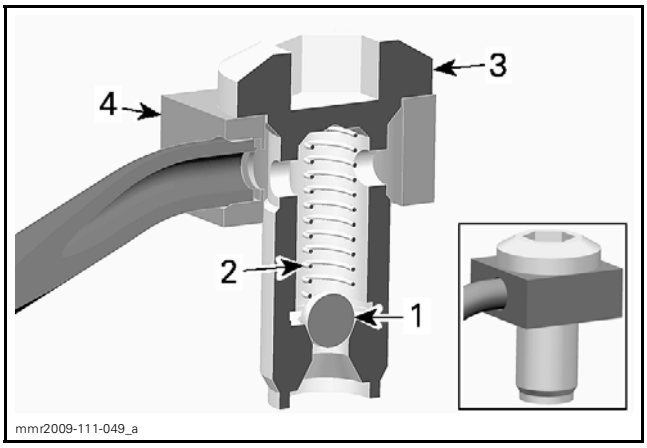

1. *Ball*
2. *Spring*
3. *Banjo bolt*
4. *Oil nozzle*

Installing the Oil Nozzle

⚠ CAUTION At assembly make sure the contact surface of the oil nozzles are well fitted onto the crankcase. If this is not ensured, the oil spray direction will change, causing potential engine damage.

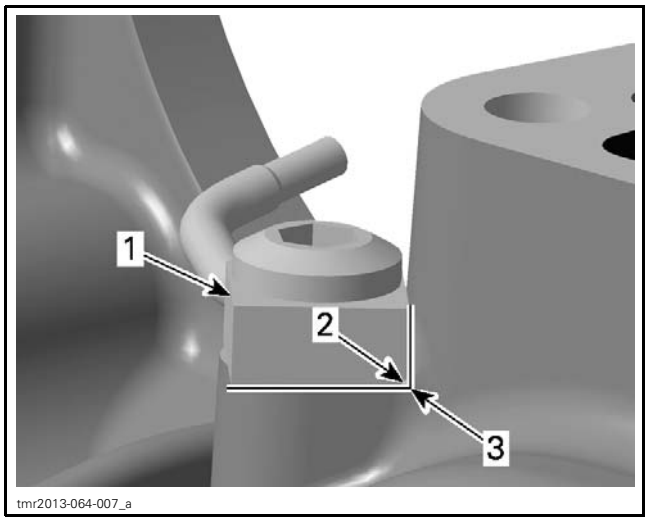

1. Oil nozzle
2. Chamfer on oil nozzle body
3. Corner in crankcase

Tighten banjo bolts to the specified torque.

TIGHTENING TORQUE	
Banjo bolt	19 N•m ± 2 N•m (168 lbf•**in** ± 18 lbf•**in**)

ENGINE COOLING SYSTEM

SERVICE TOOLS

Description	Part Number	Page
HANDLE	420 877 650	7
OIL SEAL PUSHER	529 035 757	7
SEAL PUSHER	529 035 766	7

SERVICE PRODUCTS

Description	Part Number	Page
DOW CORNING 111	413 707 000	7
LOCTITE 243 (BLUE)	293 800 060	4

WATER PUMP AND THERMOSTAT

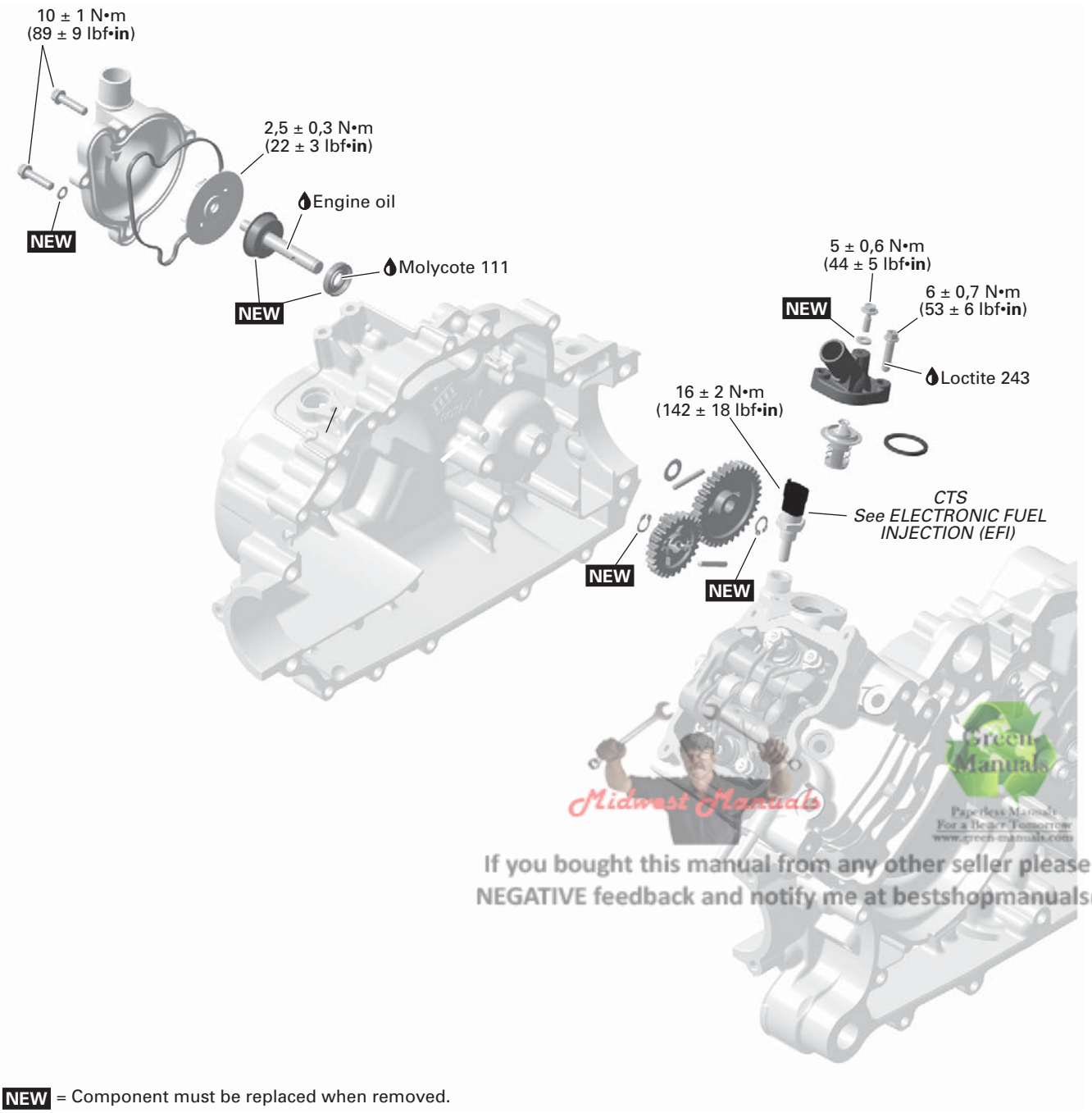

Midwest Manuals
Green Manuals
Paperless Manuals For a Better Tomorrow www.green-manuals.com
If you bought this manual from any other seller please leave them NEGATIVE feedback and notify me at bestshopmanuals@gmail.com

NEW = Component must be replaced when removed.

vmr2015-016-001_a

GENERAL

⚠ WARNING

Never start engine without coolant. Engine parts and ceramic seal on water pump shaft can be damaged.

During assembly and installation, use the torque values and service products as in the exploded view.

Clean threads before applying a threadlocker. Refer to *SELF-LOCKING FASTENERS* and *LOCTITE APPLICATION* at the beginning of this manual for complete procedure.

⚠ WARNING

Torque wrench tightening specifications must be strictly adhered to.
Locking devices when removed (e.g.: locking tabs, elastic stop nuts, self-locking fasteners, etc.) must be installed or replaced with new ones where specified. If the efficiency of a locking device is impaired, it must be renewed.

PROCEDURES

THERMOSTAT

The thermostat is a single action type, located on the RH rear side of the cylinder head.

Removing the Thermostat

Pinch the coolant hoses near the engine using a large hose pincher.

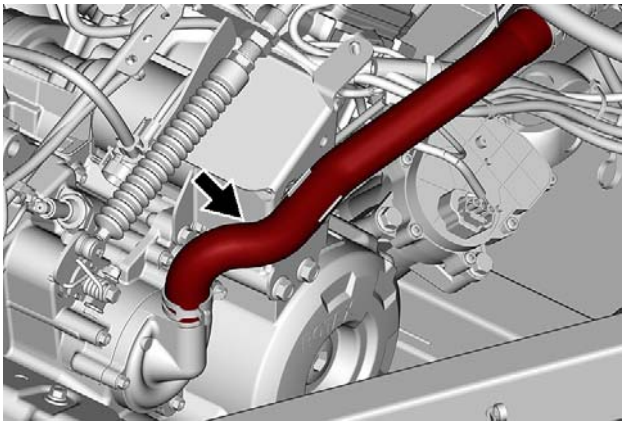

tmr2017-410-001_a

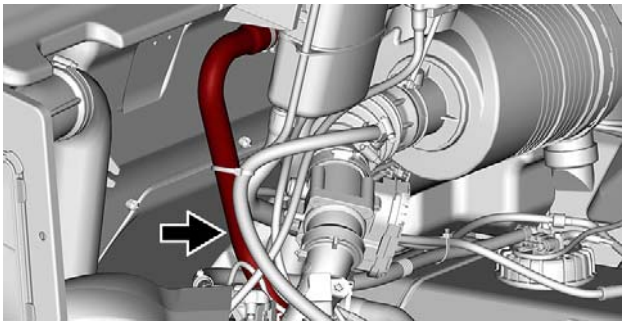

tmr2017-410-002_a

Place shop rags around the thermostat housing.

Remove thermostat housing screws and pull thermostat housing off cylinder head.

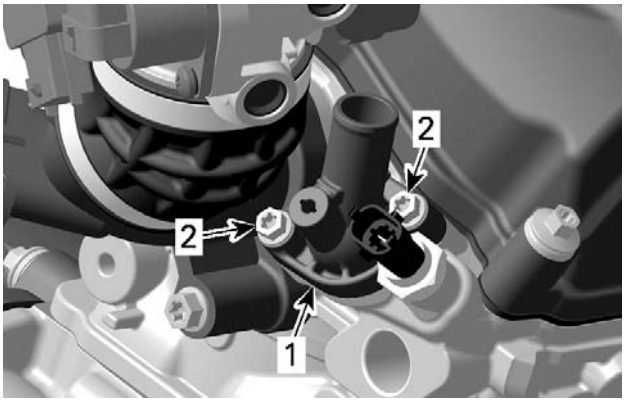

vmr2015-016-003_a

1. *Thermostat housing*
2. *Screws*

Remove thermostat with gasket.

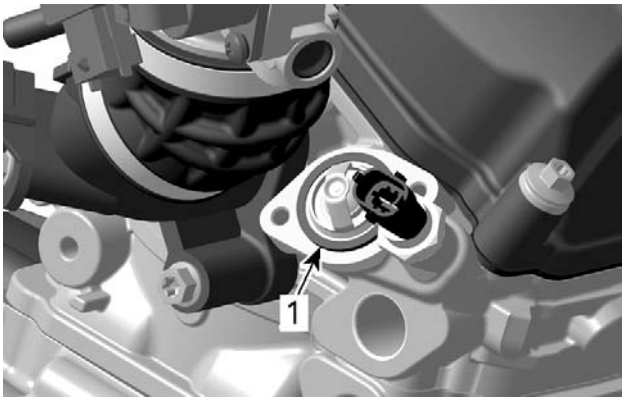

vmr2015-016-004_a

1. *Thermostat with gasket*

Testing the Thermostat

To test thermostat, put it in water and heat the water.

THERMOSTAT OPENING TEMPERATURE	
STARTS TO OPEN	FULLY OPEN
65°C (149°F)	75°C (167°F)

Replace thermostat if it does not begin to open at specified temperature.

Check gasket to see if it is brittle, hard or damaged. If so, replace gasket.

Installing the Thermostat

The installation is the reverse of the removal procedure. However, pay attention to the following details.

Tighten thermostat cover screws to specification.

TIGHTENING TORQUE	
Thermostat cover screws	6 N•m ± 0.7 N•m (53 lbf•**in** ± 6 lbf•**in**) + LOCTITE 243 (BLUE) (P/N 293 800 060)

Refill and bleed cooling system, refer to *VEHICLE COOLING SYSTEM* subsection.

Check cooling system for leaks.

COOLANT TEMPERATURE SENSOR (CTS)

The coolant temperature sensor is located next to the thermostat housing on the RH rear side of the cylinder head.

Refer to *ELECTRONIC FUEL INJECTION* subsection.

WATER PUMP HOUSING

Water Pump Housing Location

The water pump housing is located on the RH side of the engine.

Removing the Water Pump Housing

Drain cooling system, refer to *VEHICLE COOLING SYSTEM* subsection.

Remove radiator outlet hose from water pump housing.

Remove screws retaining water pump housing.

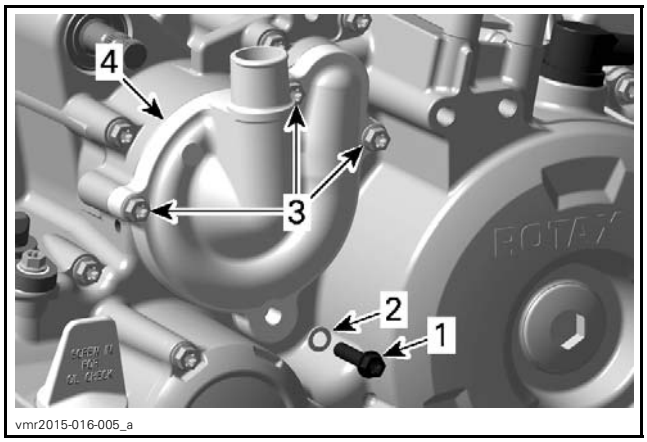

1. Coolant drain plug
2. Sealing ring
3. Screws
4. Water pump housing

Pull on water pump housing to remove it.

Inspecting the Water Pump Housing

Check if gasket is brittle, hard or damaged.

Replace as required.

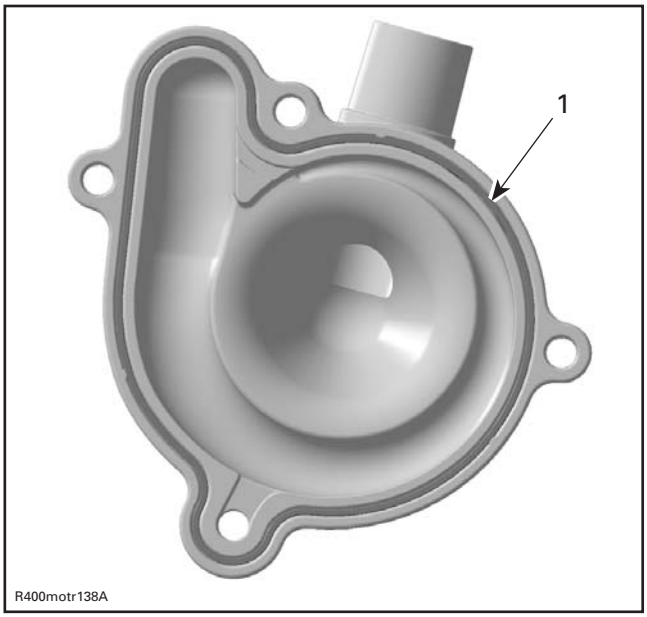

WATER PUMP COVER
1. Gasket

Installing the Water Pump Housing

The installation is the reverse of the removal procedure. However, pay attention to the followings.

NOTICE **To prevent leaking, make sure the gasket is properly inserted in the water pump housing groove when you reinstall the water pump cover.**

Install a NEW gasket ring on water pump housing screw.

Tightening sequence for screws on water pump cover is as per following illustration (criss-cross).

TIGHTENING TORQUE	
Water pump housing screws	10 N•m ± 1 N•m (89 lbf•**in** ± 9 lbf•**in**)

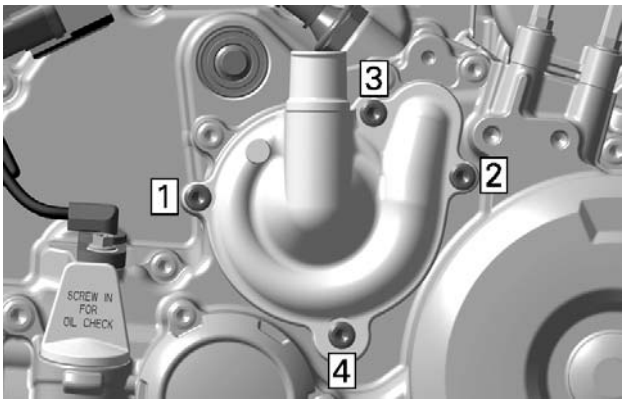

vmr2015-016-006_a

TIGHTENING SEQUENCE

WATER PUMP IMPELLER

Removing the Water Pump Impeller

Remove water pump housing, see procedure in this subsection.

Unscrew impeller from water pump shaft.

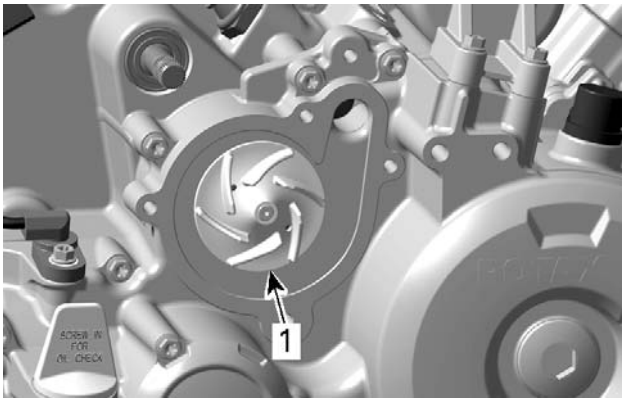

vmr2015-016-007_a

1. *Impeller*

Inspecting the Water Pump Impeller

Check impeller for cracks or other damages. Replace impeller if damaged.

Installing the Water Pump Impeller

The installation is the reverse of the removal procedure.

NOTE: Be careful not to damage the impeller blades during installation.

WATER PUMP SHAFT AND SEALS

Removing the Water Pump Shaft and Seal

Remove water pump housing, refer to *WATER PUMP HOUSING* in this subsection.

Remove impeller.

Remove magneto cover, refer to the *MAGNETO AND STARTER* subsection.

Remove circlip from the water pump gear using the appropriate pliers. Discard the circlip.

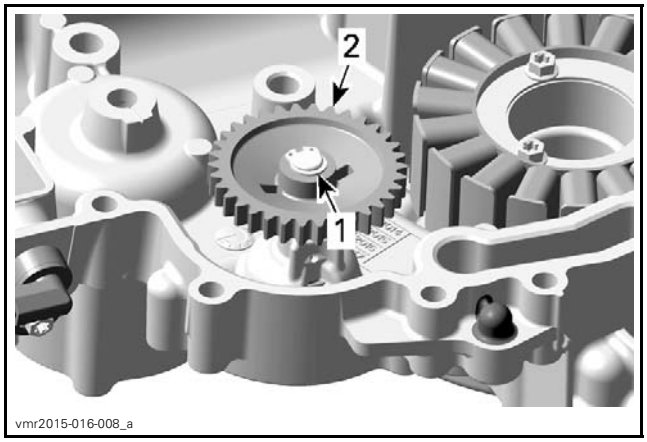

vmr2015-016-008_a

1. *Circlip*
2. *Water pump gear*

Remove the water pump gear.:

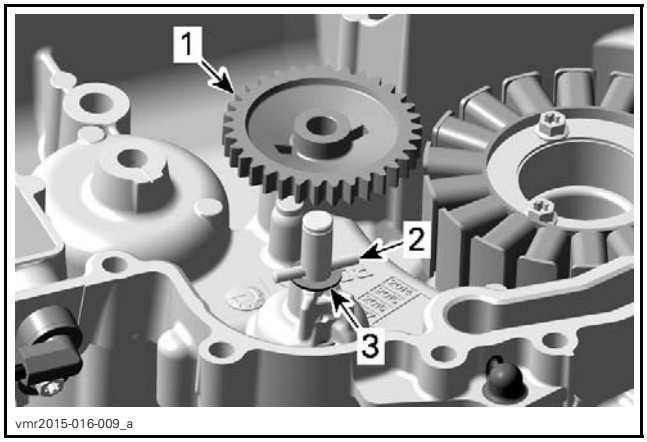

vmr2015-016-009_a

1. *Water pump gear*
2. *Needle pin*
3. *Thrust washer*

Push the water pump shaft with inner portion of the rotary seal from inside of magneto cover.

REQUIRED TOOL
Soft hammer

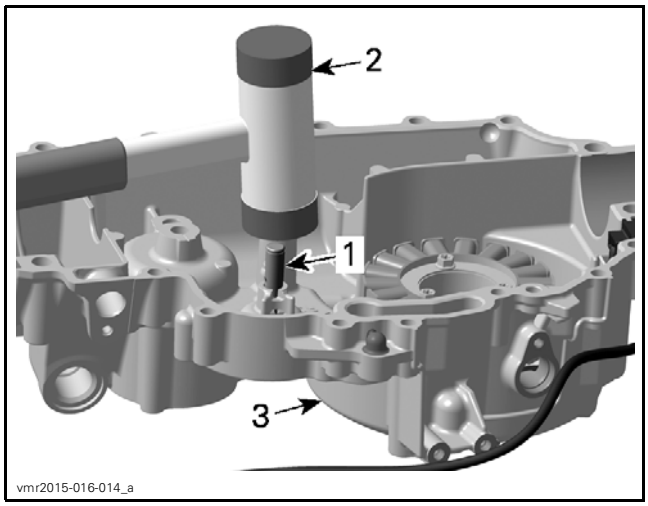

1. *Water pump shaft*
2. *Soft hammer*
3. *Magneto cover*

Install expander snugly against outer part of rotary seal.

REQUIRED TOOL
Blind hole puller

Pull outer part of rotary seal out.

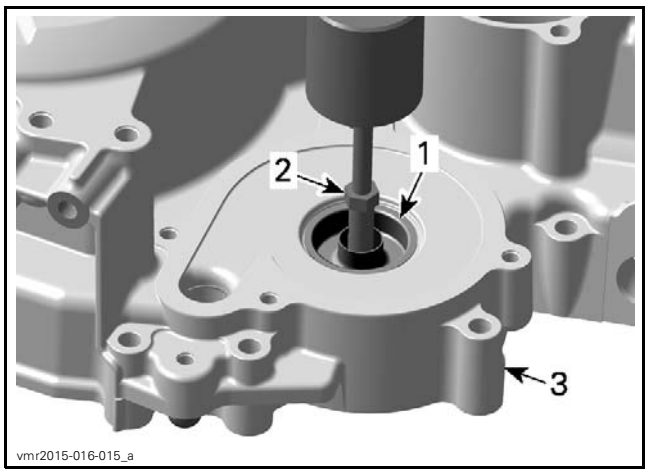

1. *Outer part of rotary seal*
2. *Expander*
3. *Magneto cover*

NOTICE Always replace rotary seal and water pump shaft together. Also install a NEW oil seal at the same time.

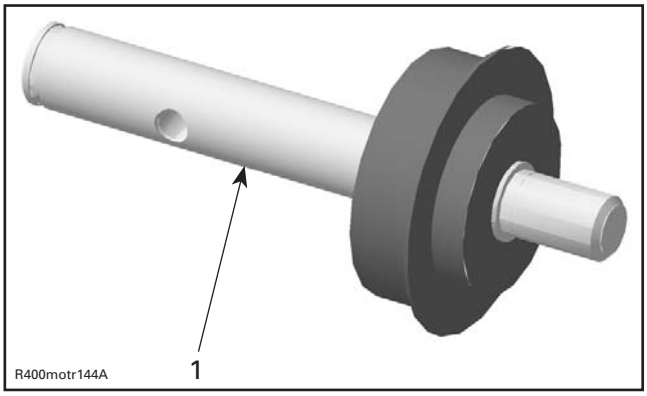

1. *Water pump shaft with rotary seal*

Remove oil seal from inside magneto cover using an appropriate pusher.

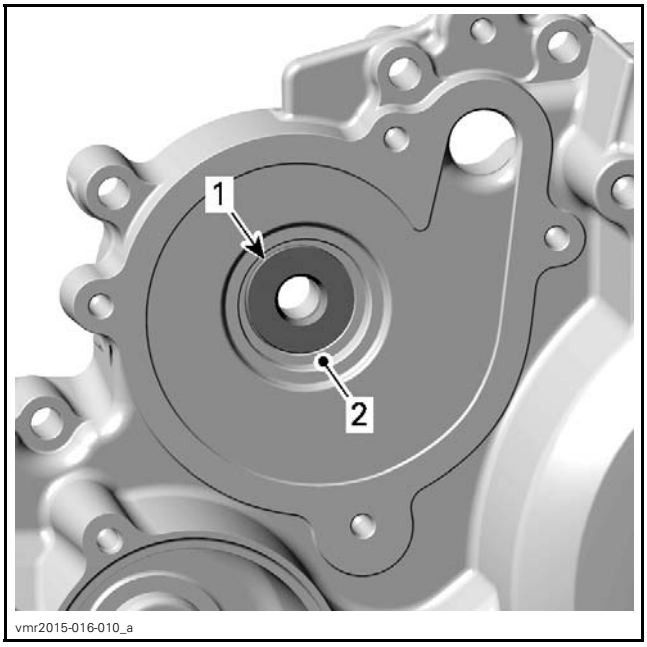

1. *Oil seal behind the rotary seal*
2. *Rotary seal bore*

NOTICE Be careful not to damage the surface of the rotary seal bore in magneto cover.

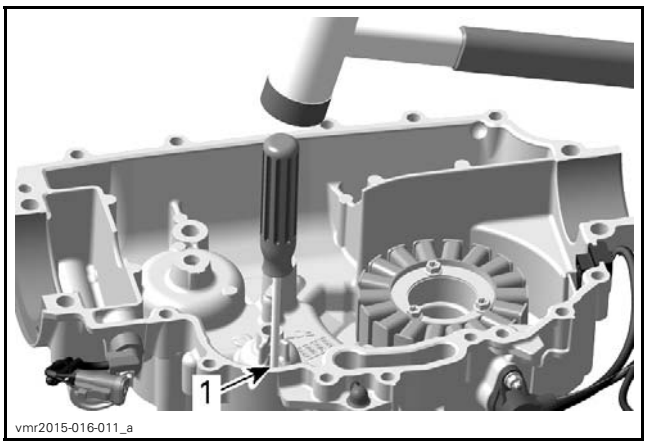

1. *Special area for oil seal removal*

Inspecting the Water Pump Shaft and Gear

Inspect water pump gear for:
- Wear
- Cracks
- Broken teeth
- Damage on snap mechanism to the needle pin.

Replace if damaged.

Inspect shaft and rotary seal for wear or damages.

Installing the Water Pump Shaft and Seal

The installation is the reverse of the removal procedure. However, pay attention to the following.

NOTICE **When replacing water pump shaft, always replace circlip, oil seal, water pump shaft and rotary seal with new parts.**

Install the water pump shaft oil seal.

REQUIRED TOOLS	
HANDLE (P/N 420 877 650)	
OIL SEAL PUSHER (P/N 529 035 757)	

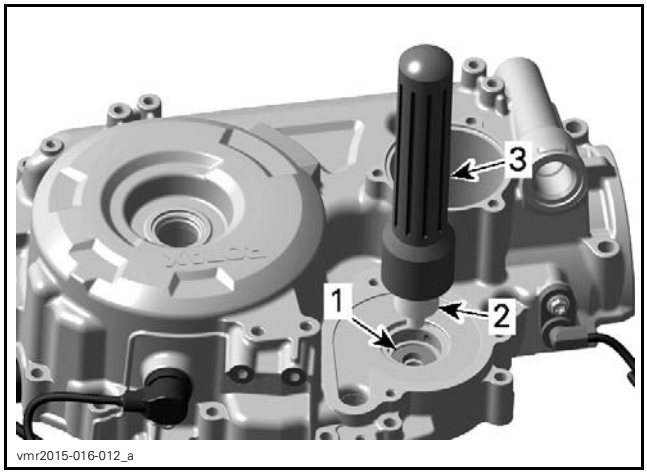

1. *Oil seal for water pump shaft*
2. *Oil seal pusher*
3. *Handle*

Install the water pump shaft assembly.

REQUIRED TOOL	
SEAL PUSHER (P/N 529 035 766)	

NOTE: Never use oil or grease in the press fit area of the oil seal and rotary seal bores.

Lubricate the sealing lip of the oil seal.

RECOMMENDED SERVICE PRODUCT
DOW CORNING 111 (P/N 413 707 000)

Lubricate the water pump shaft.

RECOMMENDED SERVICE PRODUCT
Engine oil

Press the water pump shaft assembly into the magneto cover using the outside area of the rotary seal.

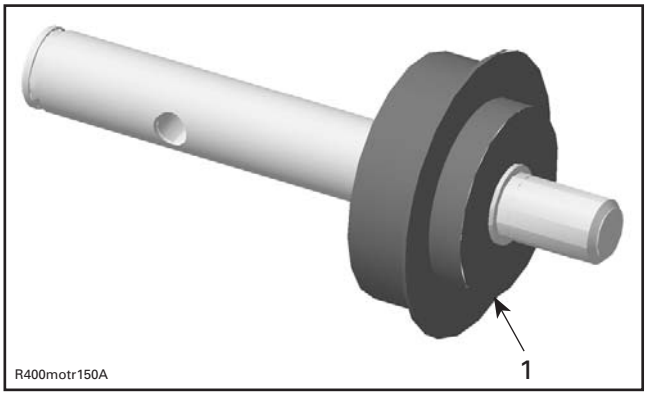

1. *Surface used to press water pump shaft assembly in place*

NOTICE **Never use a hammer for rotary seal installation. To avoid damaging the ceramic component, seal must be installed using a press.**

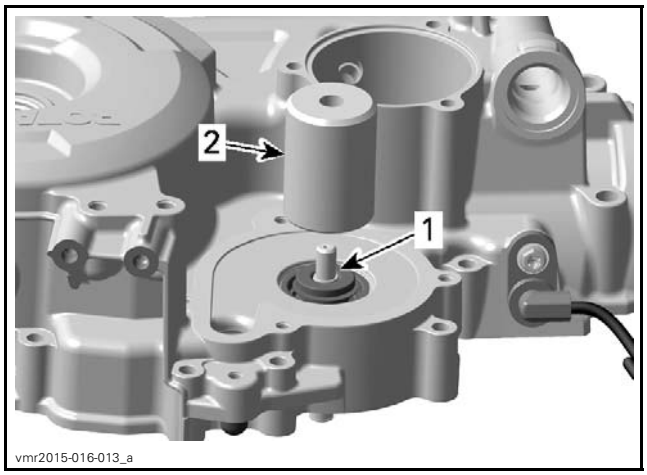

1. *Water pump shaft with rotary seal*
2. *Water pump ceramic seal installer*

NOTE: After installation water pump shaft with rotary seal must rotate freely.

Install magneto cover, refer to *MAGNETO AND STARTER* subsection.

Install all other removed parts.

ENGINE COOLING SYSTEM

SERVICE TOOLS

Description	Part Number	Page
HANDLE	420 877 650	9
OIL SEAL PUSHER	529 035 757	9
ROTARY SEAL PUSHER PLATE	529 036 130	7
SEAL PUSHER	529 035 766	7, 10

SERVICE PRODUCTS

Description	Part Number	Page
DOW CORNING 111	413 707 000	10

WATER PUMP

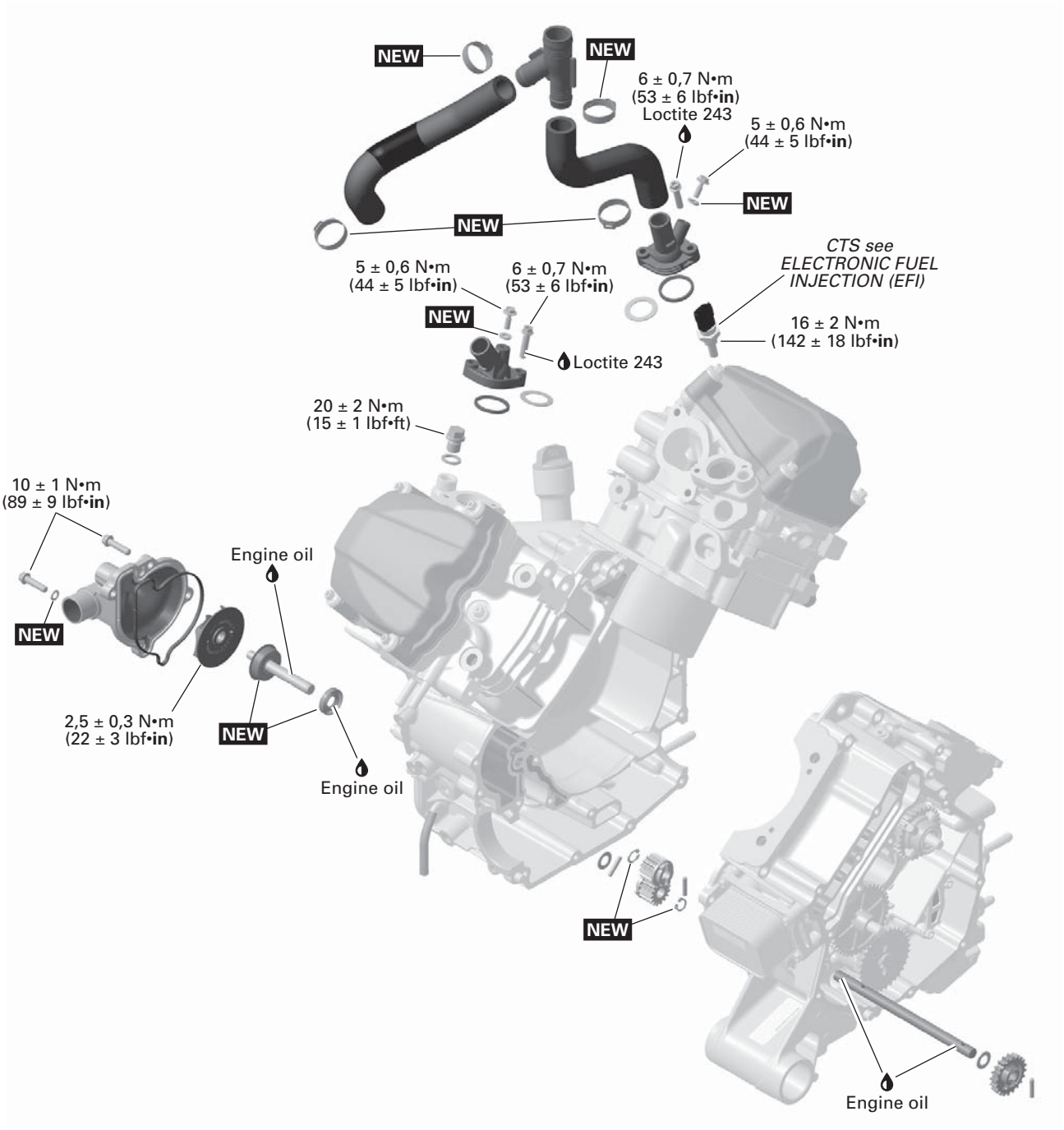

NEW = Component must be replaced when removed.

tmr2016-114-001_a

GENERAL

NOTICE **Never start engine without coolant. Some engine parts such as the rotary seal on the water pump shaft can be damaged.**

PROCEDURES

COOLANT TEMPERATURE SENSOR (CTS)

Refer to *ELECTRONIC FUEL INJECTION (EFI)* subsection.

WATER PUMP HOUSING

Water Pump Housing Location

The water pump housing is located on the engine MAG side (RH side of engine).

Removing the Water Pump Housing

WARNING

To avoid potential burns, do not remove the radiator cap or loosen the coolant drain plug if the engine is hot.

Drain cooling system. Refer to *VEHICLE COOLING SYSTEM* subsection.

Remove radiator outlet hose from water pump housing.

Remove screws retaining water pump housing.

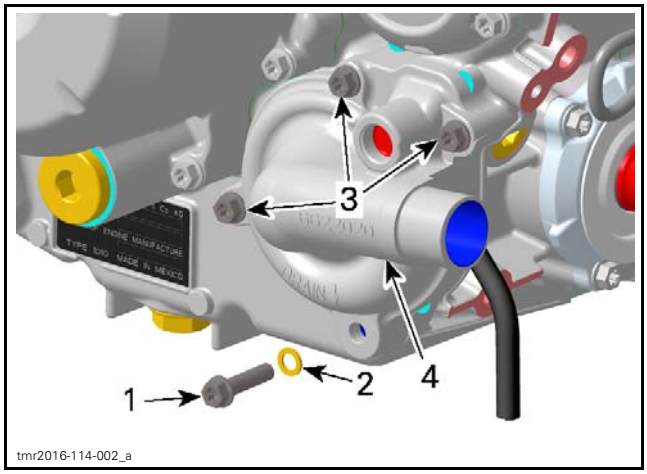

1. *Coolant drain plug*
2. *Sealing ring*
3. *Screws*
4. *Water pump housing*

Pull water pump housing to remove it.

Inspecting the Water Pump Housing

Check if gasket is brittle, hard or damaged and replace as necessary.

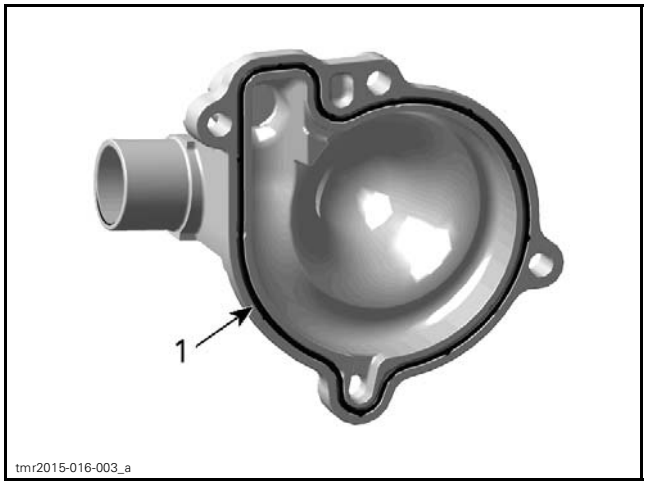

1. *Gasket*

Installing the Water Pump Housing

The installation is the opposite of the removal procedure.

NOTICE **To prevent leaking, take care that the gasket is exactly in groove when you reinstall the water pump housing.**

Tighten screws of water pump housing in a criss cross sequence to specification.

TIGHTENING TORQUE	
Water pump housing screws	10 N•m ± 1 N•m (89 lbf•**in** ± 9 lbf•**in**)

WATER PUMP IMPELLER

Removing the Water Pump Impeller

Remove water pump housing.

Unscrew impeller.

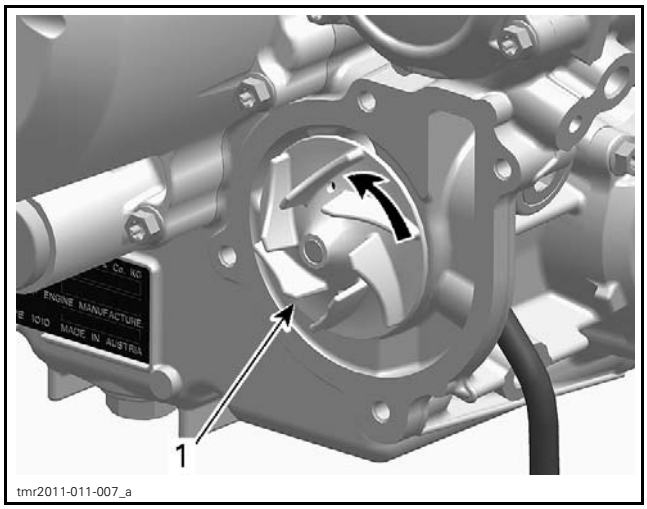

tmr2011-011-007_a

1. Turn counterclockwise to unscrew

Inspecting the Water Pump Impeller

Check impeller for cracks or other damage. Replace impeller if damaged.

Installing the Water Pump Impeller

The installation is the reverse of the removal procedure.

NOTICE **Be careful not to damage impeller fins during installation.**

WATER PUMP SHAFT AND SEALS

Use these guidelines to service these parts.

DEFECTIVE PART	ACTION
Rotary seal	Replace: - Rotary seal - Oil seal (assembled engine)
Oil seal	Replace: - Rotary seal - Oil seal (assembled engine)
Water pump shaft	Replace: - Water pump shaft assembly (including rotary seal) - Oil seal (engine disassembled)

NOTICE **Rotary seal must be replaced if water pump shaft is to be replaced.**

Replacing the Water Pump Seals (Assembled Engine)

NOTE: Read and thoroughly understand the entire procedure before starting it.

Removing the Seals

1. Remove the following parts, see procedure in this subsection.
   – *WATER PUMP HOUSING*
   – *WATER PUMP IMPELLER*.
2. Carefully pry out inner part of the rotary seal using 2 screwdrivers.

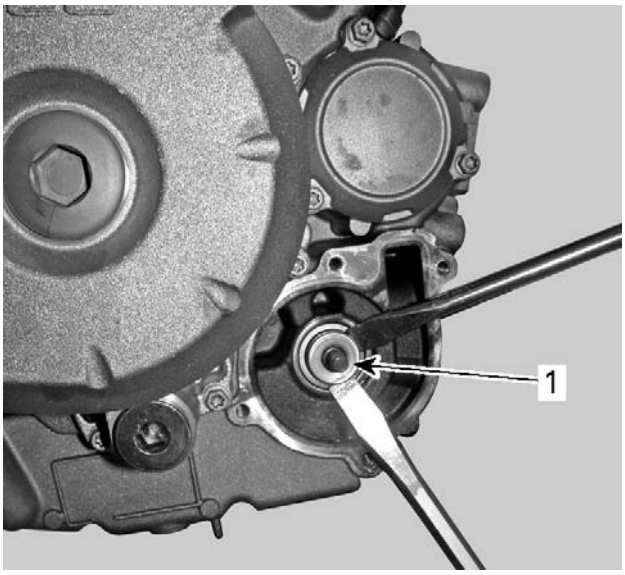

tmr2011-011-050_a

1. Inner part of rotary seal

vbs2008-011-005

TYPICAL - INNER PART OF ROTARY SEAL REMOVED

3. Carefully bend down the outer part of rotary seal lip using a small chisel.

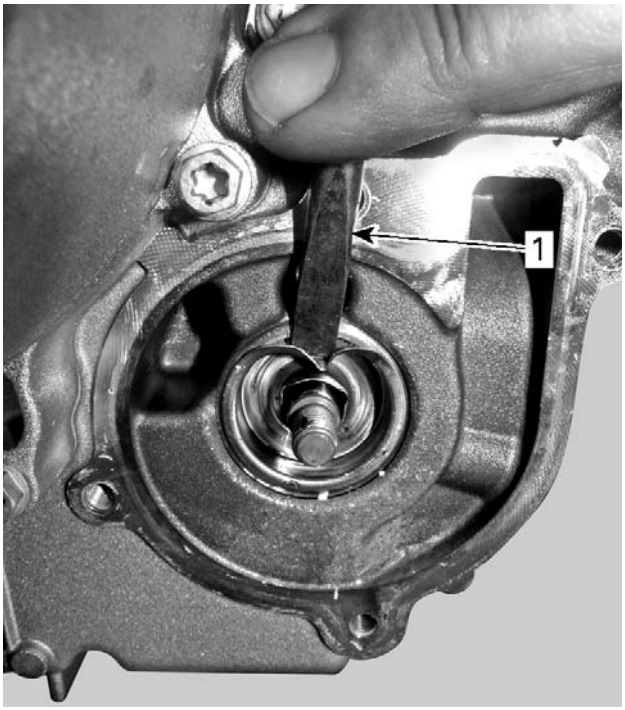

tmr2011-011-051_a

1. *Small chisel*

4. Use 2 screwdrivers and carefully remove the outer part of the rotary seal.

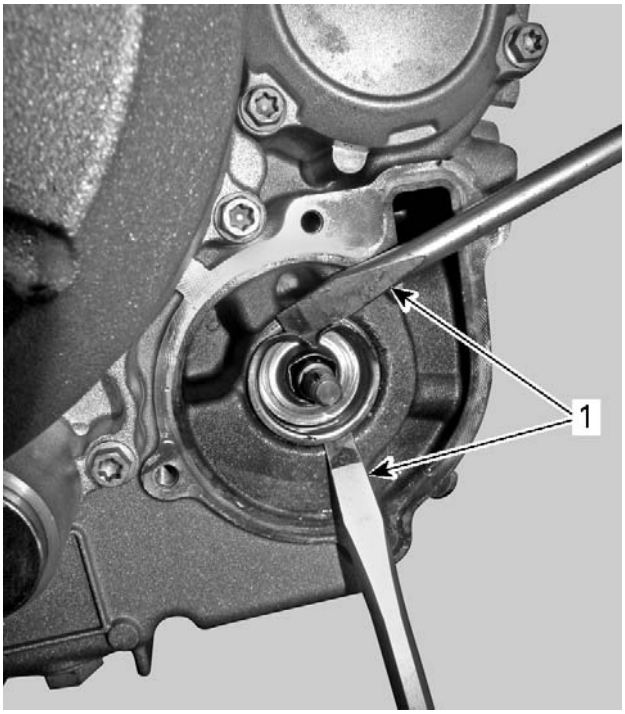

tmr2011-011-052_a

1. *Screwdrivers*

NOTICE Be careful not to damage the crankcase while removing outer part of the rotary seal.

5. Thoroughly remove carefully sealing residue and burr of rotary seal using a scraper.

NOTICE Be careful not to damage water pump shaft.

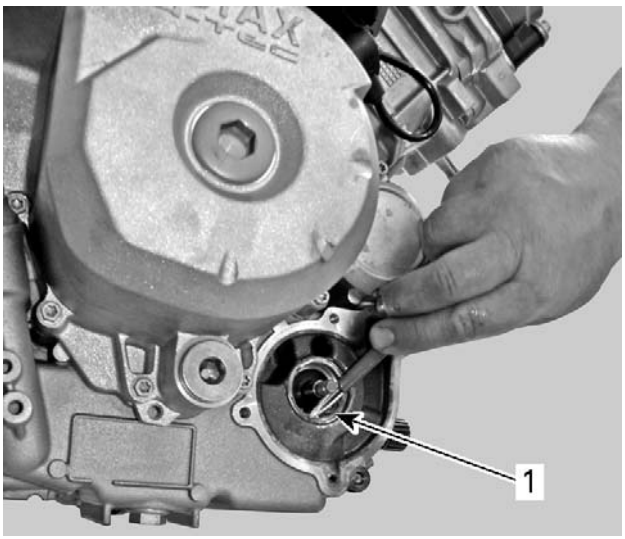

tmr2011-011-053_a

1. *Scraper*

6. Install 2 wooden screws in the seal.

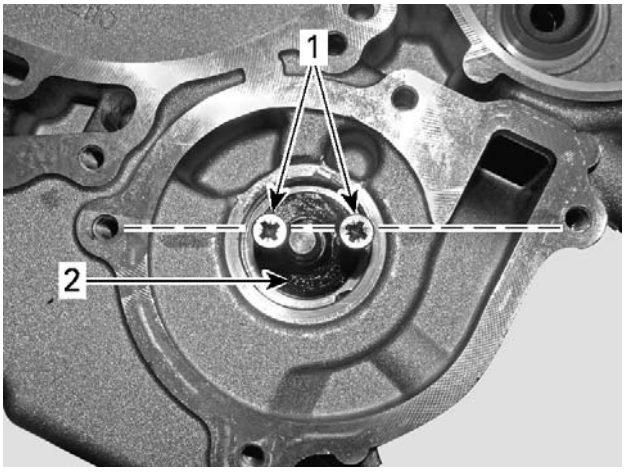

tmr2011-011-054_a

1. *Wooden screws*
2. *Oil seal*

7. Remove oil seal from crankcase by pulling screws with pliers.

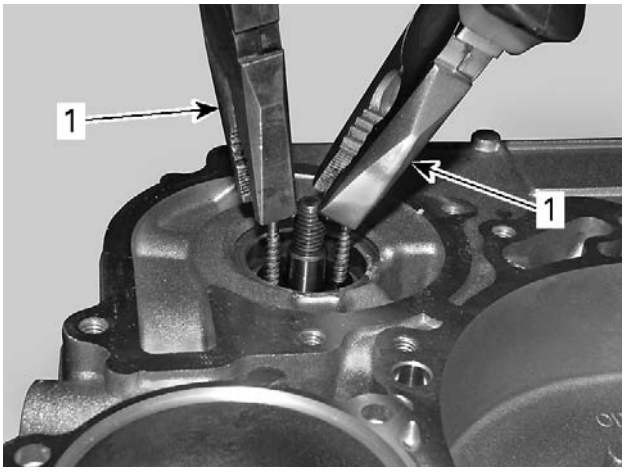

tmr2011-011-055_a

1. Pull on screws to remove seal

8. Check water pump shaft axial play. If not adequate, engine must be disassembled to replace the water pump shaft.
9. Clean oil seal seat.

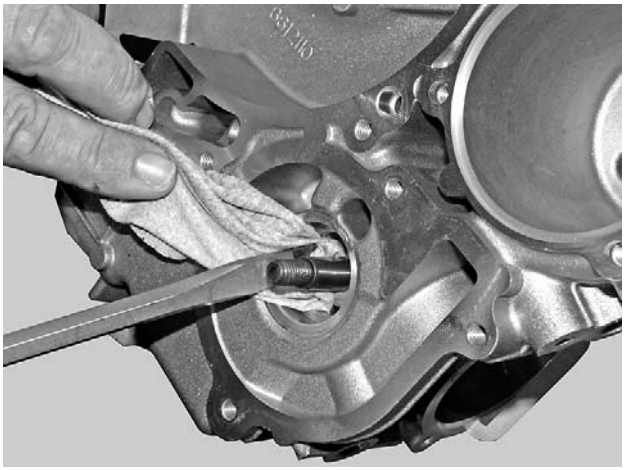

tmr2011-011-056_a

Installing the Seals

1. Apply engine oil on water pump shaft.
2. Apply grease to the lips of the oil seal.
3. Carefully install the oil seal over the water pump shaft.
4. Push the oil seal into the water pump cavity.

REQUIRED TOOL
17 mm (11/16 in) deep socket

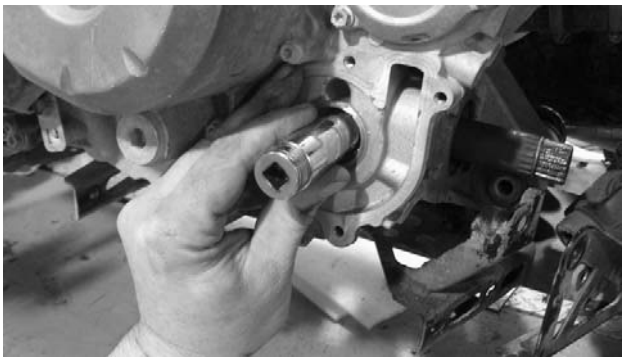

vbs2008-011-034

OIL SEAL INSTALLATION

5. Ensure that the oil seal is properly seated in water pump cavity.

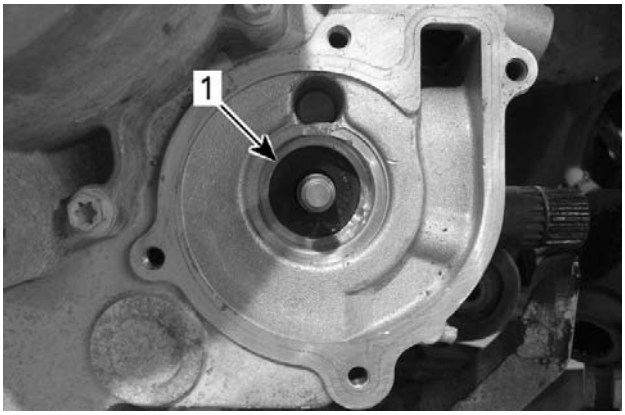

vbs2008-011-035_a

TYPICAL
1. Oil seal properly seated

6. Apply engine oil on water pump shaft.
7. Place rotary seal onto water pump shaft and pull out water pump shaft by hand.

NOTICE **Do not install the rotary seal completely into the crankcase to prevent the water pump shaft plastic gear from breaking. Push it partially in, then pull the shaft.**

8. Place a robust M8 flat washer (P/N 420 227 935) onto water pump shaft.
9. Install a M8 x 1.25 nut onto water pump shaft by hand.
10. Then thread nut **1-1/2 turns** to pull the shaft into rotary seal.

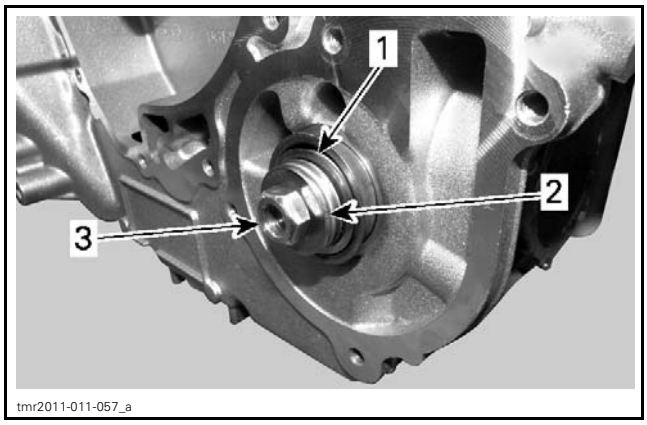

1. Rotary seal
2. M8 robust flat washer (P/N 420 227 935)
3. M8 x 1.25 nut (P/N 233 281 414)

11. Remove M8 nut.

NOTE: The robust M8 flat washer remains on water pump shaft.

12. Install rotary seal installation tools on crankcase as follows.

REQUIRED TOOLS
ROTARY SEAL PUSHER PLATE (P/N 529 036 130)
4x M6 x 85 screws (P/N 420 440 347)
4x tubes 70 mm (2.75 in)
SEAL PUSHER (P/N 529 035 766)

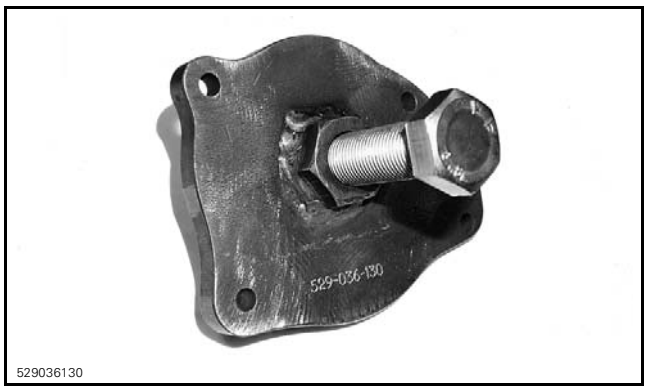

ROTARY SEAL PUSHER PLATE (P/N 529 036 130)

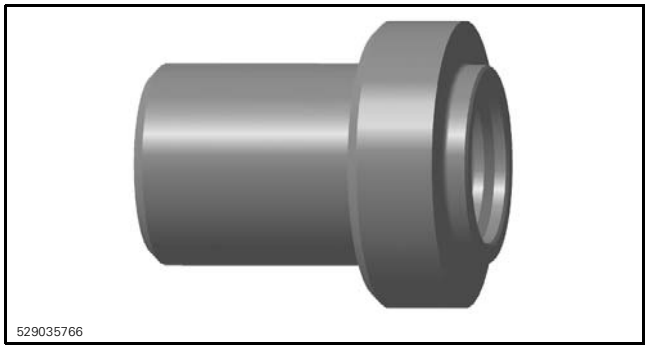

SEAL PUSHER (P/N 529 035 766)

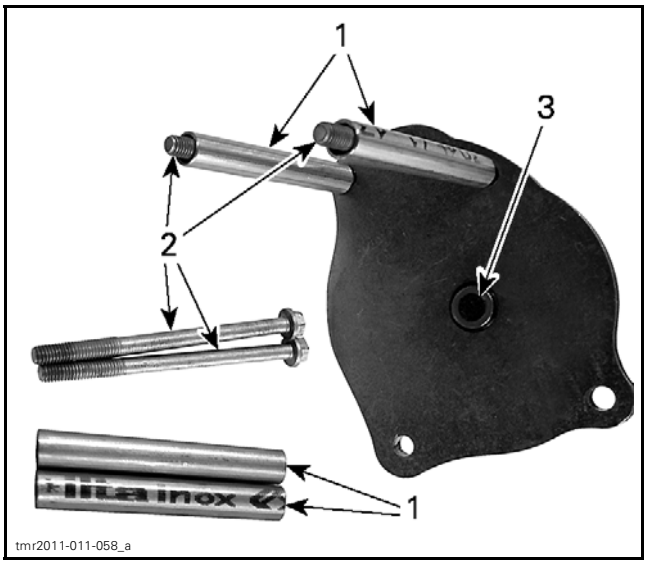

ROTARY SEAL PUSHER PLATE ASSEMBLY
1. 4 x tubes (70 mm (2.75 in) length)
2. 4 x screws M6 x 85
3. Plane surface on pusher bolt

NOTE: Make sure pusher bolt has a plane surface.

12.1 Apply a little grease at the end of tool pusher bolt.

12.2 Ensure that pusher bolt is completely unscrewed.

12.3 Install rotary seal pusher plate on crankcase by tightening M6 screws.

NOTICE **Do not use pneumatic or electric tools for tightening screws.**

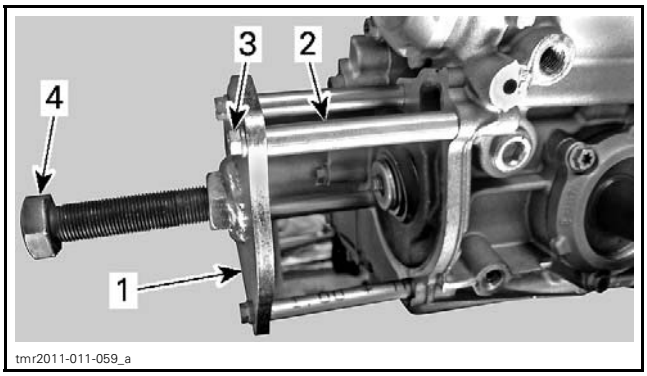

ROTARY SEAL PUSHER PLATE INSTALLATION
1. Rotary seal pusher plate
2. Tube (70 mm (2.75 in) length)
3. M6 x 85 screw
4. Pusher bolt

12.4 Install seal pusher between rotary seal pusher plate and water pump shaft.

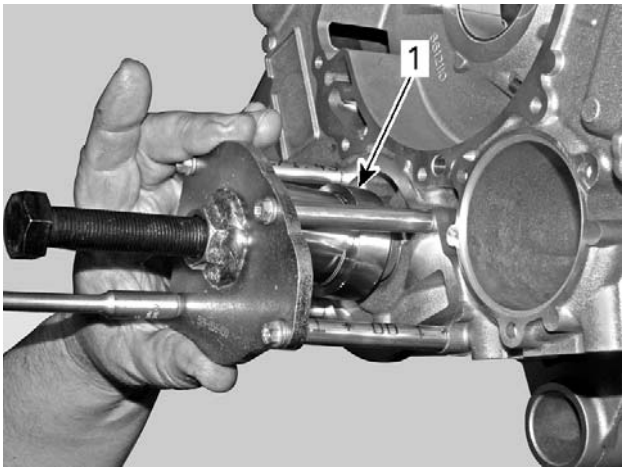

tmr2011-011-060_a

SEAL PUSHER INSTALLATION
1. Seal pusher aligned with pusher bolt

12.5 Tighten the pusher bolt by hand until it stops against the seal pusher.

13. Carefully thread the pusher bolt **1-1/2 turns**.
14. Ensure that the rotary seal is going straight into crankcase.
15. Remove rotary seal installation tools from crankcase.

Repeat the steps 9 to 15 until rotary seal is completely seated in the crankcase.

16. Remove tools from crankcase.

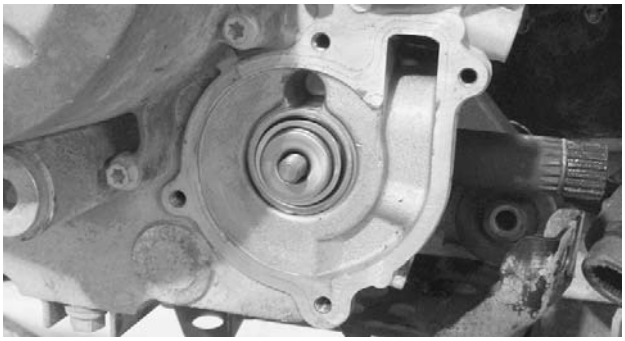

vbs2008-011-037

ROTARY SEAL PROPERLY SEATED ON CRANKCASE

17. Carry out the final adjustment of the water pump shaft as follows.
    17.1 Install M8 x 1.25 nut (P/N 233 281 414) onto water pump shaft.
    17.2 Carefully thread M8 nut until the rotary seal is flush with the end of water pump shaft threads.

vbs2008-011-040

WATER PUMP SHAFT PROPERLY ADJUSTED WITH ROTARY SEAL

NOTICE **The water pump shaft must be properly adjusted with rotary seal. The water pump shaft must move freely while pushing it toward the crankcase.**

18. Install the following parts, see procedure in this subsection.
    – *WATER PUMP IMPELLER*
    – *WATER PUMP HOUSING*.
19. Refill and bleed cooling system. Refer to *VEHICLE COOLING SYSTEM* subsection.
20. Check cooling system for leaks.

Water Pump Shaft and Seals Replacement (Disassembled Engine)

Removing the Water Pump Shaft and Seals

1. Remove the following parts:
    – *WATER PUMP HOUSING*
    – *WATER PUMP IMPELLER*
    – *WATER PUMP GEARS*.
2. Push out water pump shaft with inner portion of rotary seal from inside of crankcase MAG side.

REQUIRED TOOL
Soft hammer

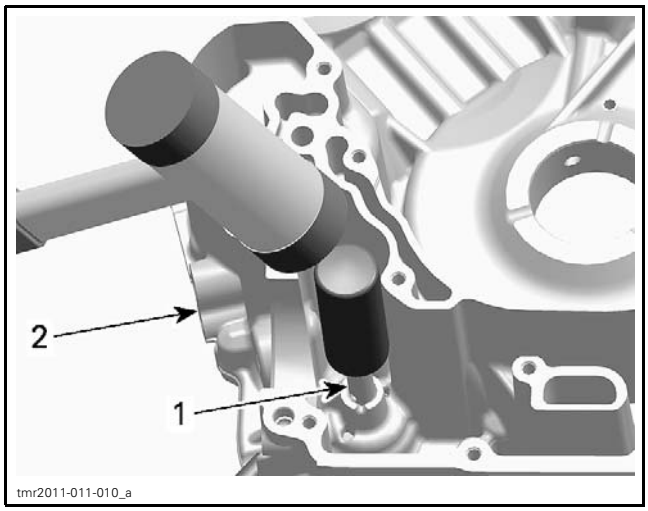

1. *Water pump shaft*
2. *Crankcase MAG side*

3. Using a blind hole puller, remove outer part of rotary seal.
4. Install expander snugly against outer part of rotary seal and pull seal out.

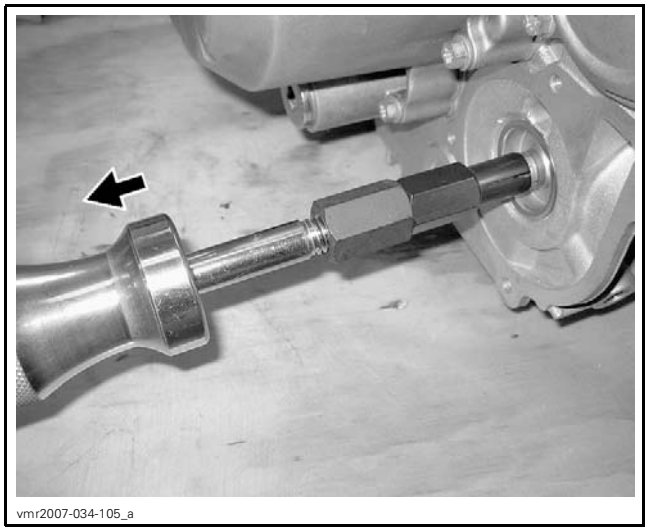

TYPICAL

5. Remove oil seal from inside of crankcase MAG side using a pusher tool.

NOTICE **Be careful not to damage the rotary seal surface in crankcase.**

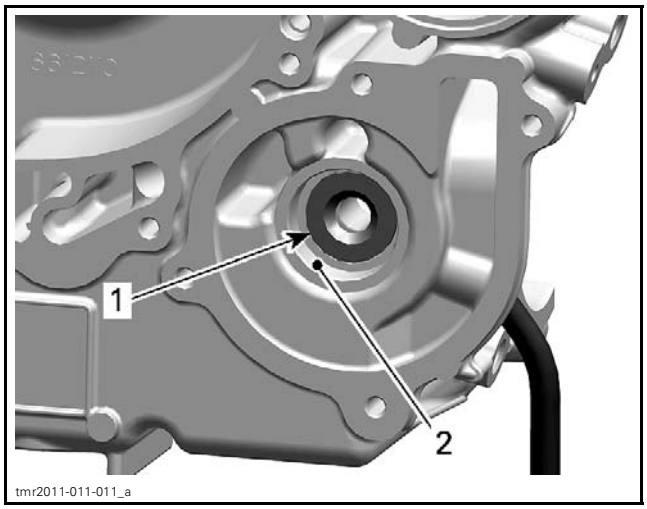

1. *Oil seal*
2. *Machined surface for rotary seal*

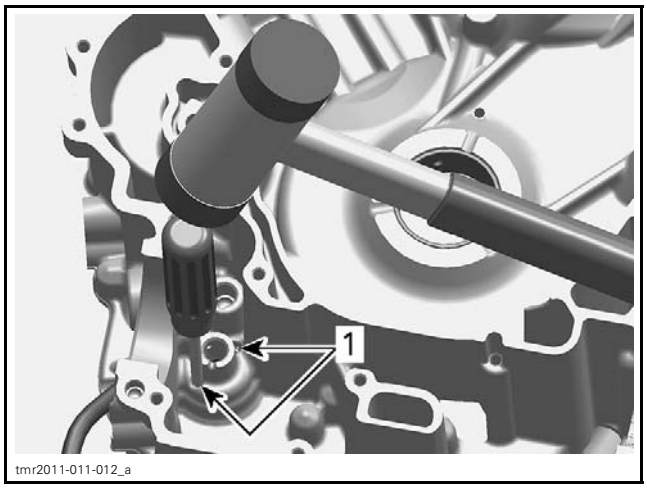

OIL SEAL REMOVAL - VIEW FROM INSIDE CRANKCASE MAG SIDE

1. *Orifices for oil seal removal*

Installing the Water Pump Shaft and Seals

The installation is the reverse of the removal procedure. However, pay attention to the following.

Use tightening torque values specified in the exploded view.

NOTE: Never apply oil on the press fit area of the oil seal and rotary seal.

Clean rotary seal surface of any old sealant.

Install oil seal.

REQUIRED TOOLS
OIL SEAL PUSHER (P/N 529 035 757)
HANDLE (P/N 420 877 650)

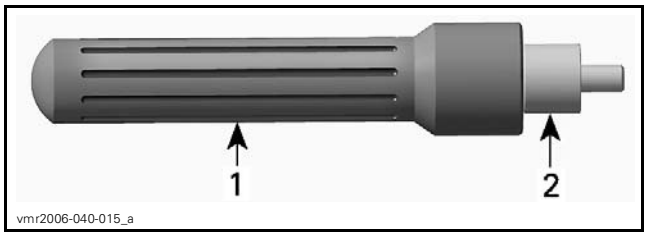

1. *Handle*
2. *Pusher*

When installing the oil seal on the pusher, make sure the sealing lip points outwards.

Push NEW oil seal in place.

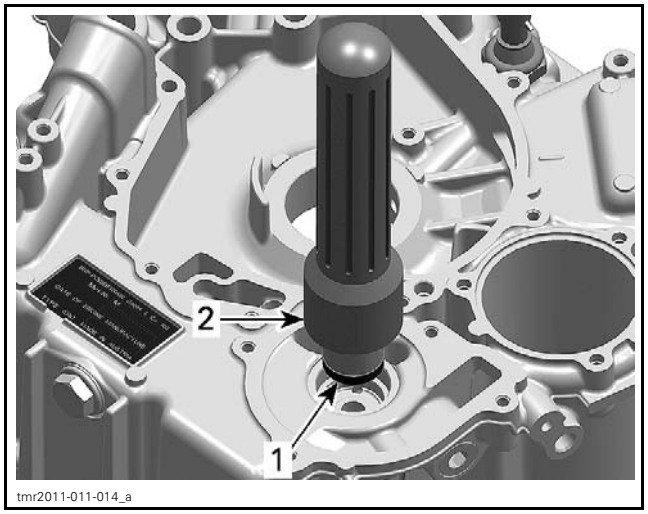

1. *Oil seal*
2. *Installer handle with oil seal pusher*

Lubricate sealing lip of the oil seal.

SERVICE PRODUCT
DOW CORNING 111 (P/N 413 707 000)

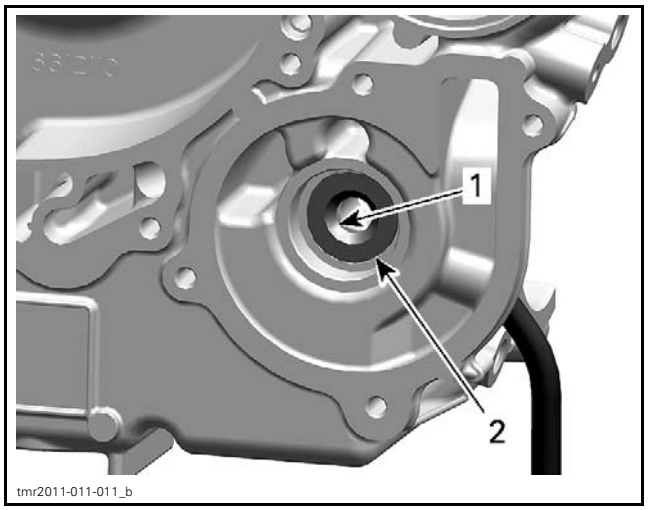

1. *Sealing lip*
2. *Oil seal properly installed*

Apply engine oil on the water pump shaft and intermediate shaft.

Slide NEW water pump shaft assembly into crankcase.

REQUIRED TOOL	
SEAL PUSHER (P/N 529 035 766)	

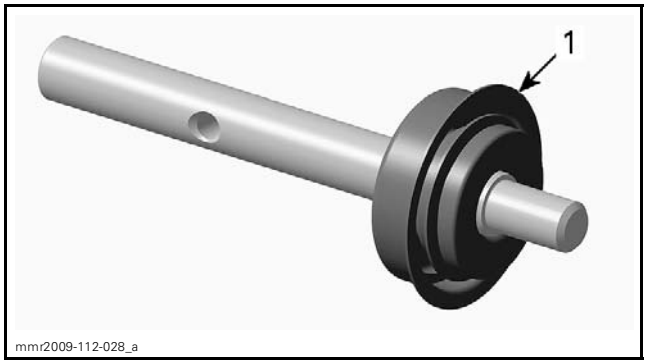

1. *Surface where rotary seal is pushed by tool*

Assembling the Water Pump Shaft

NOTICE Never use a hammer for rotary seal installation. Only use a press to avoid damaging the ceramic component.

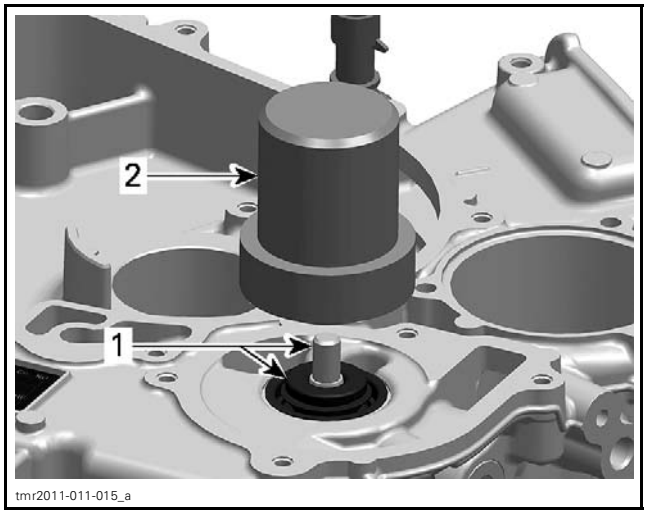

1. *Water pump shaft with rotary seal*
2. *Water pump seal installer*

NOTICE After installation, water pump shaft with rotary seal must rotate freely.

WATER PUMP GEARS

Water Pump Gears Identification

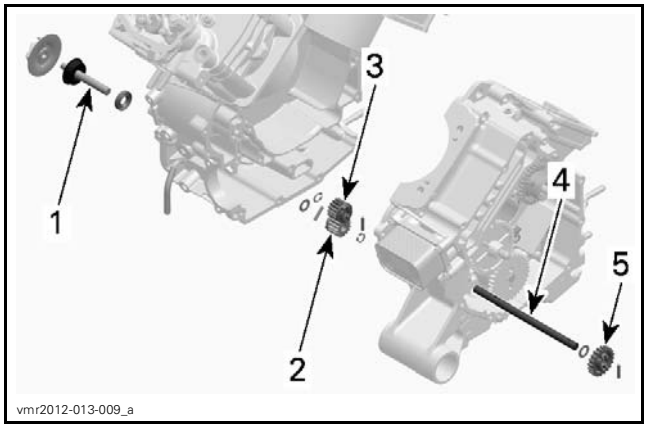

TYPICAL
1. *Water pump shaft*
2. *Water pump gear*
3. *Water pump* **intermediate drive** *gear*
4. *Water pump* **intermediate** *shaft*
5. *Water pump* **drive** *gear (See CYLINDER BLOCK subsection)*

Inspecting the Water Pump Gears

Water Pump Gear

Inspect water pump gear for wear and damage on the snap mechanism to the needle pin. Replace if damaged.

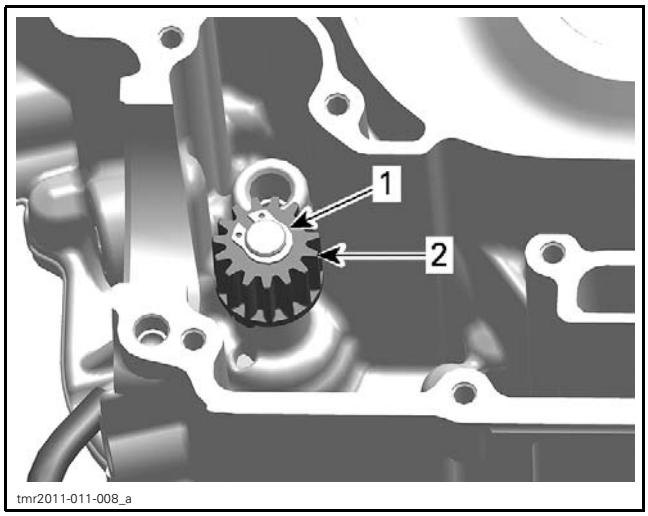

CRANKCASE MAG SIDE
1. *Circlip*
2. *Water pump gear*

Water Pump Intermediate Drive Gear

Check water pump intermediate drive gear for wear or broken teeth. Replace if damaged.

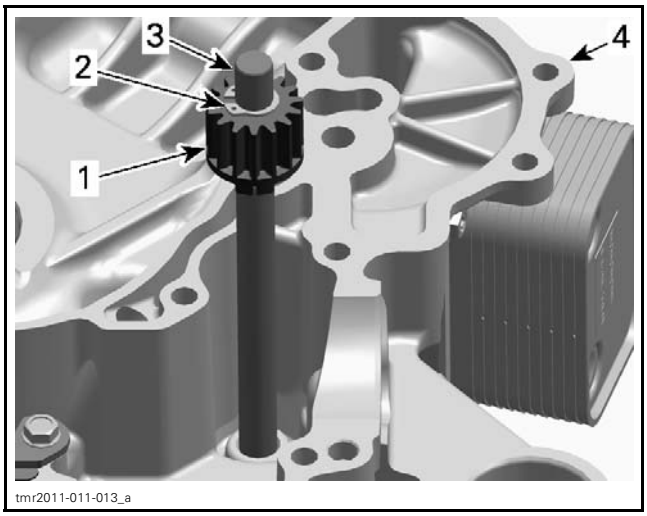

CRANKCASE PTO SIDE
1. *Water pump intermediate drive gear*
2. *Circlip*
3. *Water pump intermediate shaft*
4. *Crankcase PTO side*

Water Pump Drive Gear

See *CYLINDER BLOCK* subsection.

Removing the Water Pump Gears

Water Pump Gear

1. Remove circlip retaining water pump gear and discard it.

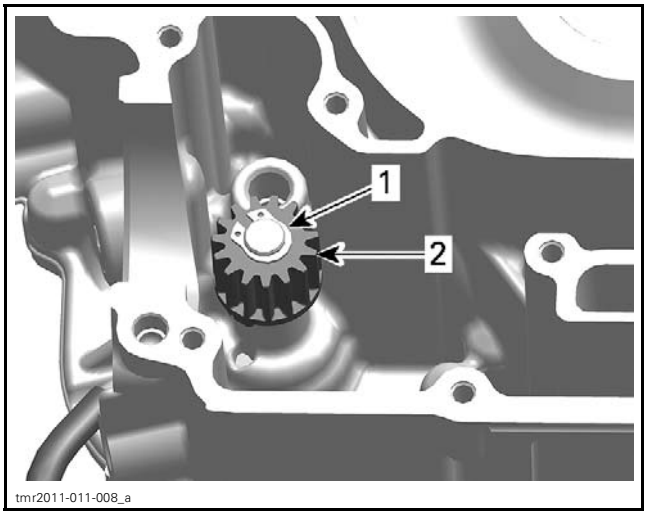

CRANKCASE MAG SIDE
1. *Circlip*
2. *Water pump gear*

2. Remove the water pump gear and the thrust washer.

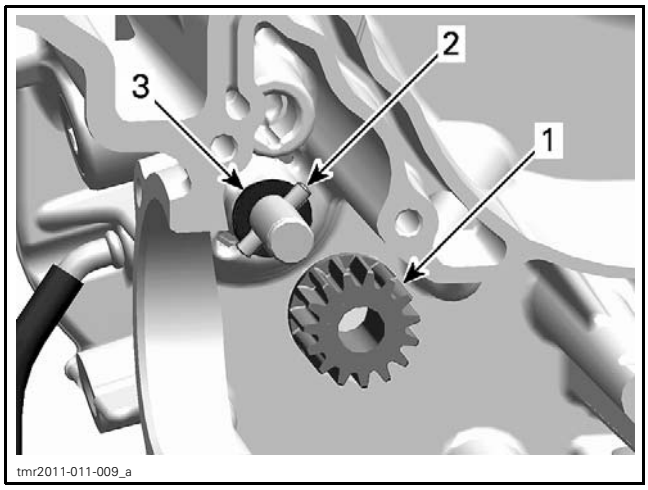

CRANKCASE MAG SIDE
1. *Water pump gear*
2. *Needle pin*
3. *Thrust washer*

Water Pump Intermediate Drive Gear

1. Remove circlip retaining water pump intermediate drive gear and discard it.

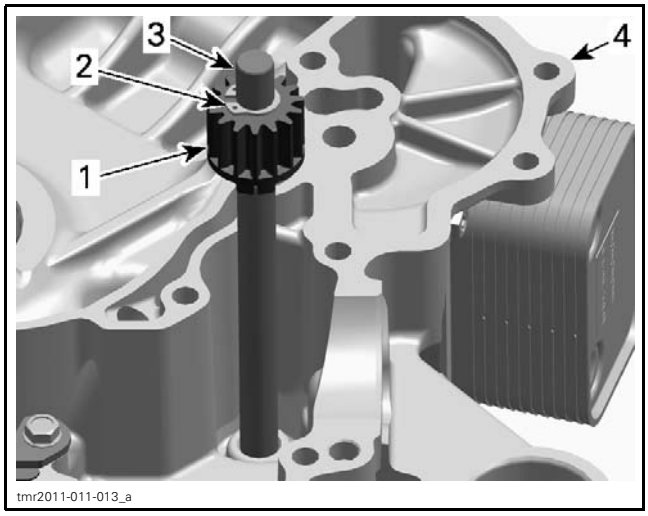

CRANKCASE PTO SIDE
1. *Water pump intermediate drive gear*
2. *Circlip*
3. *Water pump intermediate shaft*
4. *Crankcase PTO side*

2. Remove the following parts:
   – Water pump intermediate drive gear
   – Needle pin.

Water Pump Drive Gear

See *CYLINDER BLOCK* subsection.

Installing the Water Pump Gears

Water Pump Gear

Install the water pump gear.

NOTICE **A missing thrust washer will cause a leaking rotary seal.**

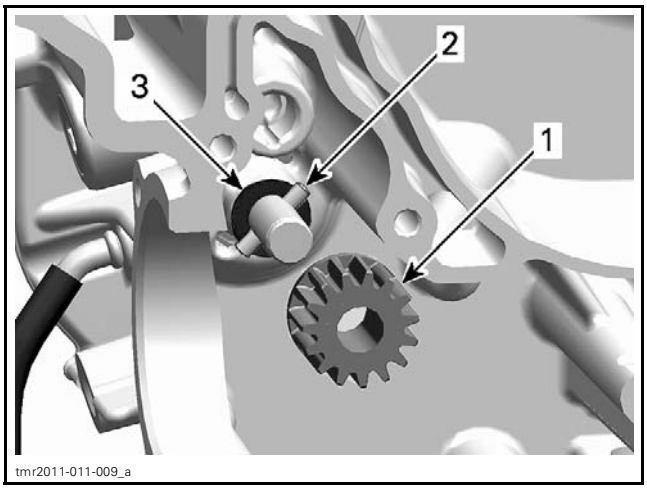

1. *Water pump gear*
2. *Needle pin*
3. *Thrust washer*

NOTE: Ensure water pump gear snaps properly onto needle pin.

Install NEW circlip to retain water pump gear.

NOTICE **Never use the circlip a second time. Always install a NEW one.**

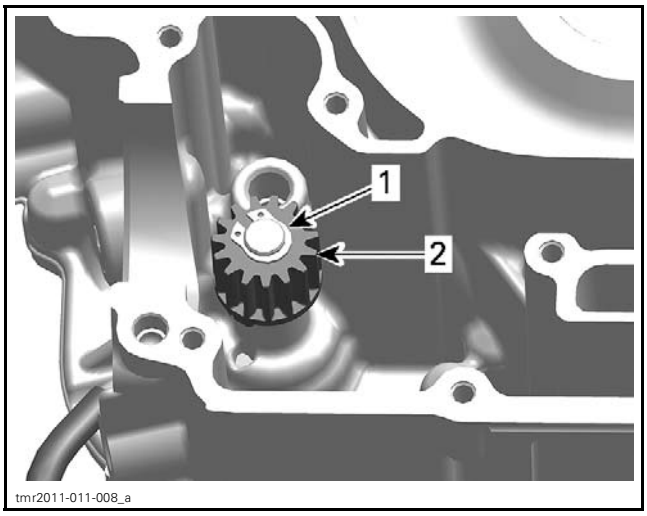

1. *Circlip*
2. *Water pump gear*

Water Pump Intermediate Drive Gear

Install the following parts on water pump intermediate shaft.
– Needle pin
– Water pump intermediate drive gear.

Install NEW circlip to retain water pump intermediate drive gear.

NOTICE **Never use the circlip a second time. Always install a NEW one.**

Water Pump Drive Gear

See *CYLINDER BLOCK* subsection.

ENGINE COOLING SYSTEM

SERVICE TOOLS

Description	Part Number	Page
HANDLE	420 877 650	10
OIL SEAL PUSHER	529 035 757	10
ROTARY SEAL PUSHER PLATE	529 036 130	7
SEAL PUSHER	529 035 766	7, 11

SERVICE PRODUCTS

Description	Part Number	Page
DOW CORNING 111	413 707 000	10

WATER PUMP

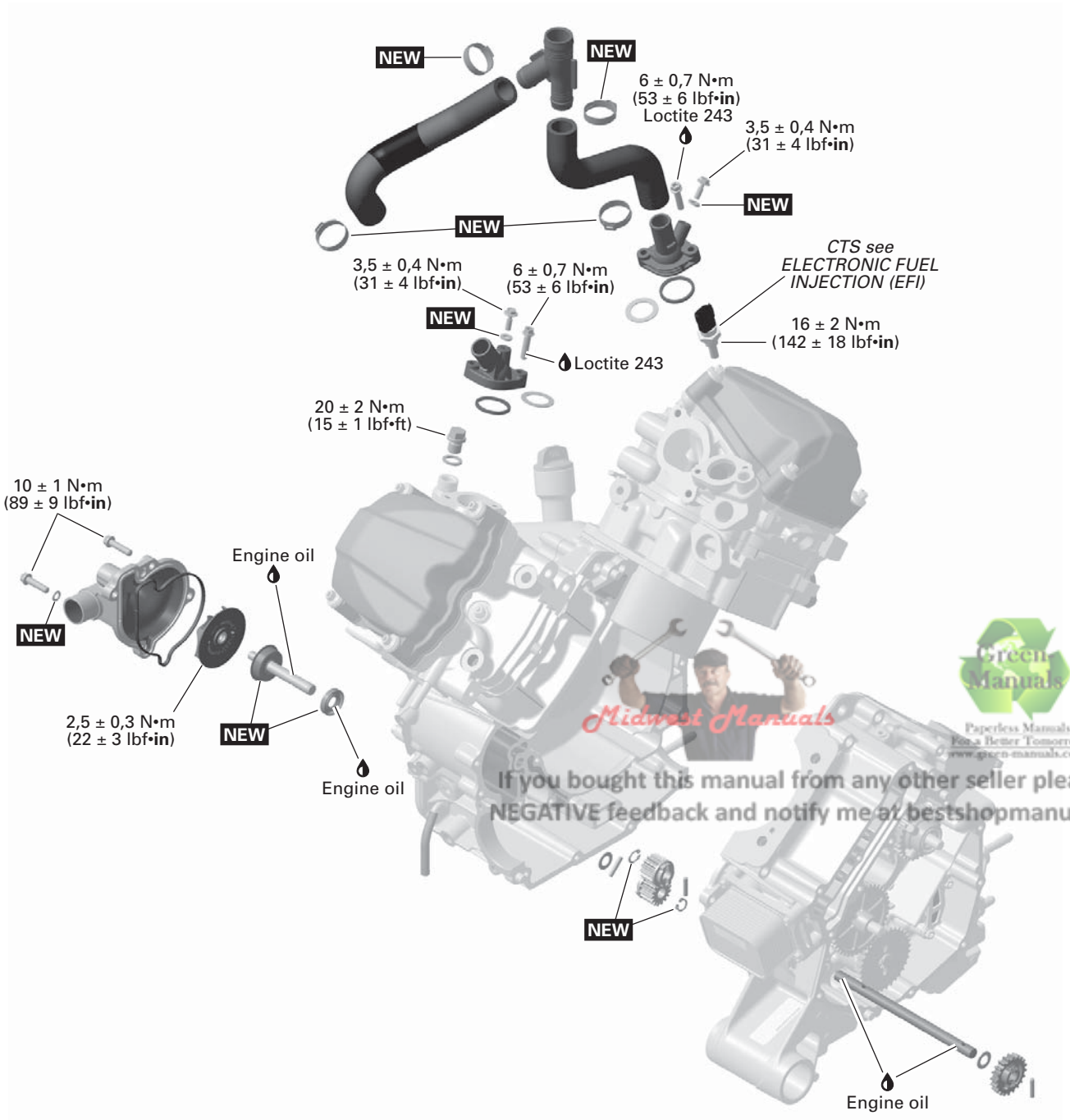

Midwest Manuals
Green Manuals
Paperless Manuals
For a Better Tomorrow
www.green-manuals.com
If you bought this manual from any other seller please leave them
NEGATIVE feedback and notify me at bestshopmanuals@gmail.com

NEW = Component must be replaced when removed.

tmr2016-114-001_b

GENERAL

NOTICE **Never start engine without coolant. Some engine parts such as the rotary seal on the water pump shaft can be damaged.**

INSPECTION

INSPECTING THE ENGINE COOLING SYSTEM

Check the leak indicator hose for oil or coolant.

NOTE: Leaking coolant indicates a defective rotary seal. Leaking oil indicates a defective oil seal. If either seal is leaking, both seals must be replaced at the same time. Refer to *WATER PUMP SHAFT AND SEALS* in this subsection

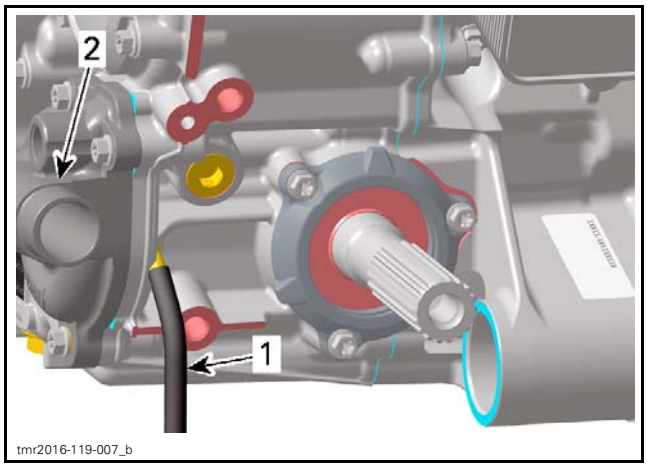

1. *Leak indicator hose*
2. *Water pump cover*

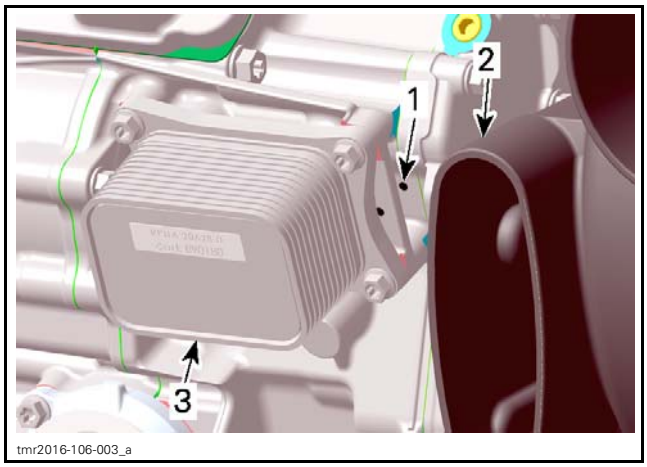

1. *Leak indicator hose*
2. *CVT air outlet*
3. *Oil cooler (HD10 engine only)*

For cooling system inspection refer to *INSPECTING THE COOLING SYSTEM* and *PERFORMING A COOLING SYSTEM LEAK TEST* in the *COOLING SYSTEM - VEHICLE COMPONENTS* subsection.

PROCEDURES

COOLANT TEMPERATURE SENSOR (CTS)

Refer to *ELECTRONIC FUEL INJECTION (EFI)* subsection.

WATER PUMP HOUSING

Water Pump Housing Location

The water pump housing is located on the engine MAG side (RH side of engine).

Removing the Water Pump Housing

WARNING

To avoid potential burns, do not remove the radiator cap or loosen the coolant drain plug if the engine is hot.

Drain cooling system. Refer to *VEHICLE COOLING SYSTEM* subsection.

Remove radiator outlet hose from water pump housing.

Remove screws retaining water pump housing.

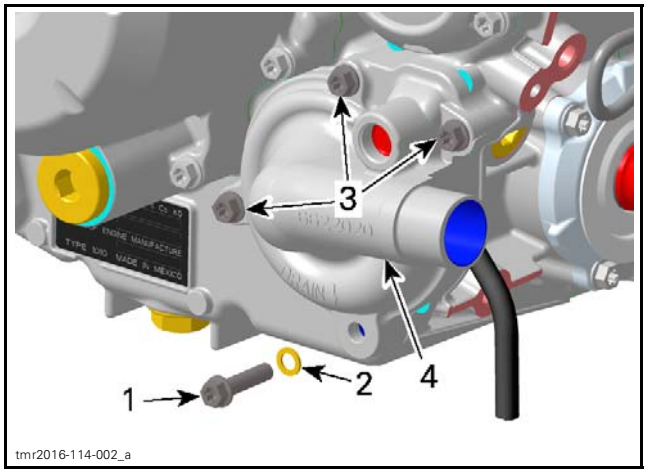

1. *Coolant drain plug*
2. *Sealing ring*
3. *Screws*
4. *Water pump housing*

Pull water pump housing to remove it.

Inspecting the Water Pump Housing

Check if gasket is brittle, hard or damaged and replace as necessary.

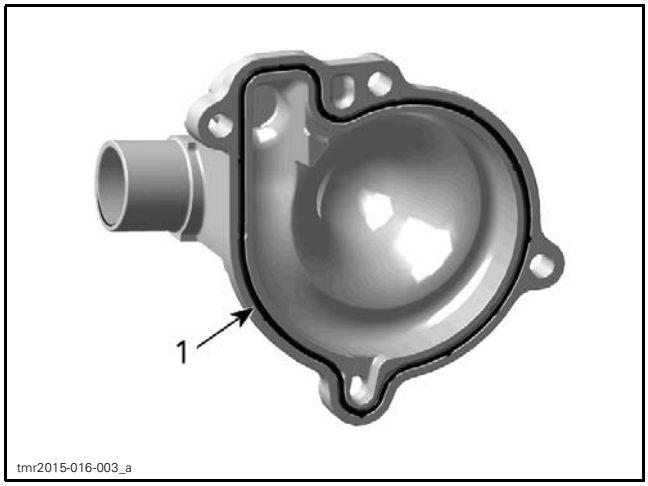

1. Gasket

Installing the Water Pump Housing

The installation is the opposite of the removal procedure.

NOTICE **To prevent leaking, take care that the gasket is exactly in groove when you reinstall the water pump housing.**

Tighten screws of water pump housing in a criss cross sequence to specification.

TIGHTENING TORQUE	
Water pump housing screws	10 N•m ± 1 N•m (89 lbf•**in** ± 9 lbf•**in**)

WATER PUMP IMPELLER

Removing the Water Pump Impeller

Remove water pump housing.

Unscrew impeller.

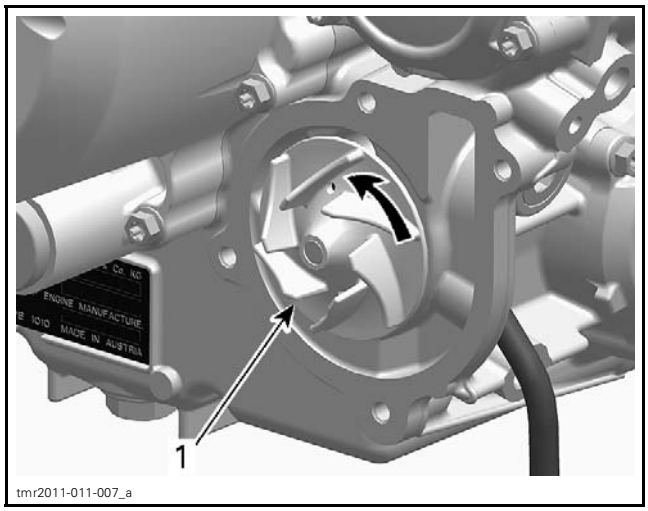

1. Turn counterclockwise to unscrew

Inspecting the Water Pump Impeller

Check impeller for cracks or other damage. Replace impeller if damaged.

Installing the Water Pump Impeller

The installation is the reverse of the removal procedure.

NOTICE **Be careful not to damage impeller fins during installation.**

WATER PUMP SHAFT AND SEALS

Use these guidelines to service these parts.

DEFECTIVE PART	ACTION
Rotary seal	Replace: - Rotary seal - Oil seal (assembled engine)
Oil seal	Replace: - Rotary seal - Oil seal (assembled engine)
Water pump shaft	Replace: - Water pump shaft assembly (including rotary seal) - Oil seal (engine disassembled)

NOTICE **Rotary seal must be replaced if water pump shaft is to be replaced.**

Replacing the Water Pump Seals (Assembled Engine)

NOTE: Read and thoroughly understand the entire procedure before starting it.

Removing the Seals

1. Remove the following parts, see procedure in this subsection.
   – *WATER PUMP HOUSING*
   – *WATER PUMP IMPELLER*.
2. Carefully pry out inner part of the rotary seal using 2 screwdrivers.

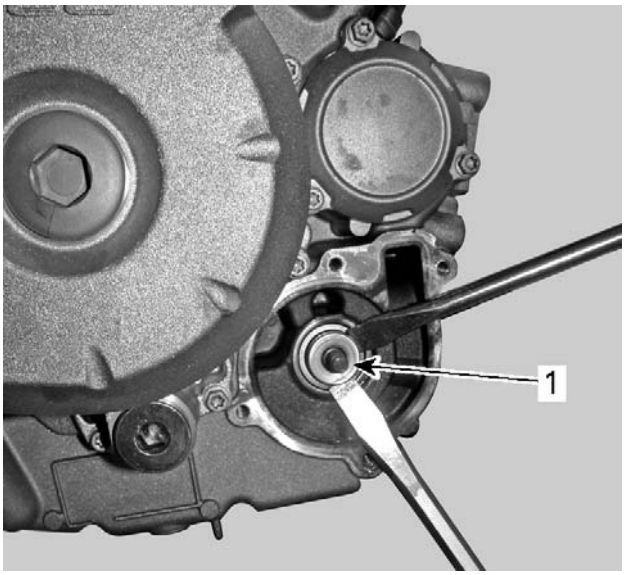

tmr2011-011-050_a

1. Inner part of rotary seal

vbs2008-011-005

TYPICAL - INNER PART OF ROTARY SEAL REMOVED

3. Carefully bend down the outer part of rotary seal lip using a small chisel.

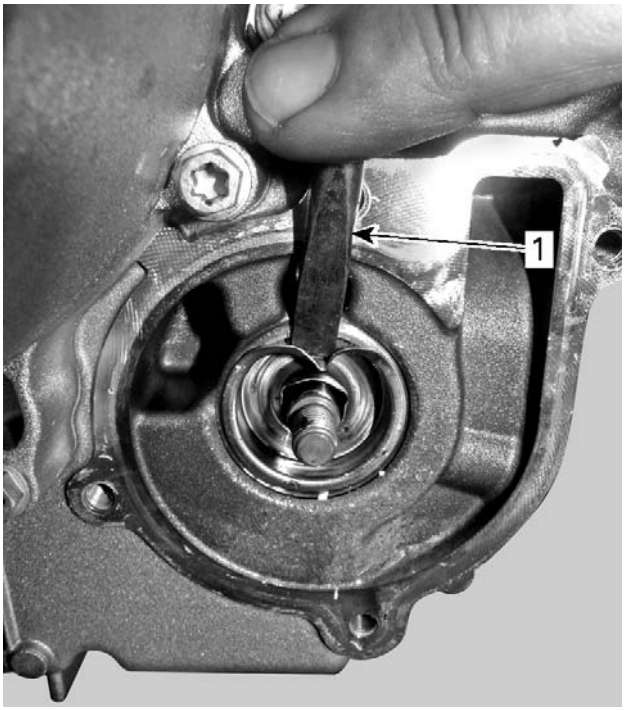

tmr2011-011-051_a

1. Small chisel

4. Use 2 screwdrivers and carefully remove the outer part of the rotary seal.

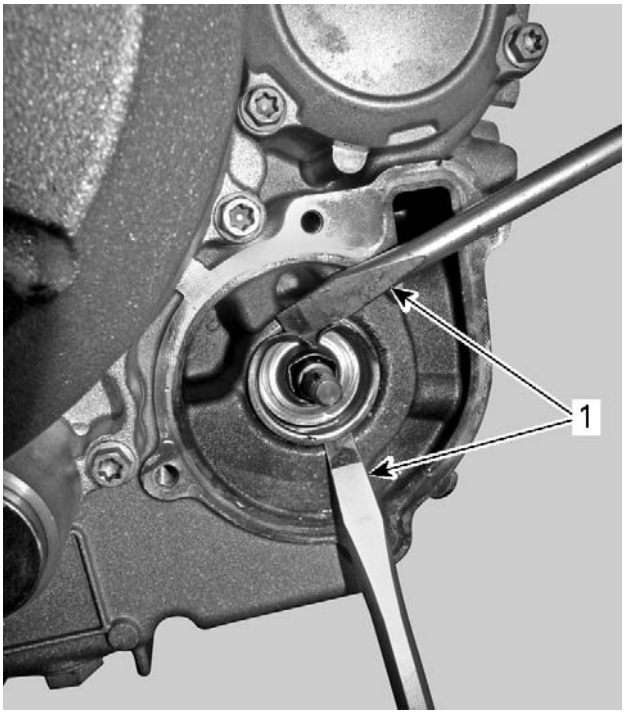

tmr2011-011-052_a

1. Screwdrivers

NOTICE Be careful not to damage the crankcase while removing outer part of the rotary seal.

5. Thoroughly remove carefully sealing residue and burr of rotary seal using a scraper.

NOTICE Be careful not to damage water pump shaft.

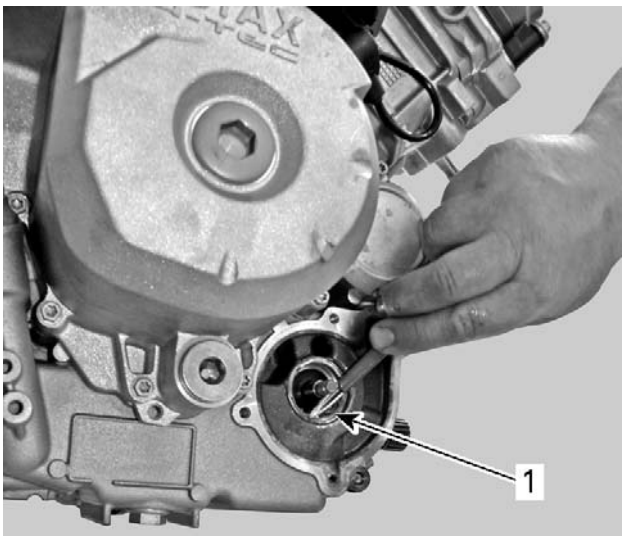

tmr2011-011-053_a

1. Scraper

6. Install 2 wooden screws in the seal.

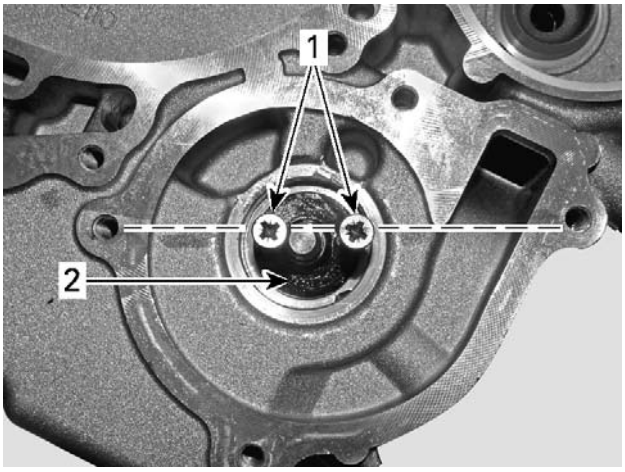

tmr2011-011-054_a

1. Wooden screws
2. Oil seal

7. Remove oil seal from crankcase by pulling screws with pliers.

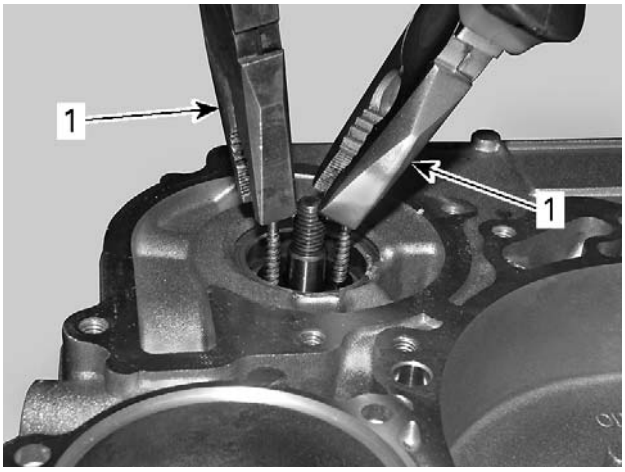

tmr2011-011-055_a

1. Pull on screws to remove seal

8. Check water pump shaft axial play. If not adequate, engine must be disassembled to replace the water pump shaft.
9. Clean oil seal seat.

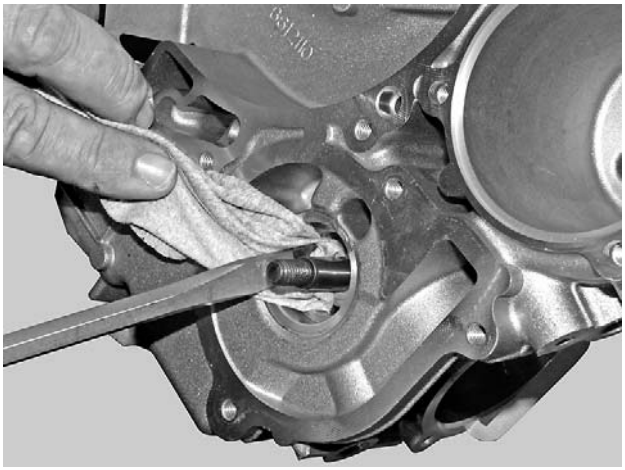

tmr2011-011-056_a

Installing the Seals

1. Apply engine oil on water pump shaft.
2. Apply grease to the lips of the oil seal.
3. Carefully install the oil seal over the water pump shaft.
4. Push the oil seal into the water pump cavity.

REQUIRED TOOL
17 mm (11/16 in) deep socket

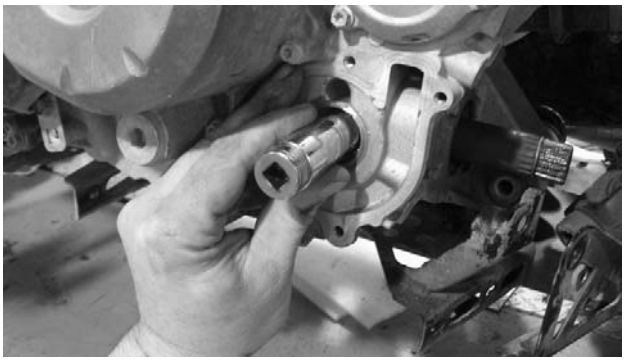

OIL SEAL INSTALLATION

5. Ensure that the oil seal is properly seated in water pump cavity.

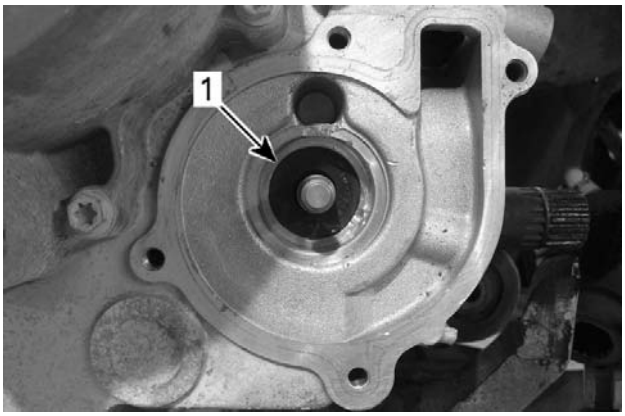

TYPICAL
1. Oil seal properly seated

6. Apply engine oil on water pump shaft.
7. Place rotary seal onto water pump shaft and pull out water pump shaft by hand.

NOTICE **Do not install the rotary seal completely into the crankcase to prevent the water pump shaft plastic gear from breaking. Push it partially in, then pull the shaft.**

8. Place a robust M8 flat washer (P/N 420 227 935) onto water pump shaft.
9. Install a M8 x 1.25 nut onto water pump shaft by hand.
10. Then thread nut **1-1/2 turns** to pull the shaft into rotary seal.

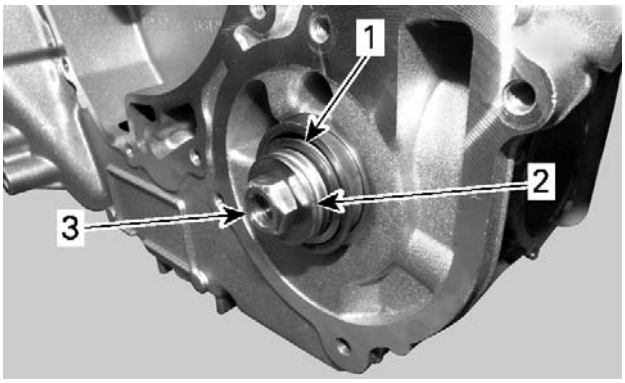

1. Rotary seal
2. M8 robust flat washer (P/N 420 227 935)
3. M8 x 1.25 nut (P/N 233 281 414)

11. Remove M8 nut.

NOTE: The robust M8 flat washer remains on water pump shaft.

12. Install rotary seal installation tools on crankcase as follows.

REQUIRED TOOLS
ROTARY SEAL PUSHER PLATE (P/N 529 036 130)
4x M6 x 85 screws (P/N 420 440 347)
4x tubes 70 mm (2.75 in)
SEAL PUSHER (P/N 529 035 766)

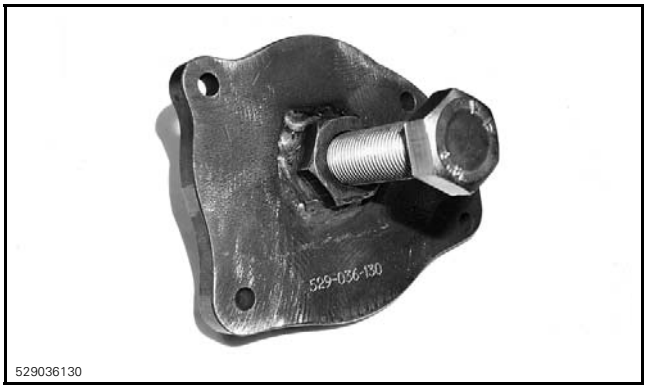

ROTARY SEAL PUSHER PLATE (P/N 529 036 130)

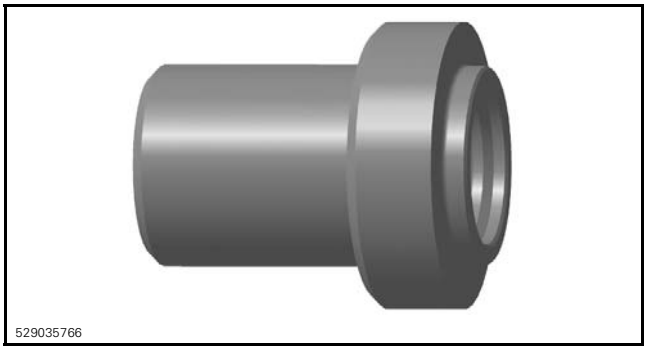

SEAL PUSHER (P/N 529 035 766)

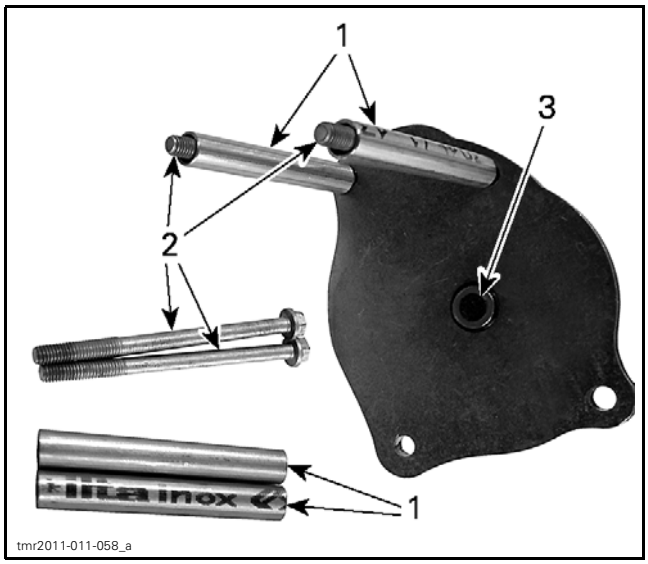

ROTARY SEAL PUSHER PLATE ASSEMBLY
1. *4 x tubes (70 mm (2.75 in) length)*
2. *4 x screws M6 x 85*
3. *Plane surface on pusher bolt*

NOTE: Make sure pusher bolt has a plane surface.

12.1 Apply a little grease at the end of tool pusher bolt.

12.2 Ensure that pusher bolt is completely unscrewed.

12.3 Install rotary seal pusher plate on crankcase by tightening M6 screws.

NOTICE **Do not use pneumatic or electric tools for tightening screws.**

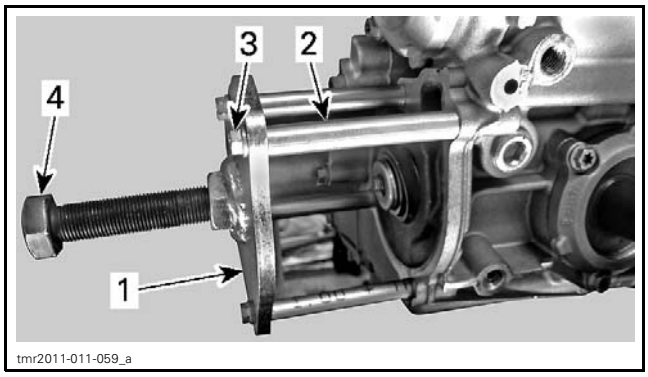

ROTARY SEAL PUSHER PLATE INSTALLATION
1. *Rotary seal pusher plate*
2. *Tube (70 mm (2.75 in) length)*
3. *M6 x 85 screw*
4. *Pusher bolt*

12.4 Install seal pusher between rotary seal pusher plate and water pump shaft.

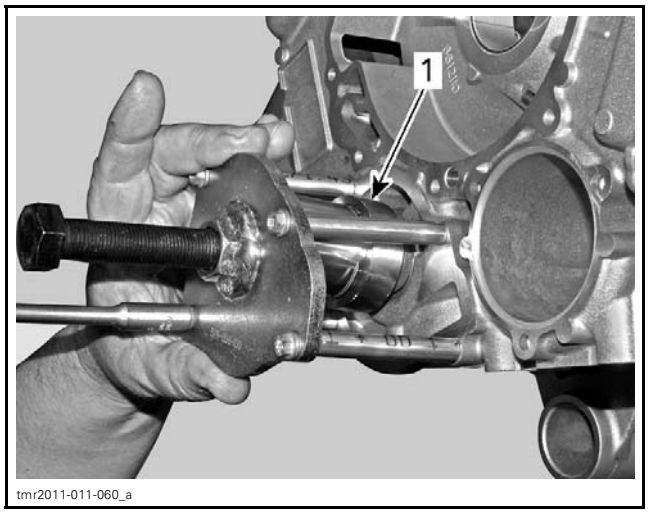

SEAL PUSHER INSTALLATION
1. *Seal pusher aligned with pusher bolt*

12.5 Tighten the pusher bolt by hand until it stops against the seal pusher.

13. Carefully thread the pusher bolt **1-1/2 turns**.
14. Ensure that the rotary seal is going straight into crankcase.
15. Remove rotary seal installation tools from crankcase.

Repeat the steps 9 to 15 until rotary seal is completely seated in the crankcase.

16. Remove tools from crankcase.

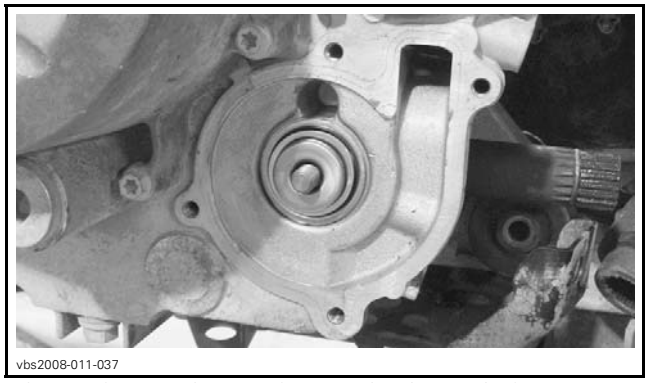

ROTARY SEAL PROPERLY SEATED ON CRANKCASE

17. Carry out the final adjustment of the water pump shaft as follows.

17.1 Install M8 x 1.25 nut (P/N 233 281 414) onto water pump shaft.

17.2 Carefully thread M8 nut until the rotary seal is flush with the end of water pump shaft threads.

vbs2008-011-040

WATER PUMP SHAFT PROPERLY ADJUSTED WITH ROTARY SEAL

NOTICE **The water pump shaft must be properly adjusted with rotary seal. The water pump shaft must move freely while pushing it toward the crankcase.**

18. Install the following parts, see procedure in this subsection.
    - *WATER PUMP IMPELLER*
    - *WATER PUMP HOUSING*.
19. Refill and bleed cooling system. Refer to *VEHICLE COOLING SYSTEM* subsection.
20. Check cooling system for leaks.

Water Pump Shaft and Seals Replacement (Disassembled Engine)

Removing the Water Pump Shaft and Seals

1. Remove the following parts:
    - *WATER PUMP HOUSING*
    - *WATER PUMP IMPELLER*
    - *WATER PUMP GEARS*.
2. Push out water pump shaft with inner portion of rotary seal from inside of crankcase MAG side.

REQUIRED TOOL
Soft hammer

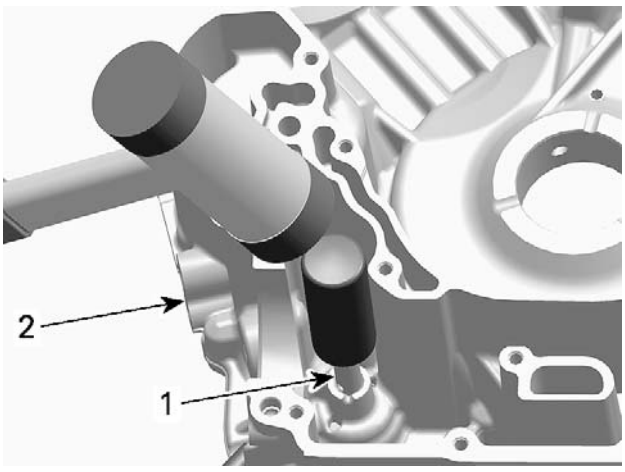

tmr2011-011-010_a

1. *Water pump shaft*
2. *Crankcase MAG side*

3. Using a blind hole puller, remove outer part of rotary seal.
4. Install expander snugly against outer part of rotary seal and pull seal out.

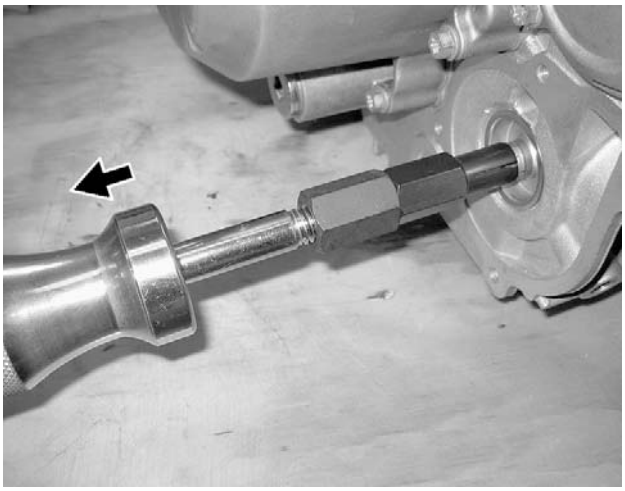
vmr2007-034-105_a

TYPICAL

5. Remove oil seal from inside of crankcase MAG side using a pusher tool.

NOTICE **Be careful not to damage the rotary seal surface in crankcase.**

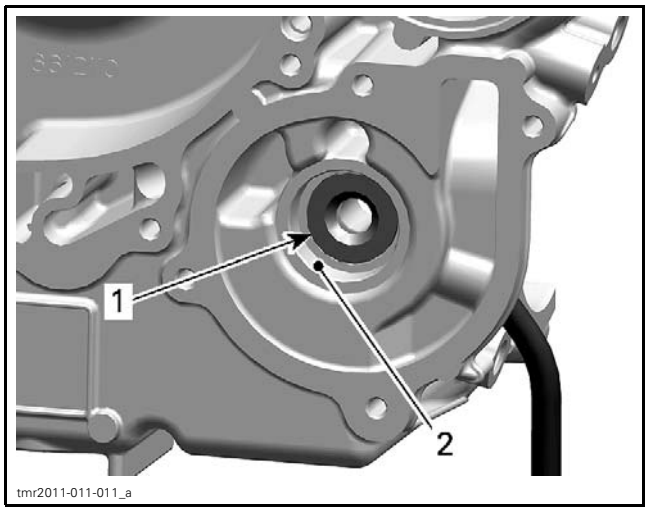

1. *Oil seal*
2. *Machined surface for rotary seal*

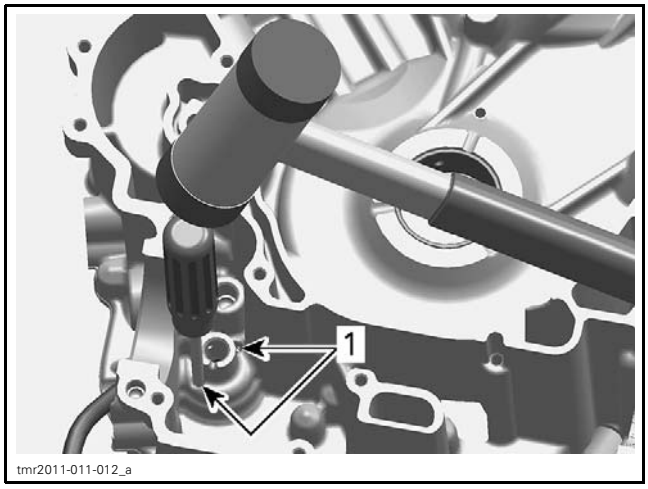

OIL SEAL REMOVAL - VIEW FROM INSIDE CRANKCASE MAG SIDE
1. *Orifices for oil seal removal*

Installing the Water Pump Shaft and Seals

The installation is the reverse of the removal procedure. However, pay attention to the following.

Use tightening torque values specified in the exploded view.

NOTE: Never apply oil on the press fit area of the oil seal and rotary seal.

Clean rotary seal surface of any old sealant.

Install oil seal.

REQUIRED TOOLS
OIL SEAL PUSHER (P/N 529 035 757)
HANDLE (P/N 420 877 650)

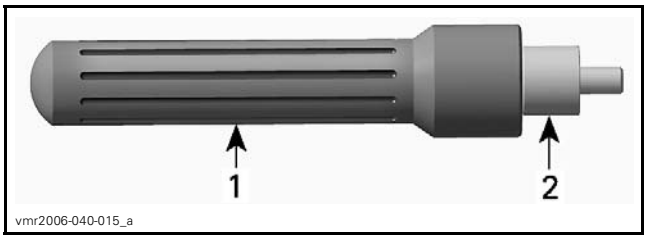

1. *Handle*
2. *Pusher*

When installing the oil seal on the pusher, make sure the sealing lip points outwards.

Push NEW oil seal in place.

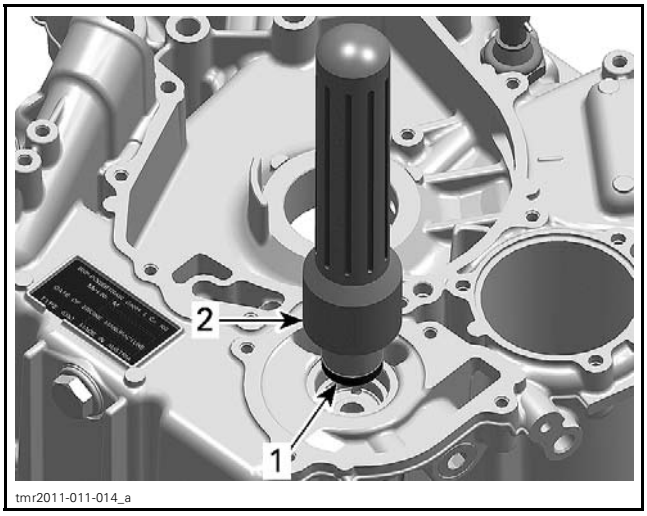

1. *Oil seal*
2. *Installer handle with oil seal pusher*

Lubricate sealing lip of the oil seal.

SERVICE PRODUCT
DOW CORNING 111 (P/N 413 707 000)

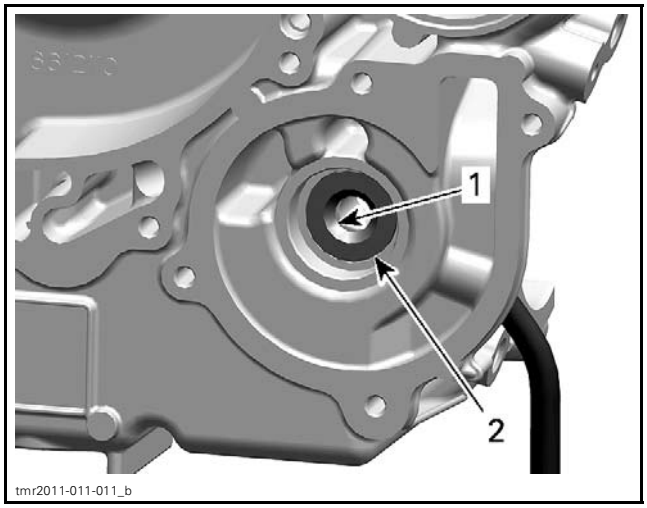

1. *Sealing lip*
2. *Oil seal properly installed*

Apply engine oil on the water pump shaft and intermediate shaft.

Slide NEW water pump shaft assembly into crankcase.

REQUIRED TOOL	
SEAL PUSHER (P/N 529 035 766)	

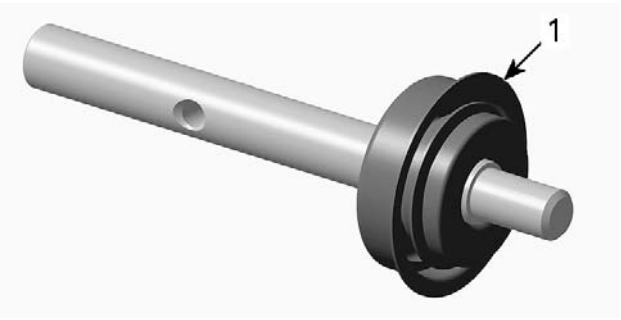

1. *Surface where rotary seal is pushed by tool*

Assembling the Water Pump Shaft

NOTICE Never use a hammer for rotary seal installation. Only use a press to avoid damaging the ceramic component.

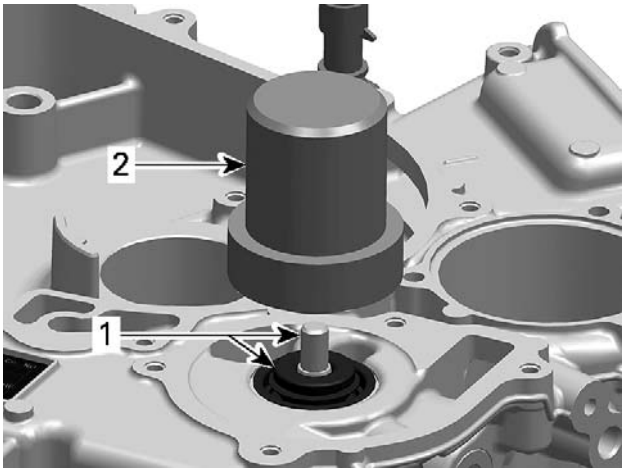

1. *Water pump shaft with rotary seal*
2. *Water pump seal installer*

NOTICE After installation, water pump shaft with rotary seal must rotate freely.

WATER PUMP GEARS

Water Pump Gears Identification

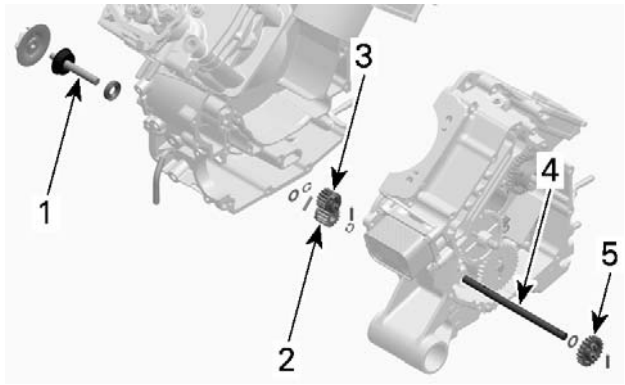

TYPICAL
1. *Water pump shaft*
2. *Water pump gear*
3. *Water pump* **intermediate drive** *gear*
4. *Water pump* **intermediate** *shaft*
5. *Water pump* **drive** *gear (See CYLINDER BLOCK subsection)*

Inspecting the Water Pump Gears

Water Pump Gear

Inspect water pump gear for wear and damage on the snap mechanism to the needle pin. Replace if damaged.

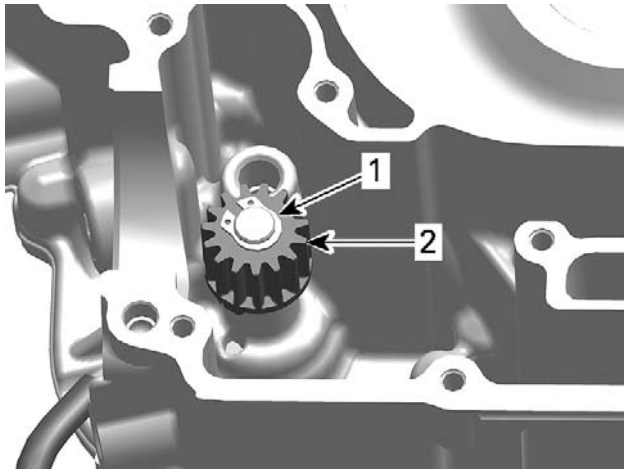

CRANKCASE MAG SIDE
1. *Circlip*
2. *Water pump gear*

Water Pump Intermediate Drive Gear

Check water pump intermediate drive gear for wear or broken teeth. Replace if damaged.

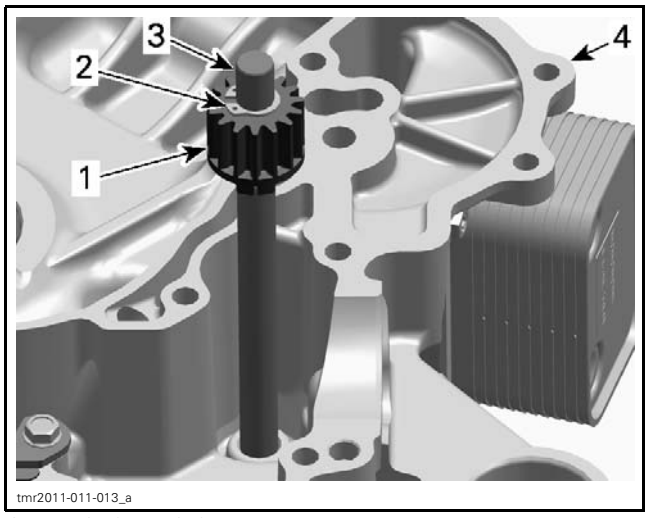

CRANKCASE PTO SIDE
1. *Water pump intermediate drive gear*
2. *Circlip*
3. *Water pump intermediate shaft*
4. *Crankcase PTO side*

Water Pump Drive Gear

See *CYLINDER BLOCK* subsection.

Removing the Water Pump Gears

Water Pump Gear

1. Remove circlip retaining water pump gear and discard it.

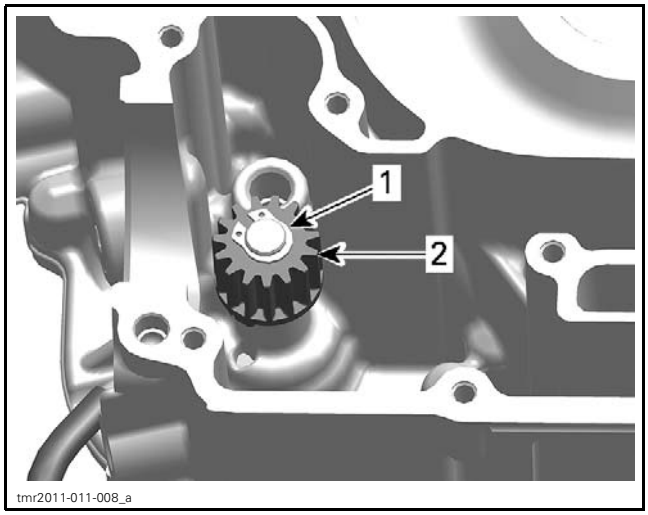

CRANKCASE MAG SIDE
1. *Circlip*
2. *Water pump gear*

2. Remove the water pump gear and the thrust washer.

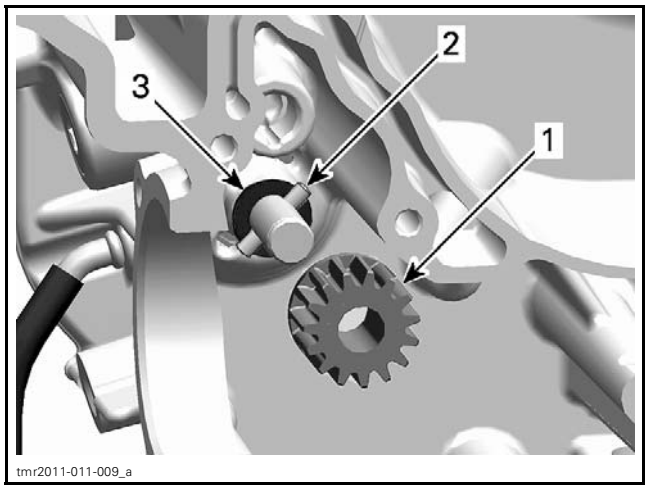

CRANKCASE MAG SIDE
1. *Water pump gear*
2. *Needle pin*
3. *Thrust washer*

Water Pump Intermediate Drive Gear

1. Remove circlip retaining water pump intermediate drive gear and discard it.

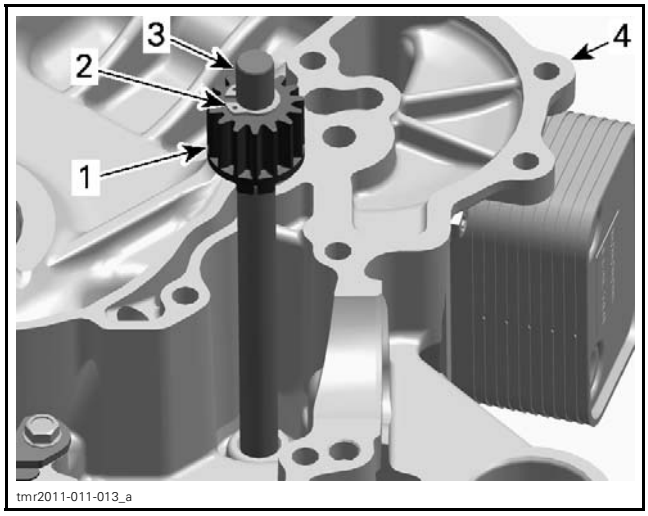

CRANKCASE PTO SIDE
1. *Water pump intermediate drive gear*
2. *Circlip*
3. *Water pump intermediate shaft*
4. *Crankcase PTO side*

2. Remove the following parts:
   – Water pump intermediate drive gear
   – Needle pin.

Water Pump Drive Gear

See *CYLINDER BLOCK* subsection.

Installing the Water Pump Gears

Water Pump Gear

Install the water pump gear.

NOTICE **A missing thrust washer will cause a leaking rotary seal.**

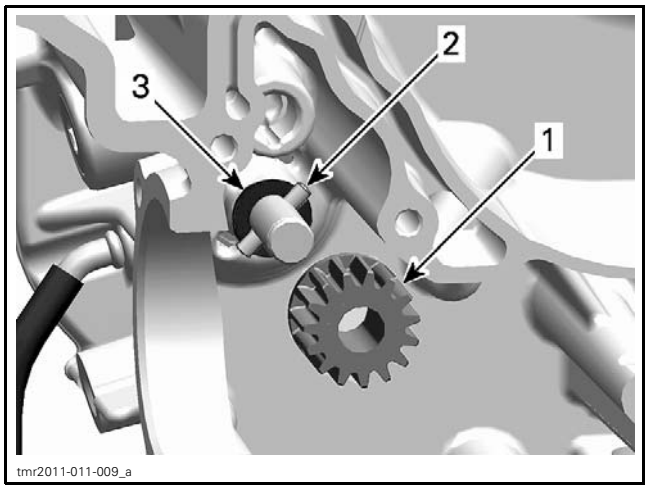

1. *Water pump gear*
2. *Needle pin*
3. *Thrust washer*

NOTE: Ensure water pump gear snaps properly onto needle pin.

Install NEW circlip to retain water pump gear.

NOTICE Never use the circlip a second time. Always install a NEW one.

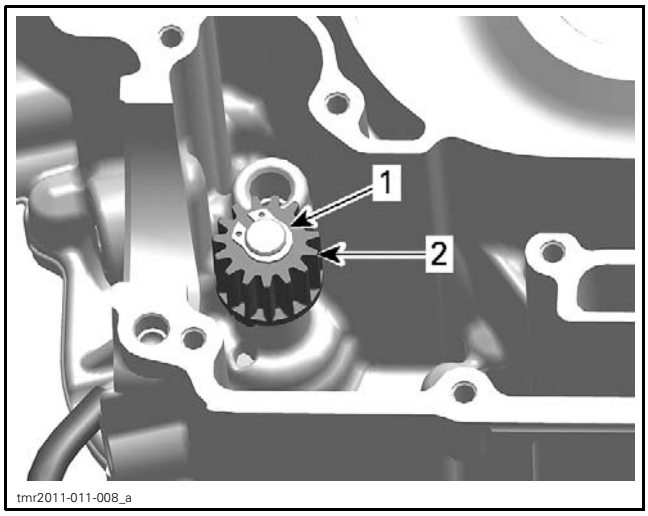

1. *Circlip*
2. *Water pump gear*

Water Pump Intermediate Drive Gear

Install the following parts on water pump intermediate shaft.

– Needle pin
– Water pump intermediate drive gear.

Install NEW circlip to retain water pump intermediate drive gear.

NOTICE Never use the circlip a second time. Always install a NEW one.

Water Pump Drive Gear

See *CYLINDER BLOCK* subsection.

COOLING SYSTEM - VEHICLE COMPONENTS

SERVICE TOOLS

Description	Part Number	Page
LARGE HOSE PINCHER	529 032 500	5
TEST CAP	529 035 991	5
VACUUM/PRESSURE PUMP	529 021 800	5

SERVICE PRODUCTS

Description	Part Number	Page
EXTENDED LIFE PRE-MIXED COOLANT	779150	3

RADIATOR

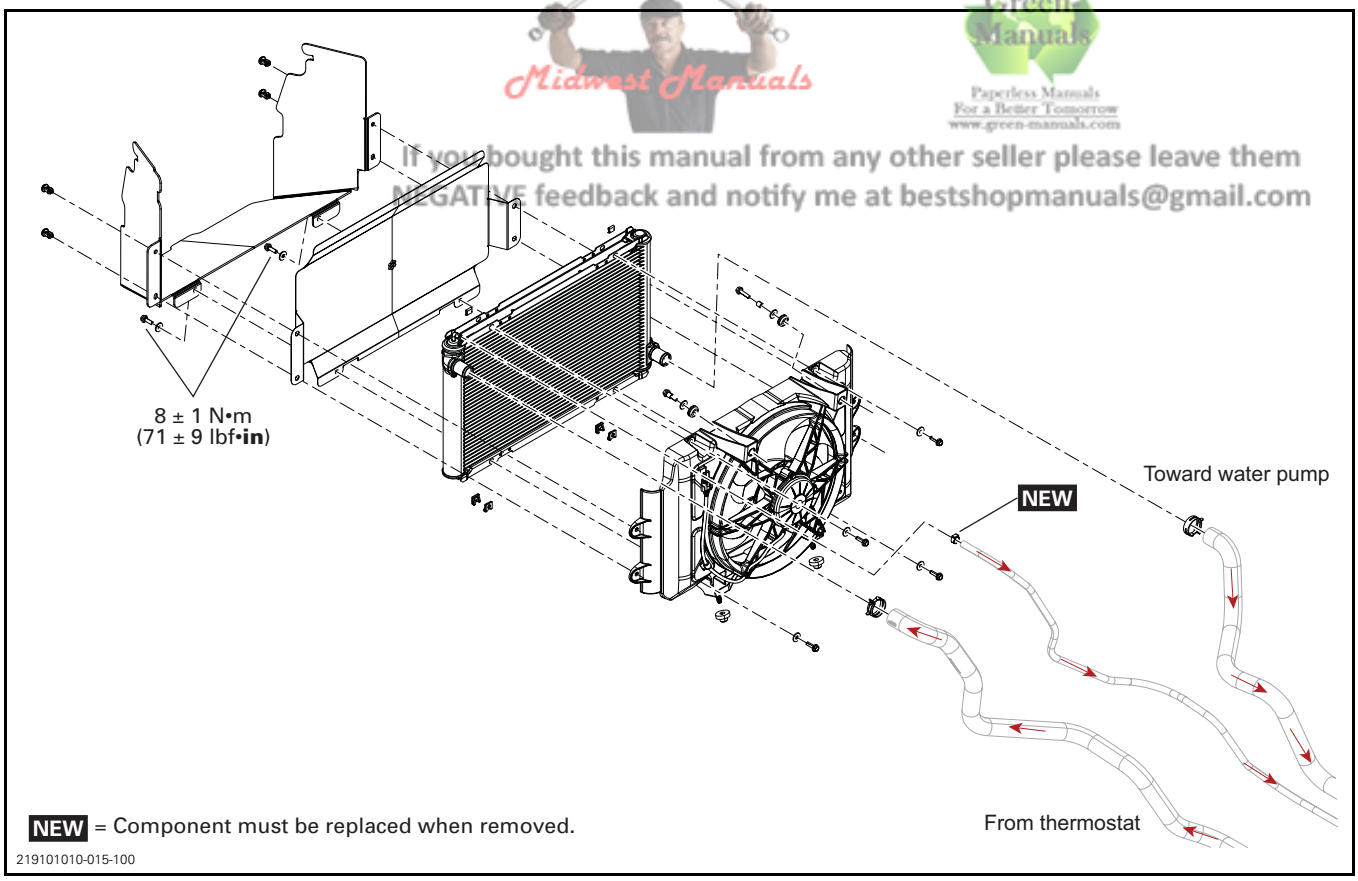

Midwest Manuals
Green Manuals
Paperless Manuals For a Better Tomorrow www.green-manuals.com
If you bought this manual from any other seller please leave them NEGATIVE feedback and notify me at bestshopmanuals@gmail.com

COOLING HOSES

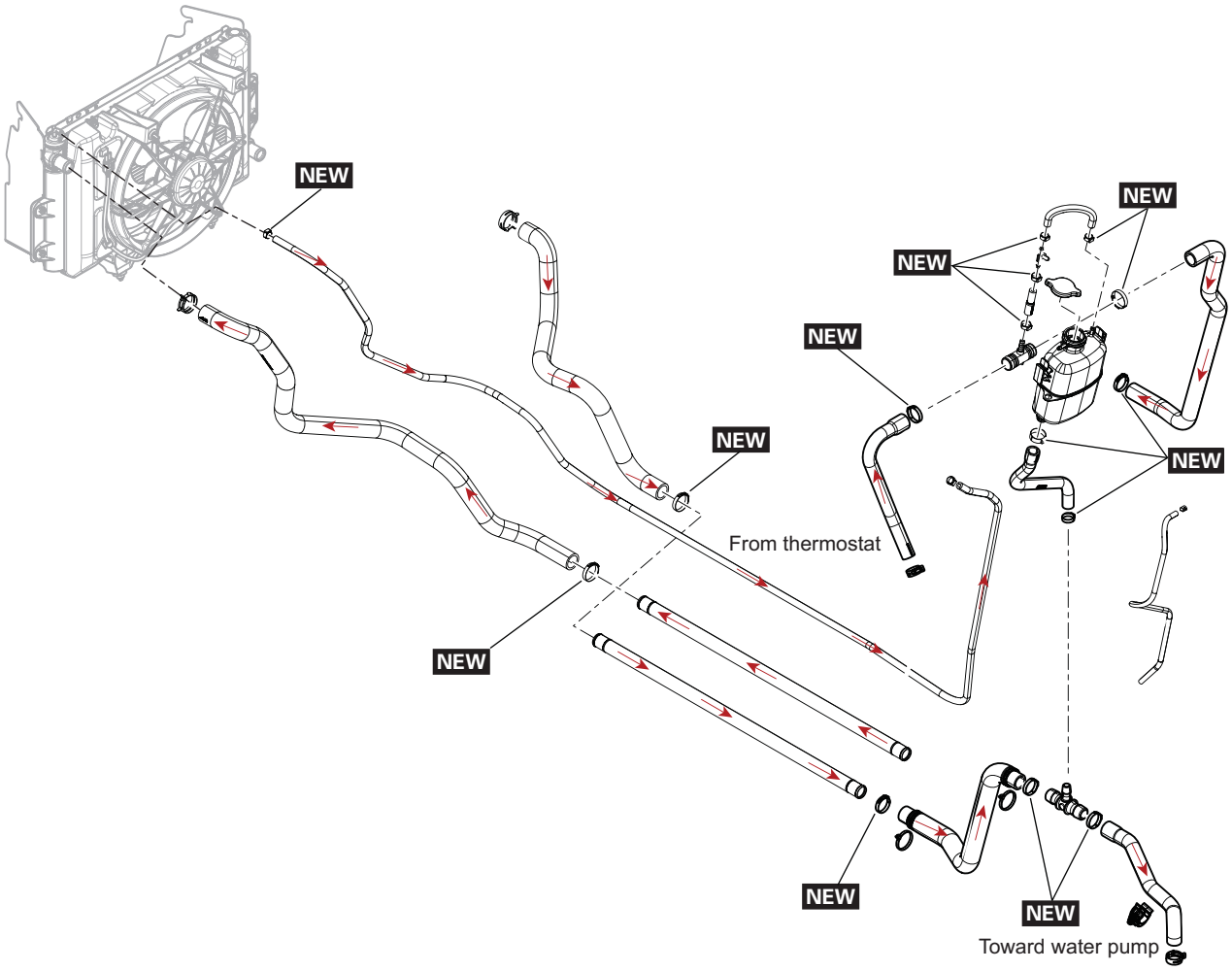

NEW = Component must be replaced when removed.

219101010-015-101

GENERAL

NOTICE Never start engine without coolant. Some engine parts such as the rotary seal on the water pump shaft can be damaged.

MAINTENANCE

RECOMMENDED ENGINE COOLANT

RECOMMENDED ENGINE COOLANT	
Scandinavia	EXTENDED LIFE PRE-MIXED COOLANT (P/N 779150)
All other countries	EXTENDED LIFE PRE-MIXED COOLANT (P/N 779150)
If THE RECOMMENDED ENGINE COOLANT IS NOT AVAILABLE	
Use a blend of 50% distilled water with 50% antifreeze (especially formulated for aluminum engines)	

To prevent antifreeze deterioration, always use the same brand. Never mix different brands unless cooling system is completely flushed and refilled.

NOTICE To prevent rust formation or freezing condition, always replenish the system with the BRP premixed coolant or with 50% antifreeze and 50% distilled water. Do not use tap water, straight antifreeze or straight water in the system. Tap water contains minerals and impurities which build up in the system. During cold weather, straight water causes the system to freeze while straight antifreeze thickens (like slush ice) and does not have the same efficiency. Always use ethylene glycol antifreeze containing corrosion inhibitors specifically recommended for aluminum engines.

VERIFYING THE ENGINE COOLANT LEVEL

⚠ WARNING

Check coolant level with engine cold.

1. Place vehicle on a level surface.
2. Tilt cargo box.

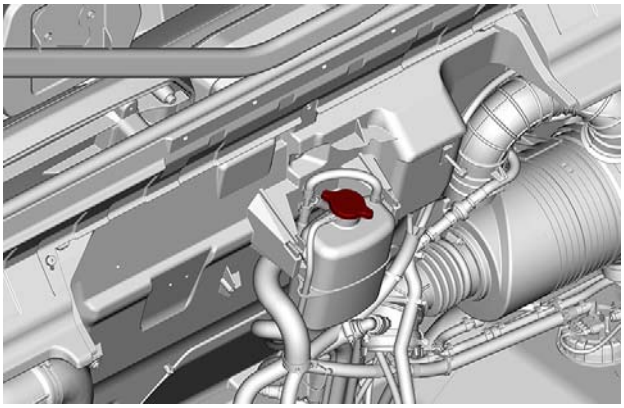

219001807-008

3. Remove the pressure cap.

⚠ WARNING

In order to avoid potential burns, do not remove the pressure cap if the engine is hot.

4. Ensure cooling system is full up to the MAX line.

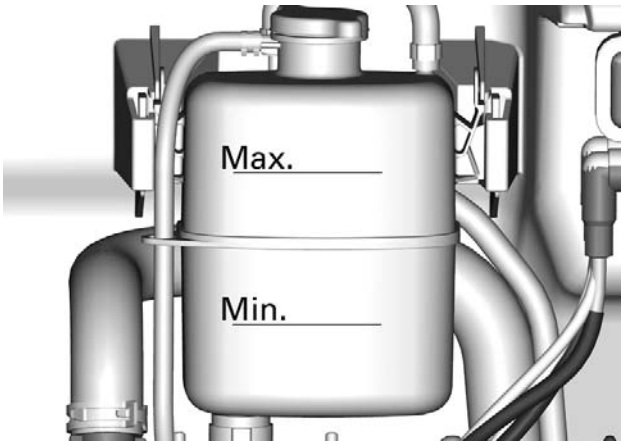

tmo2016-010-004_a

5. Add coolant in system as necessary. **Do not overfill**.
6. Properly reinstall pressure cap.
7. Close the cargo box.

NOTE: A cooling system that frequently requires addition of coolant is an indication of leaks or engine problems.

CHECKING THE ENGINE COOLANT SPECIFIC GRAVITY

Remove pressure cap.

Use an antifreeze tester to test coolant strength.

MINIMUM RECOMMENDED COOLANT STRENGTH
-30°C (-22°F)

REPLACING THE ENGINE COOLANT

Draining the Cooling System

⚠ WARNING

In order to avoid potential burns, do not remove the pressure cap or loosen the coolant drain plug if the engine is hot.

1. Tilt the cargo box.
2. Remove the cooling system pressure cap.

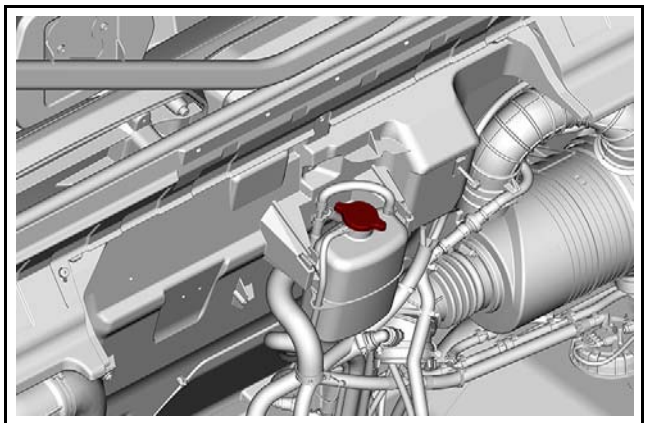

219001807-008

3. Place a drain pan underneath the vehicle.
4. Unscrew coolant drain plug and drain the coolant into a suitable container.

NOTE: Do not unscrew the coolant drain plug completely.

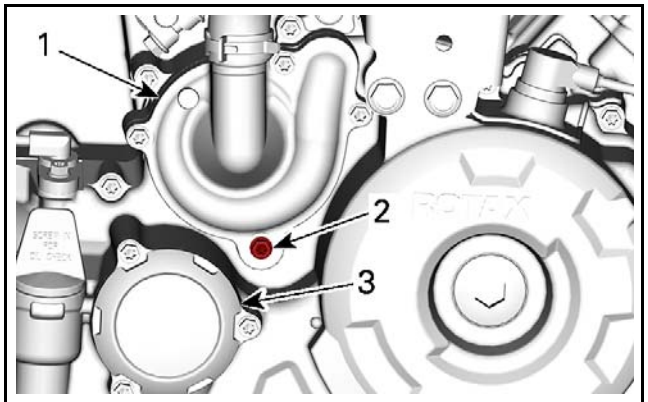

219001750-009_a

1. Water pump cover
2. Coolant drain plug
3. Oil filter cover

5. Disconnect the lower radiator hose and drain the remaining coolant into a suitable container.

NOTE: Take note of the position of the hose clamp on the lower radiator hose at the radiator.

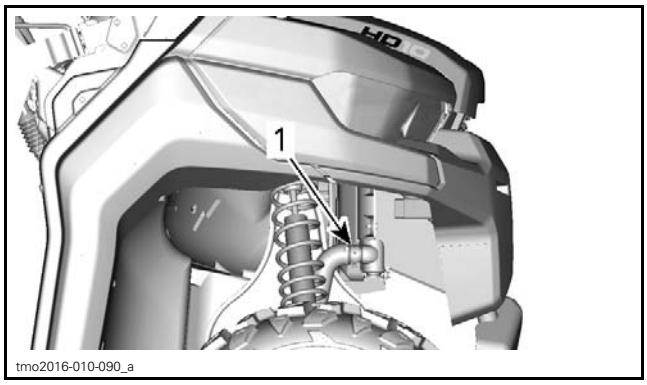

tmo2016-010-090_a

1. Lower radiator hose to disconnect

6. Drain cooling system completely.
7. Reinstall coolant drain plug.

TIGHTENING TORQUE	
Coolant drain plug	10 N•m ± 1 N•m (89 lbf•**in** ± 9 lbf•**in**)

8. Reinstall radiator hose as noted prior to removal.

TIGHTENING TORQUE	
Radiator hose clamp	3 N•m ± 0.5 N•m (27 lbf•**in** ± 4 lbf•**in**)

9. Fill cooling system with coolant, refer to *BLEEDING THE COOLING SYSTEM* procedure.

Bleeding the Cooling System

1. Remove the pressure cap.
2. Fill the cooling system until coolant is full up to the MAX line of the coolant reservoir.
3. Install pressure cap.
4. Run engine at idle with the pressure cap ON until the cooling fan cycles on for a second time.
5. Stop the engine and let it cool down.

⚠ WARNING

In order to avoid potential burns, do not remove the pressure cap if the engine is hot.

6. When the engine is cool, check coolant level. Add coolant if required.

7. After the next ride following this procedure, check coolant level. Add coolant as required. Refer to *VERIFYING THE ENGINE COOLANT LEVEL* in this subsection.

INSPECTING THE COOLING SYSTEM

1. Check general condition of hoses and clamps for tightness.
2. Carry out the *CHECKING THE ENGINE COOLANT SPECIFIC GRAVITY* as detailed in this subsection.
3. Carry out the *TESTING THE PRESSURE CAP* as detailed in this subsection.
4. Replace engine coolant if contaminated.

NOTE: Engine coolant should be replaced every 5 years or if contaminated.

PERFORMING A COOLING SYSTEM LEAK TEST

⚠ WARNING

To avoid potential burns, do not remove the pressure cap or loosen the cooling system drain plug if the engine is hot.

1. Tilt the cargo box
2. Replace the pressure cap by the following test cap.
3. Install the vacuum/pressure pump on the test cap.

REQUIRED TOOL	
TEST CAP (P/N 529 035 991)	
VACUUM/PRESSURE PUMP (P/N 529 021 800)	

4. Pressurize cooling system.

COOLING SYSTEM LEAK TEST
103 kPa (15 PSI)

If there is no pressure drop after 10 minutes, there is no leak in the cooling system.

If the pressure drops, check all hoses, radiator, cylinders and engine base for coolant leaks or air bubbles.

TESTING THE PRESSURE CAP

Test the pressure cap using a cooling system tester.

Replace the cap if it does not hold the pressure, or if it opens at a relief pressure that is too low or too high.

PRESSURE CAP RELIEF PRESSURE
Approximately 110 kPa (16 PSI)

PROCEDURES

RADIATOR

Inspecting the Radiator

Check radiating fins for clogging or damage.

Remove insects, mud or other obstructions with compressed air or low pressure water.

Removing the Radiator

1. Install a hose pincher on both radiator hoses.

REQUIRED TOOL	
LARGE HOSE PINCHER (P/N 529 032 500)	

2. Refer to *BODY* and remove the following parts to reach radiator:
   - Front fenders
   - Service center tray with service cover
   - Front fascia and head lights
   - Radiator deflector.
3. Remove the following parts from the radiator:
   - Radiator outlet hose (RH lower)
   - Radiator inlet hose (LH upper)
   - Coolant reservoir vent hose (LH upper)
   - Radiator mounting screws (2 at top of radiator).

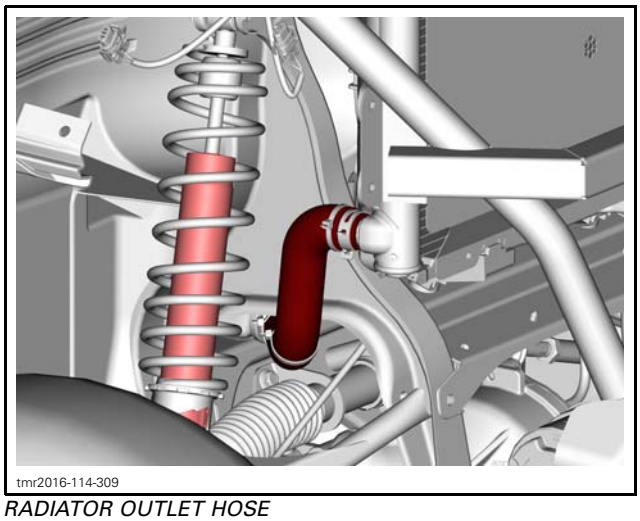
tmr2016-114-309

RADIATOR OUTLET HOSE

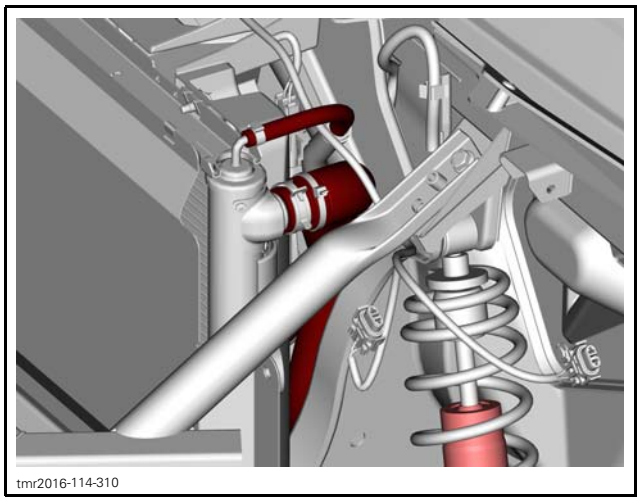
tmr2016-114-310

RADIATOR INLET HOSE AND RESERVOIR VENT HOSE

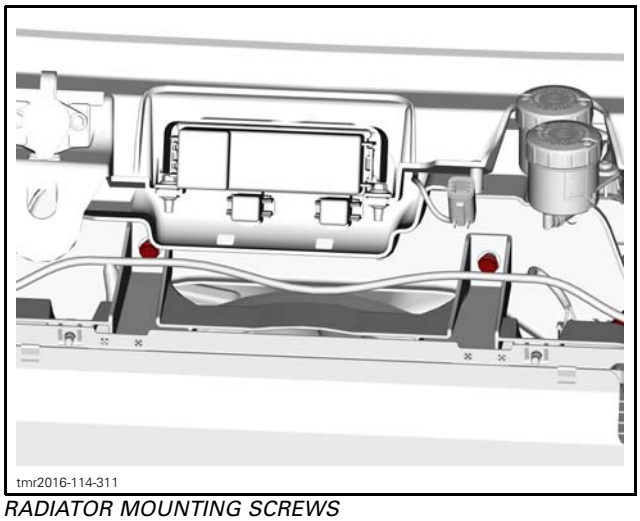
tmr2016-114-311

RADIATOR MOUNTING SCREWS

4. Disconnect cooling fan electrical connector.
5. Carefully remove radiator.

Installing the Radiator

The installation is the reverse of the removal procedure however, pay attention to the following.

Fill radiator with the recommended coolant. Refer to *PERIODIC MAINTENANCE PROCEDURES* subsection.

Bleed the cooling system, refer to *BLEEDING THE COOLING SYSTEM* in this subsection.

Check for coolant leaks from radiator and hoses.

RADIATOR COOLING FAN RELAY (R1)

Installing the Relay

Relay may be inverted by 180° at installation and it will work correctly.

tmr2016-114-312_a

1. R1: Radiator cooling fan relay

Testing the Relay Operation

The easiest way to check the relay is to remove it and temporarily substitute with a new one. If the radiator cooling fan operates, the relay is defective.

RADIATOR COOLING FAN

Radiator Cooling Fan Operation

The ECM controls the radiator cooling fan via the inputs of the coolant temperature sensor (CTS). Refer to the following table.

ENGINE TEMP.	96°C (205°F)	92°C (198°F)	114°C (237°F)
COOLING FAN	Turns ON	Turn OFF	ON
CHECK ENGINE LIGHT	—	—	OFF
MESSAGE IN GAUGE	—	—	- Limp Home - Hi Temp
LIMP HOME MODE	—	—	Gradual power reduction according to engine temperature.

Radiator Cooling Fan Fuse Location

The fuse (25A) is located in the fuse box underneath the passenger seat, near the battery.

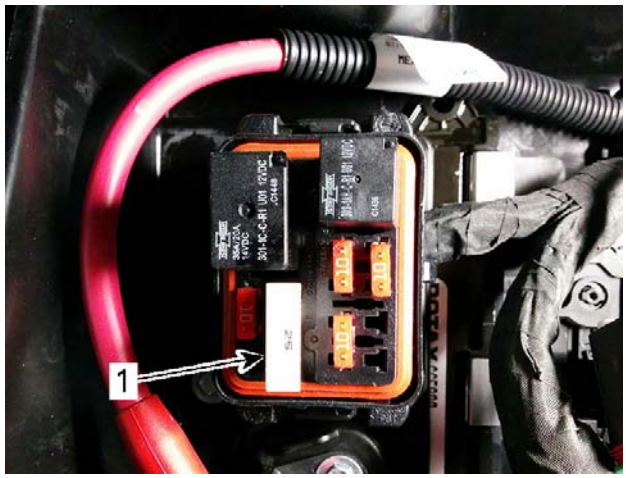

tmr2016-114-312_b

1. Cooling fan fuse

Testing the Radiator Cooling Fan

1. Connect the vehicle to BUDS2, refer to *COMMUNICATION TOOLS* for procedure and connector location.
2. In BUDS2 software, select the following:
   - **Scan** button
   - **Function** tab
   - **ECM** tab
   - **Cooling Fan** button.

If fan turns on, check CTS, wiring harness and connectors. If all parts are good, replace the ECM.

If fan does not turn on when the **Cooling Fan** button is pressed, refer to the following troubleshooting chart.

COOLING FAN TROUBLESHOOTING CHART		
Is fan working?	YES →	Everything is OK
NO ↓		
Check fan fuse (25A). Is fuse burnt?	YES →	Replace fuse Is fan working?
NO ↓		
Bypass fan relay R1		
↓		
Fan turns?	YES →	Replace relay Is fan working?
NO ↓		
Apply 12 Vdc to fan connector		
↓		
Fan turns?	NO →	Replace fan Is fan working?
YES ↓		
Check CTS		
↓		
CTS works?	NO →	Replace CTS Is fan working?
YES ↓		
Check wiring harness and connectors		
↓		
Harness and connectors good?	NO →	Repair or replace defective part(s)
YES ↓		
Try a new ECM	→	Is fan working?

Removing the Radiator Cooling Fan

1. Remove the radiator.
2. Remove 4 fan retaining screws.
3. Remove the radiator fan.

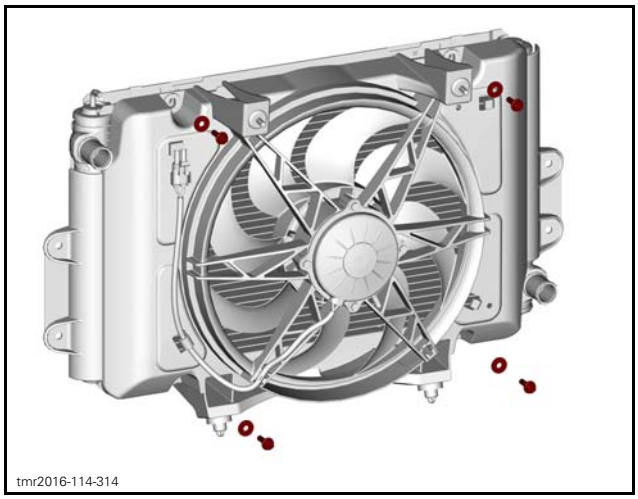

FAN RETAINING SCREWS

Installing the Radiator Cooling Fan

The installation is the reverse of the the removal procedure.

COOLING SYSTEM - VEHICLE COMPONENTS

SERVICE TOOLS

Description	Part Number	Page
LARGE HOSE PINCHER	529 032 500	9
TEST CAP	529 035 991	8
VACUUM/PRESSURE PUMP	529 021 800	8

SERVICE PRODUCTS

Description	Part Number	Page
EXTENDED LIFE PRE-MIXED COOLANT	779150	6

RADIATOR

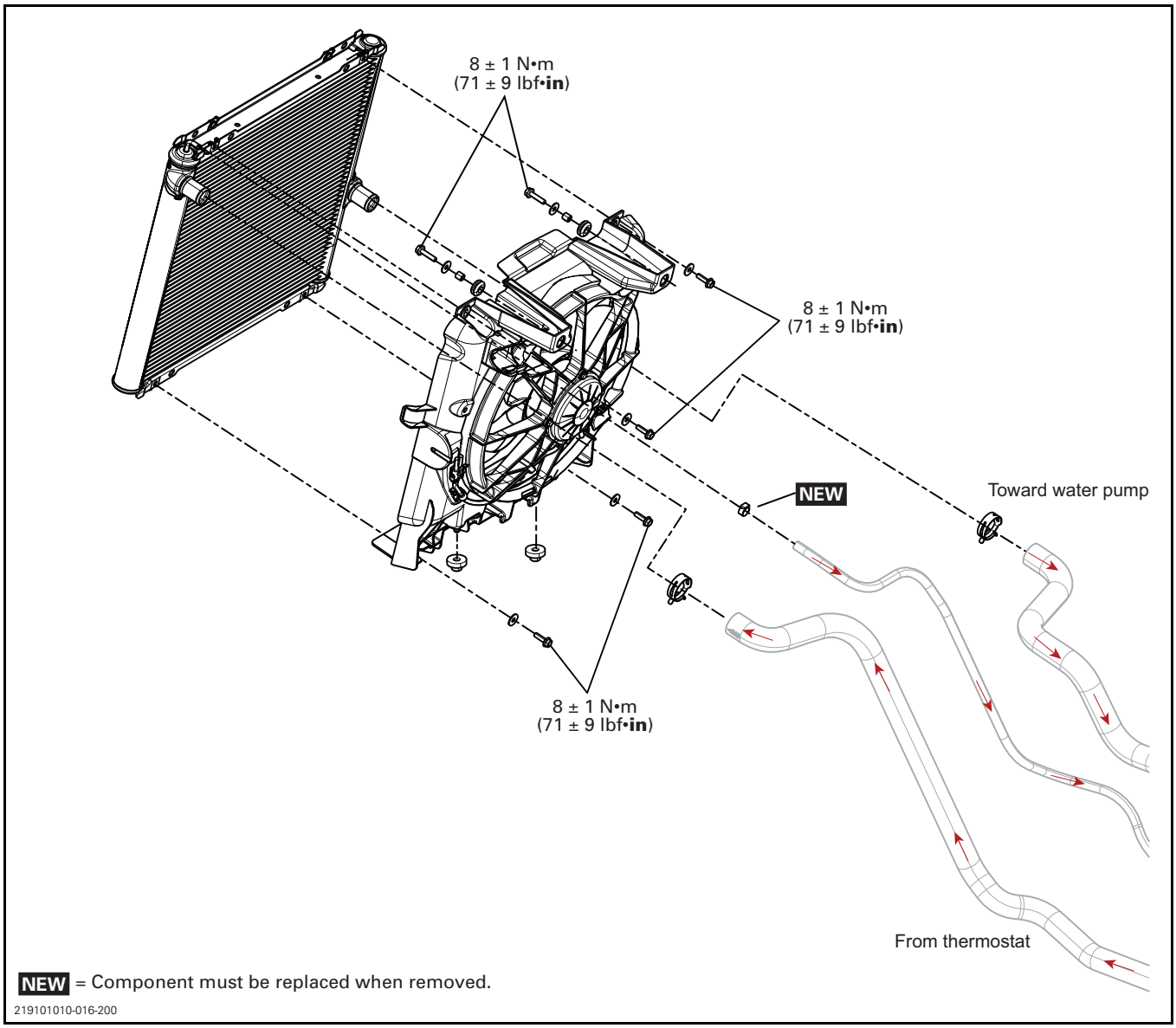
8 ± 1 N•m
(71 ± 9 lbf•in)
8 ± 1 N•m
(71 ± 9 lbf•in)
NEW
Toward water pump
8 ± 1 N•m
(71 ± 9 lbf•in)
From thermostat
NEW = Component must be replaced when removed.
219101010-016-200

COOLING HOSES

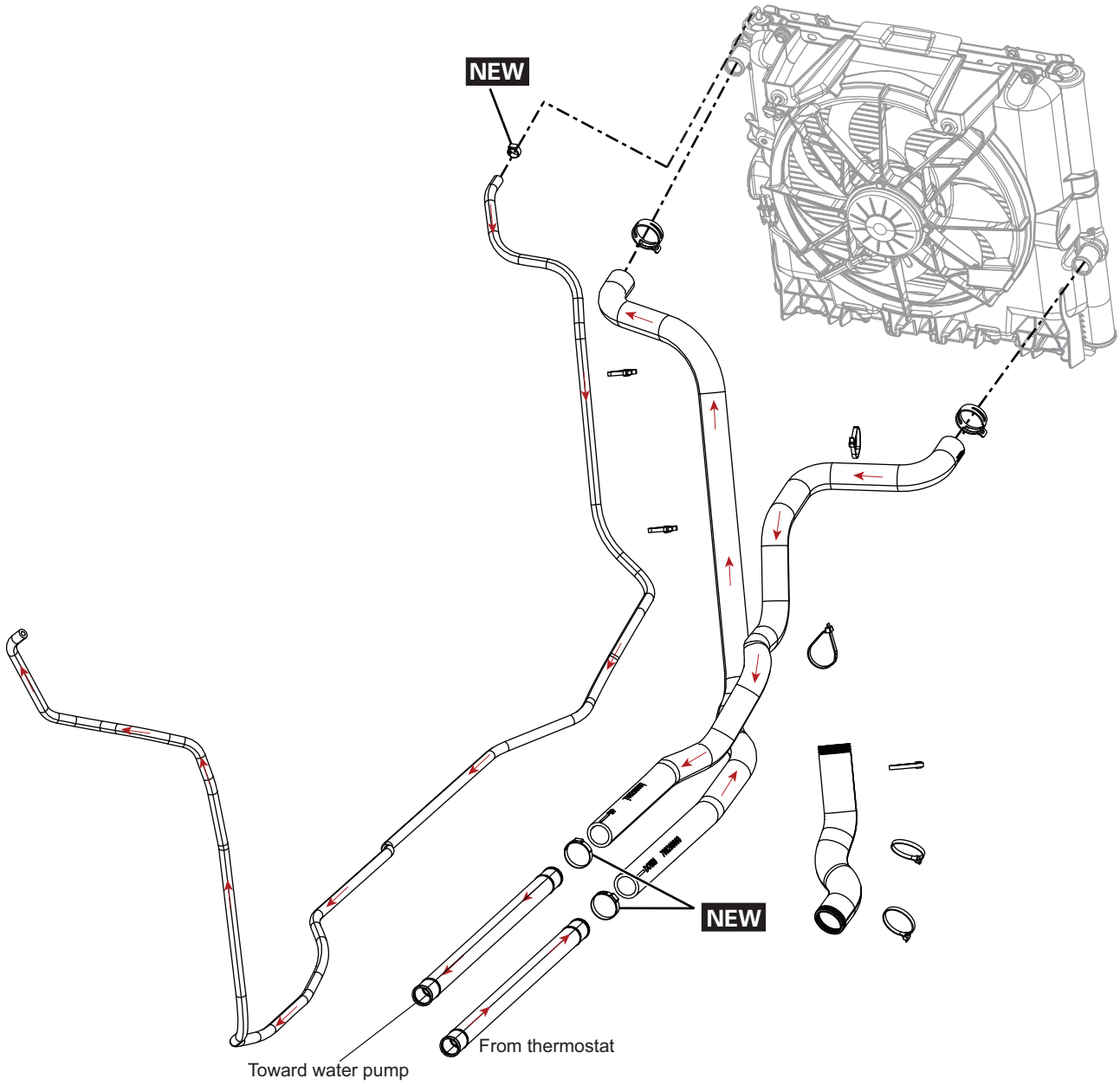

NEW = Component must be replaced when removed.

219101010-016-201

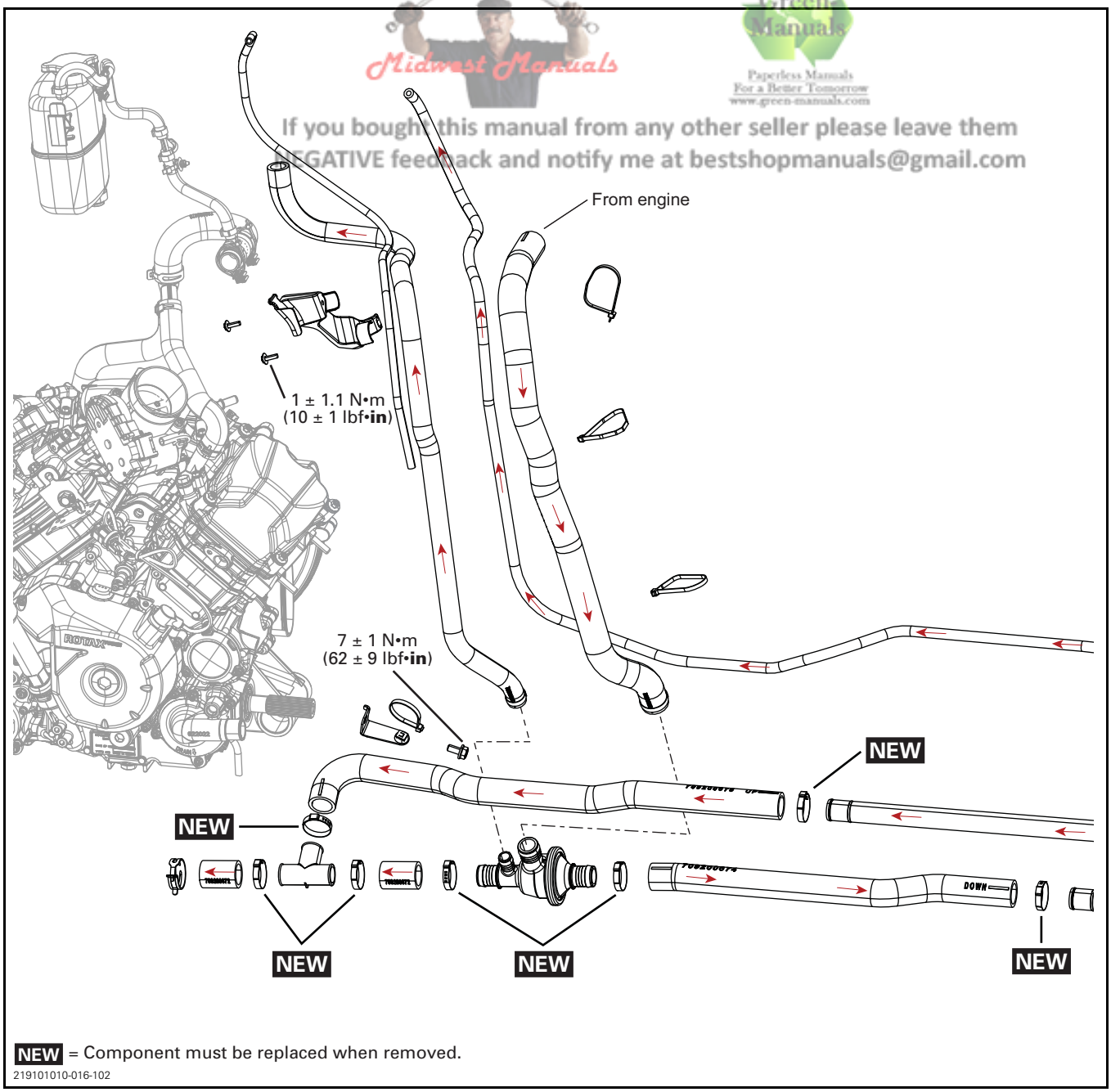

Midwest Manuals
Green Manuals
Paperless Manuals
For a Better Tomorrow
www.green-manuals.com
If you bought this manual from any other seller please leave them
NEGATIVE feedback and notify me at bestshopmanuals@gmail.com

NEW = Component must be replaced when removed.

219101010-016-102

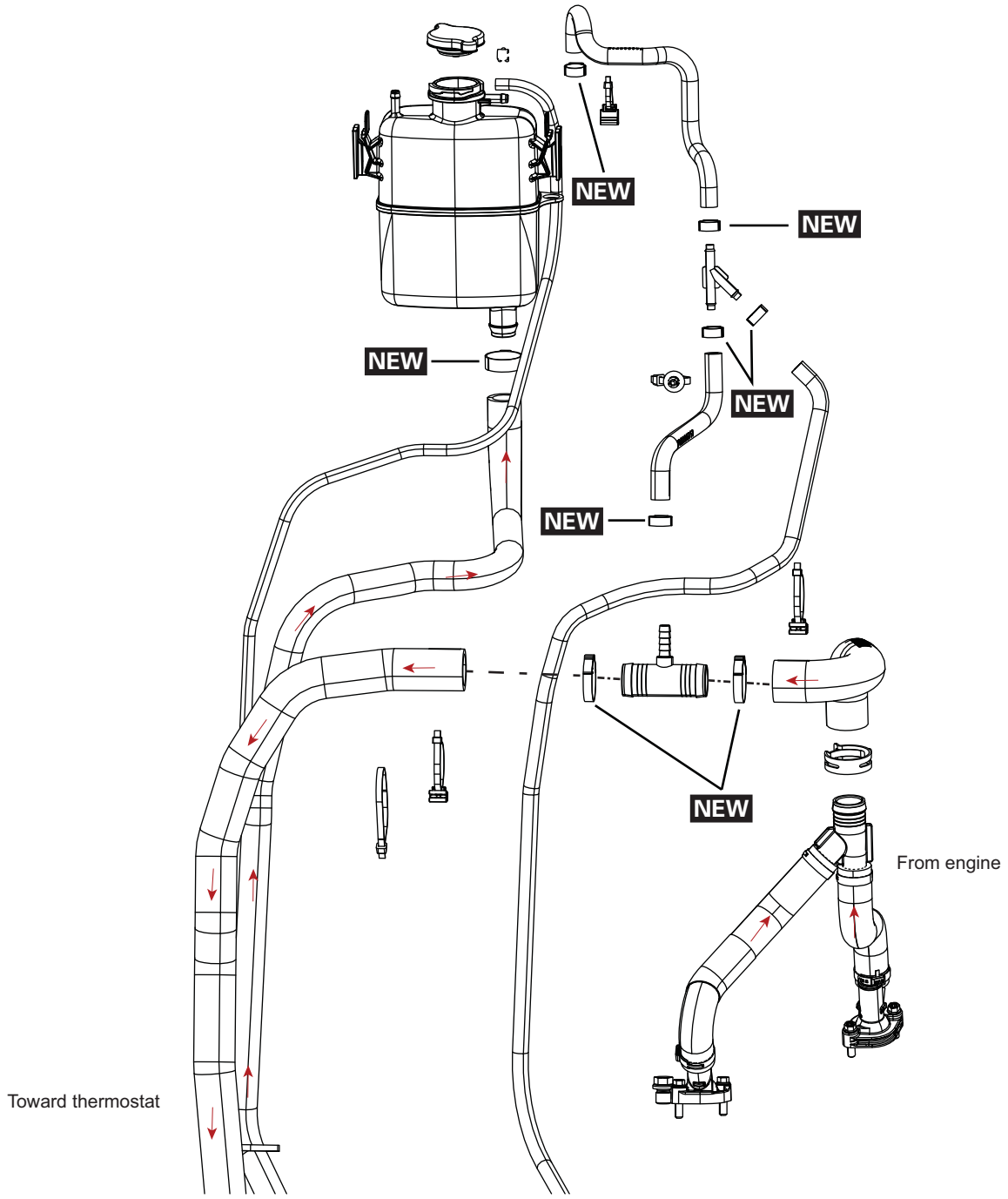

NEW = Component must be replaced when removed.

219101010-016-103

GENERAL

NOTICE Never start engine without coolant. Some engine parts such as the rotary seal on the water pump shaft can be damaged.

MAINTENANCE

RECOMMENDED ENGINE COOLANT

RECOMMENDED ENGINE COOLANT	
Scandinavia	EXTENDED LIFE PRE-MIXED COOLANT (P/N 779150)
All other countries	EXTENDED LIFE PRE-MIXED COOLANT (P/N 779150)
If THE RECOMMENDED ENGINE COOLANT IS NOT AVAILABLE	
Use a blend of 50% distilled water with 50% antifreeze (especially formulated for aluminum engines)	

To prevent antifreeze deterioration, always use the same brand. Never mix different brands unless cooling system is completely flushed and refilled.

NOTICE To prevent rust formation or freezing condition, always replenish the system with the BRP premixed coolant or with 50% antifreeze and 50% distilled water. Do not use tap water, straight antifreeze or straight water in the system. Tap water contains minerals and impurities which build up in the system. During cold weather, straight water causes the system to freeze while straight antifreeze thickens (like slush ice) and does not have the same efficiency. Always use ethylene glycol antifreeze containing corrosion inhibitors specifically recommended for aluminum engines.

VERIFYING THE ENGINE COOLANT LEVEL

⚠ WARNING

Check coolant level with engine cold.

1. Place vehicle on a level surface.
2. Tilt cargo box.

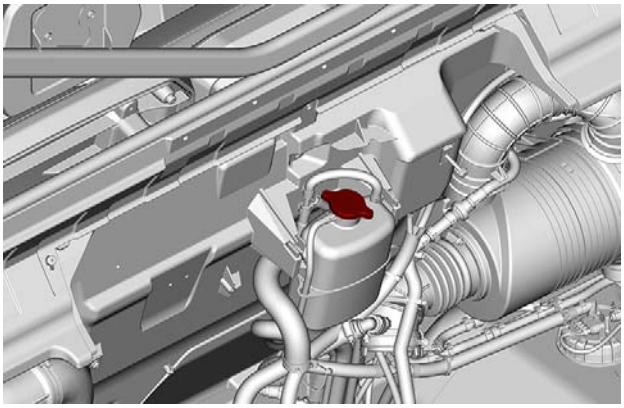

219001807-008

3. Remove the pressure cap.

⚠ WARNING

In order to avoid potential burns, do not remove the pressure cap if the engine is hot.

4. Ensure cooling system is full up to the MAX line.

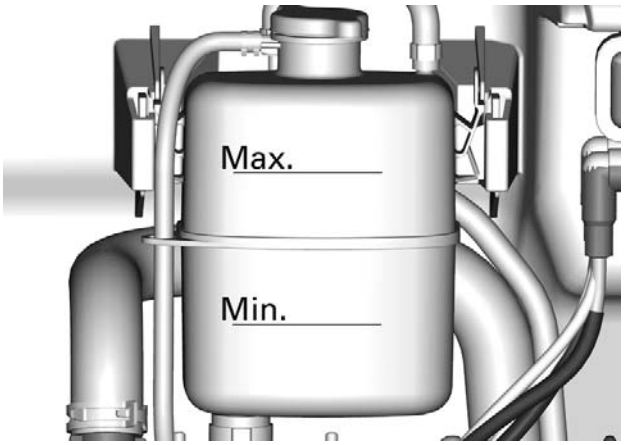

tmo2016-010-004_a

5. Add coolant in system as necessary. **Do not overfill**.
6. Properly reinstall pressure cap.
7. Close the cargo box.

NOTE: A cooling system that frequently requires addition of coolant is an indication of leaks or engine problems.

CHECKING THE ENGINE COOLANT SPECIFIC GRAVITY

Remove pressure cap.

Use an antifreeze tester to test coolant strength.

MINIMUM RECOMMENDED COOLANT STRENGTH
-30°C (-22°F)

REPLACING THE ENGINE COOLANT

Draining the Cooling System

⚠ WARNING

In order to avoid potential burns, do not remove the pressure cap or loosen the coolant drain plug if the engine is hot.

1. Tilt the cargo box.
2. Remove the cooling system pressure cap.

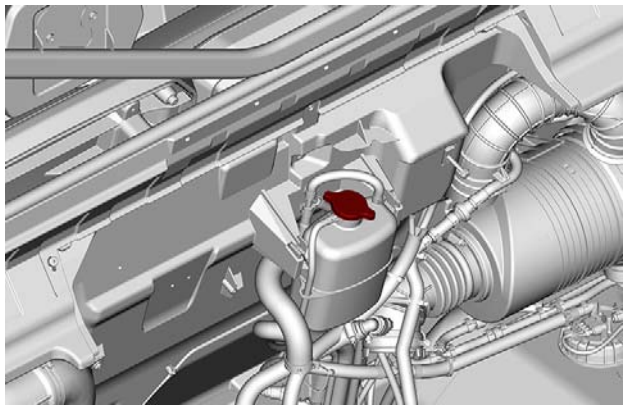

219001807-008

3. Place a drain pan underneath the vehicle.
4. Unscrew coolant drain plug and drain the coolant into a suitable container.

NOTE: Do not unscrew the coolant drain plug completely.

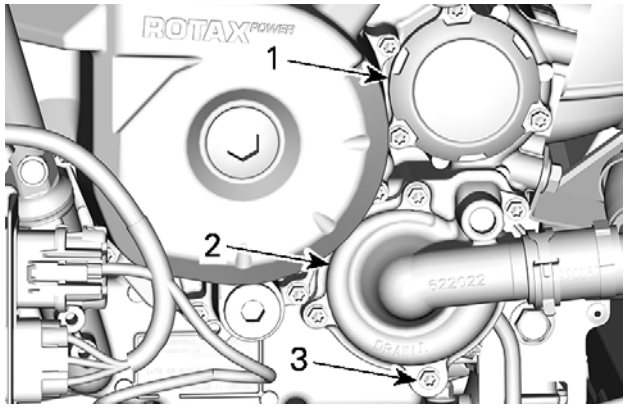

219001880-067_a

1. Oil filter cover
2. Water pump cover
3. Coolant drain plug

5. Disconnect the lower radiator hose and drain the remaining coolant into a suitable container.

NOTE: Take note of the position of the hose clamp on the lower radiator hose at the radiator.

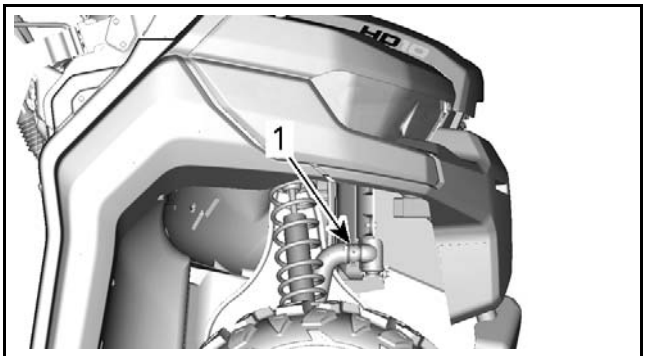

tmo2016-010-090_a

1. Lower radiator hose to disconnect

6. Drain cooling system completely.
7. Reinstall coolant drain plug.

TIGHTENING TORQUE	
Coolant drain plug	10 N•m ± 1 N•m (89 lbf•**in** ± 9 lbf•**in**)

8. Reinstall radiator hose as noted prior to removal.

TIGHTENING TORQUE	
Radiator hose clamp	3 N•m ± 0.5 N•m (27 lbf•**in** ± 4 lbf•**in**)

9. Fill cooling system with coolant, refer to *BLEEDING THE COOLING SYSTEM* procedure.

Bleeding the Cooling System

1. Remove the pressure cap.
2. Fill the cooling system until coolant is full up to the MAX line of the coolant reservoir.
3. Install pressure cap.
4. Run engine at idle with the pressure cap **ON** until the cooling fan cycles on for a second time.
5. Stop the engine and let it cool down.

⚠ WARNING

In order to avoid potential burns, do not remove the pressure cap if the engine is hot.

6. When the engine is cool, check coolant level. Add coolant if required.

7. After the next ride following this procedure, check coolant level. Add coolant as required. Refer to *VERIFYING THE ENGINE COOLANT LEVEL* in this subsection.

INSPECTING THE COOLING SYSTEM

1. Check general condition of hoses and clamps for tightness.
2. Carry out *CHECKING THE ENGINE COOLANT SPECIFIC GRAVITY* as detailed in this subsection.
3. Carry out *TESTING THE PRESSURE CAP* as detailed in this subsection.
4. Replace engine coolant if contaminated.

NOTE: Engine coolant should be replaced every 5 years or if contaminated.

PERFORMING A COOLING SYSTEM LEAK TEST

⚠ WARNING

To avoid potential burns, do not remove the pressure cap or loosen the cooling system drain plug if the engine is hot.

1. Tilt the cargo box
2. Replace the pressure cap by the following test cap.
3. Install the vacuum/pressure pump on the test cap.

REQUIRED TOOL	
TEST CAP (P/N 529 035 991)	
VACUUM/PRESSURE PUMP (P/N 529 021 800)	

4. Pressurize cooling system.

COOLING SYSTEM LEAK TEST
103 kPa (15 PSI)

If there is no pressure drop after 10 minutes, there is no leak in the cooling system.

If the pressure drops, check all hoses, radiator, cylinders and engine base for coolant leaks or air bubbles.

TESTING THE PRESSURE CAP

Test the pressure cap using a cooling system tester.

Replace the cap if it does not hold the pressure, or if it opens at a relief pressure that is too low or too high.

PRESSURE CAP RELIEF PRESSURE
Approximately 110 kPa (16 PSI)

PROCEDURES

THERMOSTAT

The thermostat is a single action type.

Thermostat Location

The thermostat is mounted in-line in the cooling system circuit.

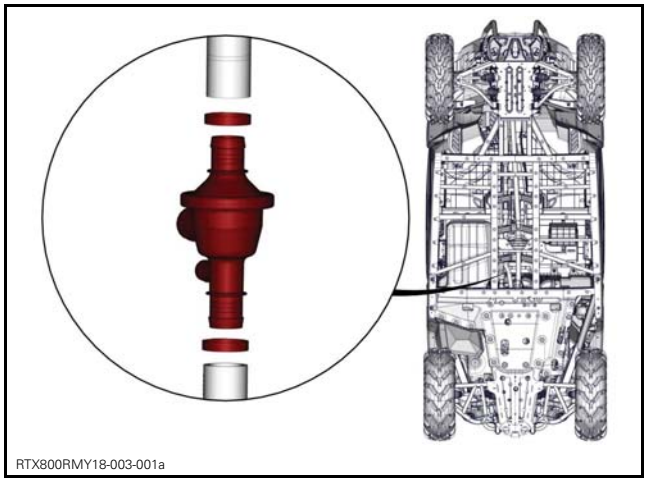

Removing the Thermostat

1. Drain the cooling system, refer to *PERIODIC MAINTENANCE PROCEDURES* subsection.
2. Remove Oetiker clamps that secure hoses to thermostat.
3. Remove thermostat.

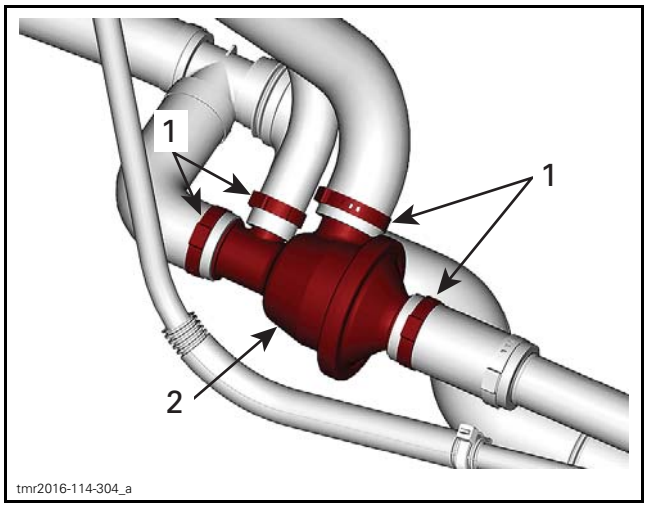

1. *Clamps*
2. *Thermostat*

Testing the Thermostat

To check thermostat, put it in water and heat the water.

Compare data with the thermostat specifications indicated in the subsection *TECHNICAL SPECIFICATION - 1000 ENGINE* subsection.

Replace thermostat if it does not begin to open at specified temperature.

Check if gasket is brittle, hard or damaged. If so, replace gasket.

Installing the Thermostat

The installation is the reverse of the removal procedures.

Refill cooling system.

Bleed cooling system, refer to *PERIODIC MAINTENANCE PROCEDURES* subsection.

NOTICE **The cooling system must be bled as specified.**

Check for coolant leaks.

RADIATOR

Inspecting the Radiator

Check radiating fins for clogging or damage.

Remove insects, mud or other obstructions with compressed air or low pressure water.

Removing the Radiator

1. Install a hose pincher on both radiator hoses.

REQUIRED TOOL	
LARGE HOSE PINCHER (P/N 529 032 500)	

2. Refer to *BODY* and remove the following parts to reach radiator:
   - Front fenders
   - Service center tray with service cover
   - Front fascia and head lights
   - Radiator deflector.
3. Remove the following parts from the radiator:
   - Radiator outlet hose (RH lower)
   - Radiator inlet hose (LH upper)
   - Coolant reservoir vent hose (LH upper)
   - Radiator mounting screws (2 at top of radiator).

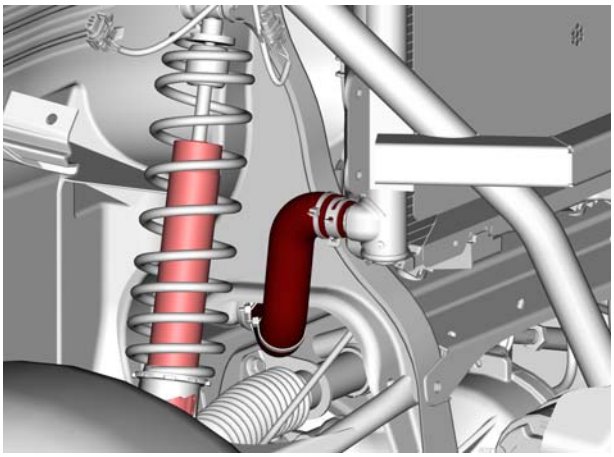

RADIATOR OUTLET HOSE

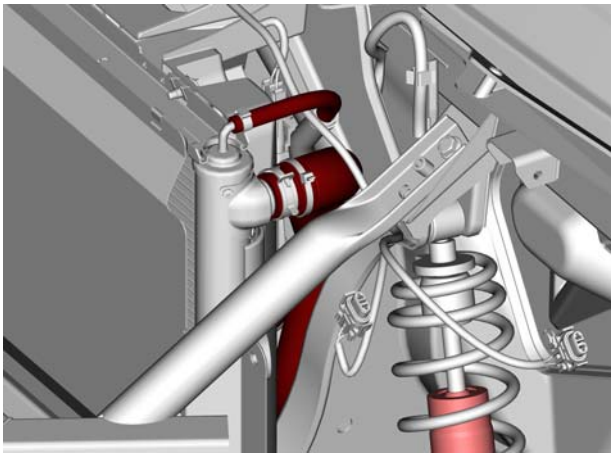

RADIATOR INLET HOSE AND RESERVOIR VENT HOSE

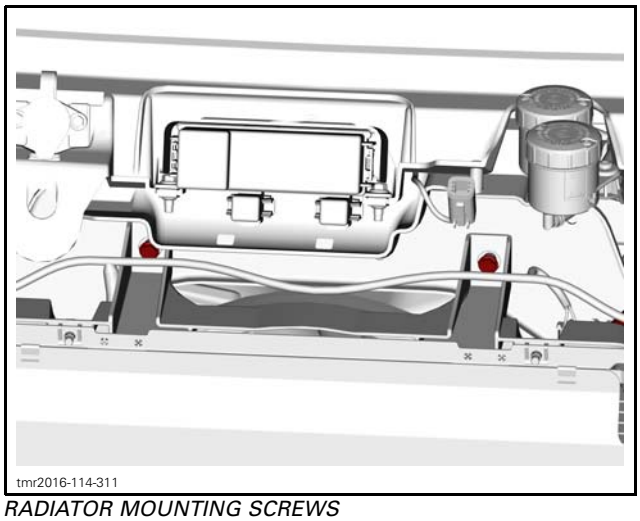

RADIATOR MOUNTING SCREWS

4. Disconnect cooling fan electrical connector.
5. Carefully remove radiator.

Installing the Radiator

The installation is the reverse of the removal procedure. However, pay attention to the following.

Fill radiator with the recommended coolant. Refer to *PERIODIC MAINTENANCE PROCEDURES* subsection.

Bleed the cooling system, refer to *BLEEDING THE COOLING SYSTEMS* in this subsection.

Check for coolant leaks from radiator and hoses.

RADIATOR COOLING FAN

Radiator Cooling Fan Operation

The ECM controls the radiator cooling fan via the inputs of the coolant temperature sensor (CTS). Refer to the following table.

ENGINE TEMP.	96°C (205°F)	92°C (198°F)	114°C (237°F)
COOLING FAN	Turns ON	Turn OFF	ON
CHECK ENGINE LIGHT	—	—	OFF
MESSAGE IN GAUGE	—	—	- Limp Home - Hi Temp
LIMP HOME MODE	—	—	Gradual power reduction according to engine temperature.

Radiator Cooling Fan Fuse Location

The fuse (25A) is located in the fuse box underneath the passenger seat, near the battery.

1. Cooling fan fuse

Testing the Radiator Cooling Fan

1. Connect the vehicle to the BRP diagnostic software (BUDS2), refer to *COMMUNICATION TOOLS* for procedure and connector location.
2. In BUDS2, go to:
   – **Functions** page
   – **ECM** button
   – **IO Controls** tab.
3. Select **Activate Cooling Fan** action

If fan turns on, check CTS, wiring harness and connectors. If all parts are good, replace the ECM.

If fan does not turn on when the **Activate Cooling Fan** button is pressed, refer to the following troubleshooting chart.

COOLING FAN TROUBLESHOOTING CHART		
Is fan working?	YES →	Everything is OK
NO ↓		
Check fan fuse (25A). Is fuse burnt?	YES →	Replace fuse Is fan working?
NO ↓		
Bypass fan relay R1		
↓		
Fan turns?	YES →	Replace relay Is fan working?
NO ↓		
Apply 12 Vdc to fan connector		
↓		
Fan turns?	NO →	Replace fan Is fan working?
YES ↓		
Check CTS		
↓		
CTS works?	NO →	Replace CTS Is fan working?
YES ↓		
Check wiring harness and connectors		
↓		
Harness and connectors good?	NO →	Repair or replace defective part(s)
YES ↓		
Try a new ECM	→	Is fan working?

Removing the Radiator Cooling Fan

1. Remove the radiator.
2. Remove 4 fan retaining screws.
3. Remove the radiator fan.

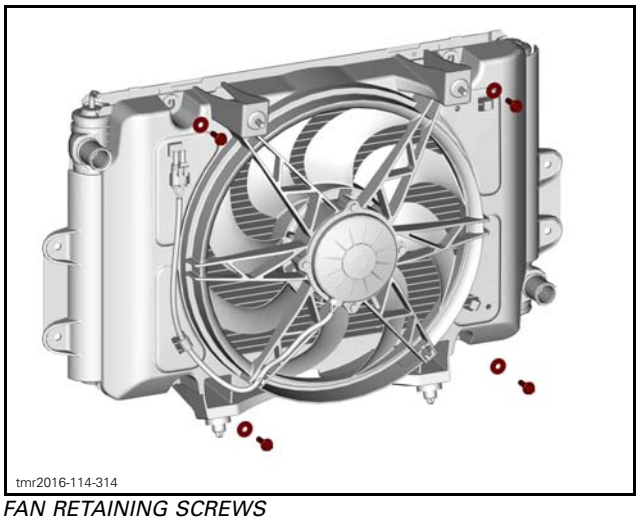

FAN RETAINING SCREWS

Installing the Radiator Cooling Fan

The installation is the reverse of the removal procedure.

HEATING SYSTEM

SERVICE TOOLS

Description	Part Number	Page
LARGE HOSE PINCHER	529 032 500	7

DUCT AND CONSOLE

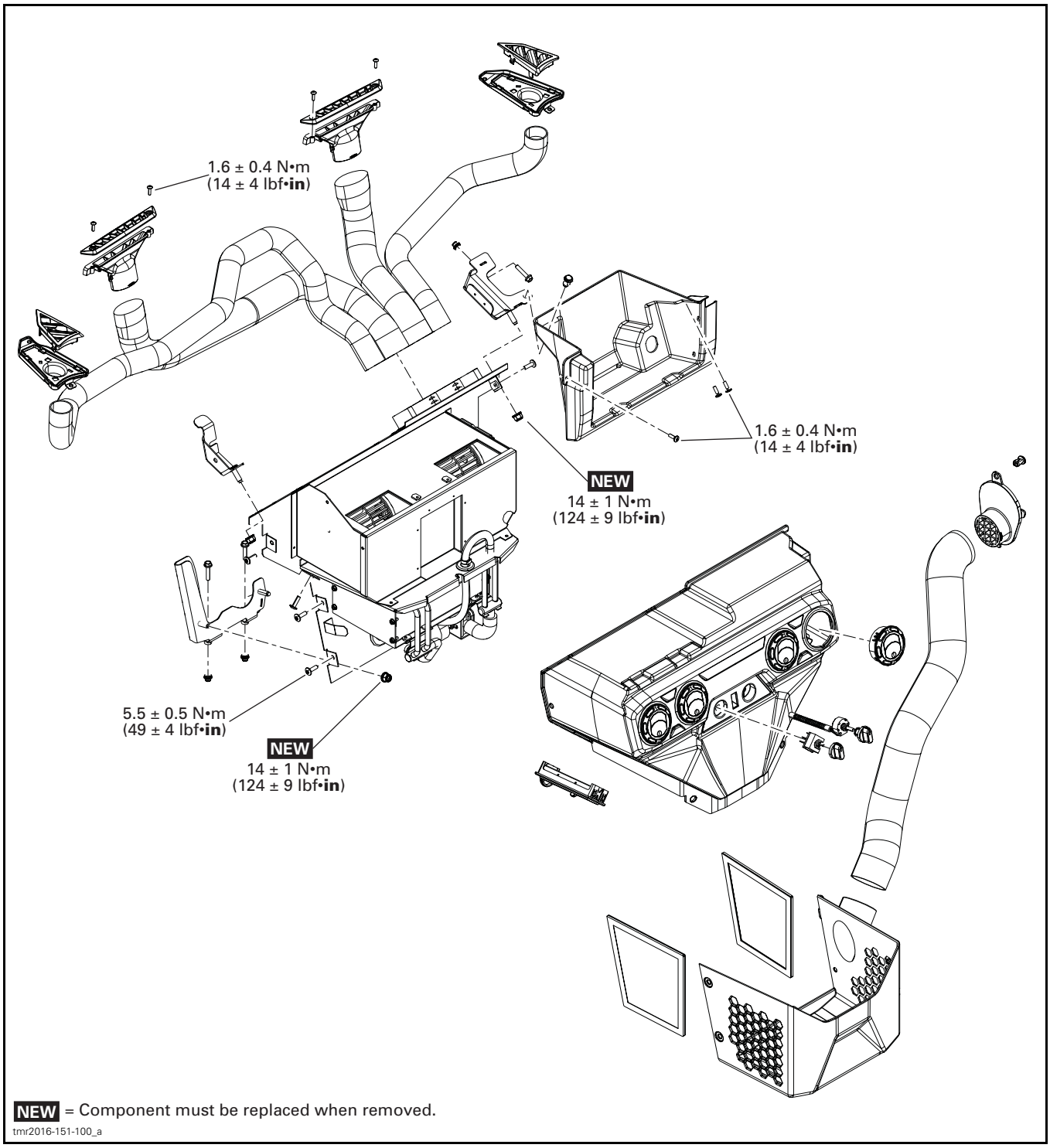

NEW = Component must be replaced when removed.

tmr2016-151-100_a

HEATING UNIT

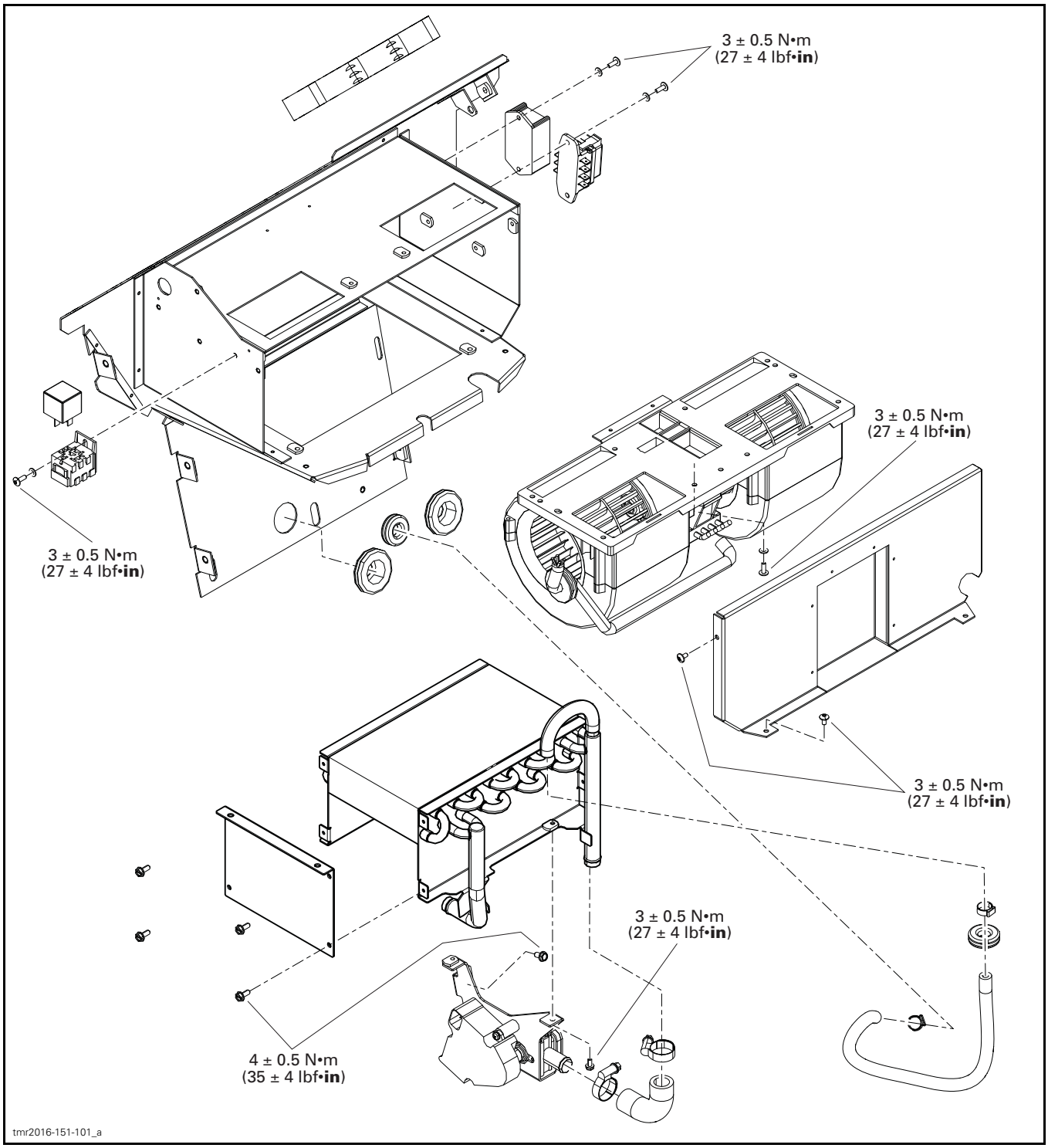

GENERAL

In the following procedures the vehicle cab is removed for clarity.

PROCEDURES

AIR OUTLET LOUVER AND ADAPTER

Removing the Outlet Louver

1. Refer to *BODY* subsection and remove the following parts to reach the ducts:
   – Front fender
   – Front side panel.

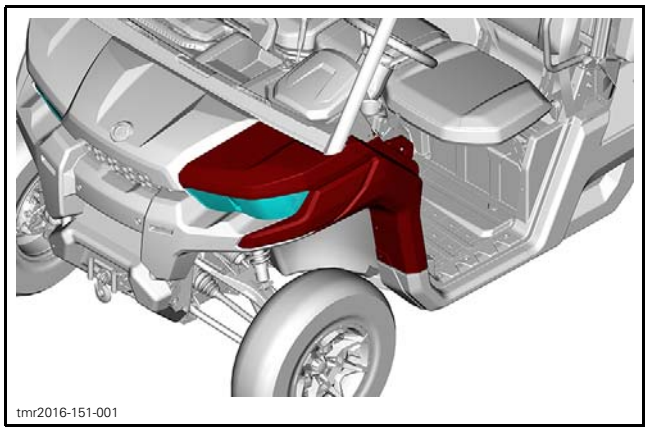
tmr2016-151-001

Central Louver

2. Remove central louver.
   2.1 Remove screws retaining the louver.
   2.2 Pull on the louver to remove it.

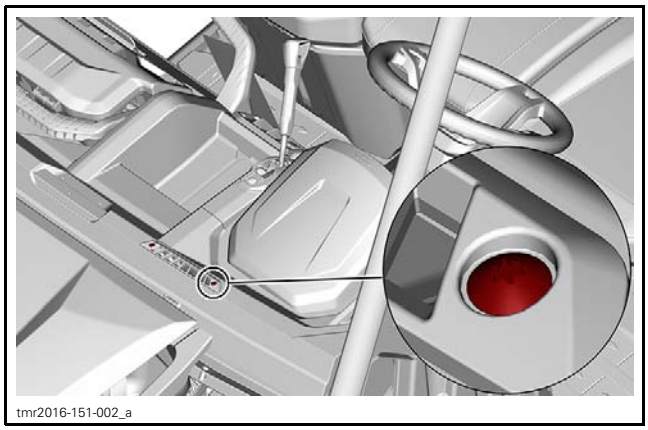
tmr2016-151-002_a

Lateral Louver

3. From inside the dashboard release both snap tabs and remove the lateral louver.

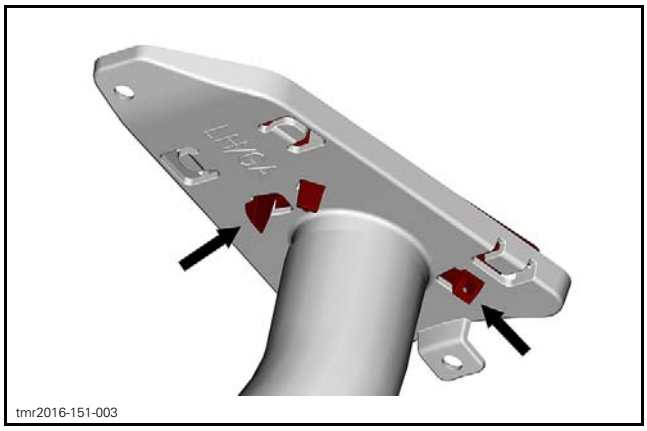
tmr2016-151-003

4. Cut the locking tie.
5. Hold the adapter from outside the dashboard and pull the duct off the adapter from inside.

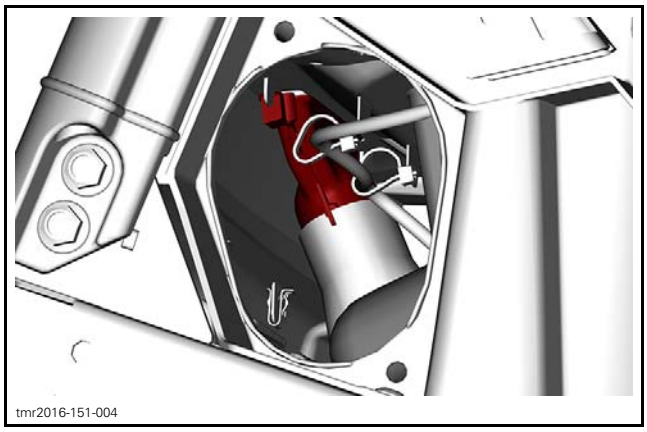
tmr2016-151-004

6. Take the adapter out of the dashboard through the side opening.

Installing the Outlet Louver

The installation is the reverse of the removal procedure. However, pay attention to the following.

TIGHTENING TORQUE	
Central louver screw	1.6 N•m ± 0.4 N•m (14 lbf•**in** ± 4 lbf•**in**)

AIR DUCTS

Removing the Air Ducts

1. Remove the following parts:
   – RH lower dashboard
   – Lower cover.

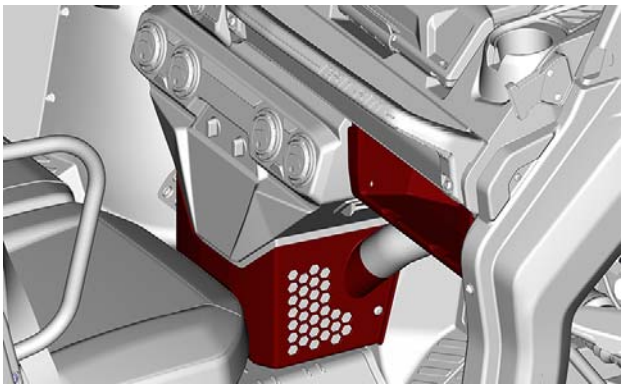
tmr2016-151-024

2. Remove the following nuts.

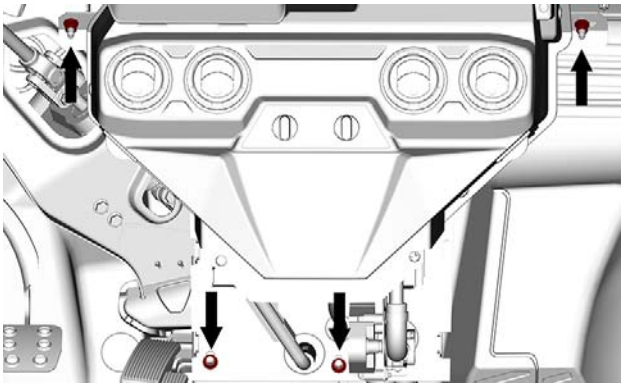
tmr2016-151-023

3. Tilt the unit towards the seats.
4. Cut locking ties and disconnect the ducts from the heating unit.
5. Refer to *BODY* subsection and remove the following parts to disconnect ducts from louvers:
   – Front fender
   – Front side panel.

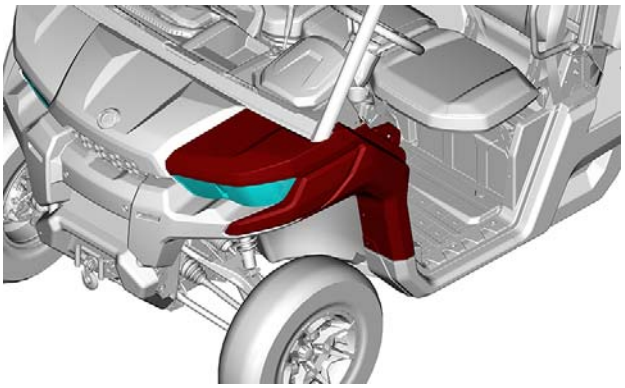
tmr2016-151-001

6. Cut locking ties and disconnect the ducts from the adaptors.
7. Remove ducts from vehicle.

Installing the Air Ducts

The installation is the reverse of the removal procedure.

HEATING SYSTEM CONSOLE

Lower Cover

Removing the Lower Cover

1. Disconnect the air inlet duct.

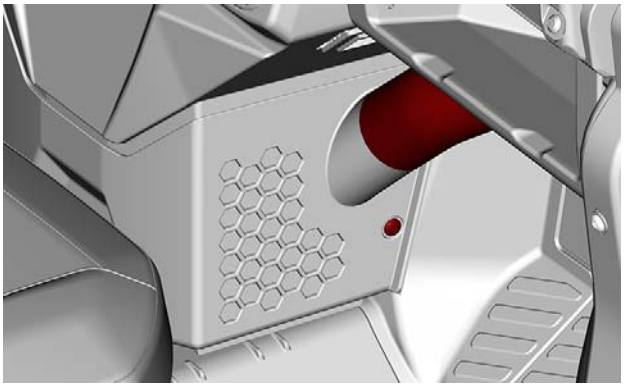
tmr2016-151-006

2. Remove the screws (3).

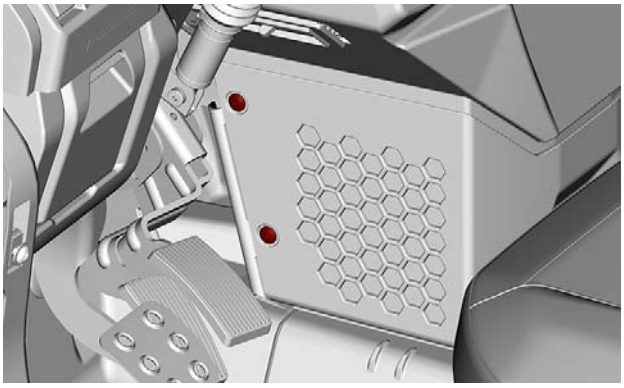
tmr2016-151-007

3. Pull the cover towards the seats.

Installing the Lower Cover

The installation is the reverse of the removal procedure. However, pay attention to the following.

TIGHTENING TORQUE	
Lower cover screw	5.5 N•m ± 0.5 N•m (49 lbf•**in** ± 4 lbf•**in**)

Console

Removing the Console

1. Remove the lower cover.
2. Remove the console screws on both sides.

tmr2016-151-008

3. Pull on the console.
4. From under the console, disconnect the blower switch connector.
5. Disconnect the potentiometer connector.
6. Remove the console.

Installing the Console

The installation is the reverse of the removal procedure. However, pay attention to the following.

TIGHTENING TORQUE	
Console screw	5.5 N•m ± 0.5 N•m (49 lbf•**in** ± 4 lbf•**in**)

HEATING UNIT ASSEMBLY

Accessing the Under Dash Accessory Post

1. Remove the following parts:
   – RH lower dashboard
   – Lower cover.

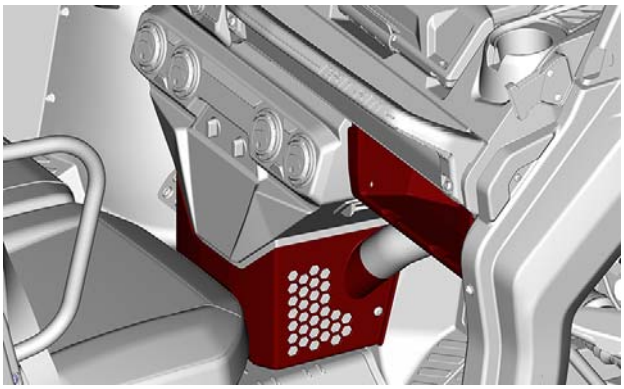
tmr2016-151-024

2. Remove the following nuts.

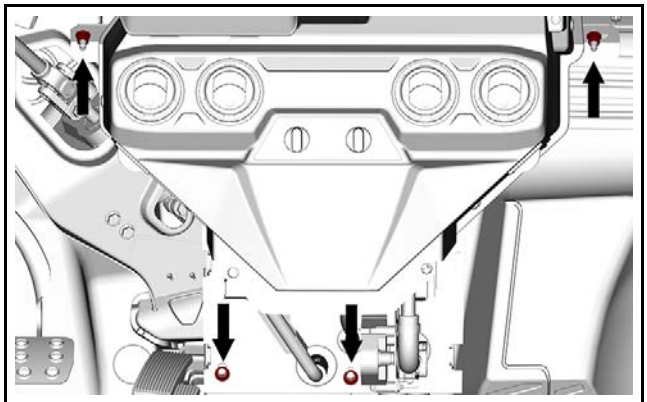
tmr2016-151-023

3. Tilt the unit towards the seats.

Removing the Heating Unit Assembly

1. Remove the following parts:
   – RH lower dashboard
   – Lower cover
   – Console
   – Floor cover.

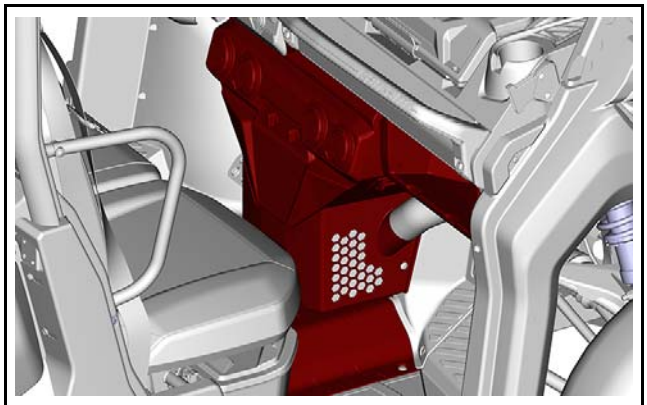
tmr2016-151-005

2. Disconnect the air ducts.
3. Remove the following nuts.

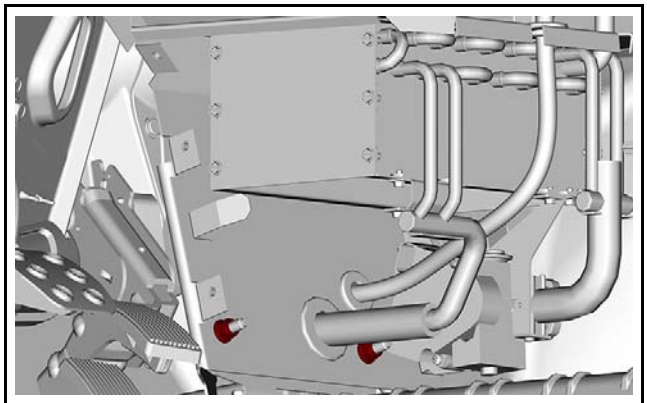
tmr2016-151-009

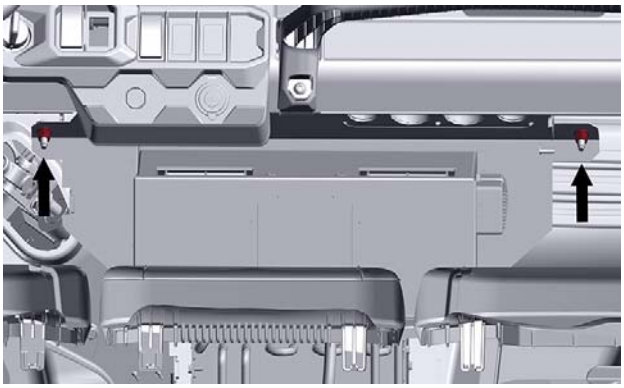
tmr2016-151-010

4. Pull on the heating unit assembly.
5. Install a hose pincher on both heater core hoses behind the unit back plate.

REQUIRED TOOL	
LARGE HOSE PINCHER (P/N 529 032 500)	

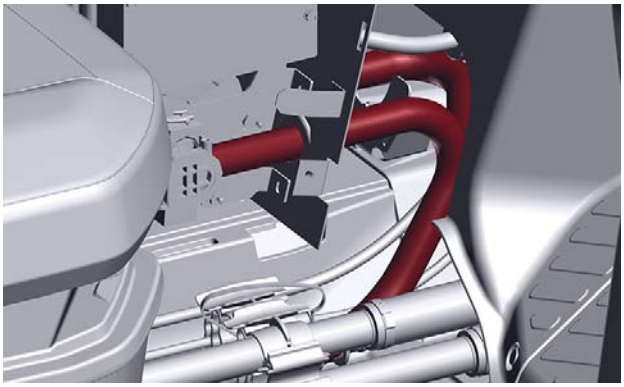
tmr2016-151-011

6. Place a drain pan under the heating unit.
7. Disconnect bleeding hose at Y fitting, behind the unit back plate.

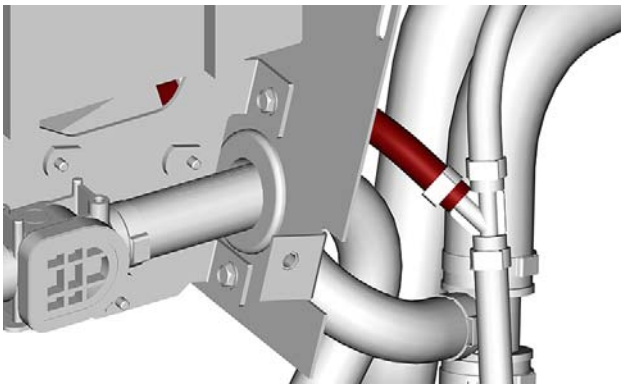
tmr2016-151-025

8. Disconnect coolant hoses from the heater core and heat control valve.
9. Disconnect the heating unit harness connector.
10. Remove the heating unit from the vehicle.

Installing the Heating Unit Assembly

The installation is the reverse of the removal procedure. However, pay attention to the following.

TIGHTENING TORQUE	
Heating unit retaining nut	14 N•m ± 1 N•m (124 lbf•**in** ± 9 lbf•**in**)

Install new Oetiker clamp.

Fill and bleed the cooling system. Refer to *COOLING SYSTEM - ENGINE COMPONENTS* subsection.

Check for coolant leaks from radiator and hoses.

BLOWER

The blower assembly includes the blower resistor, the blower motor and the blower fans.

Heating Unit Fuses Location

The fuse box is located on the RH side of the heating unit, behind the console.

tmr2016-151-020

Testing the Blower Motor

Turn the vehicle key switch to ON.

Turn the blower speed switch to low, medium, then high.

Commentaire de la rédaction: S.V.P. ne pas laisser cette table se séparer, sinon c'est la confusion.

HEATING UNIT TROUBLESHOOTING CHART		
Is blower working?	YES →	Everything is OK
NO ↓		
Check for power on main accessory posts under dashboard	NO →	Refer to *POWER DISTRIBUTION AND GROUNDS* subsection
YES ↓		
Check blower fuse (20A). Is fuse burnt?	YES →	Replace fuse Is blower working?
NO ↓		
Bypass 18A current module		
↓		
Blower turns?	YES →	Replace 18A current module Is blower working?
NO ↓		
Bypass blower speed switch		
↓		
Blower turns?	YES →	Replace blower speed switch Is blower working?
	NO →	Replace blower and motor assembly Is blower working?
NO ↓		
Check wiring harness, connectors, and ground		
↓		
Harness and connectors good?	NO →	Repair or replace defective part(s)

Blower Motor resistor

The blower motor resistor provides electrical resistance in series to the blower motor.

The fan speed control switch sends current to one blower resistor pin based on selected fan speed.

Adding resistance to the circuit slows the blower motor.

Removing resistance from the circuit speeds the blower motor.

Testing the Blower Motor Resistor

Refer to *WIRING DIAGRAM*.

The blower motor resistor cannot be tested independently from the blower motor.

1. Turn the fan on to low, medium, then high.
2. Read the voltage at the blower assembly connector for each speed.

If battery voltage is available at each pin of the blower assembly connector and the blower motor does not come on. Ensure there is a good ground.

If all electrical tests are ok. Replace the blower assembly.

Blower speed switch

The blower speed switch sends current to one pin of the blower motor resistor depending on selected speed.

The blower speed switch also activates the relay which allows the temperature control sensor signal to reach the heater control valve actuator.

Testing the Blower Speed Switch

Refer to *WIRING DIAGRAM*.

Remove console.

1. Disconnect blower speed switch.
2. Ensure battery voltage is available at pin B (harness side).
3. Disconnect blower speed switch.
4. Test resistance as per following table.

SPEED	PINS	SPECIFICATION
Off	B and C	O.L.
Any speed	B and C	0 Ω
Low	B and 9	0 Ω
Medium	B and 8	0 Ω
High	B and 7	0 Ω

Replace blower speed switch if test is not as per specifications.

Removing the Blower Assembly

1. Remove the heating unit and place it on a work bench.
2. Remove the blower cover.

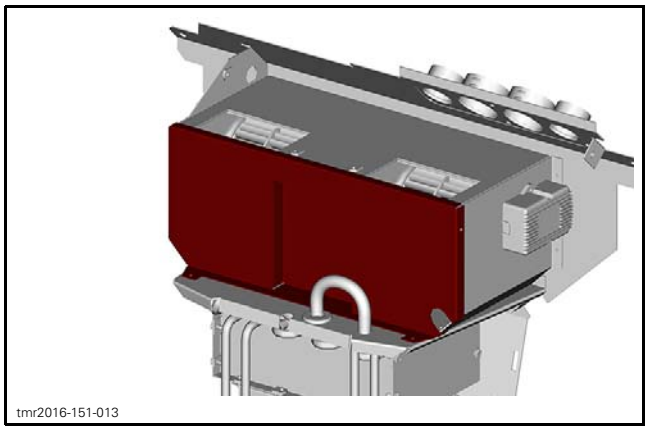
tmr2016-151-013

3. Disconnect the blower motor connector.
4. Remove the blower.

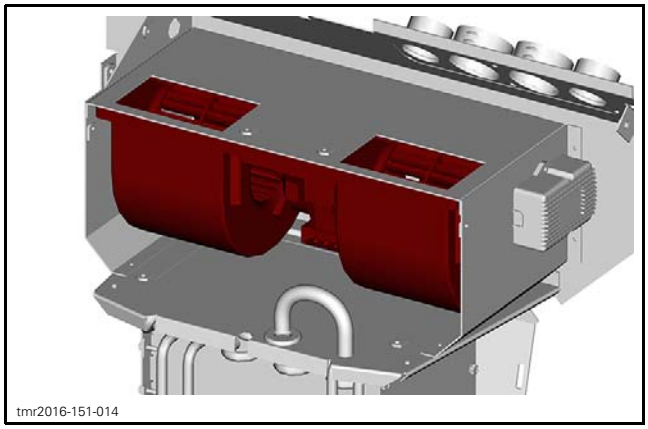
tmr2016-151-014

Installing the Blower Assembly

The installation is the reverse of the removal procedure. However, pay attention to the following.

TIGHTENING TORQUE	
Blower assembly screw	3 N•m ± 0.5 N•m (27 lbf•**in** ± 4 lbf•**in**)

HEATER CONTROL VALVE

The heater control valve assembly includes the valve and the actuator.

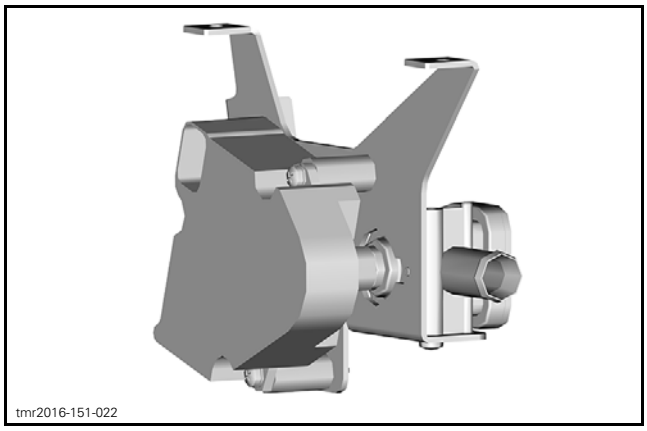
tmr2016-151-022

Heater control valve

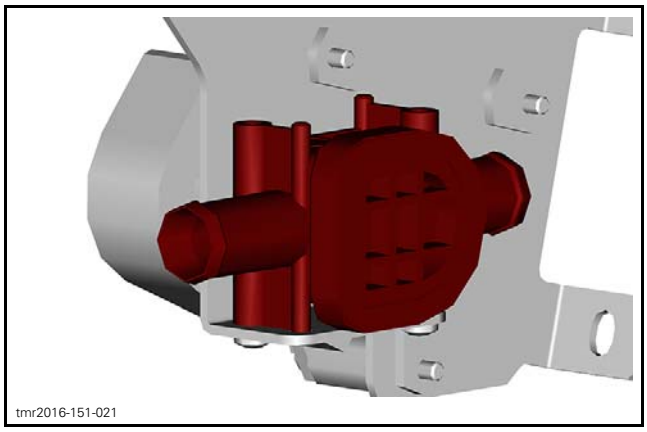
tmr2016-151-021

The heater control valve opens to allow coolant to pass through. When the coolant circulates, it heats up the unit.

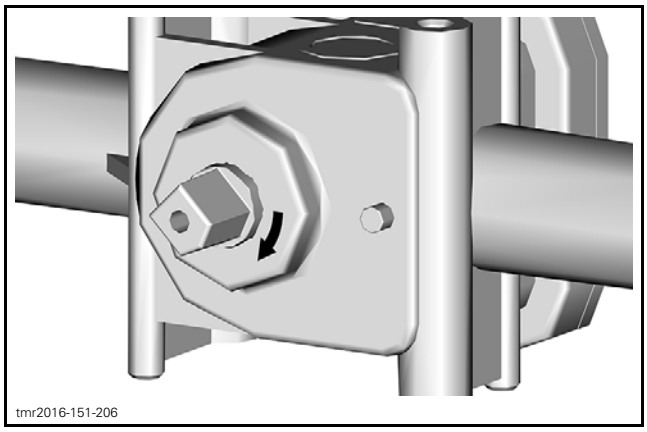
tmr2016-151-206

The heater control valve closes to prevent coolant from passing through. When the coolant circulation stops, it cools down the unit.

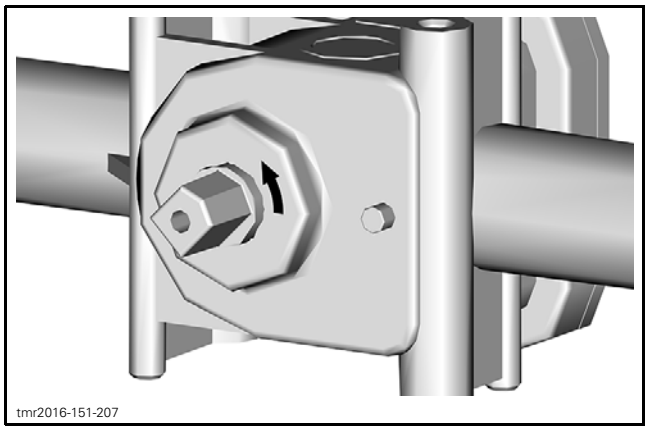
tmr2016-151-207

The heater control valve actuator turns the heater control valve.

Testing the Heater Control Valve

1. Remove the heater control valve actuator.
2. Turn the heater control valve to full open and full closed positions.

If the heater control valve does not:

– Fully open;

– Fully close;

replace the heater control valve assembly.

Removing the Heater Valve Assembly

1. Remove the heating unit and place it on a work bench. Refer to *REMOVING THE HEATING UNIT ASSEMBLY*.
2. Disconnect valve connector.
3. Remove the elbow hose.

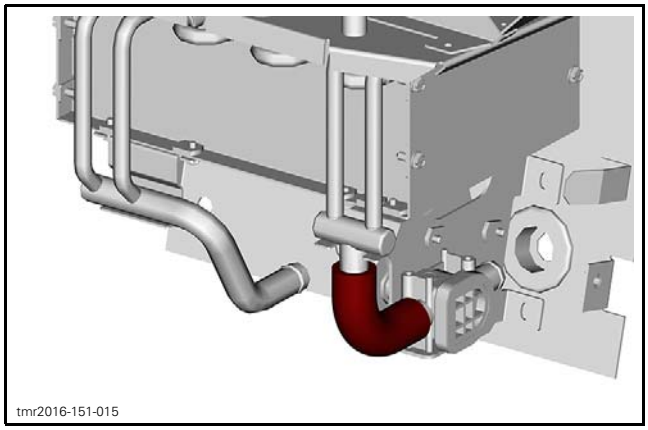
tmr2016-151-015

4. Remove the heater control valve assembly screws.

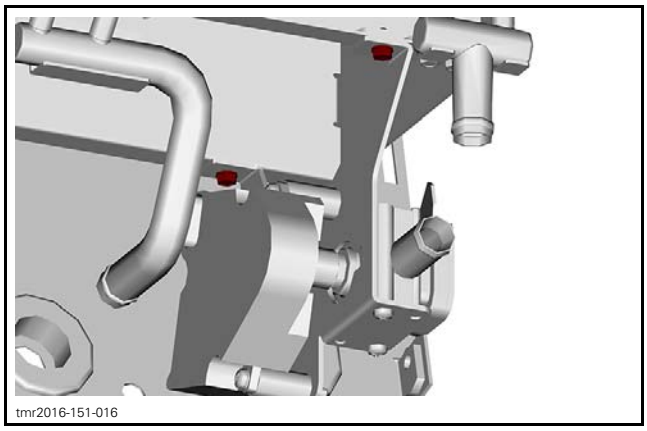
tmr2016-151-016

5. Remove the heater valve.

Installing the Heater Control Valve Assembly

The installation is the reverse of the removal procedure. However, pay attention to the following.

TIGHTENING TORQUE	
Button head screw	3 N•m ± 0.5 N•m (27 lbf•**in** ± 4 lbf•**in**)
Hexagonal screw	4 N•m ± 0.5 N•m (35 lbf•**in** ± 4 lbf•**in**)

Fill the cooling system with the recommended coolant. Refer to *COOLING SYSTEM - ENGINE COMPONENTS* subsection.

Bleed the cooling system, refer to *PERIODIC MAINTENANCE PROCEDURES* subsection.

Check for coolant leaks from radiator and hoses.

Heater control valve actuator

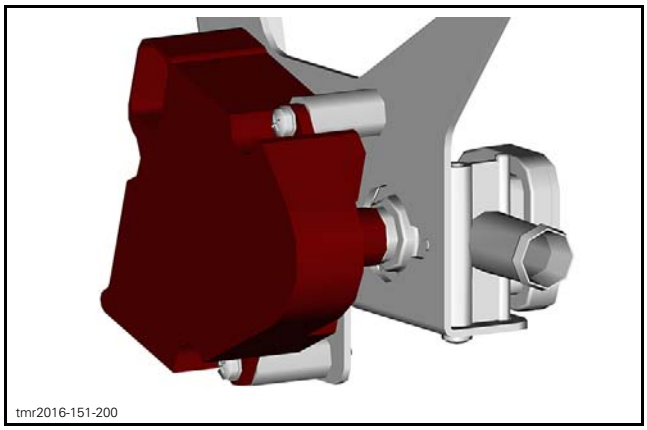
tmr2016-151-200

The heater control valve actuator turns when voltage is sent to the signal wire.

As voltage to the signal wire increases, the heater control valve actuator turns clockwise.

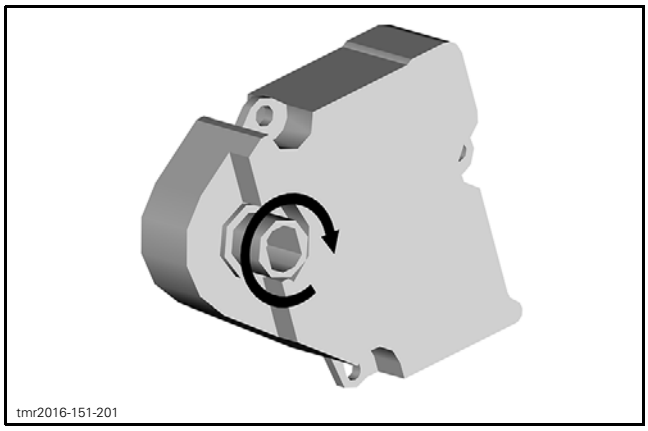

As voltage to the signal wire decreases, the heater control valve actuator turns counterclockwise.

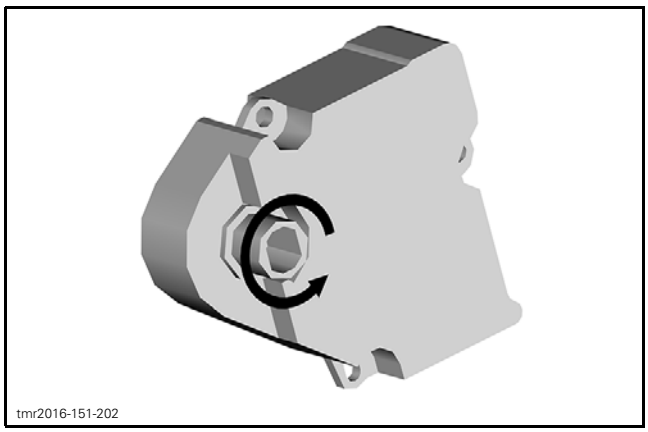

Testing the Heater Control Valve Actuator

Refer to *WIRING DIAGRAM*.

Turn blower motor on to any speed.

Remove the heater control valve actuator.

1. Ensure battery voltage is available at pin A.
2. Ensure a good ground is available at pin C.
3. Backprobe pin D.
   - 3.1 Voltage should vary when turning the temperature control knob.
   - 3.2 The heater control valve actuator shaft should turn when turning the temperature control knob.

If the valve actuator is defect, replace the control valve assembly.

Removing the Heater Control Valve Actuator

1. Remove the lower cover.
2. Remove the retaining screws and washers.

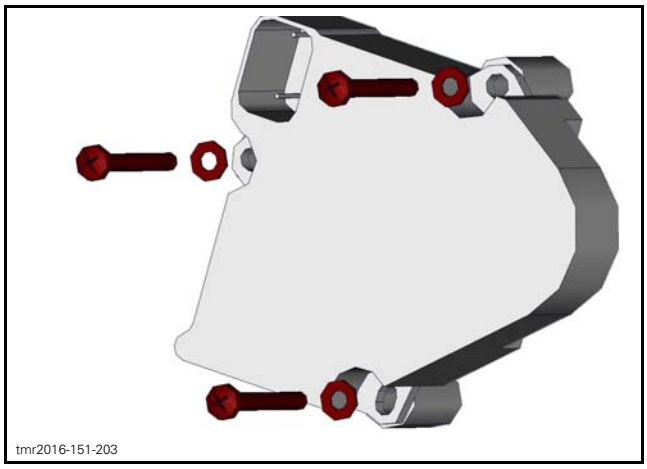

Installing the Heater Control Valve Actuator

The installation is the reverse of the removal procedure. However, pay attention to the following.

Ensure to correctly position the adaptor between valve and actuator shafts.

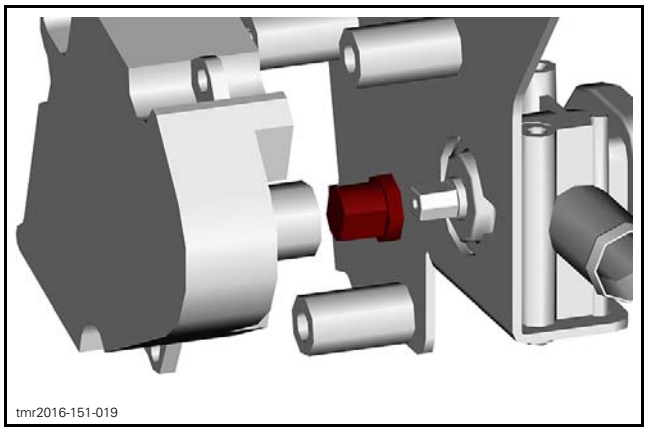

TIGHTENING TORQUE	
Actuator screw	3 N•m ± 0.5 N•m (27 lbf•**in** ± 4 lbf•**in**)

Temperature control

The temperature control knob turns a potentiometer.

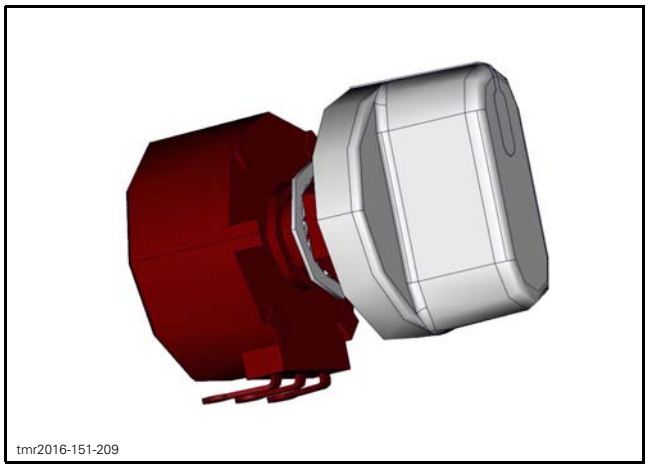
tmr2016-151-209

The potentiometer varies the voltage output through the signal wire.

Testing the Temperature Control Potentiometer

Refer to *WIRING DIAGRAM*.

Turn blower motor on to any speed.

1. Ensure battery voltage is available at pin A.
2. Ensure a good ground is available at pin C.
3. Backprobe pin B.
   3.1 Voltage should vary when turning the temperature control knob.

Removing the Temperature Control Potentiometer

1. Remove console.
2. Pull control knob off potentiometer.

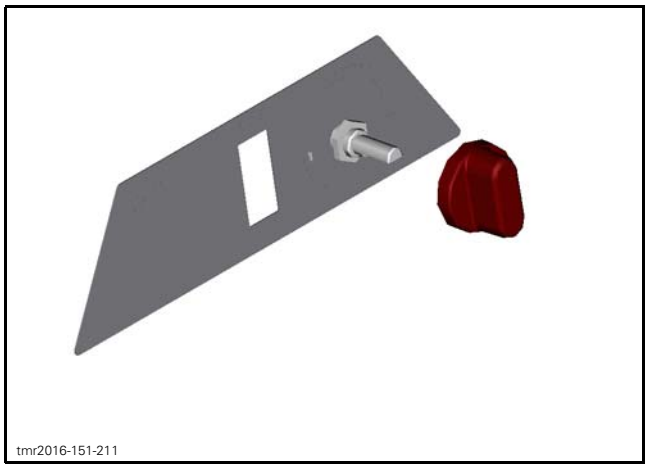
tmr2016-151-211

3. Remove the retaining nut.

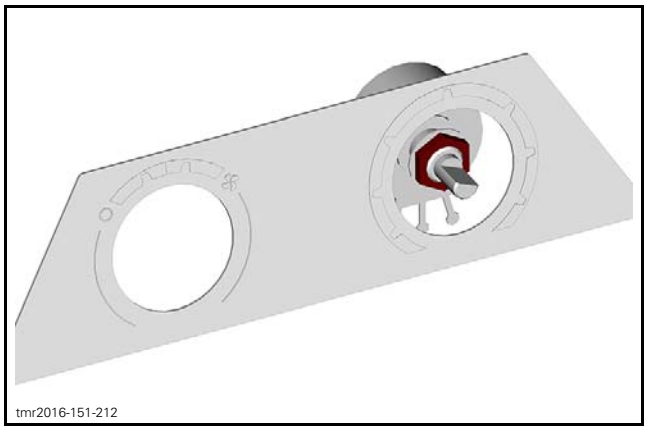
tmr2016-151-212

Installing the Temperature Control Potentiometer

Reverse removal procedure.

HEATER CORE

Removing the Heater Core

1. Remove the heating unit and place it on a work bench. Refer to *REMOVING THE HEATING UNIT ASSEMBLY*.
2. Remove the heater control valve assembly with elbow hose.
3. Remove the bleeding hose.

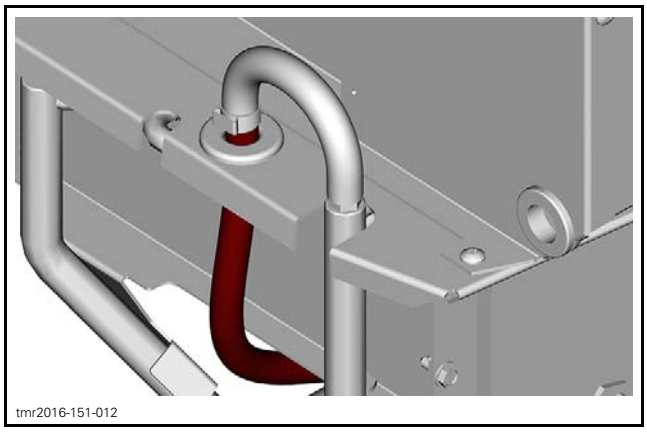
tmr2016-151-012

4. Remove the heater core end plate screws on both sides.

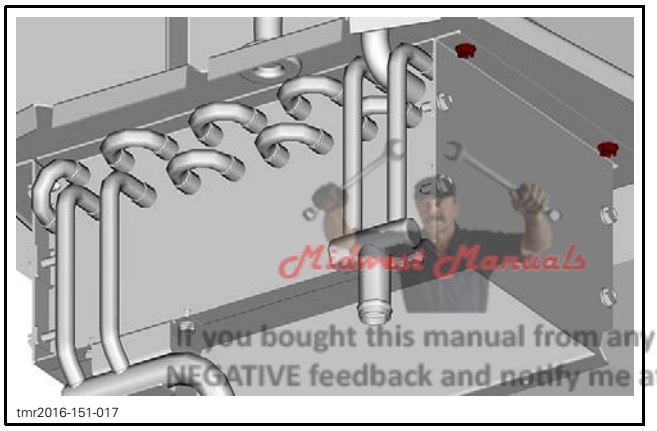
tmr2016-151-017

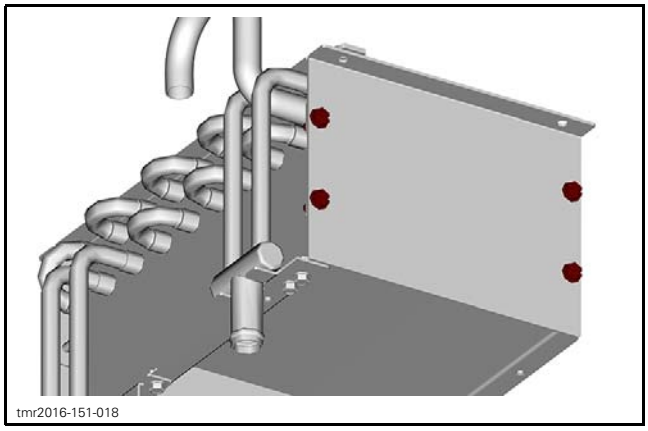
tmr2016-151-018

Midwest Manuals
Green Manuals
Paperless Manuals
For a Better Tomorrow
www.green-manuals.com
If you bought this manual from any other seller please leave them
NEGATIVE feedback and notify me at bestshopmanuals@gmail.com

5. Remove the heater core.

Installing the Heater Core

The installation is the reverse of the removal procedure. However, pay attention to the following.

TIGHTENING TORQUE	
Button head screw	3 N•m ± 0.5 N•m (27 lbf•**in** ± 4 lbf•**in**)
Hexagonal screw	4 N•m ± 0.5 N•m (35 lbf•**in** ± 4 lbf•**in**)

Install new Oetiker clamp.

Fill the cooling system with the recommended coolant. Refer to *COOLING SYSTEM - ENGIME COMPONENTS* subsection.

Bleed the cooling system, refer to *COOLING SYSTEM - ENGIME COMPONENTS* subsection.

Check for coolant leaks from radiator and hoses.

AIR CONDITIONING - VEHICLE COMPONENTS

AIR CONDITIONING SYSTEM

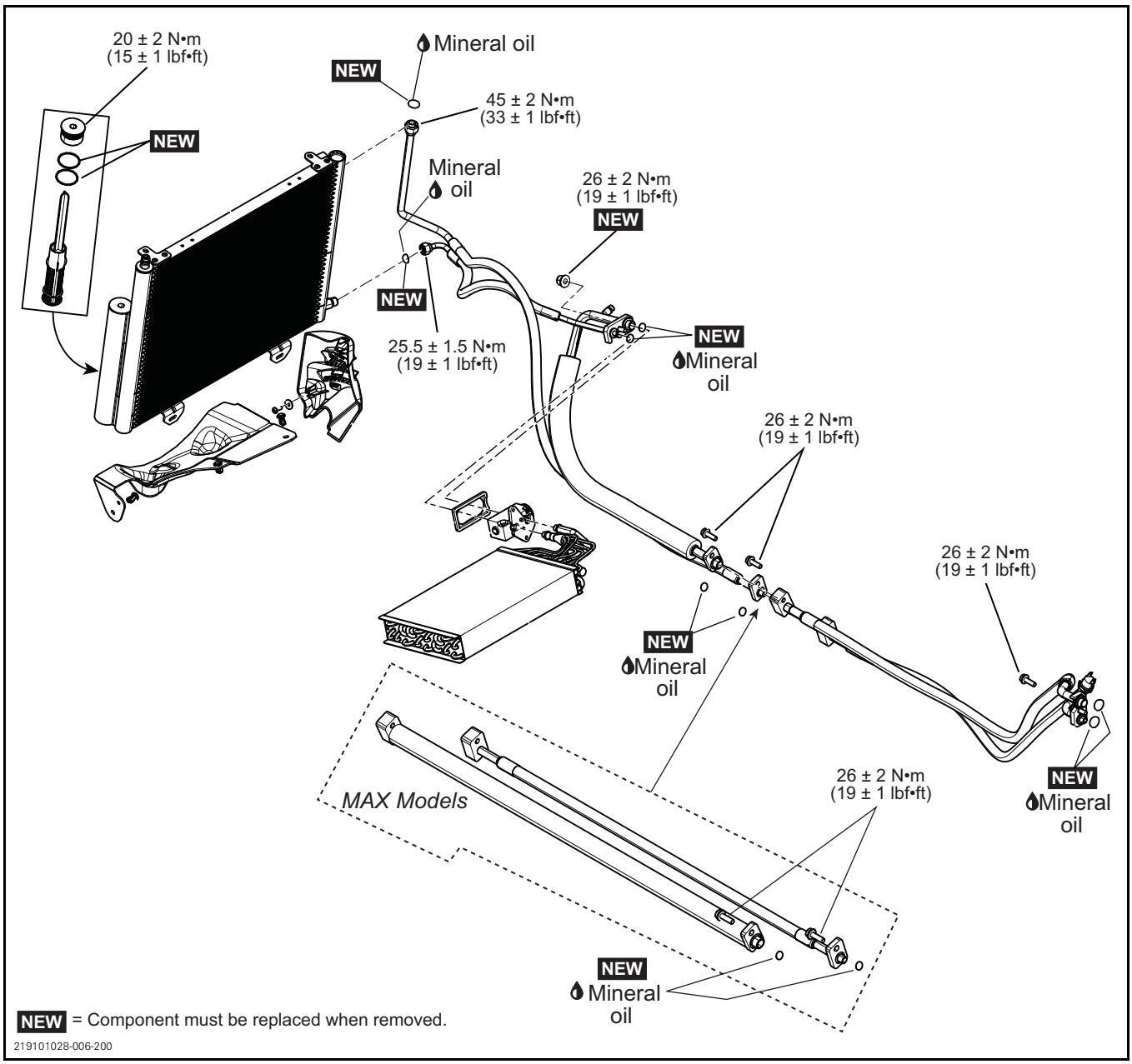

GENERAL

SYSTEM COMPONENTS

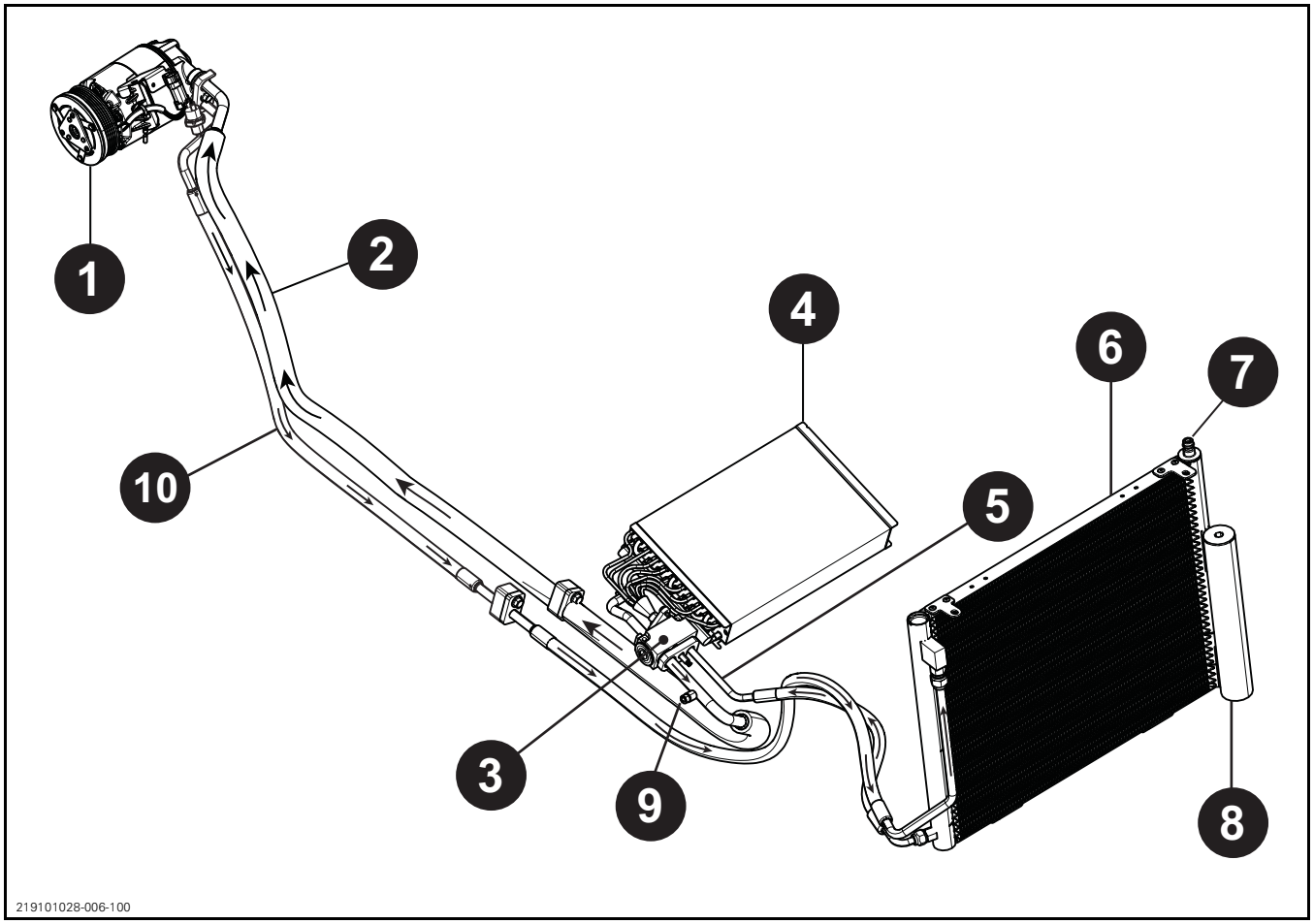

1. *Compressor*
2. *Low pressure gas hose*
3. *Expansive valve*
4. *Evaporator*
5. *High pressure liquid hose*
6. *Condenser*
7. *High pressure side service port*
8. *Receiver / drier (including the desiccant cartridge)*
9. *Low pressure side service port*
10. *High pressure gas hose*

In an air conditioning system, the heat is evacuated from the cockpit by circulating a refrigerant through a closed system containing several components. At each component the refrigerant goes through pressure and temperature changes.

The compressor: The compressor is fastened on the engine. It is driven by a belt and engaged by an electromechanical clutch. It is responsible for compressing and transferring refrigerant gas. The compressor takes in the low pressure refrigerant, pressurized it towards the condenser. The compressor is loaded in function of cooling demand. Less demand equals less torque request from compressor to the engine.

The condenser: Ambient air passing through the condenser removes the heat from the refrigerant. This action transforms the gas to liquid.

Then, the liquid moves into the receiver / drier where it is filtered to remove moisture and dirt. The receiver / drier also serves as the storage tank for the refrigerant in liquid state.

The expansion valve: After the receiver / drier, the refrigerant is sent towards the expansion valve. This valve has a controlled restriction to create an important refrigerant pressure drop and change of phase from liquid to gas. Thus the refrigerant in the evaporator is cold.

The evaporator: The refrigerant flowing inside the evaporator coil absorbs the heat from the warm air flowing on the evaporator coil. Thus the moisture from the warm air condensates on the evaporator coil and drips from the cab.

The refrigerant cycle is completed when the heated low pressure gas is again drawn into the compressor.

Receiver / drier: The liquid refrigerant coming from the condenser passes through the receiver / drier to remove moisture and foreign matter from the system. The only time the receiver / drier must be opened is to replace the desiccant cartridge when the refrigerant system is opened to ambient air (e.g.: during A/C component replacement) or a major leak has occurred within the systems components.

The low pressure side service port: Located on the front portion of the low pressure gas hose. Accessible behind the right front wheel.

The high pressure side service port: Located on the top of the condenser, on the left side of the vehicle. Accessible through the front service center.

A/C Service Products

Refrigerant	Type	R-134a
	Filling capacity	520 g (18 oz)
Oil	Type	PAG 46
	Quantity	Factory filled 155 ml (.33 pt (U.S. liq.))

Safe Practices with R134a Refrigerant

All technicians who work on the air conditioning system must be trained (certified) to use the refrigerant products and the recovery, recycling and refrigerant charging stations.

BRP is not offering training on A/C system to be certified. The majority of non-A/C parts can be replaced without having to disconnect refrigerant lines. The engine can be removed without disconnecting the refrigerant lines from the compressor.

In the event the refrigerant lines need to be disconnected:

- The refrigerant in the system must be recuperated by a certified technician using the proper equipment and having the knowledge and the experience to service refrigeration equipment.
- The vehicle can now repaired by a non-certified technician.
- After the repair, the system must be leak tested (no leak accepted) and charged by a certified technician using proper equipment.

The R-134a refrigerant inside the A/C system is under pressure. In case of major leak, the refrigerant temperature drops below freezing level instantly.

If the refrigerant splashes on the skin or eyes, rinse the area thoroughly with COOL water and consult a medical promptly.

⚠ CAUTION Safety glasses or a transparent face shield are mandatory safety items and one or the other is absolutely required when working with R134a refrigerant.

⚠ WARNING

R-134a refrigerant is dangerous if not properly handled.
Liquid R-134a may cause blindness when contacts the eyes and may cause serious frostbite when contacts the skin.
Gaseous R-134a, in ambient air, can be flammable if it contacts open flame or very hot substances.
Any servicing work that involves release or addition of R-134a to the system must be done by a certified technician using the proper equipment and having the knowledge and the experience to service refrigeration equipment.

Air Conditioning System Functioning Prerequisite

The engine RPM must be greater than 800 rpm.

The compressor will NOT be activated if the engine coolant temperature is lower than 10°C (50°F) or is higher than 120°C (248°F).

Also, the battery voltage must be above 11 volts.

If these conditions are not satisfied, the compressor clutch is not activated.

HVAC Sensors

Various sensors are used to monitor and control the HVAC system.

- Outside temperature sensor - located under the hood.
- Inside temperature sensor - located in the bottom of the HVAC unit, in the air, before the evaporator coil.

– Coil temperature sensor - located in the air after evaporator and heater coils.
– Evaporator De-icing sensor - located on the evaporator coil refrigerant outlet tube.
– Pressure switch - located on the high pressure gas line, near the compressor.

Temperature sensors: Measures internal and external temperatures to allow the controller to determine the best parameters to be used.

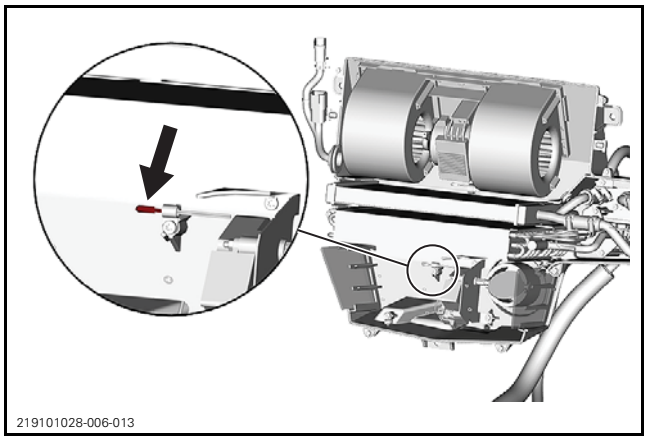
219101028-006-013

INSIDE TEMPERATURE SENSOR

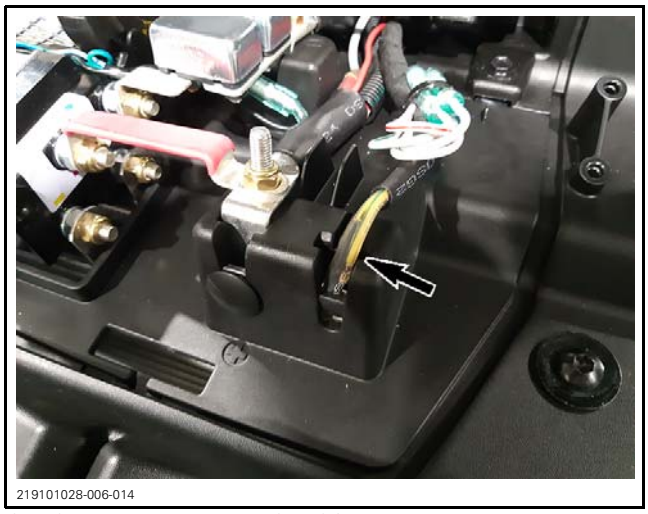
219101028-006-014

OUTSIDE TEMPERATURE SENSOR

Coil temperature sensor: Used to know the air temperature that comes out from the blower.

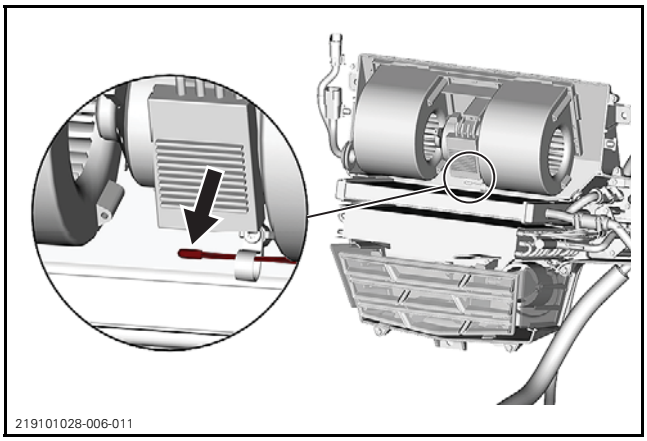
219101028-006-011

Evaporator De-icing sensor: Detects freezing on the evaporator coil and starts the de-ice mode.

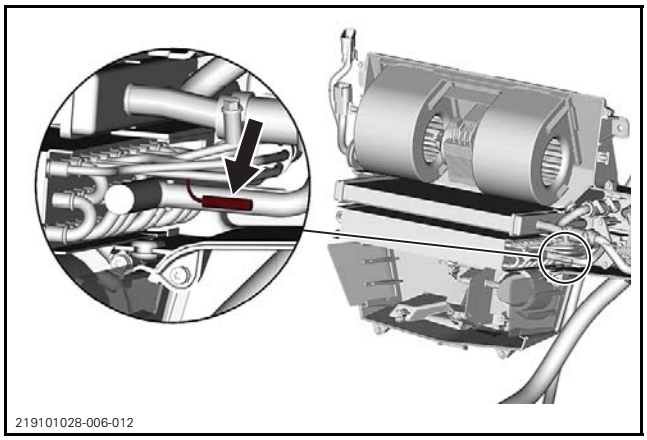
219101028-006-012

Pressure switch: Reacts to the refrigerant high side pressure and opens the circuit (shutting off compressor) if the pressure is over or below the defined thresholds.

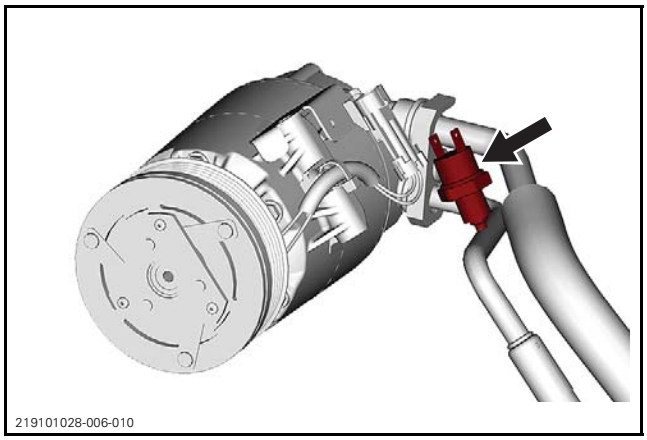
219101028-006-010

MAINTENANCE

INSPECTING AND REPLACING THE A/C AIR FILTERS

NOTICE **The cleaning of the filters must be performed more often than recommended when riding in dusty conditions or sand.**

Fresh Air Filter

Open hood to access fresh air filter.

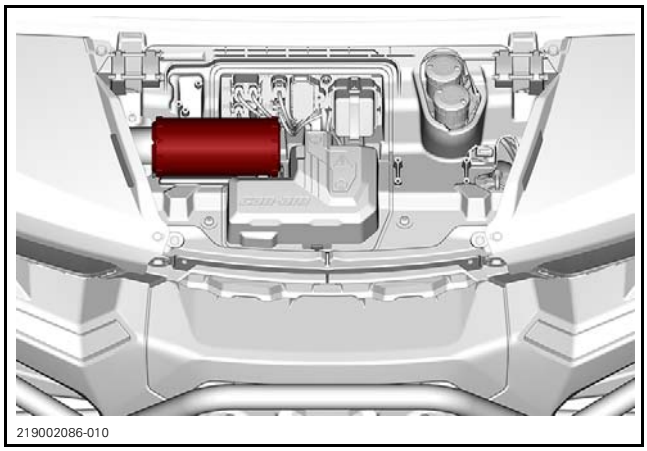

Lift and slide filter to remove.

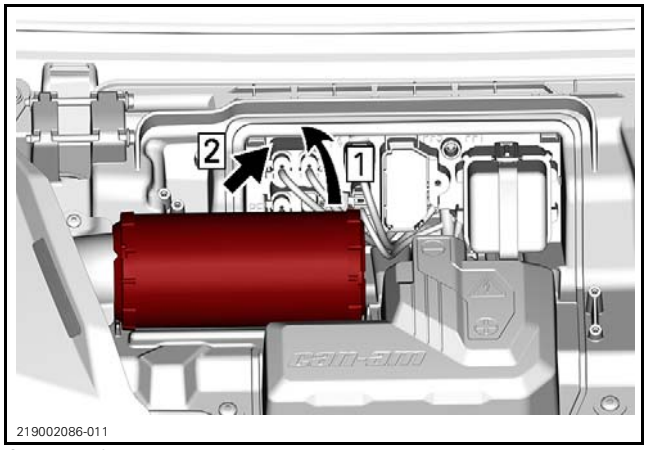

Step 1: Lift
Step 2: Slide

Inspect the filter for any signs of leaks. A streak of dust on the clean side of the filter is a telltale sign. Replace filter if there is any damage. Eliminate any source of air leaks before installing a new filter.

Clean the air filter by tapping out heavy dust from paper element, this will allow dirt and dust to get out of the paper filter.

NOTICE **It is not recommended to blow compressed air on the paper element; this could damage the paper fibers and reduce its filtration ability when used in dusty environments. If air filter is too dirty and cannot be cleaned following the recommended procedure, it should be replaced.**

Use a clean damp cloth to wipe both the filter sealing surface and the inside of the outlet tube. Ensure that the outlet tube sealing area is undamaged.

The installation is the reverse of the removal procedure.

Cockpit Air filters

Cockpit air filters are located at the bottom of the center console. There are 3 filters:

– One at the front of the unit
– One on each side of the unit.

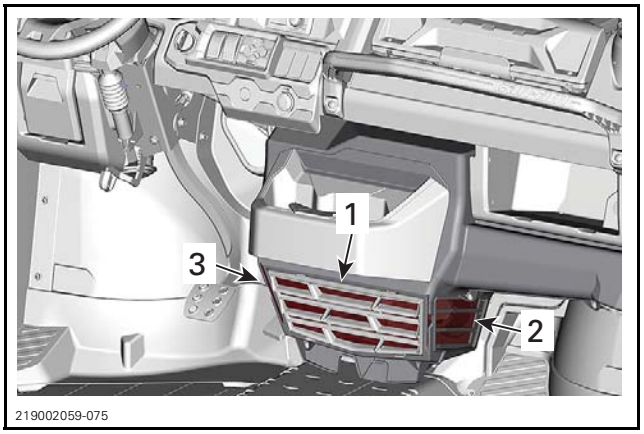

1. Front cockpit air filter
2. Lateral cockpit air filter - passenger side
3. Lateral cockpit air filter - driver side

Front Cockpit Air Filter

To remove this filter, lift the grille tabs and pull up.

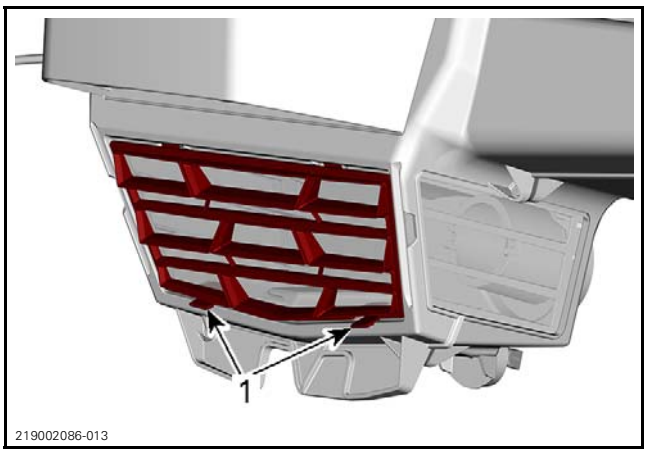

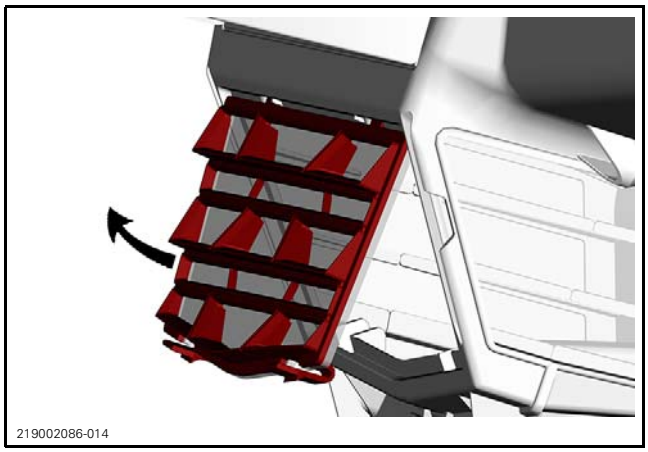

Clean air filter by washing it in lukewarm water with mild soap. Remove excess water and air dry before installation.

Before installing the filter, clean the inside of the heating/air conditioning unit and the evaporator coil using vacuum cleaner and a soft brush.

NOTICE **Be careful when brushing to avoid damaging the evaporator coil fins.**

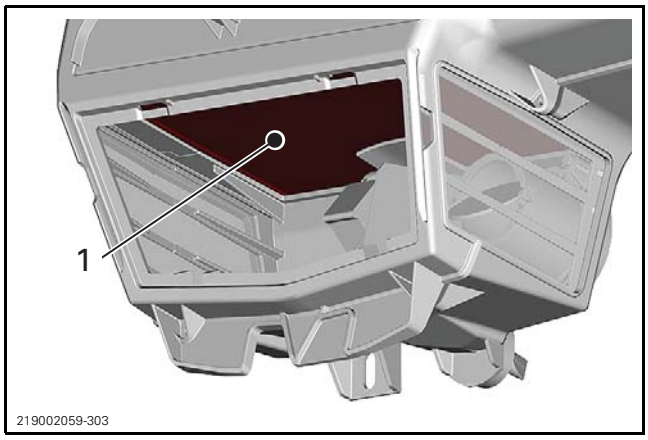

1. Evaporator

The installation is the reverse of the removal procedure.

Lateral Cockpit Air Filters

To remove these filters, grab the grille tab and pull.

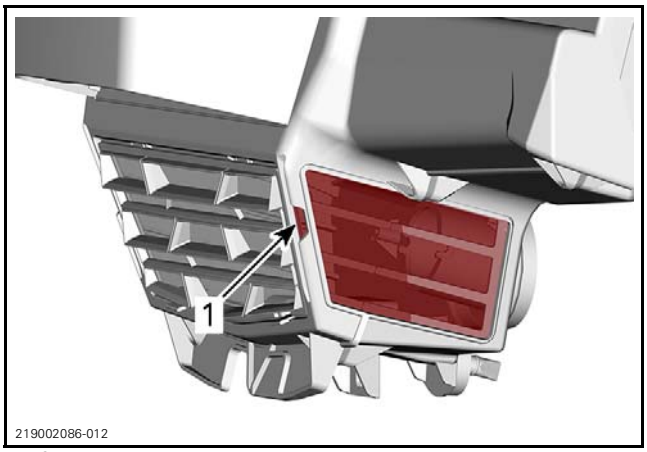

1. Grille tab

Clean air filters by washing them in lukewarm water with mild soap. Remove excess water and air dry before installation.

The installation is the reverse of the removal procedure.

INSPECTING THE COMPRESSOR DRIVE BELT

Refer to *AIR CONDITIONING - ENGINE COMPONENTS* for complete procedure to inspect or replace the compressor drive belt.

CLEANING THE CONDENSER

The condenser should be cleaned occasionally using water and a mild cleaner only.

The condenser is located in front of the radiator.

To reach the condenser, remove the front grille.

– Pull the bottom of the grille to release both retaining tabs.
– Remove the grille.

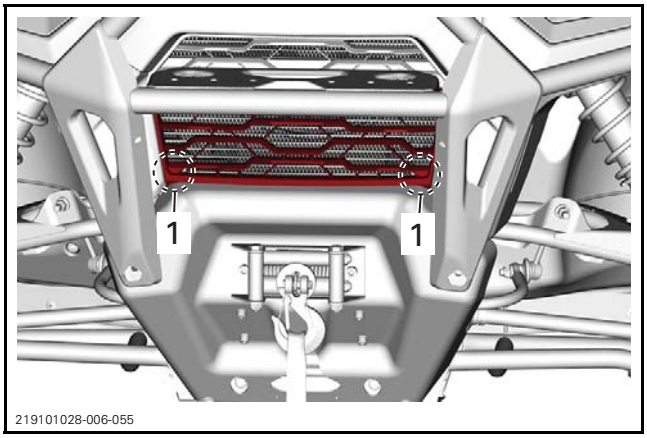

1. Retaining tab location

TROUBLESHOOTING

BLOWER MOTOR DOES NOT OPERATE

POSSIBLE CAUSE	INSPECTION	SOLUTION
1 - Blown fuse	Inspect fuse and wiring harness.	Replace fuse or repair wiring harness.
2 - Relay	Check power into and out of the relay.	Replace the relay or repair the wiring harness.
3 - Broken wire or bad connection	Check ground and connections of the blower motor.	Repair wiring harness or connector.
4 - Blower motor malfunction	Check the motor power wires.	Replace the motor.

BLOWER MOTOR OPERATES NORMALLY, BUT AIR FLOW IS INSUFFICIENT

POSSIBLE CAUSE	INSPECTION	SOLUTION
1 - Evaporator inlet is obstructed	Check evaporator for obstruction.	Remove obstruction and clean the evaporator fins.
2 - Clogged cockpit air filters	Check the cockpit air filters.	Clean or replace the cockpit air filters.
3 - Ice on evaporator	Check the de-icing sensor status in the climate control module.	Clear code and replace the sensor.
4 - Clogged air ducts	Check cleanliness of ducts.	Clean ducts.

A/C UNIT NOT COOLING SUFFICIENTLY

POSSIBLE CAUSE	INSPECTION	SOLUTION
1 - Broken compressor drive belt	Check the condition of the compressor drive belt.	Replace the compressor drive belt.
2 - System low on refrigerant or empty	The pressure on the high pressure side will be low.	Recover the refrigerant. Repair any leaks. Recharge the system with proper quantity.
3 - Excessive quantity of refrigerant	The pressure on the high pressure side will be high.	Recover refrigerant and recharge the system with proper quantity.
4 - Air in the system	The pressure is high on the high pressure and low pressure sides.	Recover refrigerant and recharge the system with proper quantity.
5 - Dirty evaporator or condenser	Check evaporator and condenser cleanliness.	Clean evaporator and/or condenser.

PRESSURE GAUGE - RELATED TROUBLESHOOTING

As a general rule, the pressure on the high pressure side will be around 8 times greater than the pressure on the low pressure side.

The Pressure on the Low Pressure Side Too High

The pressure on the low pressure side becomes too high when the pressure on the high pressure side is too high.

POSSIBLE CAUSE	INSPECTION	SOLUTION
1 - Expansive valve opens too far	Frost on the line between condenser and the expansive valve.	Replace expansion valve.
2 - Defective compressor	The pressure gauges (high and low pressure) equalize when the magnetic clutch is disengaged.	Replace the compressor.

The Pressure on the Low Pressure Side Too Low

POSSIBLE CAUSE	INSPECTION	SOLUTION
1 - Low refrigerant quantity	The pressure on the high pressure side will be low and bubbles may be present in the system.	Recover the refrigerant. Repair any leaks. Recharge the system with proper quantity.
2 - Restriction between condenser and the block valve	Frost on the line between condenser and the expansive valve.	Recover refrigerant and recharge the system with proper quantity. Replace the hose.

The Pressure on the High Pressure Side Too High

POSSIBLE CAUSE	INSPECTION	SOLUTION
1 - Poor condenser performance	Dirt or clogged condenser fins.	Clean condenser fins.
2 - Excessive quantity of refrigerant	Refer to the Pressure-Temperature charts.	Recover refrigerant and recharge the system with proper quantity.
3 - Excessive quantity of oil	The pressure on the high pressure side will be too high.	Recover refrigerant. Remove oil from compressor and condenser. Flush the system using nitrogen. Recharge the system with appropriate oil and recommended quantity.
4 - Air in the system	Pressure is high on the high pressure and low pressure sides.	Recover refrigerant and recharge the system with proper quantity.
5 - Restriction in the receiver/drier, in the condenser or in hoses of the high pressure side.	The pressure on the high pressure side will be high, and the pressure on the low pressure side will be low.	Recover refrigerant. Flush the system using nitrogen. Replace defective part(s). Recharge the system with proper quantity.

The Pressure on the High Pressure Side Too Low

POSSIBLE CAUSE	INSPECTION	SOLUTION
1 - Low refrigerant quantity	The pressure on the high pressure side will be low.	Recover the refrigerant. Repair any leaks. Recharge the system with proper quantity.
2 - Compressor not operating	The pressure is equal on the high pressure and the low pressure side.	Replace the compressor or ccmpressor clutch.
	Check if compressor is clutching at cooling mode (Temperature = Minimum and Fan Speed = Maximum)	
	Check if there 12V at the clutch connector.	No voltage - check fuse, relay and wiring harness. If 12V but clutch does not engage - replace the clutch magnet.

PROCEDURES

CONTROL OF THE AIR CONDITIONING SYSTEM TEMPERATURE

1. Inspect all A/C air filters. Replace if necessary.
2. Check cleanliness of condenser and evaporator. Clean if necessary.
3. Open all doors.
4. Close both windshield air vents but open all other (6x).
5. Start the engine.
6. Power on the climate control module and select the following:

COOL temperature mode	
Lower temperature setting	
Maximum fan speed	

7. Let engine running to idle at least 5 minutes.
8. Measure and record the ambient temperature and the air humidity.
9. Measure and record the air temperature in both air vents located in the center of the dash.

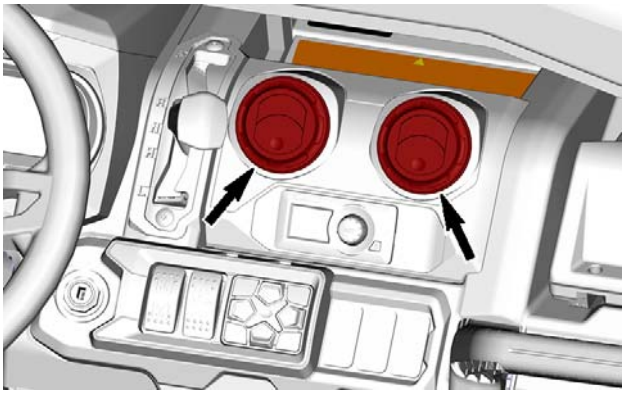

219101028-006-020

10. Calculate the average of the measured temperatures and compare the result with the following table.

AMBIENT AIR TEMPERATURE	HIGHEST ALLOWABLE AVERAGE TEMPERATURE	
	LOW AMBIENT HUMIDITY (10- 15%)	HIGH AMBIENT HUMIDITY (50- 75%)
20°C (68°F)	10.1°C (50.2°F)	11.6°C (52.9°F)
21°C (70°F)	10.4°C (50.7°F)	12.4°C (54.3°F)
22°C (72°F)	10.7°C (51.3°F)	13.2°C (55.8°F)
23°C (73°F)	11.0°C (51.8°F)	14.0°C (57.2°F)
24°C (75°F)	11.3°C (52.3°F)	14.7°C (58.5°F)
25°C (77°F)	11.7°C (53.1°F)	15.5°C (59.9°F)
26°C (79°F)	12.1°C (53.8°F)	16.3°C (61.3°F)
27°C (81°F)	12.5°C (54.5°F)	17.0°C (62.6°F)
28°C (82°F)	13.0°C (55.4°F)	17.7°C (63.9°F)

AMBIENT AIR TEMPERATURE	HIGHEST ALLOWABLE AVERAGE TEMPERATURE	
	LOW AMBIENT HUMIDITY (10- 15%)	HIGH AMBIENT HUMIDITY (50- 75%)
29°C (84°F)	13.5°C (56.3°F)	18.5°C (65.3°F)
30°C (86°F)	14.0°C (57.2°F)	19.2°C (66.6°F)
31°C (88°F)	14.5°C (58.1°F)	19.9°C (67.8°F)
32°C (90°F)	15.1°C (59.2°F)	20.6°C (69.1°F)
33°C (91°F)	15.7°C (60.3°F)	21.3°C (70.3°F)
34°C (93°F)	16.3°C (61.3°F)	22.0°C (71.6°F)
35°C (95°F)	17.0°C (62.6°F)	22.7°C (72.9°F)
36°C (97°F)	17.6°C (63.7°F)	23.4°C (74.1°F)
37°C (99°F)	18.4°C (65.1°F)	24.0°C (75.2°F)
38°C (100°F)	19.1°C (66.4°F)	24.7°C (76.5°F)
39°C (102°F)	19.8°C (67.6°F)	25.4°C (77.7°F)
40°C (104°F)	20.6°C (69.1°F)	26.0°C (78.8°F)
41°C (106°F)	21.5°C (70.7°F)	26.6°C (79.9°F)
42°C (108°F)	22.3°C (72.1°F)	27.3°C (81.1°F)
43°C (109°F)	23.2°C (73.8°F)	27.9°C (82.2°F)
44°C (111°F)	24.1°C (75.4°F)	28.5°C (83.3°F)
45°C (113°F)	25.0°C (77°F)	29.1°C (84.4°F)

11. If results are out of specification, connect the vehicle to A/C pressure gauges.
12. Observe and record the system pressures (low and high pressure) with A/C still operating.
13. Active the diagnostic mode of the climate control module. Go in the window VIEW 1 and note the COIL temperature.
14. Compare results with the following tables.

NOTE: In the following tables, the data in **BOLD** indicate the normal temperature range.

COIL TEMPERATURE	PRESSURE ON THE LOW PRESSURE SIDE
-3.3°C (26°F)	108.18 kPa (15.69 PSI)
-2.2°C (28°F)	117.49 kPa (17.04 PSI)
-1.1°C (30°F)	**127.07 kPa (18.43 PSI)**
0°C (32°F)	**137 kPa (19.87 PSI)**
1.1°C (34°F)	**147.2 kPa (21.35 PSI)**
2.2°C (36°F)	**157.75 kPa (22.88 PSI)**

COIL TEMPERATURE	PRESSURE ON THE LOW PRESSURE SIDE
3.3°C (38°F)	**168.71 kPa (24.47 PSI)**
4.4°C (40°F)	**179.95 kPa (26.10 PSI)**
5.6°C (42°F)	**191.61 kPa (27.79 PSI)**
6.7°C (44°F)	**203.53 kPa (29.52 PSI)**
7.8°C (46°F)	**215.94 kPa (31.32 PSI)**
8.9°C (48°F)	**228.7 kPa (33.17 PSI)**
10°C (50°F)	**241.8 kPa (35.07 PSI)**
11.1°C (52°F)	**255.31 kPa (37.03 PSI)**
12.2°C (54°F)	**269.24 kPa (39.05 PSI)**
12.8°C (55°F)	**276.41 kPa (40.09 PSI)**
15.6°C (60°F)	313.57 kPa (45.48 PSI)
18.3°C (65°F)	353.49 kPa (51.27 PSI)
21.1°C (70°F)	396.24 kPa (57.47 PSI)
23.9°C (75°F)	441.95 kPa (64.10 PSI)
26.7°C (80°F)	490.84 kPa (71.19 PSI)
29.4°C (85°F)	542.96 kPa (78.75 PSI)
32.2°C (90°F)	598.47 kPa (86.80 PSI)
35°C (95°F)	657.76 kPa (95.40 PSI)
37.8°C (100°F)	719.81 kPa (104.40 PSI)
38.3°C (101°F)	732.91 kPa (106.30 PSI)
38.9°C (102°F)	746.01 kPa (108.20 PSI)

OUTSIDE TEMPERATURE	PRESSURE ON THE HIGH PRESSURE SIDE
11.7°C (53°F)	759.8 kPa (110.20 PSI)
12.2°C (54°F)	772.9 kPa (112.10 PSI)
12.8°C (55°F)	786.69 kPa (114.10 PSI)
15.6°C (60°F)	857.02 kPa (124.30 PSI)
16.7°C (62°F)	885.98 kPa (128.50 PSI)
17.8°C (64°F)	916.31 kPa (132.90 PSI)
18.9°C (66°F)	946.65 kPa (137.30 PSI)
20°C (68°F)	**978.37 kPa (141.90 PSI)**
21.1°C (70°F)	**1 010.08 kPa (146.50 PSI)**
22.2°C (72°F)	**1 043.18 kPa (151.30 PSI)**
23.3°C (74°F)	**1 076.27 kPa (156.10 PSI)**
24.4°C (76°F)	**1 110.75 kPa (161.10 PSI)**
25.6°C (78°F)	**1 145.22 kPa (166.10 PSI)**
26.7°C (80°F)	**1 181.07 kPa (171.30 PSI)**

OUTSIDE TEMPERATURE	PRESSURE ON THE HIGH PRESSURE SIDE
27.8°C (82°F)	**1 217.61 kPa (176.60 PSI)**
28.9°C (84°F)	**1 254.85 kPa (182.00 PSI)**
30°C (86°F)	**1 292.77 kPa (187.50 PSI)**
31.1°C (88°F)	**1 331.38 kPa (193.10 PSI)**
32.2°C (90°F)	**1 371.37 kPa (198.90 PSI)**
35°C (95°F)	**1 473.41 kPa (213.70 PSI)**
37.8°C (100°F)	**1 581.66 kPa (229.40 PSI)**

OUTSIDE TEMPERATURE	PRESSURE ON THE HIGH PRESSURE SIDE
40.6°C (105°F)	**1 694.73 kPa (245.80 PSI)**
43.3°C (110°F)	**1 813.32 kPa (263.00 PSI)**
46.1°C (115°F)	**1 938.12 kPa (281.10 PSI)**
48.9°C (120°F)	**2 069.12 kPa (300.10 PSI)**
51.7°C (125°F)	2 206.32 kPa (320.00 PSI)
54.4°C (130°F)	2 349.73 kPa (340.80 PSI)

OPERATING PRESSURES DIAGNOSIS

PRESSURE		**HOSES**		**AIR FLOW**	**CONDITION**
LOW PRESSURE SIDE	HIGH PRESSURE SIDE	LIQUID REFRIGERANT	GAS REFRIGERANT		
Very low	Very low	Slightly warm	Slightly warm	Warm	Lack of refrigerant
Low	Low	Warm	Warm to very warm	Warm to very warm	Lost of refrigerant
Low	Low	Warm	Warm	Very warm	Expansion valve closed
Normal (may decrease)	Normal	Warm	Warm	Slightly cold	Lack of refrigerant and air in the system
Normal (may decrease)	Normal (may decrease)	Warm	Very warm	Warm	Humidity in the system
Normal	High	Warm	Warm	Slightly cold	Clogged condenser or refrigerant overload
High	High	Warm	Very warm	Slightly cold	Expansion valve opened
High	High	Warm	Very warm	Warm	Contaminated refrigerant and air in the system
High	High	Very warm	Very warm	Very warm	Defective condenser

COMPRESSOR AND DRIVE BELT

Refer to *AIR CONDITIONING - ENGINE COMPONENTS* subsection.

AIR VENTS

Removing the Air Vent

Windshield Air Vent

1. Open the windshield.
2. Remove screws retaining the windshield air vent.

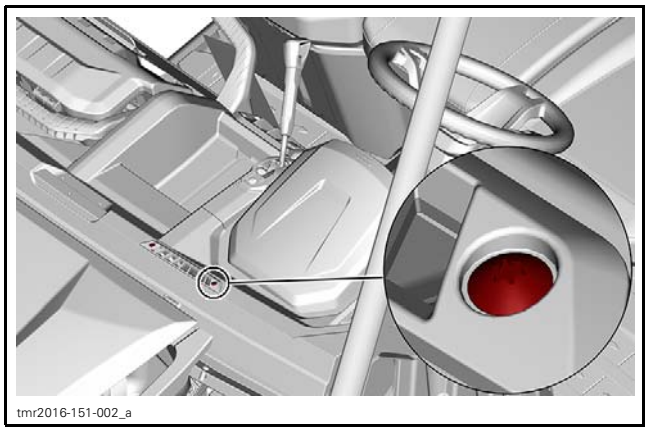
tmr2016-151-002_a

3. Pull on the windshield air vent and remove it.

Central Air Vents (Left and Right)

1. Unclip the vent and lift it.
2. Cut locking tie.

Central Air Vents (in the middle of dash)

1. Unclip the bottom of the central console panel.

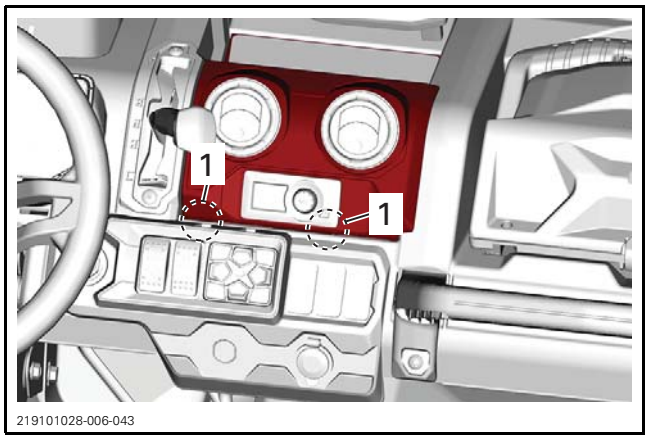

219101028-006-043

1. Locking tab location

2. Lift the panel and cut locking tie.

Installing the Air Vents

The installation is the reverse of the removal procedure. However, pay attention to the following.

TIGHTENING TORQUE	
Windshield air vent screws	1.6 N•m ± 0.4 N•m (14 lbf•**in** ± 4 lbf•**in**)

AIR DUCTS

Removing the Air Ducts

To remove air ducts, the dash removal is required.

Installing the Air Ducts

The installation is the reverse of the removal procedure.

HVAC UNIT

Removing the HVAC Unit Cover

1. Remove screws securing the cover.

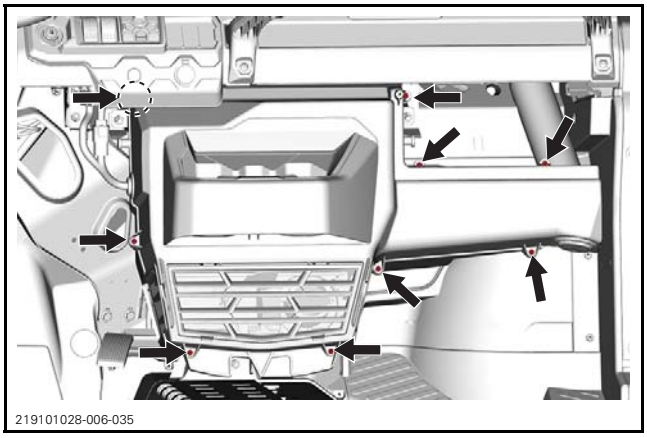
219101028-006-035

2. Pull the cover to remove it.

Installing the HVAC Unit Cover

The installation is the reverse of the removal procedure. However, pay attention to the following.

TIGHTENING TORQUE	
HVAC unit cover screws	1.35 N•m (12 lbf•**in**)

Removing the HVAC Unit

1. Remove the right storage compartment.

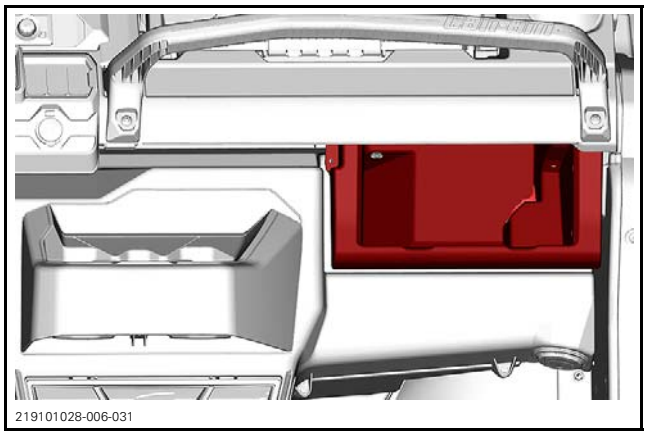
219101028-006-031

2. Remove the nuts on both side of the HVAC unit.

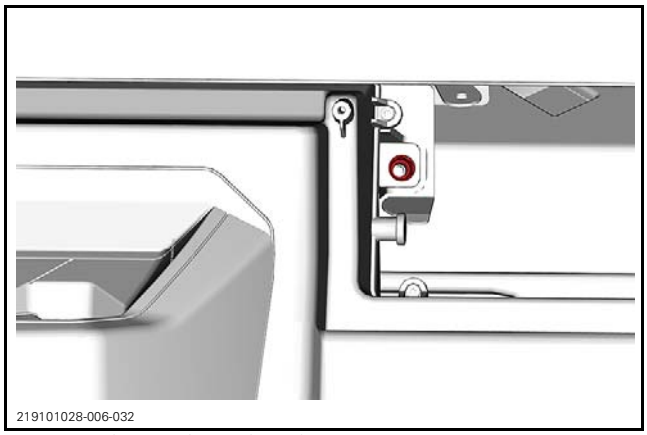

RETAINING NUT ON RIGHT SIDE

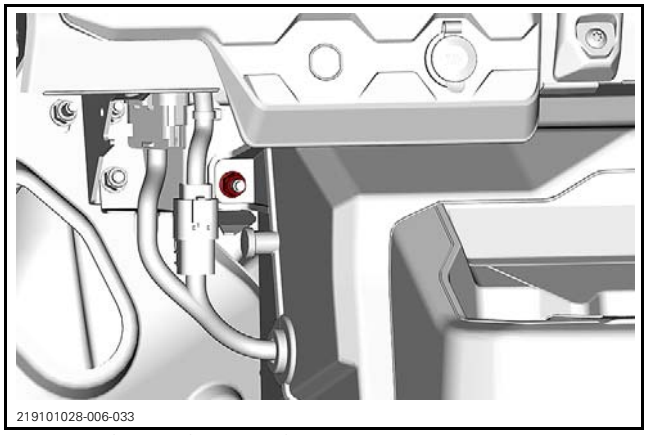

RETAINING NUT ON LEFT SIDE

3. Remove the lower central retaining nut.

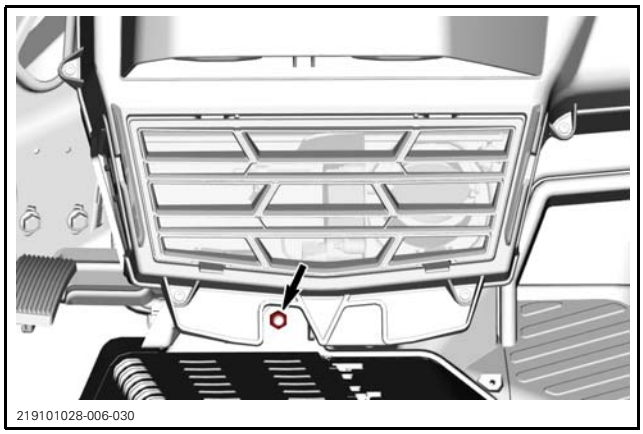

If the HVAC unit must be moved aside to work behind, pull the unit slightly and turn it towards the right side of the vehicle to make room.

If the unit must be removed from the vehicle, do the following.

4. Recover the refrigerant in the HVAC system. Refer to a certified technician.
5. Unplug the blower and HVAC connectors.

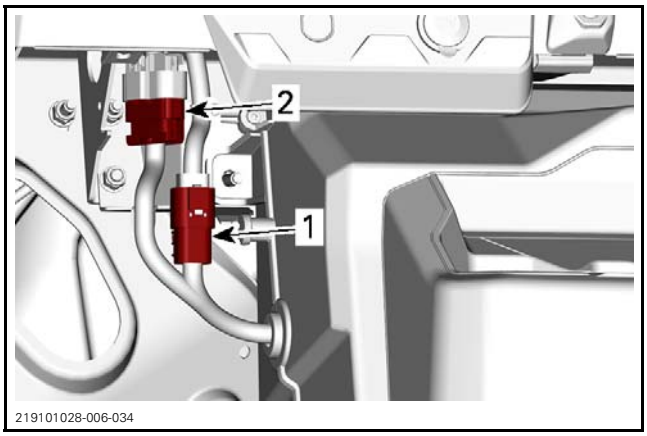

1. *Blower connector*
2. *HVAC connector*

6. From behind the front right wheel, install a hose pincher on each coolant hose.

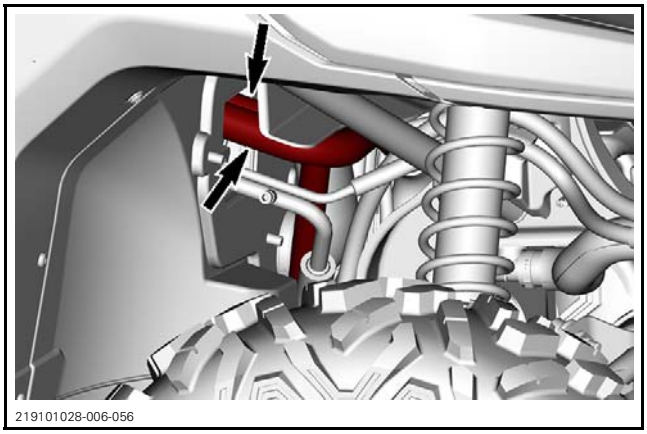

7. Unplug hoses and recover any coolant flow.

NOTICE **Clean any coolant on the A/C hoses.**

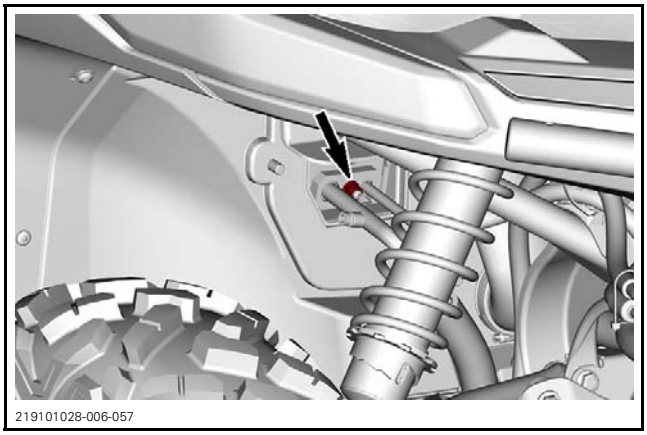

8. Remove the nut securing A/C hoses to the expansion valve.

NOTICE **Block A/C hoses and expansion valve opening to avoid contamination.**

9. Pull the unit.

10. Remove the HVAC unit from the vehicle.

Installing the HVAC Unit

The installation is the reverse of the removal procedure. However, pay attention to the following.

TIGHTENING TORQUE	
HVAC unit retaining nuts	5 N•m ± 1 N•m (44 lbf•**in** ± 9 lbf•**in**)

Fill and bleed the cooling system. Refer to *COOLING SYSTEM - VEHICLE COMPONENTS* subsection.

Check for coolant leaks.

Replace the desiccant cartridge.

Have the HVAC system recharged and checked by a certified technician.

BLOWER

The blower assembly includes the blower resistor, the blower motor and the blower fans.

HVAC Unit Fuses and Relays Location

The fuse box is located into the front service compartment.

219101010-017-066

Testing the Blower Motor

Turn the vehicle key switch to ON.

Turn the blower speed switch to low, medium, then high.

HVAC UNIT TROUBLESHOOTING CHART		
Is blower working?	YES →	Everything is OK
NO ↓		
Check for power on main accessory posts under dashboard	NO →	Refer to *POWER DISTRIBUTION AND GROUNDS* subsection
YES ↓		
Check blower fuse (20A). Is fuse burnt?	YES →	Replace fuse Is blower working?
NO ↓		
Check wiring harness, connectors, and ground		
↓		
Harness and connectors good?	NO →	Repair or replace defective part(s)
YES ↓		
Blower turns?	YES →	Reinstall all removed parts
NO ↓		
Bypass blower speed switch		
↓		
Blower turns?	YES →	Replace blower speed switch Is blower working?
	NO →	Replace blower

Blower Motor Resistor

The blower motor resistor provides electrical resistance in series to the blower motor.

The fan speed control switch sends current to one blower resistor pin based on selected fan speed.

Adding resistance to the circuit slows the blower motor.

Removing resistance from the circuit speeds the blower motor.

Testing the Blower Motor Resistor

Refer to the appropriate *WIRING DIAGRAM*.

The blower motor resistor cannot be tested independently from the blower motor.

1. Turn the fan on to low, medium, then high.

2. Read the voltage at the blower assembly connector for each speed.

If battery voltage is available at each pin of the blower assembly connector and the blower motor does not come on. Ensure there is a good ground.

If all electrical tests are good, replace the blower.

Removing the Blower

1. Remove the HVAC unit cover.
2. Remove the blower retaining screws.

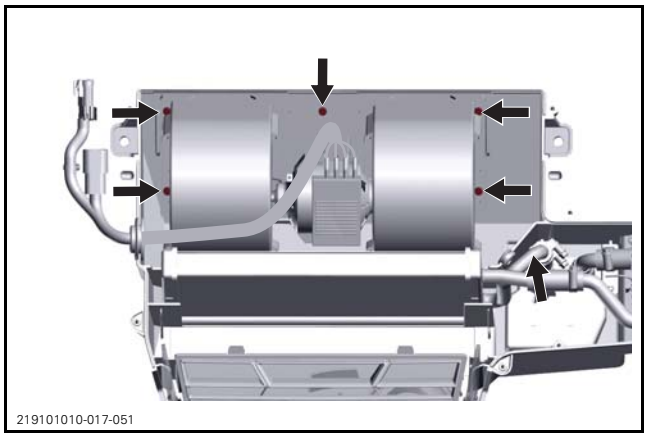
219101010-017-051

3. Remove blower harness from the rubber grommet.

Installing the Blower

The installation is the reverse of the removal procedure. However, pay attention to the following.

TIGHTENING TORQUE	
Blower retaining screws	1.35 N•m (12 lbf•**in**)

HEATER VALVE

The heater valve includes the valve and the actuator.

The actuator controls the valve opening or closing to allow or not the circulation of the heated coolant through the heater unit.

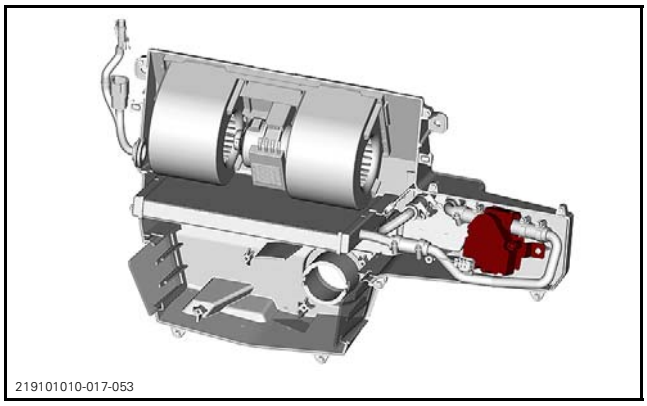
219101010-017-053

Testing the Heater Valve

1. Disconnect the HVAC connector, located on the left side of the HVAC unit.

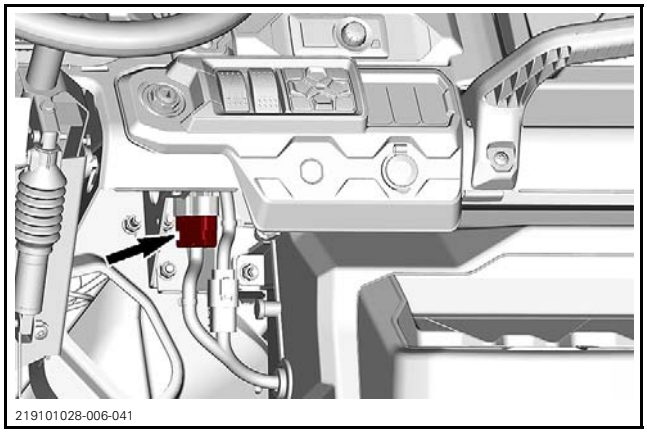
219101028-006-041

2. On vehicle connector, verify the voltage.

HEATER VALVE CONNECTOR PINS		RESULT
N	P	Battery voltage

No battery voltage, check fuse F1 and wiring harness.

Low battery voltage, recharge or replace battery by a fully charge one and retest.

3. Good battery voltage; check the signal from the climate control module.

HEATER VALVE CONNECTOR PINS		RESULT
L	K	Voltage should vary when the temperature is modified.

If the voltage vary, replace the heater valve.

If not, replace the climate control module.

Removing the Heater Valve

1. From behind the front right wheel, install a hose pincher on each coolant hose.

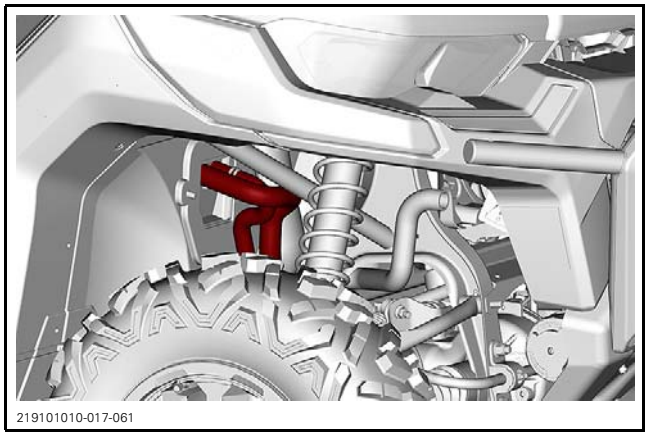
219101010-017-061

2. Remove the HVAC unit cover. See procedure in this subsection.
3. Disconnect the heater valve connector.
4. Loosen gear clamps on both side of the heater valve.

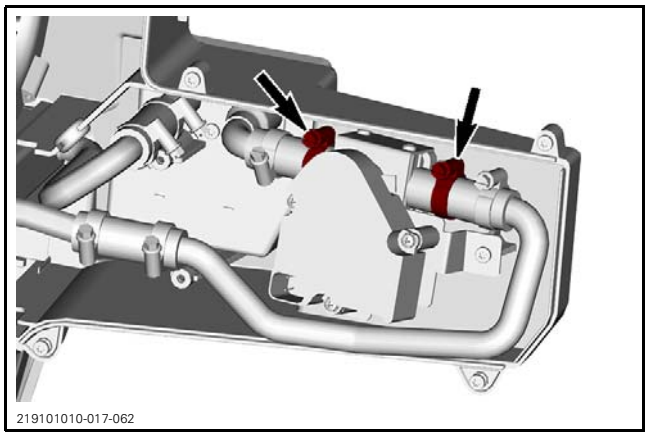
219101010-017-062

5. Remove the heater valve retaining screw.

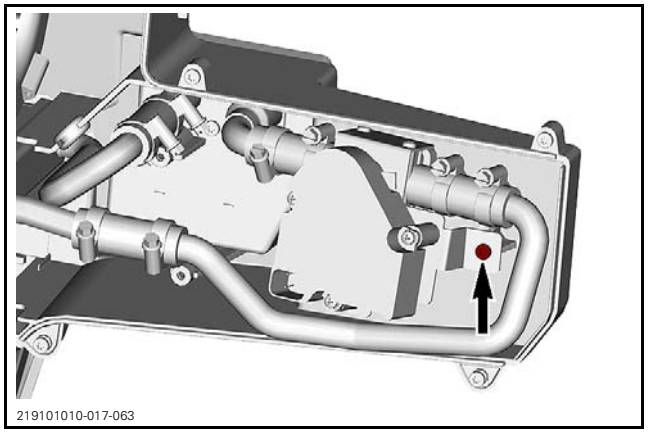
219101010-017-063

6. Remove the heater valve.
7. Catch and clean coolant flow.

Installing the Heater Valve

The installation is the reverse of the removal procedure. However, pay attention to the following.

TIGHTENING TORQUE	
Heater valve retaining screw	1.35 N•m (12 lbf•**in**)
Gear clamp	3 N•m (27 lbf•**in**)

Fill and bleed the cooling system with the recommended coolant. Refer to *COOLING SYSTEM - VEHICLE COMPONENTS* subsection.

Check for coolant leaks.

HEATER CORE

Removing the Heater Core

1. From behind the front right wheel, install a hose pincher on each coolant hose.

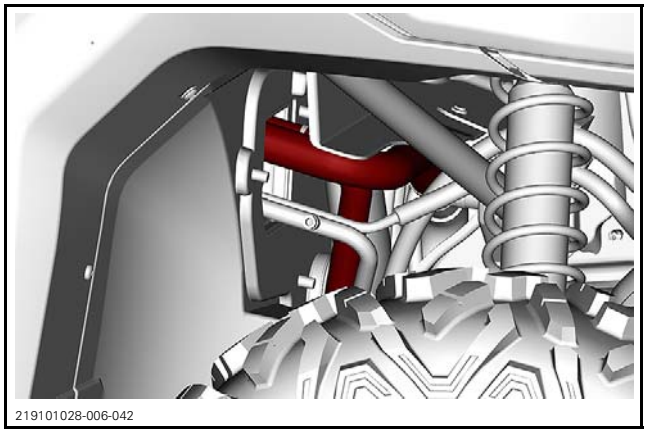
219101028-006-042

2. Remove the HVAC unit cover. See procedure in this subsection.
3. Loosen gear clamps securing the rubber hoses to the rigid tubes of the heater core.

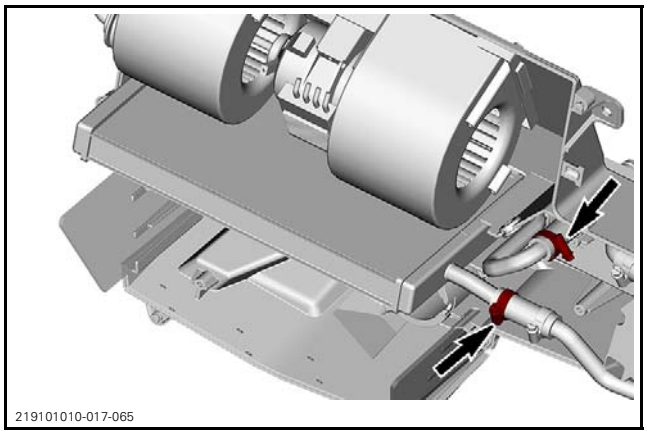
219101010-017-065

4. Remove the heater core.
5. Catch and clean coolant flow.

Installing the Heater Core

The installation is the reverse of the removal procedure. However, pay attention to the following.

TIGHTENING TORQUE	
Gear clamp	3 N•m (27 lbf•**in**)

Fill and bleed the cooling system with the recommended coolant. Refer to *COOLING SYSTEM - VEHICLE COMPONENTS* subsection.

Check for coolant leaks.

EVAPORATOR

Removing the Evaporator

1. Recover the refrigerant in the HVAC system. Refer to a certified technician.
2. Remove the HVAC unit cover. See procedure in this subsection.
3. From behind the front right wheel, remove the nut securing A/C hoses.

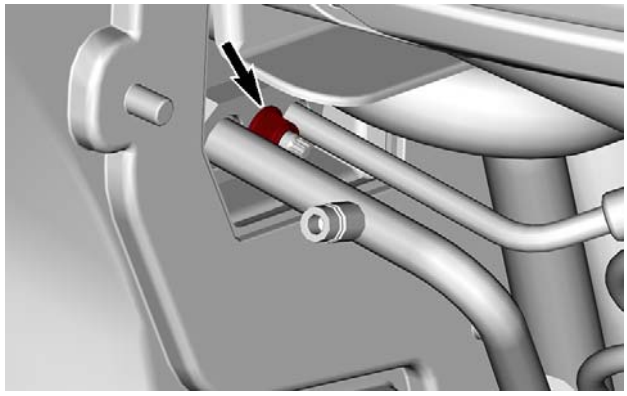

219101028-006-048

4. Remove evaporator retaining screws.

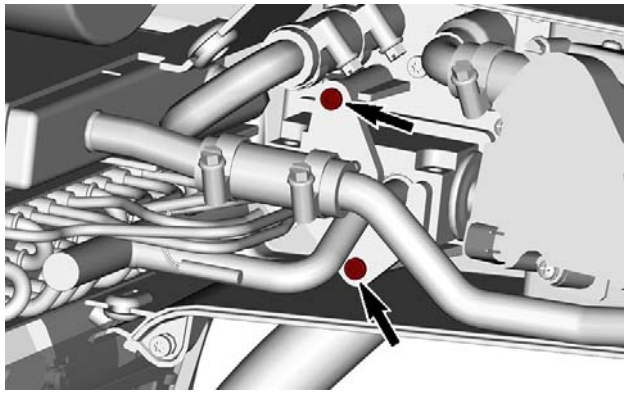

219101028-006-049

5. Remove the evaporator and the block valve in an assembly.

Installing the Evaporator

The installation is the reverse of the removal procedure. However, pay attention to the following.

TIGHTENING TORQUE	
Evaporator screws	1.35 N•m (12 lbf•**in**)
Expansion valve nut	26 N•m ± 2 N•m (19 lbf•ft ± 1 lbf•ft)

Have the HVAC system recharged and checked by a certified technician.

EXPANSION VALVE

Removing the Expansion Valve

1. Remove the evaporator.
2. Remove the block valve retaining screws.

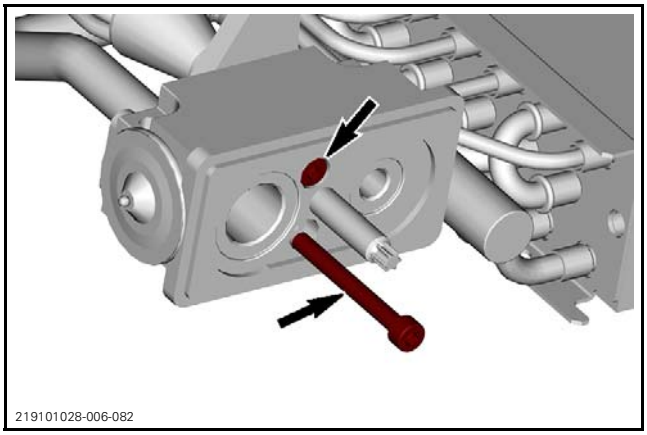

219101028-006-082

3. Remove the expansion valve.

Installing the Expansion Valve

The installation is the reverse of the removal procedure. However, pay attention to the following.

TIGHTENING TORQUE	
Expansion valve retaining screws	4.5 N•m (40 lbf•**in**)

Have the HVAC system recharged and checked by a certified technician.

CLIMATE CONTROL MODULE

Climate Control Module Diagnostic Mode

The climate control module has diagnostic capabilities.

1. Select the FAN SPEED page.
2. Press and hold the power button.
3. Rotate the knob counterclockwise 6 clicks to access to the 4 diagnostic screens:
   - Setup
   - View
   - Error List
   - Statistics

SETUP: This screen allows to show the latest software update date and know the module's software version.

VIEW: Split in 2 screens providing information on current status of sensors and settings.

View 1

Scale:	Celsius or Fahrenheit (as per customer preference)
Setpoint:	Temperature selected by the customer
Inside:	Cockpit temperature from the inside temperature sensor located in the bottom of the HVAC unit.
Outiside:	Outside temperature from the outside temperature sensor located under the hood.
De-Ice:	Temperature from the evaporator de-icing sensor located on the evaporator coil refrigerant outlet tube.
Coil:	Temperature from the coil temperature sensor located in the air after evaporator and heater coils.
Mode:	Display the current mode of the climate control module. Can be AUTO, COOL or HEAT.

View 2

AC:	OFF or ON
Blower:	Fan speed selected by the customer/system
Valve:	Heater valve opening in %
Eng S:	Engine RPM
Eng T:	Engine operating temperature
Bat V:	Battery voltage
Thr P:	Throttle position

ERROR LIST: Split in 3 screens which provides information on sensor / component error counts.

STATISTICS: Split in 2 screens which provide information on activation cycles and duration of the module, compressor and clutch, and the blower.

RESETTING ERROR LIST: From the error page, turn the knob left then push on it to reset the list. The error list must be reset every time a HVAC sensor is replaced.

Removing the Climate Control Module

1. Unclip the bottom of the central console panel.

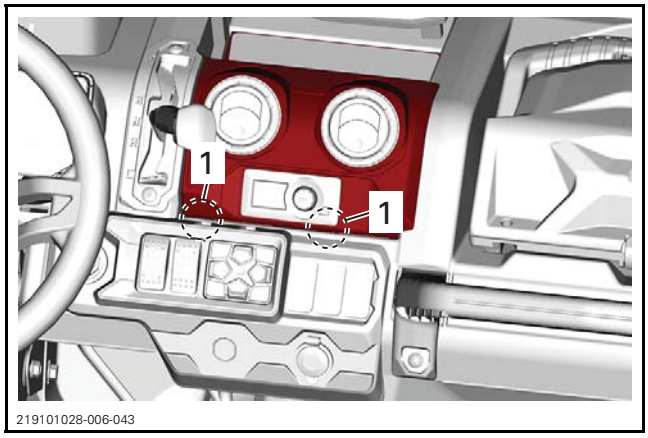

1. Locking tab location

2. Lift the panel and press tabs on each side of the climate control module.
3. Remove module from the panel.
4. Unplug both connectors from the module.

Installing the Climate Control Module

The installation is the reverse of the removal procedure.

CONDENSER

Removing the Condenser

1. Empty the HVAC system. Refer to a certified technician.
2. Remove front fenders.

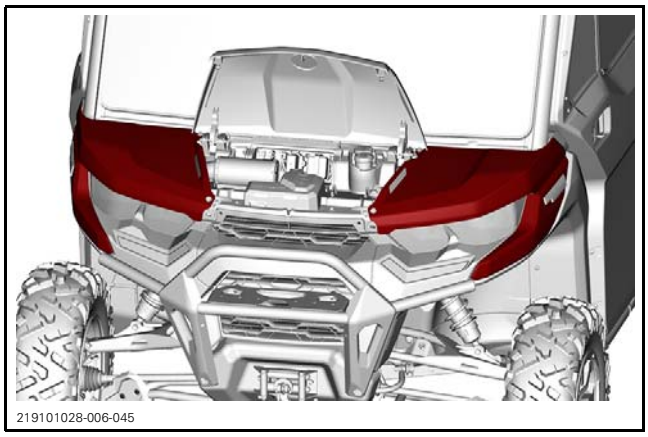
219101028-006-045

3. Remove the front service compartment tray.

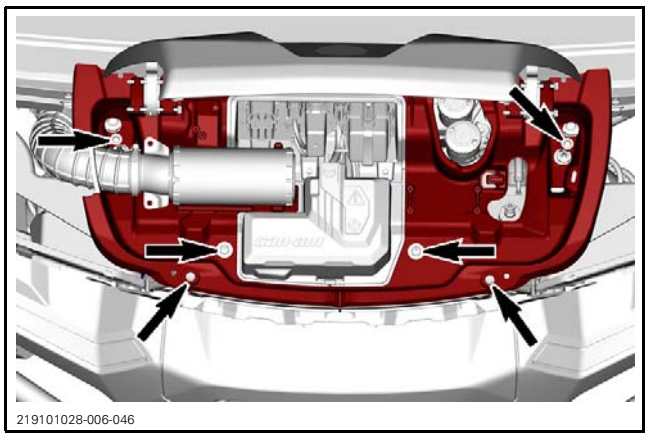
219101028-006-046

4. Move the electrical tray aside to make room.

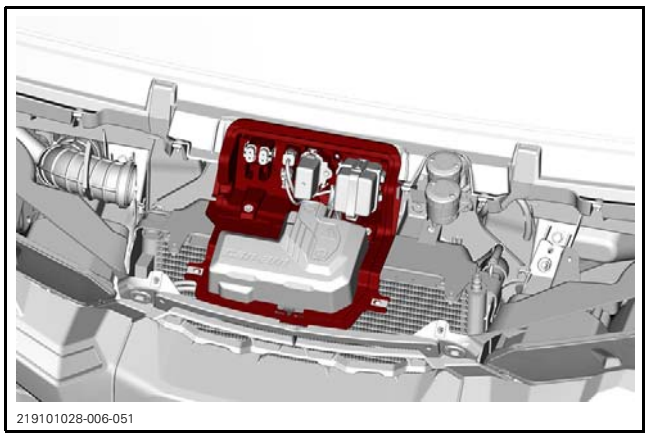
219101028-006-051

5. Remove both retaining screws at the bottom of the condenser.

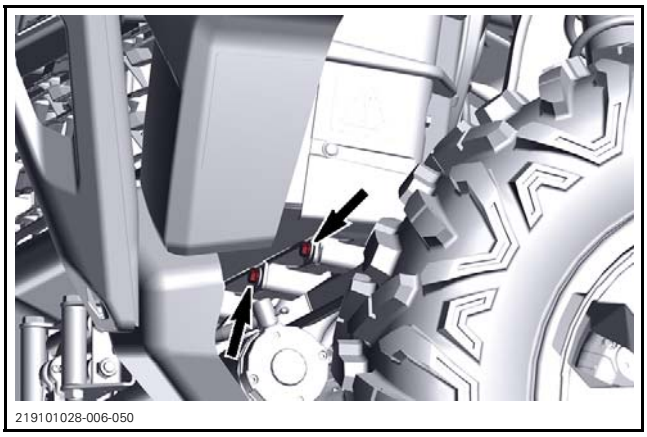
219101028-006-050

6. Disconnect both A/C hoses from the condenser.
7. Remove the condenser from the vehicle.

Installing the Condenser

The installation is the reverse of the removal procedure.

Have the HVAC system recharged and checked by a certified technician.

DESICCANT CARTRIDGE

Desiccant Cartridge Replacement

NOTICE **The desiccant cartridge must be replaced when the refrigerant system is opened to ambient air (e.g.: during A/C component replacement) or when a major leak has occurred.**

1. Ensure the HVAC system is empty. Refer to a certified technician.
2. Remove front fenders.

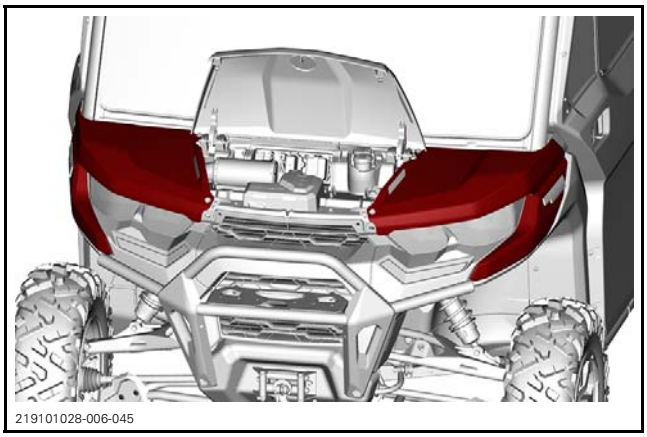
219101028-006-045

3. Remove the front service compartment tray.

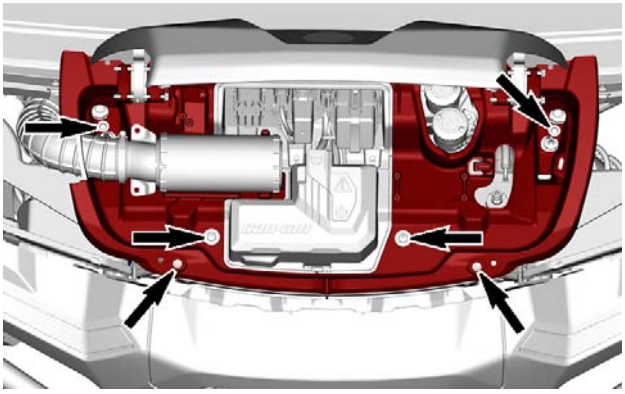

219101028-006-046

4. Using a 10 mm Allen key, remove the receiver / drier cap.

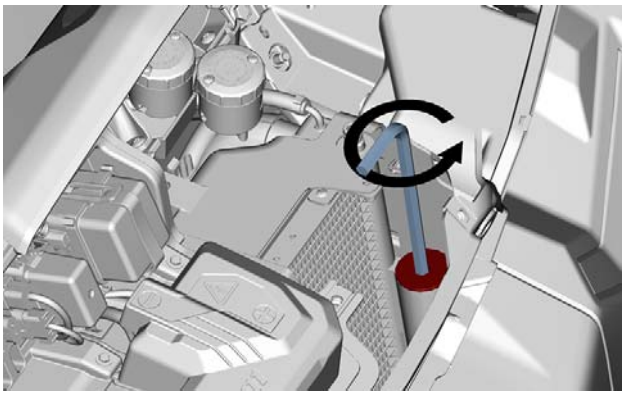

219101028-006-047

5. Replace the desiccant cartridge.
6. Check the condition of the cap and replace it if required.
7. Replace both O-rings and apply mineral oil on them.
8. Reinstall the cap.
9. Have the HVAC system recharged and checked by a certified technician.

MAGNETO AND STARTER (HD5)

SERVICE TOOLS

Description	Part Number	Page
CRANKSHAFT PROTECTOR (MAG)	420 876 557	9
FLUKE 115 MULTIMETER	529 035 868	4
HANDLE	420 877 650	13
MAGNETO PULLER	529 035 748	9
STARTER DRIVE NEEDLE INSTALLER	529 035 934	13

SERVICE PRODUCTS

Description	Part Number	Page
CLUTCH AND PULLEY FLANGE CLEANER PRO S1	779244	10
DIELECTRIC GREASE	293 550 004	12
ISOFLEX GREASE TOPAS NB 52	293 550 021	15
LOCTITE 243 (BLUE)	293 800 060	7, 10
LOCTITE 5910	293 800 081	5
LOCTITE CHISEL (GASKET REMOVER)	413 708 500	5
SUPER LUBE GREASE	293 550 030	12

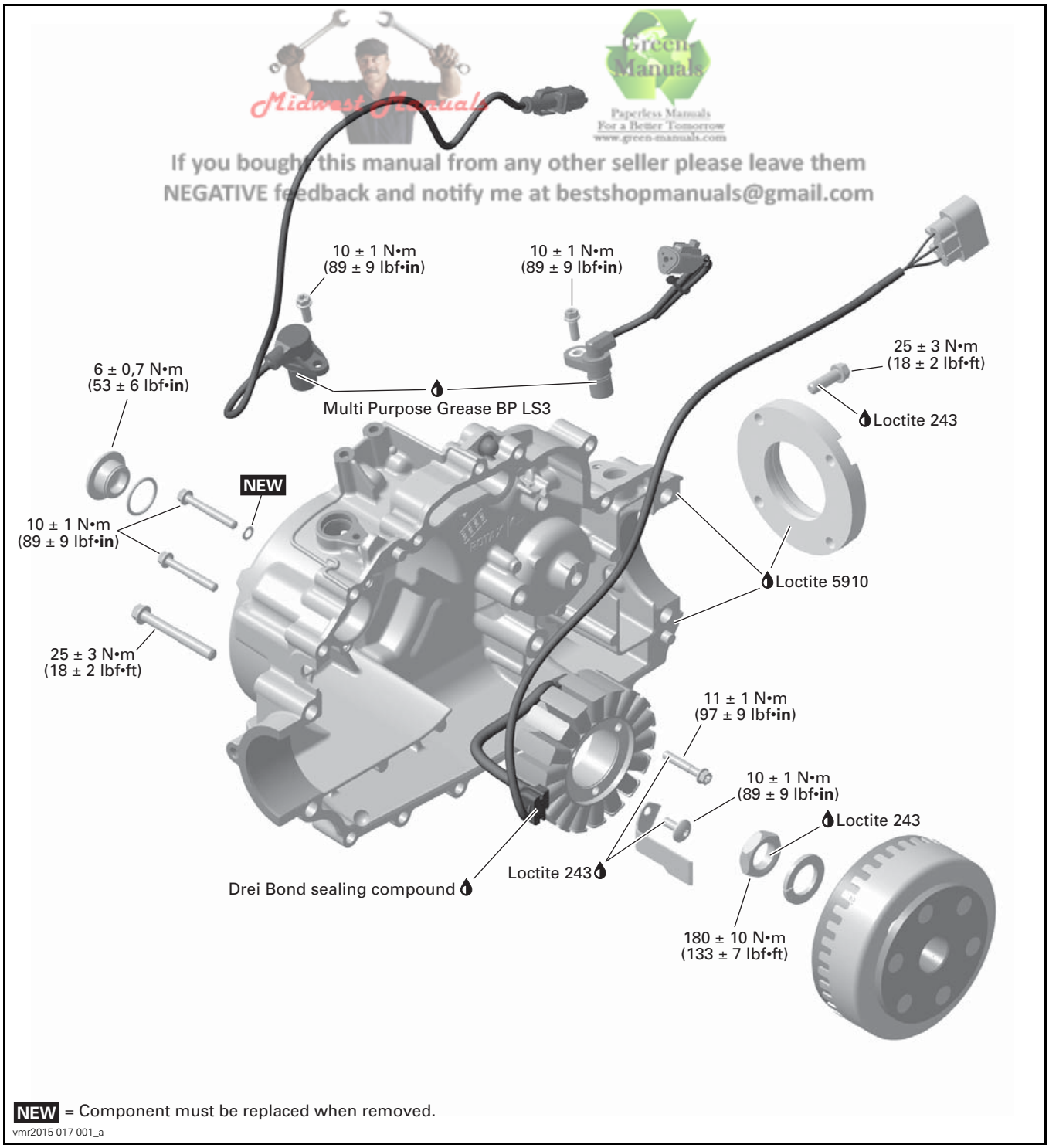

Midwest Manuals
Green Manuals
Paperless Manuals
For a Better Tomorrow
www.green-manuals.com
If you bought this manual from any other seller please leave them
NEGATIVE feedback and notify me at bestshopmanuals@gmail.com

NEW = Component must be replaced when removed.

vmr2015-017-001_a

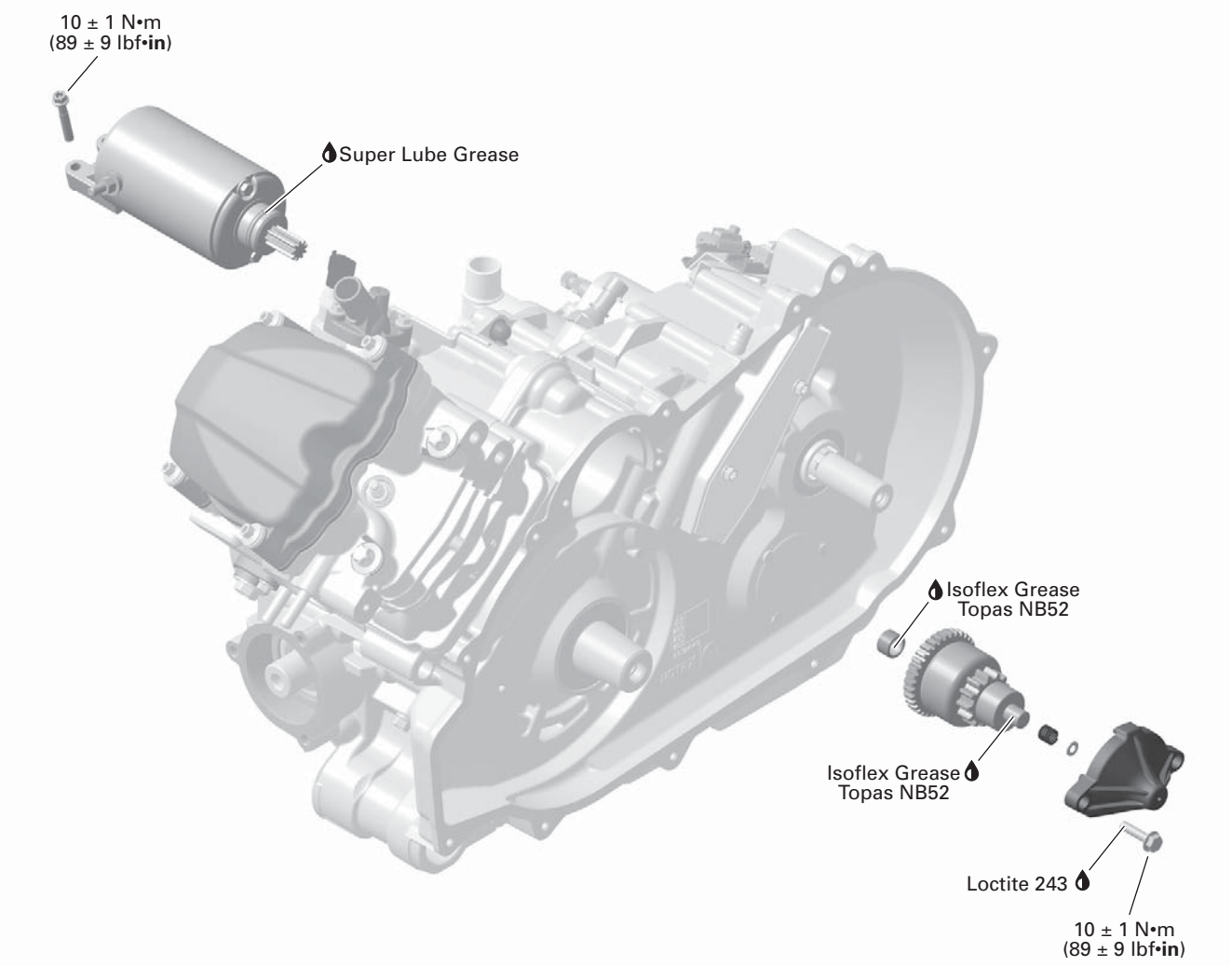

NEW = Component must be replaced when removed.

vmr2015-017-023_a

GENERAL

The following tool is required to test most of the electrical parts.

REQUIRED TOOL	
FLUKE 115 MULTIMETER (P/N 529 035 868)	

PROCEDURES

MAGNETO COVER

Removing the Magneto Cover

1. Remove engine from vehicle.
2. Remove 4WD coupling unit, refer to *GEARBOX AND 4X4 COUPLING UNIT* subsection.
3. Lock crankshaft at TDC, refer to *BOTTOM END* subsection.
4. Disconnect:
   - Stator
   - CPS
   - VSS.
5. Remove:
   - Water pump cover, refer to *COOLING SYSTEM* subsection
   - Starter, refer to procedure in this subsection.
6. Remove coupling sleeve.

Set gearbox to PARK position.

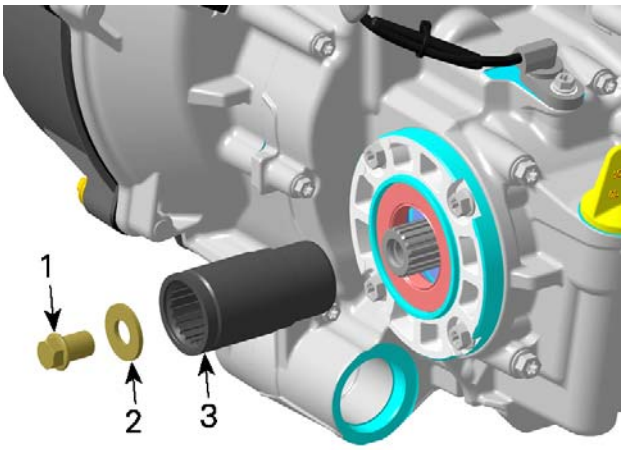

1. Retaining screw
2. Washer
3. Coupling sleeve

7. Remove bearing cover screws.
8. Remove bearing cover.

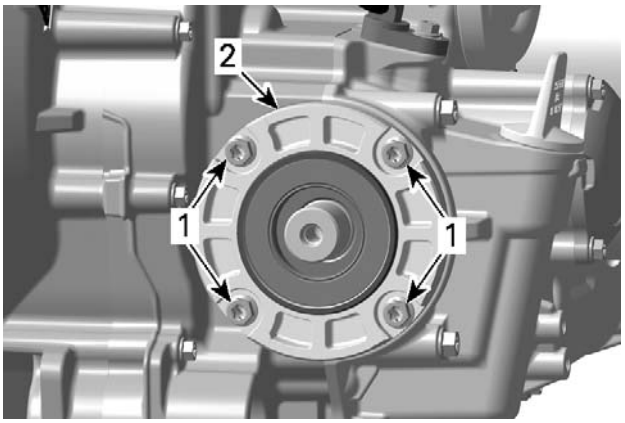

1. Screws
2. Bearing cover

9. Remove magneto cover screws:
   - 9.1 Start removing M6 screws.
   - 9.2 Then remove the M8 screws.

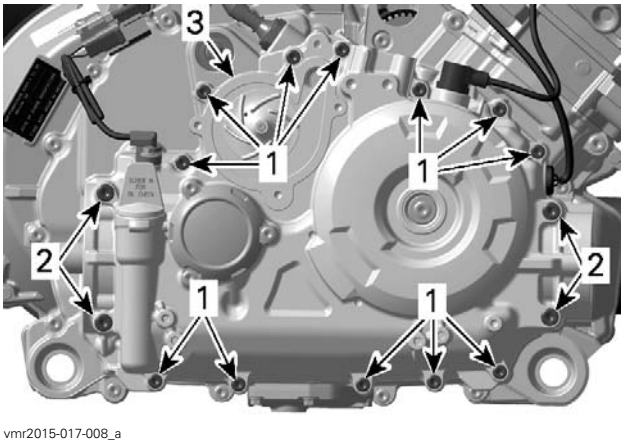

1. M6 screws
2. M8 screws
3. Magneto cover

10. Remove magneto cover.

NOTE: Lift the magneto cover from the provided area using two flat screwdrivers prying equally at the same time.

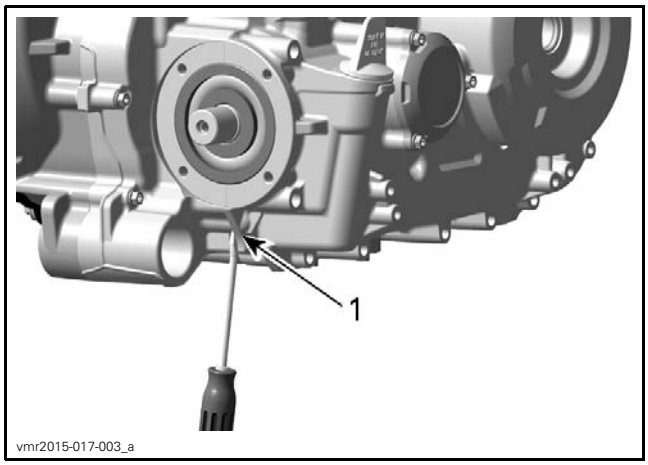

1. Special area for removal of magneto cover

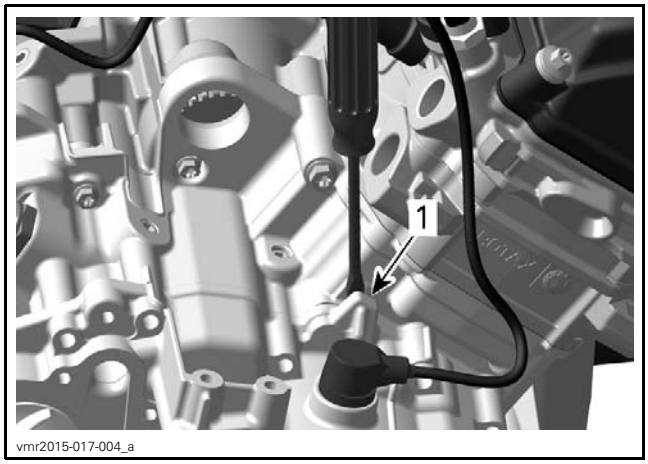

1. Special area for removal of magneto cover

NOTE: Do not loose oil pump cover O-ring when removing the magneto cover.

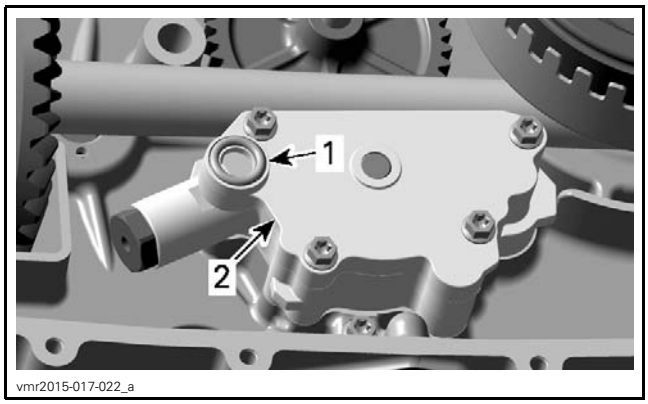

1. O-ring
2. Oil pump cover

Cleaning and Inspecting the Magneto Cover

Check magneto cover and bearing cover for cracks or other damages. Replace if necessary.

Clean all metal component in a solvent.

Clean magneto cover, crankcase and bearing cover sealing surfaces.

SERVICE PRODUCT
LOCTITE CHISEL (GASKET REMOVER) (P/N 413 708 500)

REQUIRED TOOL
Brass brush

First, brush in one direction, then make the final brushing perpendicularly (90°) to the first pass.

NOTICE **Do not wipe with rags. Use a new clean hand towel only.**

Installing the Magneto Cover

Reverse the removal procedure. However, pay attention to the following.

Put ball bearings of output shaft exactly in place, refer to *OUTPUT SHAFT* in the *GEARBOX AND 4X4 COUPLING UNIT* subsection.

Apply sealant on mating surfaces.

SERVICE PRODUCT
LOCTITE 5910 (P/N 293 800 081)

IMPORTANT: When beginning the application of the sealant, the assembly and the first torquing should be done within 10 minutes. It is suggested to have all you need on hand to save time.

Use a plexyglass plate and apply some sealant on it. Use a soft rubber roller50 mm to 75 mm (2 in to 3 in), available in arts products suppliers for printing, and roll the sealant to get a thin uniform coat on the plate (spread as necessary). When ready, apply the sealant on magneto cover and bearing cover mating surfaces.

NOTE: It is recommended to apply this specific sealant as described here to get an uniform application without lumps. If you do not use the roller method, you may use your finger to uniformly distribute the sealant (using a finger will not affect the adhesion).

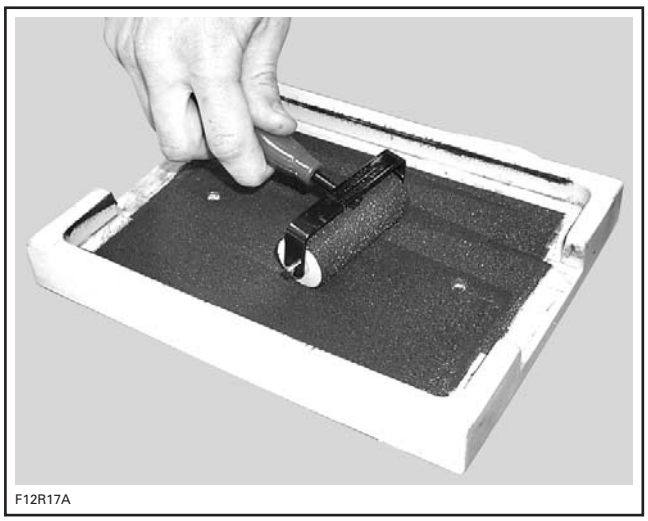

Apply sealant all around the magneto cover mating surface except the areas described below.

NOTE: Do not apply in excess as it will spread out inside cover.

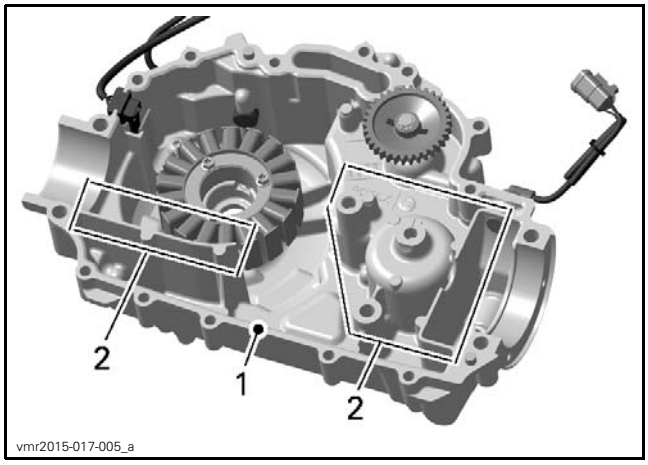

1. *Mating surface on the magneto cover*
2. *No sealant required*

NOTE: Ensure that oil pump cover O-ring is in place before installing the magneto cover.

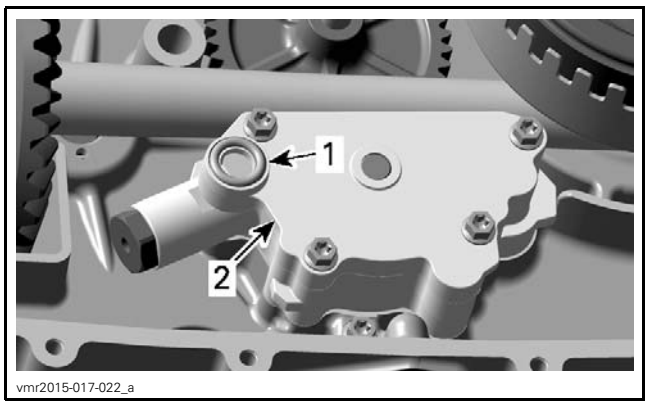

1. *O-ring*
2. *Oil pump cover*

Install the magneto cover.

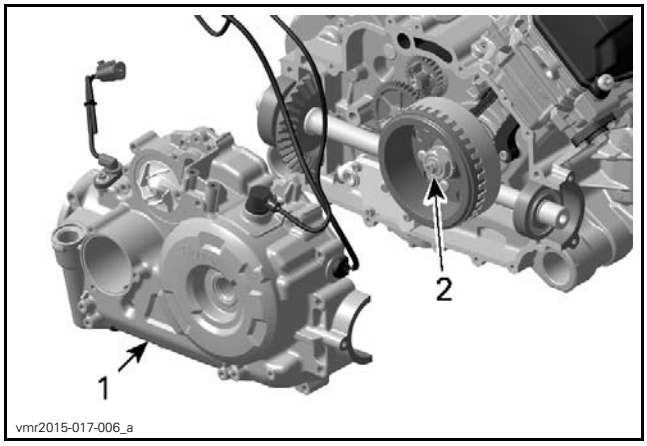

1. *Magneto cover*
2. *Crankshaft MAG side*

Tighten the M8 magneto cover screws as per following sequence.

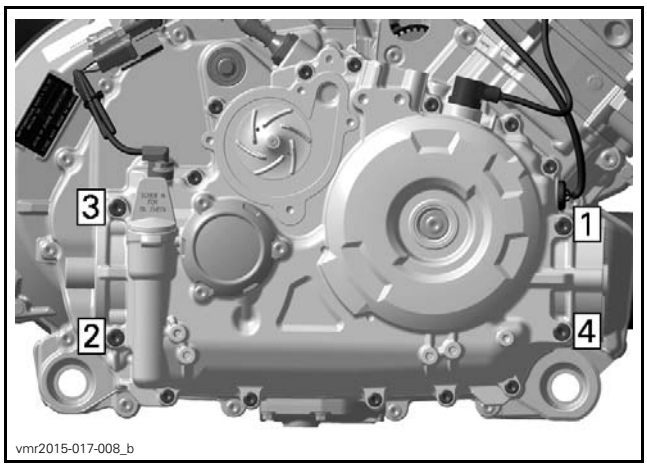

M8 SCREWS TIGHTENING SEQUENCE

TIGHTENING TORQUE	
M8 magneto cover screws	25 N•m ± 3 N•m (18 lbf•ft ± 2 lbf•ft)

Install a **NEW** gasket ring on M6 magneto cover screw beside the CPS.

NOTICE **Always install a new gasket ring.**

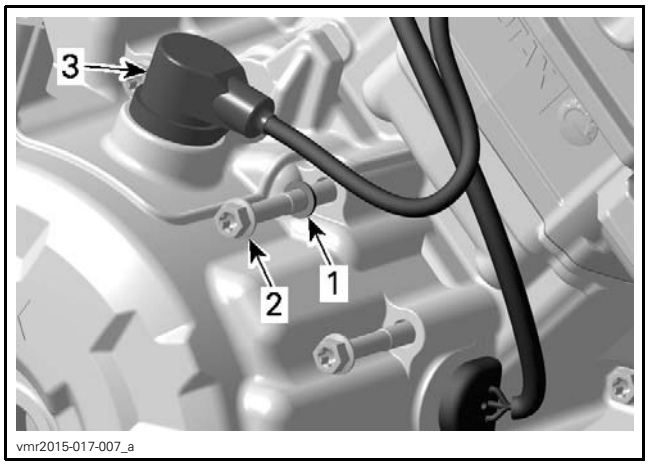

1. *Gasket ring*
2. *Screw M6*
3. *CPS (Crankshaft Position Sensor)*

Tighten the M6 magneto cover screws as per following sequence.

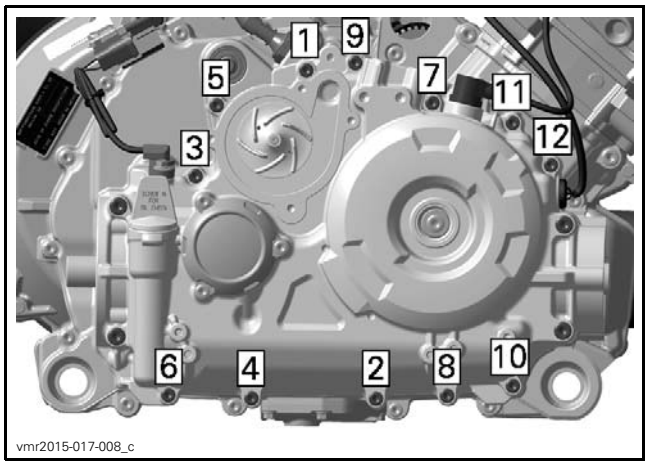

M6 SCREWS TIGHTENING SEQUENCE

TIGHTENING TORQUE	
M6 magneto cover screws	10 N•m ± 1 N•m (89 lbf•**in** ± 9 lbf•**in**)

Install the bearing cover.

Tighten bearing cover screws in a criss-cross sequence to specification.

TIGHTENING TORQUE	
Bearing cover screws	25 N•m ± 3 N•m (18 lbf•ft ± 2 lbf•ft)

Let the sealant dry before starting engine. Refer to the manufacturer's label for the sealant curing time.

Install the coupling sleeve and tighten the retaining screw to specification.

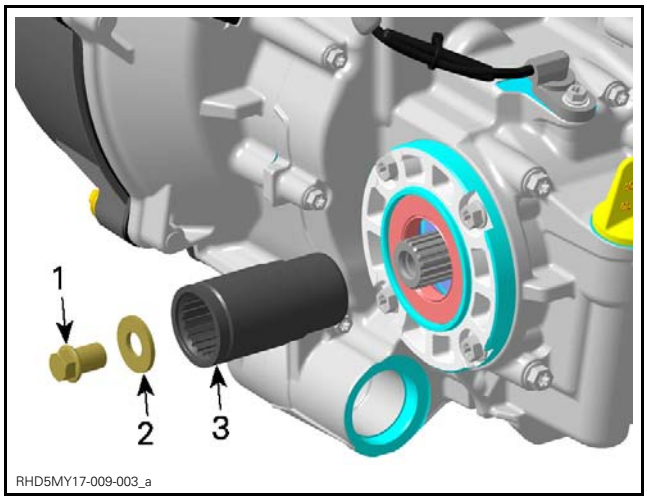

1. *Retaining screw*
2. *Washer*
3. *Coupling sleeve*

TIGHTENING TORQUE	
Coupling sleeve retaining screw	45 N•m ± 5 N•m (33 lbf•ft ± 4 lbf•ft) + LOCTITE 243 (BLUE) (P/N 293 800 060)

STATOR

Stator Connector Access

Open the cargo box to access the voltage regulator/rectifier.

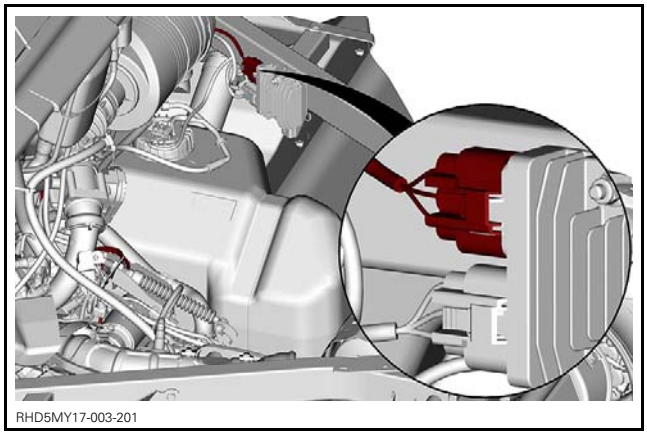

Testing the Stator Continuity (Static)

1. Disconnect the stator connector on the voltage regulator/rectifier.
2. Set a multimeter to Ω and measure resistance as following.

TERMINAL	RESISTANCE @ 20°C (68°F)
1 and 2	0.15 - 0.30 Ω
1 and 3	
2 and 3	

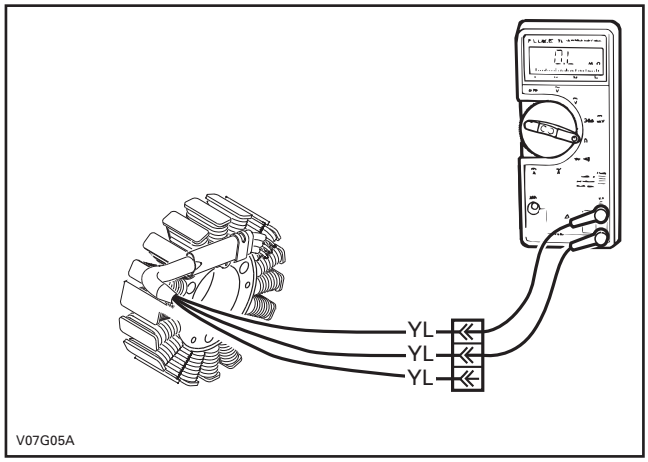

TYPICAL

3. If any reading is out of specification, replace stator.
4. Re-plug connectors properly.

Testing the Stator Insulation (Static)

1. Set multimeter to Ω.
2. Connect multimeter between any YELLOW wire (on stator connector) and engine ground.
3. Read resistance.

TEST PROBES	RESISTANCE @ 20°C (68°F)
Any YELLOW wire and engine ground	Infinite (open circuit)

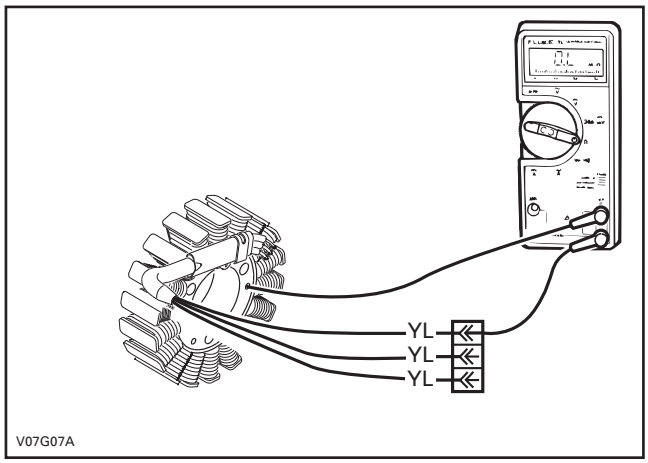

TYPICAL

4. If there is a resistance or continuity, the stator coils and/or the wiring is shorted to ground and needs to be repaired or replaced.
5. Re-plug connectors properly.

Removing the Stator

Remove magneto cover, refer to procedure in this subsection.

Remove:
- Holding strip screw
- Holding strip
- Stator screws
- Stator.

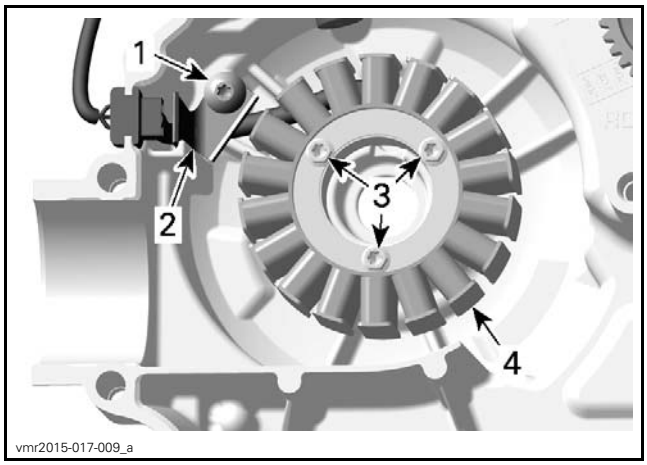

1. Holding strip screw
2. Holding strip
3. Stator screws
4. Stator

Inspecting the Stator

Check stator windings and insulation for cracks or other damages. If damaged replace it.

Check if stator wires are brittle, hard or otherwise damaged.

Installing the Stator

The installation is the reverse of the removal procedure. However, pay attention to the following.

NOTICE **When installing the stator take care to route wires properly and install holding strip.**

There is only one position for the stator (notch in the magneto cover).

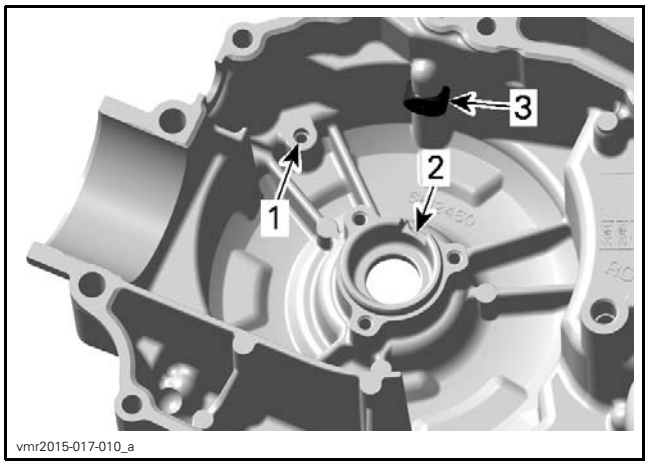

1. *Thread for holding strip*
2. *Notch for stator*
3. *Crank position sensor*

ROTOR

Removing the Rotor

Remove magneto cover, refer to procedure in this subsection.

Lock crankshaft. Refer to *BOTTOM END* subsection.

Remove:

– Nut retaining rotor
– Lock washer.

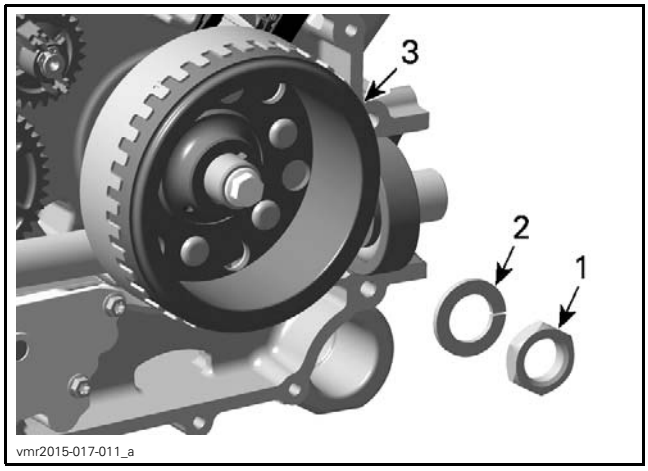

1. *Nut*
2. *Lock washer*
3. *Rotor*

Remove crankshaft plug screw.

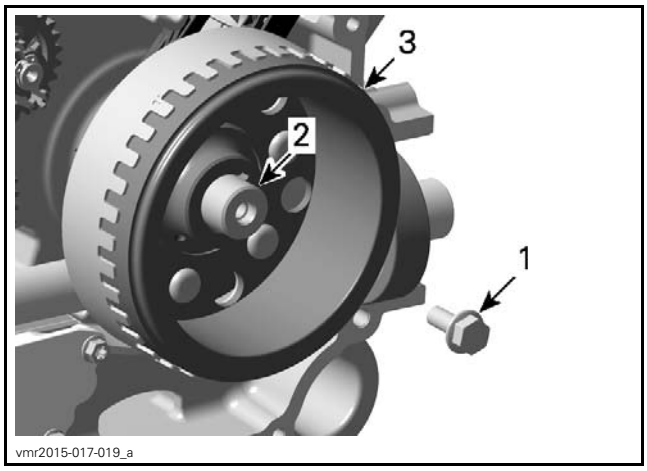

1. *Crankshaft plug screw*
2. *Crankshaft MAG side*
3. *Rotor*

Remove rotor.

REQUIRED TOOL	
CRANKSHAFT PROTECTOR (MAG) (P/N 420 876 557)	
MAGNETO PULLER (P/N 529 035 748)	

NOTE: Use grease to place protector on crankshaft end prior to screw on the magneto puller.

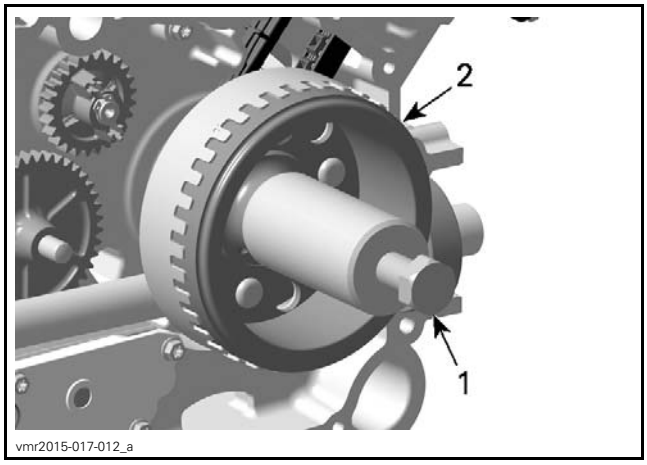

1. *Rotor*
2. *Magneto puller*

Screw magneto puller bolt to remove rotor.

Inspecting the Rotor

Check inner side of rotor for scratches or other damage.

Blow pressurized air in the rotor oil bore and make sure it is not clogged.

Check keyway of the rotor for wear or damages.

Check if trigger wheel teeth are bent or otherwise damaged.

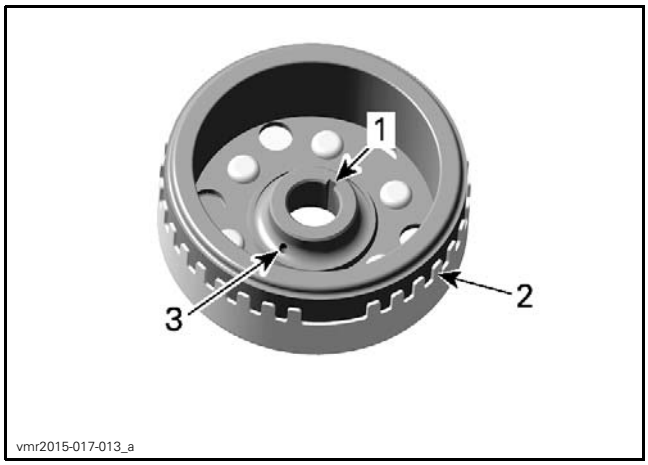

ROTOR
1. *Keyway*
2. *Trigger wheel*
3. *Oil bore*

Check woodruff key and keyway on the crankshaft for wear or damages.

Replace parts as necessary.

Installing the Rotor

The installation is the reverse of the removal procedure. However, pay attention to the following.

Clean the following parts:
- Crankshaft taper
- Oil passage in crankshaft taper
- Thread on crankshaft
- Oil bore in rotor
- Rotor taper.

SERVICE PRODUCT
CLUTCH AND PULLEY FLANGE CLEANER PRO S1 (P/N 779244)

NOTICE **Taper on crankshaft and rotor must be free of grease.**

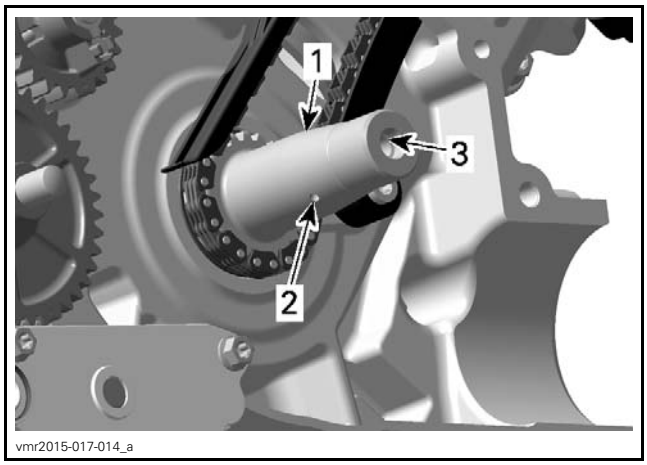

CRANKSHAFT MAG SIDE
1. *Keyway*
2. *Oil passage*
3. *Threads*

Install crankshaft plug screw.

TIGHTENING TORQUE	
Crankshaft plug screw	35 N•m ± 4 N•m (26 lbf•ft ± 3 lbf•ft) + LOCTITE 243 (BLUE) (P/N 293 800 060)

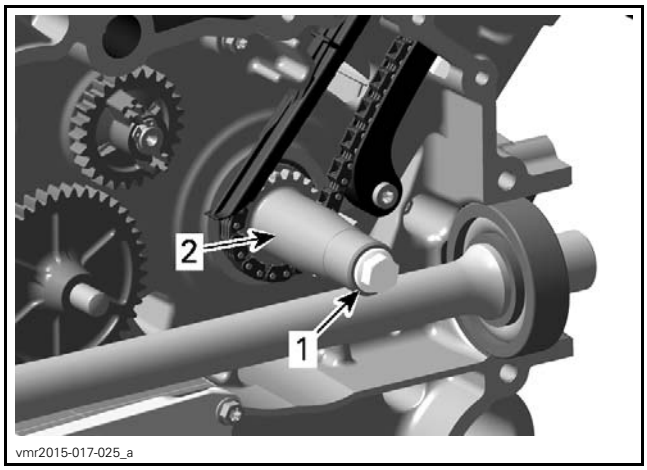

1. *Crankshaft plug screw*
2. *Crankshaft MAG side*

Slide rotor onto crankshaft. The woodruff key and the keyway must be aligned.

Tighten rotor retaining nut to specification.

TIGHTENING TORQUE	
Rotor nut	180 N•m ± 10 N•m (133 lbf•ft ± 7 lbf•ft) + LOCTITE 243 (BLUE) (P/N 293 800 060)

STARTER

Starter Access

Open the cargo box.

Detach the shift cable from its bracket.

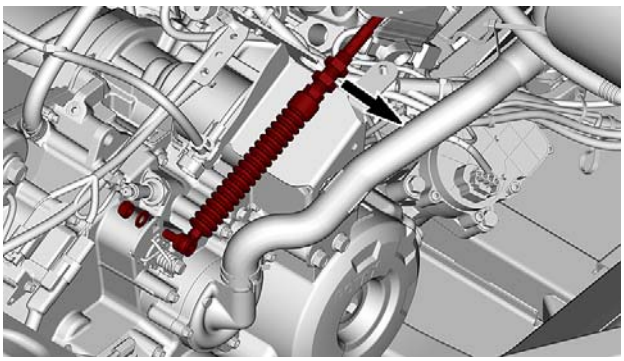

RHD5MY17-003-202_a

Remove the shift cable bracket.

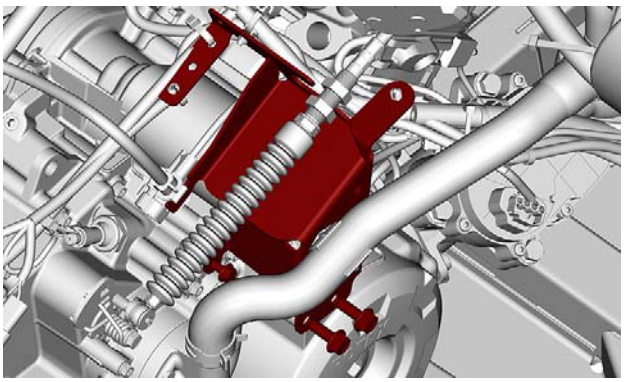

RHD5MY17-003-203

Testing the Starter Operation

1. Disconnect the starter power cable from the solenoid.

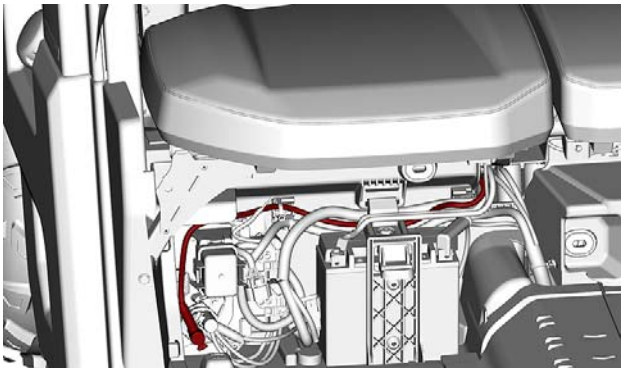

RHD5MY17-003-204

2. Pull the starter power cable forward.
3. Using booster cables and a battery or a booster pack, carefully supply current directly to the starter power cable.

NOTICE **First connect the red jumper cable from the booster battery to the starter cable. Momentarily connect the BLACK (-) cable from the booster battery to a good ground last.**

If the starter turns, test other starting system components. Refer to *STARTING SYSTEM* subsection.

Removing the Starter

1. Disconnect the BLACK (-) battery cable from the battery.

⚠ WARNING

Always disconnect BLACK (-) battery cable first and reconnect last.

2. Disconnect the RED (+) power cable from starter.

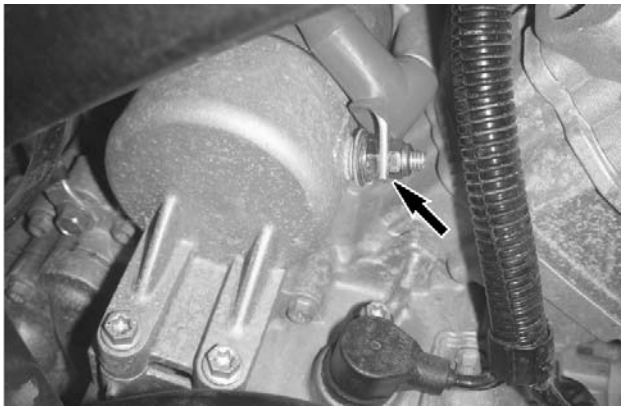

vmr2008-139-009_d

TYPICAL

3. Clean starter and surrounding area.
4. Remove starter mounting screws.

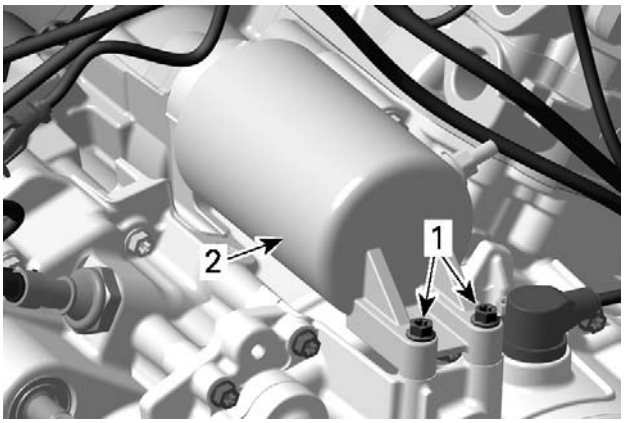

vmr2015-017-015_a

1. *Starter mounting screws*
2. *Starter*

5. Pull starter out from crankcase.

Installing the Starter

The installation is the reverse of the removal procedure. However, pay attention to the following.

Make sure the starter and engine mating surfaces are free of debris. Serious problems may arise if the starter is not properly aligned.

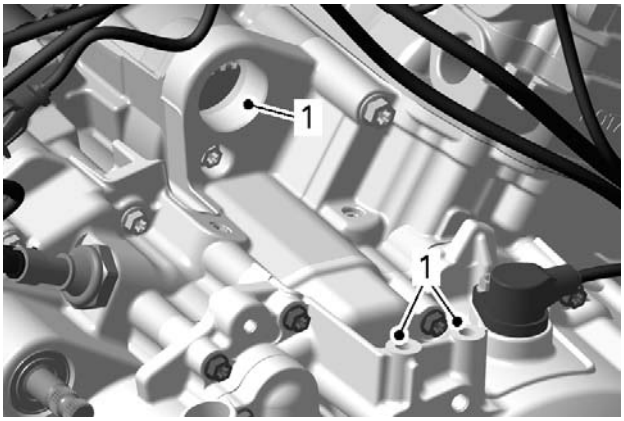

vmr2015-017-016_a

1. *Clean starter mating surfaces*

SERVICE PRODUCT	
Starter O-ring	SUPER LUBE GREASE (P/N 293 550 030)

Lubricate starter O-ring.

vmr2015-017-017_a

1. *Lubricate starter O-ring*

Install starter and tighten retaining screws to specification

TIGHTENING TORQUE	
Starter mounting screws	10 N•m ± 1 N•m (89 lbf•**in** ± 9 lbf•**in**)

Connect the RED (+) cable to the starter and tighten nut to specification.

TIGHTENING TORQUE	
Starter terminal and retaining nut	6 N•m ± 0.5 N•m (53 lbf•**in** ± 4 lbf•**in**) + DIELECTRIC GREASE (P/N 293 550 004)

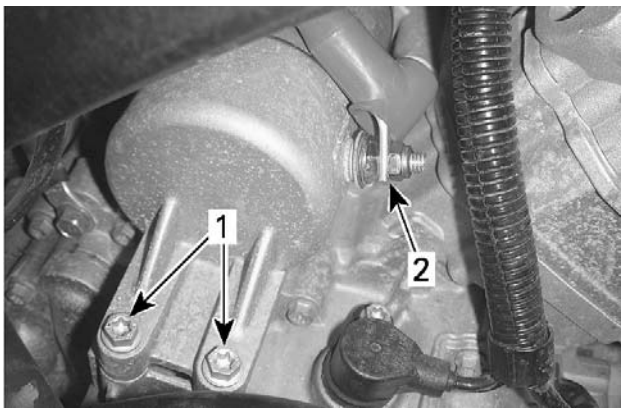

vmr2008-139-009_e

1. *Starter mounting screws*
2. *Starter terminal retaining nut*

Connect the BLACK (-) battery cable last.

⚠ WARNING

Always connect the RED (+) starter cable first, then the BLACK (-) battery cable last. Whenever connecting the RED (+) cable to the starter motor, always make sure the BLACK (-) battery cable is disconnected to prevent electric shock.

Test starter operation.

STARTER DRIVE

Removing the Starter

Remove drive pulley, refer to *CONTINUOUSLY VARIABLE TRANSMISSION* subsection.

Remove:

– Retaining screws

– Starter drive cover.

NOTE: Do not lose shim and/or spring during removal of starter drive cover.

Pull out starter drive.

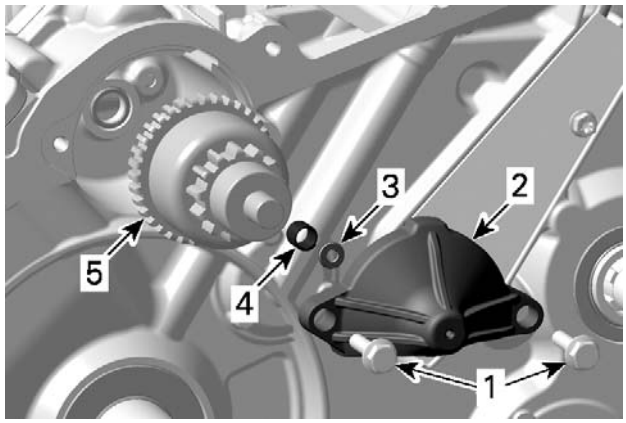

1. *Retaining screws*
2. *Starter drive cover*
3. *Shim*
4. *Spring*
5. *Starter drive*

Inspecting the Starter Drive

Check if starter drive pinion is free of movement.

NOTE: Centrifugal weights avoid disengaging of the pinion while starting the engine.

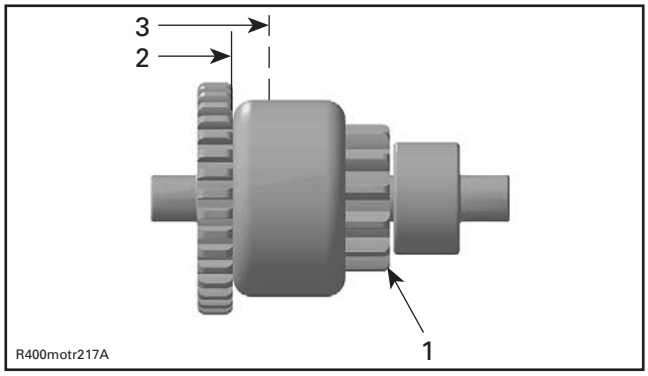

1. *Starter drive pinion*
2. *Starting position (spring released)*
3. *Gear is engaged drive pulley fixed half (spring loaded)*

Check needle bearing excessive play and smooth operation. If damaged see *REPLACING THE STARTER DRIVE NEEDLE BEARING* in this subsection.

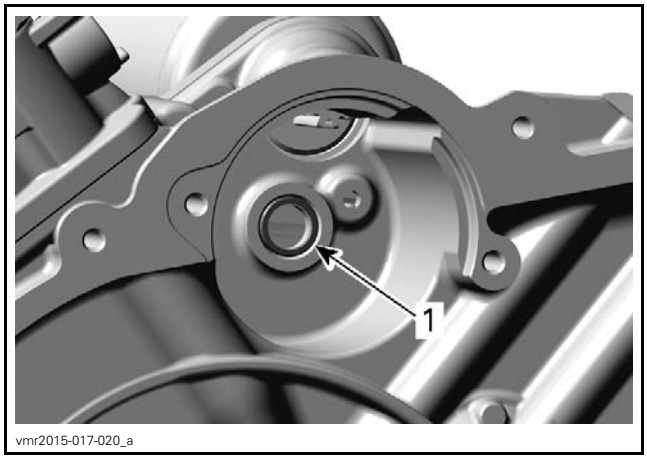

1. *Starter drive needle bearing*

Check starter drive cover for cracks and clean it before reinstallation.

Check bore inside starter drive cover if damaged, worn or otherwise damaged. Replace as necessary.

Replacing the Starter Drive Needle Bearing

Removing the Starter Drive Needle Bearing

REQUIRED TOOL	
Blind hole puller	

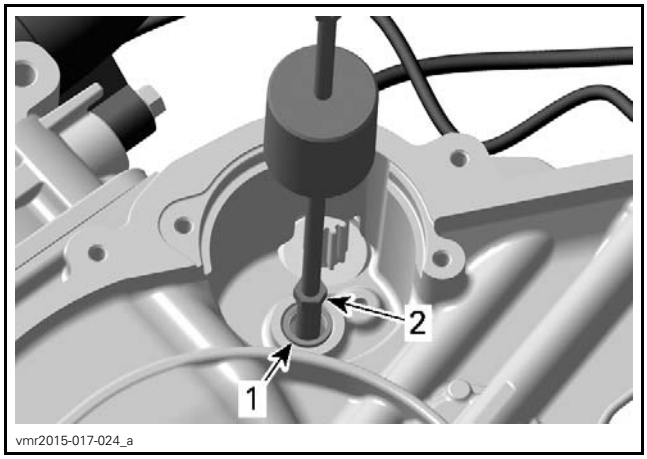

1. *Starter drive needle bearing*
2. *Blind hole bearing puller*

Installing the Starter Drive Needle Bearing

Install needle bearing.

REQUIRED TOOL	
STARTER DRIVE NEEDLE INSTALLER (P/N 529 035 934)	
HANDLE (P/N 420 877 650)	

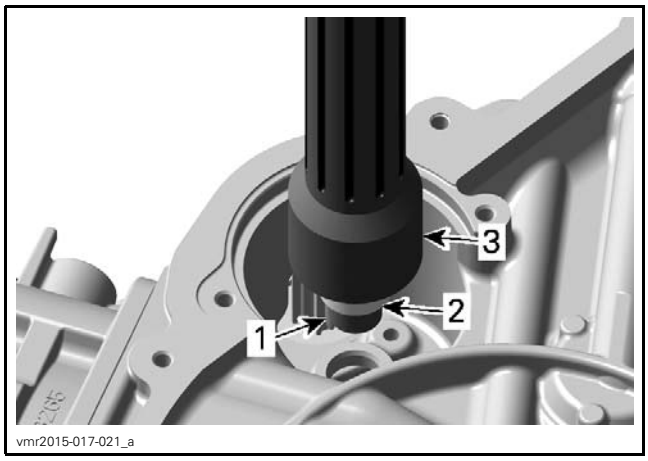

1. *Starter drive needle bearing*
2. *Starter drive needle bearing installer*
3. *Handle*

Replacing the Starter Drive Spring

Remove the starter drive. Refer to procedure in this subsection.

Replace the spring as per the following illustrations.

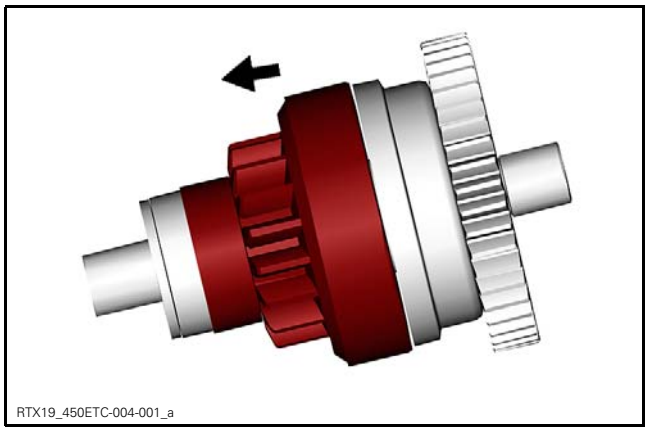

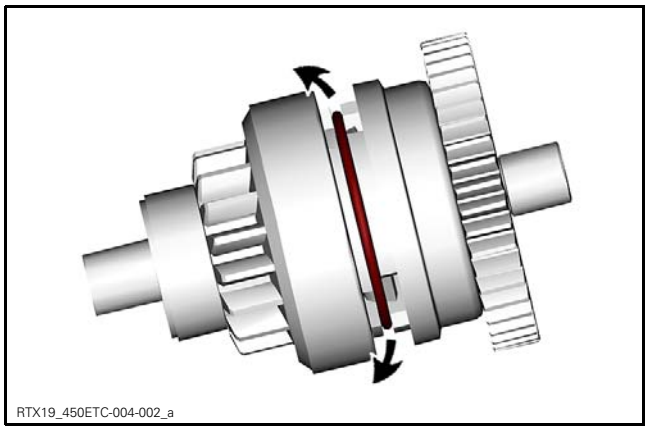

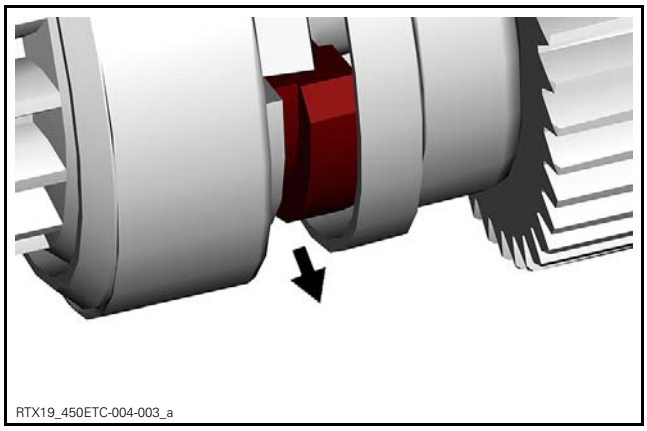

Make sure at least 1 centrifugal weight is in work position to keep the starter drive open.

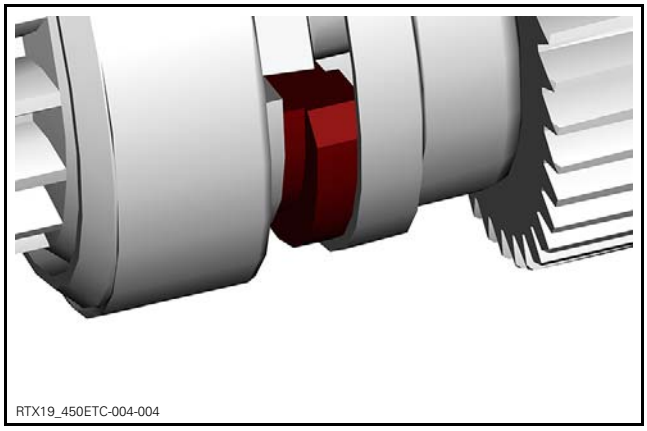

Place the starter drive on a support.

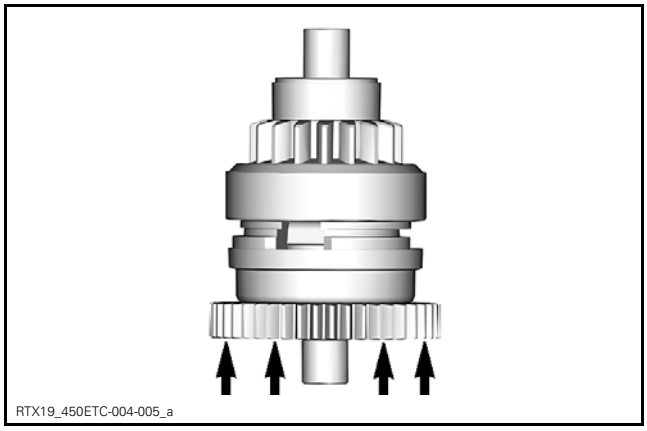

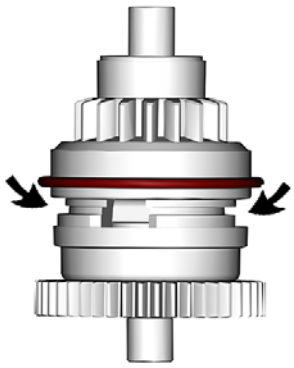

RTX19_450ETC-004-006_a

NOTICE Do not overstretch the spring during installation.

Check spring position for all centrifugal weights.

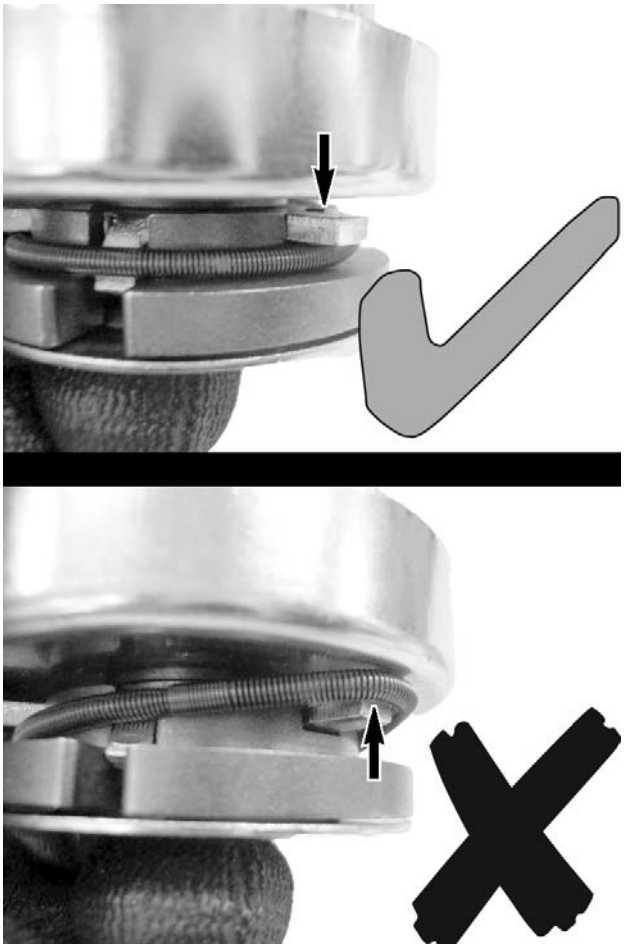

vgb2015-002-010_a

Installing the Starter Drive

The installation is the reverse of the removal procedure. However, pay attention to the following.

Apply multi-purpose grease inside starter drive pinion cover.

Clean out all residues of grease from:

- Needle bearing in the crankcase
- Starter drive journals
- Starter drive cover bore
- Spring.

Lubricate needle bearing and starter drive cover bore with specified service product.

SERVICE PRODUCT
ISOFLEX GREASE TOPAS NB 52 (P/N 293 550 021)

MAGNETO AND STARTER

SERVICE TOOLS

Description	Part Number	Page
CRANKSHAFT LOCKING BOLT	529 035 617	5
CRANKSHAFT PROTECTOR	529 036 034	6
FLUKE 115 MULTIMETER	529 035 868	4
MAGNETO PULLER	529 035 748	6

SERVICE PRODUCTS

Description	Part Number	Page
CLUTCH AND PULLEY FLANGE CLEANER PRO S1	779244	6, 8
DIELECTRIC GREASE	293 550 004	10
DREI BOND SEALING COMPOUND	420 297 906	3
LOCTITE 243 (BLUE)	293 800 060	5
LOCTITE 648 (GREEN)	413 711 400	7–8
LOCTITE 767 (ANTISEIZE LUBRICANT)	293 800 070	9
LOCTITE CHISEL (GASKET REMOVER)	413 708 500	3

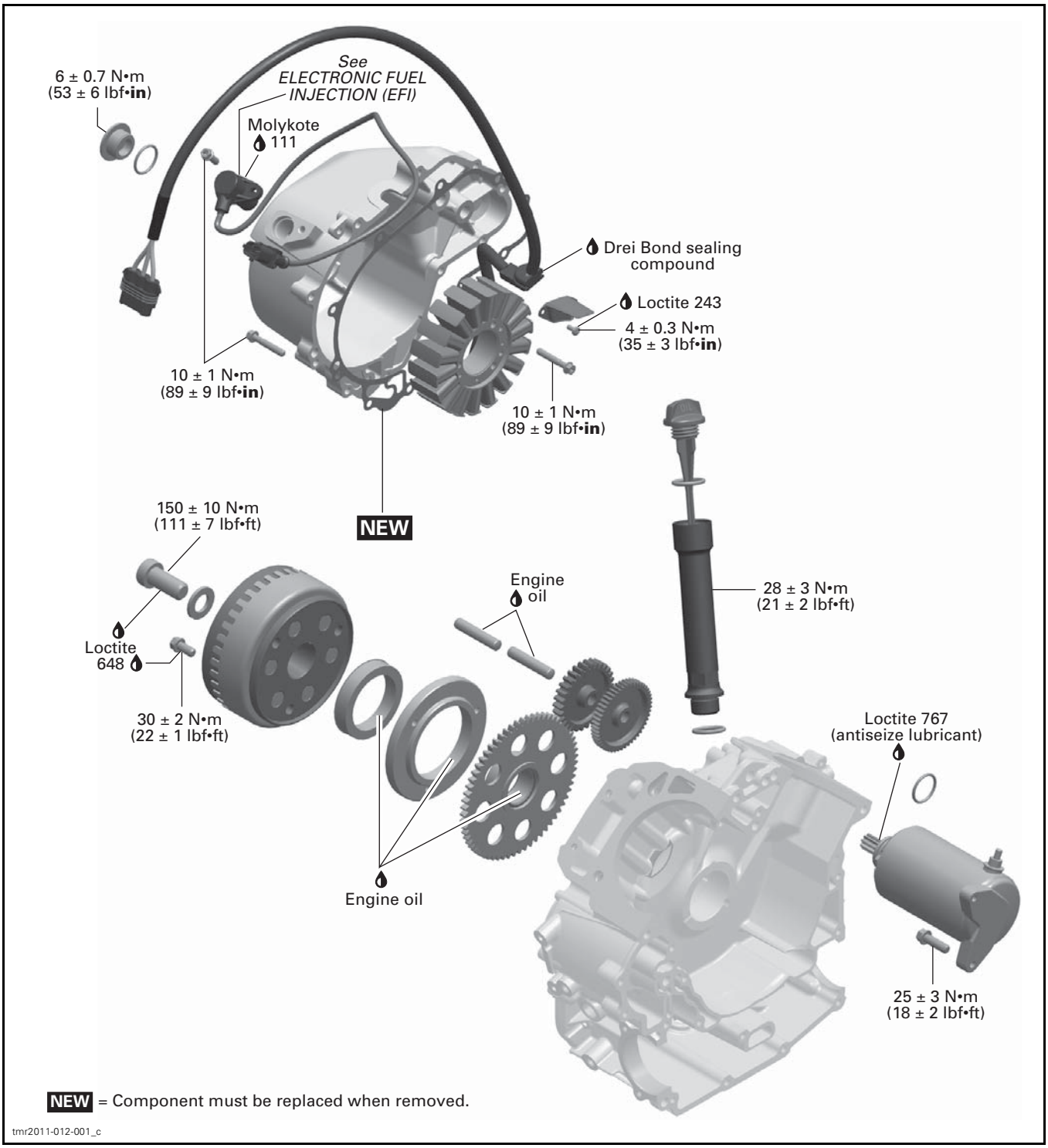
6 ± 0.7 N•m
(53 ± 6 lbf•in)
See
ELECTRONIC FUEL
INJECTION (EFI)
Molykote
111
Drei Bond sealing
compound
Loctite 243
4 ± 0.3 N•m
(35 ± 3 lbf•in)
10 ± 1 N•m
(89 ± 9 lbf•in)
10 ± 1 N•m
(89 ± 9 lbf•in)
NEW
150 ± 10 N•m
(111 ± 7 lbf•ft)
Engine
oil
28 ± 3 N•m
(21 ± 2 lbf•ft)
Loctite
648
30 ± 2 N•m
(22 ± 1 lbf•ft)
Loctite 767
(antiseize lubricant)
Engine oil
25 ± 3 N•m
(18 ± 2 lbf•ft)
NEW = Component must be replaced when removed.
tmr2011-012-001_c

PROCEDURES

MAGNETO COVER

Magneto Cover Access

Remove fuel tank, refer to *FUEL TANK AND FUEL PUMP* subsection.

Removing the Magneto Cover

Drain engine oil, refer to *LUBRICATION SYSTEM* subsection.

Remove crankshaft position sensor (CPS) and cut tie raps.

Remove dipstick and oil level tube with O-rings.

Disconnect oil pressure switch (OPS) connector.

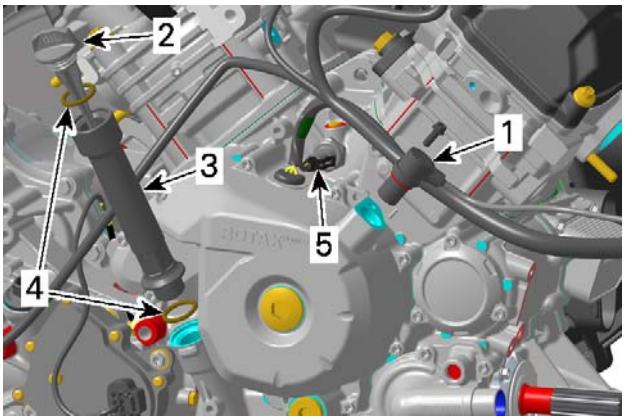

tmr2016-115-001_a

1. *Crank position sensor (CPS)*
2. *Dipstick*
3. *Oil level tube*
4. *O-rings*
5. *Oil pressure switch (OPS) connector*

Disconnect stator connector from voltage regulator/ rectifier, refer to *STATOR CONNECTOR ACCESS* in this subsection.

Remove magneto cover retaining screws.

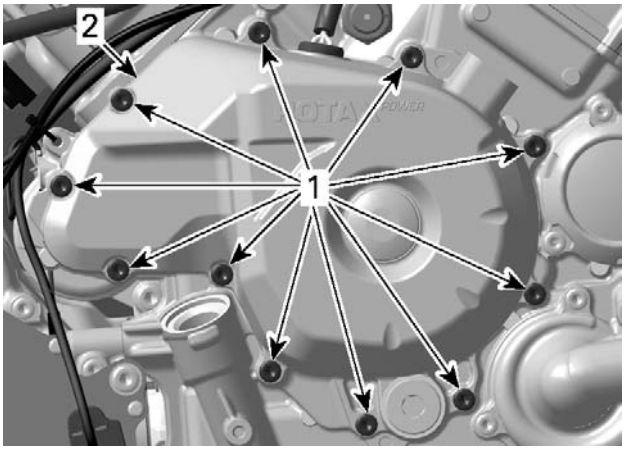

tmr2015-017-003_a

1. *Retaining screws*
2. *Magneto cover*

Pull out magneto cover.

Discard the gasket.

NOTE: If required, remove stator and harness from magneto cover.

Inspecting and Cleaning the Magneto Cover

Check magneto cover for cracks or other damage. Replace if necessary.

Clean all metal components in a non- ferrous metal cleaner. Use LOCTITE CHISEL (GASKET REMOVER) (P/N 413 708 500), or suitable equivalent.

Installing the Magneto Cover

The installation is the reverse the removal procedure. However, pay attention to the following.

Install a **NEW** magneto cover gasket.

Apply sealant on stator cable grommet as shown in next illustration.

SERVICE PRODUCT
DREI BOND SEALING COMPOUND (P/N 420 297 906)

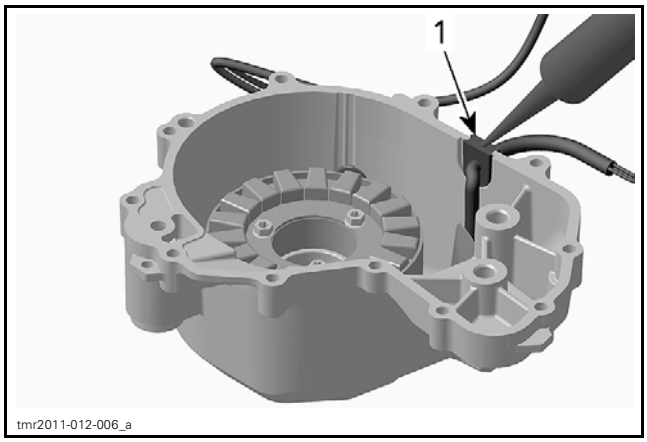

1. Stator cable grommet (apply Drei Bond sealing compound)

Tighten screws using the following sequence.

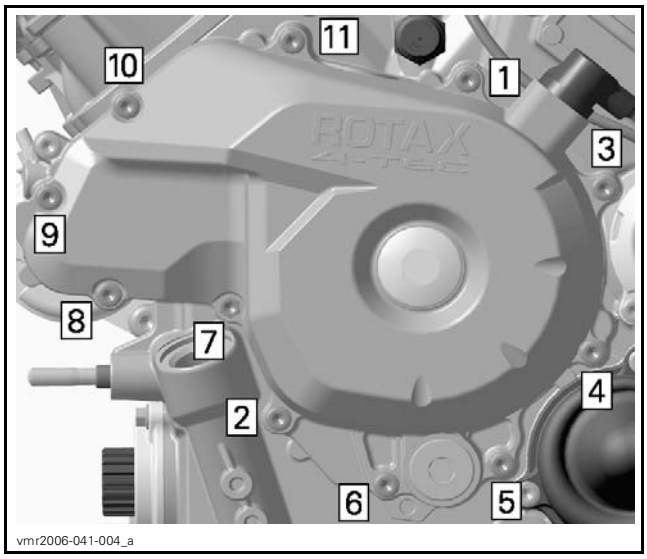

TIGHTENING SEQUENCE

TIGHTENING TORQUE	
Magneto cover screws	10 N•m ± 1 N•m (89 lbf•**in** ± 9 lbf•**in**)

Refill engine with recommended oil.

STATOR

Stator Connector Access

The stator is directly connected to the voltage regulator/rectifier.

Testing the Stator Continuity

1. Disconnect the stator connector from the voltage regulator/rectifier.
2. Check resistance between YELLOW wires.

REQUIRED TOOL	
FLUKE 115 MULTIMETER (P/N 529 035 868)	

TERMINAL	RESISTANCE @ 20°C (68°F)
1 and 2	0.15 - 0.30 Ω
1 and 3	
2 and 3	

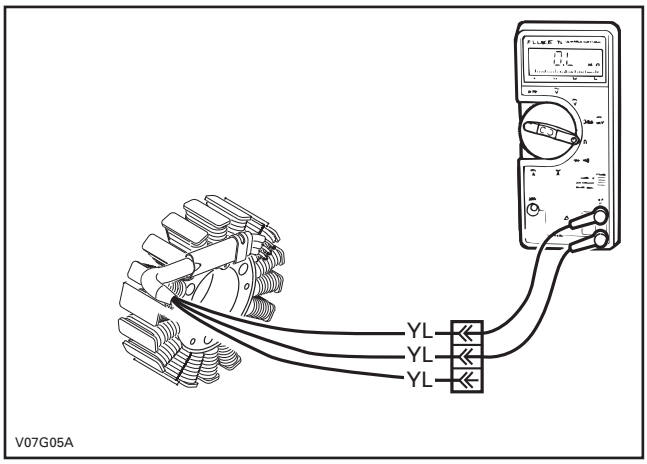

TYPICAL

3. If any reading is out of specification, replace stator.
4. Re-plug connectors properly.

Testing the Stator Static Insulation

1. Disconnect the stator connector from the voltage regulator/rectifier.
2. Connect multimeter between any YELLOW wire (on stator connector) and engine ground.

REQUIRED TOOL	
FLUKE 115 MULTIMETER (P/N 529 035 868)	

NOTICE **Never insert a multimeter probe into a terminal as it would ruin the terminal. Probe terminals only by touching.**

TEST PROBES	RESISTANCE @ 20°C (68°F)
Any YELLOW wire and engine ground	Infinite (open circuit)

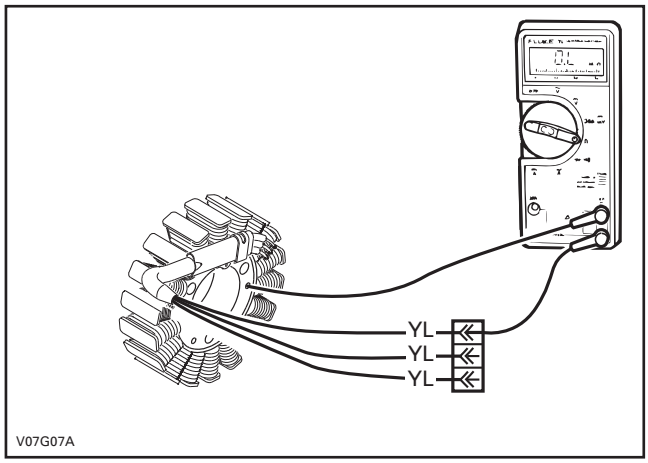

TYPICAL

3. If there is a resistance or continuity, the stator coils and/or the wiring is shorted to ground and needs to be repaired or replaced.
4. Re-plug connectors properly.

Removing the Stator

Remove *MAGNETO COVER*. See procedure in this subsection.

Remove:
- Holding strip screws
- Stator retaining screws
- Stator.

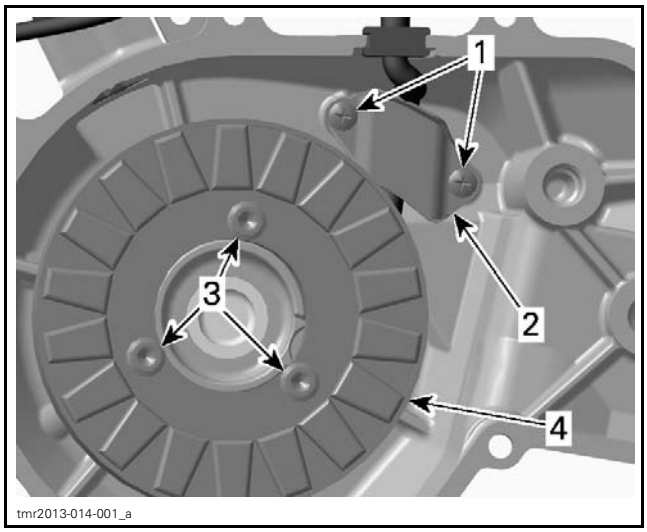

1. *Holding strip screws*
2. *Wire holding strip*
3. *Stator retaining screws*
4. *Stator*

Inspecting the Stator

Check stator windings and insulation for cracks or other damages. If damaged replace it.

Check if stator wires are brittle, hard or otherwise damaged.

Installing the Stator

The installation is the reverse of the removal procedure. However, pay attention to the following.

NOTICE **When installing the stator take care to route wires properly and install retaining strip.**

There is only one position for the stator (notch in the magneto housing cover).

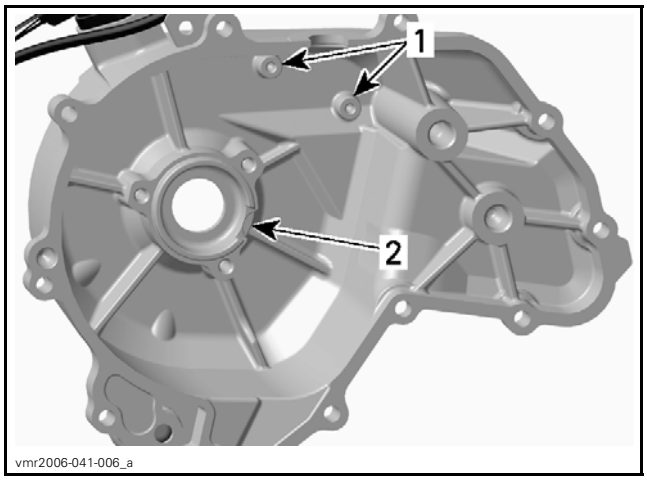

1. *Threads for cable holding strip*
2. *Notch for stator*

TIGHTENING TORQUE	
Holding strip screws	4 N•m ± 0.3 N•m (35 lbf•**in** ± 3 lbf•**in**) + LOCTITE 243 (BLUE) (P/N 293 800 060)

TIGHTENING TORQUE	
Stator retaining screws	10 N•m ± 1 N•m (89 lbf•**in** ± 9 lbf•**in**)

ROTOR

Removing the Rotor

Remove *MAGNETO COVER*. See procedure in this subsection.

Lock crankshaft, refer to *CRANKSHAFT LOCKING PROCEDURE* in the *CYLINDER BLOCK* subsection.

REQUIRED TOOL	
CRANKSHAFT LOCKING BOLT (P/N 529 035 617)	

Heat screw in order to break the threadlocker.

Remove screw and washer securing rotor to crankshaft.

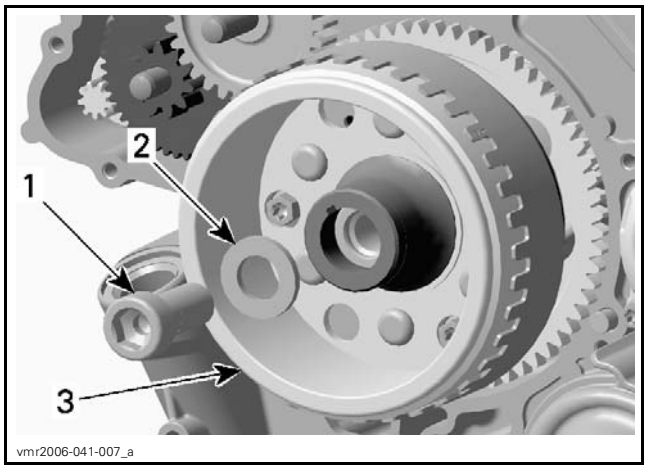

1. *Screw M16*
2. *Washer*
3. *Rotor*

Remove rotor.

REQUIRED TOOLS	
MAGNETO PULLER (P/N 529 035 748)	
CRANKSHAFT PROTECTOR (P/N 529 036 034)	

NOTE: Use grease to place protector on crankshaft end prior to screw on the magneto puller.

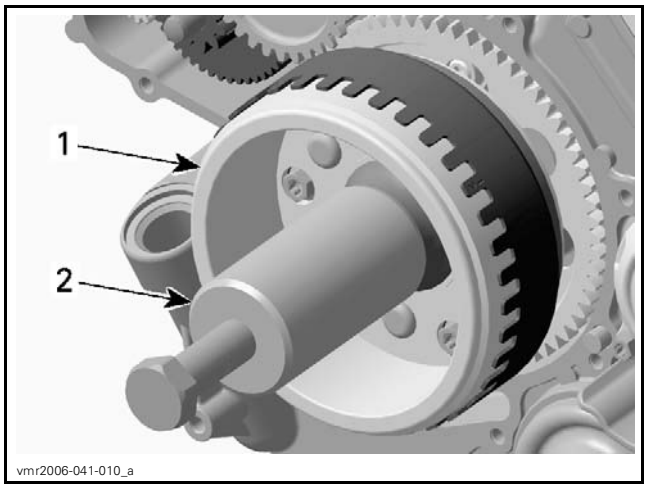

1. *Rotor*
2. *Magneto puller*

Screw magneto puller bolt to remove rotor.

Inspecting the Rotor

Check inner side of rotor for scratches or other damage.

Blow pressurized air in the rotor oil bore and make sure it is not clogged.

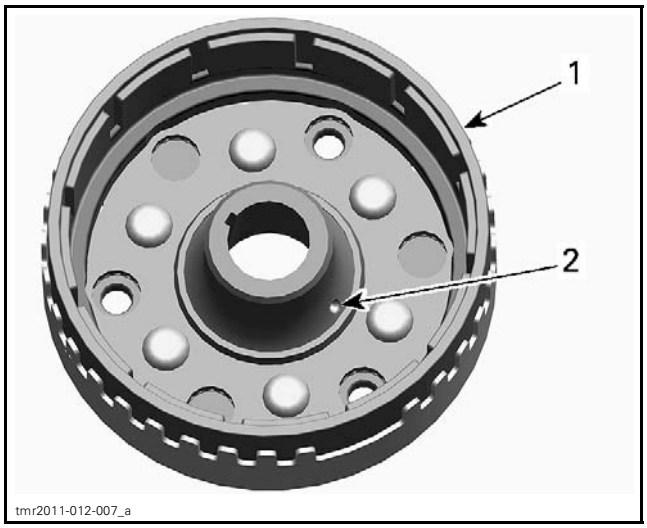

1. *Rotor*
2. *Oil bore*

Check keyway of the rotor for wear or damages.

Check if trigger wheel teeth are bent or otherwise damaged.

Check woodruff key and keyway on the crankshaft for wear or damages.

Replace parts as necessary.

Installing the Rotor

The installation is the reverse of the removal procedure. However, pay attention to the following.

Clean these components:
- Crankshaft taper
- Oil passage in crankshaft taper
- Thread in crankshaft
- Rotor taper
- Oil bore in rotor.

SERVICE PRODUCT
CLUTCH AND PULLEY FLANGE CLEANER PRO S1 (P/N 779244)

NOTICE **Taper on crankshaft and rotor must be free of grease.**

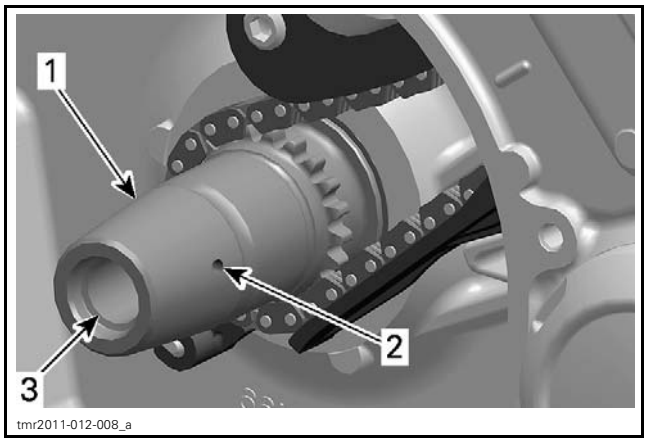

1. *Crankshaft (MAG side)*
2. *Oil passage*
3. *Threads*

Oil sprag clutch and install sprag clutch gear.

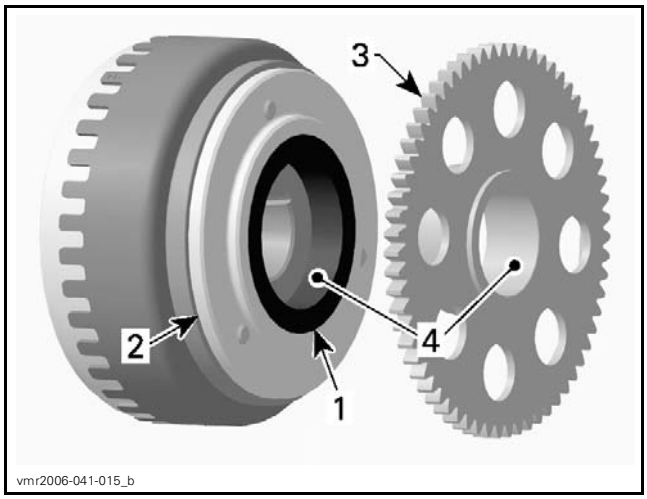

1. *Sprag clutch*
2. *Sprag clutch housing*
3. *Sprag clutch gear*
4. *Apply engine oil here*

Slide rotor onto crankshaft. The woodruff key and the keyway must be aligned.

Rotate starter double gear counterclockwise to align intermediate gear teeth with sprag clutch gear.

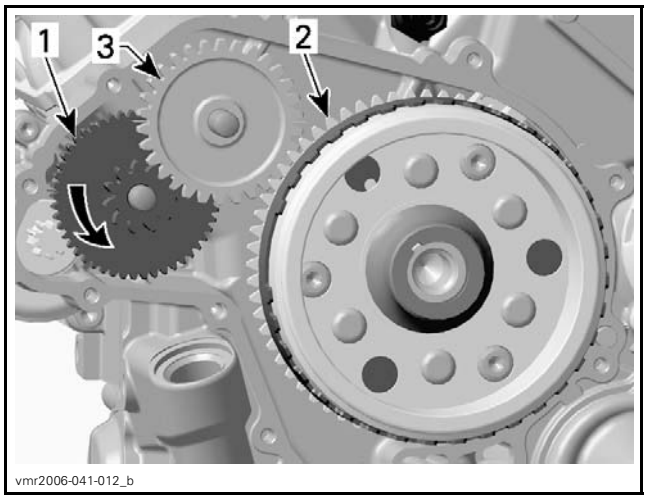

1. *Starter double gear*
2. *Sprag clutch gear*
3. *Intermediate gear*

TIGHTENING TORQUE	
Rotor retaining screw	150 N•m ± 10 N•m (111 lbf•ft ± 7 lbf•ft) + LOCTITE 648 (GREEN) (P/N 413 711 400)

SPRAG CLUTCH

Removing the Sprag Clutch

Remove *MAGNETO COVER*. See procedure in this subsection.

Heat sprag clutch housing screws in order to break the Loctite.

Loosen screws.

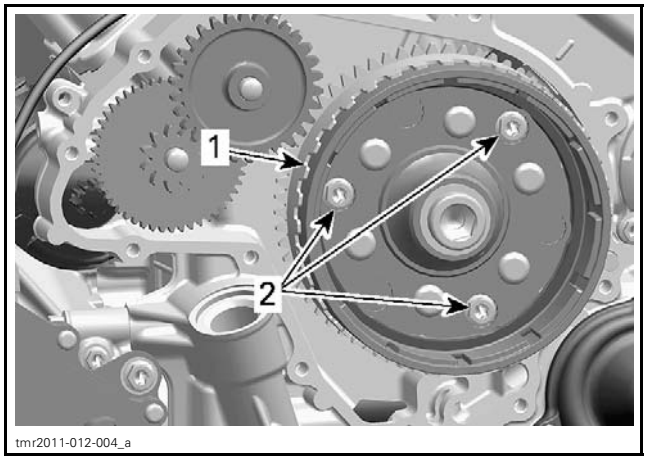

1. *Rotor*
2. *Sprag clutch housing screws*

Remove rotor, refer to *ROTOR* in this subsection.

Remove sprag clutch gear.

Remove sprag clutch housing screws and sprag clutch housing.

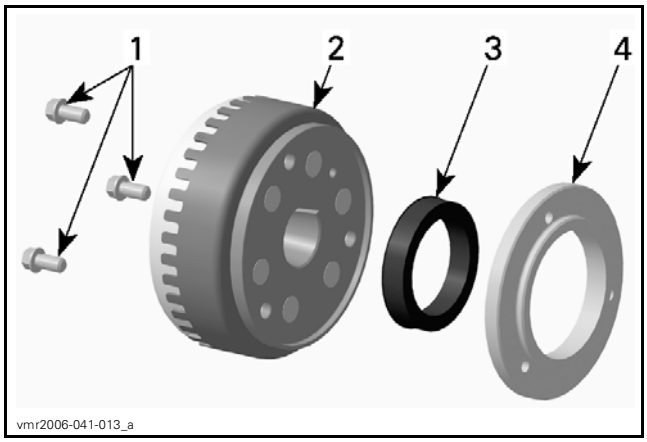

1. *Sprag clutch housing screws*
2. *Rotor*
3. *Sprag clutch*
4. *Sprag clutch housing*

Inspecting the Sprag Clutch

Inspect sprag clutch and sprag clutch housing for wear and damage.

Also check the collar of the sprag clutch gear.

Rotate sprag clutch gear in sprag clutch. Sprag clutch must lock in counterclockwise direction.

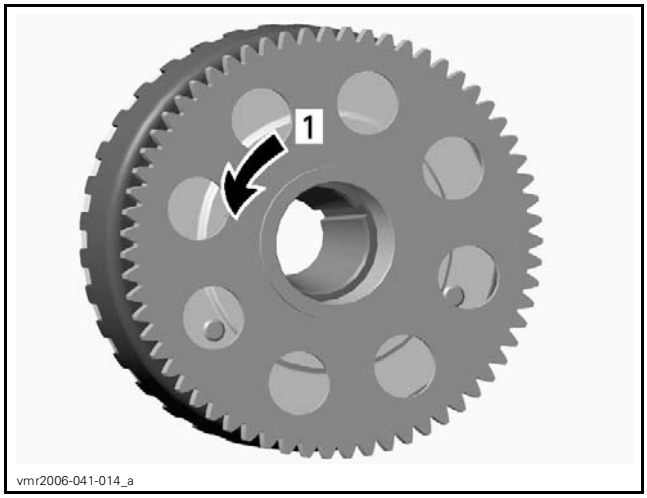

SPRAG CLUTCH FUNCTIONAL TEST
1. *Lock*

Sprag clutch, housing and gear must be replaced at the same time, if damaged.

Installing the Sprag Clutch

The installation is the reverse of the removal procedure. Pay attention to the following details.

Clean the following:
- Threads in sprag clutch housing
- Threads of sprag clutch housing screws.

SERVICE PRODUCT
CLUTCH AND PULLEY FLANGE CLEANER PRO S1 (P/N 779244)

Apply threadlocker on threads of sprag clutch housing screws.

SERVICE PRODUCT
LOCTITE 648 (GREEN) (P/N 413 711 400)

Install screws but do not torque yet.

Apply engine oil on sprag clutch and sprag clutch gear needle bearing.

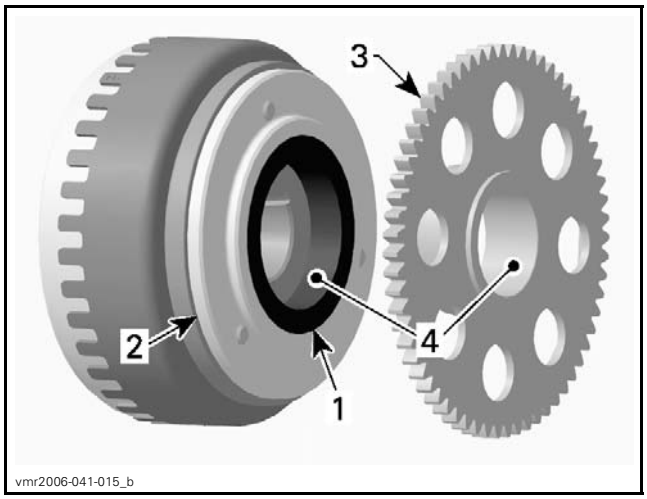

1. *Sprag clutch*
2. *Sprag clutch housing*
3. *Sprag clutch gear*
4. *Apply engine oil here*

Install rotor, refer to *ROTOR* in this subsection.

Tighten sprag clutch housing screws to specification.

TIGHTENING TORQUE	
Sprag clutch housing screws	30 N•m ± 2 N•m (22 lbf•ft ± 1 lbf•ft)

SPRAG CLUTCH GEAR

Removing the Sprag Clutch Gear

Remove *ROTOR*. See procedure in this subsection.

Pull sprag clutch gear out of the rotor.

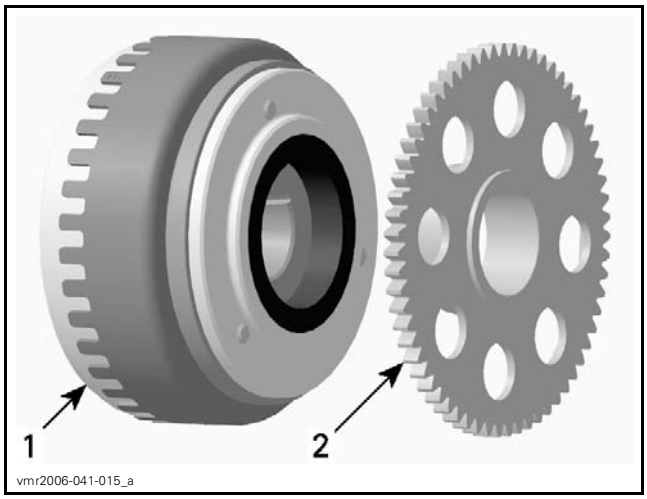

1. Rotor
2. Sprag clutch gear

Inspecting the Sprag Clutch Gear

Inspect gear, especially teeth and sprag clutch collar, for wear and other damage.

Check needle bearing condition. Replace sprag clutch gear if necessary.

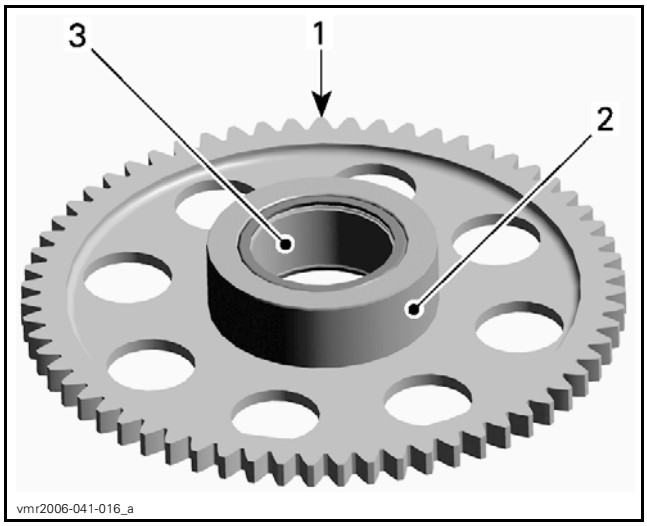

INSPECT
1. Teeth
2. Collar
3. Needle bearing

Installing the Sprag Clutch Gear

The installation is the reverse of the removal procedure.

NOTE: Apply engine oil on needle bearing and collar of sprag clutch gear.

STARTER DRIVE GEARS

Starter Drive Gear Location

The starter drive gears are located on the engine MAG side behind the magneto cover.

Removing the Starter Drive Gear

Remove *MAGNETO COVER*. See procedure in this subsection.

Remove location pins, starter double gear and intermediate gear.

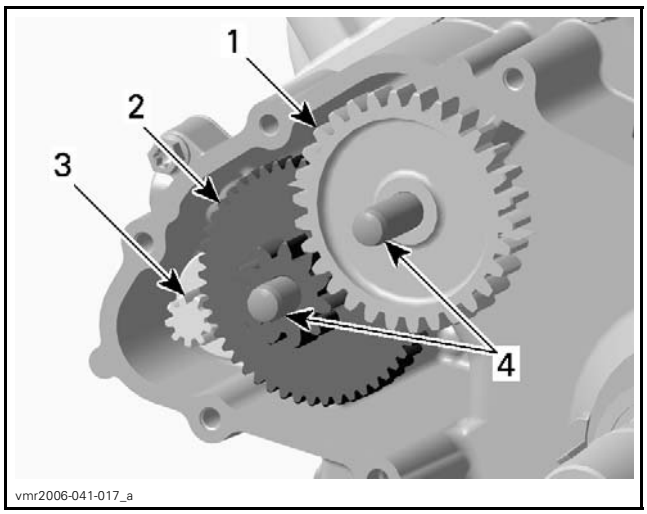

1. Intermediate gear
2. Starter double gear
3. Starter gear
4. Location pins

Inspecting the Starter Drive Gear

Inspect gears and location pins for wear and damage.

Replace parts as necessary.

Installing the Starter Drive Gear

The installation is the reverse of the removal procedure. Pay attention to the following details.

Apply an antiseize lubricant on starter gear before installing the starter double gear.

SERVICE PRODUCT
LOCTITE 767 (ANTISEIZE LUBRICANT) (P/N 293 800 070)

Apply engine oil on location pins.

ELECTRIC STARTER

Starter Location

Starter is located under rear cylinder.

Testing the Starter Operation

Ensure the starter power cable is properly connect from the starter solenoid to the starter terminal (clean, tight, no corrosion).

Using booster cables, carefully supply current from a 12 volt battery directly to the starter. First connect the BLACK (-) cable to the engine ground. Then, momentarily connect the remaining jumper cable from the battery to the starter terminal on the starter solenoid.

If starter turns, test other starting system components.

Removing the Starter

Turn OFF ignition switch.

Disconnect the battery.

Refer to *CONTINUOUSLY VARIABLE TRANSMISSION (CVT)* subsection and remove:

- CVT cover
- Drive pulley
- Driven pulley
- CVT air guide.

Clean starter area.

Remove starter retaining screw.

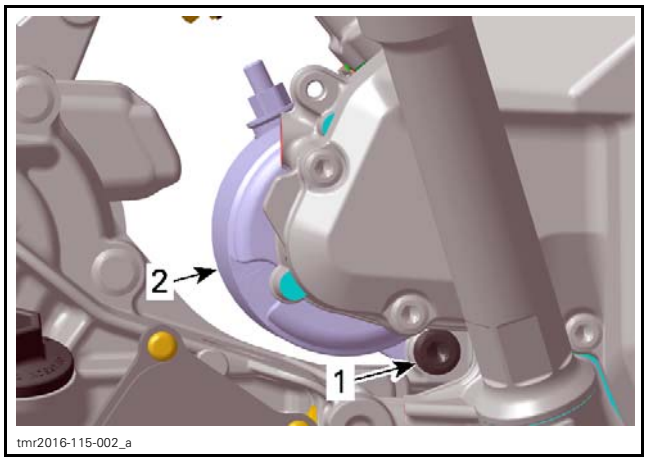

1. *Starter retaining screw*
2. *Starter*

Carefully pry starter out of the crankcase.

Installing the Starter

The installation is the reverse of the removal procedure. However, pay particular attention to the following.

Make sure that starter and engine mating surfaces are free of debris. Serious problem may arise if the starter is not properly aligned.

Bring starter close to its location. Rotate it so that its mounting ear allows installation in engine crankcase.

Push starter in place and align mounting ear to install screw. Tighten to the specified torque.

TIGHTENING TORQUE	
Starter mounting screw	25 N•m ± 3 N•m (18 lbf•ft ± 2 lbf•ft)

Connect the RED (+) cable to the starter, tighten nut, and apply specified product.

TIGHTENING TORQUE	
Starter cable nut	6 N•m ± 0.7 N•m (53 lbf•**in** ± 6 lbf•**in**) + DIELECTRIC GREASE (P/N 293 550 004)

Connect the battery.

Test starter operation.

MAGNETO AND STARTER

SERVICE TOOLS

Description	Part Number	Page
CRANKSHAFT LOCKING BOLT	529 035 617	7
CRANKSHAFT PROTECTOR	529 036 034	7
FLUKE 115 MULTIMETER	529 035 868	5–6
MAGNETO PULLER	529 035 748	7

SERVICE PRODUCTS

Description	Part Number	Page
CLUTCH AND PULLEY FLANGE CLEANER PRO S1	779244	8, 10
DIELECTRIC GREASE	293 550 004	12
DREI BOND SEALING COMPOUND	420 297 906	5
LOCTITE 243 (BLUE)	293 800 060	7
LOCTITE 648 (GREEN)	413 711 400	10
LOCTITE 767 (ANTI-SEIZE LUBRICANT)	293 800 070	11
LOCTITE CHISEL (GASKET REMOVER)	413 708 500	3

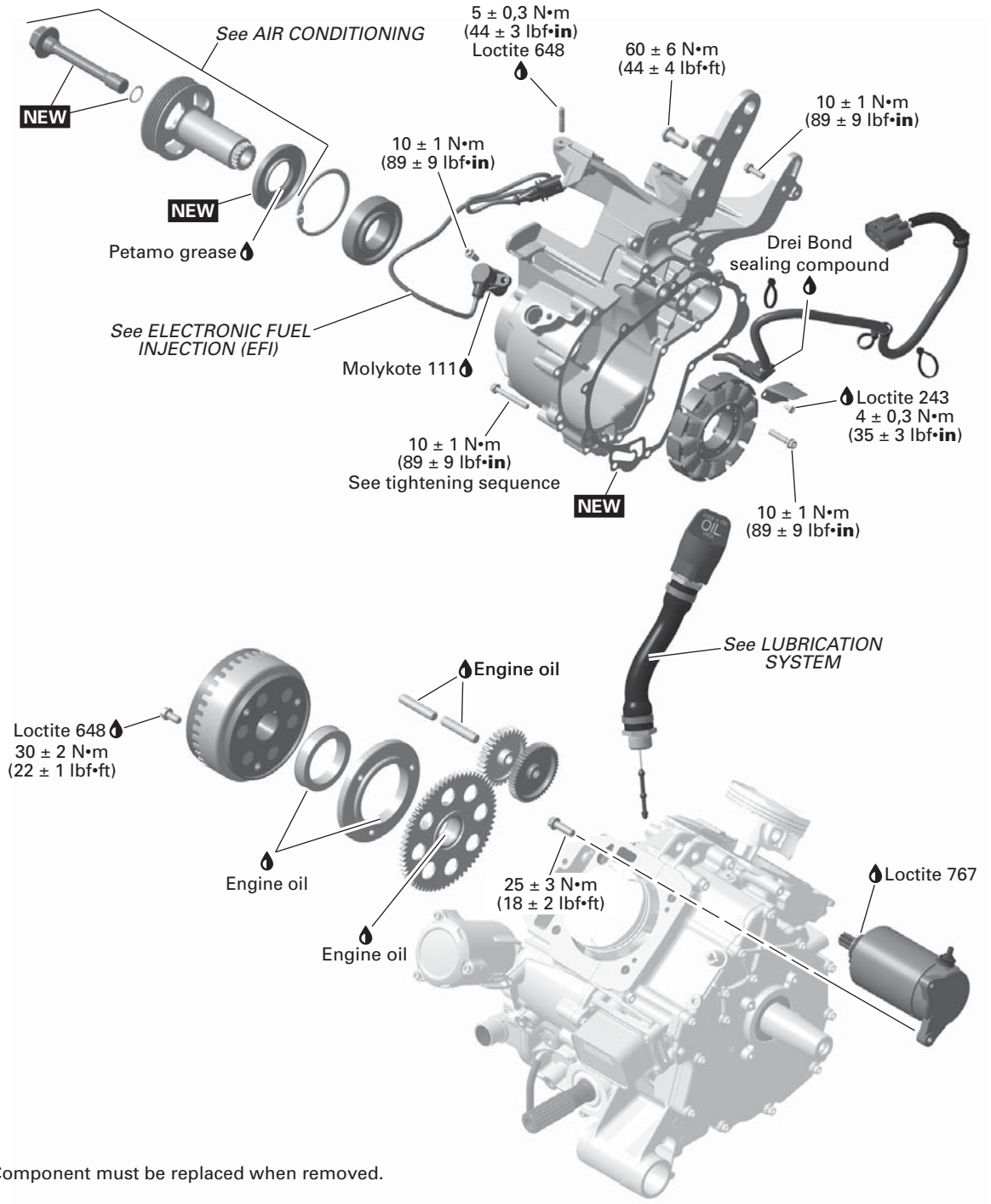

NEW = Component must be replaced when removed.

RTX20_1010HVAC-005-001_a

PROCEDURES

MAGNETO COVER

Magneto Cover Access

Remove fuel tank, refer to *FUEL TANK AND FUEL PUMP* subsection.

Removing the Magneto Cover

Drain engine oil, refer to *LUBRICATION SYSTEM* subsection.

Remove air conditioning compressor, refer to *AIR CONDITIONING* subsection and remove:

– Belt cover
– Air conditioning compressor
– Belt cover support
– Air conditioning drive pulley.

Remove dipstick and oil dipstick tube with O-rings, refer to *LUBRICATION SYSTEM* subsection.

Disconnect oil pressure switch (OPS) connector.

Remove crankshaft position sensor (CPS).

Cut locking ties securing the engine wiring harness and stator wiring.

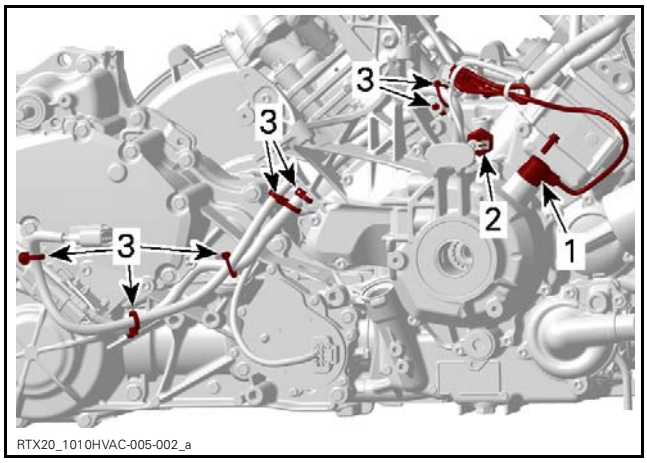

1. *Crank position sensor (CPS)*
2. *Oil pressure switch (OPS) connector*
3. *Cut locking ties*

Disconnect stator connector from voltage regulator/ rectifier, refer to *STATOR CONNECTOR ACCESS* in this subsection.

Cut locking tie securing the ignition cable and disconnect spark plug connector.

Remove magneto cover bracket screws.

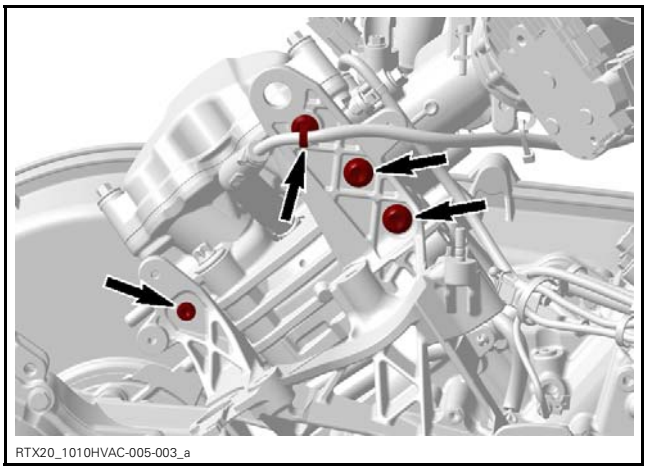

Remove magneto cover retaining screws.

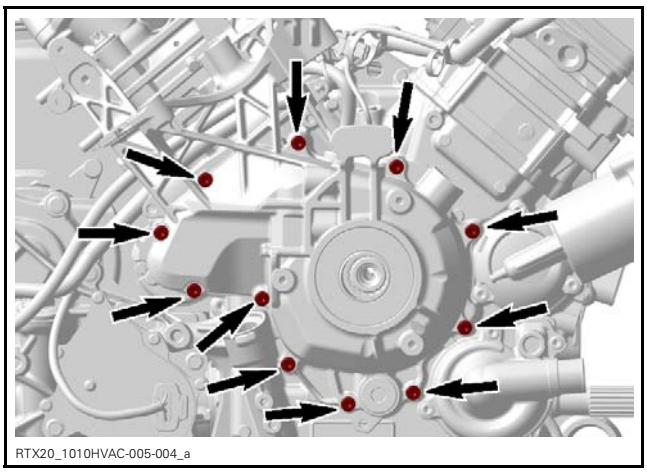

Pull out magneto cover.

Discard the gasket.

NOTE: If required, remove stator and harness from magneto cover.

Inspecting and Cleaning the Magneto Cover

Check magneto cover for cracks or other damage. Replace if necessary.

Clean all metal components in a non- ferrous metal cleaner. Use LOCTITE CHISEL (GASKET REMOVER) (P/N 413 708 500), or suitable equivalent.

Check if ball bearing turns freely and smoothly. Replace if necessary, refer to *BALL BEARING REPLACEMENT* subsection.

Check if oil seal is brittle, hard or damaged. Replace if necessary, refer to *AIR CONDITIONING DRIVE PULLEY* in the *AIR CONDITIONING* subsection.

Ball Bearing Replacement

Removing the Ball Bearing

Remove drive pulley oil seal, refer to *AIR CONDITIONING DRIVE PULLEY* in the *AIR CONDITIONING* subsection.

Remove stator, refer to procedure in this subsection.

Remove ball bearing retaining ring.

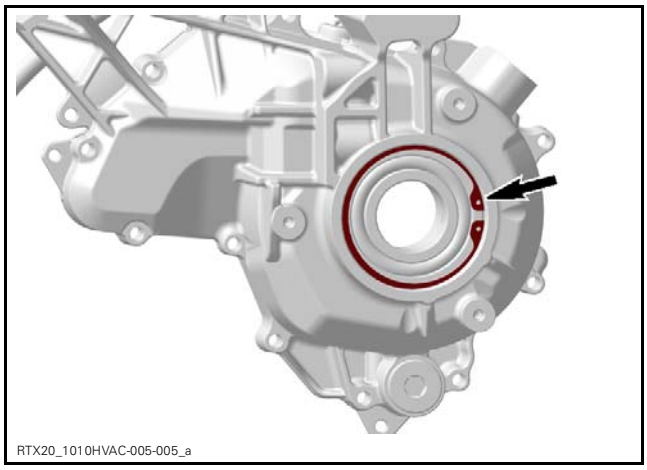

If necessary heat housing up to 100°C (212°F) before removing the ball bearing.

⚠ WARNING

Clean oil, outside and inside, from magneto cover before heating.

NOTICE **Always support magneto cover properly when ball bearing is removed. Magneto cover damages may occur if this procedure is not performed correctly.**

Use a suitable puller to remove ball bearing.

REQUIRED TOOL
Blind hole bearing puller

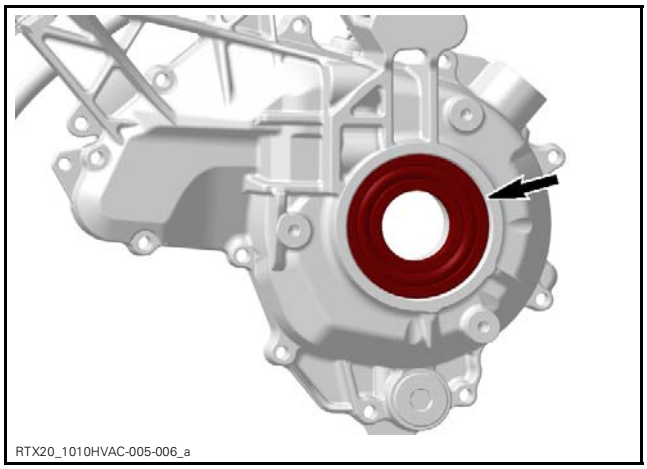

Installing the Ball Bearing

Unless otherwise instructed, never use hammer to install ball bearings. Use press machine only.

If necessary heat housing up to 100°C (212°F) before installing the ball bearing.

⚠ WARNING

Clean oil, outside and inside, from magneto cover before heating.

Place new bearing in freezer for 10 minutes before installation.

Lubricate ball bearing seat in magneto cover for proper bearing installation.

SERVICE PRODUCT
Engine oil

Use a suitable installer for installing the ball bearing.

NOTICE **Always support magneto cover properly when ball bearing is installed. Magneto cover damages may occur if this procedure is not performed correctly.**

Install ball bearing retaining ring.

Install stator, refer to procedure in this subsection.

Install drive pulley oil seal, refer to *AIR CONDITIONING DRIVE PULLEY* in the *AIR CONDITIONING* subsection.

Installing the Magneto Cover

The installation is the reverse the removal procedure. However, pay attention to the following.

Install a NEW magneto cover gasket.

Apply sealant on stator cable grommet as shown in next illustration.

SERVICE PRODUCT
DREI BOND SEALING COMPOUND (P/N 420 297 906)

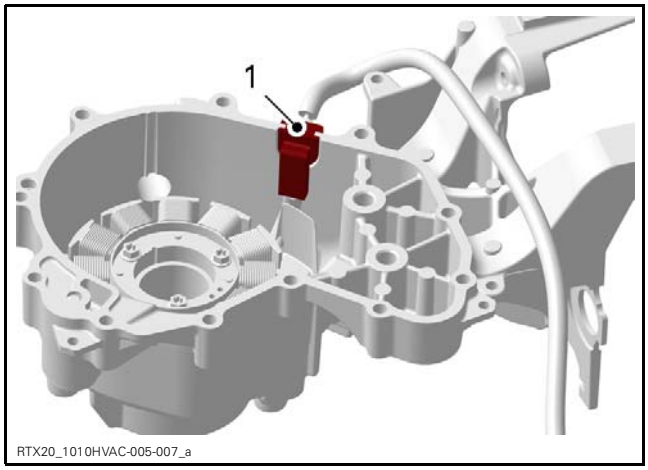

1. Stator cable grommet (apply Drei Bond sealing compound)

Tighten screws using the following sequence.

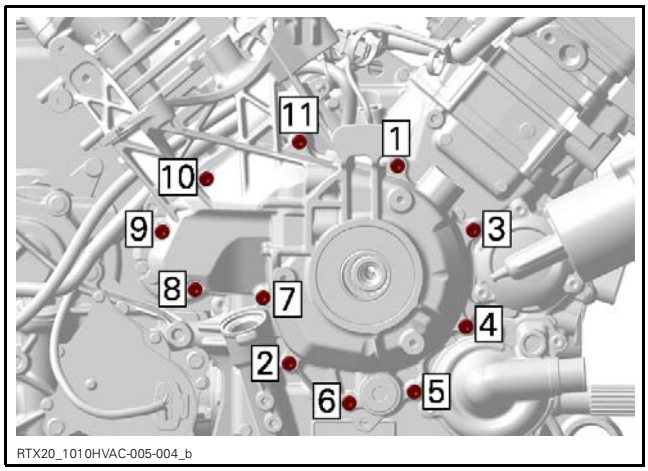

TIGHTENING TORQUE	
Magneto cover screws	10 N•m ± 1 N•m (89 lbf•**in** ± 9 lbf•**in**)

Tighten magneto cover bracket screws to specification.

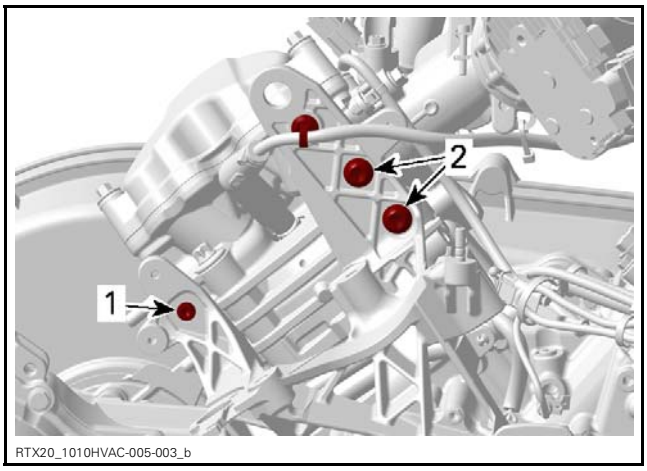

1. M6 magneto cover bracket screws
2. M10 magneto cover bracket screws

TIGHTENING TORQUE	
M6 magneto cover bracket screws	10 N•m ± 1 N•m (89 lbf•**in** ± 9 lbf•**in**)

TIGHTENING TORQUE	
M10 magneto cover bracket screws	60 N•m ± 6 N•m (44 lbf•ft ± 4 lbf•ft)

Refill engine with recommended oil.

STATOR

Stator Connector Access

The stator is directly connected to the voltage regulator/rectifier.

Testing the Stator Continuity

1. Disconnect the stator connector from the voltage regulator/rectifier.
2. Check resistance between YELLOW wires.

REQUIRED TOOL	
FLUKE 115 MULTIMETER (P/N 529 035 868)	

TERMINAL	RESISTANCE @ 20°C (68°F)
1 and 2	0.07 - 0.30 Ω
1 and 3	
2 and 3	

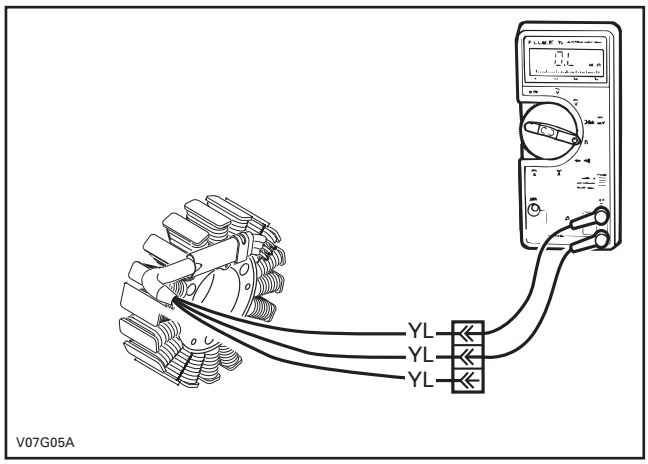

TYPICAL

3. If any reading is out of specification, replace stator.
4. Re-plug connectors properly.

Testing the Stator Static Insulation

1. Disconnect the stator connector from the voltage regulator/rectifier.
2. Connect multimeter between any YELLOW wire (on stator connector) and engine ground.

REQUIRED TOOL	
FLUKE 115 MULTIMETER (P/N 529 035 868)	

NOTICE **Never insert a multimeter probe into a terminal as it would ruin the terminal. Probe terminals only by touching.**

TEST PROBES	RESISTANCE @ 20°C (68°F)
Any YELLOW wire and engine ground	Infinite (open circuit)

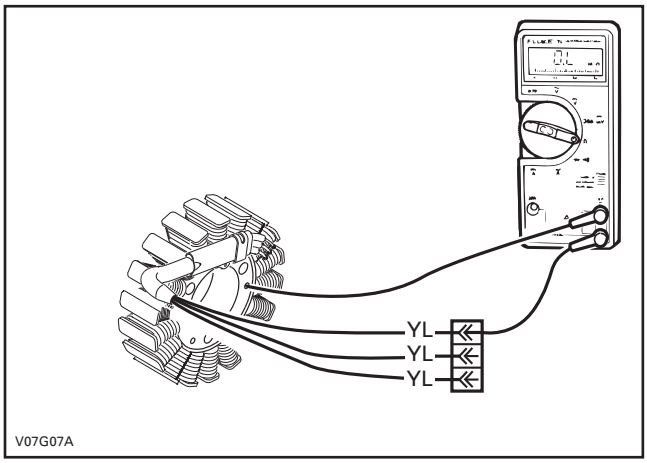

TYPICAL

3. If there is a resistance or continuity, the stator coils and/or the wiring is shorted to ground. Replace stator.
4. Re-plug connectors properly.

Removing the Stator

Remove *MAGNETO COVER*. See procedure in this subsection.

Remove:
- Holding strip screws
- Stator retaining screws
- Stator.

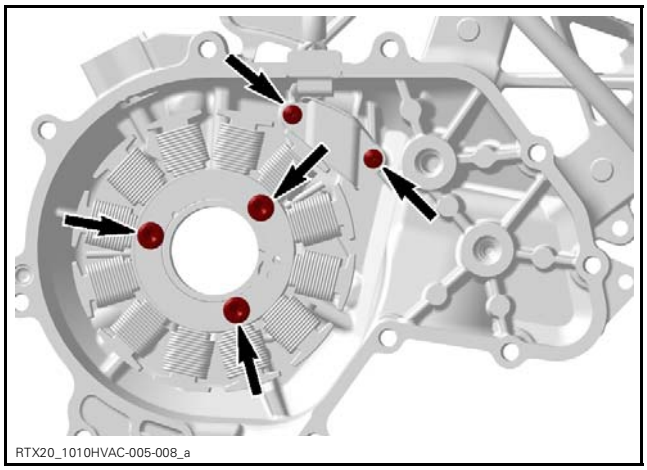

Inspecting the Stator

Check stator windings and insulation for cracks or other damages. If damaged replace it.

Check if stator wires are brittle, hard or otherwise damaged.

Check rubber of holding strip for wear or other damages. Replace if necessary.

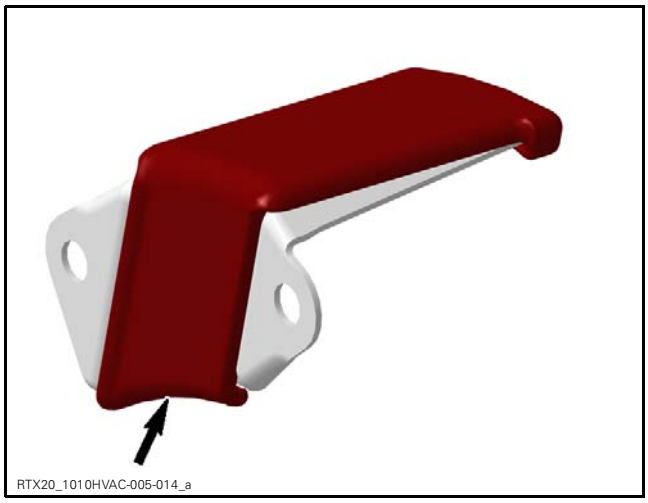

Installing the Stator

The installation is the reverse of the removal procedure. However, pay attention to the following.

NOTICE **When installing the stator take care to route wires properly and install retaining strip.**

There is only one position for the stator (notch in the magneto cover).

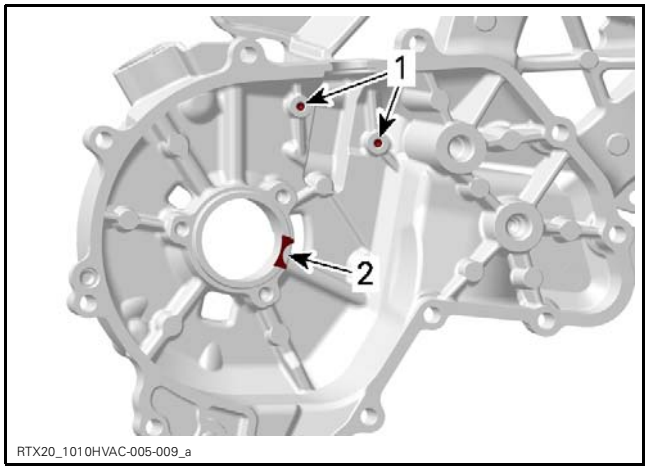

1. *Threads for cable holding strip*
2. *Notch for stator*

TIGHTENING TORQUE	
Holding strip screws	4 N•m ± 0.3 N•m (35 lbf•**in** ± 3 lbf•**in**) + LOCTITE 243 (BLUE) (P/N 293 800 060)

TIGHTENING TORQUE	
Stator retaining screws	10 N•m ± 1 N•m (89 lbf•**in** ± 9 lbf•**in**)

ROTOR

Removing the Rotor

Lock crankshaft, refer to *CRANKSHAFT LOCKING PROCEDURE* in the *CYLINDER BLOCK* subsection.

Remove *MAGNETO COVER*. See procedure in this subsection.

REQUIRED TOOL	
CRANKSHAFT LOCKING BOLT (P/N 529 035 617)	

Remove rotor.

REQUIRED TOOLS	
MAGNETO PULLER (P/N 529 035 748)	
CRANKSHAFT PROTECTOR (P/N 529 036 034)	

NOTE: Use grease to place protector on crankshaft end prior to screw on the magneto puller.

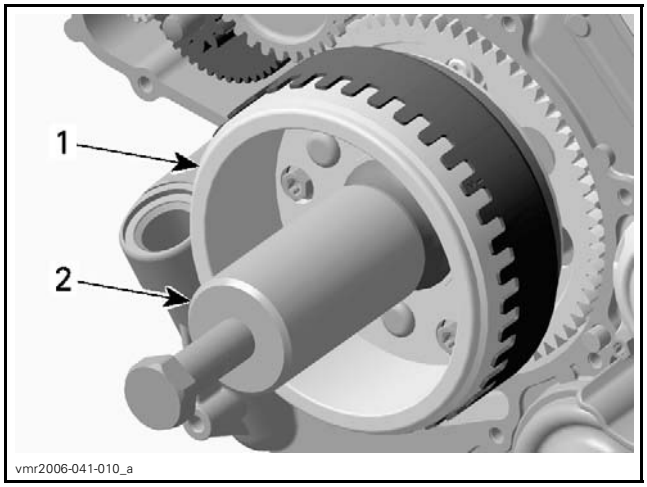

1. *Rotor*
2. *Magneto puller*

Screw magneto puller bolt to remove rotor.

Inspecting the Rotor

Check inner side of rotor for scratches or other damage.

Check inner splines for wear or damage.

Blow pressurized air in the rotor oil bore and make sure it is not clogged.

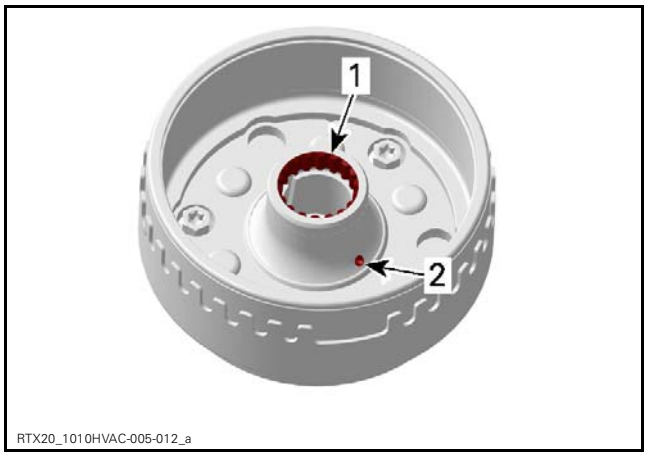

1. *Inner spline*
2. *Oil bore*

Check keyway of the rotor for wear or damages.

Check if trigger wheel teeth are bent or otherwise damaged.

Check woodruff key and keyway on the crankshaft for wear or damages.

Replace parts as necessary.

Installing the Rotor

The installation is the reverse of the removal procedure. However, pay attention to the following.

Clean these components:
- Crankshaft taper
- Oil passage in crankshaft taper
- Thread in crankshaft
- Rotor taper
- Oil bore in rotor.

SERVICE PRODUCT
CLUTCH AND PULLEY FLANGE CLEANER PRO S1 (P/N 779244)

NOTICE **Taper on crankshaft and rotor must be free of grease.**

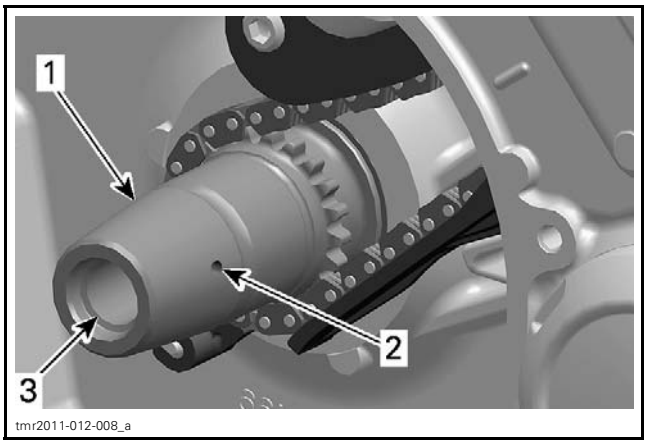

1. *Crankshaft (MAG side)*
2. *Oil passage*
3. *Threads*

Oil sprag clutch and install sprag clutch gear.

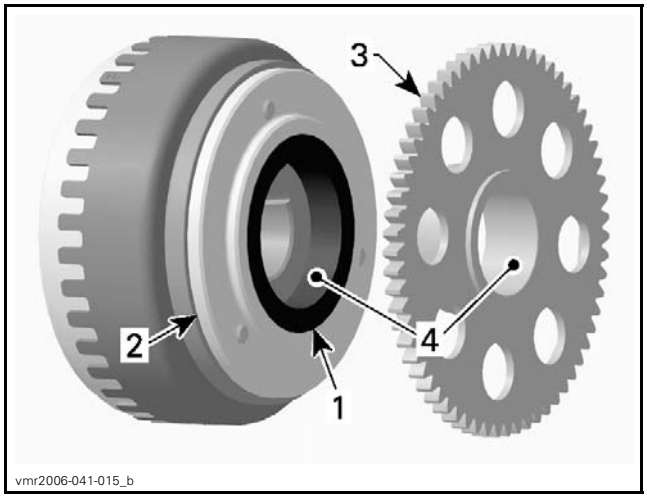

1. *Sprag clutch*
2. *Sprag clutch housing*
3. *Sprag clutch gear*
4. *Apply engine oil here*

Slide rotor onto crankshaft. The woodruff key and the keyway must be aligned.

Rotate starter double gear counterclockwise to align intermediate gear teeth with sprag clutch gear.

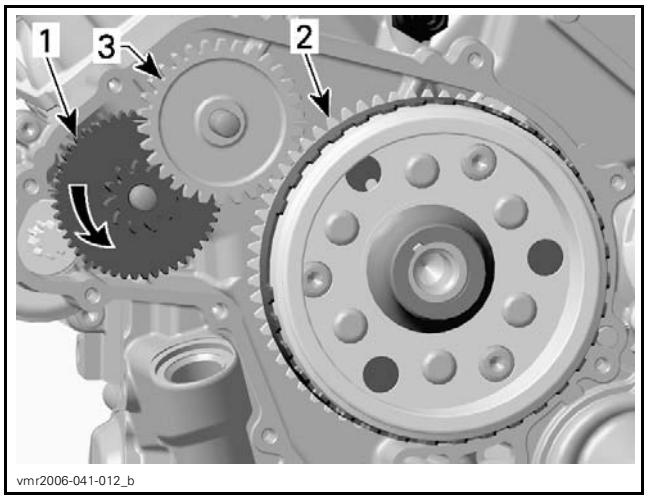

1. *Starter double gear*
2. *Sprag clutch gear*
3. *Intermediate gear*

NOTICE **Perform following steps to ensure that rotor will remain on crankshaft until air conditioning drive pulley retaining screw is installed. Otherwise, due to magnetic force rotor will jump off the crankshaft when magneto cover is installed.**

Install shim and retaining screw and tighten to specification.

REQUIRED TOOL
Retaining screw M16 x 35 (P/N 420 241 545)
Shim (P/N 420 627 270)

NOTICE **Remove the threadlocker from the screw.**

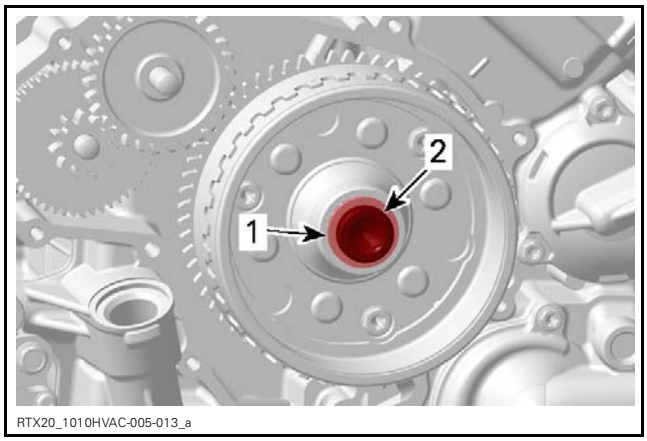

1. *Shim*
2. *Retaining screw*

TIGHTENING TORQUE	
Retaining screw	40 N•m ± 4 N•m (30 lbf•ft ± 3 lbf•ft)

Remove retaining screw and shim. Install all other removed parts.

SPRAG CLUTCH

Removing the Sprag Clutch

Remove *MAGNETO COVER*. See procedure in this subsection.

Install shim and retaining screw to retain rotor on crankshaft.

NOTICE **Remove the threadlocker from the screw.**

REQUIRED TOOL
Retaining screw M16 x 35 (P/N 420 241 545)
Shim (P/N 420 627 270)

TIGHTENING TORQUE	
Retaining screw	40 N•m ± 4 N•m (30 lbf•ft ± 3 lbf•ft)

Heat sprag clutch housing screws in order to break the Loctite.

Loosen screws.

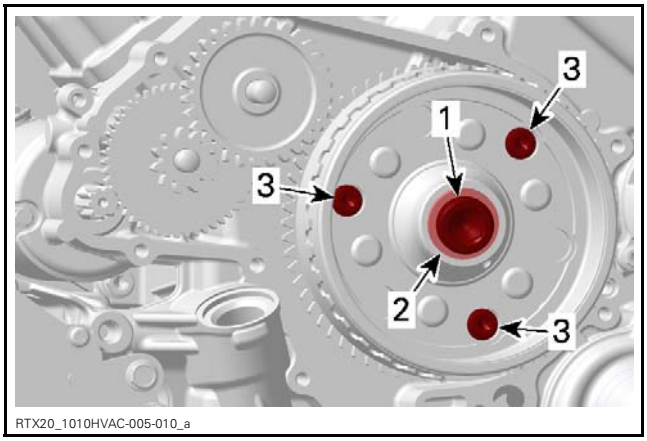

1. *Retaining screw*
2. *Shim*
3. *Sprag clutch housing screws*

Remove rotor, refer to *ROTOR* in this subsection.

Remove sprag clutch gear.

Remove sprag clutch housing screws and sprag clutch housing.

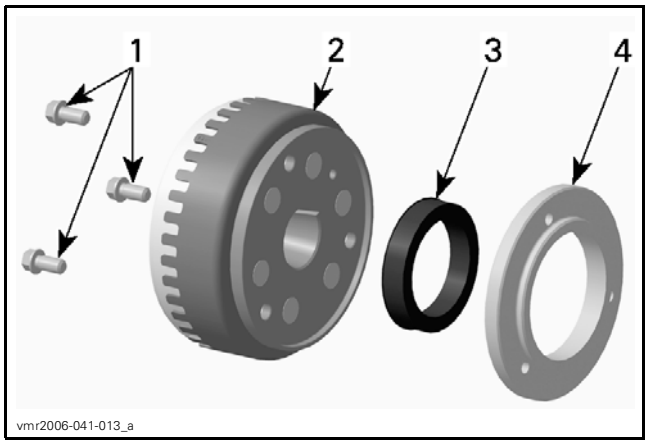

1. Sprag clutch housing screws
2. Rotor
3. Sprag clutch
4. Sprag clutch housing

Inspecting the Sprag Clutch

Inspect sprag clutch and sprag clutch housing for wear and damage.

Also check the collar of the sprag clutch gear.

Rotate sprag clutch gear in sprag clutch. Sprag clutch must lock in counterclockwise direction.

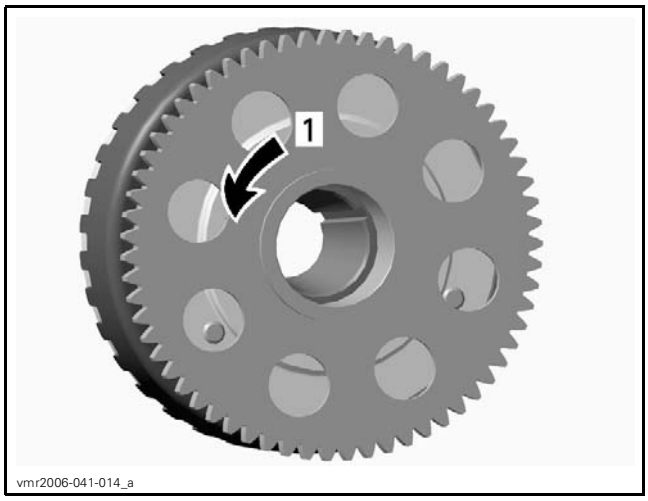

SPRAG CLUTCH FUNCTIONAL TEST
1. Lock

Sprag clutch, housing and gear must be replaced at the same time, if damaged.

Installing the Sprag Clutch

The installation is the reverse of the removal procedure. Pay attention to the following details.

Clean the following:

– Threads in sprag clutch housing
– Threads of sprag clutch housing screws.

SERVICE PRODUCT
CLUTCH AND PULLEY FLANGE CLEANER PRO S1 (P/N 779244)

Apply threadlocker on threads of sprag clutch housing screws.

SERVICE PRODUCT
LOCTITE 648 (GREEN) (P/N 413 711 400)

Install screws but do not torque yet.

Apply engine oil on sprag clutch and sprag clutch gear needle bearing.

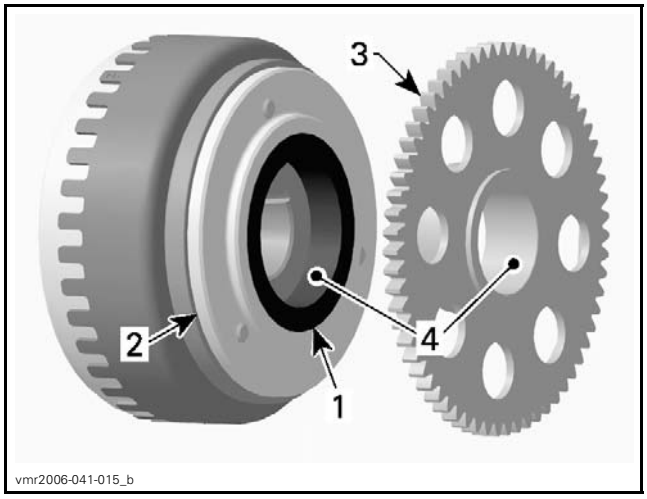

1. Sprag clutch
2. Sprag clutch housing
3. Sprag clutch gear
4. Apply engine oil here

Install rotor, refer to *ROTOR* in this subsection.

Tighten sprag clutch housing screws to specification.

TIGHTENING TORQUE	
Sprag clutch housing screws	30 N•m ± 2 N•m (22 lbf•ft ± 1 lbf•ft)

SPRAG CLUTCH GEAR

Removing the Sprag Clutch Gear

Remove *ROTOR*. See procedure in this subsection.

Pull sprag clutch gear out of the rotor.

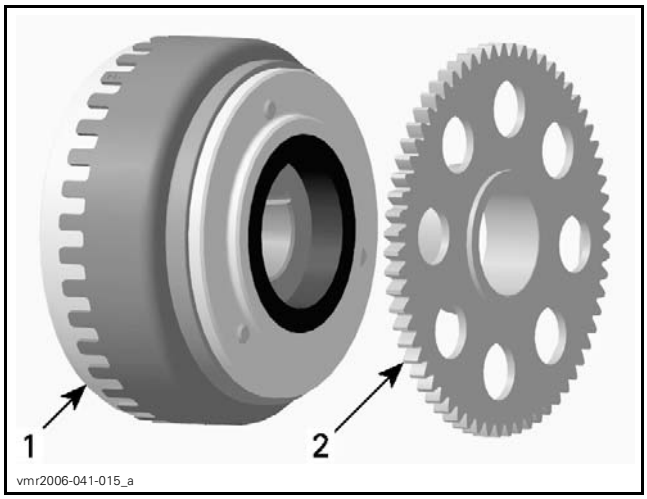

1. Rotor
2. Sprag clutch gear

Inspecting the Sprag Clutch Gear

Inspect gear, especially teeth and sprag clutch collar, for wear and other damage.

Check needle bearing condition. Replace sprag clutch gear if necessary.

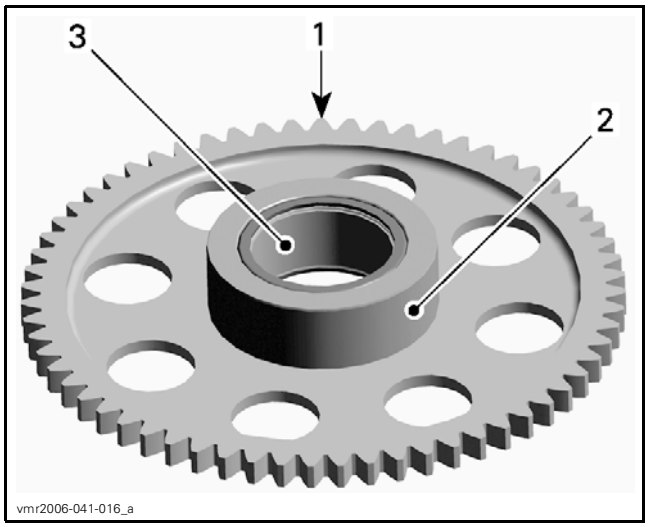

INSPECT
1. Teeth
2. Collar
3. Needle bearing

Installing the Sprag Clutch Gear

The installation is the reverse of the removal procedure.

NOTE: Apply engine oil on needle bearing and collar of sprag clutch gear.

STARTER DRIVE GEARS

Starter Drive Gear Location

The starter drive gears are located on the engine MAG side behind the magneto cover.

Removing the Starter Drive Gear

Remove *MAGNETO COVER*. See procedure in this subsection.

Remove location pins, starter double gear and intermediate gear.

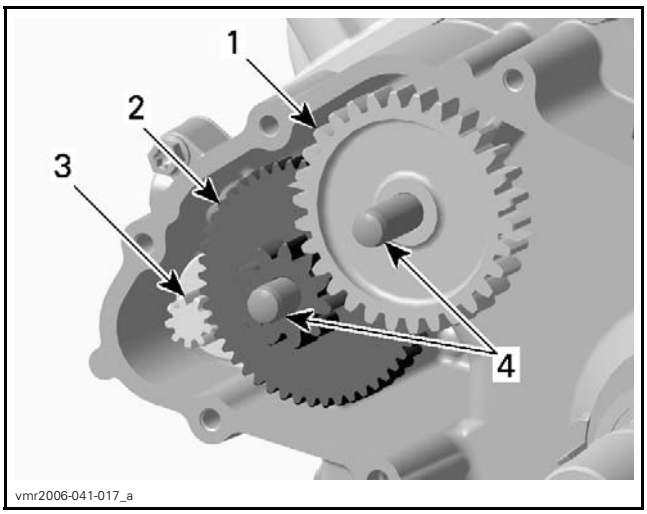

1. Intermediate gear
2. Starter double gear
3. Starter gear
4. Location pins

Inspecting the Starter Drive Gear

Inspect gears and location pins for wear and damage.

Replace parts as necessary.

Installing the Starter Drive Gear

The installation is the reverse of the removal procedure. Pay attention to the following details.

Apply an antiseize lubricant on starter gear before installing the starter double gear.

SERVICE PRODUCT
LOCTITE 767 (ANTI-SEIZE LUBRICANT) (P/N 293 800 070)

Apply engine oil on location pins.

ELECTRIC STARTER

Starter Location

Starter is located under rear cylinder.

Testing the Starter Operation

Ensure the starter power cable is properly connect from the starter solenoid to the starter terminal (clean, tight, no corrosion).

Using booster cables, carefully supply current from a 12 volt battery directly to the starter. First connect the BLACK (-) cable to the engine ground. Then, momentarily connect the remaining jumper cable from the battery to the starter terminal on the starter solenoid.

If starter turns, test other starting system components.

Removing the Starter

Turn OFF ignition switch.

Disconnect the battery.

Refer to *CONTINUOUSLY VARIABLE TRANSMISSION (CVT)* subsection and remove:

- CVT cover
- Drive pulley
- Driven pulley
- CVT air guide.

Clean starter area.

Remove starter retaining screw.

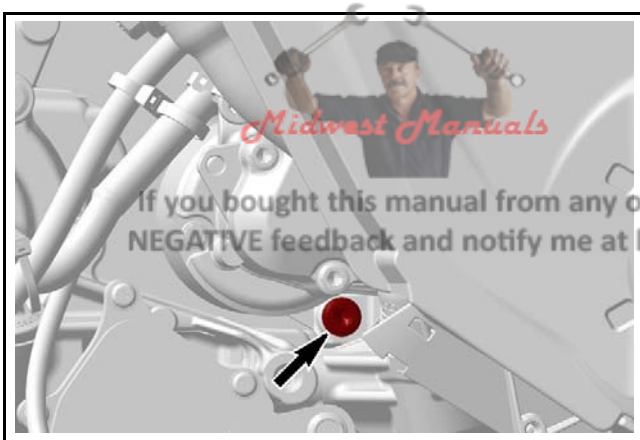

RTX20_1010HVAC-005-011_a

Carefully pry starter out of the crankcase.

Installing the Starter

The installation is the reverse of the removal procedure. However, pay particular attention to the following.

Make sure that starter and engine mating surfaces are free of debris. Serious problem may arise if the starter is not properly aligned.

Bring starter close to its location. Rotate it so that its mounting ear allows installation in engine crankcase.

Push starter in place and align mounting ear to install screw. Tighten to the specified torque.

TIGHTENING TORQUE	
Starter mounting screw	25 N•m ± 3 N•m (18 lbf•ft ± 2 lbf•ft)

Connect the RED (+) cable to the starter, tighten nut, and apply specified product.

TIGHTENING TORQUE	
Starter cable nut	6 N•m ± 0.7 N•m (53 lbf•**in** ± 6 lbf•**in**) + DIELECTRIC GREASE (P/N 293 550 004)

Connect the battery.

Test starter operation.

Green Manuals
Paperless Manuals
For a Better Tomorrow
www.green-manuals.com
Midwest Manuals
If you bought this manual from any other seller please leave them
NEGATIVE feedback and notify me at bestshopmanuals@gmail.com

INTAKE MANIFOLD

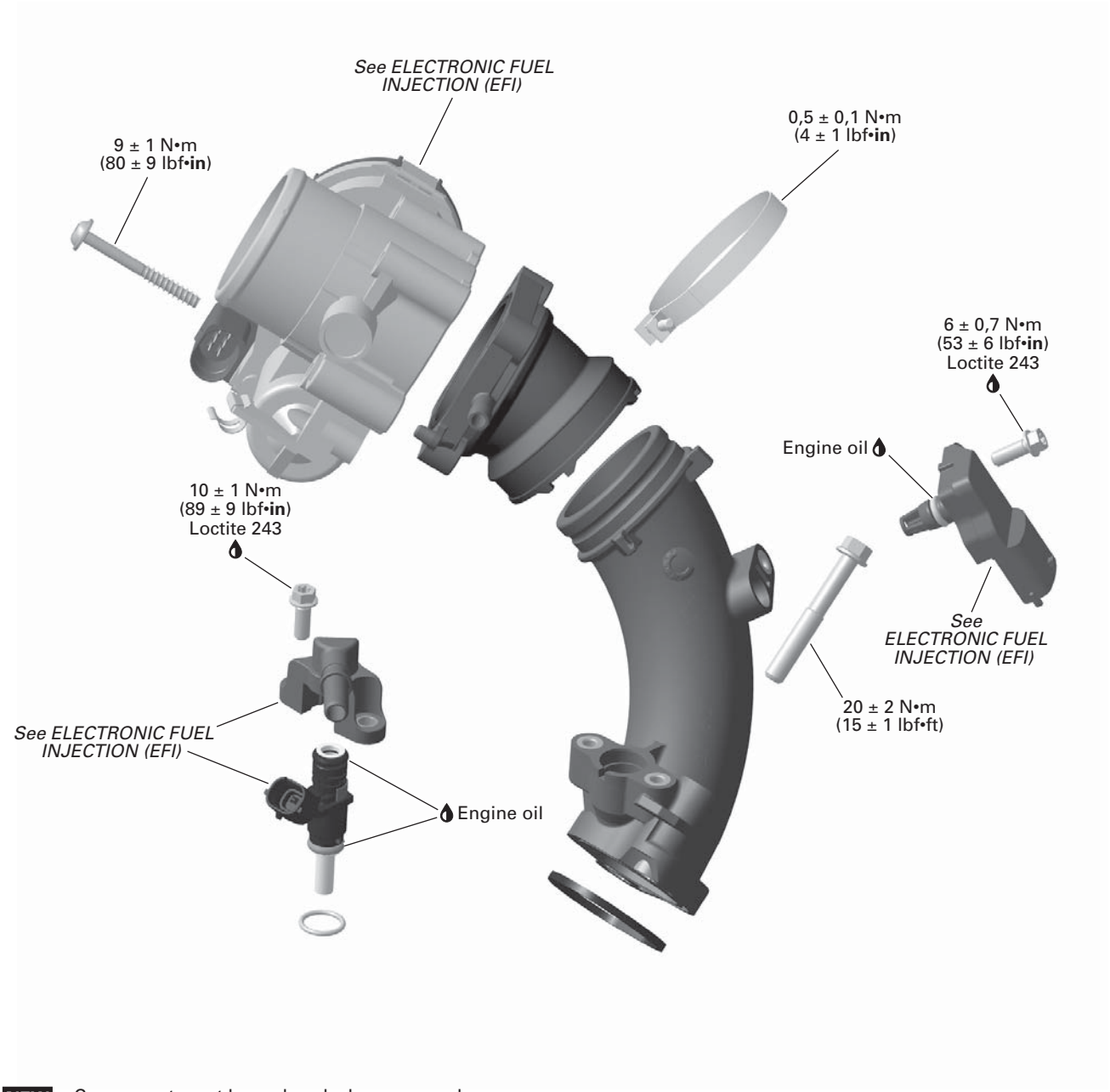

NEW = Component must be replaced when removed.

PROCEDURES

INTAKE MANIFOLD

Intake Manifold Access

Open cargo box.

Removing the Intake Manifold

1. Release fuel pressure
   1.1 Disconnect the fuel pump connector
   1.2 Start engine and let it run out of gas.
   .
2. Loosen the lower clamp that retains the intake adapter to the intake manifold.

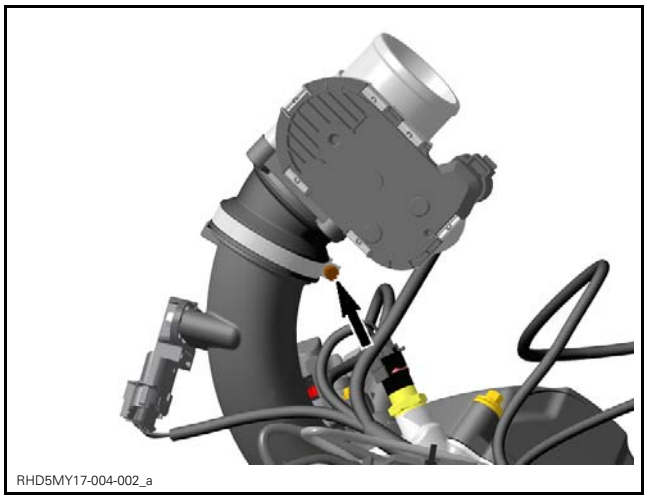

3. Disconnect the fuel hose from the fuel rail.

CAUTION The fuel hose may still be under pressure.

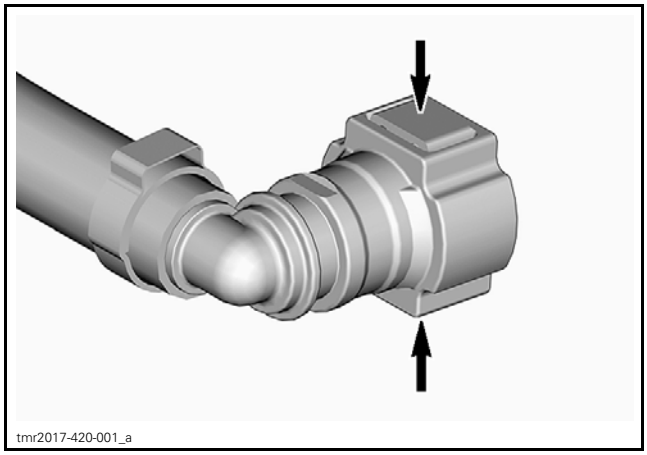

PRESS BUTTONS

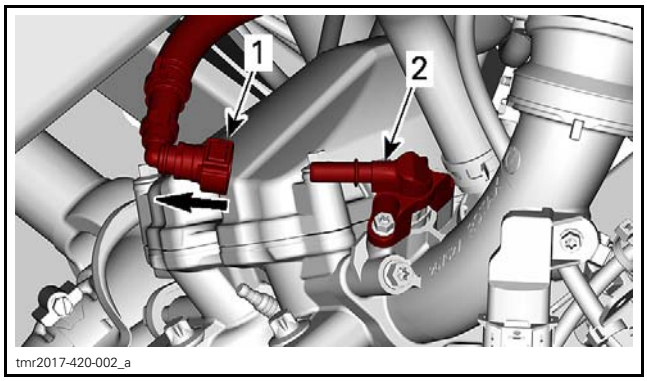

PULL OFF
1. Fuel pressure hose fitting
2. Fuel rail

4. Disconnect:
   – Fuel injector electrical connector
   – MAPTS connector.

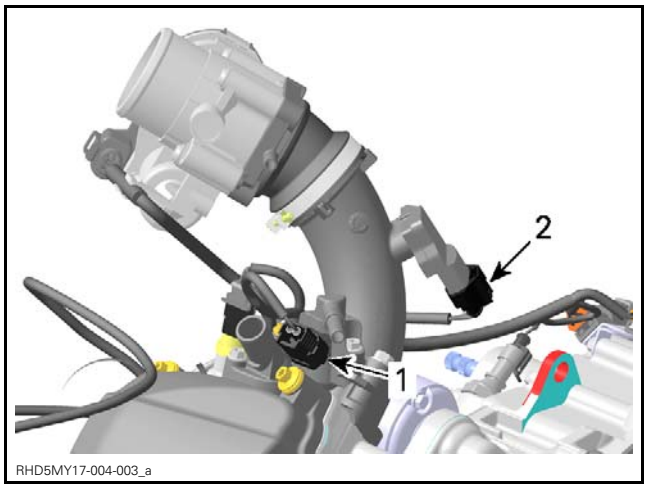

1. Fuel injector connector
2. MAPTS connector

5. Remove intake manifold from engine and intake adapter.

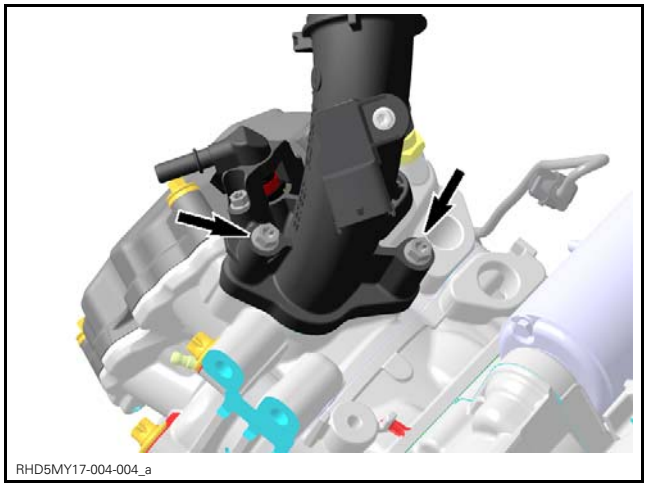

Inspecting the Intake Manifold

Check intake manifold for cracks, warping at flanges or any other damage. Replace if necessary.

Installing the Intake Manifold

The installation is the reverse of the removal procedure. However, pay attention to the following.

Tighten intake manifold retaining screws to specified torque.

TIGHTENING TORQUE	
Intake manifold retaining screws	20 N•m ± 2 N•m (15 lbf•ft ± 1 lbf•ft)

INTAKE MANIFOLD

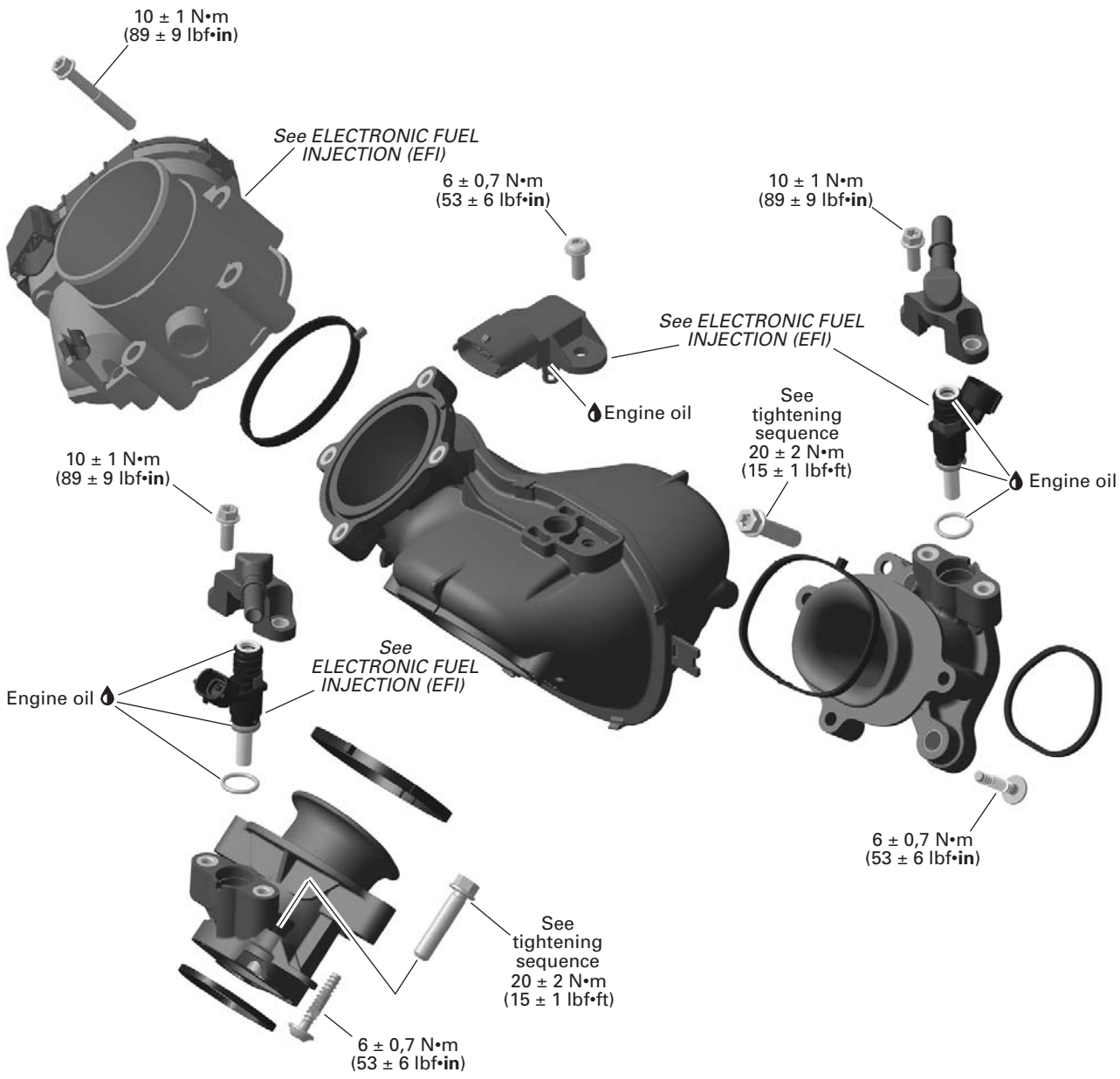

NEW = Component must be replaced when removed.

tmr2016-116-001_a

PROCEDURES

PLENUM

Removing the Plenum

1. Unplug the fuel pump connector.
2. Release fuel pressure by running engine until it runs out of gas.
3. Disconnect the air filter housing hose from throttle body.

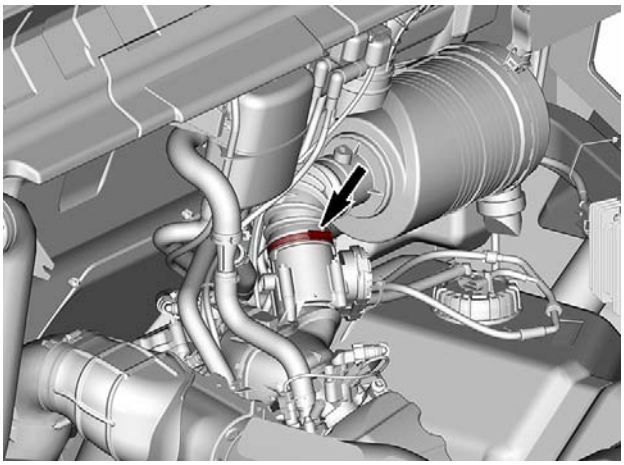

tmr2016-116-301_a

4. Disconnect the fuel hoses at the fuel injectors, refer to *ELECTRONIC FUEL INJECTION (EFI).*

CAUTION The fuel hose may still be under pressure.

5. Disconnect fuel injectors connectors.
6. Disconnect MAPTS connector.

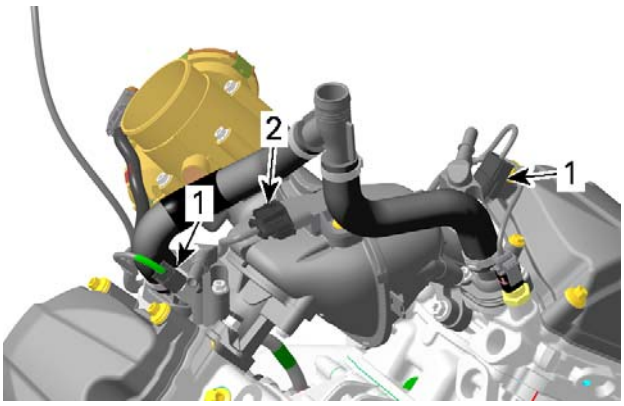

tmr2016-116-002_a

1. Fuel injectors connectors
2. MAPTS connector

7. Remove plenum retaining screws.

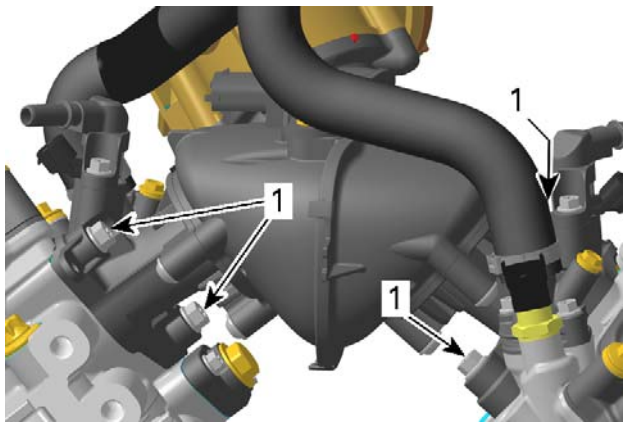

tmr2016-116-007_a

1. Plenum retaining screws

8. Remove plenum with throttle body from engine.

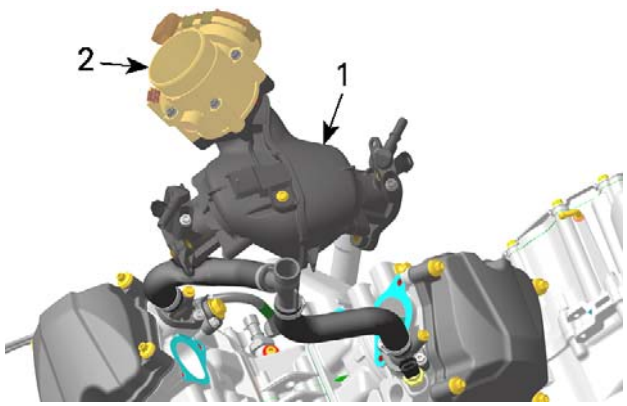

tmr2016-116-003_a

SOME PARTS REMOVED FOR CLARITY
1. Plenum
2. Throttle body

9. Disassemble the following parts only if required. Refer to *ELECTRONIC FUEL INJECTION (EFI)* for completed procedure.
   - Intake sockets
   - Throttle body
   - Fuel injectors
   - MAPTS.

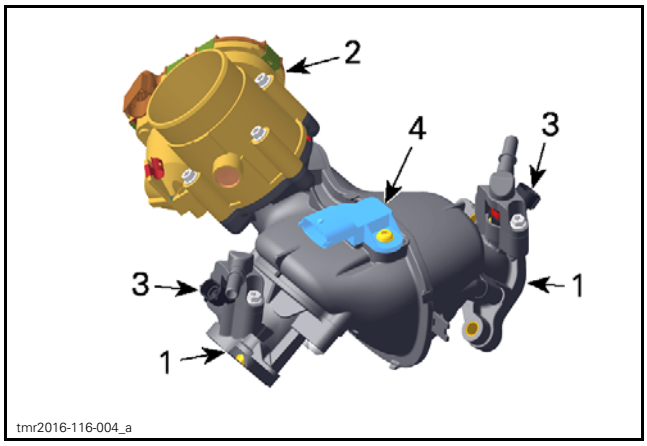

1. *Intake sockets*
2. *Throttle body*
3. *Fuel injectors*
4. *MAPTS*

Inspecting the Plenum

Check intake manifold for cracks, warping at flanges or any other damage. Replace if necessary.

Installing the Plenum

The installation is the reverse of the removal procedure. However, pay attention to the following.

Install gaskets with tab properly inserted into notch.

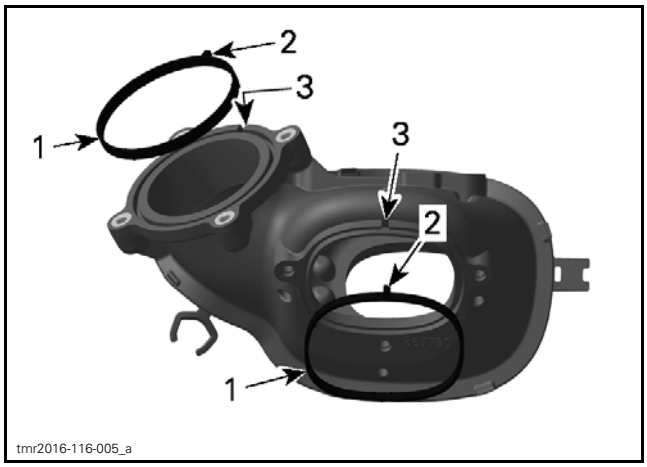

1. *Gasket*
2. *Tab*
3. *Notch*

Tighten intake socket screws to specification.

TIGHTENING TORQUE	
Intake socket screws	6 N•m ± 0.7 N•m (53 lbf•**in** ± 6 lbf•**in**)

To prevent air leakage check if gaskets of the intake sockets are exactly in groove.

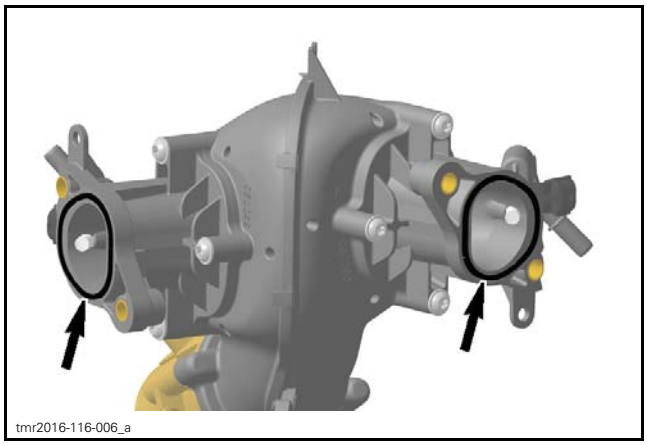

Tighten plenum retaining screws as per following sequence.

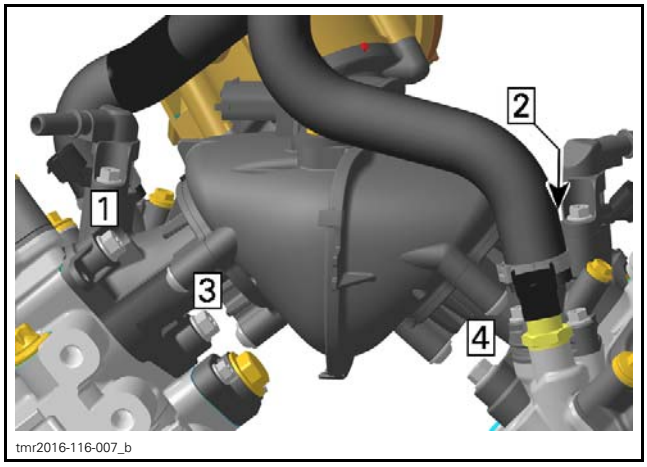

TIGHTENING TORQUE	
Plenum retaining screws	20 N•m ± 2.5 N•m (15 lbf•ft ± 2 lbf•ft)

Refer to *ELECTRONIC FUEL INJECTION (EFI)* subsection to install:

– MAPTS
– Throttle body
– Fuel rail with injectors.

Tighten air filter housing hose clamp to specification.

TIGHTENING TORQUE	
Air filter housing clamp	2.5 N•m ± 0.5 N•m (22 lbf•**in** ± 4 lbf•**in**)

Connect the fuel pump connector.

TOP END

SERVICE TOOLS

Description	Part Number	Page
DIAL INDICATOR ADAPTER	529 036 159	5
ENGINE LEAK DOWN TEST KIT	529 035 661	5
PISTON CIRCLIP INSTALLER	529 036 083	22
TDC DIAL INDICATOR	414 104 700	5
VALVE GUIDE INSTALLER	529 036 269	17
VALVE GUIDE REMOVER (6 MM)	529 036 074	16
VALVE SPRING COMPRESSOR CUP	529 036 270	13
VALVE SPRING COMPRESSOR	529 035 724	13

SERVICE TOOLS – OTHER SUPPLIER

Description	Part Number	Page
SNAP-ON PLIERS	YA 8230	14

SERVICE PRODUCTS

Description	Part Number	Page
LOCTITE 767 (ANTISEIZE LUBRICANT)	293 800 070	17

CYLINDER HEAD

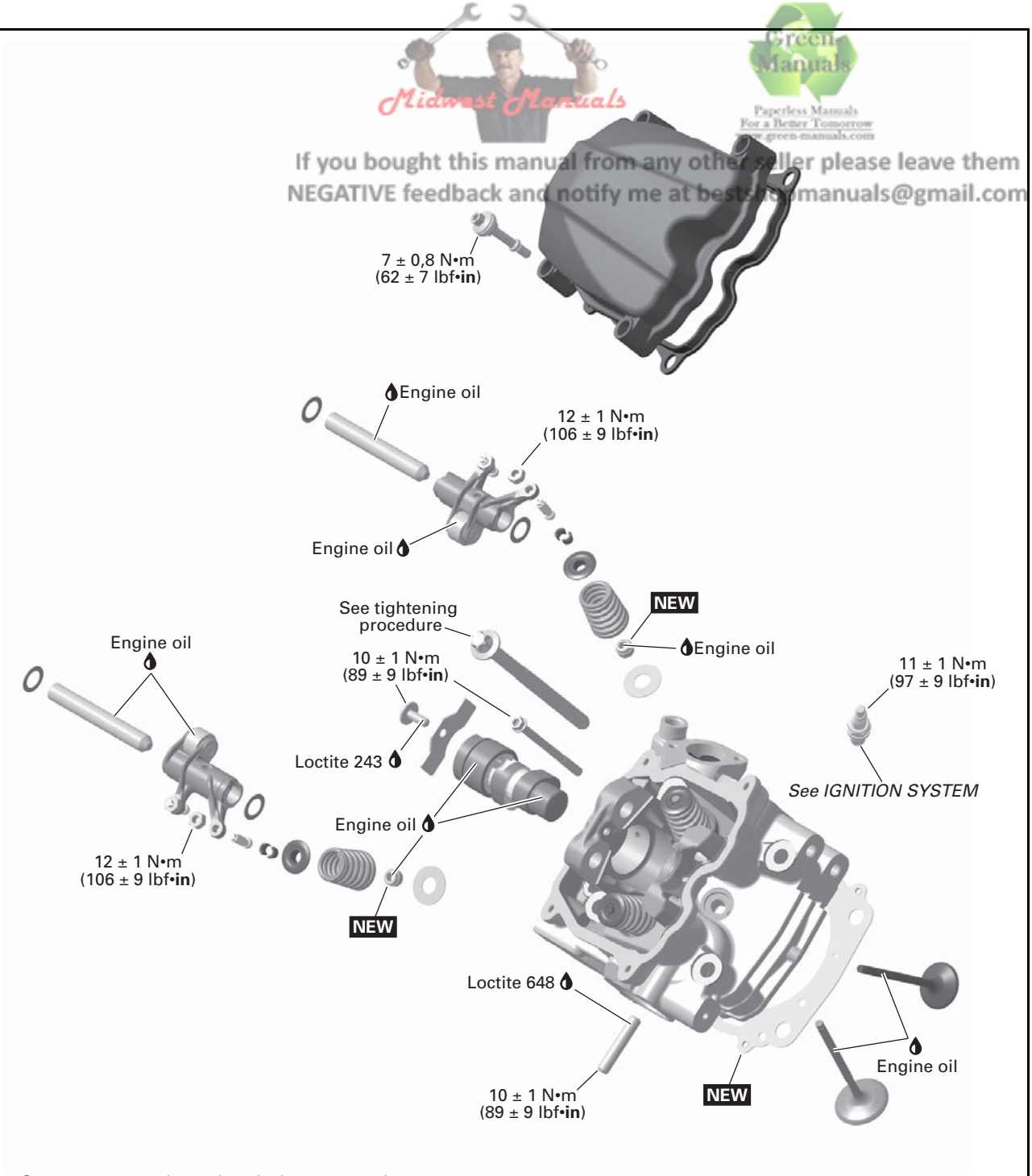

Midwest Manuals
Green Manuals
Paperless Manuals For a Better Tomorrow www.green-manuals.com
If you bought this manual from any other seller please leave them NEGATIVE feedback and notify me at best4homanuals@gmail.com

NEW = Component must be replaced when removed.

vmr2015-019-001_a

CYLINDER AND PISTON

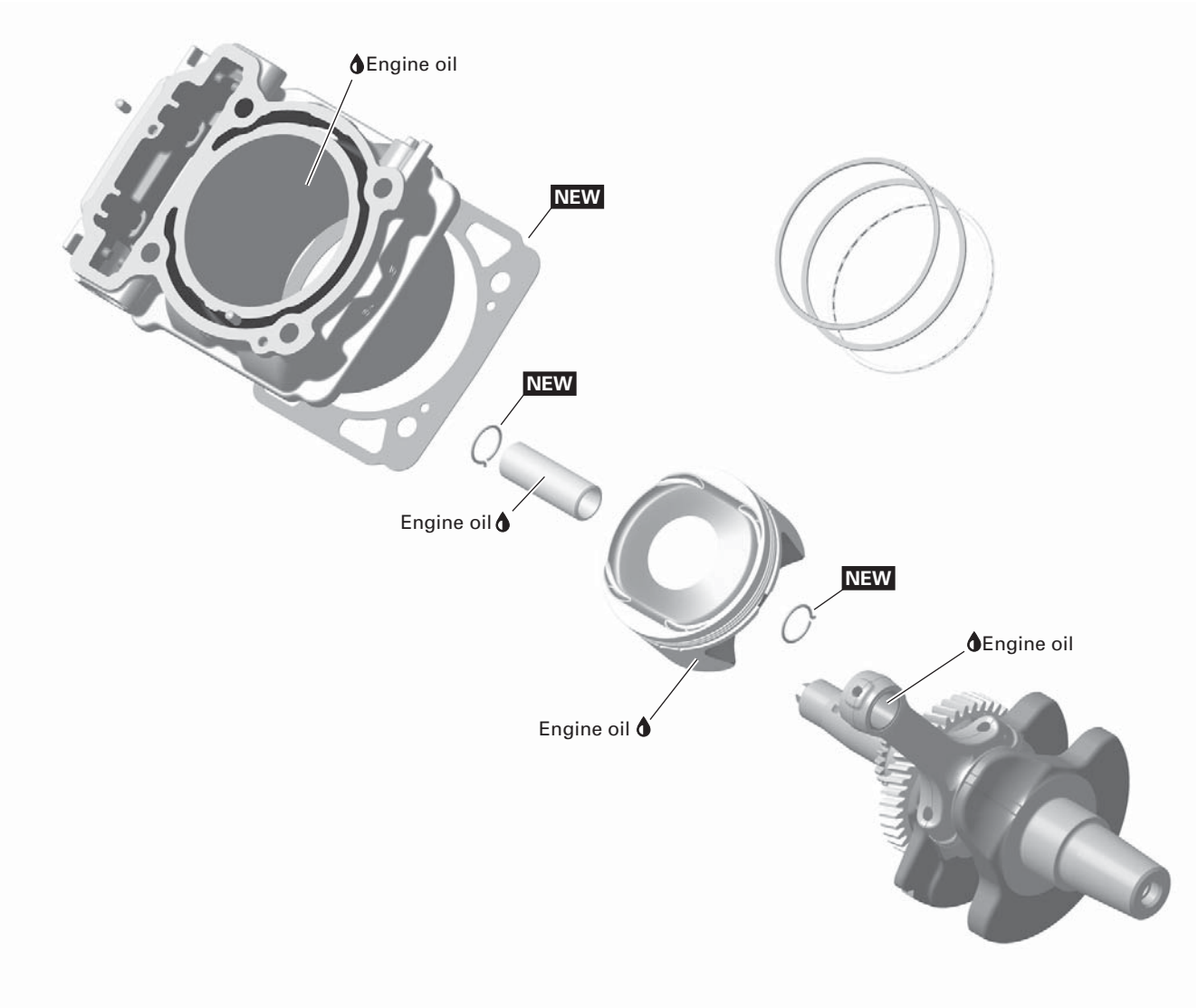

NEW = Component must be replaced when removed.

vmr2015-019-002_a

GENERAL

When diagnosing an engine problem, always perform a cylinder leak test.

NOTE: Even though the following procedures do not require the engine removal, many illustrations show the engine out of the vehicle for more clarity.

IMPORTANT: Note position of parts on disassembly. This may help to find the root cause of a problem. A component that is not replaced should be reinstalled in the same position as originally mounted.

INSPECTION

LEAK TEST

Before performing the cylinder leak test, verify the following:

– Clamp(s) tightness
– Radiator and hoses.

NOTE: For best accuracy, the leak test should be done with the engine at normal operating temperature.

⚠ WARNING

Prevent burning yourself on hot engine parts.

Preparation

Disconnect battery.

⚠ WARNING

Always respect this order for disassembly; disconnect BLACK (-) cable first.

Remove radiator cap.

Unplug spark plug cable.

Clean spark plug area and remove spark plug from cylinder head.

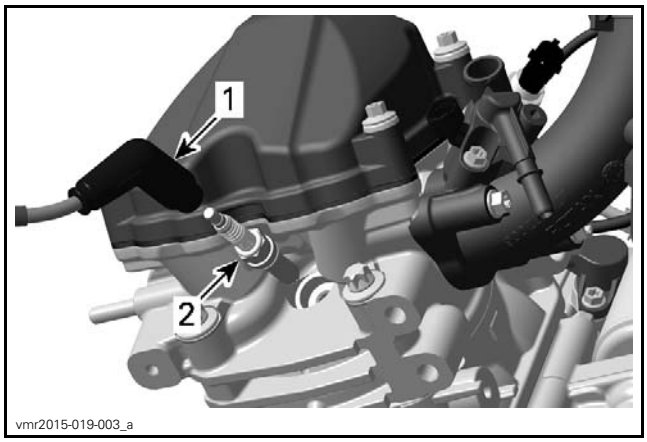

1. Spark plug cable
2. Spark plug

Remove valve cover. Refer to procedure in this subsection.

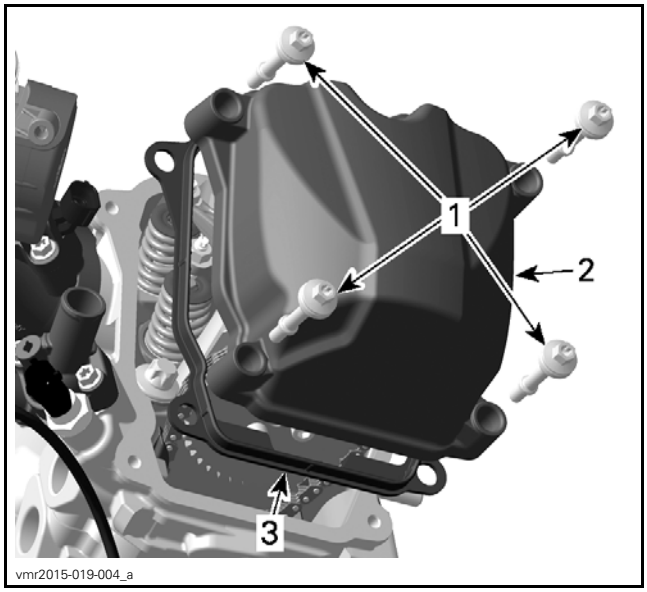

1. Valve cover screws
2. Valve cover

Rotate crankshaft until piston is at TDC ignition.

To turn crankshaft, there are two possible procedures.

First Procedure

Turn the drive pulley.

Second Procedure

1. Remove plug screw with O-ring from magneto cover.

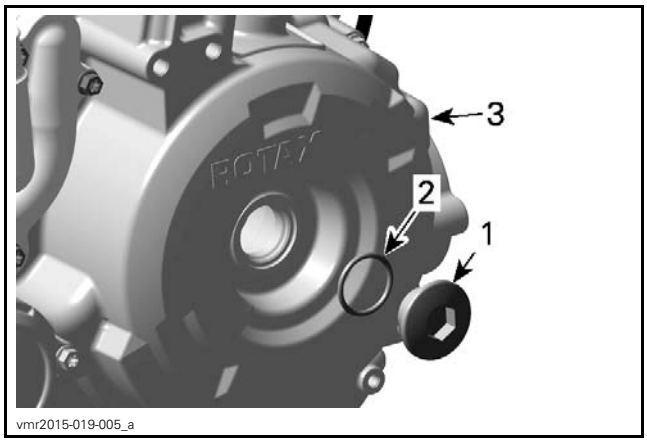

1. *Plug screw*
2. *O-ring*
3. *Magneto cover*

2. Turn crankshaft.

REQUIRED TOOL
13 mm socket

NOTICE **Turn only clockwise to avoid loosening of the MAG side screw of the crankshaft.**

Set the piston to precisely TDC ignition. For proper procedure refer to *CRANKSHAFT LOCKING PROCEDURE* in the *BOTTOM END* subsection.

NOTE: If engine is removed from vehicle a dial indicator can be used.

REQUIRED TOOL	
TDC DIAL INDICATOR (P/N 414 104 700)	
DIAL INDICATOR ADAPTER (P/N 529 036 159)	

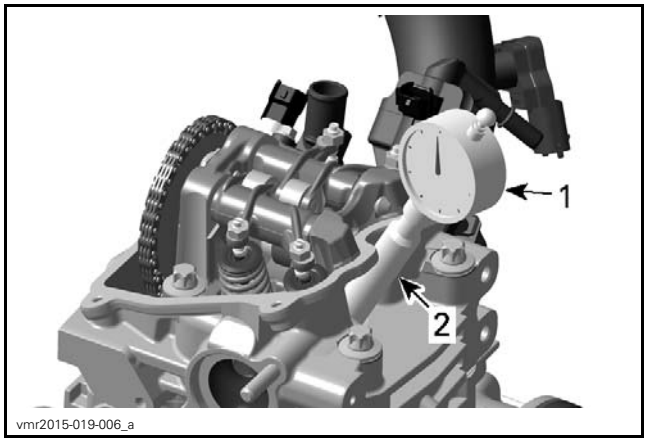

1. *TDC dial indicator*
2. *Dial indicator adapter*

NOTE: If a dial indicator is not available, use a screwdriver or another similarly suitable tool.

NOTICE **Do not scratch or damage piston/cylinder surface.**

NOTE: At TDC ignition the marks on the camshaft timing gear have to be parallel to cylinder head base as per following illustration.

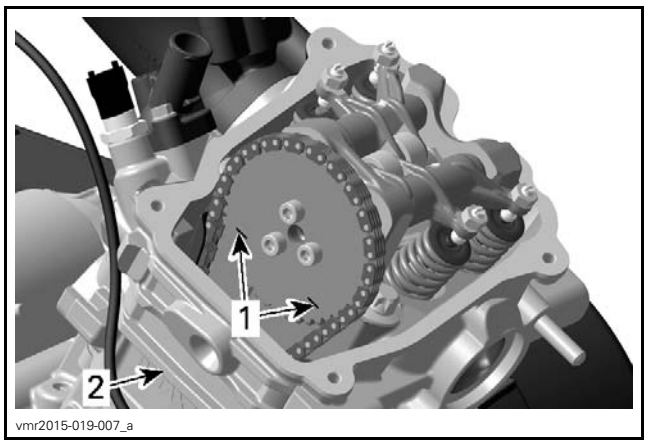

1. *Marks on camshaft timing gear*
2. *Cylinder head base*

Leak Test

REQUIRED TOOL	
ENGINE LEAK DOWN TEST KIT (P/N 529 035 661)	

Connect leak tester to adequate air supply.

Set needle of measuring gauge to zero.

NOTE: All testers have specific instructions on gauge operation and required pressure.

Install gauge adapter into previously cleaned spark plug hole.

Supply combustion chamber with air pressure.

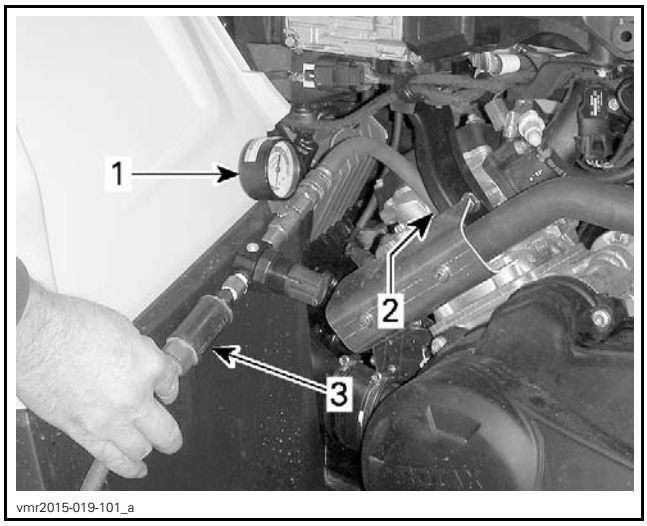

TYPICAL
1. *Leak tester*
2. *Leak tester installed in spark plug bore*
3. *Air supply hose*

Note the amount or percentage of leakage (depending on tester).

LEAKAGE PERCENTAGE	ENGINE CONDITION
0% to 15%	Excellent condition
16% to 25%	Good condition
26% to 40%	Fair condition; reduced engine performance
41% and higher	Poor condition, diagnose and repair engine

NOTE: To make sure there is no false reading due to a valves not perfectly seated, tap each valve adjustment screw (on the rocker) using a soft hammer.

Diagnosis

Listen for air leaks.

– Air escaping in intake port/throttle body means leaking intake valve(s).
– Air escaping in exhaust port means leaking exhaust valve(s).
– Air bubbles in the coolant (radiator) means leaking cylinder head gasket.
– Air/coolant escaping from cylinder/head means damaged gasket(s) and/or loosened screws.
– Air escaping into crankcase area means excessively worn cylinder and/or broken piston rings.
– Air/oil escaping from crankcase means damaged gasket and/or loosened screws (refer to *BOTTOM END* subsection).

NOTE: For all the checkpoints mentioned above, see the appropriate engine section to diagnose and repair the engine.

Reassembly

Reverse the preparation procedure. Ensure to respect torque values and use of appropriate products/lubricants. Refer to exploded views in other subsections of this manual as required.

PROCEDURES

VALVE COVER

Valve Cover Access

Open cargo box.

Refer to *BODY* subsection and remove the engine service cover.

Removing the Valve Cover

Remove:

– Valve cover screws
– Valve cover
– Gasket.

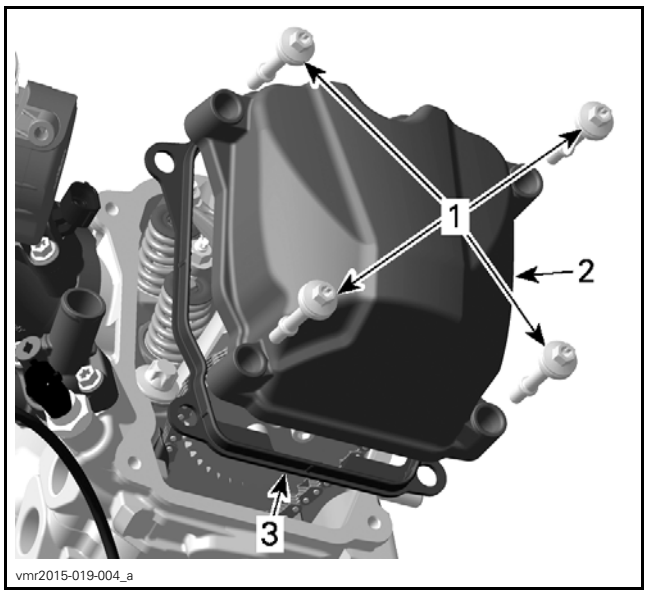

1. *Valve cover screws*
2. *Valve cover*
3. *Gasket*

Inspecting the Valve Cover

Check the gasket on the valve cover if it is brittle, cracked or hard. If so, replace the gasket.

Installing the Valve Cover

The installation is the reverse of the removal procedure.

Tighten valve cover retaining screws to specified torque in a criss-cross sequence.

TIGHTENING TORQUE	
Valve cover retaining screws	7 N•m ± 0.8 N•m (62 lbf•**in** ± 7 lbf•**in**)

ROCKER ARM

Removing the Rocker Arm

Remove valve cover.

Refer to *TIMING CHAIN* subsection and remove the following parts:

– Timing chain tensioner
– Camshaft timing gear.

Remove:

– Pan head screw
– Camshaft retaining plate.

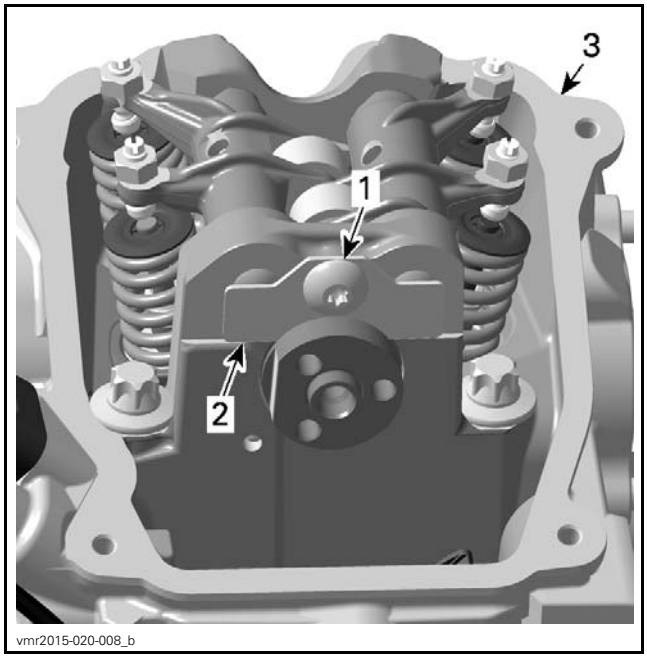

1. *Pan head screw*
2. *Camshaft retaining plate*
3. *Cylinder head*

Remove rocker arm shafts.

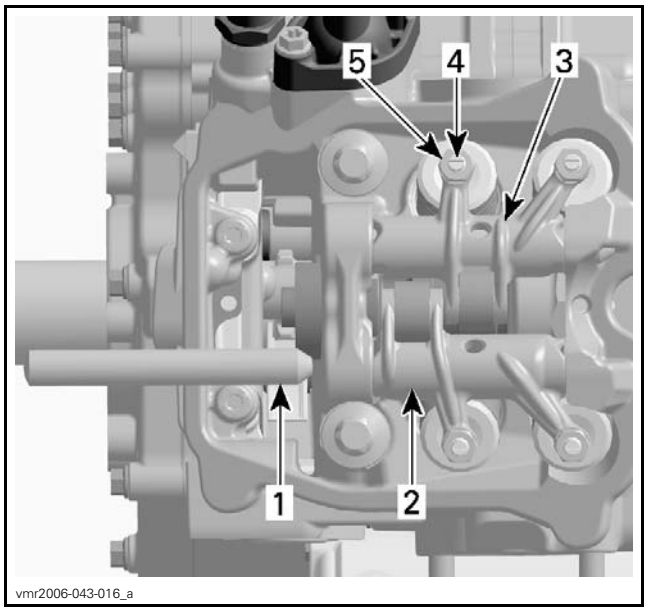

1. *Rocker arm shaft*
2. *Rocker arm (exhaust side)*
3. *Rocker arm (intake side)*
4. *Adjustment screw*
5. *Lock nut*

Remove:

– Rocker arm assembly (exhaust side and intake side) with adjustment screws and lock nuts
– Thrust washers.

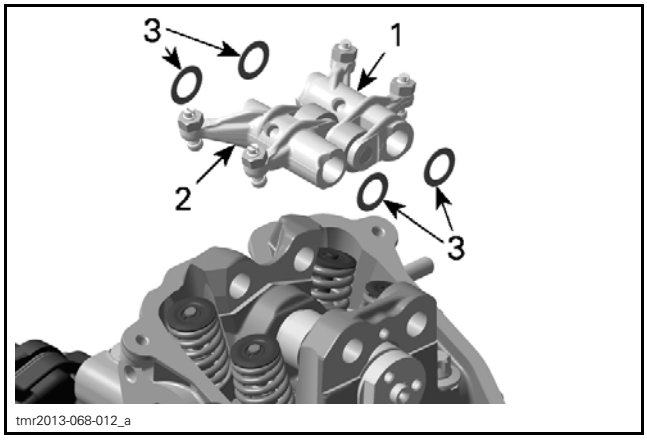

1. *Rocker arm (exhaust side)*
2. *Rocker arm (intake side)*
3. *Thrust washers*

NOTICE Pay attention not to lose thrust washers or drop them into the timing chain compartment.

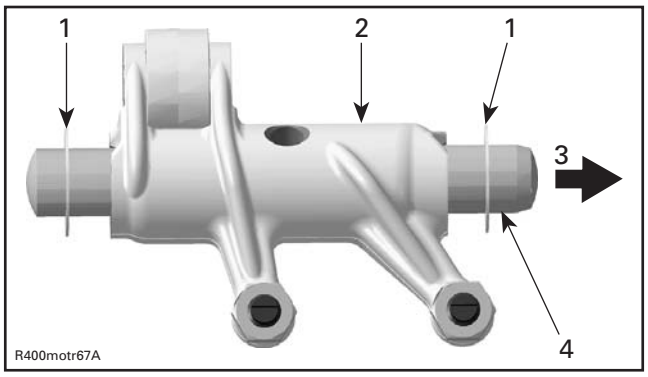

1. 2 thrust washers
2. Rocker arm (exhaust side)
3. Cylinder head (spark plug side)
4. Big taper to spark plug side

Inspecting the Rocker Arm

Inspect each rocker arm for cracks and scored friction surfaces. If so, replace rocker arm assembly.

Check the rocker arm rollers for free movement, wear and excessive radial play. Replace rocker arm assembly if necessary.

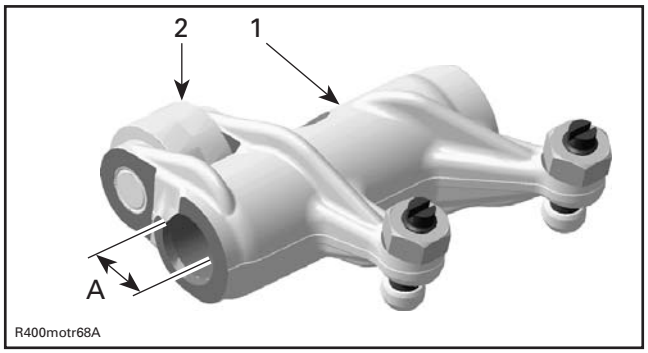

1. Rocker arm (exhaust side)
2. Roller

A. Bore for rocker arm shaft

Measure rocker arm bore diameter. If diameter is out of specification, change the rocker arm assembly.

ROCKER ARM BORE DIAMETER	
NEW	12.036 mm to 12.050 mm (.4739 in to .4744 in)
SERVICE LIMIT	12.060 mm (.4748 in)

Check adjustment screws for free movement, cracks and/or excessive play.

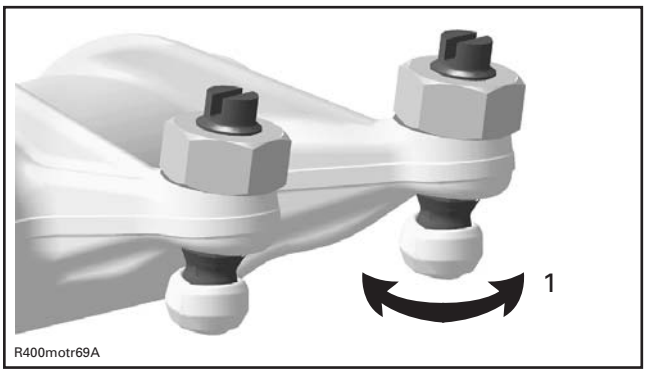

1. Free movement of adjustment screw top

Inspecting the Rocker Arm Shaft

Check for scored friction surfaces; if so, replace parts.

Measure rocker arm shaft diameter.

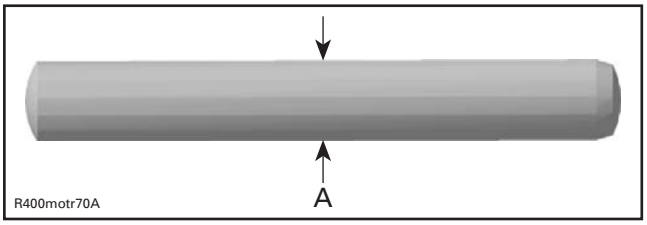

A. Measure rocker arm shaft diameter here

ROCKER ARM SHAFT DIAMETER	
NEW	12.00 mm to 12.018 mm (.4724 in to .4731 in)
SERVICE LIMIT	11.990 mm (.472 in)

Any area worn excessively will require parts replacement.

Installing the Rocker Arm

NOTE: Use the same procedure for exhaust and intake rocker arm.

Apply engine oil on rocker arm shaft.

Insert a rocker arm shaft with the chamfered edge first through rocker arm pin bore.

Install a thrust washer at timing chain side, then the proper rocker arm (exhaust side or intake side).

Push in rocker arm shaft until its chamfer reaches the end of rocker arm bore.

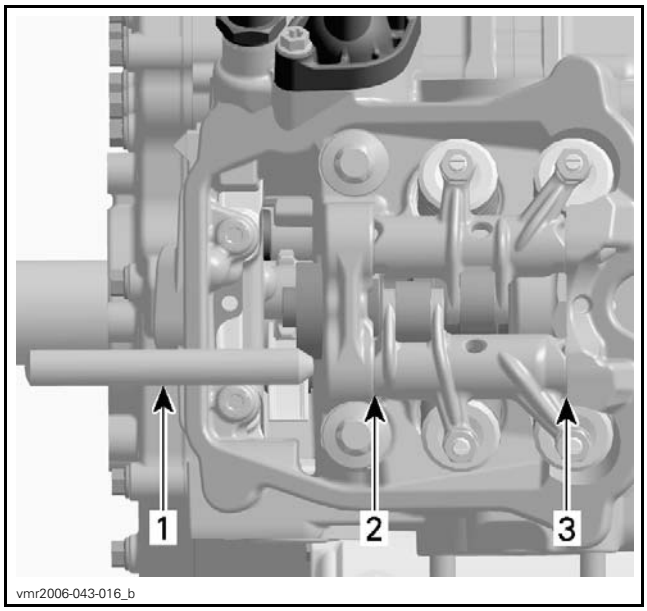

1. *Rocker arm shaft*
2. *Thrust washer (timing chain side)*
3. *Thrust washer (spark plug side)*

Place the other thrust washer and push rocker arm shaft to end position.

Install the camshaft retaining plate.

Tighten pan head screw to specification.

TIGHTENING TORQUE	
Pan head screw	10 N•m ± 1 N•m (89 lbf•**in** ± 9 lbf•**in**)

Adjust valve clearance, refer to *PERIODIC MAINTENANCE PROCEDURE*.

CAMSHAFT

Removing the Camshaft

Remove valve cover (see *VALVE COVER* in this subsection).

Refer to *TIMING CHAIN* subsection and remove the following parts:

– Timing chain tensioner
– Camshaft timing gear.

Remove the camshaft retaining plate.

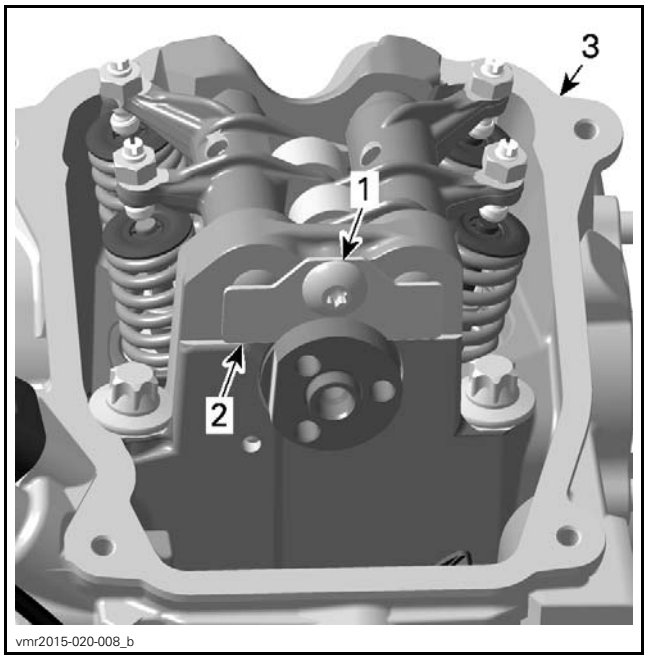

1. *Camshaft retaining plate*
2. *Pan head screw*
3. *Cylinder head*

Remove rocker arms (see *ROCKER ARM* in this subsection).

Remove the camshaft.

NOTE: For removal rotate camshaft so that intake/exhaust lobe shows to upper side of cylinder head.

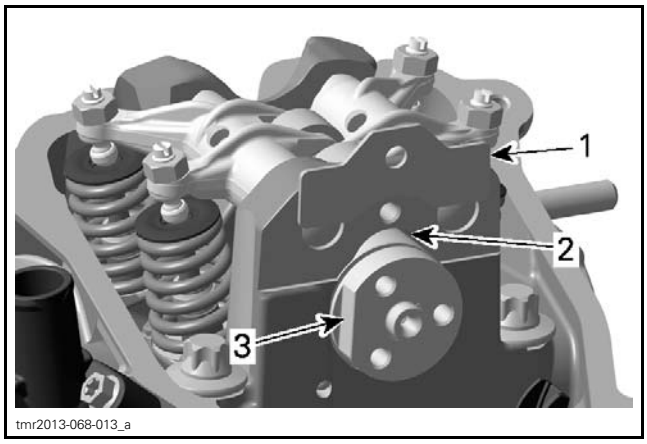

1. *Camshaft retaining plate*
2. *Area for camshaft lobes*
3. *Camshaft*

Inspecting the Camshaft

Inspecting the Camshaft Lobe

Check each lobe and bearing journal for:

– scoring
– scuffing
– cracks
– signs of wear.

Using a micrometer to measure:
– camshaft lobe height
– camshaft journal.

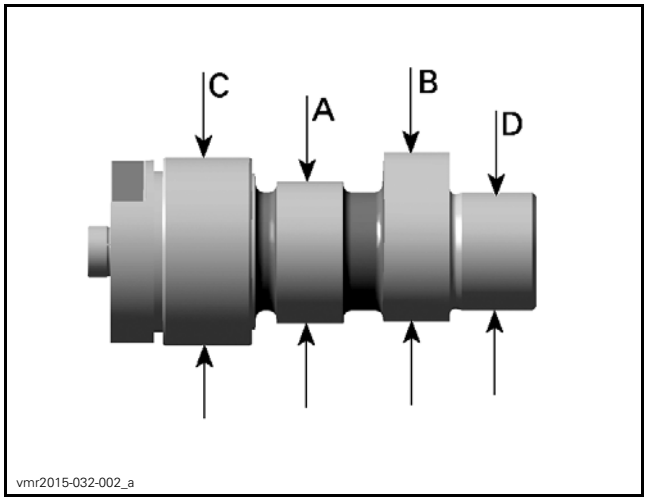

A. Camshaft lobe (exhaust valves)
B. Camshaft lobe (intake valves)
C. Camshaft journal (timing chain side)
D. Camshaft journal (spark plug side)

CAMSHAFT LOBE (EXHAUST)	
NEW	32.890 mm to 33.090 mm (1.295 in to 1.303 in)
SERVICE LIMIT	32.840 mm (1.293 in)

CAMSHAFT LOBE (INTAKE)	
NEW	32.950 mm to 33.150 mm (1.297 in to 1.305 in)
SERVICE LIMIT	32.900 mm (1.295 in)

Inspecting the Camshaft Journals

CAMSHAFT JOURNAL (TIMING CHAIN SIDE)	
NEW	34.959 mm to 34.975 mm (1.3763 in to 1.377 in)
SERVICE LIMIT	34.950 mm (1.376 in)

CAMSHAFT JOURNAL (SPARK PLUG SIDE)	
NEW	21.959 mm to 21.980 mm (.8645 in to .8654 in)
SERVICE LIMIT	21.950 mm (.8642 in)

Measure camshaft bearing in cylinder head. Refer to *INSPECTING THE CYLINDER HEAD* in this subsection.

Installing the Camshaft

The installation is the reverse of the removal procedure. However, pay attention to the following.

NOTICE **The camshafts are not identical in design. Do not invert the camshafts during assembly. Any mix-up of the components will lead to engine damage.**

Place the camshaft retaining plate in the slot of the camshaft.

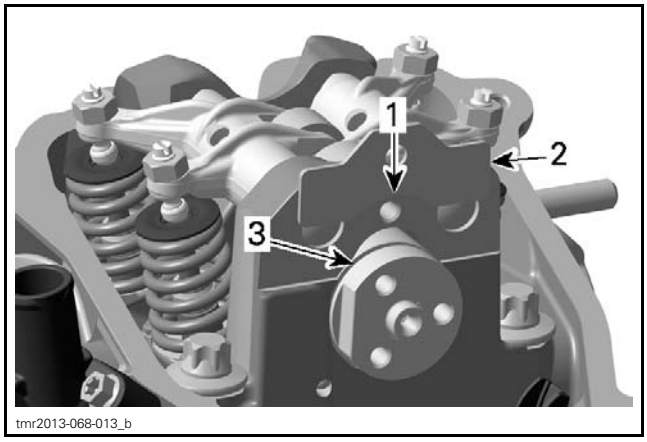

1. Direction of movement
2. Camshaft retaining plate
3. Slot retaining camshaft

Tighten pan head screw to specification.

TIGHTENING TORQUE	
Pan head screw	10 N•m ± 1 N•m (89 lbf•**in** ± 9 lbf•**in**)

For other parts, refer to proper installation procedure.

CYLINDER HEAD

Cylinder Head Access

Open cargo box.

Refer to *BODY* subsection and remove the engine service cover.

Removing the Cylinder Head

Drain engine coolant. Refer to the *PERIODIC MAINTENANCE PROCEDURES* subsection.

Disconnect the coolant hose from the thermostat housing.

Before removing cylinder head, blow out remaining coolant using air pressure. During cylinder head removal, the remaining coolant in cylinder head could overflow into the engine and the engine oil will be contaminated.

Refer to *EXHAUST SYSTEM* subsection and remove the head pipe.

Refer to *INTAKE MANIFOLD* and disconnect the intake manifold from the cylinder head.

Disconnect spark plug wire.

Disconnect CTS connector, located at the cylinder head.

Remove the valve cover and its gasket (see *VALVE COVER* in this subsection).

Refer to *TIMING CHAIN* subsection and remove the following parts:

– Timing chain tensioner
– Camshaft timing gear.

First remove the M6 cylinder head screws, then the M10 cylinder head screws.

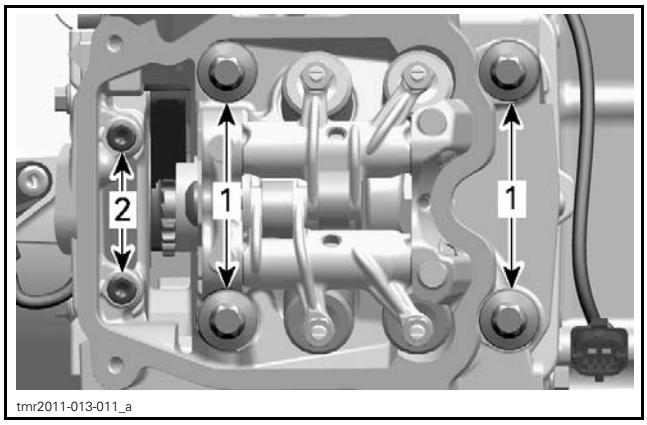

1. *Cylinder head screws M10*
2. *Cylinder head screws M6*

Pull up cylinder head.

Remove timing chain guide (fixed).

Remove and discard the cylinder head gasket.

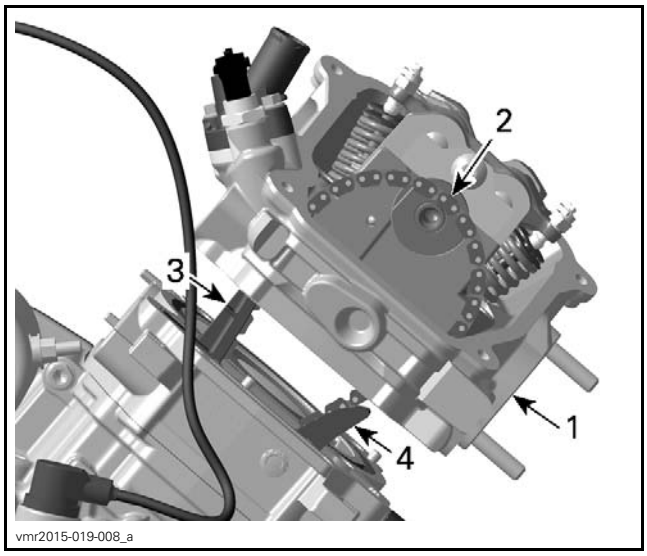

1. *Cylinder head*
2. *Timing chain*
3. *Chain guide (fixed)*
4. *Cylinder head gasket*

Inspecting the Cylinder Head

Inspect timing chain guide (fixed) for wear, cracks or other damages. Replace if necessary.

Check for cracks between valve seats, if so, replace cylinder head.

Check mating surface between cylinder and cylinder head for contamination. If so, clean both surfaces.

Clean oil support through the cylinder head from contamination.

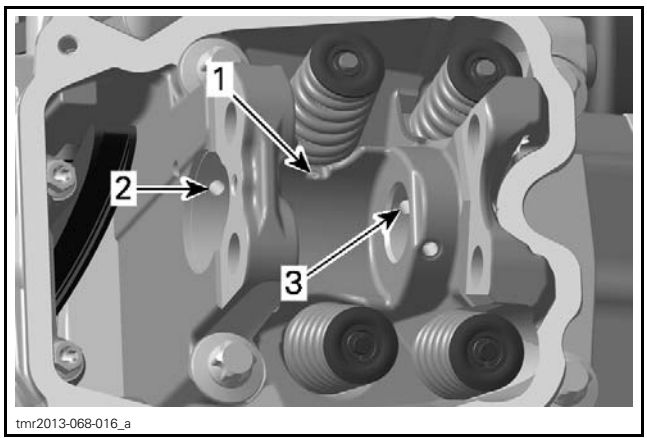

1. *Oil port to lubricate camshaft lobes intake/exhaust*
2. *Oil supply to camshaft bearing journal (timing chain side)*
3. *Oil supply to camshaft bearing journal (spark plug side)*

Inspecting the Cylinder Head Camshaft Bearing

Measure camshaft bearing in cylinder head.

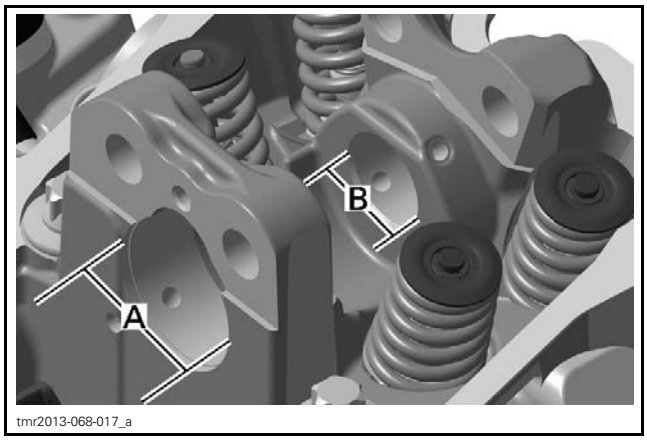

A. Camshaft bearing (timing chain side)
B. Camshaft bearing (spark plug side)

CAMSHAFT BEARING (TIMING CHAIN SIDE)	
NEW	35.000 mm to 35.025 mm (1.378 in to 1.3789 in)
SERVICE LIMIT	35.040 mm (1.3795 in)
CAMSHAFT BEARING (SPARK PLUG SIDE)	
NEW	22.000 mm to 22.021 mm (.8661 in to .867 in)
SERVICE LIMIT	22.040 mm (.8677 in)

Installing the Cylinder Head

The installation is the reverse of the removal procedure. However, pay attention to the following.

Ensure dowel pins are in place.

NOTICE **Timing chain guide (fixed) has to be fixed between cylinder and cylinder head.**

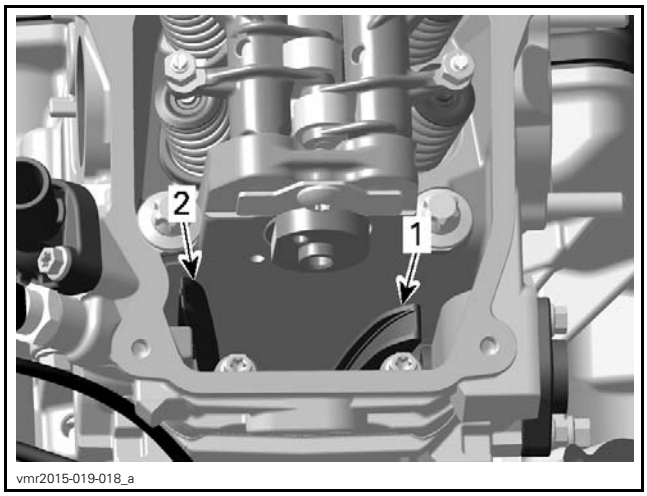

1. Timing chain guide (tensioner side) mounted in crankcase
2. Timing chain guide (fixed) between cylinder and cylinder head

Install a NEW cylinder head gasket.

Install cylinder head screws.

NOTICE **Check for proper lengths of the cylinder head screws.**

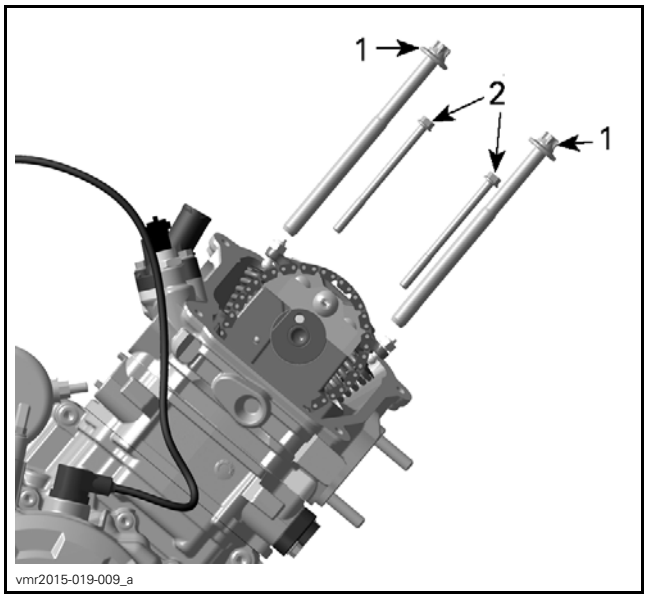

1. Location no. 1
2. Location no. 2

CYLINDER HEAD SCREW IDENTIFICATION	
Location no. 1	M10 x 140
Location no. 2	M6 x 85

Tighten M10 cylinder head screws FIRST as per following specifications.

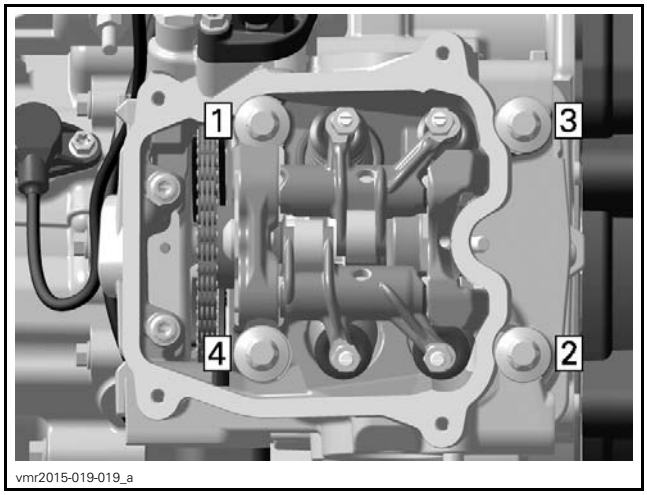

TIGHTENING SEQUENCE - M10 CYLINDER HEAD SCREWS

TIGHTENING PROCEDURE		
M10 cylinder head screws	step 1	20 N•m ± 1 N•m (15 lbf•ft ± 1 lbf•ft)
	step 2	180° ± 5°

Tighten M6 cylinder head screws as per following specification.

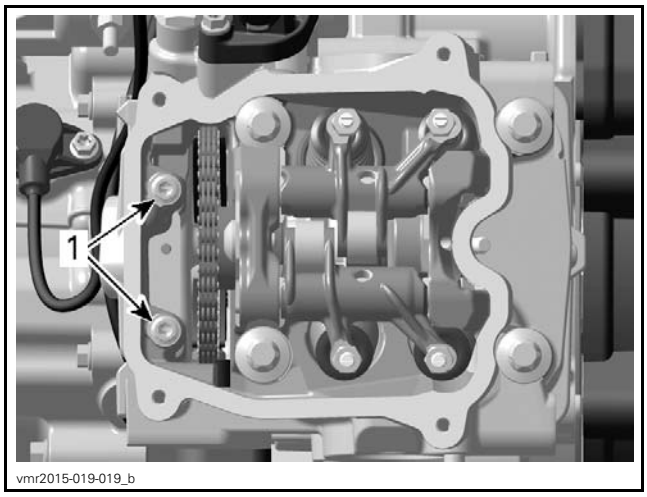

1. M6 Screws

TIGHTENING TORQUE	
M6 cylinder head screws	10 N•m ± 1 N•m (89 lbf•**in** ± 9 lbf•**in**)

Check timing chain guide (tensioner side) for movement.

Refer to applicable subsection for installation details of remaining removed parts.

VALVE SPRINGS

Removing the Valve Spring

Refer to following procedures in this subsection to remove:

– *CAMSHAFT*
– *CYLINDER HEAD*.

Compress valve spring.

REQUIRED TOOL	
VALVE SPRING COMPRESSOR (P/N 529 035 724)	
VALVE SPRING COMPRESSOR CUP (P/N 529 036 270)	

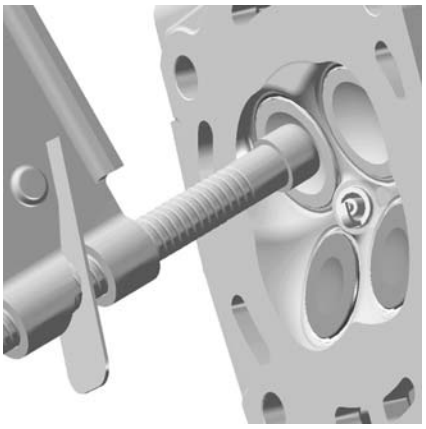

LOCATE VALVE SPRING COMPRESSOR IN CENTER OF THE VALVE

Remove valve cotters.

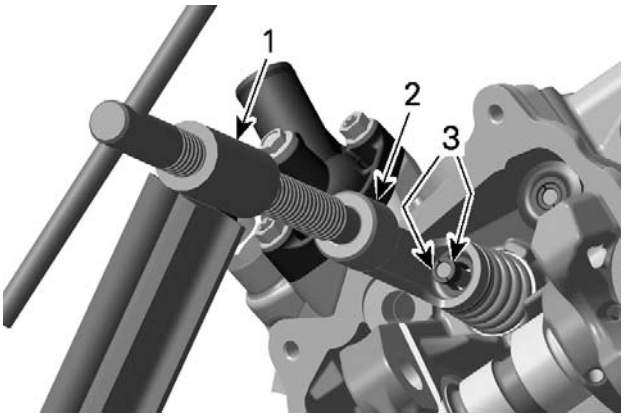

1. Valve spring compressor
2. Valve spring compressor cup
3. Valve cotter

Remove tools and withdraw valve spring retainer and valve spring.

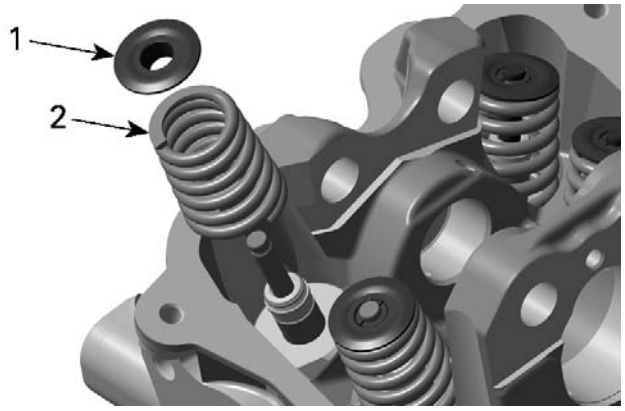

1. Valve spring retainer
2. Valve spring

Inspecting the Valve Spring

Check valve spring for visible damage. If so, replace valve spring.

Check valve spring for free length and straightness.

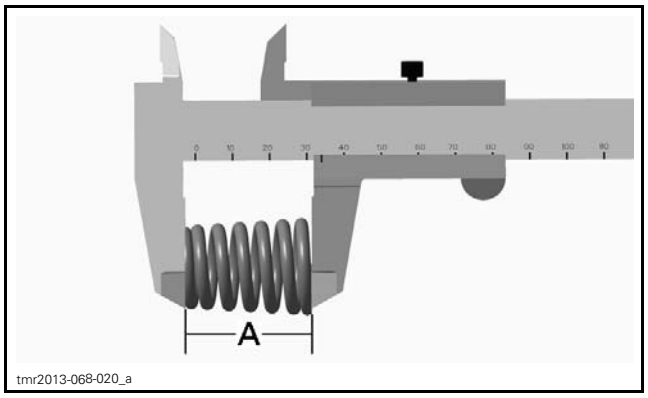

A. Valve spring length

VALVE SPRING FREE LENGTH	
NEW	40.41 mm (1.591 in)
SERVICE LIMIT	39.00 mm (1.535 in)

Replace valve springs if not within specifications.

Installing the Valve Spring

The installation is the reverse of the removal procedure. However, pay attention to the following.

Colored area of the valve spring must be placed on bottom side.

To ease installation of cotters, apply oil or grease on them so that they remain in place while releasing the spring.

NOTE: Valve cotter must be properly engaged in valve stem grooves.

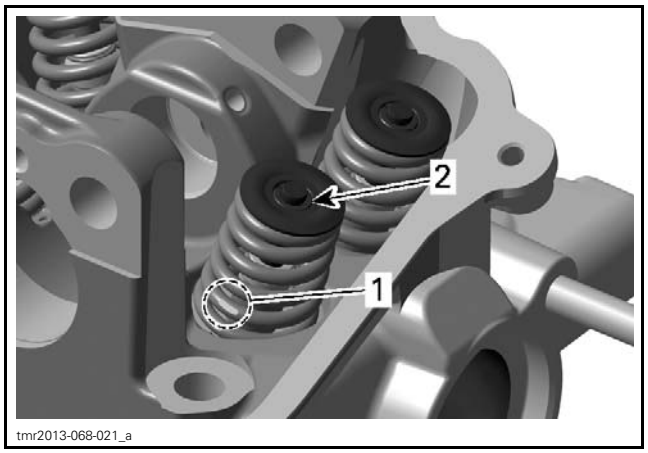

1. Colored area position of the valve spring
2. Valve cotter

After spring is installed, ensure it is properly locked by tapping on valve stem end with a soft hammer so that valve opens and closes a few times.

NOTICE **An improperly locked valve spring will cause engine damage.**

VALVES

Removing the Valve

Remove valve spring, see *VALVE SPRING* in this subsection.

Push valve stem, then pull valves (intake and exhaust) out of valve guide.

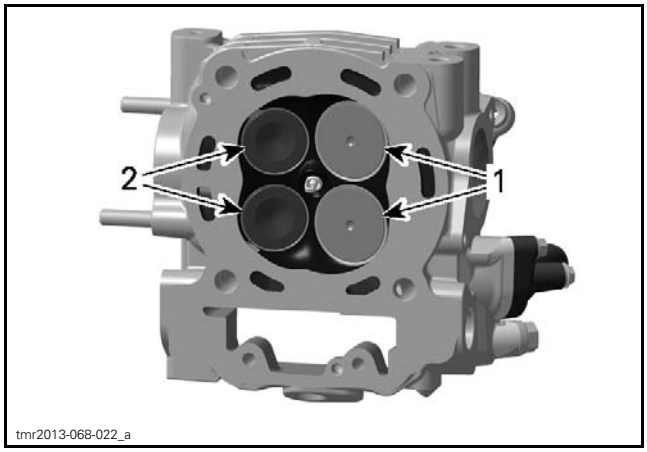

1. Intake valves 36.5 mm (1.437 in)
2. Exhaust valves 31 mm (1.22 in)

Remove valve stem seal and discard it.

REQUIRED TOOL	
SNAP-ON PLIERS (P/N YA 8230)	

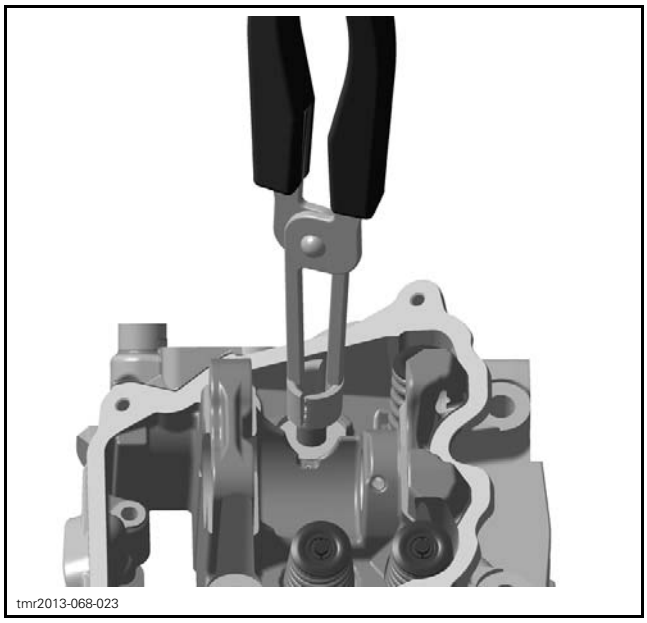
tmr2013-068-023

Inspecting the Valve

Whenever valves are removed always inspect valve guides. Refer to *VALVE GUIDES* in this subsection.

Valve Stem Seal

Always install NEW seals whenever valves are removed.

Valve

Inspect valve surface, check for abnormal stem wear and bending. If out of specification, replace by a new one.

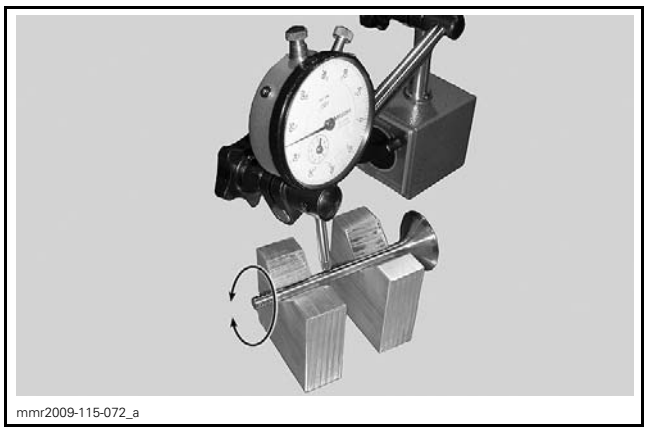
mmr2009-115-072_a

VALVE OUT OF ROUND (INTAKE AND EXHAUST VALVES)	
NEW	0.005 mm (.0002 in)
SERVICE LIMIT	0.060 mm (.0024 in)

Valve Stem

Measure valve stem in three places using a micrometer.

Replace valve if valve stem is out of specification or has other damages such as wear or friction surface.

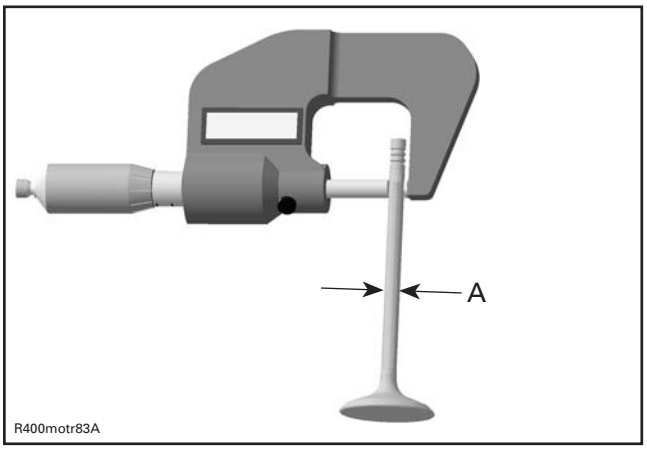

R400motr83A

A. Valve stem diameter

VALVE STEM DIAMETER	
EXHAUST VALVE	
NEW	5.461 mm to 5.476 mm (.215 in to .2156 in)
SERVICE LIMIT	5.440 mm (.2142 in)
INTAKE VALVE	
NEW	5.472 mm to 5.486 mm (.2154 in to .216 in)
SERVICE LIMIT	5.450 mm (.2146 in)

Valve Face and Seat

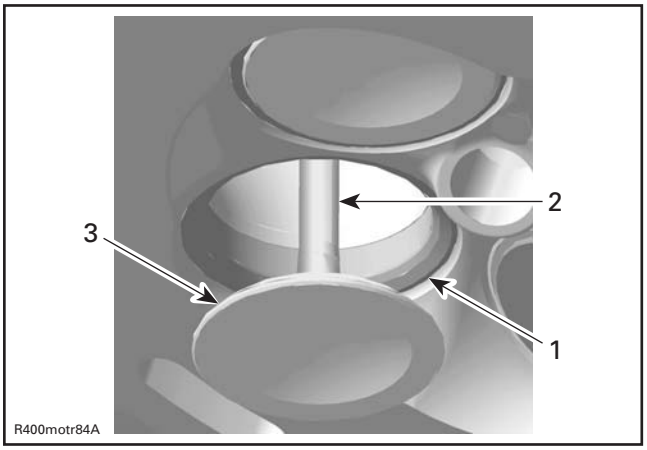

R400motr84A

1. *Valve seat*
2. *Exhaust valve contaminated area*
3. *Valve face (contact surface to valve seat)*

Check valve face and seat for burning or pittings and replace valve or cylinder head if there are signs of damage.

Ensure to seat valves properly. Apply some lapping compound to valve face and work valve on its seat with a lapping tool (see *VALVE GUIDES* in this subsection).

Measure valve face contact width.

NOTE: The location of contact area should be in center of valve seat.

Measure valve seat width using a caliper.

VALVE SEAT CONTACT WIDTH	
EXHAUST VALVE	
NEW	1.25 mm to 1.55 mm (.049 in to .061 in)
SERVICE LIMIT	2.00 mm (.079 in)
INTAKE VALVE	
NEW	1.05 mm to 1.35 mm (.041 in to .053 in)
SERVICE LIMIT	1.80 mm (.071 in)

If valve seat contact width is too wide or has dark spots, replace the cylinder head.

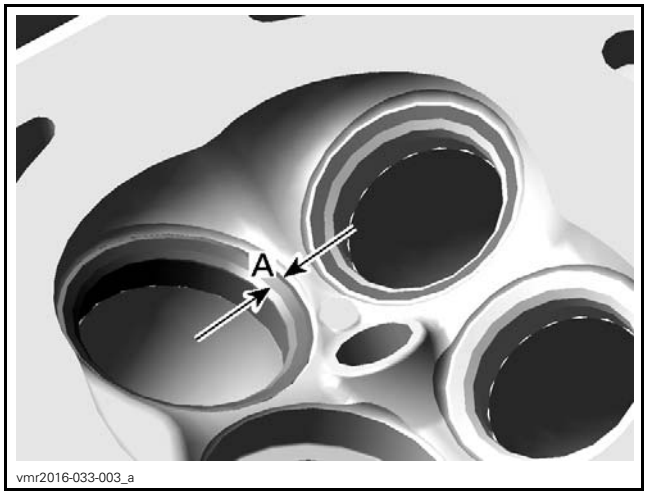

A. Valve seat contact width

Installing the Valve

The installation is the reverse of the removal procedure. However, pay attention to the following.

Install a NEW valve stem seal. Make sure thrust washer is installed before installing seal.

Apply engine oil on valve stem and install it.

NOTICE **Be careful when valve stem is passed through sealing lips of valve stem seal.**

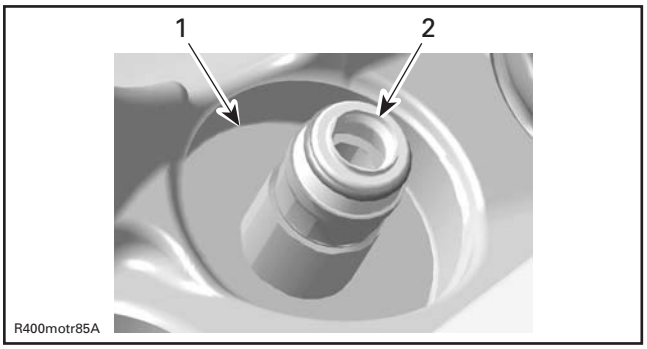

1. Thrust washer
2. Sealing lips of valve stem seal

For proper valve spring installation refer to *VALVE SPRINGS* in this subsection.

VALVE GUIDES

Inspecting the Valve Guide

Always replace valve stem seals whenever valve guides are removed.

Measure valve guide in three places using a small bore gauge.

NOTE: Clean valve guide to remove carbon deposits before measuring.

Replace valve guide if it is out of specification or has other damages such as wear or friction surface.

VALVE GUIDE DIAMETER (INTAKE AND EXHAUST VALVES)	
NEW	5.506 mm to 5.518 mm (.2168 in to .2172 in)
SERVICE LIMIT	5.568 mm (.2192 in)

Removing the Valve Guide

Refer to following procedures in this subsection to remove:

– Cylinder head
– Valve springs
– Valves
– Valve stem seals
– Thrust washers.

NOTE: Clean valve guide area from contamination before removal.

Drive the valve guide out of cylinder head.

REQUIRED TOOL	
Hammer	
VALVE GUIDE REMOVER (6 MM) (P/N 529 036 074)	

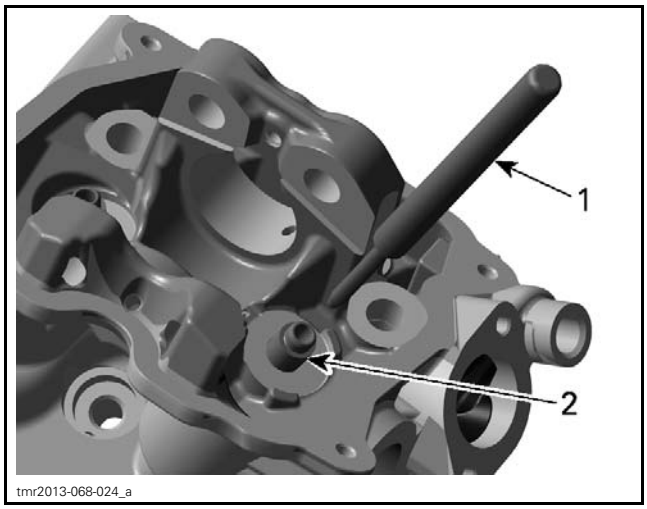

1. *Valve guide remover*
2. *Valve guide*

Installing the Valve Guide

The installation is the reverse of the removal procedure. However, pay attention to the following.

Clean the valve guide bore before reinstalling the valve guide into cylinder head.

NOTE: Apply LOCTITE 767 (ANTISEIZE LUBRICANT) (P/N 293 800 070) on valve guide prior to install it into the cylinder head.

Install valve guide.

REQUIRED TOOL	
VALVE GUIDE INSTALLER (P/N 529 036 269)	

NOTICE **Valve guide installer is used for intake and exhaust valve guides. Choose proper side for installation.**

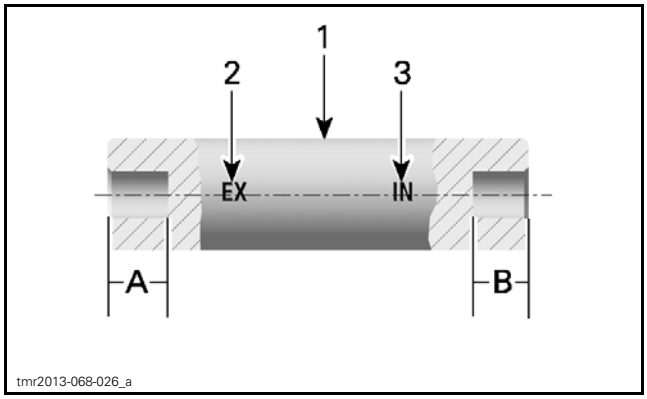

1. *Valve guide installer*
2. *Mark "EX" - exhaust valve guide installer*
3. *Mark "IN" - intake valve guide installer*

A. *14.5 mm (.571 in)*
B. *13.3 mm (.524 in)*

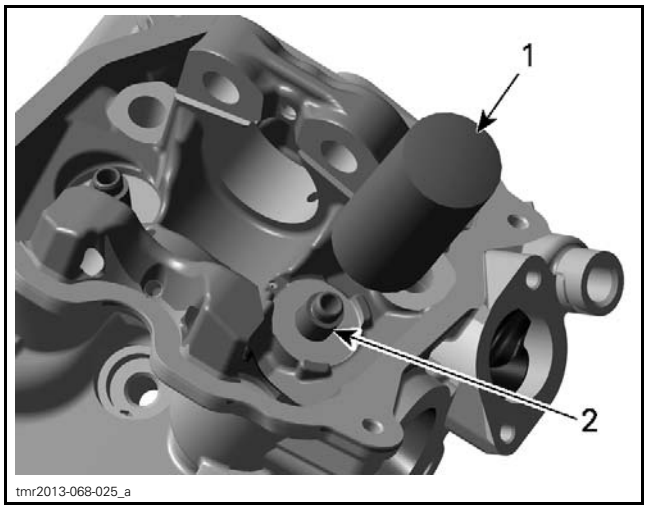

1. *Valve guide installer*
2. *Valve guide*

NOTICE **Push valve guide in the cold cylinder head as per following illustration.**

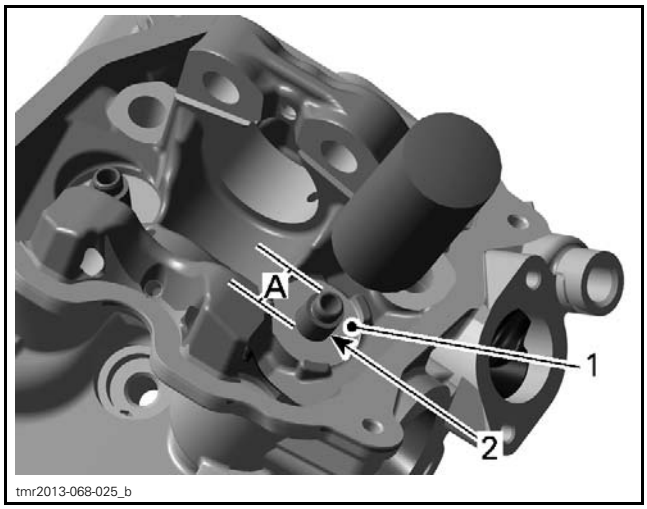

1. *Thrust surface of cylinder head*
2. *Valve guide*

A. *Measurement from thrust surface to valve guide top*

VALVE GUIDE (MEASUREMENT "A")	
INTAKE	13.1 mm to 13.5 mm (.5157 in to .5315 in)
EXHAUST	14.3 mm to 14.7 mm (.563 in to .579 in)

Apply some lapping compound to valve face and work valve on its seat with a lapping tool.

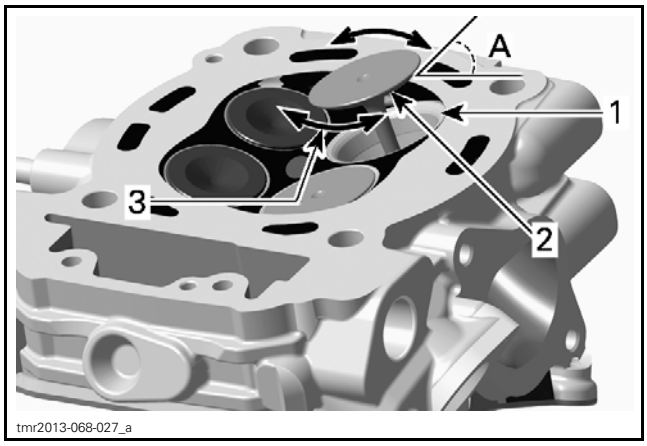

1. *Valve seat*
2. *Valve face (contact surface to valve seat)*
3. *Turn valve while pushing against cylinder head*

A. *Valve seat angle 45°*

NOTE: Ensure to seat valves properly. Apply marking paste to ease checking contact pattern.

Repeat procedure until valve seat/valve face fits together.

CYLINDER

Removing the Cylinder

Refer to *TIMING CHAIN* subsection and remove the following parts:

– Timing chain tensioner
– Camshaft timing gear.

Remove the cylinder head (see *CYLINDER HEAD* in this subsection).

Pull cylinder.

Discard cylinder base gaskets.

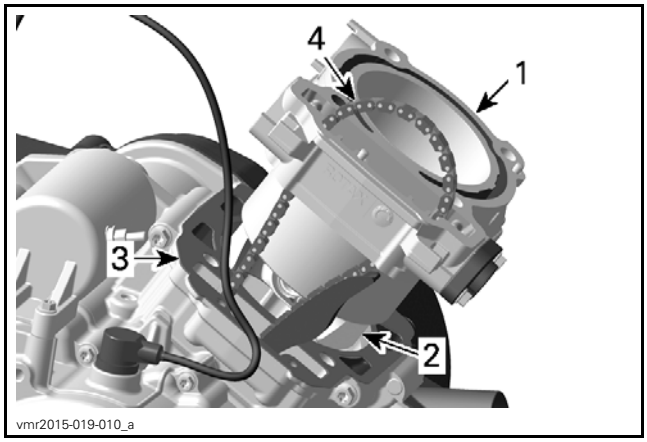

1. *Cylinder*
2. *Piston assembly*
3. *Cylinder base gasket*
4. *Camshaft timing chain*

Inspecting the Cylinder

Check cylinder for cracks, scoring and wear ridges on the top and bottom of the cylinder. If so, replace cylinder.

Cylinder Taper

Measure cylinder bore at 3 recommended positions.

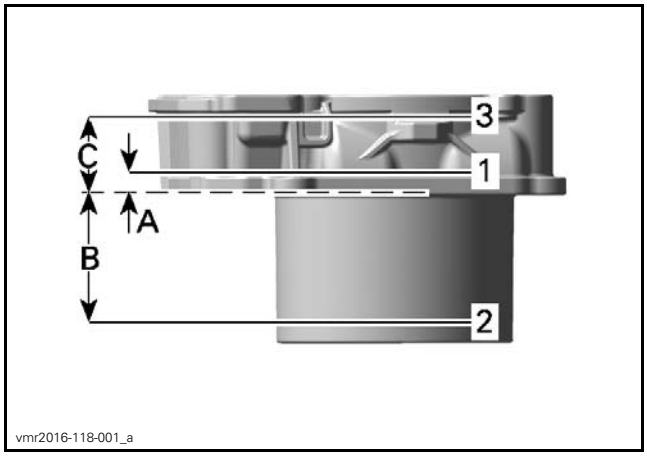

1. *First measure*
2. *Second measure*
3. *Third measure*

A. *5 mm (.197 in)*
B. *58 mm (2.283 in)*
C. *37 mm (1.457 in)*

CYLINDER TAPER SPECIFICATION	
NEW (MAXIMUM)	0.038 mm (.0015 in)
SERVICE LIMIT	0.090 mm (.0035 in)

Distance between measurements should not exceed the service limit mentioned above. Otherwise, replace cylinder and piston rings.

Cylinder Out of Round

Measure cylinder diameter:

– in piston pin axis
– perpendicular to piston pin axis.

direction from top of cylinder. Take another measurement 90° from first one and compare.

NOTE: Use the same measuring points as described in *CYLINDER TAPER*.

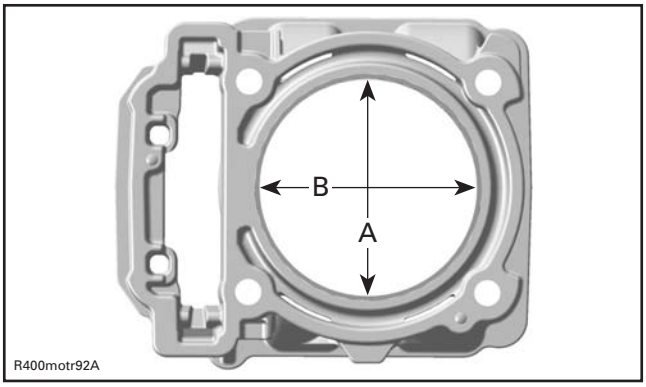

A. Perpendicular to crankshaft axis
B. Parallel to crankshaft axis

CYLINDER OUT OF ROUND	
NEW (MAXIMUM)	0.015 mm (.0006 in)
SERVICE LIMIT	0.020 mm (.0008 in)

Installing the Cylinder

the installation is the reverse of the removal procedure. However, pay attention to the following.

NOTICE **Always replace cylinder base gasket before installing the cylinder.**

NOTE: Make sure piston rings are properly spaced, refer to *PISTON RINGS* in this subsection.

Apply engine oil:
– In the bottom area of the cylinder bore
– On the piston rings
– On the piston ring compressor.

Compress piston rings.

Apply engine oil on the band of the tool.

REQUIRED TOOL
Piston ring compressor with band width of 15 mm to 20 mm (.59 in to .79 in)

NOTE: The cylinder can not be pushed fully over the piston unless the piston is located at TDC.

Put timing chain through the chain pit then put the cylinder in place.

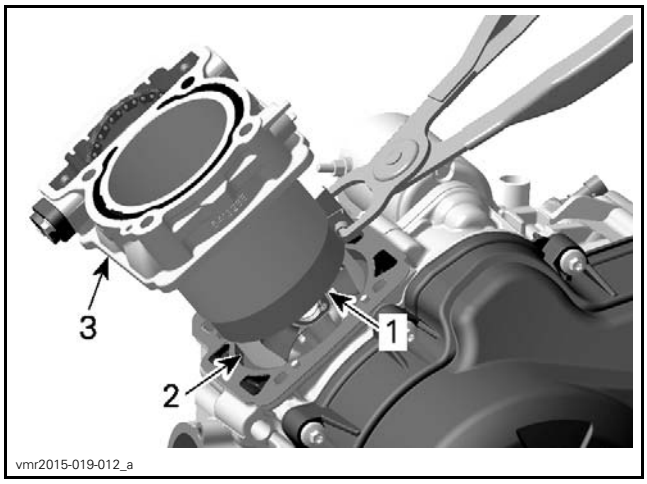

1. Piston ring compressor
2. Piston
3. Cylinder

NOTICE **Chain guide has to be fixed between cylinder and cylinder head.**

Install cylinder head and the other parts in accordance with the proper installation procedures.

PISTON

Removing the Piston

Refer to following procedures in this subsection to remove:
– Cylinder head
– Cylinder.

Place a rag under piston and in the area of timing chain compartment.

WARNING

Piston circlips are spring loaded.

Remove one piston circlip and discard it.

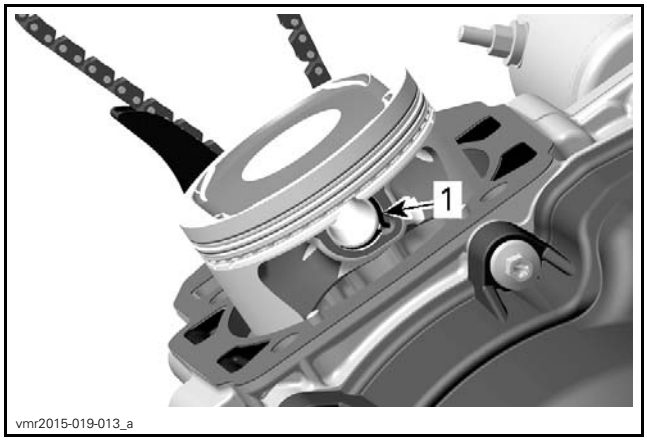

1. Piston circlip

NOTE: The removal of both piston circlips is not necessary to remove piston pin.

Push piston pin out of piston.

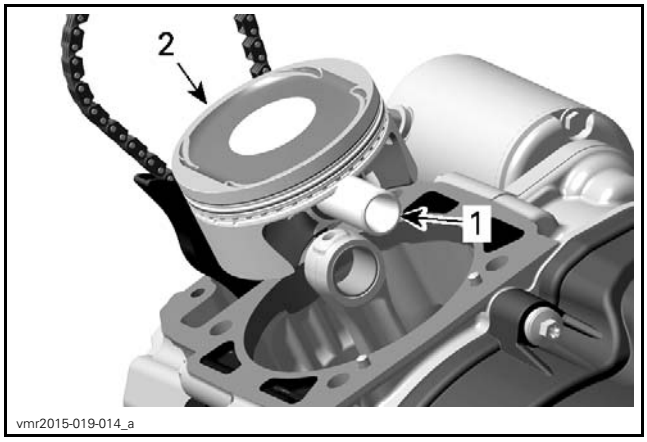

1. *Piston pin*
2. *Piston*

Detach piston from connecting rod.

Inspecting the Piston

Inspect piston for scoring, cracking or other damages. Replace piston and piston rings if necessary.

Using a micrometer, measure piston at 8 mm (.315 in) perpendicularly (90°) to piston pin.

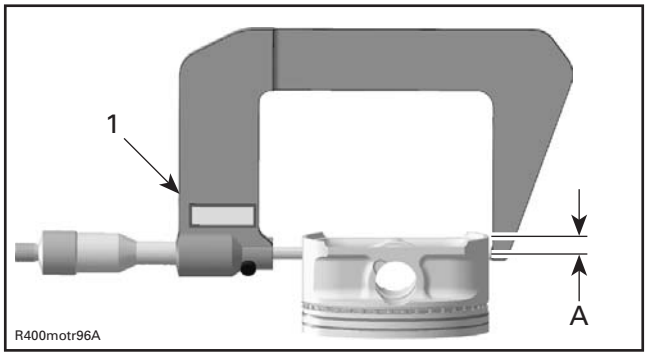

1. *Measuring perpendicularly (90°) to piston pin*

A. *8 mm (.315 in)*

The measured dimension should be as described in the following tables. If not, replace piston.

PISTON MEASUREMENT	
NEW	93.950 mm to 93.966 mm (3.6988 in to 3.6994 in)
SERVICE LIMIT	93.900 mm (3.6969 in)

Piston/Cylinder Clearance

Adjust and lock a micrometer to the piston dimension.

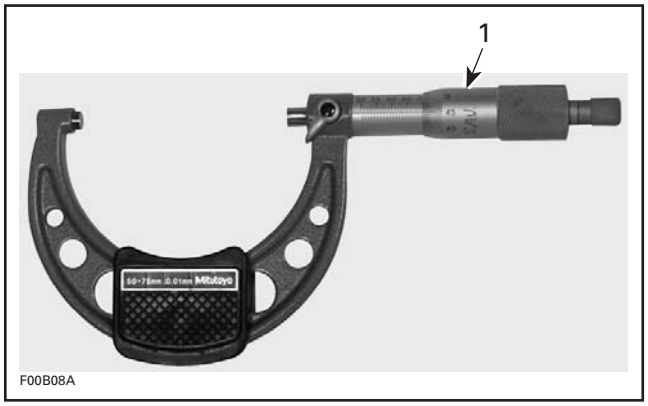

1. *Micrometer set to the piston dimension*

With the micrometer set to the dimension, adjust a cylinder bore gauge to the micrometer dimension and set the indicator to 0 (zero).

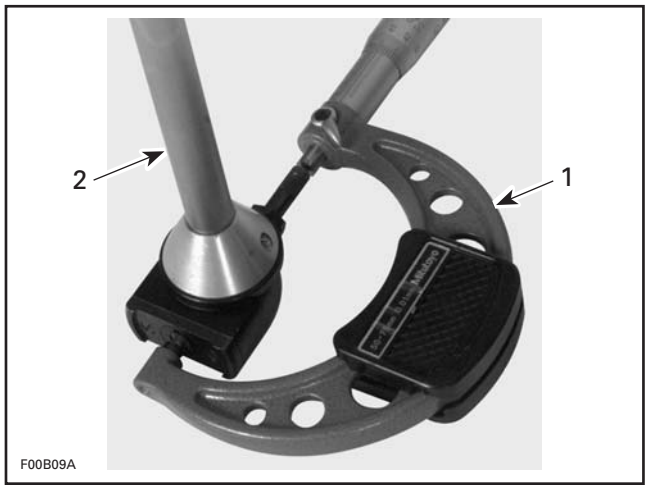

1. *Use the micrometer to set the cylinder bore gauge*
2. *Dial bore gauge*

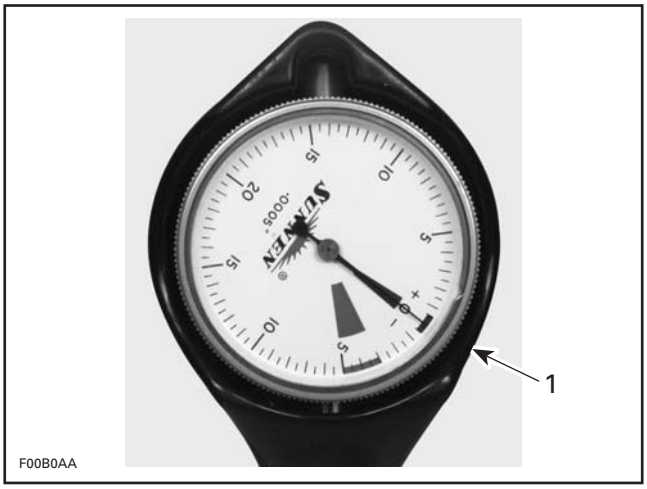

TYPICAL

1. *Indicator set to 0 (zero)*

Position the dial bore gauge 20 mm (.787 in) above cylinder base, measuring perpendicularly (90°) to piston pin axis.

Read the measurement on the cylinder bore gauge. The result is the exact piston/cylinder wall clearance.

PISTON/CYLINDER CLEARANCE	
NEW	0.027 mm to 0.057 mm (.0011 in to .0022 in)
SERVICE LIMIT	0.100 mm (.0039 in)

NOTE: Make sure used piston is not worn.

If clearance exceeds specified tolerance, replace piston by a new one and measure piston/cylinder clearance again.

NOTE: Make sure the cylinder bore gauge indicator is set exactly at the same position as with the micrometer, otherwise the reading will be false.

Connecting Rod/Piston Pin Clearance

Using synthetic abrasive woven, clean piston pin from deposits.

Inspect piston pin for scoring, cracking or other damages.

Measure piston pin. See the following illustration for the proper measurement positions.

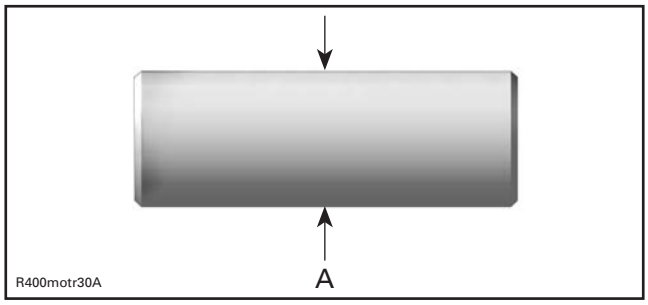

A. Piston pin diameter

PISTON PIN DIAMETER	
NEW	19.996 mm to 20.000 mm (.7872 in to .7874 in)
SERVICE LIMIT	19.980 mm (.7866 in)

Replace piston pin if diameter is out of specifications.

Measure inside diameter of connecting rod small end bushing.

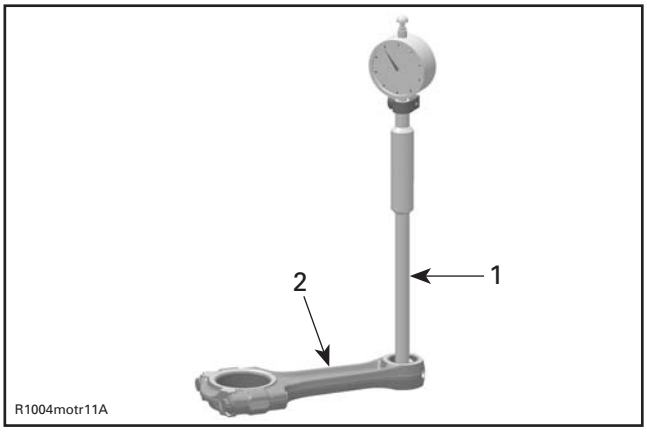

1. Bore gauge
2. Connecting rod

CONNECTING ROD SMALL END DIAMETER	
NEW	20.010 mm to 20.020 mm (.7878 in to .7882 in)
SERVICE LIMIT	20.060 mm (.7898 in)

Replace connecting rod if diameter of connecting rod small end is out of specifications. Refer to *BOTTOM END* subsection for removal procedure.

Compare measurements to obtain the connecting rod/piston pin clearance.

CONNECTING ROD/ PISTON PIN CLEARANCE	
SERVICE LIMIT	0.080 mm (.0031 in)

Installing the Piston

The installation is the reverse of the removal procedure. However, pay attention to the following.

Apply engine oil on the piston pin.

Insert piston pin into piston and connecting rod.

Install piston with the punched arrow on piston dome must point towards exhaust side of the engine.

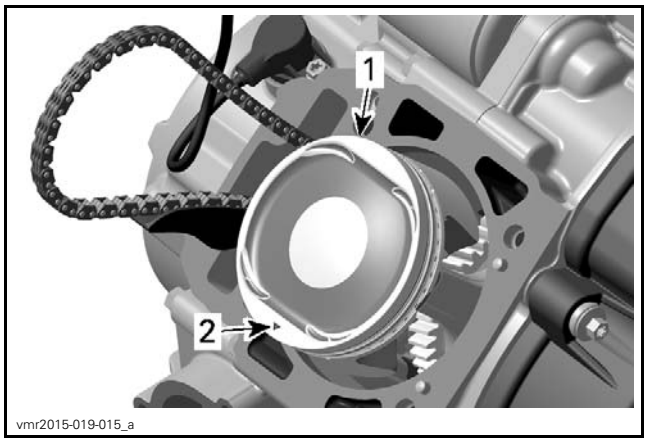

1. Piston
2. Mark on piston must show to exhaust side

Install **NEW** piston circlip as per following procedure:

REQUIRED TOOL	
PISTON CIRCLIP INSTALLER (P/N 529 036 083)	

NOTICE **Always replace disassembled piston circlip(s) by NEW ones. Place a rag on cylinder base to avoid dropping the circlip inside the engine.**

1. Place circlip in sleeve and push piston circlip installer handle until circlip reaches the mid position in the sleeve.

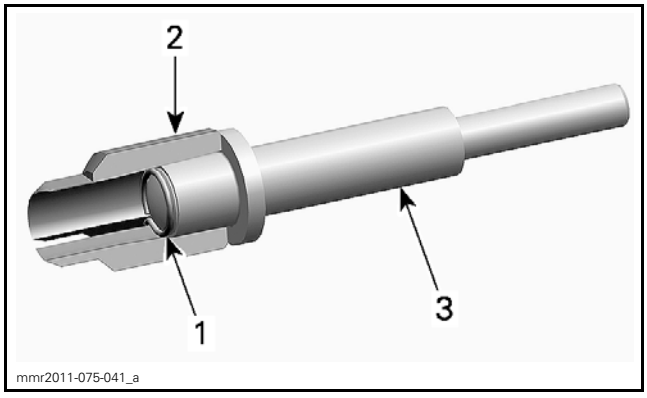

TYPICAL
1. Circlip
2. Sleeve
3. Installer handle

2. Push piston circlip installer handle until circlip reaches end position in the sleeve.

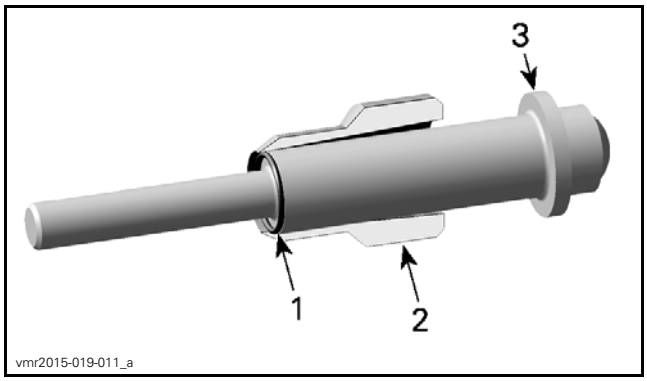

TYPICAL
1. Circlip
2. Sleeve
3. Installer handle

3. Align sleeve with piston pin axis and push installer handle until circlip engages in piston.

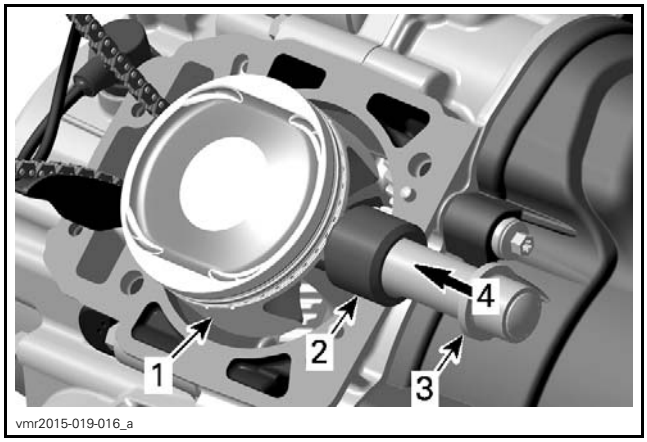

1. Hold piston while pushing circlip in place
2. Sleeve
3. Installer handle
4. Direction to push circlip

NOTE: Take care that the hook of the piston circlip is positioned properly.

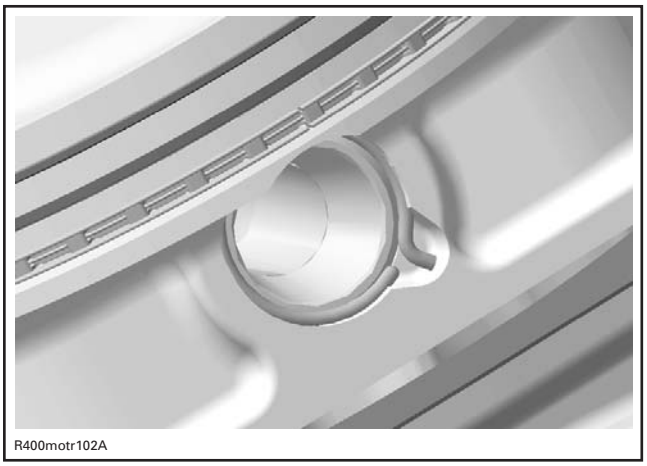

CORRECT POSITION OF THE PISTON CIRCLIP

PISTON RINGS

Removing the Ring

Remove the piston (see *PISTON* in this subsection).

Inspecting the Ring

Ring/Piston Groove Clearance

Using a feeler gauge measure each ring/piston groove clearance. If the clearance is too large, the piston and the piston rings should be replaced.

RING/PISTON GROOVE CLEARANCE	
UPPER COMPRESSION RING	
NEW	0.03 mm to 0.07 mm (.0012 in to .0028 in)
SERVICE LIMIT	0.150 mm (.0059 in)
LOWER COMPRESSION RING	
NEW	0.02 mm to 0.06 mm (.0008 in to .0024 in)
SERVICE LIMIT	0.150 mm (.0059 in)
OIL SCRAPER RING	
NEW	0.01 mm to 0.18 mm (.0004 in to .0071 in)
SERVICE LIMIT	0.250 mm (.0098 in)

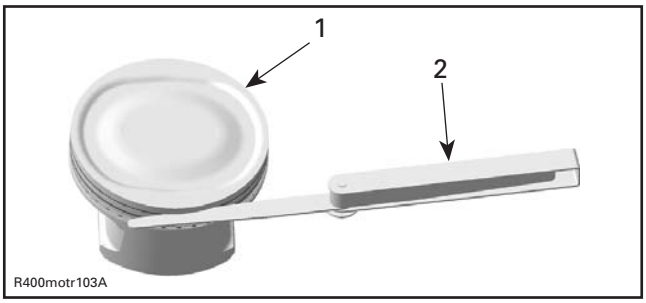

1. Piston
2. Feeler gauge

Ring End Gap

RING END GAP	
UPPER COMPRESSION RING	
NEW	0.20 mm to 0.35 mm (.008 in to .014 in)
SERVICE LIMIT	0.60 mm (.024 in)
LOWER COMPRESSION RING	
NEW	0.35 mm to 0.55 mm (.014 in to .022 in)
SERVICE LIMIT	0.85 mm (.033 in)
OIL SCRAPER RING	
NEW	0.20 mm to 0.70 mm (.008 in to .028 in)
SERVICE LIMIT	1.00 mm (.039 in)

To measure the ring end gap place the ring in the cylinder in the area of 8 mm to 16 mm (5/16 in to 5/8 in) from top of cylinder.

NOTE: In order to correctly position the ring in the cylinder, use piston as a pusher.

Using a feeler gauge, check ring end gap. Replace ring if gap exceeds above described specified tolerance.

Installing the Ring

The installation is the reverse the removal procedure. However, pay attention to the following.

NOTE: Use a ring expander to prevent breakage during installation. The oil ring must be installed by hand.

NOTE: First install spring and then rings of oil scraper ring.

Install the oil scraper ring first, then the lower compression ring with the word “N and TOP “ facing up, then the upper compression ring with the word “N and TOP“ facing up.

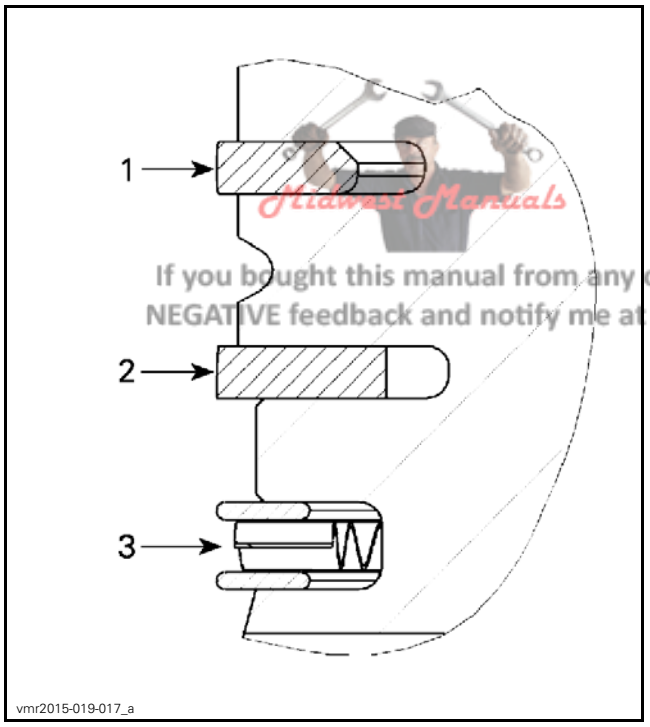

Green Manuals
Paperless Manuals
For a Better Tomorrow
www.green-manuals.com
Midwest Manuals
If you bought this manual from any other seller please leave them
NEGATIVE feedback and notify me at bestshopmanuals@gmail.com

1. Upper compression ring
2. Lower compression ring
3. Oil scraper ring

NOTICE Ensure that top and second rings are not interchanged.

Check that rings rotate smoothly after installation.

Space the piston ring end gaps 120° apart and do not align the gaps with the piston pin bore or the thrust side axis.

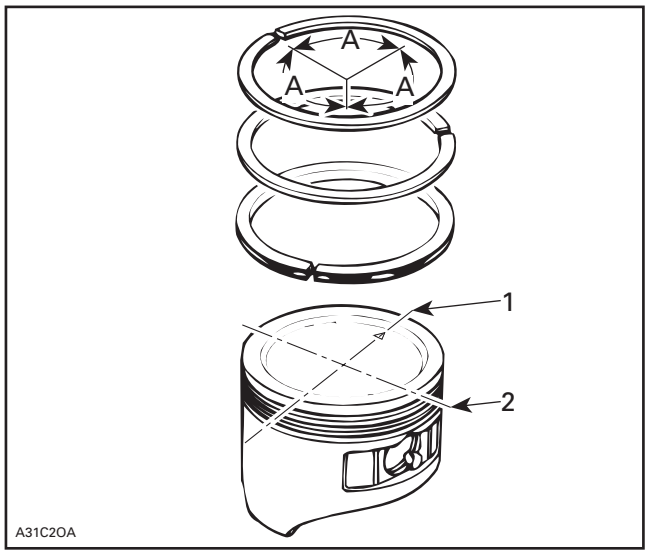

1. DO NOT align ring gap with piston thrust side axis
2. DO NOT align ring gap with piston pin bore axis
A. 120°

CYLINDER HEAD

SERVICE TOOLS

Description	Part Number	Page
CRANKSHAFT LOCKING BOLT	529 035 617	20
ENGINE LEAK DOWN TEST KIT	529 035 661	7
PISTON CIRCLIP INSTALLER	529 035 921	23
PISTON CIRCLIP INSTALLER	529 036 153	23
PISTON RING COMPRESSOR	529 035 919	20
TDC DIAL INDICATOR	414 104 700	6
VALVE GUIDE INSTALLER	529 036 140	18
VALVE GUIDE REMOVER 5 MM	529 035 924	18
VALVE SPRING COMPRESSOR CUP	529 035 764	14
VALVE SPRING COMPRESSOR	529 035 724	14

SERVICE PRODUCTS

Description	Part Number	Page
LOCTITE 767 (ANTISEIZE LUBRICANT)	293 800 070	18

CYLINDER HEAD NO. 1

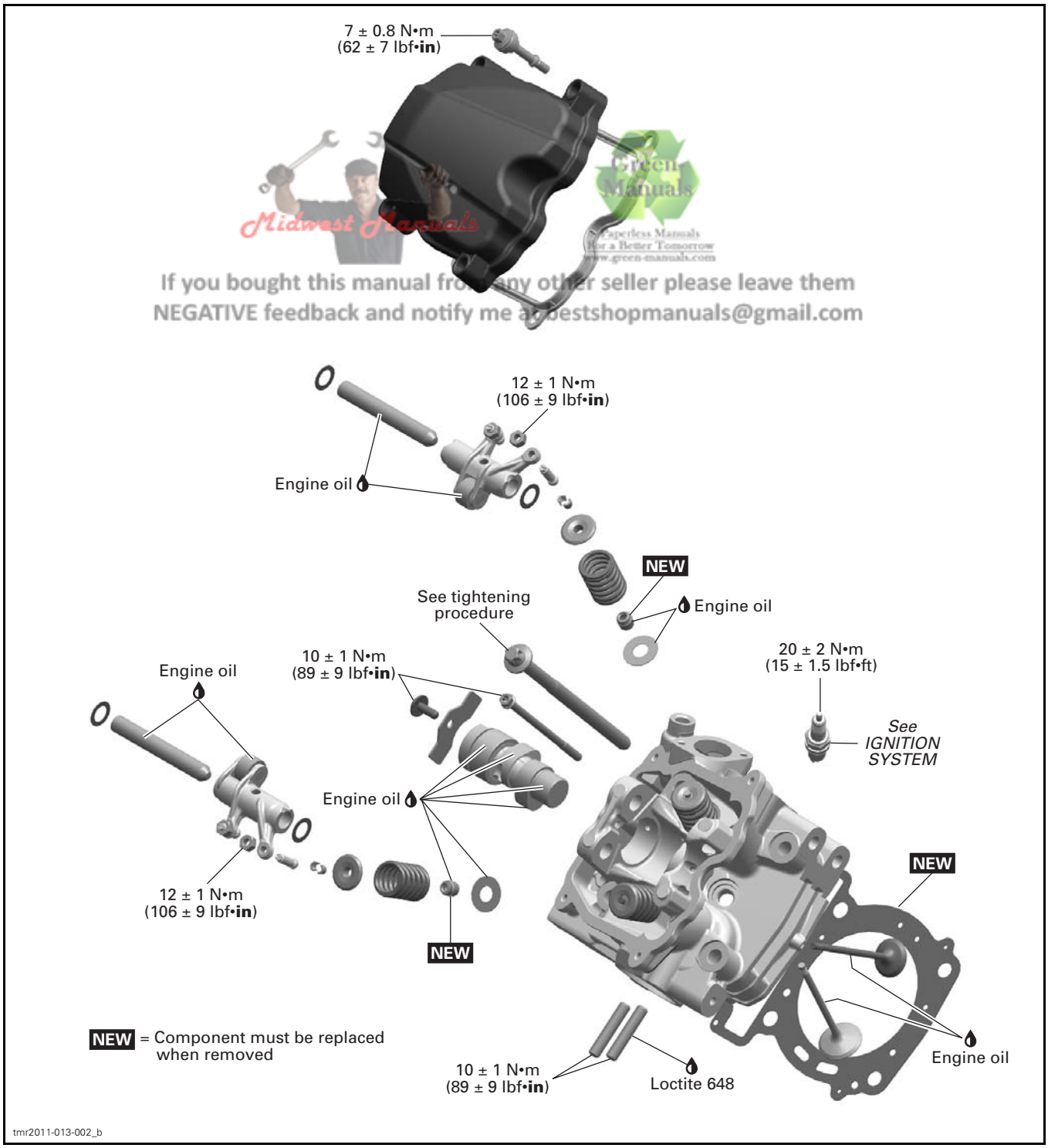

Midwest Manuals
Green Manuals
Paperless Manuals For a Better Tomorrow www.green-manuals.com
If you bought this manual from any other seller please leave them NEGATIVE feedback and notify me at bestshopmanuals@gmail.com

CYLINDER HEAD NO. 2

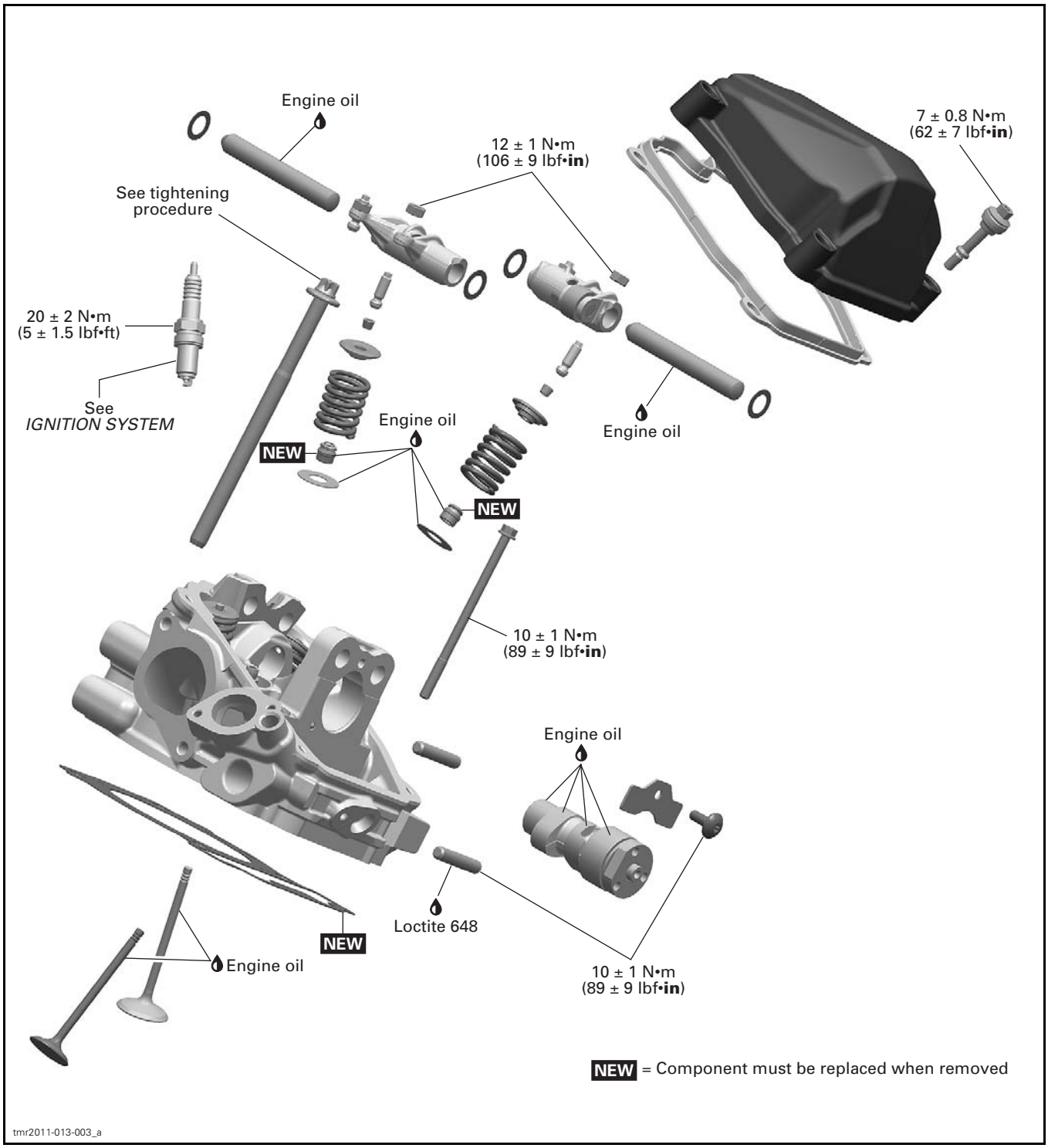

CYLINDERS AND PISTONS

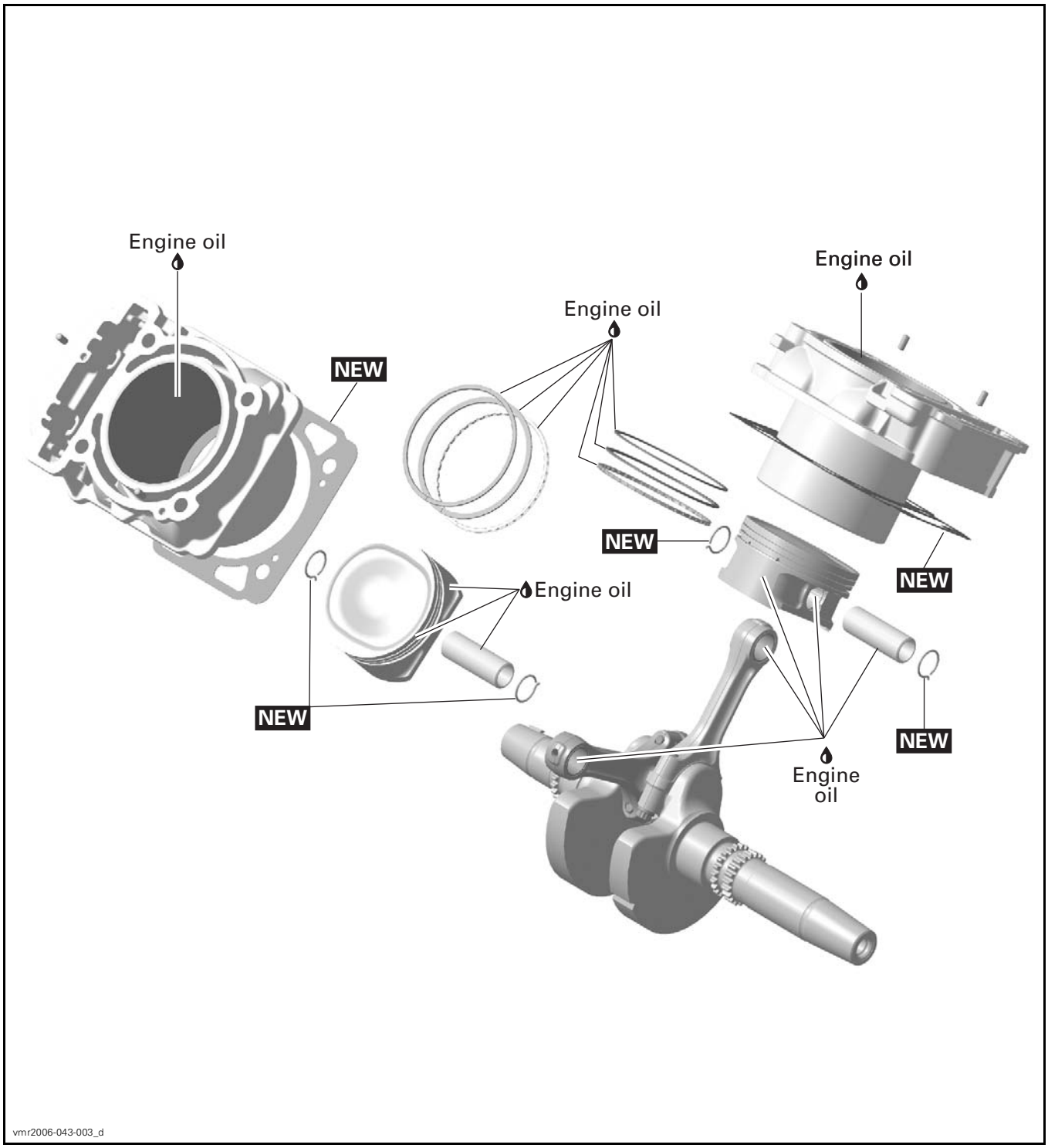

GENERAL

Special reference are made in the text for procedures which are different for cylinder no. 1 and cylinder no. 2.

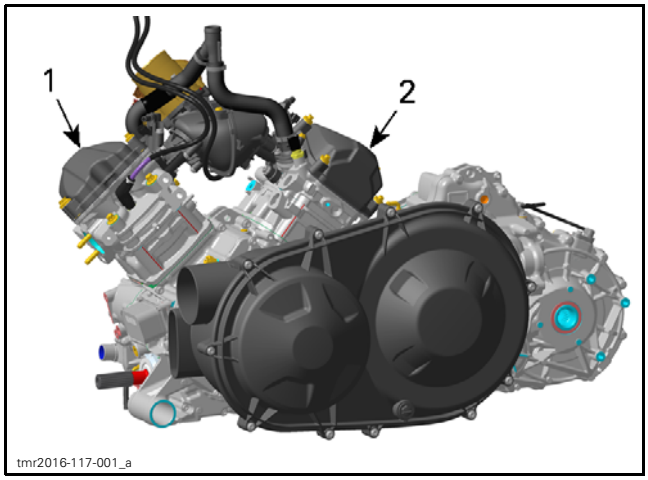

1. *Cylinder 1 (front)*
2. *Cylinder 2 (rear)*

When diagnosing an engine problem, always perform a cylinder leak test.

NOTE: Even though the following procedures do not require the engine removal, many illustrations show the engine out of the vehicle for more clarity.

IMPORTANT: Note position of parts on disassembly. This may help to find the root cause of a problem. A component that is not replaced should be reinstalled in the same position as originally mounted.

ADJUSTMENT

INSPECTING AND ADJUSTING THE ENGINE VALVE CLEARANCE

NOTE: Check and adjust valve clearance only when engine is cold.

Remove valve covers, refer to *CYLINDER HEAD* subsection.

Turn crankshaft to TDC ignition of the respective cylinder, refer to *CAMSHAFT TIMING GEAR* in the *TIMING CHAIN* subsection.

Using feeler gauge, check the valve clearance.

VALVE CLEARANCE	
EXHAUST	0.11 mm to 0.19 mm (.0043 in to .0075 in)
INTAKE	0.06 mm to 0.14 mm (.0024 in to .0055 in)

If the valve clearance is out of specification, adjust valves as follows.

NOTE: Use mean value of exhaust/intake to ensure a proper valve adjustment.

Hold the adjustment screw at the proper position and tighten the locking nut.

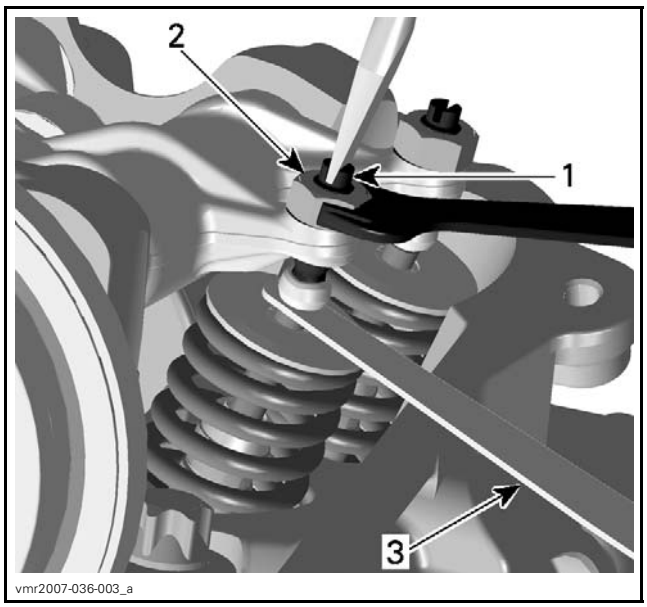

1. *Adjustment screw*
2. *Locking nut*
3. *Feeler gauge*

Repeat the procedure for each valve.

Before installing valve covers, recheck valve clearance.

INSPECTION

LEAK TEST

Before performing the cylinder leak test, verify the following:

– Clamp(s) tightness
– Radiator and hoses.

NOTE: For best accuracy, the leak test should be done with the engine at normal operating temperature.

⚠ WARNING

Prevent burning yourself on hot engine parts.

Preparation

Disconnect battery.

Remove radiator cap.

⚠ WARNING

To prevent burning yourself only remove the radiator cap by wearing the appropriate safety equipment.

Unplug spark plug cable.

Clean spark plug area and remove spark plug from cylinder head.

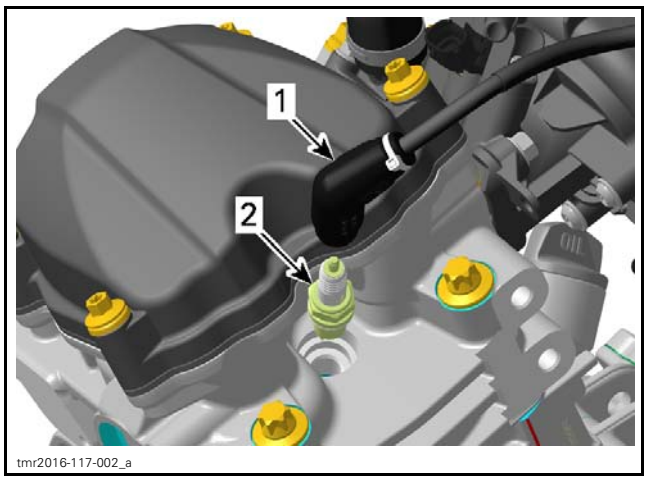

1. *Spark plug connector*
2. *Spark plug*

Remove valve cover.

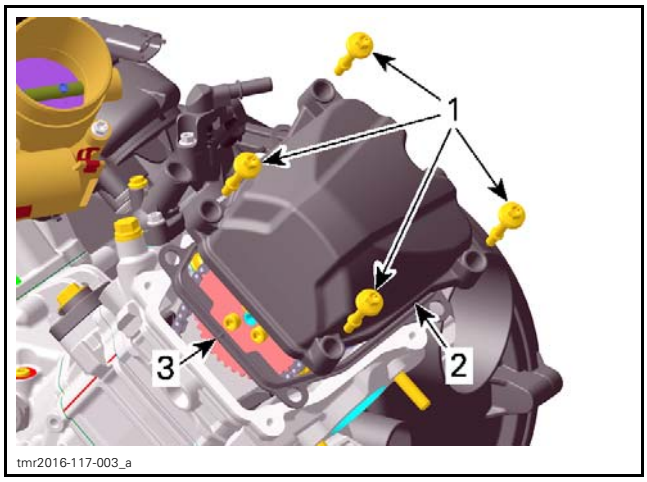

1. *Valve cover screws*
2. *Valve cover*
3. *Gasket*

Rotate crankshaft until piston is at ignition TDC.

To turn crankshaft, there are two possible procedures.

First Procedure

Turn the drive pulley.

Second Procedure

1. Remove plug screw with O-ring from magneto cover.
2. Use a 14 mm Allen key and turn crankshaft.

NOTICE **Turn only clockwise to avoid loosening of magneto flywheel Allen screw.**

Set the piston to precisely ignition TDC.

REQUIRED TOOLS	
TDC DIAL INDICATOR (P/N 414 104 700)	

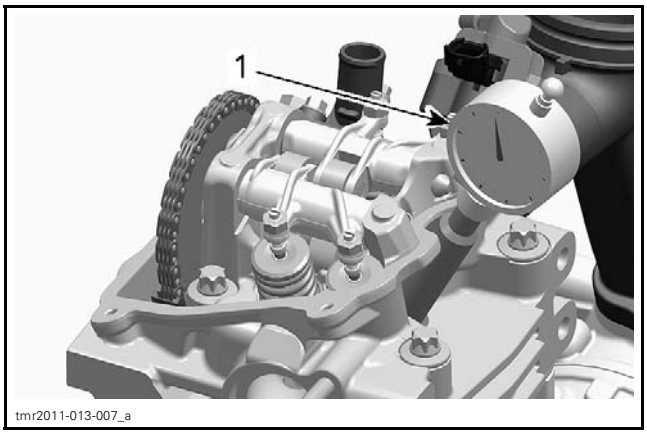

1. *Dial gauge*

NOTE: If a dial gauge is not available, use a screwdriver or another similarly suitable tool.

NOTICE **Do not scratch or damage piston/cylinder surface.**

NOTE: At ignition TDC the marks on the camshaft timing gear have to be parallel to cylinder head base as per following illustration.

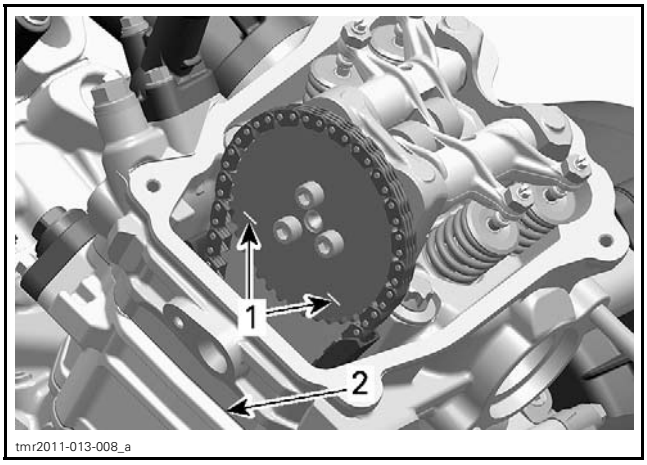

1. *Marks on camshaft timing gear*
2. *Cylinder head base*

Leak Test

REQUIRED TOOL	
ENGINE LEAK DOWN TEST KIT (P/N 529 035 661)	

Connect leak tester to adequate air supply.

Set needle of measuring gauge to zero.

NOTE: All testers have specific instructions on gauge operation and required pressure.

Install gauge adapter into previously cleaned spark plug hole.

Supply combustion chamber with air pressure.

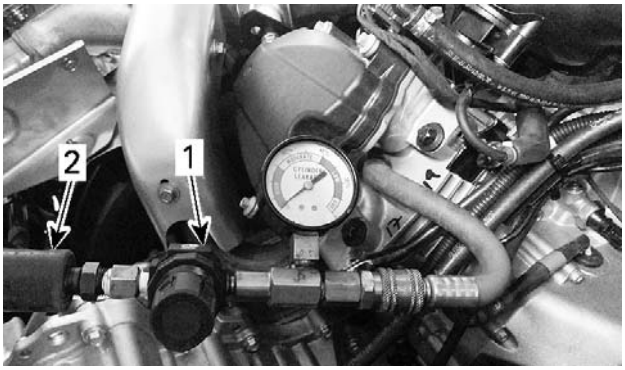

tmr2016-117-201_a

TYPICAL
1. *Leak tester*
2. *Air supply hose*

Note the amount or percentage of leakage (depending on tester).

LEAKAGE PERCENTAGE	ENGINE CONDITION
0% to 15%	Excellent condition
16% to 25%	Good condition
26% to 40%	Fair condition; reduced engine performance
41% and higher	Poor condition, diagnose and repair engine

NOTE: To make sure there is no false reading due to a valves not perfectly seated, tap each valve adjustment screw (on the rocker) using a soft hammer.

Diagnosis

Listen for air leaks.

- Air escaping in intake port/throttle body means leaking intake valve(s).
- Air escaping in exhaust port means leaking exhaust valve(s).
- Air bubbles in the coolant (radiator) means leaking cylinder head gasket.
- Air/coolant escaping from cylinder/head means damaged gasket(s) and/or loosened screws.
- Air escaping into crankcase area means excessively worn cylinder and/or broken piston rings.
- Air/oil escaping from crankcase means damaged gasket and/or loosened screws (refer to *CYLINDER BLOCK* subsection).

NOTE: For all the checkpoints mentioned above, see the appropriate engine section to diagnose and repair the engine.

Reassembly

Reverse the preparation procedure. Ensure to respect torque values and use of appropriate products or lubricants. Refer to exploded views in other subsections of this manual as required.

PROCEDURES

VALVE COVER

Valve Cover Access

Cylinder 1 (front)

Remove the engine service cover located on the rear upper bulkhead.

Cylinder 2 (rear)

Simply open the cargo box.

Removing the Valve Cover

Remove the valve cover

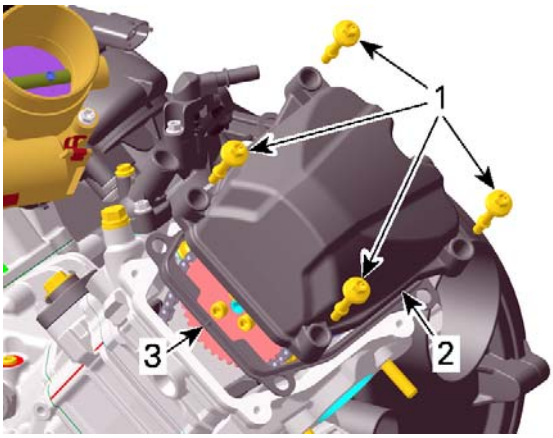

tmr2016-117-003_a

1. *Valve cover screws*
2. *Valve cover*
3. *Gasket*

Repeat the procedure for the other valve cover if required.

Inspecting the Valve Cover

Check the gasket on the valve cover if it is brittle, cracked or hard. If so, replace the gasket.

Installing the Valve Cover

The installation is the reverse of the removal procedure.

Tighten valve cover retaining screws to specified torque in a criss-cross sequence.

TIGHTENING TORQUE	
Valve cover screws	7 N•m ± 0.8 N•m (62 lbf•**in** ± 7 lbf•**in**)

ROCKER ARM

Removing the Rocker Arm

Remove valve cover.

Refer to *TIMING CHAIN* subsection and remove the following parts:

– Timing chain tensioner
– Camshaft timing gear.

Remove pan head screw and camshaft retaining plate.

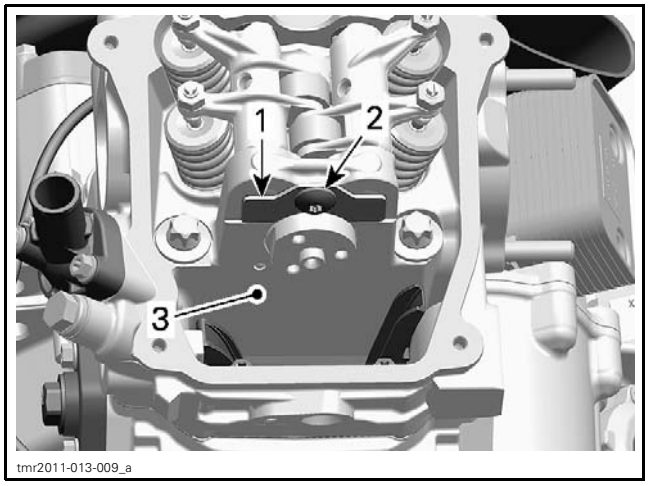

1. *Camshaft retaining plate*
2. *Pan head screw*
3. *Cylinder head*

Remove rocker arm shafts.

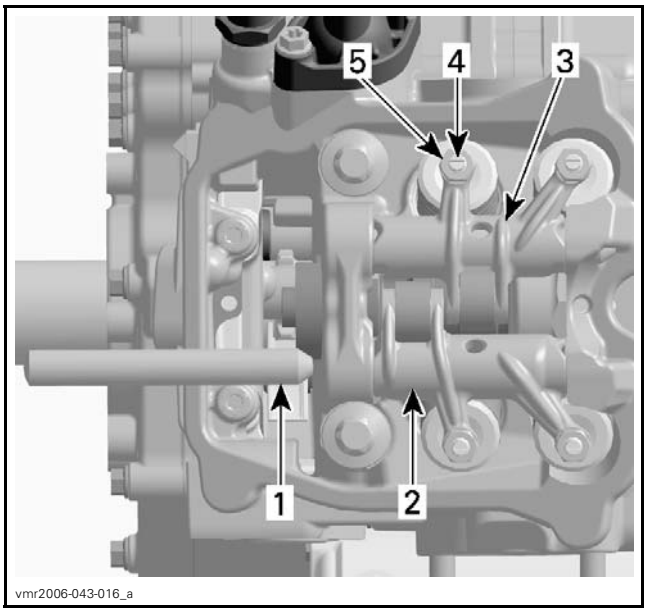

1. *Rocker arm shaft*
2. *Rocker arm (exhaust side)*
3. *Rocker arm (intake side)*
4. *Adjustment screw*
5. *Lock nut*

Remove rocker arm assembly (exhaust side and intake side) with adjustment screws and lock nuts.

Remove thrust washers.

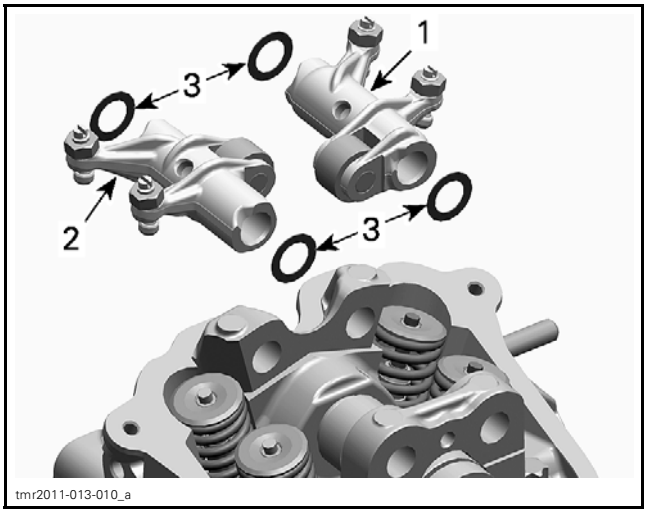

1. *Rocker arm (exhaust side)*
2. *Rocker arm (intake side)*
3. *Thrust washers*

NOTICE Pay attention not to lose thrust washers or drop them into the timing chain compartment.

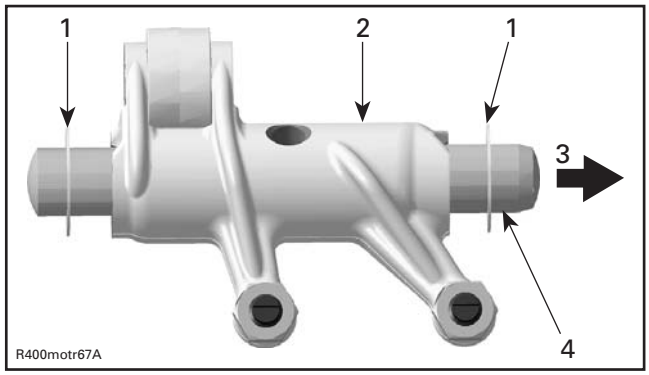

1. 2 thrust washers
2. Rocker arm (exhaust side)
3. Cylinder head (spark plug side)
4. Big taper to spark plug side

Inspecting the Rocker Arm

Inspect each rocker arm for cracks and scored friction surfaces. If so, replace rocker arm assembly.

Check the rocker arm rollers for free movement, wear and excessive radial play. Replace rocker arm assembly if necessary.

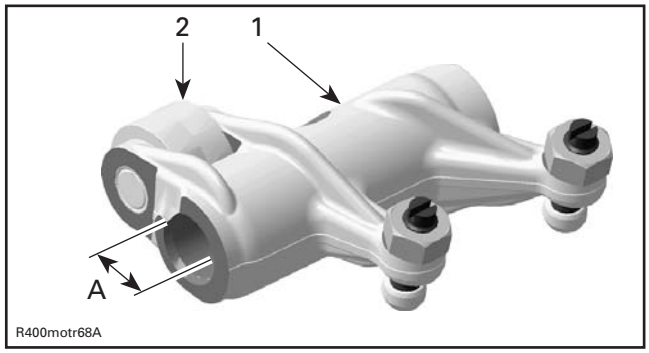

1. Rocker arm (exhaust side)
2. Roller

A. Bore for rocker arm shaft

Measure rocker arm bore diameter. If diameter is out of specification, change the rocker arm assembly.

ROCKER ARM BORE DIAMETER	
New	12.036 mm to 12.050 mm (.4739 in to .4744 in)
Service limit	12.060 mm (.4748 in)

Check adjustment screws for free movement, cracks and/or excessive play.

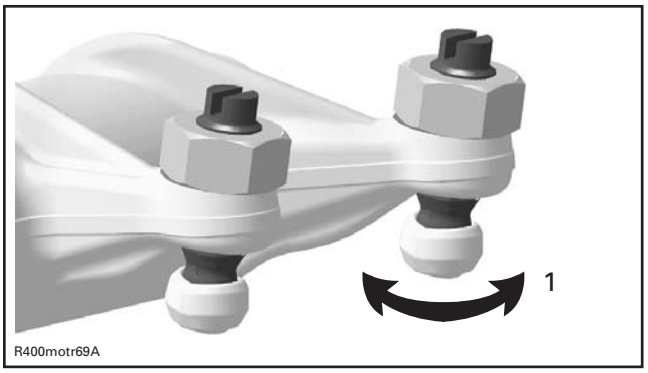

1. Free movement of adjustment screw top

Inspecting the Rocker Arm Shaft

Check for scored friction surfaces; if so, replace parts.

Measure rocker arm shaft diameter.

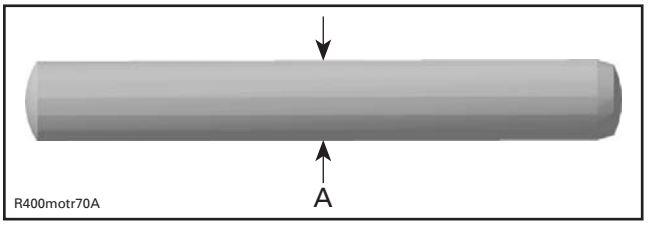

A. Measure rocker arm shaft diameter here

ROCKER ARM SHAFT DIAMETER	
New	12.000 mm to 12.018 mm (.4724 in to .4731 in)
Service limit	11.990 mm (.472 in)

Any area worn excessively will require parts replacement.

Installing the Rocker Arm

NOTE: Use the same procedure for exhaust and intake rocker arm.

Apply engine oil on rocker arm shaft.

Insert a rocker arm shaft with the chamfered edge first through rocker arm pin bore.

Install a thrust washer at timing chain side, then the proper rocker arm (exhaust side or intake side).

Push in rocker arm shaft until its chamfer reaches the end of rocker arm bore.

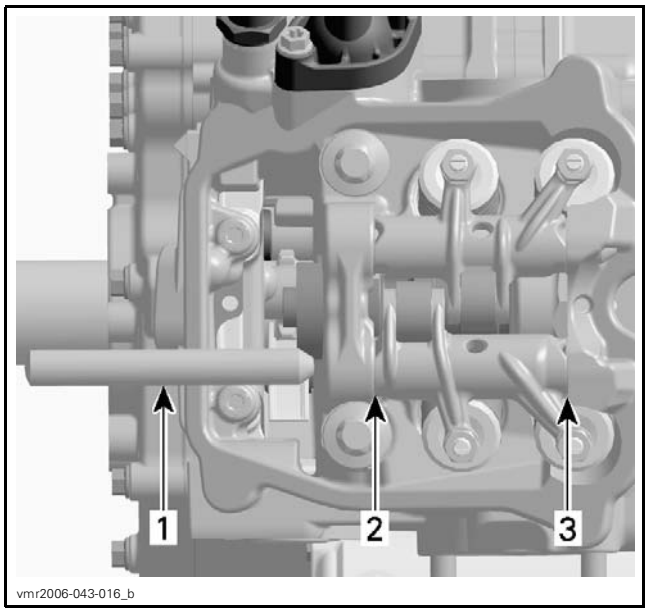

1. *Rocker arm shaft*
2. *Thrust washer (timing chain side)*
3. *Thrust washer (spark plug side)*

Place the other thrust washer and push rocker arm shaft to end position.

Install the camshaft retaining plate.

Adjust valve clearance, refer to *ADJUSTMENT* at the beginning of this subsection.

CAMSHAFT

NOTE: The engine is equipped with two different camshafts.

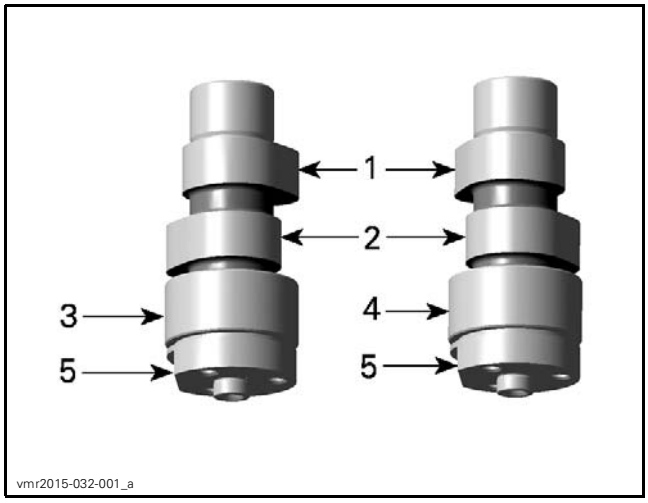

1. *Intake cam*
2. *Exhaust cam*
3. *Camshaft of cylinder 1*
4. *Camshaft of cylinder 2*
5. *Flat spot*

Removing the Camshaft

The removal procedure is the same for both camshafts.

NOTICE **Each camshaft is different in design. Thus, it is important not to mix up any parts of the camshaft assembly with that of the other cylinder. Keep parts as a group.**

Remove valve cover (see *VALVE COVER* in this subsection).

Refer to *TIMING CHAIN* subsection and remove the following parts:

– Timing chain tensioner
– Camshaft timing gear.

Remove the camshaft retaining plate.

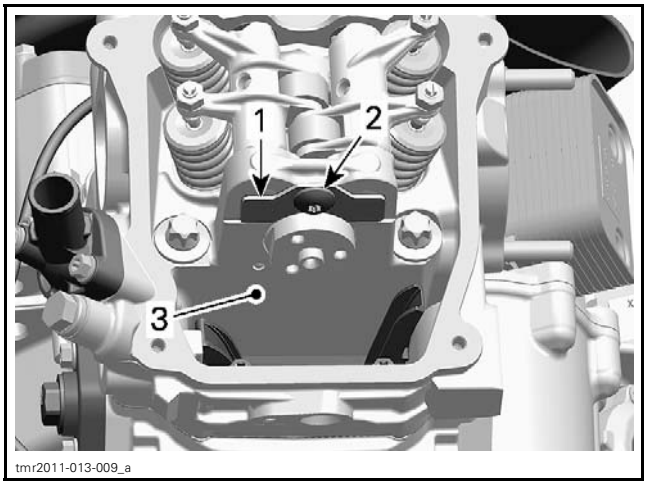

1. *Camshaft retaining plate*
2. *Pan head screw*
3. *Cylinder head*

Remove rocker arms (see *ROCKER ARM* in this subsection).

Remove the camshaft.

NOTE: For removal rotate camshaft so that intake/exhaust lobe shows to upper side of cylinder head.

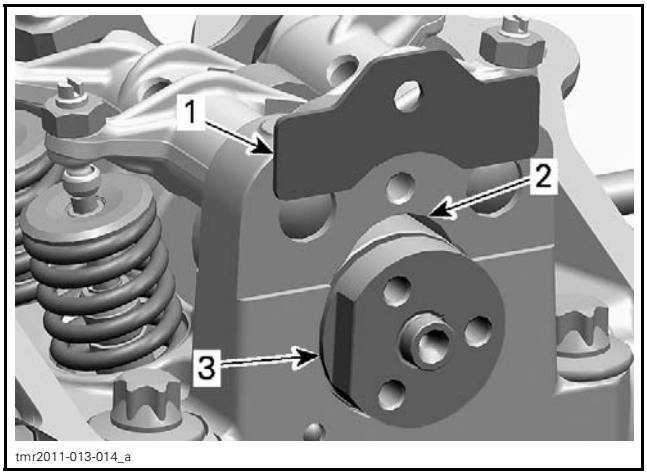

1. *Camshaft retaining plate*
2. *Area for camshaft lobes*
3. *Camshaft*

Inspecting the Camshaft

Inspecting the Camshaft Lobe

Check each lobe for scoring, scuffing, cracks or other signs of wear.

Measure camshaft lobe height using a micrometer.

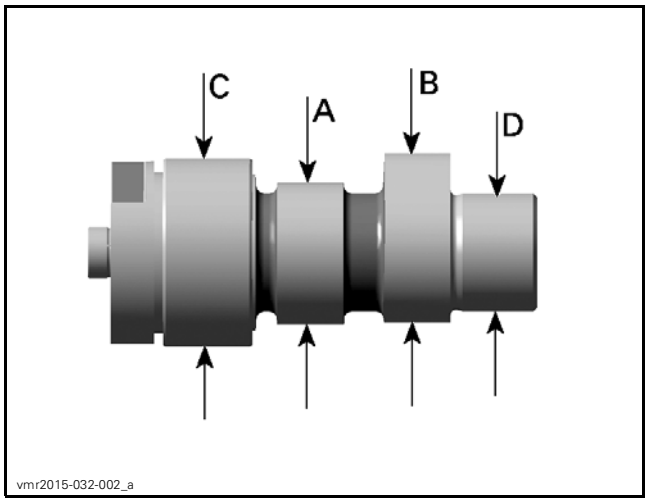

A. Camshaft lobe (exhaust valves)
B. Camshaft lobe (intake valves)
C. Camshaft journal (timing chain side)
D. Camshaft journal (spark plug side)

CAMSHAFT LOBE (EXHAUST)		
800R/HD8	New	31.730 mm to 31.930 mm (1.2492 in to 1.2571 in)
	Service limit	31.710 mm (1.2484 in)
1000/HD10	New	32.950 mm to 33.150 mm (1.2972 in to 1.3051 in)
	Service limit	32.930 mm (1.2965 in)

CAMSHAFT LOBE (INTAKE)		
800R/HD8	New	32.890 mm to 33.090 mm (1.2949 in to 1.3028 in)
	Service limit	32.870 mm (1.2941 in)
1000/HD10	New	32.960 mm to 33.160 mm (1.298 in to 1.306 in)
	Service limit	32.940 mm (1.297 in)

Measure camshaft bearing in cylinder head. Refer to *INSPECTING THE CYLINDER HEAD* in this subsection.

Inspecting the Camshaft Journal

Check each journal for scoring, scuffing, cracks or other signs of wear.

Measure camshaft journal using a micrometer.

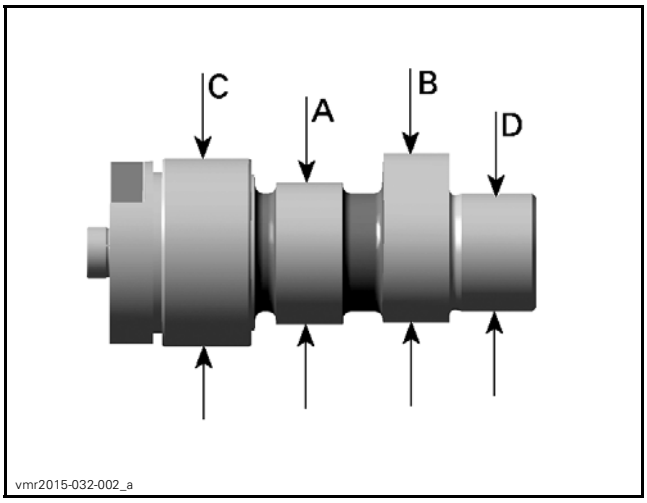

A. Camshaft lobe (exhaust valves)
B. Camshaft lobe (intake valves)
C. Camshaft journal (timing chain side)
D. Camshaft journal (spark plug side)

CAMSHAFT JOURNAL (TIMING CHAIN SIDE)	
NEW	34.959 mm to 34.975 mm (1.3763 in to 1.377 in)
SERVICE LIMIT	34.950 mm (1.376 in)

CAMSHAFT JOURNAL (SPARK PLUG SIDE)	
NEW	21.959 mm to 21.980 mm (.8645 in to .8654 in)
SERVICE LIMIT	21.950 mm (.8642 in)

Installing the Camshaft

The installation is the reverse of the removal procedure. However, pay attention to the following details.

NOTICE **The camshafts are not identical in design. Do not invert the camshafts during assembly. Any mix-up of the components will lead to engine damage.**

Place the camshaft retaining plate in the slot of the camshaft.

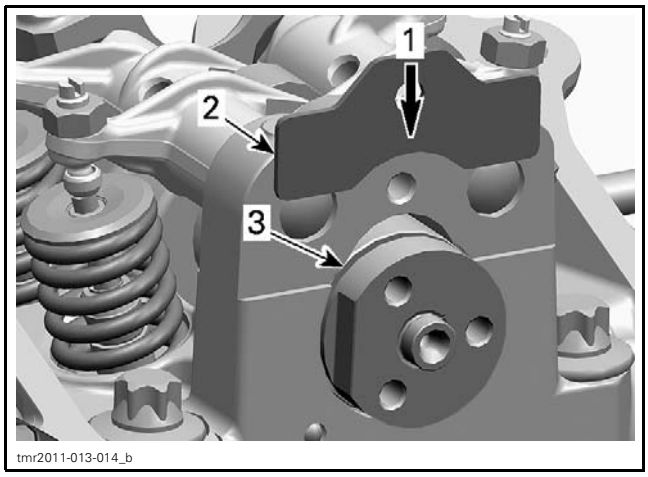

1. *Direction of movement*
2. *Camshaft retaining plate*
3. *Slot retaining camshaft*

For other parts, refer to proper installation procedure.

CYLINDER HEAD

Cylinder Head Access

Cylinder 1 (front)

The engine removal is required to work on cylinder 1.

Cylinder 2 (rear)

Simply open the cargo box.

Removing the Cylinder Head

Drain coolant. Refer to *VEHICLE COOLING SYSTEM* subsection.

NOTE: Before removing cylinder head, blow out remaining coolant by air pressure. During cylinder head removal, the remaining coolant in cylinder head could overflow into the engine and a little quantity of coolant could drop into the engine. In this case, the engine oil will be contaminated.

Disconnect spark plug wire.

Disconnect temperature sensor connector, located at rear cylinder head.

Remove the valve cover and its gasket (see *VALVE COVER* in this subsection).

Refer to *TIMING CHAIN* subsection and remove the following parts:

– Timing chain tensioner
– Camshaft timing gear.

First remove the M6 cylinder head screws, then the M10 cylinder head screws.

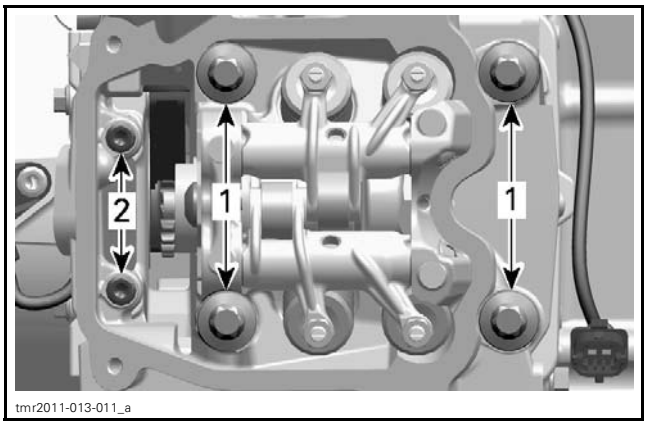

1. *Cylinder head screws M10*
2. *Cylinder head screws M6*

Pull up cylinder head.

Remove timing chain guide (fixed).

Remove and discard the cylinder head gasket.

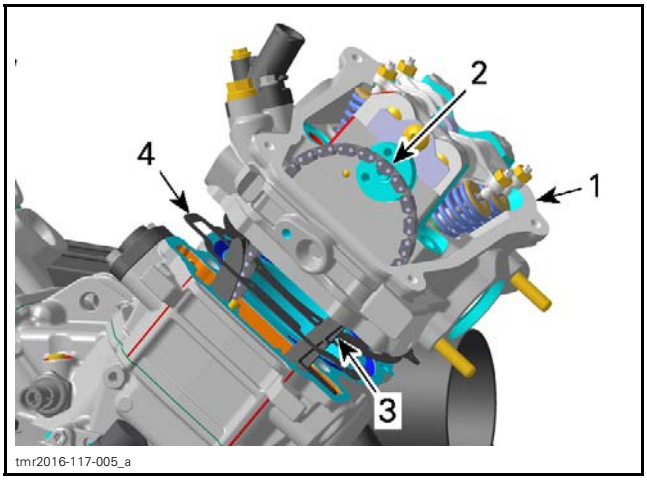

1. *Cylinder head*
2. *Timing chain*
3. *Chain guide (fixed)*
4. *Cylinder head gasket*

Inspecting the Cylinder Head

Inspect timing chain guide (fixed) for wear, cracks or other damages. Replace if necessary.

Check for cracks between valve seats, if so, replace cylinder head.

Check mating surface between cylinder and cylinder head for contamination. If so, clean both surfaces.

Clean oil support through the cylinder head from contamination.

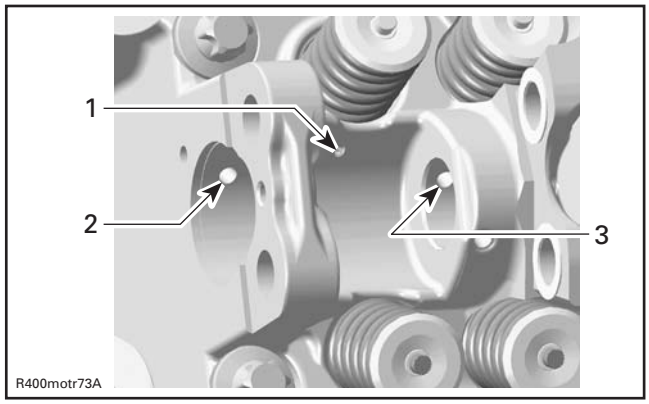

1. Oil port to lubricate camshaft lobes intake/exhaust
2. Oil supply to camshaft bearing journal (timing chain side)
3. Oil supply to camshaft bearing journal (spark plug side)

Inspecting the Cylinder Head Camshaft Bearing

Measure camshaft bearing in cylinder head.

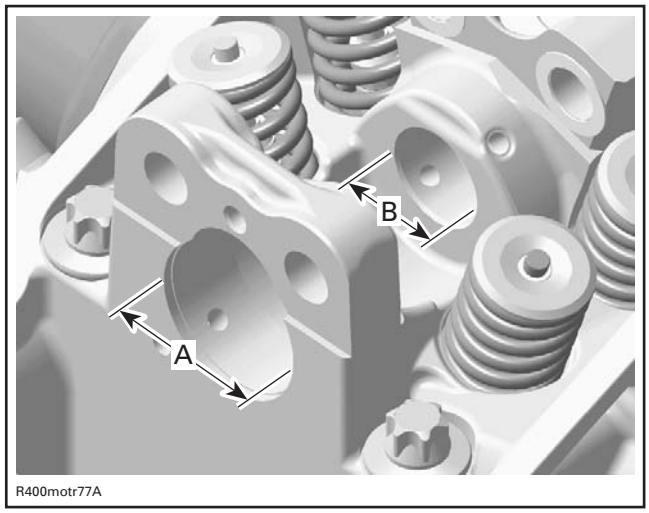

A. Camshaft bearing (timing chain side)
B. Camshaft bearing (spark plug side)

CAMSHAFT BEARING (TIMING CHAIN SIDE)	
New	35.000 mm to 35.025 mm (1.378 in to 1.3789 in)
Service limit	35.040 mm (1.3795 in)

CAMSHAFT BEARING (SPARK PLUG SIDE)	
New	22.000 mm to 22.021 mm (.8661 in to .867 in)
Service limit	22.040 mm (.8677 in)

Installing the Cylinder Head

NOTE: Never invert front and rear cylinder heads. On the **800R/HD8**, cylinder heads are not identical.

The installation is the reverse of the removal procedure. However, pay attention to the following details.

Ensure dowel pins are in place.

NOTICE **Timing chain guide (fixed) has to be fixed between cylinder and cylinder head.**

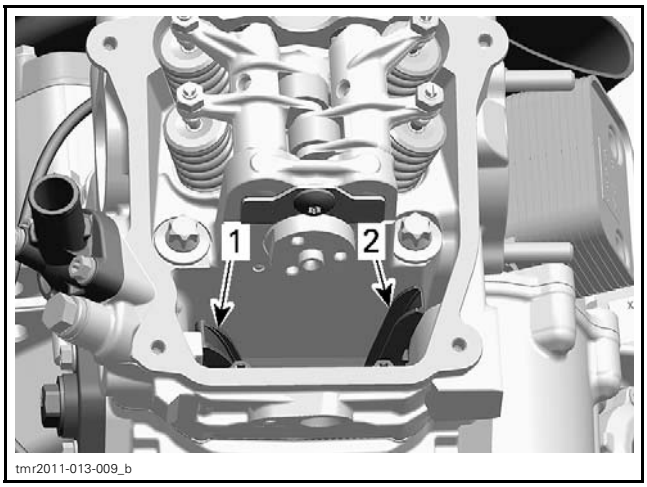

TYPICAL
1. Timing chain guide (tensioner side) mounted in crankcase
2. Timing chain guide (fixed) between cylinder and cylinder head

Install a NEW cylinder head gasket.

Install cylinder head screws in correct position.

NOTICE **Cylinder head screws have different sizes and lengths.**

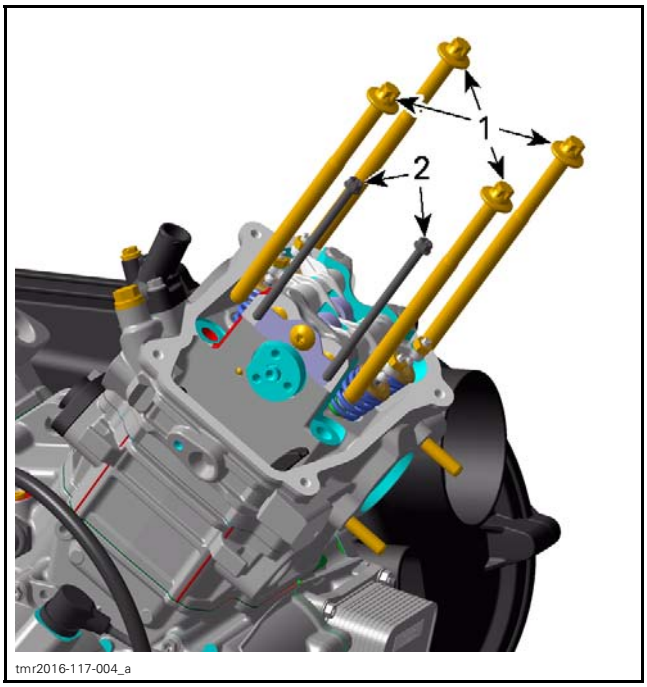

1. Location no. 1
2. Location no. 2

CYLINDER HEAD SCREW IDENTIFICATION		
800R/HD8	Location no. 1	M10 x 140
	Location no. 2	M6 x 85
1000/HD10	Location no. 1	M10 x 159
	Location no. 2	M6 x 105

Tighten M10 cylinder head screws FIRST as per following specifications.

NOTE: Always perform one step on all M10 cylinder head screws before going to the next step.

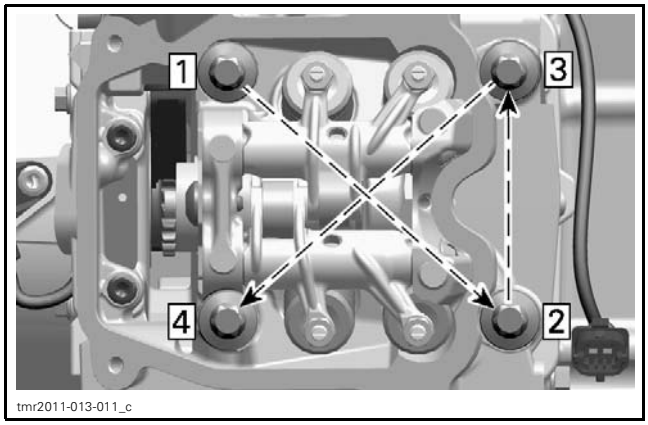

TIGHTENING SEQUENCE - M10 CYLINDER HEAD SCREWS

TIGHTENING TORQUE		
M10 Cylinder head screws	Step A	20 N•m ± 1 N•m (15 lbf•ft ± 1 lbf•ft)
	Step B	180° +/- 5°

Tighten M6 cylinder head screws as per following specification.

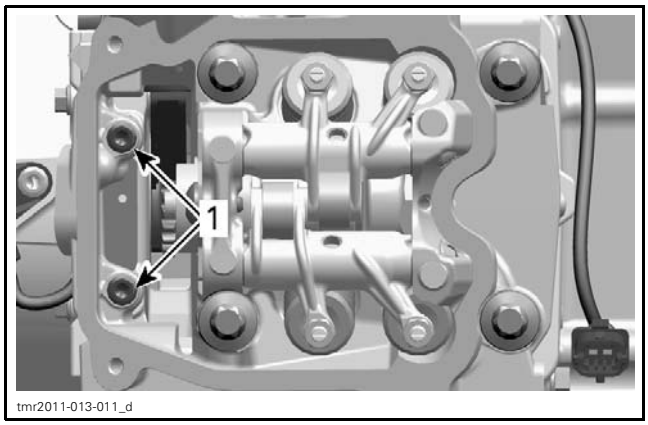

1. M6 Screws

TIGHTENING TORQUE	
M6 Cylinder head screws	10 N•m ± 1 N•m (89 lbf•**in** ± 9 lbf•**in**)

Check timing chain guide (tensioner side) for movement.

On cylinder 1, install the plenum bracket, refer to *INTAKE MANIFOLD* subsection.

VALVE SPRINGS

Removing the Valve Spring

Refer to following procedures in this subsection to remove:

– *CAMSHAFT*

– *CYLINDER HEAD*.

Compress valve spring.

REQUIRED TOOL	
VALVE SPRING COMPRESSOR (P/N 529 035 724)	
VALVE SPRING COMPRESSOR CUP (P/N 529 035 764)	

⚠ WARNING

Be careful when unlocking valves. Components could fly away because of the strong spring preload.

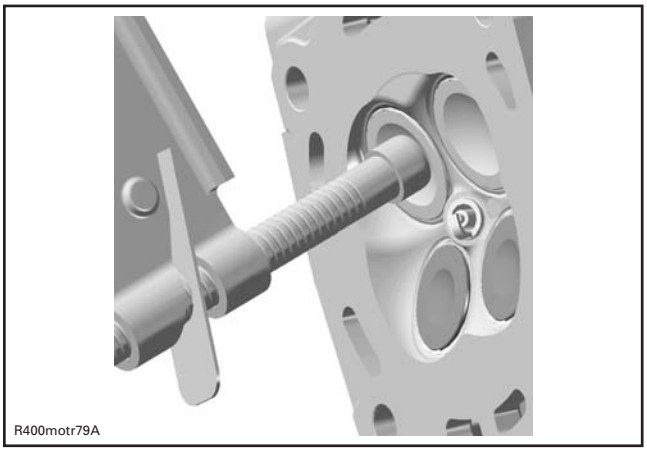

LOCATE VALVE SPRING COMPRESSOR CLAMP IN CENTER OF THE VALVE

Remove valve cotters.

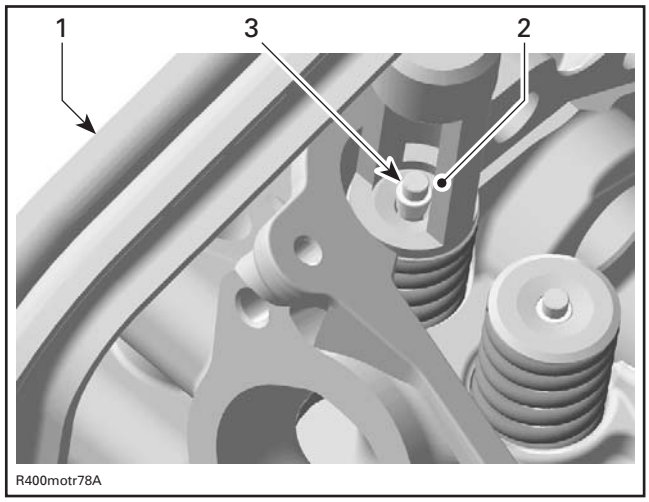

1. *Valve spring compressor clamp*
2. *Valve spring compressor cup*
3. *Valve cotter*

Remove tools and withdraw valve spring retainer and valve spring.

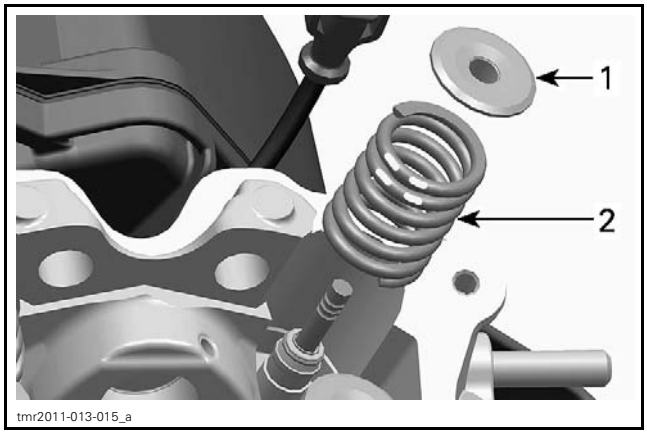

1. *Valve spring retainer*
2. *Valve spring*

Inspecting the Valve Spring

Check valve spring for visible damage. If so, replace valve spring.

Check valve spring for free length and straightness.

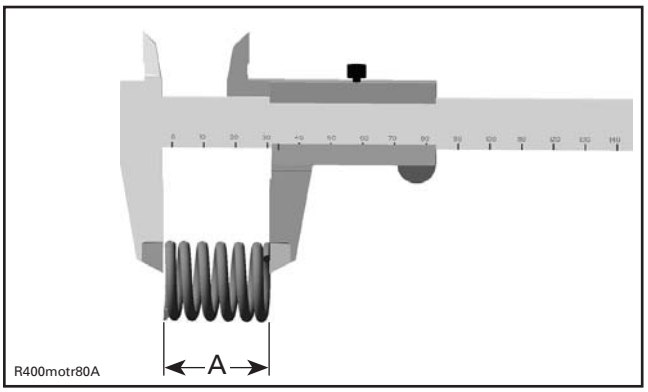

A. Valve spring length

VALVE SPRING FREE LENGTH	
New	40.81 mm (1.607 in)
Service limit	39.00 mm (1.535 in)

Replace valve springs if not within specifications.

Installing the Valve Spring

The installation is the reverse of the removal procedure. However, pay attention to the following details.

Colored area of the valve spring must be placed on top.

To ease installation of cotters, apply oil or grease on them so that they remain in place while releasing the spring.

NOTE: Valve cotter must be properly engaged in valve stem grooves.

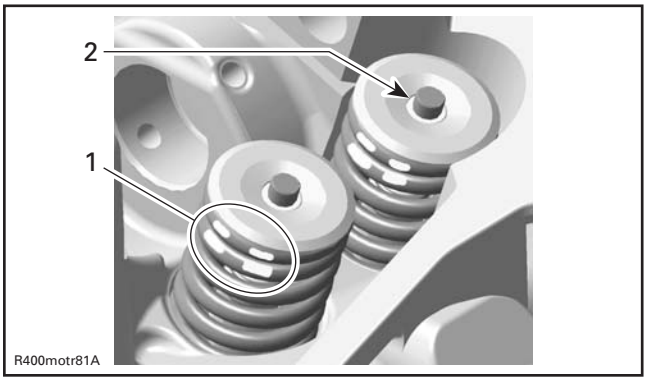

1. *Position of the valve spring*
2. *Valve cotter*

After spring is installed, ensure it is properly locked by tapping on valve stem end with a soft hammer so that valve opens and closes a few times.

NOTICE **An improperly locked valve spring will cause engine damage.**

VALVES

Removing the Valve

Remove valve spring, see *VALVE SPRING* in this subsection.

Push valve stem, then pull valves (intake and exhaust) out of valve guide.

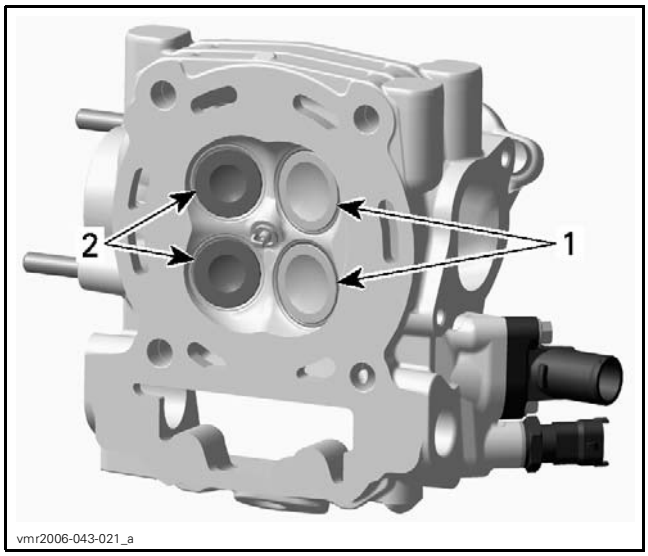

1. Intake valves 31 mm
2. Exhaust valves 27 mm

Remove valve stem seal using special pliers and discard it.

Inspecting the Valve

Whenever valves are removed always inspect valve guides. Refer to *VALVE GUIDES* in this subsection.

Valve Stem Seal

Always install **NEW** seals whenever valves are removed.

Valve

Inspect valve surface, check for abnormal stem wear and bending. If out of specification, replace by a new one.

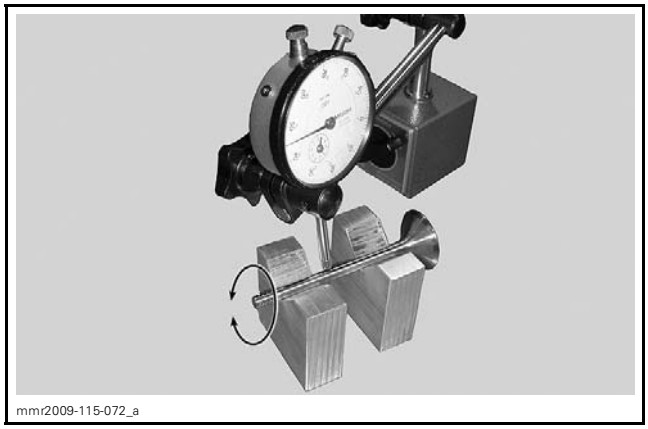

VALVE OUT OF ROUND (INTAKE AND EXHAUST VALVES)	
New	0.005 mm (.0002 in)
Service limit	0.06 mm (.0024 in)

Valve Stem

Measure valve stem in three places using a micrometer.

Replace valve if valve stem is out of specification or has other damages such as wear or friction surface.

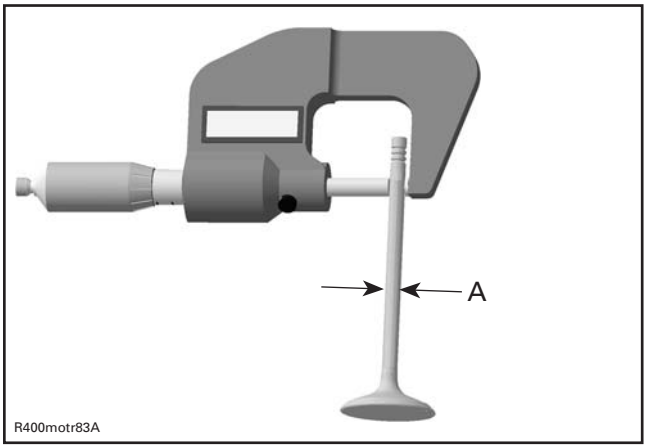

A. Valve stem diameter

VALVE STEM DIAMETER	
EXHAUST VALVE	
NEW	4.956 mm to 4.970 mm (.1951 in to .1957 in)
SERVICE LIMIT	4.930 mm (.1941 in)
INTAKE VALVE	
NEW	4.966 mm to 4.980 mm (.1955 in to .1961 in)
SERVICE LIMIT	4.930 mm (.1941 in)

Valve Face and Seat

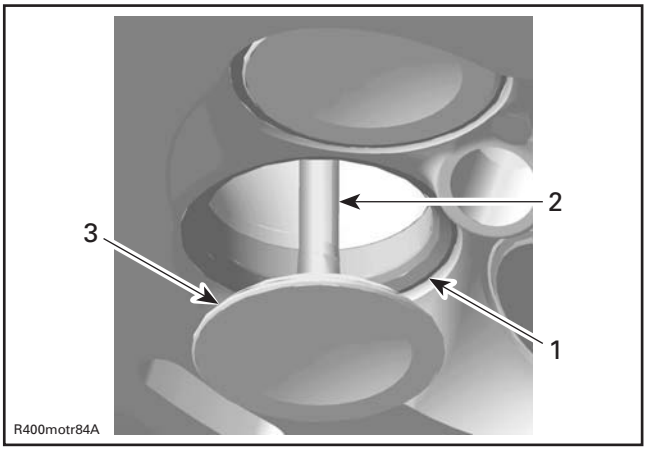

1. *Valve seat*
2. *Exhaust valve contaminated area*
3. *Valve face (contact surface to valve seat)*

Check valve face and seat for burning or pittings and replace valve or cylinder head if there are signs of damage.

Ensure to seat valves properly. Apply some lapping compound to valve face and work valve on its seat with a lapping tool (see *VALVE GUIDES* in this subsection).

Measure valve face contact width.

NOTE: The location of contact area should be in center of valve seat.

Measure valve seat width using a caliper.

VALVE SEAT CONTACT WIDTH	
EXHAUST VALVE	
NEW	1.25 mm to 1.55 mm (.049 in to .061 in)
SERVICE LIMIT	2.00 mm (.079 in)
INTAKE VALVE	
NEW	1.05 mm to 1.35 mm (.041 in to .053 in)
SERVICE LIMIT	1.80 mm (.071 in)

If valve seat contact width is too wide or has dark spots, replace the cylinder head.

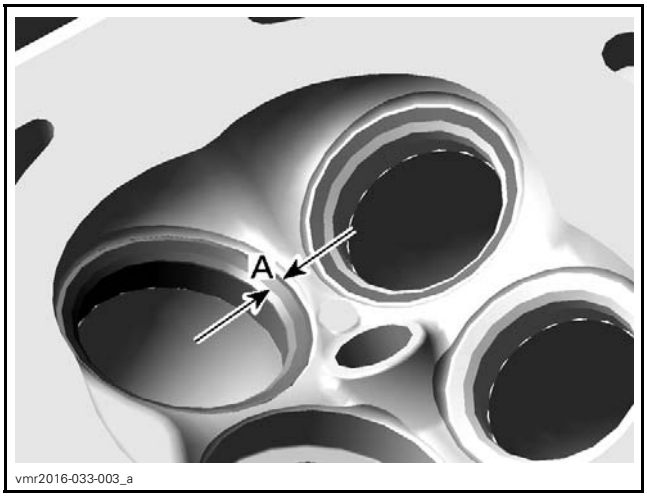

A. Valve face contact width

Installing the Valve

The installation is the reverse of the removal procedure. However, pay attention to the following details.

Install a NEW valve stem seal. Make sure thrust washer is installed before installing seal.

Apply engine oil on valve stem and install it.

NOTICE **Be careful when valve stem is passed through sealing lips of valve stem seal.**

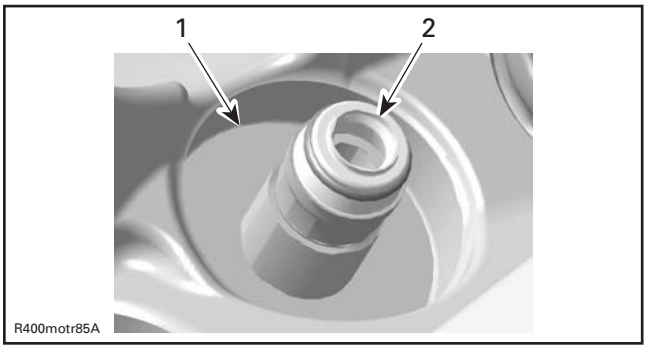

1. *Thrust washer*
2. *Sealing lips of valve stem seal*

To ease installation of cotters, apply oil or grease on them so that they remain in place while releasing the spring.

After spring is installed, ensure it is properly locked by tapping on valve stem end with a soft hammer so that valve opens and closes a few times.

NOTICE **An improperly locked valve spring will cause engine damage.**

VALVE GUIDES

Inspecting the Valve Guide

Always replace valve stem seals whenever valve guides are removed.

Measure valve guide in three places using a small bore gauge.

NOTE: Clean valve guide to remove carbon deposits before measuring.

Replace valve guide if it is out of specification or has other damages such as wear or friction surface.

VALVE GUIDE DIAMETER (INTAKE AND EXHAUST VALVES)	
New	4.998 mm to 5.018 mm (.1968 in to .1976 in)
Service limit	5.050 mm (.1988 in)

Removing the Valve Guide

Refer to following procedures in this subsection to remove:

– Cylinder head
– Valves.

NOTE: Clean valve guide area from contamination before removal.

Drive the valve guide out of cylinder head.

REQUIRED TOOL	
Hammer	
VALVE GUIDE REMOVER 5 MM (P/N 529 035 924)	

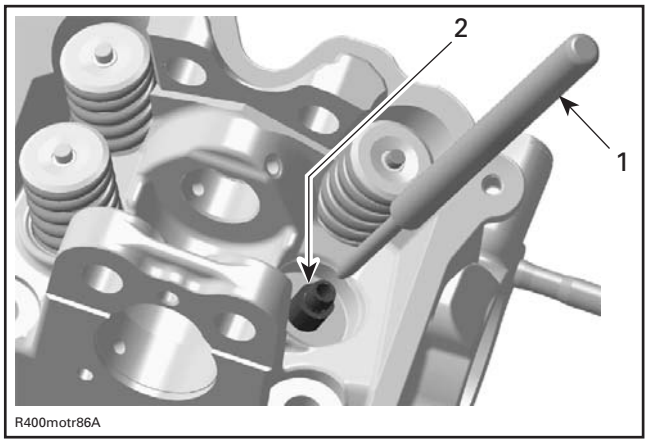

1. Valve guide remover
2. Valve guide

Installing the Valve Guide

The installation is the reverse of the removal procedure. However, pay attention to the following details.

Clean the valve guide bore before reinstalling the valve guide into cylinder head.

Apply an antiseize lubricant on the valve guide.

RECOMMENDED SERVICE PRODUCT
LOCTITE 767 (ANTISEIZE LUBRICANT) (P/N 293 800 070)

Install valve guide.

REQUIRED TOOL	
VALVE GUIDE INSTALLER (P/N 529 036 140)	

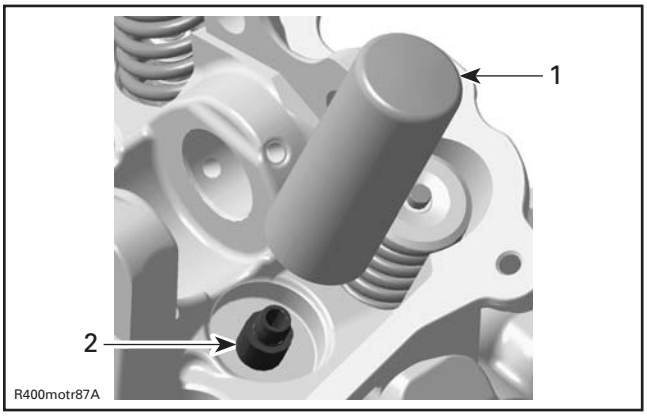

1. Valve guide installer
2. Valve guide

NOTICE **Push valve guide in the cold cylinder head as per following illustration.**

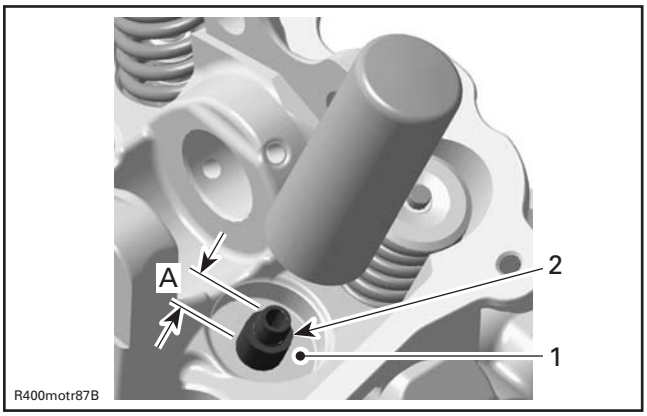

1. Thrust surface of cylinder head
2. Valve guide
A. Measurement from thrust surface to valve guide top

VALVE GUIDE (MEASUREMENT "A")	
New	14.00 mm to 14.40 mm (.5512 in to .5669 in)

Apply some lapping compound to valve face and work valve on its seat with a lapping tool.

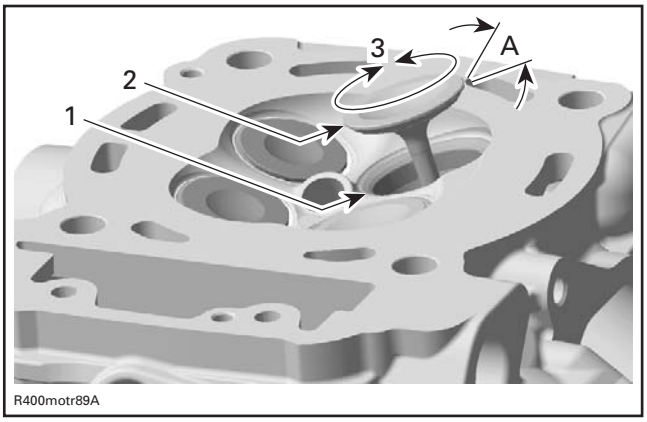

1. *Valve seat*
2. *Valve face (contact surface to valve seat)*
3. *Turn valve while pushing against cylinder head*

A. *Valve seat angle 45°*

NOTE: Ensure to seat valves properly. Apply marking paste to ease checking contact pattern.

Repeat procedure until valve seat/valve face fits together.

CYLINDER

Removing the Cylinder

Refer to *TIMING CHAIN* subsection and remove the following parts:

– Timing chain tensioner
– Camshaft timing gear.

Remove the cylinder head (see *CYLINDER HEAD* in this subsection).

Pull cylinder.

Discard cylinder base gaskets.

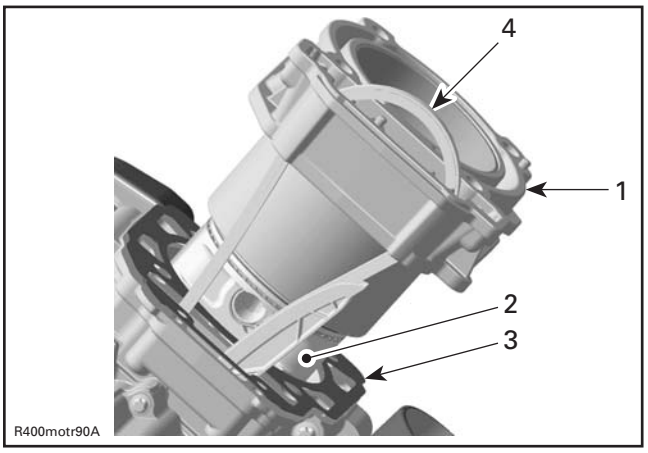

1. *Cylinder*
2. *Piston assembly*
3. *Cylinder base gasket*
4. *Camshaft timing chain*

Inspecting the Cylinder

Check cylinder for cracks, scoring and wear ridges on the top and bottom of the cylinder. If so, replace cylinder.

Cylinder Taper

Measure cylinder bore at 3 recommended positions.

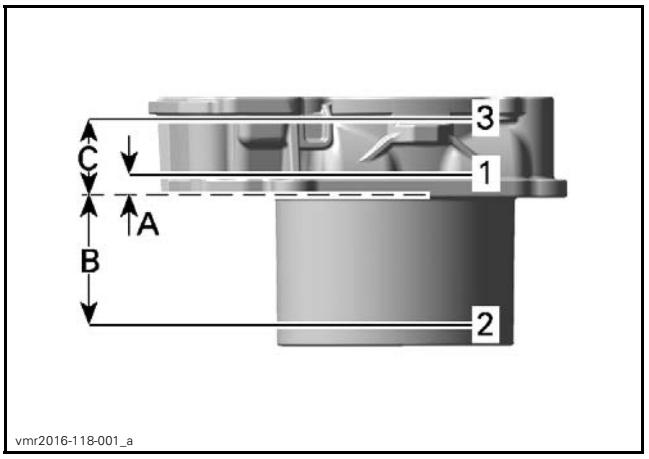

A. *First measurement (from cylinder bottom)*
B. *Second measurement*
C. *Third measurement*

CYLINDER TAPER MEASUREMENTS		
ENGINE	MEASUREMENT	SPECIFICATION
800R/HD8	A	5 mm (.197 in)
	B	58 mm (2.283 in)
	C	37 mm (1.457 in)
1000/HD10	A	5 mm (.197 in)
	B	53 mm (2.087 in)
	C	57 mm (2.244 in)

CYLINDER TAPER SPECIFICATION	
New	0.038 mm (.0015 in)
Service liimit	0.090 mm (.0035 in)

Distance between measurements should not exceed the service limit mentioned above. Otherwise, replace cylinder and piston rings.

Cylinder Out of Round

Measure cylinder diameter:
- in piston axis
- perpendicular to piston pin axis.

NOTE: Use the same measuring points as described in *CYLINDER TAPER*.

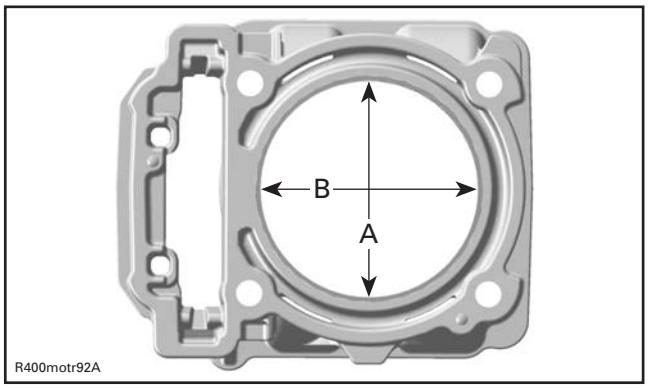

A. Perpendicular to crankshaft axis
B. Parallel to crankshaft axis

CYLINDER OUT OF ROUND	
New - maximum	0.015 mm (.0006 in)
Service limit	0.020 mm (.0008 in)

Installing the Cylinder

The installation is the reverse of the removal procedure. However, pay attention to the following details.

NOTICE **Always replace cylinder base gasket before installing the cylinder.**

NOTE: Make sure piston rings are properly spaced, refer to *PISTON RINGS* in this subsection.

Apply engine oil:
- In the bottom area of the cylinder bore
- On the piston rings
- On the compressor tool.

Compress piston rings.

REQUIRED TOOL	
PISTON RING COMPRESSOR (P/N 529 035 919)	

First mount cylinder 2.

NOTE: The cylinder can not be pushed fully over the piston unless the piston is located at TDC.

Then remove the CRANKSHAFT LOCKING BOLT (P/N 529 035 617).

Crank the engine further and position piston 1 at TDC.

Mount cylinder 1.

Put timing chain through the chain pit then put the cylinder in place.

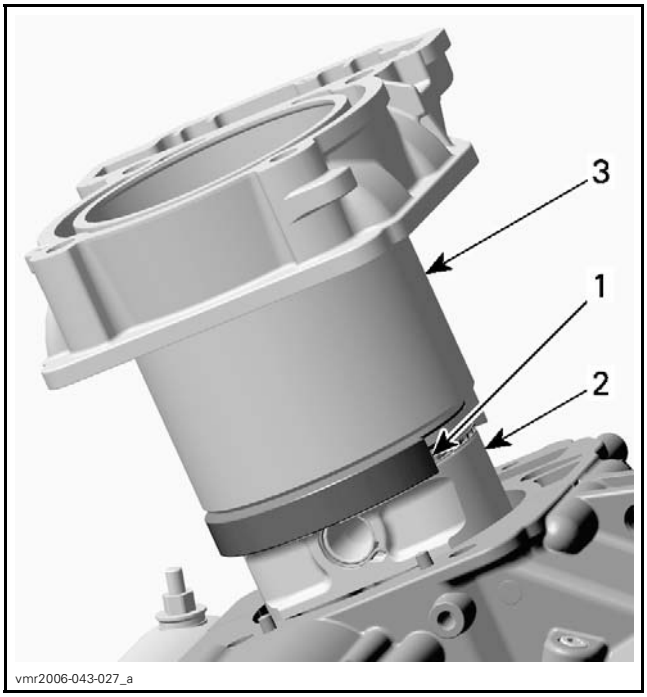

1. Piston ring compressor tool
2. Piston
3. Cylinder

NOTICE **Chain guide has to be fixed between cylinder and cylinder head.**

NOTE: After both cylinders are installed, turn crankshaft until piston of cylinder 2 is at TDC and lock crankshaft. Refer to *CRANKSHAFT* in the *CYLINDER BLOCK* subsection.

Install cylinder head and the other parts in accordance with the proper installation procedures.

PISTON

Removing the Piston

Refer to following procedures in this subsection to remove:

– Cylinder head
– Cylinder.

Place a rag under piston and in the area of timing chain compartment.

⚠ WARNING

Piston circlips are spring loaded.

Remove one piston circlip and discard it.

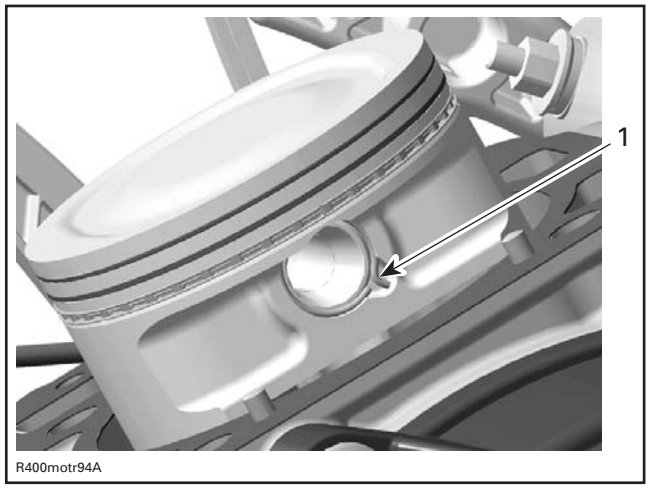

1. Piston circlip

NOTE: The removal of both piston circlips is not necessary to remove piston pin.

Push piston pin out of piston.

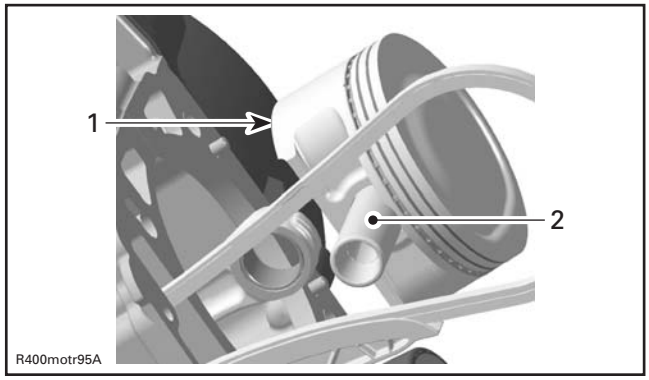

1. Piston
2. Piston pin

Detach piston from connecting rod.

Inspecting the Piston

Inspect piston for scoring, cracking or other damages. Replace piston and piston rings if necessary.

Using a micrometer, measure piston at 8 mm (.315 in) perpendicularly (90°) to piston pin.

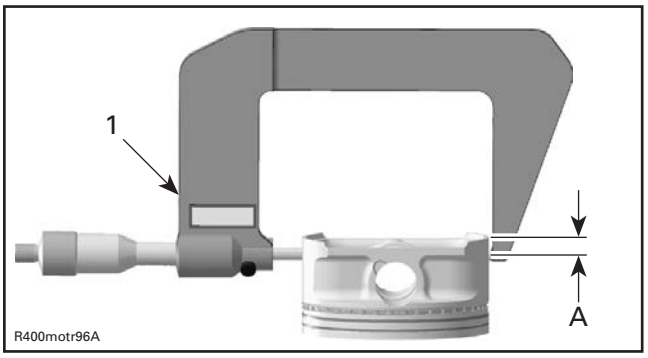

1. Measuring perpendicularly (90°) to piston pin
A. 8 mm (.315 in)

The measured dimension should be as described in the following tables. If not, replace piston.

PISTON MEASUREMENT	
New	90.950 mm to 90.966 mm (3.5807 in to 3.5813 in)
Service limit	90.850 mm (3.577 in)

Piston/Cylinder Clearance

Adjust and lock a micrometer to the piston dimension.

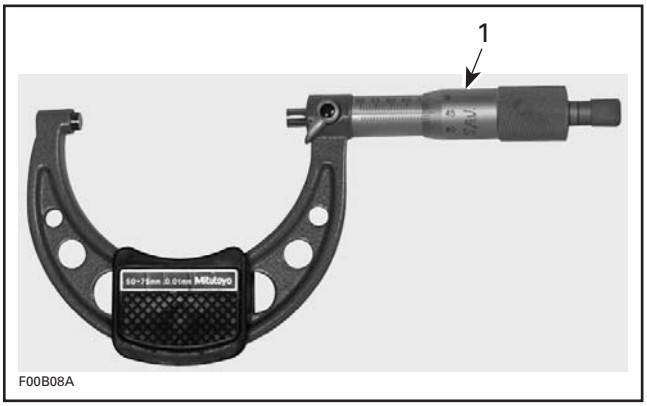

1. Micrometer set to the piston dimension

With the micrometer set to the dimension, adjust a cylinder bore gauge to the micrometer dimension and set the indicator to 0 (zero).

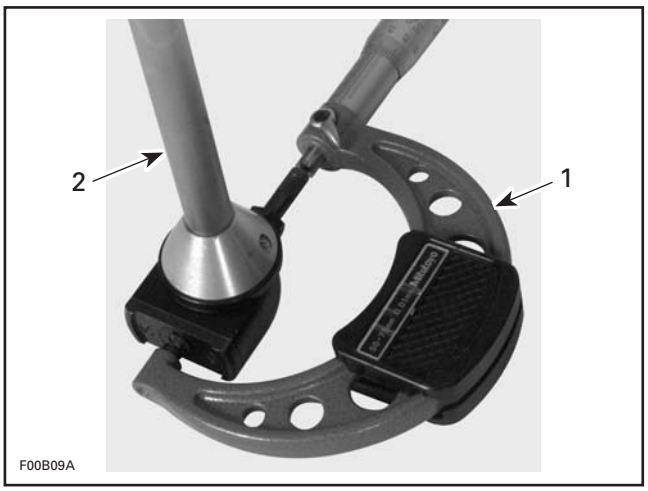

1. Use the micrometer to set the cylinder bore gauge
2. Dial bore gauge

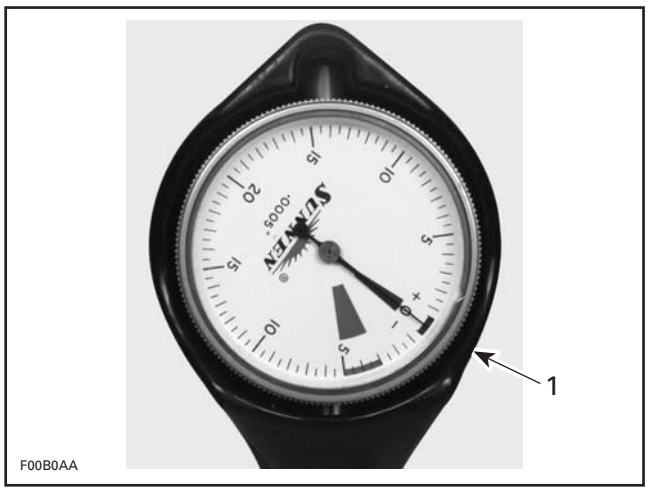

TYPICAL
1. Indicator set to 0 (zero)

Position the dial bore gauge 20 mm (.787 in) above cylinder base, measuring perpendicularly (90°) to piston pin axis.

Read the measurement on the cylinder bore gauge. The result is the exact piston/cylinder wall clearance.

PISTON/CYLINDER CLEARANCE	
New	0.027 mm to 0.057 mm (.0011 in to .0022 in)
Service limit	0.100 mm (.0039 in)

NOTE: Make sure used piston is not worn.

If clearance exceeds specified tolerance, replace piston by a new one and measure piston/cylinder clearance again.

NOTE: Make sure the cylinder bore gauge indicator is set exactly at the same position as with the micrometer, otherwise the reading will be false.

Connecting Rod/Piston Pin Clearance

Using synthetic abrasive woven, clean piston pin from deposits.

Inspect piston pin for scoring, cracking or other damages.

Measure piston pin. See the following illustration for the proper measurement positions.

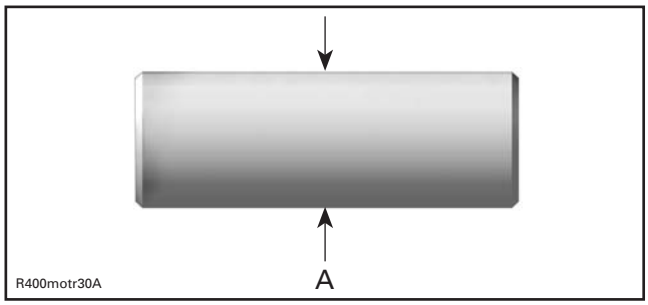

A. Piston pin diameter

PISTON PIN DIAMETER	
800R/HD8	
NEW	19.996 mm to 20.000 mm (.7872 in to .7874 in)
SERVICE LIMIT	19.980 mm (.7866 in)
1000/HD10	
NEW	21.996 mm to 22.000 mm (.866 in to .8661 in)
SERVICE LIMIT	21.980 mm (.8654 in)

Replace piston pin if diameter is out of specifications.

Measure inside diameter of connecting rod small end bushing.

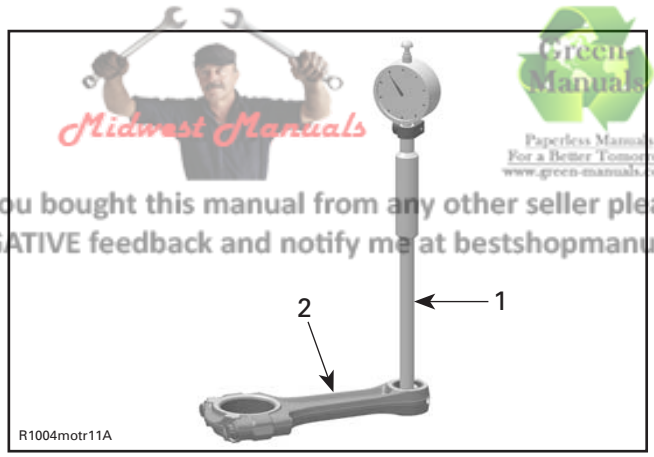

Midwest Manuals
Green Manuals
Paperless Manuals For a Better Tomorrow www.green-manuals.com
If you bought this manual from any other seller please leave them NEGATIVE feedback and notify me at bestshopmanuals@gmail.com

1. Bore gauge
2. Connecting rod

CONNECTING ROD SMALL END DIAMETER	
800R/HD8	
NEW	20.010 mm to 20.020 mm (.7878 in to .7882 in)
SERVICE LIMIT	20.060 mm (.7898 in)
1000/HD10	
NEW	22.010 mm to 22.020 mm (.8665 in to .8669 in)
SERVICE LIMIT	22.050 mm (.8681 in)

Replace connecting rod if diameter of connecting rod small end is out of specifications. Refer to *BOTTOM END* subsection for removal procedure.

Compare measurements to obtain the connecting rod/piston pin clearance.

CONNECTING ROD/ PISTON PIN CLEARANCE	
Service limit	0.080 mm (.0031 in)

Installing the Piston

The installation is the reverse of the removal procedure. However, pay attention to the following details.

Apply engine oil on the piston pin.

Insert piston pin into piston and connecting rod.

For each cylinder, install piston with the punched arrow on piston dome is pointing toward the rear side of the engine.

Front cylinder: Mark on top of piston must show to intake side.

Rear cylinder: Mark on top of piston must show to exhaust side.

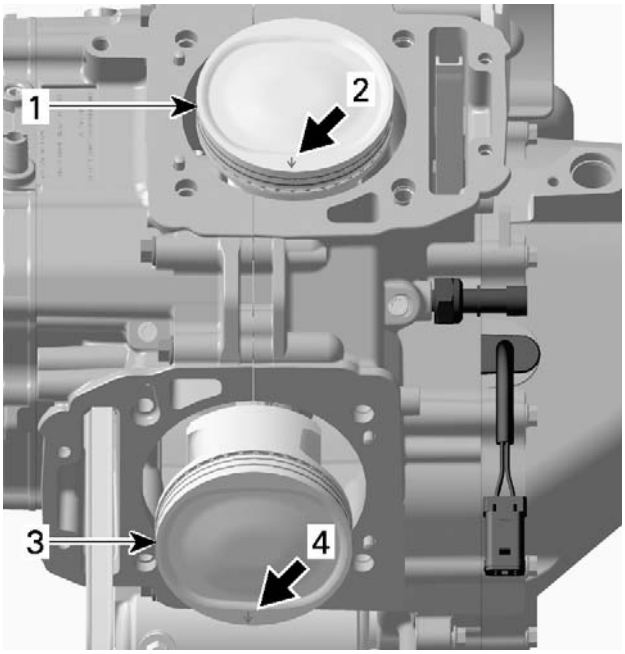

vmr2006-043-029_a

1. *Piston of cylinder 1*
2. *Mark on piston must show to intake side of cylinder 1*
3. *Piston of cylinder 2*
4. *Mark on piston must show to exhaust side of cylinder 2*

Use the piston appropriate circlip installer to assemble the NEW piston circlip as per following procedure:

REQUIRED TOOLS	
800R/HD8	PISTON CIRCLIP INSTALLER (P/N 529 035 921)
1000/HD10	PISTON CIRCLIP INSTALLER (P/N 529 036 153)

vmr2006-043-030

TYPICAL

NOTICE **Always replace disassembled piston circlip(s) by NEW ones. Place a rag on cylinder base to avoid dropping the circlip inside the engine.**

Place circlip in sleeve as per following illustration.

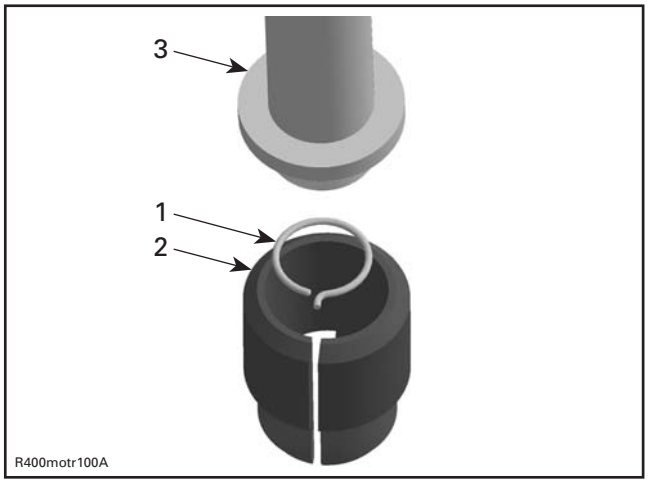

1. *Circlip*
2. *Sleeve*
3. *Assembly jig from piston clip installer*

Push taper side of assembly jig until circlip reaches middle of sleeve.

Align sleeve with piston pin axis and push assembly jig until circlip engages in piston.

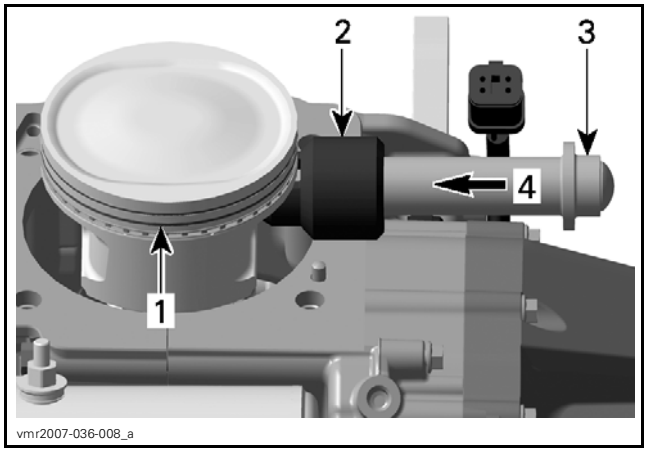

1. *Hold piston while pushing circlip in place*
2. *Sleeve*
3. *Assembly jig*
4. *Direction to push circlip*

NOTE: Take care that the hook of the piston circlip is positioned properly.

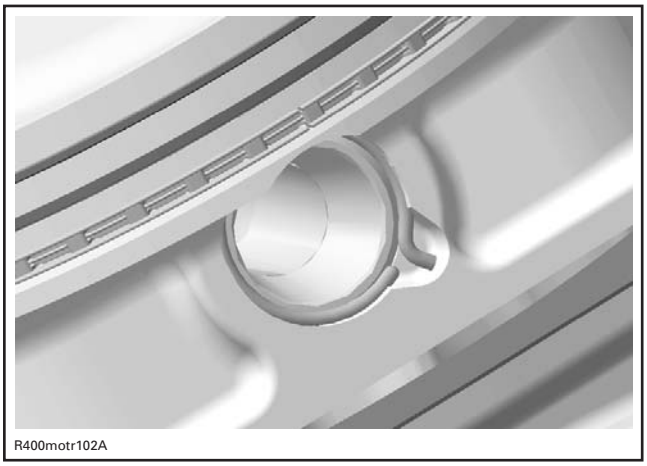

CORRECT POSITION OF THE PISTON CIRCLIP

PISTON RINGS

Removing the Ring

Remove the piston (see *PISTON* in this subsection).

Inspecting the Ring

Ring/Piston Groove Clearance

Using a feeler gauge measure each ring/piston groove clearance. If the clearance is too large, the piston and the piston rings should be replaced.

RING/PISTON GROOVE CLEARANCE	
UPPER COMPRESSION RING	
NEW	0.03 mm to 0.07 mm (.0012 in to .0028 in)
SERVICE LIMIT	0.150 mm (.0059 in)
LOWER COMPRESSION RING	
NEW	0.02 mm to 0.06 mm (.0008 in to .0024 in)
SERVICE LIMIT	0.150 mm (.0059 in)
OIL SCRAPER RING	
NEW	0.01 mm to 0.18 mm (.0004 in to .0071 in)
SERVICE LIMIT	0.250 mm (.0098 in)

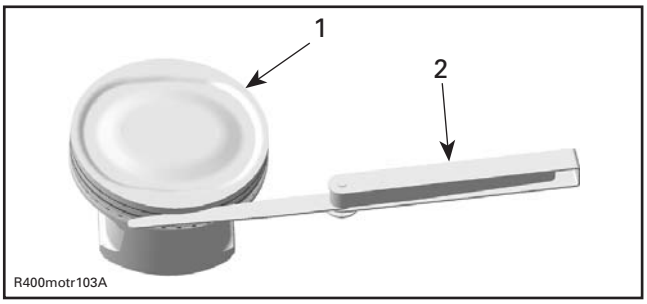

1. *Piston*
2. *Feeler gauge*

Ring End Gap

RING END GAP	
UPPER COMPRESSION RING	
NEW	0.20 mm to 0.40 mm (.008 in to .016 in)
SERVICE LIMIT	0.60 mm (.024 in)
LOWER COMPRESSION RING	
NEW	0.20 mm to 0.40 mm (.008 in to .016 in)
SERVICE LIMIT	0.70 mm (.028 in)
OIL SCRAPER RING	
NEW	0.20 mm to 0.70 mm (.008 in to .028 in)
SERVICE LIMIT	1.00 mm (.039 in)

To measure the ring end gap place the ring in the cylinder in the area of 8 mm to 16 mm (5/16 in to 5/8 in) from top of cylinder.

NOTE: In order to correctly position the ring in the cylinder, use piston as a pusher.

Using a feeler gauge, check ring end gap. Replace ring if gap exceeds above described specified tolerance.

Installing the Ring

The installation is the reverse of the removal procedure. However, pay attention to the following details.

Use a ring expander to prevent breakage during installation. The oil ring must be installed by hand.

First install spring and then rings of oil scraper ring.

Install the oil scraper ring first, then the lower compression ring with the word "N and TOP " facing up, then the upper compression ring with the word "N and TOP" facing up.

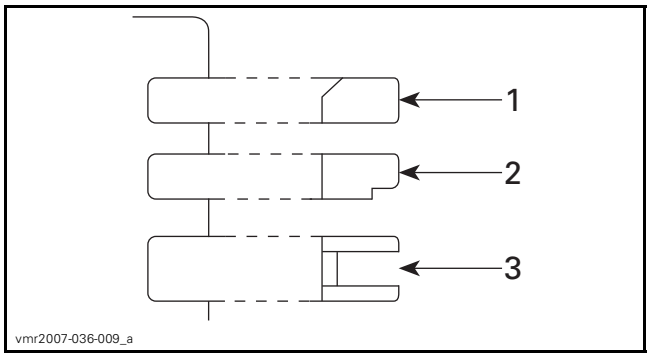

1. *Upper compression ring*
2. *Lower compression ring*
3. *Oil scraper ring*

NOTICE **Ensure that top and second rings are not interchanged.**

Check that rings rotate smoothly after installation.

Space the piston ring end gaps 120° apart and do not align the gaps with the piston pin bore or the thrust side axis.

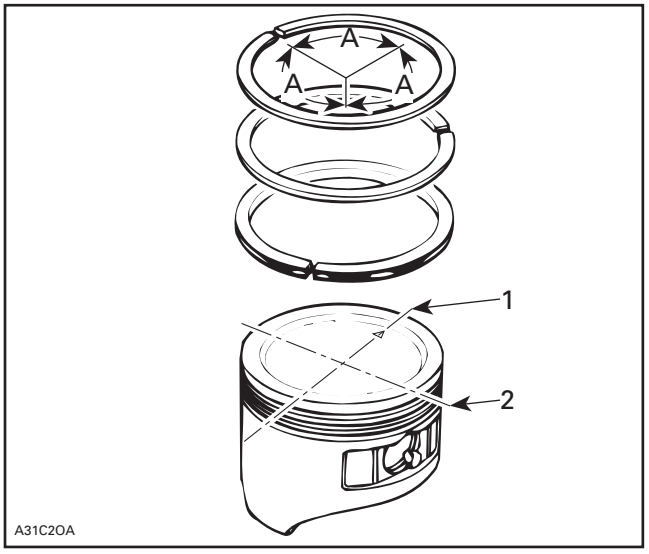

1. *DO NOT align ring gap with piston thrust side axis*
2. *DO NOT align ring gap with piston pin bore axis*

A. *120°*

CYLINDER HEAD

SERVICE TOOLS

Description	Part Number	Page
DIAL INDICATOR ADAPTER	529 036 159	6
ENGINE LEAK DOWN TEST KIT	529 035 661	7
PISTON CIRCLIP INSTALLER	529 036 153	23
PISTON RING COMPRESSOR	529 035 919	20
TDC DIAL INDICATOR	414 104 700	6
VALVE GUIDE INSTALLER	529 036 269	18
VALVE GUIDE REMOVER (6 MM)	529 036 074	18
VALVE SPRING COMPRESSOR CUP	529 036 270	14
VALVE SPRING COMPRESSOR	529 035 724	14

SERVICE PRODUCTS

Description	Part Number	Page
LOCTITE 243 (BLUE)	293 800 060	12
LOCTITE 767 (ANTI-SEIZE LUBRICANT)	293 800 070	18

CYLINDER HEAD NO. 1

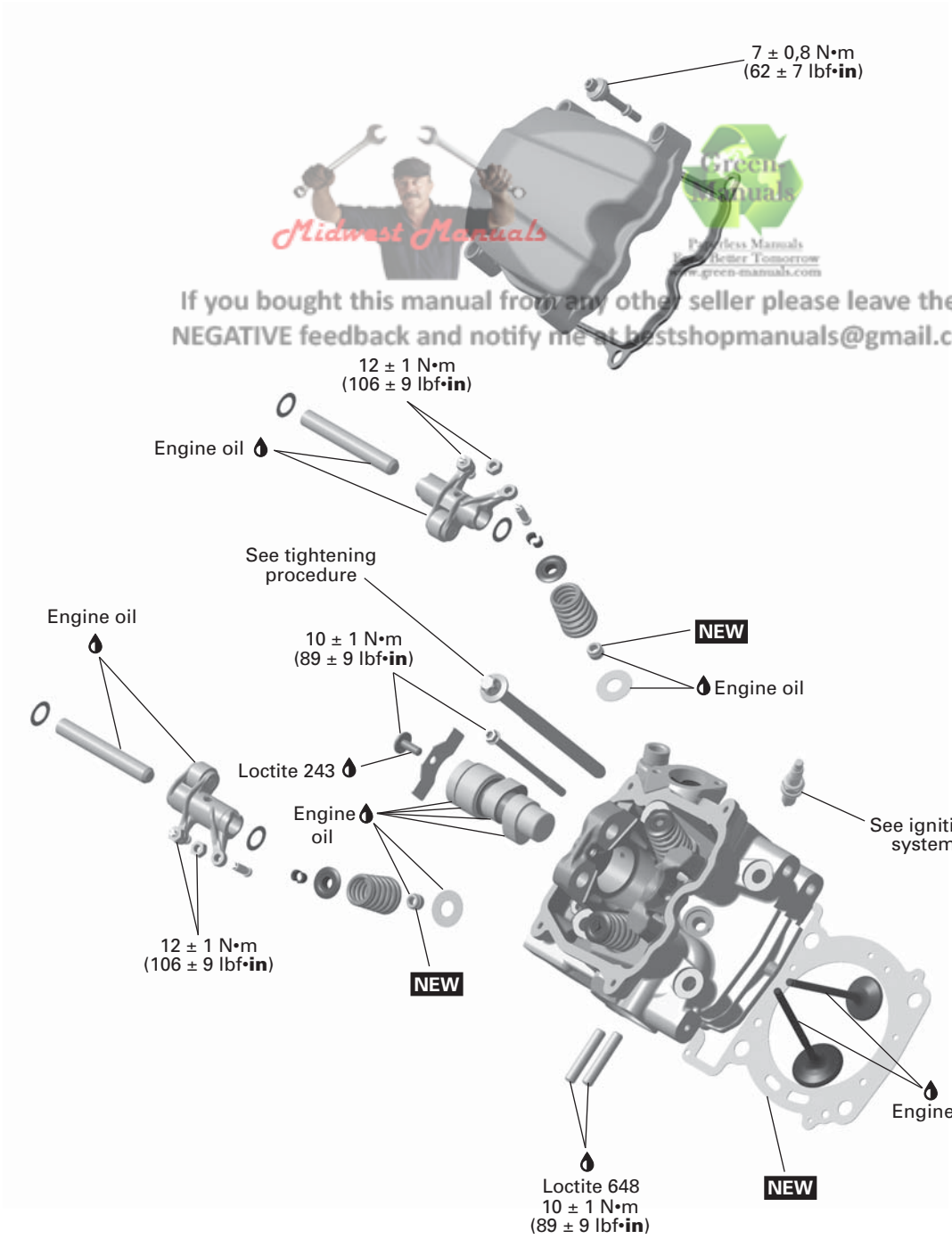

Midwest Manuals
Green Manuals
If you bought this manual from any other seller please leave them NEGATIVE feedback and notify me at bestshopmanuals@gmail.com

NEW = Component must be replaced when removed.

tmr2013-068-001_b

CYLINDER HEAD NO. 2

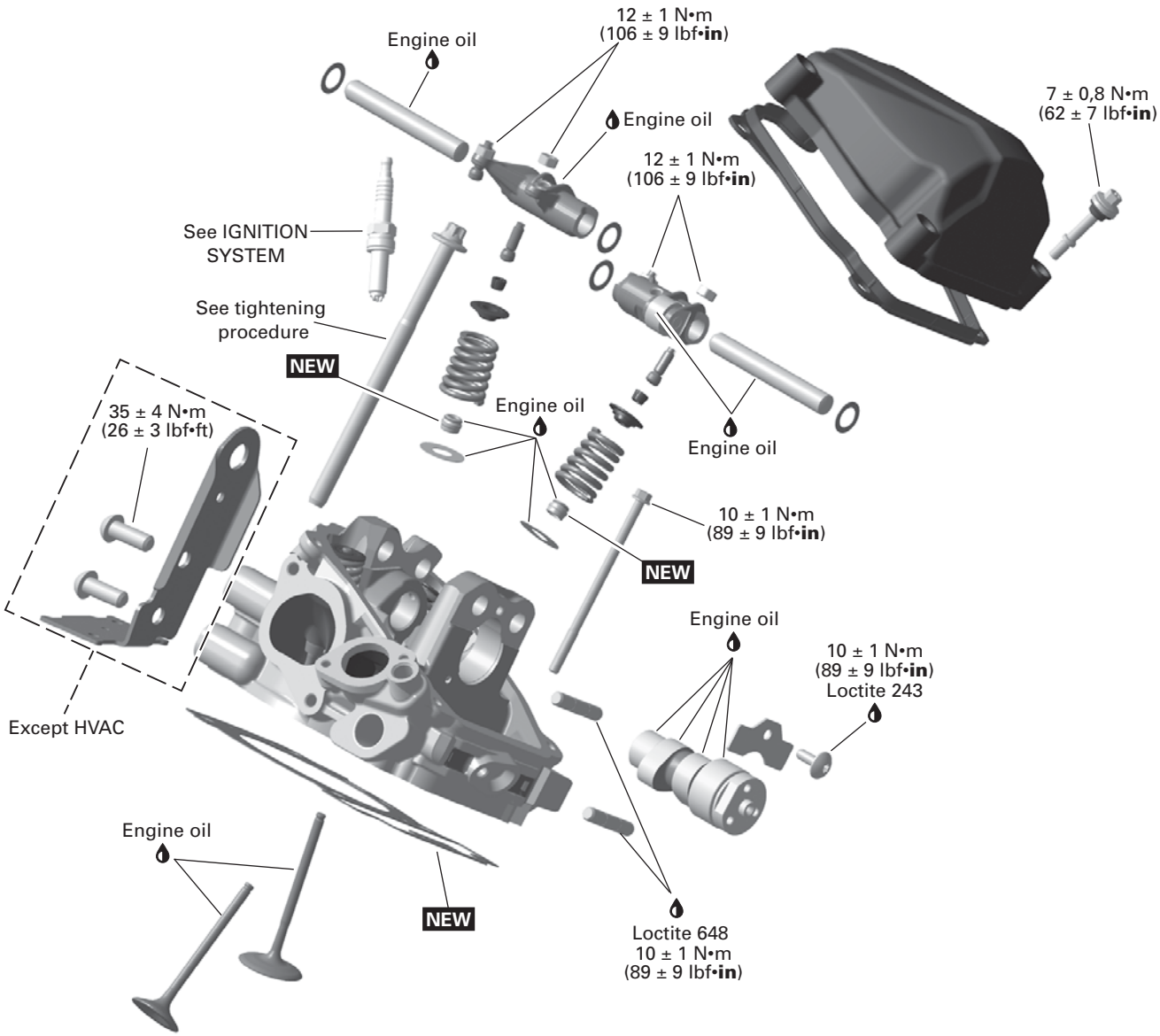

NEW = Component must be replaced when removed.

RTX20_1010HO-005-001_a

CYLINDERS AND PISTONS

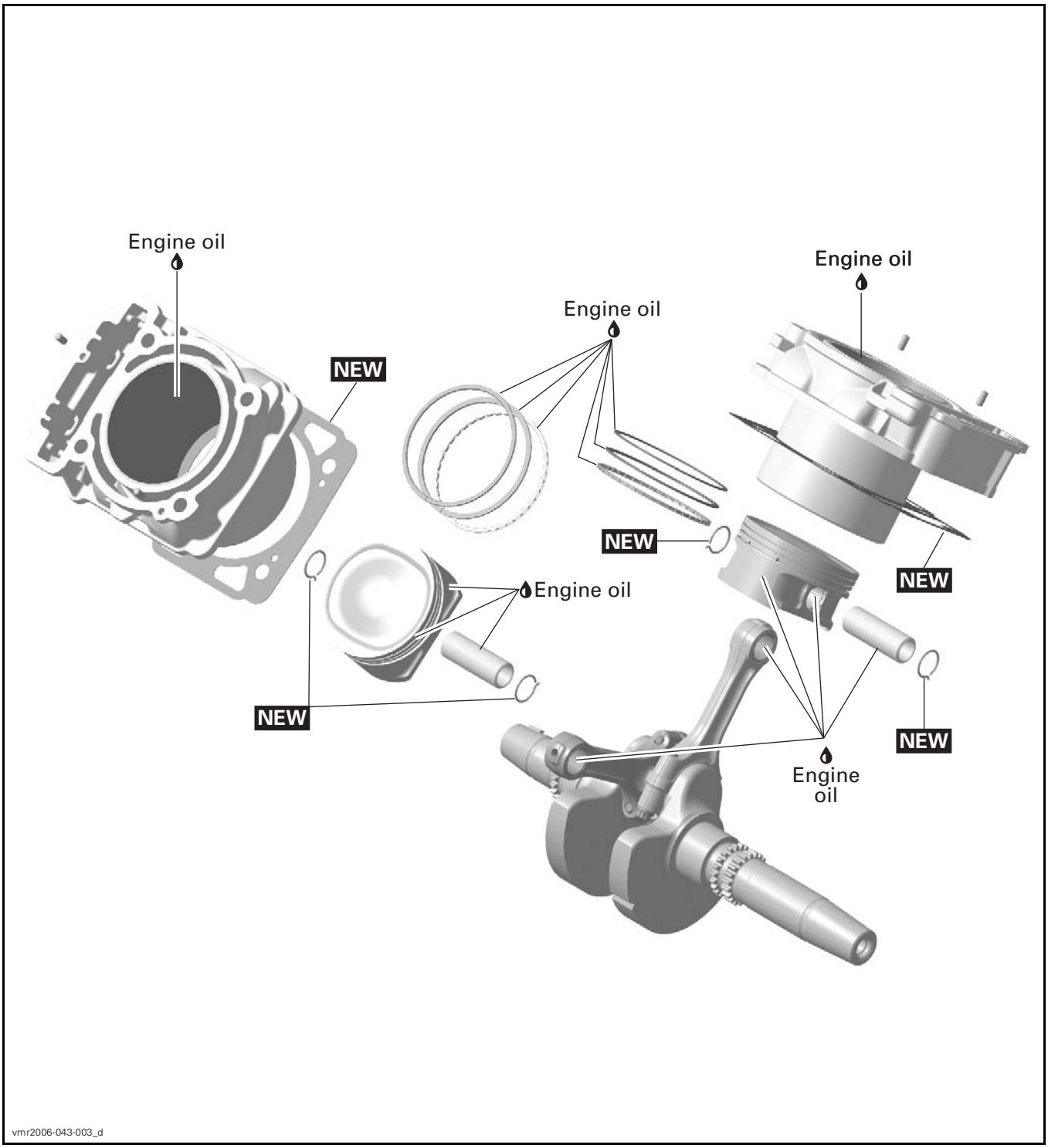

GENERAL

Special reference are made in the text for procedures which are different for cylinder no. 1 and cylinder no. 2.

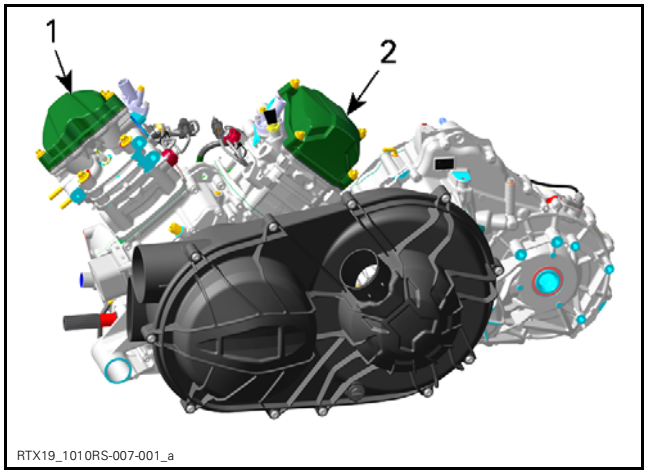

1. *Cylinder 1 (front)*
2. *Cylinder 2 (rear)*

When diagnosing an engine problem, always perform a cylinder leak test.

NOTE: Even though the following procedures do not require the engine removal, many illustrations show the engine out of the vehicle for more clarity.

IMPORTANT: Note position of parts on disassembly. This may help to find the root cause of a problem. A component that is not replaced should be reinstalled in the same position as originally mounted.

MAINTENANCE

INSPECTING AND ADJUSTING THE ENGINE VALVE CLEARANCE

NOTE: Check and adjust valve clearance only when engine is cold.

Remove valve covers, refer to procedure in this subsection.

Turn crankshaft to TDC ignition of the respective cylinder, refer to *CAMSHAFT TIMING GEAR* in the *TIMING CHAIN* subsection.

Using feeler gauge, check the valve clearance.

VALVE CLEARANCE	
EXHAUST	0.11 mm to 0.19 mm (.0043 in to .0075 in)
INTAKE	0.06 mm to 0.14 mm (.0024 in to .0055 in)

If the valve clearance is out of specification, adjust valves as follows.

NOTE: Use mean value of exhaust/intake to ensure a proper valve adjustment.

Hold the adjustment screw at the proper position and tighten the locking nut.

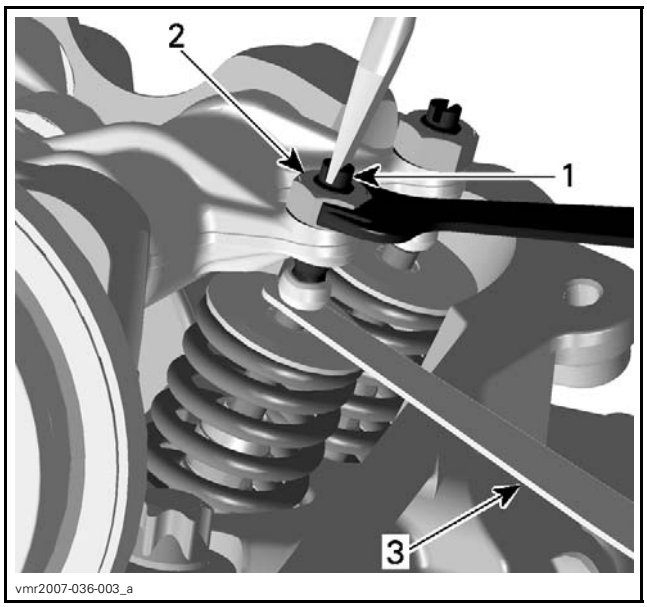

1. *Adjustment screw*
2. *Locking nut*
3. *Feeler gauge*

Repeat the procedure for each valve.

Before installing valve covers, recheck valve clearance.

INSPECTION

LEAK TEST

Before performing the cylinder leak test, verify the following:

– Clamp(s) tightness
– Radiator and hoses.

NOTE: For best accuracy, the leak test should be done with the engine at normal operating temperature.

⚠ WARNING

Prevent burning yourself on hot engine parts.

Preparation

Disconnect battery.

NOTICE **Always disconnect BLACK (-) cable first.**

Remove radiator cap.

⚠ WARNING

To prevent burning yourself only remove the radiator cap by wearing the appropriate safety equipment.

Unplug spark plug cable.

Clean spark plug area and remove spark plug from cylinder head.

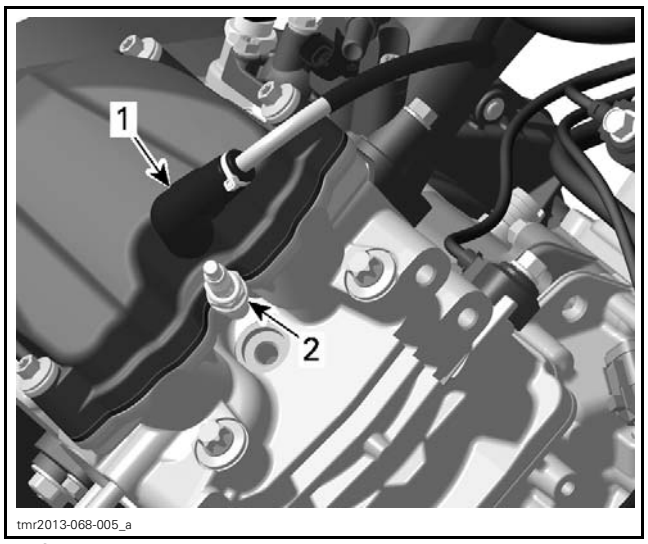

1. *Spark plug cable*
2. *Spark plug*

Remove valve cover.

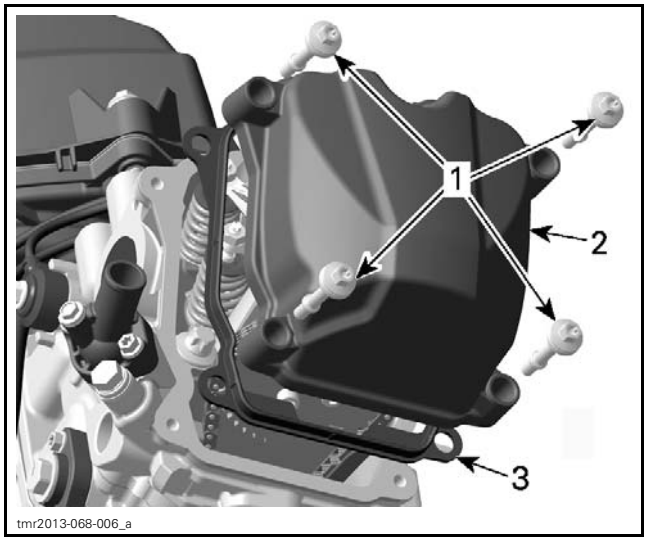

1. *Valve cover screws*
2. *Valve cover*

Rotate crankshaft until piston is at TDC ignition.

To turn crankshaft, there are two possible procedures.

First Procedure

Turn the drive pulley.

Second Procedure

1. Remove plug screw with O-ring from magneto cover.
2. Use a 14 mm Allen key and turn crankshaft.

NOTICE **Turn only clockwise to avoid loosening of magneto flywheel Allen screw.**

Set the piston to precisely TDC ignition. For proper procedure refer to *CAMSHAFT TIMING* in the *TIMING CHAIN* subsection.

NOTE: If engine is removed from vehicle a dial indicator can be used.

REQUIRED TOOL	
TDC DIAL INDICATOR (P/N 414 104 700)	
DIAL INDICATOR ADAPTER (P/N 529 036 159)	

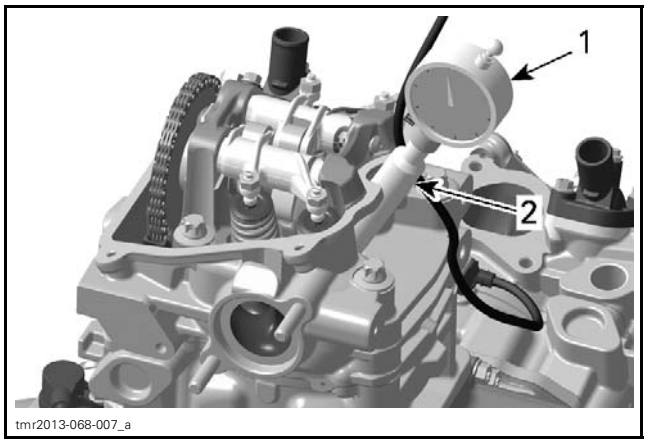

1. *TDC dial indicator*
2. *Dial indicator adapter*

NOTE: If a dial indicator is not available, use a screwdriver or another similarly suitable tool.

NOTICE **Do not scratch or damage piston/cylinder surface.**

NOTE: At TDC ignition the marks on the camshaft timing gear have to be parallel to cylinder head base as per following illustration.

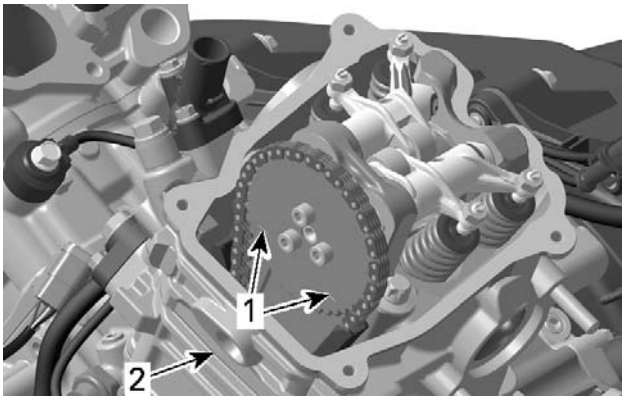

tmr2013-068-008_a

1. *Marks on camshaft timing gear*
2. *Cylinder head base*

Leak Test

REQUIRED TOOL	
ENGINE LEAK DOWN TEST KIT (P/N 529 035 661)	

Connect leak tester to adequate air supply.

Set needle of measuring gauge to zero.

NOTE: All testers have specific instructions on gauge operation and required pressure.

Install gauge adapter into previously cleaned spark plug hole.

Supply combustion chamber with air pressure.

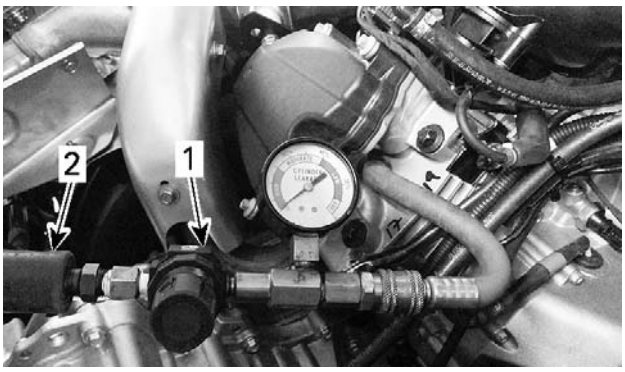

tmr2016-117-201_a

TYPICAL
1. *Leak tester*
2. *Air supply hose*

Note the amount or percentage of leakage (depending on tester).

LEAKAGE PERCENTAGE	ENGINE CONDITION
0% to 15%	Excellent condition
16% to 25%	Good condition
26% to 40%	Fair condition; reduced engine performance
41% and higher	Poor condition, diagnose and repair engine

NOTE: To make sure there is no false reading due to a valves not perfectly seated, tap each valve adjustment screw (on the rocker) using a soft hammer.

Diagnosis

Listen for air leaks.

- Air escaping in intake port/throttle body means leaking intake valve(s).
- Air escaping in exhaust port means leaking exhaust valve(s).
- Air bubbles in the coolant (radiator) means leaking cylinder head gasket.
- Air/coolant escaping from cylinder/head means damaged gasket(s) and/or loosened screws.
- Air escaping into crankcase area means excessively worn cylinder and/or broken piston rings.
- Air/oil escaping from crankcase means damaged gasket and/or loosened screws (refer to *CYLINDER BLOCK* subsection).

NOTE: For all the checkpoints mentioned above, see the appropriate engine section to diagnose and repair the engine.

Reassembly

Reverse the preparation procedure. Ensure to respect torque values and use of appropriate products/lubricants. Refer to exploded views in other subsections of this manual as required.

PROCEDURES

VALVE COVER

Valve Cover Access

Cylinder 1 (front)

Remove the engine service cover located on the rear bulkhead.

Cylinder 2 (rear)

Remove the cargo box module. Refer to *BODY* subsection.

Removing the Valve Cover

Remove:
- Valve cover screws
- Valve cover
- Gasket.

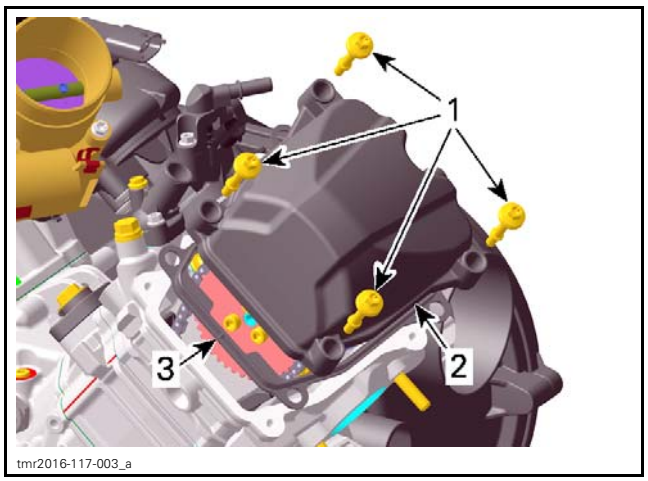

1. *Valve cover screws*
2. *Valve cover*
3. *Gasket*

Repeat the procedure for the other valve cover if required.

Inspecting the Valve Cover

Check the gasket on the valve cover if it is brittle, cracked or hard. If so, replace the gasket.

Installing the Valve Cover

The installation is the reverse of the removal procedure. However, pay attention to the following.

Tighten valve cover retaining screws to specified torque in a criss-cross sequence.

TIGHTENING TORQUE	
Valve cover screws	7 N•m ± 0.8 N•m (62 lbf•**in** ± 7 lbf•**in**)

ROCKER ARM

Removing the Rocker Arm

Remove valve cover.

Refer to *TIMING CHAIN* subsection and remove the following parts:
- Timing chain tensioner
- Camshaft timing gear.

Remove pan head screw and camshaft retaining plate.

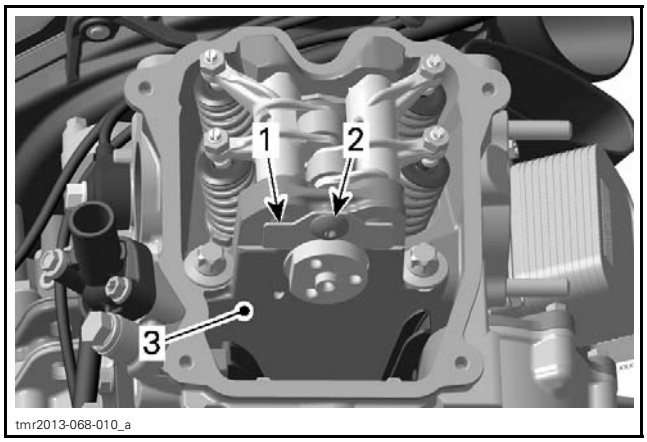

1. *Camshaft retaining plate*
2. *Pan head screw*
3. *Cylinder head*

Remove rocker arm shafts.

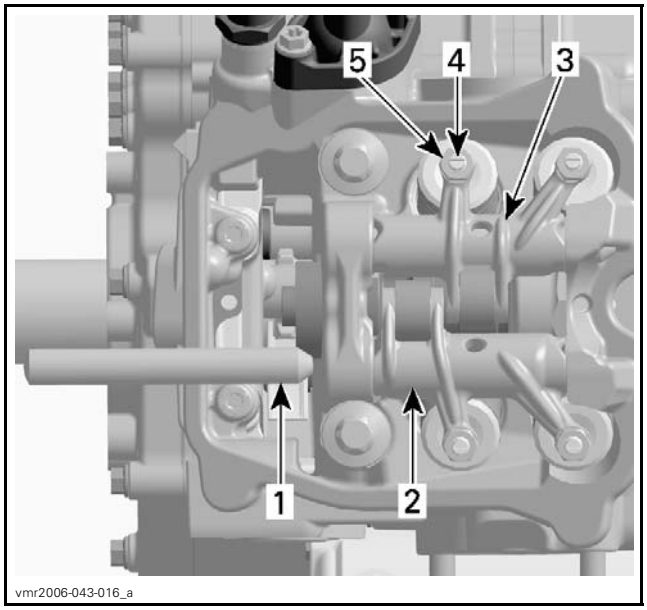

1. *Rocker arm shaft*
2. *Rocker arm (exhaust side)*
3. *Rocker arm (intake side)*
4. *Adjustment screw*
5. *Lock nut*

Remove rocker arm assembly (exhaust side and intake side) with adjustment screws and lock nuts.

Remove thrust washers.

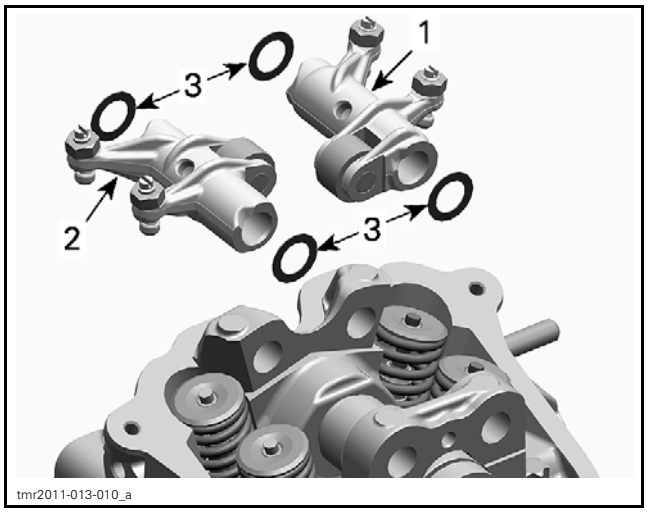

1. *Rocker arm (exhaust side)*
2. *Rocker arm (intake side)*
3. *Thrust washers*

NOTICE Pay attention not to lose thrust washers or drop them into the timing chain compartment.

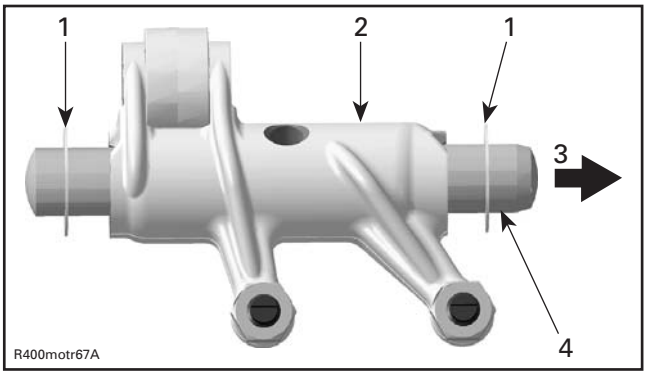

1. *2 thrust washers*
2. *Rocker arm (exhaust side)*
3. *Cylinder head (spark plug side)*
4. *Big taper to spark plug side*

Inspecting the Rocker Arm

Inspect each rocker arm for cracks and scored friction surfaces. If so, replace rocker arm assembly.

Check the rocker arm rollers for free movement, wear and excessive radial play. Replace rocker arm assembly if necessary.

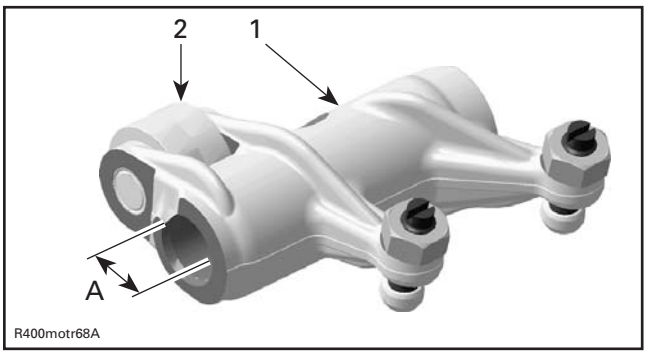

1. *Rocker arm (exhaust side)*
2. *Roller*

A. *Bore for rocker arm shaft*

Measure rocker arm bore diameter. If diameter is out of specification, change the rocker arm assembly.

ROCKER ARM BORE DIAMETER	
NEW	12.036 mm to 12.050 mm (.4739 in to .4744 in)
SERVICE LIMIT	12.060 mm (.4748 in)

Check adjustment screws for free movement, cracks and/or excessive play.

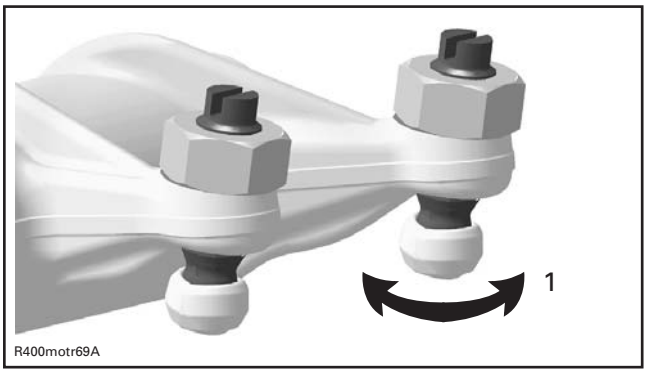

1. *Free movement of adjustment screw top*

Rocker Arm Shaft Inspection

Check for scored friction surfaces; if so, replace parts.

Measure rocker arm shaft diameter.

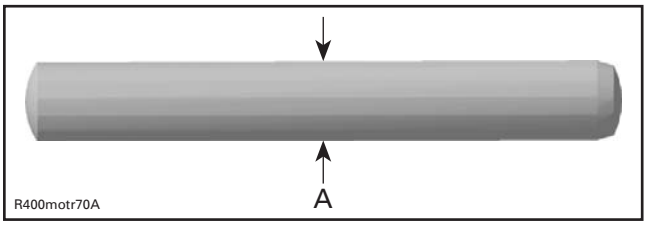

A. *Measure rocker arm shaft diameter here*

ROCKER ARM SHAFT DIAMETER	
NEW	12.000 mm to 12.018 mm (.4724 in to .4731 in)
SERVICE LIMIT	11.990 mm (.472 in)

Any area worn excessively will require parts replacement.

Installing the Rocker Arm

NOTE: Use the same procedure for exhaust and intake rocker arm.

Apply engine oil on rocker arm shaft.

Insert a rocker arm shaft with the chamfered edge first through rocker arm pin bore.

Install a thrust washer at timing chain side, then the proper rocker arm (exhaust side or intake side).

Push in rocker arm shaft until its chamfer reaches the end of rocker arm bore.

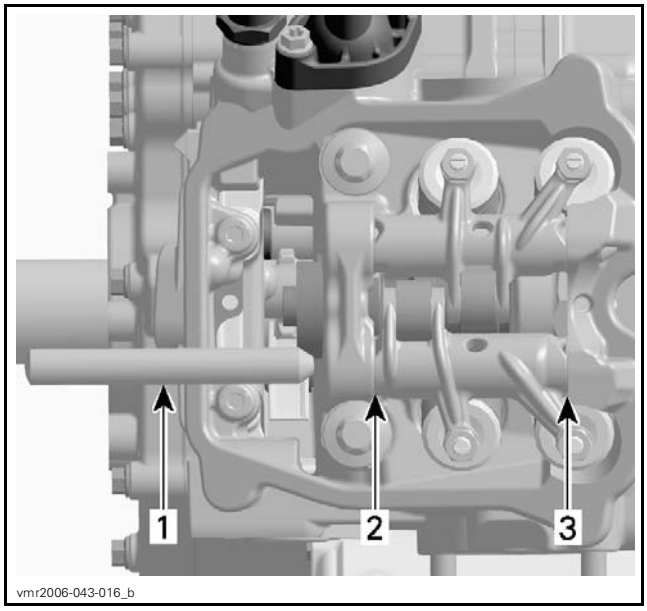

1. *Rocker arm shaft*
2. *Thrust washer (timing chain side)*
3. *Thrust washer (spark plug side)*

Place the other thrust washer and push rocker arm shaft to end position.

Install the camshaft retaining plate.

Adjust valve clearance, refer to *MAINTENANCE* in this subsection.

CAMSHAFT

NOTE: The engine is equipped with two different camshafts.

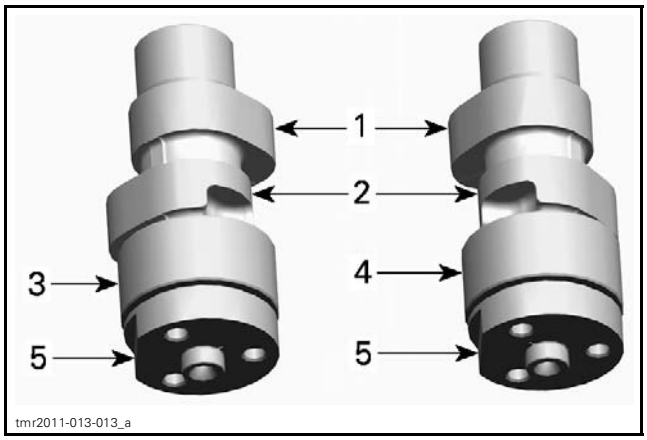

1. *Intake cam*
2. *Exhaust cam*
3. *Camshaft of cylinder 1*
4. *Camshaft of cylinder 2*
5. *Flat spot*

Removing the Camshaft

The removal procedure is the same for both camshafts.

NOTICE **Each camshaft is different in design. Thus, it is important not to mix up any parts of the camshaft assembly with that of the other cylinder. Keep parts as a group.**

Remove valve cover (see *VALVE COVER* in this subsection).

Refer to *TIMING CHAIN* subsection and remove the following parts:

– Timing chain tensioner
– Camshaft timing gear.

Remove the camshaft retaining plate.

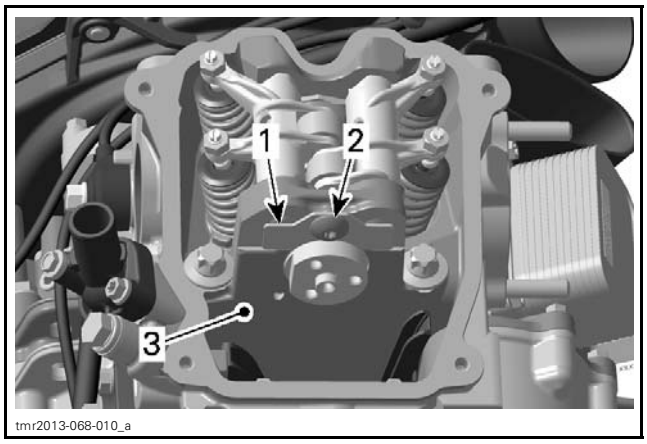

1. *Camshaft retaining plate*
2. *Pan head screw*
3. *Cylinder head*

Remove rocker arms (see *ROCKER ARM* in this subsection).

Remove the camshaft.

NOTE: For removal rotate camshaft so that intake/exhaust lobe shows to upper side of cylinder head.

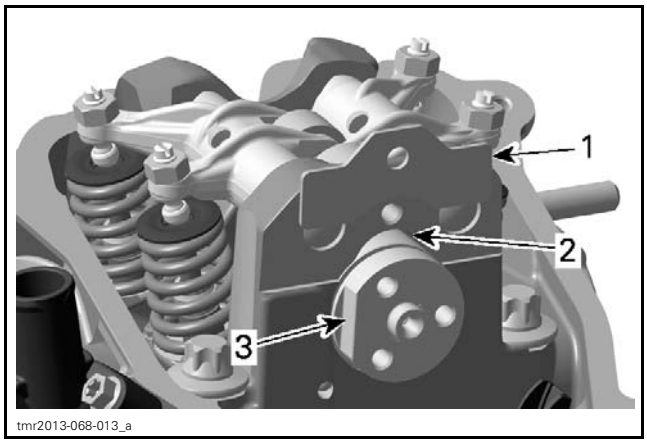

1. *Camshaft retaining plate*
2. *Area for camshaft lobes*
3. *Camshaft*

Inspecting the Camshaft

Check each lobe and bearing journal for:

– scoring
– scuffing
– cracks
– signs of wear.

Using a micrometer to measure:

– camshaft lobe height
– camshaft journal.

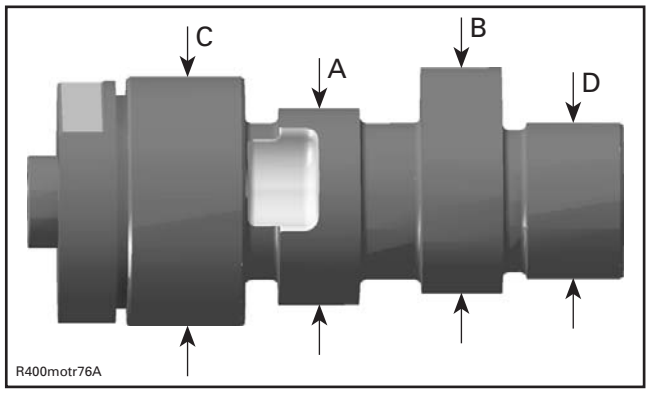

A. *Camshaft lobe (exhaust valves)*
B. *Camshaft lobe (intake valves)*
C. *Camshaft journal (timing chain side)*
D. *Camshaft journal (spark plug side)*

CAMSHAFT LOBE (EXHAUST)	
NEW	32.950 mm to 33.150 mm (1.2972 in to 1.3051 in)
SERVICE LIMIT	32.930 mm (1.2965 in)

CAMSHAFT LOBE (INTAKE)	
NEW	32.890 mm to 33.090 mm (1.2949 in to 1.3028 in)
SERVICE LIMIT	32.870 mm (1.2941 in)

CAMSHAFT JOURNAL (TIMING CHAIN SIDE)	
NEW	34.959 mm to 34.975 mm (1.3763 in to 1.377 in)
SERVICE LIMIT	34.950 mm (1.376 in)

CAMSHAFT JOURNAL (SPARK PLUG SIDE)	
NEW	21.959 mm to 21.980 mm (.8645 in to .8654 in)
SERVICE LIMIT	21.950 mm (.8642 in)

Measure camshaft bearing in cylinder head. Refer to *CYLINDER HEAD INSPECTION* in this subsection.

Installing the Camshaft

The installation is the reverse of the removal procedure. However, pay attention to the following.

NOTICE **The camshafts are not identical in design. Do not invert the camshafts during assembly. Any mix-up of the components will lead to engine damage.**

Place the camshaft retaining plate in the slot of the camshaft.

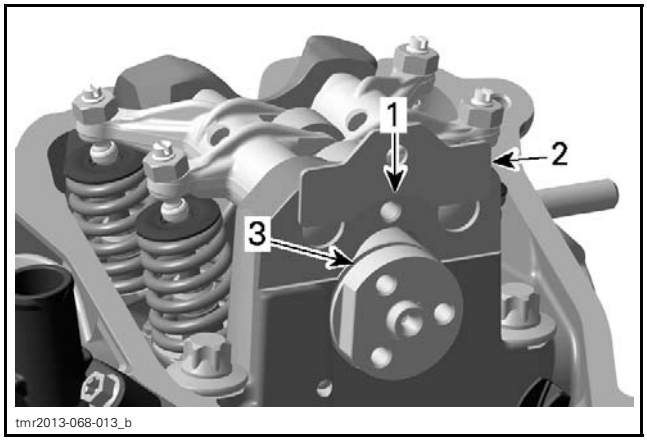

1. *Direction of movement*
2. *Camshaft retaining plate*
3. *Slot retaining camshaft*

Tighten pan head screw to specification.

TIGHTENING TORQUE	
Pan head screw	10 N•m ± 1 N•m (89 lbf•**in** ± 9 lbf•**in**) + LOCTITE 243 (BLUE) (P/N 293 800 060)

For other parts, refer to proper installation procedure.

CYLINDER HEAD

Cylinder Head Access

Cylinder 1 (front)

The engine removal is required to work on cylinder 1.

Cylinder 2 (rear)

Remove the cargo box module. Refer to *BODY* subsection

Removing the Cylinder Head

Drain coolant. Refer to *REPLACING THE ENGINE COOLANT* in the *COOLING SYSTEM - VEHICLE COMPONENTS* subsection.

NOTE: Before removing cylinder head, blow out remaining coolant by air pressure. During cylinder head removal, the remaining coolant in cylinder head could overflow into the engine and a little quantity of coolant could drop into the engine. In this case, the engine oil will be contaminated.

Disconnect spark plug wire.

Disconnect temperature sensor connector, located at rear cylinder head.

Remove the valve cover and its gasket (see *VALVE COVER* in this subsection).

Refer to *TIMING CHAIN* subsection and remove the following parts:

– Timing chain tensioner
– Camshaft timing gear.

First remove the M6 cylinder head screws, then the M10 cylinder head screws.

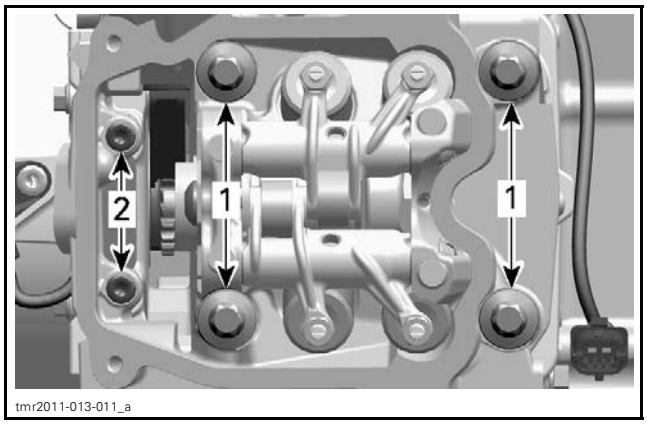

1. Cylinder head screws M10
2. Cylinder head screws M6

Pull up cylinder head.

Remove timing chain guide (fixed).

Remove and discard the cylinder head gasket.

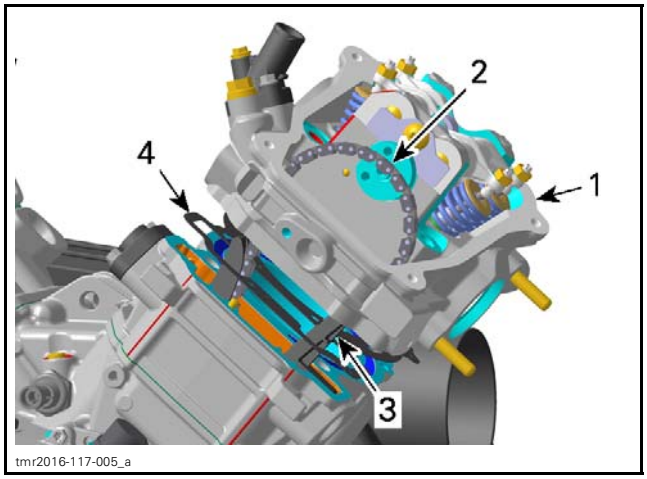

1. Cylinder head
2. Timing chain
3. Chain guide (fixed)
4. Cylinder head gasket

Inspecting the Cylinder Head

Inspect timing chain guide (fixed) for wear, cracks or other damages. Replace if necessary.

Check for cracks between valve seats, if so, replace cylinder head.

Check mating surface between cylinder and cylinder head for contamination. If so, clean both surfaces.

Clean oil support through the cylinder head from contamination.

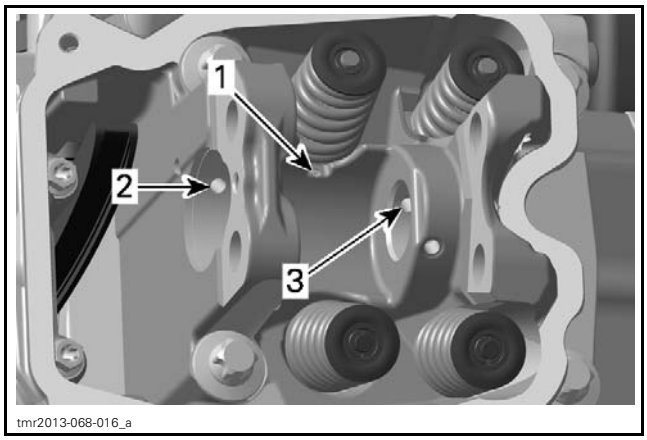

1. *Oil port to lubricate camshaft lobes intake/exhaust*
2. *Oil supply to camshaft bearing journal (timing chain side)*
3. *Oil supply to camshaft bearing journal (spark plug side)*

Inspecting the Cylinder Head Camshaft Bearing

Measure camshaft bearing in cylinder head.

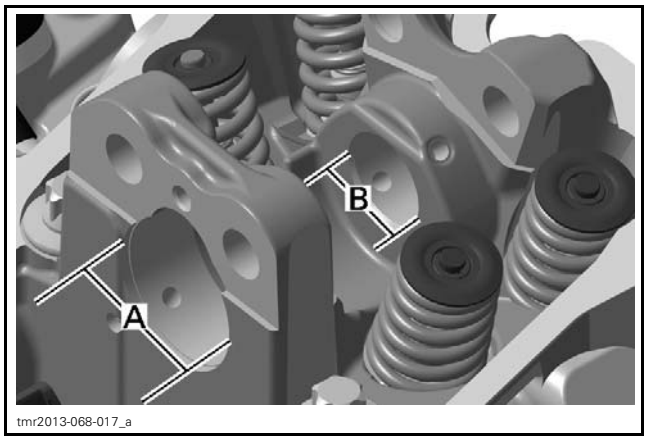

A. *Camshaft bearing (timing chain side)*
B. *Camshaft bearing (spark plug side)*

CAMSHAFT BEARING (TIMING CHAIN SIDE)	
NEW	35.000 mm to 35.025 mm (1.378 in to 1.3789 in)
SERVICE LIMIT	35.040 mm (1.3795 in)
CAMSHAFT BEARING (SPARK PLUG SIDE)	
NEW	22.000 mm to 22.021 mm (.8661 in to .867 in)
SERVICE LIMIT	22.040 mm (.8677 in)

Installing the Cylinder Head

The installation is the reverse of the removal procedure. However, pay attention to the following.

Ensure dowel pins are in place.

NOTICE **Timing chain guide (fixed) has to be fixed between cylinder and cylinder head.**

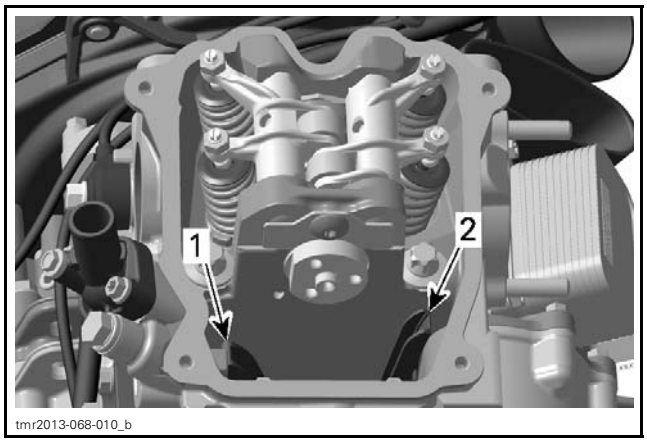

TYPICAL
1. *Timing chain guide (tensioner side) mounted in crankcase*
2. *Timing chain guide (fixed) between cylinder and cylinder head*

Install a NEW cylinder head gasket.

Install cylinder head screws in correct position.

NOTICE **Cylinder head screws have different sizes and lengths.**

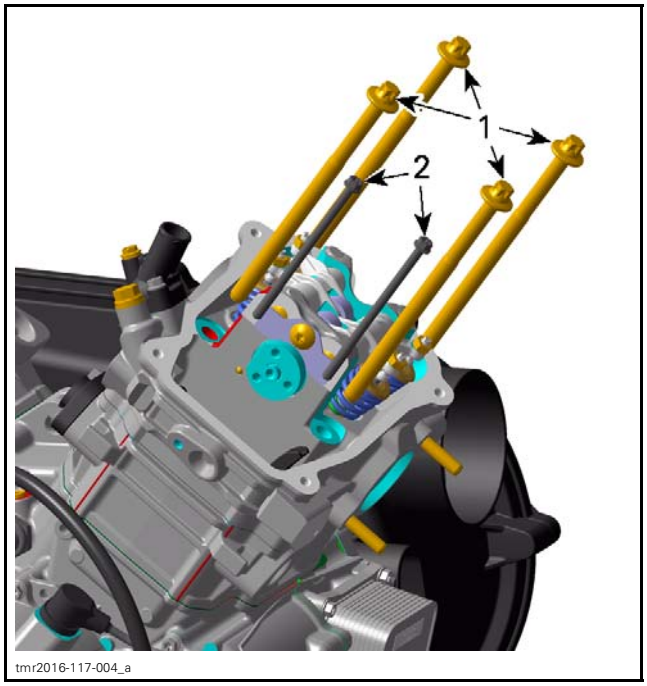

1. *Location no. 1*
2. *Location no. 2*

CYLINDER HEAD SCREW IDENTIFICATION	
Location no. 1	M10 x 159
Location no. 2	M6 x 105

Tighten M10 cylinder head screws FIRST as per following specifications.

NOTE: Always perform one step on all M10 cylinder head screws before going to the next step.

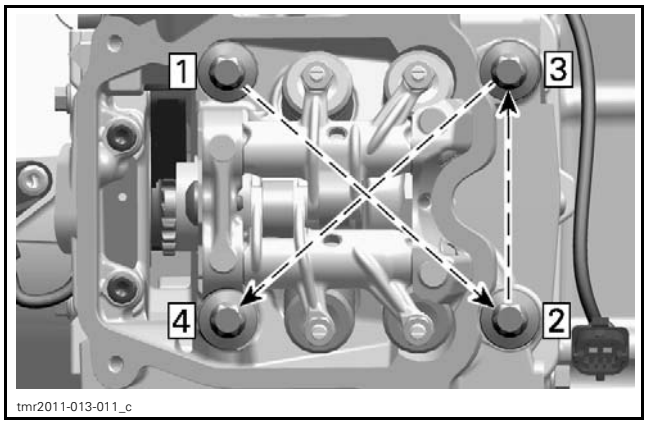

TIGHTENING SEQUENCE - M10 CYLINDER HEAD SCREWS

TIGHTENING TORQUE		
M10 Cylinder head screws	Step A	20 N•m ± 1 N•m (15 lbf•ft ± 1 lbf•ft)
	Step B	180° +/- 5°

Tighten M6 cylinder head screws as per following specification.

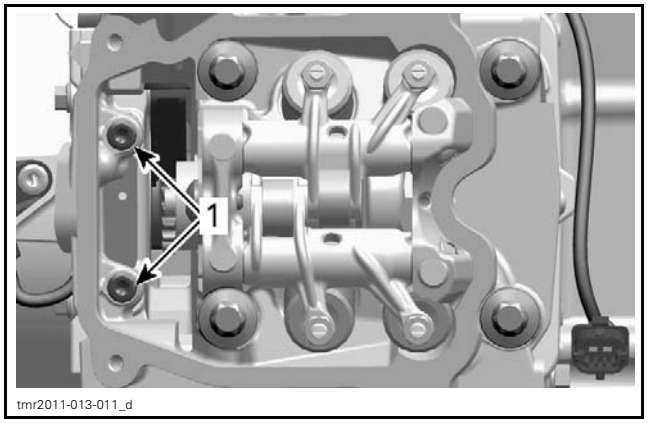

1. *M6 Screws*

TIGHTENING TORQUE	
M6 Cylinder head screws	10 N•m ± 1 N•m (89 lbf•**in** ± 9 lbf•**in**)

Check timing chain guide (tensioner side) for movement.

On cylinder 1, install the plenum bracket, refer to *INTAKE MANIFOLD* subsection.

VALVE SPRINGS

Removing the Valve Spring

Refer to following procedures in this subsection to remove:

– *CAMSHAFT*

– *CYLINDER HEAD*.

Compress valve spring.

REQUIRED TOOL	
VALVE SPRING COMPRESSOR (P/N 529 035 724)	
VALVE SPRING COMPRESSOR CUP (P/N 529 036 270)	

⚠ WARNING

Always wear safety glasses when disassembling valve springs. Be careful when unlocking valves. Components could fly away because of the strong spring preload.

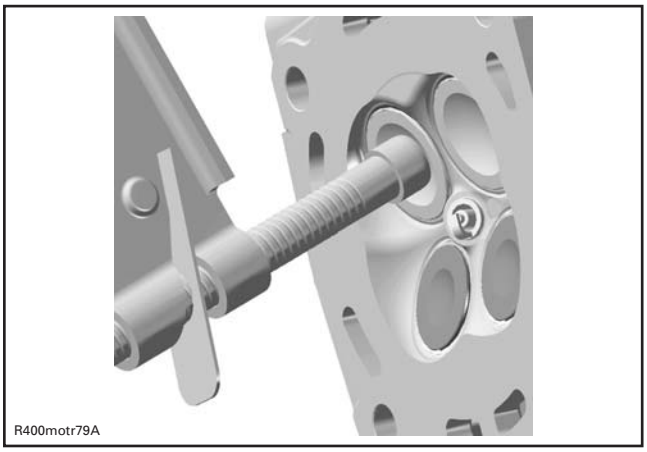

LOCATE VALVE SPRING COMPRESSOR IN CENTER OF THE VALVE

Remove valve cotters.

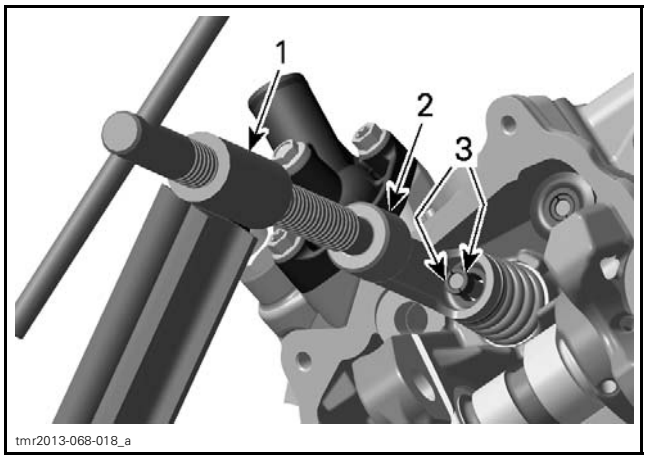

1. *Valve spring compressor*
2. *Valve spring compressor cup*
3. *Valve cotter*

Remove tools and withdraw valve spring retainer and valve spring.

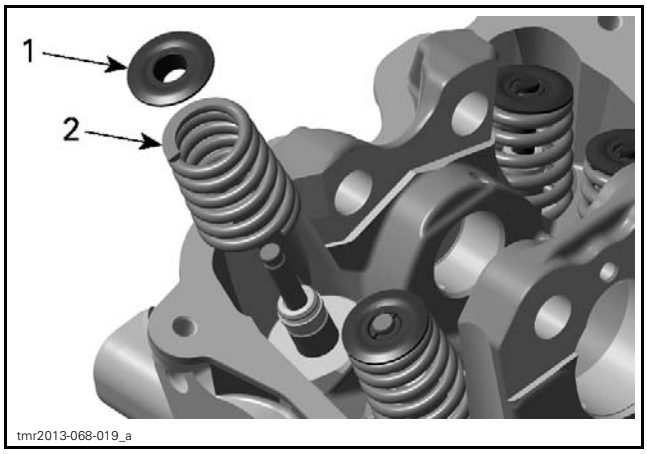

1. *Valve spring retainer*
2. *Valve spring*

Inspecting the Valve Spring

Check valve spring for visible damage. If so, replace valve spring.

Check valve spring for free length and straightness.

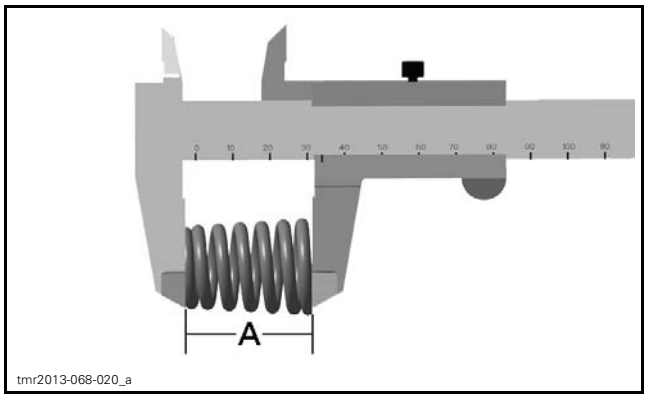

A. *Valve spring length*

VALVE SPRING FREE LENGTH	
NEW	40.41 mm (1.591 in)
SERVICE LIMIT	39.00 mm (1.535 in)

Replace valve springs if not within specifications.

Installing the Valve Spring

The installation Is the reverse of the removal procedure. However, pay attention to the following.

Colored area of the valve spring must be placed on bottom side.

To ease installation of cotters, apply oil or grease on them so that they remain in place while releasing the spring.

NOTE: Valve cotter must be properly engaged in valve stem grooves.

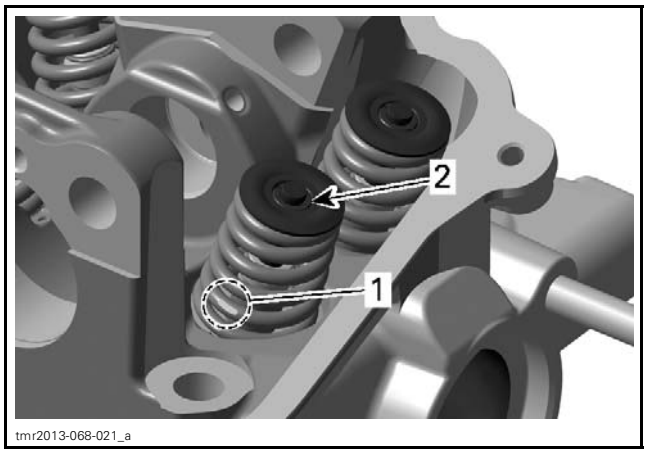

1. *Colored area position of the valve spring*
2. *Valve cotter*

After spring is installed, ensure it is properly locked by tapping on valve stem end with a soft hammer so that valve opens and closes a few times.

NOTICE **An improperly locked valve spring will cause engine damage.**

VALVES

Removing the Valve

Remove valve spring, see *VALVE SPRING* in this subsection.

Push valve stem, then pull valves (intake and exhaust) out of valve guide.

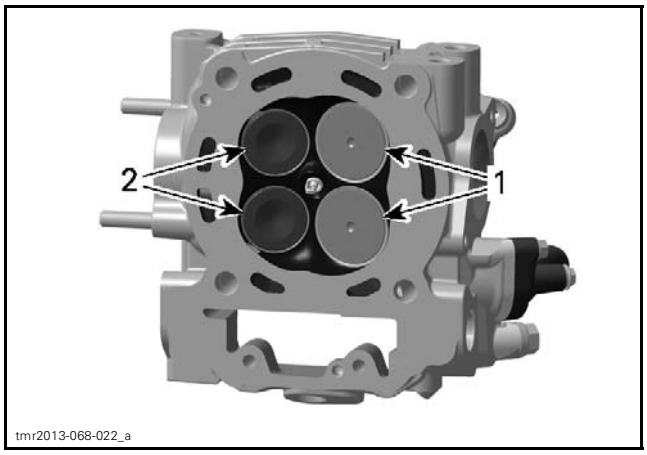

1. *Intake valves 36.5 mm (1.437 in)*
2. *Exhaust valves 31 mm (1.22 in)*

Remove valve stem seal and discard it.

REQUIRED TOOL	
Valve stem seal pliers	

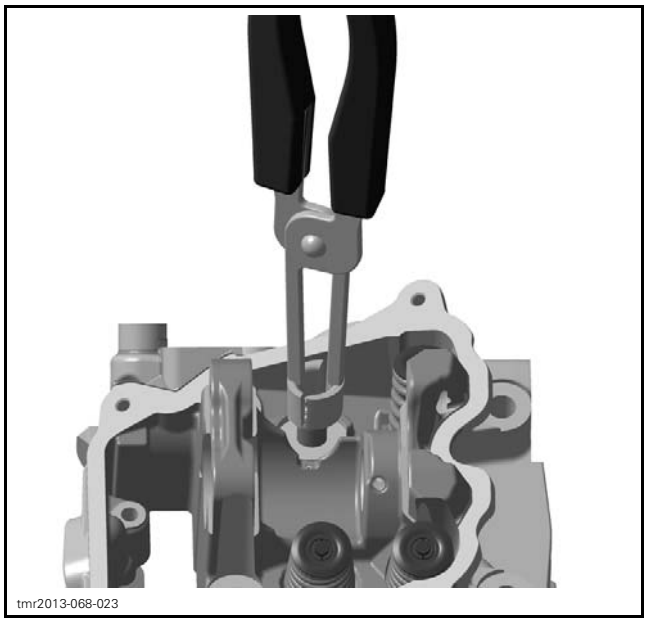

Inspecting the Valve

Whenever valves are removed always inspect valve guides. Refer to *VALVE GUIDES* in this subsection.

Valve Stem Seal

Always install NEW seals whenever valves are removed.

Valve

Inspect valve surface, check for abnormal stem wear and bending. If out of specification, replace by a new one.

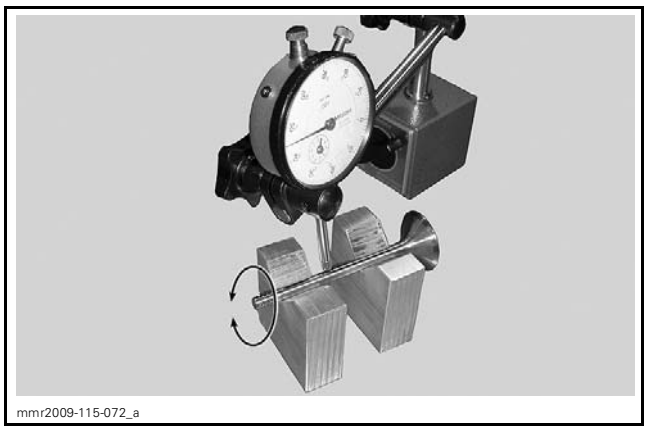

VALVE OUT OF ROUND (INTAKE AND EXHAUST VALVES)	
NEW	0.005 mm (.0002 in)
SERVICE LIMIT	0.06 mm (.0024 in)

Valve Stem

Measure valve stem in three places using a micrometer.

Replace valve if valve stem is out of specification or has other damages such as wear or friction surface.

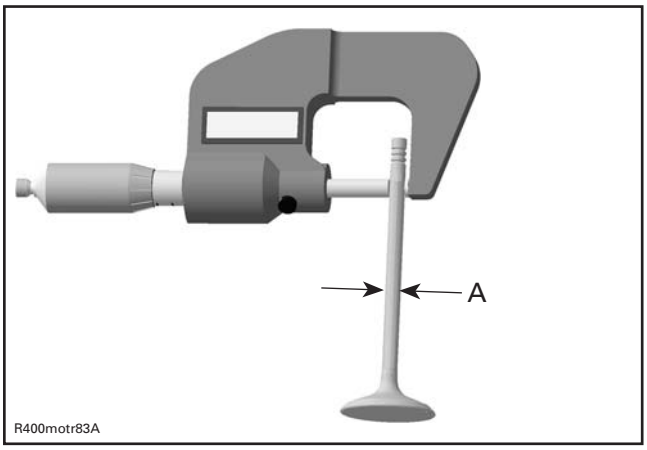

A. Valve stem diameter

VALVE STEM DIAMETER	
EXHAUST VALVE	
NEW	5.461 mm to 5.476 mm (.215 in to .2156 in)
SERVICE LIMIT	5.440 mm (.2142 in)
INTAKE VALVE	
NEW	5.472 mm to 5.486 mm (.2154 in to .216 in)
SERVICE LIMIT	5.450 mm (.2146 in)

Valve Face and Seat

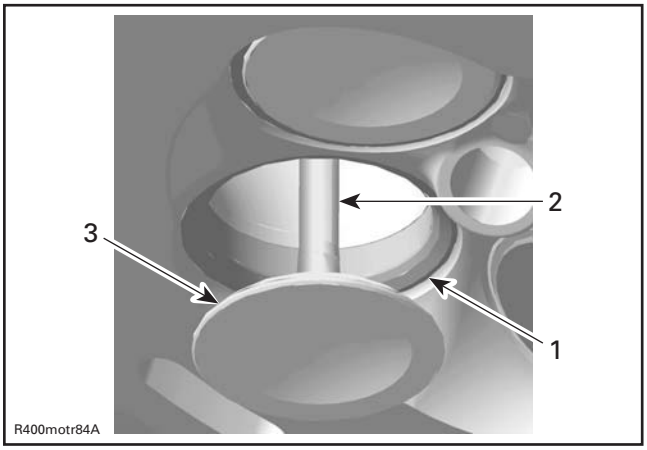

1. *Valve seat*
2. *Exhaust valve contaminated area*
3. *Valve face (contact surface to valve seat)*

Check valve face and seat for burning or pittings and replace valve or cylinder head if there are signs of damage.

Ensure to seat valves properly. Apply some lapping compound to valve face and work valve on its seat with a lapping tool (see *VALVE GUIDES* in this subsection).

Measure valve face contact width.

NOTE: The location of contact area should be in center of valve seat.

Measure valve seat width using a caliper.

VALVE SEAT CONTACT WIDTH	
EXHAUST VALVE	
NEW	1.25 mm to 1.55 mm (.049 in to .061 in)
SERVICE LIMIT	2.50 mm (.098 in)
INTAKE VALVE	
NEW	1.05 mm to 1.35 mm (.041 in to .053 in)
SERVICE LIMIT	2.20 mm (.087 in)

If valve seat contact width is too wide or has dark spots, replace the cylinder head.

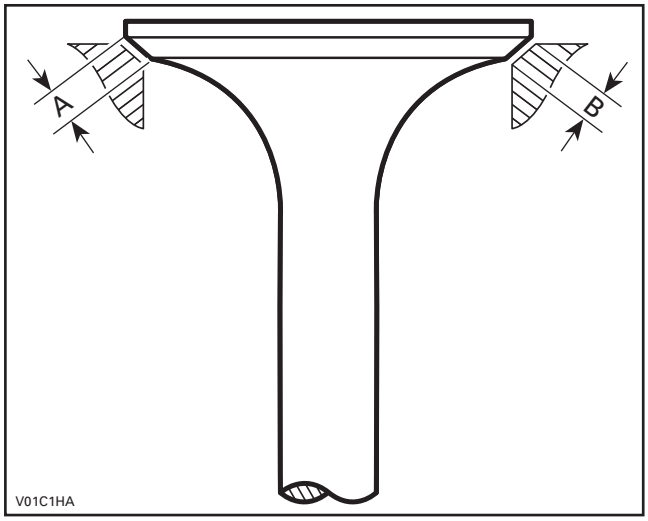

A. Valve face contact width
B. Valve seat contact width

Installing the Valve

The installation is the reverse of the removal procedure. However, pay attention to the following.

Install a NEW valve stem seal. Make sure thrust washer is installed before installing seal.

Apply engine oil on valve stem and install it.

NOTICE **Be careful when valve stem is passed through sealing lips of valve stem seal.**

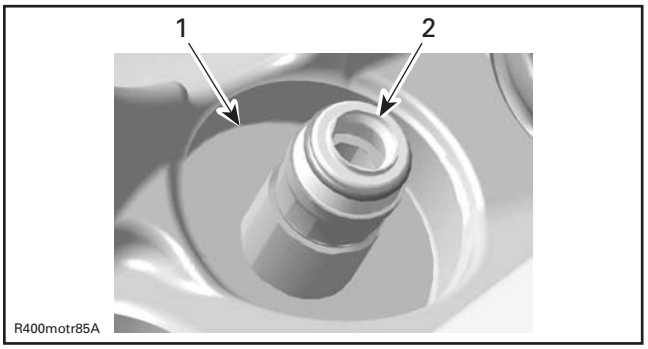

1. Thrust washer
2. Sealing lips of valve stem seal

For proper valve spring installation refer to *VALVE SPRINGS* in this subsection.

NOTICE **An improperly locked valve spring will cause engine damage.**

VALVE GUIDES

Inspecting the Valve Guide

Always replace valve stem seals whenever valve guides are removed.

Measure valve guide in three places using a small bore gauge.

NOTE: Clean valve guide to remove carbon deposits before measuring.

Replace valve guide if it is out of specification or has other damages such as wear or friction surface.

VALVE GUIDE DIAMETER (INTAKE AND EXHAUST VALVES)	
NEW	5.506 mm to 5.518 mm (.2168 in to .2172 in)
SERVICE LIMIT	5.568 mm (.2192 in)

Removing the Valve Guide

Refer to following procedures in this subsection to remove:

- Cylinder head
- Valve springs
- Valves
- Valve stem seals
- Thrust washers.

NOTE: Clean valve guide area from contamination before removal.

Drive the valve guide out of cylinder head.

REQUIRED TOOL
Hammer
VALVE GUIDE REMOVER (6 MM) (P/N 529 036 074)

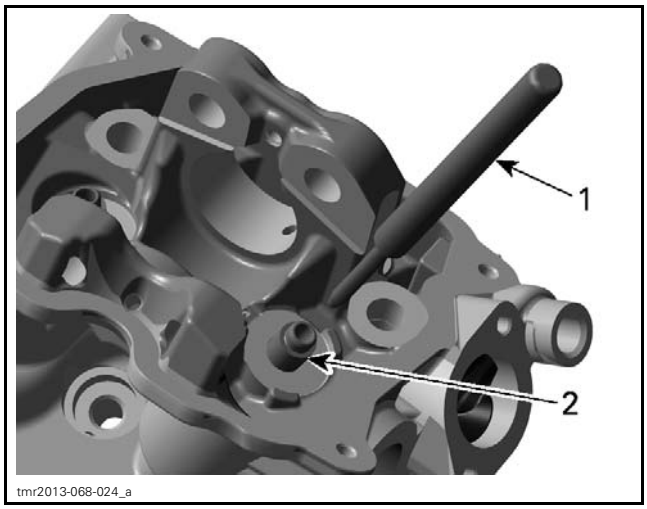

1. *Valve guide remover*
2. *Valve guide*

Installing the Valve Guide

The installation is the reverse of the removal procedure. However, pay attention to the following.

Clean the valve guide bore before reinstalling the valve guide into cylinder head.

SERVICE PRODUCT
LOCTITE 767 (ANTI-SEIZE LUBRICANT) (P/N 293 800 070)

Apply lubricant on valve guide prior to install it into the cylinder head.

Install valve guide.

REQUIRED TOOL
VALVE GUIDE INSTALLER (P/N 529 036 269)

NOTICE **Valve guide installer is used for intake and exhaust valve guides. Choose proper side for installation.**

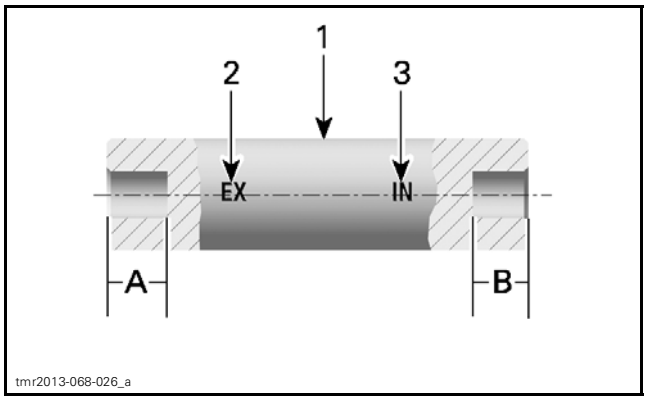

1. *Valve guide installer*
2. *Mark "EX" - exhaust valve guide installer*
3. *Mark "IN" - intake valve guide installer*

A. *14.5 mm (.571 in)*
B. *13.3 mm (.524 in)*

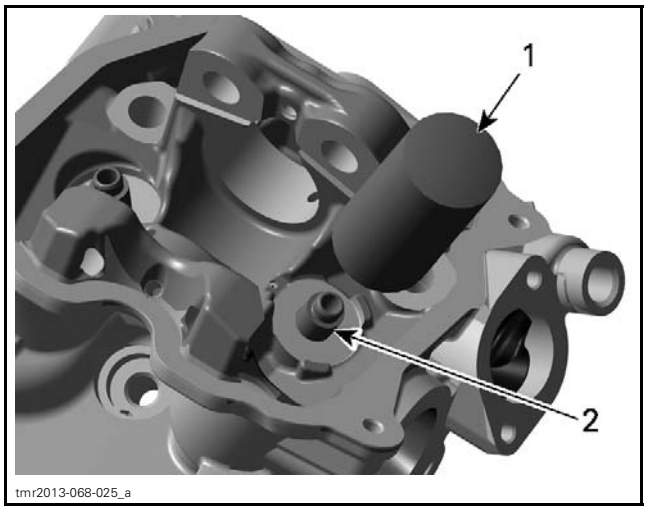

1. *Valve guide installer*
2. *Valve guide*

NOTICE **Push valve guide in the cold cylinder head as per following illustration.**

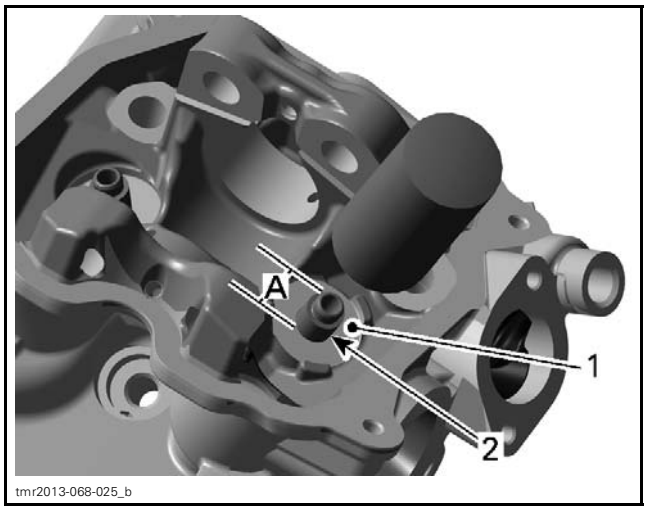

1. *Thrust surface of cylinder head*
2. *Valve guide*

A. *Measurement from thrust surface to valve guide top*

VALVE GUIDE (MEASUREMENT "A")	
INTAKE	13.1 mm to 13.5 mm (.5157 in to .5315 in)
EXHAUST	14.3 mm to 14.7 mm (.563 in to .579 in)

Apply some lapping compound to valve face and work valve on its seat with a lapping tool.

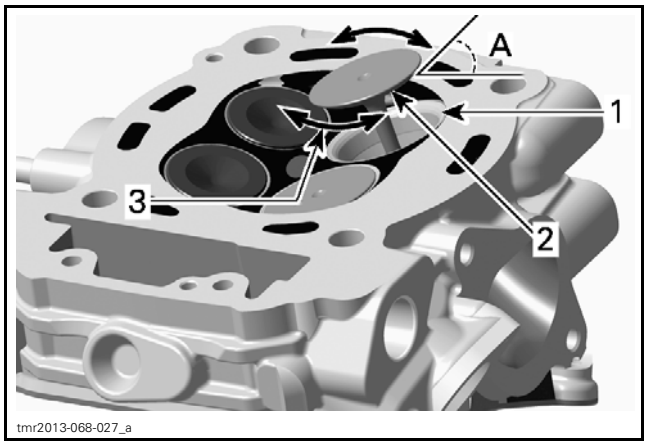

1. *Valve seat*
2. *Valve face (contact surface to valve seat)*
3. *Turn valve while pushing against cylinder head*

A. *Valve seat angle 45°*

Ensure to seat valves properly. Apply marking paste to ease checking contact pattern.

Repeat procedure until valve seat/valve face fits together.

CYLINDER

Removing the Cylinder

Refer to *TIMING CHAIN* subsection and remove the following parts:

– Timing chain tensioner
– Camshaft timing gear.

Remove the cylinder head (see *CYLINDER HEAD* in this subsection).

Pull cylinder.

Discard cylinder base gaskets.

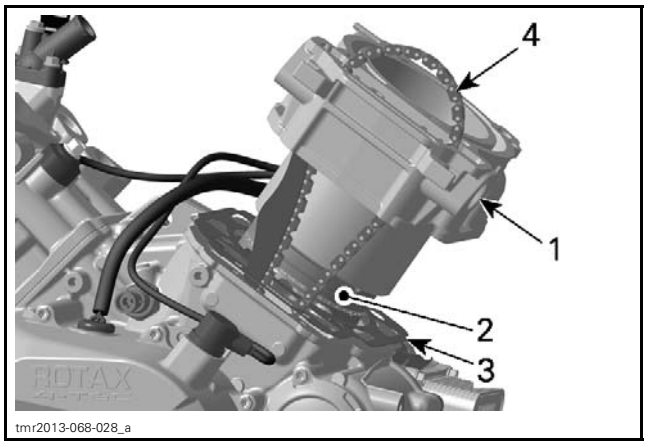

1. *Cylinder*
2. *Piston assembly*
3. *Cylinder base gasket*
4. *Camshaft timing chain*

Inspecting the Cylinder

Check cylinder for cracks, scoring and wear ridges on the top and bottom of the cylinder. If so, replace cylinder.

Cylinder Taper

Measure cylinder bore at 3 recommended positions.

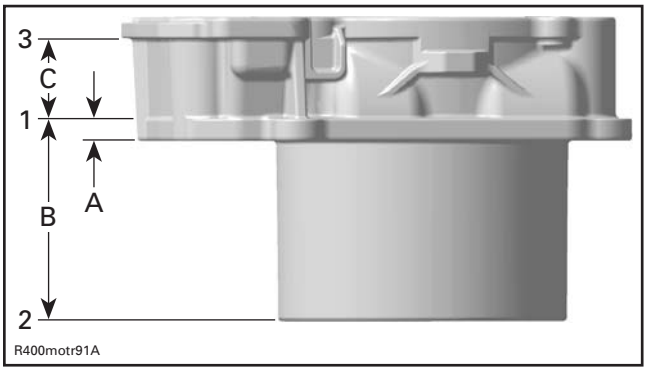

A. *First measurement (from cylinder bottom)*
B. *Second measurement*
C. *Third measurement*

CYLINDER TAPER MEASUREMENTS	
MEASUREMENT	SPECIFICATION
A	5 mm (.197 in)
B	58 mm (2.283 in)
C	52 mm (2.047 in)

CYLINDER TAPER SPECIFICATION	
NEW (MAXIMUM)	0.038 mm (.0015 in)
SERVICE LIMIT	0.090 mm (.0035 in)

Distance between measurements should not exceed the service limit mentioned above. Otherwise, replace cylinder and piston rings.

Cylinder Out of Round

Measure cylinder diameter in piston axis direction from top of cylinder. Take another measurement 90° from first one and compare.

NOTE: Take the same measuring points like described in *CYLINDER TAPER* above.

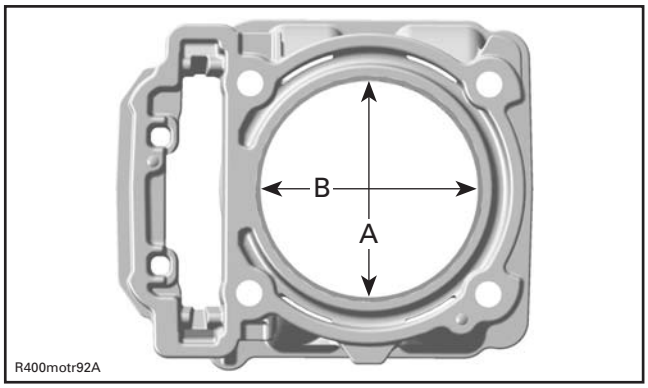

A. Perpendicular to crankshaft axis
B. Parallel to crankshaft axis

CYLINDER OUT OF ROUND	
NEW (MAXIMUM)	0.015 mm (.0006 in)
SERVICE LIMIT	0.020 mm (.0008 in)

Installing the Cylinder

The installation is the reverse of the removal procedure. However, pay attention to the following.

NOTICE **Always replace cylinder base gasket before installing the cylinder.**

NOTE: Make sure piston rings are properly spaced, refer to *PISTON RINGS* in this subsection.

Apply engine oil:
- In the bottom area of the cylinder bore
- On the piston rings
- On the piston ring compressor.

Compress piston rings.

REQUIRED TOOL	
PISTON RING COMPRESSOR (P/N 529 035 919)	

First mount cylinder 2.

NOTE: The cylinder can not be pushed fully over the piston unless the piston is located at TDC.

Then remove the crankshaft locking bolt.

Crank the engine further and position piston 1 at TDC.

Mount cylinder 1.

Put timing chain through the chain pit then put the cylinder in place.

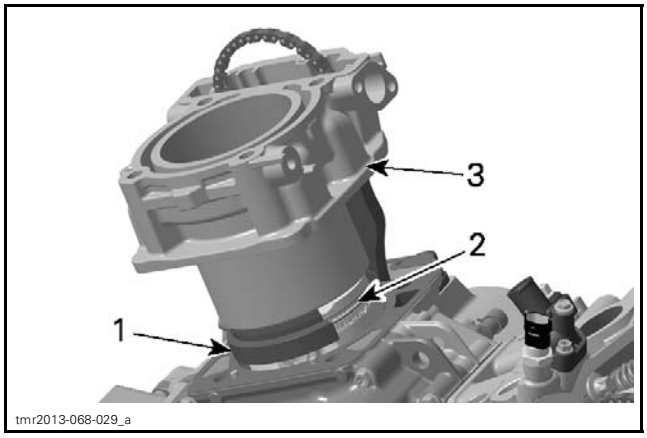

1. Piston ring compressor
2. Piston
3. Cylinder

NOTICE **Chain guide has to be fixed between cylinder and cylinder head.**

NOTE: After both cylinders are installed, turn crankshaft until piston of cylinder 2 is at TDC and lock crankshaft. Refer to *CRANKSHAFT* in the *CYLINDER BLOCK* subsection.

Install cylinder head and the other parts in accordance with the proper installation procedures.

PISTON

Removing the Piston

Refer to following procedures in this subsection to remove:
- Cylinder head
- Cylinder.

Place a rag under piston and in the area of timing chain compartment.

⚠ WARNING

Piston circlips are spring loaded.

Remove one piston circlip and discard it.

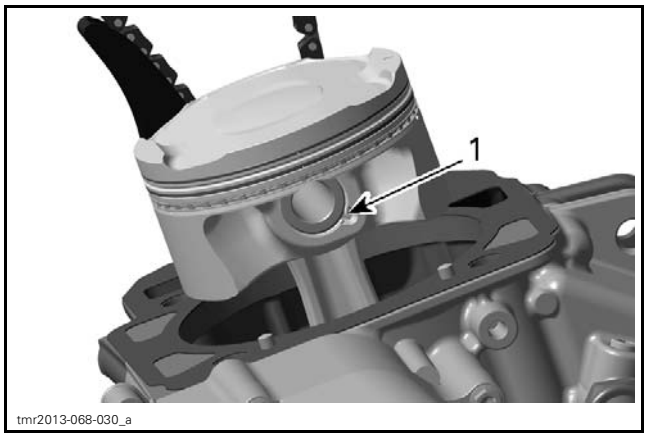

1. Piston circlip

NOTE: The removal of both piston circlips is not necessary to remove piston pin.

Push piston pin out of piston.

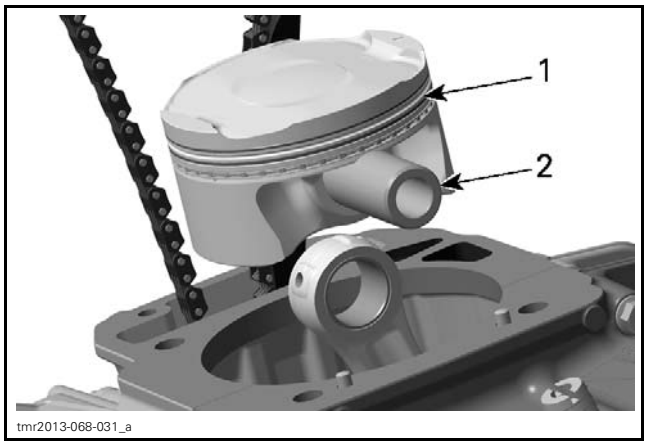

1. Piston
2. Piston pin

Detach piston from connecting rod.

Inspecting the Piston

Inspect piston for scoring, cracking or other damages. Replace piston and piston rings if necessary.

Using a micrometer, measure piston at 8 mm (.315 in) perpendicularly (90°) to piston pin.

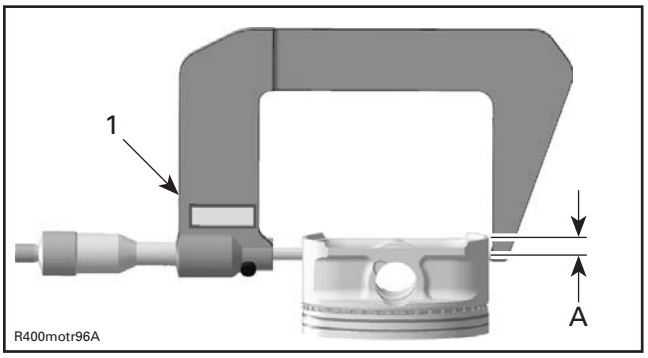

1. Measuring perpendicularly (90°) to piston pin
A. 8 mm (.315 in)

The measured dimension should be as described in the following tables. If not, replace piston.

PISTON MEASUREMENT	
NEW	90.950 mm to 90.966 mm (3.5807 in to 3.5813 in)
SERVICE LIMIT	90.850 mm (3.577 in)

Piston/Cylinder Clearance

Adjust and lock a micrometer to the piston dimension.

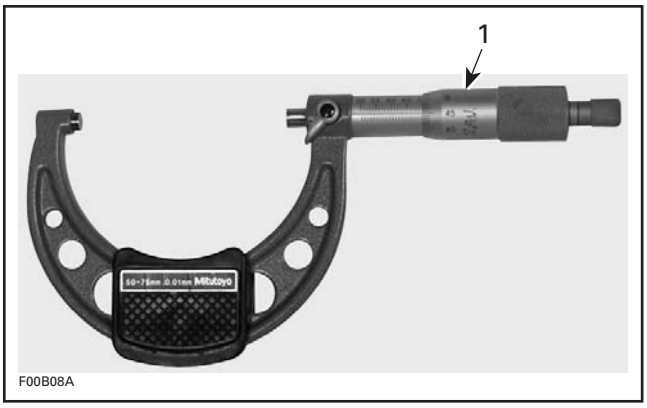

1. Micrometer set to the piston dimension

With the micrometer set to the dimension, adjust a cylinder bore gauge to the micrometer dimension and set the indicator to 0 (zero).

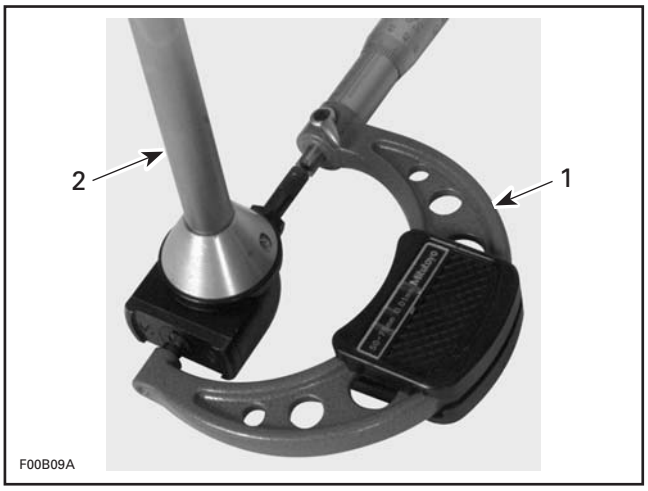

1. Use the micrometer to set the cylinder bore gauge
2. Dial bore gauge

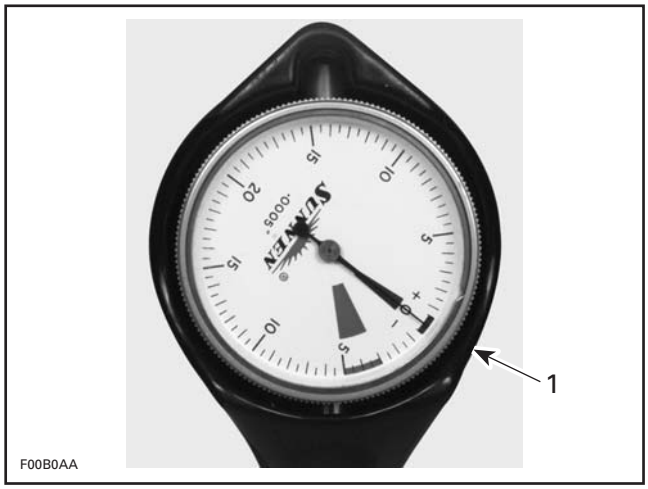

TYPICAL
1. Indicator set to 0 (zero)

Position the dial bore gauge 20 mm (.787 in) above cylinder base, measuring perpendicularly (90°) to piston pin axis.

Read the measurement on the cylinder bore gauge. The result is the exact piston/cylinder wall clearance.

PISTON/CYLINDER CLEARANCE	
NEW	0.027 mm to 0.057 mm (.0011 in to .0022 in)
SERVICE LIMIT	0.100 mm (.0039 in)

NOTE: Make sure used piston is not worn.

If clearance exceeds specified tolerance, replace piston by a new one and measure piston/cylinder clearance again.

NOTE: Make sure the cylinder bore gauge indicator is set exactly at the same position as with the micrometer, otherwise the reading will be false.

Connecting Rod/Piston Pin Clearance

Using synthetic abrasive woven, clean piston pin from deposits.

Inspect piston pin for scoring, cracking or other damages.

Measure piston pin. See the following illustration for the proper measurement positions.

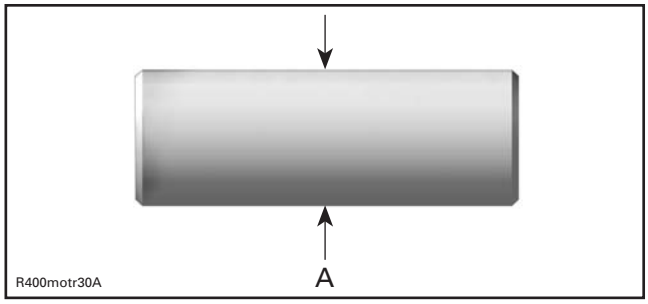

A. Piston pin diameter

PISTON PIN DIAMETER	
NEW	21.996 mm to 22.000 mm (.866 in to .8661 in)
SERVICE LIMIT	21.980 mm (.8654 in)

Replace piston pin if diameter is out of specifications.

Measure inside diameter of connecting rod small end bushing.

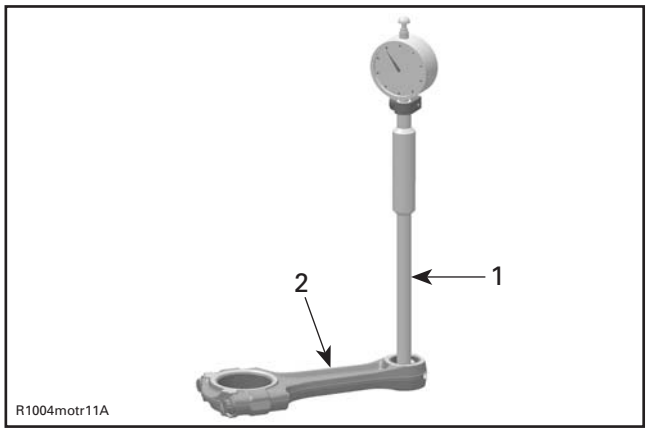

1. Bore gauge
2. Connecting rod

CONNECTING ROD SMALL END DIAMETER	
NEW	22.010 mm to 22.020 mm (.8665 in to .8669 in)
SERVICE LIMIT	22.050 mm (.8681 in)

Replace connecting rod if diameter of connecting rod small end is out of specifications. Refer to *CYLINDER BLOCK* subsection for removal procedure.

Compare measurements to obtain the connecting rod/piston pin clearance.

CONNECTING ROD/ PISTON PIN CLEARANCE	
SERVICE LIMIT	0.080 mm (.0031 in)

Installing the Piston

The installation is the reverse of the removal procedure. However, pay attention to the following.

Apply engine oil on the piston pin.

Insert piston pin into piston and connecting rod.

For each cylinder, install piston with the punched arrow on piston dome is pointing toward the rear side of the engine.

Front cylinder: Mark on top of piston must show to intake side.

Rear cylinder: Mark on top of piston must show to exhaust side.

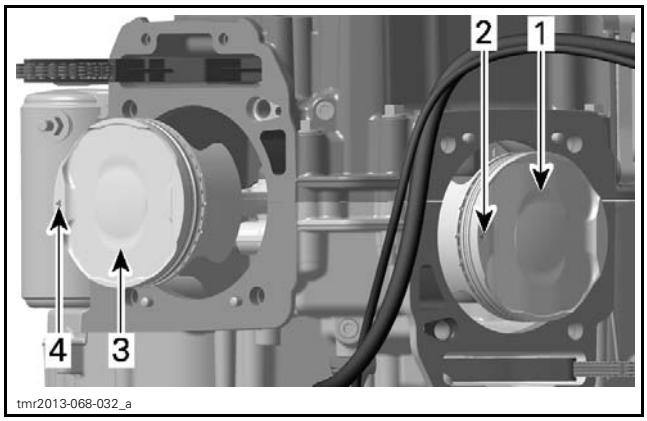

1. *Piston of cylinder 1*
2. *Mark on piston must show to intake side of cylinder 1*
3. *Piston of cylinder 2*
4. *Mark on piston must show to exhaust side of cylinder 2*

Use the piston appropriate circlip installer to assemble the NEW piston circlip as per following procedure:

REQUIRED TOOL	
PISTON CIRCLIP INSTALLER (P/N 529 036 153)	

NOTICE **Always replace disassembled piston circlip(s) by NEW ones. Place a rag on cylinder base to avoid dropping the circlip inside the engine.**

Place circlip in sleeve as per following illustration.

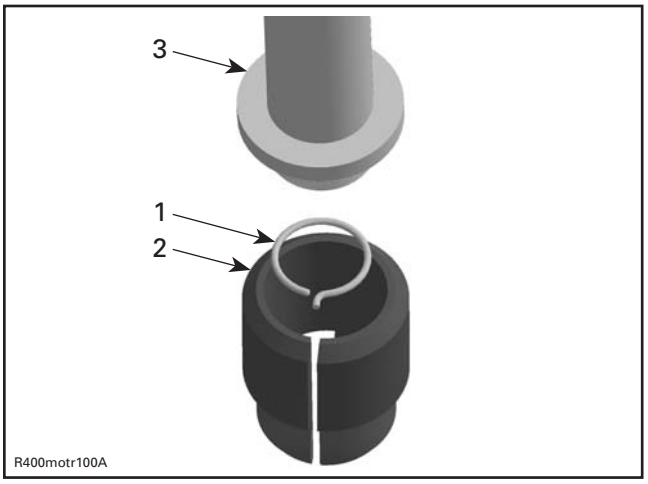

1. *Circlip*
2. *Sleeve*
3. *Assembly jig from piston clip installer*

Push taper side of assembly jig until circlip reaches middle of sleeve.

Align sleeve with piston pin axis and push assembly jig until circlip engages in piston.

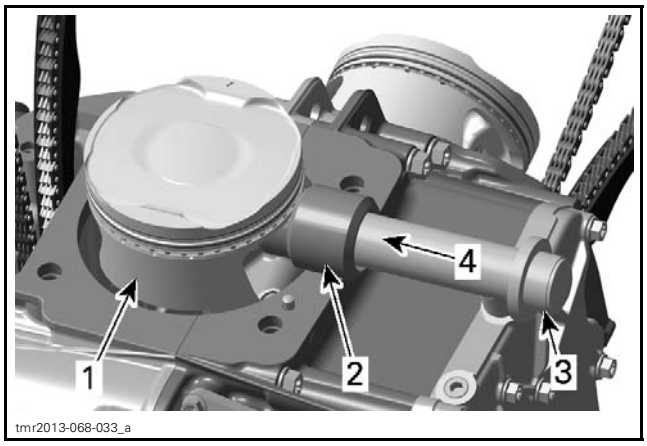

1. *Hold piston while pushing circlip in place*
2. *Sleeve*
3. *Assembly jig*
4. *Direction to push circlip*

NOTE: Take care that the hook of the piston circlip is positioned properly.

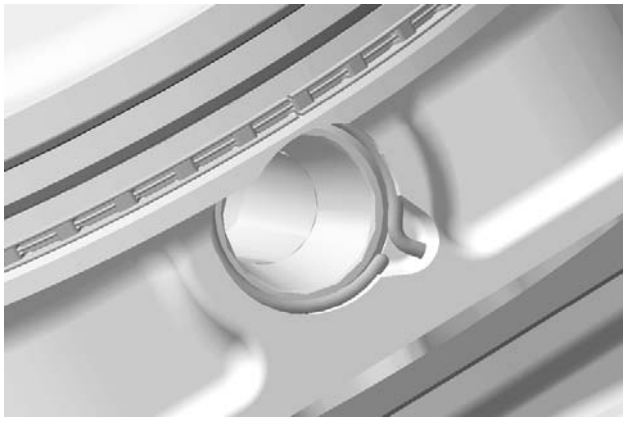

CORRECT POSITION OF THE PISTON CIRCLIP

PISTON RINGS

Removing the Piston Ring

Remove the piston (see *PISTON* in this subsection).

Inspecting the Piston Ring

Ring/Piston Groove Clearance

Using a feeler gauge measure each ring/piston groove clearance. If the clearance is too large, the piston and the piston rings should be replaced.

RING/PISTON GROOVE CLEARANCE	
UPPER COMPRESSION RING	
NEW	0.03 mm to 0.07 mm (.0012 in to .0028 in)
SERVICE LIMIT	0.150 mm (.0059 in)
LOWER COMPRESSION RING	
NEW	0.02 mm to 0.06 mm (.0008 in to .0024 in)
SERVICE LIMIT	0.150 mm (.0059 in)
OIL SCRAPER RING	
NEW	0.01 mm to 0.18 mm (.0004 in to .0071 in)
SERVICE LIMIT	0.250 mm (.0098 in)

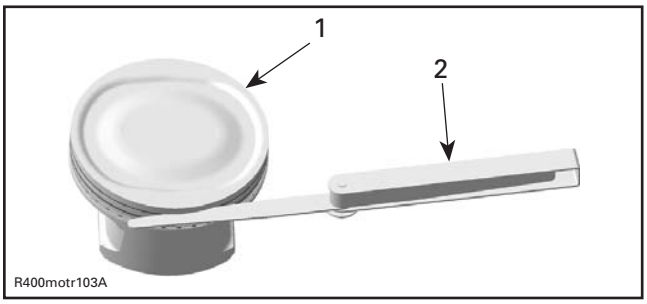

1. Piston
2. Feeler gauge

Ring End Gap

RING END GAP	
UPPER COMPRESSION RING	
NEW	0.20 mm to 0.40 mm (.008 in to .016 in)
SERVICE LIMIT	0.60 mm (.024 in)
LOWER COMPRESSION RING	
NEW	0.20 mm to 0.40 mm (.008 in to .016 in)
SERVICE LIMIT	0.70 mm (.028 in)
OIL SCRAPER RING	
NEW	0.20 mm to 0.70 mm (.008 in to .028 in)
SERVICE LIMIT	1.00 mm (.039 in)

To measure the ring end gap place the ring in the cylinder in the area of 8 mm to 16 mm (5/16 in to 5/8 in) from top of cylinder.

NOTE: In order to correctly position the ring in the cylinder, use piston as a pusher.

Using a feeler gauge, check ring end gap. Replace ring if gap exceeds above described specified tolerance.

Installing the Piston Ring

1. Install oil scraper spring by hand.
2. Install oil scraper rings by hand.
3. Using a ring expander, install the lower compression ring with the word “N and TOP “ facing up.
4. Using a ring expander, install the upper compression ring with the word “N and TOP “ facing up.

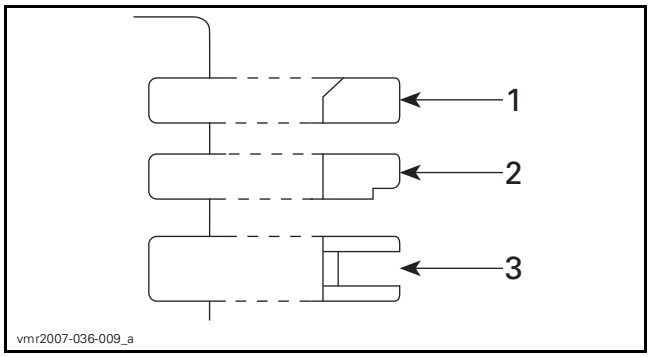

1. Upper compression ring
2. Lower compression ring
3. Oil scraper ring

NOTICE Ensure that top and second rings are not interchanged.

Check that rings rotate smoothly after installation.

Space the piston ring end gaps 120° apart and do not align the gaps with the piston pin bore or the thrust side axis.

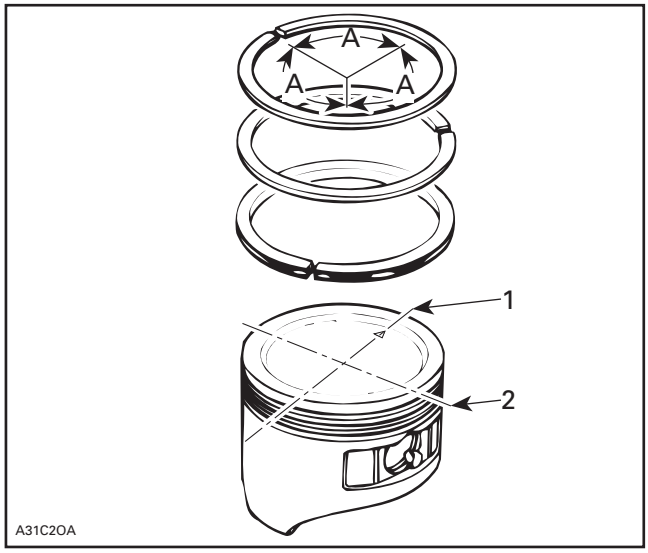

1. DO NOT align ring gap with piston thrust side axis
2. DO NOT align ring gap with piston pin bore axis

A. 120°

TIMING CHAIN

SERVICE TOOLS

Description	Part Number	Page
CAMSHAFT TIMING TOOL	529 036 268	6–7

SERVICE PRODUCTS

Description	Part Number	Page
LOCTITE 243 (BLUE)	293 800 060	7, 9

TIMING CHAIN

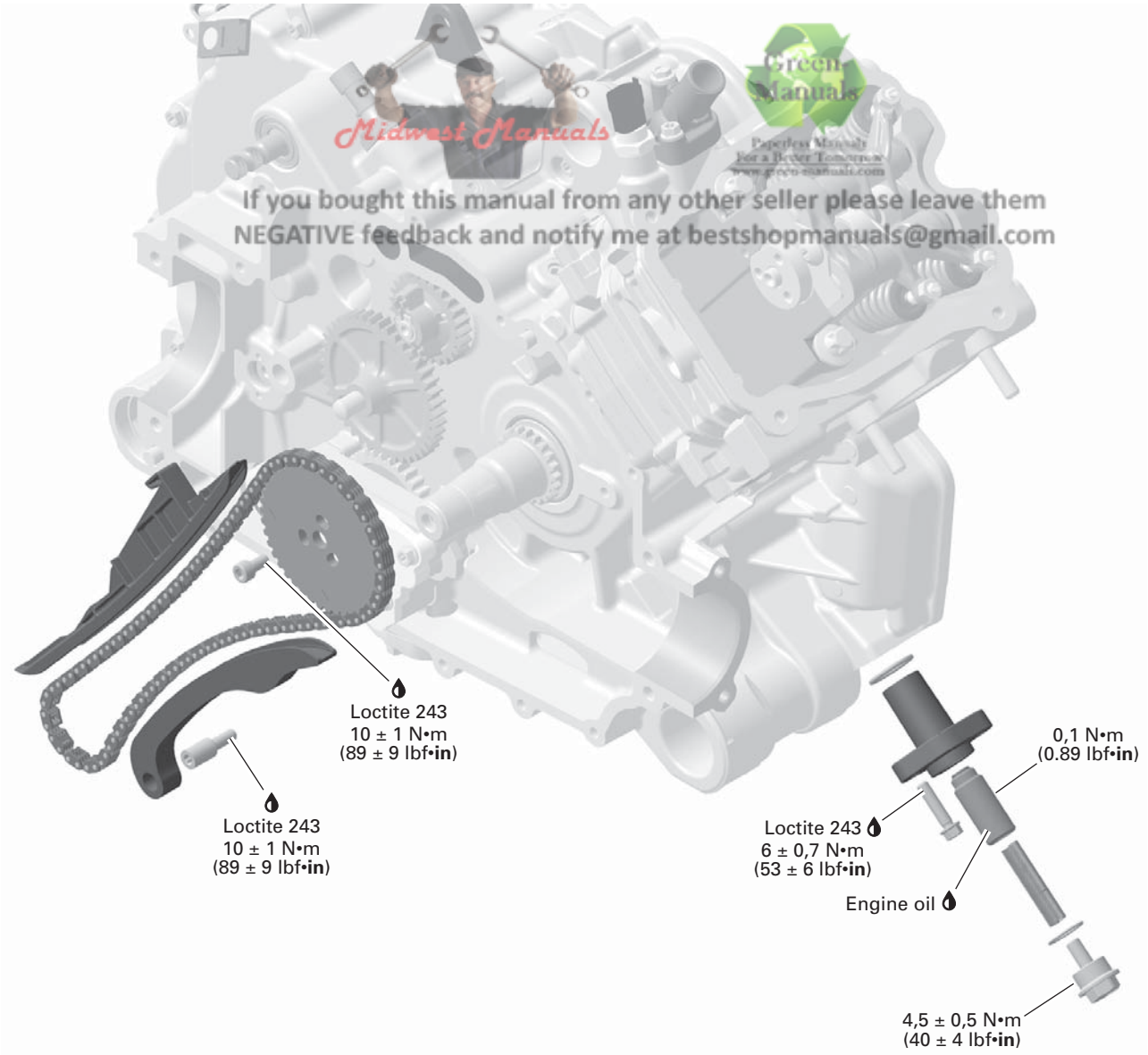

Midwest Manuals
Green Manuals
If you bought this manual from any other seller please leave them NEGATIVE feedback and notify me at bestshopmanuals@gmail.com

NEW = Component must be replaced when removed.

RHD5MY17-006-001_a

GENERAL

IMPORTANT: Note position of parts on disassembly. This may help to find the root cause of a problem. A component that is not replaced should be reinstalled in the same position as originally mounted.

TROUBLESHOOTING

UNUSUAL ENGINE NOISE OR VIBRATION

1. IMPROPER VALVE CLEARANCE ADJUSTMENT AND/OR WORN OUT ROCKER ARM(S)
   - *Readjust valve clearance and/or replace defective part(s), refer to TOP END subsection.*
2. DEFECTIVE CHAIN TENSIONER
   - *Replace chain tensioner.*
3. WORN OUT TIMING CHAIN GUIDE(S)
   - *Replace timing chain guide(s).*
4. STRETCHED TIMING CHAIN OR WORN OUT TIMING GEARS
   - *Replace timing chain and timing gears.*
5. LOOSE TIMING GEAR RETAINING SCREWS
   - *Retighten screws to recommended torque.*
6. INCORRECT CAMSHAFT TIMING
   - *Replace damaged components and readjust camshaft timing.*

ENGINE LACKS ACCELERATION OR POWER

1. INCORRECT CAMSHAFT TIMING
   - *Replace damaged components and readjust camshaft timing.*

PROCEDURES

TIMING CHAIN TENSIONER

Timing Chain Tensioner Location

The timing chain tensioner is located in the cylinder.

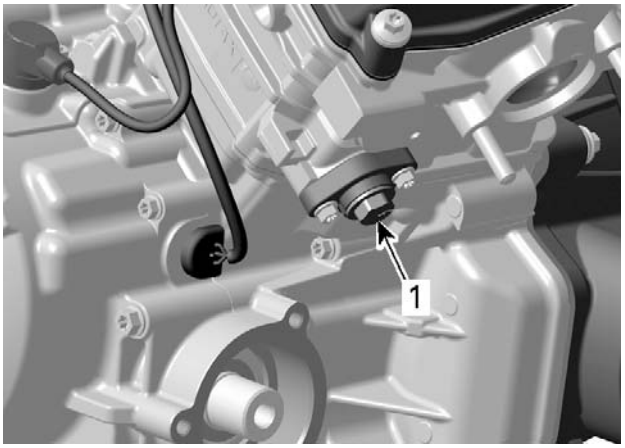

1. Timing chain tensioner

Timing Chain Tensioner Access

Refer to *BODY* subsection and remove the engine service cover.

Removing the Timing Chain Tensioner

1. Make sure the piston is set to TDC ignition. Refer to *CRANKSHAFT LOCKING PROCEDURE* in the *BOTTOM END* subsection.
2. Carefully unscrew chain tensioner plug and release spring tension.

CAUTION **Tensioner is spring loaded.**

3. Remove:
   – O-ring
   – Spring
   – Chain tensioner plunger.

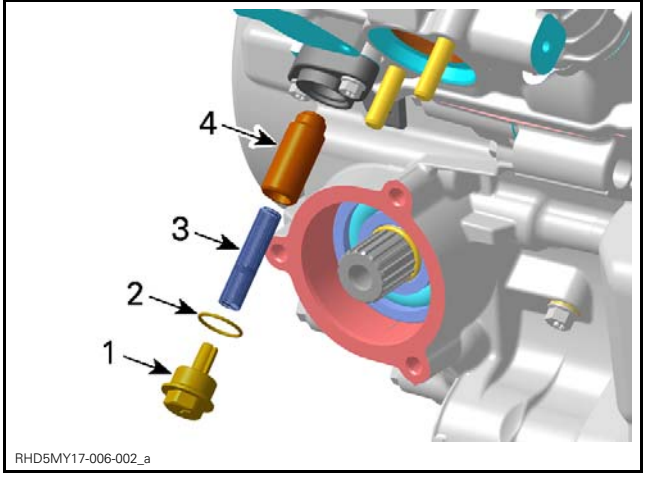

1. Chain tensioner plug
2. O-ring
3. Spring
4. Chain tensioner plunger

4. Remove:
   – Chain tensioner housing retaining screws

– Chain tensioner housing
– O-ring.

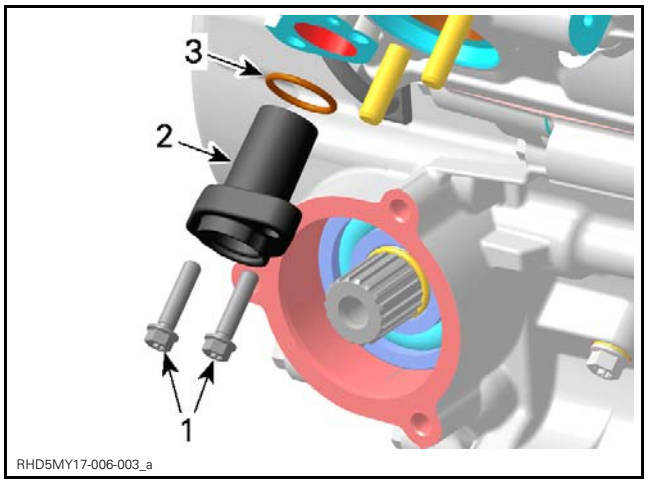

1. Screws
2. Chain tensioner housing
3. O-ring

Inspecting the Timing Chain Tensioner

Check the chain tensioner housing and plug for cracks or other damages. Replace if necessary.

Check chain tensioner plunger for free movement and/or scoring.

Check if O-rings are brittle, cracked or hard. Replace if necessary.

Check spring condition. Replace if bent, broken or worn.

Installing the Timing Chain Tensioner

The installation is the reverse of the removal procedure. However, pay attention to the following.

NOTE: Before installing the chain tensioner make sure, that the camshaft timing gear can be moved back and forth.

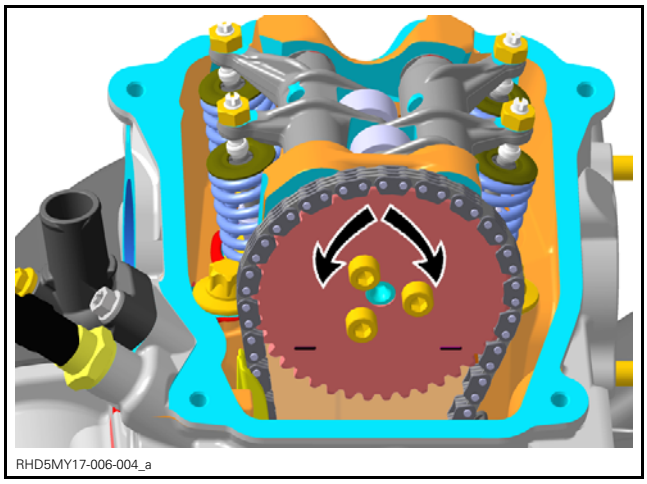

MOVE GEAR BACK AND FORTH

1. Lubricate plunger before installation.

PLUNGER LUBRICATION	
Service product	Engine oil

2. Slightly turn the camshaft timing gear in order to get the timing chain play on the tensioner side.
3. Slightly screw the plunger in until the timing chain allows no more back and forth movement of the camshaft timing gear.
4. Screw the plunger in an additional 1/8 turn to reach the required specified torque.

TIMING CHAIN TENSIONER ADJUSTMENT (TORQUE)
0.1 N•m (.9 lbf•**in**)

NOTICE **Improper adjustment of the timing chain will lead to severe engine damage.**

5. Place the O-ring on plug.
6. Fit the spring on one side into the slot of the plug.

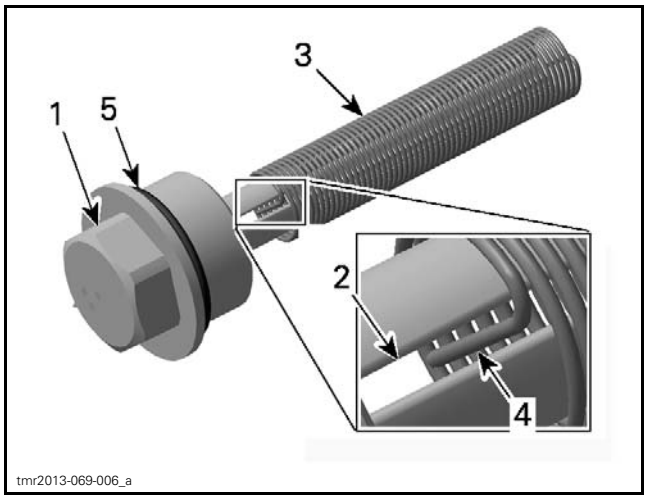

1. Plug
2. Slot
3. Spring
4. Spring end
5. O-Ring

Fit the spring on the other side into the plunger.

NOTE: Turn spring only clockwise in order to fit the spring end into the notch of the plunger to avoid loosening the plunger during spring installation. Do not preload the spring.

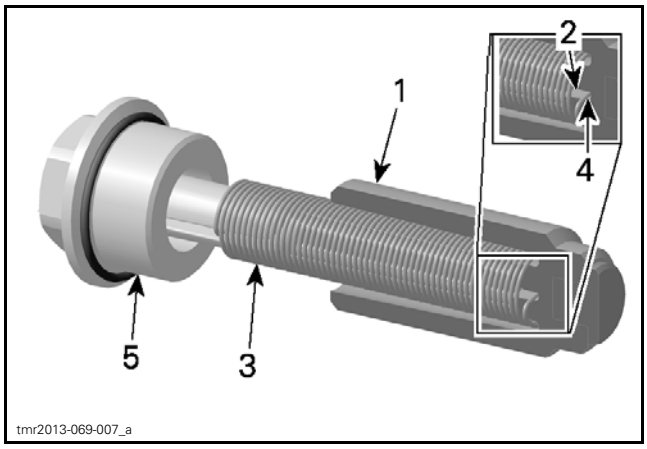

FOR CLARITY PARTS ARE REMOVED FROM CYLINDER
1. Plunger
2. Notch
3. Spring
4. Spring end
5. Plug with O-ring

7. Then compress the spring and screw the plug in.

NOTE: To avoid overstressed timing chain, the plug must engage into threads within the first full turn.

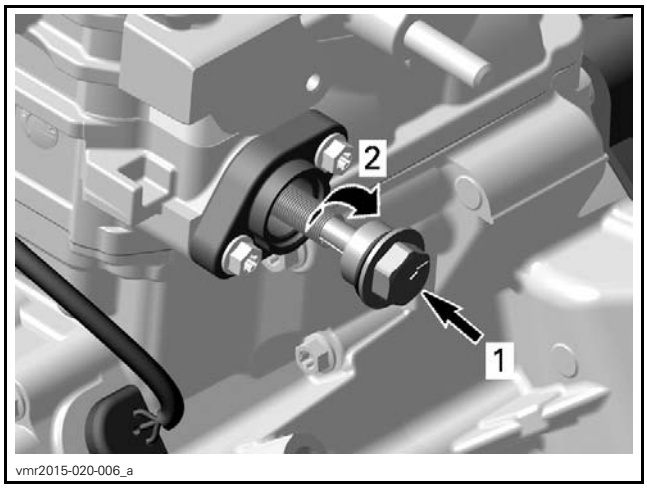

Step 1: Compress spring
Step 2: Screw in plug

8. Remove the crankshaft locking bolt and install all other removed parts.

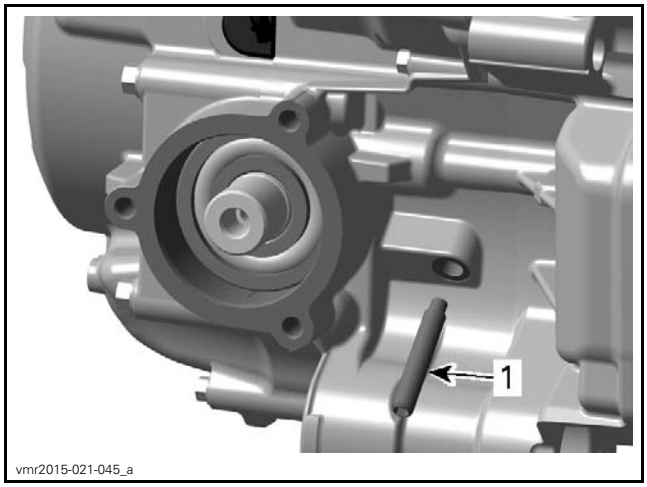

1. Crankshaft locking bolt

9. Finally, tighten the chain tensioner plug to specification.

TIGHTENING TORQUE	
chain tensioner plug	4.5 N•m ± 0.5 N•m (40 lbf•**in** ± 4 lbf•**in**)

CAMSHAFT TIMING GEAR

Removing the Camshaft Timing Gear

Remove the valve cover, refer to *TOP END* subsection.

Turn crankshaft to TDC ignition and lock crankshaft, refer to *CRANKSHAFT LOCKING PROCEDURE* in the *BOTTOM END* subsection.

Unscrew timing chain tensioner. Refer to *TIMING CHAIN TENSIONER* in this subsection.

Remove:
– Camshaft timing gear retaining screws
– Camshaft timing gear.

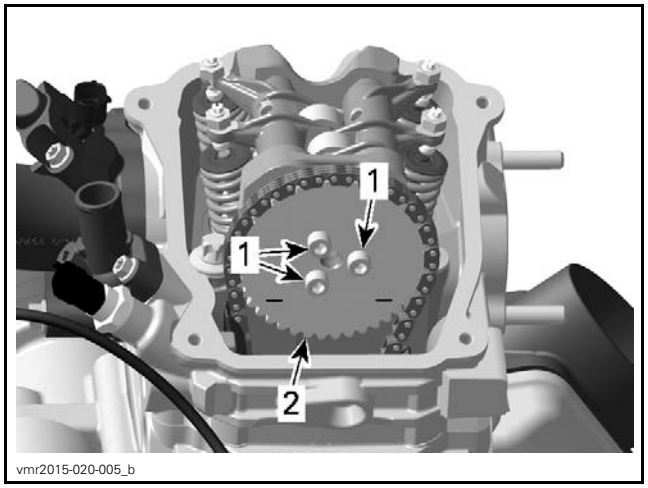

1. Camshaft timing gear retaining screws
2. Camshaft timing gear

NOTE: Secure timing chain with a piece of wire.

Inspecting the Camshaft Timing Gear

Check camshaft timing gear for wear or deterioration.

If gear is worn or damaged, replace it as a set with the timing chain.

For crankshaft gear, refer to *BOTTOM END* subsection, see *CRANKSHAFT*.

Installing the Camshaft Timing Gear

The installation is the reverse of the removal procedure. However, pay attention to the following.

1. Clean mating surface and threads of camshaft prior installing camshaft timing gear.

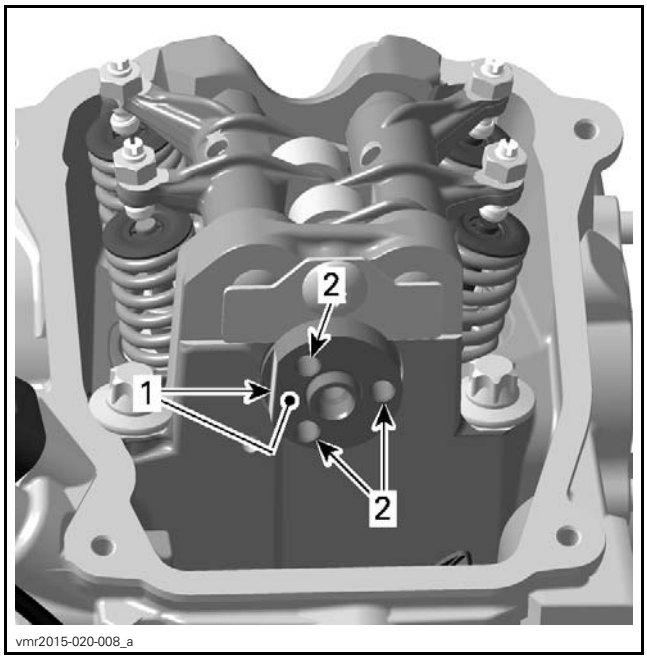

1. Mating surface on camshaft
2. Threads for camshaft screws

2. Crankshaft must be locked at TDC position before installing the timing chain, refer to *CRANKSHAFT LOCKING PROCEDURE* in the *BOTTOM END* subsection.
3. Install the camshaft timing tool on the cylinder head.

REQUIRED TOOL	
CAMSHAFT TIMING TOOL (P/N 529 036 268)	

NOTE: Align tube of camshaft adjustment tool properly with machined radius on cylinder head.

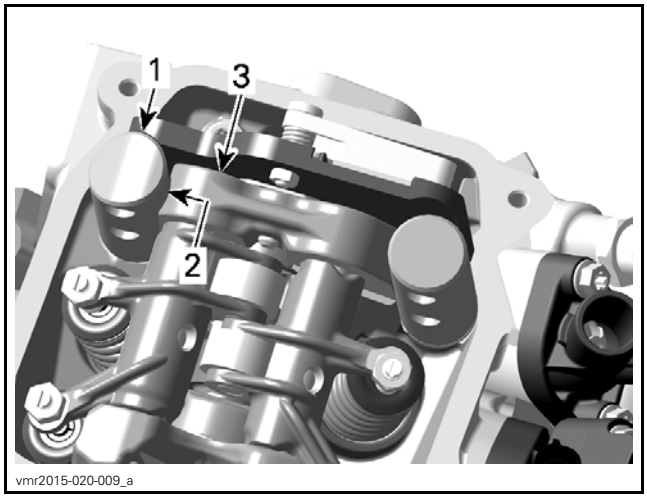

CAMSHAFT TIMING TOOL INSTALLED
1. Tube (camshaft adjustment tool)
2. Machined radius (camshaft adjustment tool)
3. Cylinder head

4. Set camshaft to TDC ignition position by aligning the camshaft flange flat spot with the tool lever.

NOTE: In addition, to ensure proper camshaft timing, press camshaft adjustment tool lever downwards.

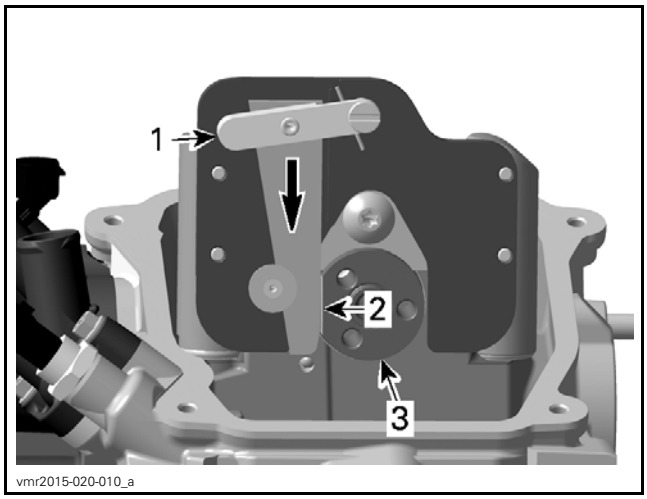

PRESS TOOL LEVER DOWN
1. *Lever*
2. *Flat spot*
3. *Camshaft*

NOTICE **Crankshaft and camshaft must be locked at TDC ignition position to place camshaft timing gear and timing chain in the proper position.**

5. Place camshaft timing gear along with the timing chain on the camshaft.

NOTE: The printed marks on the camshaft timing gear must be parallel to the cylinder head base.

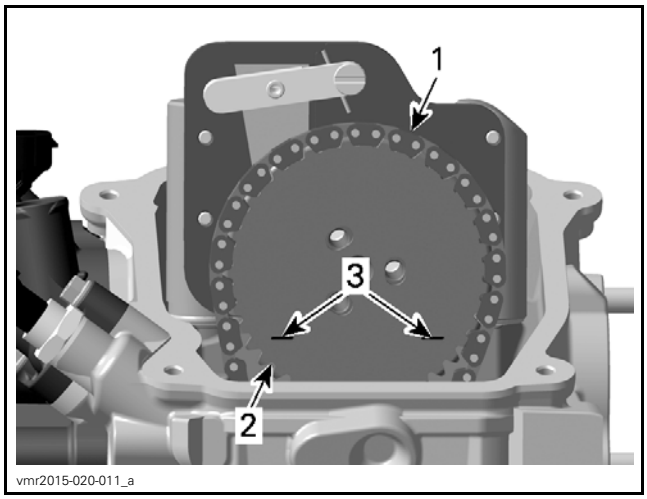

1. *Timing chain*
2. *Camshaft timing gear*
3. *Printed marks on camshaft timing gear*

6. Install and adjust timing chain tensioner, refer to *TIMING CHAIN TENSIONER* in this subsection.

7. Install and tighten camshaft timing gear retaining screws to specified torque.

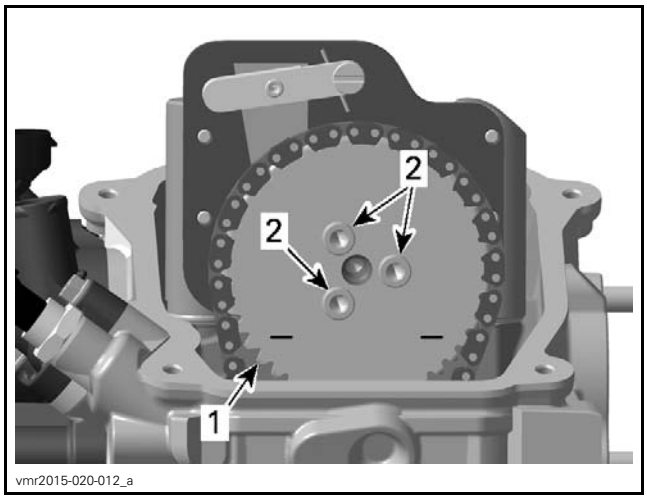

1. *Camshaft timing gear*
2. *Timing gear retaining screws*

TIGHTENING TORQUE	
Service product	LOCTITE 243 (BLUE) (P/N 293 800 060)
Camshaft timing gear retaining screws	10 N•m ± 1 N•m (89 lbf•**in** ± 9 lbf•**in**)

8. Remove the CAMSHAFT TIMING TOOL (P/N 529 036 268).

TIMING CHAIN

Removing the Timing Chain

Remove engine from vehicle, refer to *ENGINE REMOVAL/INSTALLATION* subsection.

Refer to *MAGNETO AND STARTER* subsection and remove following parts:
– Magneto cover
– Rotor.

Refer to *TOP END* subsection and remove the valve cover.

Refer to *GEARBOX AND 4X4 COUPLING UNIT* subsection and remove the output shaft.

NOTE: Mark the operating direction of the timing chain and check for excessive radial play before removal. Refer to *TIMING CHAIN INSPECTION*.

Refer to following procedures in this subsection and remove following parts:
– Chain tensioner
– Camshaft timing gear.

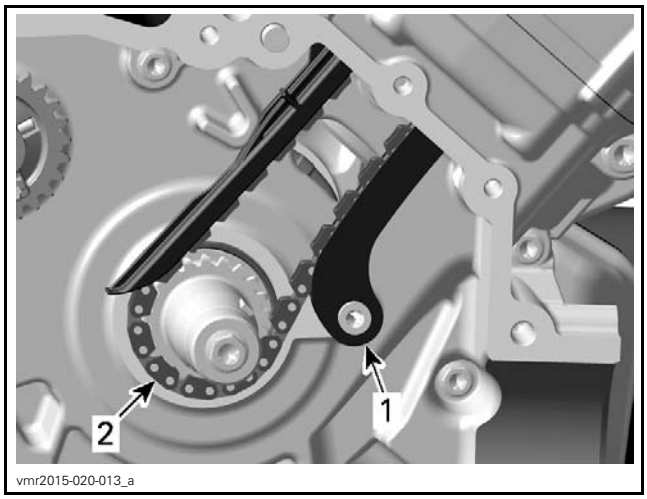

1. *Timing chain guide (tensioner side)*
2. *Timing chain*

Carefully pull the timing chain downwards and sideways, then out of the crankcase.

Inspecting the Timing Chain

Check timing chain on camshaft timing gear for excessive radial play.

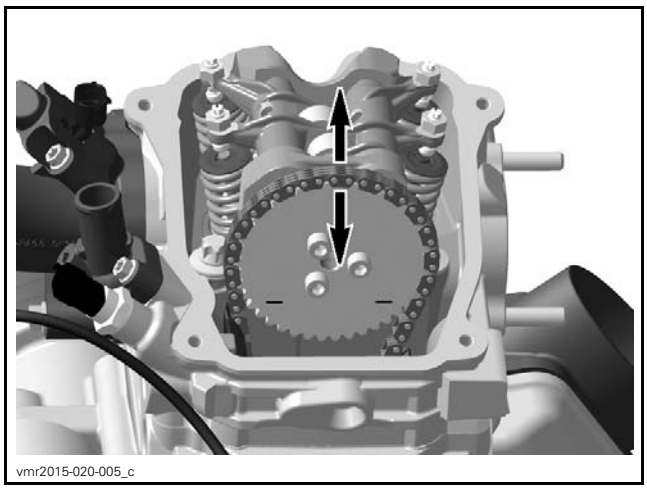

CHECKING TIMING CHAIN RADIAL PLAY

Check chain condition for wear and teeth condition.

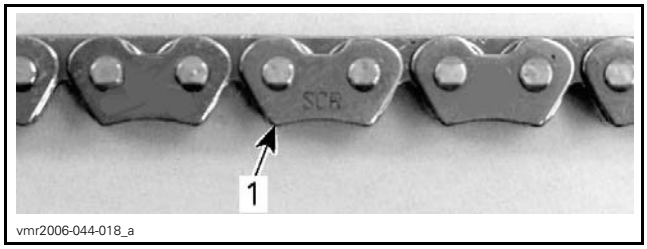

1. *Timing chain*

If chain is excessively worn or damaged, replace it as a set (camshaft timing gear and timing chain).

Check timing chain guides for wear, cracks or deforming. Replace as required.

NOTE: Check also the timing chain guide (tensioner side).

Installing the Timing Chain

The installation is the reverse of the removal procedure. However, pay attention to the following.

Install timing chain with camshaft timing gear.

NOTE: Ensure to carry out proper valve timing, refer to *CAMSHAFT TIMING GEAR* in this subsection.

NOTICE **Improper valve timing will damage engine components.**

TIMING CHAIN GUIDE (TENSIONER SIDE)

Removing the Timing Chain Guide (Tensioner Side)

Refer to procedures in this subsection and remove:

– Camshaft timing gear
– Timing chain.

Remove:

– Bearing screw
– Timing chain guide (tensioner side).

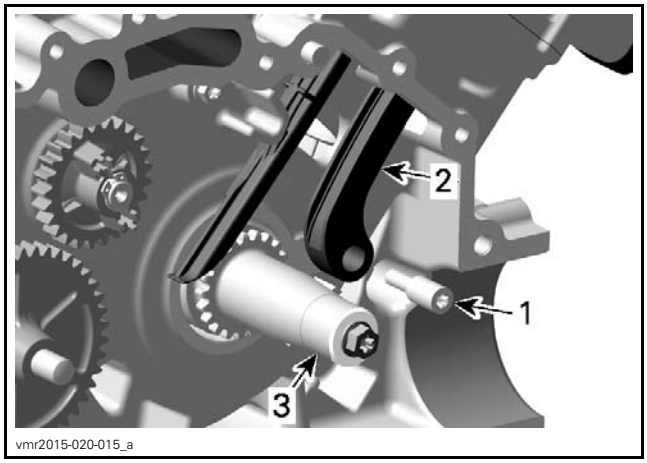

1. *Bearing screw*
2. *Timing chain guide (tensioner side)*
3. *Crankshaft MAG side*

Inspecting the Timing Chain Guide (Tensioner Side)

Check timing chain guide for wear, cracks or deforming. Replace if necessary.

Installing the Timing Chain Guide (Tensioner Side)

The installation is the reverse of the removal procedure.

TIGHTENING TORQUE	
Service product	LOCTITE 243 (BLUE) (P/N 293 800 060)
Timing chain guide bearing screw	10 N•m ± 1 N•m (89 lbf•**in** ± 9 lbf•**in**)

TIMING CHAIN

SERVICE TOOLS

Description	Part Number	Page
CAMSHAFT TIMING TOOL	529 036 268	6
CRANKSHAFT TDC POSITION TOOL	529 036 201	9

SERVICE PRODUCTS

Description	Part Number	Page
LOCTITE 243 (BLUE)	293 800 060	7, 12

TIMING CHAIN

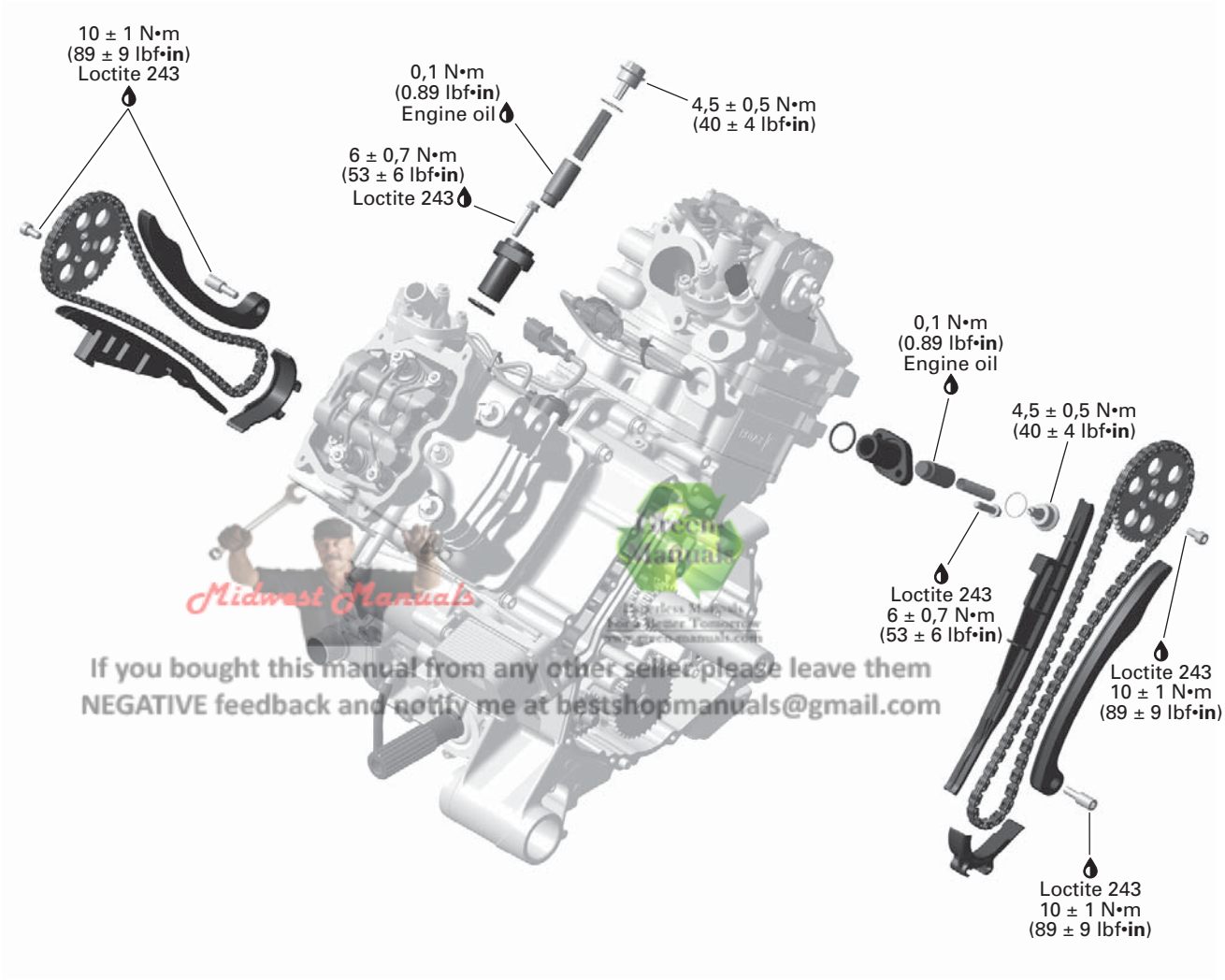

Midwest Manuals
If you bought this manual from any other seller please leave them
NEGATIVE feedback and notify me at bestshopmanuals@gmail.com

NEW = Component must be replaced when removed.

RTX19_1010RS-008-001_a

GENERAL

IMPORTANT: Note position of parts on disassembly. This may help to find the root cause of a problem. A component that is not replaced should be reinstalled in the same position as originally mounted.

TROUBLESHOOTING

UNUSUAL ENGINE NOISE OR VIBRATION

1. IMPROPER VALVE CLEARANCE ADJUSTMENT AND/OR WORN OUT ROCKER ARM(S)
   - *Readjust valve clearance and/or replace defective part(s), refer to CYLINDER HEAD subsection.*
2. DEFECTIVE CHAIN TENSIONER
   - *Replace chain tensioner.*
3. WORN OUT TIMING CHAIN GUIDE(S)
   - *Replace timing chain guide(s).*
4. STRETCHED TIMING CHAIN OR WORN OUT TIMING GEARS
   - *Replace timing chain and timing gears.*
5. LOOSE TIMING GEAR RETAINING SCREWS
   - *Retighten screws to recommended torque.*
6. INCORRECT CAMSHAFT TIMING
   - *Replace damaged components and readjust camshaft timing.*

ENGINE LACKS ACCELERATION OR POWER

1. INCORRECT CAMSHAFT TIMING
   - *Replace damaged components and readjust camshaft timing.*

PROCEDURES

TIMING CHAIN TENSIONERS

Timing Chain Tensioner Location

800R/HD8 Engine

The timing chain tensioner is located in the cylinder head.

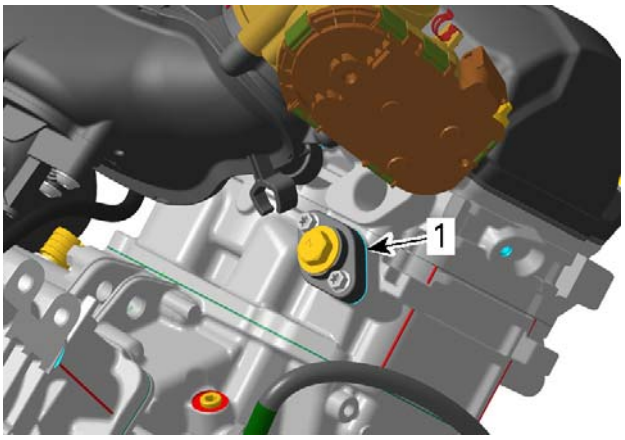

tmr2016-118-001_a

FRONT CYLINDER
1. Timing chain tensioner

1000R/HD10 Engine

The timing chain tensioner is located in the cylinder.

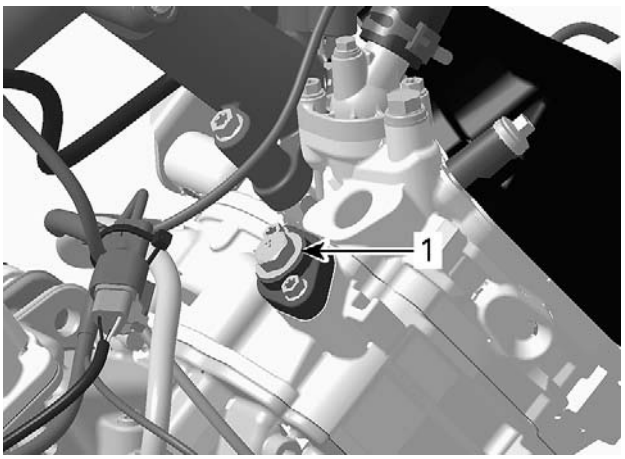

tmr2011-045-002_a

FRONT CYLINDER
1. Timing chain tensioner

Removing the Timing Chain Tensioner

1. Make sure the respective cylinder is set to TDC ignition. Refer to *CAMSHAFT TIMING GEARS* in this subsection.
2. Carefully unscrew chain tensioner plug and release spring tension.

CAUTION Tensioner is spring loaded.

3. Remove:
   – O-ring
   – Spring
   – Chain tensioner plunger.

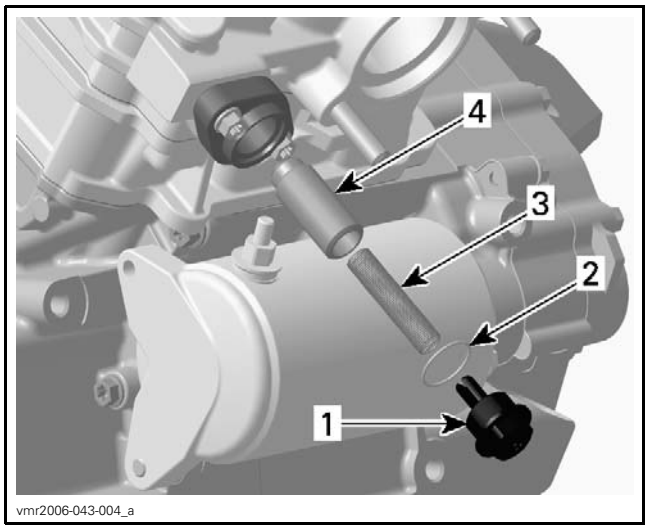

1. *Chain tensioner plug*
2. *O-ring*
3. *Spring*
4. *Chain tensioner plunger*

4. Remove:
   - Chain tensioner housing retaining screws
   - Chain tensioner housing
   - O-ring.

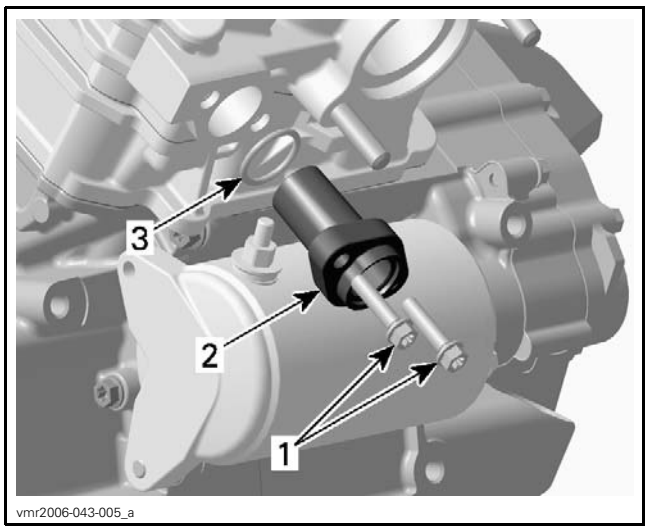

1. *Screws*
2. *Chain tensioner housing*
3. *O-ring*

Inspecting the Timing Chain Tensioner

Check the chain tensioner housing and plug for cracks or other damages. Replace if necessary.

Check chain tensioner plunger for free movement and/or scoring.

Check if O-rings are brittle, cracked or hard. Replace if necessary.

Check spring condition. Replace if bent, broken or worn.

Installing the Timing Chain Tensioner

1. For installation, reverse the removal procedure. However, pay attention to the following.

NOTE: Before installing the chain tensioner make sure, that the camshaft timing gear can be moved back and forth.

NOTICE **Do not loosen or remove camshaft timing gear screws. Otherwise the *CAMSHAFT TIMING* procedure must be performed.**

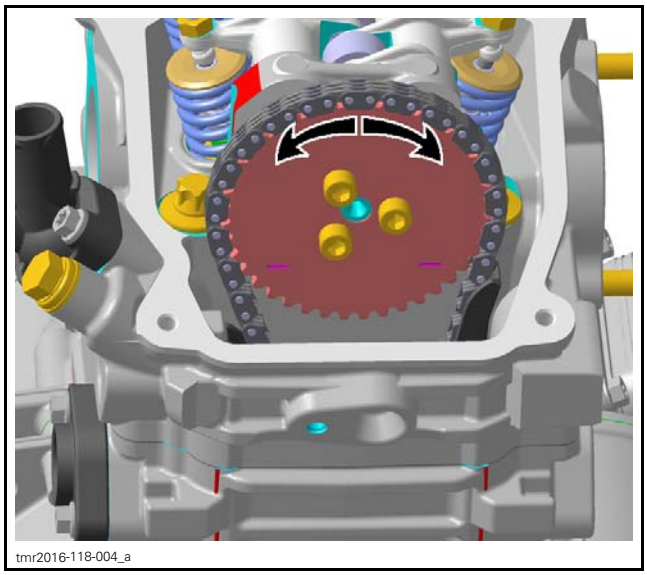

MOVE GEAR BACK AND FORTH

2. Apply engine oil on the plunger before installation.
3. Slightly turn the camshaft timing gear in order to get the timing chain play on the tensioner side.
4. Slightly screw the plunger in until the timing chain allows no more back and forth movement of the camshaft timing gear.
5. Screw the plunger in an additional 1/8 turn to reach the required specified torque.

TIMING CHAIN TENSIONER ADJUSTMENT (TORQUE)
0.1 N•m (.9 lbf•**in**)

NOTICE **Improper adjustment of the timing chain will lead to severe engine damage.**

6. Place the O-ring on chain tensioner screw plug.
7. Fit the spring on one side into the slot of the plug.

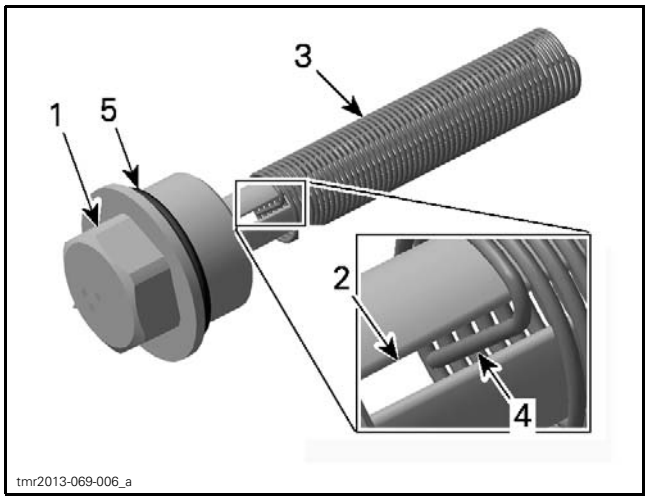

1. *Plug*
2. *Slot*
3. *Spring*
4. *Spring end*
5. *O-ring*

8. Fit the spring on the other side into the plunger.

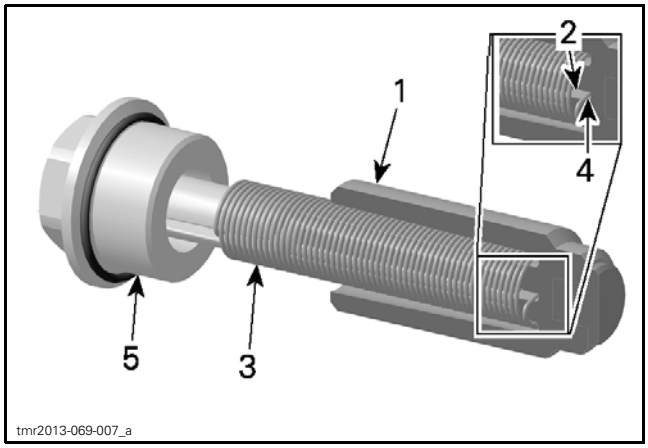

FOR CLARITY PARTS ARE REMOVED FROM CYLINDER
1. *Plunger*
2. *Notch*
3. *Spring*
4. *Spring end*
5. *Plug with O-ring*

NOTE: Turn spring only clockwise in order to fit the spring end into the notch of the plunger to avoid loosening the plunger during spring installation. Do not preload the spring.

9. Then compress the spring and screw the plug in.

NOTE: To avoid overstressed timing chain, the plug must engage into threads within the first full turn.

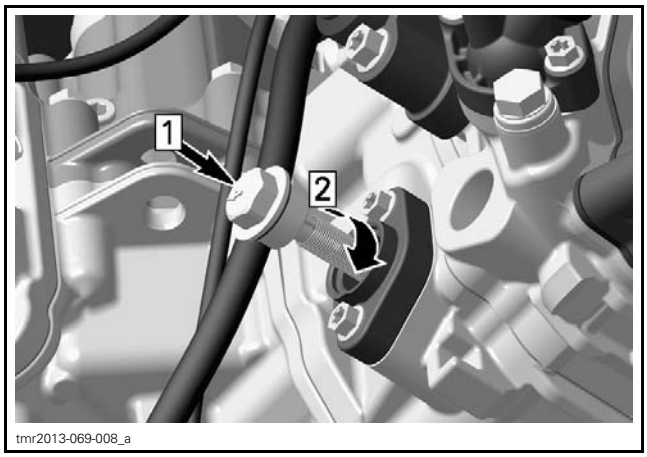

Step 1: Compress spring
Step 2: Screw in plug

10. Remove locking tool and install all other removed parts.
11. Finally, tighten the plug.

TIGHTENING TORQUE	
Chain tensioner plug	4.5 N•m ± 0.5 N•m (40 lbf•**in** ± 4 lbf•**in**)

CAMSHAFT TIMING GEARS

Removing the Camshaft Timing Gear

Remove the valve cover, refer to *CYLINDER HEAD* subsection.

Turn crankshaft to TDC ignition of the respective cylinder and lock magneto flywheel, see *CAMSHAFT TIMING* in this subsection.

Unscrew timing chain tensioner. Refer to *TIMING CHAIN TENSIONERS* in this subsection.

Remove camshaft timing gear screws.

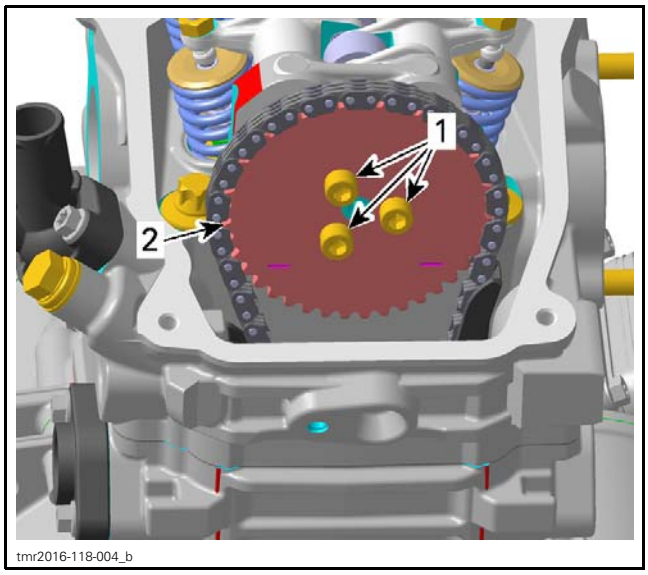

1. *Camshaft timing gear screws*
2. *Camshaft timing gear*

Remove the camshaft timing gear.

NOTE: Secure timing chain with a piece of wire.

Inspecting the Camshaft Timing Gear

Check camshaft timing gear for wear or deterioration.

If gear is worn or damaged, replace it as a set with the timing chain.

For crankshaft gear, refer to *CYLINDER BLOCK* subsection, see *CRANKSHAFT*.

Installing the Camshaft Timing Gear

For installation, reverse the removal procedure. Pay attention to the following details.

1. Clean mating surface and threads of camshaft prior installing camshaft timing gear.

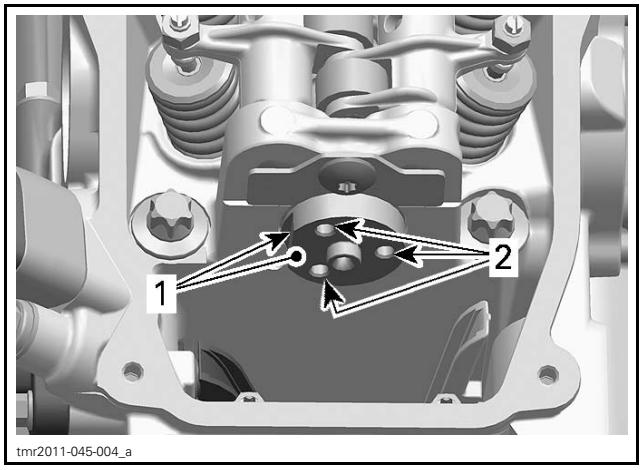

1. *Mating surface on camshaft*
2. *Threads for camshaft screws*

2. Crankshaft must be set to TDC ignition position before installing the timing chain, refer to *CAMSHAFT TIMING* in this subsection.
3. Install the camshaft timing tool on the cylinder head.

REQUIRED TOOL	
ICAMSHAFT TIMING TOOL (P/N 529 036 268)	

NOTE: Align tube of camshaft adjustment tool properly with machined radius on cylinder head.

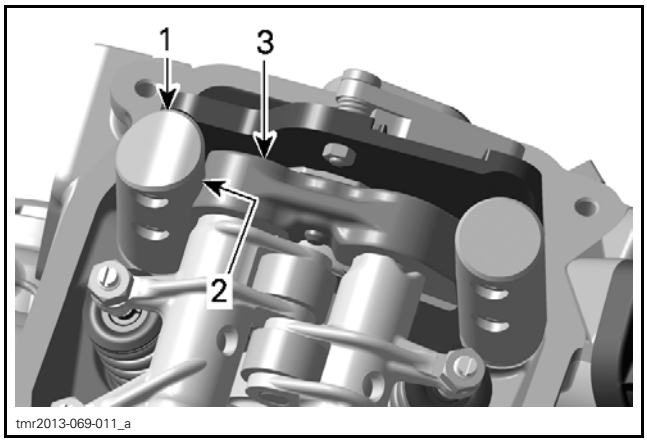

1. *Tube (camshaft adjustment tool)*
2. *Machined radius (camshaft adjustment tool)*
3. *Cylinder head*

4. Set camshaft to TDC ignition position by aligning the camshaft flange flat spot with the tool lever.

NOTE: In addition, to ensure proper camshaft timing, press camshaft adjustment tool lever downwards.

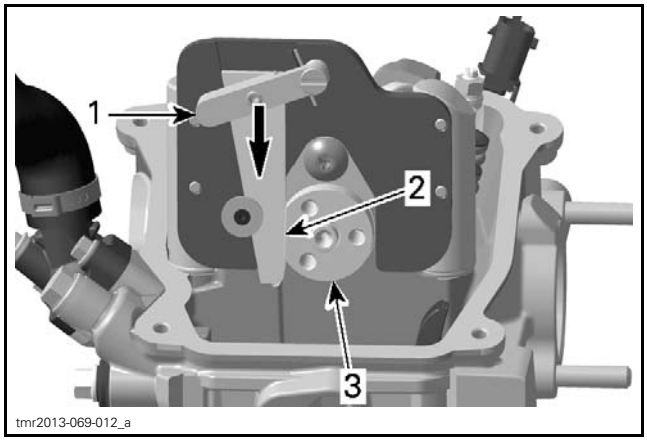

PRESS TOOL LEVER DOWN
1. *Lever*
2. *Flat spot*
3. *Camshaft*

NOTICE **Crankshaft and camshaft must be locked at TDC ignition position to place camshaft timing gear and timing chain in the proper position.**

5. Place camshaft timing gear along with the timing chain on the camshaft.

NOTE: The printed marks on the camshaft timing gear must be parallel to the cylinder head base.

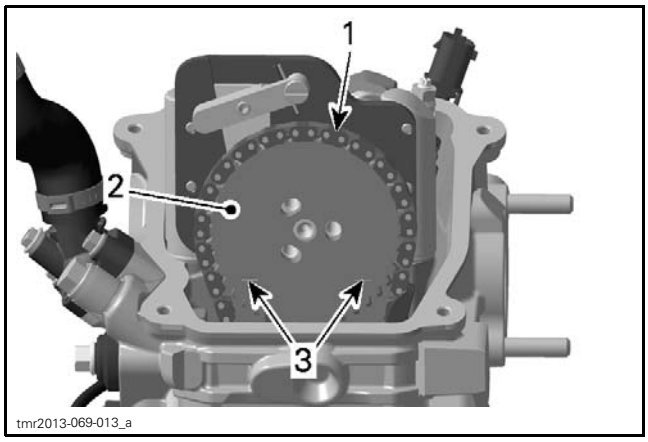

1. Timing chain
2. Camshaft timing gear
3. Printed marks on camshaft timing gear

6. Install and adjust timing chain tensioner, refer to *TIMING CHAIN TENSIONERS* in this subsection.
7. Install and tighten camshaft timing gear screws to specified torque.

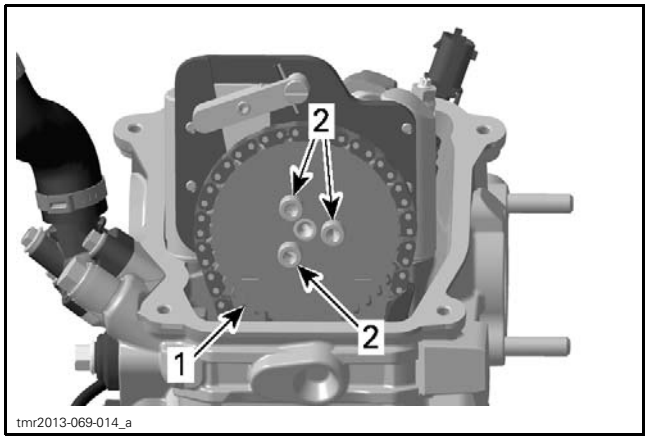

1. Camshaft timing gear
2. Camshaft timing gear screws

TIGHTENING TORQUE	
Camshaft timing gear screws	10 N•m ± 1 N•m (89 lbf•**in** ± 9 lbf•**in**) + LOCTITE 243 (BLUE) (P/N 293 800 060)

8. Remove the camshaft timing tool.

Camshaft Timing

If a piston (of cylinder 1 or 2) is set to TDC ignition, the camshaft timing gear of the opposite cylinder must be in the following position.

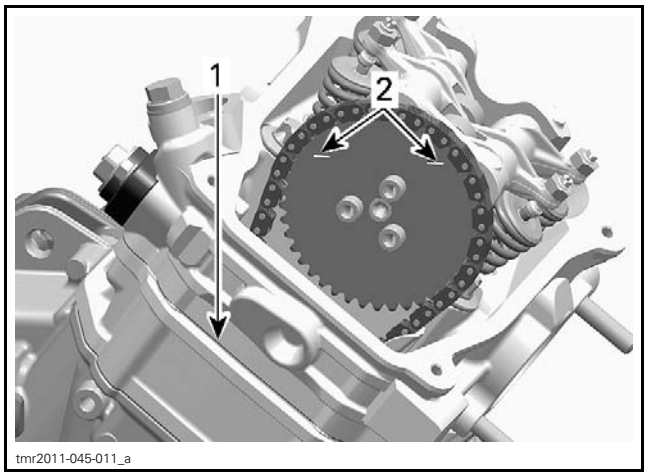

TYPICAL
1. Cylinder head base
2. Marks on timing gear of the opposite cylinder

Camshaft Timing Piston No. 2 (rear)

1. Remove spark plugs of both cylinders.
2. Remove valve covers of both cylinders.
3. Remove the plug and O-ring of magneto cover.

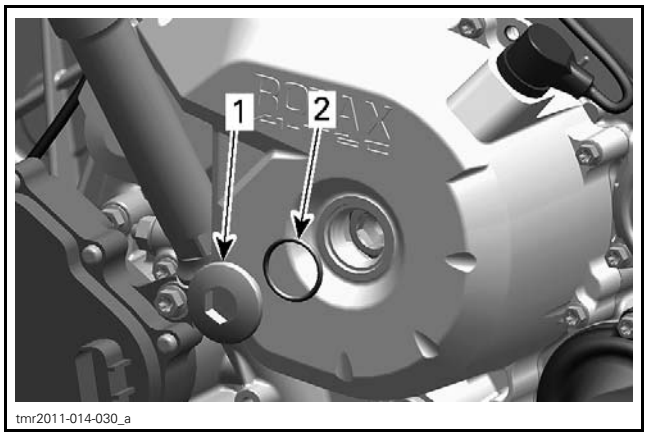

1. Plug
2. O-ring

4. Remove the crankshaft position sensor (CPS).

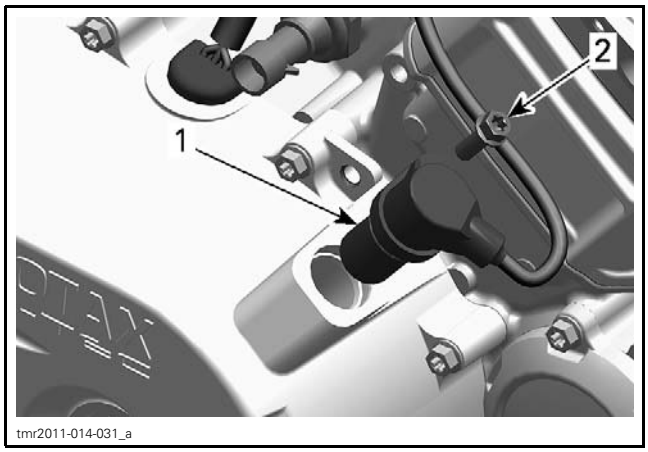

1. *CPS*
2. *Screw*

5. Set piston no. 2 to TDC ignition by turning the crankshaft.

REQUIRED TOOL
Allen key 14 mm

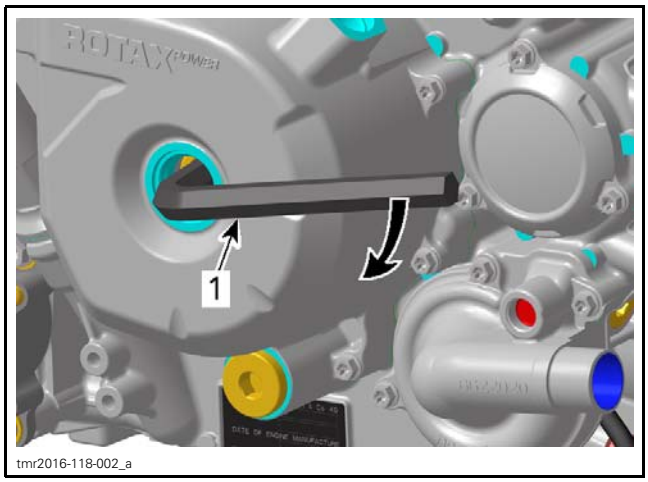

1. *Allen key 14 mm*

5.1 The rear piston is at TDC when it's index mark on the magneto flywheel is aligned with notch in the magneto cover.

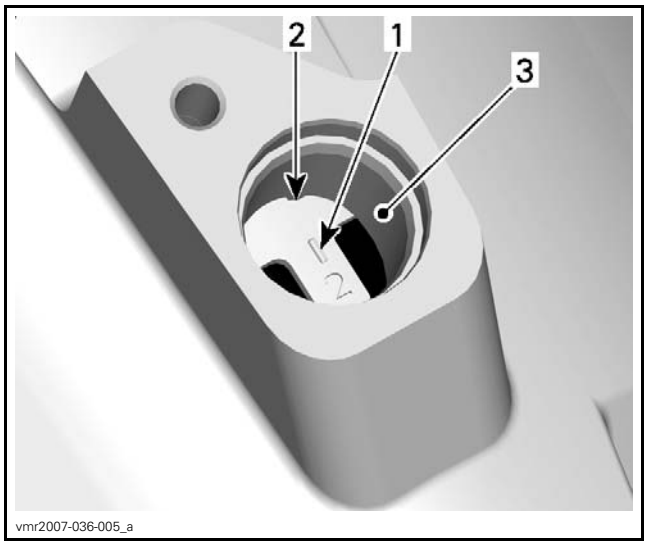

PISTON NO. 2 AT TDC
1. *Mark "2" on magneto flywheel*
2. *Notch on magneto cover*
3. *Crankshaft position sensor location*

5.2 Confirm printed marks on the camshaft timing gear are parallel to cylinder head base, in the lower position.

NOTE: If printed marks on camshaft timing gear are not as specified, turn crankshaft 360°.

NOTE: In this position the piston is set to TDC ignition.

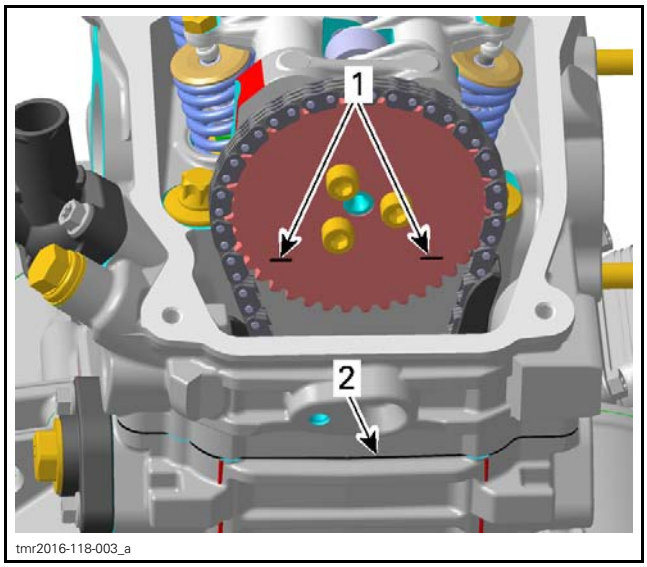

PISTON AT TDC IGNITION
1. *Printed marks on camshaft timing gear*
2. *Cylinder head base*

6. Install the crankshaft TDC position tool to lock crankshaft in position. Refer to *CRANKSHAFT TDC POSITION TOOL* in this subsection.

Camshaft Timing Piston No. 1 (front)

1. Set piston no. 2 (rear) to TDC ignition, see *CAMSHAFT TIMING PISTON NO. 2 (REAR)* in this subsection.
2. Remove crankshaft TDC position tool.
3. To set front piston no. 1 to **TDC ignition** turn crankshaft 280° counterclockwise.

REQUIRED TOOL
Allen key 14 mm

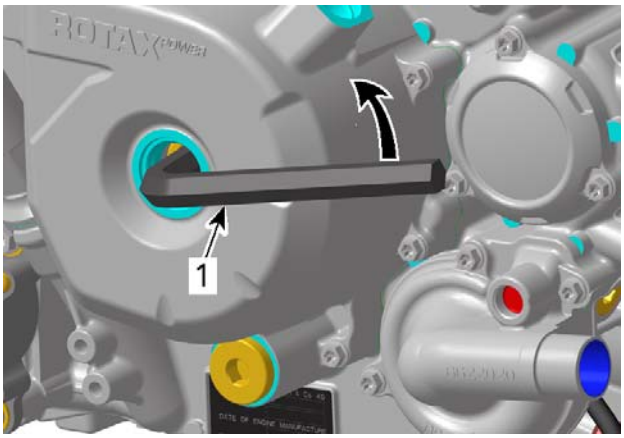

tmr2016-118-002_b

TURN CRANKSHAFT 280° COUNTERCLOCKWISE
1. Allen key 14 mm

3.1 The front piston is at TDC when it's index mark on the magneto flywheel is aligned with the notch in the magneto cover.

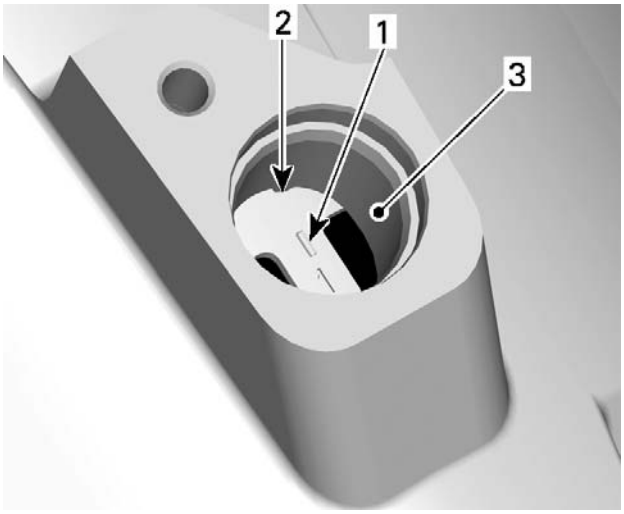

vmr2007-036-006_a

CYLINDER 1 AT TDC IGNITION
1. Mark "1" on magneto flywheel
2. Notch on magneto cover
3. Location of crankshaft position sensor

3.2 Confirm printed marks on the camshaft timing gear are parallel with cylinder head base, in the lowest position.

NOTE: In this position the piston is set to TDC ignition.

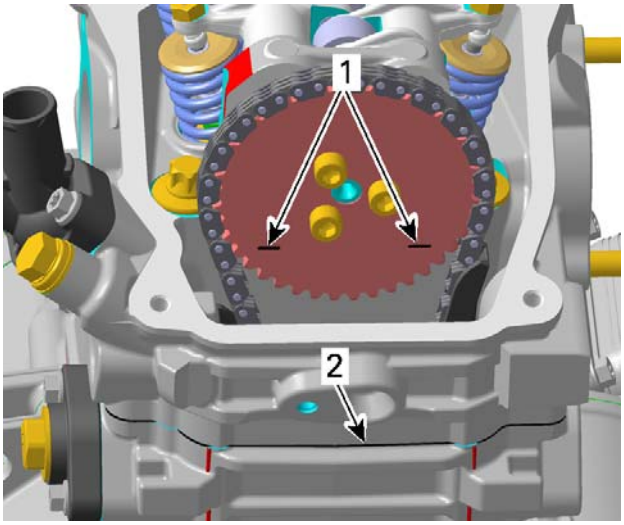

tmr2016-118-003_a

PISTON AT TDC IGNITION
1. Printed marks on camshaft timing gear
2. Cylinder head base

Crankshaft TDC Position Tool Installation

NOTICE **Never use crankshaft TDC position tool to remove or tighten drive CVT screw or rotor retaining screw. Damage to the teeth of the trigger wheel on the rotor will occur.**

Install tool in magneto cover CPS bore.

REQUIRED TOOL	
CRANKSHAFT TDC POSITION TOOL (P/N 529 036 201)	

NOTE: Make sure to match the teeth on the crankshaft TDC position tool with the magneto rotor.

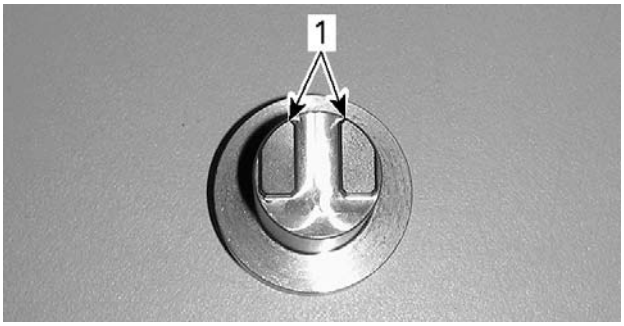

tmr2011-045-020_a

1. Crankshaft TDC position tool teeth (end view)

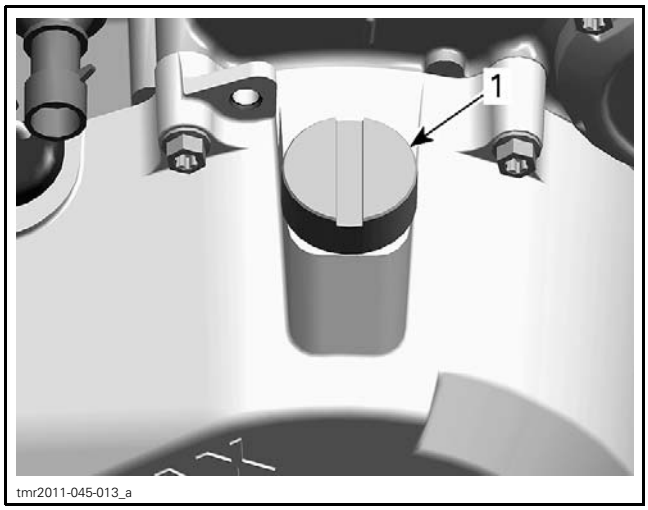

MAGNETO COVER
1. *Crankshaft TDC position tool installed in CPS bore*

NOTICE Tool must be fully inserted.

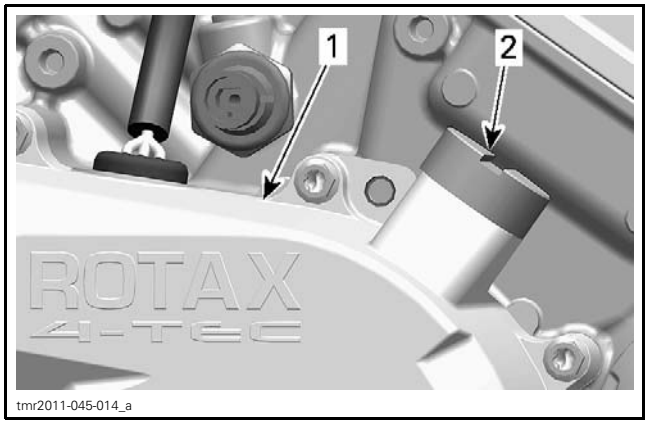

1. *Magneto cover*
2. *TDC position tool*

TIMING CHAIN

The engine is equipped with two timing chains.

– MAG side timing chain is located behind the magneto cover.
– PTO side timing chain is located behind the PTO cover.

Removing the Timing Chain (MAG Side)

NOTE: Mark the operating direction of the timing chain and check for excessive radial play before removal. Refer to *INSPECTING THE TIMING CHAIN*.

Refer to *MAGNETO SYSTEM* subsection and remove following parts:

– Magneto cover
– Rotor
– Sprag clutch gear.

Refer to *CYLINDER HEAD* subsection and remove following parts:

– Valve cover.

Refer to following procedures in this subsection and remove following parts:

– Chain tensioner
– Camshaft timing gear.

Remove timing chain guide (tensioner side) and lower timing chain guide.

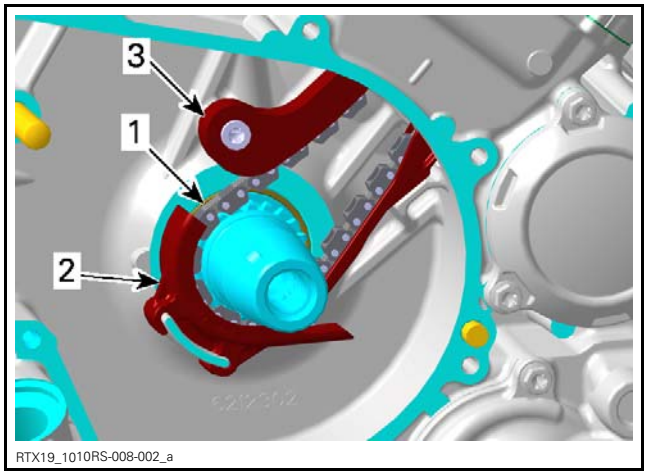

1. *Timing chain*
2. *Lower timing chain guide*
3. *Timing chain guide (tensioner side)*

Carefully pull the timing chain downwards and sideways, then out of the crankcase.

Removing the Timing Chain (PTO Side)

NOTE: Mark the operating direction of the timing chain and check for excessive radial play before removal. Refer to *INSPECTING THE TIMING CHAIN*.

Refer to *CYLINDER BLOCK* subsection and remove following parts:

– PTO cover
– Breather gear
– Intermediate gear.

Refer to *CYLINDER HEAD* subsection and remove following parts:

– Valve cover.

Refer to following procedures in this subsection and remove following parts:

– Chain tensioner
– Camshaft timing gear.

Remove timing chain guide (tensioner side) and lower timing chain guide.

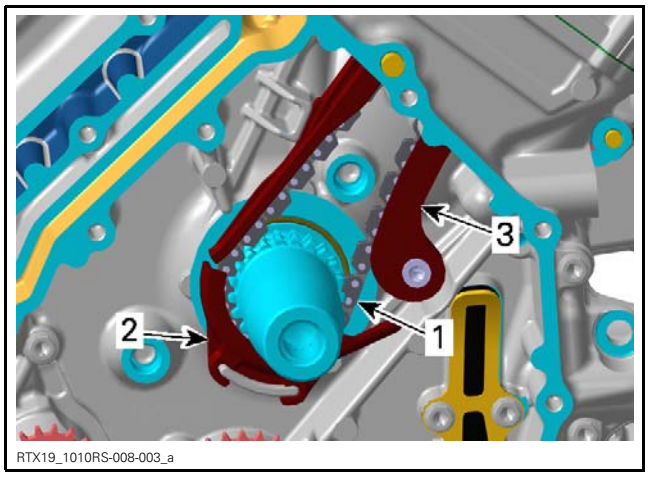

1. *Timing chain*
2. *Lower timing chain guide*
3. *Timing chain guide (tensioner side)*

Carefully pull the timing chain sideward and down from the crankcase.

Inspecting the Timing Chain

Inspection is the same for both timing chains.

Check timing chain on camshaft timing gear for excessive radial play.

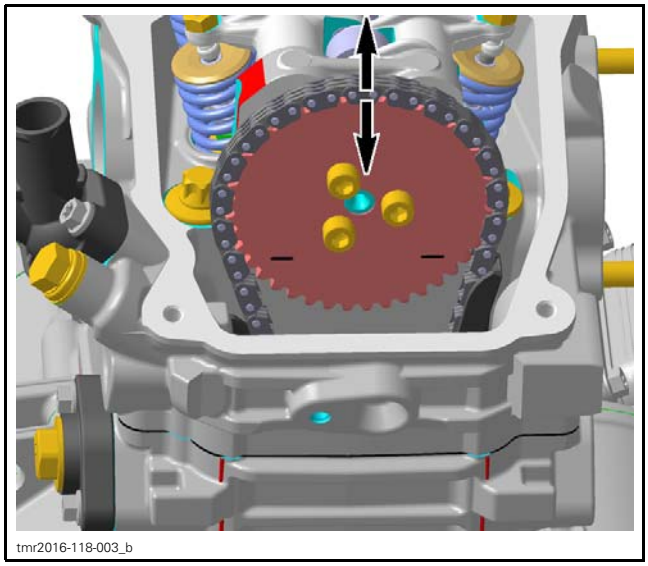

CHECKING TIMING CHAIN RADIAL PLAY

Check chain condition for wear and teeth condition.

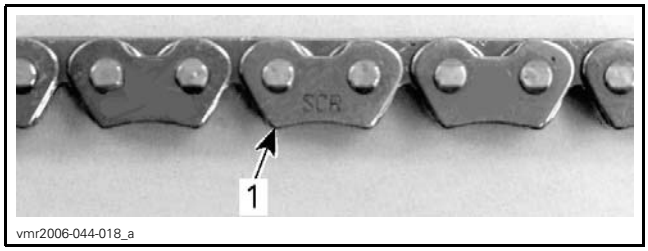

1. *Timing chain*

If chain is excessively worn or damaged, replace it as a set (camshaft timing gear and timing chain).

Check timing chain guides for wear, cracks or deforming. Replace as required.

NOTE: Check also the timing chain guide (tensioner side).

Check if crankshaft timing gears are excessively worn or damaged.

Replace if necessary. Refer to *CRANKSHAFT* in the *CYLINDER BLOCK* subsection.

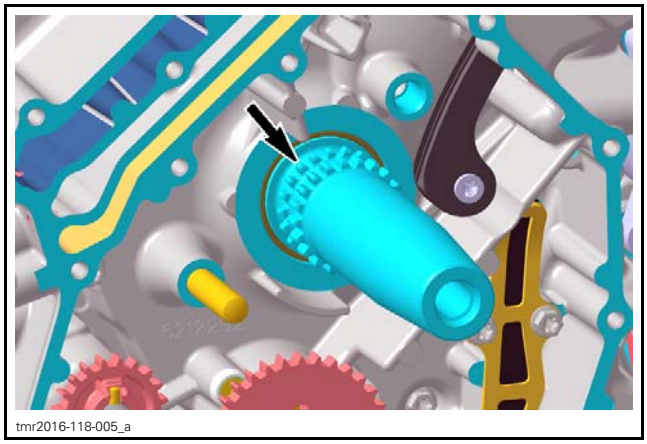

Installing the Timing Chain

The installation is essentially the reverse of the removal procedure, but pay attention to the following details.

NOTE: Installation is the same for both timing chains.

Install timing chain with camshaft timing gear.

NOTE: Ensure to carry out proper valve timing, refer to *CAMSHAFT TIMING GEARS* in this subsection.

NOTICE **Improper valve timing will damage engine components.**

TIMING CHAIN GUIDE (TENSIONER SIDE)

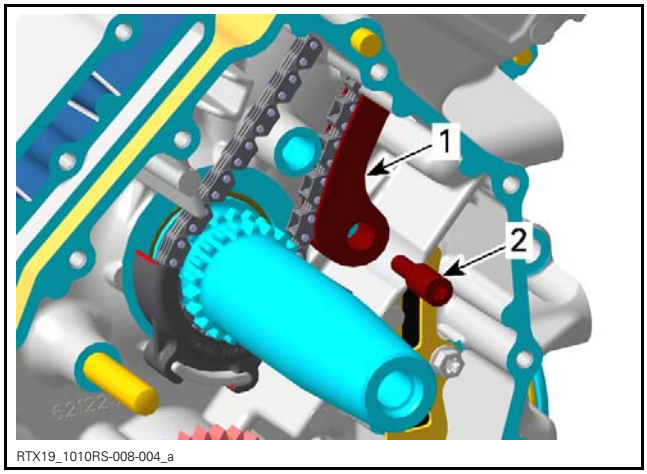

1. *Timing chain guide (tensioner side)*
2. *Bearing screw*

Removing the Timing Chain Guide (Tensioner Side)

Refer to *TIMING CHAIN* in this subsection.

Inspecting the Timing Chain Guide (Tensioner Side)

Check timing chain guide for wear, cracks or deforming. Replace if necessary.

Installing the Timing Chain Guide (Tensioner Side)

The installation is the reverse of the removal procedure.

TIGHTENING TORQUE	
Timing chain guide bearing screw	10 N•m ± 1 N•m (89 lbf•**in** ± 9 lbf•**in**) + LOCTITE 243 (BLUE) (P/N 293 800 060)

BOTTOM END

SERVICE TOOLS

Description	Part Number	Page
BEARING INSTALLER (GEARBOX)	529 035 762	14
BEARING INSTALLER (GEARBOX)	529 035 763	13
CRANKCASE SUPPORT (MAG SIDE)	529 035 916	11–12
CRANKCASE SUPPORT PTO	529 035 754	11–12
CRANKSHAFT LOCKING BOLT	529 035 617	18, 22
DIAL INDICATOR ADAPTER	529 036 159	17
HANDLE	420 877 650	5, 11, 13–14
OIL SEAL INSTALLER	529 036 069	11
OUTPUT SHAFT SEAL INSTALLER	529 035 941	5
PLAIN BEARING REMOVER/INSTALLER	529 035 917	11–12
TDC DIAL INDICATOR	414 104 700	17

SERVICE PRODUCTS

Description	Part Number	Page
LOCTITE 243 (BLUE)	293 800 060	5
LOCTITE 5910	293 800 081	15
LOCTITE CHISEL (GASKET REMOVER)	413 708 500	9

TIMING CHAIN

SERVICE TOOLS

Description	Part Number	Page
CAMSHAFT TIMING TOOL	529 036 268	6
CRANKSHAFT TDC POSITION TOOL	529 036 201	9

SERVICE PRODUCTS

Description	Part Number	Page
LOCTITE 243 (BLUE)	293 800 060	7, 12

TIMING CHAIN

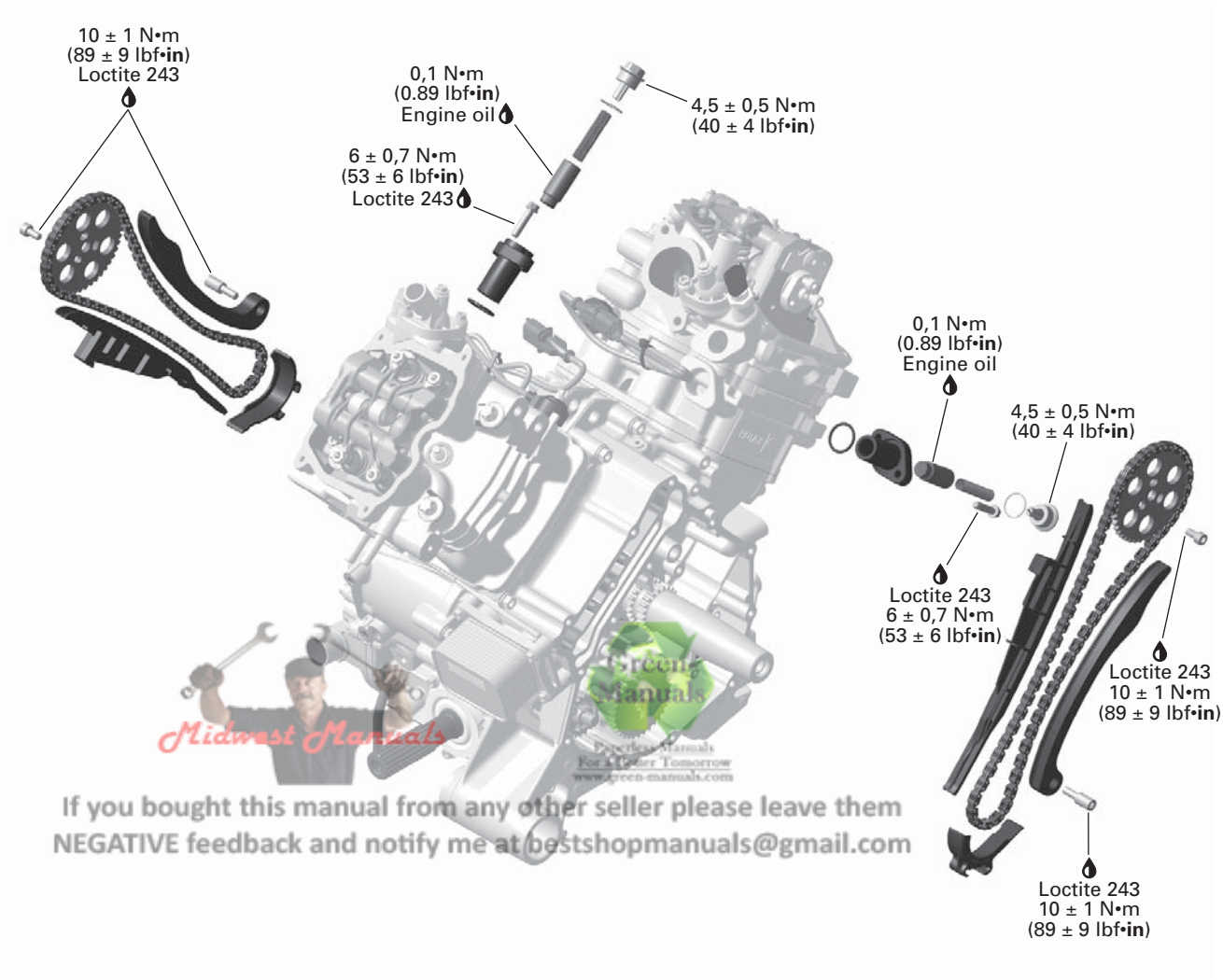

Midwest Manuals
Green Manuals
For a Greener Tomorrow
www.green-manuals.com
If you bought this manual from any other seller please leave them
NEGATIVE feedback and notify me at bestshopmanuals@gmail.com

NEW = Component must be replaced when removed.

RTX19_1010RS-008-001_a

GENERAL

IMPORTANT: Note position of parts on disassembly. This may help to find the root cause of a problem. A component that is not replaced should be reinstalled in the same position as originally mounted.

TROUBLESHOOTING

UNUSUAL ENGINE NOISE OR VIBRATION

1. IMPROPER VALVE CLEARANCE ADJUSTMENT AND/OR WORN OUT ROCKER ARM(S)
   - *Readjust valve clearance and/or replace defective part(s), refer to CYLINDER HEAD subsection.*
2. DEFECTIVE CHAIN TENSIONER
   - *Replace chain tensioner.*
3. WORN OUT TIMING CHAIN GUIDE(S)
   - *Replace timing chain guide(s).*
4. STRETCHED TIMING CHAIN OR WORN OUT TIMING GEARS
   - *Replace timing chain and timing gears.*
5. LOOSE TIMING GEAR RETAINING SCREWS
   - *Retighten screws to recommended torque.*
6. INCORRECT CAMSHAFT TIMING
   - *Replace damaged components and readjust camshaft timing.*

ENGINE LACKS ACCELERATION OR POWER

1. INCORRECT CAMSHAFT TIMING
   - *Replace damaged components and readjust camshaft timing.*

PROCEDURES

TIMING CHAIN TENSIONERS

Timing Chain Tensioner Location

The timing chain tensioner is located in the cylinder.

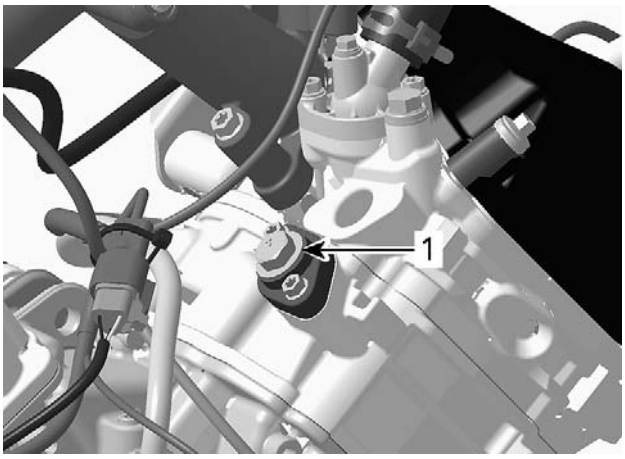

FRONT CYLINDER
1. Timing chain tensioner

Removing the Timing Chain Tensioner

1. Make sure the respective cylinder is set to TDC ignition. Refer to *CAMSHAFT TIMING GEARS* in this subsection.
2. Carefully unscrew chain tensioner plug and release spring tension.

CAUTION Tensioner is spring loaded.

3. Remove:
   – O-ring
   – Spring
   – Chain tensioner plunger.

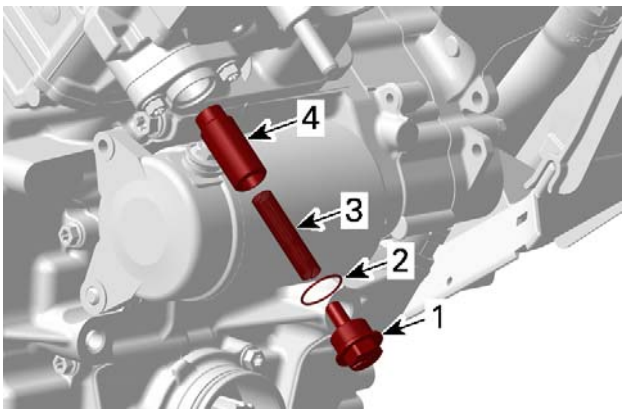

1. Chain tensioner plug
2. O-ring
3. Spring
4. Chain tensioner plunger

4. Remove:
   – Chain tensioner housing retaining screws
   – Chain tensioner housing
   – O-ring.

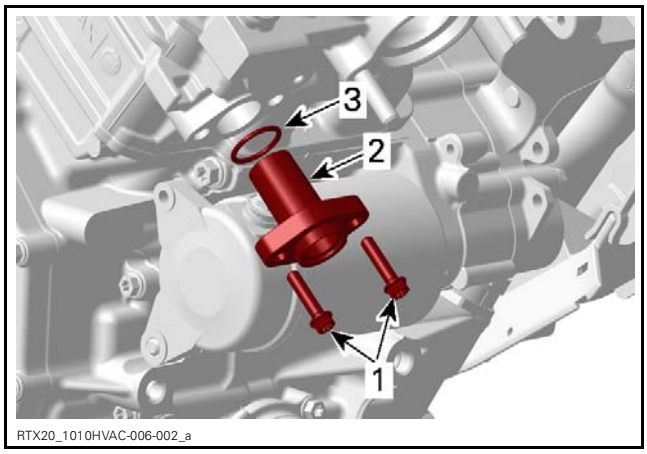

1. *Screws*
2. *Chain tensioner housing*
3. *O-ring*

Inspecting the Timing Chain Tensioner

Check the chain tensioner housing and plug for cracks or other damages. Replace if necessary.

Check chain tensioner plunger for free movement and/or scoring.

Check if O-rings are brittle, cracked or hard. Replace if necessary.

Check spring condition. Replace if bent, broken or worn.

Installing the Timing Chain Tensioner

1. For installation, reverse the removal procedure. However, pay attention to the following.

NOTE: Before installing the chain tensioner make sure, that the camshaft timing gear can be moved back and forth.

NOTICE **Do not loosen or remove camshaft timing gear screws. Otherwise the *CAMSHAFT TIMING* procedure must be performed.**

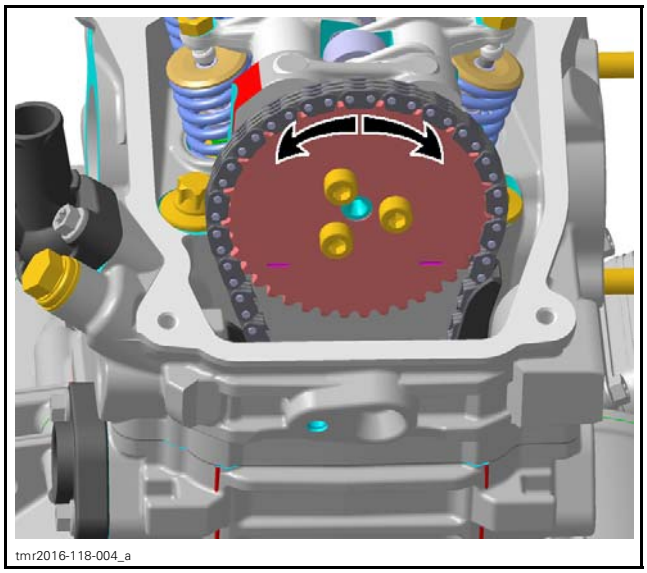

MOVE GEAR BACK AND FORTH

2. Apply engine oil on the plunger before installation.
3. Slightly turn the camshaft timing gear in order to get the timing chain play on the tensioner side.
4. Slightly screw the plunger in until the timing chain allows no more back and forth movement of the camshaft timing gear.
5. Screw the plunger in an additional 1/8 turn to reach the required specified torque.

TIMING CHAIN TENSIONER ADJUSTMENT (TORQUE)
0.1 N•m (.9 lbf•**in**)

NOTICE **Improper adjustment of the timing chain will lead to severe engine damage.**

6. Place the O-ring on chain tensioner screw plug.
7. Fit the spring on one side into the slot of the plug.

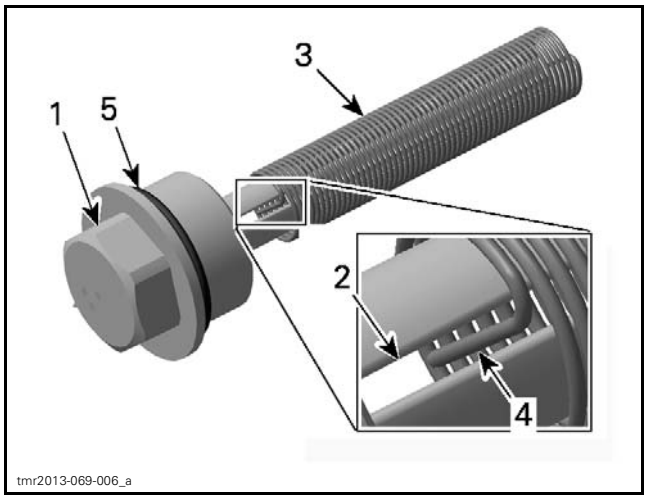

1. *Plug*
2. *Slot*
3. *Spring*
4. *Spring end*
5. *O-ring*

8. Fit the spring on the other side into the plunger.

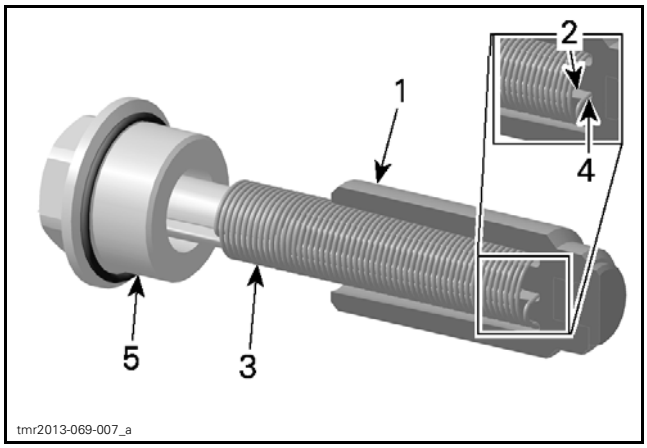

FOR CLARITY PARTS ARE REMOVED FROM CYLINDER
1. *Plunger*
2. *Notch*
3. *Spring*
4. *Spring end*
5. *Plug with O-ring*

NOTE: Turn spring only clockwise in order to fit the spring end into the notch of the plunger to avoid loosening the plunger during spring installation. Do not preload the spring.

9. Then compress the spring and screw the plug in.

NOTE: To avoid overstressed timing chain, the plug must engage into threads within the first full turn.

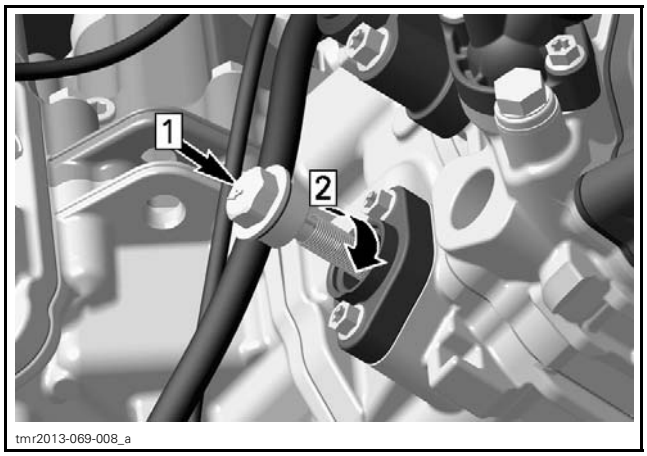

Step 1: Compress spring
Step 2: Screw in plug

10. Remove locking tool and install all other removed parts.
11. Finally, tighten the plug.

TIGHTENING TORQUE	
Chain tensioner plug	4.5 N•m ± 0.5 N•m (40 lbf•**in** ± 4 lbf•**in**)

CAMSHAFT TIMING GEARS

Removing the Camshaft Timing Gear

Remove the valve cover, refer to *CYLINDER HEAD* subsection.

Turn crankshaft to TDC ignition of the respective cylinder and lock magneto flywheel, see *CAMSHAFT TIMING* in this subsection.

Unscrew timing chain tensioner. Refer to *TIMING CHAIN TENSIONERS* in this subsection.

Remove camshaft timing gear screws.

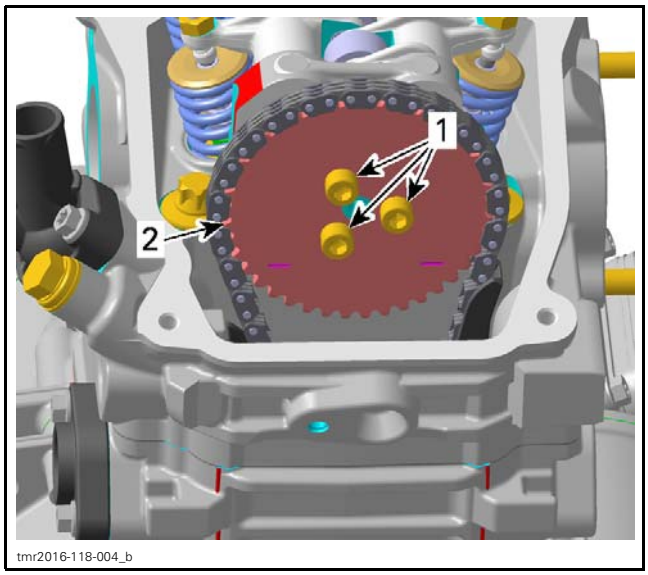

1. *Camshaft timing gear screws*
2. *Camshaft timing gear*

Remove the camshaft timing gear.

NOTE: Secure timing chain with a piece of wire.

Inspecting the Camshaft Timing Gear

Check camshaft timing gear for wear or deterioration.

If gear is worn or damaged, replace it as a set with the timing chain.

For crankshaft gear, refer to *CYLINDER BLOCK* subsection, see *CRANKSHAFT*.

Installing the Camshaft Timing Gear

For installation, reverse the removal procedure. Pay attention to the following details.

1. Clean mating surface and threads of camshaft prior installing camshaft timing gear.

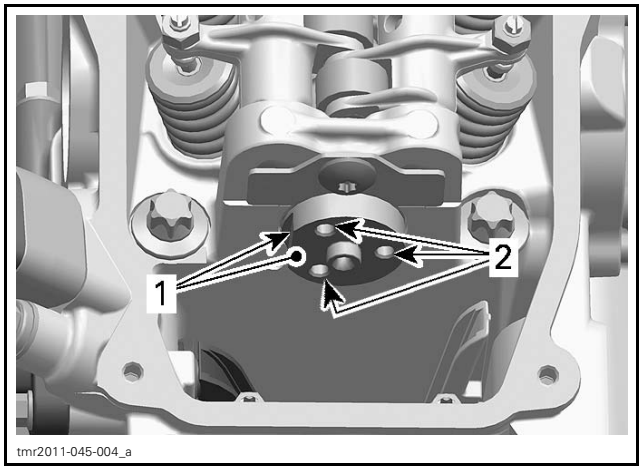

1. *Mating surface on camshaft*
2. *Threads for camshaft screws*

2. Crankshaft must be set to TDC ignition position before installing the timing chain, refer to *CAMSHAFT TIMING* in this subsection.
3. Install the camshaft timing tool on the cylinder head.

REQUIRED TOOL	
ICAMSHAFT TIMING TOOL (P/N 529 036 268)	

NOTE: Align tube of camshaft adjustment tool properly with machined radius on cylinder head.

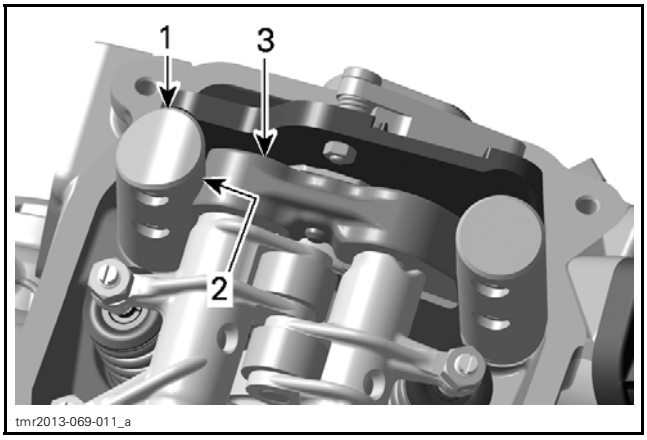

1. *Tube (camshaft adjustment tool)*
2. *Machined radius (camshaft adjustment tool)*
3. *Cylinder head*

4. Set camshaft to TDC ignition position by aligning the camshaft flange flat spot with the tool lever.

NOTE: In addition, to ensure proper camshaft timing, press camshaft adjustment tool lever downwards.

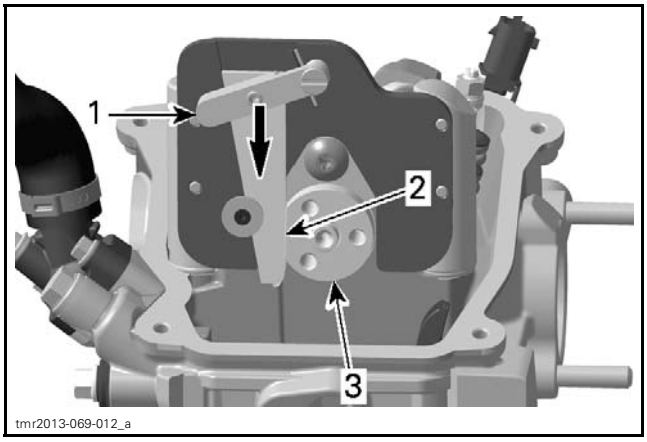

PRESS TOOL LEVER DOWN
1. *Lever*
2. *Flat spot*
3. *Camshaft*

NOTICE **Crankshaft and camshaft must be locked at TDC ignition position to place camshaft timing gear and timing chain in the proper position.**

5. Place camshaft timing gear along with the timing chain on the camshaft.

NOTE: The printed marks on the camshaft timing gear must be parallel to the cylinder head base.

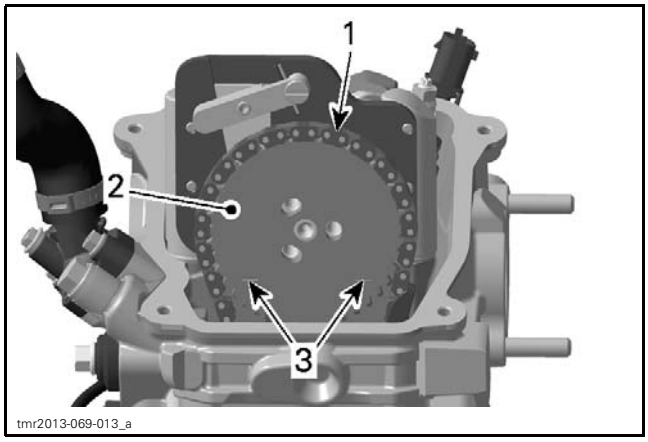

1. Timing chain
2. Camshaft timing gear
3. Printed marks on camshaft timing gear

6. Install and adjust timing chain tensioner, refer to *TIMING CHAIN TENSIONERS* in this subsection.
7. Install and tighten camshaft timing gear screws to specified torque.

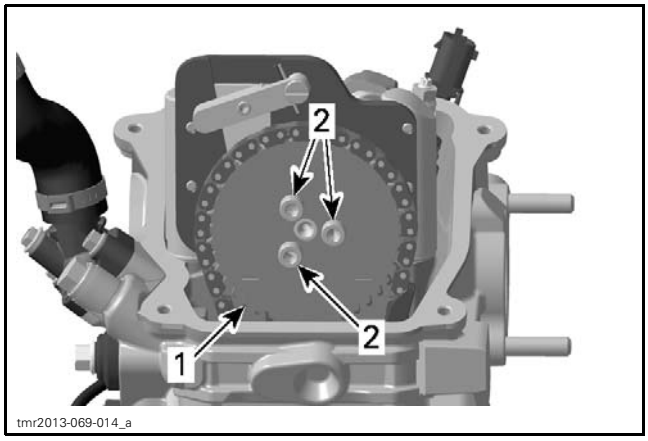

1. Camshaft timing gear
2. Camshaft timing gear screws

TIGHTENING TORQUE	
Camshaft timing gear screws	10 N•m ± 1 N•m (89 lbf•**in** ± 9 lbf•**in**) + LOCTITE 243 (BLUE) (P/N 293 800 060)

8. Remove the camshaft timing tool.

Camshaft Timing

If a piston (of cylinder 1 or 2) is set to TDC ignition, the camshaft timing gear of the opposite cylinder must be in the following position.

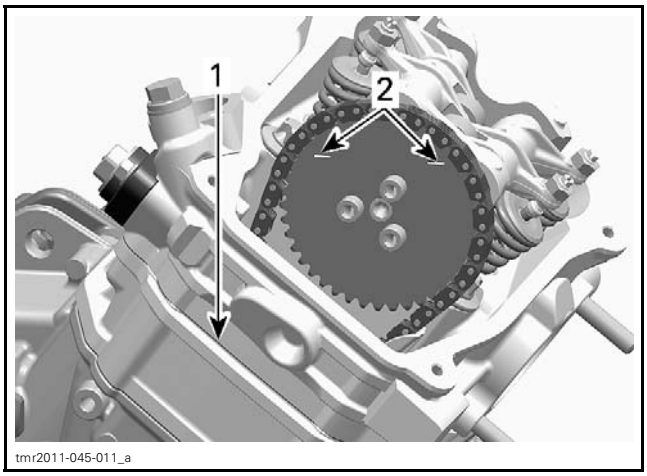

TYPICAL
1. Cylinder head base
2. Marks on timing gear of the opposite cylinder

Camshaft Timing Piston No. 2 (rear)

1. Remove spark plugs of both cylinders.
2. Remove valve covers of both cylinders.
3. Remove the compressor drive belt cover. Refer to *AIR CONDITIONING - ENGINE COMPONENTS* subsection.
4. Remove the crankshaft position sensor (CPS).

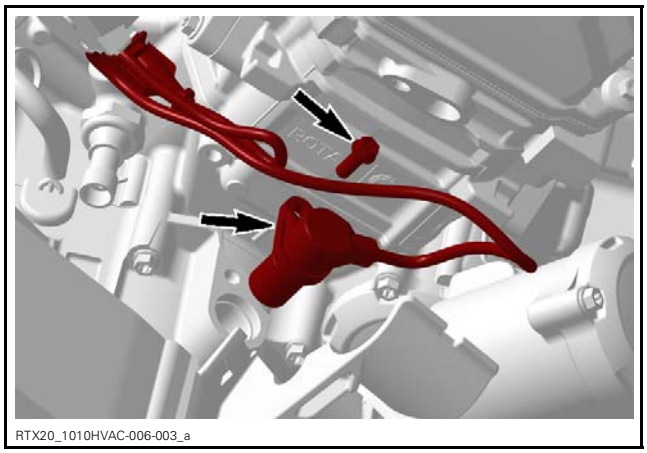

5. Set piston no. 2 to TDC ignition by turning the crankshaft.

REQUIRED TOOL
Ratchet with 24 mm nut

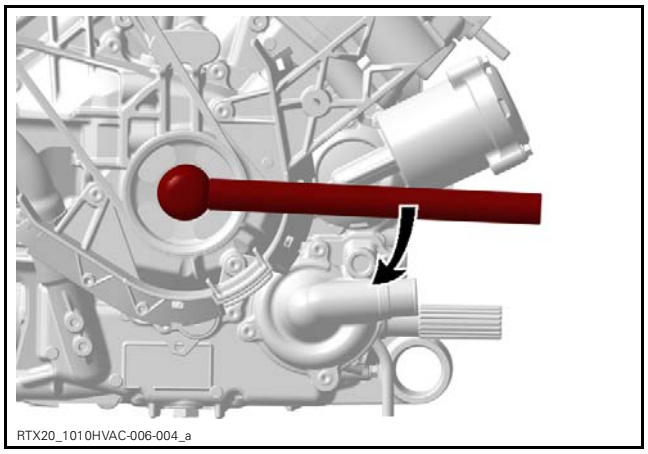

5.1 The rear piston is at TDC when it's index mark on the magneto flywheel is aligned with notch in the magneto cover.

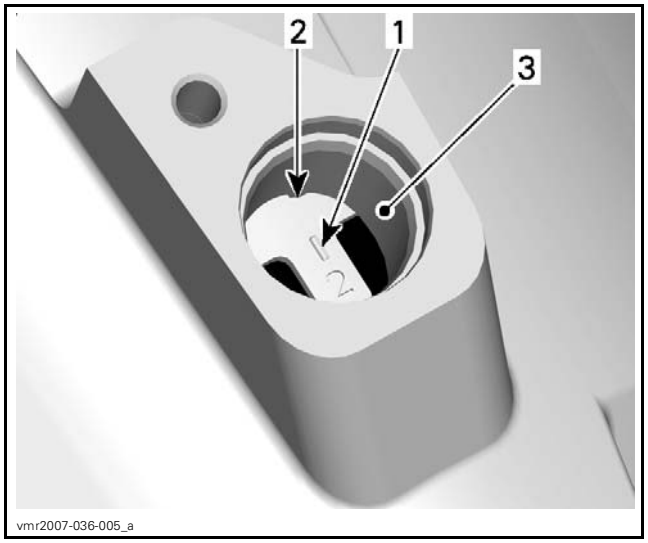

PISTON NO. 2 AT TDC
1. *Mark "2" on magneto flywheel*
2. *Notch on magneto cover*
3. *Crankshaft position sensor location*

5.2 Confirm printed marks on the camshaft timing gear are parallel to cylinder head base, in the lower position.

NOTE: If printed marks on camshaft timing gear are not as specified, turn crankshaft 360°.

NOTE: In this position the piston is set to TDC ignition.

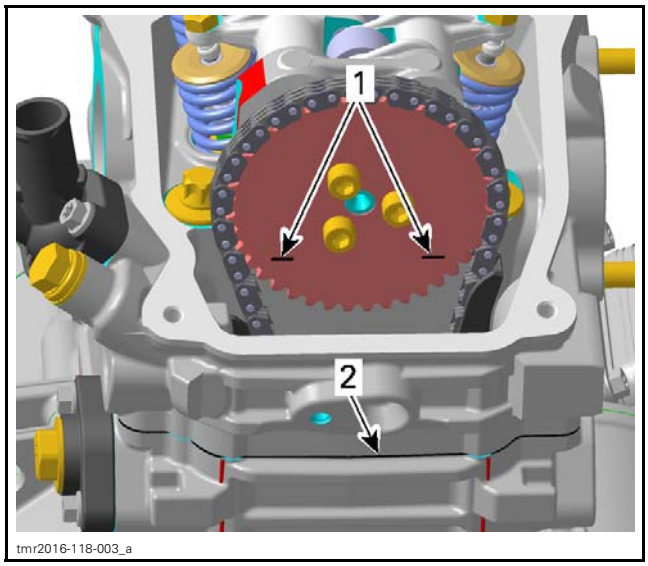

PISTON AT TDC IGNITION
1. *Printed marks on camshaft timing gear*
2. *Cylinder head base*

6. Install the crankshaft TDC position tool to lock crankshaft in position. Refer to *CRANKSHAFT TDC POSITION TOOL* in this subsection.

Camshaft Timing Piston No. 1 (front)

1. Set piston no. 2 (rear) to TDC ignition, see *CAMSHAFT TIMING PISTON NO. 2 (REAR)* in this subsection.
2. Remove crankshaft TDC position tool.
3. To set front piston no. 1 to **TDC ignition** turn crankshaft 280° counterclockwise.

REQUIRED TOOL
Ratchet with 24 mm nut

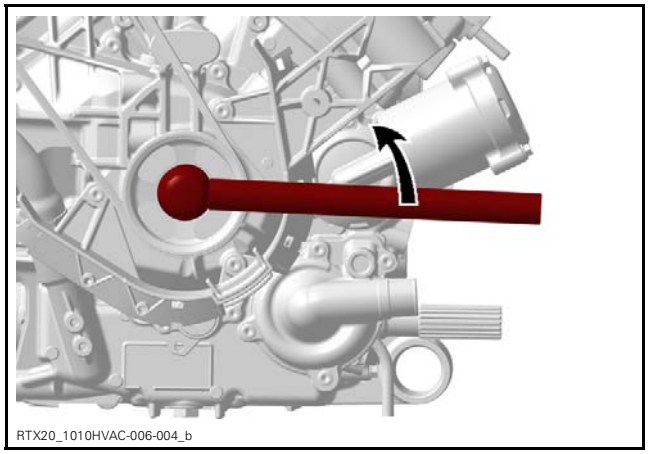

TURN CRANKSHAFT 280° COUNTERCLOCKWISE

3.1 The front piston is at TDC when it's index mark on the magneto flywheel is aligned with the notch in the magneto cover.

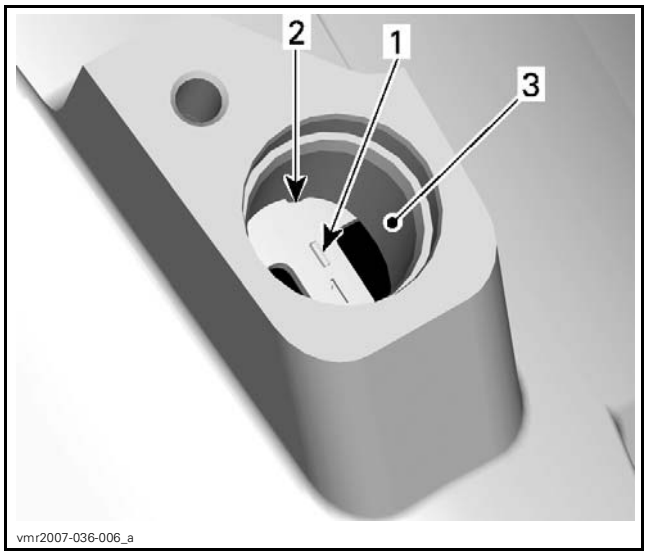

CYLINDER 1 AT TDC IGNITION
1. *Mark "1" on magneto flywheel*
2. *Notch on magneto cover*
3. *Location of crankshaft position sensor*

3.2 Confirm printed marks on the camshaft timing gear are parallel with cylinder head base, in the lowest position.

NOTE: In this position the piston is set to TDC ignition.

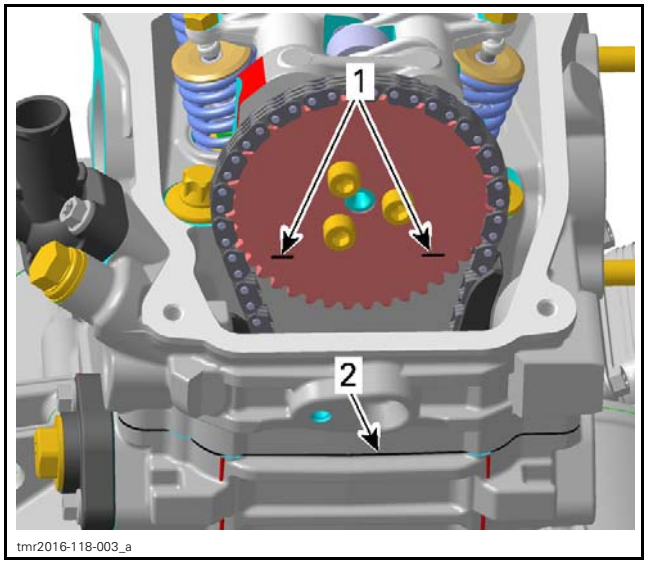

PISTON AT TDC IGNITION
1. *Printed marks on camshaft timing gear*
2. *Cylinder head base*

Crankshaft TDC Position Tool Installation

NOTICE Never use crankshaft TDC position tool to remove or tighten drive CVT screw or rotor retaining screw. Damage to the teeth of the trigger wheel on the rotor will occur.

Install tool in magneto cover CPS bore.

REQUIRED TOOL	
CRANKSHAFT TDC POSITION TOOL (P/N 529 036 201)	

NOTE: Make sure to match the teeth on the crankshaft TDC position tool with the magneto rotor.

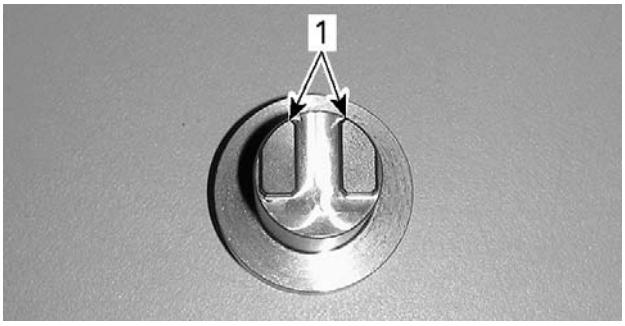

1. *Crankshaft TDC position tool teeth (end view)*

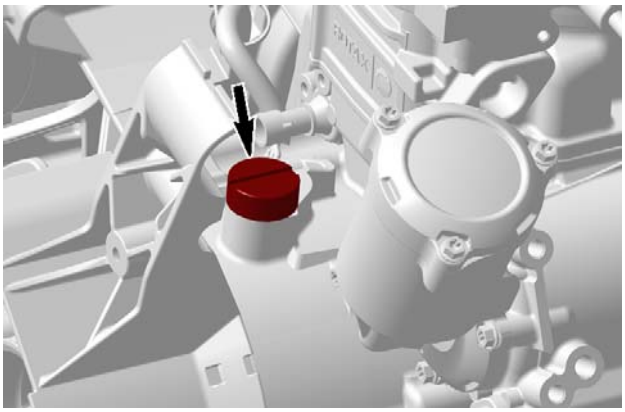

NOTICE Tool must be fully inserted.

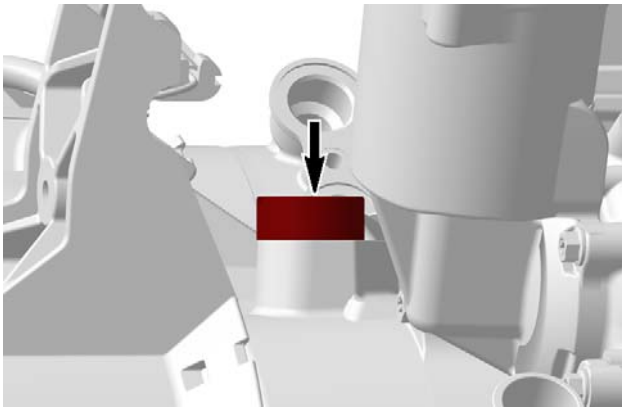

TIMING CHAIN

The engine is equipped with two timing chains.

– MAG side timing chain is located behind the magneto cover.
– PTO side timing chain is located behind the PTO cover.

Removing the Timing Chain (MAG Side)

NOTE: Mark the operating direction of the timing chain and check for excessive radial play before removal. Refer to *INSPECTING THE TIMING CHAIN*.

Refer to *AIR CONDITIONING - ENGINE COMPONENTS* subsection an remove following parts:

– Air conditioning compressor
– Air conditioning drive pulley.

Remove oil dipstick tube, refer to *LUBRICATION SYSTEM* subsection.

Refer to *MAGNETO SYSTEM* subsection and remove following parts:

– Magneto cover
– Rotor
– Sprag clutch gear.

Refer to *CYLINDER HEAD* subsection and remove following parts:

– Valve cover.

Refer to following procedures in this subsection and remove following parts:

– Chain tensioner
– Camshaft timing gear.

Remove timing chain guide (tensioner side) and lower timing chain guide.

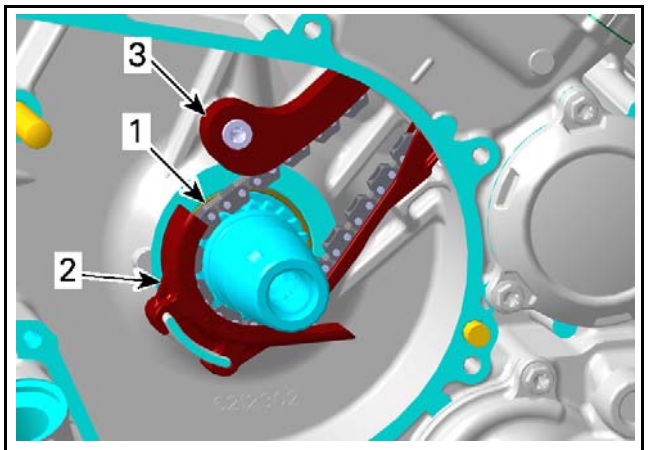

RTX19_1010RS-008-002_a

1. *Timing chain*
2. *Lower timing chain guide*
3. *Timing chain guide (tensioner side)*

Carefully pull the timing chain downwards and sideways, then out of the crankcase.

Removing the Timing Chain (PTO Side)

NOTE: Mark the operating direction of the timing chain and check for excessive radial play before removal. Refer to *INSPECTING THE TIMING CHAIN*.

Refer to *CYLINDER BLOCK* subsection and remove following parts:

– PTO cover
– Breather gear
– Intermediate gear.

Refer to *CYLINDER HEAD* subsection and remove following parts:

– Valve cover.

Refer to following procedures in this subsection and remove following parts:

– Chain tensioner
– Camshaft timing gear.

Remove timing chain guide (tensioner side) and lower timing chain guide.

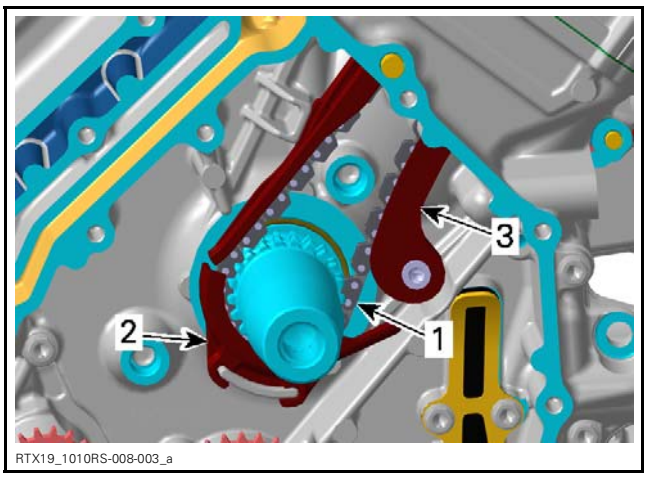

RTX19_1010RS-008-003_a

1. *Timing chain*
2. *Lower timing chain guide*
3. *Timing chain guide (tensioner side)*

Carefully pull the timing chain sideward and down from the crankcase.

Inspecting the Timing Chain

Inspection is the same for both timing chains.

Check timing chain on camshaft timing gear for excessive radial play.

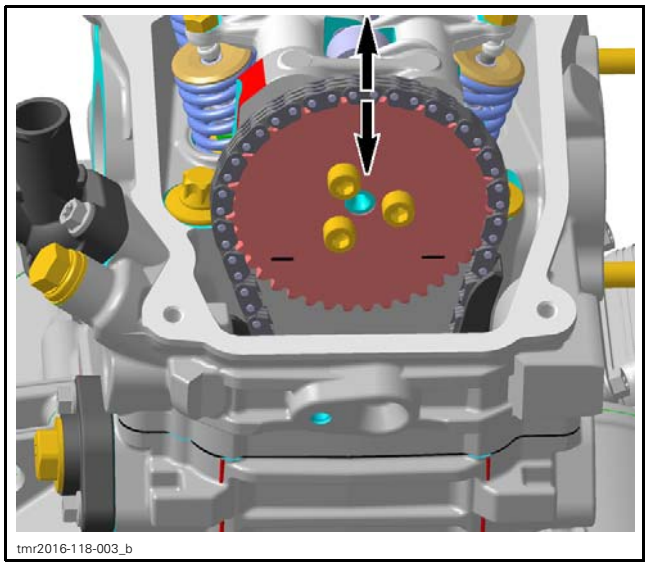

CHECKING TIMING CHAIN RADIAL PLAY

Check chain condition for wear and teeth condition.

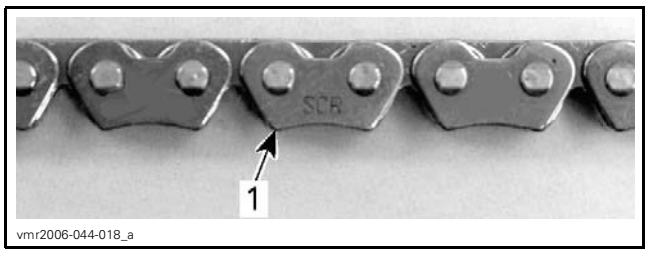

1. *Timing chain*

If chain is excessively worn or damaged, replace it as a set (camshaft timing gear and timing chain).

Check timing chain guides for wear, cracks or deforming. Replace as required.

NOTE: Check also the timing chain guide (tensioner side).

Check if crankshaft timing gears are excessively worn or damaged.

Replace if necessary. Refer to *CRANKSHAFT* in the *CYLINDER BLOCK* subsection.

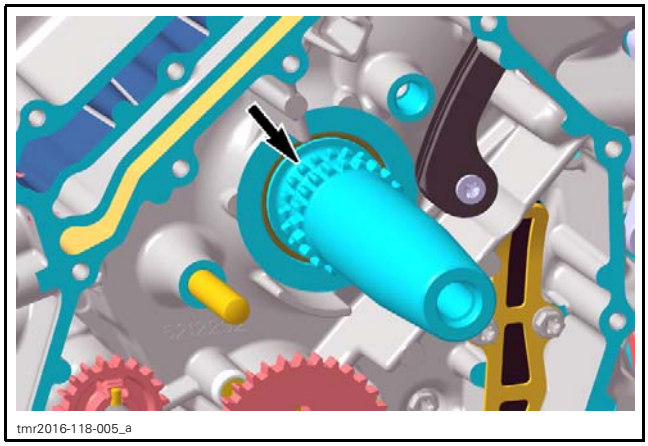

Installing the Timing Chain

The installation is essentially the reverse of the removal procedure, but pay attention to the following details.

NOTE: Installation is the same for both timing chains.

Install timing chain with camshaft timing gear.

NOTE: Ensure to carry out proper valve timing, refer to *CAMSHAFT TIMING GEARS* in this subsection.

NOTICE **Improper valve timing will damage engine components.**

TIMING CHAIN GUIDE (TENSIONER SIDE)

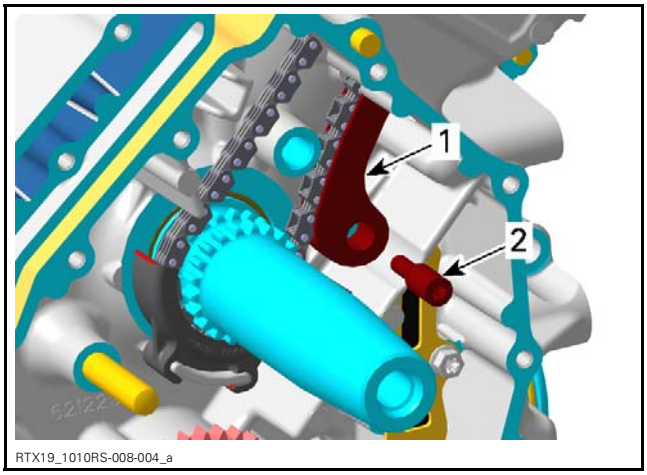

1. *Timing chain guide (tensioner side)*
2. *Bearing screw*

Removing the Timing Chain Guide (Tensioner Side)

Refer to *TIMING CHAIN* in this subsection.

Inspecting the Timing Chain Guide (Tensioner Side)

Check timing chain guide for wear, cracks or deforming. Replace if necessary.

Installing the Timing Chain Guide (Tensioner Side)

The installation is the reverse of the removal procedure.

TIGHTENING TORQUE	
Timing chain guide bearing screw	10 N•m ± 1 N•m (89 lbf•**in** ± 9 lbf•**in**) + LOCTITE 243 (BLUE) (P/N 293 800 060)

CRANKCASE

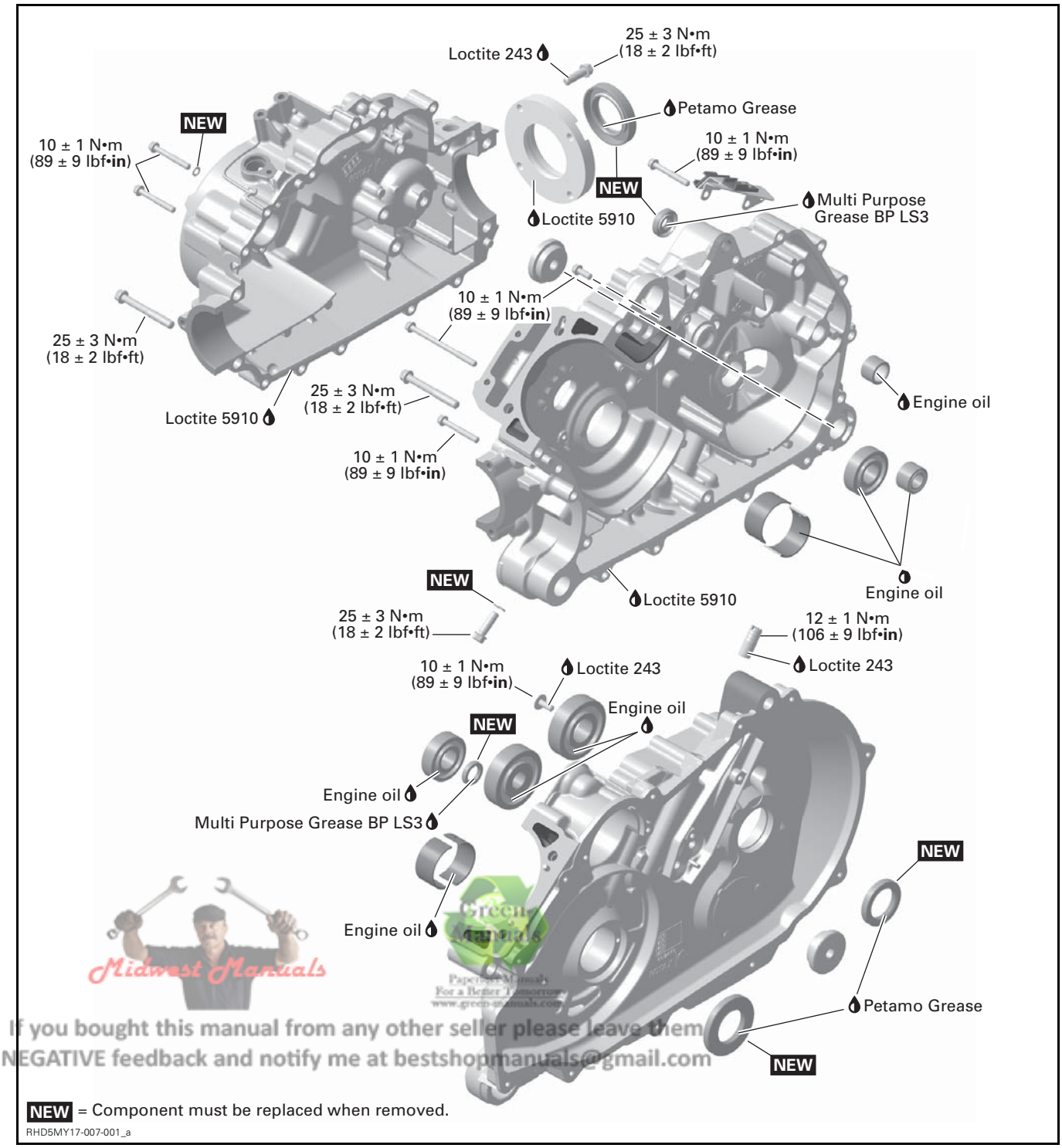

Midwest Manuals
If you bought this manual from any other seller please leave them
NEGATIVE feedback and notify me at bestshopmanuals@gmail.com

CRANKSHAFT/BALANCER SHAFT

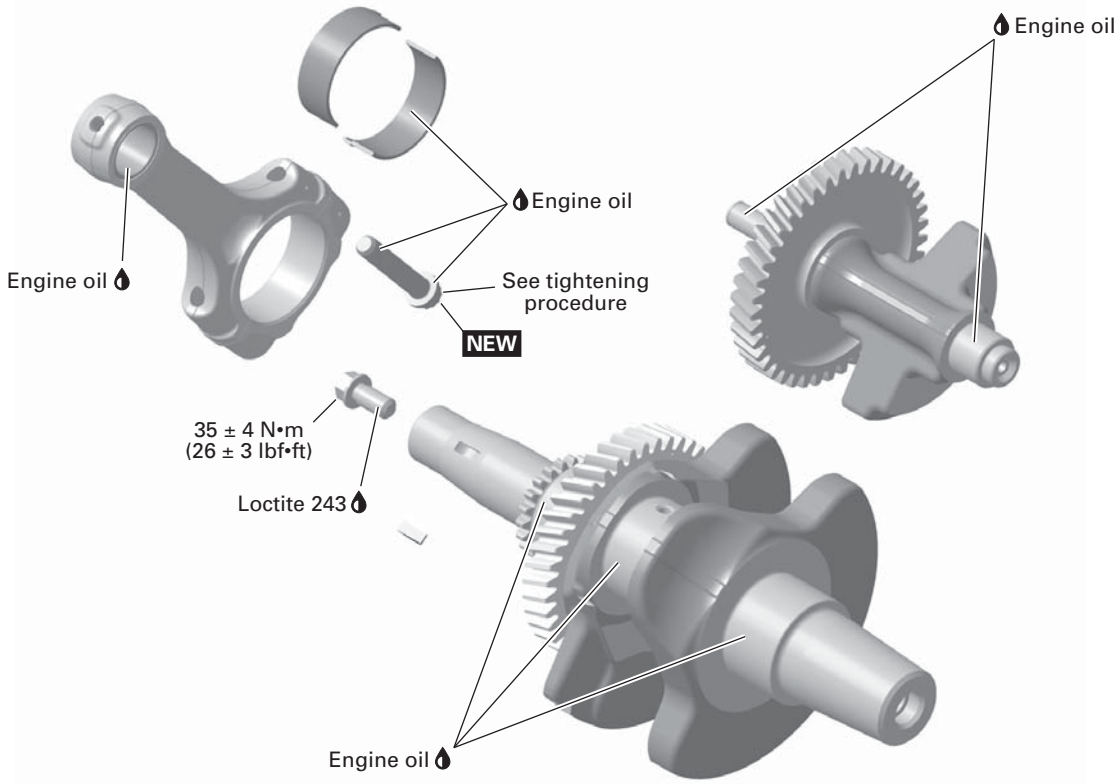

NEW = Component must be replaced when removed.

vmr2015-021-002_a

GENERAL

This section includes the procedures pertaining to the crankcase, crankshaft and balancer shaft. For the gearbox, follow the procedure for the *CRANKCASE* then refer to *GEARBOX AND 4X4 COUPLING UNIT* subsection.

During assembly / installation, use the torque values and service products as in the exploded views.

Clean threads before applying a thread locker. Refer to *SELF-LOCKING FASTENERS* and *LOCTITE APPLICATION* at the beginning of this manual for complete procedure.

⚠ WARNING

Torque wrench tightening specifications must strictly be adhered to.
Locking devices when removed (e.g.: locking tabs, elastic stop nuts, self-locking fasteners, etc.) must be installed or replaced with new ones where specified. If the efficiency of a locking device is impaired, it must be renewed.

PROCEDURES

IMPORTANT: Note position of parts on disassembly. This may help to find the root cause of a problem. A component that is not replaced should be reinstalled in the same position as originally mounted.

OUTPUT SHAFT OIL SEAL

Removing the Output Shaft Oil Seal

NOTE: The output shaft oil seal can be removed and installed without removing the engine from vehicle.

Remove the final drive unit. Refer to *REAR DRIVE*.

Set gearbox to PARK position.

Remove coupling sleeve.

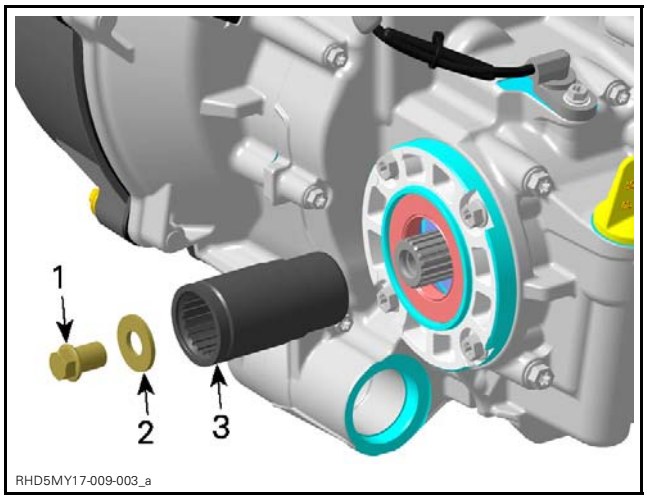

1. *Retaining screw*
2. *Washer*
3. *Coupling sleeve*

Replace oil seal if brittle, hard or otherwise damaged.

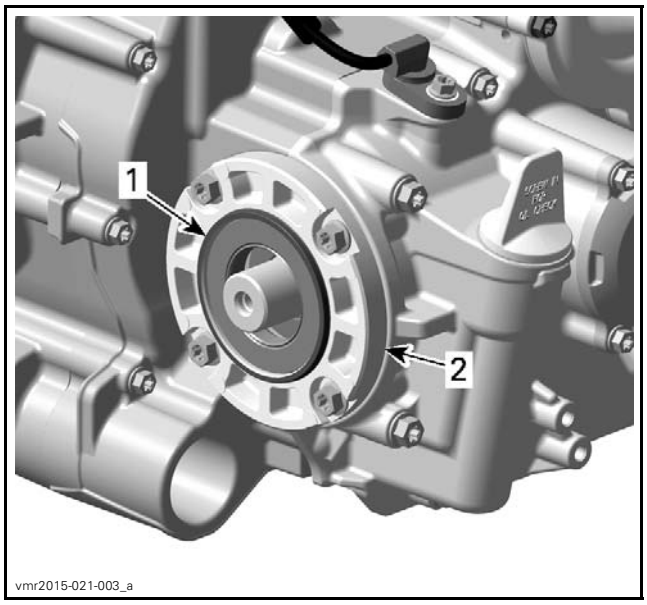

1. *Output shaft oil seal*
2. *Bearing flange*

Drain engine oil, refer to *LUBRICATION SYSTEM* subsection.

Using a small screwdriver, remove the output shaft oil seal from bearing flange.

NOTICE **Avoid scratching the bearing flange or output shaft during oil seal removal.**

Check oil seal seating surface for grooves. Replace bearing flange if necessary.

Check bearing behind oil seal for contamination and/or metal shavings. Replace if necessary.

Installing the Output Shaft Oil Seal

REQUIRED TOOLS	
OUTPUT SHAFT SEAL INSTALLER (P/N 529 035 941)	
HANDLE (P/N 420 877 650)	

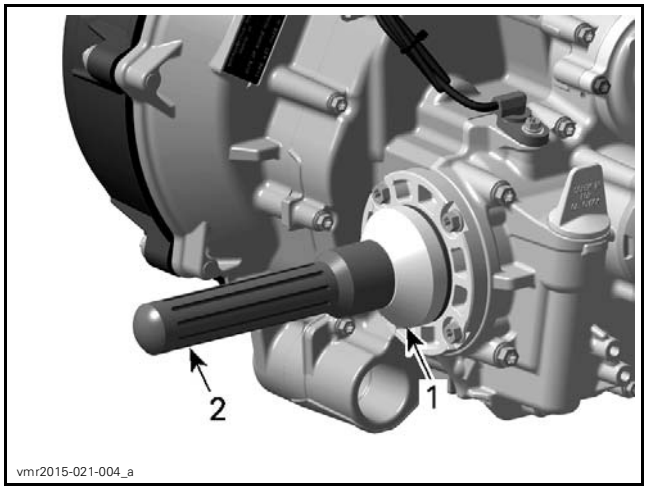

1. *Output shaft seal installer*
2. *Handle*

Set gearbox to PARK position.

Tighten coupling sleeve retaining screw to specification.

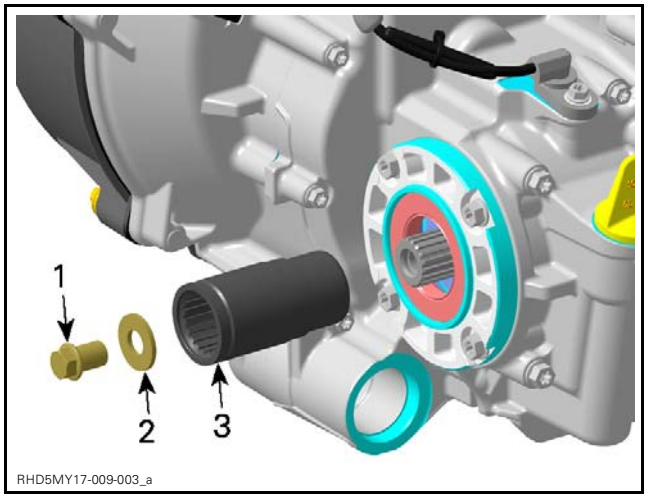

1. *Retaining screw*
2. *Washer*
3. *Coupling sleeve*

TIGHTENING TORQUE	
Coupling sleeve retaining screw	45 N•m ± 5 N•m (33 lbf•ft ± 4 lbf•ft) + LOCTITE 243 (BLUE) (P/N 293 800 060)

Install all remaining removed parts. Refer to applicable subsections.

COUNTER SHAFT OIL SEAL

Removing the Counter Shaft Oil Seal

Replace oil seal if brittle, hard or otherwise damaged.

NOTE: The counter shaft oil seal can be removed without removing the engine from vehicle.

Remove the driven pulley. Refer to *CONTINUOUSLY VARIABLE TRANSMISSION* subsection.

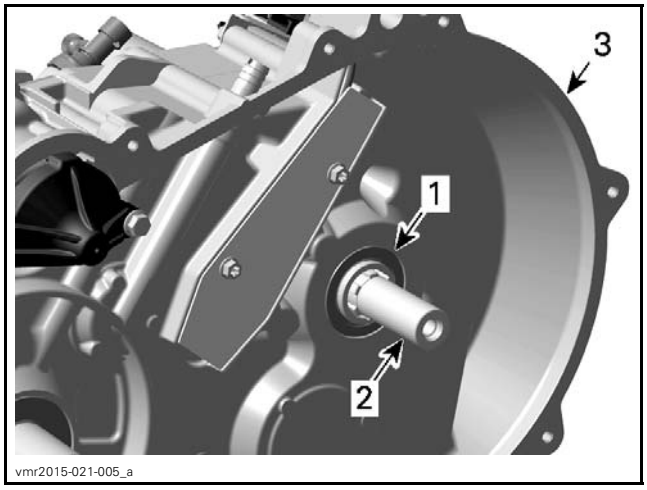

1. *Counter shaft oil seal*
2. *Counter shaft*
3. *Crankcase, PTO side*

Using a small screwdriver, remove the counter shaft oil seal.

NOTICE **Avoid scratching the crankcase or counter shaft during oil seal removal.**

Installing the Counter Shaft Oil Seal

Using a suitable tube with the proper diameter to install the oil seal.

Install all removed parts.

SHIFT SHAFT OIL SEAL

Removing the Shift Shaft Oil Seal

Remove the shift plate from the shift shaft. Refer to the *SHIFTER* subsection.

Replace oil seal if brittle, hard or otherwise damaged.

NOTE: The shift shaft oil seal can be removed without removing the engine from vehicle.

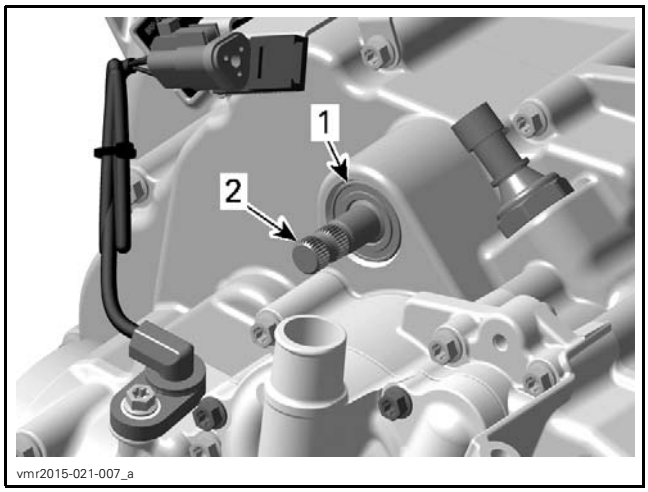

1. *Shift shaft oil seal*
2. *Shift shaft*

Using a small screwdriver, remove the shift shaft oil seal.

NOTICE **Avoid scratching the crankcase or shift shaft during oil seal removal.**

Installing the Shift Shaft Oil Seal

Using a suitable tube, with the proper diameter, install the seal.

Refer to the *SHIFTER* subsection and reinstall the shift plate and cable.

CRANKSHAFT OIL SEAL

Removing the Crankshaft Oil Seal

Replace oil seal if brittle, hard or otherwise damaged.

NOTE: The crankshaft oil seal can be removed without removing the engine from vehicle.

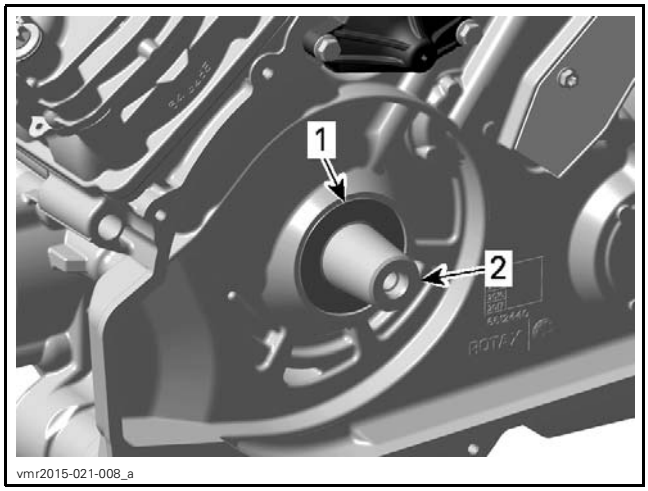

1. *Crankshaft oil seal*
2. *Crankshaft, PTO side*

Remove the drive pulley. Refer to *CONTINUOUSLY VARIABLE TRANSMISSION* subsection.

Using a small screwdriver, remove the crankshaft oil seal.

NOTICE **Avoid scratching the crankcase or crankshaft during oil seal removal.**

Installing the Crankshaft Oil Seal

Using a suitable tube with the proper diameter to install the seal.

CRANKCASE

Disassembling the Crankcase

NOTE: Oil pump removal from crankcase MAG side is not necessary, but recommended to see condition of oil pump, refer to *LUBRICATION SYSTEM* subsection.

Remove:

- Engine from vehicle, refer to *ENGINE REMOVAL AND INSTALLATION* subsection
- Magneto cover and rotor, refer to *MAGNETO AND STARTER* subsection
- Output shaft, refer to *GEARBOX AND 4X4 COUPLING UNIT* subsection
- Cylinder head and cylinder, refer to *TOP END* subsection
- Drive and driven pulley, refer to *CONTINUOUSLY VARIABLE TRANSMISSION* subsection
- Oil pressure switch, refer to *LUBRICATION SYSTEM* subsection.

Measure axial clearance between the crankshaft and crankcase PTO with a feeler gauge.

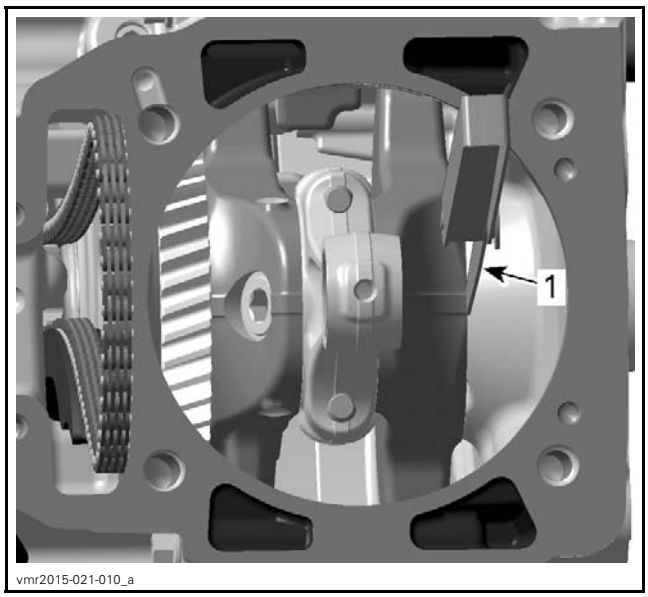

1. *Feeler gauge*

CRANKSHAFT AXIAL CLEARANCE	
New	0.1 mm to 0.4 mm (.004 in to .016 in)
Service limit	0.5 mm (.02 in)

If measurement is out of specification, inspect butting faces of crankshaft and crankcase (MAG/PTO side) for excessive wear.

Remove:
- Timing chain
- Intermediate gear of oil pump
- Drive gear of water pump.

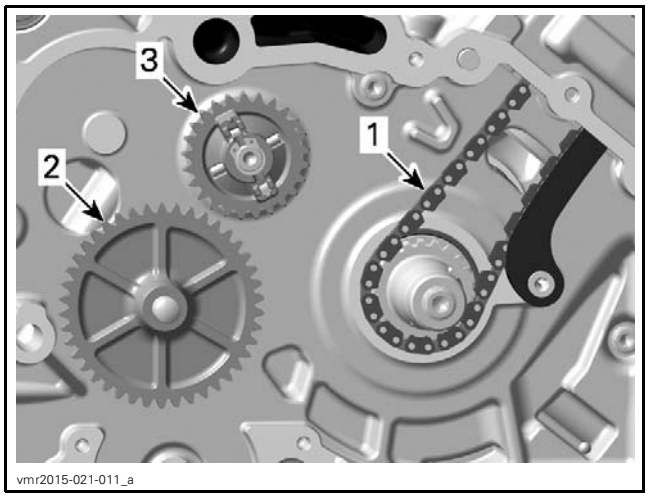

1. *Timing chain*
2. *Intermediate gear, oil pump*
3. *Drive gear, water pump*

Remove crankshaft locking bolt.

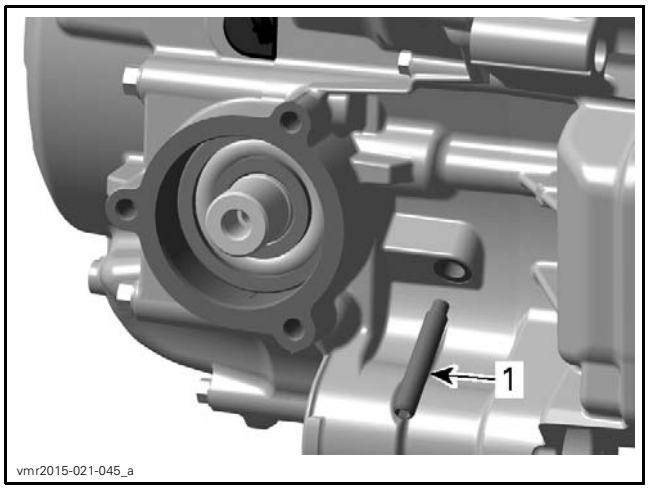

1. *Crankshaft locking bolt*

Remove crankcase retaining screws:
1. Start removing the M6 screws
2. Then remove the M8 screws.

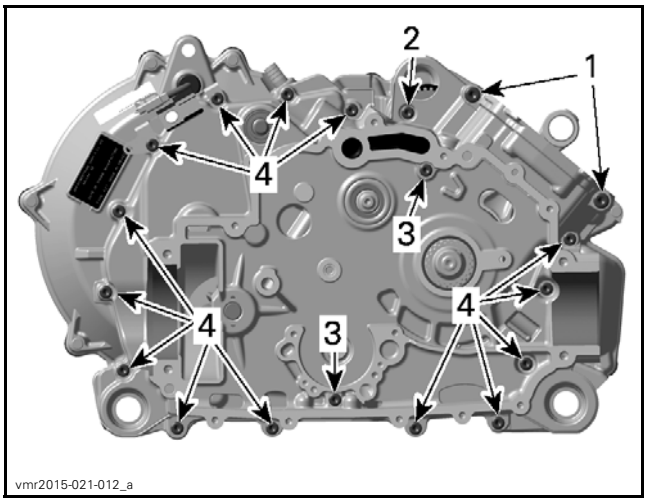

1. *2x screws M8 x 85*
2. *1x screw M6 x 16*
3. *2x screws M6 x 85*
4. *14x screws M6 x 45*

Place the crankcase on a wood stand, MAG side upwards.

Split crankcase with 2 screwdrivers.

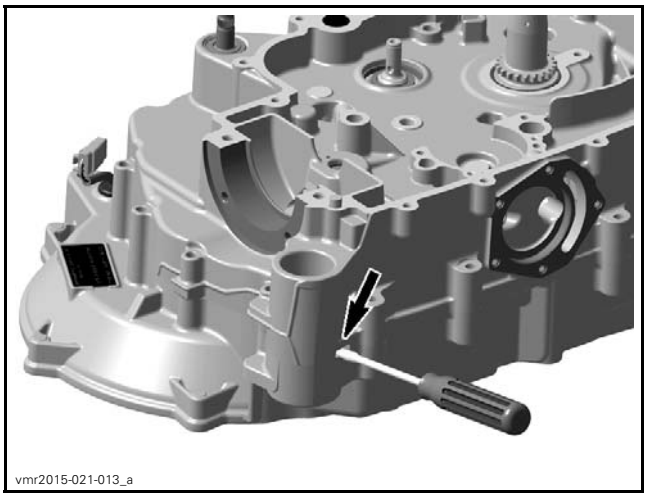

POSITION FOR BIG FLAT SCREWDRIVER

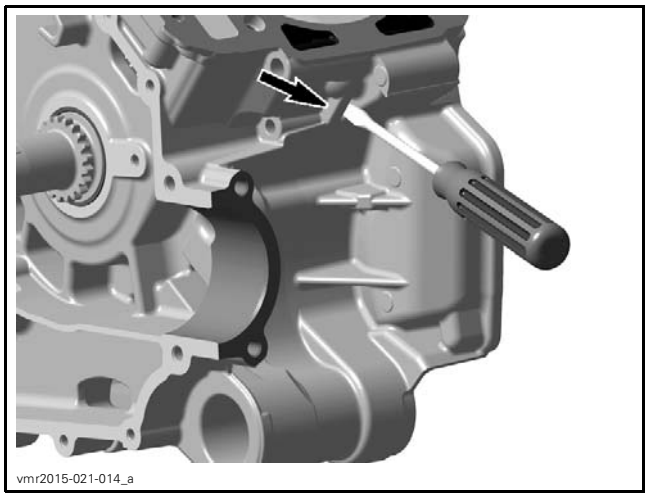

POSITION FOR BIG FLAT SCREWDRIVER

Cleaning the Crankcase

Clean all metal components in a solvent.

Clean oil passages and make sure they are not clogged.

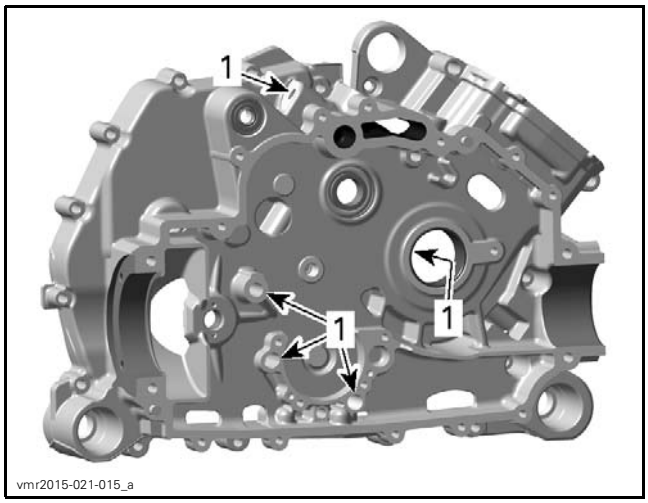

CRANKCASE MAG SIDE
1. Oil orifices

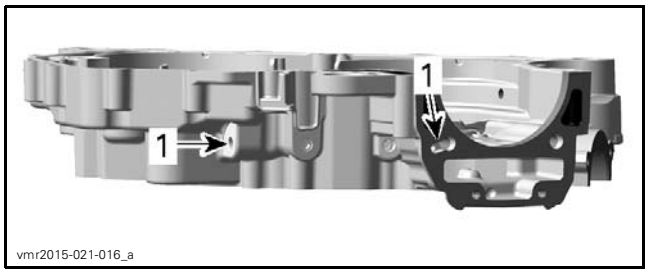

CRANKCASE MAG SIDE
1. Oil orifices

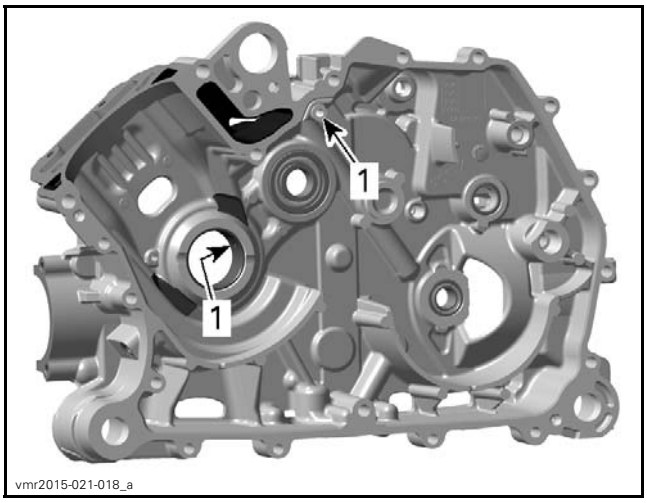

CRANKCASE MAG SIDE
1. Oil orifices

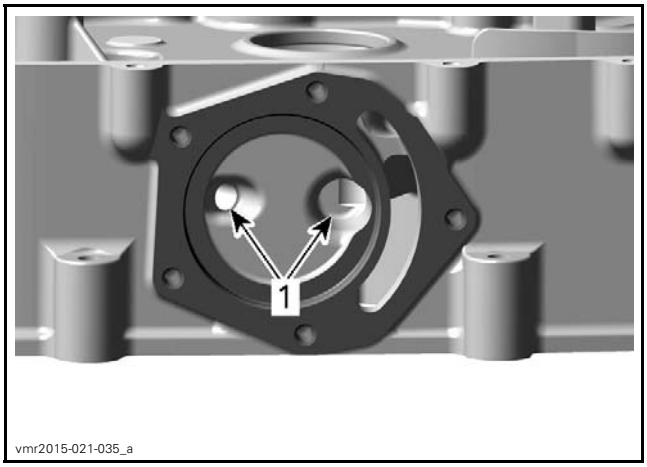

CRANKCASE MAG SIDE
1. Oil orifices

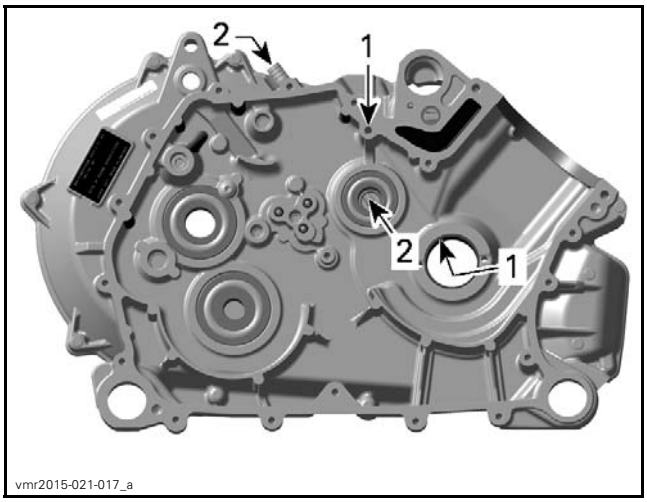

CRANKCASE PTO SIDE
1. Oil orifices
2. Engine blow by bore

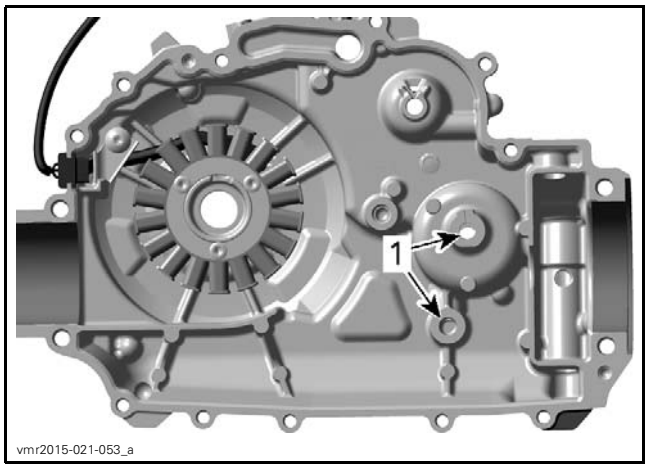

MAGNETO COVER
1. *Oil orifices*

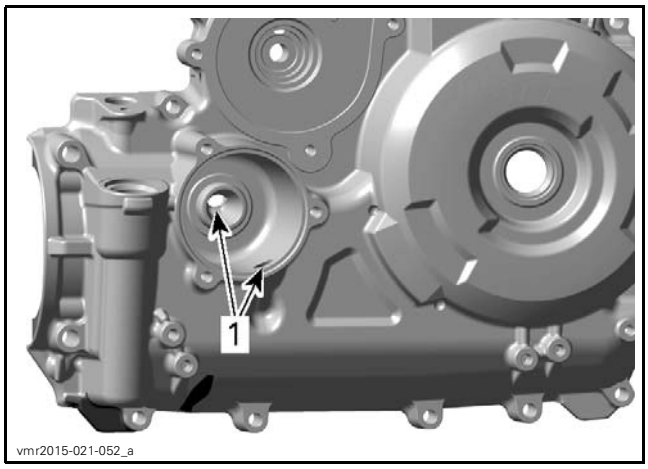

MAGNETO COVER
1. *Oil orifices*

Clean crankcase mating surfaces using a combination of LOCTITE CHISEL (GASKET REMOVER) (P/N 413 708 500) and a brass brush. First brush in one direction then make the final brushing perpendicularly (90°) to the first pass.

NOTICE **Do not wipe with rags. Use a new clean hand towel only.**

Inspecting the Crankcase

NOTE: To check some parts, it is recommended to remove all components from crankcase.

Crankshaft Plain Bearing

Check MAG and PTO plain bearings for scoring or other damages.

Measure plain bearing inside diameter.

Compare measurements to MAG/PTO main journal diameters of crankshaft, refer to *CRANKSHAFT* in this subsection.

Replace if the measurement is out of specification.

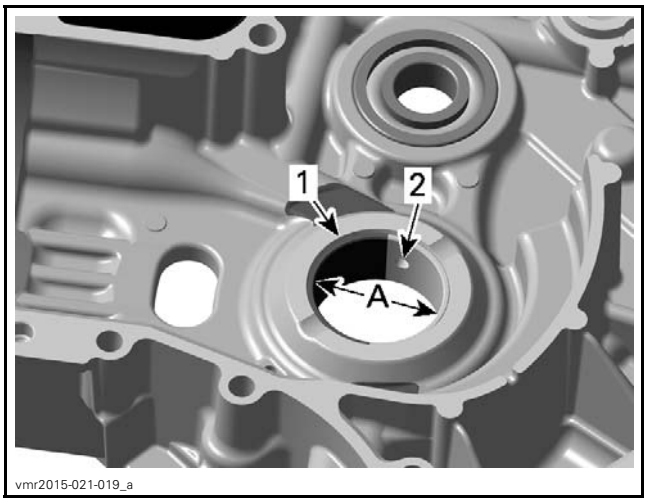

MAG PLAIN BEARING
1. *Plain bearing*
2. *Oil bore*

A. *Plain bearing inside diameter*

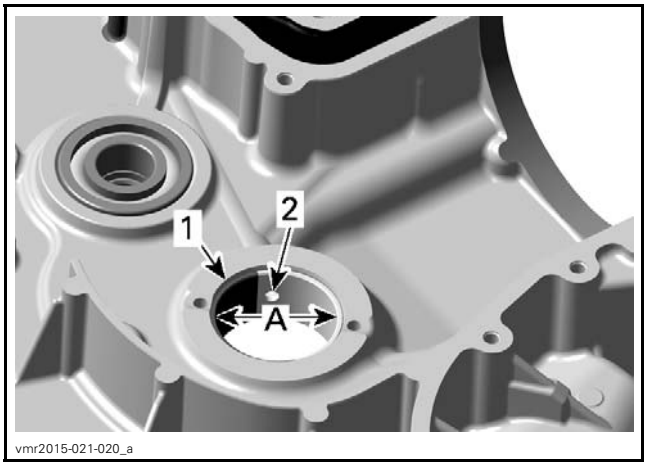

PTO PLAIN BEARING
1. *Plain bearing*
2. *Oil bore*

A. *Plain bearing inside diameter*

PLAIN BEARING INSIDE DIAMETER (MAG/PTO)	
Service limit	42.100 mm (1.6575 in)

Ball and Needle Bearings

Check ball bearings and needle bearings for excessive play and smooth operation. Replace if necessary.

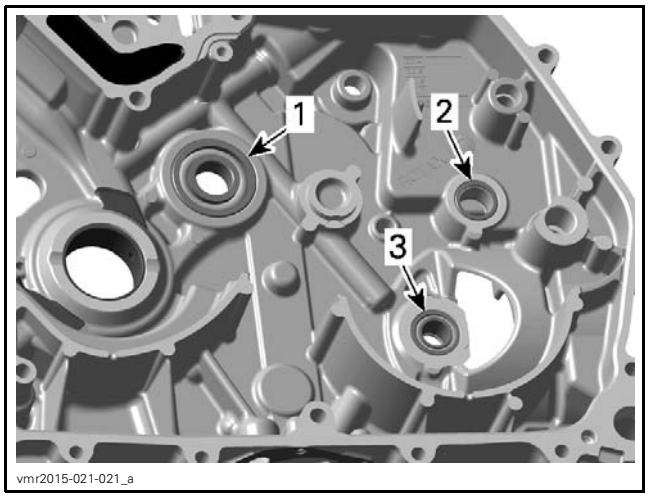

CRANKCASE MAG
1. *Balancer shaft ball bearing*
2. *Counter shaft needle bearing*
3. *Bevel gear needle bearing*

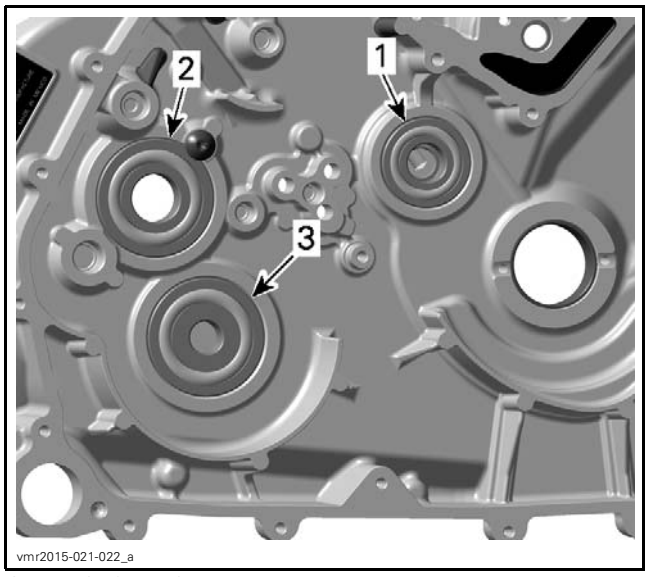

CRANKCASE PTO
1. *Balancer shaft ball bearing*
2. *Counter shaft ball bearing*
3. *Bevel gear ball bearing*

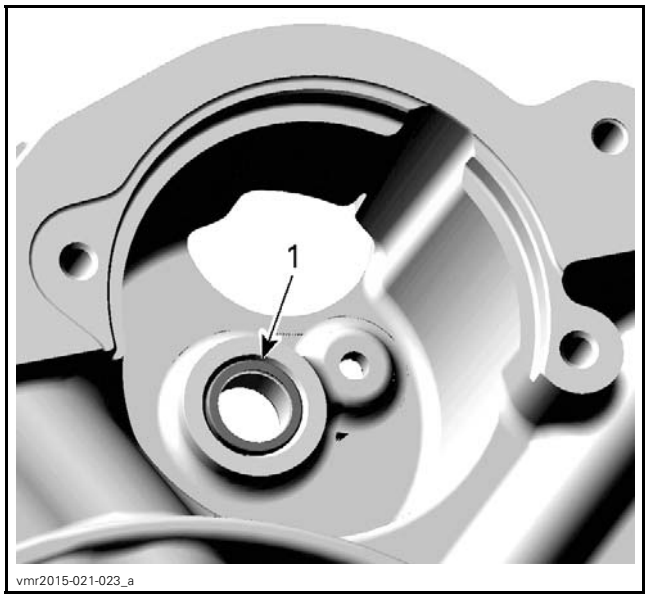

CRANKCASE PTO
1. *Starter drive needle bearing*

Balancer Shaft Oil Seal

Replace oil seal if brittle, hard or otherwise damaged.

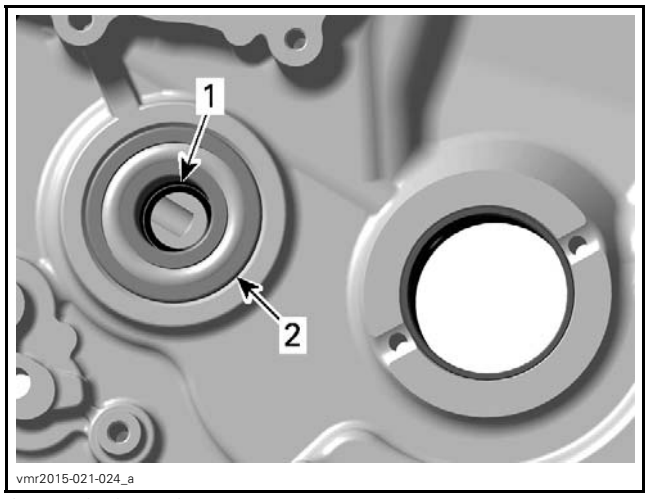

CRANKCASE PTO
1. *Balancer shaft oil seal*
2. *Balancer shaft ball bearing*

Balancer Shaft Oil Seal Replacement Procedure

Removing the Balancer Shaft Oil Seal

Remove balancer shaft ball bearing, refer to *BEARING REPLACEMENT PROCEDURE* in this subsection.

The oil seal is removed easily with a flat screwdriver.

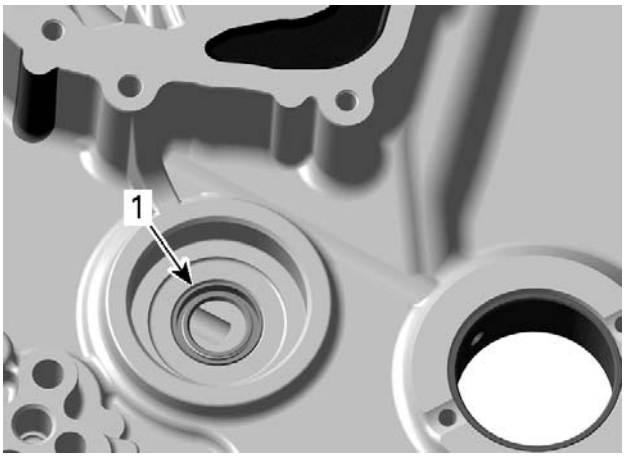

CRANKCASE PTO
1. Balancer shaft oil seal

NOTICE **Avoid scoring bearing seat or oil seal bore in crankcase.**

Installing the Balancer Shaft Oil Seal

NOTICE **Oil seal must be installed with sealing lip towards balancer shaft.**

REQUIRED TOOLS	
OIL SEAL INSTALLER (P/N 529 036 069)	
HANDLE (P/N 420 877 650)	

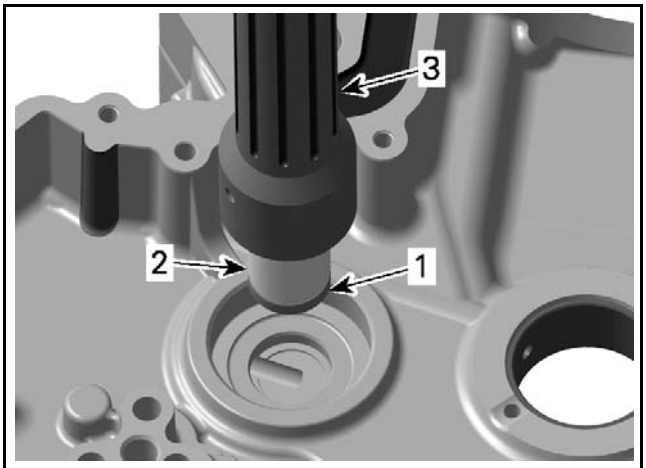

CRANKCASE, PTO SIDE
1. Balancer shaft oil seal
2. Oil seal installer
3. Handle

Bearing Replacement Procedure

NOTICE **Clean oil, outside and inside, from crankcase.**

NOTICE **Always support crankcase properly when ball bearings, needle bearings or plain bearings are removed or installed; otherwise, crankcase could be damaged.**

Unless otherwise instructed, never use hammer to install ball bearings, needle bearings or plain bearings. Use press machine only.

NOTICE **Ball bearings have to be installed with closed bearing cage to the engine outside.**

Removing the Crankshaft Plain Bearing

Always use a press for removal or installation of plain bearing halves.

Carefully press the plain bearings out from the crankcase half from inside towards the outside.

Use proper crankcase support when removing plain bearings.

REQUIRED TOOLS	
PLAIN BEARING REMOVER/INSTALLER (P/N 529 035 917)	
CRANKCASE SUPPORT (MAG SIDE) (P/N 529 035 916)	
CRANKCASE SUPPORT PTO (P/N 529 035 754)	

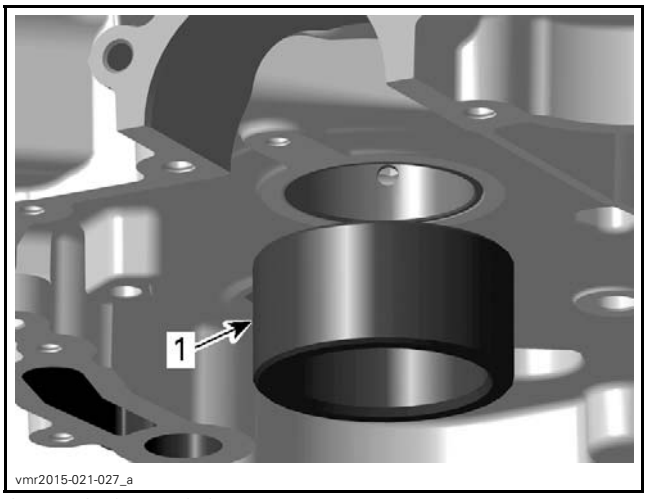

CRANKCASE MAG SIDE
1. Crankcase support MAG

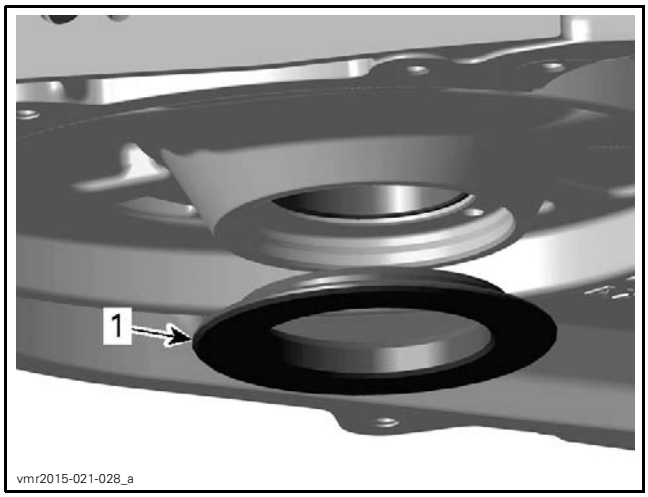

CRANKCASE PTO SIDE
1. *Crankcase support PTO*

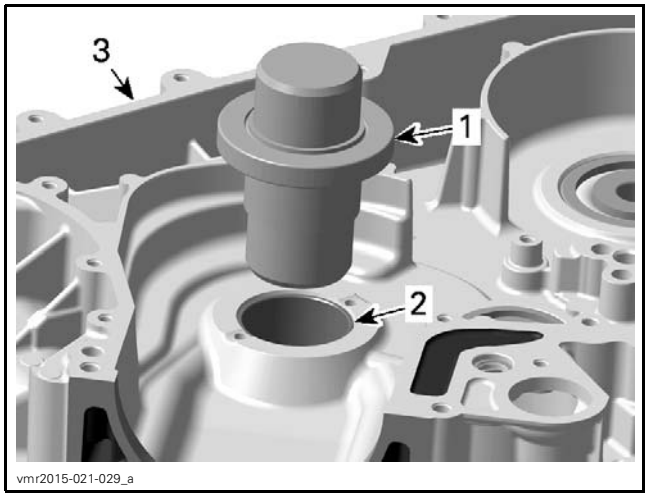

PRESS PLAIN BEARINGS OUTSIDE
1. *Plain bearing remover/installer*
2. *Plain bearing*
3. *Crankcase (PTO side shown)*

Installing the Crankshaft Plain Bearing

NOTICE **Unless otherwise instructed, never use hammer to install plain bearings. Use press only.**

Use proper crankcase support when installing plain bearings. Damage to crankcase may occur if this procedure is not performed correctly.

Carefully press in the plain bearings in the same direction as during disassembly, from the crankcase inside towards the outside.

Install plain bearings in a cold crankcase.

NOTICE **Do not lubricate plain bearings and/or crankcase for installation.**

REQUIRED TOOLS	
PLAIN BEARING REMOVER/INSTALLER (P/N 529 035 917)	
CRANKCASE SUPPORT (MAG SIDE) (P/N 529 035 916)	
CRANKCASE SUPPORT PTO (P/N 529 035 754)	

Use an O-ring (Ø 42 mm (1.65 in) x 1 mm to 1.5 mm (.04 in to .06 in) thickness) to hold plain bearings in place during installation. The O-ring will disappear in the groove of the plain bearing remover/installer.

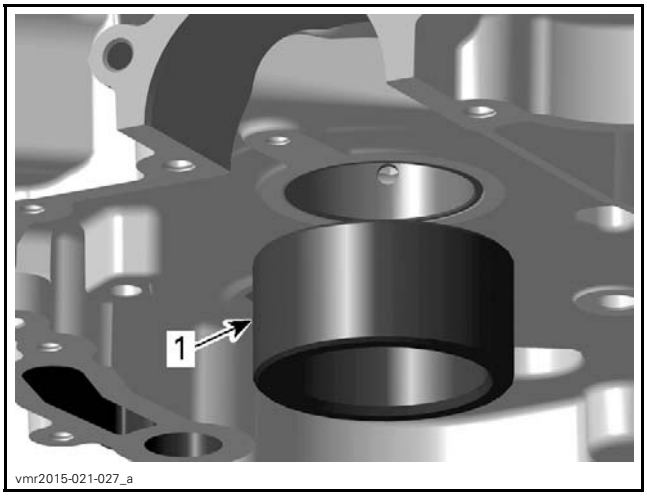

CRANKCASE MAG SIDE
1. *Crankcase support MAG*

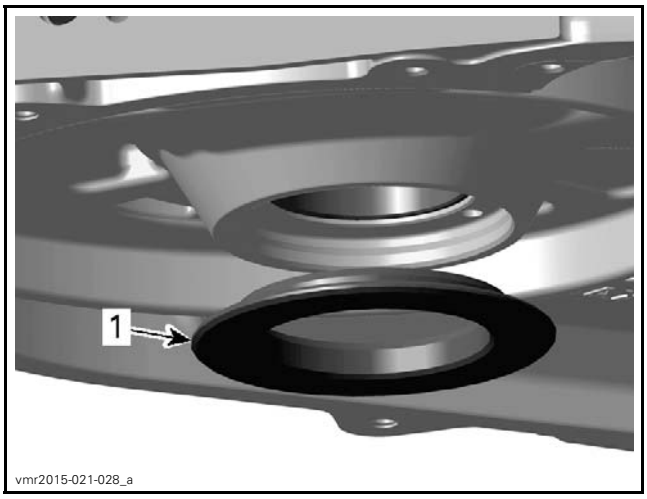

CRANKCASE PTO SIDE
1. *Crankcase support PTO*

Mark position of plain bearing oil bore on plain bearing remover/installer.

Mark position of oil bore on crankcase half.

Align mark on plain bearing remover/installer with mark on crankcase half.

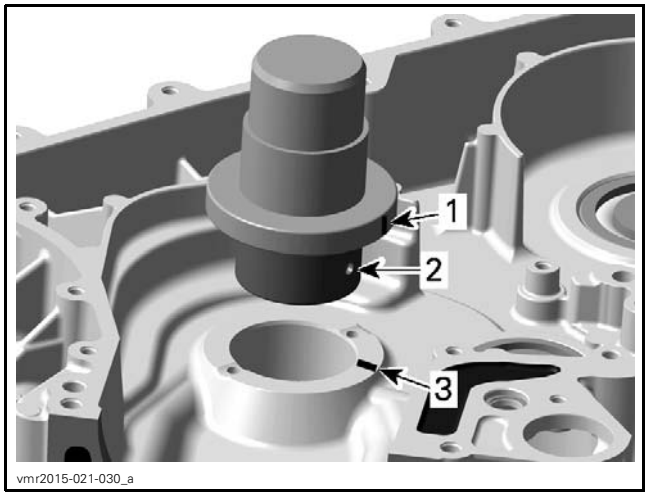

PRESS PLAIN BEARINGS INSIDE
1. *Oil bore position marked on plain bearing remover/installer*
2. *Plain bearing oil bore*
3. *Oil bore position marked on crankcase*

NOTICE **Misalignment of the plain bearing and crankcase oil bores will prevent proper oil supply to plain bearings.**

Carefully press in the plain bearings from inside the crankcase towards the outside.

NOTICE **The partition of the plain bearings in crankcase half MAG side must be positioned near to oil bore in counterclockwise direction.**

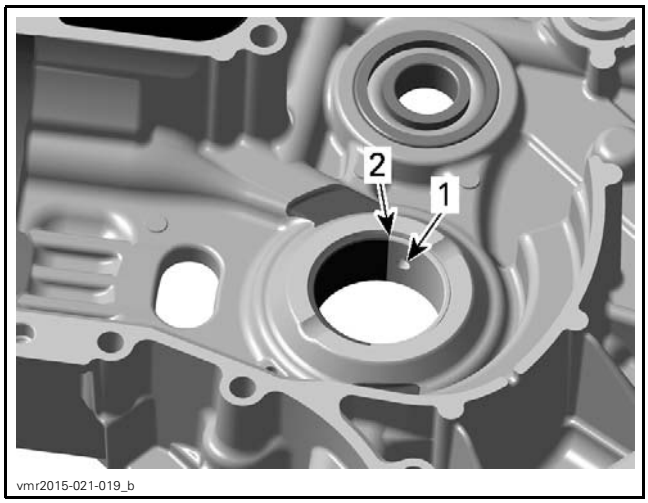

CRANKCASE MAG
1. *Oil bore*
2. *Partition*

NOTICE **The partition of the plain bearings in crankcase half PTO side must be positioned near to oil bore in counterclockwise direction.**

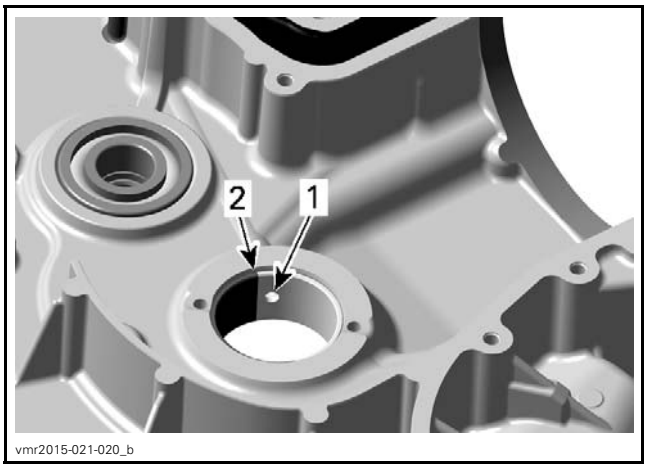

CRANKCASE PTO
1. *Oil bore*
2. *Partition*

Removing the Bevel Gear Needle Bearing

Remove bevel gear needle bearing using a punch.

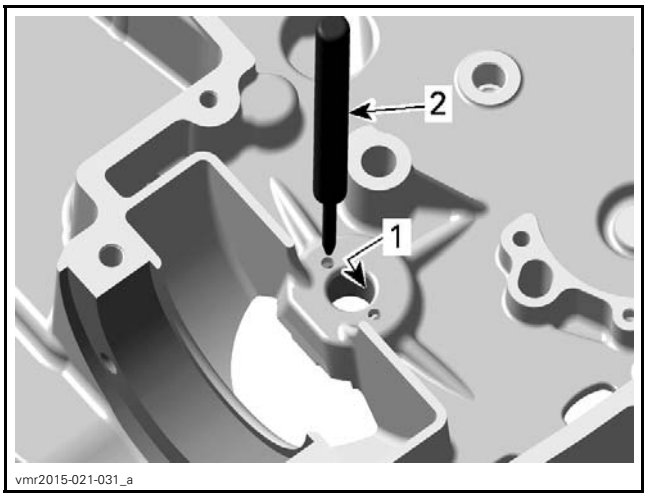

1. *Bevel gear needle bearing*
2. *Punch*

Installing the Bevel Gear Needle Bearing

REQUIRED TOOLS	
BEARING INSTALLER (GEARBOX) (P/N 529 035 763)	
HANDLE (P/N 420 877 650)	

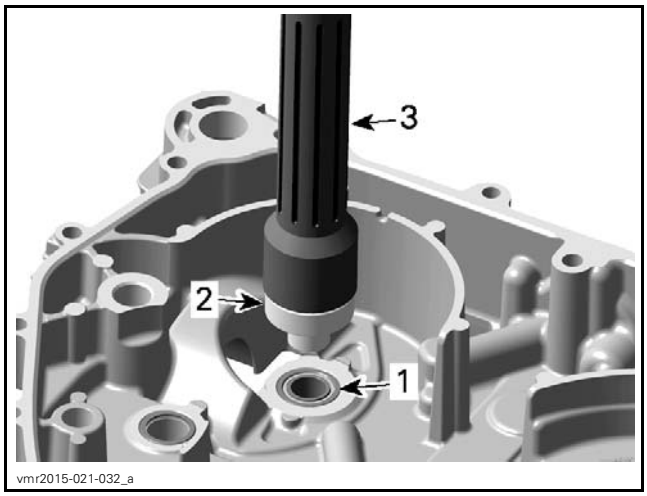

1. *Bevel gear needle bearing*
2. *Needle bearing installer*
3. *Handle*

Removing the Counter Shaft Needle Bearing

Remove counter shaft needle bearing, using a punch.

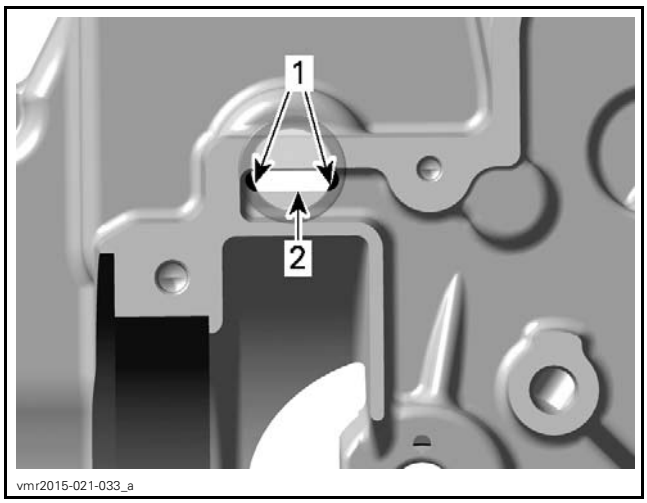

1. *Counter shaft needle bearing*
2. *Hole in crankcase MAG side*

Installing the Counter Shaft Needle Bearing

REQUIRED TOOLS	
BEARING INSTALLER (GEARBOX) (P/N 529 035 762)	
HANDLE (P/N 420 877 650)	

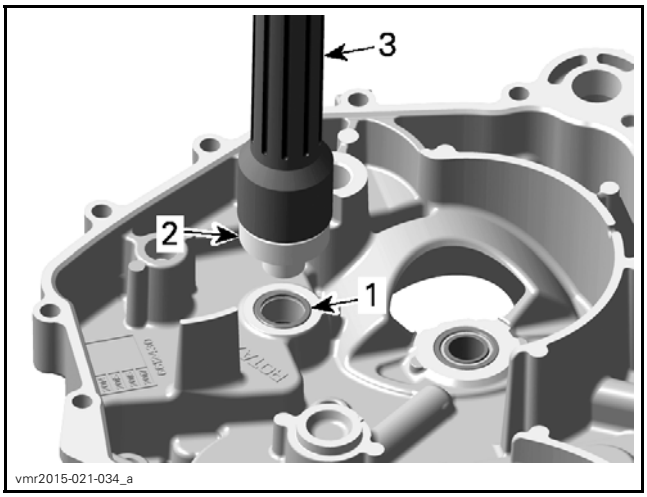

1. *Counter shaft needle bearing*
2. *Needle bearing installer*
3. *Handle*

Starter Drive Needle Bearing Replacement

For starter drive needle bearing replacement refer to *MAGNETO AND STARTER* subsection.

Removing the Balancer Shaft (PTO side) and Bevel Gear Ball Bearing

To remove ball bearings use a blind hole bearing puller.

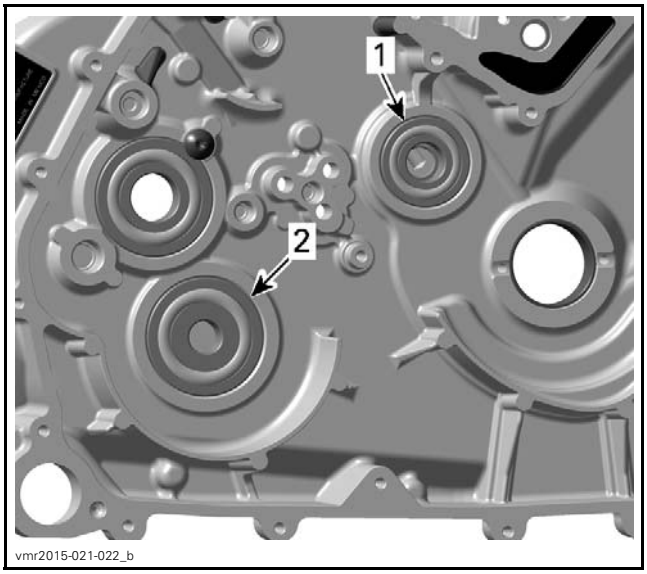

CRANKCASE PTO
1. *Balancer shaft ball bearing*
2. *Bevel gear ball bearing*

Installing the Balancer Shaft (PTO side) and Bevel Gear Ball Bearing

Use a suitable installer for installing ball bearings.

Removing the Balancer Shaft (MAG side) Ball Bearing

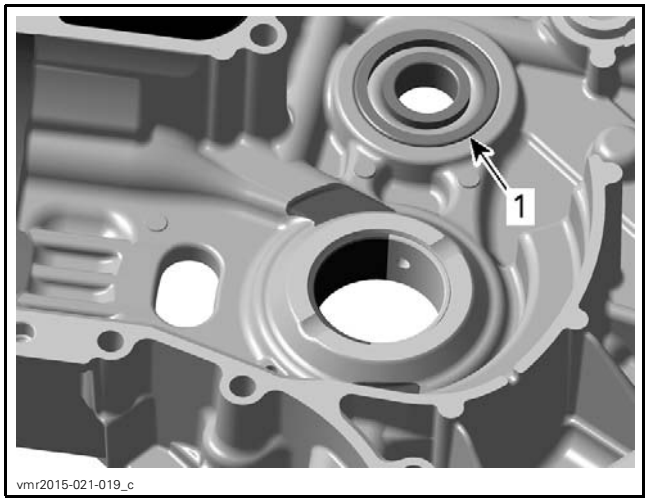

CRANKCASE MAG
1. Balancer shaft ball bearing

Removed ball bearing with a suitable pusher from outside in.

Installing the Balancer Shaft (MAG side) Ball Bearing

Use a suitable installer.

Removing the Counter Shaft (PTO side) Ball Bearing

Remove screw.

Push ball bearing from outside in with a punch.

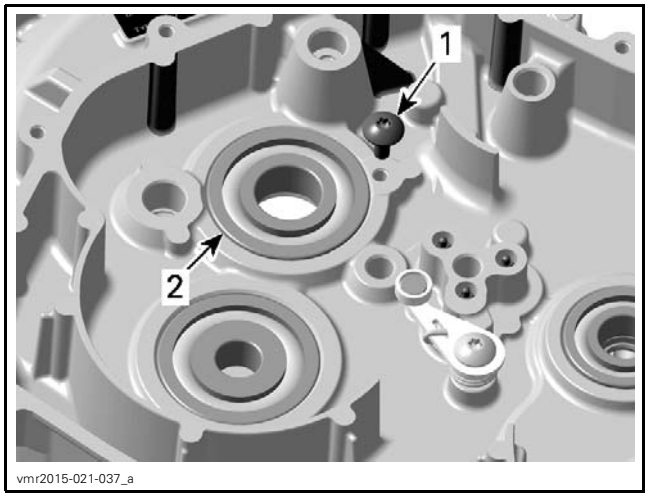

1. Screw
2. Counter shaft ball bearing

Installing the Counter Shaft (PTO side) Ball Bearing

Use a suitable installer.

NOTE: Install ball bearing with closed bearing cage towards outside of engine.

Assembling the Crankcase

The assembly is the reverse of the disassembly procedure. However, pay attention to the following.

Apply the recommended sealant on mating surfaces.

RECOMMENDED SERVICE PRODUCT
LOCTITE 5910 (P/N 293 800 081)

IMPORTANT: When beginning the application of the crankcase sealant, the assembly and the first torquing should be done within 10 minutes. It is suggested to have all you need on hand to save time.

First tighten crankcase M8 retaining screws as per following sequence:

TIGHTENING TORQUE	
Crankcase M8 retaining screws	25 N•m ± 3 N•m (18 lbf•ft ± 2 lbf•ft)

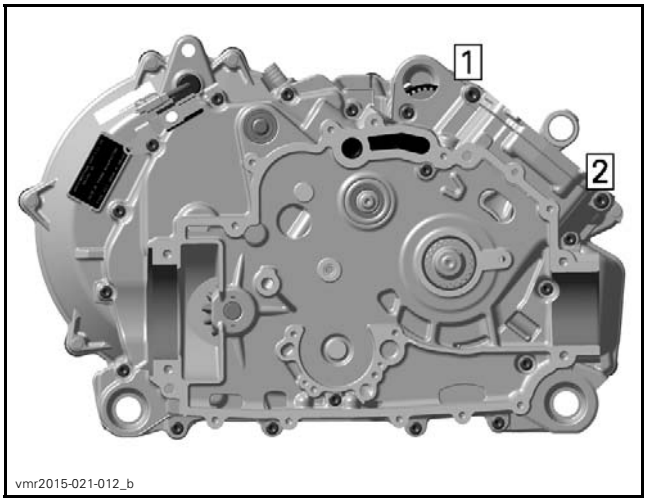

M8 SCREWS TIGHTENING SEQUENCE

Then tighten crankcase M6 retaining screws as per following sequence.

TIGHTENING TORQUE	
Crankcase M6 retaining screws	10 N•m ± 1 N•m (89 lbf•**in** ± 9 lbf•**in**)

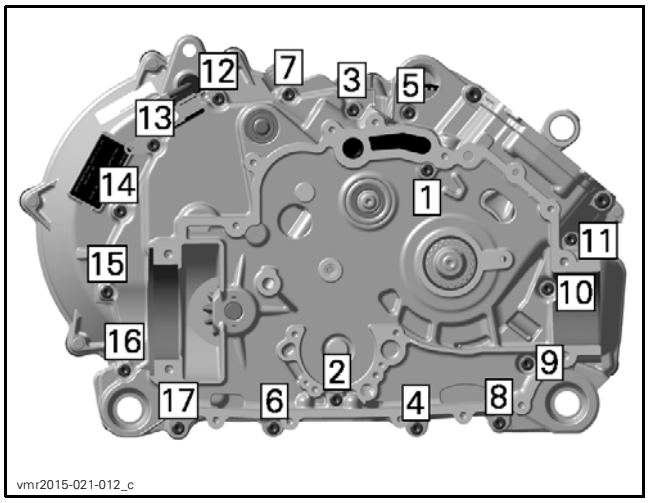

M6 SCREWS TIGHTENING SEQUENCE

BALANCER SHAFT

Removing the Balancer Shaft

Split crankcase, refer to *CRANKCASE* in this subsection.

Remove the crankshaft locking bolt.

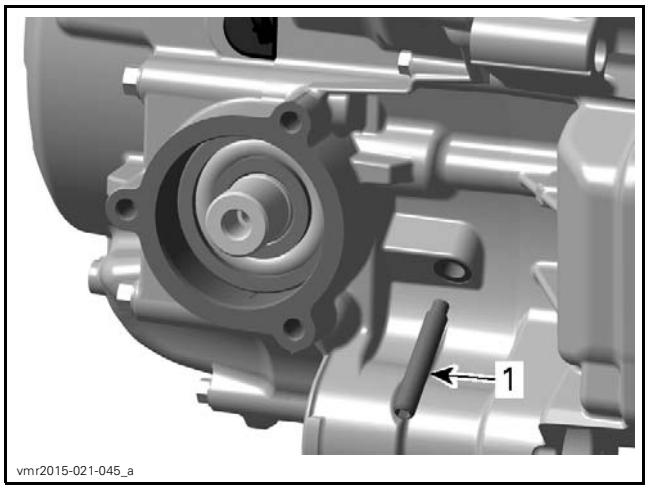

1. *Crankshaft locking bolt*

Align the dot of crankshaft gear with the balancer shaft gear dot then remove balancer shaft.

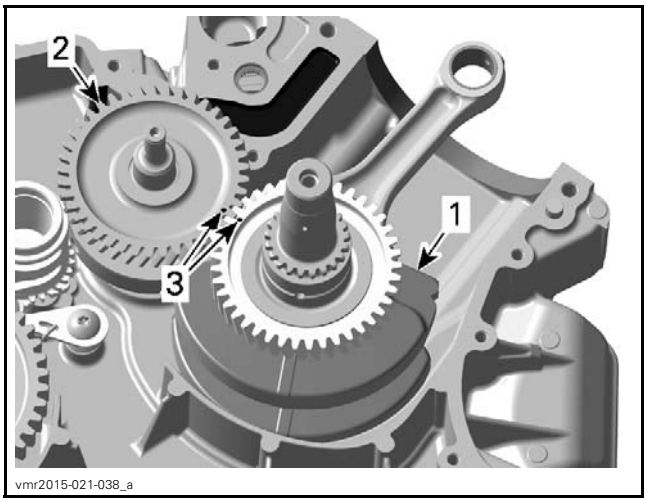

1. *Crankshaft*
2. *Balancer shaft*
3. *Dots on crankshaft gear and balancer shaft gear*

Inspecting the Balancer Shaft

Check balancer shaft and replace if damaged.

Check ball bearings on MAG and PTO side for excessive play and smooth operation. Replace if necessary.

Inspect the balancer shaft gear for chipped, worn or broken teeth. Replace balancer shaft if necessary.

NOTE: If any imperfection is detected, check also the crankshaft gear, refer to *CRANKSHAFT* in this subsection.

Installing the Balancer Shaft

The installation is the reverse of the removal procedure. However, pay attention to the following.

Align the dot on crankshaft gear with the balancer shaft gear dot.

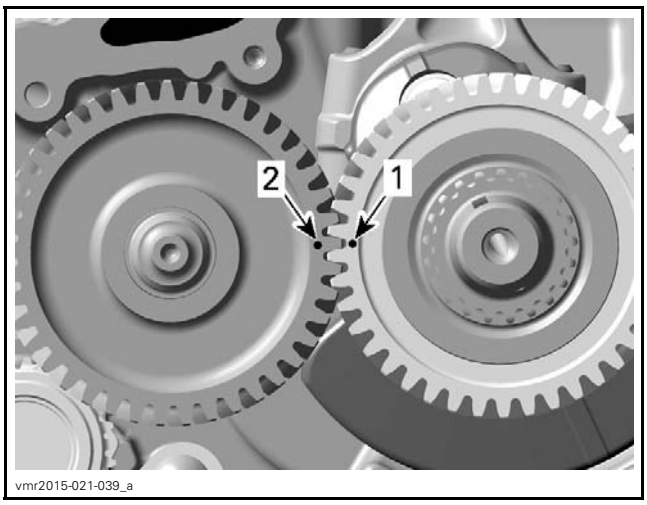

1. *Mark on crankshaft gear*
2. *Mark on balancer shaft gear*

CRANKSHAFT

Crankshaft Locking Procedure

Disconnect spark plug cable and remove the spark plug.

REQUIRED TOOLS	
TDC DIAL INDICATOR (P/N 414 104 700)	
DIAL INDICATOR ADAPTER (P/N 529 036 159)	

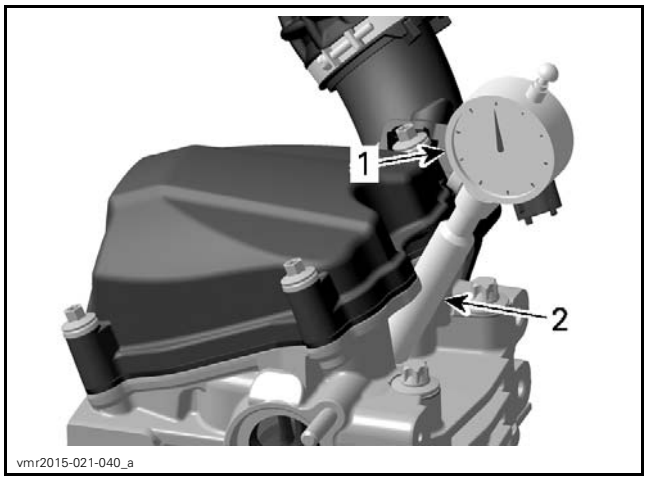

1. *Dial gauge*
2. *Dial indicator adapter*

Remove the plug screw and O-ring from magneto cover.

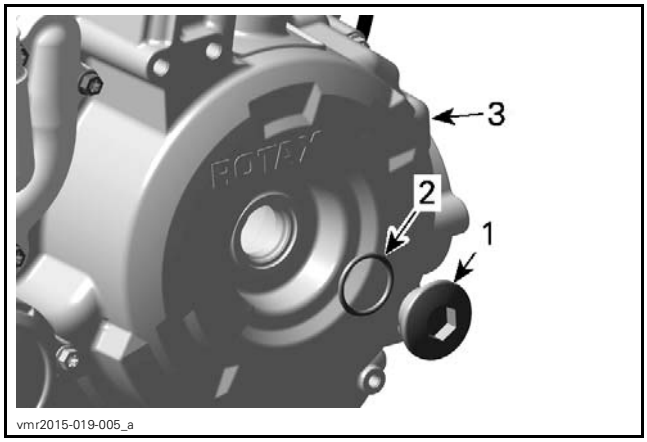

1. *Plug screw*
2. *O-ring*
3. *Magneto cover*

Set piston to TDC ignition by turning the crankshaft.

REQUIRED TOOL
13 mm socket

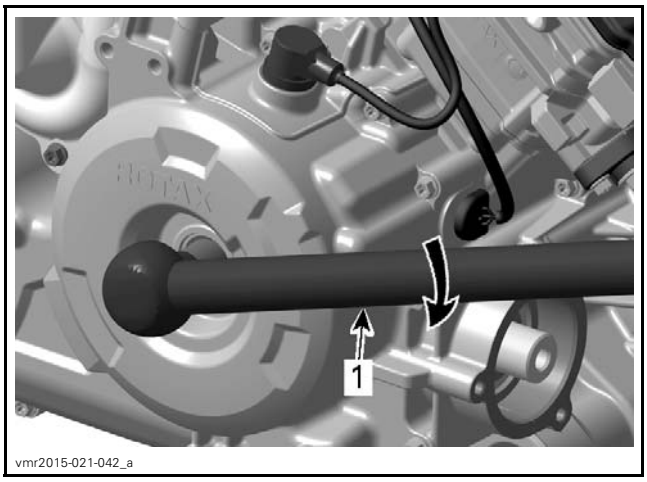

1. *Wrench with 13 mm socket*

TDC ignition

NOTICE **Never use the mark on the magneto to find the TDC. Only use the crankshaft locking tool to locate the TDC.**

Remove valve cover and verify if the printed marks on the camshaft timing gear are parallel with the cylinder head edge. If so, the engine is at TDC ignition position.

If printed marks on camshaft timing gear are not as specified, turn crankshaft 360°.

In this position the piston is set to TDC ignition.

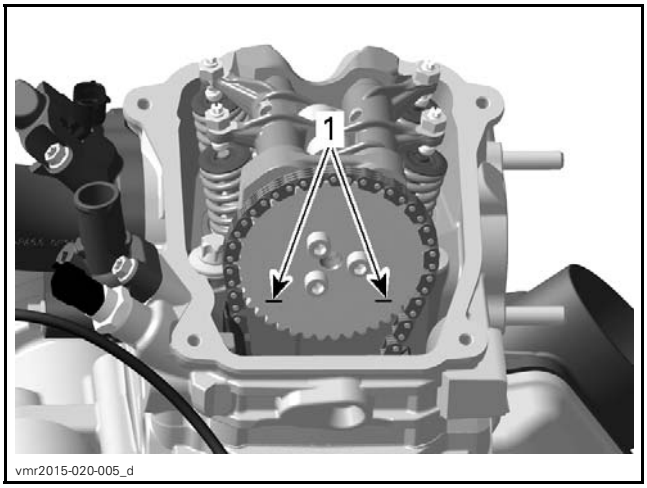

TYPICAL - PISTON AT TDC IGNITION
1. *Printed marks on camshaft timing gear*
2. *Cylinder head base*

Remove:
- Screw
- Sealing ring.

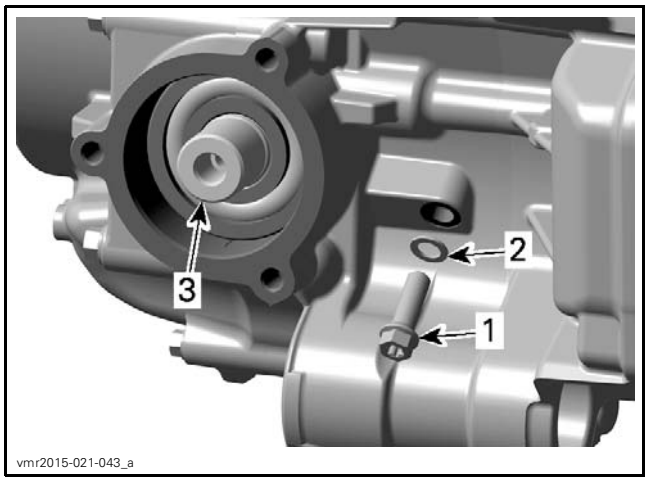

1. *Screw*
2. *Sealing ring*
3. *Output shaft on front side of vehicle*

Use a screwdriver to check if groove in crankshaft is aligned with the hole.

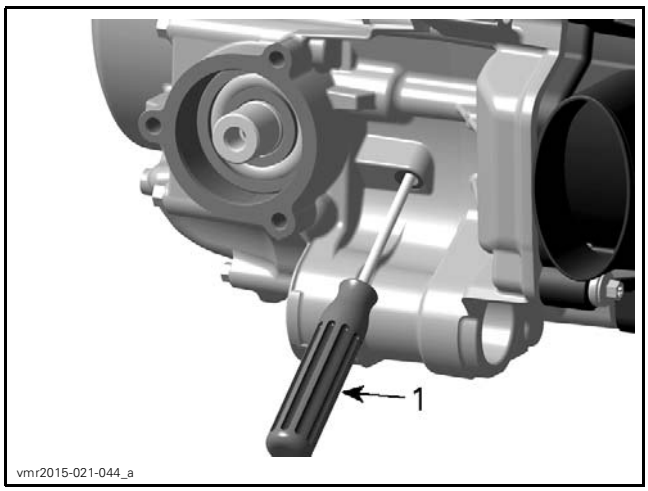

1. *Screwdriver*

Lock crankshaft.

REQUIRED TOOL	
CRANKSHAFT LOCKING BOLT (P/N 529 035 617)	

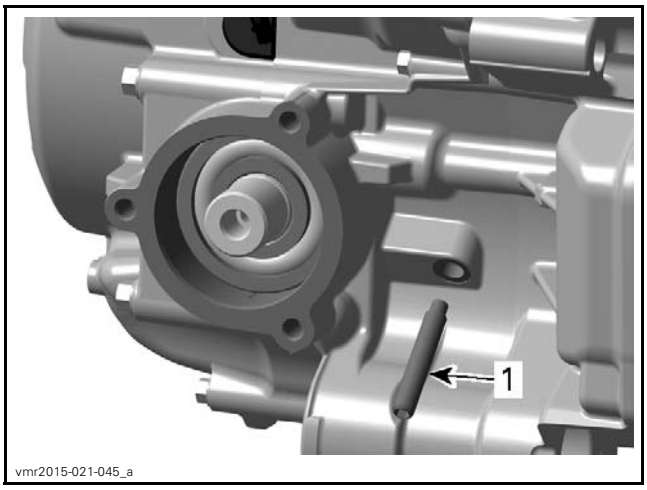

1. *Crankshaft locking bolt*

Removing the Crankshaft

Remove:

– Balancer shaft, see *BALANCER SHAFT* in this subsection
– Crankshaft.

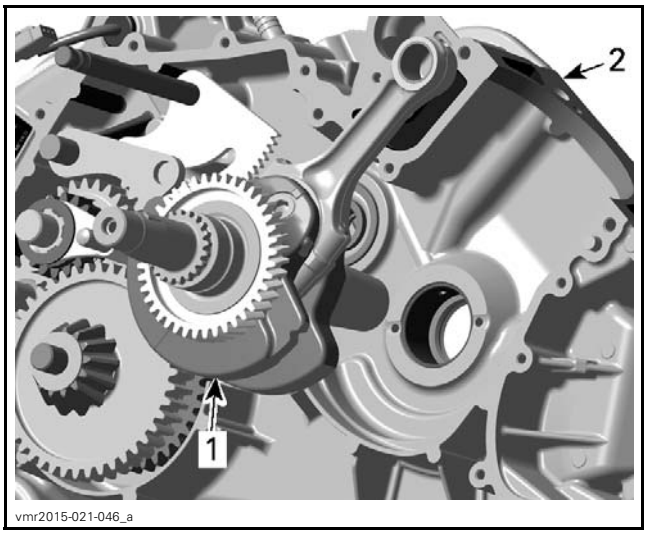

1. *Crankshaft*
2. *Crankcase PTO*

Inspecting the Crankshaft

Replace crankshaft if the gears are worn or otherwise damaged.

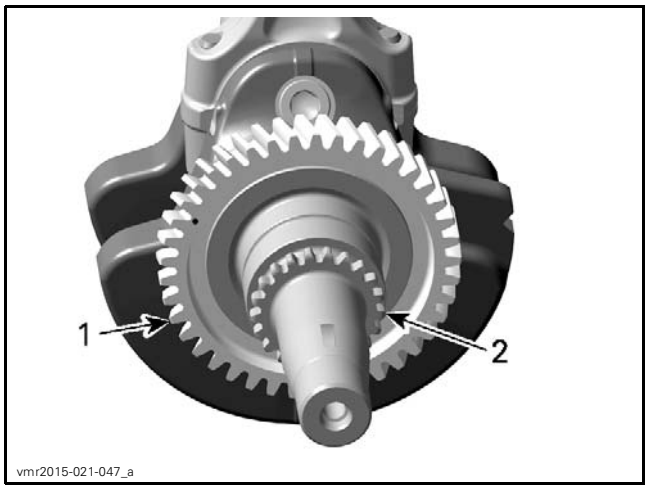

1. *Balancer gear*
2. *Crankshaft timing gear*

Connecting Rod Big End Axial Play

Using a feeler gauge, measure distance between butting face of connecting rod and crankshaft counterweight. If the distance exceeds specified tolerance, replace the crankshaft.

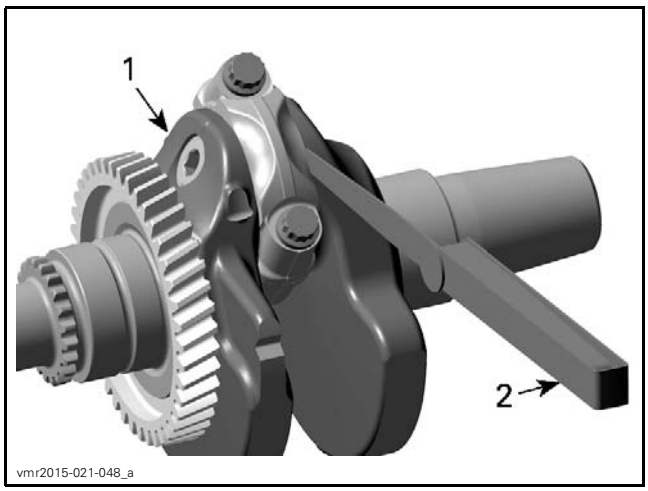

1. *Crankshaft*
2. *Feeler gauge*

CONNECTING ROD BIG END AXIAL PLAY	
New	0.100 mm to 0.452 mm (.004 in to .018 in)
Service limit	0.500 mm (.02 in)

Connecting Rod/Piston Pin Clearance

Refer to *TOP END* subsection.

Connecting Rod Big End Radial Play

NOTE: Prior to remove connecting rod from the crankshaft, mark big end halves together to ensure a correct reinstallation (cracked surface fits in only one position).

Remove connecting rod from crankshaft.

NOTICE Connecting rod screws are not reusable. Always discard screws and replace by NEW ones. It is recommended to install new plain bearings when reinstalling connecting rods.

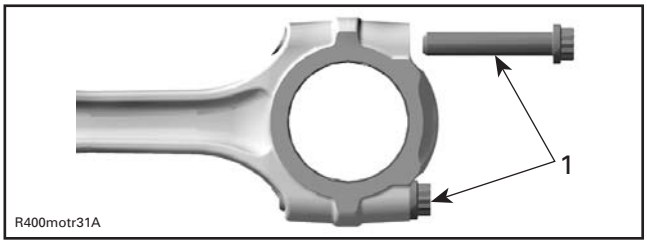

1. *Connecting rod screw*

Measure crankpin. Compare to inside diameter of connecting rod big end.

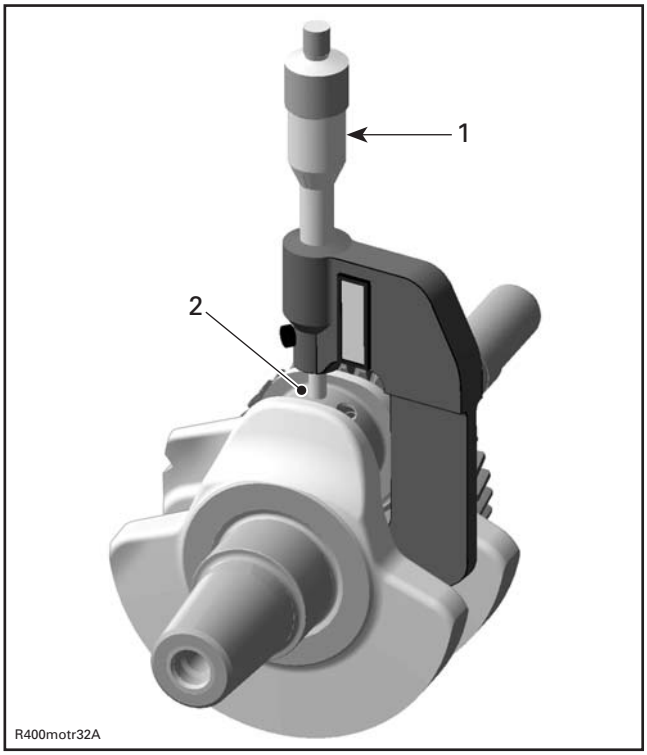

1. *Micrometer*
2. *Crankpin area for plain bearings*

CRANK PIN DIAMETER	
New	40.001 mm to 40.025 mm (1.5748 in to 1.5758 in)
Service limit	39.980 mm (1.574 in)

If the crank pin diameter is out of specification, replace crankshaft.

To measure the connecting rod big end diameter, use the OLD screws.

Install the OLD plain bearings as they were mounted initially.

Carry out the tightening procedure described in *CRANKSHAFT ASSEMBLY* in this subsection.

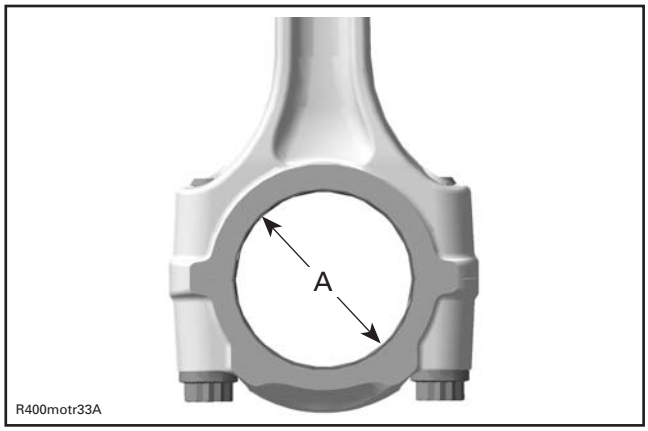

A. Connecting rod big end plain bearing

If the crank pin diameter is out of specification, replace crankshaft.

CONNECTING ROD BIG END DIAMETER	
Service limit	40.100 mm (1.579 in)

If connecting rod big end diameter is out of specification, replace plain bearings and recheck.

CONNECTING ROD BIG END RADIAL PLAY	
Service limit	0.09 mm (.0035 in)

If connecting rod big end radial clearance is out of specification, replace plain bearings and recheck.

Crankshaft Radial Play MAG/PTO Side

Measure crankshaft MAG/PTO side. Compare to inside diameter of MAG/PTO plain bearings, refer to *CRANKCASE* in this subsection.

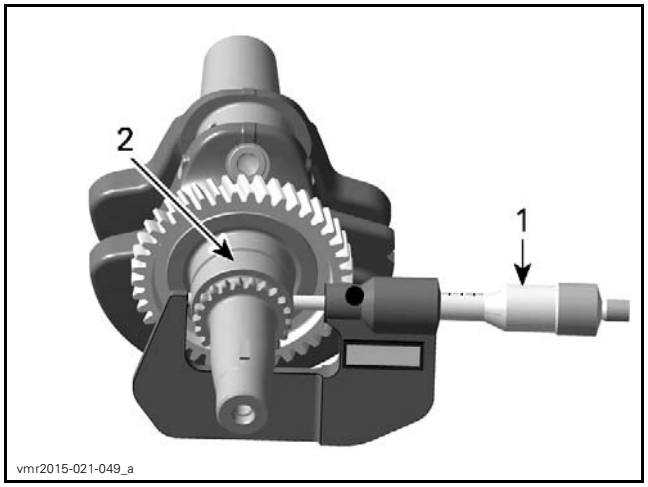

1. Micrometer
2. Crankshaft, MAG side main bearing journal

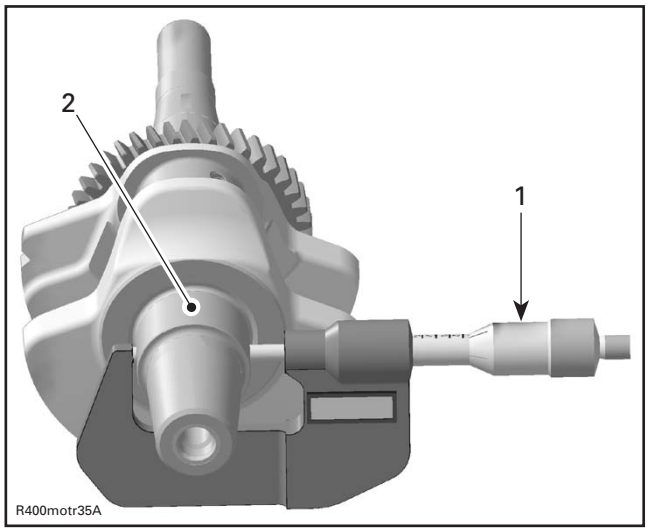

1. Micrometer
2. Crankshaft area for PTO plain bearing

CRANKSHAFT MAG/PTO DIAMETER	
New	42.016 mm to 42.040 mm (1.6542 in to 1.6551 in)
Service limit	42.000 mm (1.6535 in)

CRANKSHAFT MAG RADIAL PLAY	
Service limit	0.07 mm (.0028 in)

Assembling the Crankshaft

The assembly is the reverse of the disassembly procedure. However, pay attention to the following.

Clean the split surface on both sides (cracked area) carefully with compressed air.

Use **NEW** bearings, when connecting rod big end diameter is out of specification.

Put plain bearings correctly in place.

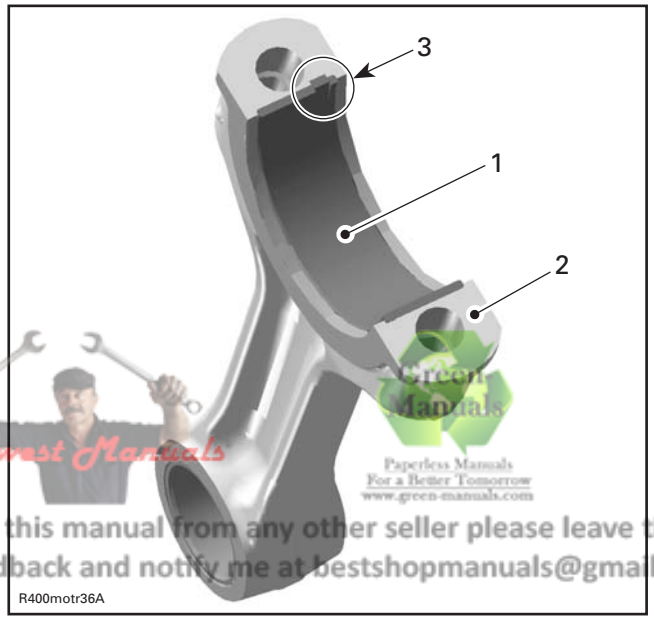

Midwest Manuals
Green Manuals
Paperless Manuals For a Better Tomorrow www.green-manuals.com
If you bought this manual from any other seller please leave them NEGATIVE feedback and notify me at bestshopmanuals@gmail.com

1. *Half plain bearing of connecting rod big end*
2. *Split surface of the connecting rod*
3. *Nose of bearing in line with connecting rod groove*

Oil the plain bearing surface of the connecting rod and crank pin before installation.

NOTICE **Lower cap and rod must match together since there is a cracked surface.**

Oil NEW connecting rod screws.

NOTICE **Always use NEW connecting rod screws for the final assembly. They are not reusable.**

Thread screws in connecting rod, then tighten as per following procedure.

NOTICE **Strictly adhere following instructions:**

- **Do not apply any thread locker.**
- **The running direction of the big end bearings and of the piston pins must not change.**
- **Always perform each step on both connecting rod screws before going to the next step.**
- **Failure to strictly follow procedure may cause connecting rod screws to loosen and lead to severe engine damage.**

REQUIRED TOOLS
Torque wrench
Angle torque wrench

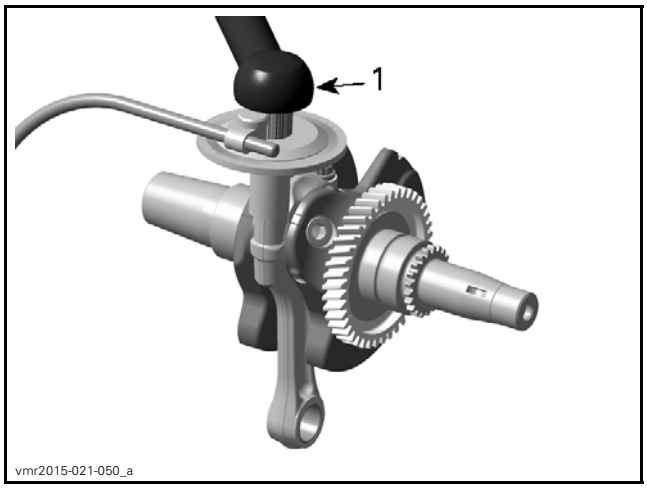

1. *Angle torque wrench*

CONNECTING RODS SCREWS TIGHTENING SEQUENCE	
Step 1	Tighten to 1/2 of specified torque
Step 2	Tighten to 20 N•m ± 2 N•m (15 lbf•ft ± 1 lbf•ft)
Step 3	Torque by an additional 60 ± 5° turn using an angle torque wrench

Installing the Crankshaft

The installation is the reverse of the removal procedure. However, pay attention to following.

Install crankshaft first then balancer shaft.

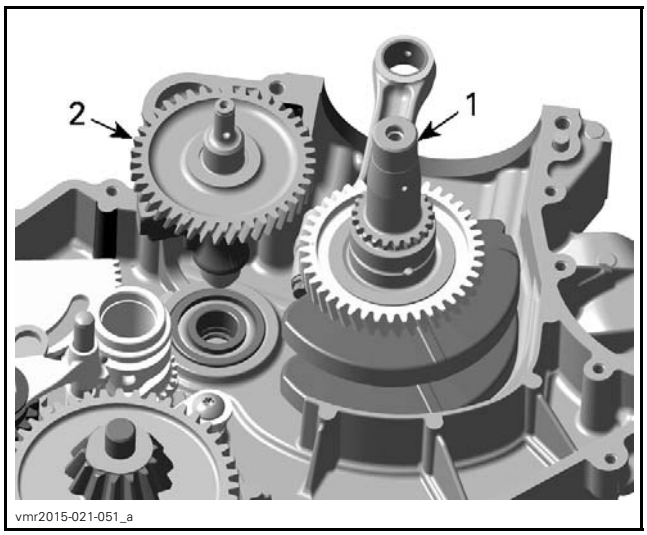

1. *Crankshaft*
2. *Balancer shaft*

Align the marks of crankshaft and balancer shaft.

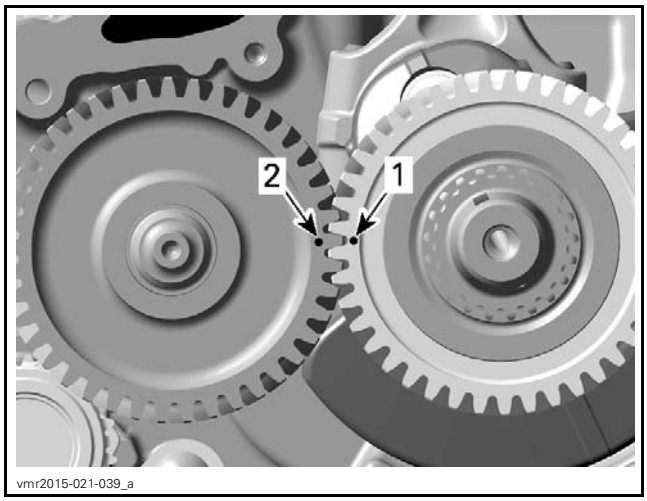

1. Mark on crankshaft gear
2. Mark on balancer shaft gear

After reinstalling of crankcase MAG, measure axial clearance of crankshaft with a feeler gauge between PTO crankcase and crankshaft thrust surface.

Install the CRANKSHAFT LOCKING BOLT (P/N 529 035 617) to keep the crankshaft in TDC position before installing the camshaft timing chain (refer to *CRANKSHAFT LOCKING PROCEDURE* in this subsection).

NOTICE **Make sure the woodruff key on crankshaft MAG is present and correctly in place.**

CYLINDER BLOCK

SERVICE TOOLS

Description	Part Number	Page
COVER WASHER INSTALLER	529 036 271	8
CRANKCASE SUPPORT MAG/PTO	529 036 031	16
CRANKSHAFT LOCKING BOLT	529 035 617	19
DRIVE SHAFT OIL SEAL INSTALLER	529 036 028	8–9
DRIVE SHAFT OIL SEAL PROTECTOR	529 036 029	7
PLAIN BEARING REMOVER/INSTALLER	529 035 917	16
PLAIN BEARING REMOVER/INSTALLER	529 036 032	11
PTO COVER OIL SEAL INSTALLER	529 036 033	9

SERVICE PRODUCTS

Description	Part Number	Page
LOCTITE 243 (BLUE)	293 800 060	7
LOCTITE 5910	293 800 081	6
LOCTITE CHISEL (GASKET REMOVER)	413 708 500	6

ENGINE DRIVE SHAFT

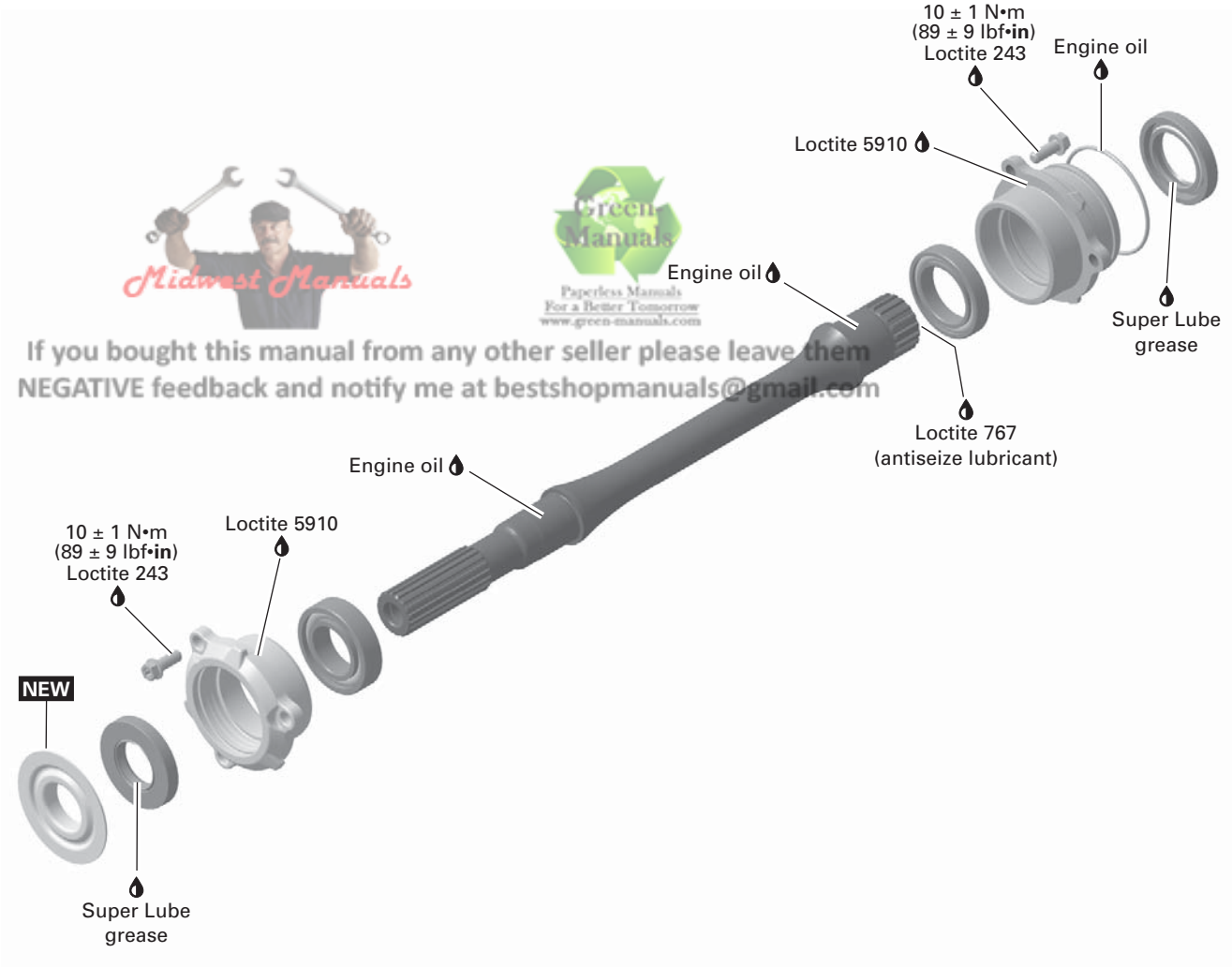

Midwest Manuals
Green Manuals
Paperless Manuals
For a Better Tomorrow
www.green-manuals.com
If you bought this manual from any other seller please leave them
NEGATIVE feedback and notify me at bestshopmanuals@gmail.com

NEW = Component must be replaced when removed.

tmr2016-119-001_a

CRANKCASE AND PTO COVER

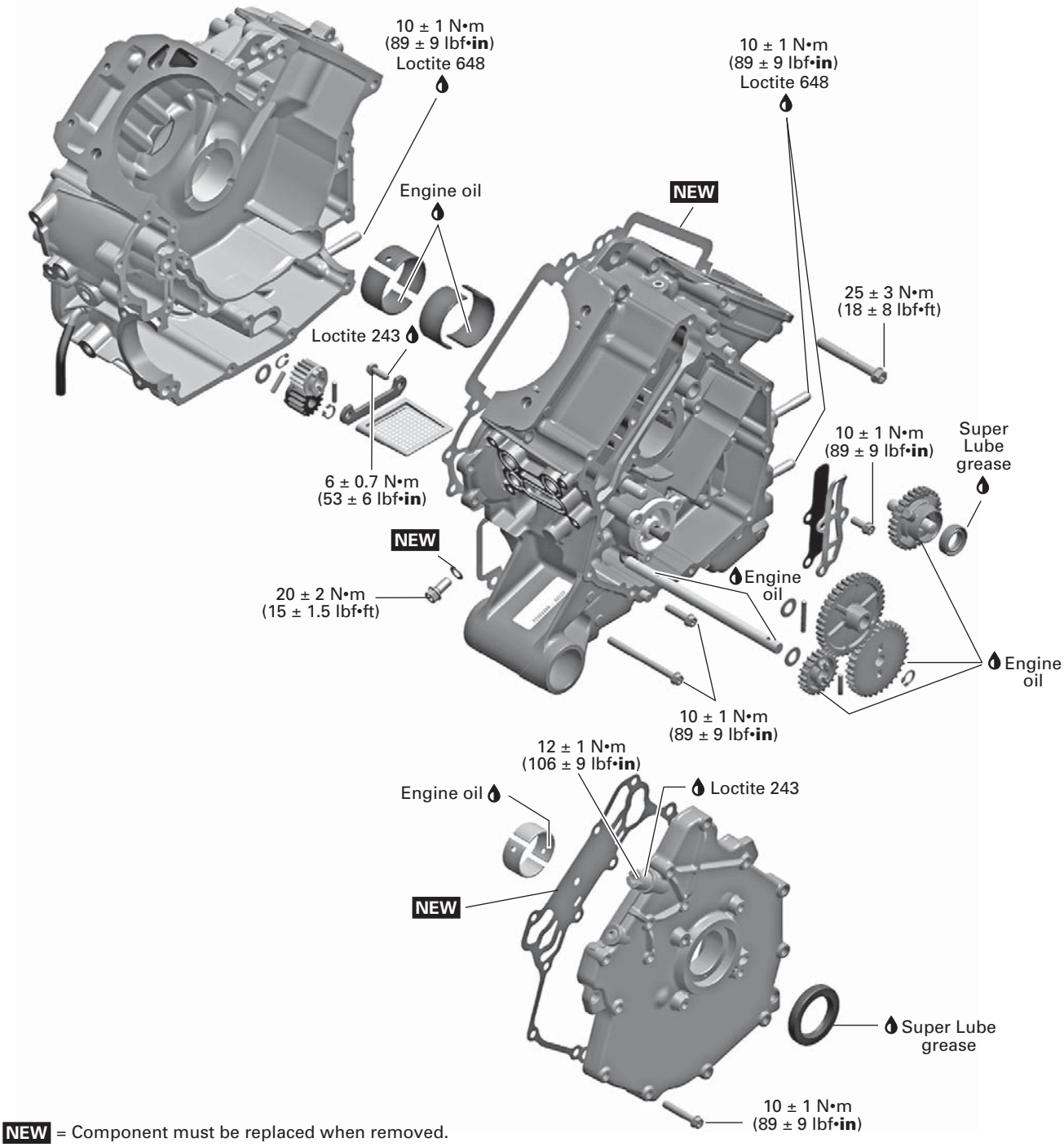

NEW = Component must be replaced when removed.

tmr2011-014-002_d

CRANKSHAFT

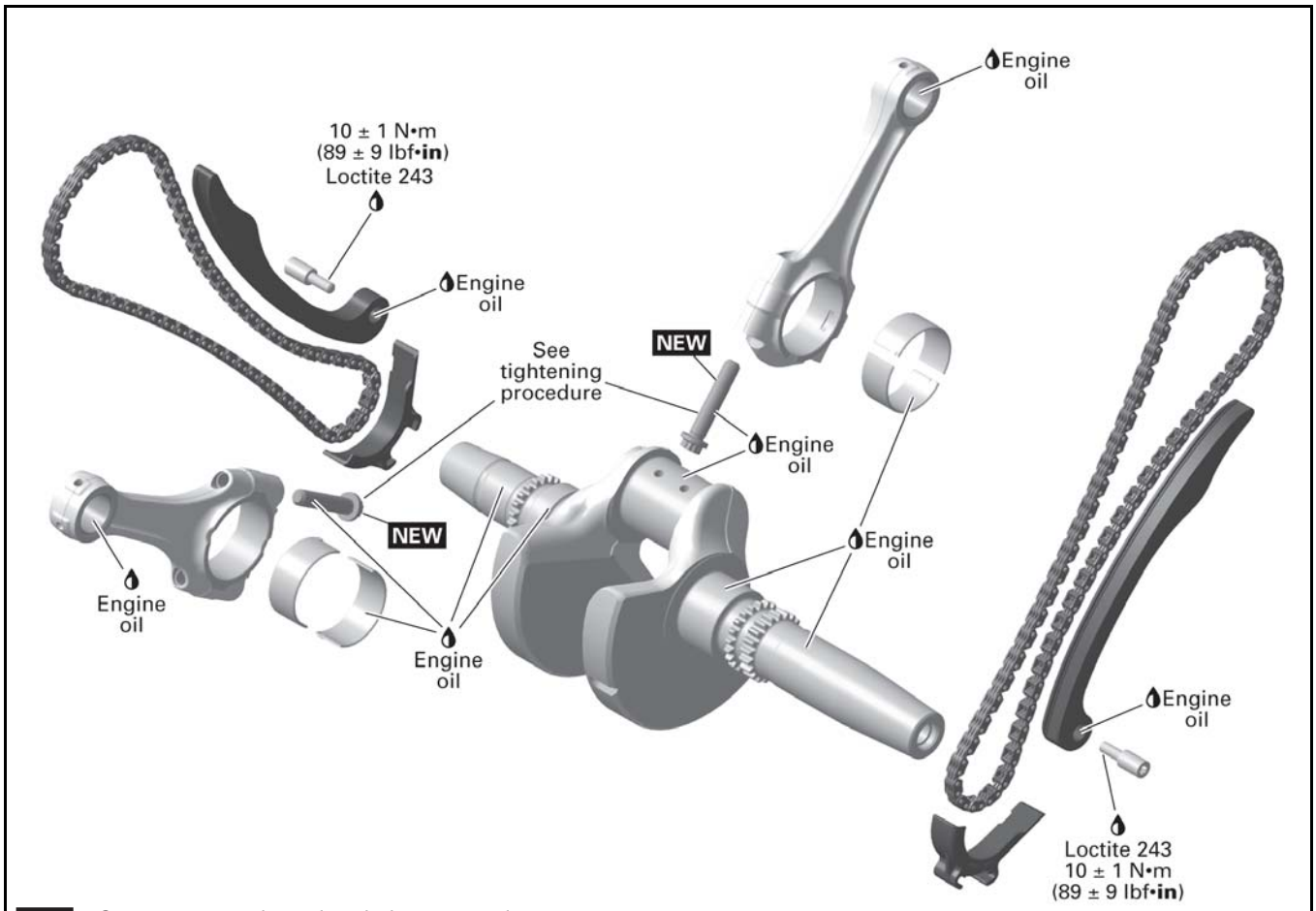

NEW = Component must be replaced when removed.

RTX20_1010HO-007-001_a

GENERAL

IMPORTANT: Note position of parts on disassembly. This may help to find the root cause of a problem. A component that is not replaced should be reinstalled in the same position as originally mounted.

PROCEDURES

ENGINE DRIVE SHAFT

The engine drive shaft transmits the power from the gearbox to the front differential and is located inside the crankcase.

Removing the Engine Drive Shaft

Remove the engine. Refer to *ENGINE REMOVAL AND INSTALLATION* subsection.

Removing the Rear Bearing Cover

Detach gearbox from engine, refer to *GEARBOX AND 4X4 COUPLING UNIT* subsection.

Remove the bearing cover and its O-ring.

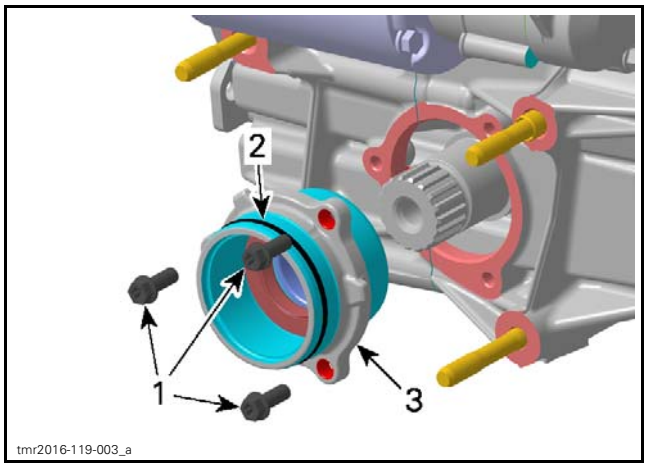

1. *Bearing cover screws*
2. *O-ring*
3. *Bearing cover*

Removing the Front Bearing Cover

NOTE: The front bearing cover can be replaced with the engine installed.

Lift and support vehicle.

Remove the front drive shaft. Refer to *FRONT DRIVE* subsection.

Remove cover washer from drive shaft using 2 screwdrivers.

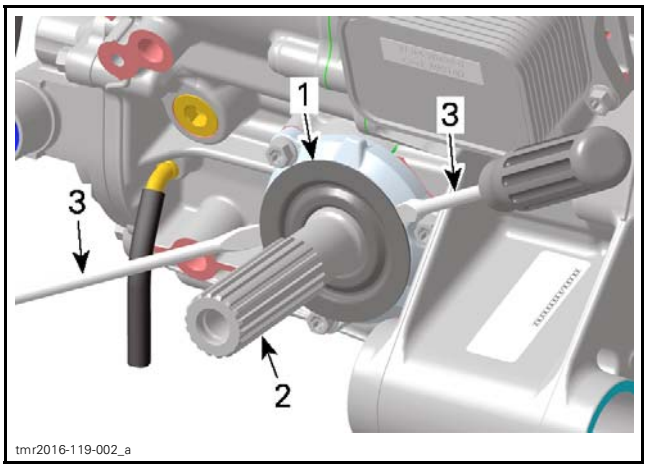

1. *Cover washer*
2. *Drive shaft*
3. *Screwdrivers*

Remove the bearing cover.

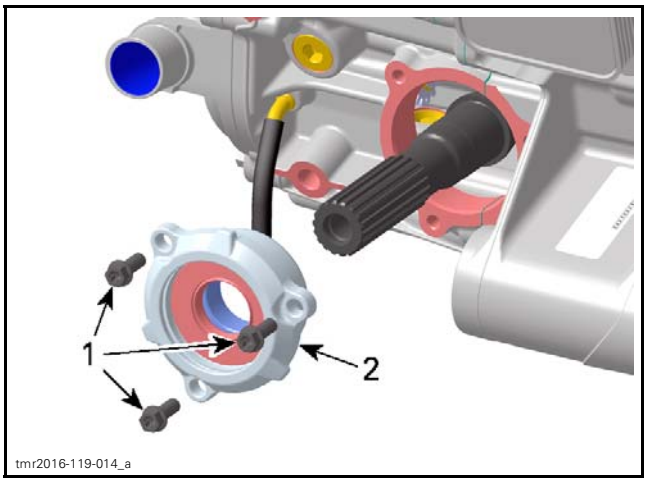

1. *Bearing cover screws*
2. *Bearing cover*

Removing the Engine Drive Shaft

Split crankcase, refer to *CRANKCASE* in this subsection.

Remove engine drive shaft from the crankcase.

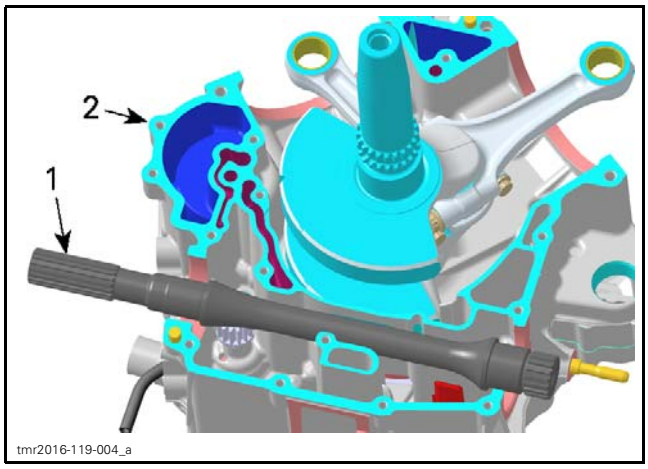

1. *Engine drive shaft*
2. *Crankcase MAG side*

Inspecting the Engine Drive Shaft

Replace oil seals and/or O-ring (bearing cover gearbox side) if they are brittle, hard or damaged.

Check drive shaft bearings for contamination and/or metal shavings. Check if bearings turn freely and smoothly. Replace if necessary.

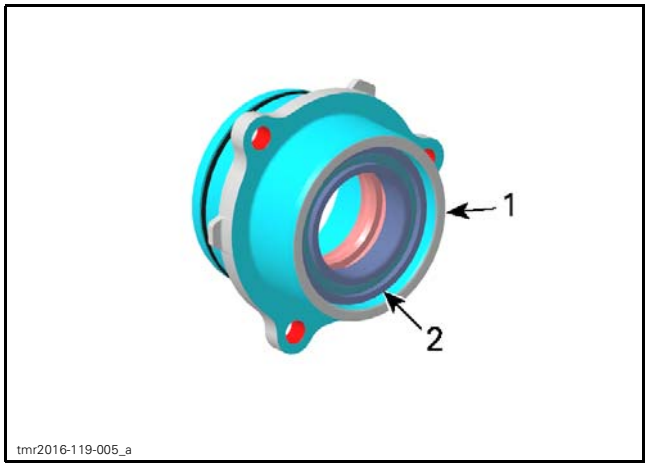

1. *Rear bearing cover*
2. *Drive shaft bearing*

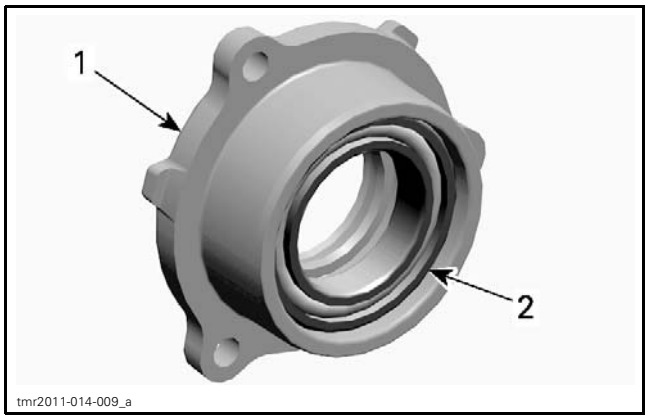

1. *Front bearing cover*
2. *Drive shaft bearing*

Check drive shaft for cracks, bend, pitting or other visible damages.

Check drive shaft splines for wear or damages.

Check oil seal running surface of the drive shaft for scratches. Replace if necessary.

Installing the Engine Drive Shaft

The installation is the reverse of removal procedure. Pay attention to the following details.

Clean all metal components in solvent.

Crankcase surfaces and bearing covers are best cleaned using a combination of LOCTITE CHISEL (GASKET REMOVER) (P/N 413 708 500) and a brass brush. Brush a first pass in one direction then make the final brushing perpendicularly (90°) to the first pass.

NOTICE **Do not wipe with rags. Use a new clean hand towel only.**

Use a suitable installer for installing bearings.

Apply sealant on mating surfaces.

SERVICE PRODUCT
LOCTITE 5910 (P/N 293 800 081)

IMPORTANT: When beginning the application of the bearing cover sealant, the assembly and the first torquing should be done within 10 minutes. It is suggested to have all you need on hand to save time.

Use a plexiglass plate and apply some sealant on it. Use a soft rubber roller 50 mm - 75 mm (2 in - 3 in), available in arts products suppliers for printing, and roll the sealant to get a thin uniform coat on the plate (spread as necessary). When ready, apply the sealant on bearing cover surfaces.

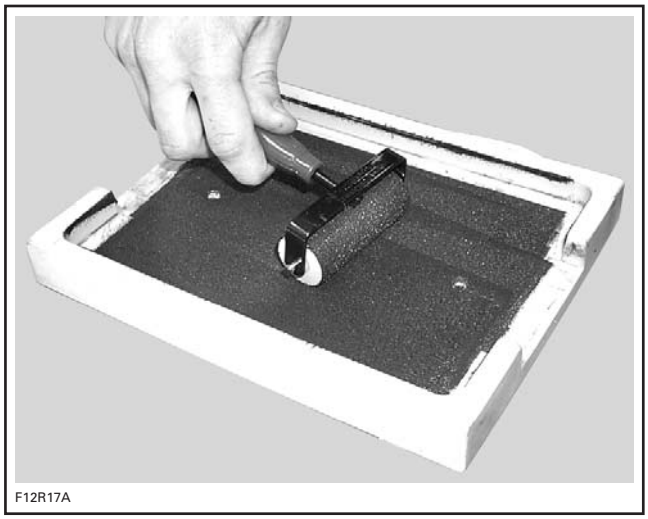

Do not apply in excess as it will spread out inside crankcase.

NOTE: It is recommended to apply this specific sealant as described here to get a uniform application without lumps. If you do not use the roller method, you may use your finger to uniformly distribute the sealant (using a finger will not affect the adhesion).

Installing the Rear Bearing Cover

Check O-ring on bearing cover if brittle, hard or damaged. Replace if necessary.

Lubricate O-ring.

SERVICE PRODUCT
Engine oil

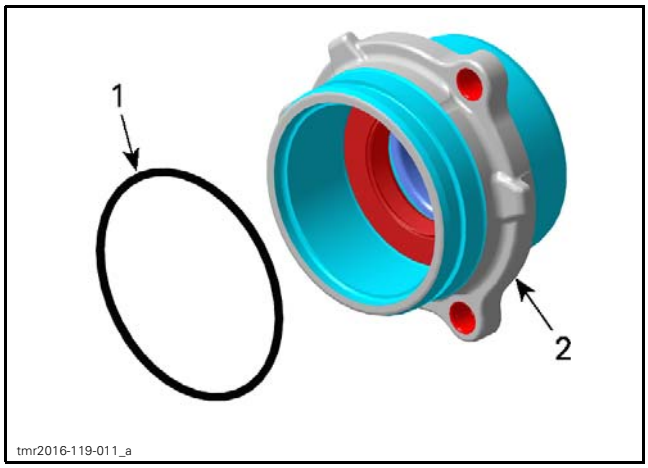

1. *O-ring*
2. *Bearing cover*

For bearing cover installation on gearbox side, protect the oil seal to avoid damaging the sealing lip.

REQUIRED TOOL	
DRIVE SHAFT OIL SEAL PROTECTOR (P/N 529 036 029)	

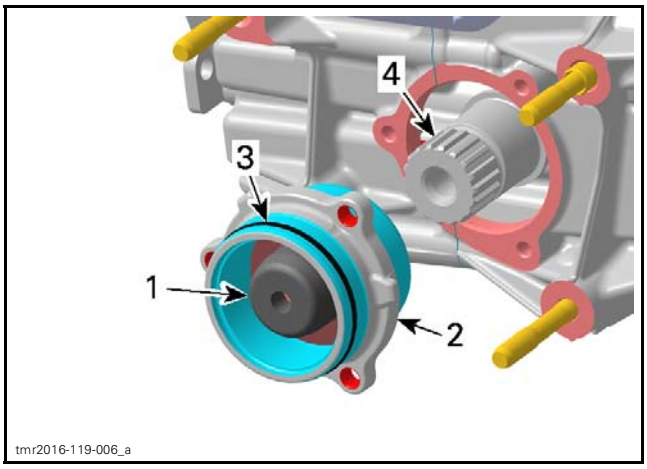

1. *Protection sleeve*
2. *Bearing cover*
3. *O-ring*
4. *Drive shaft*

TIGHTENING TORQUE	
Rear bearing cover screws	10 N•m ± 1 N•m (89 lbf•**in** ± 9 lbf•**in**) + LOCTITE 243 (BLUE) (P/N 293 800 060)

Installing the Front Bearing Cover

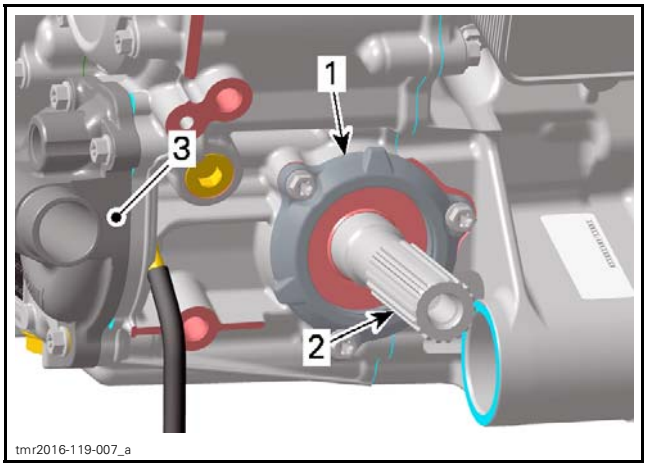

1. *Bearing cover*
2. *Drive shaft*
3. *Water pump cover*

TIGHTENING TORQUE	
Front bearing cover screws	10 N•m ± 1 N•m (89 lbf•**in** ± 9 lbf•**in**) + LOCTITE 243 (BLUE) (P/N 293 800 060)

Place **NEW** cover washer on drive shaft.

NOTE: Groove must face outwards the engine

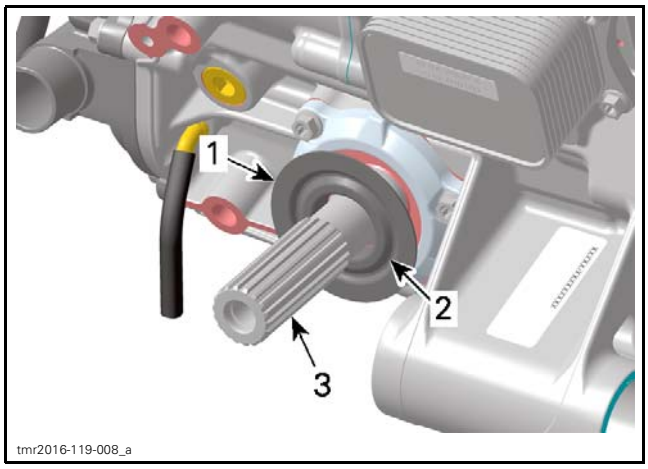

1. *Cover washer*
2. *Groove*
3. *Drive shaft*

Press cover washer on drive shaft.

REQUIRED TOOLS	
COVER WASHER INSTALLER (P/N 529 036 271)	
Flat washer (P/N 250200102)	
M12 x 1.25 x 35 hexagonal screw	

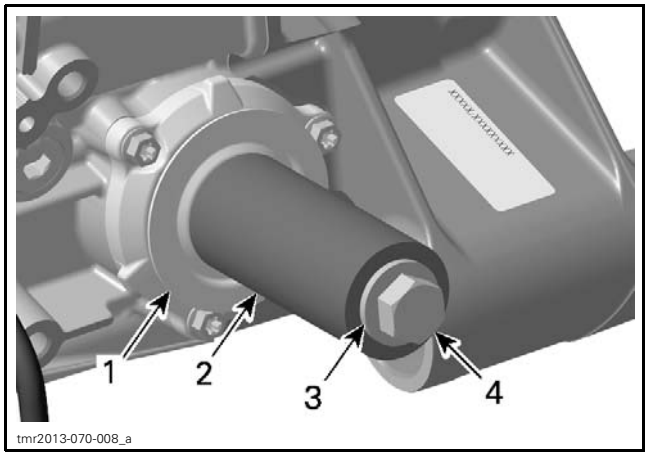

1. *Cover washer*
2. *Cover washer installer (P/N 529 036 271)*
3. *Flat washer (P/N 250200102)*
4. *M12 x 1.25 x 35 hexagonal screw*

Installing the Engine Drive Shaft

Finally check for axial play of the drive shaft.

FRONT OIL SEAL (ENGINE DRIVE SHAFT)

Front Oil Seal Replacement (Engine Drive Shaft)

1. Remove front propeller shaft. Refer to *FRONT DRIVE* subsection.
2. Remove the front bearing cover, refer to *ENGINE DRIVE SHAFT* in this subsection.
3. Remove drive shaft seal from bearing cover.

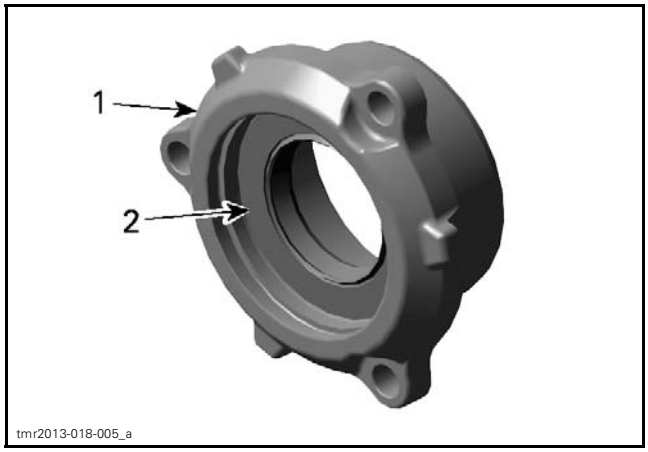

1. *Bearing cover*
2. *Oil seal*

4. Install drive shaft oil seal.

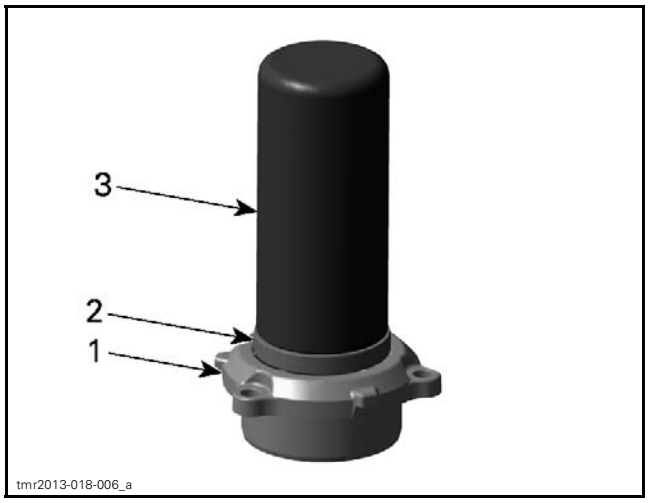

1. *Bearing cover*
2. *Oil seal*
3. *Oil seal installer*

REQUIRED TOOL	
DRIVE SHAFT OIL SEAL INSTALLER (P/N 529 036 028)	

5. Reinstall remaining parts in the reverse order of removal.

REAR OIL SEAL (ENGINE DRIVE SHAFT)

Rear Oil Seal Replacement (Engine Drive Shaft)

1. Remove rear bearing cover, refer to *ENGINE DRIVE SHAFT* in this subsection.

2. Remove drive shaft seal from bearing cover.

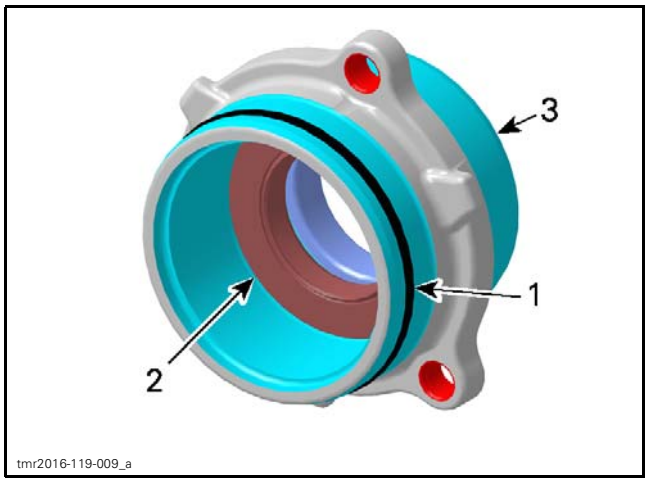

1. *O-ring*
2. *Oil seal*
3. *Bearing cover*

3. Install drive shaft oil seal.

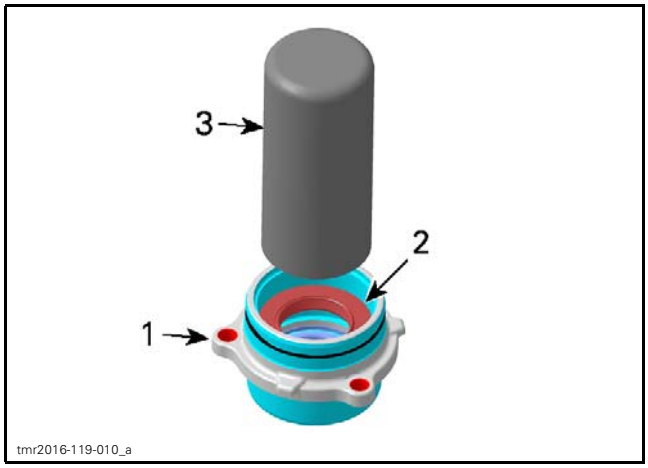

1. *Bearing cover*
2. *Oil seal*
3. *Oil seal installer*

REQUIRED TOOL	
DRIVE SHAFT OIL SEAL INSTALLER (P/N 529 036 028)	

4. Reinstall remaining parts in the reverse order of removal.

PTO COVER OIL SEAL

To replace oil seal it is not necessary to remove engine from vehicle.

Removing the PTO Oil Seal

Refer to *CONTINUOUSLY VARIABLE TRANSMISSION (CVT)* subsection to remove the following parts:

– CVT cover
– Drive pulley
– Driven pulley
– CVT air guide.

Remove oil seal with a small flat screwdriver.

NOTICE **Avoid scoring surfaces with tool.**

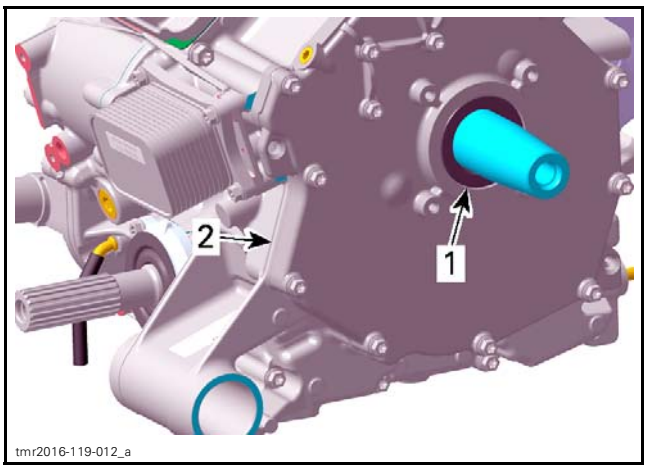

1. *Oil seal*
2. *PTO cover*

Inspecting the PTO Oil Seal

Check oil seal running surface of crankshaft PTO side for grooves. Replace if necessary.

Installing the PTO Oil Seal

The installation is the reverse of the removal procedure.

Pay attention to the following details.

NOTICE **Oil seal must be installed with sealing lip toward the engine.**

Push oil seal in place.

REQUIRED TOOL	
PTO COVER OIL SEAL INSTALLER (P/N 529 036 033)	

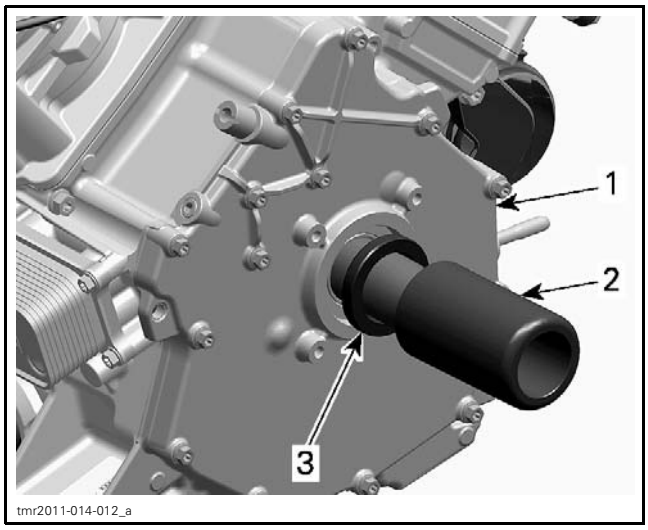

1. *PTO cover*
2. *Oil seal installer*
3. *Oil seal*

PTO COVER

Removing the PTO Cover

Refer to *CONTINUOUSLY VARIABLE TRANSMISSION (CVT)* subsection to remove the following parts:

- CVT cover
- Drive pulley
- Driven pulley
- CVT air guide.

Disconnect vent hose.

Remove PTO cover screws and pull PTO cover.

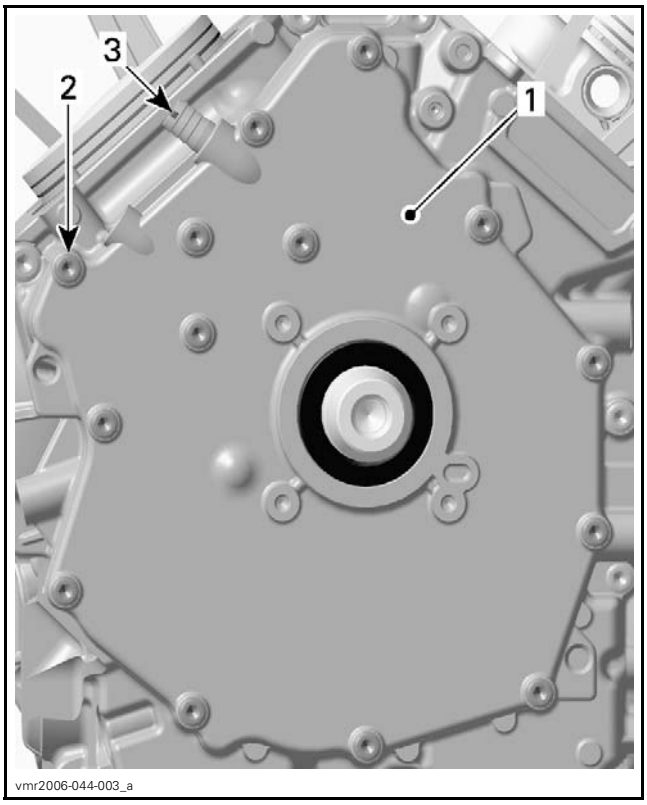

1. *PTO cover*
2. *PTO cover screws*
3. *Vent hose nipple*

Inspecting the PTO Cover

Check the PTO cover for cracks or other damage.

Replace PTO cover if damaged.

Clean oil breather bore in PTO cover from contaminations with part cleaner then use pressurized air to dry it.

Check surface of sealing sleeve for wear or other damages. Replace PTO cover if damaged.

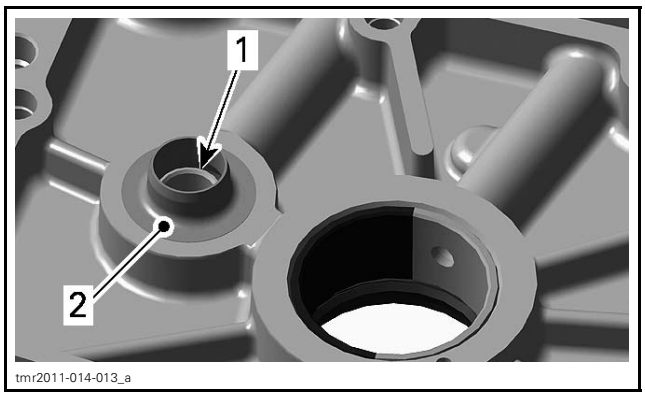

1. *Oil breather bore*
2. *Surface of sealing sleeve*

Check plain bearings for scorings or other damages.

NOTE: Measure plain bearing inside diameter (PTO cover) and compare to crankshaft journal diameter (PTO cover bearing). Refer to *CRANKSHAFT* in this section. Replace if the measurement is out of specification.

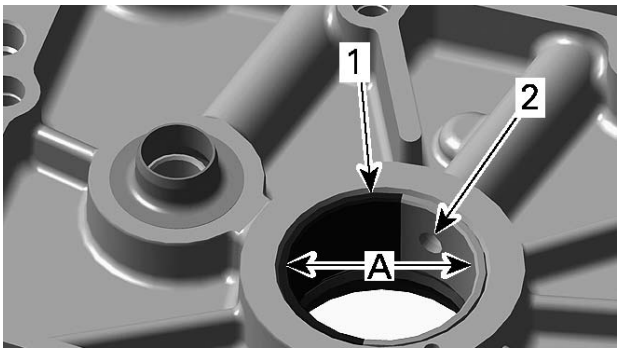

tmr2011-014-013_b

1. *Plain bearing*
2. *Oil bore*

A. *Measure plain bearing inside diameter*

PLAIN BEARING INSIDE DIAMETER (PTO COVER)	
Service limit	34.120 mm (1.3433 in)

Plain Bearing Replacement (PTO Cover)

Removing the Plain Bearing

NOTICE **Unless otherwise instructed, never use a hammer to install plain bearings. Use a press only.**

Carefully remove the PTO oil seal with a screwdriver, without damaging the PTO cover.

Press out the plain bearings from the outside towards the inside.

REQUIRED TOOL	
PLAIN BEARING REMOVER/INSTALLER (P/N 529 036 032)	

The PTO cover has to be supported from below with suitable support with straight surface, in order to prevent damage of the sealing surface.

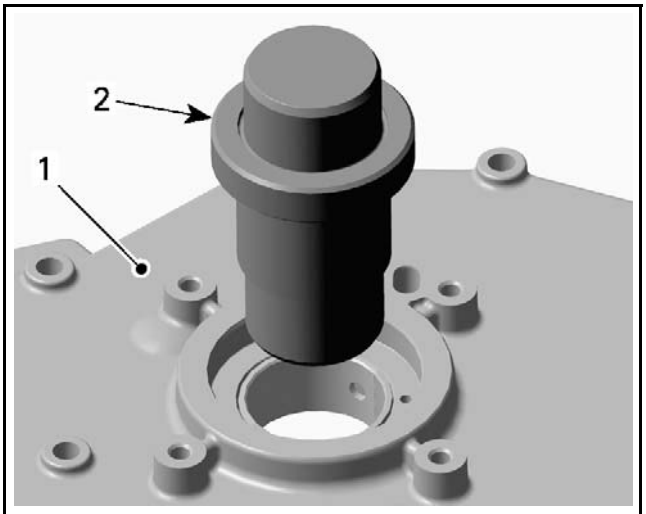

vmr2006-044-007_a

1. *PTO cover*
2. *Plain bearing remover/installer*

Installing the Plain Bearing

NOTE: Do not lubricate plain bearings and/or PTO cover for installation.

Install plain bearings in a cool PTO cover.

REQUIRED TOOL	
PLAIN BEARING REMOVER/INSTALLER (P/N 529 036 032)	

NOTICE **Mark position of oil bore on PTO cover and on plain bearing remover/installer. Align mark on plain bearing remover/installer with mark on PTO cover.**

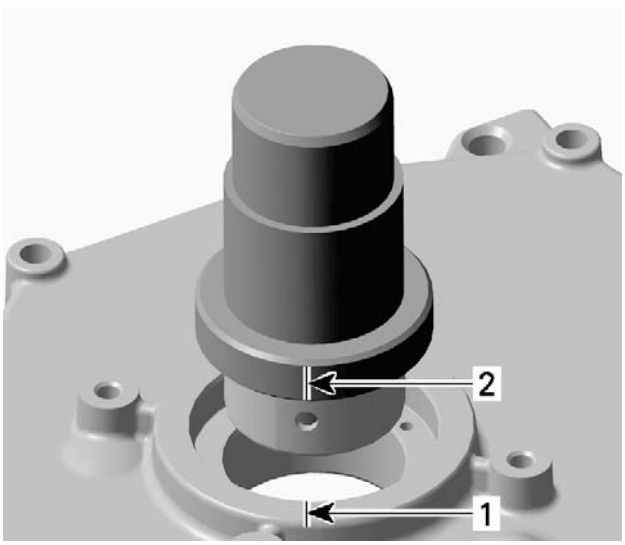

vmr2006-044-008_a

1. *Mark position of oil bore on PTO cover*
2. *Mark position of oil bore on plain bearing remover/installer*

Carefully press-in the plain bearings in the same direction as during disassembly, from the outside towards the inside. Support PTO cover with suitable support with straight surface, in order to prevent damage of the sealing surface.

NOTICE **Wrong oil bore position will stop oil supply to plain bearings and will damage the engine.**

NOTICE **The partition of the plain bearings must be positioned near to oil bore in counter-clockwise direction.**

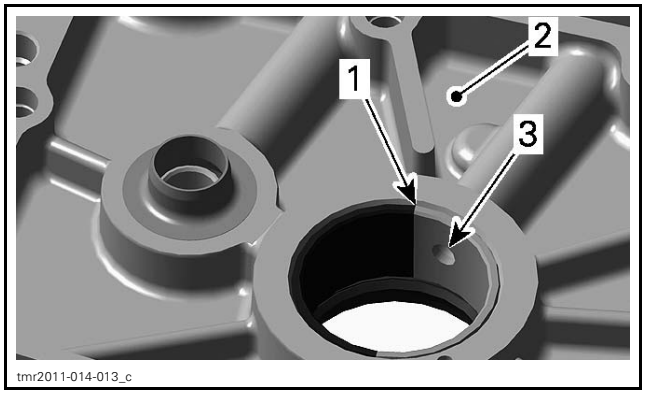

1. *Partition*
2. *PTO cover (inside)*
3. *Oil bore*

Installing the PTO Cover

The installation is the reverse of the removal procedure. However, pay attention to the following.

NOTICE **At installation, replace PTO cover gasket and oil seal.**

Tighten PTO cover screws following the illustrated sequence.

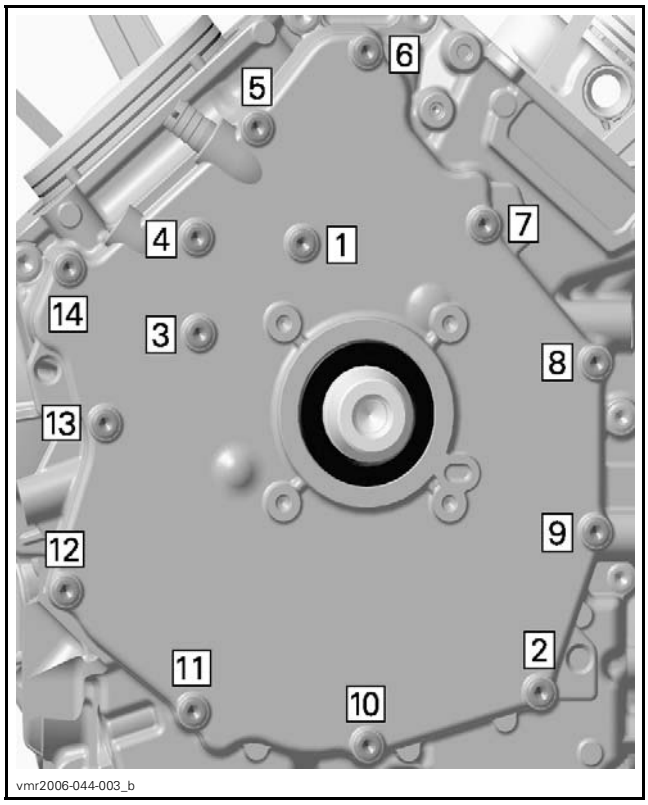

TIGHTENING SEQUENCE

TIGHTENING TORQUE	
PTO cover screws	10 N•m ± 1 N•m (89 lbf•**in** ± 9 lbf•**in**)

DRIVE GEARS

Drive Gears Location

The engine is equipped with a breather gear which prevents engine oil coming out through the breathing system into the air intake system.

The drive gears are located on the engine PTO side behind the PTO cover.

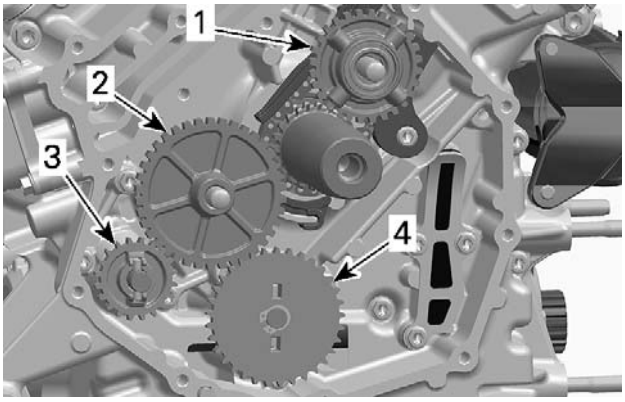

tmr2011-014-014_a

1. *Breather gear*
2. *Intermediate gear*
3. *Water pump drive gear*
4. *Oil pump drive gear*

Removing the Drive Gears

Remove PTO cover (refer to *PTO COVER*).

Withdraw intermediate gear and breather gear.

For oil pump drive gear removal, refer to *OIL PUMP* in the *LUBRICATION SYSTEM* subsection.

To remove water pump drive gear, pull the shaft assembly a bit out and turn it about one teeth until it stays out.

Then push water pump drive gear in.

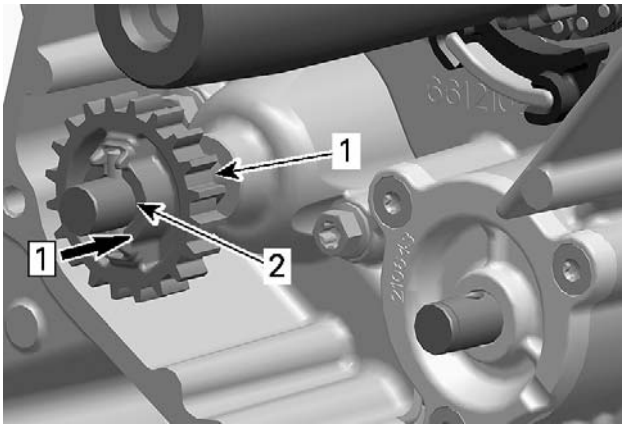

tmr2011-014-015_a

Step 1: Push gear in

1. *Water pump drive gear*
2. *Intermediate shaft*

Remove needle pin and pull water pump drive gear out.

Remove thrust washer from intermediate shaft.

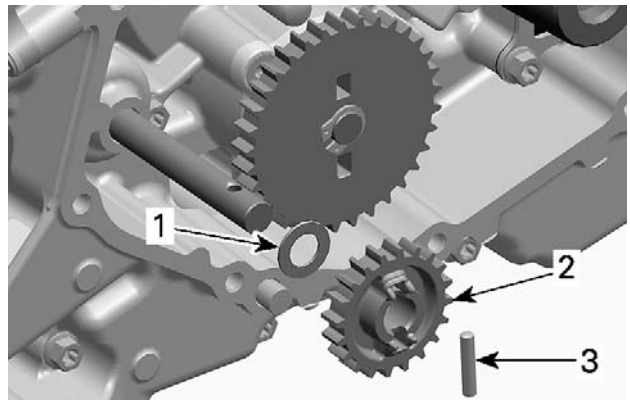

tmr2011-014-016_a

1. *Thrust washer*
2. *Water pump drive gear*
3. *Needle pin*

Inspecting the Drive Gears

Intermediate Gear/Oil Pump Drive Gear/Water Pump Drive Gear

Inspect gears for wear or other damage. Replace if damaged.

Breather Gear

Check if oil seal is brittle, hard or damaged. Replace if necessary.

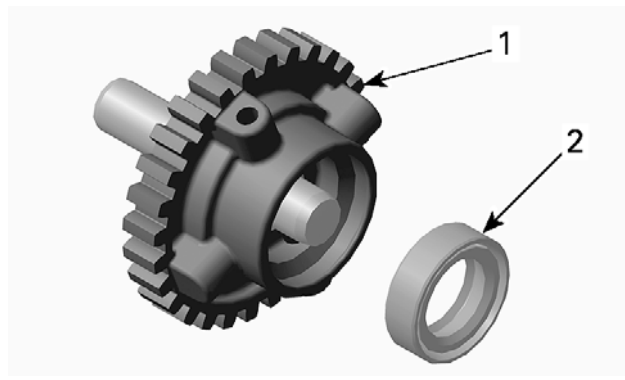

tmr2011-014-017_a

1. *Breather gear*
2. *Oil seal*

Inspect gear for wear or other damage.

Check ball bearing for excessive play and smooth operation. Replace breather gear assembly if necessary.

Installing the Drive Gears

The installation is the reverse of the removal procedure.

Adequately oil the ball bearing of the breather gear.

CRANKCASE

Disassembling the Crankcase

1. Drain the following:
   - Cooling system, refer to *VEHICLE COOLING SYSTEM* subsection
   - Engine oil, refer to *LUBRICATION SYSTEM* subsection
   - Gearbox oil, refer to *GEARBOX AND 4X4 COUPLING UNIT* subsection.
2. Lock crankshaft. Refer to *CRANKSHAFT LOCKING PROCEDURE* in the this subsection.
3. Refer to *CONTINUOUSLY VARIABLE TRANSMISSION (CVT)* subsection to remove following parts:
   - CVT cover
   - Drive pulley
   - Driven pulley
   - CVT air guide.
4. Remove engine from vehicle. Refer to *ENGINE REMOVAL AND INSTALLATION* subsection.
5. Detach gearbox from engine. Refer to *GEARBOX AND 4X4 COUPLING UNIT*.
6. Refer to *MAGNETO AND STARTER* subsection to remove the following parts:
   - Magneto cover
   - Rotor with sprag clutch gear
   - Starter drive gears.
7. Refer to following procedures in this subsection to remove the following parts:
   - PTO cover
   - Drive gears
   - Bearing covers of engine drive shaft.
8. Refer to *TIMING CHAIN* subsection to remove following parts:
   - Chain tensioners
   - Camshaft timing gears
   - Timing chains
   - Timing chain guides.
9. Refer to *CYLINDER HEAD* subsection to remove following parts:
   - Front cylinder head
   - Rear cylinder head
   - Cylinders.
10. Refer to *ENGINE COOLING SYSTEM* subsection to remove following parts:
    - Water pump housing.
11. Refer to *LUBRICATION SYSTEM* subsection to remove following parts:
    - Oil filter
    - Oil cooler (if equipped)
    - Oil pump drive gear.

NOTE: Oil pump removal from crankcase is not necessary, but recommended to see condition of oil pump (refer to *LUBRICATION SYSTEM* subsection).

12. Remove electric starter.

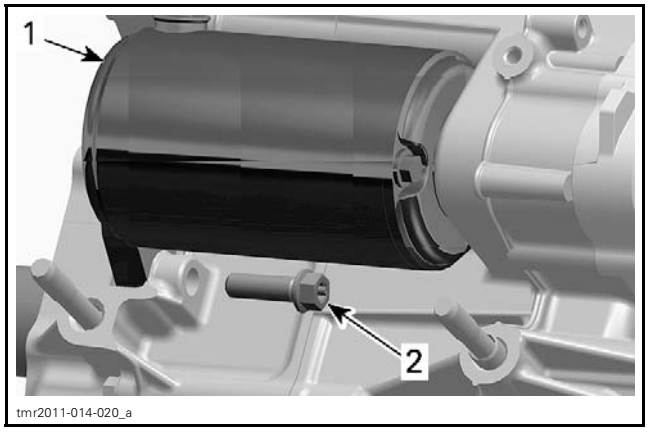

1. Electric starter
2. Screw

NOTE: Before splitting the crankcase, measure crankshaft axial play. Refer to *CRANKSHAFT*.

13. Remove retaining screws of crankcase.

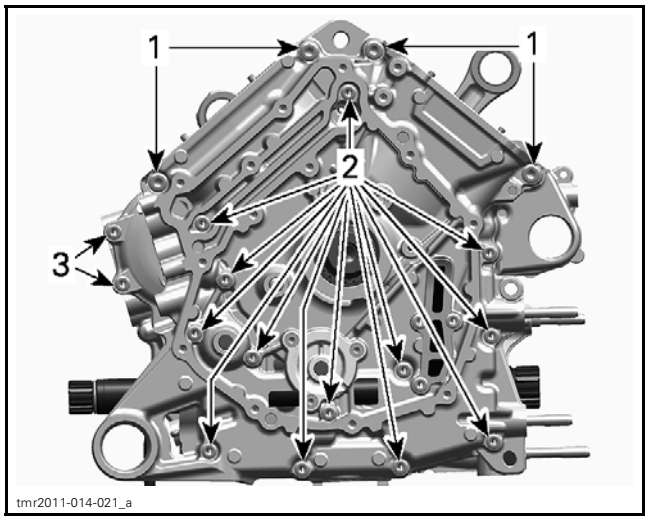

1. 4 screws M8 x 65
2. 13 screws M6 x 75
3. 2 screws M6 x 25

14. Carefully split crankcase halves.

NOTE: During disassembly, do not damage the sealing surfaces of the crankcase halves.

15. Pull crankshaft out of crankcase.
16. Remove the water pump intermediate shaft.

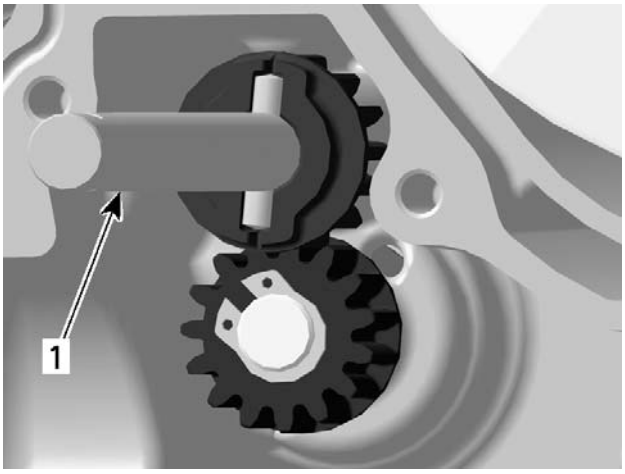

1. *Water pump intermediate shaft*

17. Remove engine oil strainer.

NOTE: Oil strainer removal for inspection and cleaning is recommended. Refer to *LUBRICATION SYSTEM* subsection.

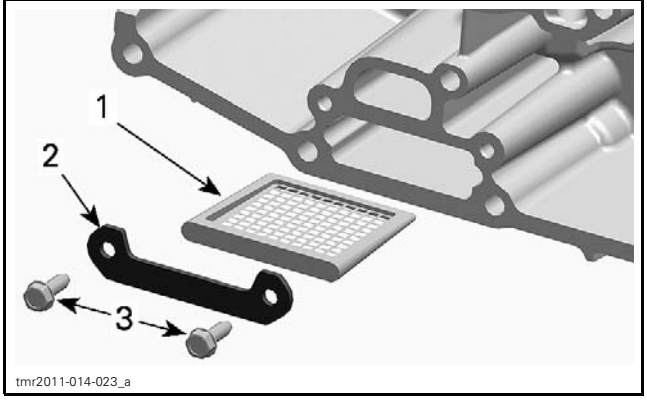

1. *Engine oil strainer*
2. *Retaining plate*
3. *Screws*

Cleaning the Crankcase

Clean crankcase using a part cleaner.

Dry crankcase using compressed air.

Blow the oil supply lines.

Inspecting the Crankcase

Check crankcase halves for cracks or other damage. Replace if damaged.

Check MAG and PTO plain bearings in for scoring or other damages.

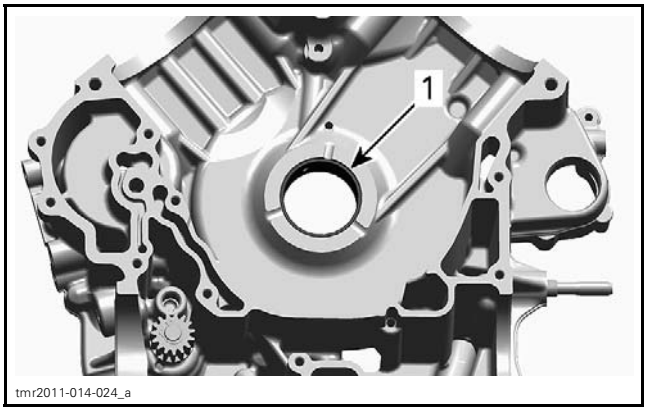

1. *Plain bearing*

NOTE: Measure plain bearing inside diameter and compare to PTO/MAG main journal diameters of crankshaft (refer to *CRANKSHAFT*). Replace if the measurements are out of specification.

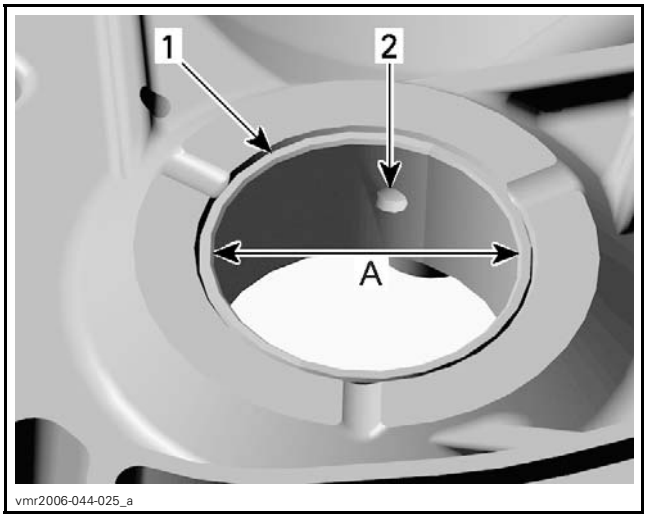

1. *Plain bearing*
2. *Oil bore*

A. *Measure plain bearing inside diameter*

MAIN BEARING INSIDE DIAMETER (PTO/MAG)	
Service limit	42.100 mm (1.6575 in)

Plain Bearing Replacement (Main)

Removing the Plain Bearing

NOTICE **Always support crankcase halves properly when plain bearings are removed. Damages to crankcase halves may occur if this procedure is not performed correctly.**

NOTE: Always use a press for removal of plain bearings.

Carefully press the plain bearings out, from the crankcase half inside towards the outside.

REQUIRED TOOLS	
CRANKCASE SUPPORT MAG/PTO (P/N 529 036 031)	
PLAIN BEARING REMOVER/INSTALLER (P/N 529 035 917)	

During disassembly, make sure not to damage the sealing surfaces of the crankcase halves.

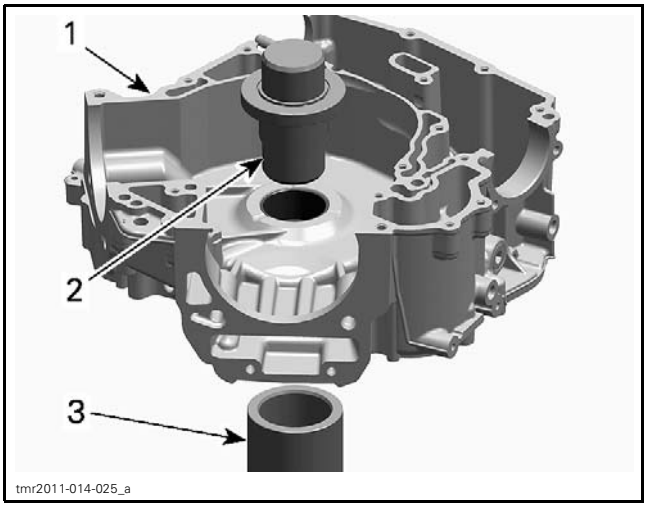

PUSH PLAIN BEARINGS OUTSIDE
1. *Crankcase half*
2. *Plain bearing remover/installer*
3. *Crankcase support sleeve (P/N 529 036 031)*

Installing the Plain Bearing (Main)

NOTICE **Unless otherwise instructed, never use hammer to install plain bearings. Use press only.**

NOTE: Place the proper crankcase support sleeve under crankcase halves before installing the plain bearings.

Carefully press in the plain bearings in the same direction as during disassembly, from the crankcase inside towards the outside.

During reassembly, make sure not to damage the sealing surfaces of the crankcase halves.

Install plain bearings in a cold crankcase.

NOTICE **Do not lubricate plain bearings and/or crankcase for installation.**

REQUIRED TOOL	
PLAIN BEARING REMOVER/INSTALLER (P/N 529 035 917)	

Use an O-ring (Ø 42 x 1 mm to 1.5 mm (.04 in to .06 in) thickness) to hold plain bearings in place during installation. The O-ring will disappear in the groove of the plain bearing remover/installer.

Mark position of plain bearing oil bore on plain bearing remover/installer.

Mark position of oil bore on crankcase half.

Align mark on plain bearing remover/installer with mark on crankcase half.

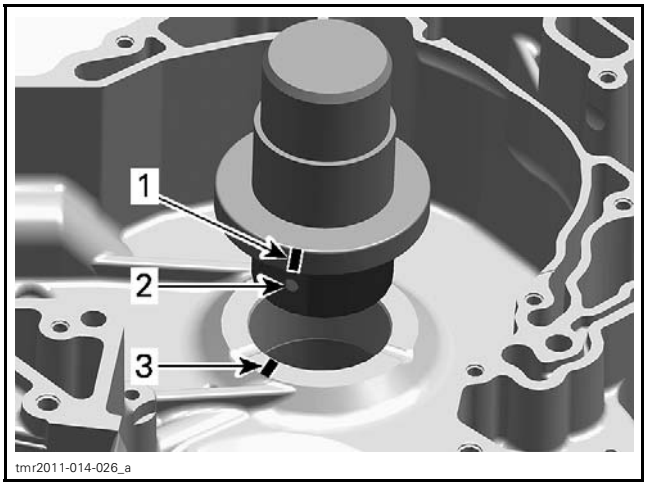

1. *Oil bore position marked on plain bearing remover/installer*
2. *Plain bearing oil bore*
3. *Oil bore position marked on crankcase*

NOTICE **Misalignment of the plain bearing and crankcase oil bores will prevent proper oil supply to plain bearings.**

Carefully press in the plain bearings from inside the crankcase towards the outside.

NOTICE **The partition of the plain bearings in crankcase half MAG side must be positioned near to oil bore in clockwise direction.**

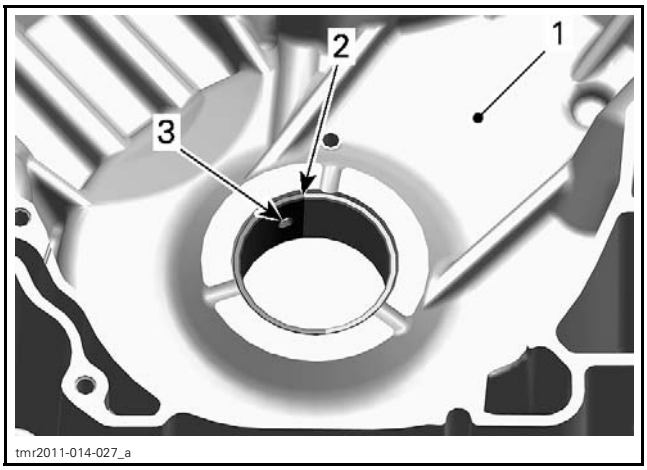

1. *Crankcase half MAG (inside surface)*
2. *Partition*
3. *Oil bore*

NOTICE The partition of the plain bearings in crankcase half PTO side must be positioned near to oil bore in counterclockwise direction.

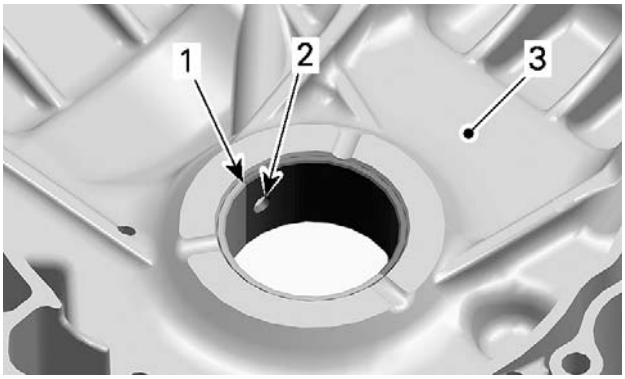

tmr2011-014-028_a

1. *Partition*
2. *Oil bore*
3. *Crankcase half PTO (inside)*

Assembling the Crankcase

The assembly of crankcase is essentially the reverse of removal procedure. However, pay attention to the following details.

Install a NEW crankcase gasket.

Oil the plain bearings before mounting the crankshaft.

NOTICE Correctly reinstall crankshaft (refer to *CRANKSHAFT*).

Properly reinstall engine oil strainer and screws. Refer to *LUBRICATION SYSTEM* subsection.

Reinstall water pump intermediate shaft and gears. Refer to *WATER PUMP GEARS* in the *ENGINE COOLING SYSTEM* subsection.

Tightening sequence for screws on crankcase is as per following illustration.

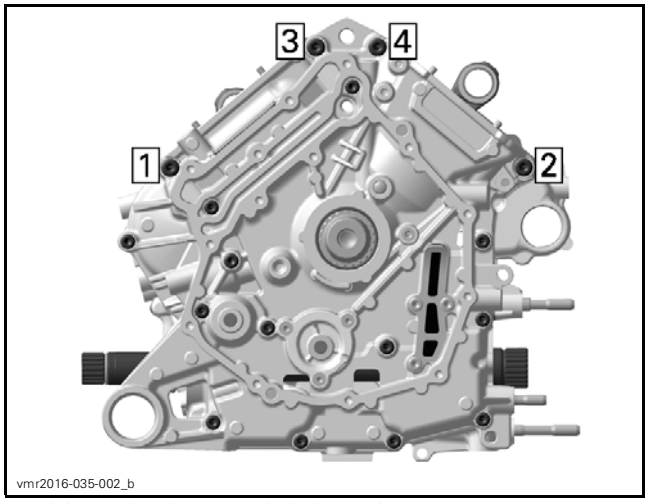

vmr2016-035-002_b

M8 SCREWS TIGHTENING SEQUENCE

TIGHTENING TORQUE	
M8 crankcase screws	25 N•m ± 3 N•m (18 lbf•ft ± 2 lbf•ft)

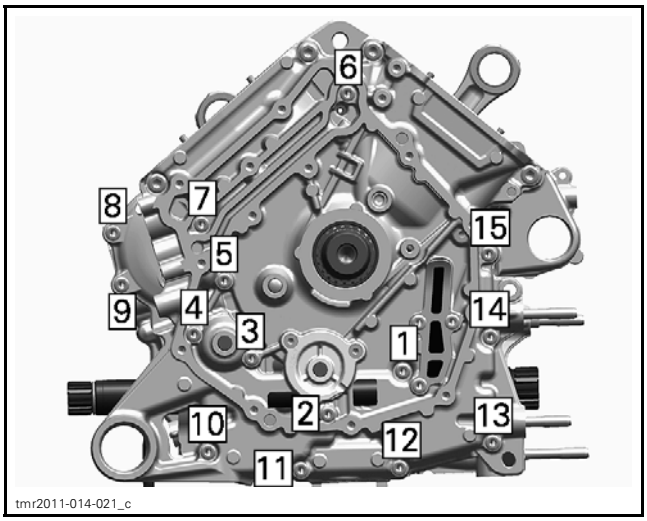

tmr2011-014-021_c

M6 SCREWS TIGHTENING SEQUENCE

TIGHTENING TORQUE	
M6 crankcase screws	10 N•m ± 1 N•m (89 lbf•**in** ± 9 lbf•**in**)

CRANKSHAFT

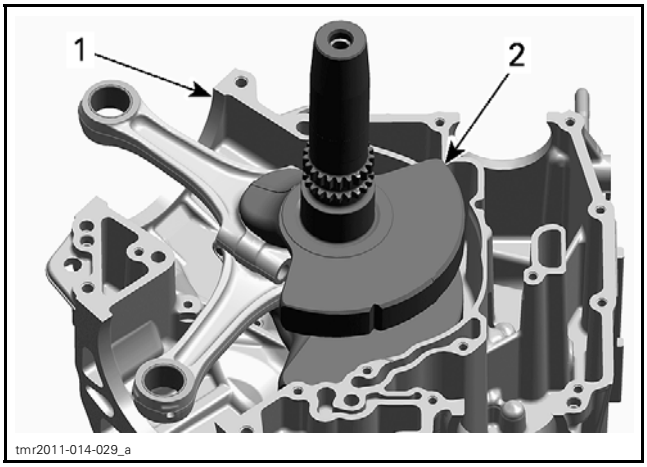

tmr2011-014-029_a

1. *Crankcase MAG*
2. *Crankshaft*

Crankshaft Locking Procedure

NOTE: When crankshaft is locked, the rear piston no. 2 is at TDC. Crankshaft can not be locked at piston no.1 TDC.

NOTICE To see if the rear piston no. 2 is at TDC ignition refer to *CAMSHAFT TIMING GEAR* in the *TIMING CHAIN* subsection.

Remove:

1. Spark plug cables and spark plugs of both cylinders.
2. Plug screw and O-ring of magneto cover.

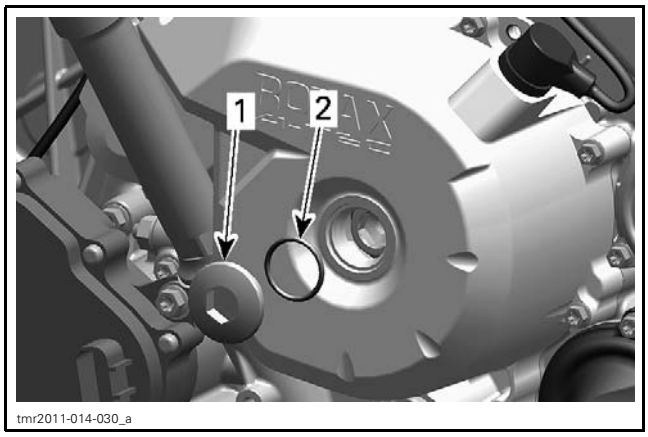

1. Plug screw
2. O-ring

3. Crankshaft position sensor.

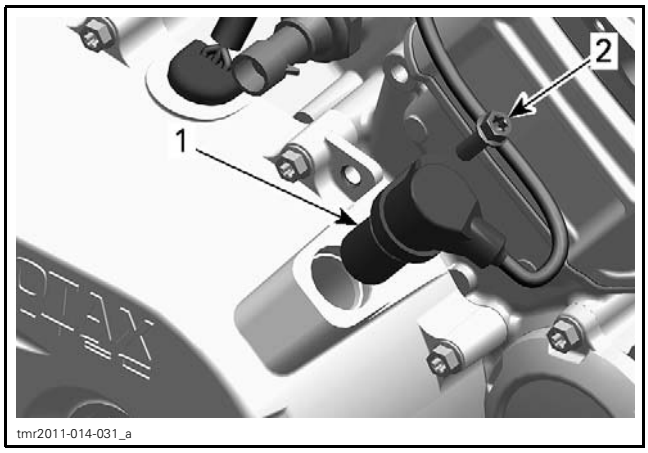

1. Crankshaft position sensor
2. Screw

4. Plug screw and discard sealing ring.

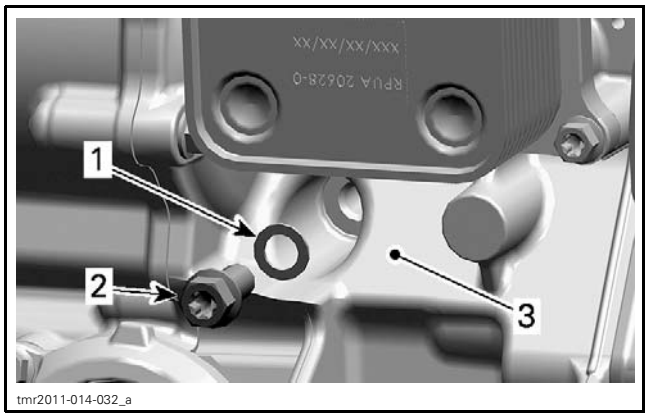

1. Sealing ring
2. Plug screw
3. Crankcase PTO side, front side

Use a 14 mm Allen key to turn crankshaft until piston no. 2 is at TDC.

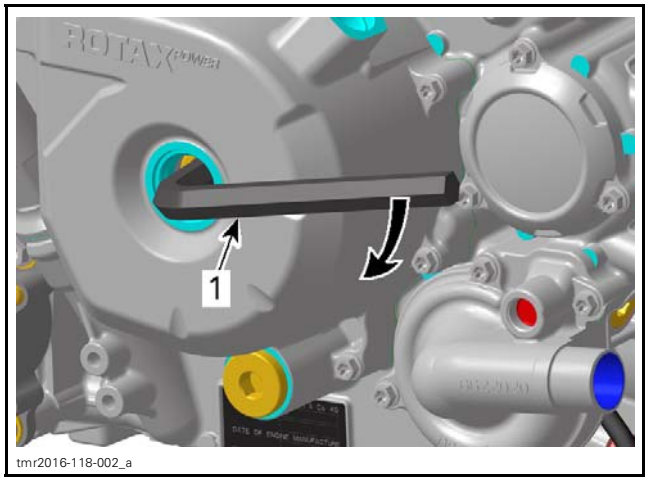

1. Allen key 14 mm

When rear piston is at TDC marks on magneto flywheel “2” and on the magneto cover are aligned.

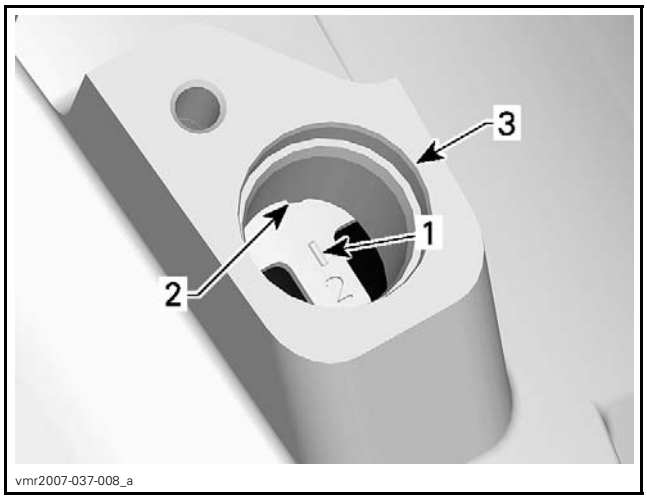

1. Mark “2” on magneto flywheel
2. Notch on magneto cover
3. Crankshaft position sensor location

Use a screwdriver to check if the groove in the crankshaft is aligned with the hole.

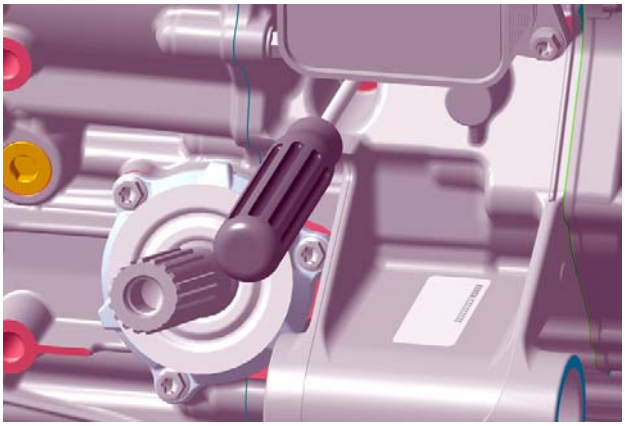

tmr2016-119-013

Lock crankshaft.

REQUIRED TOOL	
CRANKSHAFT LOCKING BOLT (P/N 529 035 617)	

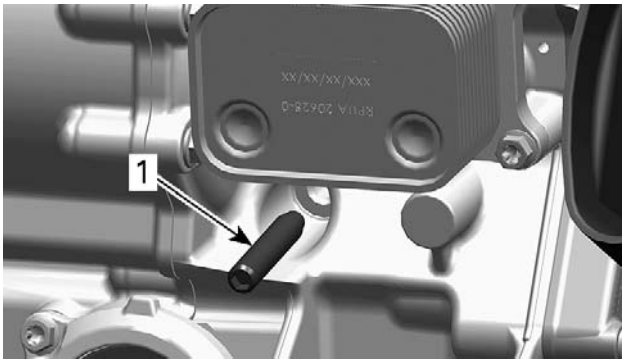

tmr2011-014-035_a

1. Crankshaft locking bolt

Gradually insert the tool in the crankshaft groove. Make sure that the tool tip enters the groove and does not jam on the crankshaft balancer surface.

Removing the Crankshaft

Refer to *CRANKCASE*.

Inspecting the Crankshaft

Check each bearing journal of crankshaft for scoring, scuffing, cracks or other signs of wear.

Replace crankshaft if the gears are worn or otherwise damaged.

NOTICE **Components out of specifications always have to be replaced. If this is not observed, severe damage may be caused to the engine.**

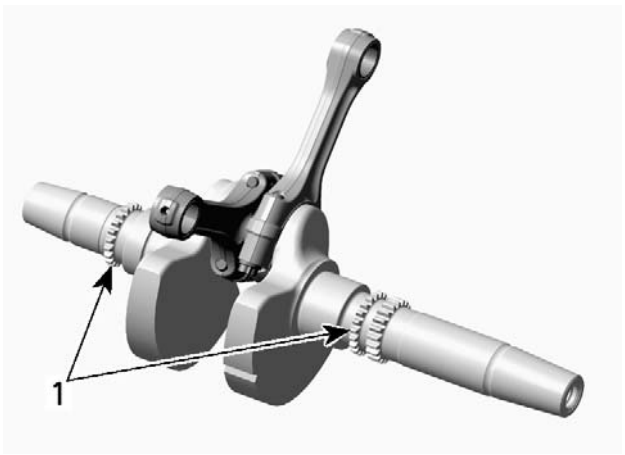

vmr2006-044-036_a

1. Crankshaft timing gears

Crankshaft Axial Play

NOTE: Axial play needs to be measured before splitting the crankcase.

Measure play on PTO end, using a dial indicator.

CRANKSHAFT AXIAL PLAY	
New	0.200 mm to 0.500 mm (.008 in to .02 in)
Service limit	0.600 mm (.024 in)

If play is out of specification, replace crankcase and/or crankshaft.

Connecting Rod Big End Axial Play

Using a feeler gauge, measure distance between butting face of connecting rods and crankshaft counterweight. If the distance exceeds specified tolerance, replace the crankshaft.

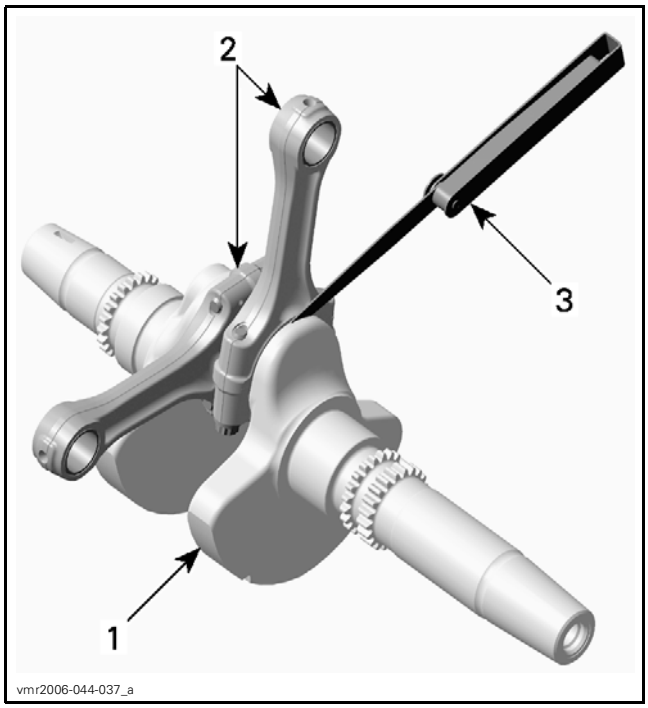

1. *Crankshaft*
2. *Connecting rods*
3. *Feeler gauge*

CONNECTING ROD BIG END AXIAL PLAY		
800R/HD8	New	0.200 mm to 0.500 mm (.008 in to .02 in)
	Service limit	0.600 mm (.024 in)
1000/HD10	New	0.250 mm to 0.550 mm (.01 in to .022 in)
	Service limit	0.600 mm (.024 in)

Connecting Rod/Piston Pin Clearance

Refer to *CYLINDER HEAD* subsection.

Connecting Rod Big End Radial Play

NOTE: Prior to remove connecting rod from the crankshaft, mark big end halves together to ensure a correct reinstallation (cracked surface fits in only one position).

Remove connecting rods from crankshaft.

NOTICE **Connecting rod screws are not reusable. Always discard screws and replace by NEW ones. It is recommended to install new plain bearings when reinstalling connecting rods.**

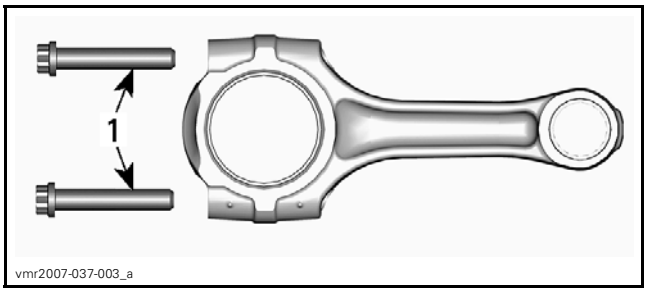

1. *Connecting rod screws*

Measure crankpin. Compare to inside diameter of connecting rod big end.

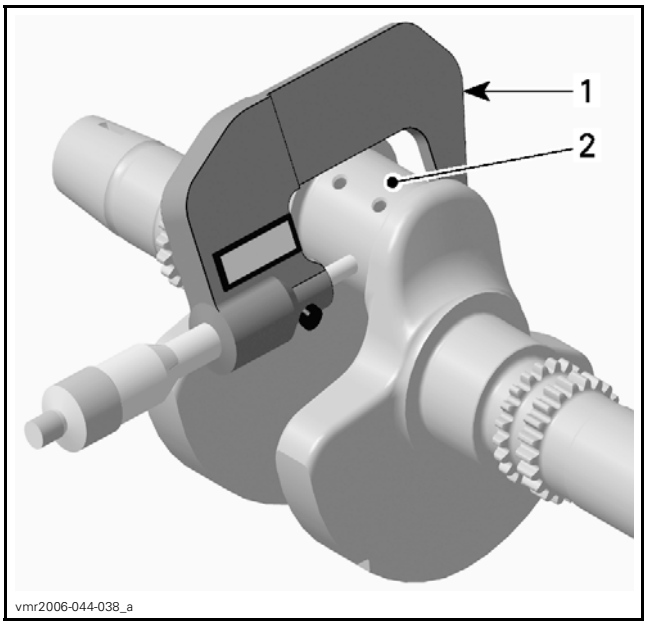

1. *Micrometer*
2. *Crankpin area for plain bearing*

CRANK PIN DIAMETER		
800R/HD8	New	40.001 mm to 40.025 mm (1.5748 in to 1.5758 in)
	Service limit	39.990 mm (1.5744 in)
1000/HD10	New	41.986 mm to 42.010 mm (1.653 in to 1.6539 in)
	Service limit	41.967 mm (1.6522 in)

If the crank pin diameter is out of specification, replace crankshaft.

To measure the connecting rod big end diameter, use the OLD connecting rod screws.

Install the OLD plain bearings as they were mounted initially.

Carry out the tightening procedure described in *ASSEMBLING THE CRANKSHAFT ASSEMBLY* in this subsection.

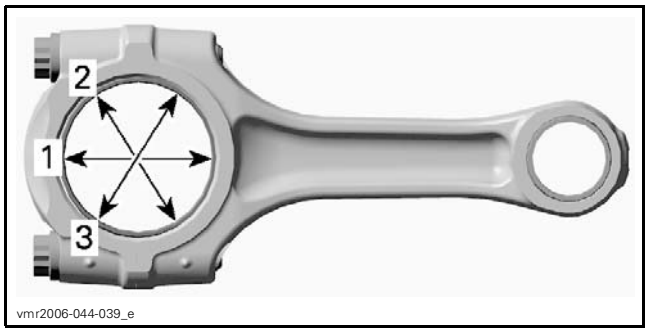

MEASURE AT 3 DIFFERENT POSITIONS

CONNECTING ROD BIG END DIAMETER		
800R/HD8	Service limit	40.100 mm (1.5787 in)
1000/HD10	Service limit	42.100 mm (1.6575 in)

If connecting rod big end diameter is out of specification, replace plain bearings and recheck.

CONNECTING ROD BIG END RADIAL CLEARANCE	
Service limit	0.09 mm (.0035 in)

If connecting rod big end radial clearance is out of specification, replace plain bearings and recheck.

Crankshaft Radial Play MAG/PTO Side

Measure crankshaft on MAG/PTO side. Compare to inside diameter of MAG/PTO plain bearing (refer to *CRANKCASE*).

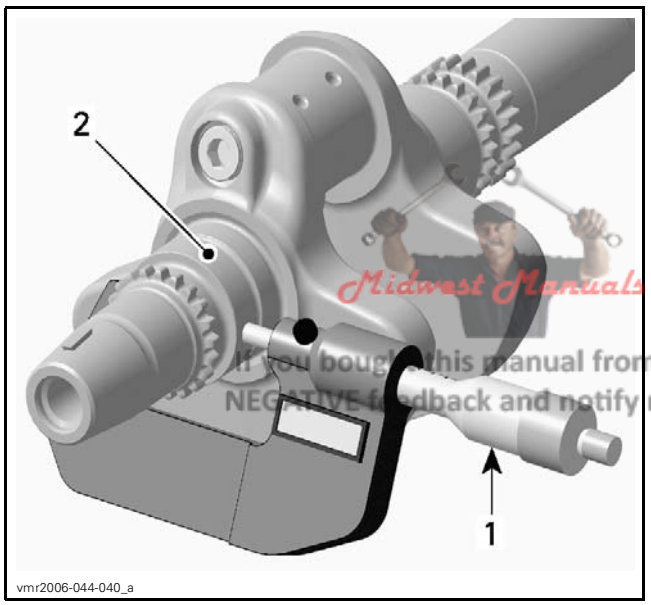

1. *Micrometer*
2. *Crankshaft area for MAG plain bearing*

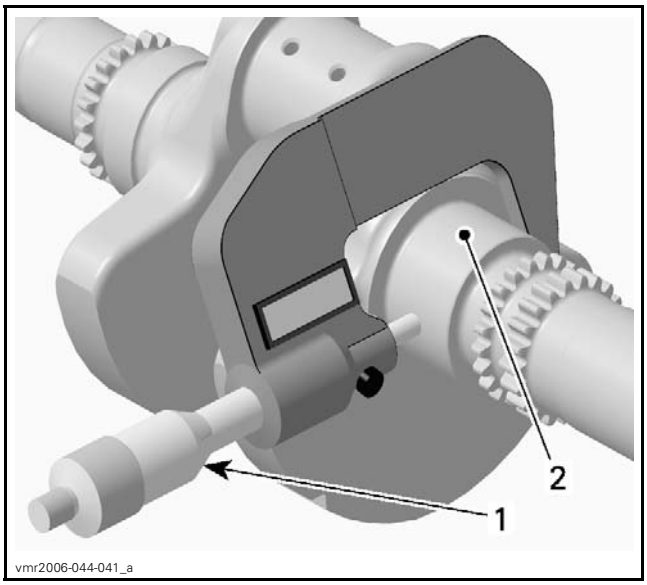

1. *Micrometer*
2. *Crankshaft area for PTO plain bearing*

CRANKSHAFT MAIN BEARING JOURNAL DIAMETER (MAG/PTO SIDE)	
New	42.016 mm to 42.040 mm (1.6542 in to 1.6551 in)
Service limit	42.000 mm (1.6535 in)

CRANKSHAFT RADIAL PLAY (MAG/PTO SIDE)	
SERVICE LIMIT	0.07 mm (.0028 in)

Crankshaft Radial Play (PTO Cover Bearing)

Measure crankshaft journal diameter (PTO cover bearing). Compare to plain bearing inside diameter (PTO cover). Refer to *PTO COVER* in this subsection.

Green Manuals
Paperless Manuals
For a Better Tomorrow
www.green-manuals.com
Midwest Manuals
If you bought this manual from any other seller please leave them
NEGATIVE feedback and notify me at bestshopmanuals@gmail.com

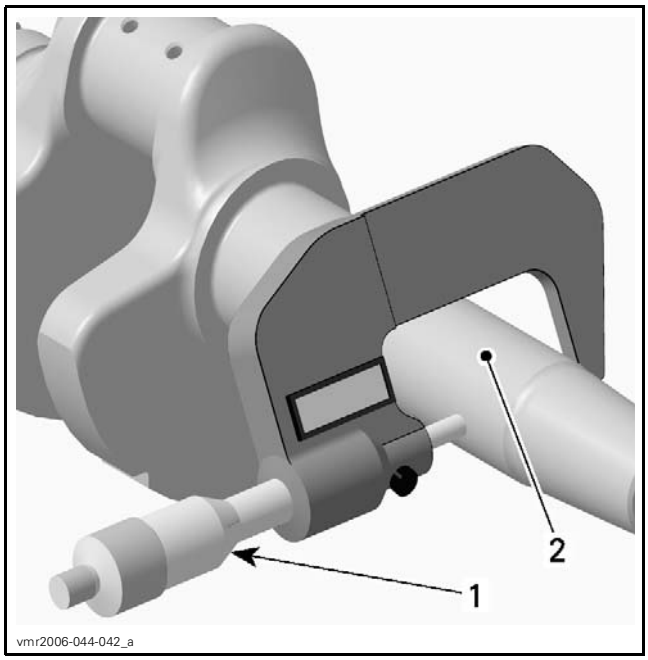

1. *Micrometer*
2. *Crankshaft journal (PTO support bearing)*

CRANKSHAFT JOURNAL DIAMETER (PTO COVER BEARING)	
New	34.004 mm to 34.020 mm (1.3387 in to 1.3394 in)
Service limit	33.998 mm (1.3385 in)

CRANKSHAFT RADIAL PLAY (PTO COVER BEARING)	
Service limit	0.10 mm (.0039 in)

If crankshaft journal diameter is out of specification, replace crankshaft.

If crankshaft radial play (PTO cover bearing) out of specification, replace plain bearings and recheck.

Assembling the Crankshaft Assembly

The assembly is the reverse of the disassembly procedure. However, pay attention to following details.

Clean the split surface on both sides (cracked area) carefully with compressed air.

Put plain bearings correctly in place.

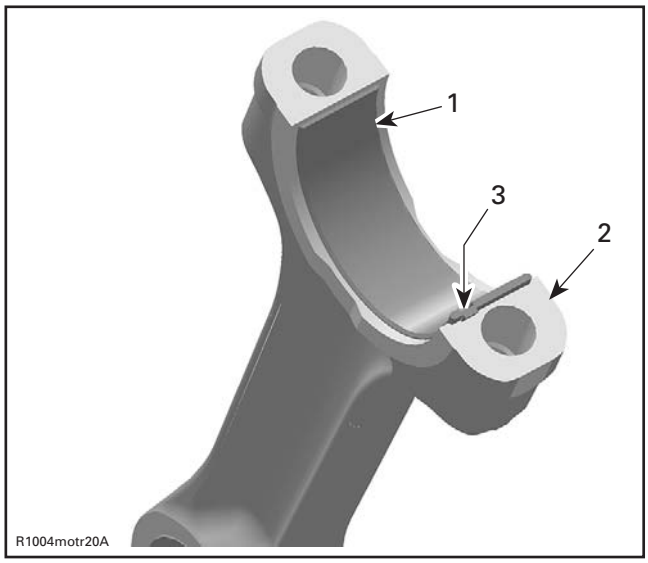

1. *Half plain bearing of connecting rod big end*
2. *Split surface of the connecting rod*
3. *Nose of plain bearing in line with connecting rod groove*

Oil the plain bearing surface of the connecting rod and crank pin before installation.

NOTICE **Lower cap and rod must match together since there is a cracked surface.**

Oil **NEW** connecting rod screws.

NOTICE **Always use NEW connecting rod screws at final assembly. They are not reusable.**

Thread screws in the connecting rods, then tighten as per following procedure.

NOTICE **Strictly adhere following instructions:**

- Do not apply any thread locker.
- The running direction of the big end bearings and of the piston pins must not change.
- Always perform each step on both connecting rod screws before going to the next step.
- Failure to strictly follow procedure may cause connecting rod screws to loosen and lead to severe engine damage.

REQUIRED TOOLS
Torque wrench
Angle torque wrench

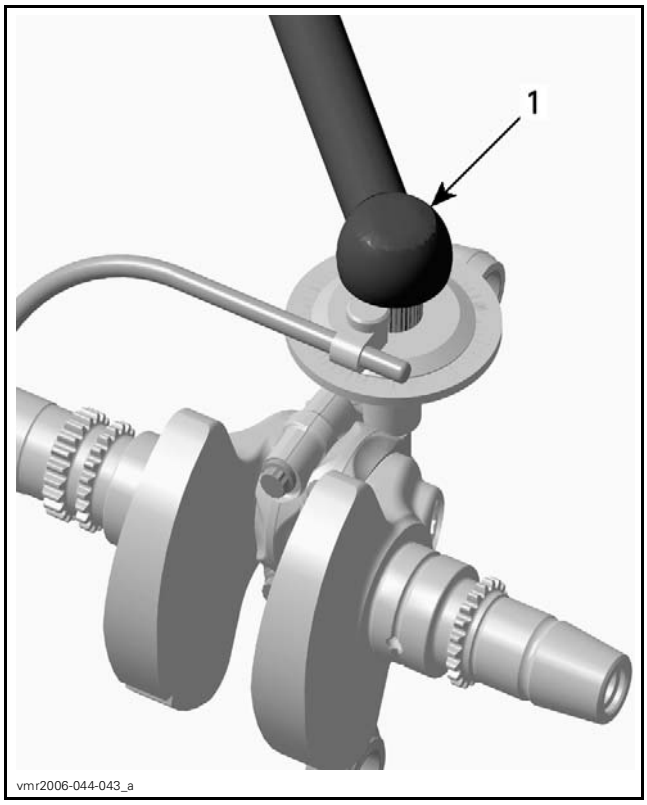

1. Angle torque wrench

800R/HD8 Engines:

NEW connecting rods can be installed either way.

CONNECTING RODS SCREWS TIGHTENING SEQUENCE	
1.	Tighten to 1/2 of specified torque
2.	Tighten to 20 N•m ± 2 N•m (15 lbf•ft ± 1 lbf•ft)
3.	Torque by an additional 60 ± 5° turn using an angle torque wrench

1000/HD10 Engines:

NOTICE **Connecting rods are asymmetric. There must be no gap between the small ends when they face each other.**

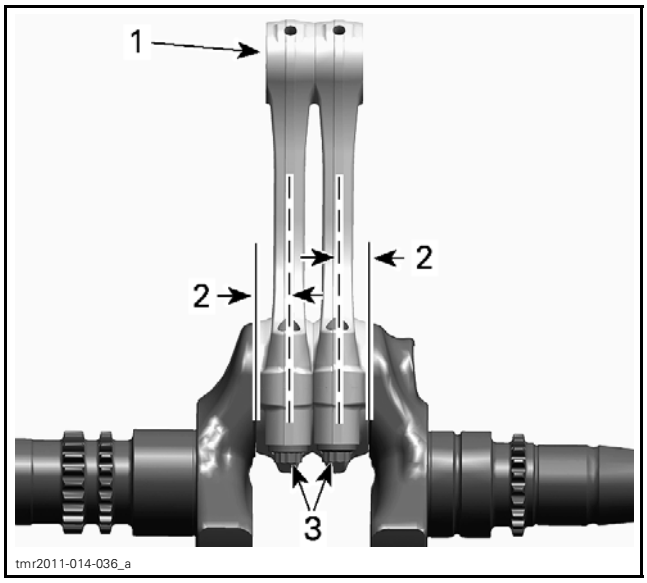

1. Connecting rod small ends
2. Connecting rod offset
3. Connecting rod screws

CONNECTING RODS SCREWS TIGHTENING SEQUENCE	
1.	Tighten to 1/2 of specified torque
2.	Tighten to 30 N•m ± 2 N•m (22 lbf•ft ± 1 lbf•ft)
3.	Torque by an additional 90 ± 5° turn using an angle torque wrench

Installing the Crankshaft

The installation is the reverse of the removal procedure. However, pay attention to the following.

Do not mix up the connecting rods of cylinders 1 and 2 during installation.

NOTICE **Observe the correct installation position when fitting the crankshaft with the connecting rods. The connecting rod MAG side has to face cylinder no. 1.**

Midwest Manuals
Green Manuals
Paperless Manuals
For a Better Tomorrow
www.green-manuals.com
If you bought this manual from any other seller please leave them
NEGATIVE feedback and notify me at bestshopmanuals@gmail.com

1. *Crankcase half MAG side*
2. *Connecting rod cylinder 1*
3. *Connecting rod cylinder 2*

CYLINDER BLOCK

SERVICE TOOLS

Description	Part Number	Page
COVER WASHER INSTALLER	529 036 271	8
CRANKCASE SUPPORT MAG/PTO	529 036 031	16
CRANKSHAFT LOCKING BOLT	529 035 617	19
DRIVE SHAFT OIL SEAL INSTALLER	529 036 028	8–9
DRIVE SHAFT OIL SEAL PROTECTOR	529 036 029	7
PLAIN BEARING REMOVER/INSTALLER	529 035 917	16
PLAIN BEARING REMOVER/INSTALLER	529 036 032	11
PTO COVER OIL SEAL INSTALLER	529 036 033	9

SERVICE PRODUCTS

Description	Part Number	Page
LOCTITE 243 (BLUE)	293 800 060	7
LOCTITE 5910	293 800 081	6
LOCTITE CHISEL (GASKET REMOVER)	413 708 500	6

ENGINE DRIVE SHAFT

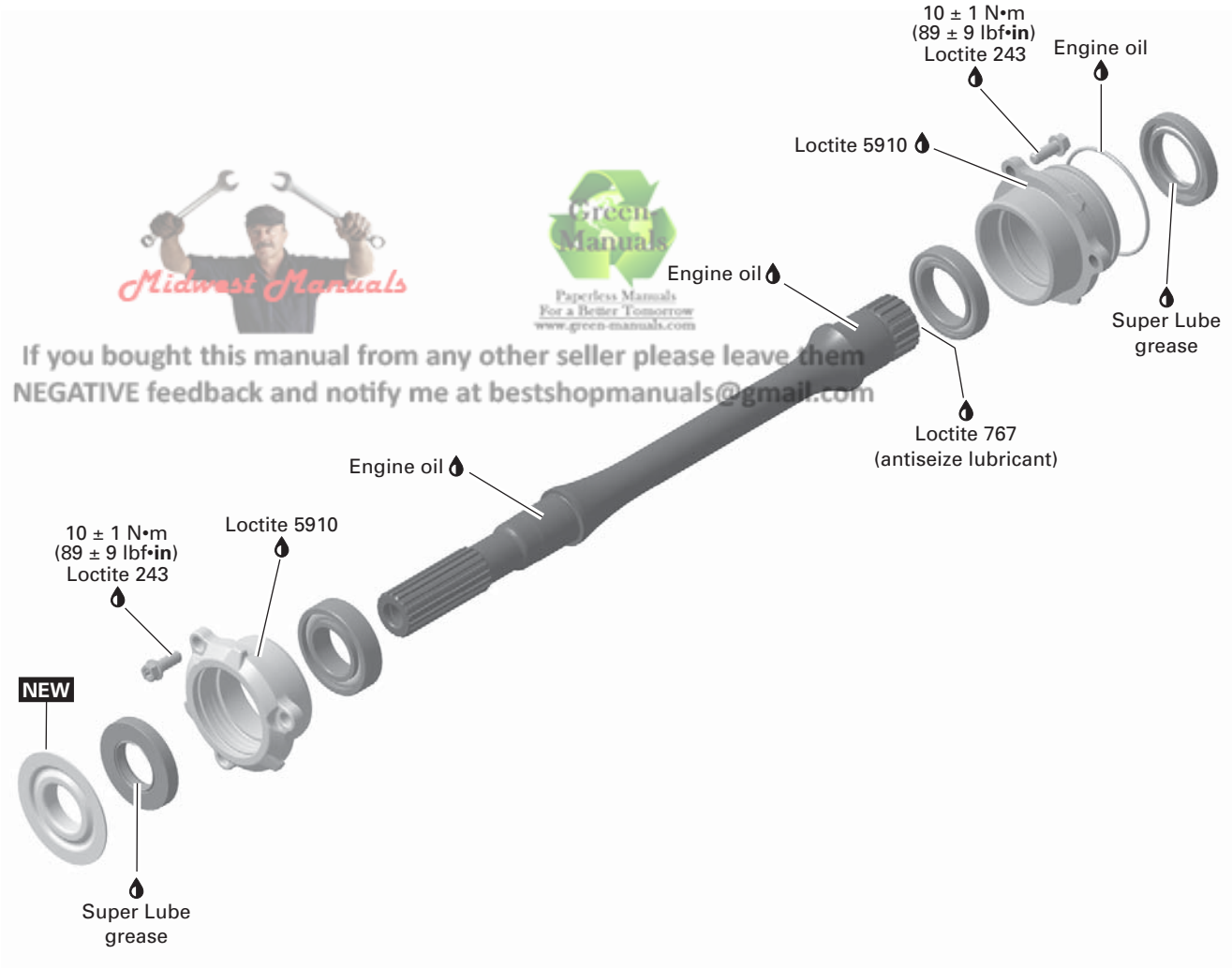

Midwest Manuals
Green Manuals
Paperless Manuals
For a Better Tomorrow
www.green-manuals.com
If you bought this manual from any other seller please leave them
NEGATIVE feedback and notify me at bestshopmanuals@gmail.com

NEW = Component must be replaced when removed.

tmr2016-119-001_a

CRANKCASE AND PTO COVER

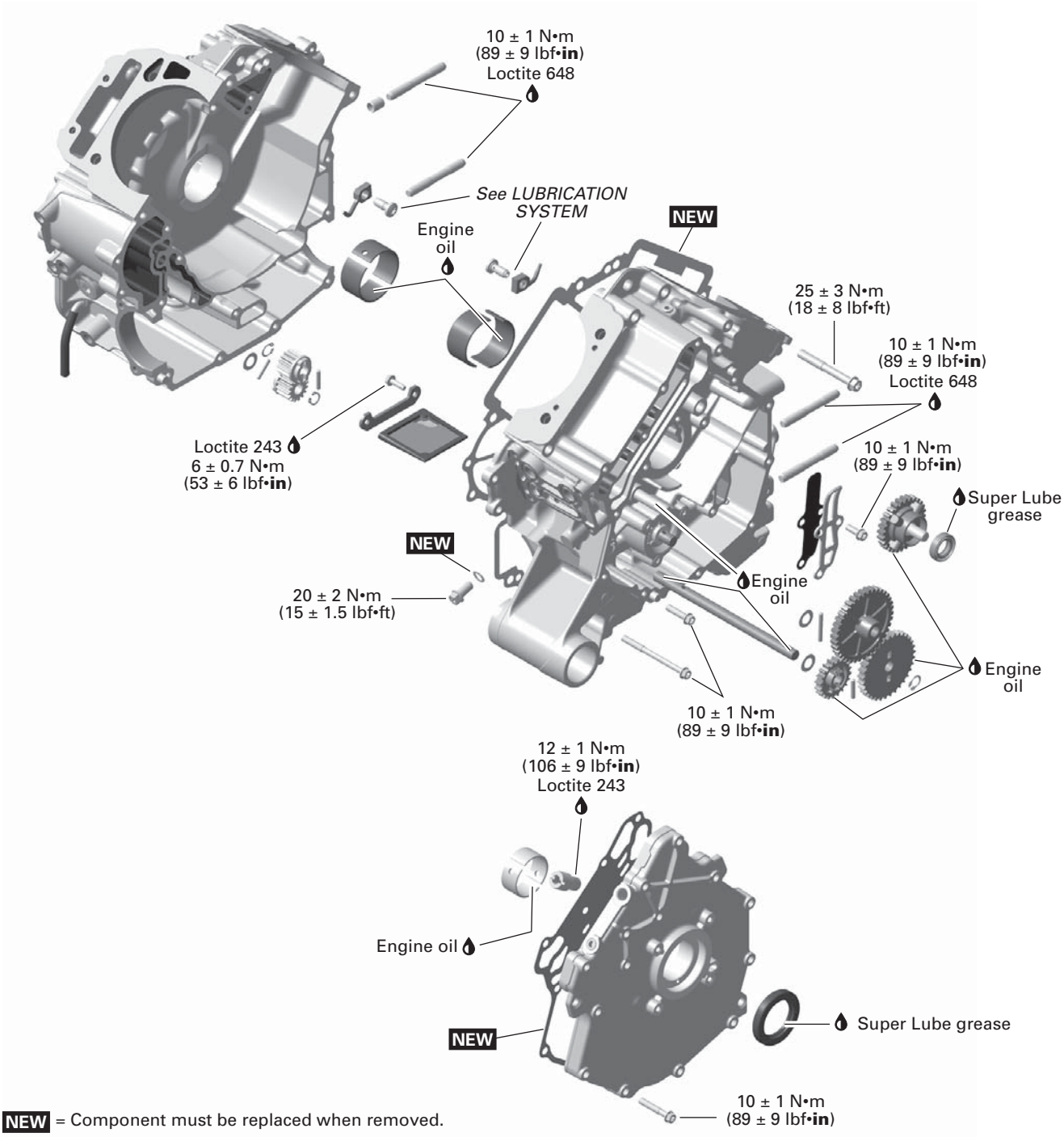

CRANKSHAFT

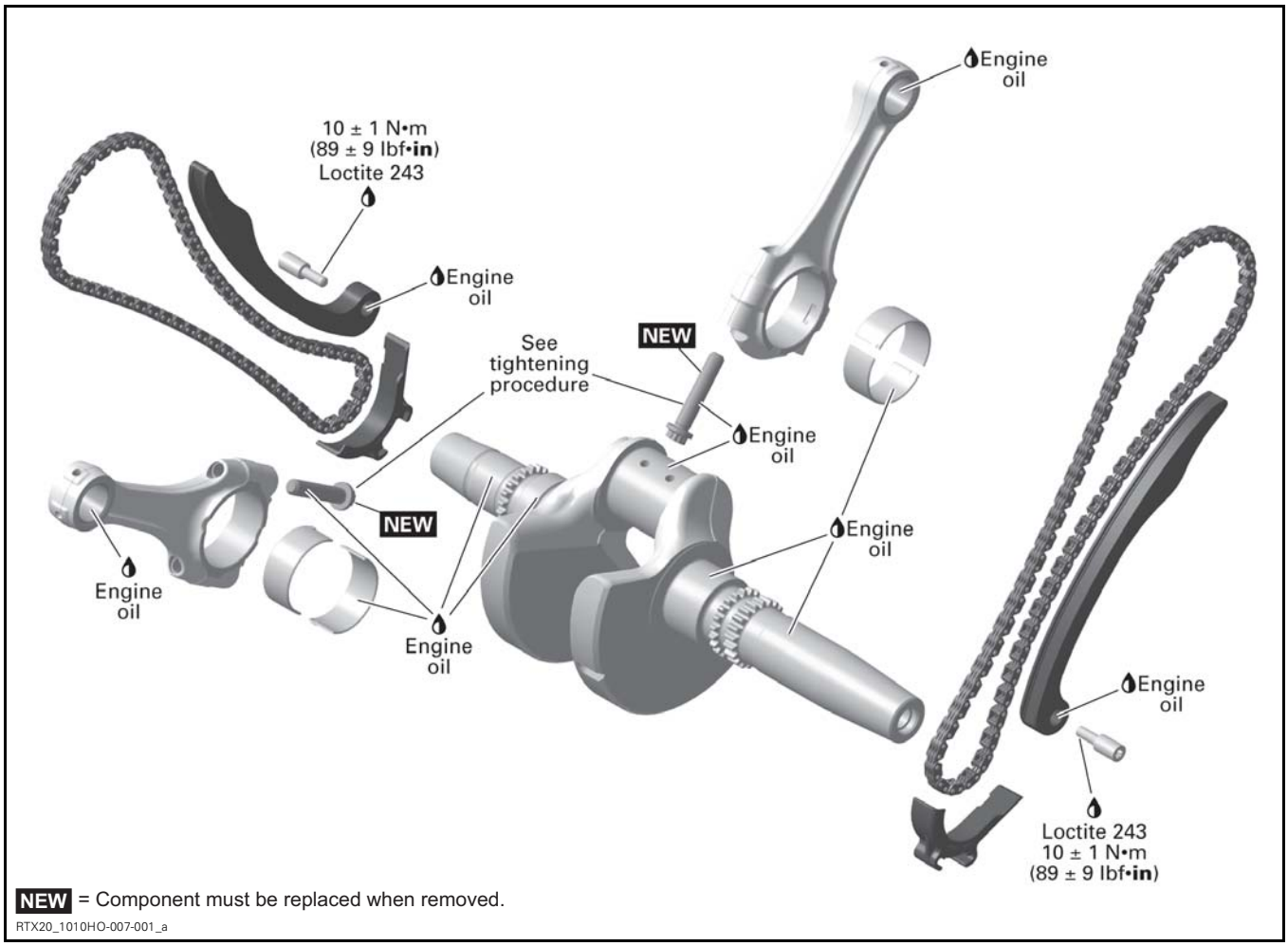

RTX20_1010HO-007-001_a

GENERAL

IMPORTANT: Note position of parts on disassembly. This may help to find the root cause of a problem. A component that is not replaced should be reinstalled in the same position as originally mounted.

PROCEDURES

ENGINE DRIVE SHAFT

The engine drive shaft transmits the power from the gearbox to the front differential and is located inside the crankcase.

Removing the Engine Drive Shaft

Remove the engine. Refer to *ENGINE REMOVAL AND INSTALLATION* subsection.

Removing the Rear Bearing Cover

Detach gearbox from engine, refer to *GEARBOX AND 4X4 COUPLING UNIT* subsection.

Remove the bearing cover and its O-ring.

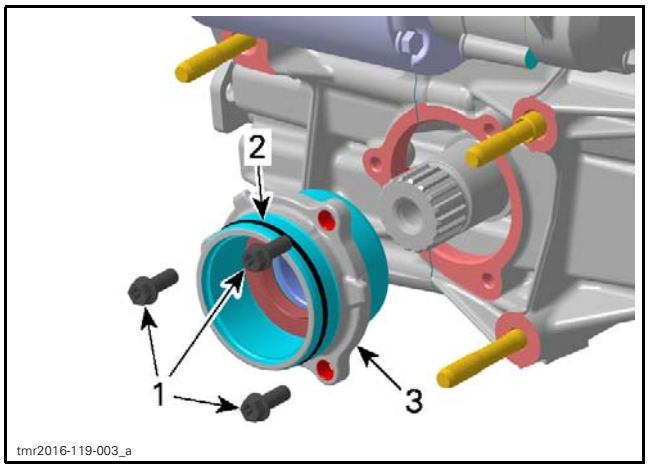

1. *Bearing cover screws*
2. *O-ring*
3. *Bearing cover*

Removing the Front Bearing Cover

NOTE: The front bearing cover can be replaced with the engine installed.

Lift and support vehicle.

Remove the front drive shaft. Refer to *FRONT DRIVE* subsection.

Remove cover washer from drive shaft using 2 screwdrivers.

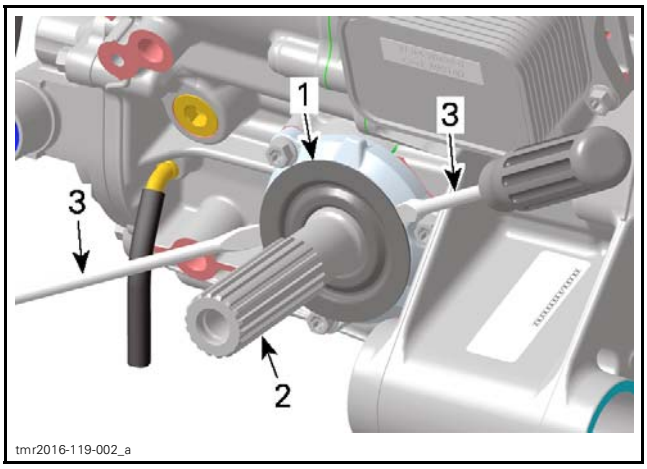

1. *Cover washer*
2. *Drive shaft*
3. *Screwdrivers*

Remove the bearing cover.

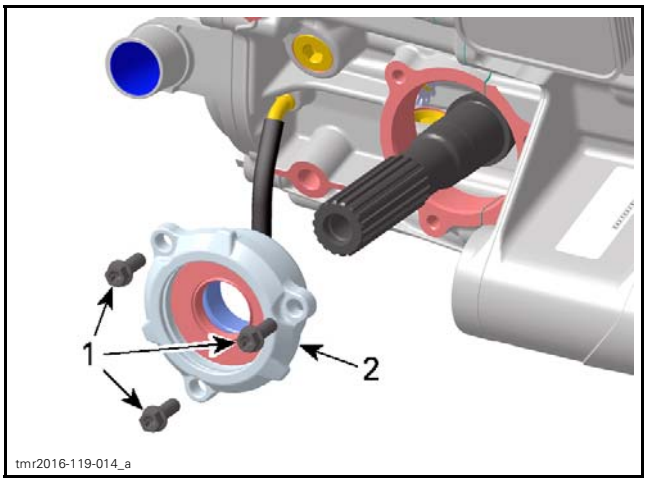

1. *Bearing cover screws*
2. *Bearing cover*

Removing the Engine Drive Shaft

Split crankcase, refer to *CRANKCASE* in this subsection.

Remove engine drive shaft from the crankcase.

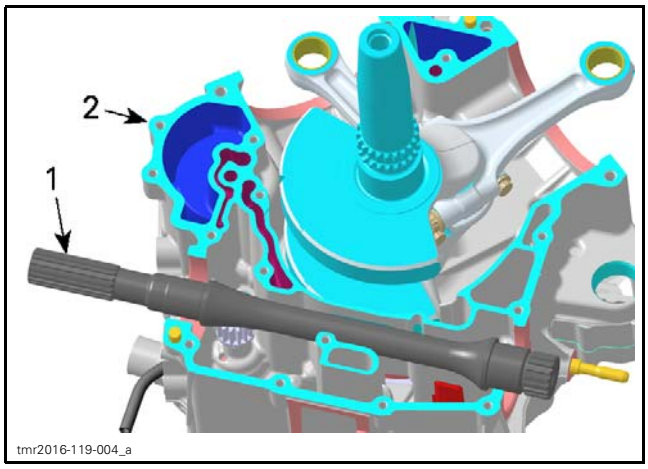

1. *Engine drive shaft*
2. *Crankcase MAG side*

Inspecting the Engine Drive Shaft

Replace oil seals and/or O-ring (bearing cover gearbox side) if they are brittle, hard or damaged.

Check drive shaft bearings for contamination and/or metal shavings. Check if bearings turn freely and smoothly. Replace if necessary.

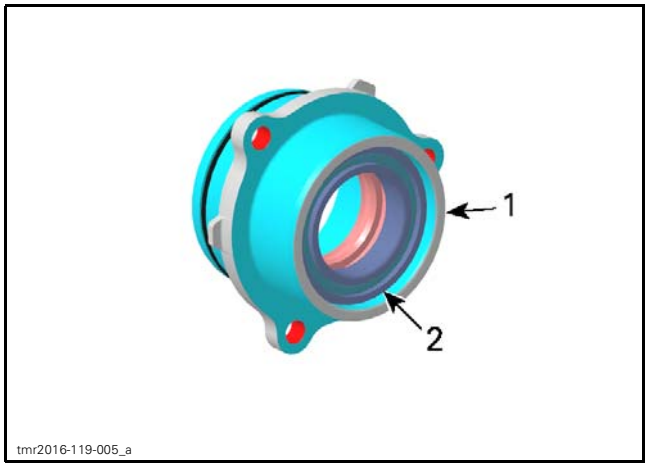

1. *Rear bearing cover*
2. *Drive shaft bearing*

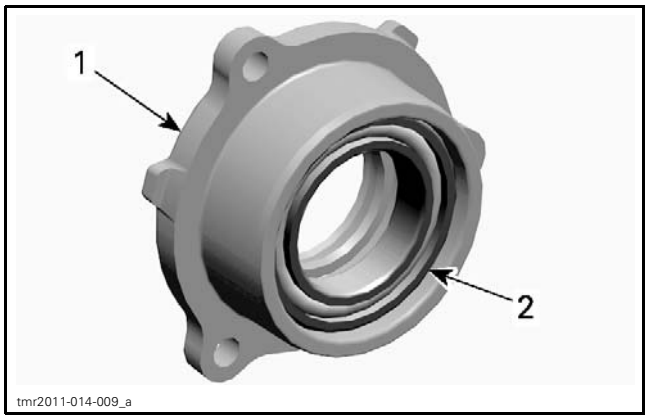

1. *Front bearing cover*
2. *Drive shaft bearing*

Check drive shaft for cracks, bend, pitting or other visible damages.

Check drive shaft splines for wear or damages.

Check oil seal running surface of the drive shaft for scratches. Replace if necessary.

Installing the Engine Drive Shaft

The installation is the reverse of removal procedure. Pay attention to the following details.

Clean all metal components in solvent.

Crankcase surfaces and bearing covers are best cleaned using a combination of LOCTITE CHISEL (GASKET REMOVER) (P/N 413 708 500) and a brass brush. Brush a first pass in one direction then make the final brushing perpendicularly (90°) to the first pass.

NOTICE **Do not wipe with rags. Use a new clean hand towel only.**

Use a suitable installer for installing bearings.

Apply sealant on mating surfaces.

SERVICE PRODUCT
LOCTITE 5910 (P/N 293 800 081)

IMPORTANT: When beginning the application of the bearing cover sealant, the assembly and the first torquing should be done within 10 minutes. It is suggested to have all you need on hand to save time.

Use a plexiglass plate and apply some sealant on it. Use a soft rubber roller 50 mm - 75 mm (2 in - 3 in), available in arts products suppliers for printing, and roll the sealant to get a thin uniform coat on the plate (spread as necessary). When ready, apply the sealant on bearing cover surfaces.

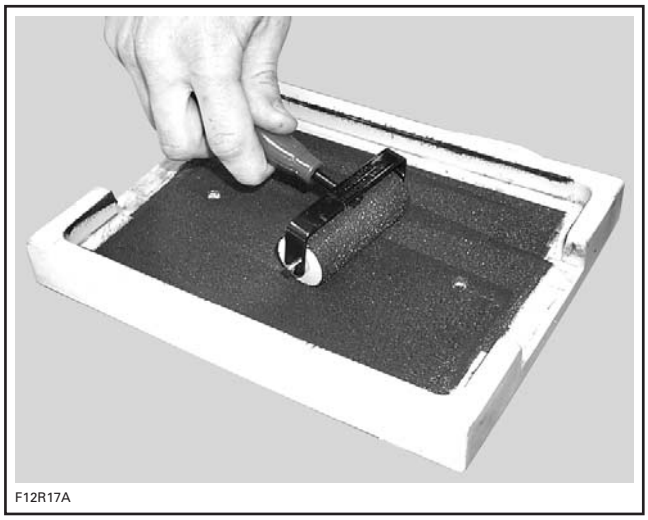

Do not apply in excess as it will spread out inside crankcase.

NOTE: It is recommended to apply this specific sealant as described here to get a uniform application without lumps. If you do not use the roller method, you may use your finger to uniformly distribute the sealant (using a finger will not affect the adhesion).

Installing the Rear Bearing Cover

Check O-ring on bearing cover if brittle, hard or damaged. Replace if necessary.

Lubricate O-ring.

SERVICE PRODUCT
Engine oil

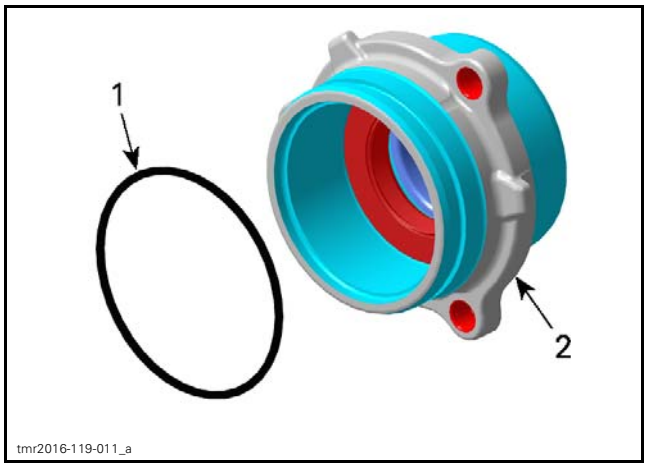

1. *O-ring*
2. *Bearing cover*

For bearing cover installation on gearbox side, protect the oil seal to avoid damaging the sealing lip.

REQUIRED TOOL	
DRIVE SHAFT OIL SEAL PROTECTOR (P/N 529 036 029)	

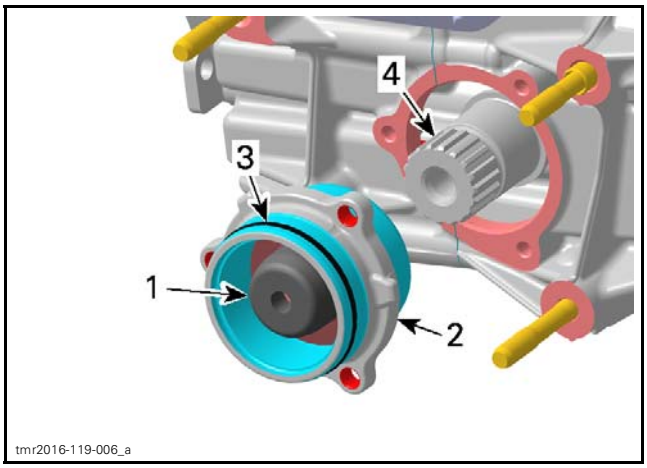

1. *Protection sleeve*
2. *Bearing cover*
3. *O-ring*
4. *Drive shaft*

TIGHTENING TORQUE	
Rear bearing cover screws	10 N•m ± 1 N•m (89 lbf•**in** ± 9 lbf•**in**) + LOCTITE 243 (BLUE) (P/N 293 800 060)

Installing the Front Bearing Cover

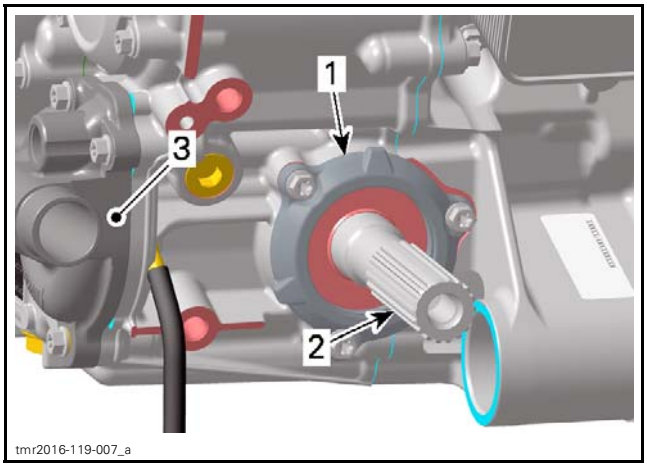

1. *Bearing cover*
2. *Drive shaft*
3. *Water pump cover*

TIGHTENING TORQUE	
Front bearing cover screws	10 N•m ± 1 N•m (89 lbf•**in** ± 9 lbf•**in**) + LOCTITE 243 (BLUE) (P/N 293 800 060)

Place **NEW** cover washer on drive shaft.

NOTE: Groove must face outwards the engine

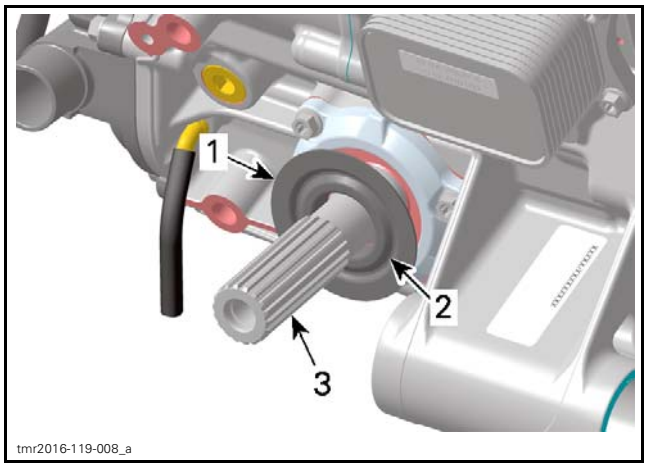

1. *Cover washer*
2. *Groove*
3. *Drive shaft*

Press cover washer on drive shaft.

REQUIRED TOOLS	
COVER WASHER INSTALLER (P/N 529 036 271)	
Flat washer (P/N 250200102)	
M12 x 1.25 x 35 hexagonal screw	

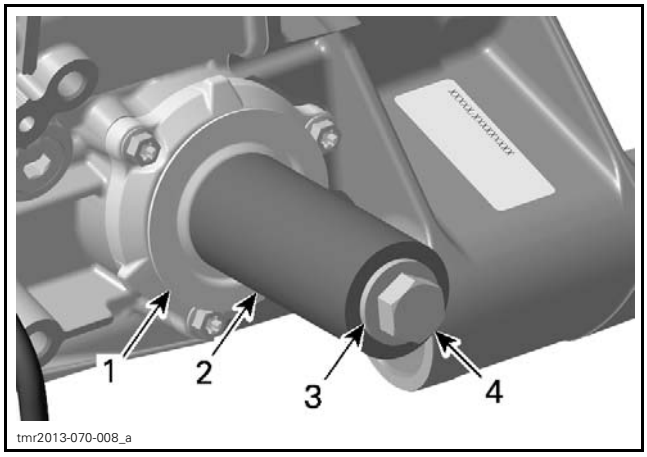

1. *Cover washer*
2. *Cover washer installer (P/N 529 036 271)*
3. *Flat washer (P/N 250200102)*
4. *M12 x 1.25 x 35 hexagonal screw*

Installing the Engine Drive Shaft

Finally check for axial play of the drive shaft.

FRONT OIL SEAL (ENGINE DRIVE SHAFT)

Front Oil Seal Replacement (Engine Drive Shaft)

1. Remove front propeller shaft. Refer to *FRONT DRIVE* subsection.
2. Remove the front bearing cover, refer to *ENGINE DRIVE SHAFT* in this subsection.
3. Remove drive shaft seal from bearing cover.

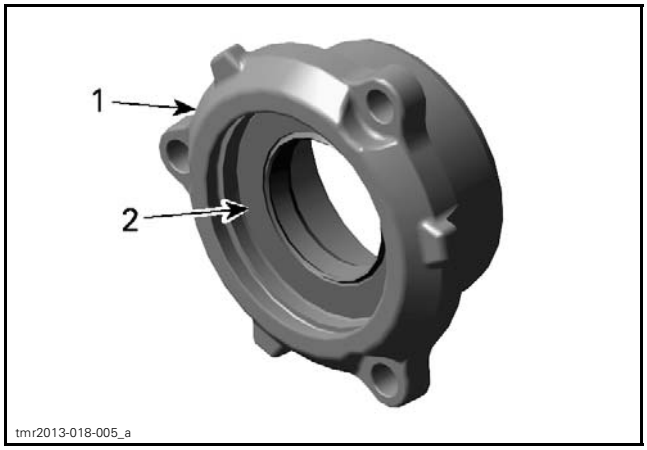

1. *Bearing cover*
2. *Oil seal*

4. Install drive shaft oil seal.

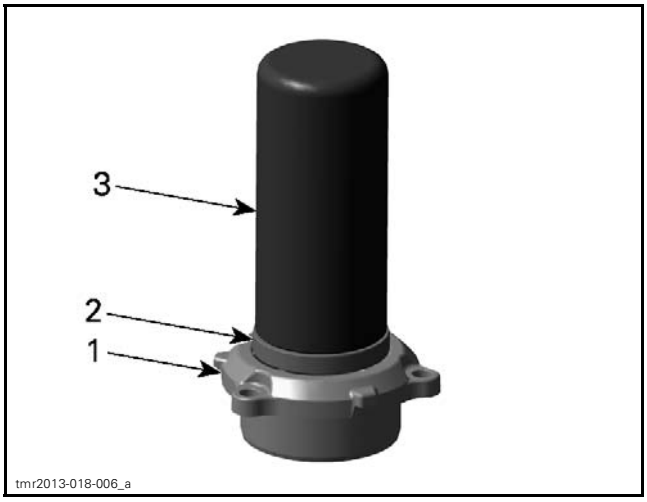

1. *Bearing cover*
2. *Oil seal*
3. *Oil seal installer*

REQUIRED TOOL	
DRIVE SHAFT OIL SEAL INSTALLER (P/N 529 036 028)	

5. Reinstall remaining parts in the reverse order of removal.

REAR OIL SEAL (ENGINE DRIVE SHAFT)

Rear Oil Seal Replacement (Engine Drive Shaft)

1. Remove rear bearing cover, refer to *ENGINE DRIVE SHAFT* in this subsection.

2. Remove drive shaft seal from bearing cover.

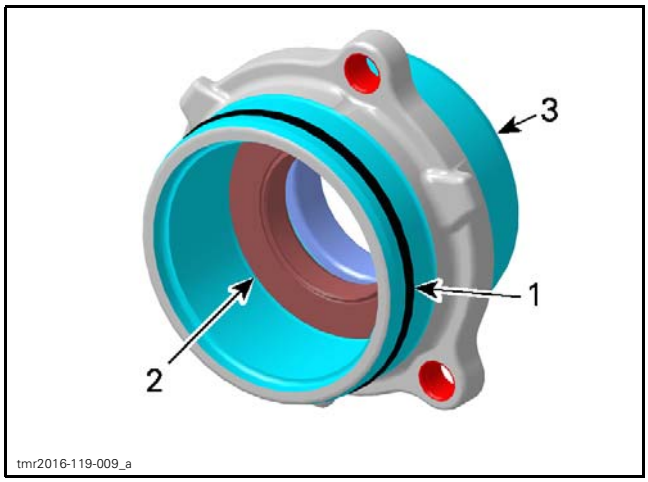

1. *O-ring*
2. *Oil seal*
3. *Bearing cover*

3. Install drive shaft oil seal.

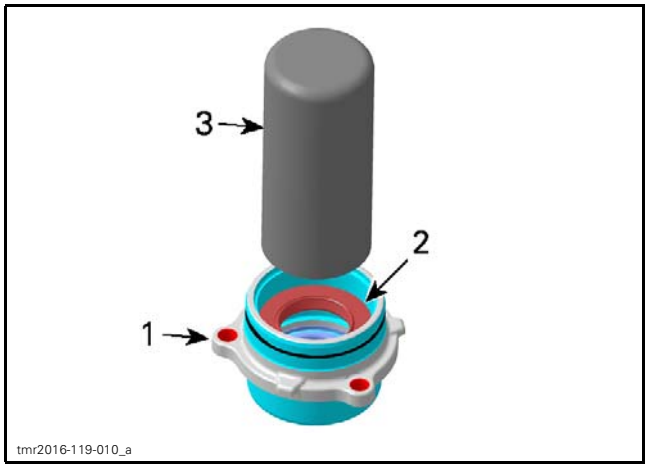

1. *Bearing cover*
2. *Oil seal*
3. *Oil seal installer*

REQUIRED TOOL	
DRIVE SHAFT OIL SEAL INSTALLER (P/N 529 036 028)	

4. Reinstall remaining parts in the reverse order of removal.

PTO COVER OIL SEAL

To replace oil seal it is not necessary to remove engine from vehicle.

Removing the PTO Oil Seal

Refer to *CONTINUOUSLY VARIABLE TRANSMISSION (CVT)* subsection to remove the following parts:

– CVT cover
– Drive pulley
– Driven pulley
– CVT air guide.

Remove oil seal with a small flat screwdriver.

NOTICE **Avoid scoring surfaces with tool.**

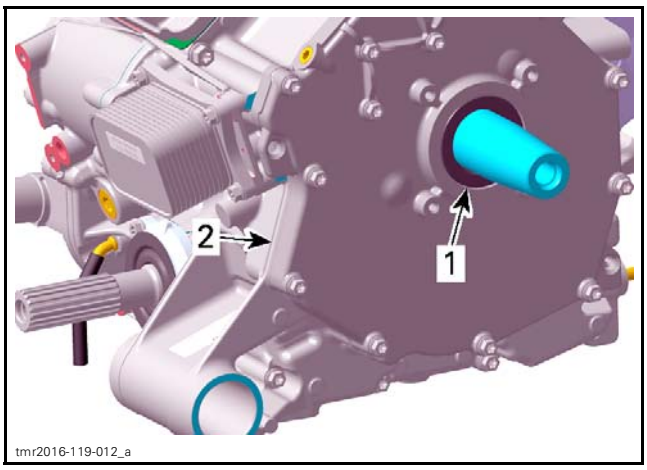

1. *Oil seal*
2. *PTO cover*

Inspecting the PTO Oil Seal

Check oil seal running surface of crankshaft PTO side for grooves. Replace if necessary.

Installing the PTO Oil Seal

The installation is the reverse of the removal procedure.

Pay attention to the following details.

NOTICE **Oil seal must be installed with sealing lip toward the engine.**

Push oil seal in place.

REQUIRED TOOL	
PTO COVER OIL SEAL INSTALLER (P/N 529 036 033)	

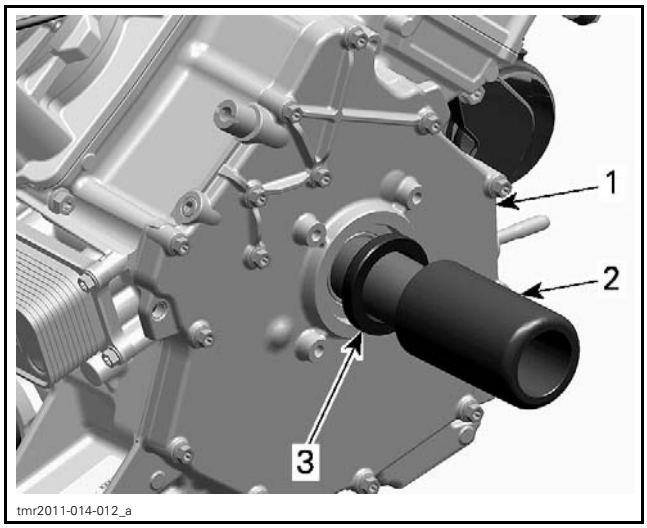

1. *PTO cover*
2. *Oil seal installer*
3. *Oil seal*

PTO COVER

Removing the PTO Cover

Refer to *CONTINUOUSLY VARIABLE TRANSMISSION (CVT)* subsection to remove the following parts:

- CVT cover
- Drive pulley
- Driven pulley
- CVT air guide.

Disconnect vent hose.

Remove PTO cover screws and pull PTO cover.

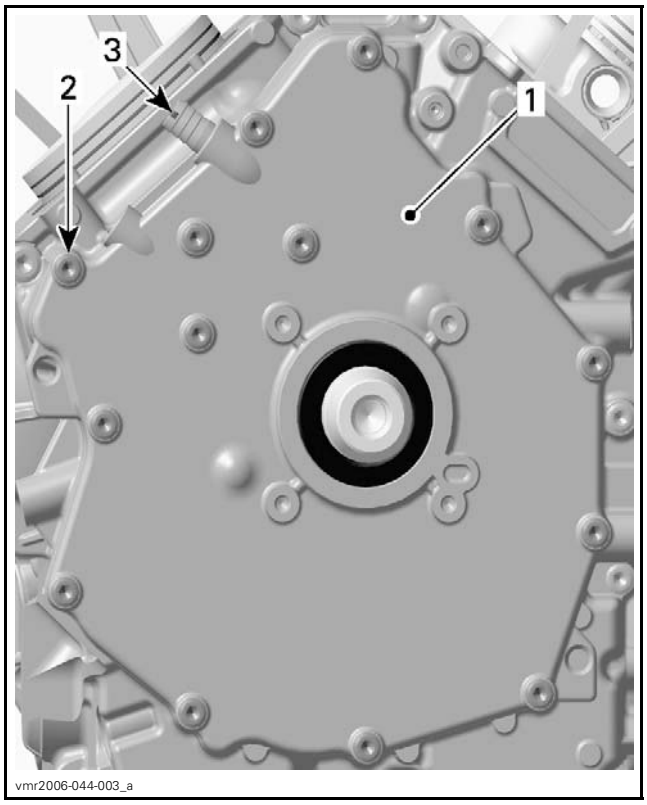

1. *PTO cover*
2. *PTO cover screws*
3. *Vent hose nipple*

Inspecting the PTO Cover

Check the PTO cover for cracks or other damage.

Replace PTO cover if damaged.

Clean oil breather bore in PTO cover from contaminations with part cleaner then use pressurized air to dry it.

Check surface of sealing sleeve for wear or other damages. Replace PTO cover if damaged.

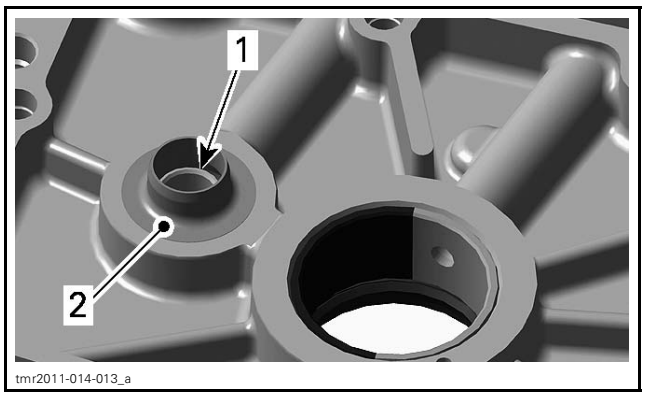

1. *Oil breather bore*
2. *Surface of sealing sleeve*

Check plain bearings for scorings or other damages.

NOTE: Measure plain bearing inside diameter (PTO cover) and compare to crankshaft journal diameter (PTO cover bearing). Refer to *CRANKSHAFT* in this section. Replace if the measurement is out of specification.

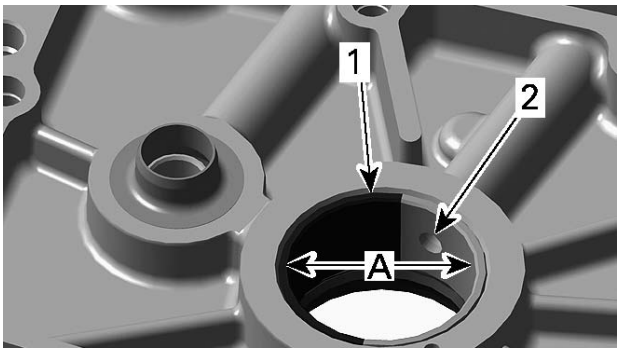

tmr2011-014-013_b

1. *Plain bearing*
2. *Oil bore*

A. *Measure plain bearing inside diameter*

PLAIN BEARING INSIDE DIAMETER (PTO COVER)	
Service limit	34.120 mm (1.3433 in)

Plain Bearing Replacement (PTO Cover)

Removing the Plain Bearing

NOTICE **Unless otherwise instructed, never use a hammer to install plain bearings. Use a press only.**

Carefully remove the PTO oil seal with a screwdriver, without damaging the PTO cover.

Press out the plain bearings from the outside towards the inside.

REQUIRED TOOL	
PLAIN BEARING REMOVER/INSTALLER (P/N 529 036 032)	

The PTO cover has to be supported from below with suitable support with straight surface, in order to prevent damage of the sealing surface.

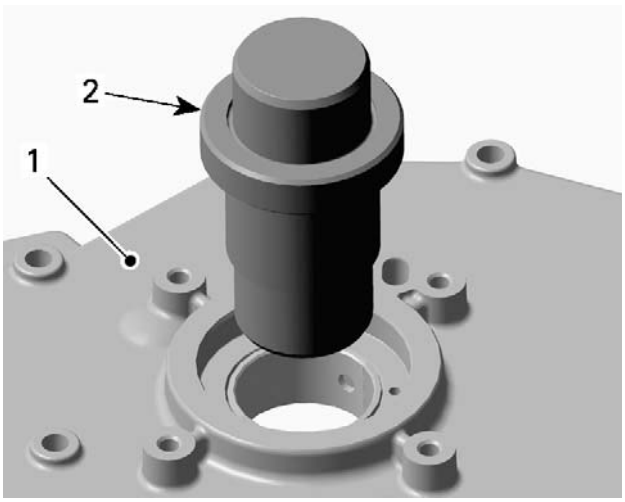

vmr2006-044-007_a

1. *PTO cover*
2. *Plain bearing remover/installer*

Installing the Plain Bearing

NOTE: Do not lubricate plain bearings and/or PTO cover for installation.

Install plain bearings in a cool PTO cover.

REQUIRED TOOL	
PLAIN BEARING REMOVER/INSTALLER (P/N 529 036 032)	

NOTICE **Mark position of oil bore on PTO cover and on plain bearing remover/installer. Align mark on plain bearing remover/installer with mark on PTO cover.**

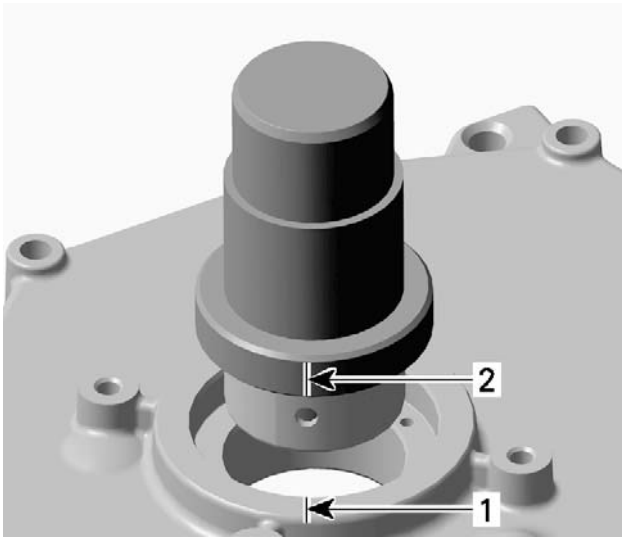

vmr2006-044-008_a

1. *Mark position of oil bore on PTO cover*
2. *Mark position of oil bore on plain bearing remover/installer*

Carefully press-in the plain bearings in the same direction as during disassembly, from the outside towards the inside. Support PTO cover with suitable support with straight surface, in order to prevent damage of the sealing surface.

NOTICE **Wrong oil bore position will stop oil supply to plain bearings and will damage the engine.**

NOTICE **The partition of the plain bearings must be positioned near to oil bore in counter-clockwise direction.**

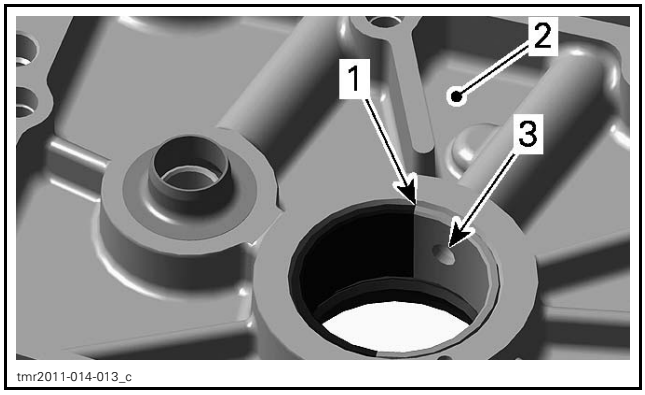

1. *Partition*
2. *PTO cover (inside)*
3. *Oil bore*

Installing the PTO Cover

The installation is the reverse of the removal procedure. However, pay attention to the following.

NOTICE **At installation, replace PTO cover gasket and oil seal.**

Tighten PTO cover screws following the illustrated sequence.

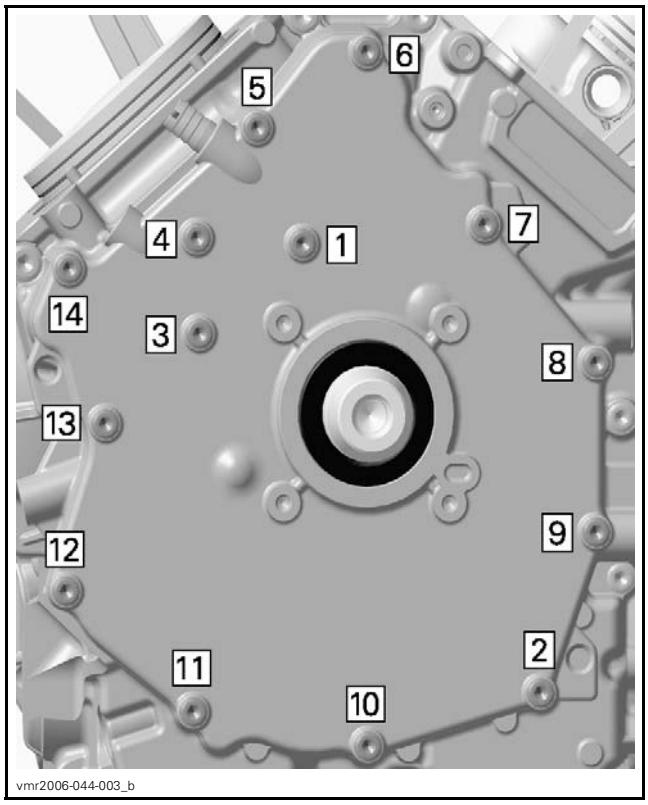

TIGHTENING SEQUENCE

TIGHTENING TORQUE	
PTO cover screws	10 N•m ± 1 N•m (89 lbf•**in** ± 9 lbf•**in**)

DRIVE GEARS

Drive Gears Location

The engine is equipped with a breather gear which prevents engine oil coming out through the breathing system into the air intake system.

The drive gears are located on the engine PTO side behind the PTO cover.

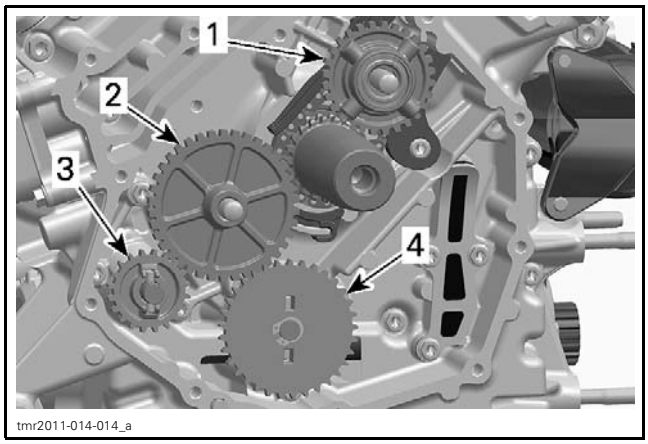

1. *Breather gear*
2. *Intermediate gear*
3. *Water pump drive gear*
4. *Oil pump drive gear*

Removing the Drive Gears

Remove PTO cover (refer to *PTO COVER*).

Withdraw intermediate gear and breather gear.

For oil pump drive gear removal, refer to *OIL PUMP* in the *LUBRICATION SYSTEM* subsection.

To remove water pump drive gear, pull the shaft assembly a bit out and turn it about one teeth until it stays out.

Then push water pump drive gear in.

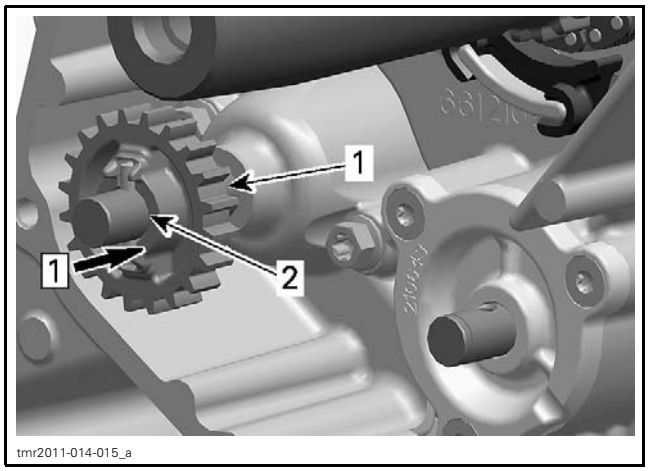

Step 1: Push gear in

1. *Water pump drive gear*
2. *Intermediate shaft*

Remove needle pin and pull water pump drive gear out.

Remove thrust washer from intermediate shaft.

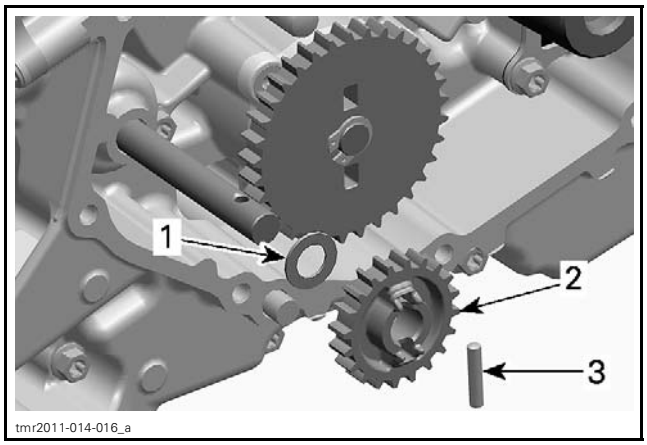

1. *Thrust washer*
2. *Water pump drive gear*
3. *Needle pin*

Inspecting the Drive Gears

Intermediate Gear/Oil Pump Drive Gear/Water Pump Drive Gear

Inspect gears for wear or other damage. Replace if damaged.

Breather Gear

Check if oil seal is brittle, hard or damaged. Replace if necessary.

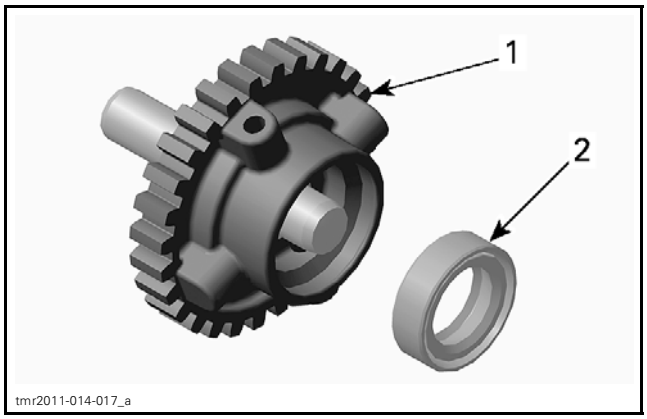

1. *Breather gear*
2. *Oil seal*

Inspect gear for wear or other damage.

Check ball bearing for excessive play and smooth operation. Replace breather gear assembly if necessary.

Installing the Drive Gears

The installation is the reverse of the removal procedure.

Adequately oil the ball bearing of the breather gear.

CRANKCASE

Disassembling the Crankcase

1. Drain the following:
   - Cooling system, refer to *VEHICLE COOLING SYSTEM* subsection
   - Engine oil, refer to *LUBRICATION SYSTEM* subsection
   - Gearbox oil, refer to *GEARBOX AND 4X4 COUPLING UNIT* subsection.
2. Lock crankshaft. Refer to *CRANKSHAFT LOCKING PROCEDURE* in the this subsection.
3. Refer to *CONTINUOUSLY VARIABLE TRANSMISSION (CVT)* subsection to remove following parts:
   - CVT cover
   - Drive pulley
   - Driven pulley
   - CVT air guide.
4. Remove engine from vehicle. Refer to *ENGINE REMOVAL AND INSTALLATION* subsection.
5. Detach gearbox from engine. Refer to *GEARBOX AND 4X4 COUPLING UNIT*.

HVAC Models

6. Refer to *AIR CONDITIONING - ENGINE COMPONENTS* subsection to remove the following parts:
   - Air conditioning compressor
   - Air conditioning drive pulley.

All Models

7. Refer to *MAGNETO AND STARTER* subsection to remove the following parts:
   - Magneto cover
   - Rotor with sprag clutch gear
   - Starter drive gears.
8. Refer to following procedures in this subsection to remove the following parts:
   - PTO cover
   - Drive gears
   - Bearing covers of engine drive shaft.
9. Refer to *TIMING CHAIN* subsection to remove following parts:
   - Chain tensioners
   - Camshaft timing gears
   - Timing chains
   - Timing chain guides.
10. Refer to *CYLINDER HEAD* subsection to remove following parts:
    - Front cylinder head
    - Rear cylinder head
    - Cylinders.
11. Refer to *ENGINE COOLING SYSTEM* subsection to remove following parts:
    - Water pump housing.
12. Refer to *LUBRICATION SYSTEM* subsection to remove following parts:
    - Oil filter
    - Oil cooler (if equipped)
    - Oil pump drive gear.

NOTE: Oil pump removal from crankcase is not necessary, but recommended to see condition of oil pump (refer to *LUBRICATION SYSTEM* subsection).

13. Remove electric starter.

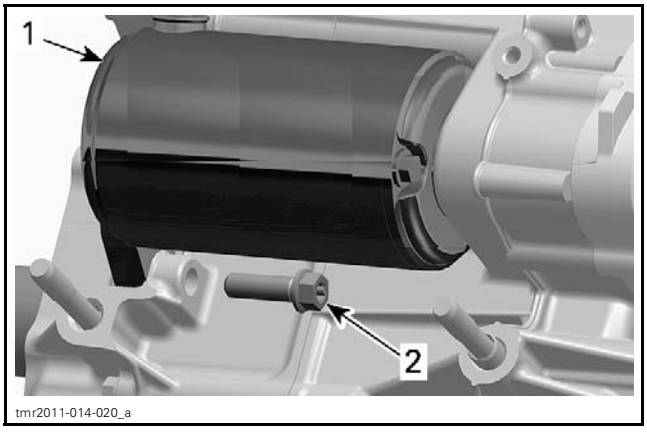

1. Electric starter
2. Screw

NOTE: Before splitting the crankcase, measure crankshaft axial play. Refer to *CRANKSHAFT*.

14. Remove retaining screws of crankcase.

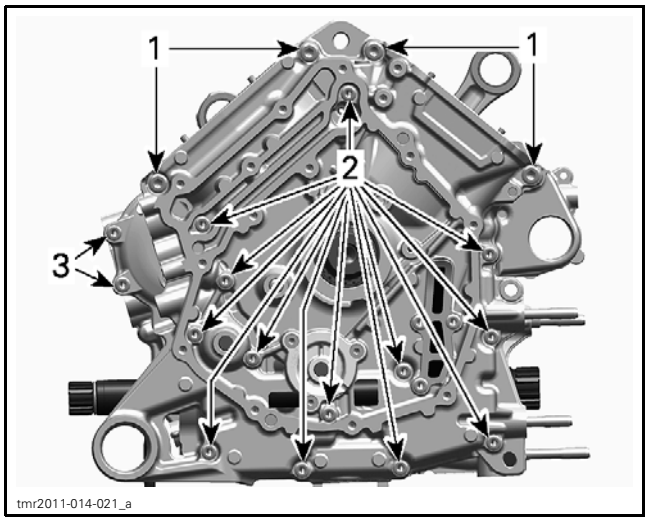

1. *4 screws M8 x 65*
2. *13 screws M6 x 75*
3. *2 screws M6 x 25*

15. Carefully split crankcase halves.

NOTE: During disassembly, do not damage the sealing surfaces of the crankcase halves.

16. Pull crankshaft out of crankcase.

17. Remove the water pump intermediate shaft.

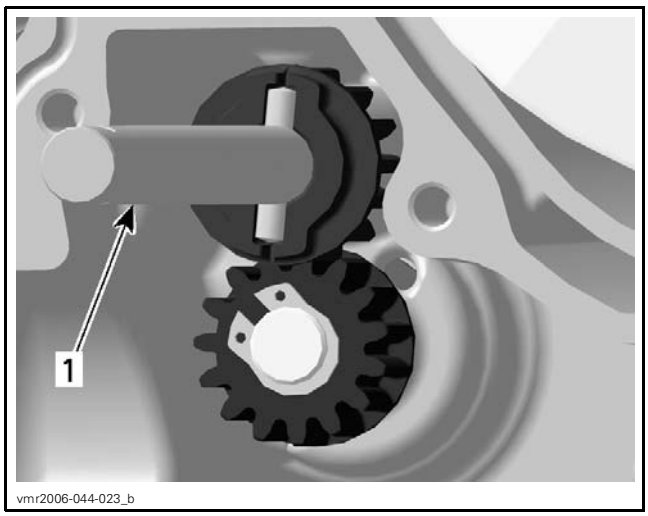

1. *Water pump intermediate shaft*

18. Remove engine oil strainer.

NOTE: Oil strainer removal for inspection and cleaning is recommended. Refer to *LUBRICATION SYSTEM* subsection.

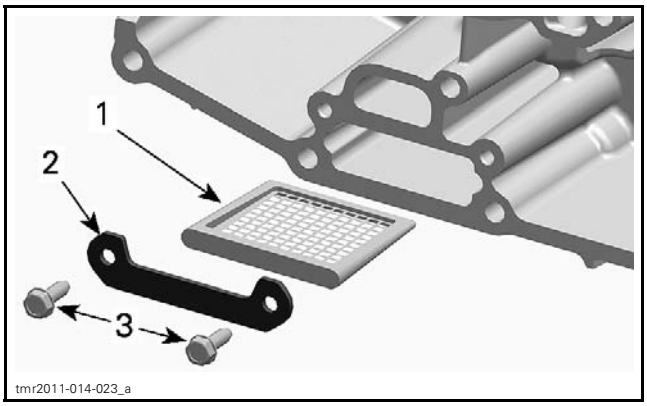

1. *Engine oil strainer*
2. *Retaining plate*
3. *Screws*

Cleaning the Crankcase

Clean crankcase using a part cleaner.

Dry crankcase using compressed air.

Blow the oil supply lines.

Clean and inspect oil nozzles, refer to *LUBRICATION SYSTEM* subsection.

Inspecting the Crankcase

Check crankcase halves for cracks or other damage. Replace if damaged.

Check MAG and PTO plain bearings in for scoring or other damages.

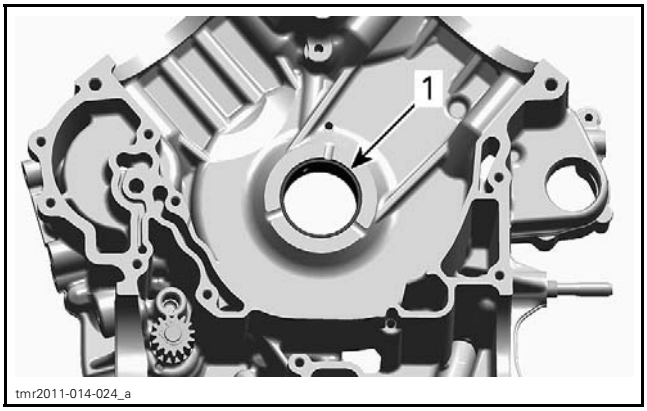

1. *Plain bearing*

NOTE: Measure plain bearing inside diameter and compare to PTO/MAG main journal diameters of crankshaft (refer to *CRANKSHAFT*). Replace if the measurements are out of specification.

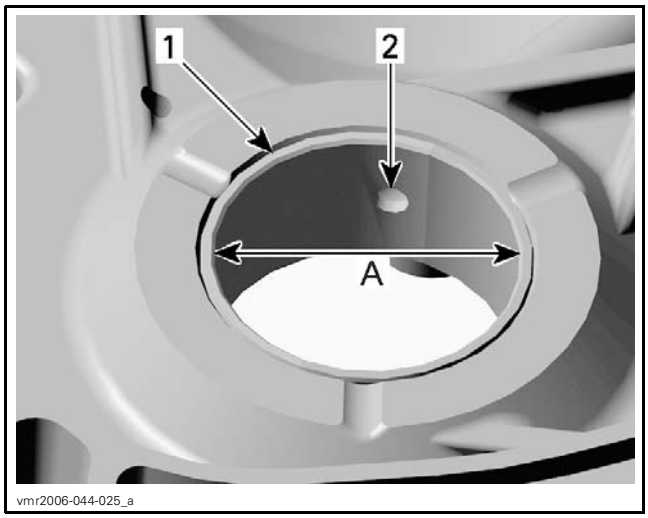

1. Plain bearing
2. Oil bore
A. Measure plain bearing inside diameter

MAIN BEARING INSIDE DIAMETER (PTO/MAG)	
Service limit	42.100 mm (1.6575 in)

Plain Bearing Replacement (Main)

Removing the Plain Bearing

NOTICE **Always support crankcase halves properly when plain bearings are removed. Damages to crankcase halves may occur if this procedure is not performed correctly.**

NOTE: Always use a press for removal of plain bearings.

Carefully press the plain bearings out, from the crankcase half inside towards the outside.

REQUIRED TOOLS	
CRANKCASE SUPPORT MAG/PTO (P/N 529 036 031)	
PLAIN BEARING REMOVER/INSTALLER (P/N 529 035 917)	

During disassembly, make sure not to damage the sealing surfaces of the crankcase halves.

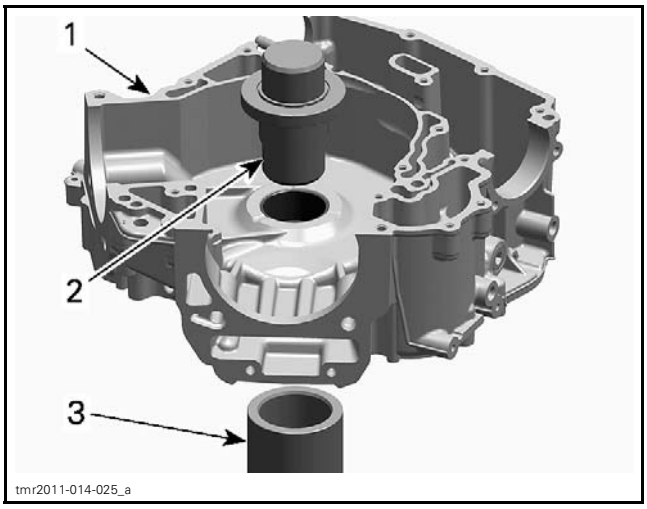

PUSH PLAIN BEARINGS OUTSIDE
1. Crankcase half
2. Plain bearing remover/installer
3. Crankcase support sleeve (P/N 529 036 031)

Installing the Plain Bearing (Main)

NOTICE **Unless otherwise instructed, never use hammer to install plain bearings. Use press only.**

NOTE: Place the proper crankcase support sleeve under crankcase halves before installing the plain bearings.

Carefully press in the plain bearings in the same direction as during disassembly, from the crankcase inside towards the outside.

During reassembly, make sure not to damage the sealing surfaces of the crankcase halves.

Install plain bearings in a cold crankcase.

NOTICE **Do not lubricate plain bearings and/or crankcase for installation.**

REQUIRED TOOL	
PLAIN BEARING REMOVER/INSTALLER (P/N 529 035 917)	

Use an O-ring (Ø 42 x 1 mm to 1.5 mm (.04 in to .06 in) thickness) to hold plain bearings in place during installation. The O-ring will disappear in the groove of the plain bearing remover/installer.

Mark position of plain bearing oil bore on plain bearing remover/installer.

Mark position of oil bore on crankcase half.

Align mark on plain bearing remover/installer with mark on crankcase half.

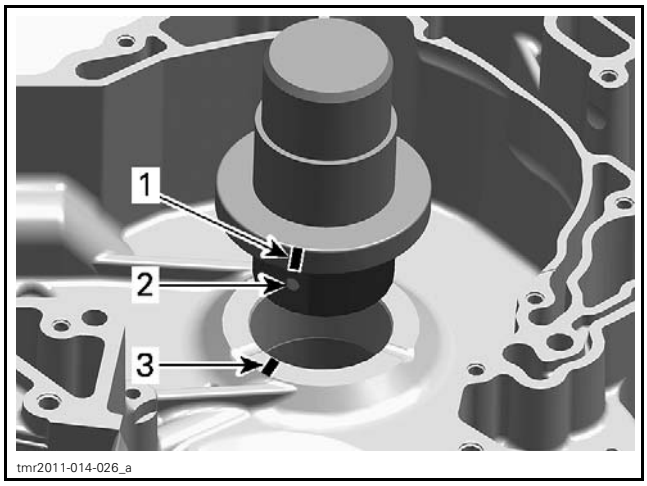

1. *Oil bore position marked on plain bearing remover/installer*
2. *Plain bearing oil bore*
3. *Oil bore position marked on crankcase*

NOTICE **Misalignment of the plain bearing and crankcase oil bores will prevent proper oil supply to plain bearings.**

Carefully press in the plain bearings from inside the crankcase towards the outside.

NOTICE **The partition of the plain bearings in crankcase half MAG side must be positioned near to oil bore in clockwise direction.**

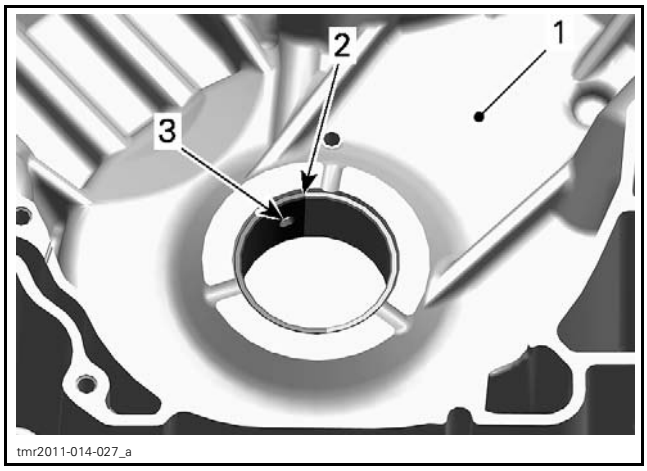

1. *Crankcase half MAG (inside surface)*
2. *Partition*
3. *Oil bore*

NOTICE **The partition of the plain bearings in crankcase half PTO side must be positioned near to oil bore in counterclockwise direction.**

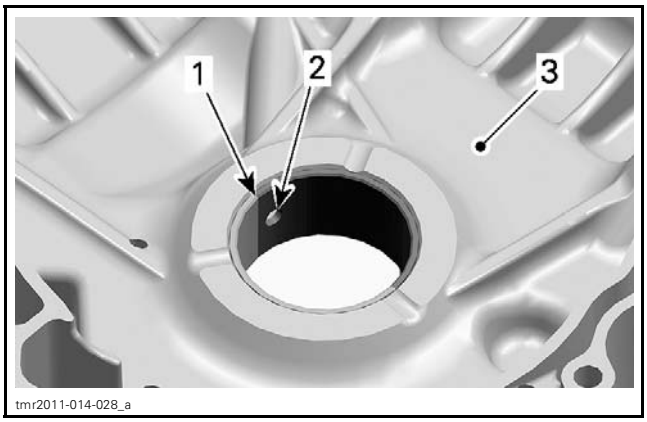

1. *Partition*
2. *Oil bore*
3. *Crankcase half PTO (inside)*

Assembling the Crankcase

The assembly of crankcase is essentially the reverse of removal procedure. However, pay attention to the following details.

Install a **NEW** crankcase gasket.

Oil the plain bearings before mounting the crankshaft.

NOTICE **Correctly reinstall crankshaft (refer to *CRANKSHAFT*).**

Properly reinstall engine oil strainer and screws. Refer to *LUBRICATION SYSTEM* subsection.

Reinstall water pump intermediate shaft and gears. Refer to *WATER PUMP GEARS* in the *ENGINE COOLING SYSTEM* subsection.

Tightening sequence for screws on crankcase is as per following illustration.

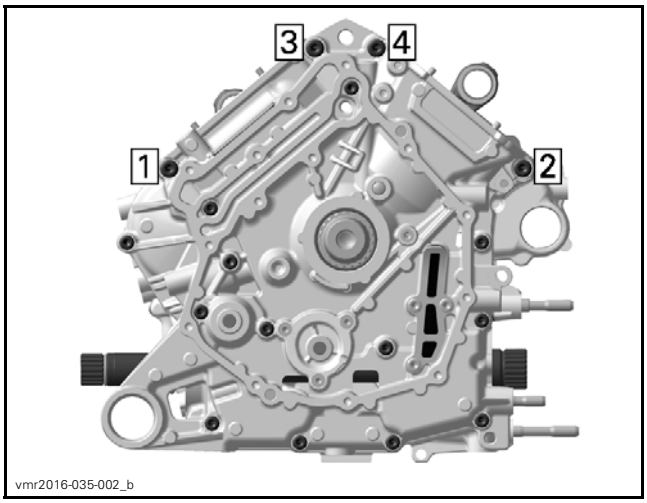

M8 SCREWS TIGHTENING SEQUENCE

TIGHTENING TORQUE	
M8 crankcase screws	25 N•m ± 3 N•m (18 lbf•ft ± 2 lbf•ft)

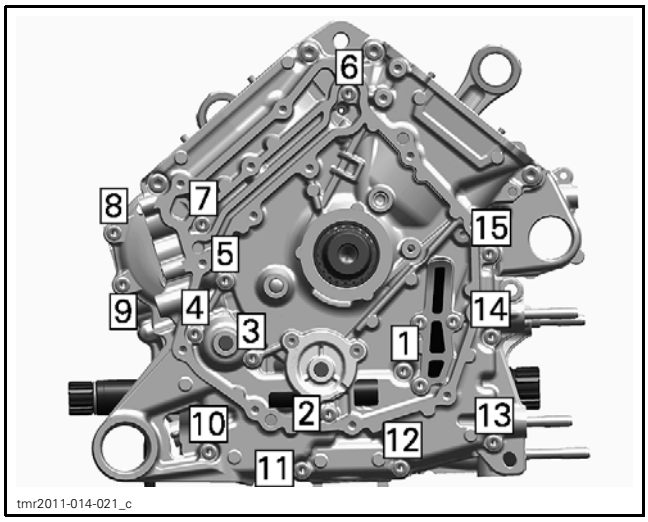

M6 SCREWS TIGHTENING SEQUENCE

TIGHTENING TORQUE	
M6 crankcase screws	10 N•m ± 1 N•m (89 lbf•**in** ± 9 lbf•**in**)

CRANKSHAFT

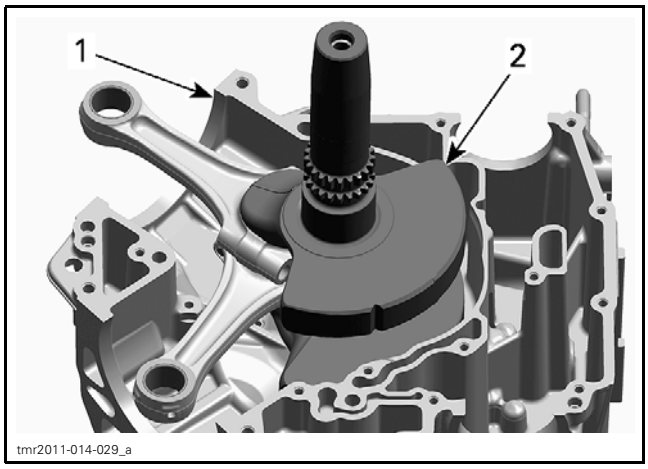

1. *Crankcase MAG*
2. *Crankshaft*

Crankshaft Locking Procedure

NOTE: When crankshaft is locked, the rear piston no. 2 is at TDC. Crankshaft can not be locked at piston no.1 TDC.

NOTICE To see if the rear piston no. 2 is at TDC ignition refer to *CAMSHAFT TIMING GEAR* in the *TIMING CHAIN* subsection.

Remove:

1. Spark plug cables and spark plugs of both cylinders.
2. Parts to get access to the MAG-side crankshaft bolt.

All Models except HVAC

3. Plug screw and O-ring of magneto cover.

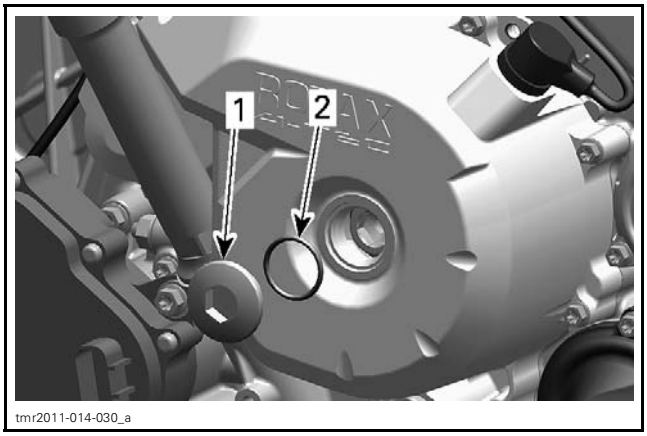

1. *Plug screw*
2. *O-ring*

HVAC Models

4. Remove belt cover. Refer to *AIR CONDITIONING* subsection.
5. Crankshaft position sensor.

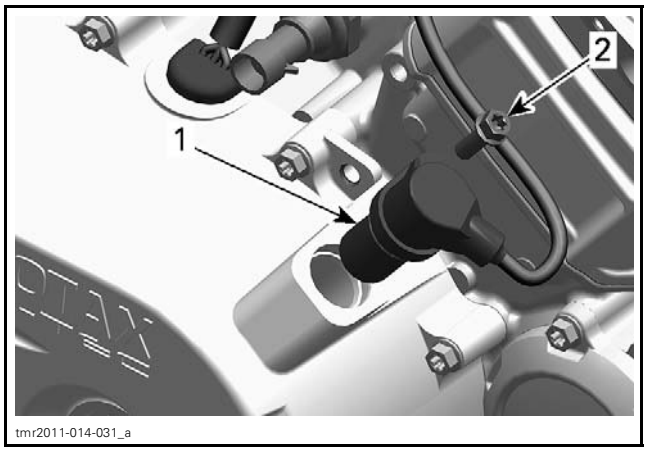

TYPICAL
1. *Crankshaft position sensor*
2. *Screw*

6. Plug screw and discard sealing ring.

tmr2011-014-032_a

1. *Sealing ring*
2. *Plug screw*
3. *Crankcase PTO side, front side*

Turn crankshaft until piston no. 2 is at TDC.

REQUIRED TOOL	
All Models except HVAC	14 mm Allen key
HVAC Models	Ratchet with 24 mm nut

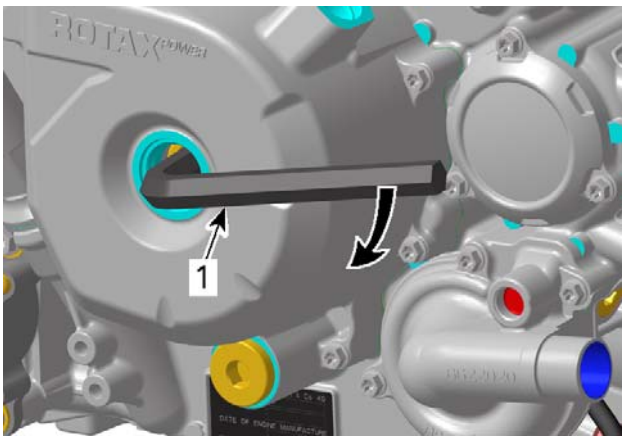

tmr2016-118-002_a

ALL MODELS EXCEPT HVAC
1. *Allen key 14 mm*

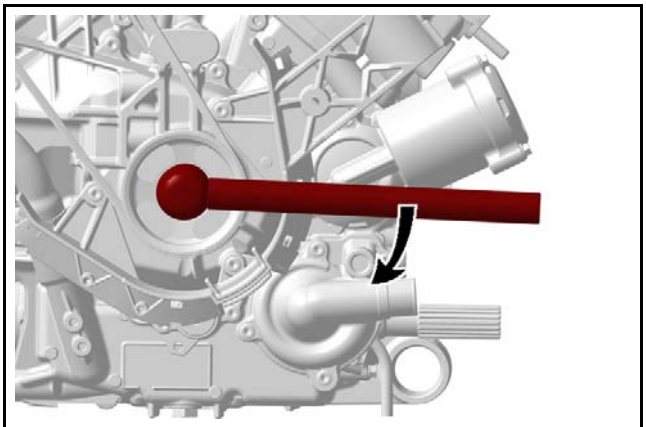
RTX20_1010HVAC-006-004_a

HVAC MODELS

When rear piston is at TDC marks on magneto flywheel "2" and on the magneto cover are aligned.

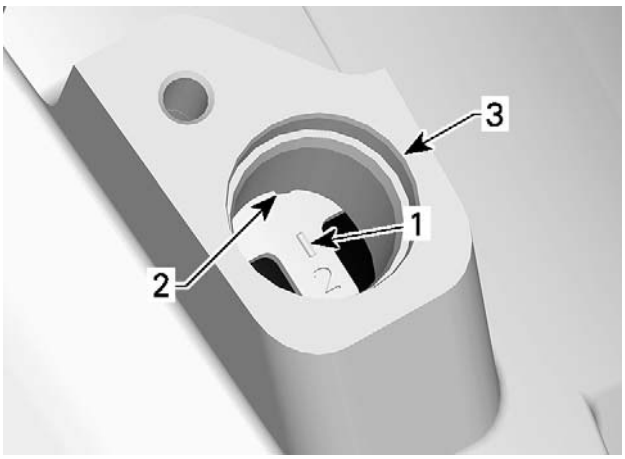

vmr2007-037-008_a

1. *Mark "2" on magneto flywheel*
2. *Notch on magneto cover*
3. *Crankshaft position sensor location*

Use a screwdriver to check if the groove in the crankshaft is aligned with the hole.

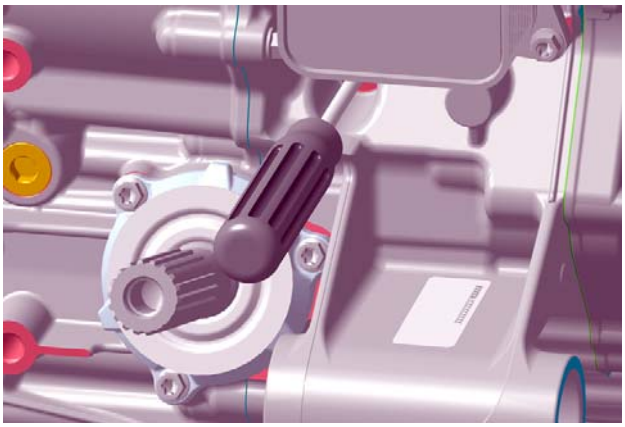
tmr2016-119-013

Lock crankshaft.

REQUIRED TOOL	
CRANKSHAFT LOCKING BOLT (P/N 529 035 617)	

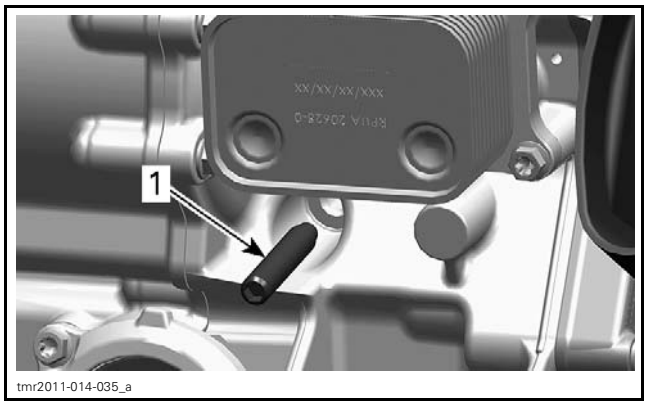

1. Crankshaft locking bolt

Gradually insert the tool in the crankshaft groove. Make sure that the tool tip enters the groove and does not jam on the crankshaft balancer surface.

Removing the Crankshaft

Refer to *CRANKCASE*.

Inspecting the Crankshaft

Check each bearing journal of crankshaft for scoring, scuffing, cracks or other signs of wear.

Replace crankshaft if the gears are worn or otherwise damaged.

NOTICE **Components out of specifications always have to be replaced. If this is not observed, severe damage may be caused to the engine.**

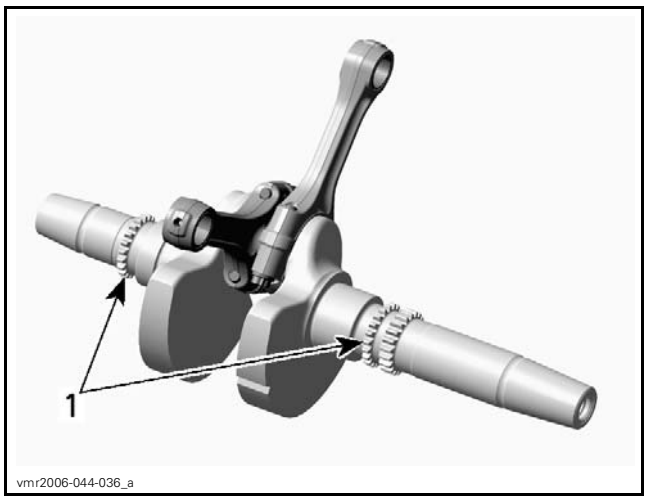

1. Crankshaft timing gears

Crankshaft Axial Play

NOTE: Axial play needs to be measured before splitting the crankcase.

Measure play on PTO end, using a dial indicator.

CRANKSHAFT AXIAL PLAY	
New	0.200 mm to 0.500 mm (.008 in to .02 in)
Service limit	0.600 mm (.024 in)

If play is out of specification, replace crankcase and/or crankshaft.

Connecting Rod Big End Axial Play

Using a feeler gauge, measure distance between butting face of connecting rods and crankshaft counterweight. If the distance exceeds specified tolerance, replace the crankshaft.

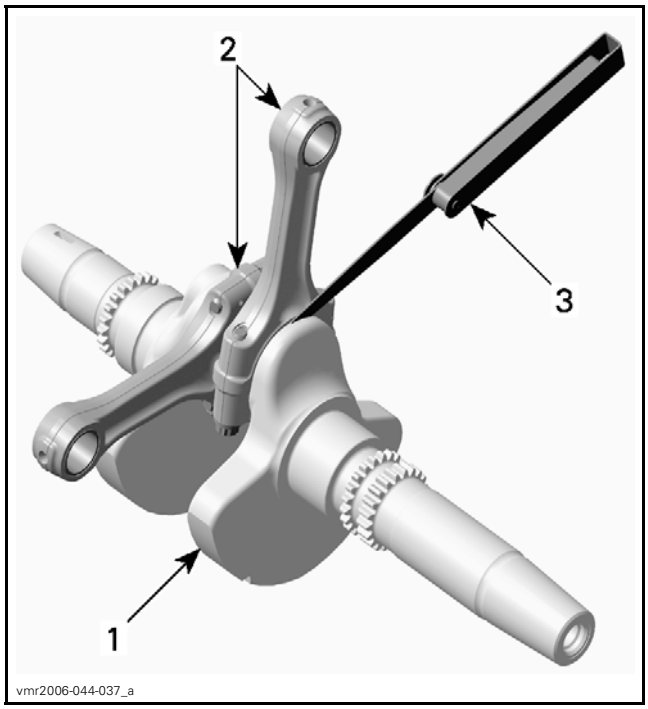

1. Crankshaft
2. Connecting rods
3. Feeler gauge

CONNECTING ROD BIG END AXIAL PLAY		
800R/HD8	New	0.200 mm to 0.500 mm (.008 in to .02 in)
	Service limit	0.600 mm (.024 in)
1000/HD10	New	0.250 mm to 0.550 mm (.01 in to .022 in)
	Service limit	0.600 mm (.024 in)

Connecting Rod/Piston Pin Clearance

Refer to *CYLINDER HEAD* subsection.

Connecting Rod Big End Radial Play

NOTE: Prior to remove connecting rod from the crankshaft, mark big end halves together to ensure a correct reinstallation (cracked surface fits in only one position).

Remove connecting rods from crankshaft.

NOTICE **Connecting rod screws are not reusable. Always discard screws and replace by NEW ones. It is recommended to install new plain bearings when reinstalling connecting rods.**

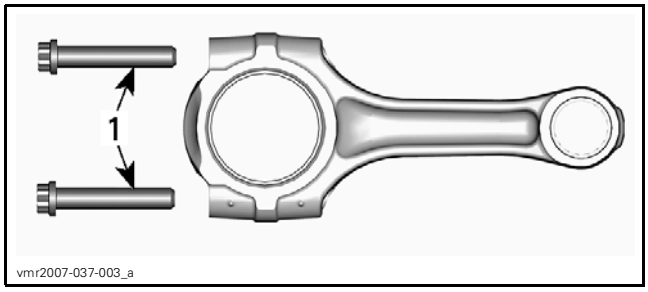

1. Connecting rod screws

Measure crankpin. Compare to inside diameter of connecting rod big end.

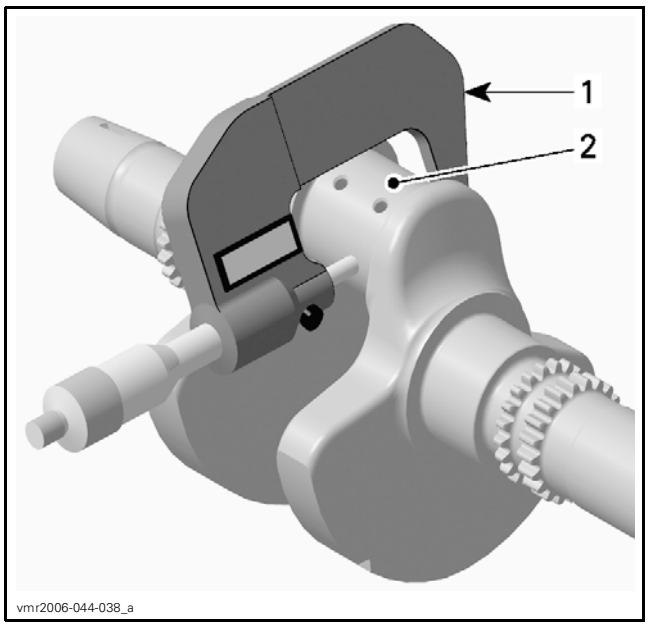

1. Micrometer
2. Crankpin area for plain bearing

CRANK PIN DIAMETER		
800R/HD8	New	40.001 mm to 40.025 mm (1.5748 in to 1.5758 in)
	Service limit	39.990 mm (1.5744 in)
1000/HD10	New	41.986 mm to 42.010 mm (1.653 in to 1.6539 in)
	Service limit	41.967 mm (1.6522 in)

If the crank pin diameter is out of specification, replace crankshaft.

To measure the connecting rod big end diameter, use the OLD connecting rod screws.

Install the OLD plain bearings as they were mounted initially.

Carry out the tightening procedure described in *ASSEMBLING THE CRANKSHAFT ASSEMBLY* in this subsection.

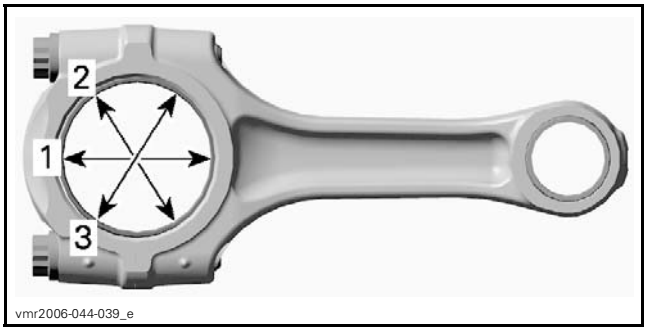

MEASURE AT 3 DIFFERENT POSITIONS

CONNECTING ROD BIG END DIAMETER		
800R/HD8	Service limit	40.100 mm (1.5787 in)
1000/HD10	Service limit	42.100 mm (1.6575 in)

If connecting rod big end diameter is out of specification, replace plain bearings and recheck.

CONNECTING ROD BIG END RADIAL CLEARANCE	
Service limit	0.09 mm (.0035 in)

If connecting rod big end radial clearance is out of specification, replace plain bearings and recheck.

Crankshaft Radial Play MAG/PTO Side

Measure crankshaft on MAG/PTO side. Compare to inside diameter of MAG/PTO plain bearing (refer to *CRANKCASE*).

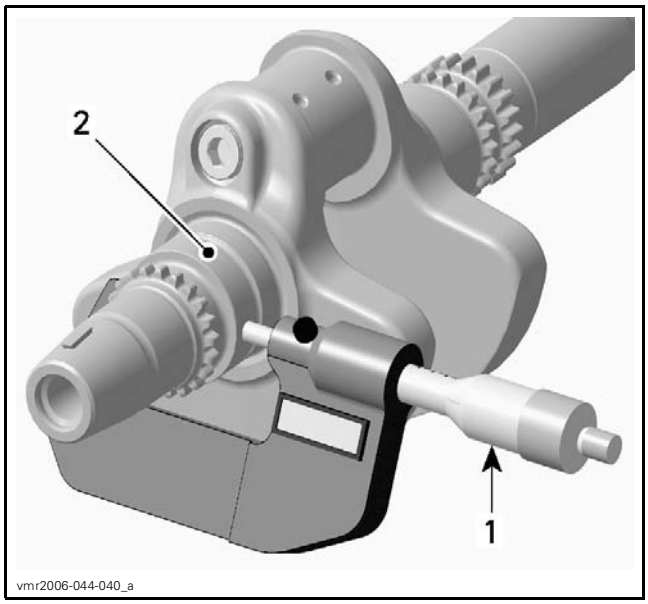

1. *Micrometer*
2. *Crankshaft area for MAG plain bearing*

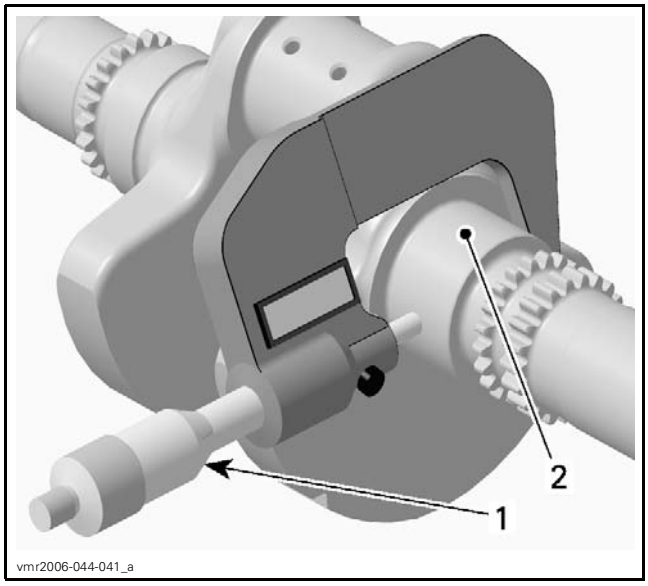

1. *Micrometer*
2. *Crankshaft area for PTO plain bearing*

CRANKSHAFT MAIN BEARING JOURNAL DIAMETER (MAG/PTO SIDE)	
New	42.016 mm to 42.040 mm (1.6542 in to 1.6551 in)
Service limit	42.000 mm (1.6535 in)

CRANKSHAFT RADIAL PLAY (MAG/PTO SIDE)	
SERVICE LIMIT	0.07 mm (.0028 in)

Crankshaft Radial Play (PTO Cover Bearing)

Measure crankshaft journal diameter (PTO cover bearing). Compare to plain bearing inside diameter (PTO cover). Refer to *PTO COVER* in this subsection.

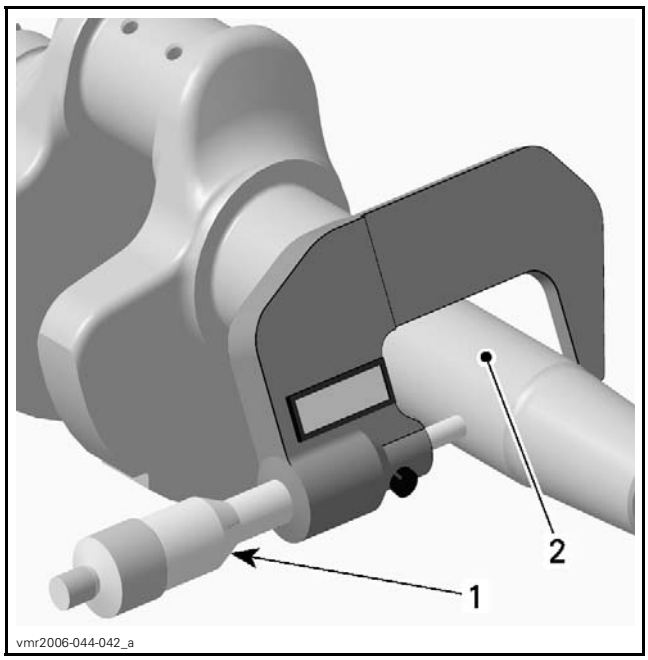

1. *Micrometer*
2. *Crankshaft journal (PTO support bearing)*

CRANKSHAFT JOURNAL DIAMETER (PTO COVER BEARING)	
New	34.004 mm to 34.020 mm (1.3387 in to 1.3394 in)
Service limit	33.998 mm (1.3385 in)

CRANKSHAFT RADIAL PLAY (PTO COVER BEARING)	
Service limit	0.10 mm (.0039 in)

If crankshaft journal diameter is out of specification, replace crankshaft.

If crankshaft radial play (PTO cover bearing) out of specification, replace plain bearings and recheck.

Assembling the Crankshaft Assembly

The assembly is the reverse of the disassembly procedure. However, pay attention to following details.

Clean the split surface on both sides (cracked area) carefully with compressed air.

Put plain bearings correctly in place.

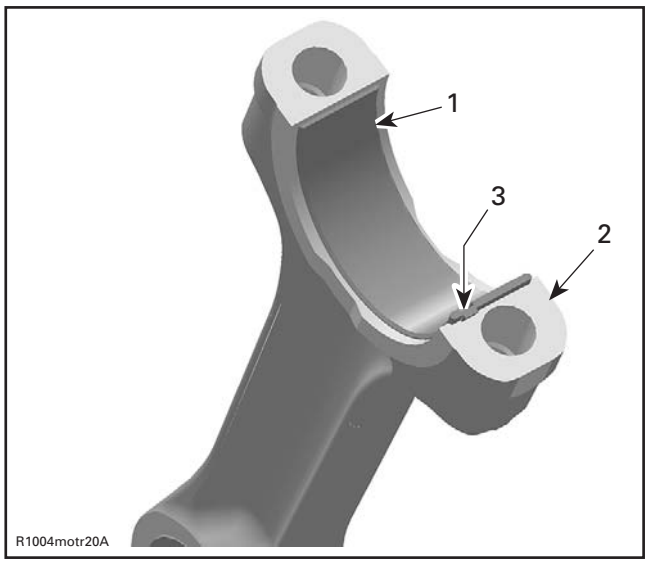

1. *Half plain bearing of connecting rod big end*
2. *Split surface of the connecting rod*
3. *Nose of plain bearing in line with connecting rod groove*

Oil the plain bearing surface of the connecting rod and crank pin before installation.

NOTICE **Lower cap and rod must match together since there is a cracked surface.**

Oil NEW connecting rod screws.

NOTICE **Always use NEW connecting rod screws at final assembly. They are not reusable.**

Thread screws in the connecting rods, then tighten as per following procedure.

NOTICE **Strictly adhere following instructions:**

– Do not apply any thread locker.
– The running direction of the big end bearings and of the piston pins must not change.
– Always perform each step on both connecting rod screws before going to the next step.
– Failure to strictly follow procedure may cause connecting rod screws to loosen and lead to severe engine damage.

REQUIRED TOOLS
Torque wrench
Angle torque wrench

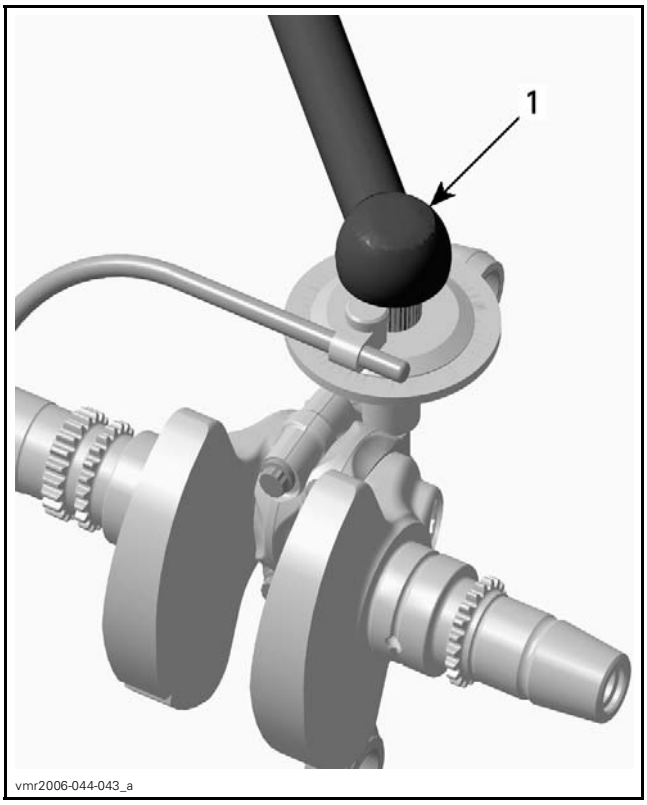

1. *Angle torque wrench*

800R/HD8 Engines:

NEW connecting rods can be installed either way.

CONNECTING RODS SCREWS TIGHTENING SEQUENCE	
1.	Tighten to 1/2 of specified torque
2.	Tighten to 20 N•m ± 2 N•m (15 lbf•ft ± 1 lbf•ft)
3.	Torque by an additional 60 ± 5° turn using an angle torque wrench

1000/HD10 Engines:

NOTICE **Connecting rods are asymmetric. There must be no gap between the small ends when they face each other.**

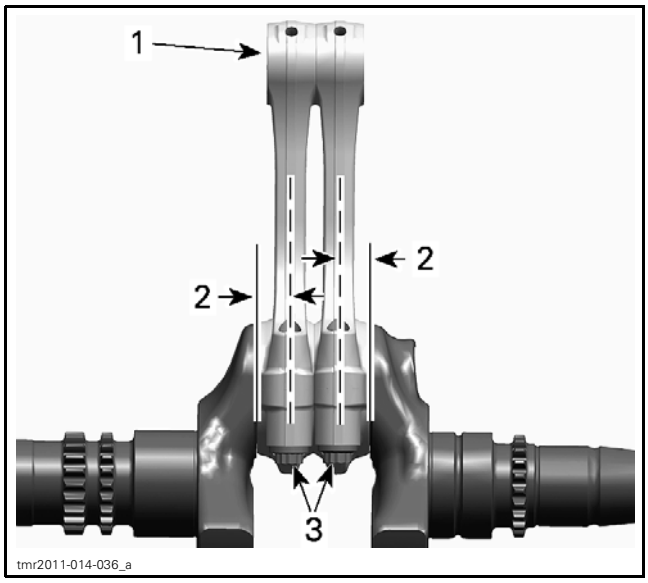

1. *Connecting rod small ends*
2. *Connecting rod offset*
3. *Connecting rod screws*

CONNECTING RODS SCREWS TIGHTENING SEQUENCE	
1.	Tighten to 1/2 of specified torque
2.	Tighten to 30 N•m ± 2 N•m (22 lbf•ft ± 1 lbf•ft)
3.	Torque by an additional 90 ± 5° turn using an angle torque wrench

Installing the Crankshaft

The installation is the reverse of the removal procedure. However, pay attention to the following.

Do not mix up the connecting rods of cylinders 1 and 2 during installation.

NOTICE **Observe the correct installation position when fitting the crankshaft with the connecting rods. The connecting rod MAG side has to face cylinder no. 1.**

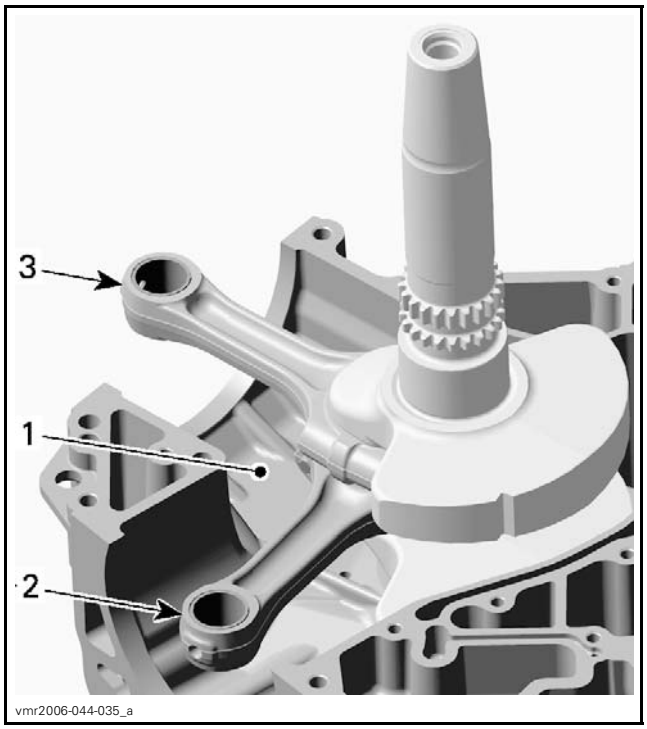

1. *Crankcase half MAG side*
2. *Connecting rod cylinder 1*
3. *Connecting rod cylinder 2*

CONTINUOUSLY VARIABLE TRANSMISSION (CVT) (HD5)

SERVICE TOOLS

Description	Part Number	Page
CLUTCH PULLER	529 035 746	7
DRIVE PULLEY HOLDER (CVT)	529 006 400	6
DRIVEN CLUTCH HOLDER	529 035 771	16
PULLER/LOCKING TOOL	529 036 098	5, 22

SERVICE PRODUCTS

Description	Part Number	Page
CLUTCH AND PULLEY FLANGE CLEANER PRO S1	779244	9, 17, 21
ISOFLEX GREASE TOPAS NB 52	293 550 021	14

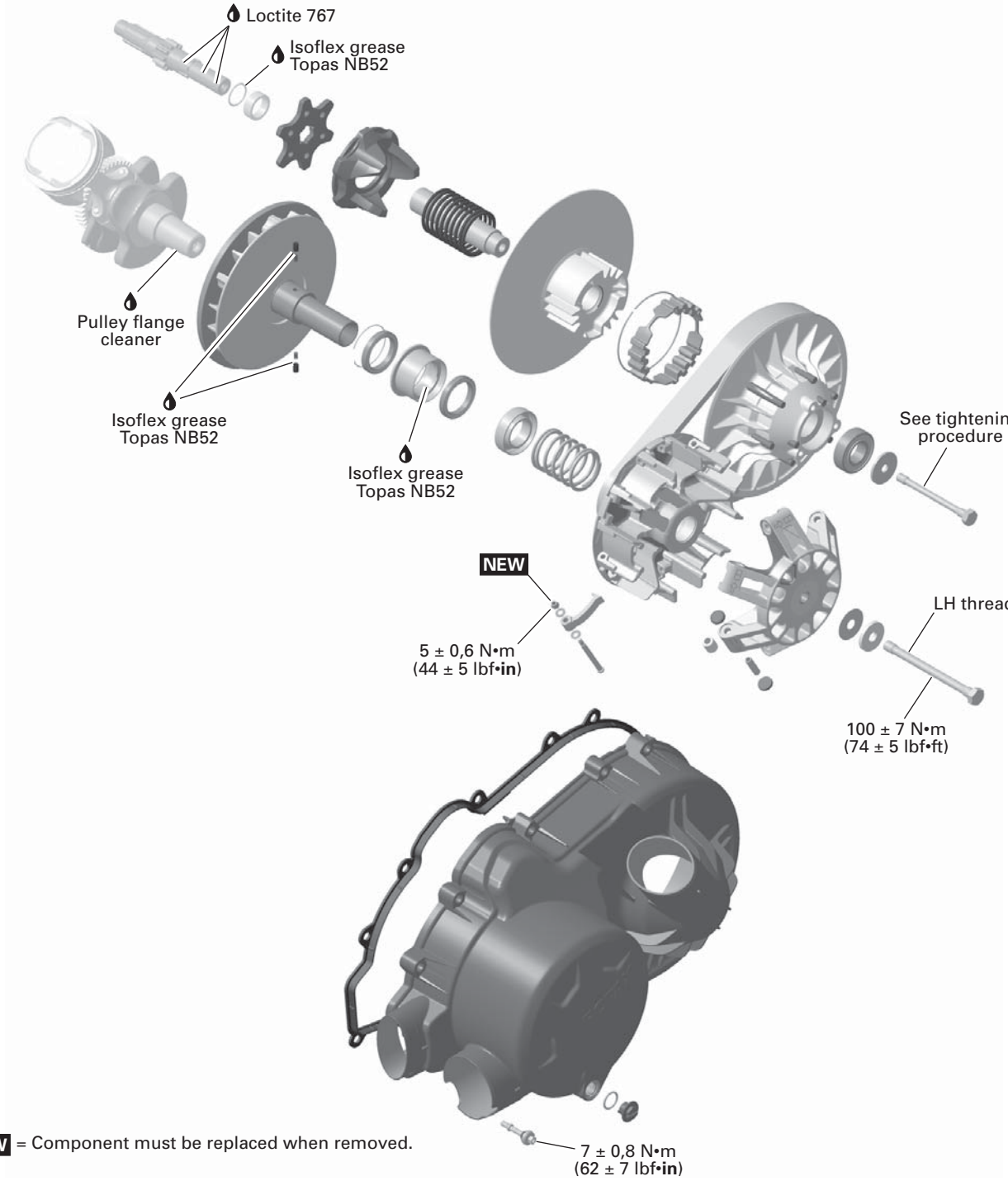

NEW = Component must be replaced when removed.

RHD5MY17-008-001_a

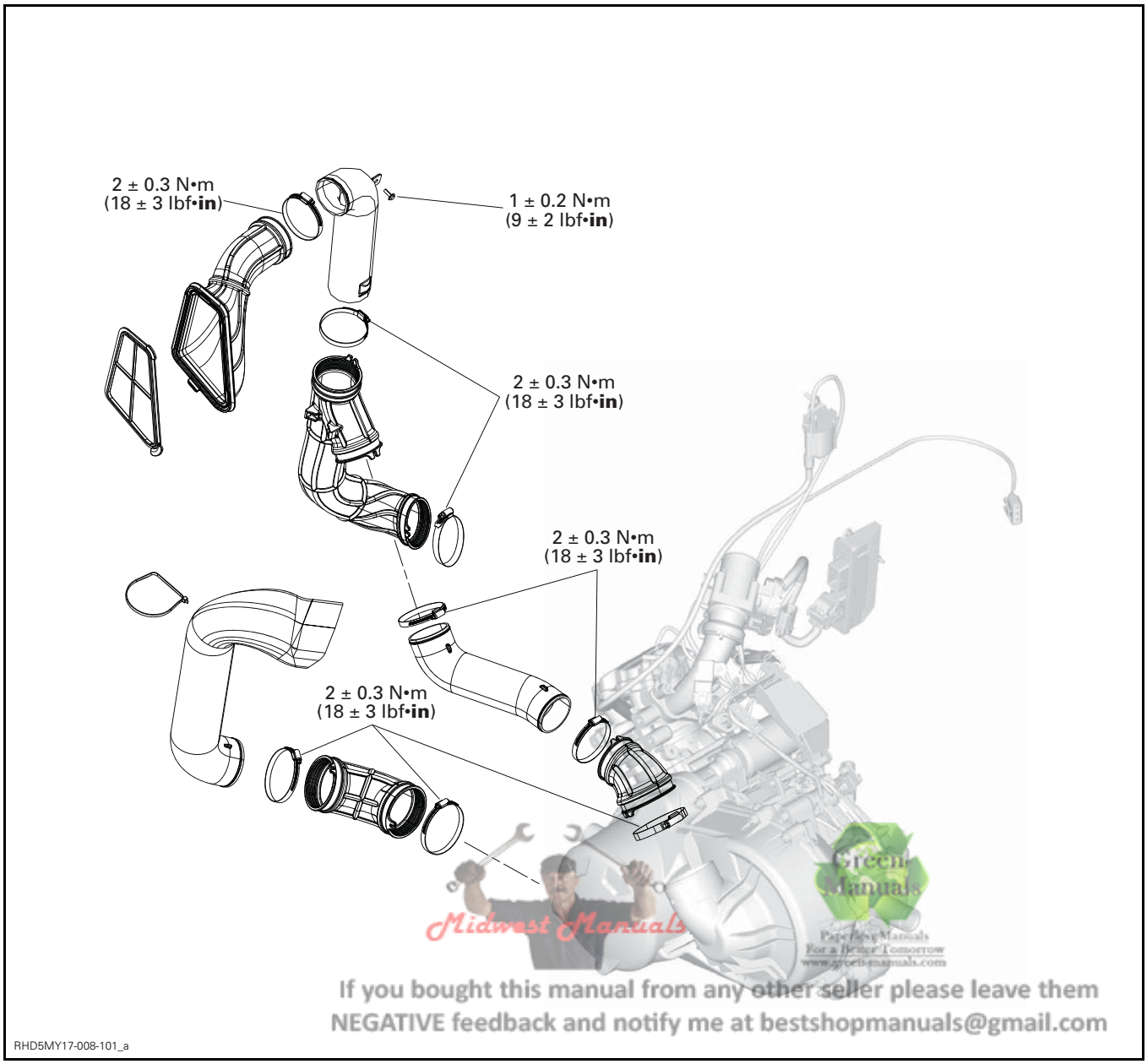

Midwest Manuals
Green Manuals
Paperless Manuals
For a Better Tomorrow
www.green-manuals.com
If you bought this manual from any other seller please leave them
NEGATIVE feedback and notify me at bestshopmanuals@gmail.com

GENERAL

NOTE: For a better understanding, some illustrations are taken with engine out of vehicle. To perform the following instructions, it is not necessary to remove engine from vehicle.

This CVT is lubrication free. Never lubricate any components except drive pulley one-way clutch.

⚠ WARNING

Never touch CVT while engine is running. Never drive vehicle when CVT cover is removed.

⚠ WARNING

Any drive pulley repairs must be performed by an authorized Can-Am dealer. Subcomponent installation and assembly tolerances require strict adherence to procedures detailed.

NOTICE **Never use any type of impact wrench at drive pulley removal and installation.**

⚠ WARNING

The clutch assembly is a precisely balanced unit. Never replace parts with used parts from another clutch assembly.

NOTICE **These pulleys have metric threads. Do not use imperial thread puller. Always tighten puller by hand to ensure that the drive pulley has the same type of threads (metric vs imperial) before tightening completely.**

PROCEDURES

CVT COVER

CVT Cover Access

Tilt cargo box.

Draining the CVT Cover

Turn bayonet cap 90° counterclockwise to open it.

Remove bayonet cap with O-ring.

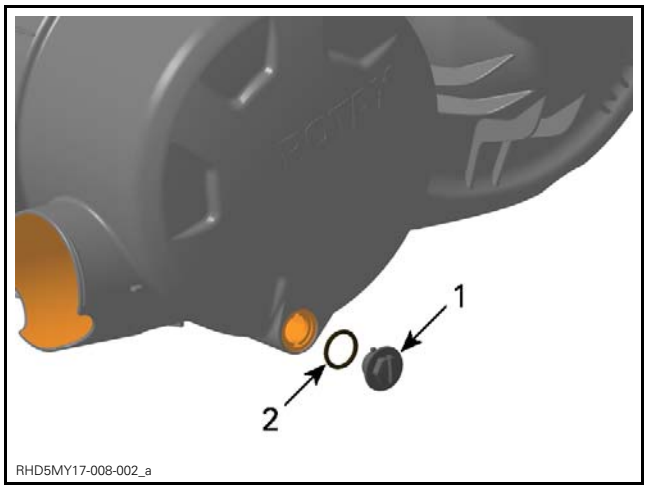

1. Bayonet cap
2. O-ring

Let water drain from CVT cover.

NOTICE **If an appreciable amount of water or any debris entered the CVT cover, CVT must be cleaned and inspected.**

Reinstall bayonet cap with O-ring.

Removing the CVT Cover

Disconnect CVT cooling air ducts.

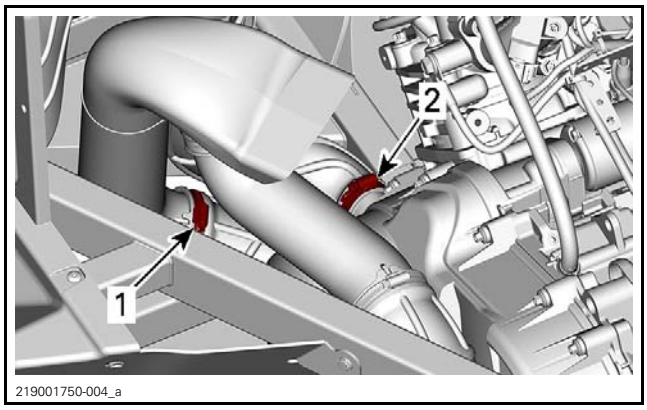

1. Outlet duct clamp
2. Front inlet duct clamp

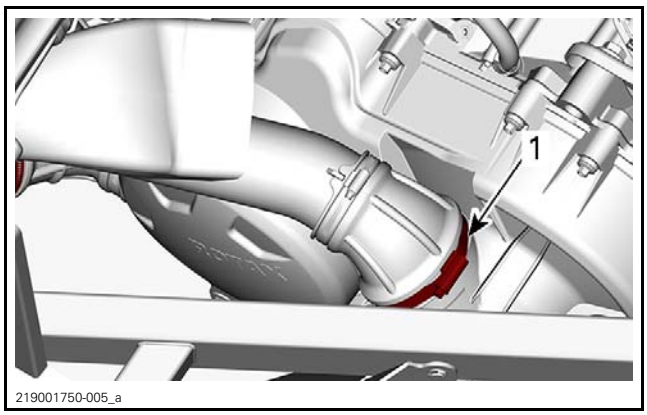

1. Rear inlet duct clamp

Remove:
- Retaining screws
- CVT cover
- Gasket.

NOTE: Do not use and impact tool to remove CVT cover screws.

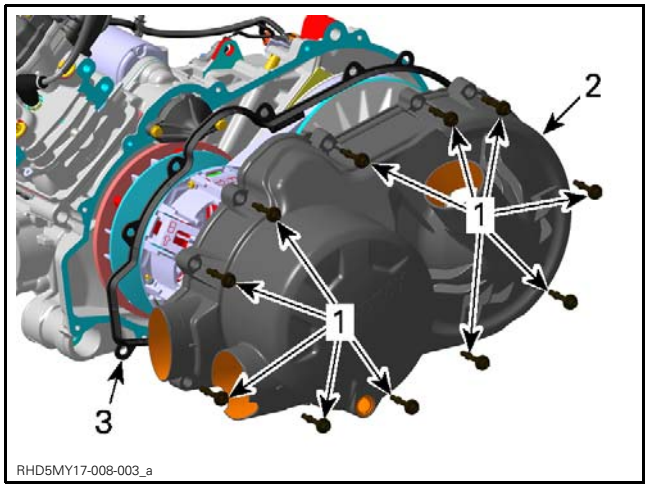

1. *Retaining screws*
2. *CVT cover*
3. *Gasket*

NOTE: To support the cover remove the center top screw last.

Installing the CVT Cover

Install the center top screw of cover in first.

Install the other screws then torque them in a crisscross sequence.

Tighten the CVT cover screws as per following sequence.

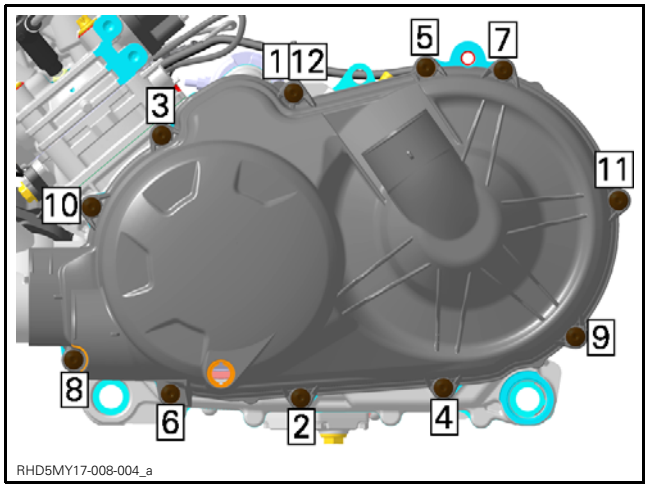

CVT COVER TIGHTENING SEQUENCE

TIGHTENING TORQUE	
CVT cover retaining screws	7 N•m ± 0.8 N•m (62 lbf•**in** ± 7 lbf•**in**)

Reinstall the CVT cooling ducts.

DRIVE BELT

Removing the Drive Belt

NOTICE **In case of a drive belt failure, the CVT cover, air inlet and air outlet must be cleaned and inspected for obstruction.**

Remove CVT cover, refer to procedure in this subsection.

Open driven pulley.

REQUIRED TOOL	
PULLER/LOCKING TOOL (P/N 529 036 098)	

Screw tool in the threaded hole of driven pulley and tighten to open the pulley.

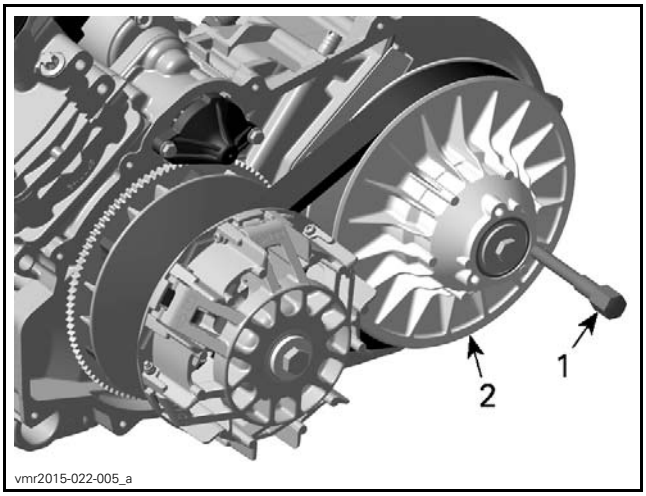

1. *Puller/locking tool*
2. *Fixed sheave of driven pulley*

Slide belt over the top edge of fixed sheave.

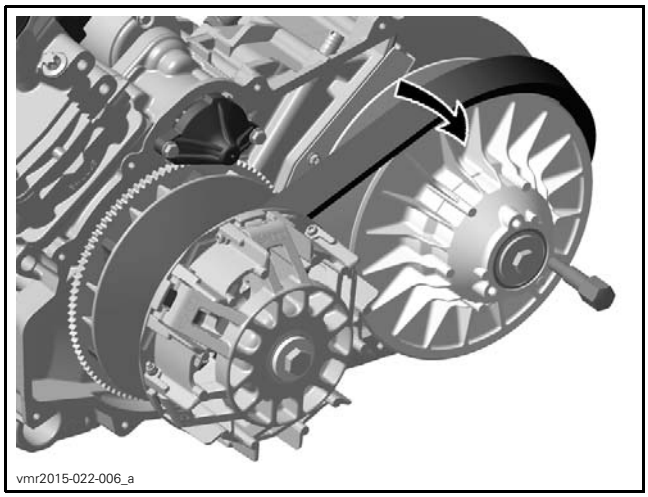

Inspecting the Drive Belt

For drive belt inspection, refer to the *PERIODIC MAINTENANCE PROCEDURES (HD5)* subsection.

Installing the Drive Belt

For installation, reverse the removal procedure. Pay attention to following details.

The maximum drive belt life span is obtained when the drive belt has the proper rotation direction. Install it so that the arrow printed on belt is pointing towards the back of the vehicle.

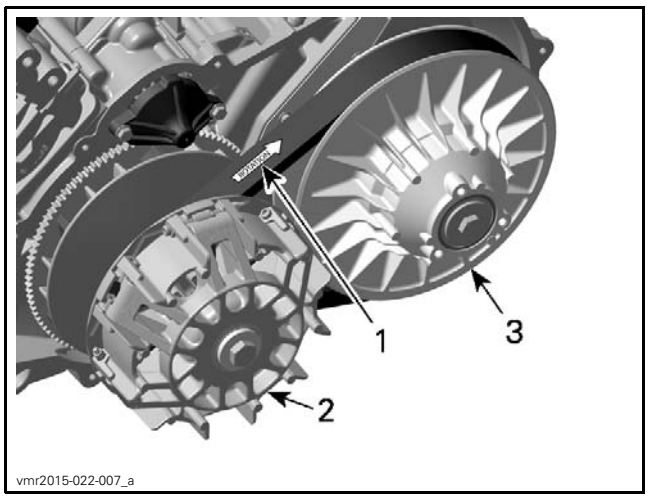

1. *Arrow towards the back of the vehicle*
2. *Drive pulley (front)*
3. *Driven pulley (rear)*

DRIVE PULLEY

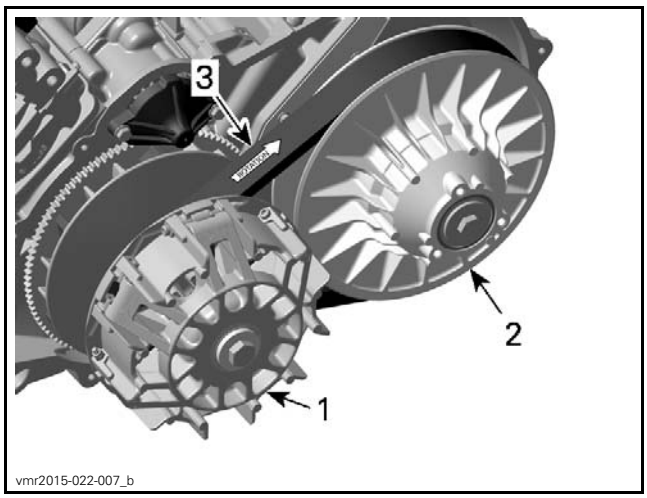

1. *Drive pulley*
2. *Driven pulley*
3. *Belt*

Removing the Drive Pulley

Remove drive belt, refer to procedure in this subsection.

Prior to removing the drive pulley, mark sliding sheave and governor cup together to ensure correct reinstallation. There are 4 levers mounted out of 6 possible positions.

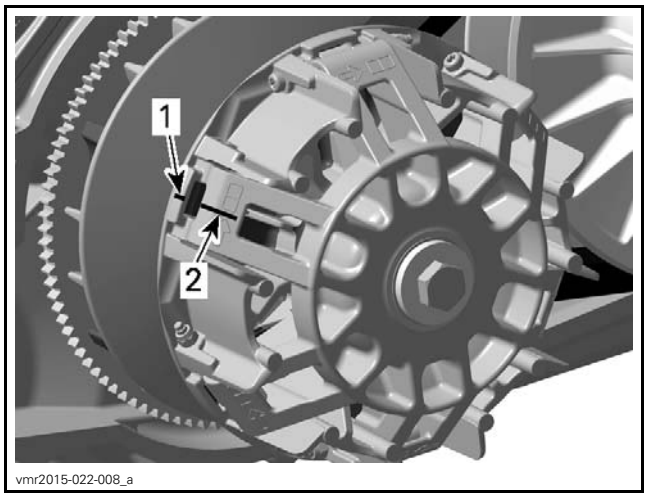

1. *Mark on drive pulley sliding sheave*
2. *Mark on governor cup*

To block drive pulley, two methods can be used:

– Lock crankshaft. Refer to the *BOTTOM END* subsection.
– Block drive pulley.

REQUIRED TOOL	
DRIVE PULLEY HOLDER (CVT) (P/N 529 006 400)	

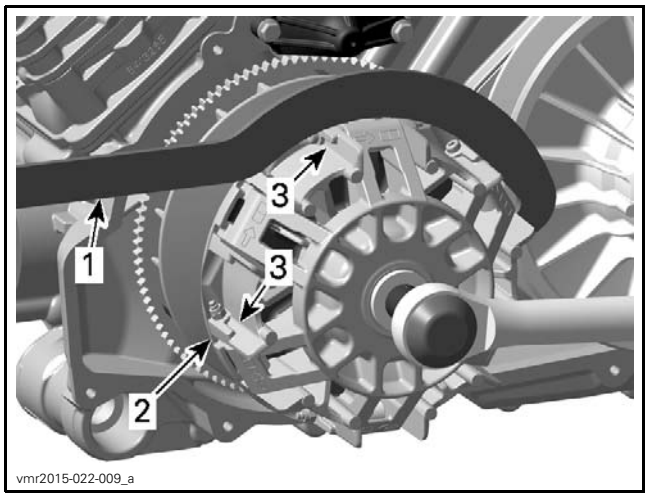

1. Drive pulley holder
2. Drive pulley sliding sheave
3. Area to place holding tool hook

Loosen drive pulley screw clockwise.

NOTICE **Drive pulley screw has LH threads.**

NOTE: Do not unscrew the drive pulley screw completely. If governor cup is stuck, hit it using a soft hammer.

Remove service tool.

Apply axial pressure with your hand on the sliding sheave and governor cup.

Remove:
- Screw
- Spring washer
- Thrust washer.

⚠ CAUTION **Sliding sheave of drive pulley is spring loaded.**

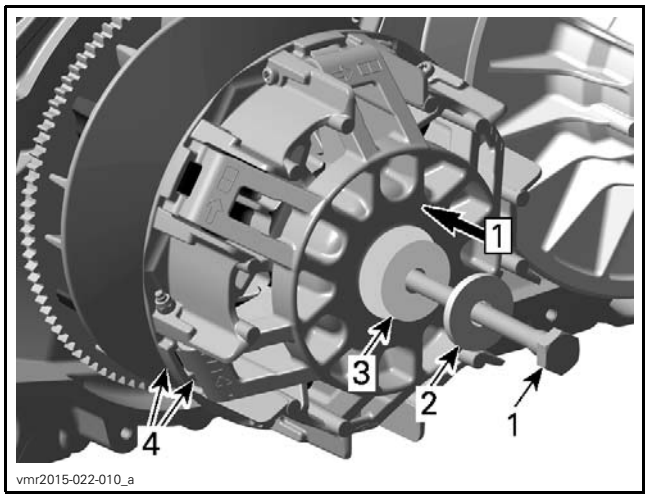

Step 1: Push

1. Drive pulley screw
2. Spring washer
3. Thrust washer
4. Sliding sheave with governor cup

Slowly release spring pressure and remove sliding sheave.

Slowly release sliding sheave.

Remove fixed sheave.

REQUIRED TOOL	
CLUTCH PULLER (P/N 529 035 746)	

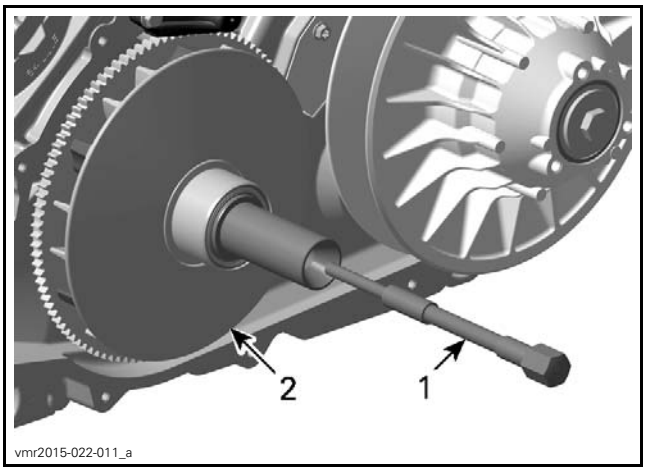

1. Drive pulley puller
2. Fixed sheave

Disassembling the Drive Pulley

Governor Cup

Carefully lift governor cup until slider shoes come at their highest position into guides.

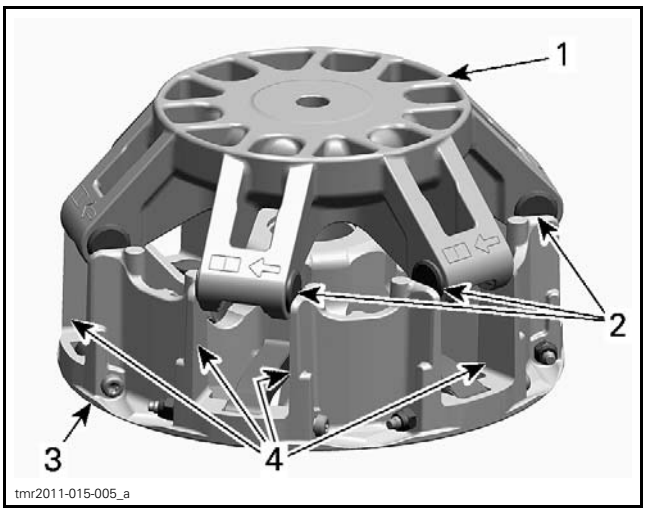

1. Governor cup
2. Slider shoes
3. Sliding sheave
4. Guides

NOTE: The following procedure is not necessary except if roller must be removed. Refer to *INSPECTING THE DRIVE PULLEY* subsection before proceeding.

NOTE: Whenever removing a governor cup that has the 2 boxes marked (punch marks), replace it with a new one.

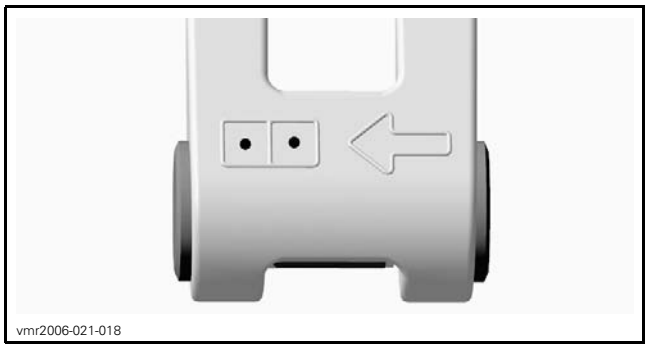

Remove slider shoes

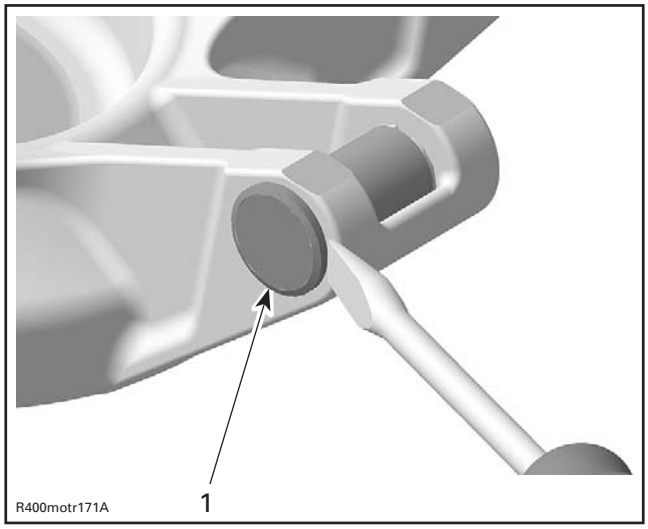

1. Slider shoe

Put governor cup on a vise. Use protection plates on the vise jaws to avoid marks and/or damages to the governor cup.

Push out roller sleeve with an appropriate punch in the direction illustrated (against insertion arrow marked on governor cup arm).

NOTE: Use a punch with a smaller diameter than the roller sleeve.

NOTICE **Do not clamp the governor cup in the vise to push out bearing sleeve. Governor cup will be damaged.**

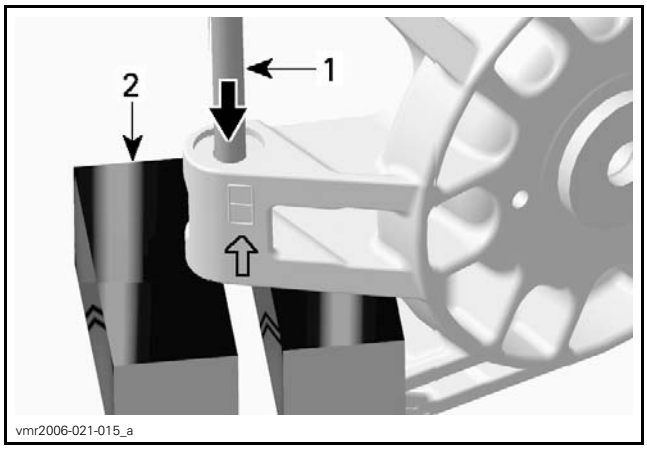

PUSHING OUT ROLLER SLEEVE
1. Punch
2. Vise

NOTICE **Always replace all rollers at the same time. Partially worn rollers may cause damage to the CVT system.**

Remove roller sleeve and roller.

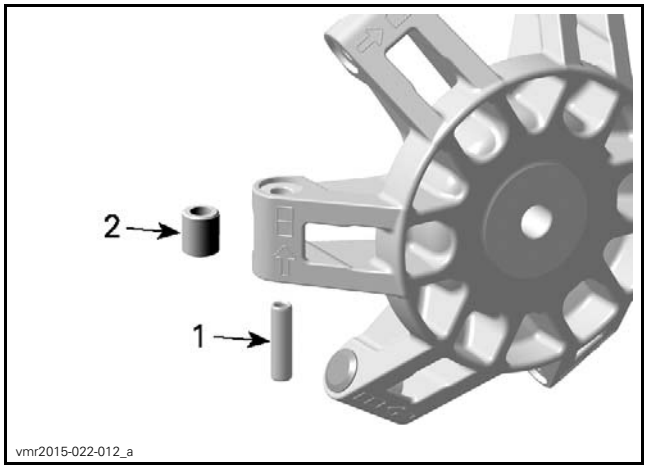

1. Roller sleeve
2. Roller

Sliding Sheave

NOTE: This drive pulley is equipped with 4 levers.

Unscrew lock nut and remove centrifugal lever pivot bolt.

Remove centrifugal lever and both thrust washers.

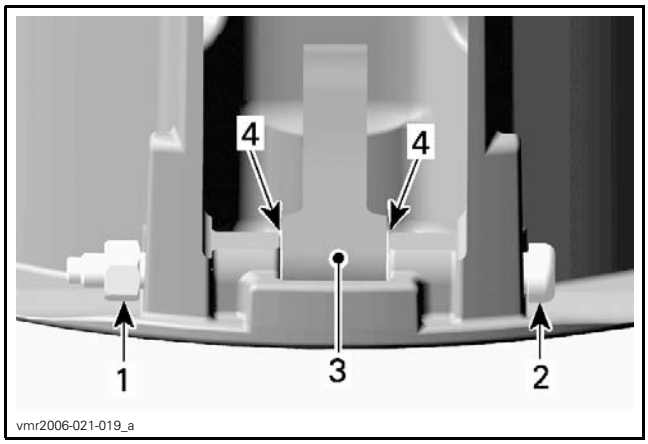

1. *Lock nut*
2. *Centrifugal lever pivot bolt*
3. *Centrifugal lever*
4. *Thrust washers*

Fixed Sheave

Pull and rotate one-way clutch slowly until the half of spring sleeves are visible.

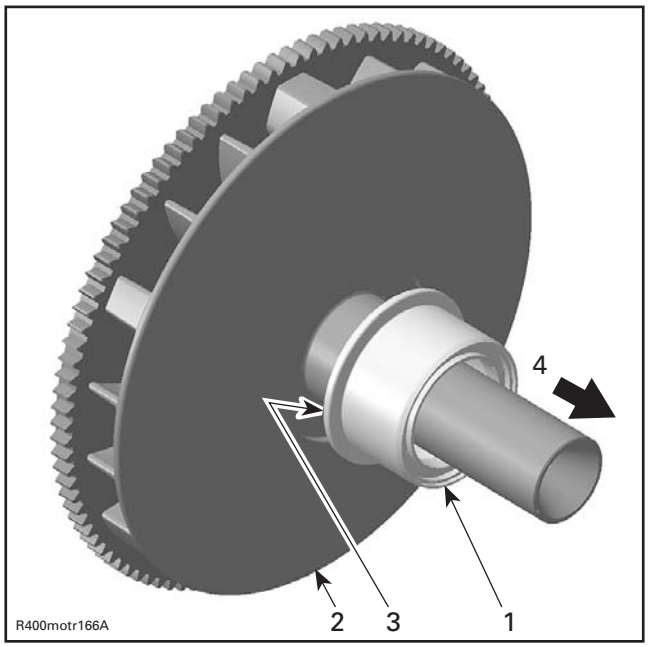

1. *One-way clutch*
2. *Fixed sheave*
3. *Spring sleeve area*
4. *Direction of removal*

Hold both spring sleeves with fingers and carefully remove them when the one-way clutch is disengaged.

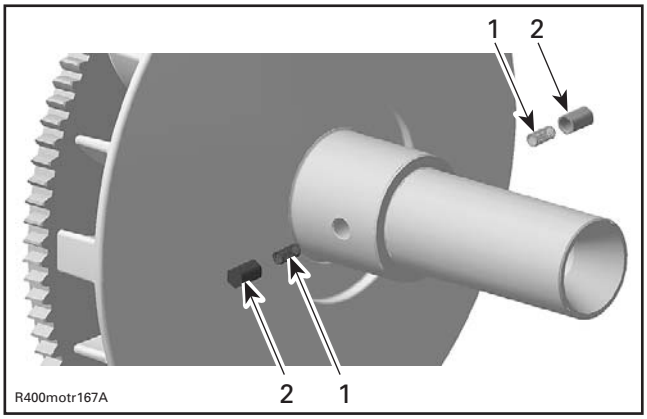

1. *Spring*
2. *Spring sleeves*

Cleaning the Drive Pulley

Clean pulley faces and shaft with fine steel wool and dry cloth.

Using a paper towel with the recommended cleaning solvent, clean:

– Crankshaft tapered end
– Crankshaft threads
– Taper inside of the fixed sheave of the drive pulley
– Drive pulley screw threads.

SERVICE PRODUCT
CLUTCH AND PULLEY FLANGE CLEANER PRO S1 (P/N 779244)

NOTICE **To avoid damage, make sure cleaner does not contact the crankshaft seal.**

Remove all hardened oil deposits that have baked on crankshaft and pulley tapered surfaces with coarse or medium steel wool and/or sand paper no. 600.

NOTICE **Do not use any other type of abrasive.**

Reclean mounting surfaces with paper towel and cleaning solvent.

Wipe off the mounting surfaces with a clean, dry paper towel.

NOTICE **Mounting surfaces must be free of any oil, cleaner or towel residue.**

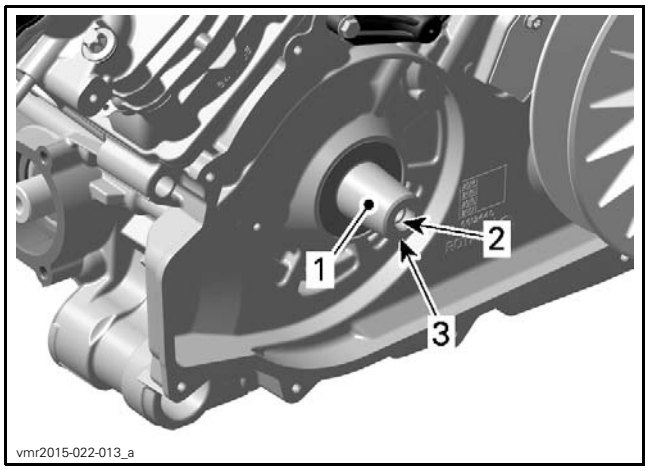

1. *Taper*
2. *Threads*
3. *Crankshaft*

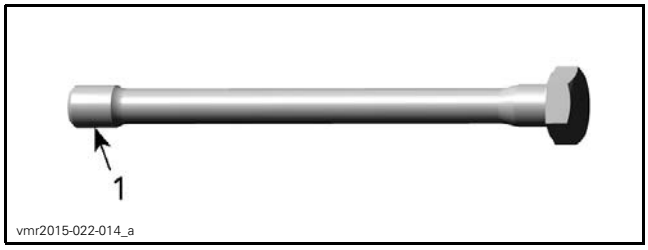

1. *Drive pulley screw threads*

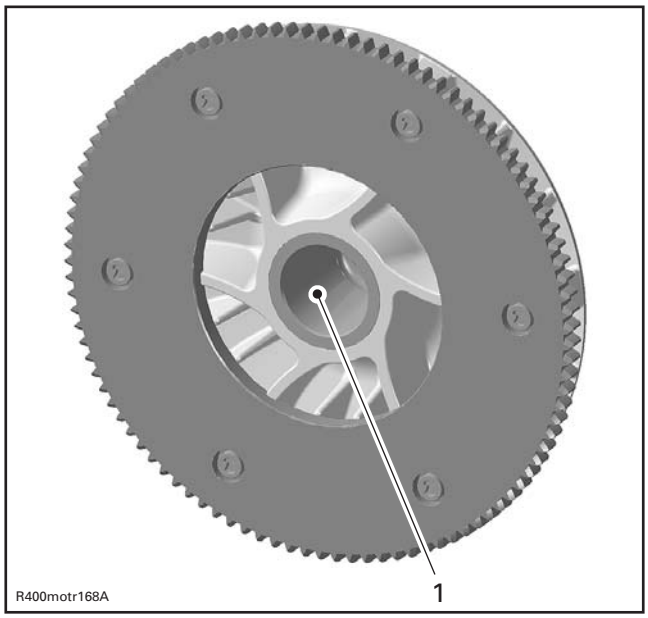

1. *Taper of fixed sheave*

Only use petrol base cleaner when cleaning bushings.

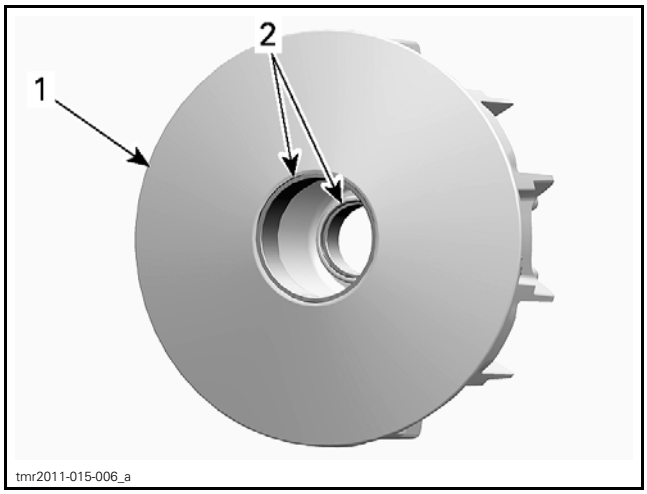

1. *Sliding sheave*
2. *Bushings*

NOTICE Do not use acetone to clean bushing.

Inspecting the Drive Pulley

Governor Cup

Check governor cup for cracks or other visible damages. Replace if necessary.

Roller and Slider Shoe

Check each roller for roundness of external diameter.

NOTE: Whenever replacing rollers and slider shoes, always replace all rollers and slider shoes as a set.

Check slider shoes for visible wear and replace if damaged.

Measure the roller diameter. If one roller is out of specification, replace all rollers.

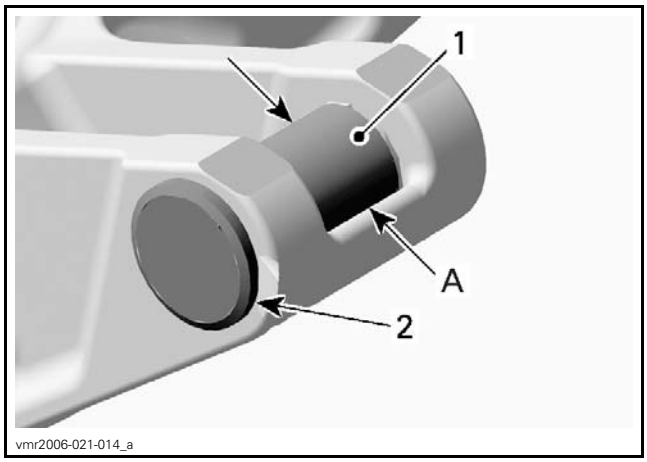

1. *Roller*
2. *Slider shoe*

A. *Roller outer diameter*

ROLLER OUTER DIAMETER	
NEW	13.80 mm to 14.00 mm (.543 in to .551 in)
SERVICE LIMIT	13.20 mm (.52 in)
ROLLER INNER DIAMETER	
NEW	8.025 mm to 8.175 mm (.316 in to .322 in)
SERVICE LIMIT	9.00 mm (.354 in)

Centrifugal Lever Pivot Bolt

Measure diameter of centrifugal lever pivot bolt, replace if it is out of specification.

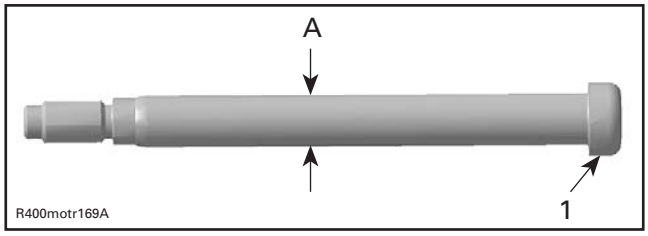

1. Centrifugal lever pivot bolt
A. Measure diameter here

CENTRIFUGAL LEVER PIVOT BOLT DIAMETER	
SERVICE LIMIT	6.000 mm (.236 in)

Centrifugal Lever

Check bushing diameter in the centrifugal lever for wear. If a centrifugal lever must be replaced, replace all levers at the same time.

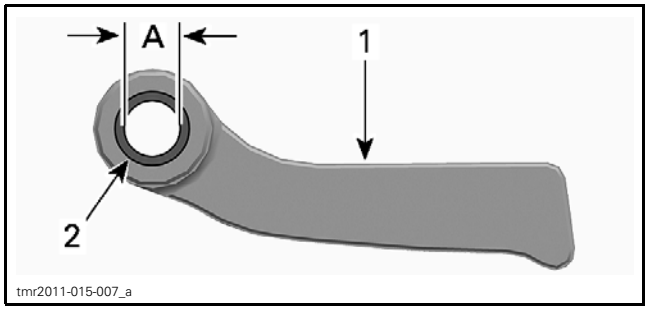

1. Centrifugal lever
2. Bushing
A. Bushing inner diameter

CENTRIFUGAL LEVER BORE DIAMETER	
SERVICE LIMIT	6.200 mm (.244 in)

Inspect and replace as necessary the following items if their contact surfaces are heavy worn:

– Centrifugal lever
– Thrust washers
– Centrifugal lever pivot bolts
– Lock nuts.

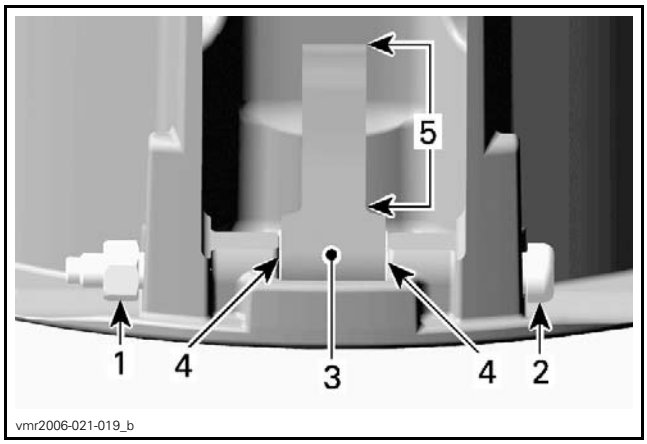

1. Lock nut
2. Centrifugal lever pivot bolt
3. Centrifugal lever
4. Thrust washers
5. Contact surface to the roller

NOTICE **Whenever replacing centrifugal levers, always replace all levers at the same time. Otherwise, the drive pulley will be unbalanced (because of lever differences).**

Sliding Sheave

Check sliding sheave for cracks and sliding contact surface for excessive wear. Replace sliding sheave if necessary.

Measure centrifugal lever pivot bolt bores. Replace sliding sheave if bores are out of specification or damaged.

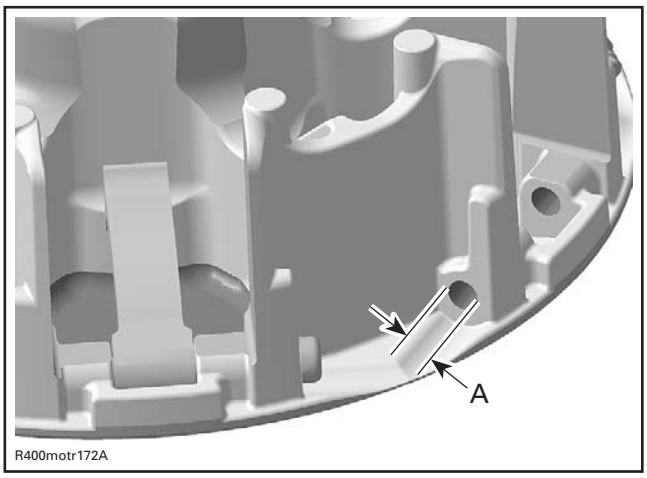

A. Centrifugal lever pivot bolt bore diameter

CENTRIFUGAL LEVER PIVOT BOLT BORE DIAMETER	
NEW	6.113 mm to 6.171 mm (.241 in to .243 in)
SERVICE LIMIT	6.300 mm (.248 in)

Measure bushing diameters of sliding sheave.

REQUIRED TOOL
Dial bore gauge

MEASURING POINT
At least 5 mm (1/4 in) from bushing edge

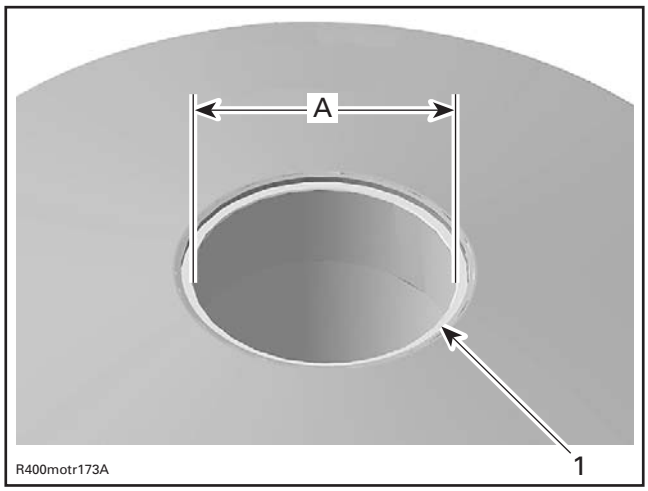

1. Bushing on fixed sheave side
A. Bore diameter of bushing

SLIDING SHEAVE LARGE BUSHING	
NEW	55.000 mm to 55.040 mm (2.165 in to 2.167 in)
SERVICE LIMIT	55.200 mm (2.173 in)

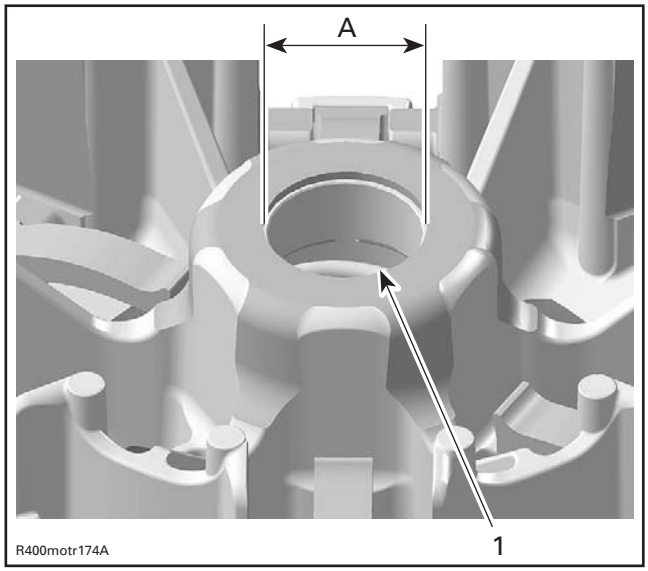

1. Bushing on governor cup side
A. Bore diameter of bushing

SLIDING SHEAVE SMALL BUSHING	
NEW	30.000 mm to 30.040 mm (1.181 in to 1.183 in)
SERVICE LIMIT	30.200 mm (1.189 in)

Replace sliding sheave if one of the bushings is out of specification. Visually inspect coatings.

Fixed Sheave

Check fixed sheave contact surface to the governor cup for scoring and other damages. If so, replace fixed sheave.

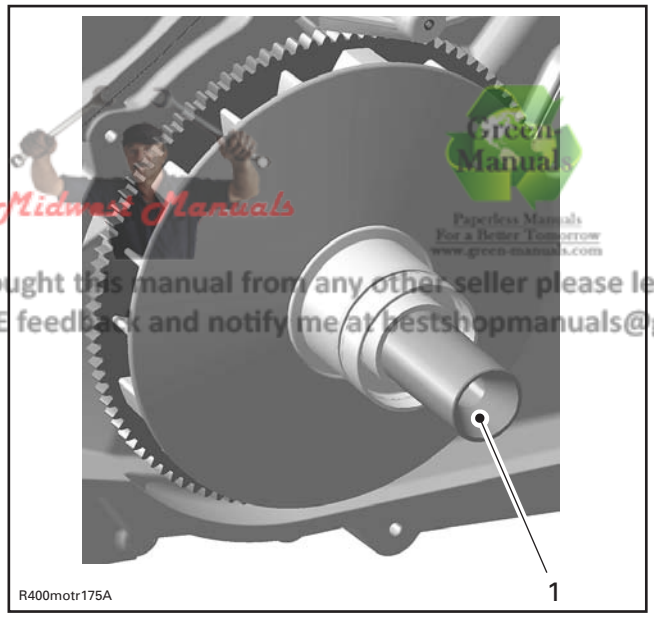

1. Visually check here

Midwest Manuals
Green Manuals
Paperless Manuals For a Better Tomorrow www.green-manuals.com
If you bought this manual from any other seller please leave them NEGATIVE feedback and notify me at bestshopmanuals@gmail.com

Check for any marks on fixed sheave plate. Replace if necessary.

Check ring gear teeth for excessive wear or other damage. Replace fixed sheave if necessary.

⚠ WARNING

Fixed sheave and ring gear are balanced together. Always replace both parts together otherwise severe injury and/or damages may occur.

Spring

Measure spring free length and squareness. If spring is out of specification, replace by a new one.

SPRING FREE LENGTH	
SERVICE LIMIT	75 mm (2.953 in)

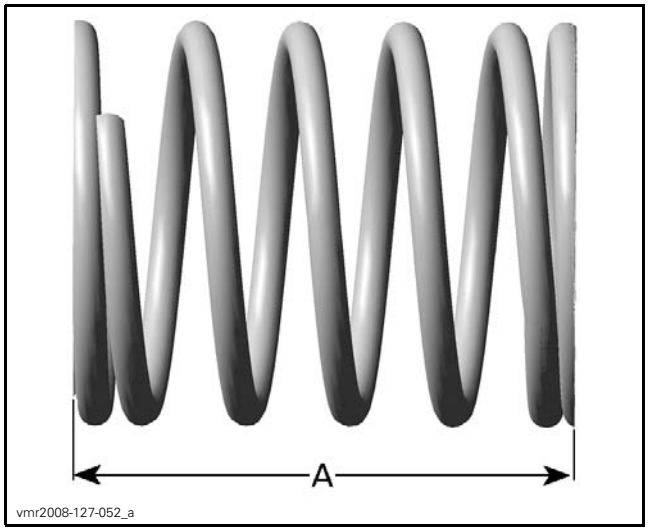

A. Free length

CLUTCH SPRING SQUARENESS	
SERVICE LIMIT	4 mm (.157 in)

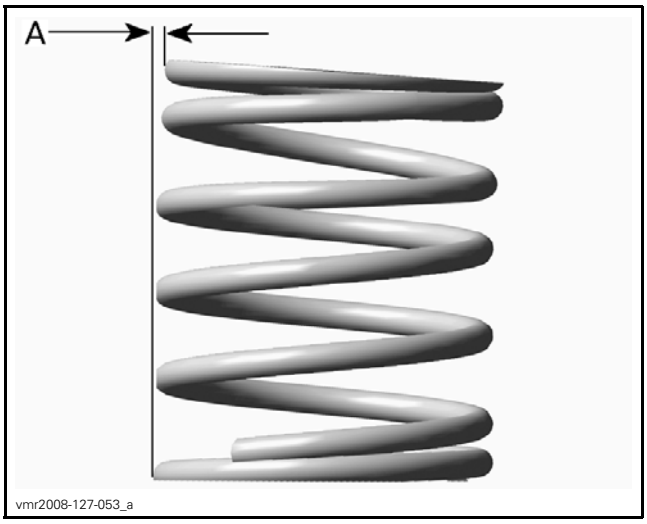

A. Squareness

One-Way Clutch

Check bearings for excessive play and smooth operation. Replace one-way clutch if necessary.

NOTICE **Be careful not to damage the inside of one-way clutch during bearing removal.**

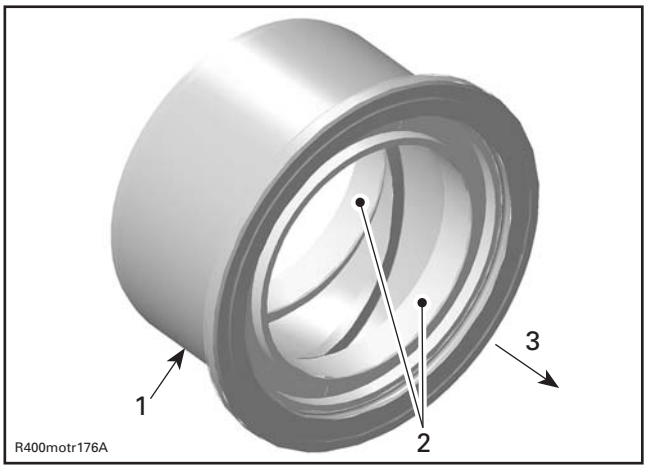

1. *One-way clutch*
2. *Bearings*
3. *Drive pulley sliding sheave side*

Measure length of spring sleeve and check if edges on top of the spring sleeve are excessively worn. If out of specifications, replace both spring sleeves and springs at the same time.

SPRING SLEEVE LENGTH	
NEW	9.2 mm to 9.4 mm (.362 in to .37 in)
SERVICE LIMIT	9.0 mm (.354 in)

Drive Pulley Assembly

For assembly, reverse the disassembly procedure. Pay attention to following details.

One-Way Clutch

Lubricate spring sleeves, springs and between one-way clutch bearings using recommended product.

SERVICE PRODUCT
ISOFLEX GREASE TOPAS NB 52 (P/N 293 550 021)

Sliding Sheave

Install centrifugal lever and both thrust washers.

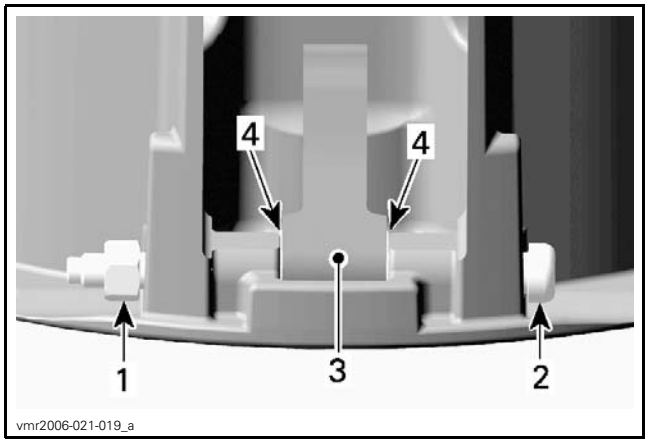

1. *Lock nut*
2. *Centrifugal lever pivot bolt*
3. *Centrifugal lever*
4. *Thrust washers*

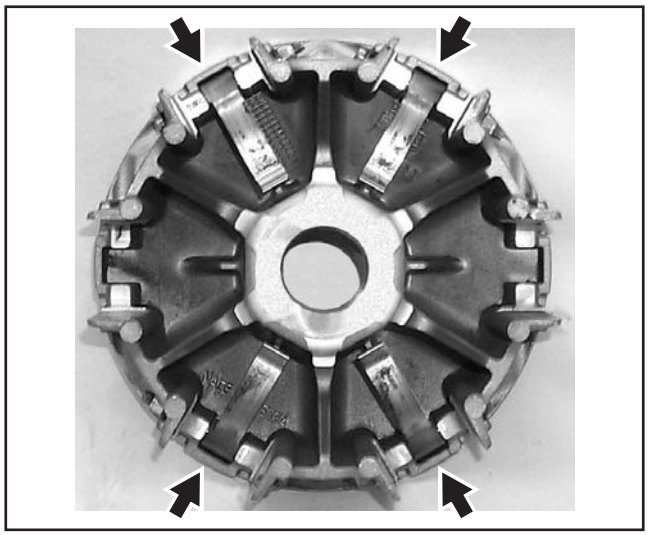

NOTICE Centrifugal lever must move easily after installation.

Governor Cup

Rebuild governor cup with NEW roller sleeves, thrust washers, rollers and slider shoes.

Push in roller sleeve with an appropriate punch in the direction of the protruding arrow. Push until roller sleeve aligns with the contact surface of the slider shoe.

NOTICE Final position of roller sleeve has to be flush with the contact surface of the slider shoes (no protrusion).

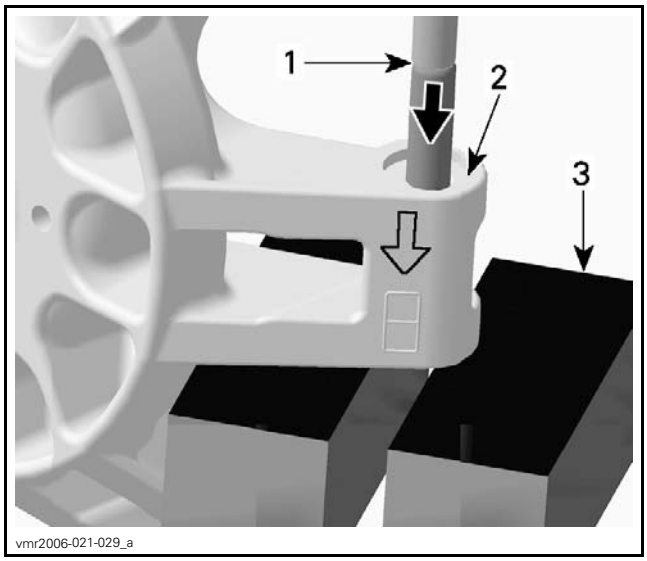

1. *Top edge of roller sleeve*
2. *Mating surface of slider shoes*
3. *Vise*

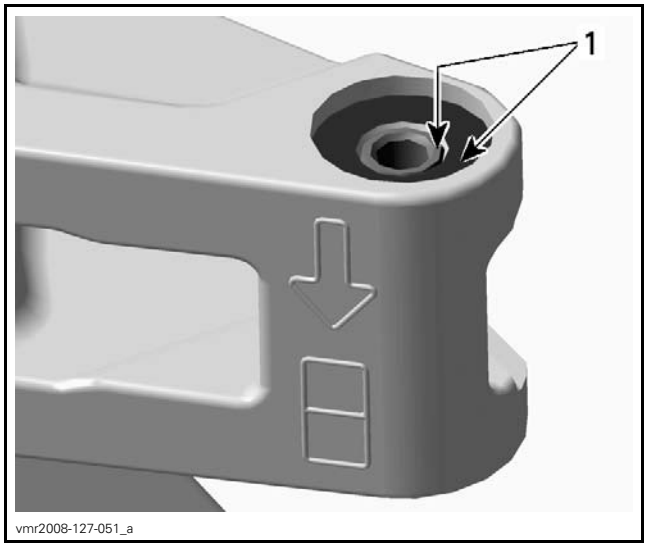

1. *Flush surfaces*

Whenever replacing roller sleeves, punch a mark in an empty telltale box. If each box is already marked, replace governor cup with a new one.

NOTICE Do not tap too hard. Severe damage to the governor cup may appear.

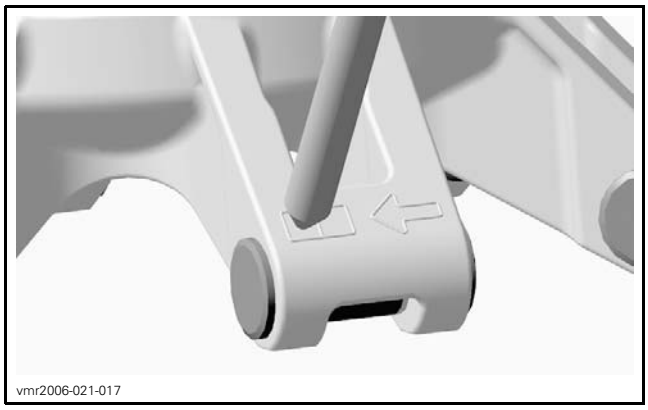
vmr2006-021-017

NOTICE **Rollers must move easily after installation.**

Carefully press slider shoes in the governor cup arm so they **bottom out evenly** in the machined portion of the governor cup arm.

NOTICE **Slider shoes must be pressed in evenly to ensure they are centered in the arm and slide properly in the guides.**

Align governor cup with sliding sheave using the marks traced at disassembly.

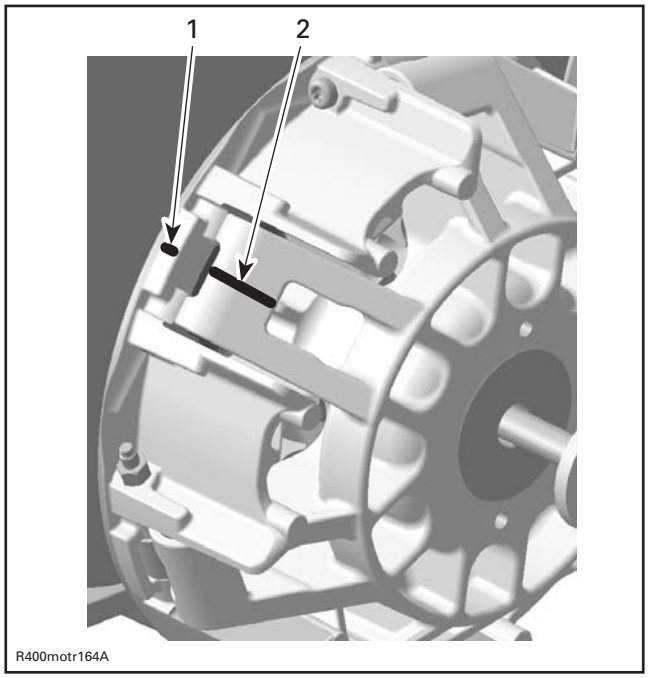

R400motr164A

1. *Mark on drive pulley sliding sheave*
2. *Mark on governor cup*

Installing the Drive Pulley

For installation, reverse the removal procedure. Pay attention to the following details.

NOTICE **Do not apply antiseize or any lubricant on crankshaft and drive pulley tapers.**

NOTICE **Never use any type of impact wrench at drive pulley removal and installation.**

Clean mounting surfaces. Refer to *CLEANING THE DRIVE PULLEY* procedure in this subsection.

Install drive pulley on crankshaft extension.

Install:
- Thrust washer
- Spring washer with its concave side towards drive pulley
- Drive pulley screw.

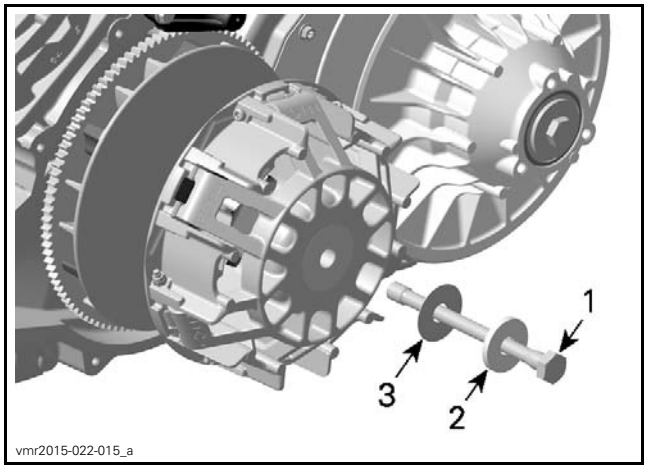

vmr2015-022-015_a

1. *Drive pulley screw*
2. *Spring washer*
3. *Thrust washer*

⚠ WARNING

Never substitute spring washer and/or screw with aftermarket parts. Always use BRP genuine parts.

Lock the drive pulley as per removal procedure.

Tighten drive pulley screw counterclockwise to specification.

TIGHTENING TORQUE	
Drive pulley screw	100 N•m ± 7 N•m (74 lbf•ft ± 5 lbf•ft)

NOTE: Drive pulley screw has LH threads.

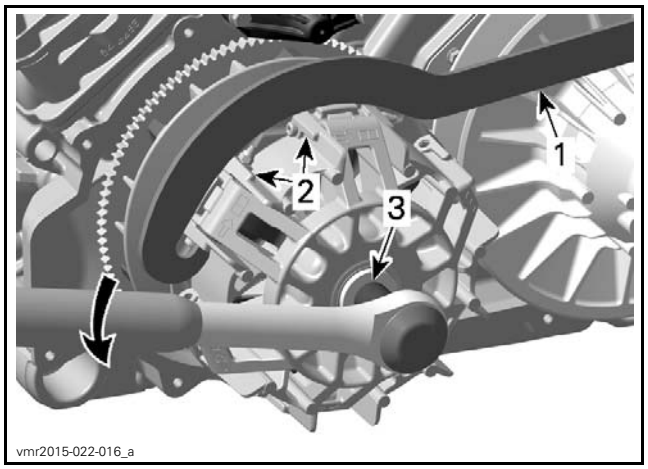

1. *Drive pulley holder*
2. *Drive pulley removal/installation area*
3. *Drive pulley screw*

DRIVEN PULLEY

Removing the Driven Pulley

Remove . Refer to *DRIVE BELT* in this subsection.

Block driven pulley fixed sheave.

REQUIRED TOOL	
DRIVEN CLUTCH HOLDER (P/N 529 035 771)	

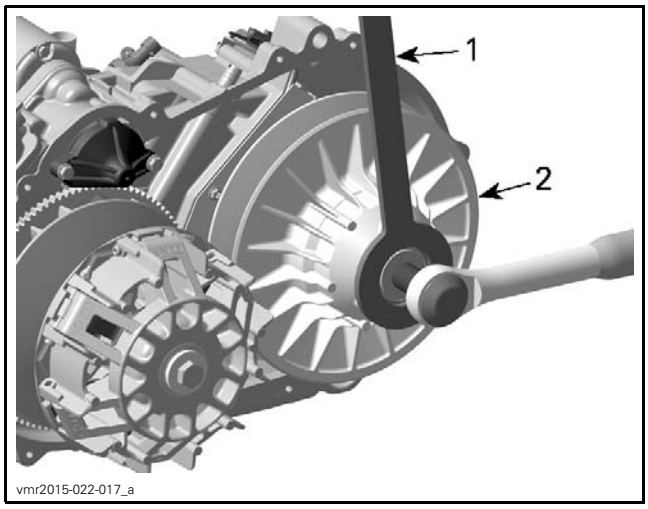

1. *Driven clutch holder*
2. *Driven pulley fixed sheave*

Unscrew the driven pulley screw.

NOTE: Do not remove screw completely.

Apply axial pressure with your hand on driven pulley and maintain during screw removal.

Remove:

– Driven pulley screw
– Washer.

⚠ WARNING

Driven pulley is spring loaded. Hold driven clutch pulley tight and slowly remove the driven pulley screw to release spring tension.

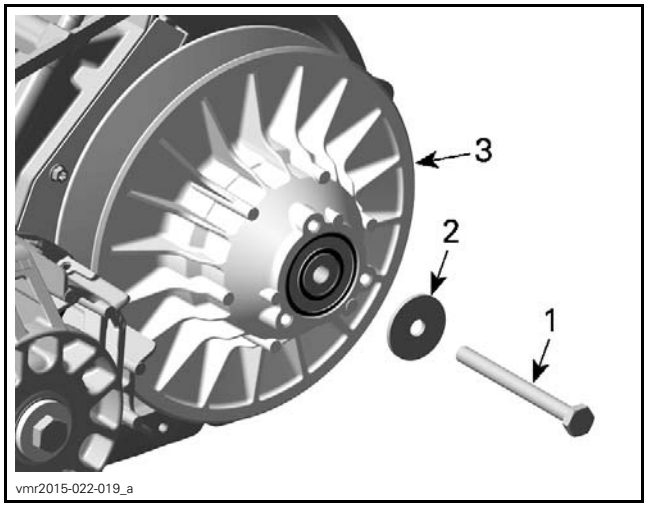

1. *Driven pulley screw*
2. *Washer*
3. *Driven pulley fixed sheave*

Remove:

– Driven pulley
– Spring
– Cam
– Plate.

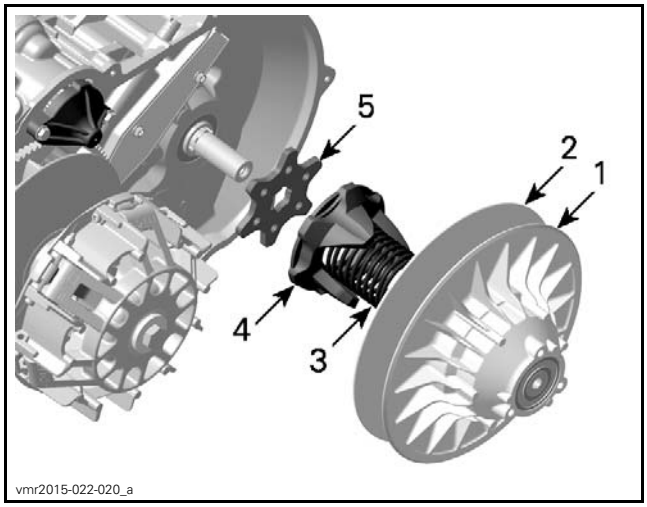

1. *Fixed sheave of driven pulley*
2. *Sliding sheave of driven pulley*
3. *Spring*
4. *Cam*
5. *Plate*

Remove distance sleeve including O-ring from counter shaft on engine PTO side.

Replace O-ring if brittle, hard or damaged.

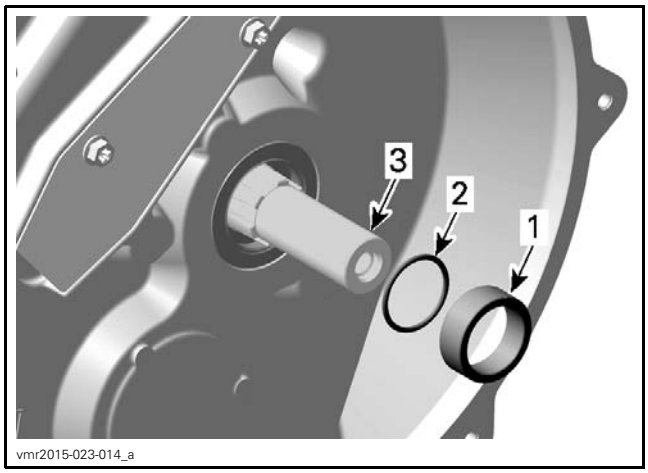

1. *Distance sleeve*
2. *O-ring*
3. *Counter shaft*

Disassembling the Driven Pulley

Fixed Sheave

Remove retaining ring and lift torque gear.

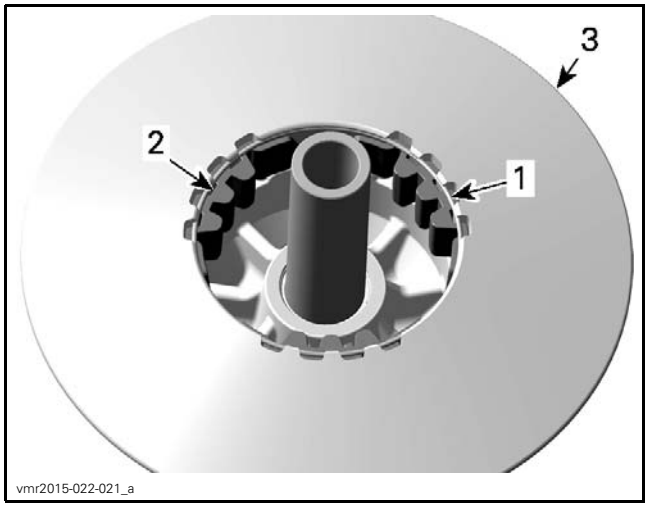

1. *Retaining ring*
2. *Torque gear*
3. *Fixed sheave of driven pulley*

NOTE: The following procedure is not necessary except if ball bearing or shaft must be removed. Refer to *INSPECTING THE DRIVEN PULLEY* before proceeding.

Heat ball bearing area up to 100°C (212°F) before removing ball bearing.

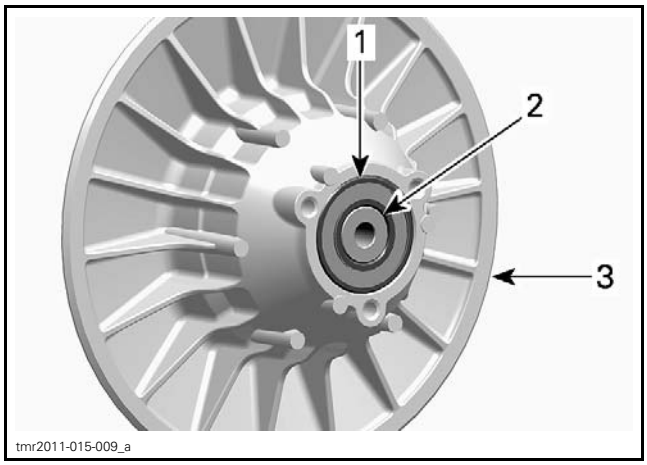

1. *Ball bearing*
2. *Shaft*
3. *Fixed sheave of driven pulley*

Use a soft hammer to push shaft with bearing out of fixed sheave.

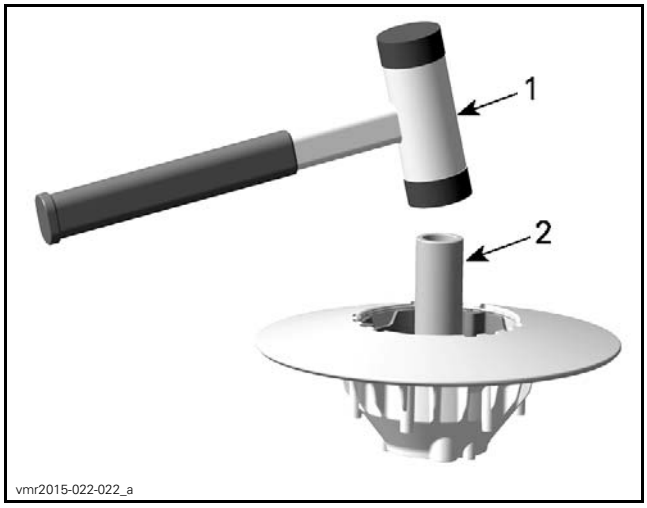

1. *Soft hammer*
2. *Shaft*

Remove shaft from ball bearing.

Cleaning the Driven Pulley

To remove a dust deposit from cam or shaft, use a dry cloth.

Clean pulley faces and shaft with fine steel wool and dry cloth.

Clean driven pulley using the recommended product

SERVICE PRODUCT
CLUTCH AND PULLEY FLANGE CLEANER PRO S1 (P/N 779244)

Clean the CVT crankcase area from contamination.

Using a paper towel with cleaning solvent to clean counter shaft end and the inside of the shaft.

NOTICE To avoid damage, make sure cleaner does not contact the counter oil shaft seal.

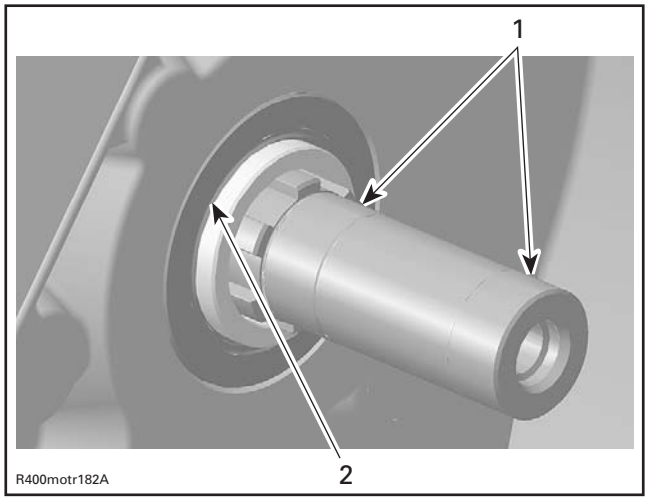

1. *Counter shaft supports*
2. *Sealing lip of counter shaft oil seal*

Inspecting the Driven Pulley

Sliding Sheave

Check sliding sheave for cracks and sliding contact surface for excessive wear. Replace sliding sheave if necessary.

Check bushings for cracks, scratch and for free movement when assembled to sliding sheave.

Using a dial bore gauge, measure bushing diameters. Measuring point must be at least 5 mm (1/4 in) from bushing edges.

Measure bushing inner diameter.

NOTE: Bushings cannot be replaced. Replace sliding sheave if bushings are out of specification. Visually inspect coatings.

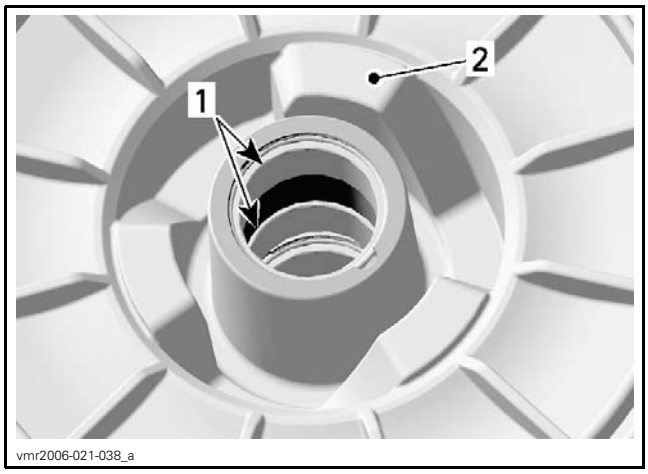

1. *Bushings*
2. *Backside of sliding sheave*

REQUIRED TOOL
Dial bore gauge

MEASURING POINT
At least 5 mm (1/4 in) from bushing edge

BUSHINGS INNER DIAMETER	
NEW	30.060 mm to 30.100 mm (1.183 in to 1.185 in)
SERVICE LIMIT	30.200 mm (1.189 in)

Fixed Sheave

Check fixed sheave for cracks and excessive wear. Replace fixed sheave if necessary.

Check ball bearing for free play and smooth operation. Replace if necessary.

Check shaft for heavy wear or visible damage. Replace if necessary.

If the shaft is removed, measure bushing inner diameter

NOTE: This bushing cannot be replaced. Replace fixed sheave if bushing is out of specification. Visually inspect coatings.

REQUIRED TOOL
Dial bore gauge

MEASURING POINT
At least 5 mm (1/4 in) from bushing edge

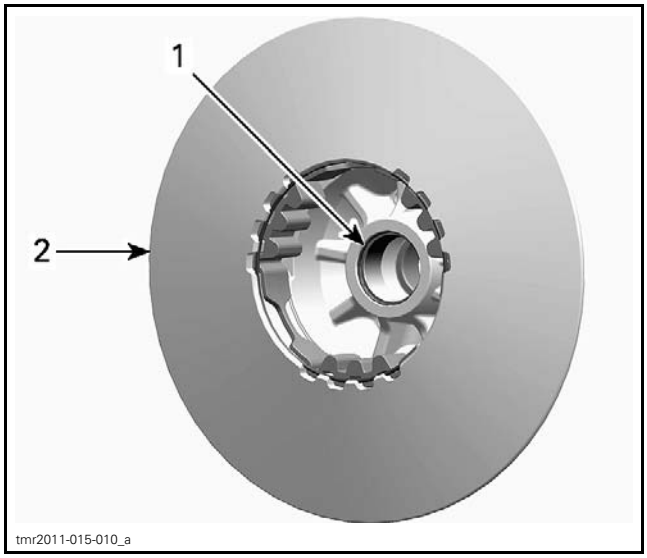

1. *Bushing*
2. *Fixed sheave*

BUSHING INNER DIAMETER	
NEW	30.060 mm to 30.100 mm (1.183 in to 1.185 in)
SERVICE LIMIT	30.200 mm (1.189 in)

Check torque gear for visible damage and cracks. Measure for wear limit using a caliper.

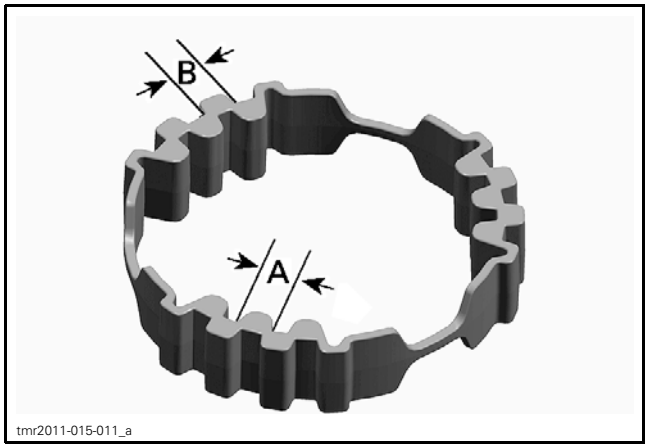

A. Measurement inside
B. Measurement outside

WEAR ON TEETH (BOTH SIDES)	
SERVICE LIMIT	7.500 mm (.295 in)

Cam

Check cam for visible damage and measure for wear using a caliper.

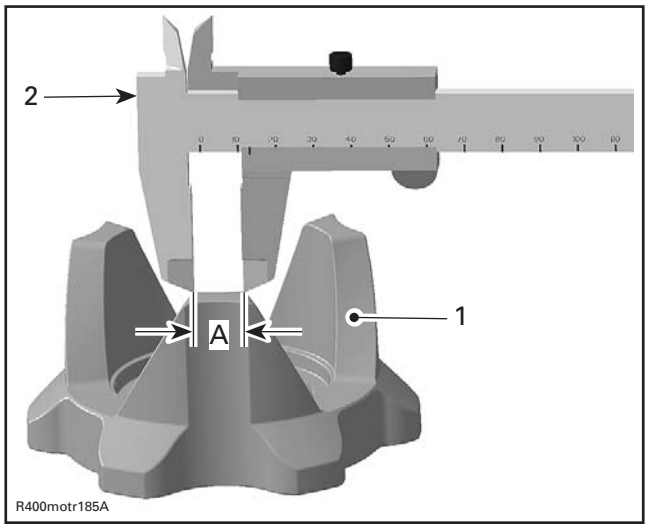

1. Contact surfaces for power train
2. Caliper

A. Width to be measured due to wear on contact surface

WIDTH ON TOP SURFACE	
SERVICE LIMIT	6.000 mm (.236 in)

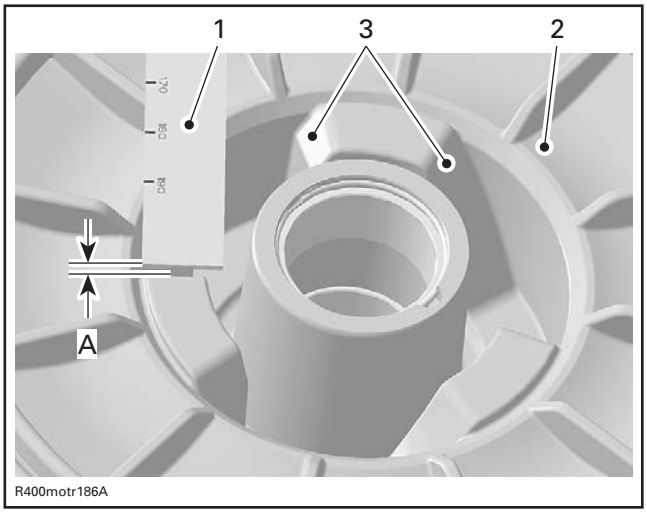

1. Caliper
2. Sliding sheave
3. Contact surface

A. Wear to be measured

WEAR ON CONTACT SURFACE	
SERVICE LIMIT	1.000 mm (.039 in)

Spring

Measure spring free length and squareness. If spring is out of specification, replace by a new one.

SPRING FREE LENGTH	
SERVICE LIMIT	164 mm (6.457 in)

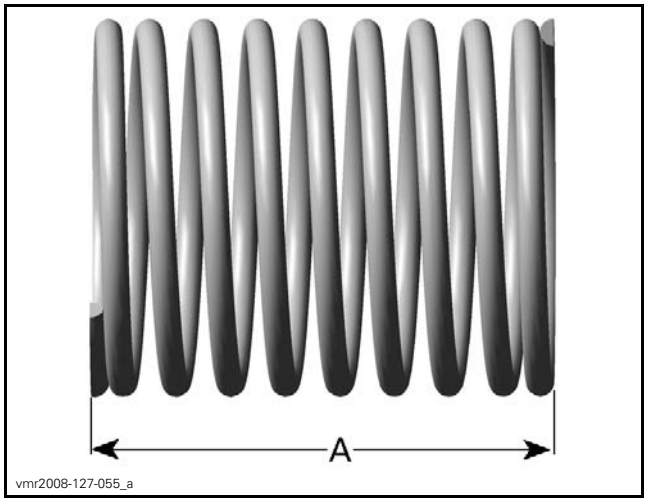

A. Free length

CLUTCH SPRING SQUARENESS	
SERVICE LIMIT	3.8 mm (.15 in)

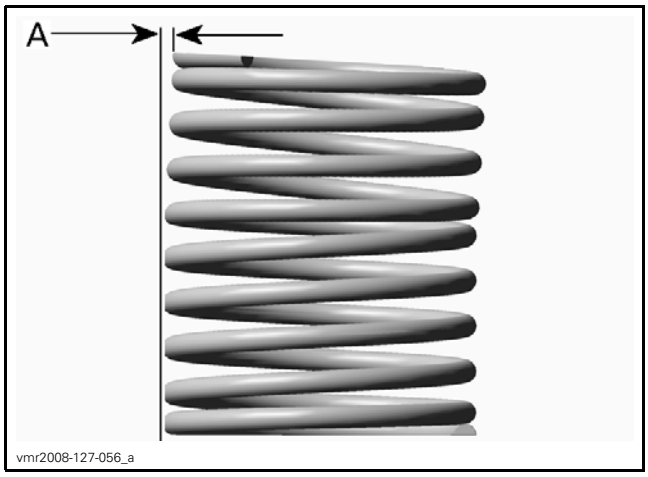

A. Squareness

Assembling the Driven Pulley

For installation, reverse the removal procedure. Pay attention to following details.

Heat ball bearing area up to 100°C (212°F) before ball bearing installation.

NOTE: Place new ball bearing in a freezer for 10 minutes before installation.

Install ball bearing with the writing on top and push only on the outer ring.

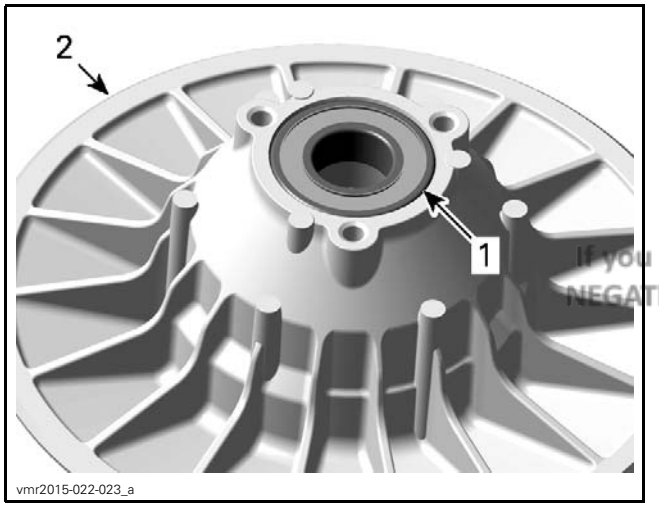

1. Ball bearing

NOTICE Do not use a hammer, use a press only.

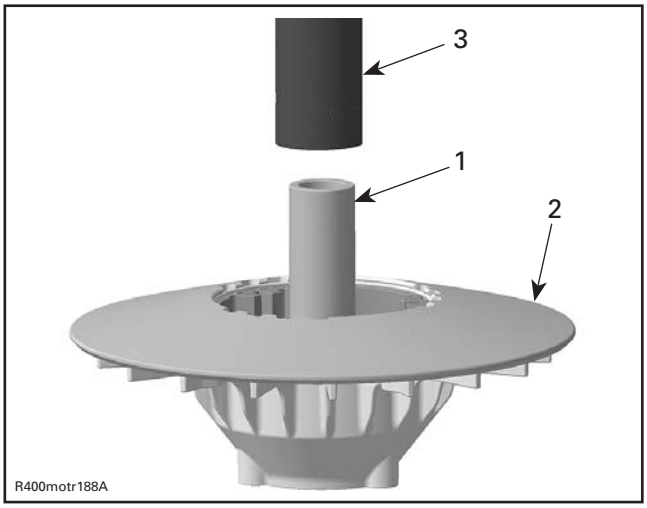

1. Shaft
2. Fixed sheave
3. Press machine

Install torque gear then secure it with retaining ring.

1. Torque gear
2. Retaining ring

Midwest Manuals
Green Manuals
Paperless Manuals For a Better Tomorrow www.green-manuals.com
If you bought this manual from any other seller please leave them NEGATIVE feedback and notify me at bestshopmanuals@gmail.com

Installing the Driven Pulley

For installation, reverse the removal procedure. Pay attention to the following details.

Place O-ring on counter shaft splines and move it with spacer in end position.

NOTICE Chamfer on inside diameter of the spacer must face engine side.

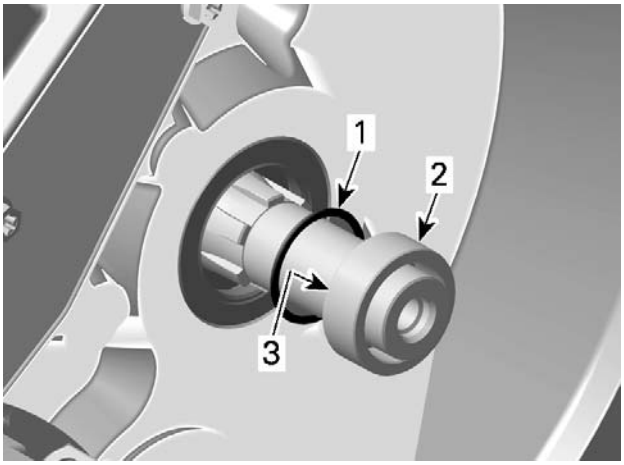

vmr2015-022-024_a

1. *O-ring*
2. *Distance sleeve*
3. *Chamfered area of distance sleeve*

Clean:

– Threads of gearbox counter shaft
– Driven pulley screw threads.

SERVICE PRODUCT
CLUTCH AND PULLEY FLANGE CLEANER PRO S1 (P/N 779244)

NOTICE **Threads of gearbox counter shaft and driven pulley screw must be free of oil and grease. Lubricants in threads will create too high preload to tightened driven pulley screw.**

Install cam retainer on counter shaft spline the right way then install cam.

NOTE: Place cam retainer with printed mark "ENGINE SIDE" towards the engine.

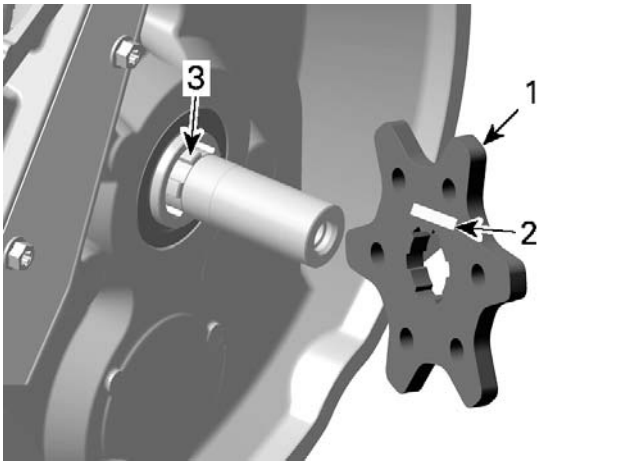

vmr2015-022-025_a

1. *Cam retainer*
2. *Printed mark "ENGINE SIDE"*
3. *Counter shaft spline*

Insert sliding sheave into fixed sheave.

Place spring behind sliding sheave then align driven pulley with cam.

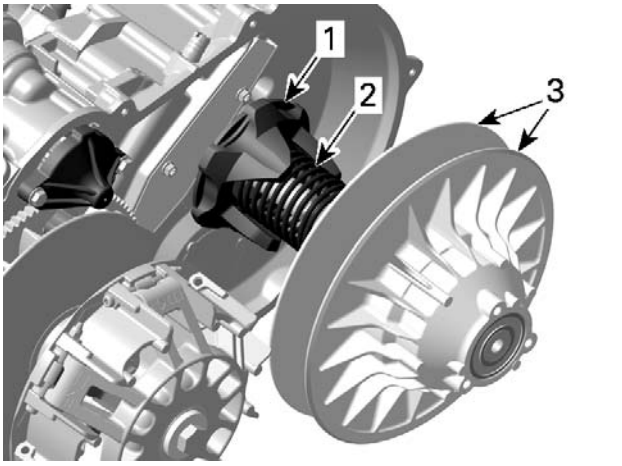

vmr2015-022-026_a

1. *Cam*
2. *Spring*
3. *Driven pulley*

With your hand, push the driven pulley onto the shaft to compress the spring.

NOTICE **A cam not correctly engaged will cause damage to the driven pulley and cam.**

Install the driven pulley screw and its washer.

NOTE: Tighten the screw with your hand sufficiently for the cam to remain engaged.

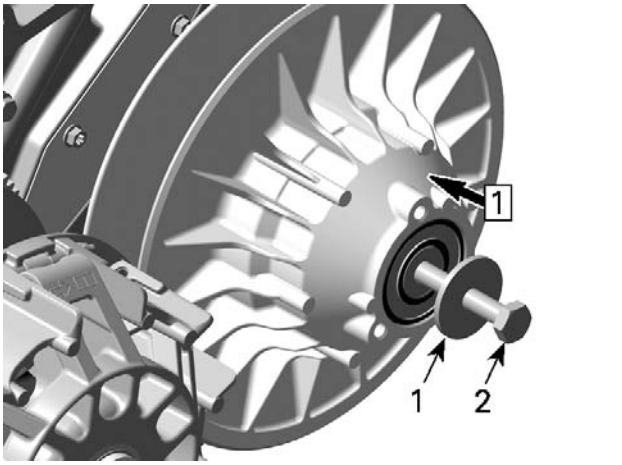

vmr2015-022-027_a

Step 1: Push

1. *Washer*
2. *Driven pulley screw*

Install drive belt. Refer to *DRIVE BELT* in this subsection.

REQUIRED TOOL	
PULLER/LOCKING TOOL (P/N 529 036 098)	

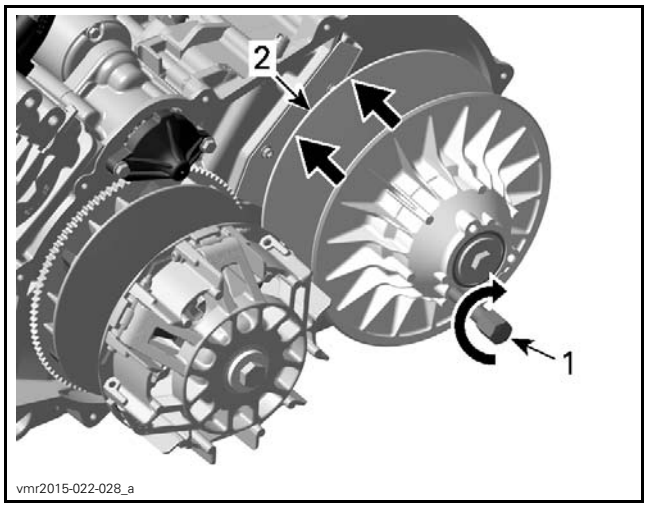

1. Puller/locking tool
2. Sliding sheave

NOTE: If driven pulley sheaves cannot be opened when the service tool is screwed in, the cam is not correctly engaged in the sliding sheave.

Torque driven pulley screw to specification.

TIGHTENING PROCEDURE		
Driven pulley screw	Step 1	20 N•m ± 1 N•m (15 lbf•ft ± 1 lbf•ft)
	Step 2	180° ± 5°

Check driven pulley end play.

SPECIFICATION	
Driven pulley end play	0 mm (0 in)

CONTINUOUSLY VARIABLE TRANSMISSION (CVT)

SERVICE TOOLS

Description	Part Number	Page
CLUTCH HOLDER	529 036 380	8, 17, 23
CLUTCH PULLER	529 035 746	8
DRIVEN PULLEY ADAPTER	708 200 720	7, 17
DRIVEN PULLEY SPACER	529 036 351	18
GOVERNOR CUP PULLER	529 036 350	9
PULLER/LOCKING TOOL	529 000 088	7, 17
PULLEY SPRING COMPRESSOR TOOL	529 036 012	11, 18

SERVICE PRODUCTS

Description	Part Number	Page
CLUTCH AND PULLEY FLANGE CLEANER PRO S1	779244	12, 15, 21
ISOFLEX GREASE TOPAS NB 5051	420 898 351	15
LOCTITE 243 (BLUE)	293 800 060	21, 24
XPS BRAKES AND PARTS CLEANER (USA)	219 701 705	23
XPS BRAKES AND PARTS CLEANER	219 701 776	23

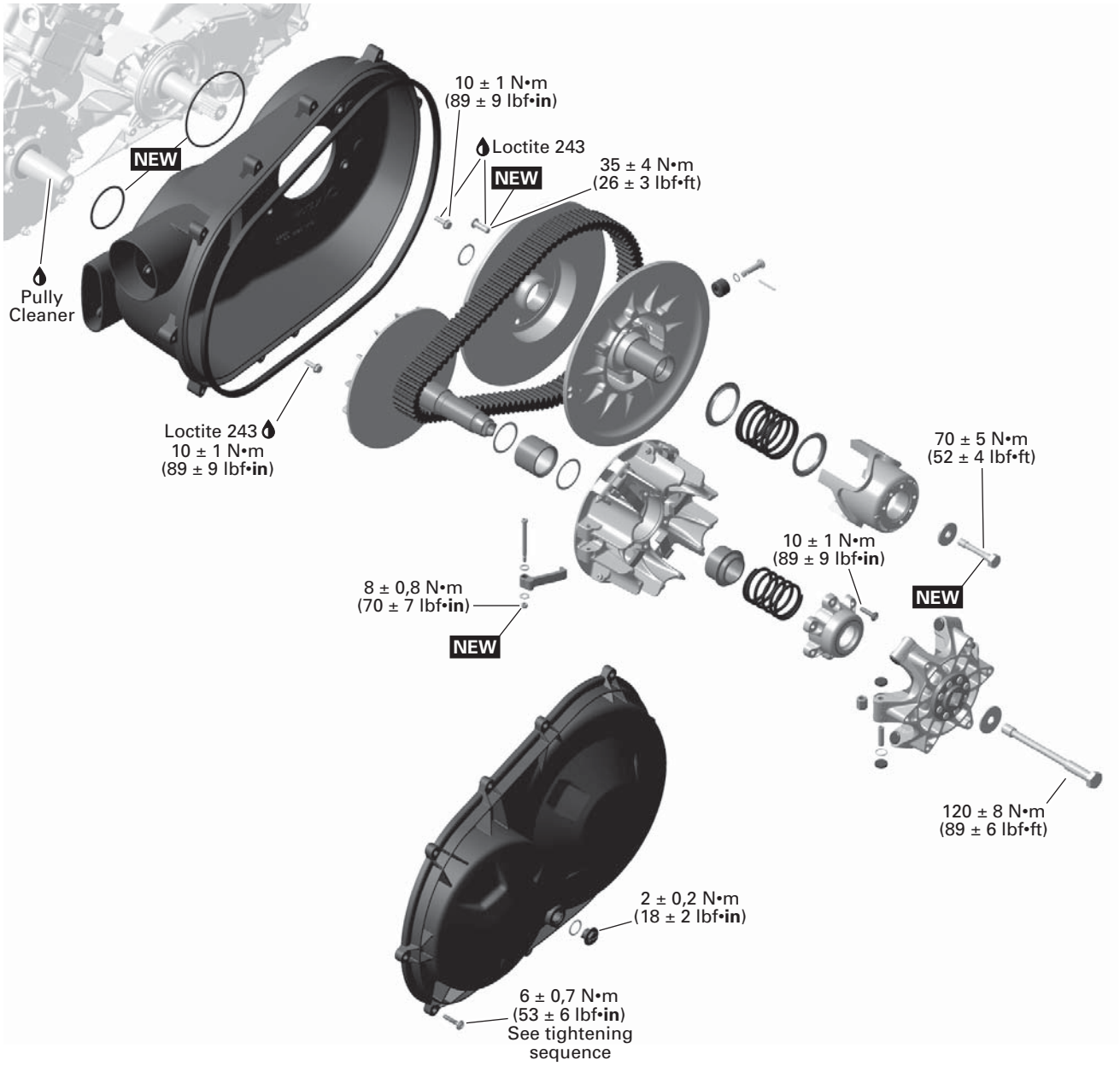

NEW = Component must be replaced when removed.

RTX1000MY18-003-001_a

Except X mr

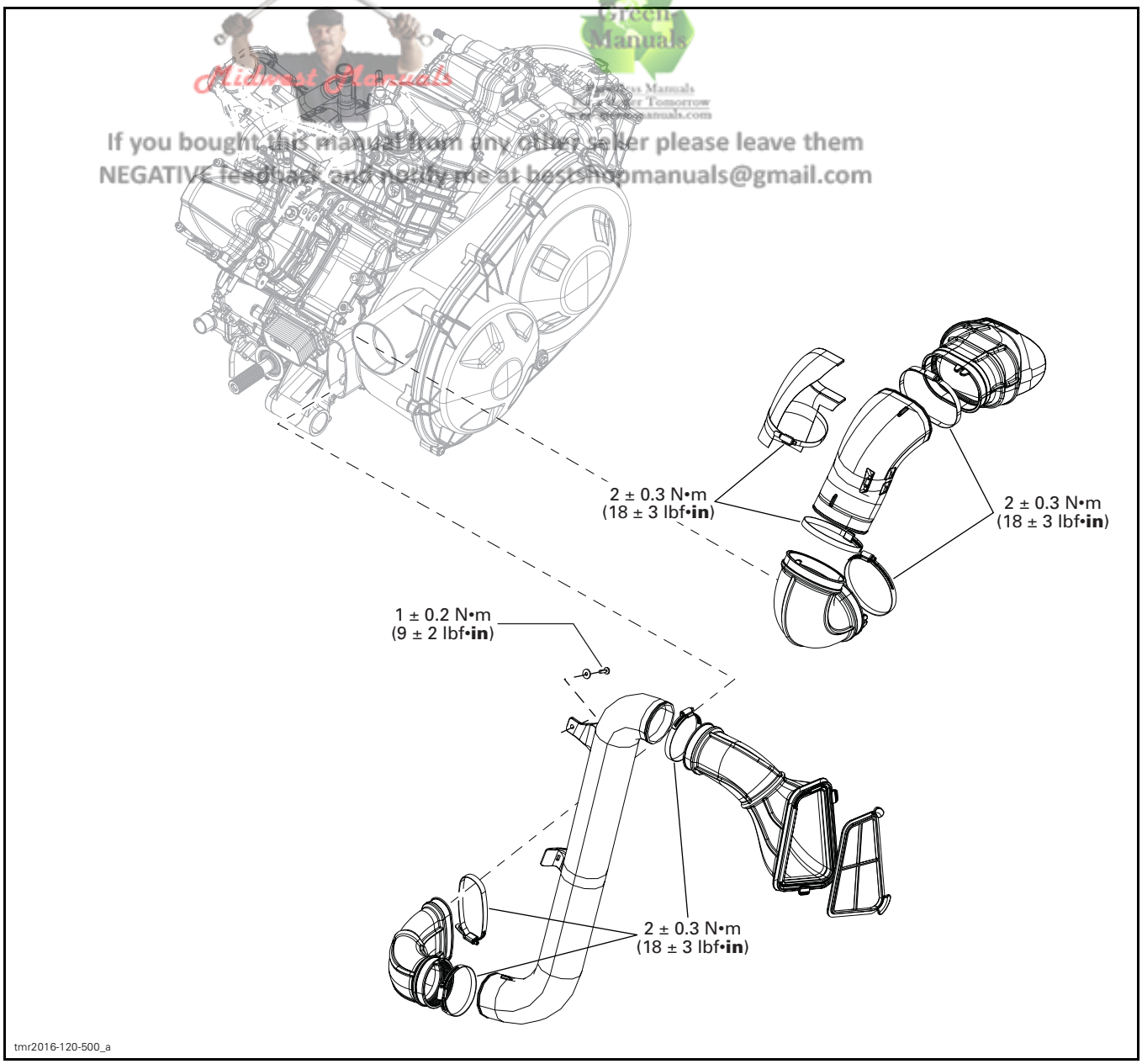

Midwest Manuals
Green Manuals
If you bought this manual from any other seller please leave them NEGATIVE feedback and notify me at bestshopmanuals@gmail.com

X mr

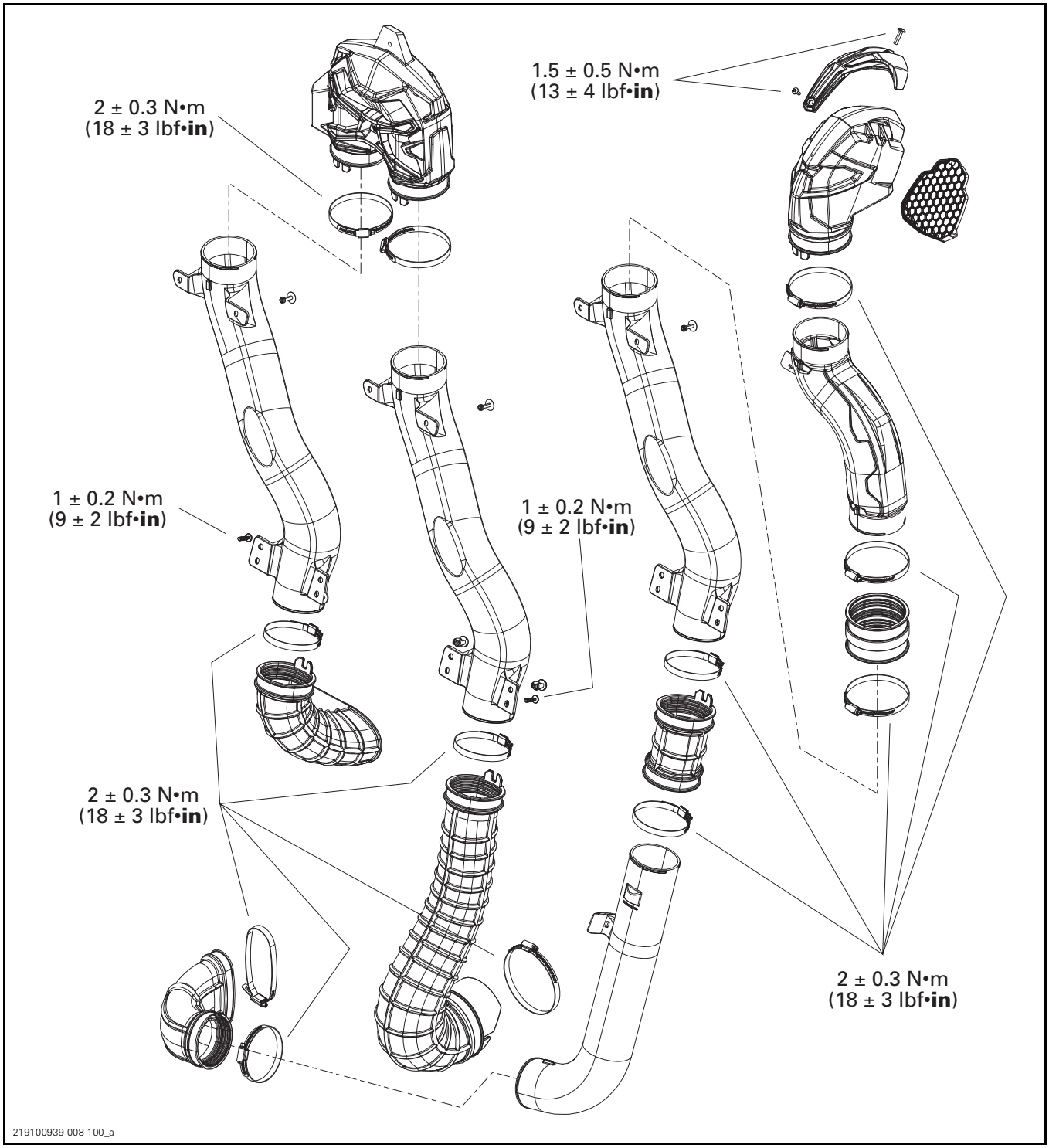
2 ± 0.3 N•m
(18 ± 3 lbf•in)
1.5 ± 0.5 N•m
(13 ± 4 lbf•in)
1 ± 0.2 N•m
(9 ± 2 lbf•in)
1 ± 0.2 N•m
(9 ± 2 lbf•in)
2 ± 0.3 N•m
(18 ± 3 lbf•in)
2 ± 0.3 N•m
(18 ± 3 lbf•in)
219100939-008-100_a

GENERAL

For a better understanding, the following illustrations are taken with engine out of vehicle. To perform the following instructions, it is not necessary to remove engine.

This CVT is lubrication free. Never lubricate any components except drive pulley hub.

⚠ CAUTION **Never touch CVT while engine is running. Never drive vehicle when CVT cover is removed.**

NOTICE **Any drive pulley repairs must be performed by an authorized Can-Am dealer. Subcomponent installation and assembly tolerances require strict adherence to procedures detailed.**

NOTICE **The clutch assembly is a precisely balanced unit. Never replace parts with used parts from another clutch assembly.**

MAINTENANCE

CLEANING THE CVT AIR INLET/OUTLET

1. Remove CVT cover, refer to *CVT COVER* in this subsection.
2. Inspect and clean the air inlet and outlet openings from inside the CVT air guide.

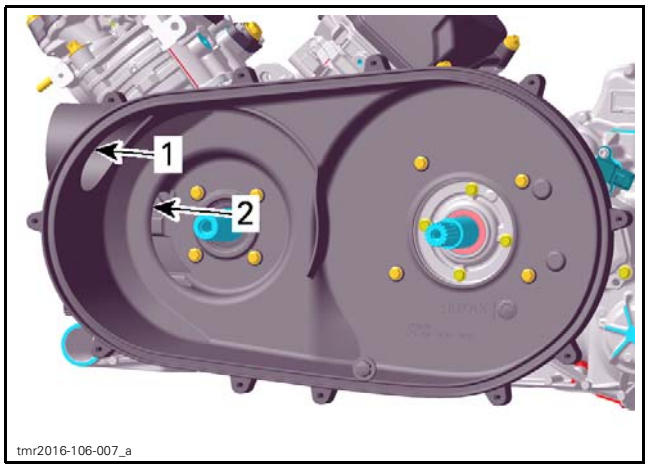

1. CVT air inlet
2. CVT air outlet

3. Inspect and clean the CVT air inlet end.

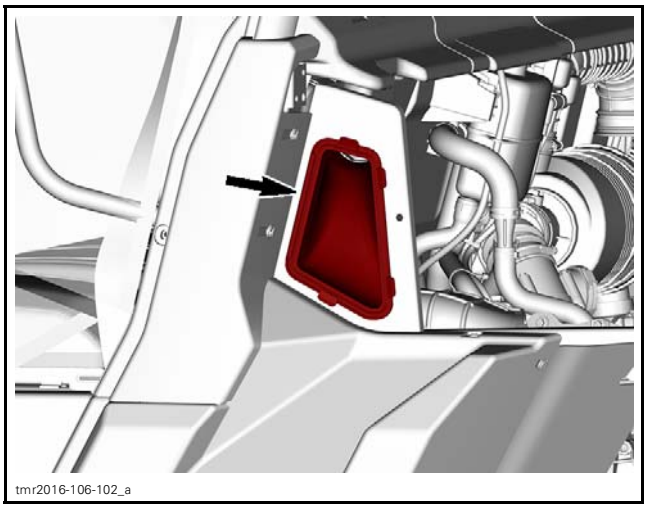

NOTE: If a lot of debris or grime are found in the CVT system, it may be necessary to remove the ducts and thoroughly clean them.

4. Reinstall CVT cover.

PROCEDURES

CVT AIR FILTER

Removing the CVT Air Filter

1. Tilt the cargo box.
2. Press the filter tabs to release it.

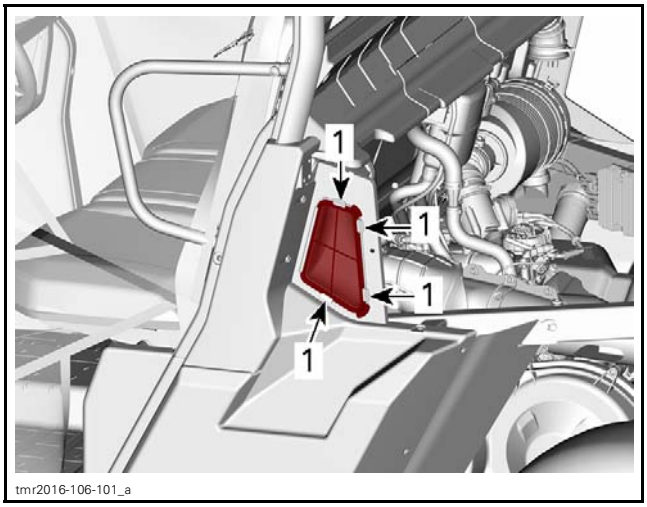

1. Press here

Cleaning the CVT Air Filter

1. Inspect filter and replace if damaged.
2. Gently clean using a solution of soft soap and water, then rinse filter.
3. Gently shake off excess water and allow filter to dry at room temperature.
4. Clean inside the CVT air inlet end.

Installing the CVT Air Filter

The installation is the reverse of the removal procedure.

CVT COVER

Draining the CVT Cover

If water is present in CVT cover, it can be drained as follows:

1. Turn bayonet cap 90° counterclockwise to open it.
2. Remove bayonet cap and O-ring.

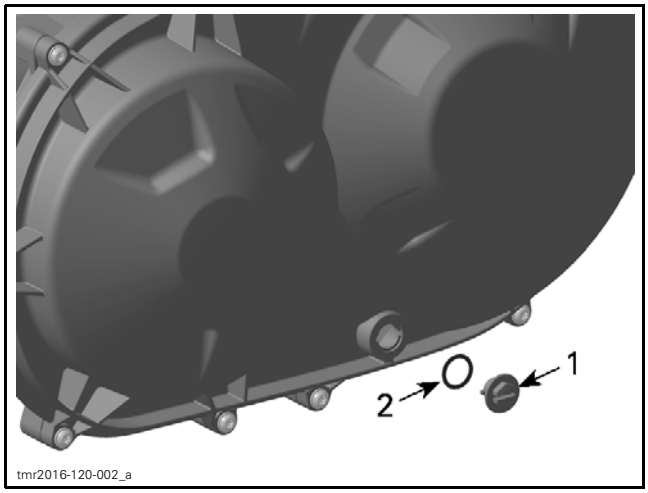

1. Bayonet cap
2. O-ring

3. Let water drain from CVT cover.
4. Reinstall bayonet cap and O-ring.

TIGHTENING TORQUE	
Bayonet cap	2 N•m ± 0.2 N•m (18 lbf•**in** ± 2 lbf•**in**)

NOTICE **If any debris entered the CVT cover, CVT must be cleaned and inspected.**

Removing the CVT Cover

Detach all CVT hoses from the cover.

Remove CVT cover screws.

NOTE: Remove the center top screw last to support the cover during removal.

NOTICE **Do not use an impact tool to remove CVT cover screws.**

Remove the CVT cover.

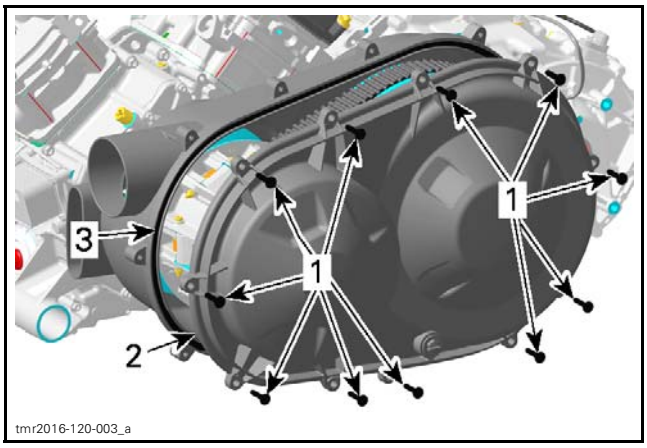

1. Retaining screws
2. CVT cover
3. Gasket

Installing the CVT Cover

Install the center top screw of first.

Tighten the CVT cover retaining screws as per following sequence.

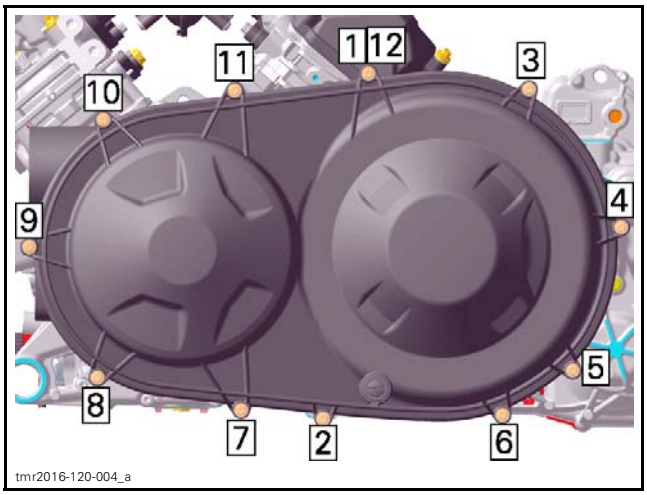

TIGHTENING TORQUE	
CVT cover retaining screws	6 N•m ± 0.7 N•m (53 lbf•**in** ± 6 lbf•**in**)

Reinstall CVT hoses.

DRIVE BELT

Removing the Drive Belt

NOTICE **In case of a drive belt failure, the CVT, cover and air outlet must be cleaned.**

Remove the CVT cover.

REQUIRED TOOL	
PULLER/LOCKING TOOL (P/N 529 000 088)	
DRIVEN PULLEY ADAPTER (P/N 708 200 720)	

Tighten the driven pulley adapter into the driven pulley shaft.

Tighten the puller/locking tool into the threaded offset hole of the adapter.

Tighten the puller/locking tool to open the pulley.

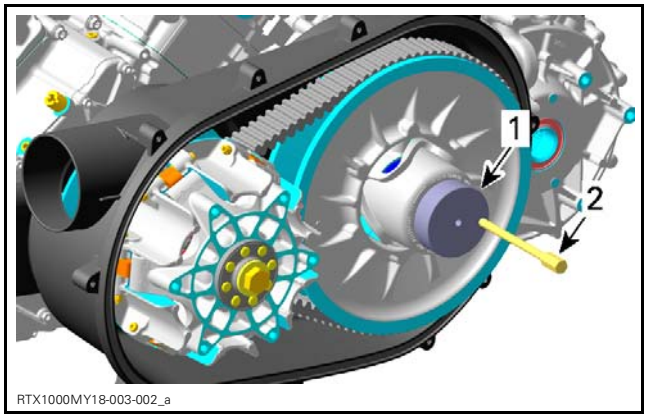

1. *Driven pulley adapter*
2. *Puller/locking tool*

To remove belt, slip the belt over the top edge of fixed sheave, as shown.

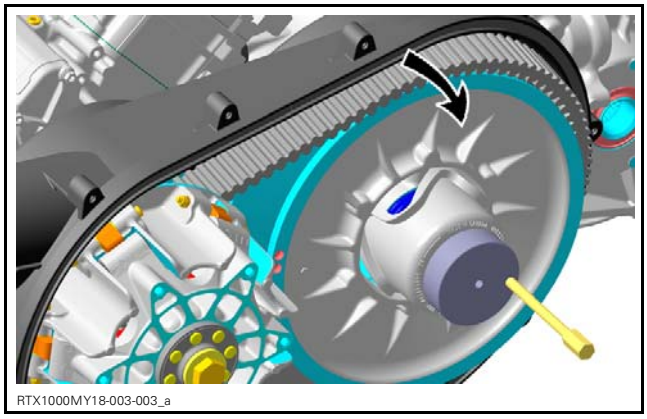

Inspecting the Drive Belt

Inspect belt for cracks, fraying or abnormal wear. Replace if necessary.

Check drive belt width at cord level. Replace if it is out of specification (see table below).

DRIVE BELT WIDTH	
Service limit	34.7 mm (1.366 in)

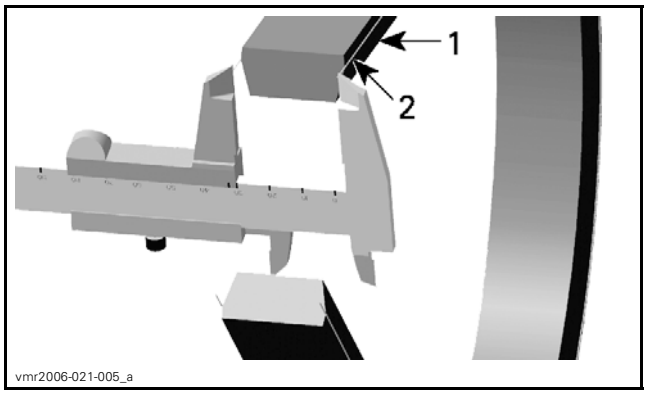

1. *Drive belt*
2. *Cord in drive belt*

Installing the Drive Belt

The installation is the reverse of the removal procedure. However, pay attention to following details.

The maximum drive belt life span is obtained when the drive belt has the proper rotation direction. Install it so that the arrow printed on belt is pointing towards front of the vehicle, viewed from top.

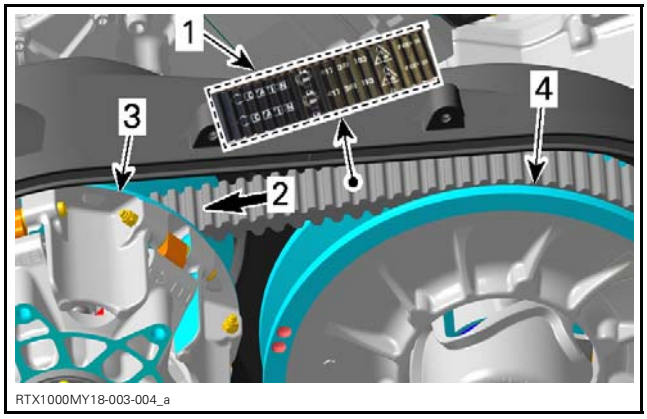

1. *Arrow printed on belt*
2. *Rotation direction*
3. *Drive pulley (front)*
4. *Driven pulley (rear)*

DRIVE PULLEY

Removing the Drive Pulley

1. Remove the drive belt, see procedure in this subsection.
2. Prior to removing the drive pulley, mark sliding sheave and governor cup to ensure correct indexation at reinstallation.

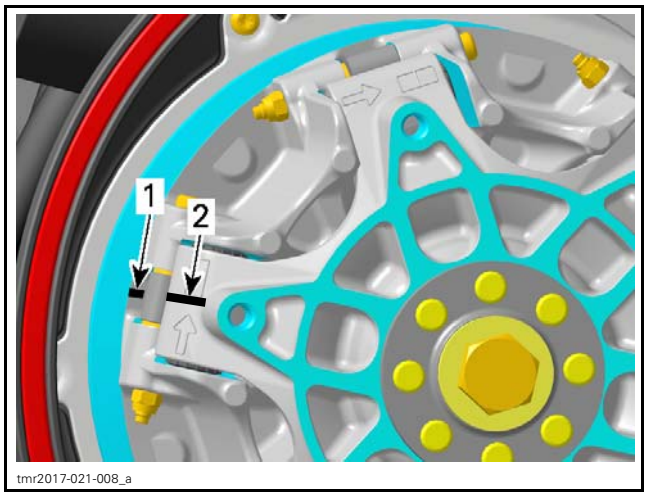

1. Mark on drive pulley sliding sheave
2. Mark on governor cup

3. Lock the drive pulley.

REQUIRED TOOL	
CLUTCH HOLDER (P/N 529 036 380)	

4. Loosen the drive pulley screw.

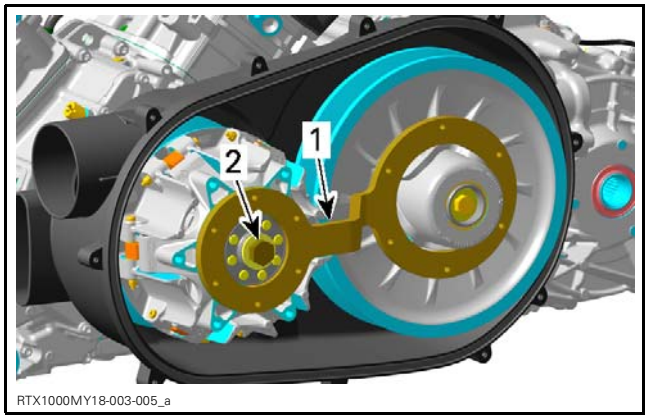

1. Clutch holder
2. Drive pulley screw

NOTICE **Never use any type of impact wrench for drive pulley removal.**

NOTE: Do not unscrew the drive pulley screw completely.

5. Remove service tool.
6. Apply axial pressure with your hand on the governor cup until clutch puller for removal is installed.
7. Remove drive pulley screw and spring washer.

CAUTION **Sliding sheave of drive pulley is spring loaded.**

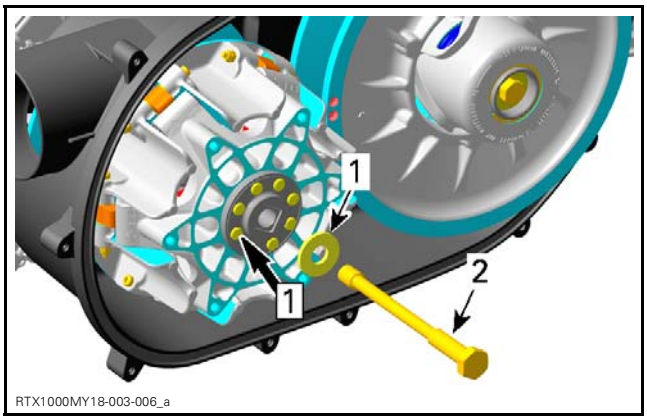

Step 1: Push
1. Spring washer
2. Drive pulley screw

8. Screw clutch puller in fixed sheave to remove drive pulley.

NOTICE **Use only recommended tool.**

REQUIRED TOOL	
CLUTCH PULLER (P/N 529 035 746)	

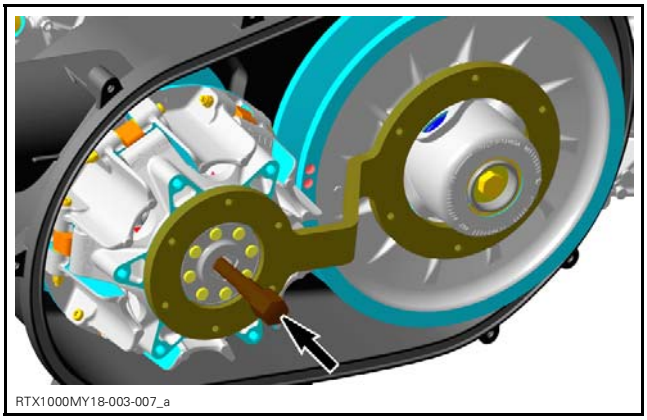

Disassembling the Drive Pulley

Drive Pulley

1. Tighten clutch puller into fixed sheave shaft (maximum protrusion of 63 mm (2-1/2 in)).

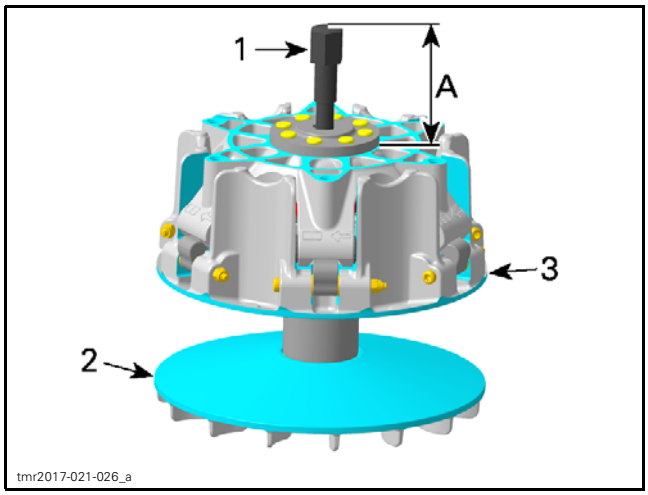

1. Clutch puller
2. Fixed sheave
A. Maximum protrusion of 63 mm (2-1/2 in)

2. Place the governor cup puller on governor cup.

REQUIRED TOOL	
GOVERNOR CUP PULLER (P/N 529 036 350)	

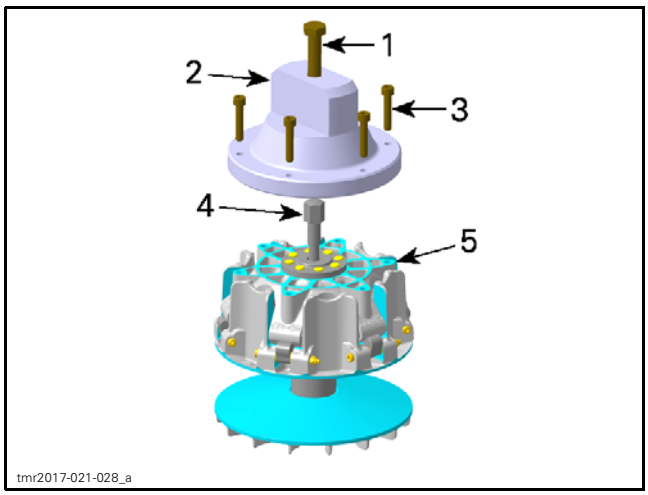

1. M16 x 80 puller screw
2. Governor cup puller
3. M8 x 35 puller retaining screws
4. Clutch puller
5. Governor cup

NOTICE **Ensure that the hexagonal head of the clutch puller engages in the slot of the governor cup puller.**

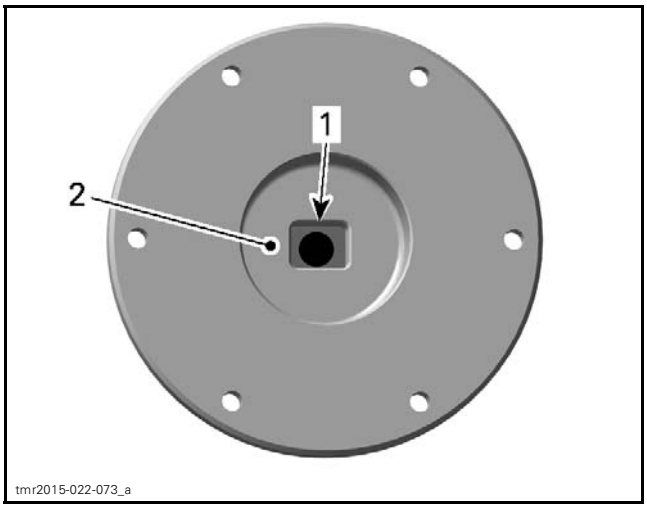

1. Slot
2. Inner side of puller

3. Tighten M8 x 35 puller retaining screws.

TIGHTENING TORQUE	
M8 x 35 puller retaining screws	20 N•m ± 2 N•m (15 lbf•ft ± 1 lbf•ft)

4. Put the governor cup puller into a vice and tighten the M16 x 80 puller screw.

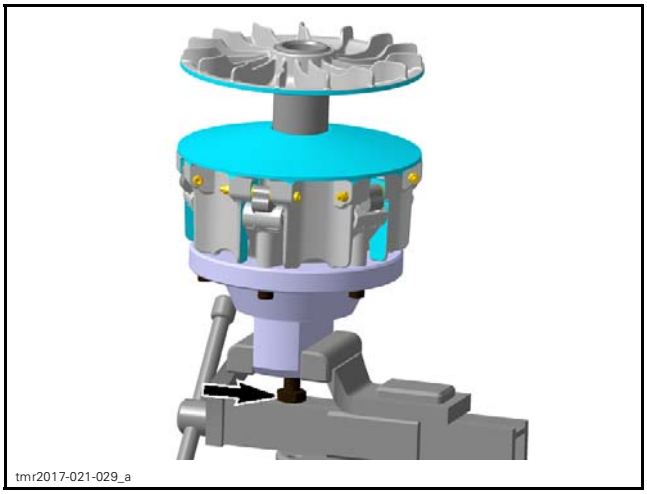

SCREW IN M16 X 80 PULLER SCREW

CAUTION **The fixed sheave will bounce up.**

5. Remove the governor cup puller from the drive pulley.

Governor Cup

Carefully lift governor cup until slider shoes come at their highest position into guides.

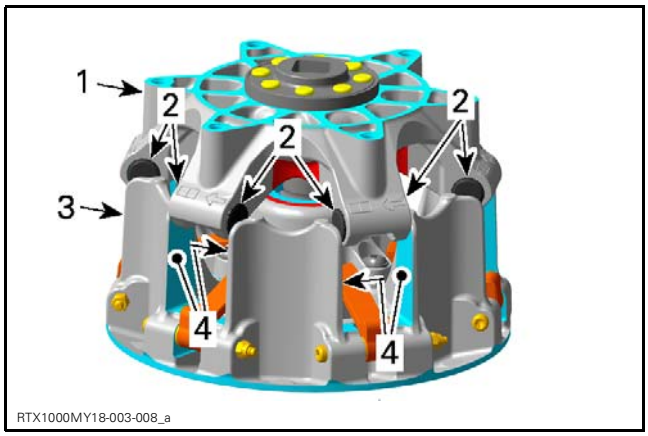

1. *Governor cup*
2. *Slider shoes*
3. *Sliding shave*
4. *Guides*

NOTE: The following procedure is not necessary except if roller must be removed. Refer to *INSPECTING THE DRIVE PULLEY* in this subsection before proceeding.

Remove slider shoes out of each bearing sleeve. Use a flat screwdriver if necessary.

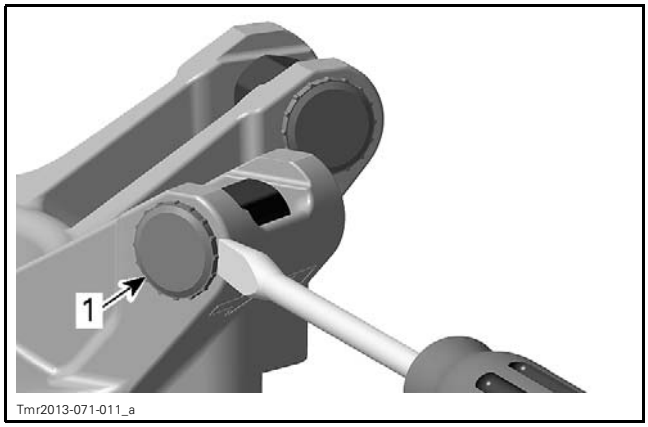

1. *Slider shoe*

Put governor cup on a vice to push out bearing sleeve of roller in the foreseen direction (against arrow). Use an appropriate punch (diameter of punch must be smaller than the bearing sleeve diameter).

NOTICE **Do not clamp the governor cup in the vice to push out bearing sleeve. Governor cup will be damaged.**

NOTE: Use protection plates to avoid marks and/or damages to the governor cup.

NOTICE **Always replace all rollers at the same time. Partly worn rollers may cause damage to the CVT system.**

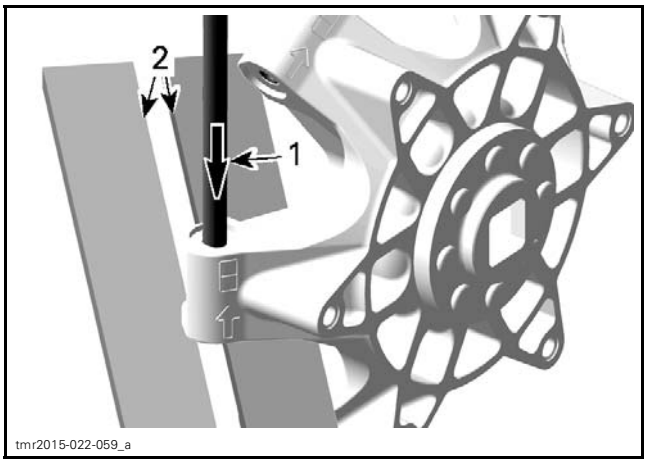

1. *Punch*
2. *Vice*

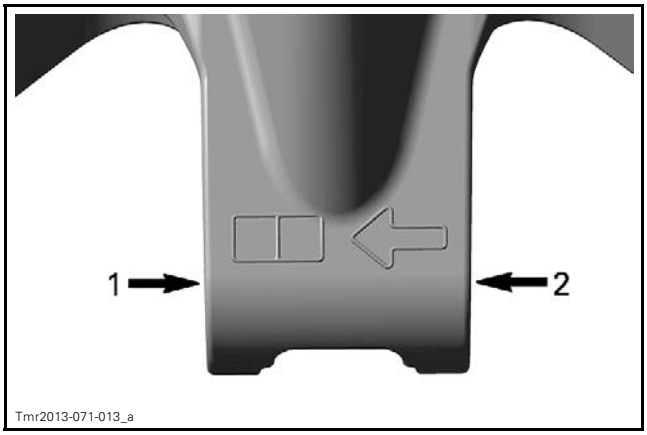

1. *Removal direction*
2. *Assembly direction*

NOTE: Whenever removing a governor cup with already two marked boxes replace it by a NEW one.

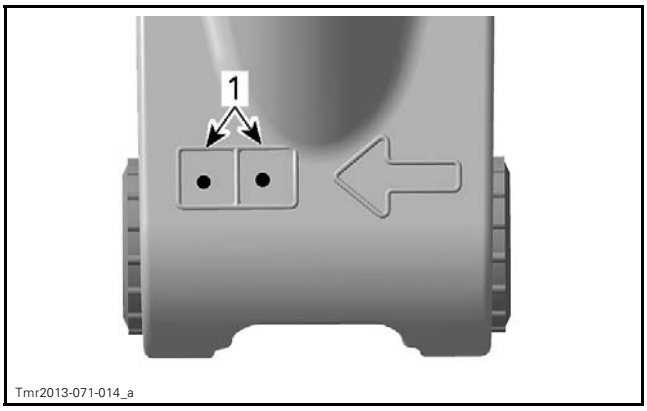

Sliding Sheave

This drive pulley is equipped with 6 levers.

Remove the centrifugal lever.

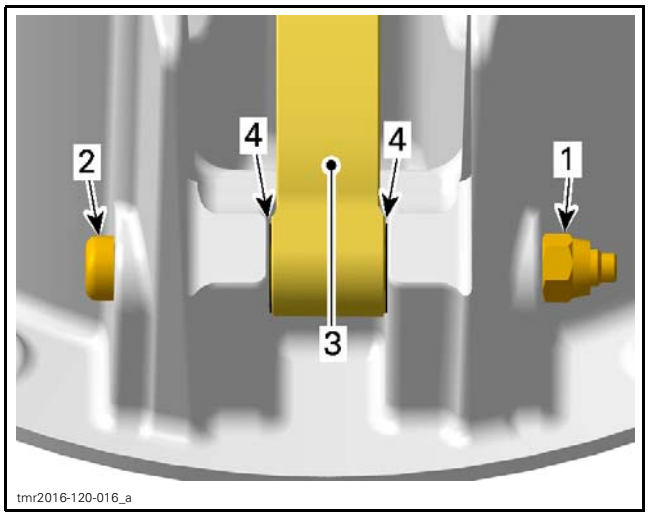

1. *Lock nut*
2. *Centrifugal lever pivot bolt*
3. *Centrifugal lever*
4. *Thrust washers*

Remove spring cover.

⚠ CAUTION Spring cover is under high clutch spring preload. Never attempt to remove spring cover without the recommended tools.

REQUIRED TOOL	
PULLEY SPRING COMPRESSOR TOOL (P/N 529 036 012)	

Install support guide of spring compressor in a vice.

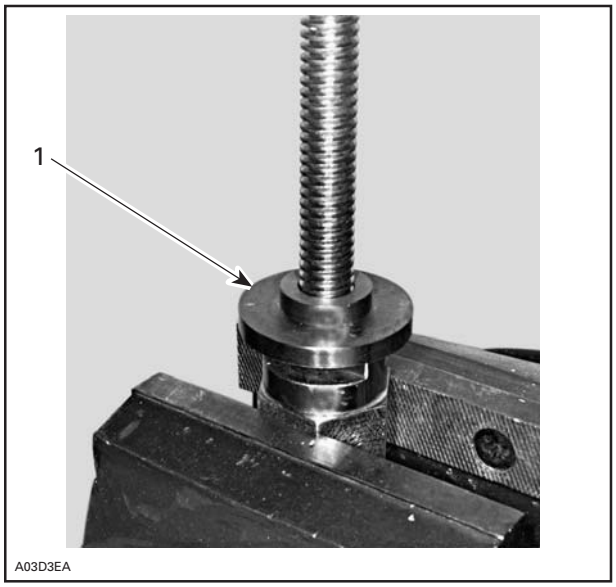

NOTE: The support guide will prevent bushing damage.

Place sliding sheave on support guide.

Place support cup over spring cover and tighten nut.

Remove spring cover screws.

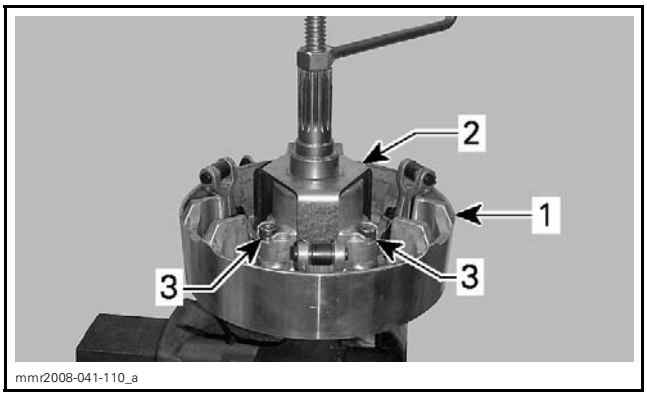

TYPICAL

Remove service tool.

Remove the spring.

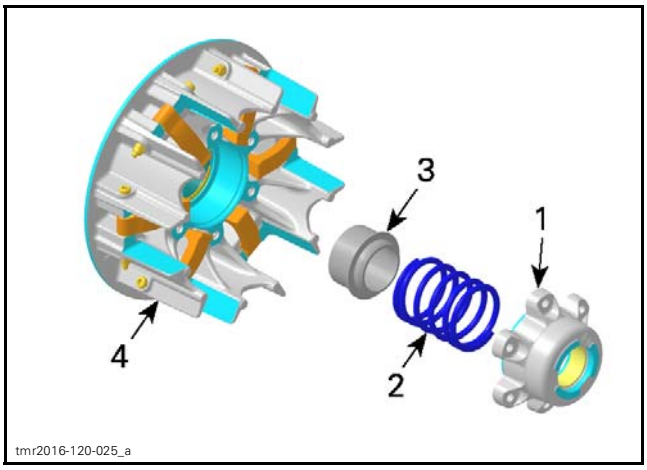

1. *Spring cover*
2. *Spring*
3. *Spring seat*
4. *Sliding sheave*

Fixed Sheave

Remove hub.

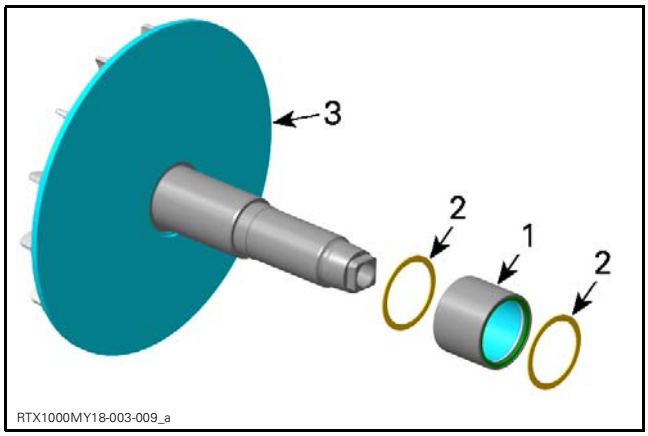

1. Hub
2. Thrust washers
3. Fixed sheave

Cleaning the Drive Pulley

Clean pulley faces and shaft with fine steel wool and dry cloth.

Using a paper towel with cleaning solvent, clean:

- Crankshaft tapered end
- Crankshaft threads
- Taper on the fixed sheave
- Threads of drive pulley screw.

SERVICE PRODUCT
CLUTCH AND PULLEY FLANGE CLEANER PRO S1 (P/N 779244)

NOTICE **Avoid contact between cleaner and crankshaft seal because damage may occur.**

Remove all hardened oil deposits that have baked on crankshaft and pulley tapered surfaces with coarse or medium steel wool and/or sand paper no. 600.

NOTICE **Do not use any other type of abrasive.**

Reclean mounting surfaces with paper towel and solvent cleaner.

SERVICE PRODUCT
CLUTCH AND PULLEY FLANGE CLEANER PRO S1 (P/N 779244)

Wipe off the mounting surfaces with a clean, dry paper towel.

NOTICE **Mounting surfaces must be free of any oil, cleaner or towel residue.**

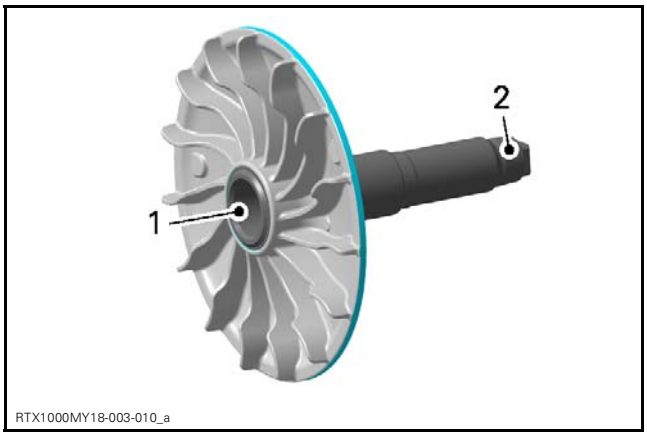

1. Taper of fixed sheave, crankshaft side
2. Tapered end of fixed sheave shaft

Only use petrol base cleaner when cleaning bushings of sliding sheave.

NOTICE **Do not use acetone to clean bushing.**

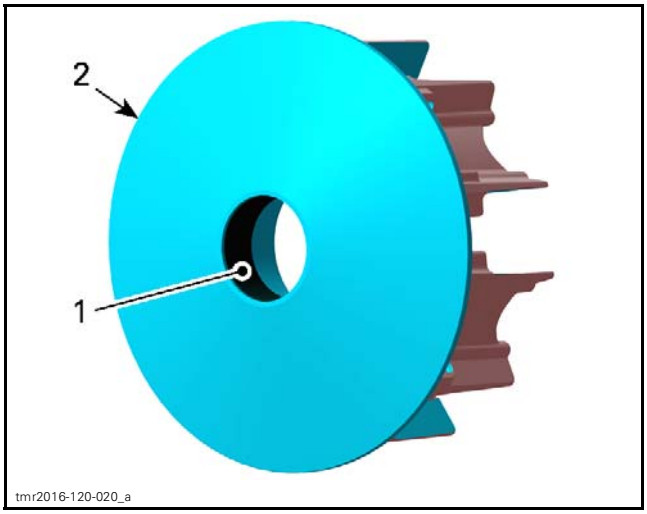

1. Bushing
2. Sliding sheave

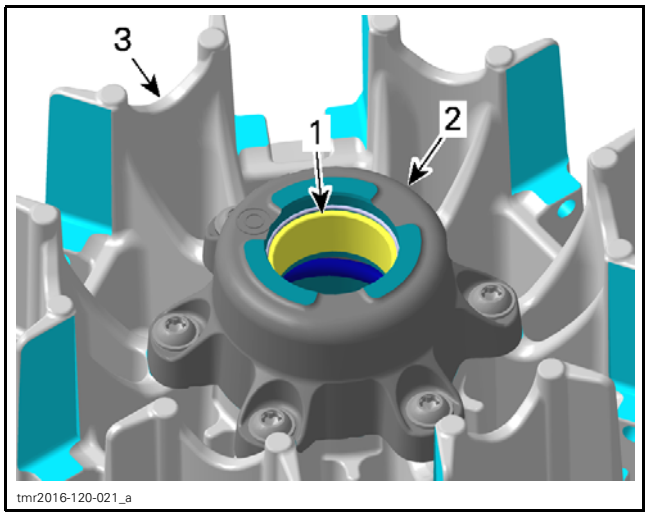

1. *Bushing*
2. *Spring cover*
3. *Sliding sheave*

Inspecting the Drive Pulley

Bushings

For bushing inspection, refer to *SLIDING SHEAVE AND SPRING COVER* in this subsection.

Governor Cup

Check governor cup for cracks or other visible damage. Replace if necessary.

Roller and Slider Shoe

Check if rollers move freely.

NOTICE **Always replace all rollers and slider shoes at the same time.**

Check slider shoes for visible wear. If chamfer is not present anymore, replace **ALL** slider shoes.

NOTE: If necessary, use a screwdriver to remove slider shoes.

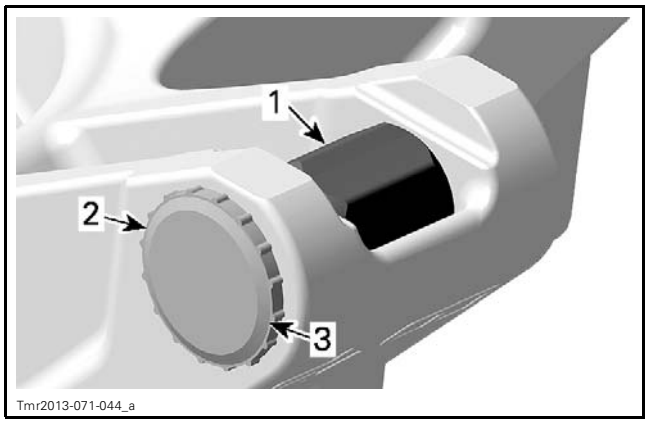

1. *Roller*
2. *Slider shoe*
3. *Chamfer*

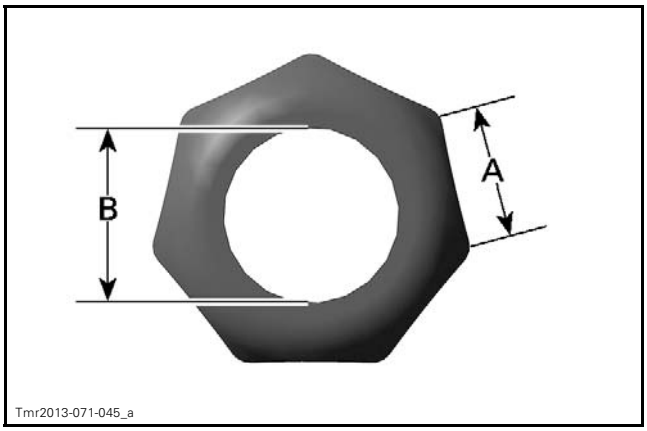

A. *Roller flat spot width*
B. *Roller inner diameter*

ROLLER FLAT SPOT WIDTH (A)	
Service limit	8.50 mm (.335 in)

ROLLER INNER DIAMETER (B)	
New	8.025 mm to 8.175 mm (.3159 in to .3219 in)
Service limit	9.000 mm (.3543 in)

Centrifugal Lever Pivot Bolt

Measure diameter of centrifugal lever pivot bolt, replace if it is out of specification.

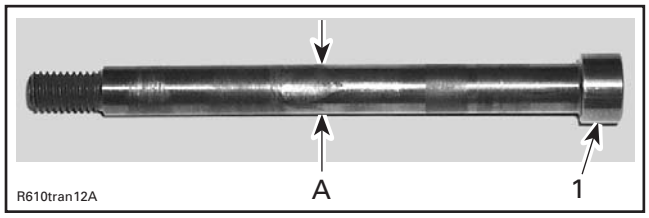

1. *Centrifugal lever pivot bolt*

A. *Measure diameter here*

CENTRIFUGAL LEVER PIVOT BOLT DIAMETER	
New	6.063 mm to 6.091 mm (.2387 in to .2398 in)
Service limit	6.000 mm (.2362 in)

Centrifugal Lever

Check bushing diameter in the centrifugal lever for wear. Replace centrifugal lever if necessary.

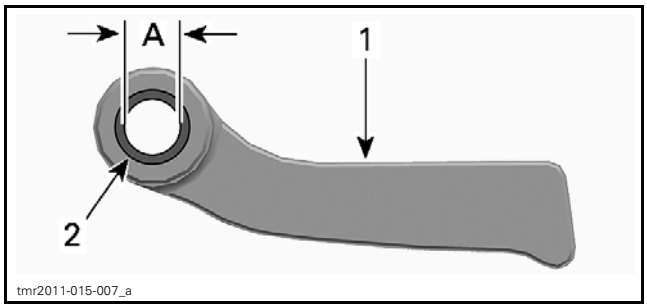

1. *Centrifugal lever*
2. *Bushing*

A. *Bushing inner diameter*

CENTRIFUGAL LEVER BORE DIAMETER	
New	6.000 mm to 6.120 mm (.236 in to .241 in)
Service limit	6.200 mm (.244 in)

Replace centrifugal lever, thrust washers, centrifugal lever pivot bolts and lock nuts if the contact surfaces show heavy visible wear.

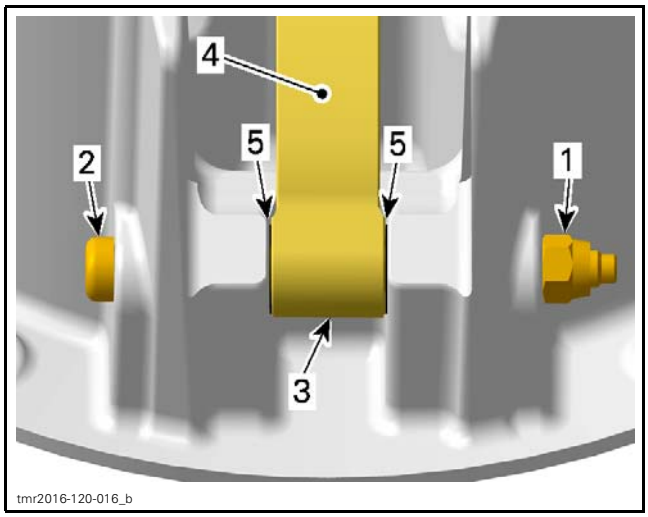

1. *Lock nut*
2. *Centrifugal lever pivot bolt*
3. *Centrifugal lever*
4. *Contact surface to the roller*
5. *Thrust washers*

NOTICE **Whenever replacing centrifugal levers, always replace all lever at the same time. Otherwise, unbalanced drive pulley will occur because of levers difference.**

Sliding Sheave and Spring Cover

Check sliding sheave for cracks and sliding contact surface for excessive wear. Replace sliding sheave if necessary.

Measure centrifugal lever pivot bolt bores. Replace sliding sheave if bores are out of specification or otherwise damaged.

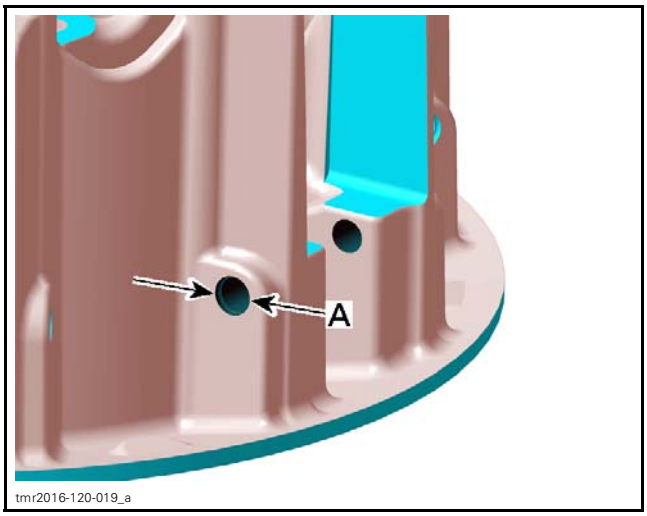

A. *Centrifugal lever pivot bolt bore diameter*

CENTRIFUGAL LEVER PIVOT BOLT BORE DIAMETER	
New	6.113 mm to 6.171 mm (.241 in to .243 in)
Service limit	6.300 mm (.248 in)

Measure bushing diameters of sliding sheave.

REQUIRED TOOL
Dial bore gauge

MEASURING POINT
At least 5 mm (1/4 in) from bushing edge

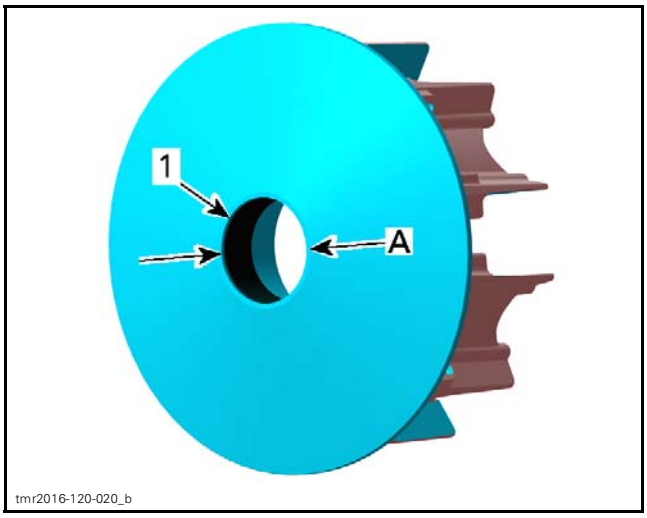

1. *Bushing on fixed sheave side*

A. *Bore diameter of bushing*

SLIDING SHEAVE LARGE BUSHING	
New	46.950 mm to 47.130 mm (1.848 in to 1.856 in)
Service limit	47.160 mm (1.857 in)

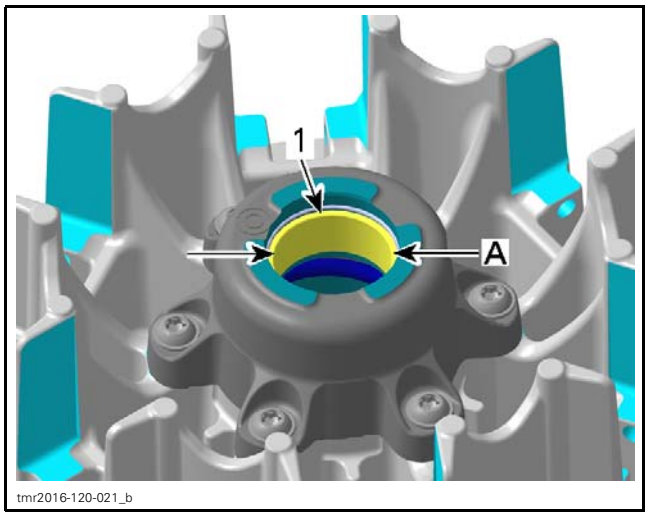

1. Bushing on governor cup side
A. Bore diameter of bushing

SLIDING SHEAVE SMALL BUSHING	
New	32.010 mm to 32.135 mm (1.26 in to 1.265 in)
Service limit	32.200 mm (1.268 in)

Replace sliding sheave if one of the bushings is out of specification. Visually inspect coatings.

Fixed Sheave

Check:

– Fixed sheave contact surface to the governor cup for scratches or other damages
– Fixed sheave plate for marks or scratches.

Replace fixed sheave if required.

Check fixed sheave contact surface with the hub for discoloration, polished area or pitting. If so, the hub needs to be replaced.

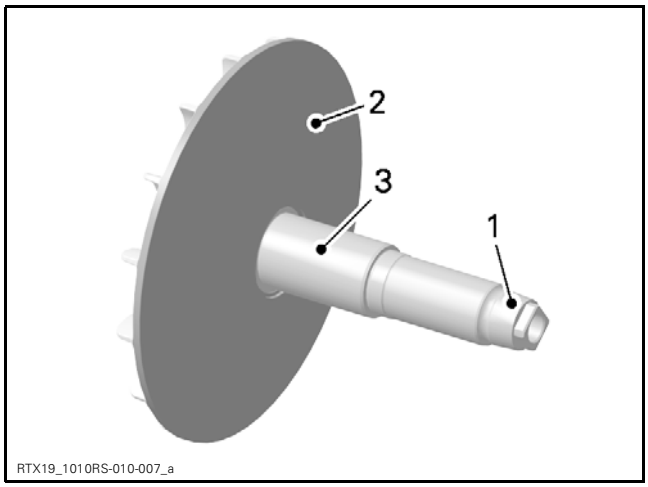

1. Contact surface to governor cup
2. Sheave plate
3. Contact surface with hub.

Hub

Check for:

– Brittle, hard or damaged seals
– Discoloration on the edges of the bearing
– Corrosion on the needles and/or the outter ring
– Flat spots on the needles.

If any of these damages appear, replace the hub.

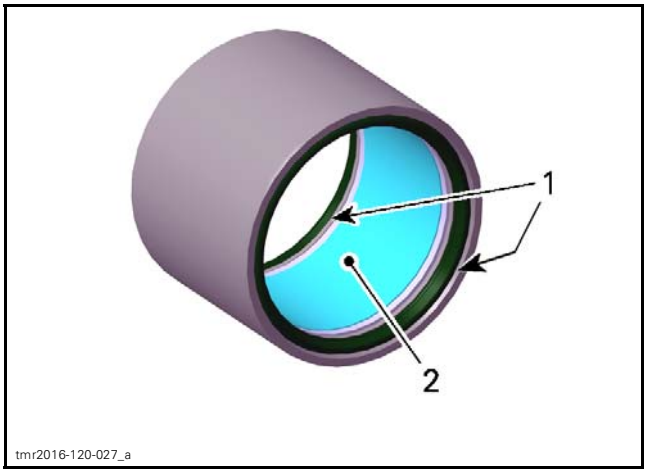

1. Oil seals
2. Needle bearing

Assembling the Drive Pulley

The assembly is the reverse of the disassembly procedure. However, pay attention to following details.

Hub

1. Thoroughly clean the bearing. Remove all the grease with a pulley cleaner or a brake cleaner.

SERVICE PRODUCT
CLUTCH AND PULLEY FLANGE CLEANER PRO S1 (P/N 779244)

2. Dry the inside of the bearing with compressed air.
3. Apply 1 g (.035 oz) of grease in the middle of needles.

RECOMMENDED SERVICE PRODUCT
ISOFLEX GREASE TOPAS NB 5051 (P/N 420 898 351) (1 g (.035 oz))

NOTICE **Do not use any other type of grease.**

NOTE: All the content of the pouch is required.

Keep seals free of grease.

4. Spin the needles until grease is spread evenly.
5. Put the bearing back on the shaft.
6. Spray cleaner on a clean rag to wipe grease excess on the shaft and the pulley sheaves.

NOTE: New hub comes with appropriate grease and quantity of grease.

Sliding Sheave

Install centrifugal levers with their thrust washers.

NOTICE **Centrifugal levers must move easily after installation.**

Governor Cup

Rebuild governor cup with new bearing sleeves, thrust washers, rollers and slider shoes.

NOTICE **Final position has to be aligned with the contact surface of the slider shoes (no protrusion).**

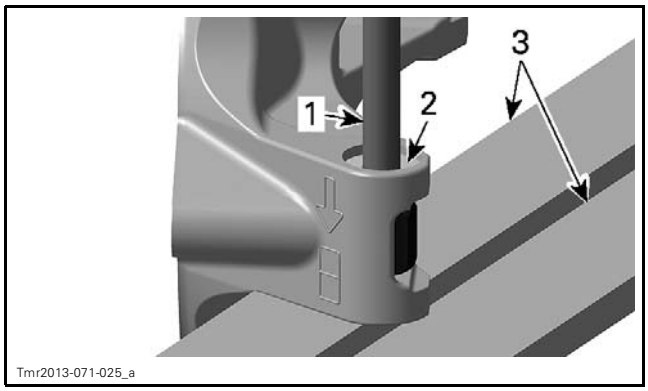

1. *Top edge of bearing sleeve*
2. *Mating surface of slider shoes*
3. *Vice*

Each time when replacing the bearing sleeves sign the foreseen box with a punch.

NOTICE **Do not tap too hard. Violent damage of the governor cup may appear.**

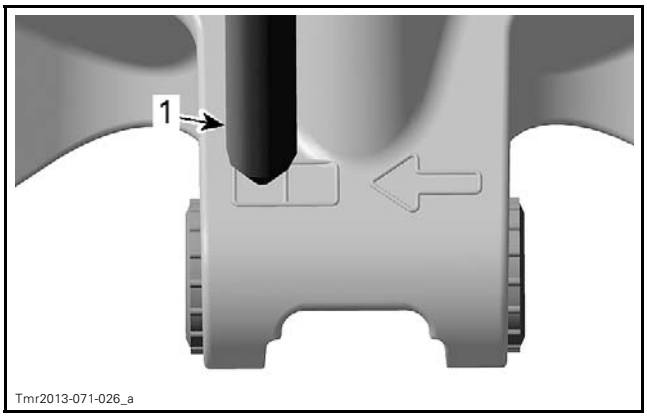

NOTICE **Rollers must move easily after installation.**

Insert slider shoes into governor cup to properly slide in guides.

Installing the Drive Pulley

The installation is the reverse of the removal procedure. However, pay attention to the following details.

NOTICE **Do not apply antiseize or any lubricant on crankshaft and drive pulley tapers.**

NOTICE **Never use any type of impact wrench at drive pulley removal and installation.**

Clean mounting surfaces. Refer to *CLEANING THE DRIVE PULLEY* in this subsection.

Install drive pulley on crankshaft extension.

Install conical spring washer with its concave side towards drive pulley then install drive pulley screw.

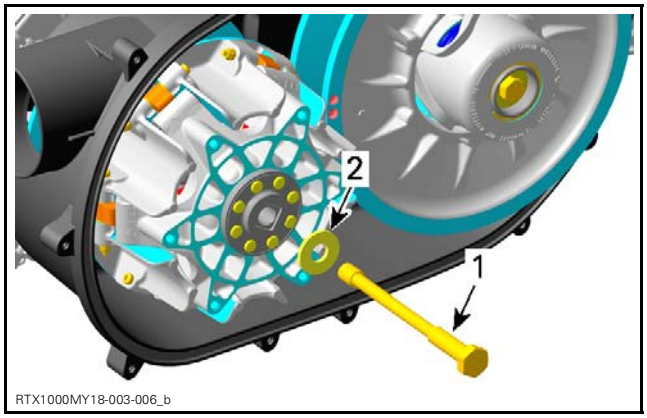

1. *Drive pulley screw*
2. *Conical spring washer*

NOTICE **Never substitute conical spring washer and/or screw with jobber ones. Always use BRP genuine parts for this particular case.**

Lock the drive pulley as per removal procedure.

Tighten drive pulley screw to specified torque.

NOTICE Never use any type of impact wrench for drive pulley installation.

TIGHTENING TORQUE	
Drive pulley screw	120 N•m ± 8 N•m (89 lbf•ft ± 6 lbf•ft)

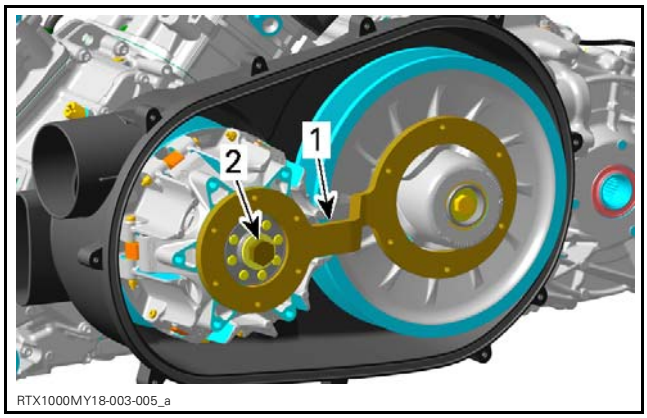

1. *Clutch holder (P/N 529 036 380)*
2. *Drive pulley screw*

DRIVEN PULLEY

Removing the Driven Pulley

REQUIRED TOOLS	
CLUTCH HOLDER (P/N 529 036 380)	
PULLER/LOCKING TOOL (P/N 529 000 088)	
DRIVEN PULLEY ADAPTER (P/N 708 200 720)	

1. Remove the CVT cover, refer to *REMOVING THE CVT COVER* in this subsection.
2. Remove drive belt.
3. Install the clutch holder.
4. Remove and discard driven pulley screw.

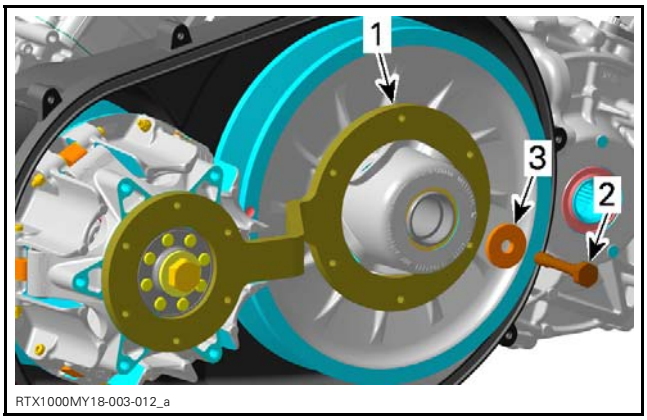

1. *Clutch holder*
2. *Driven pulley screw (discard)*
3. *Collar washer*

5. Remove the clutch holder.
6. Pull the driven pulley out of the vehicle.
   6.1 If removed, reinstall the DRIVEN PULLEY ADAPTER (P/N 708 200 720).
   6.2 Tighten the PULLER/LOCKING TOOL (P/N 529 000 088) in the **center hole** of the driven pulley adapter.
   6.3 Tighten the puller/locking tool until driven pulley is free.
   6.4 Remove tools from the driven pulley.

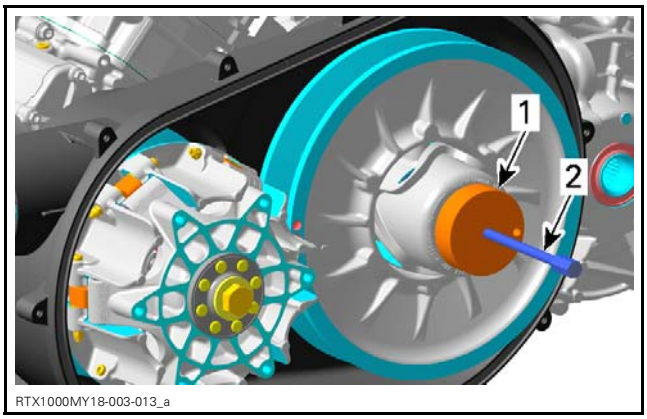

1. *Driven pulley adapter*
2. *Puller/locking tool*

7. Remove thrust washer from countershaft.

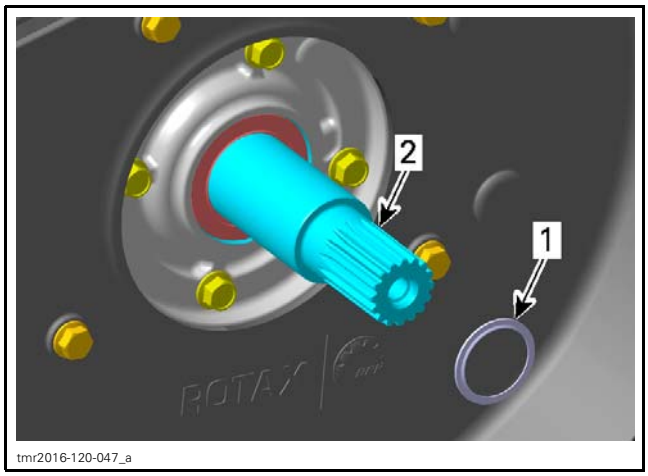

1. Thrust washer
2. Countershaft

Disassembling the Driven Pulley

Removing the Cam and Spring

To remove the cam and the spring, always use the following tools.

CAUTION Cam is under high clutch spring preload. Never attempt to remove the cam without the recommended tools.

REQUIRED TOOLS	
PULLEY SPRING COMPRESSOR TOOL (P/N 529 036 012)	
DRIVEN PULLEY SPACER (P/N 529 036 351)	

1. Install the driven pulley on the spring compressor tool.
   1.1 Secure the spring compressor tool rod in a vice.
   1.2 Install the support cup, the driven pulley spacer, the driven pulley (with the cam towards the vice), the support guide and the handle.
   1.3 Tighten the handle to remove all play.

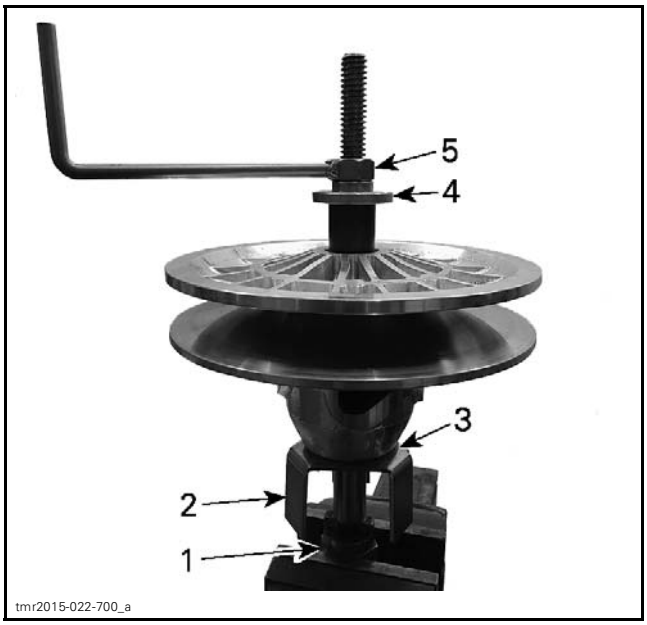

TYPICAL
1. Pulley spring compressor tool
2. Support cup
3. Driven pulley spacer
4. Support guide
5. Handle

2. Remove and discard the four (4) Torx cam retaining screws.
3. Remove the driven pulley assembly from the spring compressor tool.
4. Separate parts.

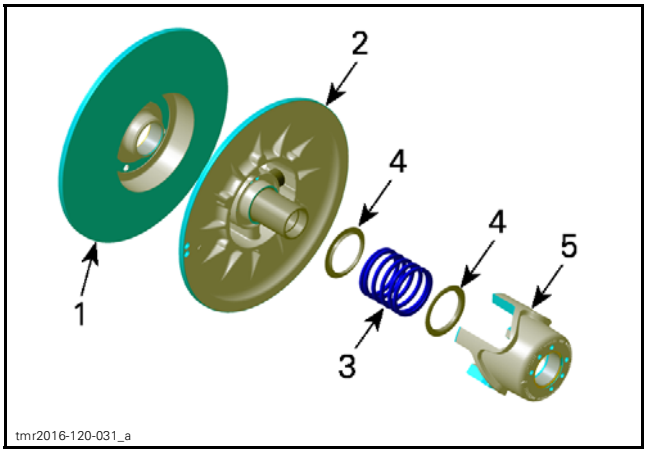

1. Fixed sheave
2. Sliding sheave
3. Spring
4. Spring support
5. Cam

Removing the Driven Pulley Roller

1. Remove spring pin used to lock pivot screw.
   1.1 Use a pin punch to start removing spring pin.

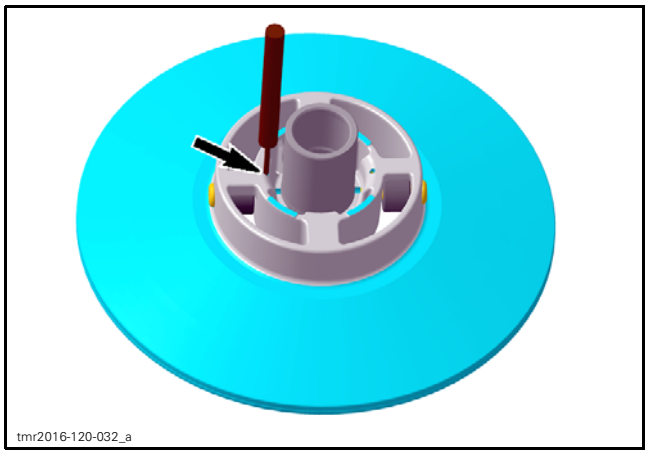

1.2 Once spring pin is accessible to pliers, pull pin out using pliers.

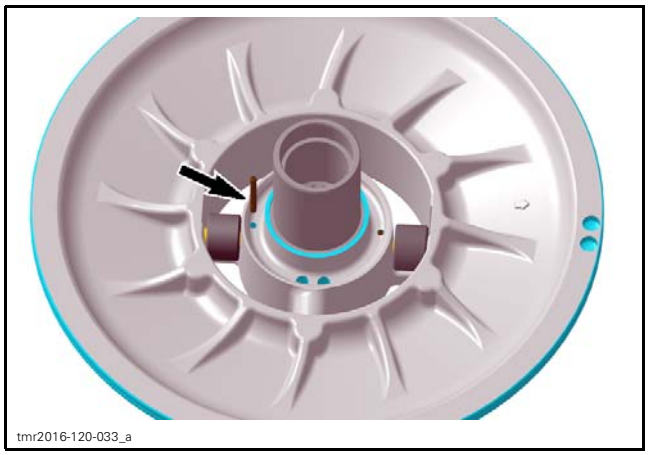

2. Remove pivot screw and roller.
   2.1 Identify pivot screws location before removal.
   2.2 Remove pivot screw and ribbed lock washer.

   NOTICE **Make sure not to damage or lose pivot screws. If screws need to be replaced, replace fixed sheave assembly.**

   2.3 Remove roller.

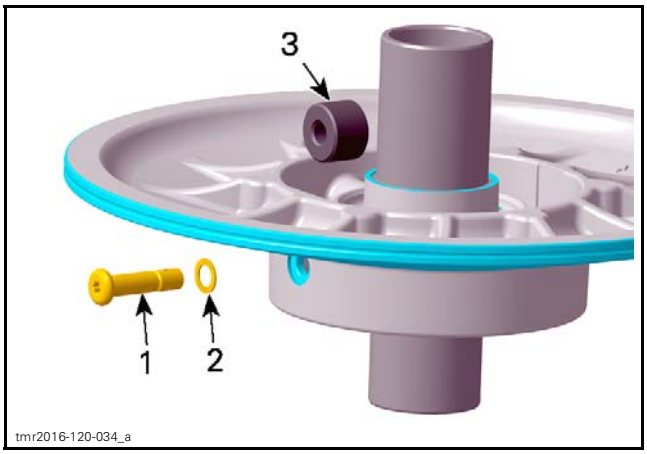

1. Pivot screw
2. Ribbed lock washer
3. Roller

3. Proceed with removal of other roller.

Inspecting the Driven Pulley

Cam

1. Verify all contact surfaces of cam for visible damages.

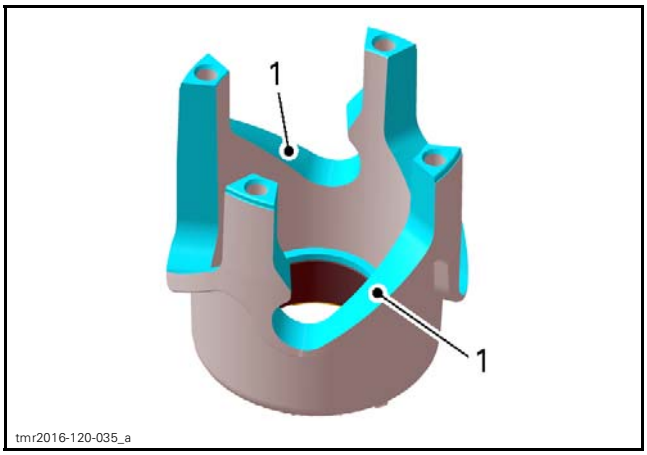

1. Contact surfaces

2. Ensure circlip properly locks the inner bushing. Replace part if necessary.

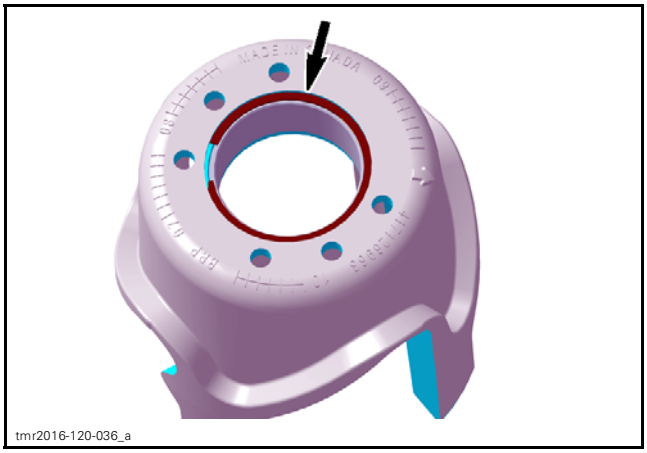

3. Measure the inner diameter of cam bushing.

REQUIRED TOOL
Dial bore gauge

MEASURING POINT
At least 5 mm (1/4 in) from bushing edge

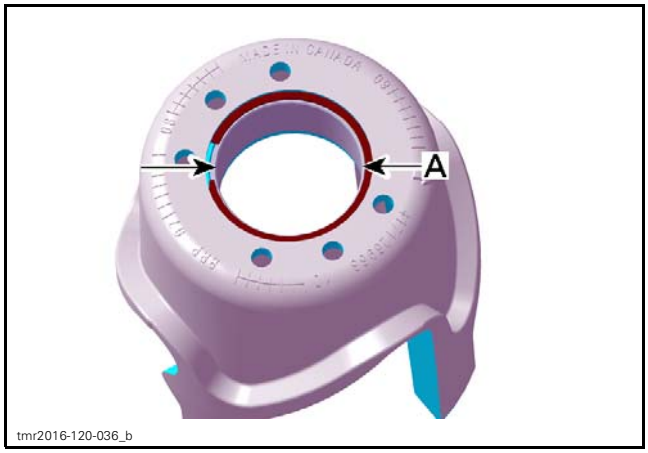

A. Inner diameter of cam bushing

CAM BUSHING INNER DIAMETER	
New	41.278 mm to 41.363 mm (1.6251 in to 1.6285 in)
Service limit	41.420 mm (1.6307 in)

Replace the cam if the inner diameter of bushing is out of specification.

Sliding Sheave

1. Inspect pulley sheave for marks or scratches.
2. Ensure circlip properly locks the inner bushing. Replace part if necessary.
3. Measure the inner diameter of sliding sheave bushing.

REQUIRED TOOL
Dial bore gauge

MEASURING POINT
At least 5 mm (1/4 in) from bushing edge

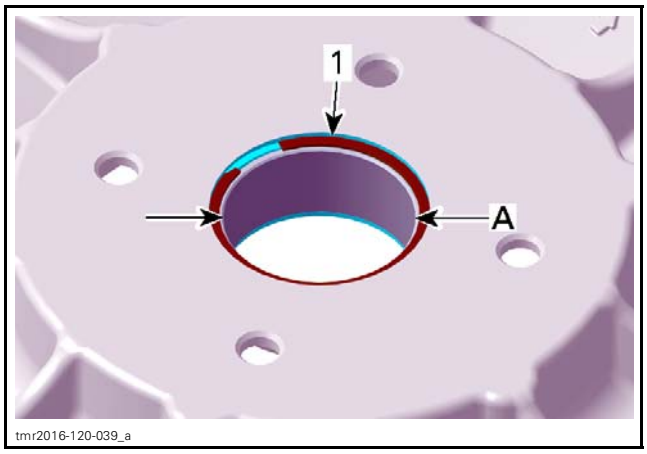

1. Circlip
A. Inner diameter of sliding sheave bushing

DRIVEN PULLEY INNER HALF BUSHING	
New	41.278 mm to 41.363 mm (1.6251 in to 1.6285 in)
Service limit	41.420 mm (1.6307 in)

Replace the sliding sheave if the inner diameter of bushing is out of specification.

Fixed Sheave

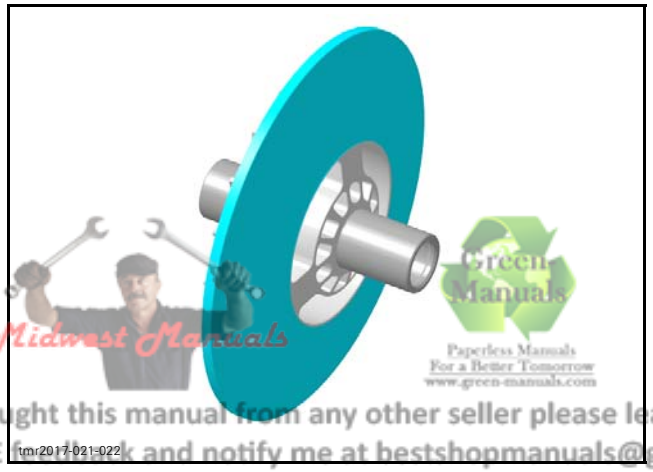

Midwest Manuals
Green Manuals
Paperless Manuals For a Better Tomorrow www.green-manuals.com
If you bought this manual from any other seller please leave them NEGATIVE feedback and notify me at bestshopmanuals@gmail.com

Replace fixed sheave and countershaft if one of the following problem is detected:

– Marks or scratches on pulley sheave
– Bent, twisted or otherwise damaged countershaft
– Defective splines and threads at the end of countershaft.

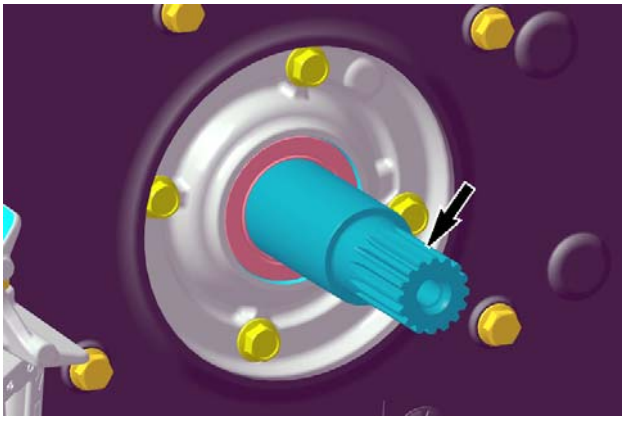
tmr2016-120-042_a

Driven Pulley Roller

1. Check the rollers for flat spots, cracks or other visible damages. Replace if necessary (as a set).
2. Measure inner and outer diameter of rollers.

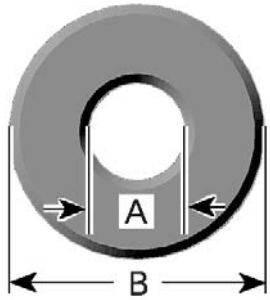

mmr2008-044-009_a

A. Inner diameter
B. Outer diameter

DRIVEN PULLEY ROLLER	
Service limit	Inner diameter: 8.5 mm (.335 in)
	Outer diameter: 21.5 mm (.846 in)

3. Measure the roller thickness.

mmr2008-044-010_a

A. Thickness of roller

DRIVEN PULLEY ROLLER THICKNESS	
Service limit	14.75 mm (.581 in)

If a roller is out of specifications, replace both rollers at the same time.

Cleaning the Driven Pulley

Use solvent cleaner and a clean rag to clean pulley sheaves.

SERVICE PRODUCT
CLUTCH AND PULLEY FLANGE CLEANER PRO S1 (P/N 779244)

Cam and Spring

During break-in period, Teflon from bushing moves to cam or countershaft surface. A Teflon over Teflon running condition occurs, leading to low friction. So it is normal to see gray Teflon deposit on cam or countershaft. Do not remove this deposit.

When a dust deposit has to be removed from the cam or the countershaft, use dry cloth to avoid removing transferred Teflon.

Assembling the Driven Pulley

Installing the Driven Pulley Roller

NOTE: Exceptionally, do NOT clean threaded hole to avoid changing the screw position when torqued.

1. Using a hand wire brush, clean pivot screw threads.

IMPORTANT: Do not use a thread die to clean pivot screw of threadlocker as this may alter the screw threads.

Pivot screw and ribbed lock washer must be reused if in good condition. If damaged, replace fixed sheave assembly.

2. Apply the threadlocker to the pivot screw threads.

SERVICE PRODUCT	
Pivot screw threads	LOCTITE 243 (BLUE) (P/N 293 800 060)

3. Insert roller in fixed sheave, thread in pivot screw with ribbed lock washer.

IMPORTANT: For proper fit, each pivot screw must be reinstalled where originally mounted in the fixed sheave.

The ribbed locked washer must be installed with the concave side towards the fixed sheave.

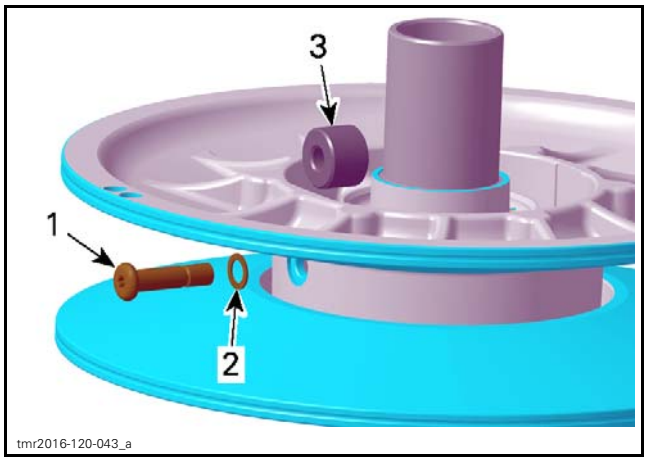

1. *Pivot screw*
2. *Ribbed lock washer (concave side towards fixed sheave)*
3. *Roller*

4. Tighten pivot screw as specified.

TIGHTENING TORQUE	
Pivot screws	20 N•m ± 1 N•m (15 lbf•ft ± 1 lbf•ft)

The holes in the fixed sheave and pivot screw must be perfectly aligned when torque is applied.

NOTICE **If both holes are not properly aligned, the spring pin will not be inserted properly, causing damages to the pivot screw hole and the fixed sheave.**

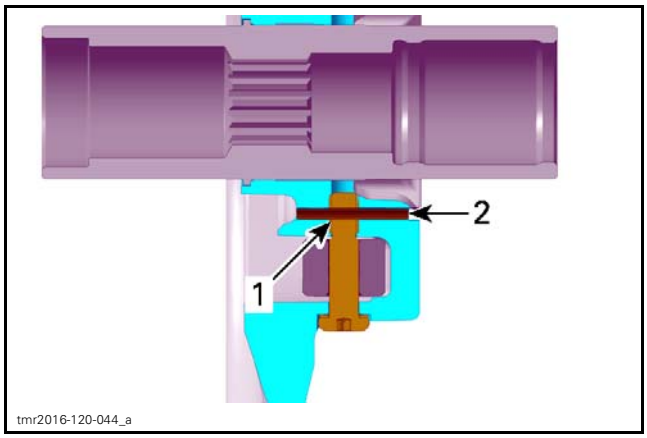

1. *Hole in pivot screw*
2. *Spring pin*

5. Install spring pin and tighten as specified.

Assembling the Sheaves and Cam

1. Install the cam on the spring compressor tool, over the support cup and the clutch shim.
2. Install the spring into the cam then the fixed sheave and the sliding sheave.
3. Complete with the support guide and the handle.
4. Before tightening the handle, align the arrows on cam and the sliding sheave with the one on the fixed sheave.
5. Tighten the handle until the cam is completely pressed against the sliding sheave.

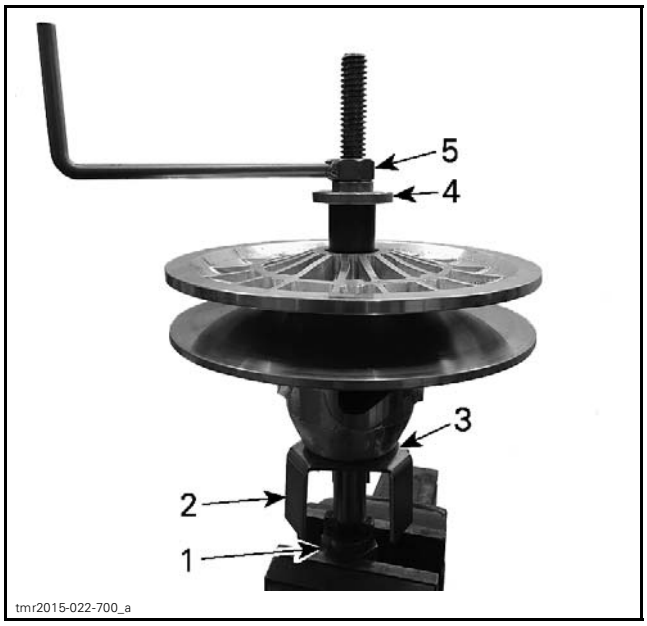

1. *Pulley spring compressor tool*
2. *Support cup*
3. *Driven pulley spacer*
4. *Support guide*
5. *Handle*

6. From the back of the sliding sheave, install four (4) **NEW** cam screws.

TIGHTENING TORQUE	
Cam screw	35 N•m ± 4 N•m (26 lbf•ft ± 3 lbf•ft)

7. Remove the driven pulley from the tool.

Installing the Driven Pulley

The installation is the reverse of the removal procedure. However, pay attention to the following details.

Install thrust washer on countershaft.

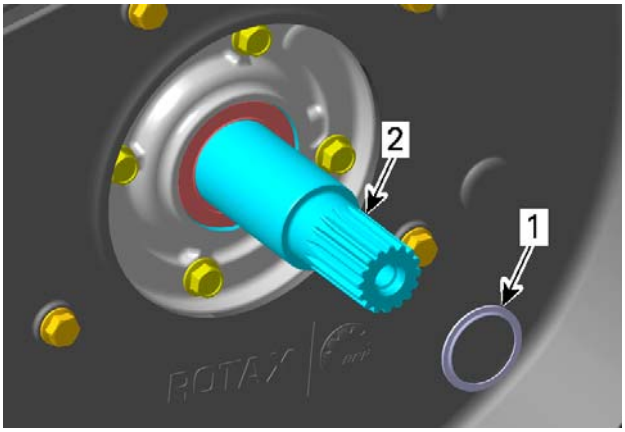

1. *Thrust washer*
2. *Countershaft*

NOTICE **This assembly uses a stretch screw. Always install a NEW screw.**

Clean threads of gearbox countershaft and **NEW** driven pulley screw.

RECOMMENDED SERVICE PRODUCT	
USA	XPS BRAKES AND PARTS CLEANER (USA) (P/N 219 701 705)
Other countries	XPS BRAKES AND PARTS CLEANER (P/N 219 701 776)

NOTICE **Threads must be free of oil and grease. Lubricants in threads will create too high preload to tightened driven pulley screw.**

Install the driven pulley onto the countershaft. Make sure to align splines.

Install driven pulley screw with collar washer.

NOTICE **Make sure to position the large diameter of the thrust washer against the conical side of the spring washer.**

Install the clutch holder.

REQUIRED TOOL	
CLUTCH HOLDER (P/N 529 036 380)	

Tighten driven pulley screw as specified.

TIGHTENING TORQUE	
Driven pulley screw	70 N•m ± 5 N•m (52 lbf•ft ± 4 lbf•ft)

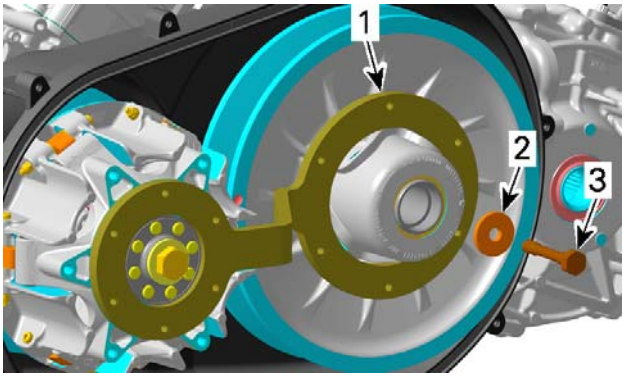

1. *Clutch holder*
2. *Collar washer*
3. *Driven pulley screw (NEW)*

Remove the clutch holder.

Install drive belt. Refer to *DRIVE BELT* in this subsection.

NOTICE **After the repair procedure is finished, allow vehicle to sit for 6 hours for threadlocker curing.**

CVT AIR GUIDE

Removing the CVT Air Guide

Remove:

– *DRIVE PULLEY*

– *DRIVEN PULLEY*.

Unscrew the clamps retaining the CVT air hoses.

Remove CVT air guide.

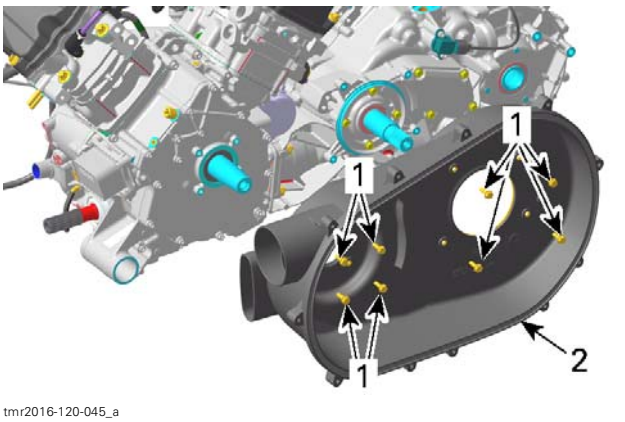

1. *Retaining screws*
2. *CVT air guide*

Remove and discard O-rings.

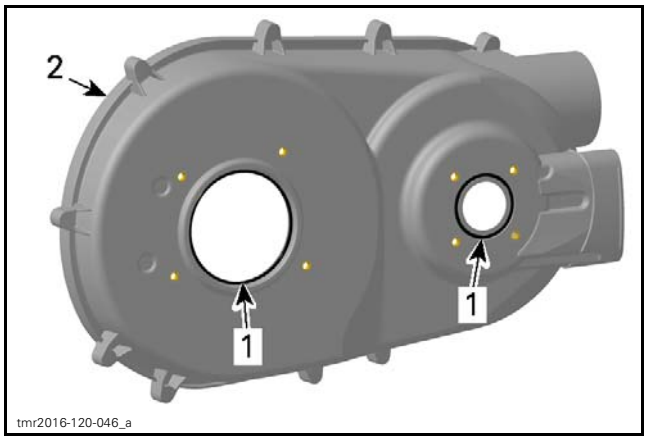

1. *CVT air guide*
2. *O-rings*

Inspecting the CVT Air Guide

Clean CVT air guide from contamination.

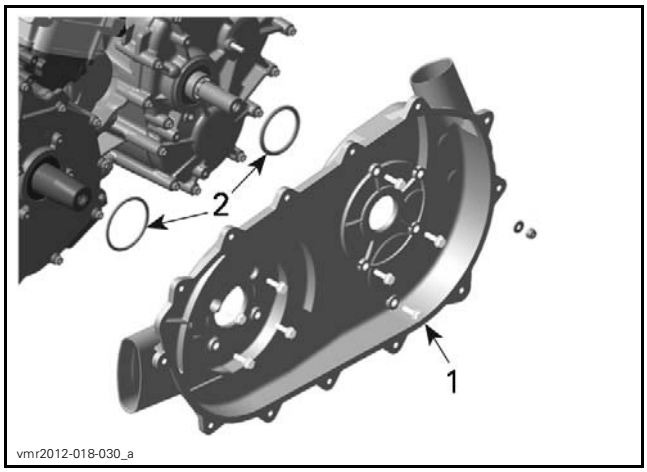

1. *CVT air guide*
2. *O-rings*

Installing the CVT Air Guide

The installation is the reverse of the removal procedure.

TIGHTENING TORQUE	
CVT air guide retaining screws	10 N•m ± 1 N•m (89 lbf•**in** ± 9 lbf•**in**) + LOCTITE 243 (BLUE) (P/N 293 800 060)

CONTINUOUSLY VARIABLE TRANSMISSION

SERVICE TOOLS

Description	Part Number	Page
CLUTCH HOLDER	529 036 496	9, 20, 26
DRIVE PULLEY PULLER	529 000 064	9
DRIVEN PULLEY ADAPTER	708 200 720	8, 20
DRIVEN PULLEY SPACER	529 036 351	21
GOVERNOR CUP PULLER	529 036 350	10
PULLER/LOCKING TOOL	529 000 088	8, 20
PULLEY SPRING COMPRESSOR TOOL	529 036 012	12, 21

SERVICE PRODUCTS

Description	Part Number	Page
CLUTCH AND PULLEY FLANGE CLEANER PRO S1	779244	13, 18, 24
LOCTITE 243 (BLUE)	293 800 060	27
XPS BRAKES AND PARTS CLEANER (USA)	219 701 705	26
XPS BRAKES AND PARTS CLEANER	219 701 776	26

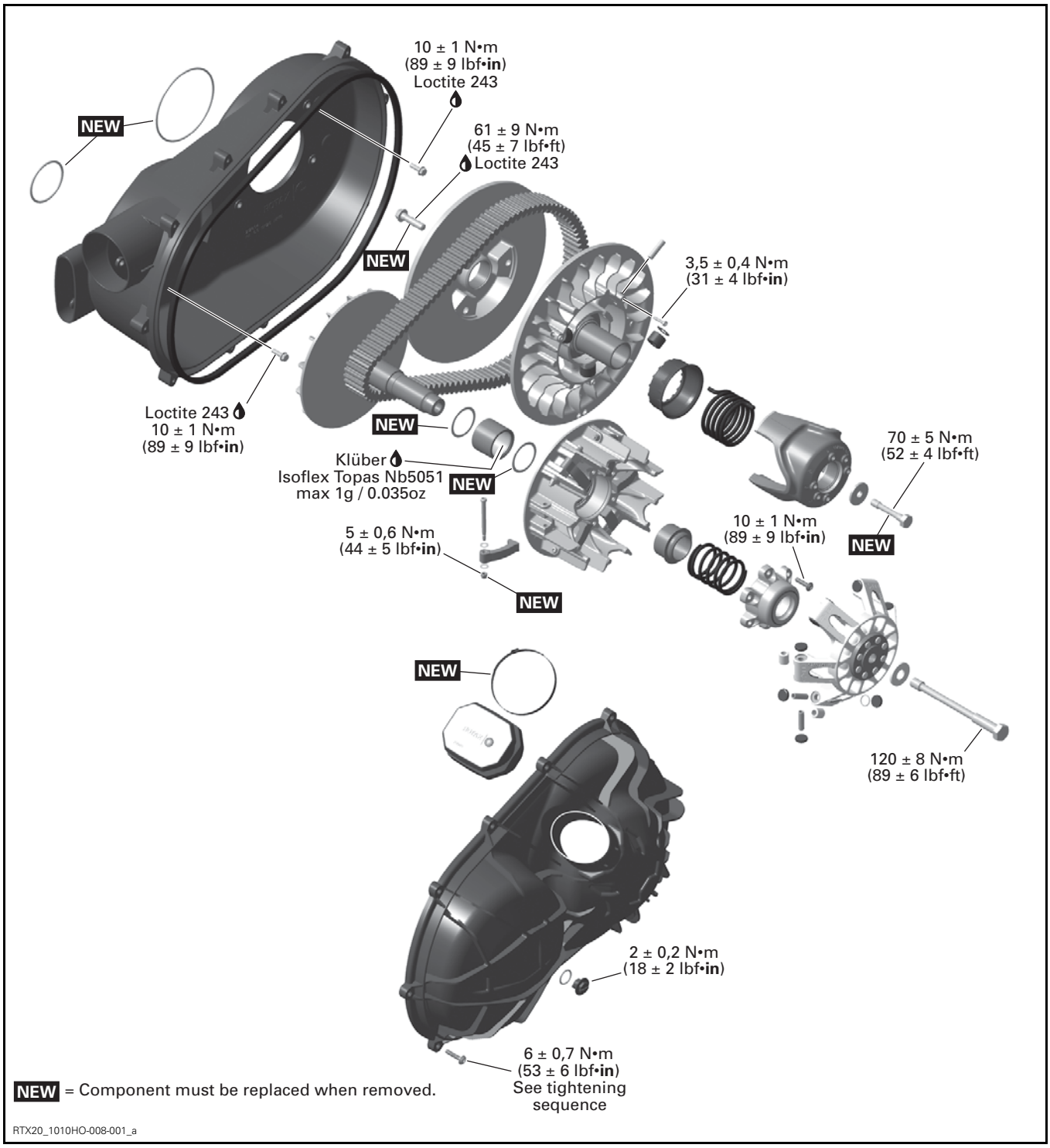
10 ± 1 N•m
(89 ± 9 lbf•in)
Loctite 243
NEW
61 ± 9 N•m
(45 ± 7 lbf•ft)
Loctite 243
NEW
3,5 ± 0,4 N•m
(31 ± 4 lbf•in)
Loctite 243
10 ± 1 N•m
(89 ± 9 lbf•in)
NEW
Klüber
Isoflex Topas Nb5051
max 1g / 0.035oz
NEW
70 ± 5 N•m
(52 ± 4 lbf•ft)
NEW
10 ± 1 N•m
(89 ± 9 lbf•in)
5 ± 0,6 N•m
(44 ± 5 lbf•in)
NEW
NEW
120 ± 8 N•m
(89 ± 6 lbf•ft)
2 ± 0,2 N•m
(18 ± 2 lbf•in)
6 ± 0,7 N•m
(53 ± 6 lbf•in)
See tightening
sequence
NEW = Component must be replaced when removed.
RTX20_1010HO-008-001_a

Except X mr

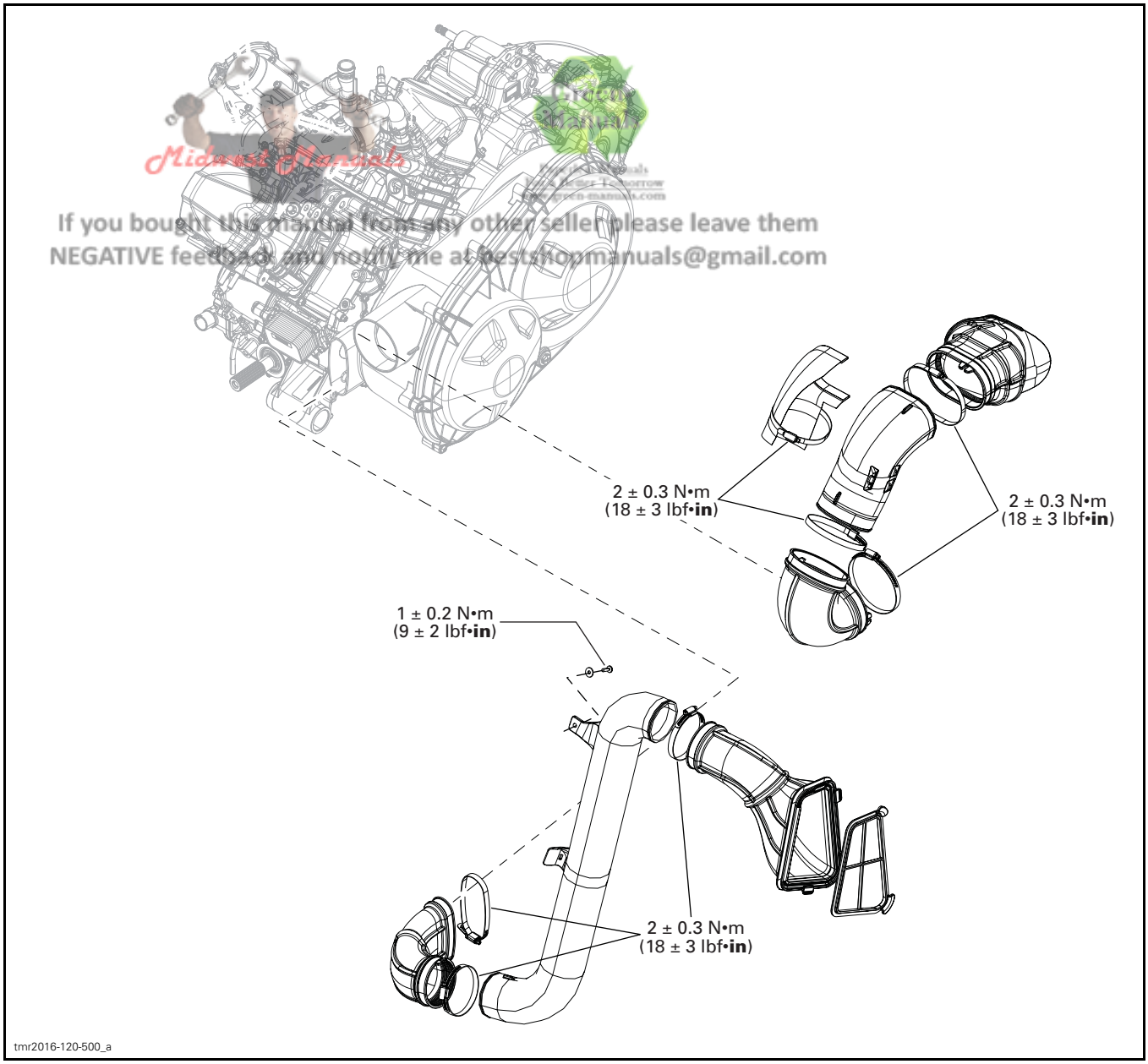

If you bought this manual from any other seller please leave them NEGATIVE feedback and notify me at bestshopmanuals@gmail.com

X mr

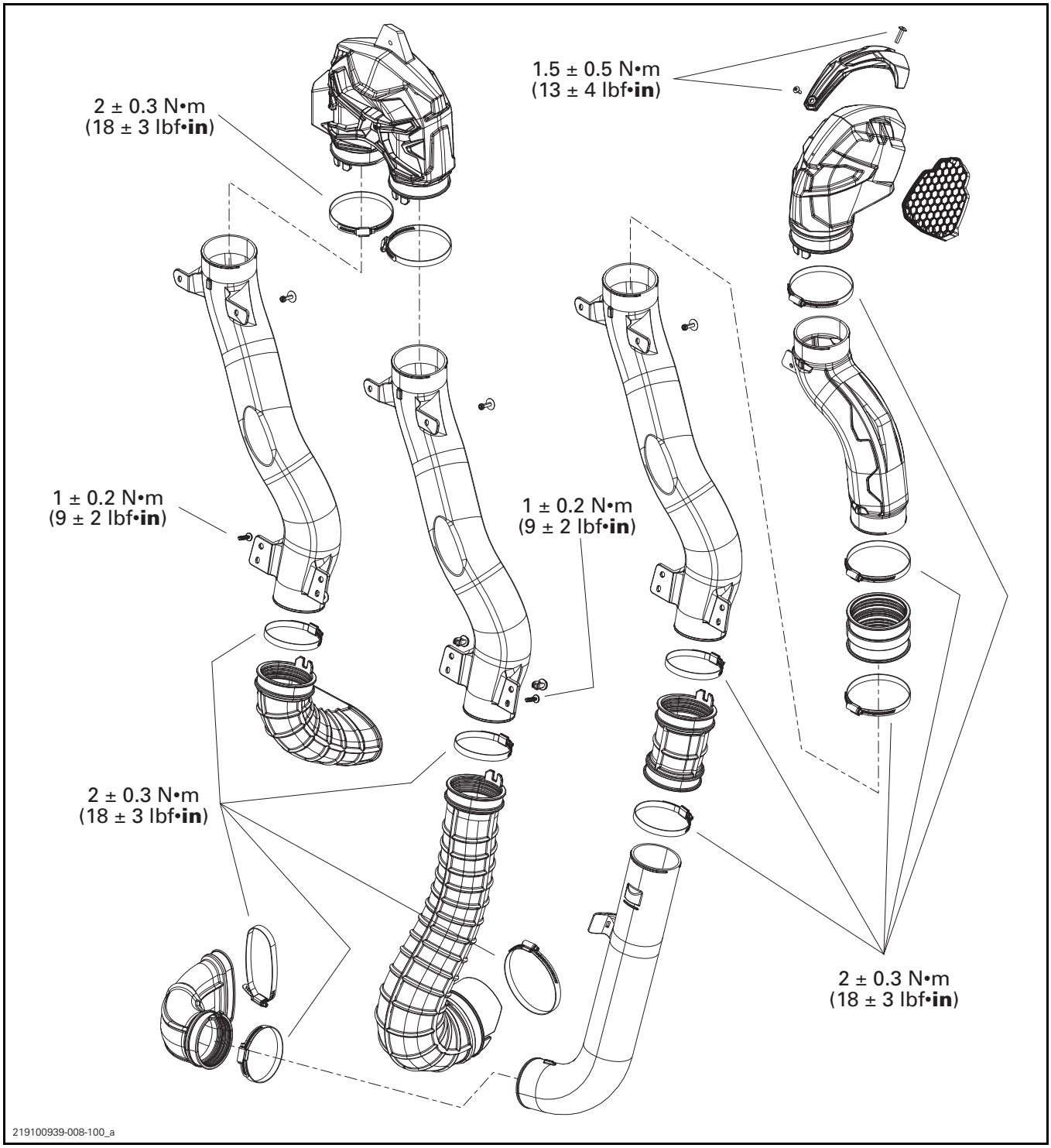
2 ± 0.3 N•m
(18 ± 3 lbf•in)
1.5 ± 0.5 N•m
(13 ± 4 lbf•in)
1 ± 0.2 N•m
(9 ± 2 lbf•in)
1 ± 0.2 N•m
(9 ± 2 lbf•in)
2 ± 0.3 N•m
(18 ± 3 lbf•in)
2 ± 0.3 N•m
(18 ± 3 lbf•in)
219100939-008-100_a

GENERAL

NOTE: For a better understanding, the following illustrations are taken with engine out of vehicle. To perform the following instructions, it is not necessary to remove engine.

This CVT is lubrication free. Never lubricate any components except drive pulley hub.

⚠ WARNING

Never touch CVT while engine is running. Never drive vehicle when CVT cover is removed.

⚠ WARNING

Any drive pulley repairs must be performed by an authorized Can-Am dealer. Subcomponent installation and assembly tolerances require strict adherence to procedures detailed.

⚠ WARNING

The clutch assembly is a precisely balanced unit. Never replace parts with used parts from another clutch assembly.

MAINTENANCE

CVT AIR FILTER

CVT air filter inspection and cleaning frequency should be adjusted according to riding conditions as it is critical to ensure proper engine performance and life span.

CVT Air filter inspection and cleaning frequency must be increased for the following severe riding conditions:

- Riding on dry sand.
- Riding on dry dirt covered surfaces.
- Riding on dry gravel trails or similar conditions.
- Riding in areas with high concentration of seeds or crop husks.
- Riding in severe snow conditions.

NOTE: Riding in a group in these conditions would increase even more the air filter replacement requirement.

Removing the CVT Air Filter

1. Tilt the cargo box.
2. Press the filter tabs to release it.

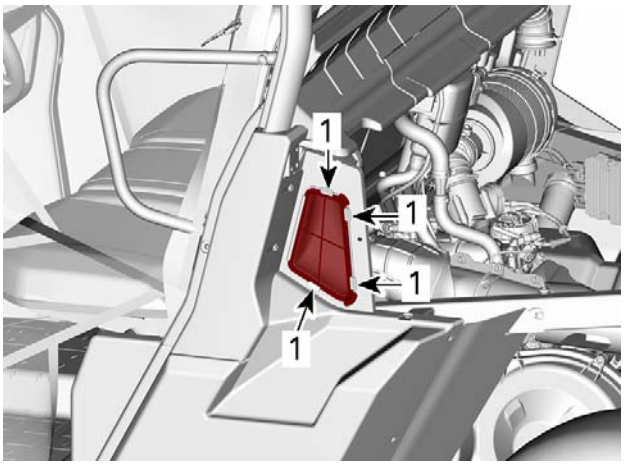

1. Press here

Cleaning the CVT Air Filter

1. Inspect filter and replace if damaged.
2. Gently clean using a solution of soft soap and water, then rinse filter.
3. Gently shake off excess water and allow filter to dry at room temperature.
4. Clean inside the CVT air inlet end.

Installing the CVT Air Filter

The installation is the reverse of the removal procedure.

INSPECTING THE DRIVE BELT

Remove drive belt, refer to procedure in this subsection.

Inspect belt for cracks, fraying or abnormal wear. Replace if necessary.

Check drive belt width at cord level. Replace if it is out of specification.

DRIVE BELT WIDTH	
Service limit	34.8 mm (1.37 in)

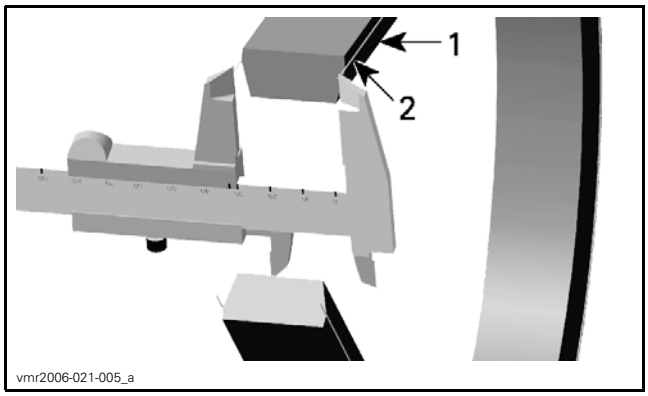

1. Drive belt
2. Cord in drive belt

CLEANING THE CVT AIR INLET/OUTLET

1. Remove CVT cover, refer to procedure in this subsection.
2. Inspect and clean the air inlet and outlet openings from inside the CVT air guide.

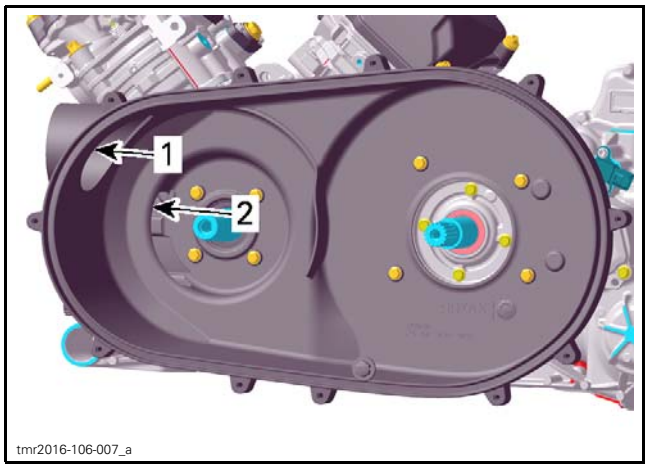

1. CVT air inlet
2. CVT air outlet

3. Remove CVT air filter, refer to *REMOVING CVT AIR FILTER*.
4. Inspect and clean the CVT air inlet end.

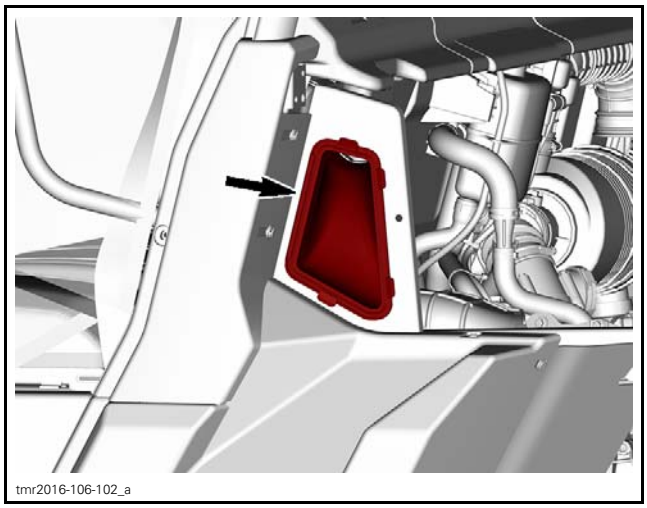

NOTE: If a lot of debris or grime are found in the CVT system, it may be necessary to remove the ducts and thoroughly clean them.

5. Install air inlet baffle.
6. Install CVT air filter, refer to *INSTALLING CVT AIR FILTER*.
7. Install CVT cover, refer to *CONTINUOUSLY VARIABLE TRANSMISSION (CVT)* subsection.

DRIVE PULLEY, DRIVEN PULLEY AND HUB NEEDLE BEARING MAINTENANCE

Drive and Driven Pulley

Clean and inspect drive and drive pulley sheaves. Refer to *CLEANING THE DRIVE PULLEY* and *CLEANING THE DRIVEN PULLEY* in this subsection.

Checking the Hub Bearing Operation

1. Bring engine to operating temperature.
2. Switch to 2WD.
3. Shift lever to “H”.
4. Stop engine.
5. Remove CVT Cover. Refer to appropriate shop manual.
6. Lift and support rear end of the vehicle so the wheels clear the ground.
7. Start engine and let run at idle speed.
8. Look at the driven pulley if it is turning or not.
   1. If turning, inspect drive pulley hub bearing. Refer to *INSPECTING THE DRIVE PULLEY* in this subsection.
   2. If not turning, the hub bearing is ok.

PROCEDURES

CVT COVER

Draining the CVT Cover

If water is present in CVT cover, it can be drained as follows:

1. Turn bayonet cap 90° counterclockwise to open it.
2. Remove bayonet cap and O-ring.

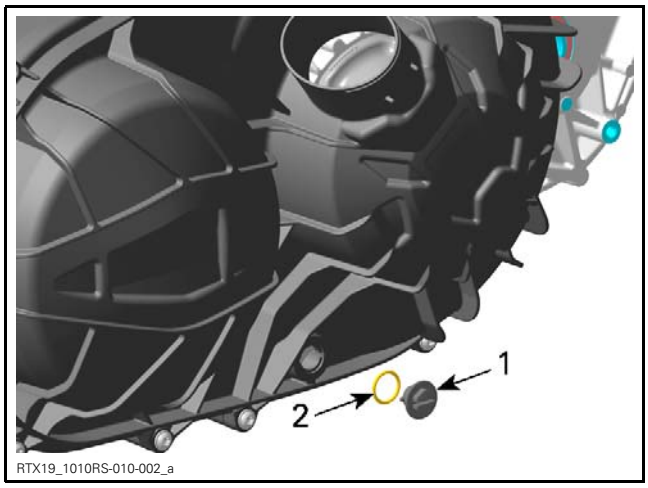

1. Bayonet cap
2. O-ring

3. Let water drain from CVT cover.
4. Reinstall bayonet cap and O-ring.

TIGHTENING TORQUE	
Bayonet cap	2 N•m ± 0.2 N•m (18 lbf•**in** ± 2 lbf•**in**)

NOTICE **If any debris entered the CVT cover, CVT must be cleaned and inspected.**

Removing the CVT Cover

Remove:

– Retaining screws
– CVT cover
– Gasket.

NOTE: Remove the center top screw last to support the cover during removal.

NOTICE **Do not use and impact tool to remove CVT cover screws.**

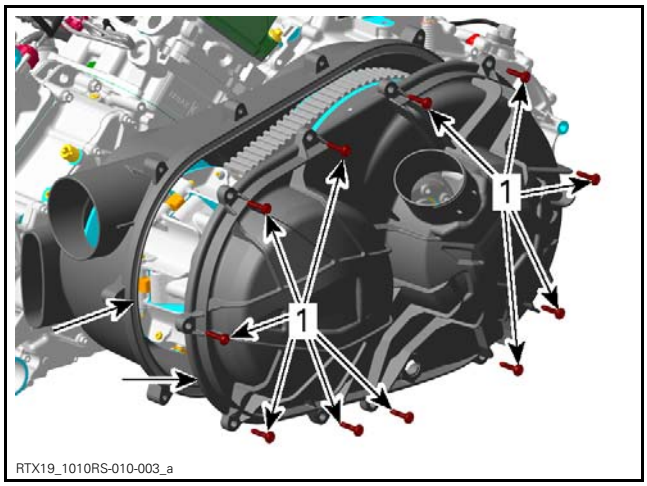

1. Retaining screws
2. CVT cover
3. Gasket

Installing the CVT Cover

Install the center top screw of first.

Tighten the CVT cover retaining screws as per following sequence.

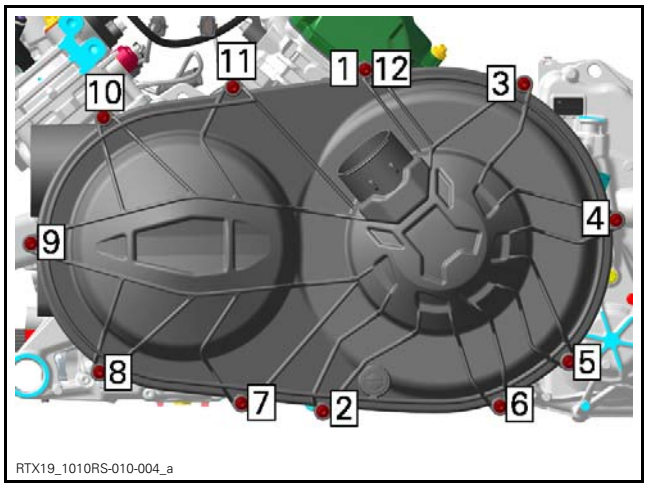

TIGHTENING TORQUE	
CVT cover retaining screws	6 N•m ± 0.7 N•m (53 lbf•**in** ± 6 lbf•**in**)

DRIVE BELT

Removing the Drive Belt

NOTICE **In case of a drive belt failure, the CVT, cover and air outlet must be cleaned.**

Remove *CVT COVER*.

REQUIRED TOOLS	
PULLER/LOCKING TOOL (P/N 529 000 088)	
DRIVEN PULLEY ADAPTER (P/N 708 200 720)	

Screw in the driven pulley adapter into the driven pulley shaft.

Screw in the driven pulley extractor into the threaded offset hole of the adapter.

Tighten the extractor to open the pulley.

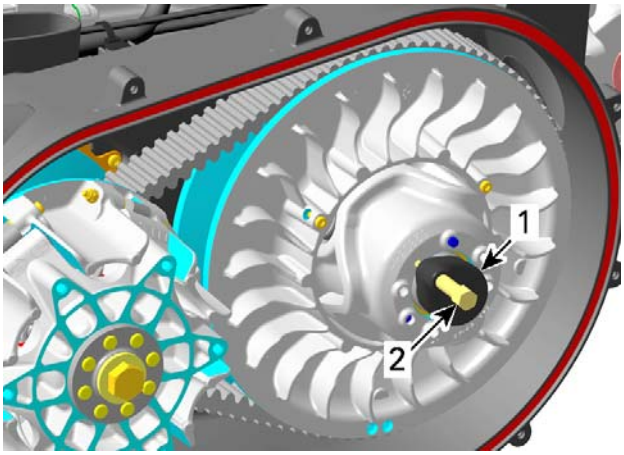

tmr2017-021-005_a

1. *Driven pulley adapter*
2. *Driven pulley extractor*

To remove belt, slip the belt over the top edge of fixed sheave, as shown.

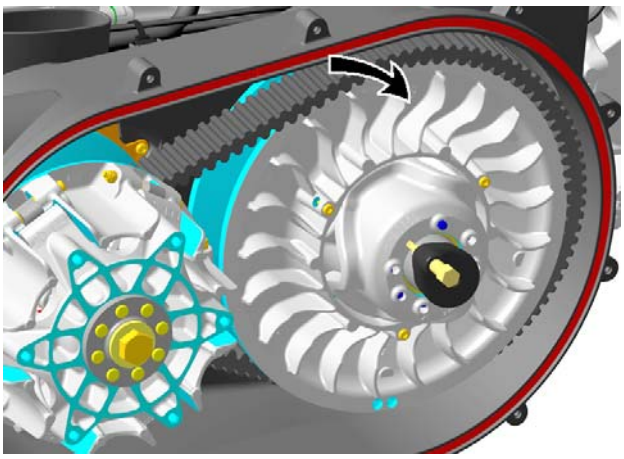
tmr2017-021-006_a

Inspecting the Drive Belt

For drive belt inspection refer to *MAINTENANCE* in this subsection.

Installing the Drive Belt

For installation, reverse the removal procedure. Pay attention to following details.

The maximum drive belt life span is obtained when the drive belt has the proper rotation direction. Install it so that the arrow printed on belt is pointing towards front of the vehicle, viewed from top.

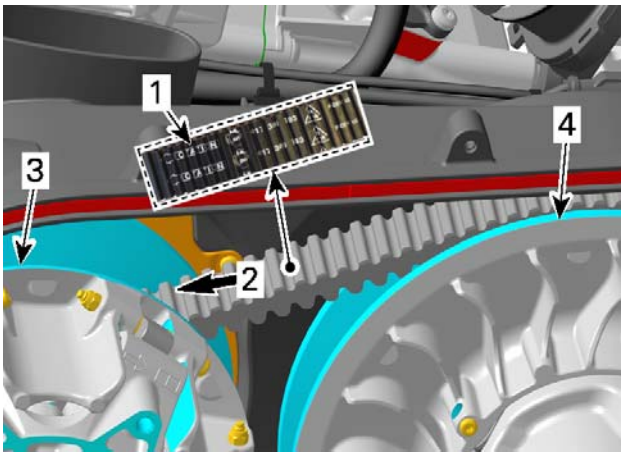

tmr2017-021-007_a

1. *Arrow printed on belt*
2. *Rotation direction*
3. *Drive pulley (front)*
4. *Driven pulley (rear)*

DRIVE PULLEY

Removing the Drive Pulley

1. Remove *DRIVE BELT*, see procedure in this subsection.
2. Prior to removing the drive pulley, mark sliding sheave and governor cup to ensure correct indexation at reinstallation.

tmr2016-120-008_a

1. *Mark on drive pulley sliding sheave*
2. *Mark on governor cup*

3. Lock the drive pulley.

REQUIRED TOOL	
CLUTCH HOLDER (P/N 529 036 496)	

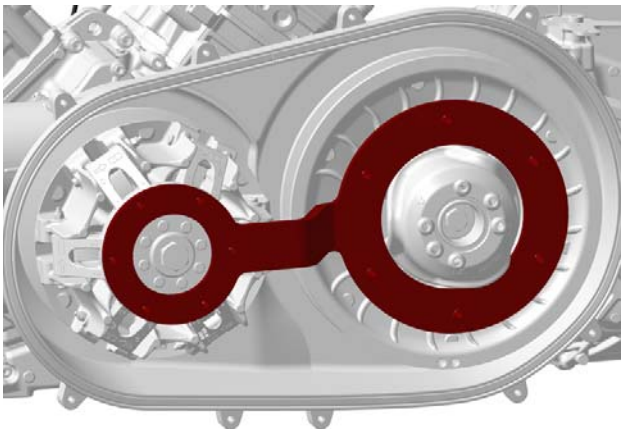

4. Loosen the drive pulley screw.

NOTICE **Never use any type of impact wrench for drive pulley removal.**

NOTE: Do not unscrew the drive pulley screw completely.

5. Remove service tool.
6. Apply axial pressure with your hand on the governor cup until clutch puller for removal is installed.
7. Remove:
   – Drive pulley screw
   – Spring washer.

CAUTION **Sliding sheave of drive pulley is spring loaded.**

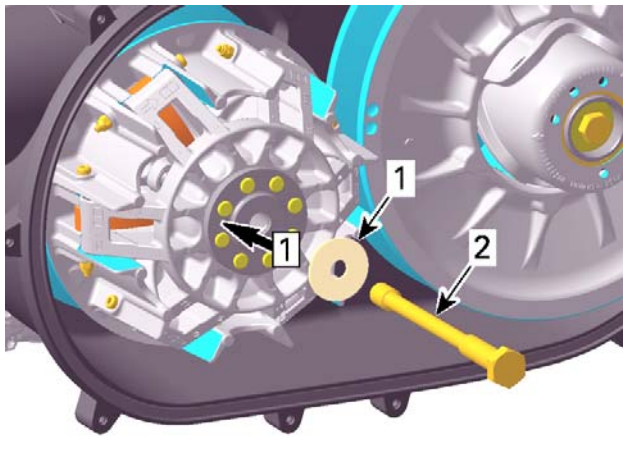

Step 1: Push

1. *Spring washer*
2. *Drive pulley screw*

8. Screw clutch puller in fixed sheave to remove drive pulley.

NOTICE **Use only recommended tool.**

REQUIRED TOOL	
DRIVE PULLEY PULLER (P/N 529 000 064)	

Disassembling the Drive Pulley

Drive Pulley

Except X mr Model

Screw clutch puller into fixed sheave shaft about 63 mm (2-1/2 in).

Raise drive pulley by the sliding sheave while knocking on the puller head to disengage fixed sheave.

NOTICE **Never tap on governor cup.**

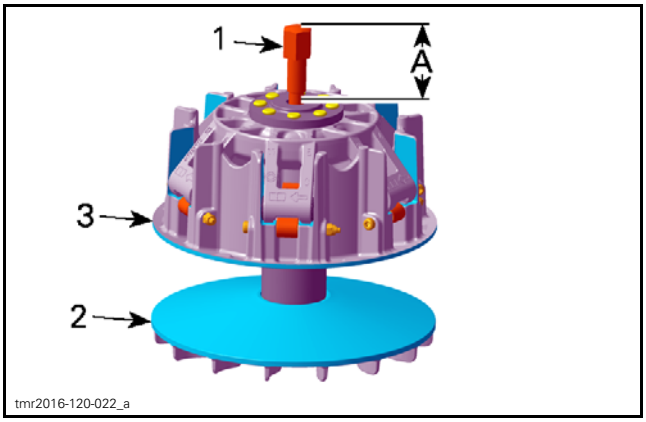

A. Maximum protrusion of 63 mm (2-1/2 in)

1. *Clutch puller*
2. *Fixed sheave*
3. *Sliding sheave*

Drive Pulley

X mr Model

Screw clutch puller into fixed sheave shaft (maximum protrusion of 63 mm (2-1/2 in)).

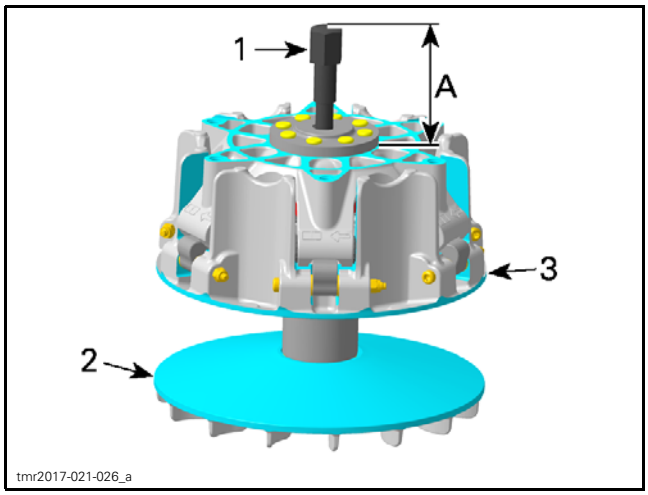

A. Maximum protrusion of 63 mm (2-1/2 in)
1. Clutch puller
2. Fixed sheave
3. Sliding sheave

Place the governor cup puller on governor cup.

REQUIRED TOOL	
GOVERNOR CUP PULLER (P/N 529 036 350)	

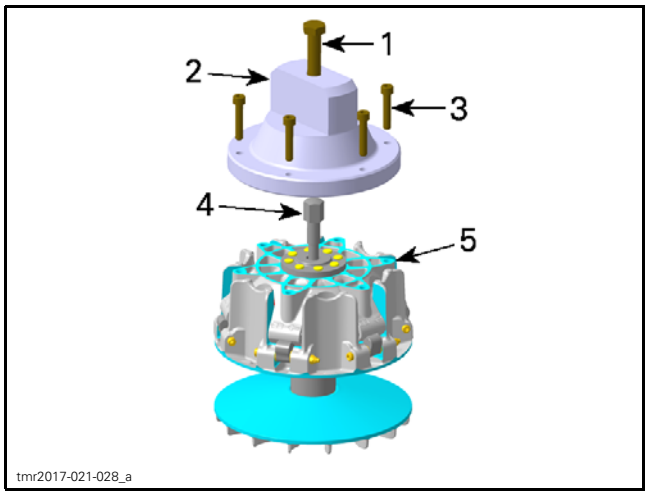

1. M16 x 80 puller screw
2. Governor cup puller
3. M8 x 35 puller retaining screws
4. Clutch puller
5. Governor cup

NOTICE Ensure that the hexagonal head of the clutch puller engages in the slot of the governor cup puller.

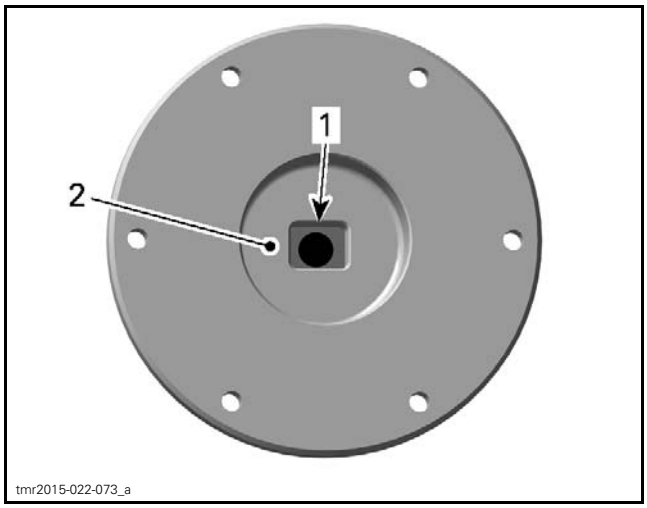

1. Slot
2. Inner side of puller

Tighten M8 x 35 puller retaining screws.

TIGHTENING TORQUE	
M8 x 35 puller retaining screws	20 N•m ± 2 N•m (15 lbf•ft ± 1 lbf•ft)

Put the governor cup puller into a vice and screw in the M16 x 80 puller screw.

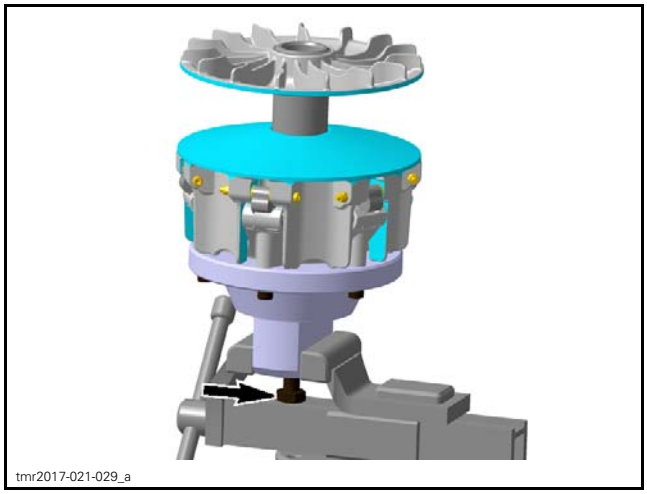

SCREW IN M16 X 80 PULLER SCREW

CAUTION The fixed sheave will bounce up.

Remove the governor cup puller from the drive pulley.

Governor Cup

Carefully lift governor cup until slider shoes come at their highest position into guides.

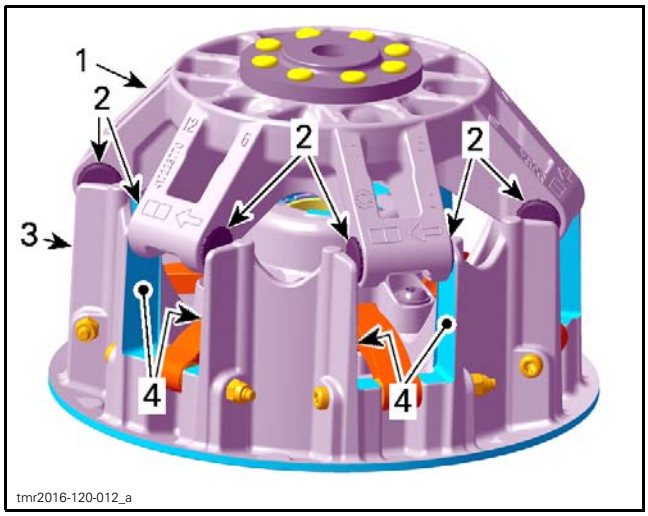

1. *Governor cup*
2. *Slider shoes*
3. *Sliding sheave*
4. *Guides*

NOTE: The following procedure is not necessary except if roller must be removed. Refer to *INSPECTING THE DRIVE PULLEY* before proceeding.

Remove slider shoes out of each bearing sleeve. Use a flat screwdriver if necessary.

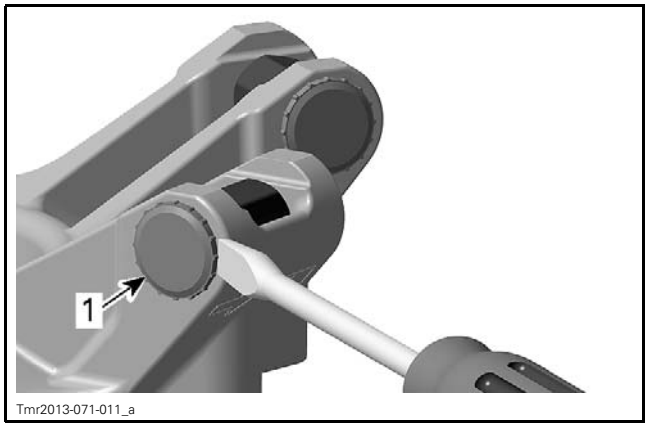

1. *Slider shoe*

Put governor cup on a vice to push out bearing sleeve of roller in the foreseen direction (against arrow). Use an appropriate punch (diameter of punch must be smaller than the bearing sleeve diameter).

NOTICE **Do not clamp the governor cup in the vice to push out bearing sleeve. Governor cup will be damaged.**

NOTE: Use protection plates to avoid marks and/or damages to the governor cup.

NOTICE **Always replace all rollers at the same time. Partly worn rollers may cause damage to the CVT system.**

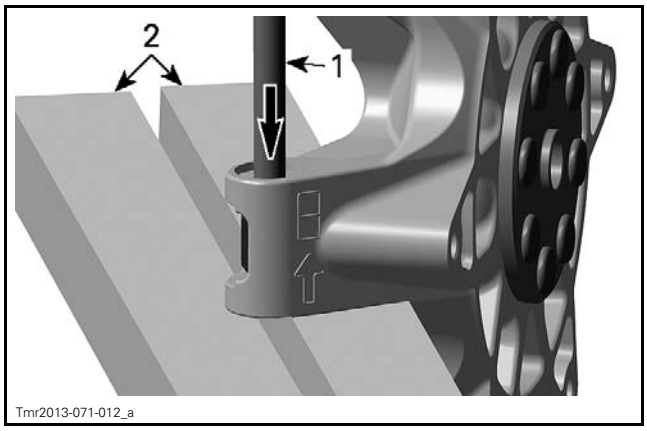

1. *Punch*
2. *Vice*

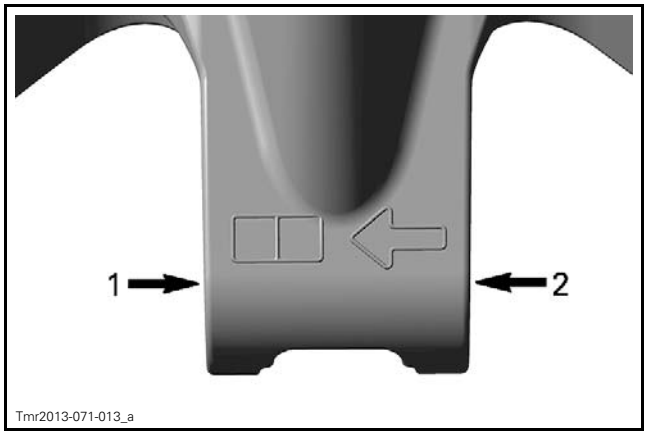

1. *Removal direction*
2. *Assembly direction*

Whenever replacing the roller sleeves, make a mark in the box on the governor arm using a punch.

NOTICE **Do not tap too hard. Severe damage to the governor cup may appear.**

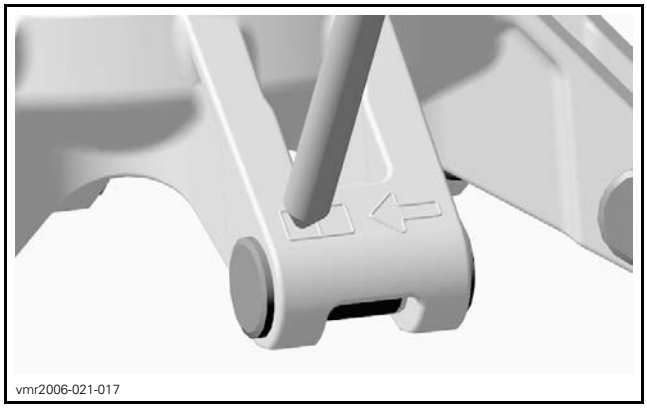

NOTE: Whenever removing a governor cup with already two marked boxes replace it by a NEW one.

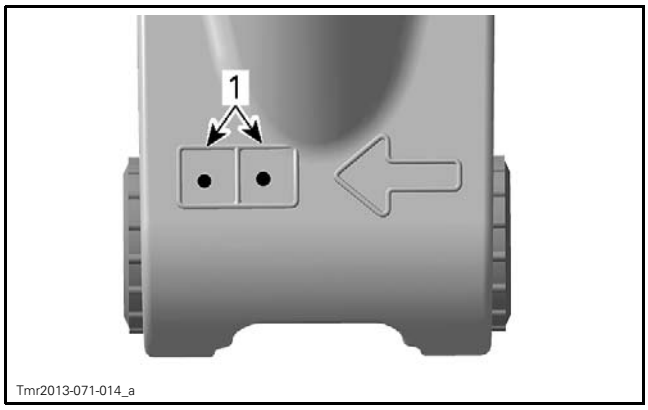

1. Marked boxes

Sliding Sheave

NOTE: The following procedure is not necessary except if centrifugal lever and/or sliding plates (if applicable) must be removed. Refer to *INSPECTION* before proceeding.

Remove:

- Lock nut
- Centrifugal lever pivot bolt
- Centrifugal lever
- Thrust washers.

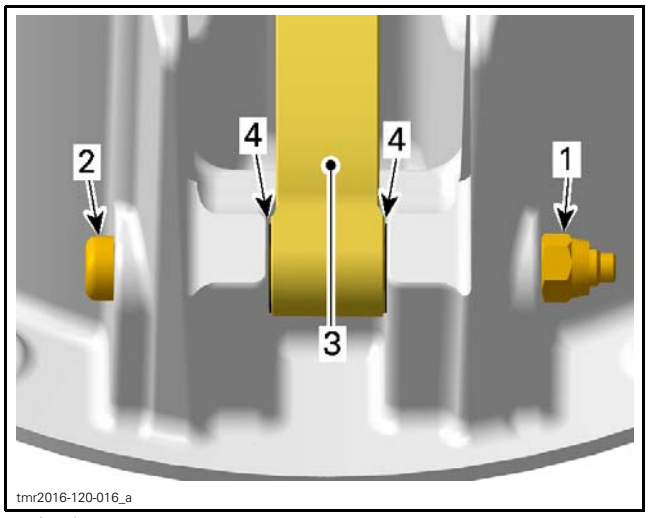

1. Lock nut
2. Centrifugal lever pivot bolt
3. Centrifugal lever
4. Thrust washers

Remove spring cover.

⚠ WARNING

Spring cover is under high clutch spring preload. Never attempt to remove spring cover without the recommended tools.

REQUIRED TOOL	
PULLEY SPRING COMPRESSOR TOOL (P/N 529 036 012)	

Install support guide of spring compressor in a vice.

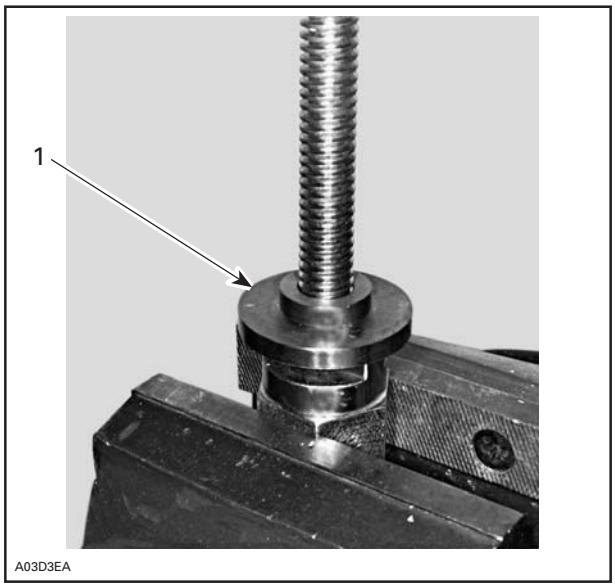

NOTE: The support guide will prevent bushing damage.

Place sliding sheave on support guide.

Place support cup over spring cover and tighten nut.

Remove spring cover screws.

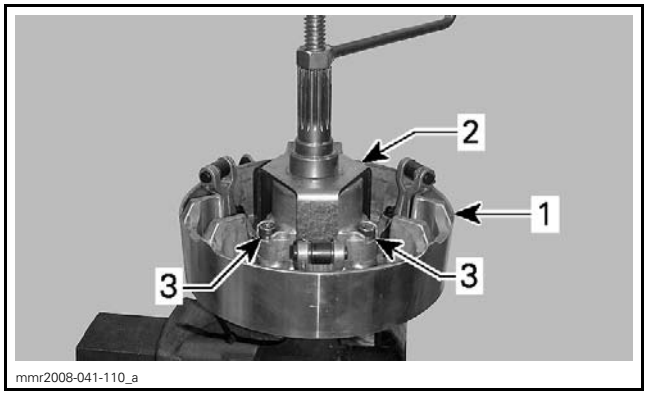

TYPICAL
1. Sliding sheave
2. Support cup
3. Spring cover screws

Remove service tool.

Remove the following components from the sliding sheave.

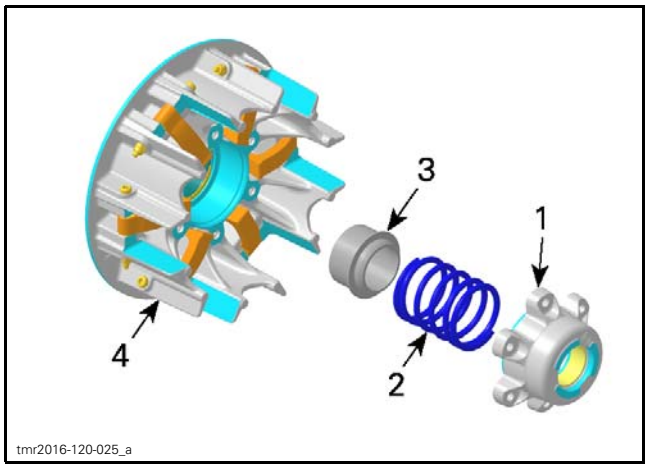

1. *Spring cover*
2. *Spring*
3. *Spring seat*
4. *Sliding sheave*

Fixed Sheave

Remove the following components from the fixed sheave.

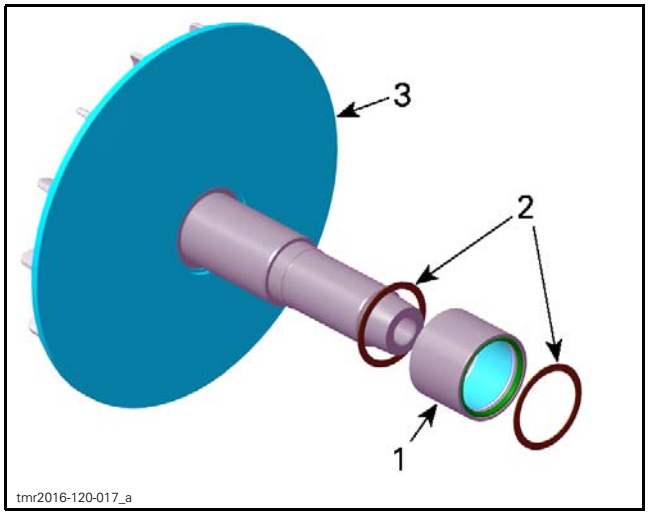

1. *Hub*
2. *Thrust washers*
3. *Fixed sheave*

Cleaning the Drive Pulley

Clean pulley faces and shaft with fine steel wool and dry cloth.

SERVICE PRODUCT
CLUTCH AND PULLEY FLANGE CLEANER PRO S1 (P/N 779244)

Using a paper towel with cleaning solvent, clean:
- Crankshaft tapered end
- Crankshaft threads
- Taper on the fixed sheave
- Threads of drive pulley screw.

NOTICE **Avoid contact between cleaner and crankshaft seal because damage may occur.**

Remove all hardened oil deposits that have baked on crankshaft and pulley tapered surfaces with coarse or medium steel wool and/or sand paper no. 600.

NOTICE **Do not use any other type of abrasive.**

Reclean mounting surfaces with paper towel and cleaning solvent.

Wipe off the mounting surfaces with a clean, dry paper towel.

NOTICE **Mounting surfaces must be free of any oil, cleaner or towel residue.**

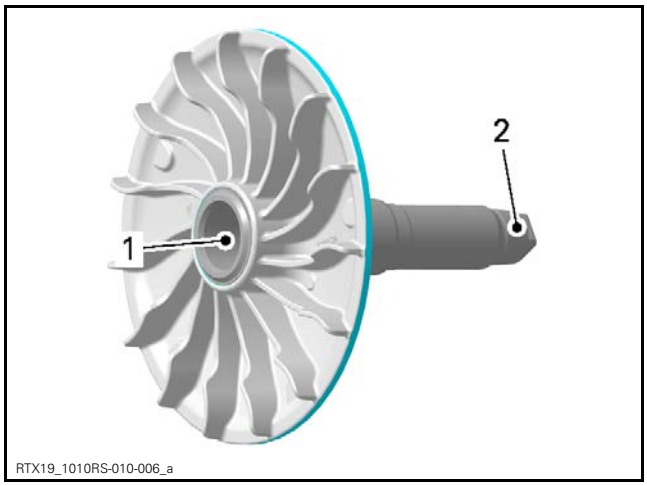

1. *Taper of fixed sheave, crankshaft side*
2. *Tapered end of fixed sheave shaft*

Only use petrol base cleaner when cleaning bushings of sliding sheave.

NOTICE **Do not use acetone to clean bushing.**

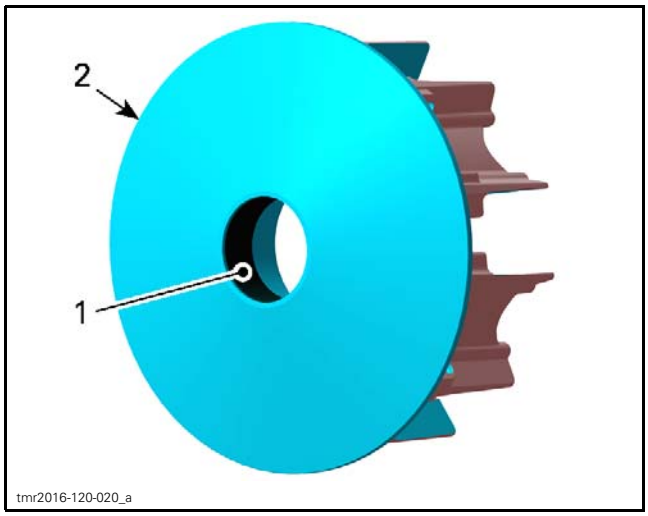

1. *Bushing*
2. *Sliding sheave*

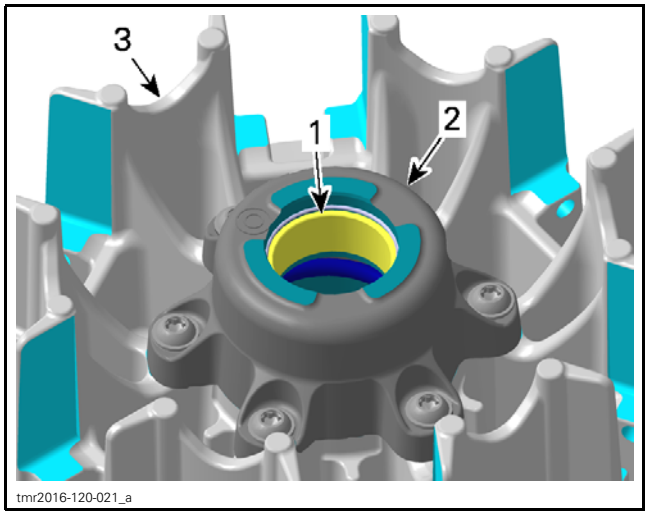

1. *Bushing*
2. *Spring cover*
3. *Sliding sheave*

Inspecting the Drive Pulley

Bushings

For bushing inspection, refer to *SLIDING SHEAVE AND SPRING COVER* in this subsection.

Governor Cup

Check governor cup for cracks or other visible damage. Replace if necessary.

Roller

Except X mr Model

NOTICE **When replacing rollers, always replace all rollers and all slider shoes at the same time.**

Check if rollers move freely.

Check roller outer width and inner diameter, replace if it is out of specification.

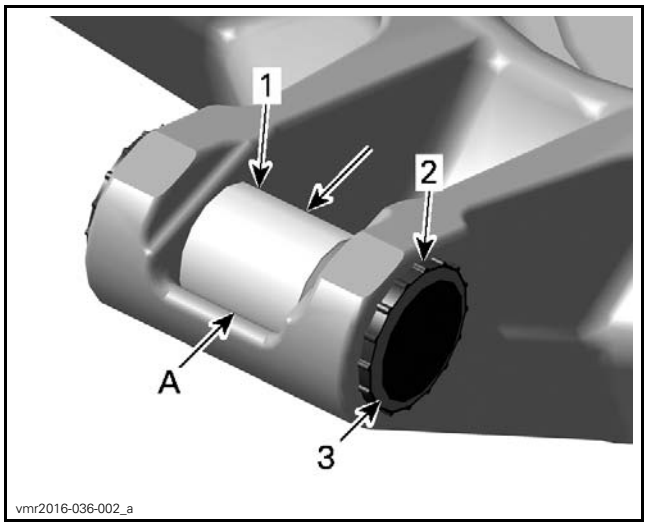

1. *Roller*
2. *Slider shoe*
3. *Chamfer*

A. *Roller outer diameter*

ROLLER OUTER DIAMETER	
New	13.80 mm to 14.00 mm (.543 in to .551 in)
Service limit	13.20 mm (.52 in)

ROLLER INNER DIAMETER	
New	8.025 mm to 8.175 mm (.3159 in to .3219 in)
Service limit	9.000 mm (.3543 in)

Roller

X mr Model

NOTICE **When replacing rollers, always replace all rollers and all slider shoes at the same time.**

Check if rollers move freely.

Check roller outer width and inner diameter, replace if it is out of specification.

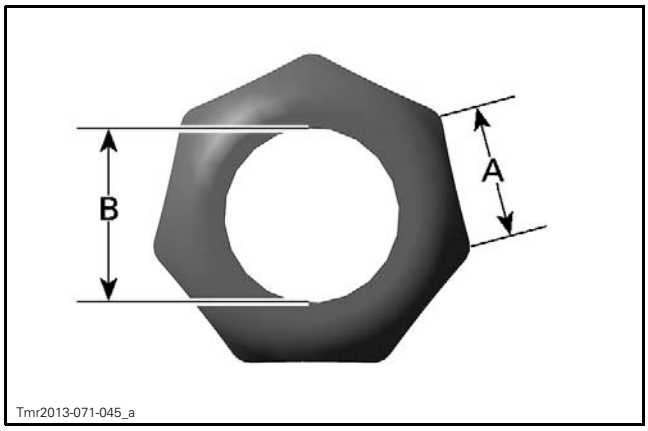

A. Roller flat spot width
B. Roller inner diameter

ROLLER FLAT SPOT WIDTH	
Service limit	8.50 mm (.335 in)

ROLLER INNER DIAMETER	
New	8.025 mm to 8.175 mm (.3159 in to .3219 in)
Service limit	9.000 mm (.3543 in)

Sliding Sheave and Slider Shoes

NOTICE **Always replace all slider shoes and O-rings at the same time.**

Check slider shoes for visible wear. If chamfer is worn out, replace slider shoes and O-rings.

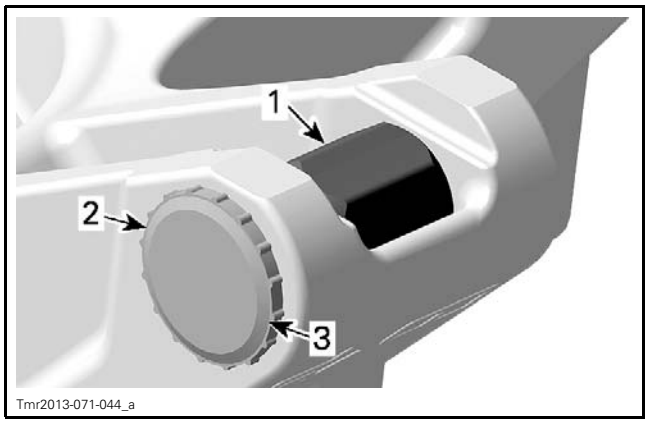

1. Roller
2. Slider shoe
3. Chamfer

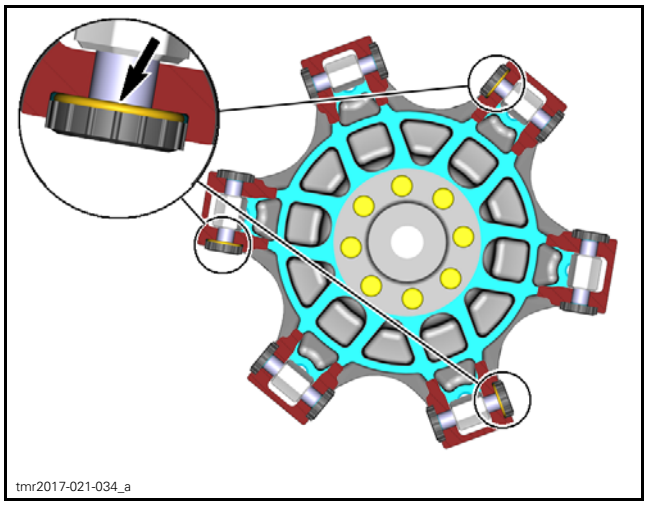

3 O-RINGS AT 120°

Measure the gap between slider shoes and guides with slider shoe at their lowest position into guides

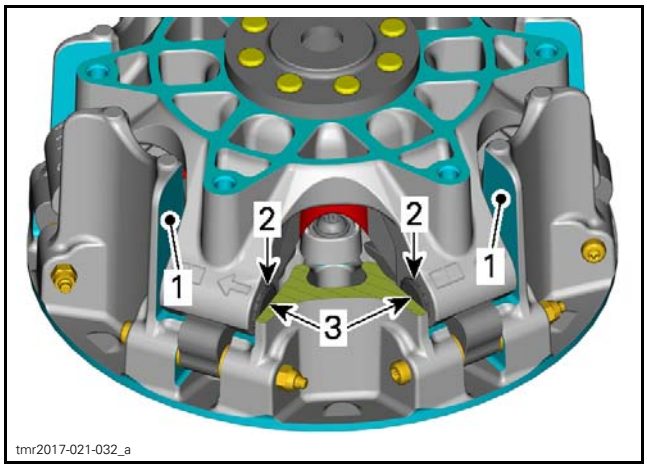

SLIDER SHOES AT LOWEST POSITION
1. Guides
2. Slider shoes
3. Measure here

GAP BETWEEN SLIDER SHOES AND GUIDES	
Up to 0.2 mm (.0079 in)	Inspect occasionally
0.2 mm to 0.35 mm (.0079 in to .0138 in) with old slider shoes	Replace slider shoes
Over 0.35 mm (.0138 in) with new slider shoes	Replace governor cup and sliding sheave

Centrifugal Lever Pivot Bolt

Measure diameter of centrifugal lever pivot bolt, replace if it is out of specification.

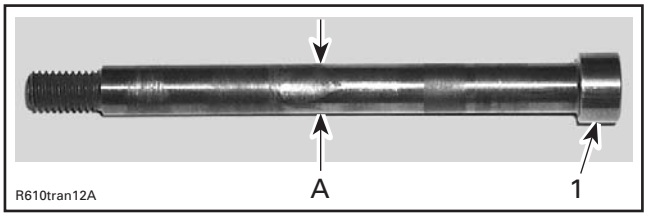

1. Centrifugal lever pivot bolt
A. Measure diameter here

CENTRIFUGAL LEVER PIVOT BOLT DIAMETER	
New	6.063 mm to 6.091 mm (.2387 in to .2398 in)
Service limit	6.000 mm (.2362 in)

Centrifugal Lever

Check bushing diameter in the centrifugal lever for wear. Replace centrifugal lever if necessary.

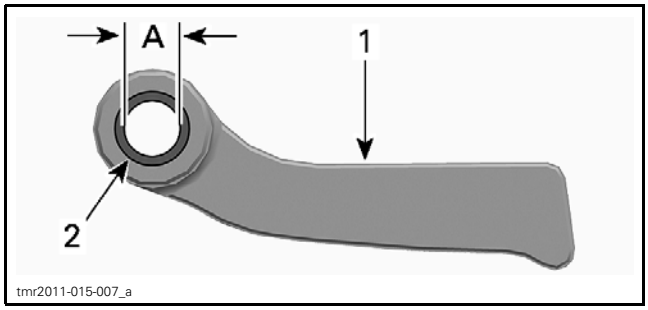

TYPICAL
1. Centrifugal lever
2. Bushing
A. Bushing inner diameter

CENTRIFUGAL LEVER BORE DIAMETER	
New	6.000 mm to 6.120 mm (.236 in to .241 in)
Service limit	6.200 mm (.244 in)

Replace centrifugal lever, thrust washers, centrifugal lever pivot bolts and lock nuts if the contact surfaces show heavy visible wear.

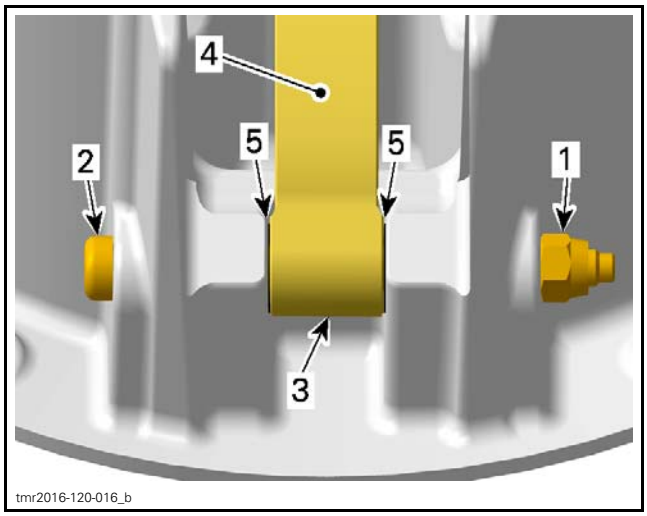

1. Lock nut
2. Centrifugal lever pivot bolt
3. Centrifugal lever
4. Contact surface to the roller
5. Thrust washers

⚠ WARNING

Whenever replacing centrifugal levers, always replace all lever at the same time. Otherwise, unbalanced drive pulley will occur because of levers difference.

Sliding Sheave and Spring Cover

Check sliding sheave for cracks and sliding contact surface for excessive wear. Replace sliding sheave if necessary.

Measure centrifugal lever pivot bolt bores. Replace sliding sheave if bores are out of specification or otherwise damaged.

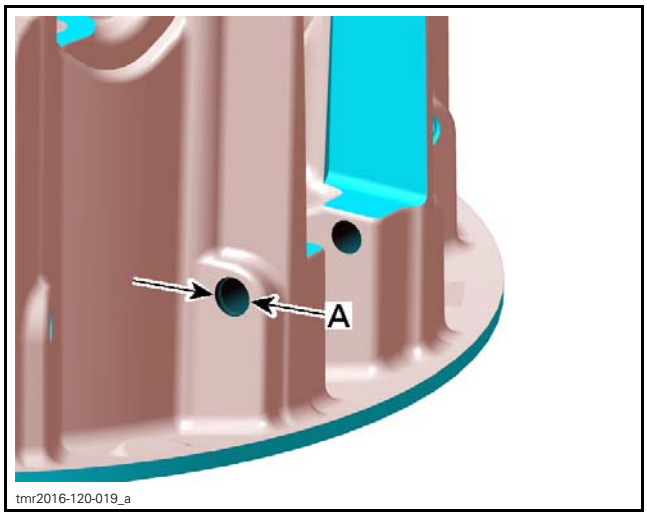

A. Centrifugal lever pivot bolt bore diameter

CENTRIFUGAL LEVER PIVOT BOLT BORE DIAMETER	
New	6.113 mm to 6.171 mm (.241 in to .243 in)
Service limit	6.300 mm (.248 in)

Measure bushing diameters of sliding sheave.

REQUIRED TOOL
Dial bore gauge

MEASURING POINT
At least 5 mm (1/4 in) from bushing edge

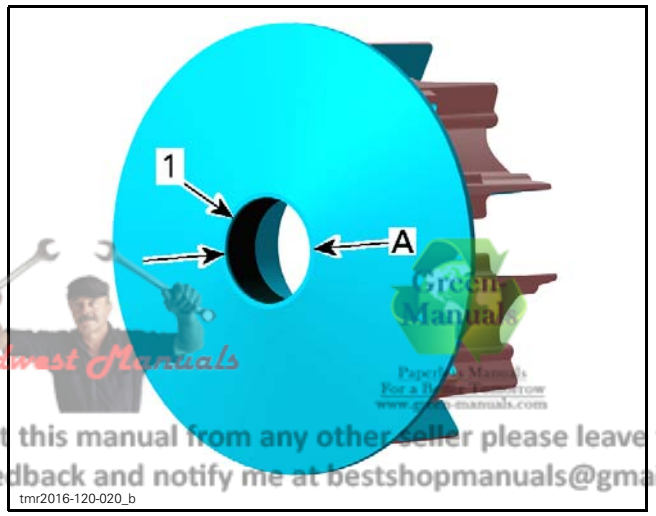

1. Bushing on fixed sheave side
A. Bore diameter of bushing

If you bought this manual from any other seller please leave them NEGATIVE feedback and notify me at bestshopmanuals@gmail.com

SLIDING SHEAVE LARGE BUSHING	
New	46.950 mm to 47.130 mm (1.848 in to 1.856 in)
Service limit	47.160 mm (1.857 in)

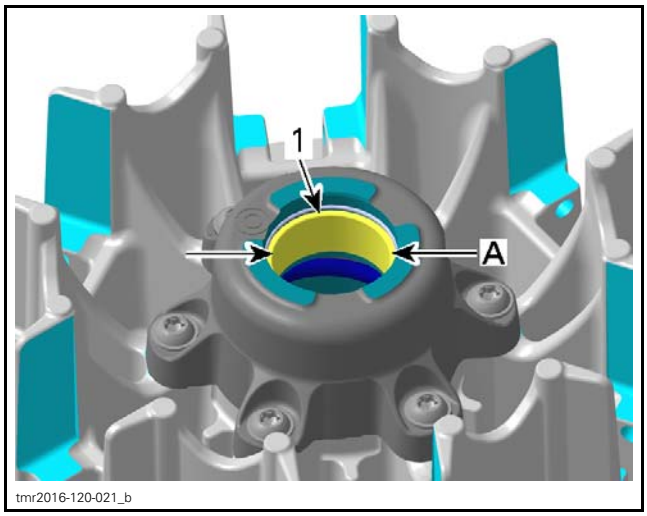

1. Bushing on governor cup side
A. Bore diameter of bushing

SLIDING SHEAVE SMALL BUSHING	
New	32.010 mm to 32.135 mm (1.26 in to 1.265 in)
Service limit	32.200 mm (1.268 in)

Replace sliding sheave if one of the bushings is out of specification. Visually inspect coatings.

Fixed Sheave

Check:

– Fixed sheave contact surface to the governor cup for scratches or other damages

– Fixed sheave plate for marks or scratches.

Replace fixed sheave if required.

Check fixed sheave contact surface with the hub for discoloration, polished area or pitting. If so, the hub needs to be replaced.

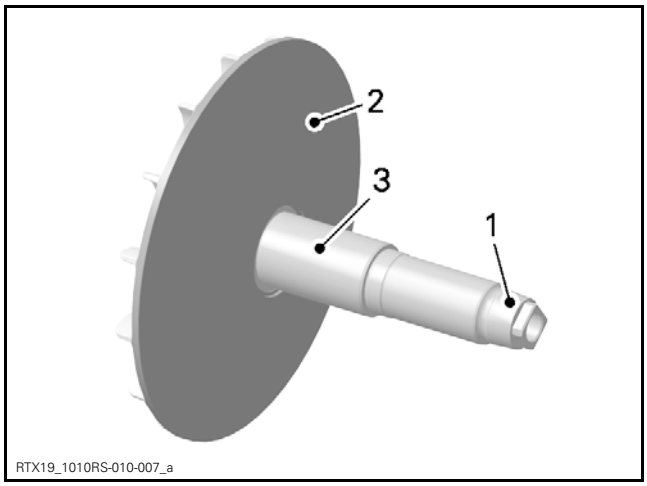

1. Contact surface to governor cup
2. Sheave plate
3. Contact surface with hub.

Hub Bearing

Check for:
- Brittle, hard or damaged seals
- Discoloration on the edges of the bearing
- Corrosion on the needles and/or the outer ring
- Flat spots on the needles.

If any of these damages appear, replace the hub bearing.

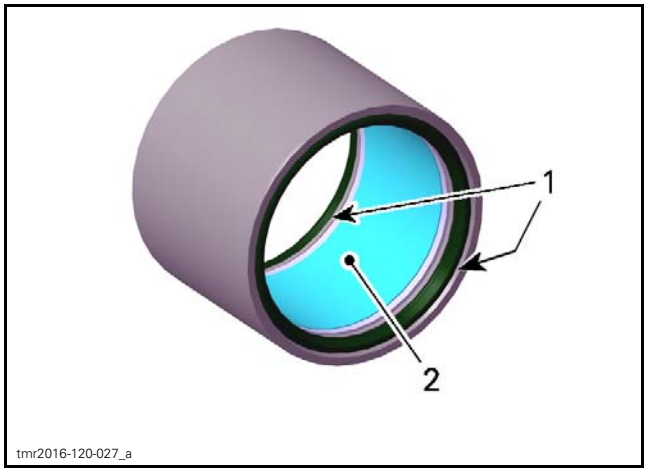

1. Oil seals
2. Needle bearing

Assembling the Drive Pulley

The assembly is the reverse of the disassembly procedure. However, pay attention to following.

Hub Bearing

1. Thoroughly clean the bearing. Remove all the grease with a pulley cleaner or a brake cleaner.

SERVICE PRODUCT
CLUTCH AND PULLEY FLANGE CLEANER PRO S1 (P/N 779244)

2. Dry the inside of the bearing with compressed air.
3. Apply grease in the middle of needles.

SERVICE PRODUCT
Isoflex Grease Topas NB 5051 (P/N 420298032) (1 g (.035 oz))

NOTICE **Do not use any other type of grease.**

NOTE: All the content of the pouch is required.

Keep seals free of grease.

4. Spin the needles until grease is spread evenly.
5. Put the bearing back on the shaft.
6. Spray cleaner on a clean rag to wipe grease excess on the shaft and the pulley sheaves.

NOTE: New hub bearing comes with appropriate grease and quantity of grease.

When CVT is reassemble repeat step 1 to 7 from *CHECKING THE HUB BEARING OPERATION* in *MAINTENANCE* in this subsection.

1. If the driven pulley is turning, **replace** the hub bearing.
2. If the driven pulley is not turning, the hub bearing is ok.

Sliding Sheave

Install centrifugal levers with their thrust washers.

Install **NEW** lock nuts and tighten them to specification.

TIGHTENING TORQUE	
Centrifugal lever lock nuts	5 N•m ± 0.6 N•m (44 lbf•**in** ± 5 lbf•**in**)

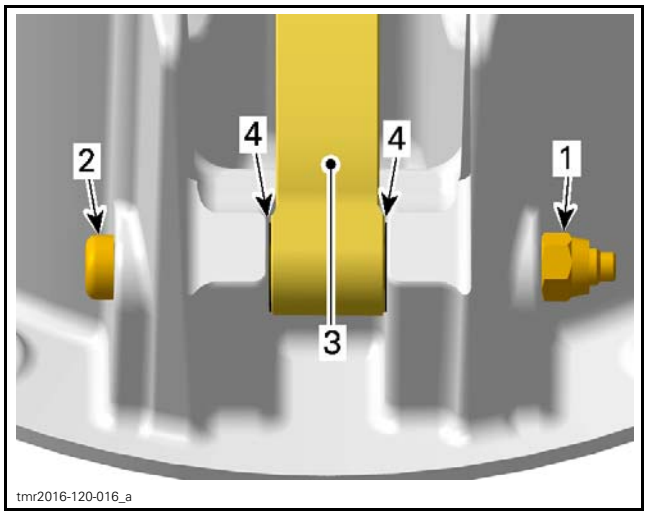

1. *Lock Nut*
2. *Centrifugal lever pivot screw*
3. *Centrifugal lever*
4. *Thrust washer*

NOTICE Centrifugal levers must move easily after installation.

Governor Cup

Rebuild governor cup with new bearing sleeves, rollers and slider shoes.

NOTICE Final position has to be aligned with the contact surface of the slider shoes (no protrusion).

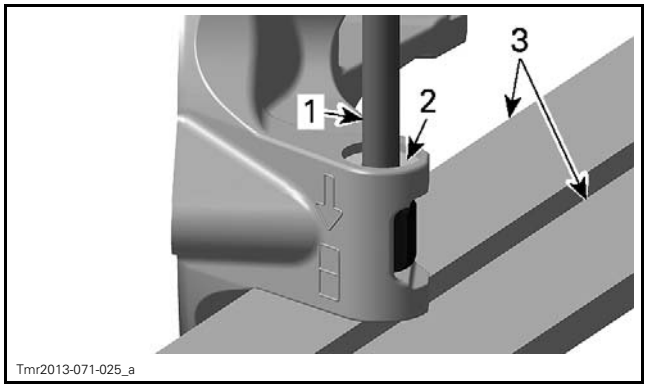

1. *Punch*
2. *Mating surface of slider shoes*
3. *Vice*

Each time when replacing the bearing sleeves sign the foreseen box with a punch.

NOTICE Do not tap too hard. Violent damage of the governor cup may appear.

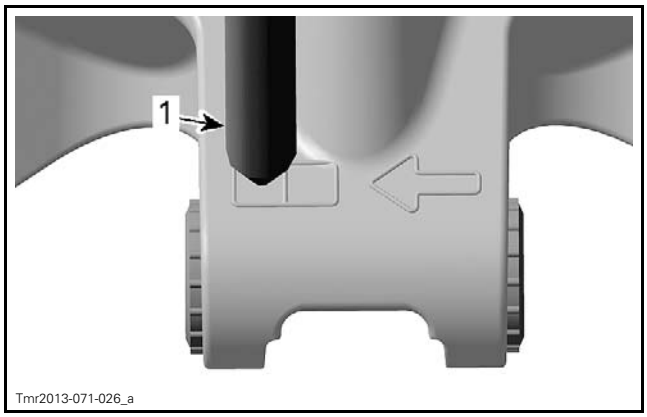

1. *Punch*

NOTICE Rollers must move easily after installation.

Insert slider shoes into governor cup to properly slide in guides.

Installing the Drive Pulley

The installation is the reverse of the removal procedure. However, pay attention to the following.

⚠ WARNING

Do not apply antiseize or any lubricant on crankshaft and drive pulley tapers.

NOTICE Never use any type of impact wrench at drive pulley removal and installation.

Clean mounting surfaces as described in *CLEANING* above.

Install drive pulley on crankshaft extension.

X mr Model

Align governor cup with square end of fixed sheave shaft

All Models

Install conical spring washer with its concave side towards drive pulley then install drive pulley screw.

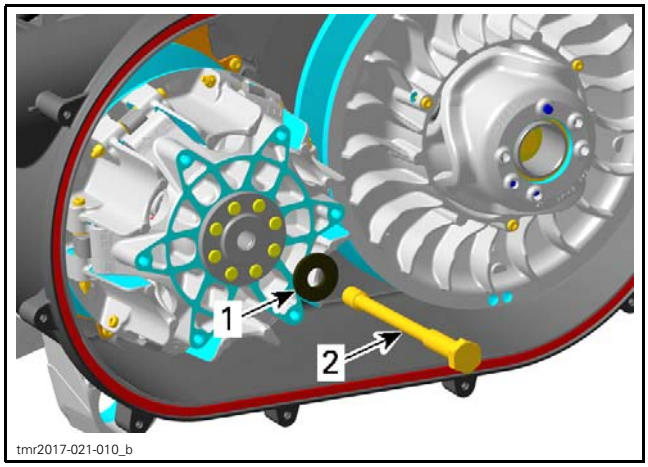

1. *Conical spring washer*
2. *Drive pulley screw*

⚠ WARNING

Never substitute conical spring washer and/or screw with jobber ones. Always use BRP genuine parts for this particular case.

Lock the drive pulley as per removal procedure.

Tighten drive pulley screw to specified torque.

NOTICE **Never use any type of impact wrench for drive pulley installation.**

TIGHTENING TORQUE	
Drive pulley screw	120 N•m ± 8 N•m (89 lbf•ft ± 6 lbf•ft)

DRIVEN PULLEY

Removing the Driven Pulley

REQUIRED TOOLS	
CLUTCH HOLDER (P/N 529 036 496)	
PULLER/LOCKING TOOL (P/N 529 000 088)	
DRIVEN PULLEY ADAPTER (P/N 708 200 720)	

1. Remove:
   – CVT cover
   – Drive belt.
2. Install the clutch holder.

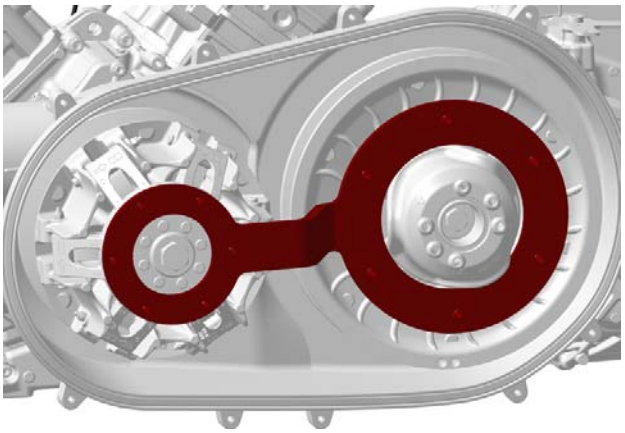

3. Remove:
   – Driven pulley screw (discard it)
   – Collar washer.
4. Remove the clutch holder.
5. Pull the driven pulley out of the vehicle.
   5.1 If removed, reinstall the driven pulley adapter.
   5.2 Screw in the driven pulley extractor in the **center hole** of the driven pulley adapter.
   5.3 Tighten the extractor until driven pulley is free.
   5.4 Remove tools from the driven pulley.

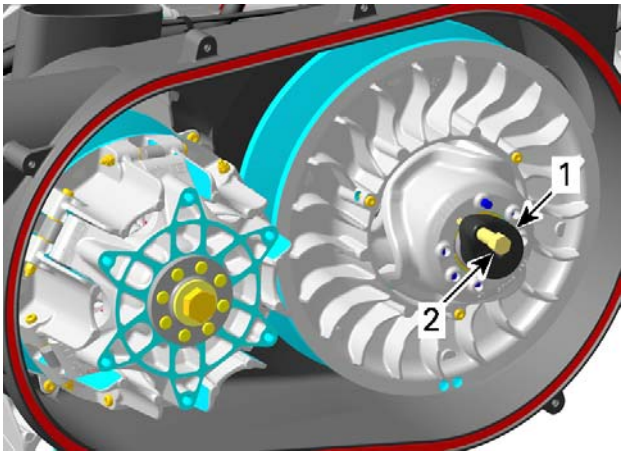

1. *Driven pulley adapter*
2. *Driven pulley extractor*

Disassembling the Driven Pulley

Removing the Cam and Spring

To remove the cam and the spring, always use the following tools.

⚠ WARNING

Cam is under high clutch spring preload. Never attempt to remove the cam without the recommended tools.

REQUIRED TOOLS	
PULLEY SPRING COMPRESSOR TOOL (P/N 529 036 012)	
DRIVEN PULLEY SPACER (P/N 529 036 351)	

1. Install the driven pulley on the spring compressor tool.
   1.1 Secure the spring compressor tool rod in a vice.
   1.2 Install the support cup, the driven pulley spacer, the driven pulley (with the cam towards the vice), the support guide and the handle.
   1.3 Screw in the handle to remove all play.

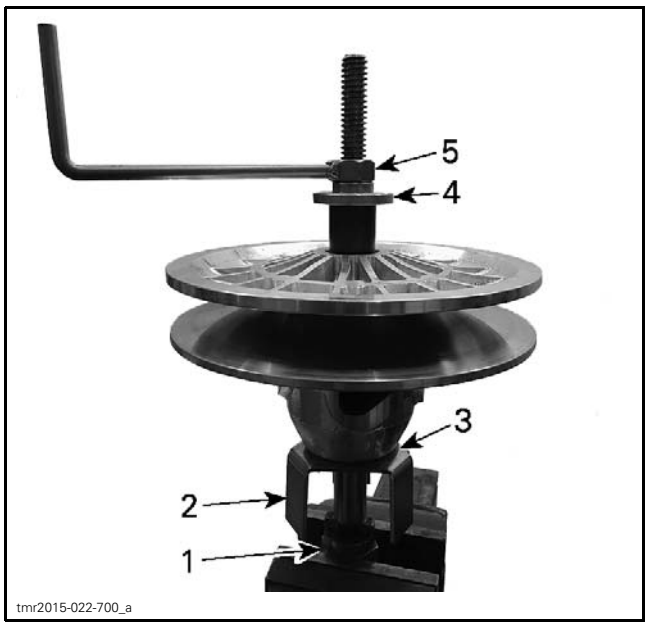

TYPICAL
1. *Pulley spring compressor tool*
2. *Support cup*
3. *Driven pulley spacer*
4. *Support guide*
5. *Handle*

2. Remove and discard the three (3) Torx cam retaining screws.

TYPICAL - PULLEY SPRING COMPRESSOR TOOL IS STILL INSTALLED

3. Remove the driven pulley assembly from the spring compressor tool.
4. Separate parts.

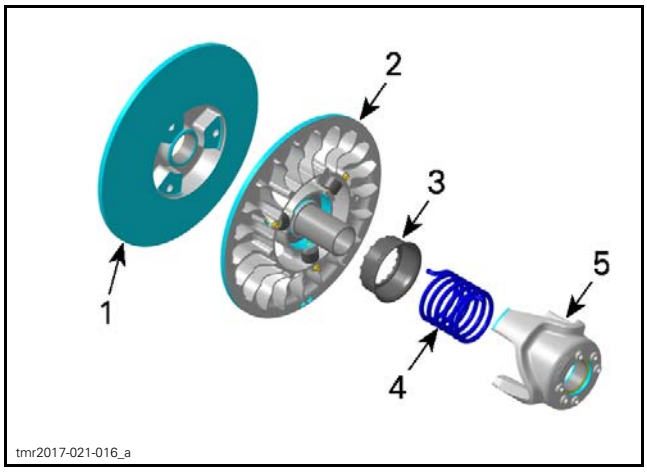

1. *Fixed sheave*
2. *Sliding sheave*
3. *Spring support*
4. *Spring*
5. *Cam*

Removing the Driven Pulley Roller

1. Remove screw locking the bearing pin.

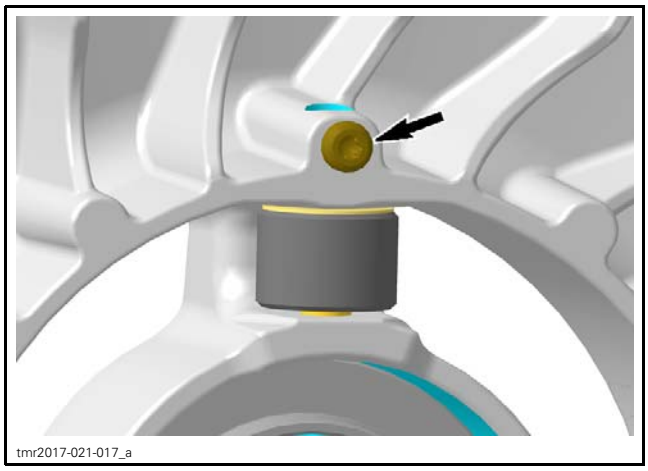

2. Remove bearing pin.

REQUIRED TOOL
Slide hammer
Extractor adapter M4

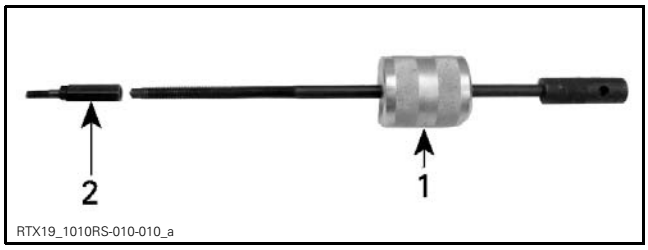

1. Hammer
2. Extractor adapter M4

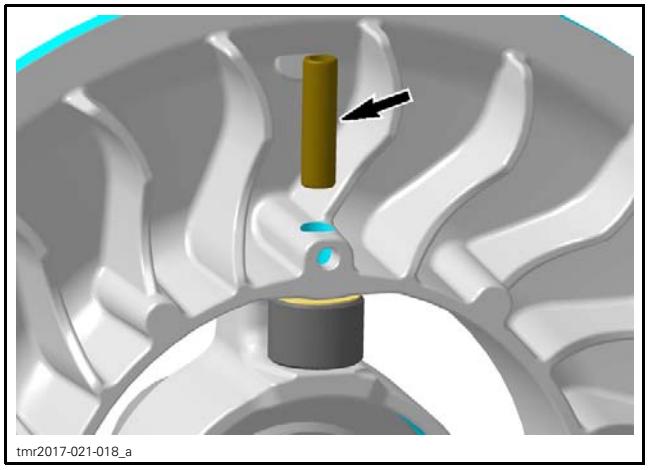

3. Remove:
   - Thrust washer
   - Roller.

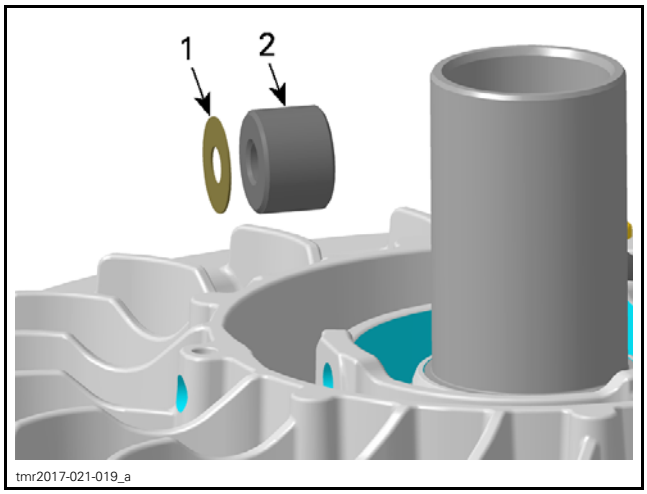

1. Thrust washer
2. Roller

4. Proceed with removal of other roller.

Inspecting the Driven Pulley

Cam

1. Verify all contact surfaces of cam for visible damages.

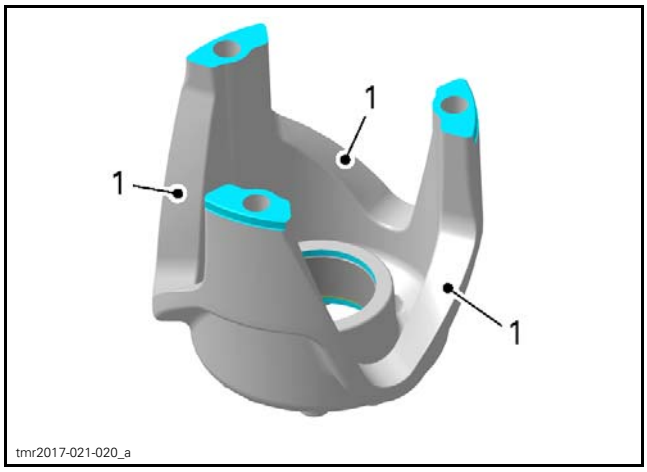

1. Contact surfaces

2. Ensure circlip properly locks the inner bushing. Replace part if necessary.

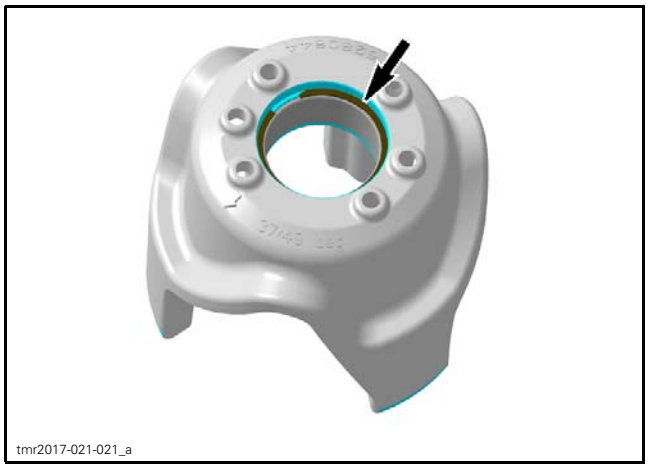

3. Measure the inner diameter of cam bushing.

REQUIRED TOOL
Dial bore gauge

MEASURING POINT
At least 5 mm (1/4 in) from bushing edge

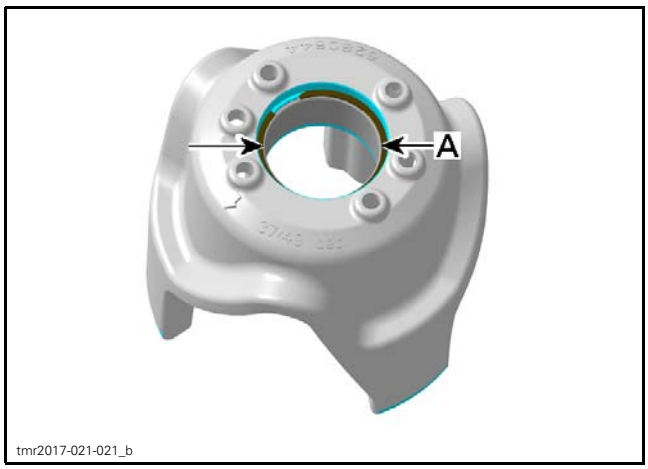

A. Inner diameter of cam bushing

CAM BUSHING INNER DIAMETER	
New	41.278 mm to 41.363 mm (1.625 in to 1.628 in)
Service limit	41.420 mm (1.631 in)

Replace the cam if the inner diameter of bushing is out of specification.

Sliding Sheave

1. Inspect pulley sheave for marks or scratches.
2. Ensure circlip properly locks the inner bushing. Replace part if necessary.
3. Measure the inner diameter of sliding sheave bushing.

REQUIRED TOOL
Dial bore gauge

MEASURING POINT
At least 5 mm (1/4 in) from bushing edge

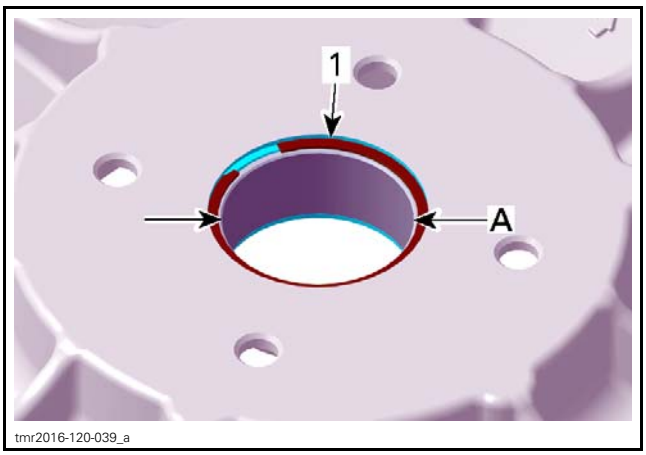

1. Circlip
A. Inner diameter of sliding sheave bushing

DRIVEN PULLEY INNER HALF BUSHING	
New	41.278 mm to 41.363 mm (1.625 in to 1.628 in)
Service limit	41.420 mm (1.631 in)

Replace the sliding sheave if the inner diameter of bushing is out of specification.

Fixed Sheave

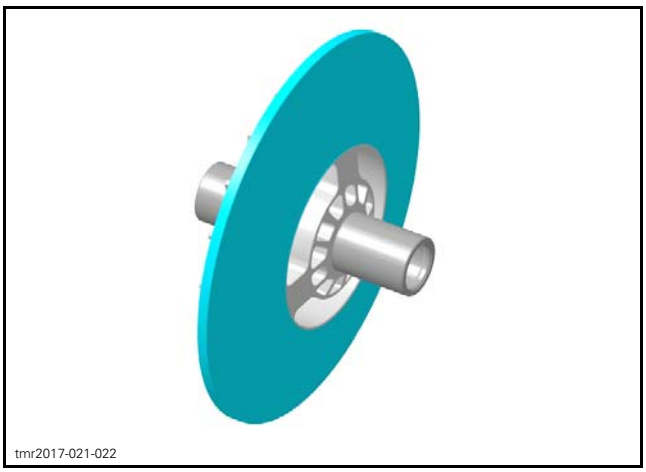

Replace fixed sheave and countershaft if one of the following problem is detected:

– Marks or scratches on pulley sheave
– Bent, twisted or otherwise damaged countershaft
– Defective splines and threads at the end of countershaft.

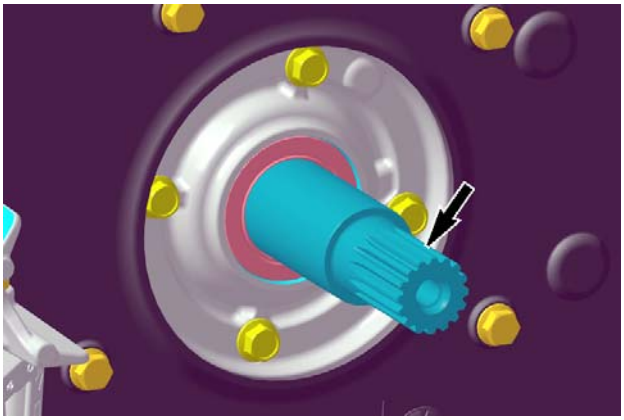
tmr2016-120-042_a

Driven Pulley Roller

1. Check the rollers for flat spots, cracks or other visible damages. Replace if necessary (as a set).
2. Measure inner and outer diameter of rollers.

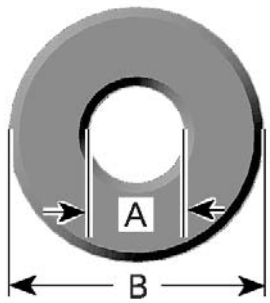

mmr2008-044-009_a

A. Inner diameter
B. Outer diameter

ROLLER INNER DIAMETER	
New	8.20 mm to 8.35 mm (.323 in to .329 in)
Service limit	8.50 mm (.335 in)

ROLLER OUTER DIAMETER	
New	21.80 mm to 22.20 mm (.858 in to .874 in)
Service limit	21.50 mm (.846 in)

3. Measure the roller thickness.

mmr2008-044-010_a

A. Thickness of roller

ROLLER THICKNESS	
New	15.10 mm to 15.50 mm (.594 in to .61 in)
Service limit	14.75 mm (.581 in)

If a roller is out of specifications, replace all rollers at the same time.

Cleaning the Driven Pulley

SERVICE PRODUCT
CLUTCH AND PULLEY FLANGE CLEANER PRO S1 (P/N 779244)

Use cleaner and a clean rag to clean pulley sheaves.

Cam and Spring

During break-in period, teflon from bushing moves to cam or countershaft surface. A teflon over teflon running condition occurs, leading to low friction. So it is normal to see gray teflon deposit on cam or countershaft. Do not remove this deposit.

When a dust deposit has to be removed from the cam or the countershaft, use dry cloth to avoid removing transferred teflon.

Assembling the Driven Pulley

Installing the Driven Pulley Roller

1. Using a hand wire brush, clean locking screw threads.
2. Insert:
   - Roller
   - Thrust washer.
3. Install spring pin.

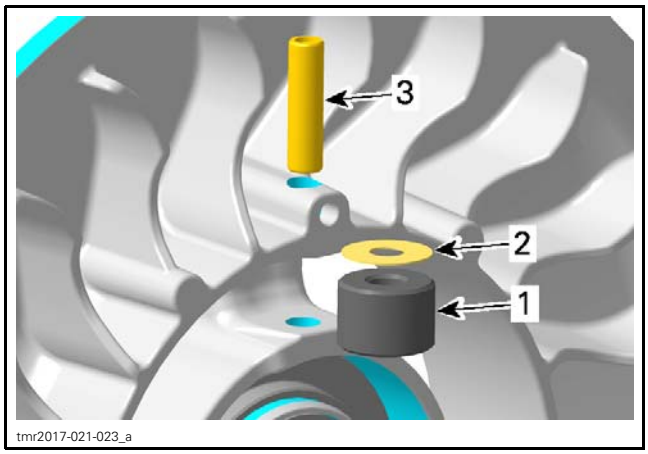

1. *Roller*
2. *Thrust washer*
3. *Spring pin*

4. Tighten locking screw as specified.

TIGHTENING TORQUE	
Locking screws	3.5 N•m ± 0.4 N•m (31 lbf•**in** ± 4 lbf•**in**)

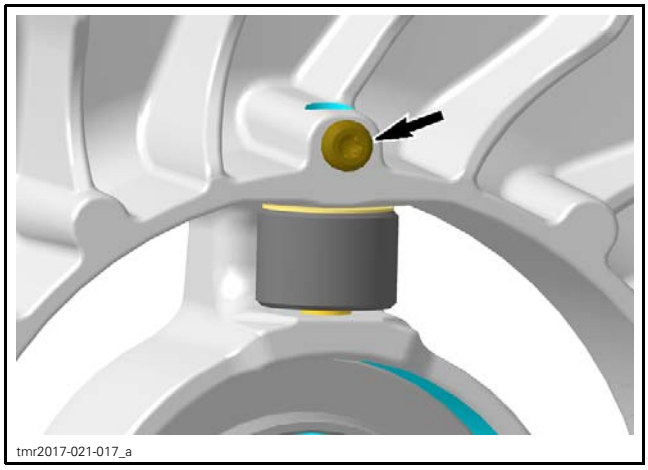

5. Install spring pin and tighten as specified.

Assembling the Sheaves and Cam

1. Install the cam on the spring compressor tool, over the support cup and the clutch shim.
2. Install the spring into the cam then the fixed sheave and the sliding sheave.

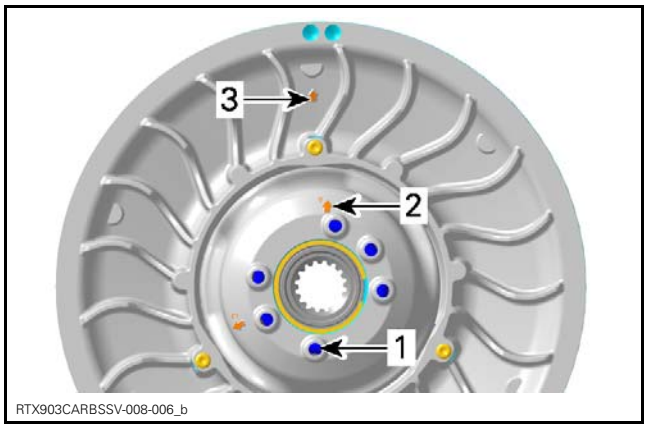

1. *Spring end*
2. *Arrow A*
3. *Arrow on Outer Half Assy.*

3. Complete with the support guide and the handle.
4. Before tightening the handle, align the arrows on cam and the sliding sheave with the one on the fixed sheave.
5. Tighten the handle until the cam is completely pressed against the sliding sheave.

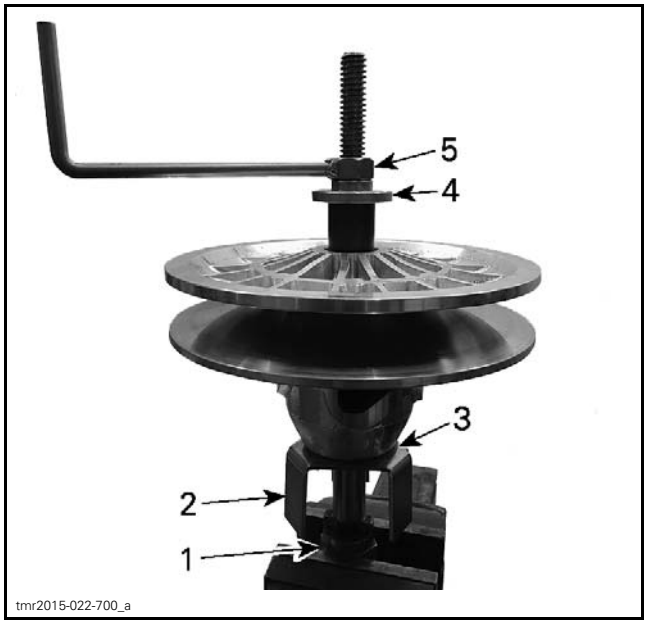

1. *Pulley spring compressor tool*
2. *Support cup*
3. *Driven pulley spacer*
4. *Support guide*
5. *Handle*

6. From the back of the sliding sheave, install three (3) **NEW** cam screws.

TIGHTENING TORQUE	
Cam screw	61 N•m ± 6 N•m (45 lbf•ft ± 4 lbf•ft)

7. Remove the driven pulley from the tool.

Installing the Driven Pulley

For installation, reverse the removal procedure. Pay attention to the following details.

NOTICE **This assembly uses a stretch screw. Always install a NEW screw.**

SERVICE PRODUCT	
United States of America	XPS BRAKES AND PARTS CLEANER (USA) (P/N 219 701 705)
Other countries	XPS BRAKES AND PARTS CLEANER (P/N 219 701 776)

Clean threads of gearbox countershaft and NEW driven pulley screw.

NOTICE **Threads must be free of oil and grease. Lubricants in threads will create too high preload to tightened driven pulley screw.**

Install the driven pulley onto the countershaft. Make sure to align splines.

Install driven pulley screw with collar washer.

NOTICE **Make sure to position the large diameter of the thrust washer against the conical side of the spring washer.**

Install the clutch holder.

REQUIRED TOOL	
CLUTCH HOLDER (P/N 529 036 496)	

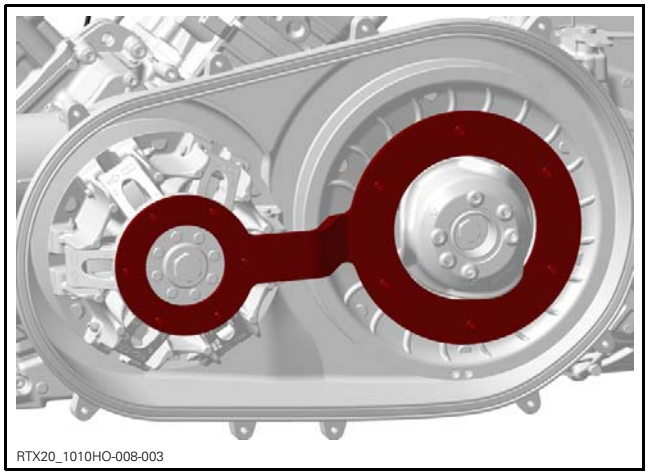

Tighten driven pulley screw as specified.

TIGHTENING TORQUE	
Driven pulley screw	70 N•m ± 5 N•m (52 lbf•ft ± 4 lbf•ft)

Remove the clutch holder.

Install drive belt. Refer to *DRIVE BELT* in this subsection.

NOTICE **After the repair procedure is finished, allow vehicle to sit for 6 hours for threadlocker curing.**

CVT AIR GUIDE

Removing the CVT Air Guide

Remove:

– *DRIVE PULLEY*

– *DRIVEN PULLEY.*

Unscrew the clamps retaining the CVT air hoses.

Remove CVT air guide.

Remove and discard O-rings.

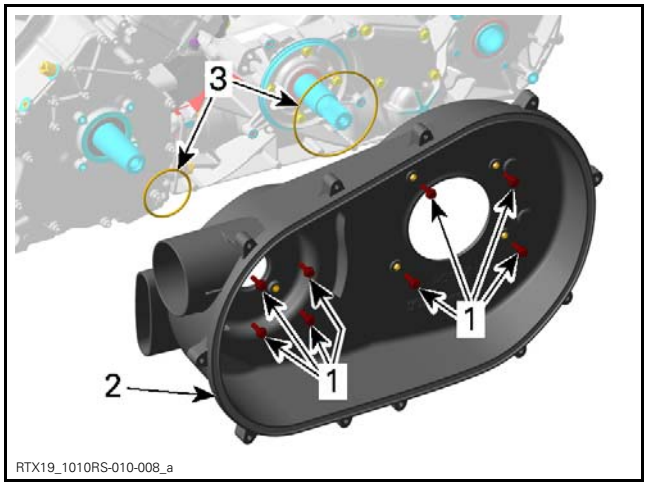

1. *Retaining screws*
2. *CVT air guide*
3. *O-rings*

Inspecting the CVT Air Guide

Clean CVT air guide from contamination

Installing the CVT Air Guide

The installation is the reverse of the removal procedure. However, pay attention to the following.

Install NEW O-rings.

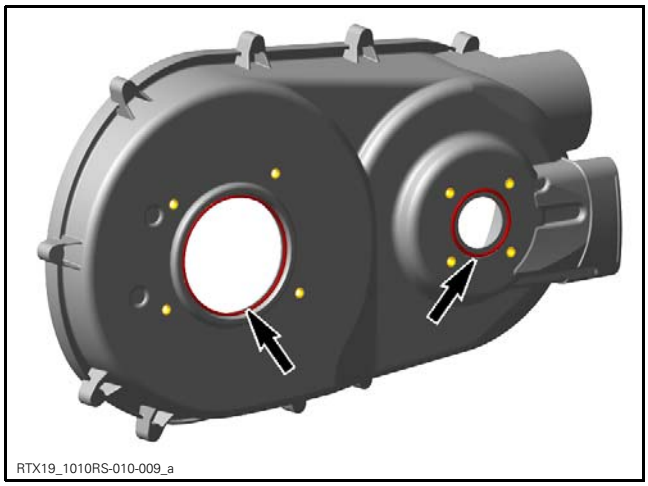

TIGHTENING TORQUE	
CVT air guide retaining screws	10 N•m ± 1 N•m (89 lbf•**in** ± 9 lbf•**in**) + LOCTITE 243 (BLUE) (P/N 293 800 060)

GEARBOX AND 4X4 COUPLING UNIT (with external switches)

SERVICE TOOLS

Description	Part Number	Page
FLUKE 115 MULTIMETER	529 035 868	6, 21

SERVICE TOOLS – OTHER SUPPLIER

Description	Part Number	Page
FLUKE RIGID BACK-PROBE	TP88	6

SERVICE PRODUCTS

Description	Part Number	Page
LOCTITE 243 (BLUE)	293 800 060	25, 29–30
LOCTITE 5910	293 800 081	22
LOCTITE 648 (GREEN)	413 711 400	11
SUPER LUBE GREASE	293 550 030	7

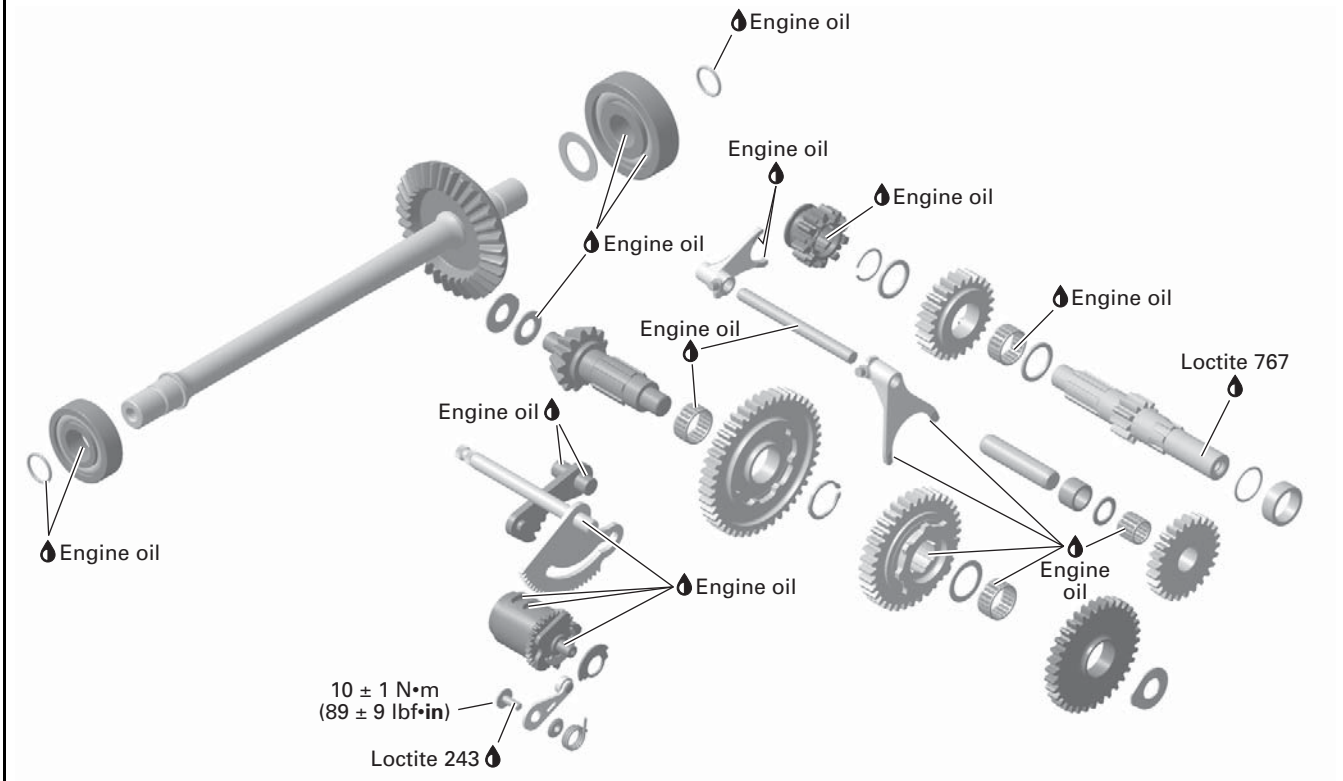

vmr2015-023-001_a

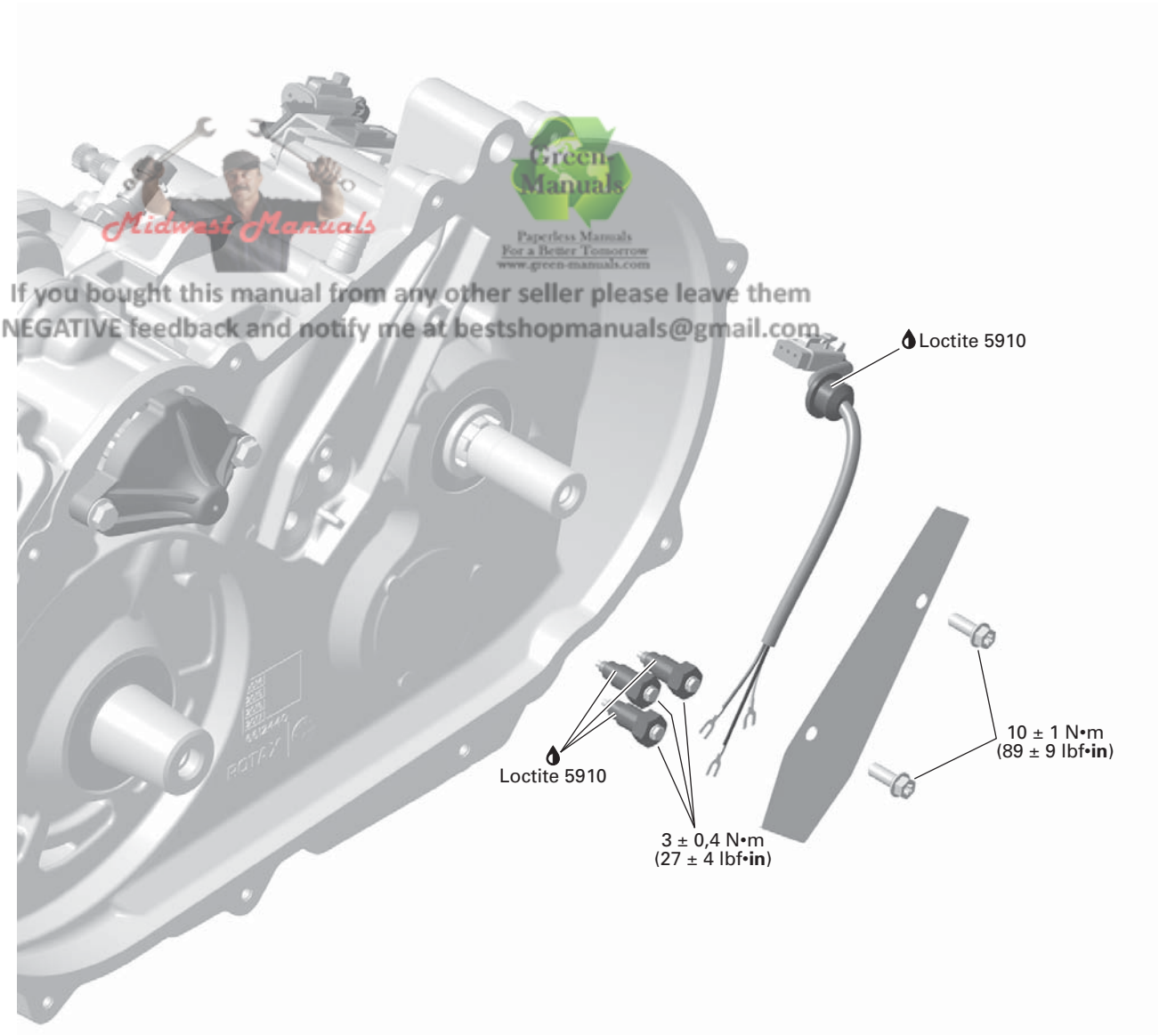

Midwest Manuals
Green Manuals
Paperless Manuals
For a Better Tomorrow
www.green-manuals.com
If you bought this manual from any other seller please leave them
NEGATIVE feedback and notify me at bestshopmanuals@gmail.com

vmr2015-023-002_a

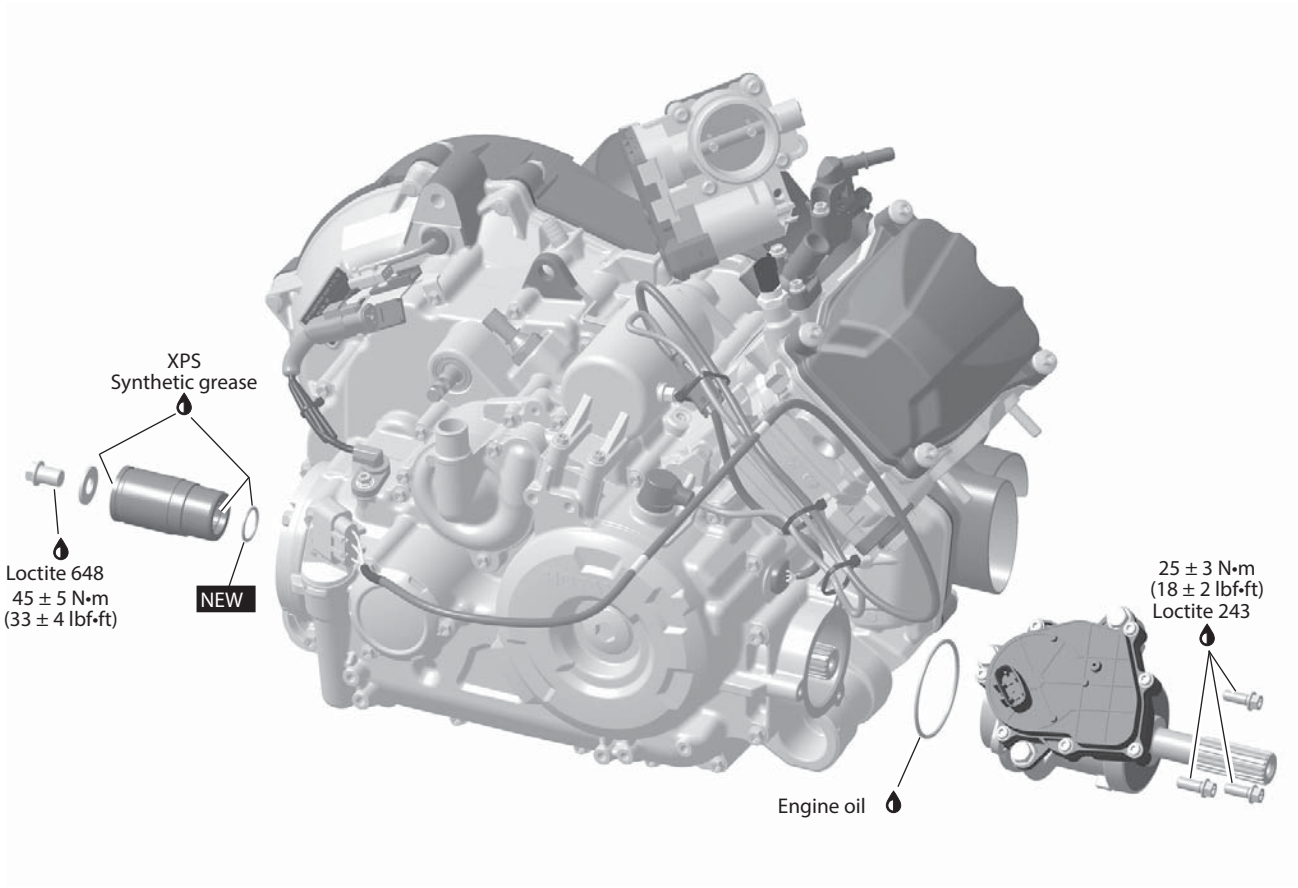

NEW = Component must be replaced when removed.

219100901-017-100_a

4X4 COUPLING UNIT

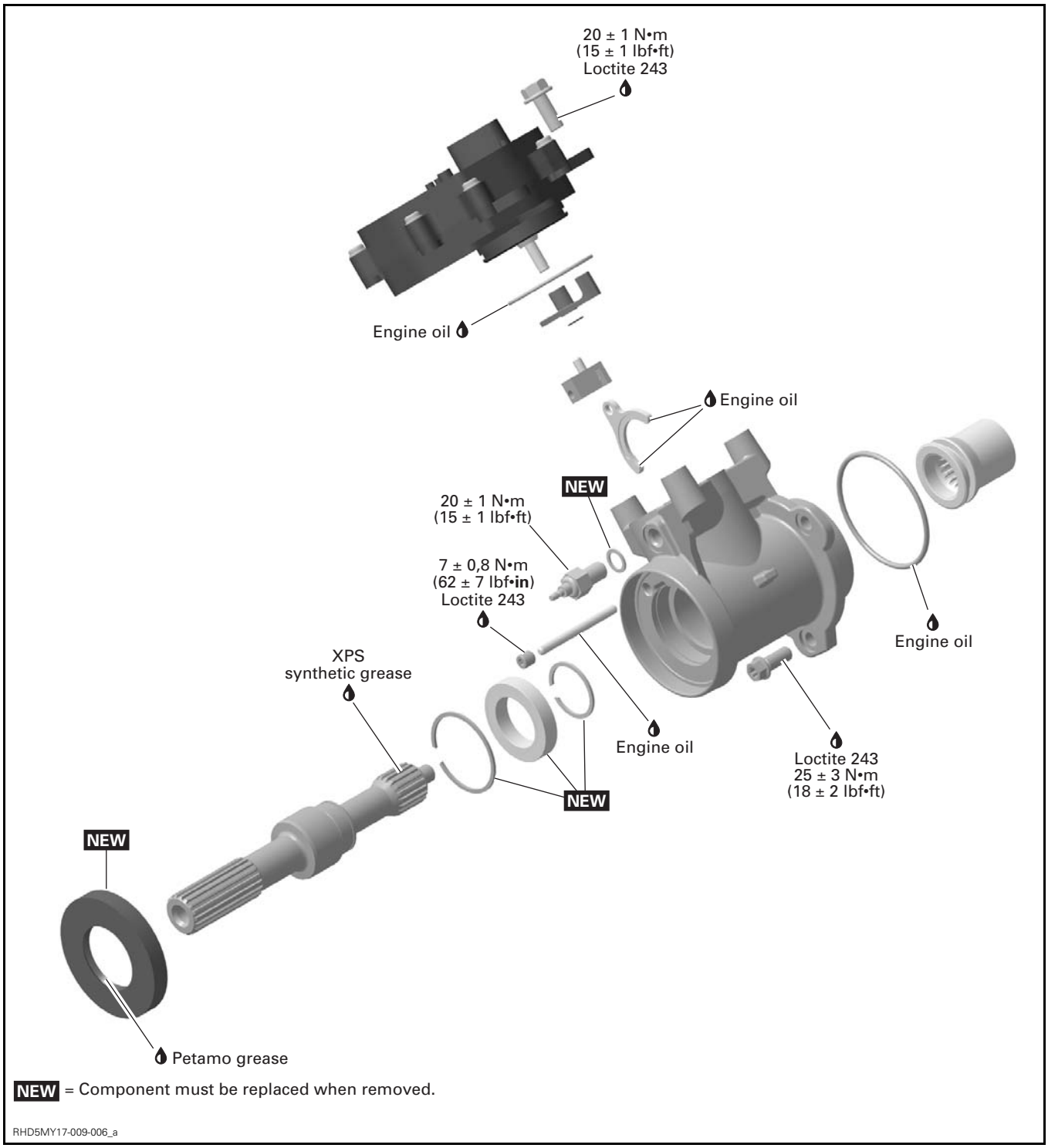

PROCEDURES

VEHICLE SPEED SENSOR (VSS)

VSS Location

The vehicle speed sensor is located on the magneto cover on the rear side of the engine.

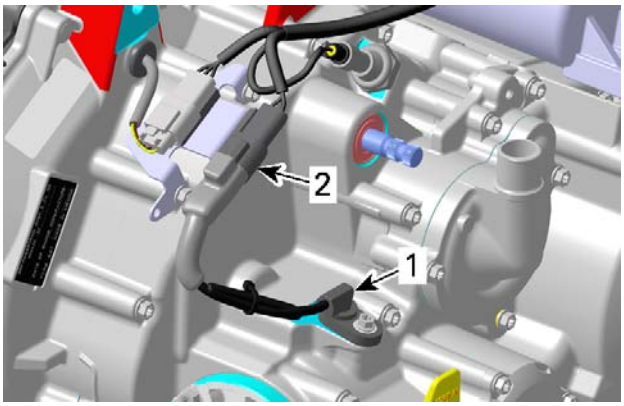

RHD5MY17-009-024_a

1. *VSS (Vehicle Speed Sensor)*
2. *VSS connector*

VSS Access

To reach the VSS, tilt the cargo box.

VSS Wire Identification

FUNCTION	PIN	COLOR - SENSOR CONNECTOR	COLOR - WIRING HARNESS CONNECTOR
12-volt input from fuse F9	A	RED	VIOLET/BLUE
Speed signal (to ECM E1)	B	WHITE	WHITE
Ground (to ECM D4)	C	BLACK	BLACK/GREEN

VSS Circuit Protection

CONDITION	CIRCUIT PROTECTION
Supplied with main relay activated	Fuse 9 of fuse block 2 (from main relay R2)

Testing the VSS Input Voltage

1. Remove VSS connector cover.
2. Set multimeter to Vdc.

REQUIRED TOOL
FLUKE 115 MULTIMETER (P/N 529 035 868)

3. Turn ignition switch ON.
4. Back-probe the VSS connector.

REQUIRED TOOL
FLUKE RIGID BACK-PROBE (P/N TP88)

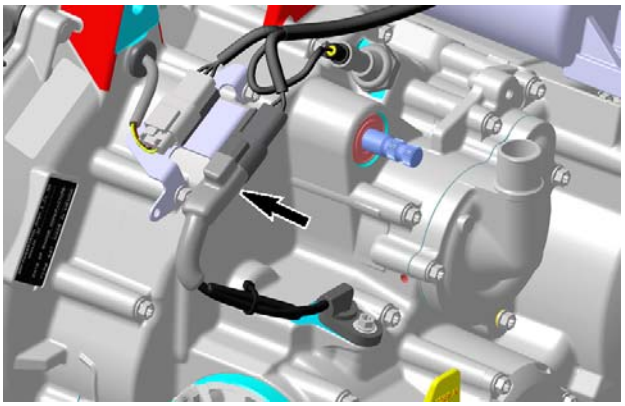

RHD5MY17-009-024_b

VSS CONNECTOR

5. Measure voltage as per following table.

VEHICLE SPEED SENSOR INPUT VOLTAGE TEST		
TEST PROBES		RESULT (KEY ON)
PIN A VIOLET/BLUE wire	PIN C BLACK/GREEN wire	Battery voltage

If voltage is not as specified, test positive and ground circuits separately.

Testing the VSS Signal

1. Lift rear of vehicle so that rear wheels are off the ground.
2. Set transmission to 2WD and to NEUTRAL.
3. Back-probe the VSS connector.

REQUIRED TOOL
FLUKE RIGID BACK-PROBE (P/N TP88)

4. Turn ignition switch ON.
5. Set multimeter to Vdc.
6. Measure voltage while slowly rotating rear wheels by hand.

VEHICLE SPEED SENSOR SIGNAL TEST		
TEST PROBES		RESULT (WHILE ROTATING WHEELS)
PIN B WHITE wire	PIN C BLACK/GREEN wire	Alternate reading between battery voltage and 0 Vdc

NOTE: Since we measure pulsating voltage, the numeric display will continuously change. The analog display may be easier to follow.

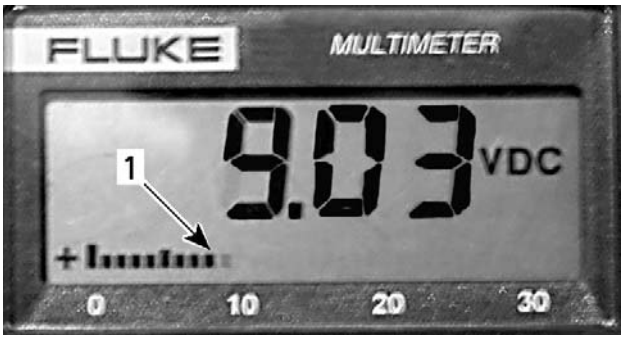

smr2005-056-010_a

1. *Analog display*

Removing the VSS

Remove:

– Retaining screw
– VSS.

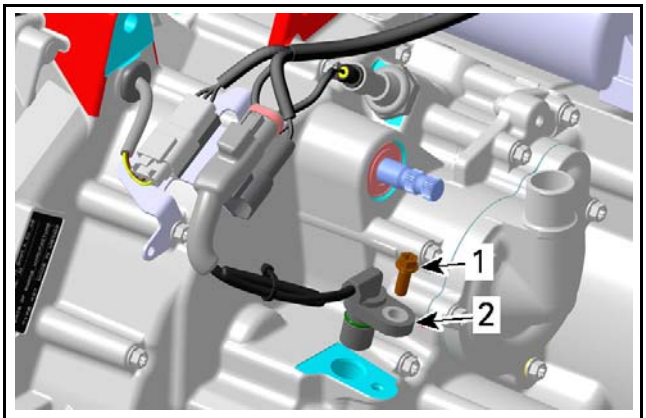

RHD5MY17-009-025_a

1. *Screw*
2. *VSS*

Installing the VSS

For installation, reverse the removal procedure. Pay attention to the following.

Lubricate VSS O-ring.

SERVICE PRODUCT
SUPER LUBE GREASE (P/N 293 550 030)

Tighten VSS retaining screw to specification.

TIGHTENING TORQUE	
VSS retaining screw	10 N•m ± 1 N•m (89 lbf•**in** ± 9 lbf•**in**)

OUTPUT SHAFT AND COUPLING SLEEVE

Removing the Output Shaft and Coupling Sleeve

1. Remove engine from the vehicle. Refer to *ENGINE REMOVAL AND INSTALLATION* subsection.
2. Measure output shaft axial clearance prior to remove it.

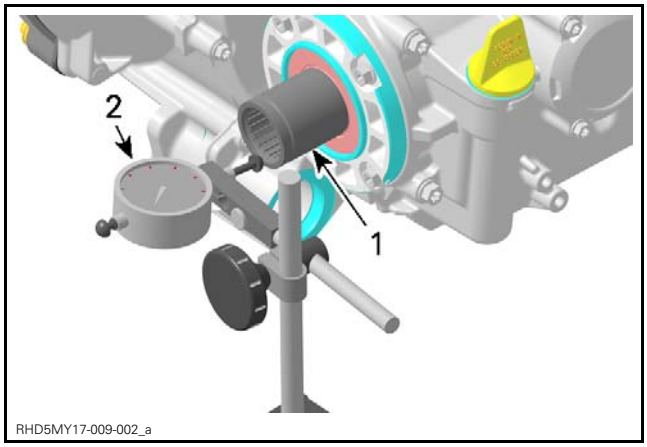

RHD5MY17-009-002_a

1. *Coupling sleeve*
2. *Dial indicator*

OUTPUT SHAFT AXIAL CLEARANCE	
NEW	0.09 mm to 0.18 mm (.004 in to .007 in)
SERVICE LIMIT	0.30 mm (.012 in)

If the output shaft axial clearance is out of specification, crankcase must be split and the bevel gear must be adjusted. See *ADJUSTING THE GEARBOX* in this subsection.

NOTICE **If the output shaft must be replaced, always replace the bevel gear shaft at the same time.**

3. Remove 4x4 coupling unit. Refer to procedure in this subsection.
4. Remove coupling sleeve.

Set gearbox to PARK position.

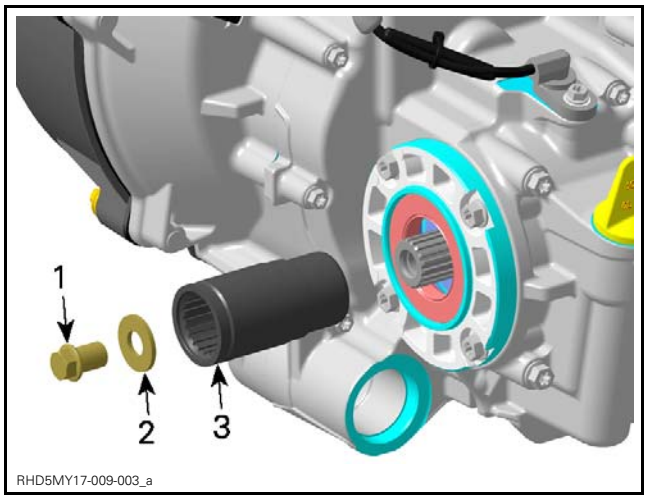

1. *Retaining screw*
2. *Washer*
3. *Coupling sleeve*

5. Refer to *MAGNETO AND STARTER* subsection to remove:
   - Output shaft bearing cover
   - Magneto cover
   - Rotor.
6. Use a soft hammer to remove output shaft with its bearings from housing.

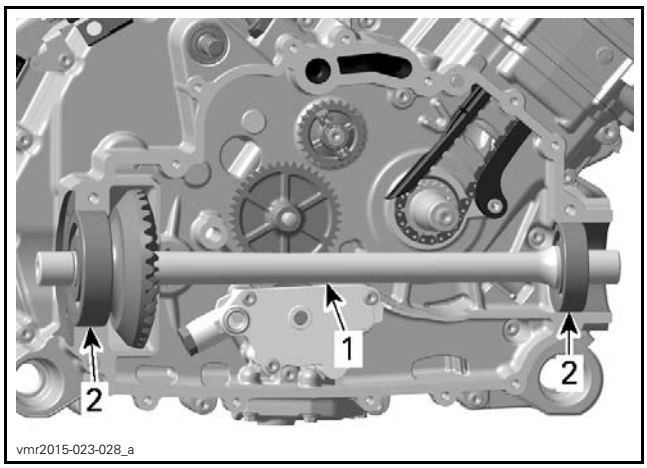

1. *Output shaft*
2. *Ball bearings*

7. Remove both O-rings and both bearings from output shaft.

NOTE: Both bearings on output shaft have a transition fit.

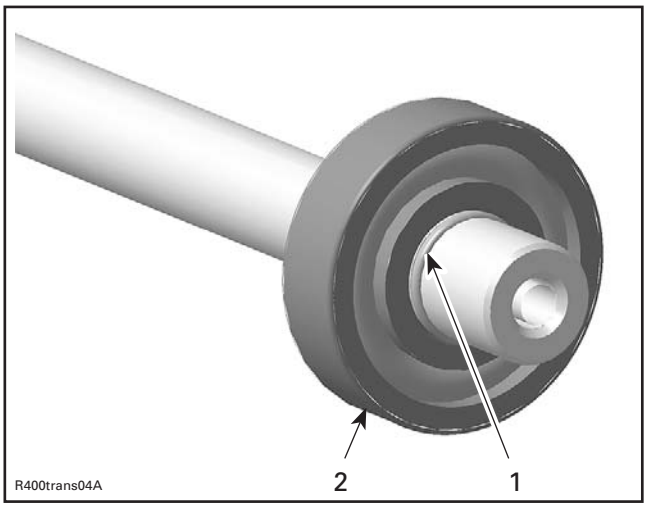

1. *O-ring*
2. *Bearing on front side*

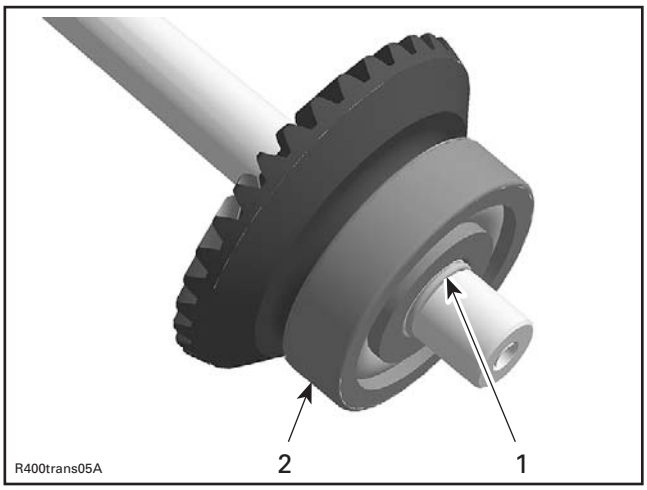

1. *O-ring*
2. *Bearing on rear side*

8. Withdraw adjustment shim.

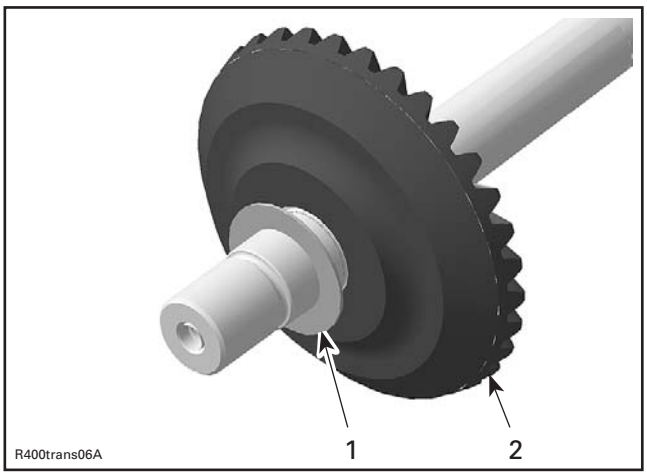

1. *Adjustment shim*
2. *Output shaft bevel gear*

Inspecting the Output Shaft and Coupling Sleeve

Check output shaft for bending, cracks and other visible damages.

NOTICE **Always replace output shaft and bevel gear shaft at the same time.**

Check output shaft bevel gear for wear and teeth damages.

Check splines of coupling sleeve for wear or other damages. Replace if splines are damaged.

Check oil seal running surface of coupling sleeve for scratches or grooves. Replace if necessary.

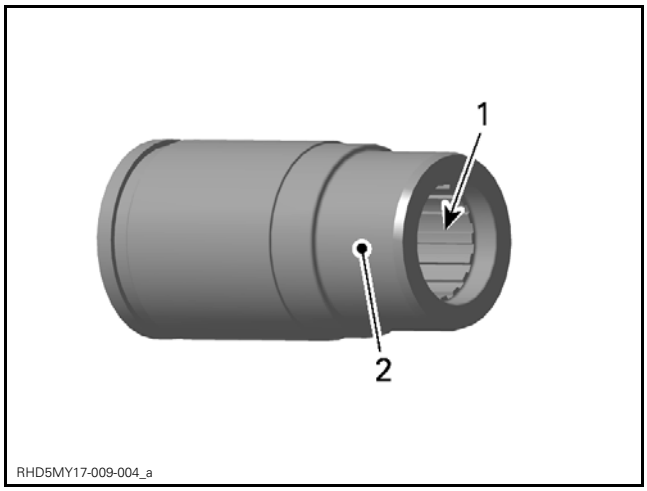

1. Splines
2. Oil seal running surface

Check if output shaft bearings turn freely and smoothly. Replace if necessary.

Replace output shaft oil seal if brittle, hard or damaged. Refer to *BOTTOM END* subsection for replacement procedure.

Replace O-rings of output shaft if brittle, hard or damaged.

Clean crankcase and magneto cover mating surface and especially the bearing areas from metal particles or other contamination.

Installing the Output Shaft and Coupling Sleeve

Reverse the removal procedure. However, pay attention to following details.

Install front ball bearing with open side of plastic-cage facing to the inside of the engine.

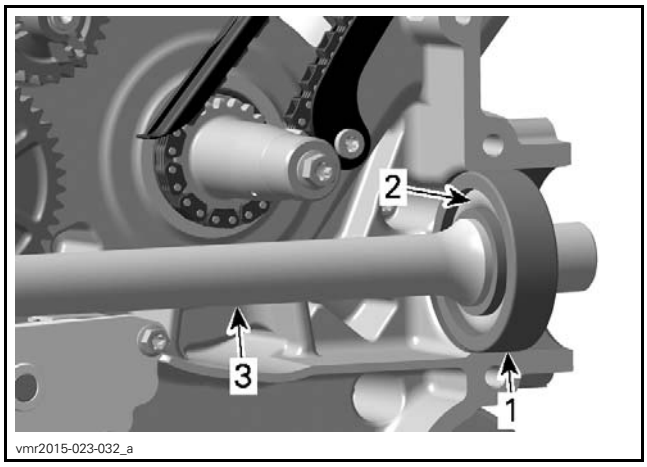

1. Ball bearing (front side)
2. Open side of plastic cage
3. Output shaft

Adjust axial play as per following procedure:

Install output shaft in crankcase.

NOTICE **Do not install thrust washer on output shaft ring gear side yet.**

Put bearings exactly in place against crankcase.

REQUIRED TOOL
Soft hammer

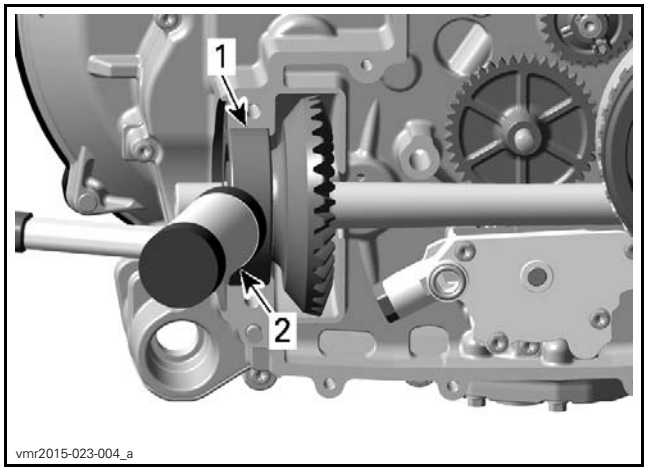

1. Output shaft ball bearing
2. Soft hammer

Install output shaft bearing cover.

NOTE: Do not apply sealant on bearing cover yet.

Push output shaft as per following illustration.

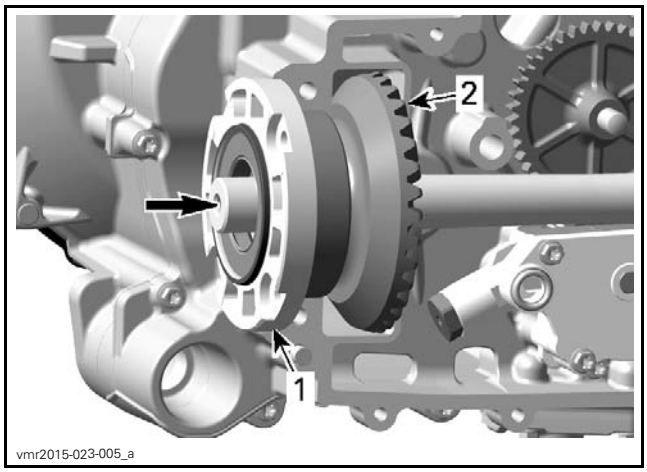

WAY TO PUSH THE BEVEL GEARS TOGETHER
1. *Bearing cover*
2. *Output shaft bevel gear*

Measure axial gap between bearing and output shaft bevel gear.

REQUIRED TOOL
Feeler gauge

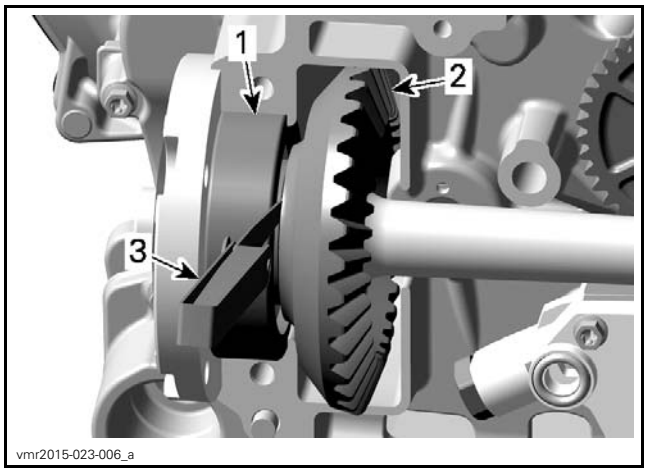

1. *Output shaft ball bearing*
2. *Output shaft bevel gear*
3. *Feeler gauge*

Remove output shaft again and rebuild it with proper adjustment shim.

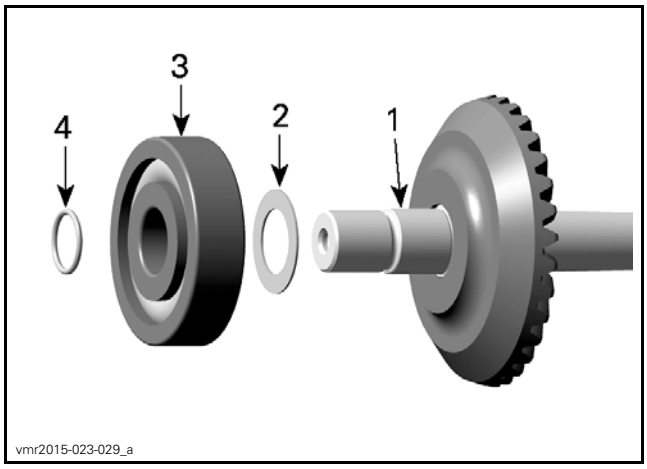

1. *Output shaft*
2. *Adjustment shim*
3. *Ball bearing*
4. *O-ring*

Use the measured thickness to choose the required adjustment shim as per the following table.

MEASURED THICKNESS	ADJUSTMENT SHIM THICKNESS
0.79 mm to 0.88 mm (.0311 in to .0346 in)	0.70 mm (.0276 in)
0.89 mm to 0.98 mm (.035 in to .0386 in)	0.80 mm (.0315 in)
0.99 mm to 1.08 mm (.039 in to .0425 in)	0.90 mm (.0354 in)
1.08 mm to 1.18 mm (.0425 in to .0465 in)	1.00 mm (.0394 in)
1.19 mm to 1.28 mm (.0469 in to .0504 in)	1.10 mm (.0433 in)
1.29 mm to 1.38 mm (.0508 in to .0543 in)	1.20 mm (.0472 in)
1.39 mm to 1.48 mm (.0547 in to .0583 in)	1.30 mm (.0512 in)
1.49 mm to 1.58 mm (.0587 in to .0622 in)	1.40 mm (.0551 in)

NOTE: Output shaft axial clearance of 0.09 mm to 0.18 mm (.004 in to .007 in) is included in the above table.

Install output shaft.

Install magneto cover and bearing cover. Refer to *MAGNETO AND STARTER* subsection.

Set gearbox to PARK position.

Tighten coupling sleeve retaining screw to specification.

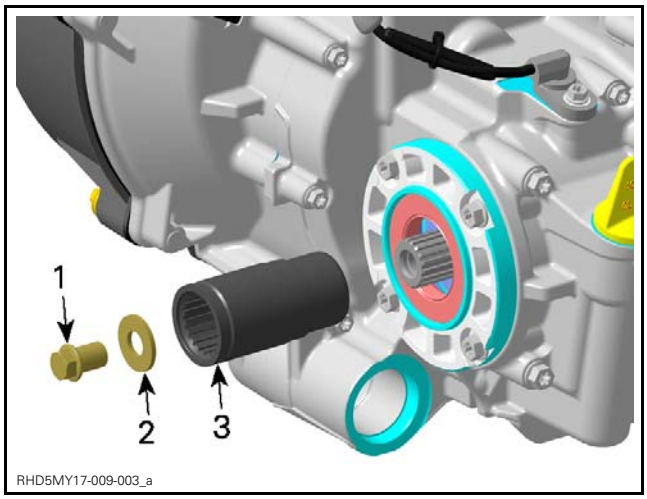

1. *Retaining screw*
2. *Washer*
3. *Coupling sleeve*

TIGHTENING TORQUE	
Coupling sleeve retaining screw	45 N•m ± 5 N•m (33 lbf•ft ± 4 lbf•ft) + LOCTITE 648 (GREEN) (P/N 413 711 400)

GEARBOX

Disassembling the Gearbox

1. Remove engine from vehicle. Refer to *ENGINE REMOVAL AND INSTALLATION* subsection.

NOTE: During gearbox disassembly, inspect the condition of each part closely.

2. Remove magneto cover and rotor. Refer to *MAGNETO AND STARTER* subsection.
3. Remove output shaft.
4. Measure the axial clearance of bevel gear.

NOTE: Bevel gear axial clearance should be measured before crankcase separation.

REQUIRED TOOL
Feeler gauge

BEVEL GEAR AXIAL CLEARANCE	
NEW	0.02 mm to 0.11 mm (.0008 in to .0043 in)
SERVICE LIMIT	0.15 mm (.006 in)

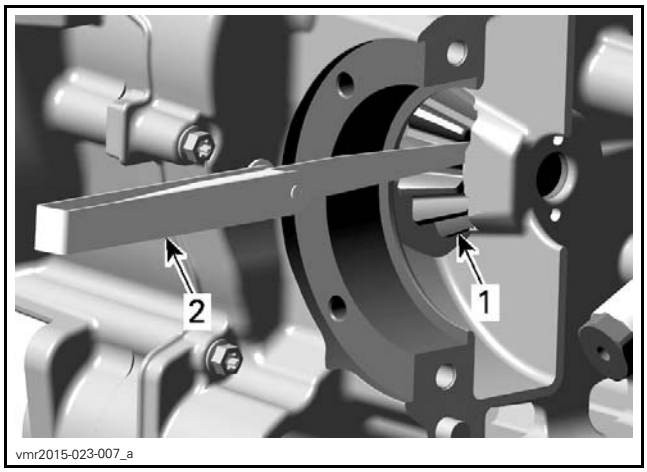

MEASURE AXIAL CLEARANCE
1. *Bevel gear*
2. *Feeler gauge*

5. Separate crankcase. Refer to *BOTTOM END* subsection.
6. Remove balancer shaft. Refer to *BOTTOM END* subsection.
7. Remove:
   – Parking lever
   – Shift shaft.

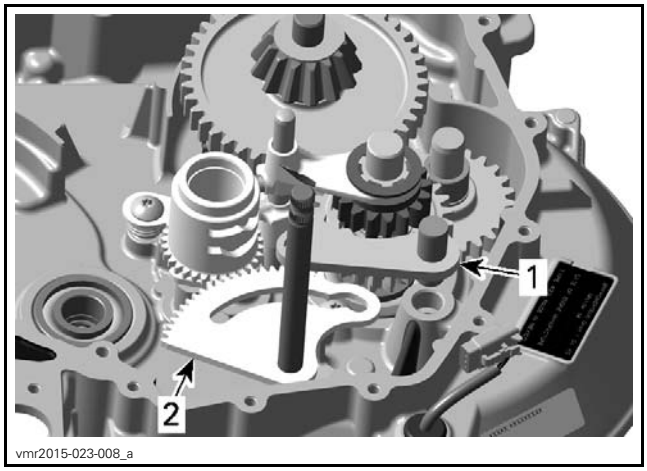

1. *Parking lever*
2. *Shift shaft*

8. Remove shift fork shaft.

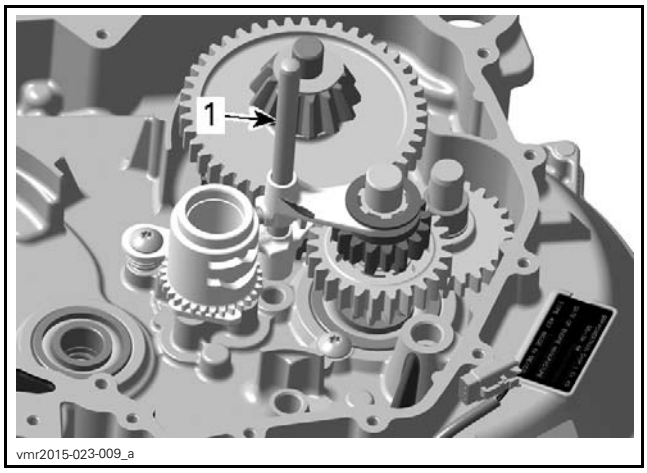

1. Shift fork shaft

9. Remove shift fork.

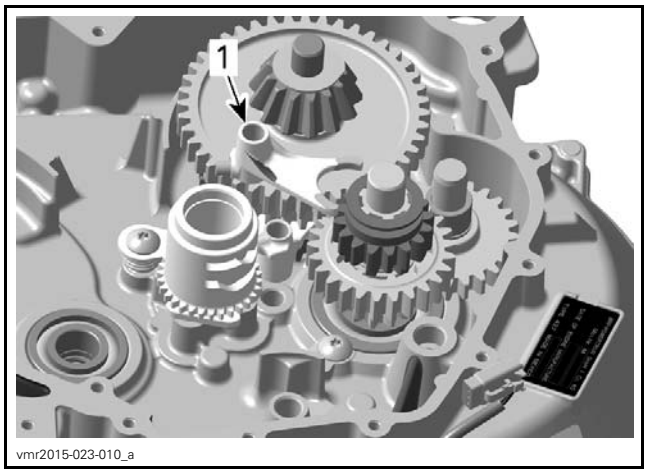

1. Shift fork (engaged in countershaft gear)

10. Disengage shift fork from shift drum.

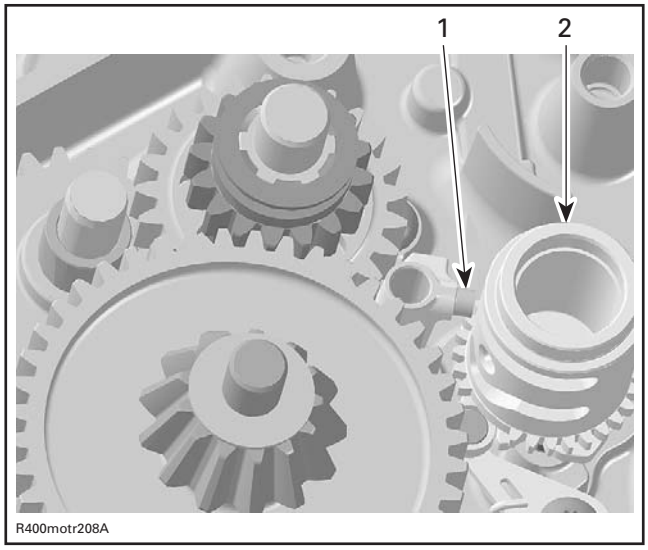

1. Shift fork engagement pin
2. Shift drum

11. Insert a flat screwdriver in the slot of index lever. Turn screwdriver counterclockwise and remove shift drum.

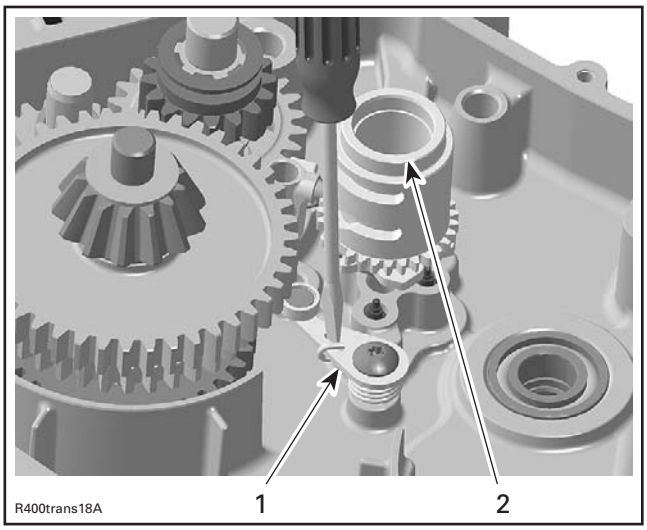

1. Index lever
2. Shift drum

12. Remove shift fork.

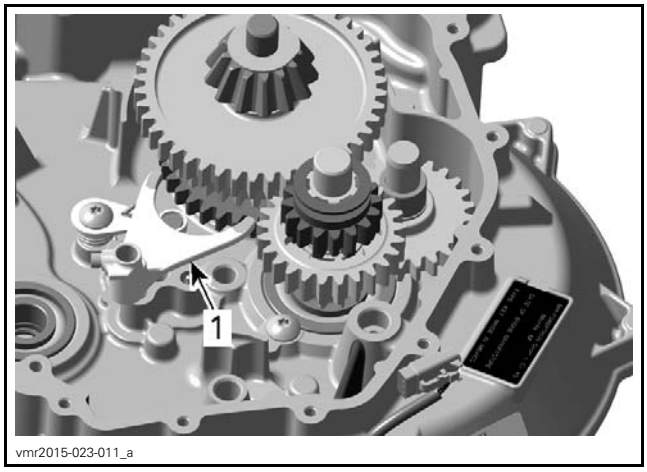

1. Shift fork

13. Remove:
    - Thrust washer
    - Axial needle bearing
    - Bevel gear shaft with low range gear assembly.

.

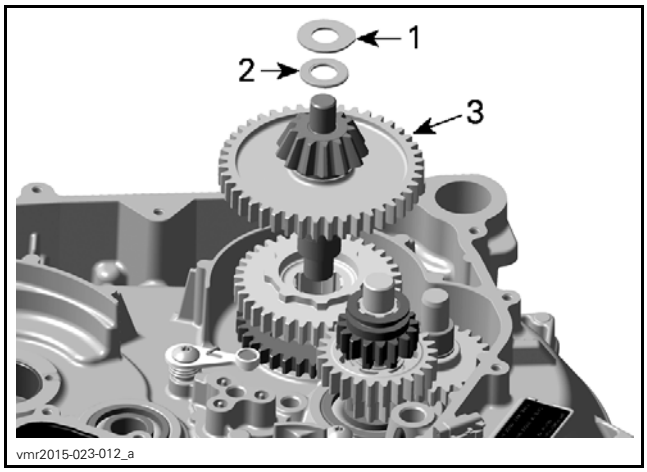

1. *Thrust washer*
2. *Axial needle bearing*
3. *Bevel gear shaft with low range gear assembly*

14. Remove main gear from countershaft.

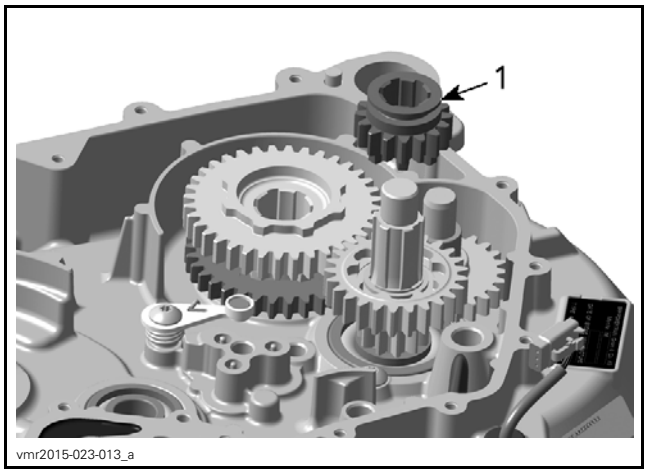

1. *Main gear*

15. Remove distance sleeve including O-ring from countershaft on engine PTO side.

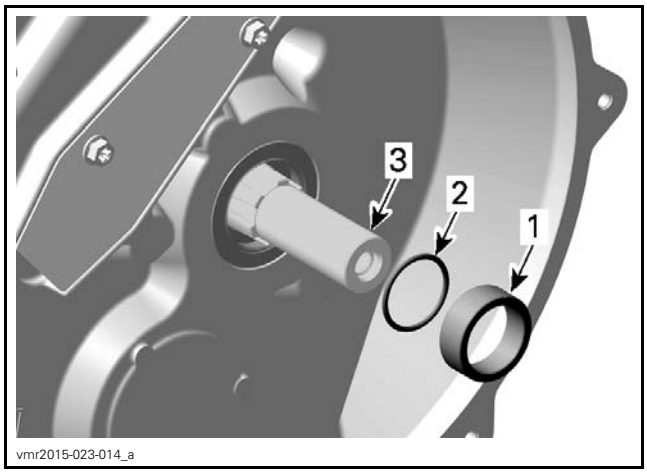

1. *Distance sleeve*
2. *O-ring*
3. *Countershaft*

16. Remove countershaft with high range gear assembly.

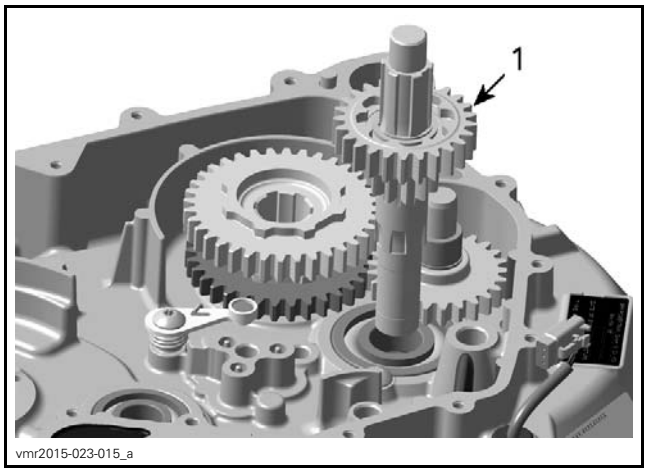

1. *Countershaft with high range gear assembly*

17. Remove:
    - Sliding gear
    - Needle bearing
    - Thrust washer
    - Reverse gear
    - Thrust washer.

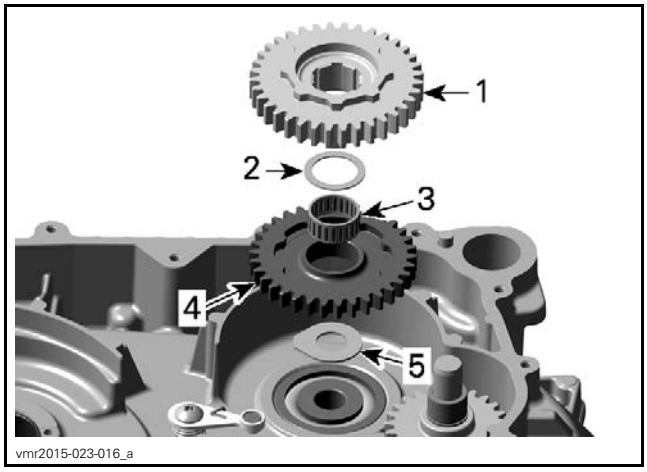

1. *Sliding gear*
2. *Needle bearing*
3. *Thrust washer*
4. *Reverse gear*
5. *Thrust washer*

18. Remove:
    - Intermediate gear shaft
    - Distance sleeve
    - Thrust washer
    - Needle bearing
    - Intermediate gear.

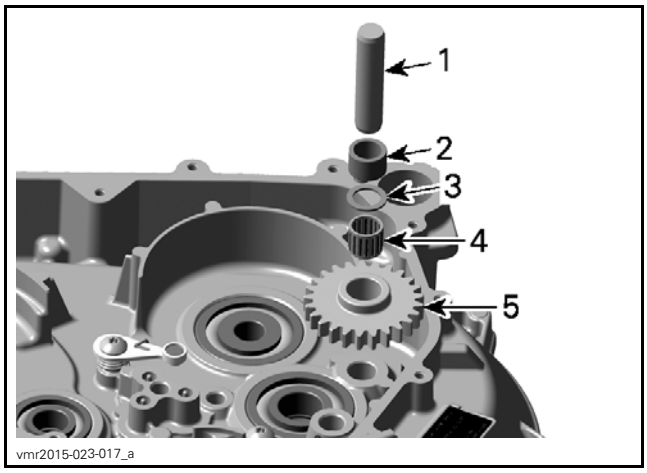

1. Intermediate gear shaft
2. Distance sleeve
3. Thrust washer
4. Needle bearing
5. Intermediate gear

Remove index lever only if necessary.

NOTE: Check index lever for visible damage and if it moves freely. Replace if necessary.

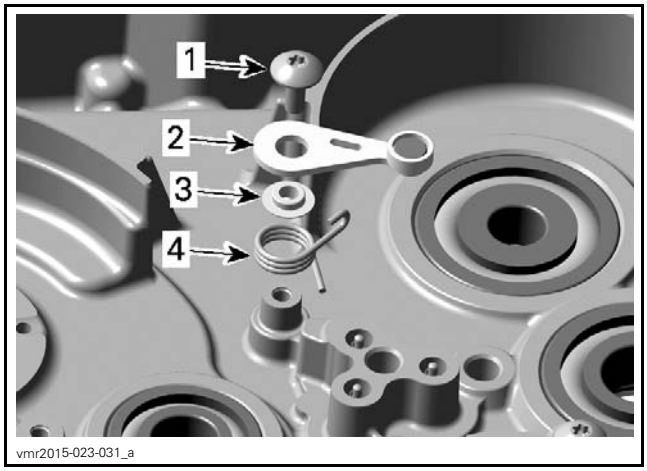

1. Screw
2. Index lever
3. Step ring
4. Index spring

Inspecting the Gearbox

Always verify for the following when inspecting gearbox components:

– Gear teeth damage
– Worn or scored bearing surfaces
– Bent, worn or scored shift fork
– Worn shift fork engagement pins
– Bent, worn or scored shift fork shaft
– Rounded engagement dogs and slots of gears
– Worn grooves on shift drum
– Worn gear engagement groove
– Worn splines on shafts and gears.

Bearings

Check all ball bearings and needle bearings turn freely and smoothly. If rough or any excessive play is detected, replace bearing.

Gears

Check tooth flanks of gears.

Replace gears only together with the corresponding meshing gears.

NOTE: Always replace circlips and use special pliers to install them.

Measure the engagement groove width of sliding gears.

ENGAGEMENT GROOVE WIDTH	
NEW	5.00 mm to 5.10 mm (.197 in to .201 in)
SERVICE LIMIT	5.20 mm (.205 in)

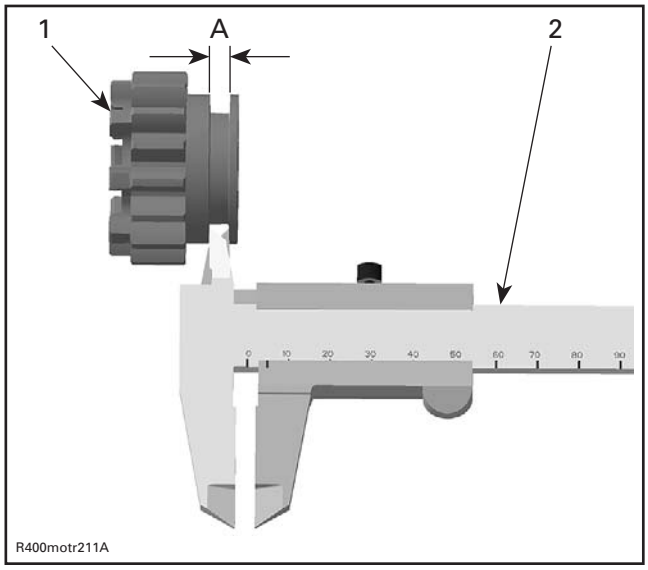

TYPICAL
1. Main gear
2. Caliper
A. Engagement groove width

Levers

Parking lever for cracks or other damages.

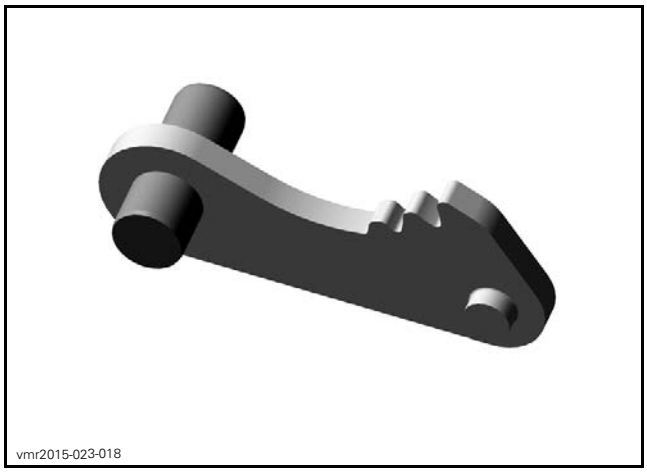

PARKING LEVER

Roller of index lever must have free movement.

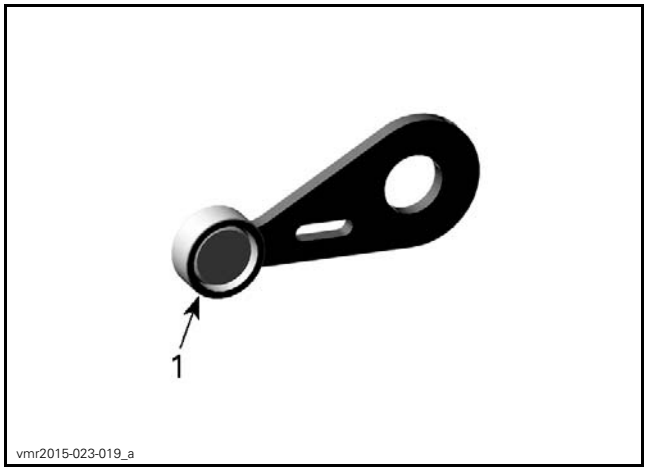

INDEX LEVER
1. Roller

Shafts

Check taper grooves and annular grooves of shafts. Annular grooves must have sharp edges.

Check shift shaft for worn splines and gears.

Check countershaft for wear.

COUNTERSHAFT SERVICE LIMIT	
MAG side	17.990 mm (.708 in)
PTO side	24.950 mm (.982 in)

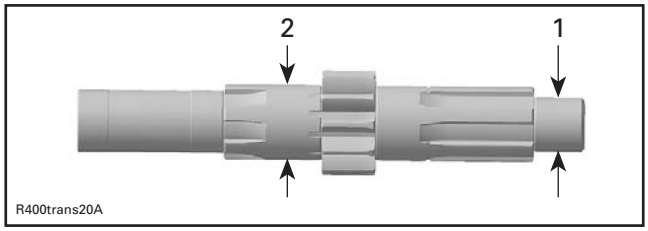

1. Mag side
2. PTO side

Check bevel gear shaft.

BEVEL GEAR SHAFT SERVICE LIMIT	
PTO side	24.990 mm (.984 in)

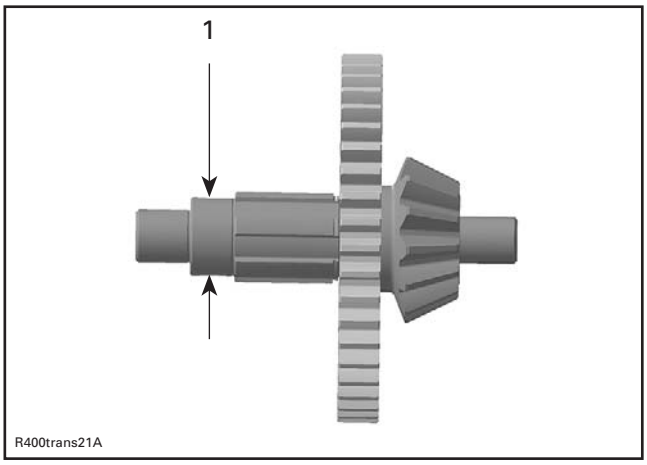

1. PTO side

Shift Drum

Check tracks of shift drum for scoring or heavy wear like rounded engagement slots.

Check index washer on shift drum for scoring or visible damages.

Replace isolating washer if there are signs of wear or visible damages.

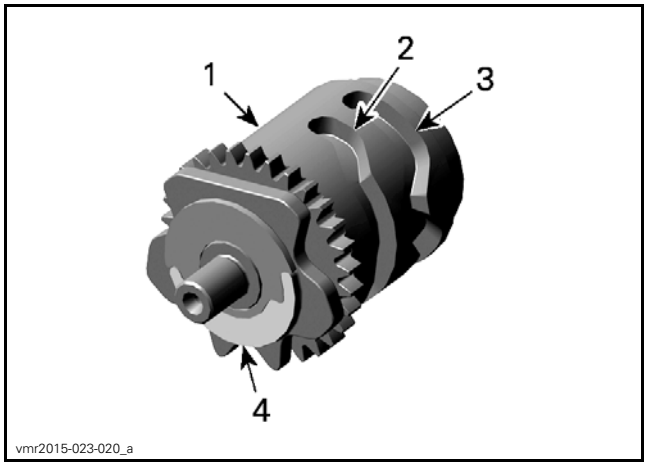

1. Shift drum
2. Track for the low/reverse gear shift fork
3. Track for the high gear shift fork
4. Isolating washer

Shift Forks

Check both shift forks for visible damage, wear or bent shift fork claws.

Measure the shift fork claw thickness.

SHIFT FORK CLAW THICKNESS	
NEW	4.800 mm to 4.860 mm (.189 in to .191 in)
SERVICE LIMIT	4.750 mm (.187 in)

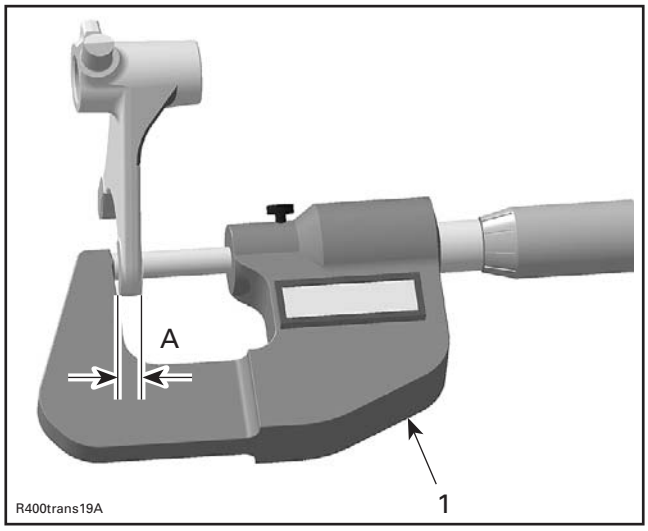

1. Micrometer
A. Shift fork claw thickness

Thrust Washers

Check thrust washers for wear. Always replace thrust washer by a new one with the same thickness, when reassembling the gearbox with existing output shaft and bevel gear.

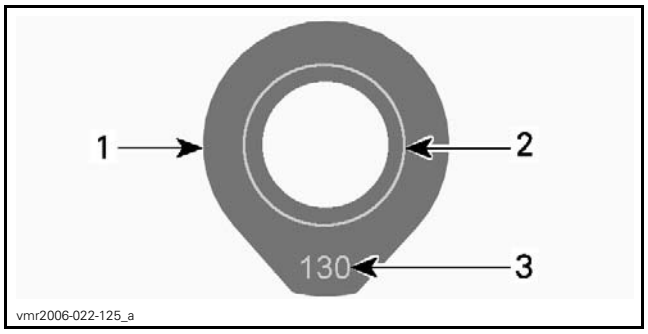

1. Thrust washer for adjusting the bevel gear axial clearance on PTO side
2. Area where wear signs appear
3. Adjustment thickness of the washer

Adjusting the Gearbox

NOTE: Only necessary if the bevel gear backlash and the axial clearance is out of specification or if parts are changed (output shaft, bevel gear or crankcase).

The bevel gear adjustment includes:

– Bevel gear backlash on MAG side crankcase
– Bevel gear axial clearance on PTO side crankcase.

The bevel gear backlash is adjusted by finding the proper thrust washer thickness E as per following illustration.

The bevel gear axial clearance is adjusted by finding the proper thrust washer thickness J as per following illustration.

NOTE: Clean mating surface of crankcase before taking measurements. Refer to *BOTTOM END* subsection.

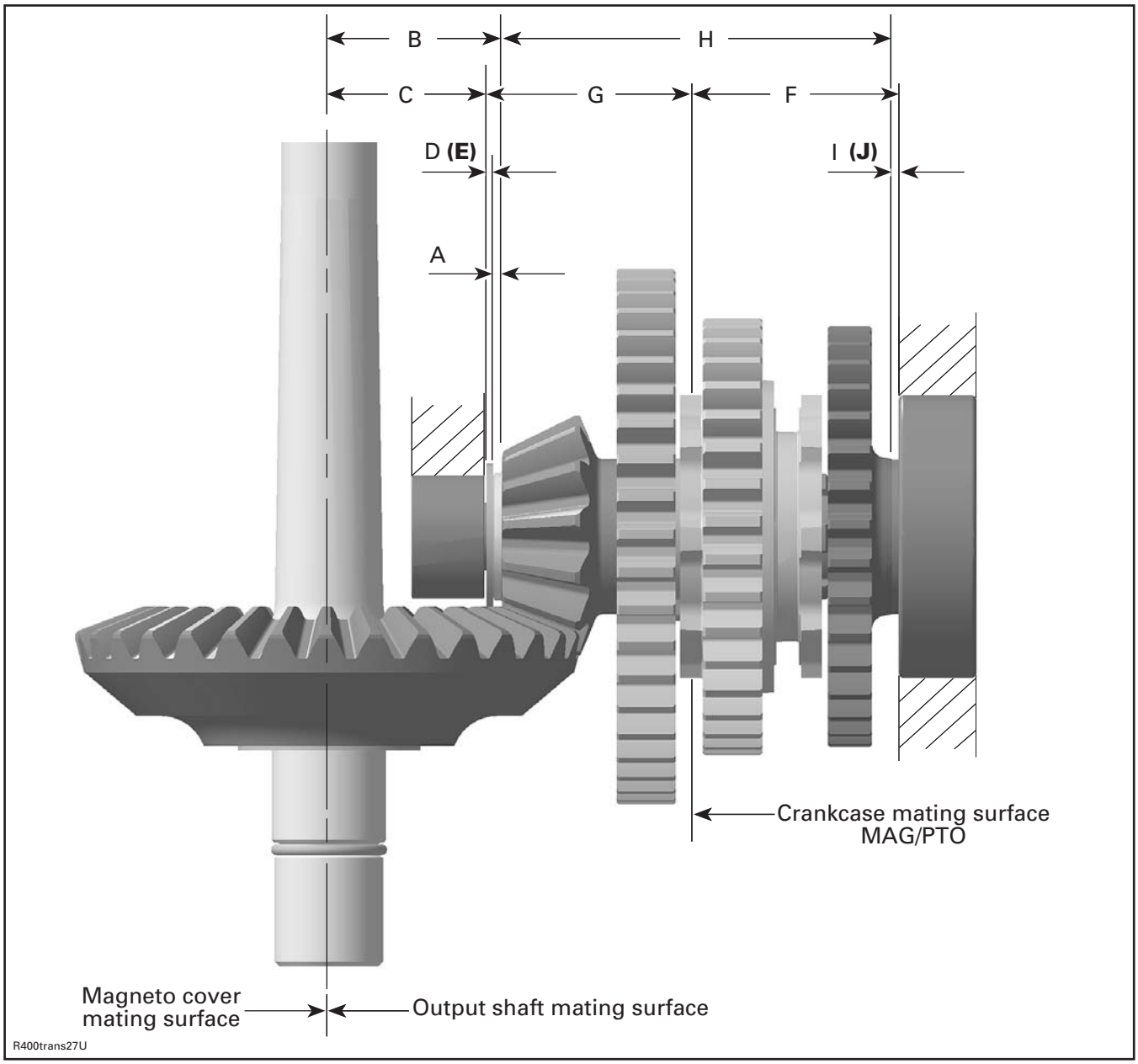

Bevel Gear Backlash Procedure (MAG Side Crankcase)

Use the following course of calculation to determine the theoretical thrust washer thickness D:

D = B - C - A

B = Distance between the thrust surface of bevel gear and the theoretical center of its taper. This is defined by manufacturer and written on the bevel gear shaft.

NOTE: Bevel gear reference number is a value between - 10 and + 10.

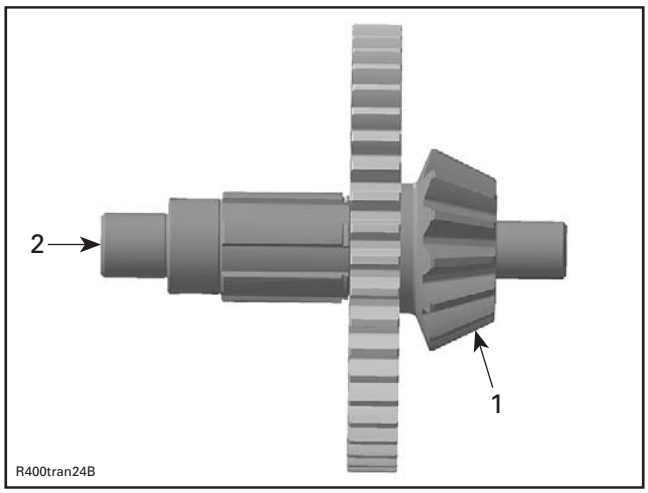

1. Bevel gear
2. Bevel gear reference number location

Use following course of calculation to find out value B.

$$B = \left(\frac{\text{bevel gear reference number}}{100}\right) + 37.8$$

C = Distance between the washer thrust surface in the MAG side and the mating surface of crankcase magneto cover.

NOTE: For a better understanding following illustration is made as a cutaway.

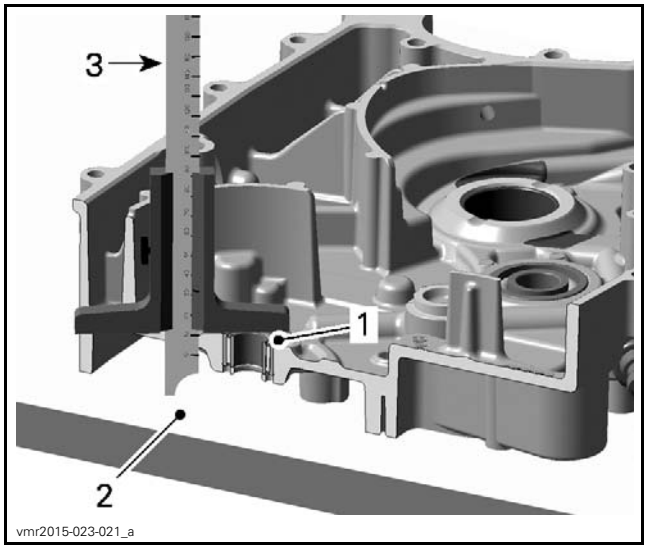

MEASUREMENT C
1. Washer thrust surface
2. Mating surface of crankcase to the magneto cover
3. Depth gauge

A = 2 mm (.0787 in) nominal thickness of axial needle bearing.

When all the measurements are taken, calculate the theoretical thickness D of thrust washer using the formula (D = B - C - A).

Take the obtained theoretical thrust washer thickness D and choose the proper thrust washer number E according to the following table.

THEORETICAL THRUST WASHER THICKNESS D	THRUST WASHER NUMBER E
1.20 mm to 1.29 mm (.0472 in to .0508 in)	120
1.30 mm to 1.39 mm (.0512 in to .0547 in)	130
1.40 mm to 1.49 mm (.0551 in to .0587 in)	140
1.50 mm to 1.59 mm (.0591 in to .0626 in)	150
1.60 mm to 1.69 mm (.063 in to .0665 in)	160
1.70 mm to 1.79 mm (.0669 in to .0705 in)	170
1.80 mm to 1.89 mm (.0709 in to .0744 in)	180

Bevel Gear Axial Clearance Procedure (PTO Side Crankcase)

Use the following course of calculation to determine the theoretical thrust washer thickness I:

I = F + G - H - A - E

F = Distance between mating surface (crankcase PTO) to ball bearing inner race.

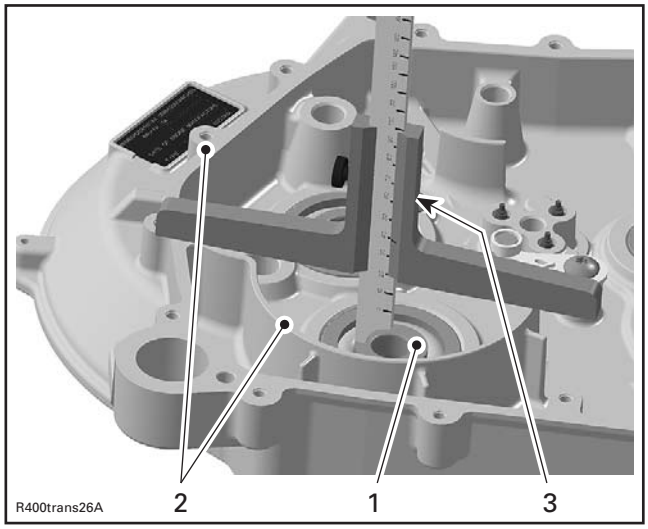

1. Ball bearing inner race
2. Mating surface of crankcase PTO
3. Depth gauge

G = Distance between mating surface of crankcase MAG and outer race of needle bearing.

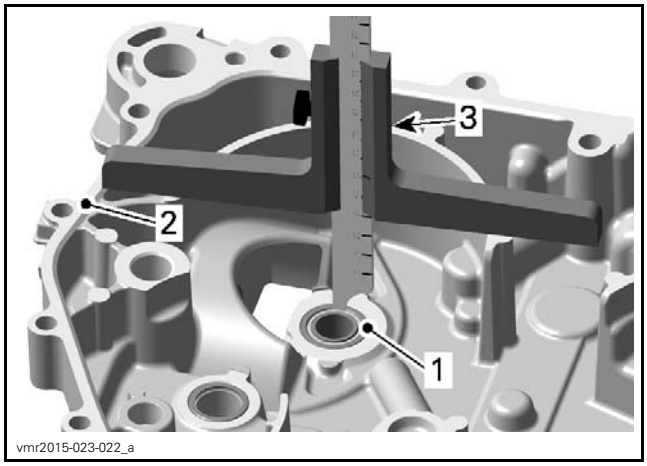

1. *Needle bearing inner race*
2. *Mating surface of crankcase MAG*
3. *Depth gauge*

H = Distance between thrust surfaces of bevel gear shaft.

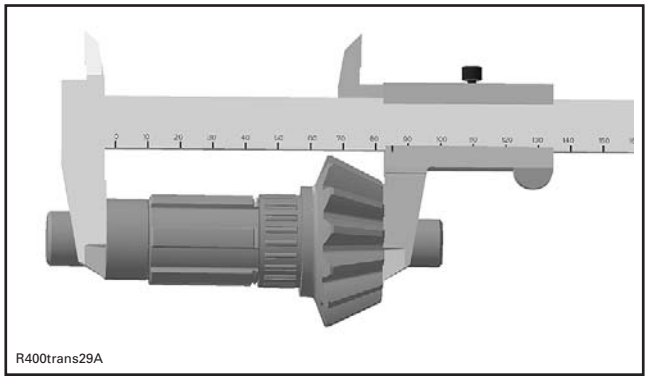

A = 2.00 mm (.0787 in) nominal thickness of needle bearing.

E = The thrust washer number nominal value as found in the *BEVEL GEAR BACKLASH PROCEDURE*. For example, thrust washer number 170 represents a value of 1.70 mm (.0669 in).

When all the measurements are taken, calculate the theoretical thrust washer thickness I using the formula (I = F + G - H - A - E).

Take the obtained theoretical thrust washer thickness I and choose the proper thrust washer number J according to the following table.

THEORETICAL THRUST WASHER THICKNESS I	THRUST WASHER NUMBER J
1.22 mm to 1.31 mm (.048 in to .0516 in)	120
1.32 mm to 1.41 mm (.052 in to .0555 in)	130
1.42 mm to 1.51 mm (.0559 in to .0594 in)	140
1.52 mm to 1.61 mm (.0598 in to .0634 in)	150
1.62 mm to 1.71 mm (.0638 in to .0673 in)	160
1.72 mm to 1.81 mm (.0677 in to .0713 in)	170
1.82 mm to 1.91 mm (.0717 in to .0752 in)	180

NOTE: Bevel gear axial clearance of 0.02 mm to 0.11 mm (.0008 in to .0043 in) is included in the above table.

Assembling the Gearbox

Reverse the disassembly procedure. However, pay attention to the following.

1. Install:
   - Intermediate gear shaft , needle bearing, intermediate gear, thrust washer and distance sleeve
   - Thrust washer, needle bearing, reverse gear, thrust washer and sliding gear
   - Countershaft with high range gear assembly.
2. Main gear.
3. Bevel gear shaft with low range gear assembly.

NOTE: If a new bevel gear is used, it is necessary to perform the bevel gear adjustments. Refer to *ADJUSTING THE GEARBOX* in this subsection. If the existing bevel gear is used, it is mandatory to use new thrust washers with the same thickness and also a new axial needle bearing.

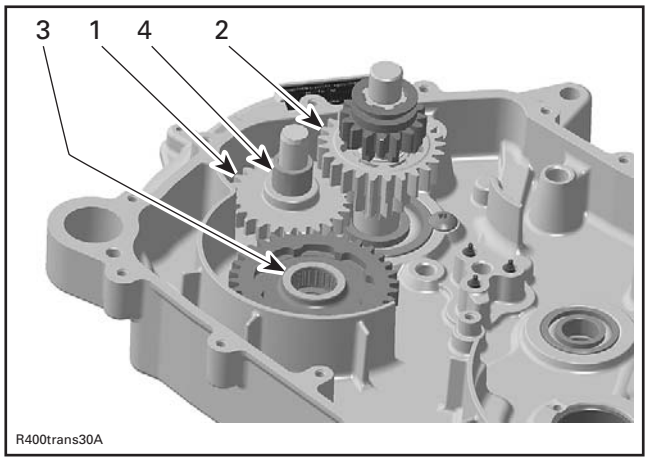

1. *Intermediate gear*
2. *Countershaft*
3. *Thrust washer after sliding gear on bevel gear*
4. *Thrust washer between distance sleeve and reverse gear*

4. Install shift forks.
5. Put shift forks in place and afterward insert pin with the chamfer on top for a better installation of crankcase MAG side.
6. Insert a flat screwdriver in the slot of index lever. Turn screwdriver counterclockwise and install shift drum on park position as per the following illustration.

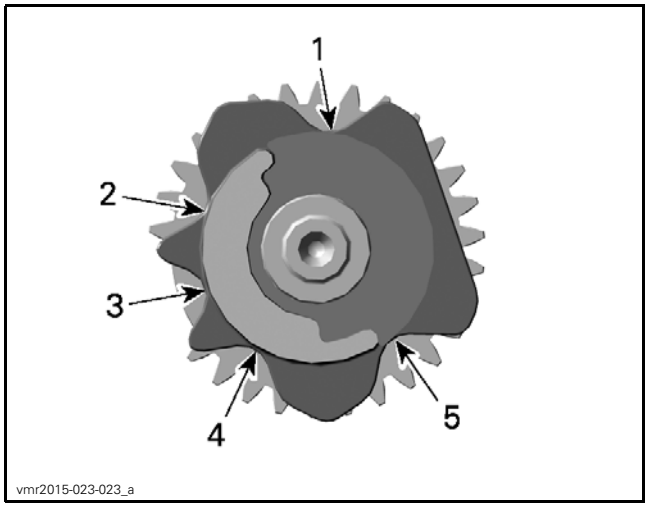

1. *Parking stop location*
2. *Reverse stop location*
3. *Neutral stop location*
4. *High gear stop location*
5. *Low gear stop location*

7. Insert shift shaft with mark in line to first tooth on shift drum.

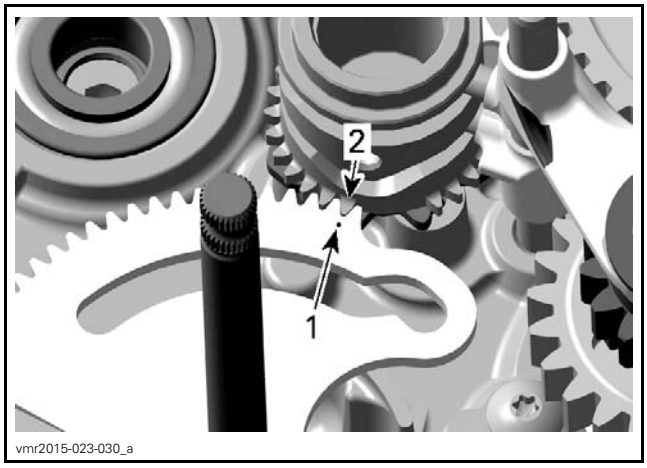

1. *Mark on shift shaft*
2. *First tooth on shift drum*

8. Install parking lever.
9. Run all gears as a final function check.
10. Install balancer shaft then close crankcase housings. Refer to *BOTTOM END* subsection.
11. Install O-ring including distance sleeve on countershaft end PTO side.

NOTICE **Place O-ring including distance sleeve right away. Chamfered bore of distance sleeve has to face the engine.**

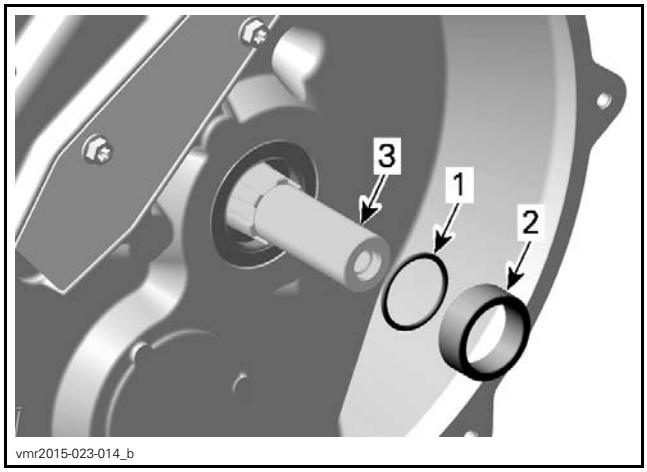

1. *O-ring*
2. *Distance sleeve*
3. *Main shaft end PTO side*

12. Install output shaft and measure axial clearance. Refer to *OUTPUT SHAFT* in this subsection.
13. Install all other removed parts.

GEARBOX POSITION INDICATOR SWITCHES

NOTE: First ensure shifter link rod is properly adjusted. Refer to *SHIFTER* subsection.

The multifunction gauge uses one switch state (open or closed) for each P, N and R switch to determine the gearbox position.

Gearbox Position Indicator Switch Access

The switches are located in the crankcase, behind the CVT cover.

A common connector for the gearbox position indicator switches is easily accessible by tilting the cargo box.

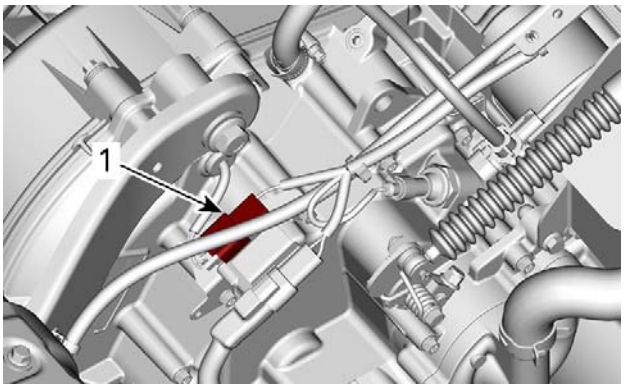

RHD5MY17-019-700_a

1. Gearbox position indicator switch connector

Testing the Gearbox Position Indicator Switch Continuity

1. Tilt the cargo box.
2. Disconnect gearbox position indicator switch connector.

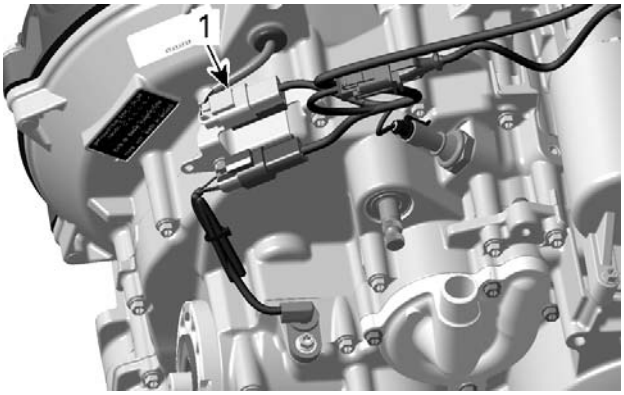

vmr2015-023-024_a

1. Gearbox position indicator switch connector

REQUIRED TOOL	
FLUKE 115 MULTIMETER (P/N 529 035 868)	

3. Using a multimeter, measure resistance of the position switch while selecting the gearbox to each position. Compare results with following table.

SHIFTER POSITION	CORRESPONDING SWITCH		
	YELLOW/ GREEN	BLUE	BROWN
	Position 3	Position 1	Position 2
L		X	X
H			X
N	X		X
R	X		
P	X	X	

An “X” indicates switch is making ground contact, thus there should be continuity (R is close to 0 Ohms).

A blank space indicates switch is not making contact, there should be no continuity (R = infinite).

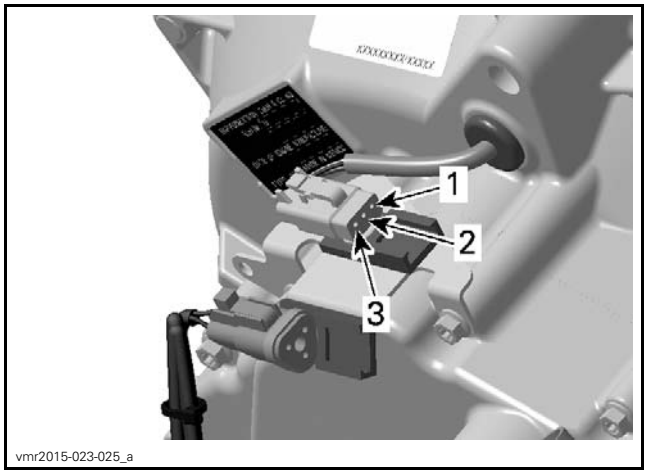

vmr2015-023-025_a

GEARBOX POSITION INDICATOR SWITCH CONNECTOR
1. Blue wire
2. Brown wire
3. Yellow/green wire

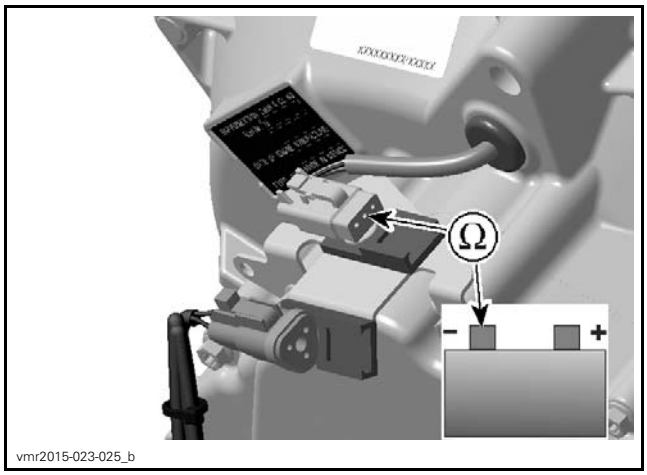

If the indicator switch is good, check the vehicle harness and/or indicator lights.

Removing the Gearbox Position Indicator Switch

NOTE: Engine removal is not necessary.

Refer to *CONTINUOUSLY VARIABLE TRANSMISSION (CVT)* subsection and remove:

– CVT cover
– Driven pulley.

Remove:

– Retaining screws
– Switch protection plate.

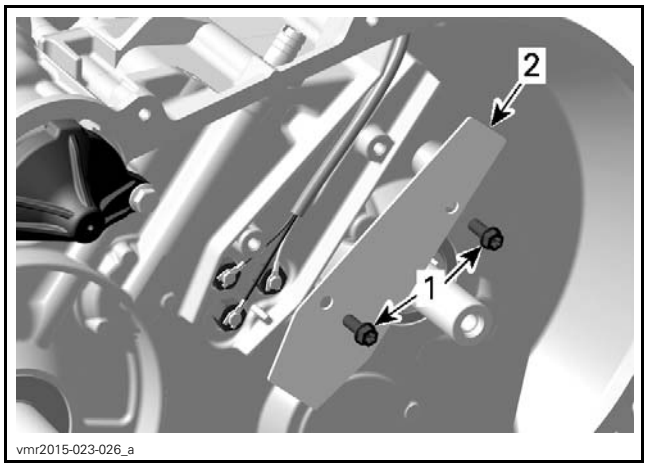

1. Retaining screws
2. Switch protection plate

NOTE: Clean area from dirt and belt dust before removing gearbox position indicator switch(es). Take note of corresponding switch position and wire color.

Remove screw retaining terminals of intermediate wiring harness to gearbox position indicator switch.

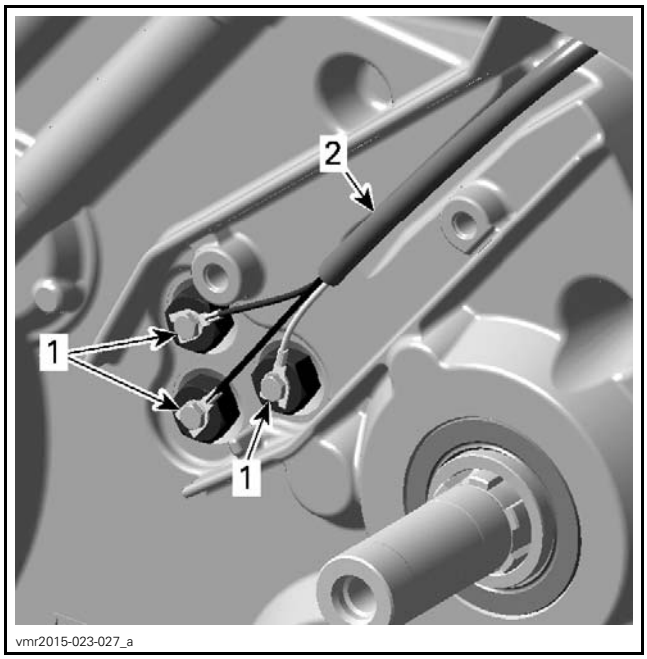

1. Retaining screws
2. Intermediate wiring harness

Unscrew gearbox position indicator switch.

Installing the Gearbox Position Indicator Switch

1. Reverse the removal procedure. However, pay attention to the following.
2. Take care to avoid damaging threads in switch bores during installation.

TIGHTENING TORQUE	
Gearbox position indicator switch	3 N•m ± 0.4 N•m (27 lbf•**in** ± 4 lbf•**in**) + LOCTITE 5910 (P/N 293 800 081)

NOTICE **Do not apply thread locker on switch plunger as it will lead to switch malfunction.**

3. If all terminals were removed, put them back in the proper location as noted prior to removal.

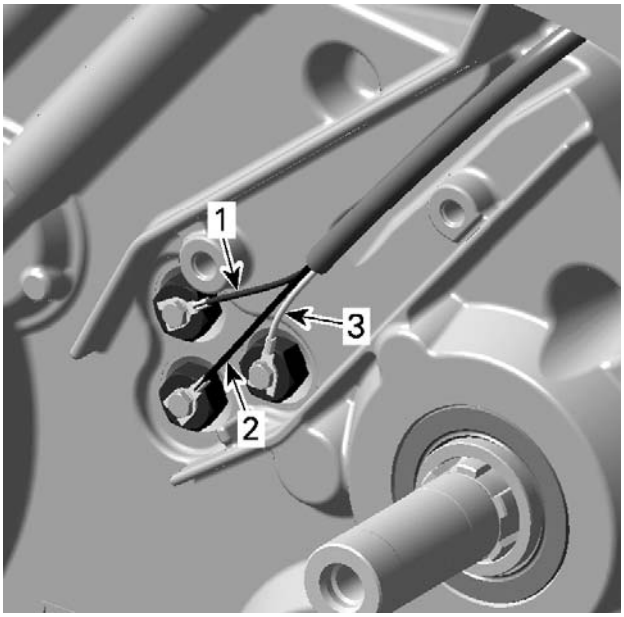

vmr2015-023-027_b

1. *Gearbox position switch position 1 — BLUE wire*
2. *Gearbox position switch position 2 — BROWN wire*
3. *Gearbox position switch position 3 — GREEN/YELLOW wire*

4. Install protection plate and tighten screws to specification.

TIGHTENING TORQUE	
Protection plate retaining screws	10 N•m ± 1 N•m (89 lbf•**in** ± 9 lbf•**in**)

4WD SWITCH

Testing the 4WD Switch

Tilt cargo box.

Unplug actuator connector from coupling unit.

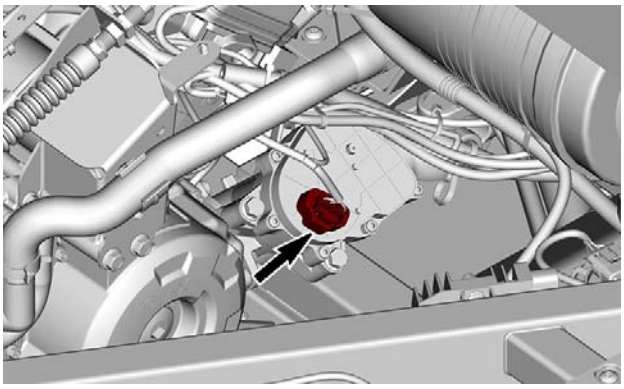
RHD5MY17-019-701_a

Using a multimeter, check if the 4WD switch works properly.

Turn ignition key ON.

Select 2WD position.

Install the RED probe to the WHITE wire connector and the BLACK probe to the WHITE/BLACK wire connector.

The obtained value should be 12 Vdc.

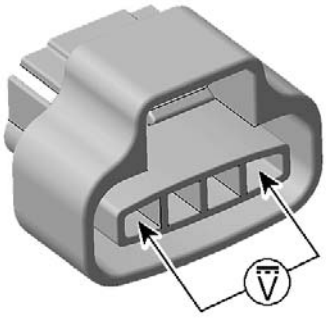
vmr2008-141-003_a

Select 4WD position.

Install the RED probe to the WHITE/BLUE wire connector and the BLACK probe to the WHITE wire connector.

The obtained value should be 12 Vdc.

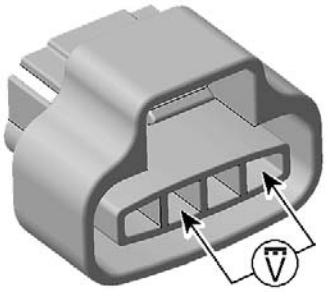
vmr2008-141-003_b

If voltage is not as specified, check wires and connectors. If good, replace the 4WD switch.

Replacing the 4WD Switch

To replace the 4WD switch, reach under the dashboard and release retaining clips, then push switch out of the console.

Disconnect electrical connector.

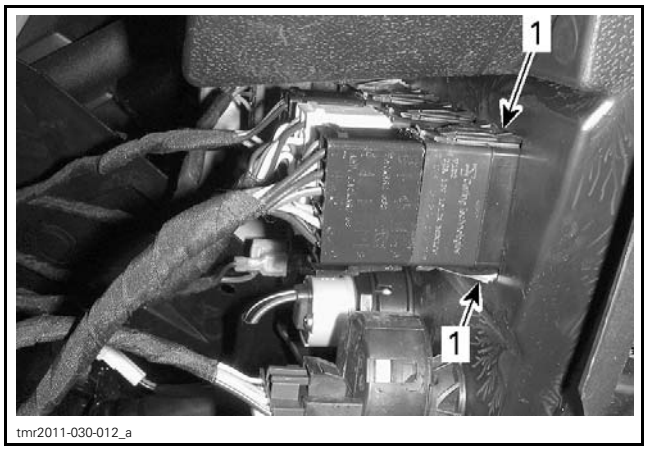

tmr2011-030-012_a

1. Retaining clips

4WD ACTUATOR

Removing the 4WD Actuator

Tilt cargo box.

Unplug actuator connector.

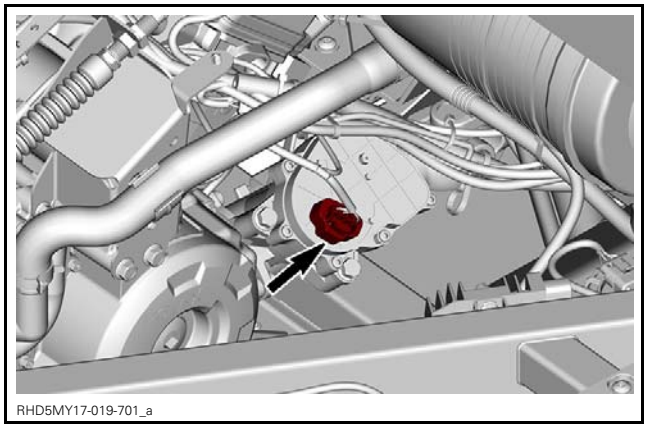
RHD5MY17-019-701_a

Remove actuator screws.

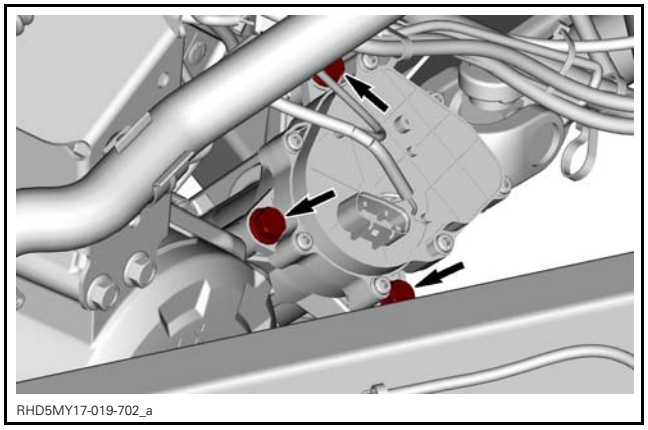
RHD5MY17-019-702_a

Pull the actuator out of the housing.

Installing the 4WD Actuator

Lubricate actuator O-ring.

SERVICE PRODUCT
Engine oil

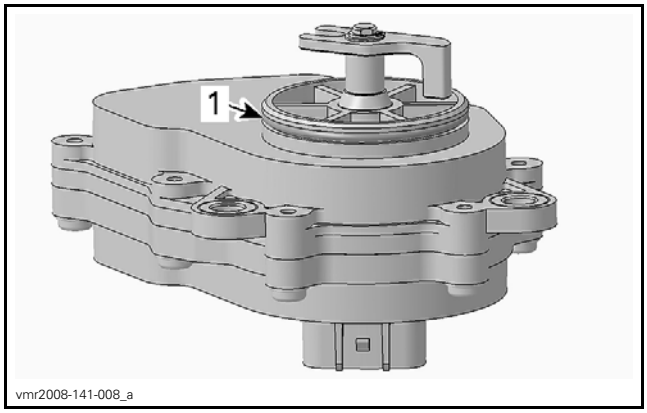

vmr2008-141-008_a

1. Actuator O-ring

Verify if sliding sleeve is in 2WD position. The sliding sleeve should be pointed toward the front of vehicle.

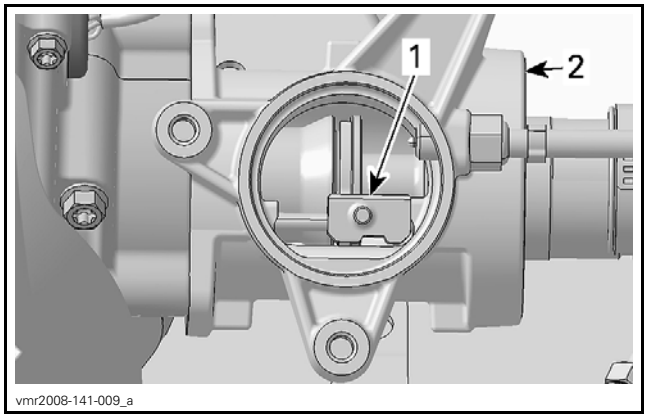

vmr2008-141-009_a

1. Sliding sleeve
2. Coupling unit housing

Turn the actuator 37 degrees clockwise from the mounting position.

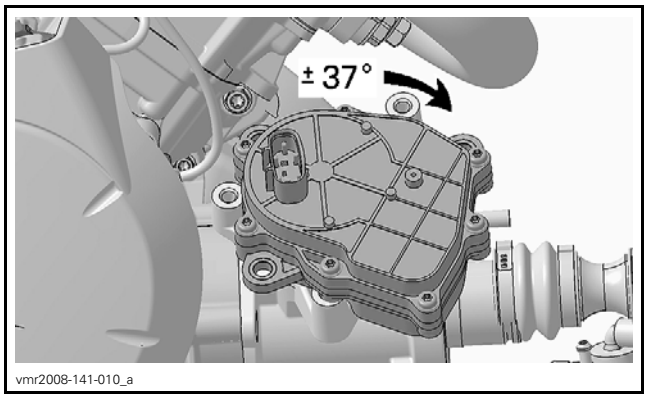

vmr2008-141-010_a

FROM RH SIDE — ACTUATOR POSITIONS AT 37 DEGREES

Align the actuator fork with the dog on sliding sleeve then push the actuator in the housing.

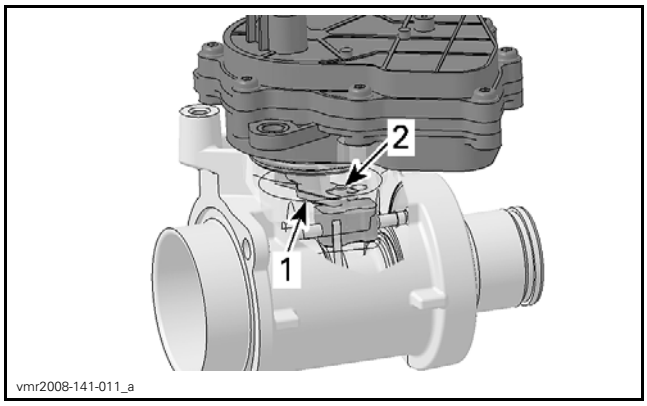

1. *Actuator fork*
2. *Sliding sleeve dog*

Rotate the actuator counterclockwise until it orients itself to mounting position.

NOTICE **Do not cut or break the actuator O-ring.**

Tighten actuator screws to specification.

TIGHTENING TORQUE	
Actuator screws	20 N•m ± 2 N•m (15 lbf•ft ± 1 lbf•ft) + LOCTITE 243 (BLUE) (P/N 293 800 060)

Connect actuator.

Lift the front of vehicle until front wheels turn freely.

Try to turn the front propeller shaft. The shaft should turn easily.

Place ignition switch to ON position and select the 4WD position.

The front propeller shaft should not turn (the PARK position must be selected).

If the front propeller shaft turns, the actuator is not installed correctly. Remove actuator and reinstall it.

4WD INDICATOR SWITCH

Removing the 4WD Indicator Switch

Tilt cargo box.

Unplug the 4WD indicator switch connector.

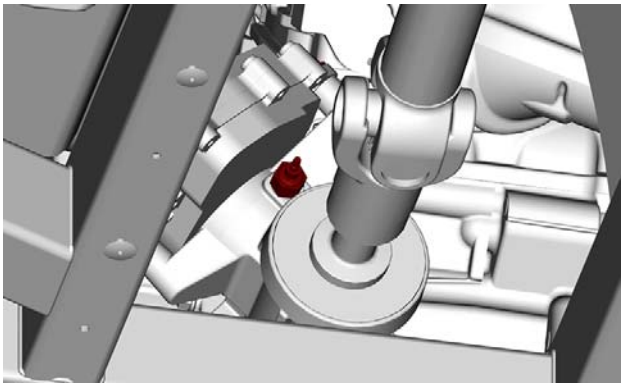

VIEWED FROM UNDERSIDE FOR CLARITY, ACCESSIBLE FROM TOP

Remove:

– 4WD indicator switch
– Sealing washer (discard it)

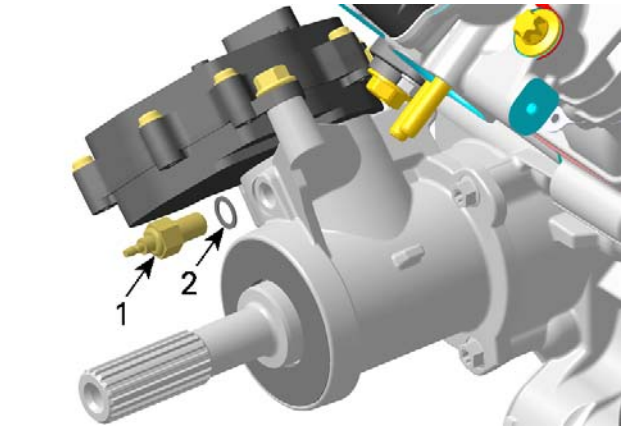

1. *4WD indicator switch*
2. *Sealing washer (discard it)*

Testing the 4WD Indicator Switch

Using a multimeter, do the following to check the switch.

Using an alligator clip, place the BLACK probe on the external pin.

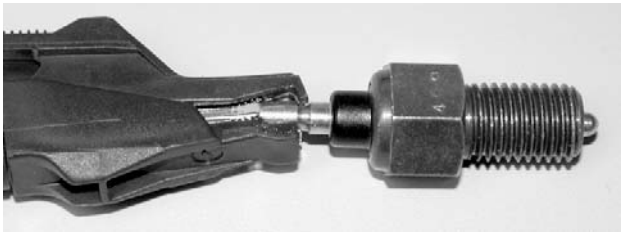

Touch the contact pin with the RED probe. The multimeter should indicate ± 1 Ω.

vmr2006-035-006

Apply the RED probe on switch body. The measure should be OL.

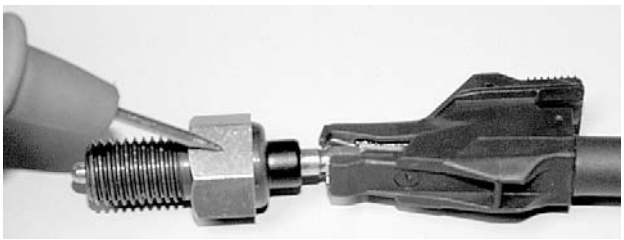
vmr2006-035-007

If switch is out of specifications, replace it.

Installing the 4WD Indicator Switch

The installation is the reverse of the removal procedure. However, pay attention to the following details.

Install a **NEW** sealing washer and tighten 4WD indicator switch to specification.

TIGHTENING TORQUE	
4WD indicator switch	20 N•m ± 1.5 N•m (15 lbf•ft ± 1 lbf•ft)

4X4 COUPLING UNIT

Removing the 4x4 Coupling Unit

Remove front propeller shaft. Refer to *FRONT DRIVE* subsection.

Unplug:
- Coupling unit connector
- 4WD switch connector.

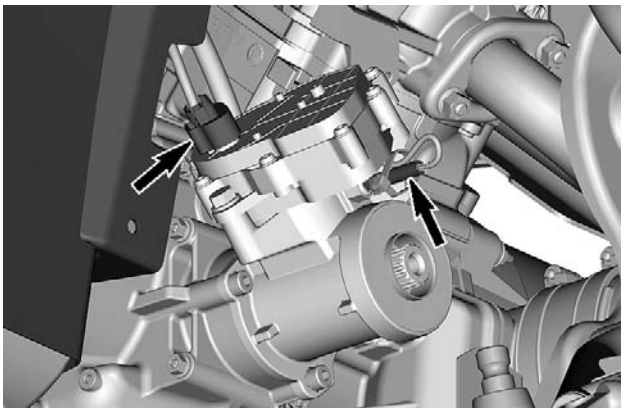
vmr2015-074-007_a

Remove:
- Retaining screws
- 4x4 coupling unit
- O-ring.

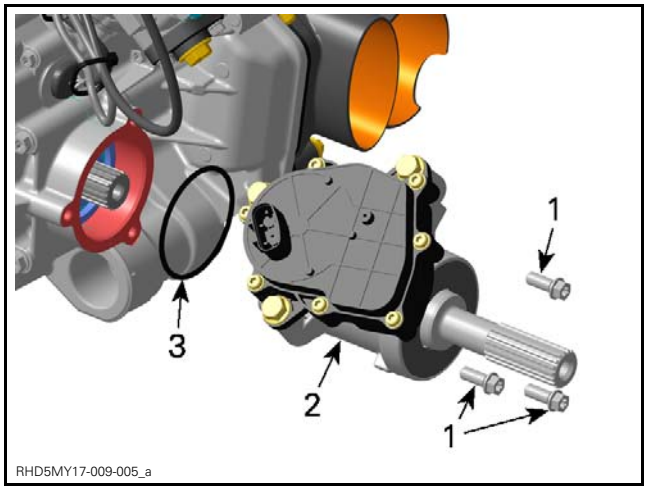

RHD5MY17-009-005_a

1. *Retaining screws*
2. *4x4 coupling unit*
3. *O-ring*

Disassembling the 4x4 Coupling Unit

Remove:
- Retaining screws
- Actuator.

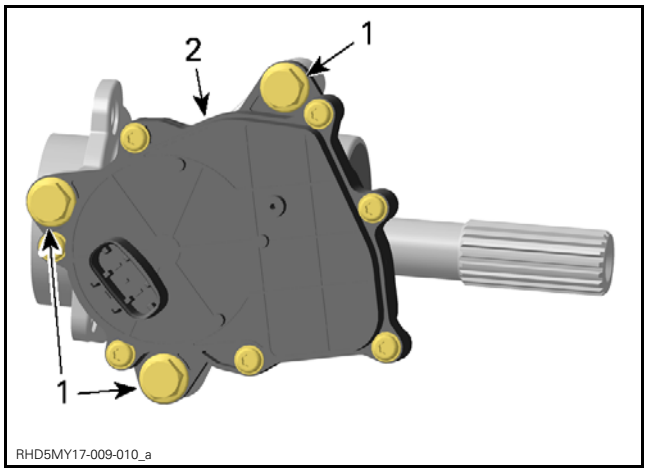

RHD5MY17-009-010_a

1. *Retaining screws*
2. *Actuator*

Remove and discard the oil seal.

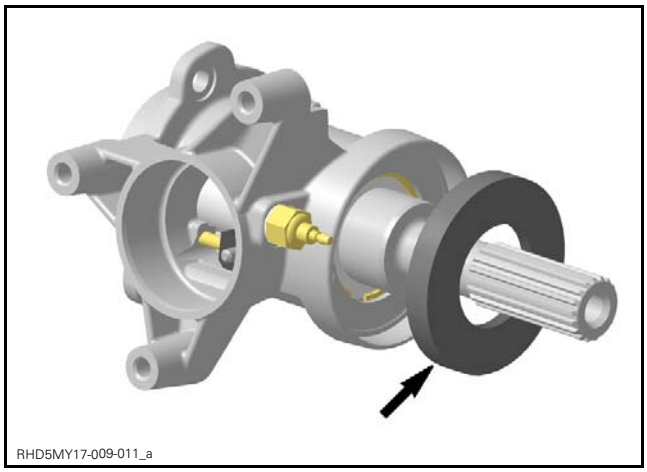

Remove:
- Allen set screw
- Sliding sleeve pin.

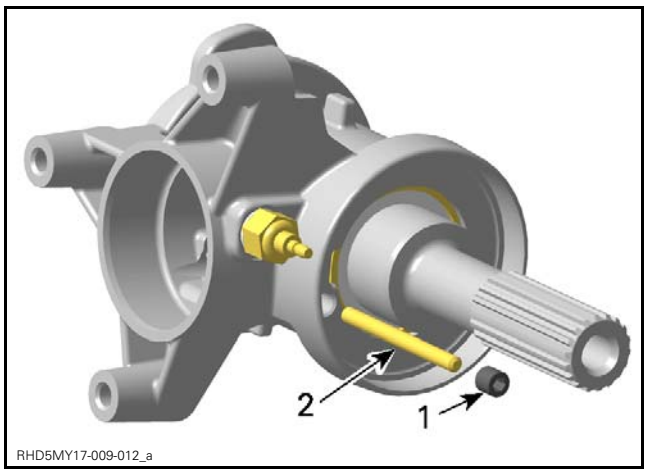

1. *Allen set screw*
2. *Sliding sleeve pin*

Remove:
- Sliding sleeve
- Shifter fork.

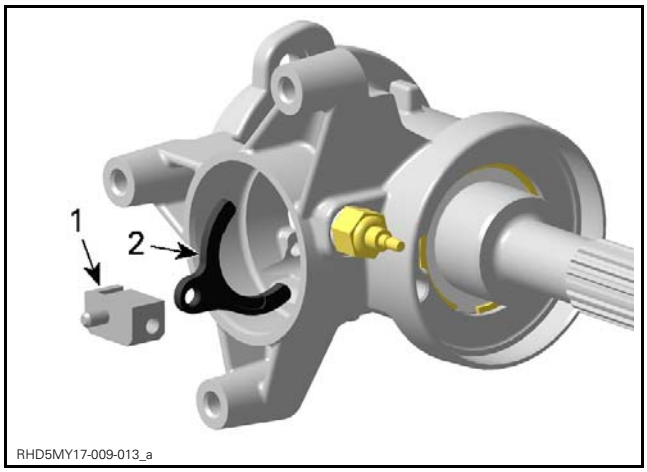

1. *Sliding sleeve*
2. *Shifter fork*

Pull out the coupling sleeve.

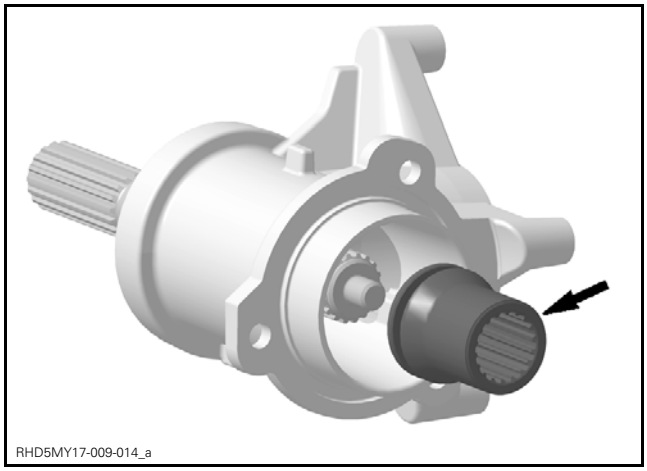

Remove the inner circlip.

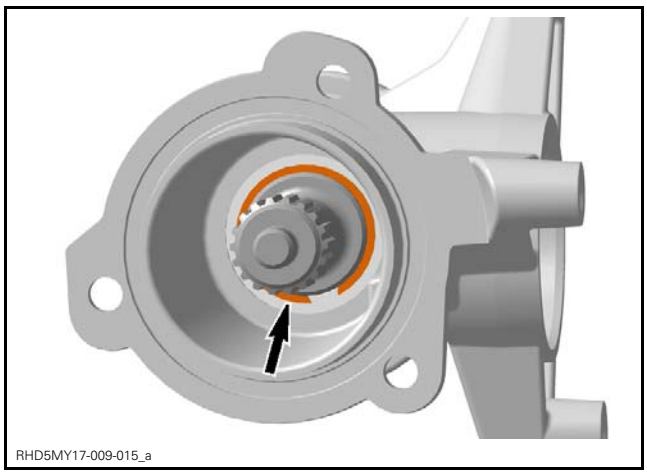

Remove the outer circlip.

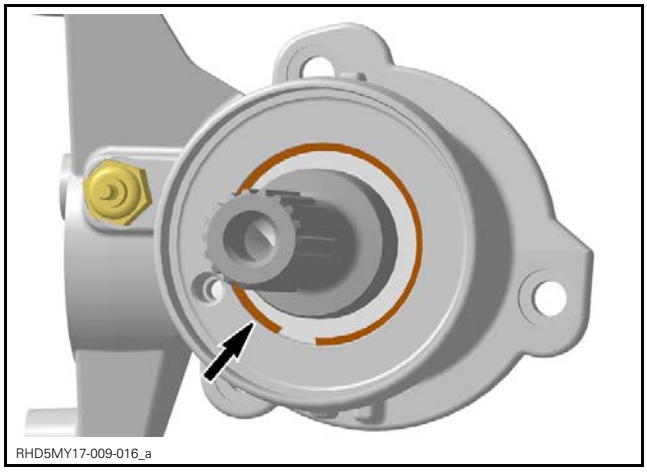

Remove coupling unit shaft.

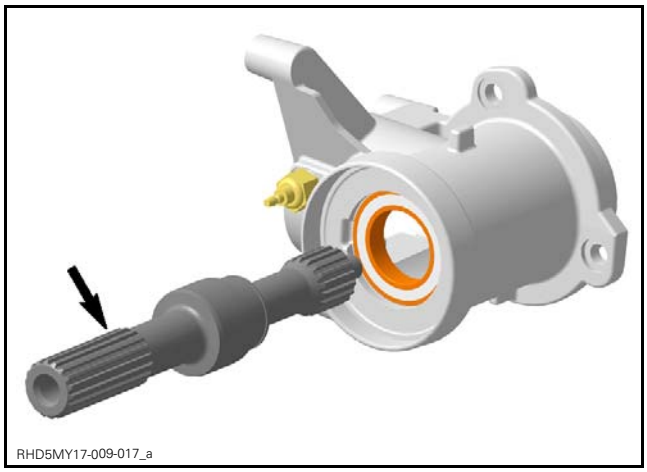

Remove the ball bearing.

NOTE: Remove the ball bearing only if it does not turn freely and smoothly.

REQUIRED TOOL
Blind hole bearing puller

Inspecting the 4x4 Coupling Unit

Check disconnect unit housing and actuator for cracks or other damages. Replace defective part(s) if necessary.

Check if the actuator O-ring and the coupling unit housing O-ring are brittle, hard or damaged.

Check splines of coupling sleeve for wear or other damages. Replace if splines are damaged.

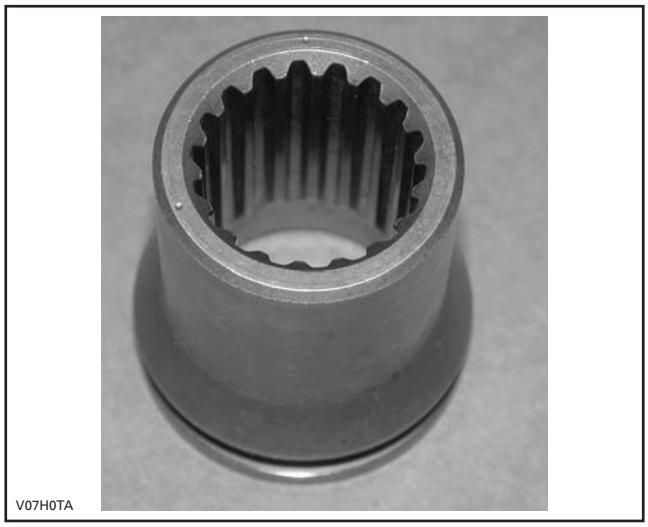

Measure the coupling sleeve groove. If the width of groove is out of specification replace the coupling sleeve.

COUPLING SLEEVE GROOVE WIDTH	
Service limit	5.00 mm (.197 in)

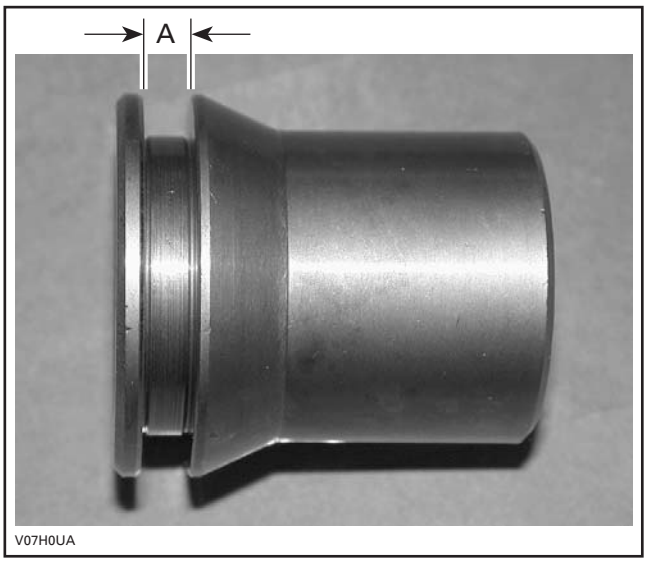

A. Groove width

Check sliding sleeve dog for bend and measure it.

SLIDING SLEEVE DOG THICKNESS	
Service limit	4.80 mm (.189 in)

Measure the sliding sleeve groove.

SLIDING SLEEVE GROOVE WIDTH	
Service limit	3.60 mm (.142 in)

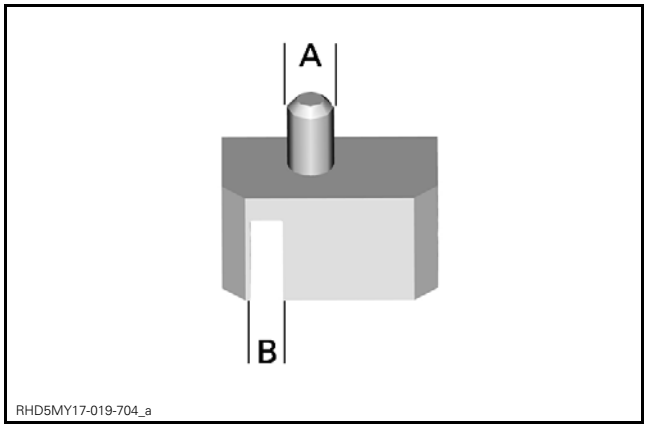

A. Sliding sleeve dog thickness
B. Sliding sleeve groove width

Check shifter fork for visible damage, wear or bent claws.

Measure the shifter fork claw thicknesses.

SHIFTER FORK CLAWS THICKNESS	
Service limit	2.93 mm (.115 in)

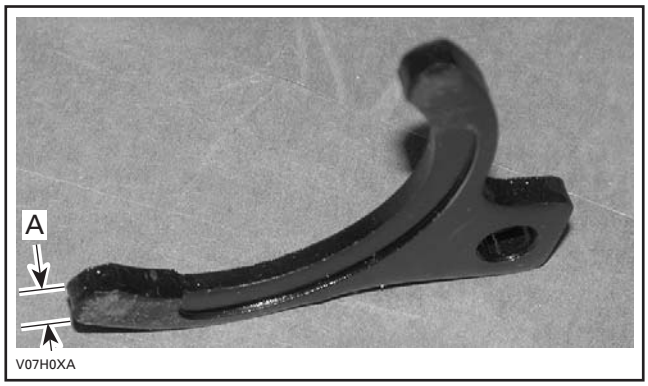

A. Shifter fork claw thickness

Check inner and outer shaft splines for wear or other damages. Replace shaft if necessary.

Measure the coupling unit shaft for wear limit.

COUPLING UNIT SHAFT	
Service limit	29.995 mm (1.181 in)

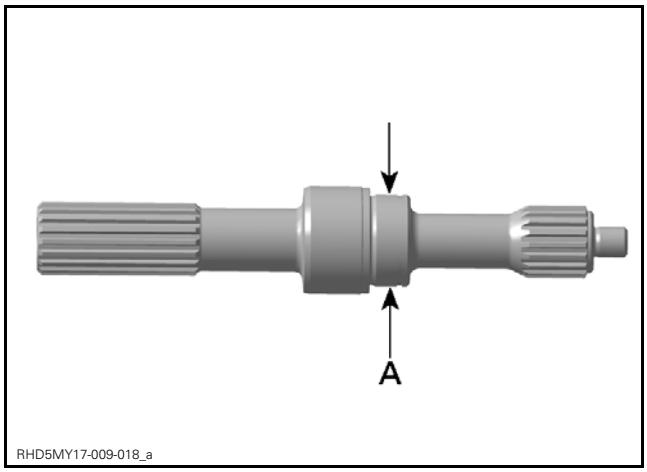

A. Shaft diameter in the area of bearing

Assembling the 4x4 Coupling Unit

The installation is the reverse of removal procedure. However, pay attention to the following:

Apply engine oil on moving parts.

Install the shifter fork.

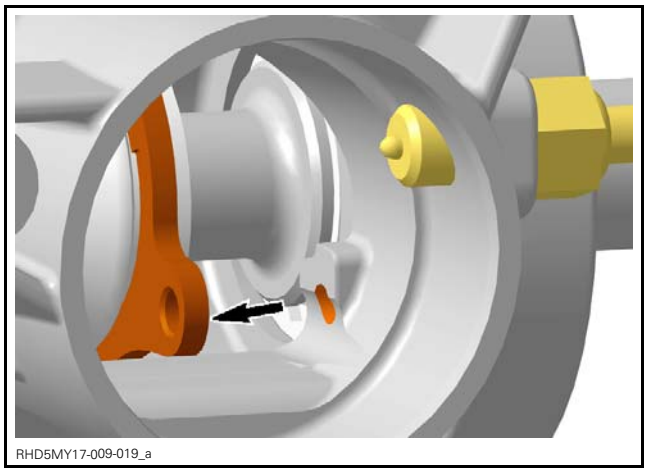

Install sliding sleeve.

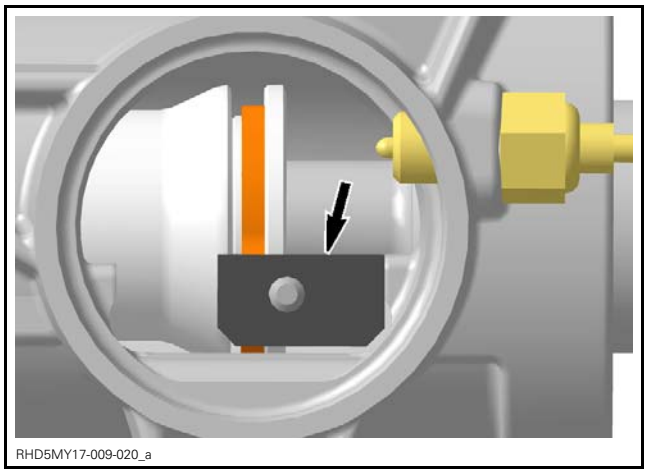

Insert pin and tighten Allen set screw to specification.

TIGHTENING TORQUE	
Allen set screw	7 N•m ± 1 N•m (62 lbf•**in** ± 9 lbf•**in**) + LOCTITE 243 (BLUE) (P/N 293 800 060)

Check if the shifter fork and the coupling sleeve are installed properly.

– When moving the sliding sleeve to 2WD position , the coupling sleeve is equal with the end of the shaft splines.

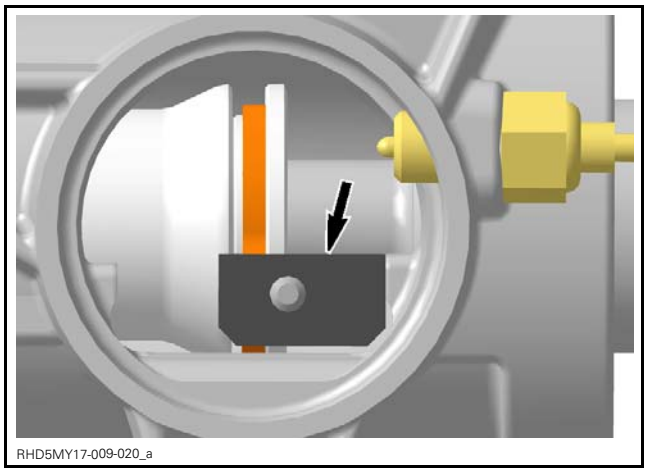

SLIDING SLEEVE AT 2WD POSITION

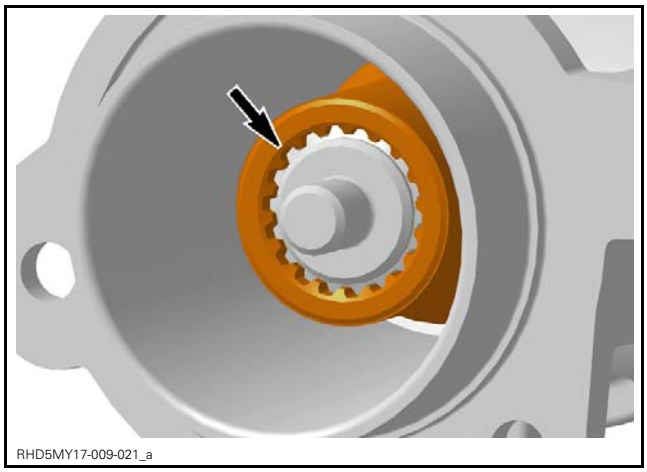

– When moving the sliding sleeve to 4WD position , the coupling sleeve is flush with the end of shaft.

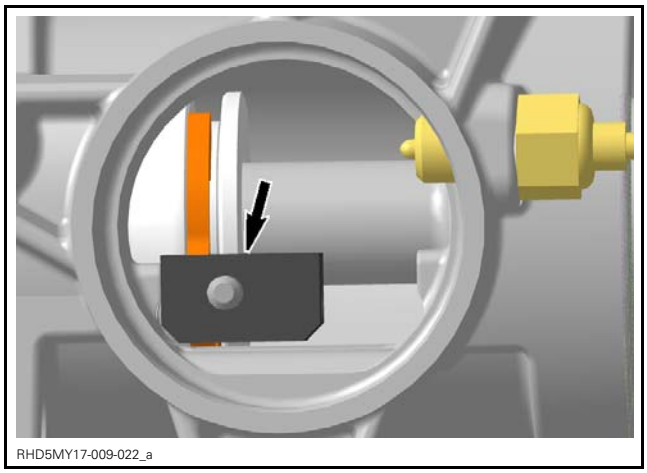

SLIDING SLEEVE AT 4WD POSITION

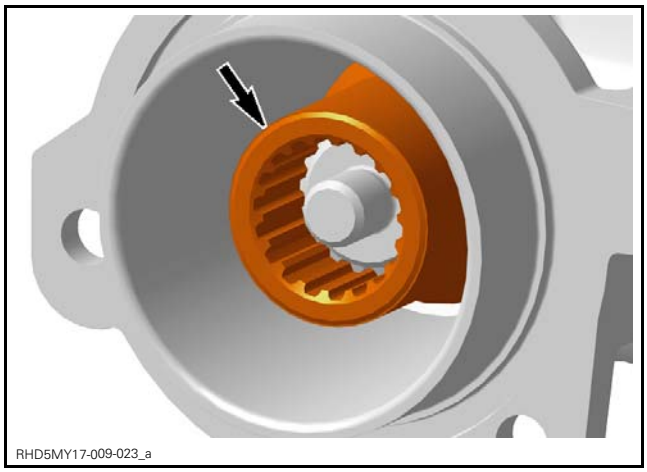

Install the actuator onto the 4x4 coupling unit. Refer to *INSTALLING THE 4WD ACTUATOR* in this subsection.

Installing the 4x4 Coupling Unit

The installation is the reverse of removal procedure. However, pay attention to the following:

Lubricate coupling unit housing O-ring.

SERVICE PRODUCT
Engine oil

Tighten coupling unit screws to specification.

TIGHTENING TORQUE	
Coupling unit screws	25 N•m ± 3.5 N•m (18 lbf•ft ± 3 lbf•ft) + LOCTITE 243 (BLUE) (P/N 293 800 060)

Install all other removed parts and check if the actuator is operational. See the procedure in *INSTALLING THE 4WD ACTUATOR* in this subsection.

GEARBOX AND 4X4 COUPLING UNIT (without rear lockable differential)

SERVICE TOOLS

Description	Part Number	Page
ECM ADAPTER TOOL	529 036 166	9
FLUKE 115 MULTIMETER	529 035 868	7, 10
HANDLE	420 877 650	13
M34 SOCKET	529 036 388	15, 20
OIL SEAL INSTALLER (COUNTERSHAFT)	529 036 391	12
OIL SEAL INSTALLER (DIFFERENTIAL OUTPUT)	529 036 456	13
OIL SEAL INSTALLER (GEARBOX)	529 035 758	13
SLEEVE INSTALLER	529 036 455	13, 18, 30
SPLINES SOCKET 1/2"	529 036 389	15, 20

SERVICE TOOLS – OTHER SUPPLIER

Description	Part Number	Page
BACK PROBE TEST WIRES	529 036 063	7–8

SERVICE PRODUCTS

Description	Part Number	Page
75W140 SYNTHETIC GEAR OIL (EUR)	779215	4
75W140 SYNTHETIC GEAR OIL	779160	4
COPASLIP	420 297 430	25
LOCTITE 243 (BLUE)	293 800 060	14, 18, 27–28, 30
LOCTITE 5910	293 800 081	10, 18, 20
LOCTITE 648 (GREEN)	413 711 400	19–20, 28
LOCTITE CHISEL (GASKET REMOVER)	413 708 500	18
PETAMO GREASE GHY 133N	420 899 271	12
SUPER LUBE GREASE	293 550 030	7, 11

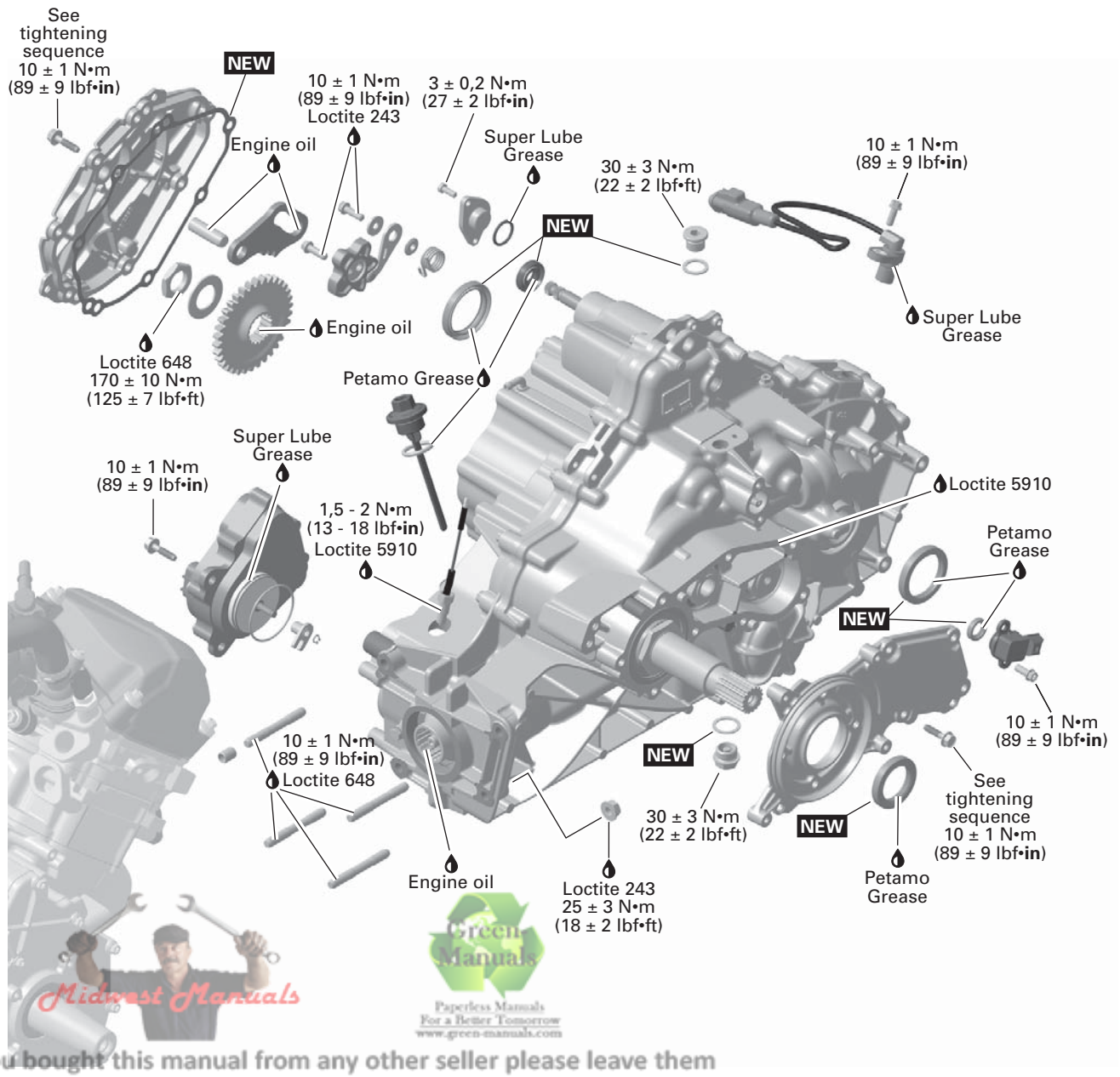

Midwest Manuals
Green Manuals
Paperless Manuals For a Better Tomorrow www.green-manuals.com
If you bought this manual from any other seller please leave them NEGATIVE feedback and notify me at bestshopmanuals@gmail.com

NEW = Component must be replaced when removed.

tmr2016-121-098_a

GEARBOX COMPONENTS AND 4X4 COUPLING MECHANISM

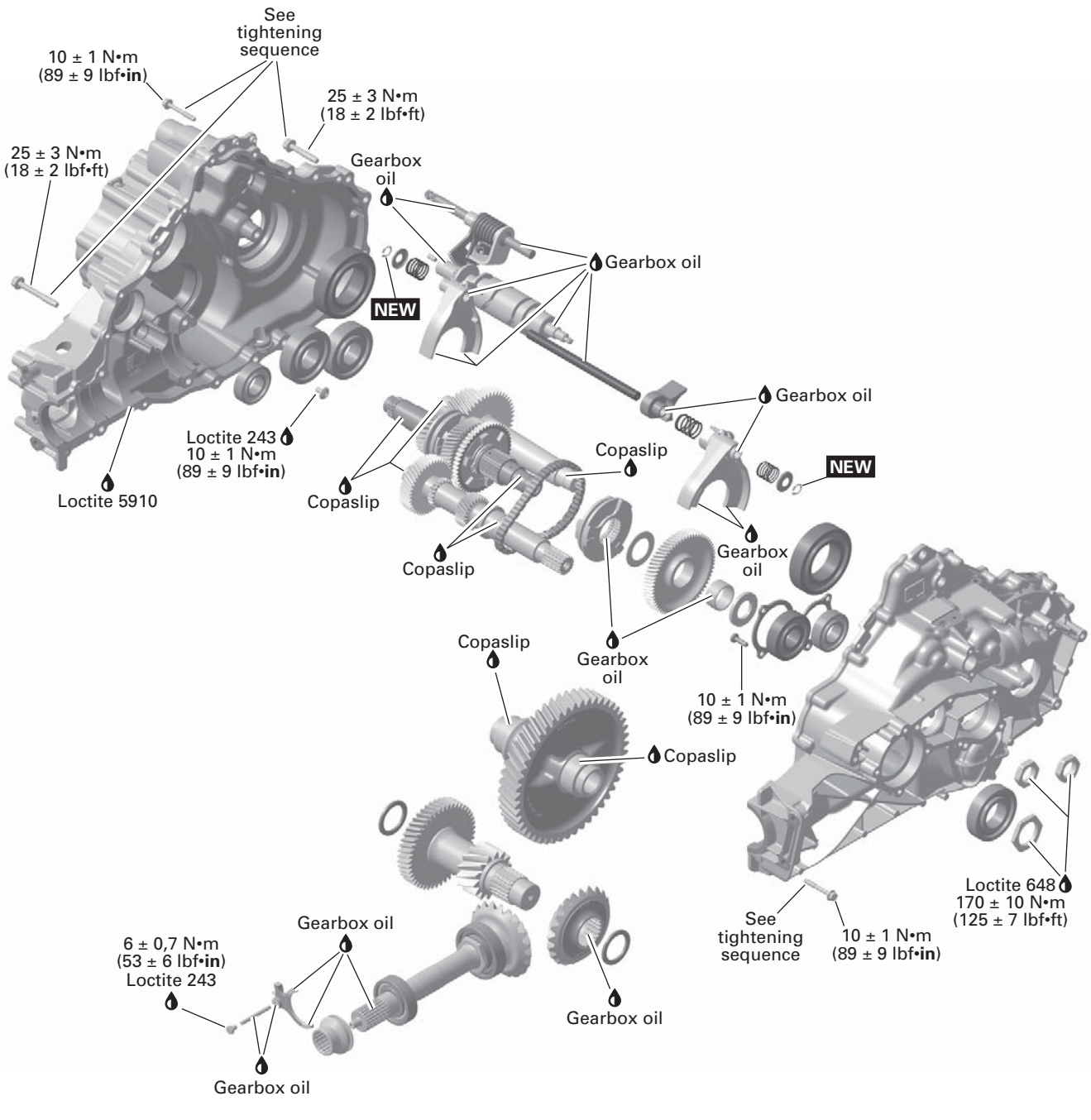

NEW = Component must be replaced when removed.

RotaxHD2017-016-001_a

GENERAL

GEARBOX OVERVIEW

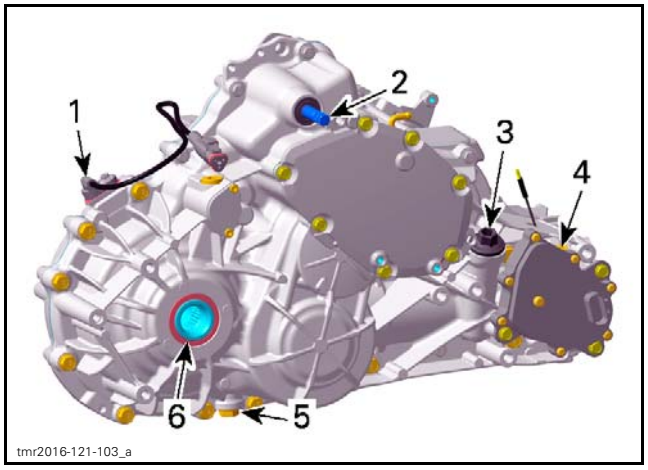

1. *Vehicle speed sensor (VSS)*
2. *Shift shaft*
3. *Gearbox oil dipstick*
4. *4WD actuator*
5. *Magnetic drain plug*
6. *Drive gear*

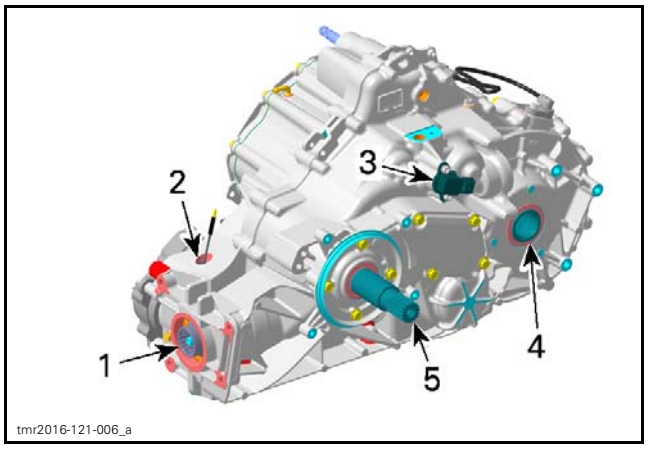

1. *4WD coupling sleeve*
2. *4WD indicator switch*
3. *Gearbox position senesor (GBPS)*
4. *Drive gear*
5. *Countershaft*

MAINTENANCE

RECOMMENDED GEARBOX OIL

XPS™ RECOMMENDED GEARBOX OIL	
Scandinavia	75W140 SYNTHETIC GEAR OIL (EUR) (P/N 779215)
Other countries	75W140 SYNTHETIC GEAR OIL (P/N 779160)
If THE RECOMMENDED XPS GEARBOX OIL IS NOT AVAILABLE	
Use a 75W140 gearbox oil that meets the API GL-5 specification.	

VERIFYING THE GEARBOX OIL LEVEL

Tilt the cargo box.

Unscrew and remove the gearbox oil dipstick wipe clean.

NOTICE **Pay attention not to loose O-ring on oil dipstick.**

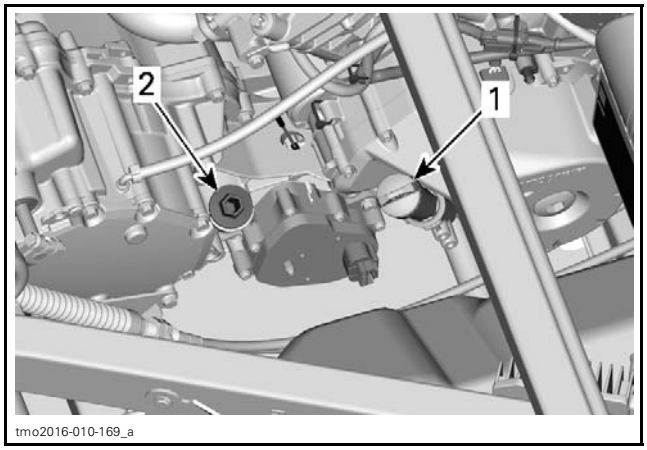

1. *Engine oil dipstick*
2. *Gearbox oil dipstick*

Reinstall dipstick, screw in it completely.

Remove dipstick again and check oil level. It should be near or equal to the upper mark.

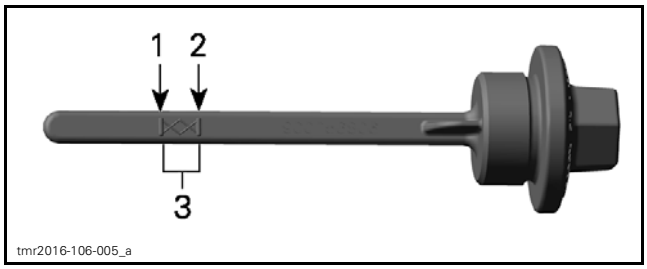

1. *MIN.*
2. *MAX.*
3. *Operating range*

To add oil, place a funnel into the dipstick hole.

Add a small amount of recommended oil and recheck oil level.

Repeat the above procedures until oil level reaches the dipstick's upper mark.

NOTICE **Operating the gearbox with an improper oil level may severely damage gearbox.**

NOTE: Do not overfill. Wipe off any spillage.

Properly tighten oil dipstick.

REPLACING THE GEARBOX OIL

Draining Procedure

Prior to change the oil, ensure vehicle is on a level surface.

Oil change should be done with a warm engine.

⚠ WARNING

The gearbox oil can be very hot.

Place a drain pan under the gearbox drain plug area.

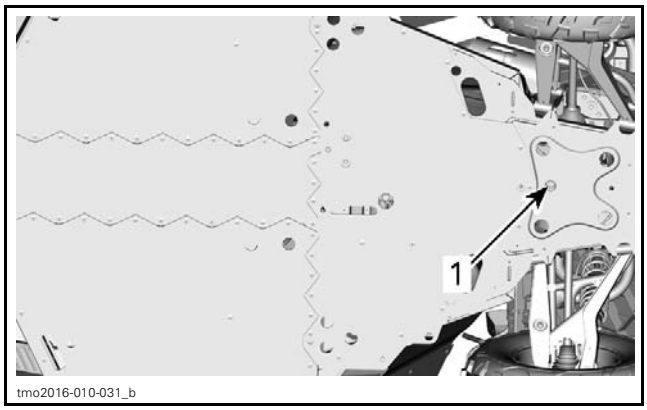

1. *Oil drain plug*

Clean drain plug area.

Remove magnetic drain plug and discard sealing ring.

Remove oil dipstick.

NOTICE **Pay attention not to loose O-ring on oil dipstick.**

Wait a while to allow oil flow out of gearbox.

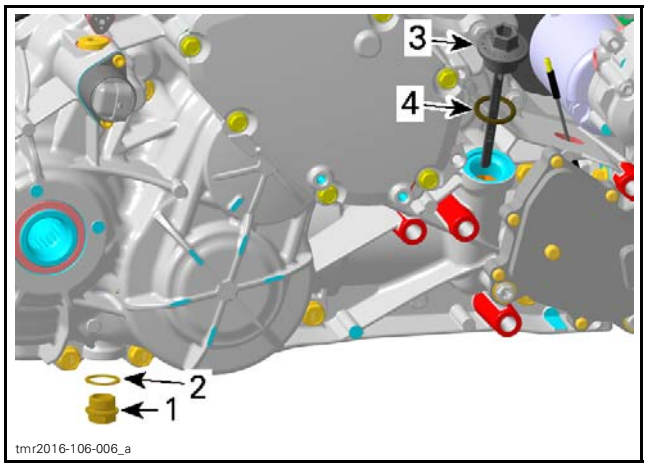

1. *Magnetic drain plug*
2. *Sealing ring*
3. *Oil dipstick*
4. *O-ring*

Dispose gearbox oil as per your local environmental regulations.

Inspection

Oil condition gives information about the teeth condition inside the gearbox. See *TROUBLESHOOTING* in this subsection.

Clean the magnetic drain plug from metal shavings and dirt. Presence of debris gives an indication of failure inside the gearbox. Check gearbox to correct the problem.

Replace O-ring of oil filler screw if brittle, hard or otherwise damaged.

Filling Procedure

Ensure vehicle on a level surface.

Make sure that magnetic drain plug is reinstalled and tight.

Always install a **NEW** sealing ring.

TIGHTENING TORQUE	
Magnetic drain plug	30 N•m ± 3 N•m (22 lbf•ft ± 2 lbf•ft)

Fill the gearbox through the oil dipstick hole.

CAPACITY
1.25 L (42.3 U.S. oz)

NOTICE **Do not use another type of oil when servicing.**

After filling check the oil level, refer to *VERIFYING THE GEARBOX OIL LEVEL* in this subsection.

NOTE: Wait a while to allow oil to flow down to the gearbox housing.

Install the oil dipstick with its O-ring.

Tighten oil dipstick to specification.

TIGHTENING TORQUE	
Oil dipstick	5 N•m ± 0.6 N•m (44 lbf•**in** ± 5 lbf•**in**)

TROUBLESHOOTING

UNUSUAL GEARBOX NOISE AND/OR VIBRATIONS

1. Low oil level in gearbox.
   - *Oil leakage from gearbox. Replace damaged gasket(s) and/or oil seal(s).*
2. Defective bearings.
   - *Bearing(s) do(es) not turn smoothly. Replace bearing(s).*
3. Damaged or worn gears.
   - *Inspect gears for damages or missing teeth. Replace respective gears.*

GEAR INDICATION FAILS

1. Defective gearbox position sensor (GBPS).
   - *Perform a gearbox position sensor test.*
   - *Damaged wires. Repair as required.*

GEAR(S) IS (ARE) HARD TO SHIFT

1. Incorrect shifter cable adjustment.
   - *Adjust shifter cable (refer to SHIFTER CABLE in SHIFTER subsection.*

4 WHEEL DRIVE INDICATION FAILS

1. 4WD indicator switch failure.
   - *Test 4WD indicator switch. Replace as required.*
   - *Bad contact. Check for corrosion or loose connector.*
   - *Damaged wires. Repair as required.*

4 WHEEL DRIVE DOES NOT ENGAGE OR DISENGAGE

1. Defective 4WD switch.
   - *Check 4WD switch operation.*
2. Defective 4WD actuator.
   - *Test 4WD actuator.*
3. Damaged or worn shifting fork or sleeve.
   - *Remove 4WD actuator and inspect shifting fork and sleeve.*

PROCEDURES

VEHICLE SPEED SENSOR (VSS)

VSS Location

The vehicle speed sensor is located on the rear top side of the left gearbox housing.

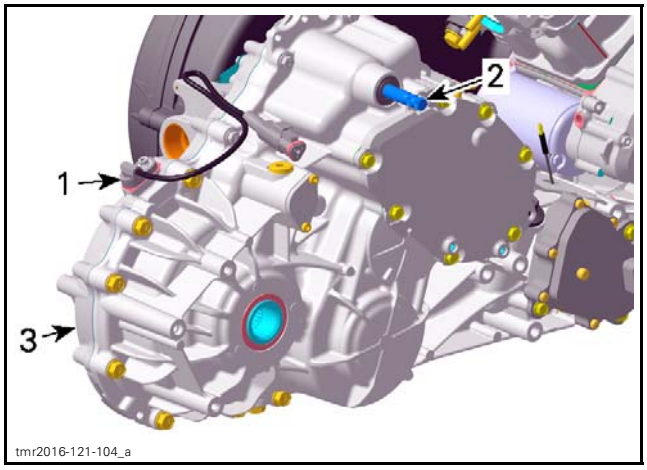

1. *VSS (Vehicle Speed Sensor)*
2. *Shift shaft*
3. *Left housing of gearbox*

VSS Wire Identification

FUNCTION	PIN	COLOR SENSOR CONNECTOR
12-volt input from fuse F5	A	RED
Speed signal (to ECM-A E1)	B	WHITE
Ground (to ECM-A D4)	C	BLACK

VSS Circuit Protection

CONDITION	CIRCUIT PROTECTION
Supplied with main relay activated	Fuse 5 of fuse block 2 (from main relay R2)

Testing the VSS Input Voltage

1. Turn ignition switch ON.
2. Back-probe the VSS connector and measure voltage.

REQUIRED TOOLS	
BACK PROBE TEST WIRES (P/N 529 036 063)	
FLUKE 115 MULTIMETER (P/N 529 035 868)	

VSS INPUT VOLTAGE TEST		
TEST PROBES		RESULT (KEY ON)
PIN A (RED wire)	PIN C (BLACK wire)	Battery voltage

If voltage is not as specified, test positive and ground separately.

Testing the VSS Signal

1. Lift rear of vehicle so that rear wheels are off the ground.
2. Set transmission to 2WD and to Neutral.
3. Turn ignition switch ON.
4. Back-probe the VSS connector and measure voltage while slowly rotating rear wheels by hand.

REQUIRED TOOLS	
BACK PROBE TEST WIRES (P/N 529 036 063)	
FLUKE 115 MULTIMETER (P/N 529 035 868)	

VSS SIGNAL TEST		
TEST PROBES		RESULT (WHILE ROTATING WHEELS)
PIN B (WHITE wire)	PIN C (BLACK wire)	Alternate reading between battery voltage and 0 Vdc

NOTE: Since we measure pulsating voltage, the numeric display will continuously change. The analog display may be easier to follow.

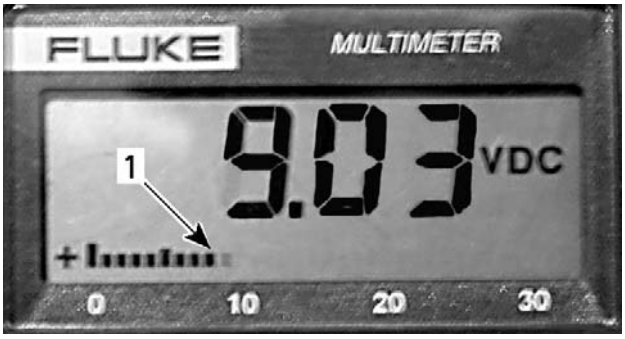

1. Analog display

Removing the VSS

Disconnect VSS connector.

Remove screw retaining the VSS.

Using a long screwdriver, pull out the VSS.

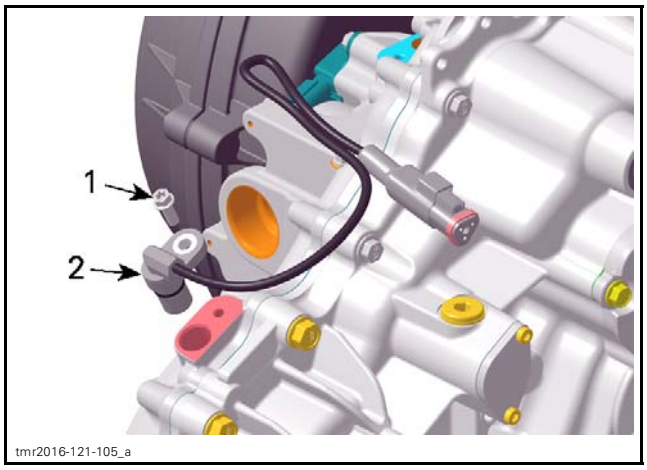

SEVERAL PARTS REMOVED FOR CLARITY
1. Screw
2. VSS

Cleaning the Vehicle Speed Sensor (VSS)

Remove all metal particles and oil from the VSS magnet.

NOTE: A dirty VSS will cause erratic speedometer readings.

Installing the VSS

For installation, reverse the removal procedure. Pay attention to the following.

Lubricate VSS O-ring.

RECOMMENDED SERVICE PRODUCT
SUPER LUBE GREASE (P/N 293 550 030)

Tighten retaining screw to specification.

TIGHTENING TORQUE	
VSS screw retaining	10 N•m ± 1 N•m (89 lbf•**in** ± 9 lbf•**in**)

GEARBOX POSITION SENSOR (GBPS)

GBPS Reset

When replacing the gearbox position sensor (GBPS), it is required to reset (re-zero) its values for proper operation.

A reset must be carried out each time any of the following parts has been replaced:

- Gearbox assembly
- Shift drum
- GBPS
- ECM.

1. Connect the vehicle to the BRP diagnostic software (BUDS2).
2. In BUDS2, select the following:
   - **Settings** page
   - **ECM** tab
   - **Reset Gear Position Sensor**.
3. Follow instructions display in the screen.

If an error occurred or the GBPS is not within the allowed range while resetting, the ECM will generate a fault code and will not accept the setting.

4. If a fault message is displayed, follow the instructions in the message(s).
5. Check for fault codes.

If a fault code is generated:

- Carry out the service action.
- Reset the fault code.
- Repeat the reset procedure.

6. Close and disconnect BUDS2.

NOTE: Do not turn ignition key OFF.

7. Verify gears engagement.
   - 7.1 With the vehicle on ground and in NEUTRAL position, start engine.
   - 7.2 During 4-5 seconds, rev engine to 2500 ± 200 RPM.
   - 7.3 Let engine returns to idle.
   - 7.4 Select an other position (P, R, H or L). Repeat substeps 8.2 and 8.3 until all position are verified.

   NOTE: The vehicle must be in movement to complete the procedure on R, H and L position.

Testing the GBPS Input Voltage

NOTE: Prior to conduct testing, check fault codes in BUDS2.

Set shift lever in NEUTRAL position.

Back-probe the GBPS connector.

REQUIRED TOOL	
BACK PROBE TEST WIRES (P/N 529 036 063)	

Test as follow:

MULTIMETER PROBE POSITIONS	VOLTAGE
PIN 2 and PIN 3 of the GBPS connector 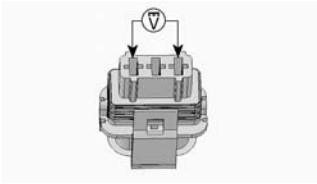	5 volts

If voltage is adequate, check GBPS signal wire.

If there is no voltage, check each GBPS input as follows.

MULTIMETER PROBE POSITIONS	VOLTAGE
GBPS connector (pin 3) and battery ground 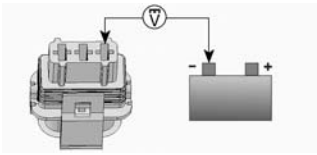	5 volts
GBPS connector (pin 2) and battery + terminal 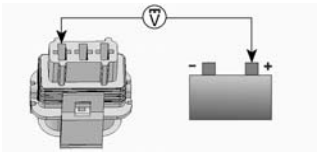	Battery voltage

If there is no voltage, check wires and connector pins. Replace or repair defective parts and reset fault codes.

Testing the GBPS Communication Link Continuity

Unplug connector "A" from ECM and connect it to the ECM adapter tool.

REQUIRED TOOL	
#ECM ADAPTER TOOL (P/N 529 036 166)	

MULTIMETER PROBE POSITIONS	RESISTANCE @ 20°C (68°F)
GBPS connector (pin 1) and ECM adapter tool (pin F4) 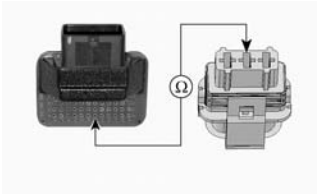	Below 1 Ω

If resistance is out of specification, check wires and connectors. Repair and reset fault codes.

If resistance is good and the other tests succeeded, replace the GBPS and reset fault codes.

NOTE: The GBPS must be reset.

Removing the GBPS

Set shift lever in NEUTRAL position.

Unplug GBPS connector.

Remove screws and withdraw GBPS.

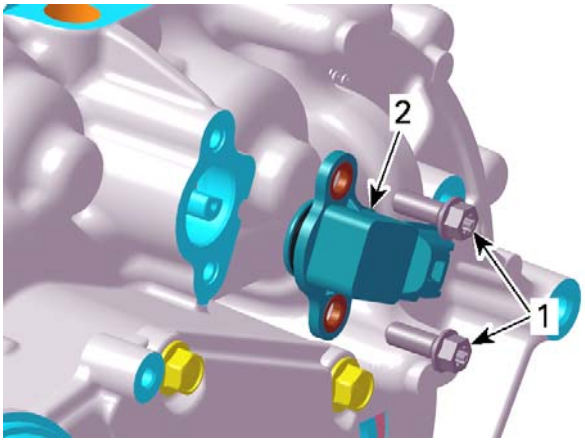

tmr2016-121-009_a

1. *Screws*
2. *Gearbox Position Sensor (GBPS)*

Installing the GBPS

The installation is the reverse of the removal procedure. However, pay attention to the following details.

Shift lever must be in the NEUTRAL position.

Align GBPS with the flat on the shift drum shaft.

NOTE: Do not force to install GBPS if shaft flat is not properly aligned. If alignment is incorrect, check shift rod adjustment.

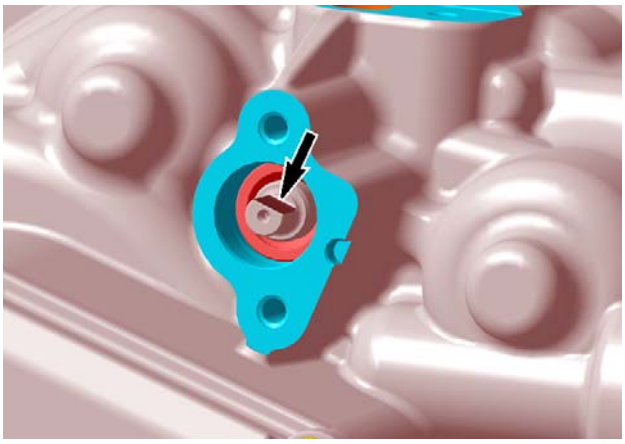

tmr2016-121-010_a

Reset the GBPS. Refer to *GBPS RESET* in this subsection.

4WD INDICATOR SWITCH

Testing the 4WD Indicator Switch

Disconnect 4WD indicator switch connector.

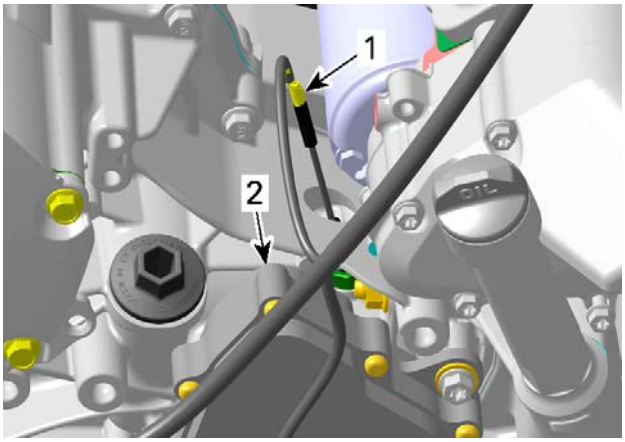

tmr2016-121-011_a

1. *4WD indicator switch*
2. *4WD actuator*

Measure switch resistance as follows.

SWITCH POSITION	SWITCH WIRE		RESISTANCE
2WD	BLACK/ BEIGE	Engine ground	Infinite (OL)

If the resistance is out of specification, replace the 4WD indicator switch.

4WD Indicator Switch Access

Remove *4WD ACTUATOR*, refer to procedure in this subsection.

Removing the 4WD Indicator Switch

Disconnect 4WD indicator switch connector and unscrew 4WD indicator switch.

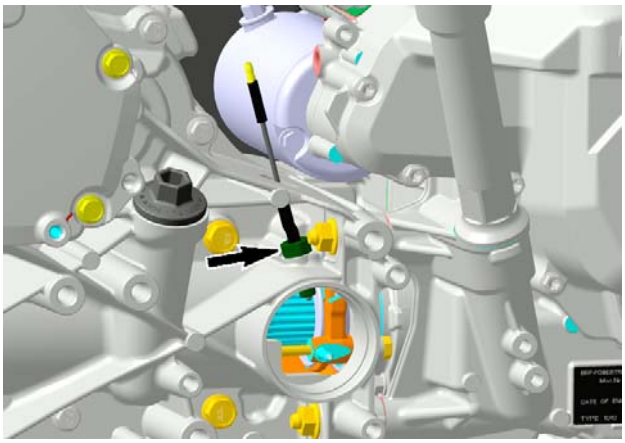

tmr2016-121-012_a

Installing the 4WD Indicator Switch

The installation is the reverse of the removal procedure. However, pay attention to the following details.

Take care do not damage indicator switch threads during installation.

Apply carefully some sealant on threads of indicator switch.

NOTICE **Do not apply Loctite 5910 on switch plunger, as it will lead to switch malfunction.**

TIGHTENING TORQUE	
4WD indicator switch	1.5 N•m to 2 N•m (13 lbf•**in** to 18 lbf•**in**) + LOCTITE 5910 (P/N 293 800 081)

4WD ACTUATOR

Testing the 4WD Actuator

Check if the 2WD/4WD selector works properly.

Unplug 4WD actuator connector.

Turn ignition key ON.

Measure voltage as follows.

REQUIRED TOOL	
FLUKE 115 MULTIMETER (P/N 529 035 868)	

SWITCH POSITION	SWITCH WIRE		VOLTAGE
2WD	WHITE	WHITE/BLUE	Battery voltage
4WD			

If the selector is out of specifications, check wires, connectors and replace the selector if necessary.

If the selector is good, check the vehicle harness.

If the vehicle harness is good, replace the 4WD actuator.

Removing the 4WD Actuator

NOTE: Before beginning any servicing on the 4WD actuator, make sure the vehicle is in 4WD position. No need to remove engine from vehicle.

Place a drain pan under 4WD actuator.

Remove:

– 4WD actuator screws
– 4WD actuator.

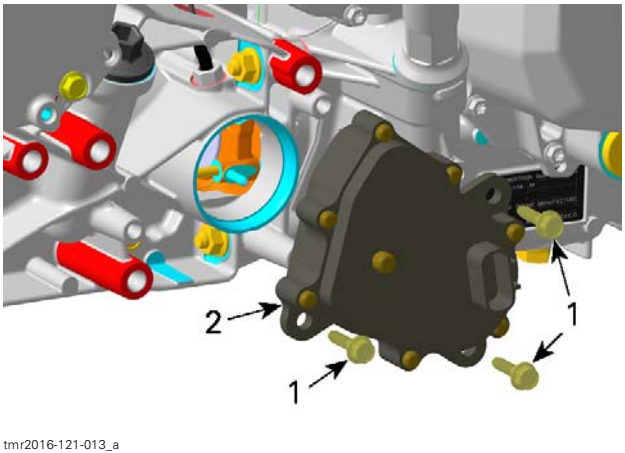

tmr2016-121-013_a

1. Screws
2. 4WD actuator

Installing the 4WD Actuator

Lubricate 4WD actuator O-ring.

RECOMMENDED SERVICE PRODUCT
SUPER LUBE GREASE (P/N 293 550 030)

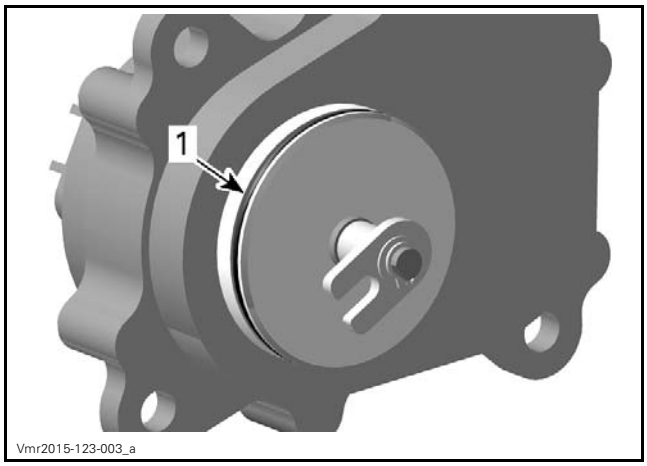

1. 4WD actuator O-ring

Ensure coupling fork is in 4WD position (toward the front of vehicle).

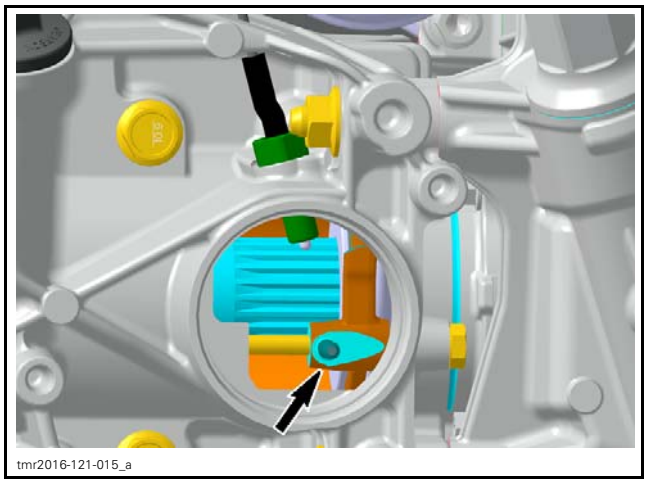

1. Coupling fork in 4WD position

Align the 4WD actuator fork with the pin on coupling fork then push the 4WD actuator in the housing. See the following illustration to position the 4WD actuator correctly.

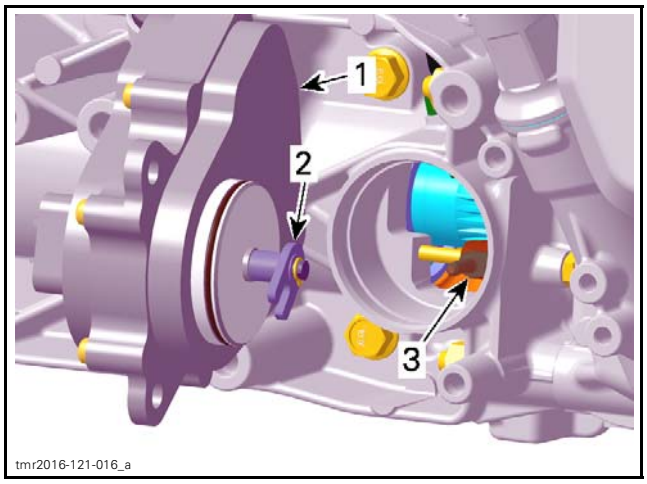

1. 4WD actuator
2. 4WD actuator fork
3. Coupling fork

Rotate the 4WD actuator counterclockwise until it orients itself to mounting position.

NOTICE **Do not cut or break the 4WD actuator O-ring.**

Install all 4WD actuator screws and tighten them.

TIGHTENING TORQUE	
4WD actuator screws	10 N•m ± 1 N•m (89 lbf•**in** ± 9 lbf•**in**)

Connect 4WD actuator.

Set gearbox to PARK position.

Lift the front of vehicle.

Turn front wheels. The front propeller shaft should not turn.

If the front propeller shaft turns, the 4WD actuator is not installed correctly. Remove 4WD actuator and reinstall it.

Place ignition switch to ON position and select the 2WD position.

Turn front wheel again. The front propeller shaft should turn easily.

If the front propeller shaft does not turn, the 4WD actuator is not installed correctly. Remove 4WD actuator and reinstall it.

Refill missing gearbox oil. Refer to *GEARBOX OIL REPLACEMENT* in this subsection.

Install all other removed parts.

GEARBOX OIL SEALS

Replacing the Gearbox Oil Seal

Replace oil seals if they are brittle, hard or damaged.

A small flat screwdriver can be used to remove most of these oil seals.

NOTICE **Avoid scoring parts during oil seal removal.**

When replacing an oil seal, take this opportunity to inspect the following:

- Check bearings behind each oil seal for contamination and/or metal shavings.
- Check oil seal running surfaces for scratches.

Oil Seal Lubrication

Lubricate sealing lips all around.

Fill up the room between sealing lips halfway around the perimeter.

RECOMMENDED SERVICE PRODUCT
PETAMO GREASE GHY 133N (P/N 420 899 271)

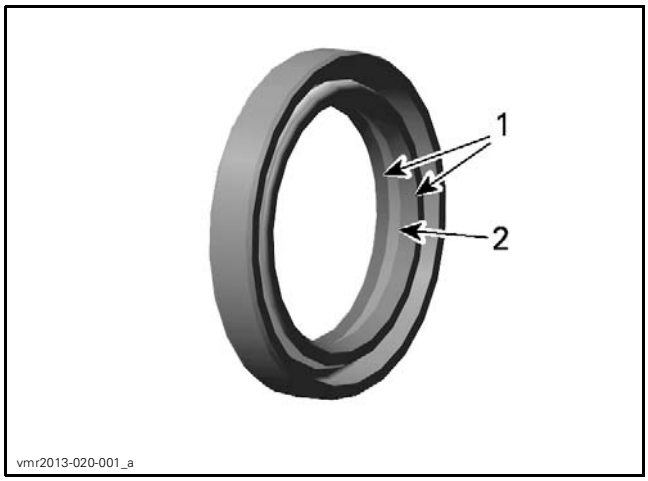

1. *Sealing lips*
2. *Room between sealing lips*

Countershaft Oil Seal

To replace the countershaft oil seal, remove:

- Drive and driven pulleys
- CVT air guide.

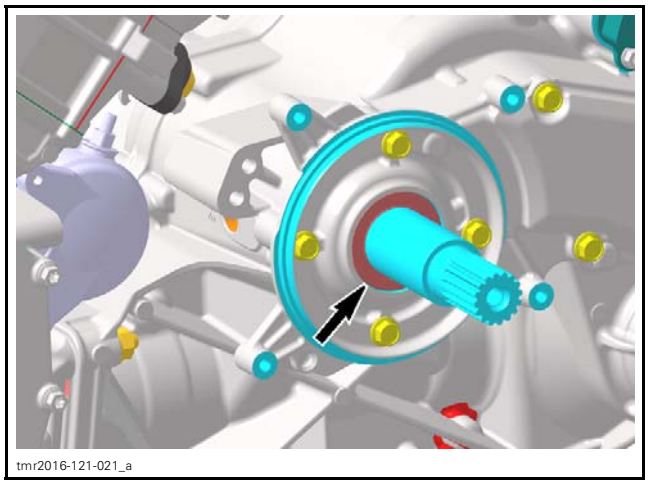

Install countershaft oil seal.

REQUIRED TOOL	
OIL SEAL INSTALLER (COUNTERSHAFT) (P/N 529 036 391)	

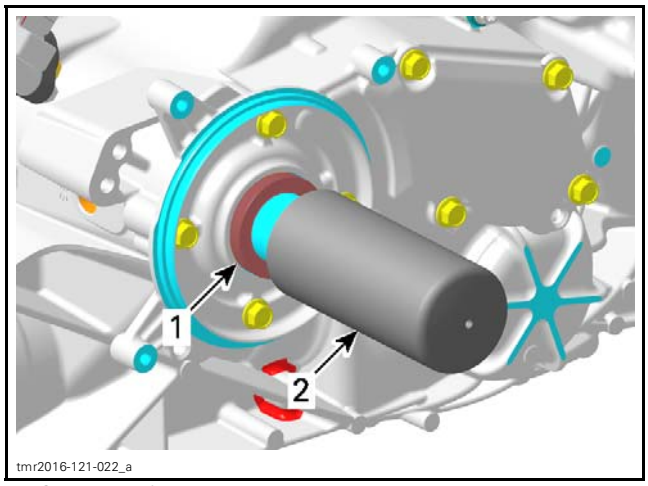

1. *Countershaft oil seal*
2. *Oil seal installer*

Shift Shaft Oil Seal

Remove the shift plate. Refer to *SHIFTER* subsection.

The shift shaft oil seal can be removed without removing the gearbox from the vehicle.

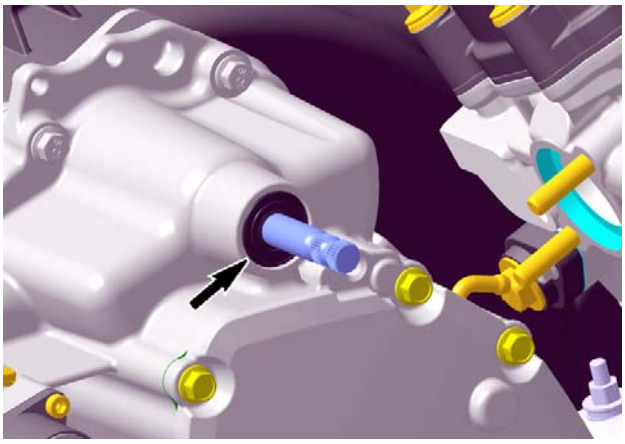
tmr2016-121-023_a

Use a suitable tube with the proper diameter to install the oil seal.

If gearbox housing is apart, use following tools for shift shaft oil seal installation.

REQUIRED TOOLS	
OIL SEAL INSTALLER (GEARBOX) (P/N 529 035 758)	
HANDLE (P/N 420 877 650)	

NOTICE **Oil seal must be installed with sealing lip toward gearbox.**

Shift Drum Shaft Oil Seal

To replace the shift drum shaft oil seal, remove the *GBPS (GEARBOX POSITION SENSOR)*. See procedure in this subsection.

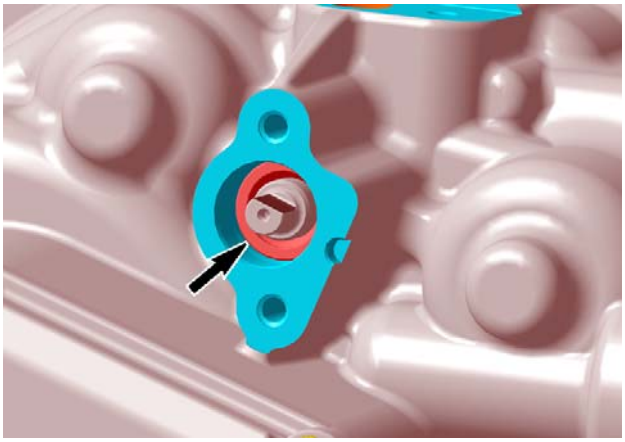
tmr2016-121-010_b

Use a suitable tube with the proper diameter to install the oil seal.

NOTICE **Oil seal must be installed with sealing lip toward gearbox.**

Drive Geart Oil Seals

Remove the appropriate drive shaft. Refer to *REAR DRIVE* subsection.

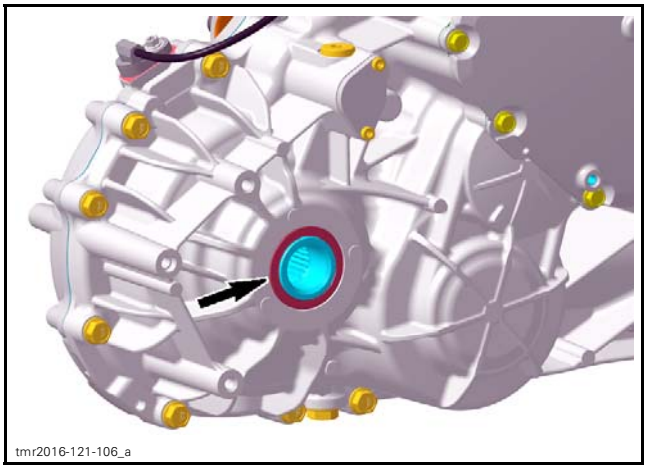
tmr2016-121-106_a

RIGHT SIDE

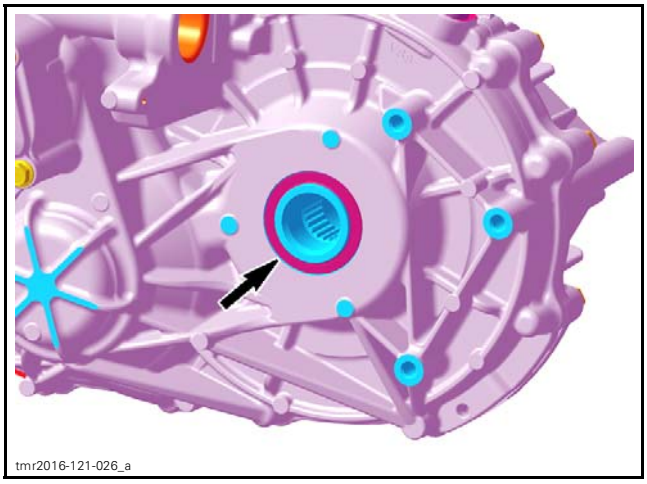
tmr2016-121-026_a

LEFT SIDE

Punch a sharp screwdriver through oil seal for removal.

Place oil seal on output shaft and install it using the following tools.

REQUIRED TOOLS	
SLEEVE INSTALLER (P/N 529 036 455)	
OIL SEAL INSTALLER (DIFFERENTIAL OUTPUT) (P/N 529 036 456)	

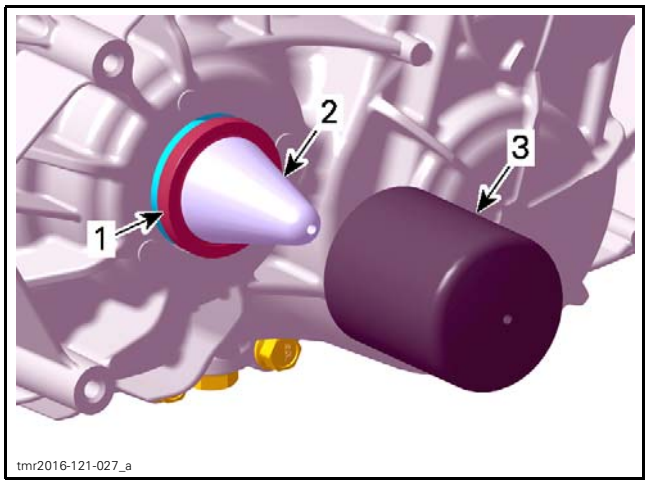

1. *Output shaft oil seal*
2. *Sleeve installer*
3. *Oil seal installer*

GEARBOX ASSEMBLY

Removing the Gearbox Assembly

Remove engine from vehicle. Refer to *ENGINE REMOVAL AND INSTALLATION* for the procedure.

Refer to *CONTINUOUSLY VARIABLE TRANSMISSION (CVT)* subsection to remove following parts:

– CVT cover
– Drive and driven pulleys
– CVT air guide.

Drain gearbox oil. Refer to *REPLACING THE GEARBOX OIL* in this subsection.

Remove *4WD ACTUATOR*, see procedure in this subsection.

Unscrew the four (4) gearbox retaining nuts.

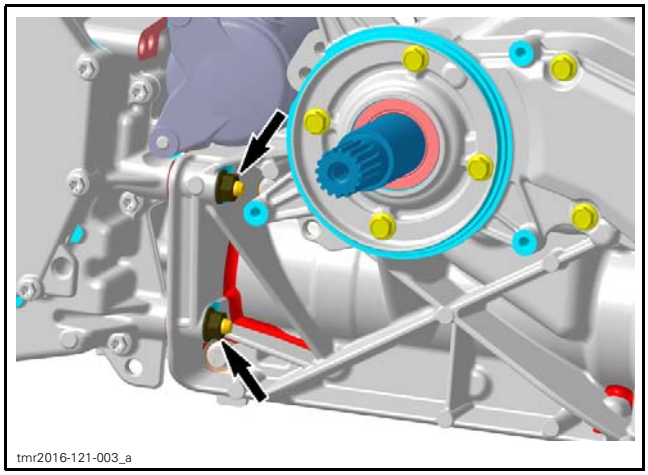

LH SIDE OF ENGINE

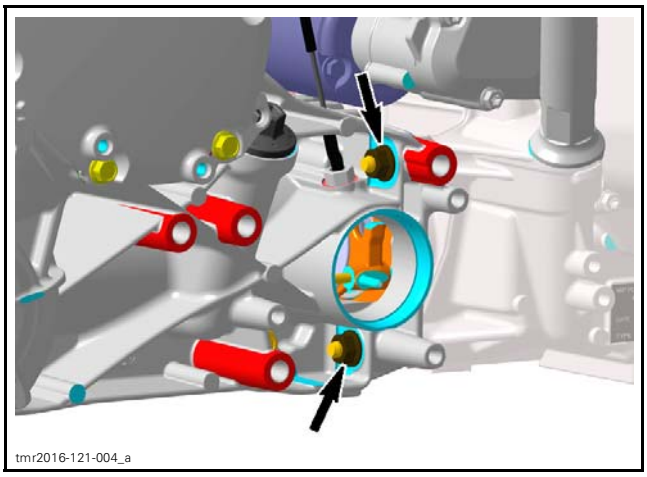

RH SIDE OF ENGINE

Pull gearbox to separate it from engine.

Installing the Gearbox

The installation is the reverse of the removal procedure. However, pay attention to following.

Before gearbox installation check O-ring on bearing cover if brittle, hard or damaged. Replace if necessary.

Lubricate O-ring on rear bearing cover.

RECOMMENDED SERVICE PRODUCT
Engine oil

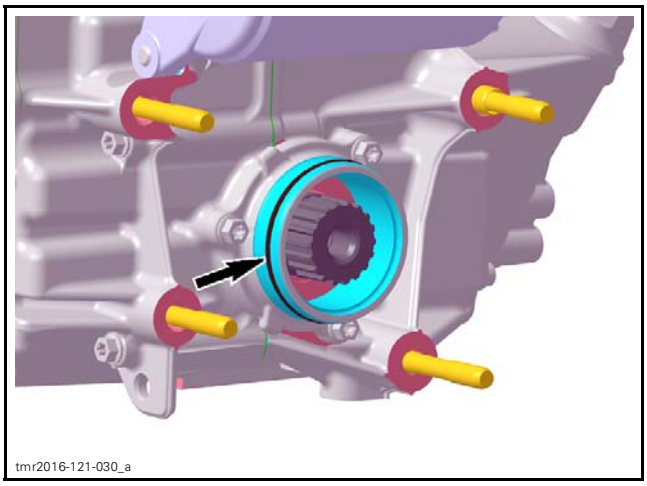

Tighten gearbox retaining nuts to specification.

TIGHTENING TORQUE	
Gearbox retaining nuts	25 N•m ± 3 N•m (18 lbf•ft ± 2 lbf•ft) + LOCTITE 243 (BLUE) (P/N 293 800 060)

After installation refill gearbox oil, refer to *REPLACING THE GEARBOX OIL* in this subsection.

GEARBOX HOUSING

Disassembling the Gearbox Housing

See procedures in this subsection to remove:

– *4WD ACTUATOR*

– *GBPS (GEARBOX POSITION SENSOR).*

Set gearbox to PARK position.

Remove bearing cover.

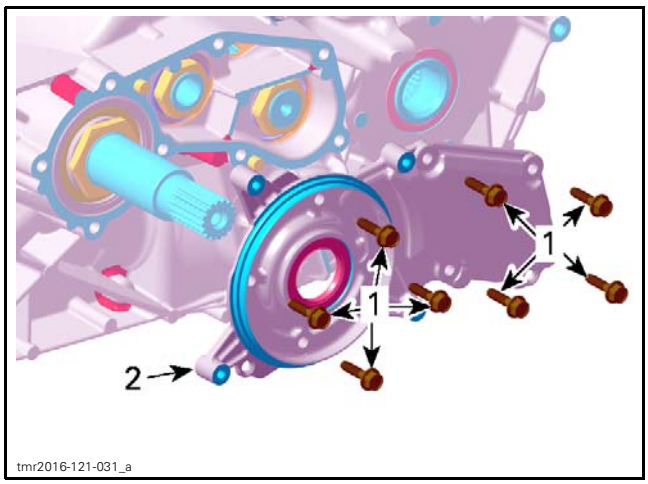

1. *Retaining screws*
2. *Bearing cover*

Remove countershaft nut.

NOTE: Heat up nut with a heat gun to break threadlocker.

CAUTION Nut can loosen abruptly.

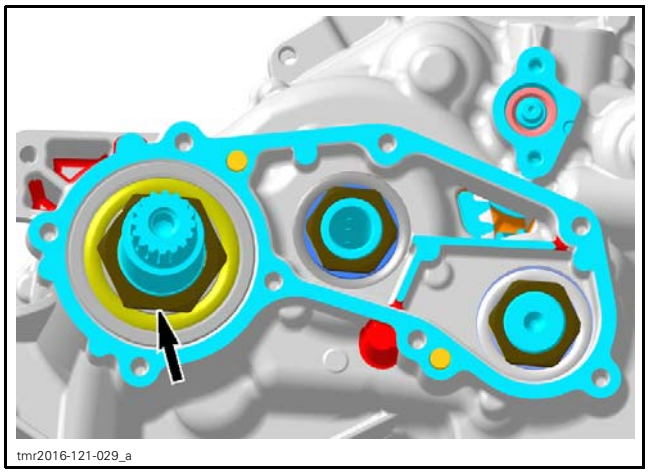

REQUIRED TOOLS	
M34 SOCKET (P/N 529 036 388)	
SPLINES SOCKET 1/2" (P/N 529 036 389)	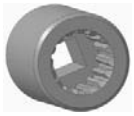

NOTICE Turn spline socket clockwise to loosen the nut.

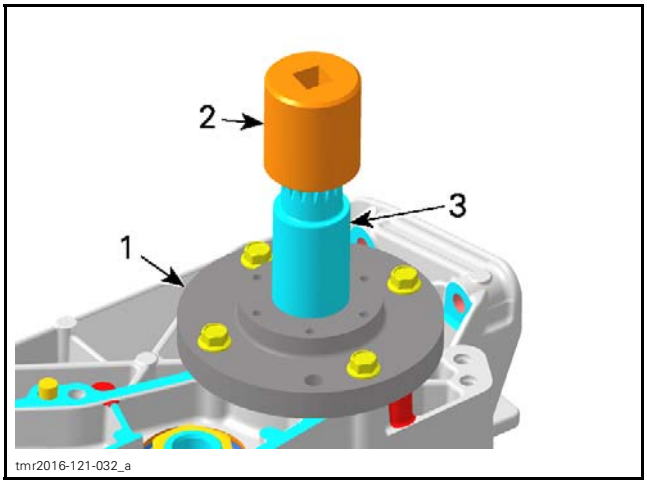

1. *M34 socket*
2. *Spline socket*
3. *Countershaft*

Remove nuts of main shaft and intermediate shaft.

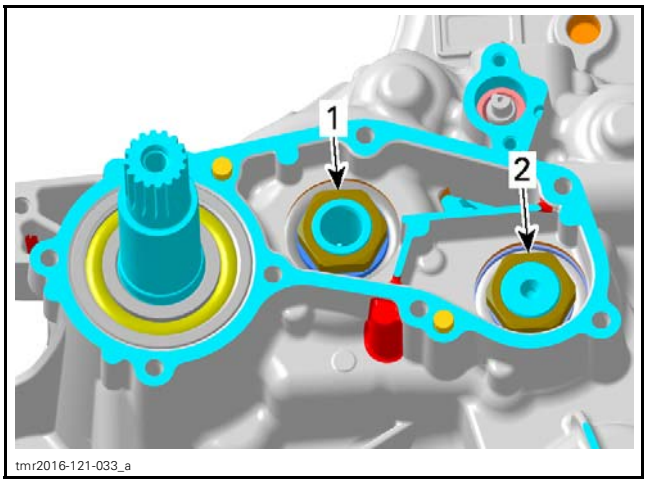

1. *Main shaft nut*
2. *Intermediate shaft nut*

Refer to *GEARBOX AND SHIFTING MECHANISM* in this subsection and remove:

– Parking lock gear

– Index washer.

Remove all gearbox housing screws:
1. Start removing the M6 screws.
2. Then remove the M8 screws.

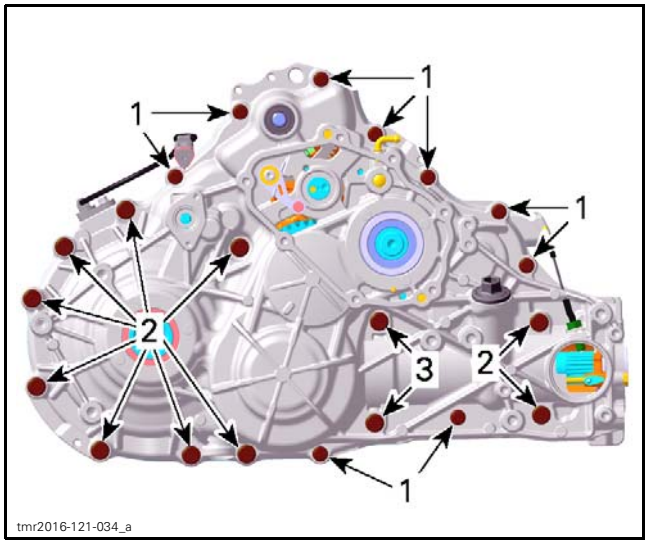

1. 11 screws M6 x 45
2. 10 screws M8 x 45
3. 2 screws M8 x 65

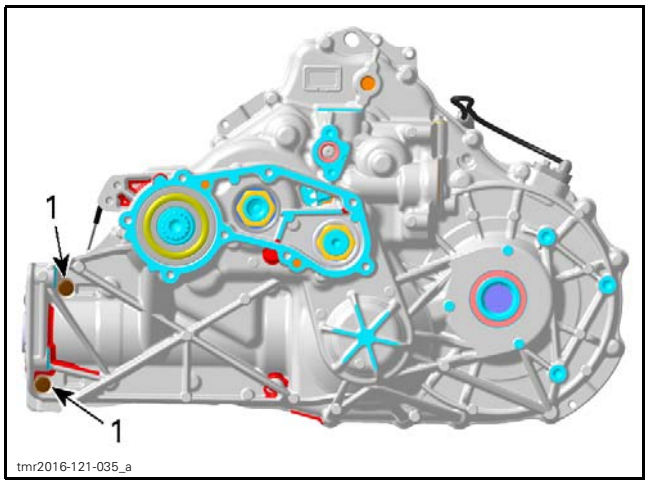

1. 2 screws M6 x 45

Separate gearbox housing, use 2 big screwdrivers.

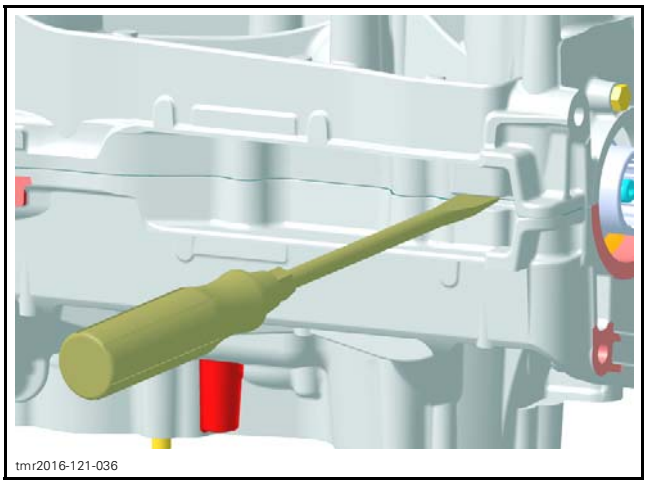

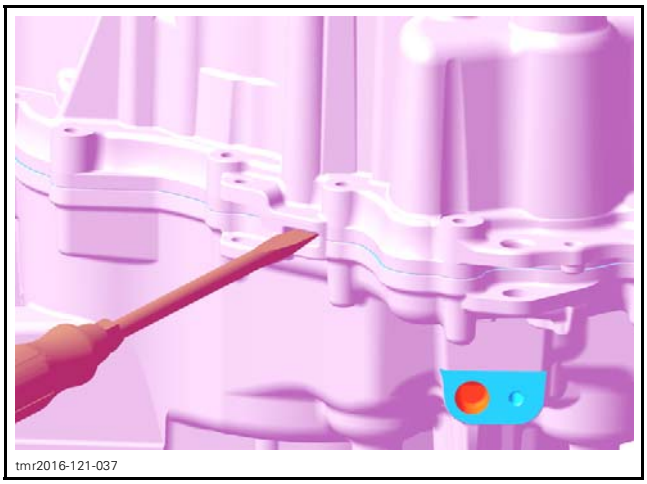

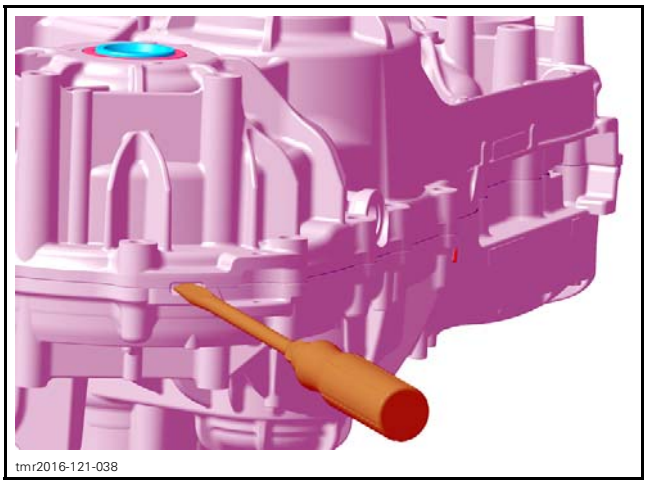

If necessary, refer to procedures in this subsection and remove:
- *GEARBOX AND SHIFTING MECHANISM*
- *OUTPUT SHAFT AND COUPLING MECHANISM*
- *DRIVE GEAR.*

Inspecting the Gearbox Housing

Check gearbox ball bearings for: contamination and/or metal shavings.

Check if ball bearings turn freely and smoothly. Replace if necessary.

Replacing the Bearing

If necessary heat housing up to 100°C (212°F) before removing ball bearings.

⚠ WARNING

Clean oil, outside and inside, from housing before heating.

NOTICE **Always support gearbox housings properly when ball bearings are removed. Housing damages may occur if this procedure is not performed correctly.**

Use a blind hole bearing puller to remove ball bearings of:

– Countershaft (right cover)
– Intermediate shaft (right cover).

Remove retaining plate securing the main shaft and intermediate shaft bearings in the left housing.

Remove screw securing the main shaft bearing in the right cover.

Use a suitable puller to remove ball bearings of:

– Main shaft (right and left cover)
– Countershaft (left cover)
– Intermediate shaft (left cover)
– Drive gear ball bearings (right and left cover).

.

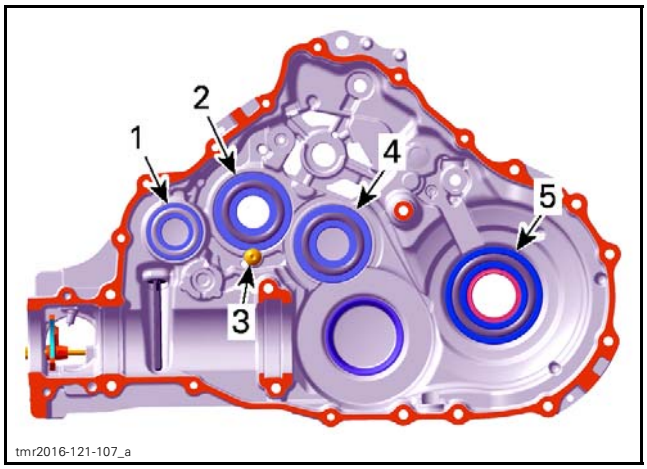

RIGHT GEARBOX HOUSING
1. *Ball bearing countershaft*
2. *Ball bearing main shaft*
3. *Screw*
4. *Ball bearing intermediate shaft*
5. *Ball bearing drive gear*

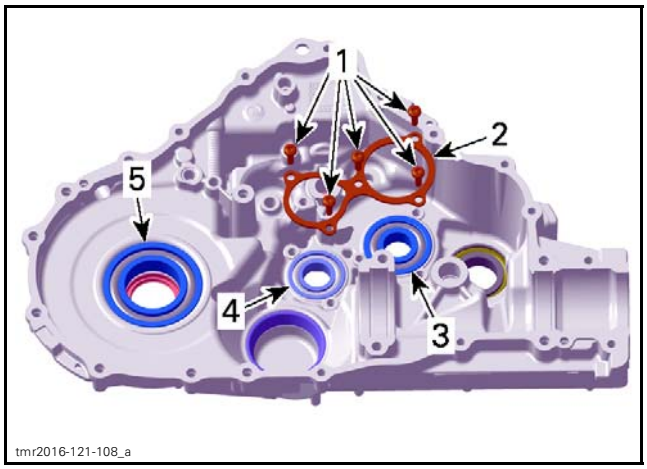

LEFT GEARBOX HOUSING
1. *Screws*
2. *Retaining plate*
3. *Ball bearing main shaft*
4. *Ball bearing intermediate shaft*
5. *Ball bearing drive gear*

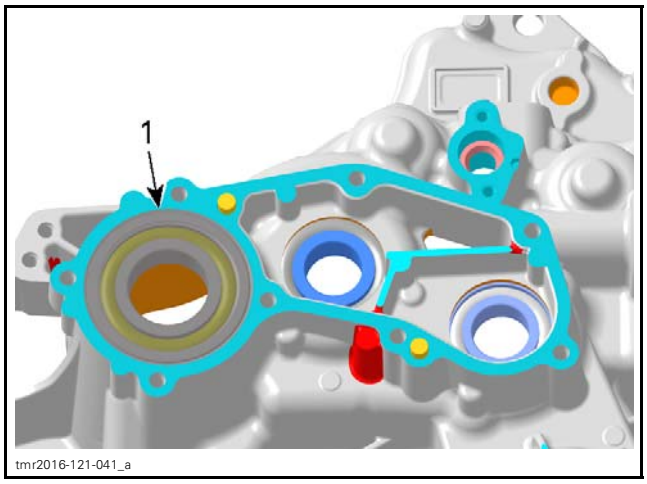

LEFT GEARBOX HOUSING
1. *Ball bearing countershaft*

Unless otherwise instructed, never use hammer to install ball bearings. Use press machine only.

If necessary heat housings up to 100°C (212°F) before installing ball bearings.

⚠ WARNING

Clean oil, outside and inside, from housing before heating.

Place new bearing in freezer for 10 minutes before installation.

Use a suitable installer for installing ball bearings of countershaft, main shaft and intermediate shaft.

NOTE: Place gearbox housings on a wood stand before installing ball bearings.

TIGHTENING TORQUE	
Retaining plate screws	10 N•m ± 1 N•m (89 lbf•**in** ± 9 lbf•**in**)

TIGHTENING TORQUE	
Retaining screw main shaft bearing (right cover)	10 N•m ± 1 N•m (89 lbf•**in** ± 9 lbf•**in**) + LOCTITE 243 (BLUE) (P/N 293 800 060)

Install new oil seals with the proper installer (refer to *GEARBOX OIL SEALS* in this subsection).

Assembling the Gearbox Housing

Clean all metal components in a solvent.

Gearbox housing mating surfaces are best cleaned using a combination of LOCTITE CHISEL (GASKET REMOVER) (P/N 413 708 500) and a brass brush. Brush a first pass in one direction then make the final brushing perpendicularly (90°) to the first pass cross (hatch).

NOTICE **Do not wipe with rags. Use a new clean hand towel only.**

IMPORTANT: When beginning the application of the gear housing sealant, the assembly and the first torquing should be done within 10 minutes. It is suggested to have all you need on hand to save time.

Place sleeve installer on drive gear.

REQUIRED TOOL	
SLEEVE INSTALLER (P/N 529 036 455)	

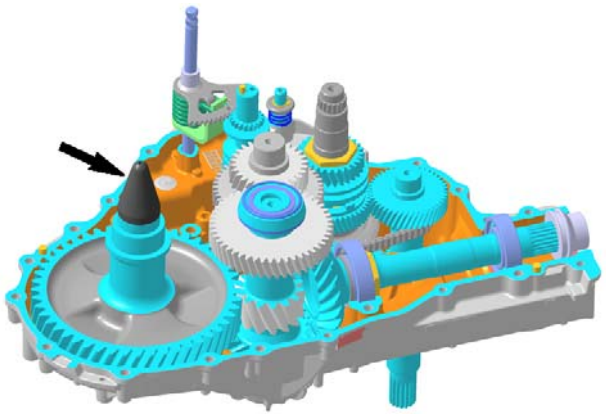

Apply sealant on mating surface.

RECOMMENDED SERVICE PRODUCT
LOCTITE 5910 (P/N 293 800 081)

Do not apply in excess as it will spread out inside gearbox housing.

NOTE: It is recommended to apply this specific sealant as described here to get a uniform application without lumps. If you do not use the roller method, you may use your finger to uniformly distribute the sealant (using a finger will not affect the adhesion).

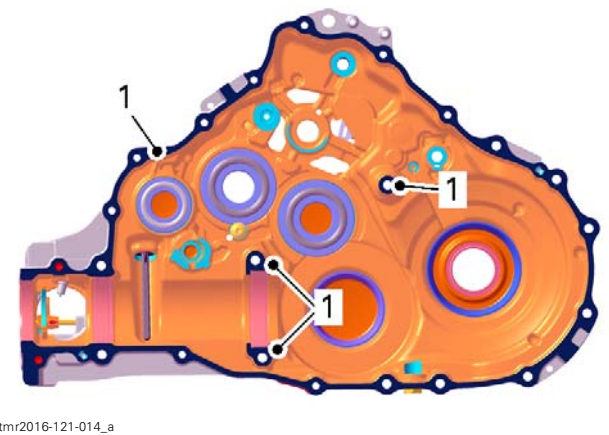

1. Apply sealant here

During installation of the right gearbox housing align the coupling fork with the groove in the coupling sleeve.

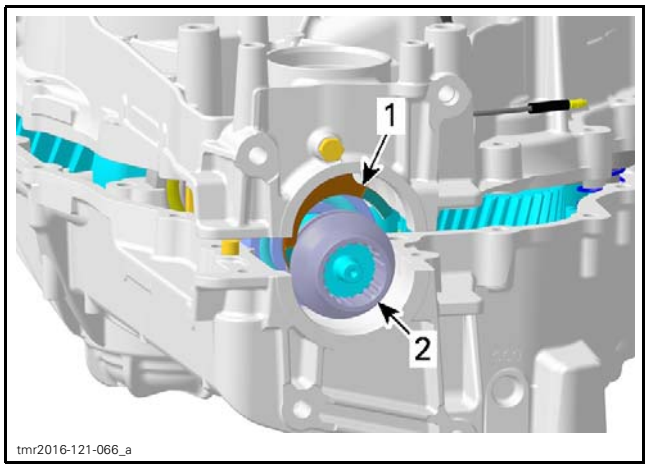

1. *Coupling fork*
2. *Coupling sleeve*

Install all gearbox housing screws.

Tighten M8 gearbox housing screws as per following sequence.

TIGHTENING TORQUE	
M8 gearbox housing screws	25 N•m ± 3 N•m (18 lbf•ft ± 2 lbf•ft)

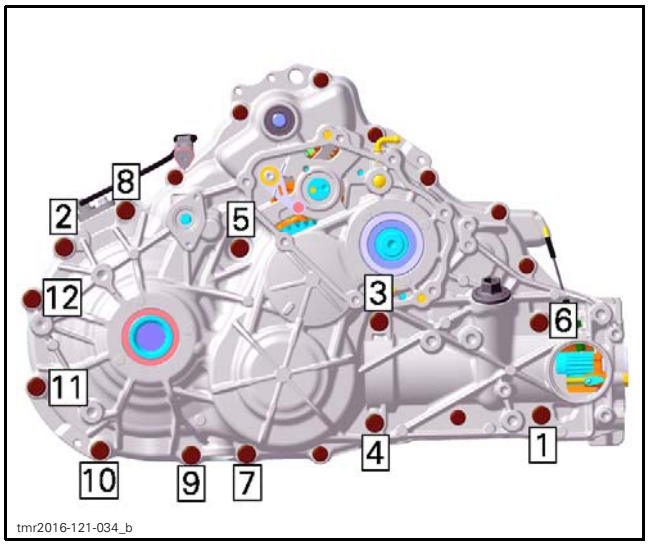

Tighten M6 gearbox housing screws as per following sequence.

TIGHTENING TORQUE	
M6 gearbox housing screws	10 N•m ± 1 N•m (89 lbf•**in** ± 9 lbf•**in**)

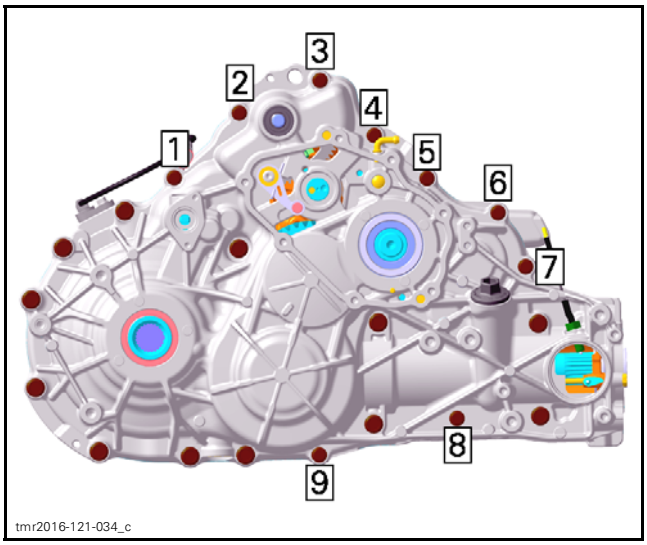

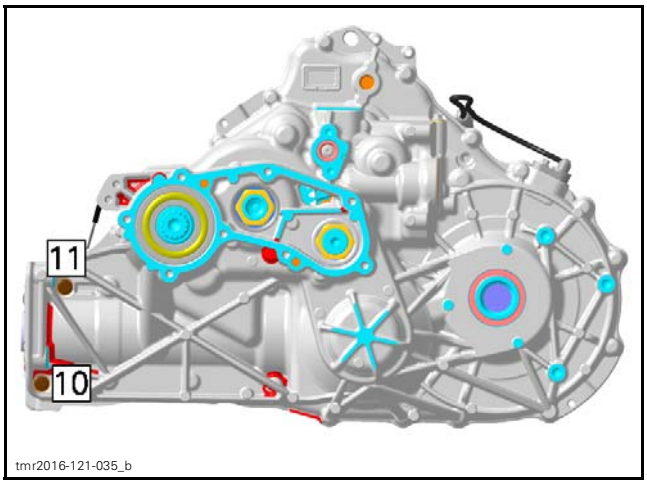

Refer to *GEARBOX AND SHIFTING MECHANISM* in this subsection to install:

- Index lever
- Index washer
- Parking lock gear
- Parking lock lever.

Set gearbox to PARK position.

Tighten main shaft and intermediate shaft nuts to specification.

TIGHTENING TORQUE	
Main shaft and intermediate shaft nuts	170 N•m ± 10 N•m (125 lbf•ft ± 7 lbf•ft) + LOCTITE 648 (GREEN) (P/N 413 711 400)

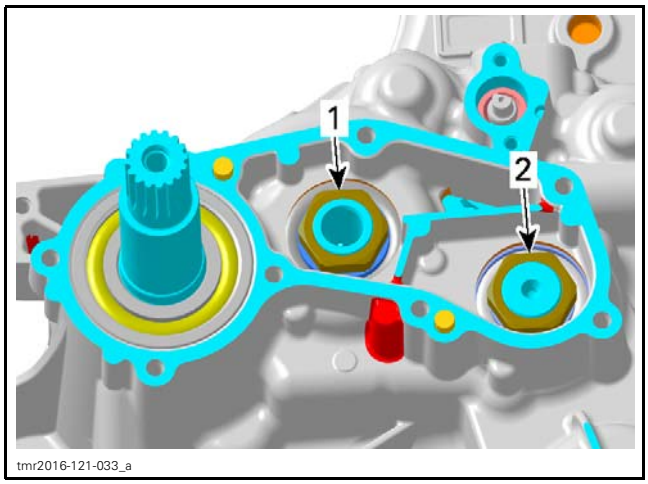

1. *Main shaft nut*
2. *Intermediate shaft nut*

Tighten countershaft nut to specification.

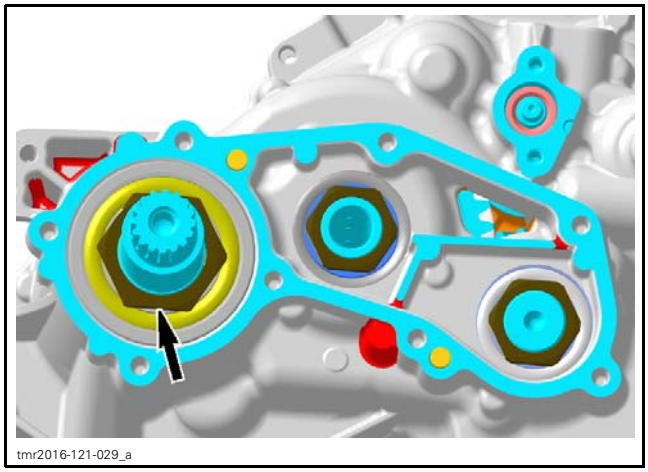

TIGHTENING TORQUE	
Countershaft nut	170 N•m ± 10 N•m (125 lbf•ft ± 7 lbf•ft) + LOCTITE 648 (GREEN) (P/N 413 711 400)

REQUIRED TOOLS	
M34 SOCKET (P/N 529 036 388)	
SPLINES SOCKET 1/2" (P/N 529 036 389)	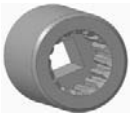

NOTICE Turn spline socket counterclockwise to tighten the nut.

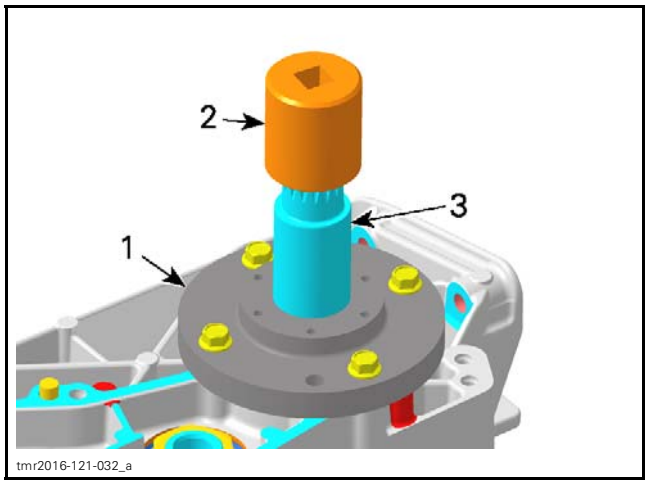

1. *M34 socket*
2. *Spline socket*
3. *Countershaft*

Apply sealant on mating surface of bearing housing.

RECOMMENDED SERVICE PRODUCT
LOCTITE 5910 (P/N 293 800 081)

Install bearing housing screws and tighten them as per following sequence.

TIGHTENING TORQUE	
Bearing housing screws	10 N•m ± 1 N•m (89 lbf•**in** ± 9 lbf•**in**)

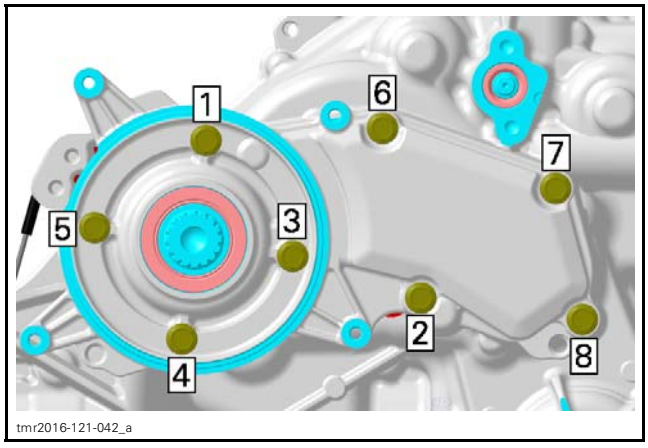

GEARBOX AND SHIFTING MECHANISM

Disassembling the Gearbox and Shifting Mechanism

NOTE: During gearbox and shifting mechanism disassembly, inspect the condition of each part closely.

Index Lever, Index Washer and Parking Lock Lever

Set gearbox to PARK position.

Remove the gearbox cover.

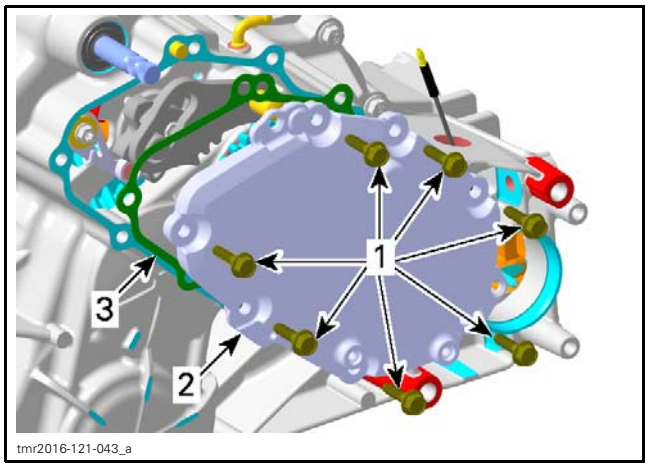

1. *Retaining screws*
2. *Gearbox cover*
3. *Gasket (discard it)*

Remove the park locking gear.

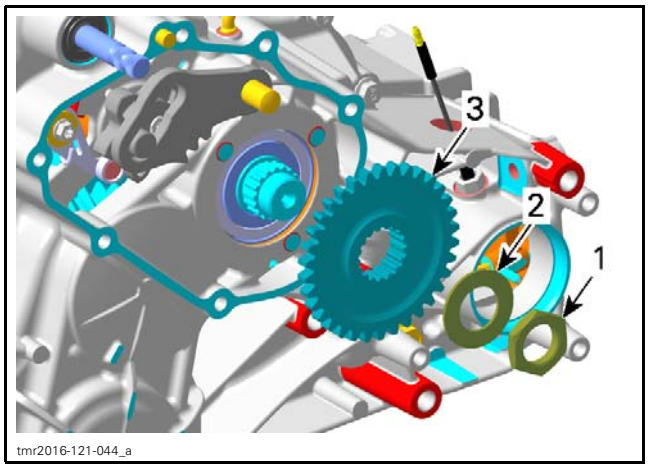

1. *Nut*
2. *Spring washer*
3. *Park locking gear*

Remove the parking locking lever.

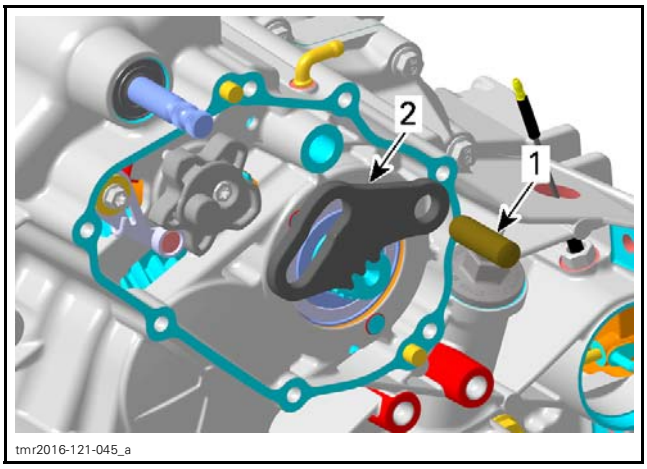

1. *Pin*
2. *Park locking lever*

Remove screw retaining the index washer to the shift drum.

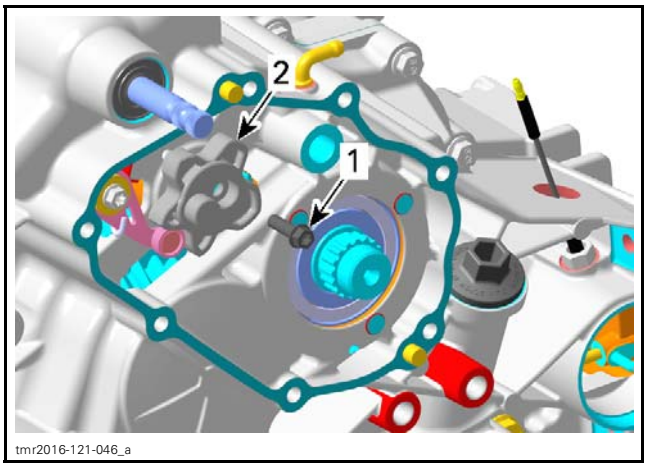

1. *Screw*
2. *Index washer*

Insert a flat screwdriver in the slot of index lever. Turn screwdriver clockwise and remove index washer.

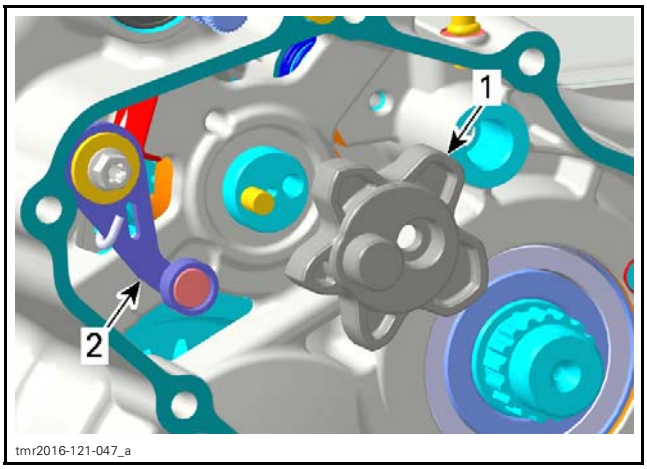

1. *Index washer*
2. *Index lever*

Remove the index lever with washer, step ring and spring.

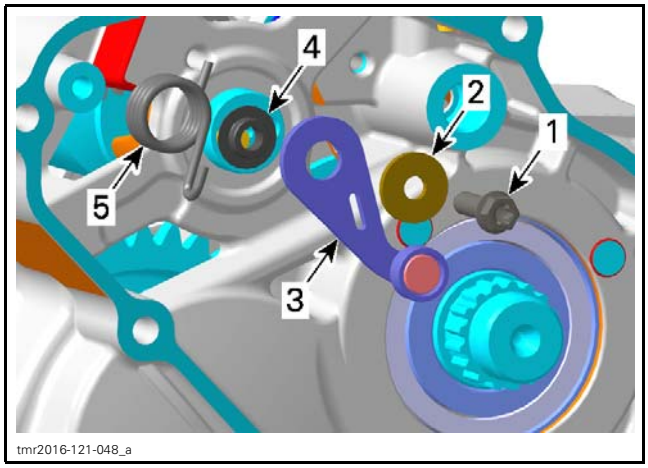

tmr2016-121-048_a

1. *Screw*
2. *Washer*
3. *Index lever*
4. *Step ring*
5. *Index spring*

Shift Shaft Assembly and Shift Drum

Separate gearbox housing, refer to *GEARBOX HOUSING* in this subsection.

Withdraw shift shaft assembly.

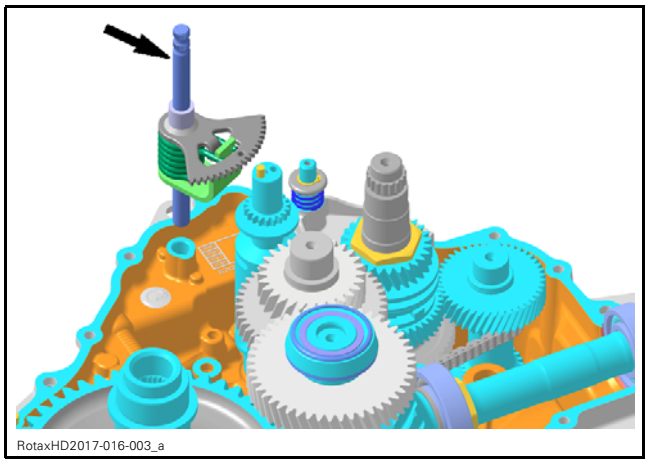
RotaxHD2017-016-003_a

Lift shift fork shaft assembly and move it aside to disengage shift forks from shift drum.

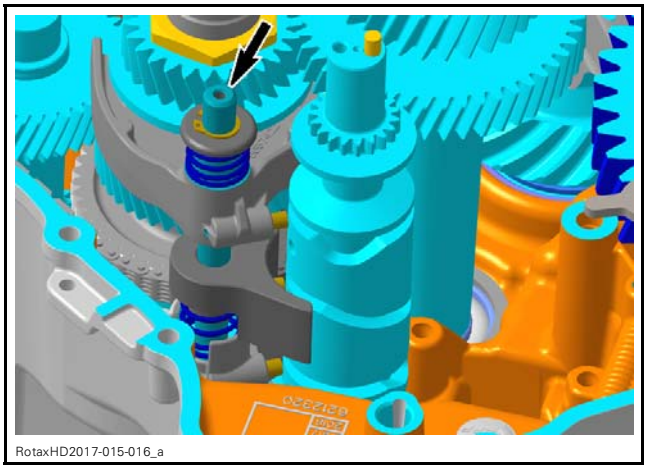
RotaxHD2017-015-016_a

Withdraw shift drum.

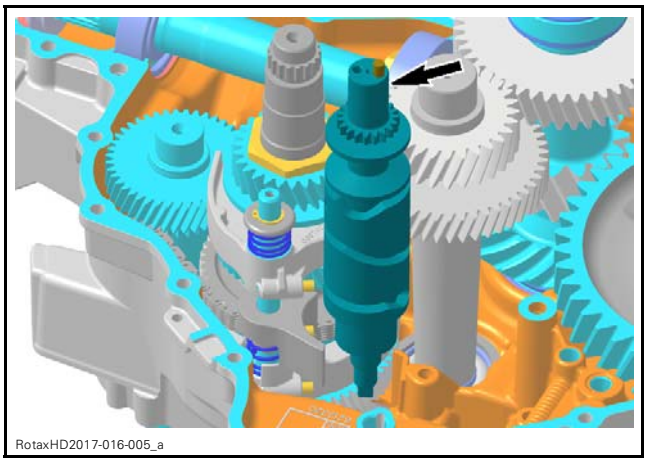
RotaxHD2017-016-005_a

Pinion Drive Shaft and Intermediate Shaft

Separate gearbox housing, refer to *GEARBOX HOUSING* in this subsection.

Remove:

1. Pinion drive shaft
2. Intermediate shaft.

NOTE: Bevel gear and distance shim remain in gearbox housing.

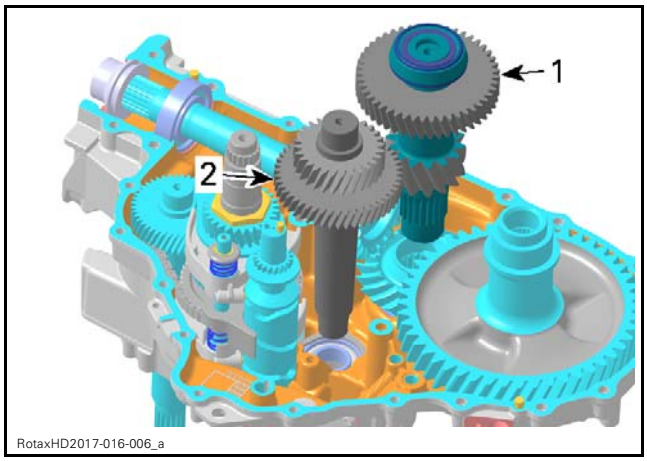

1. *Pinion drive shaft*
2. *Intermediate shaft*

Main Shaft, Shift Fork Shaft Assembly and Countershaft

Separate gearbox housing, refer to *GEARBOX HOUSING* in this subsection.

See procedures in this subsection to remove:

- Pinion drive shaft
- Intermediate shaft
- Shift fork shaft assembly
- Shift drum.

Remove main shaft assembly together with shift fork shaft assembly and countershaft.

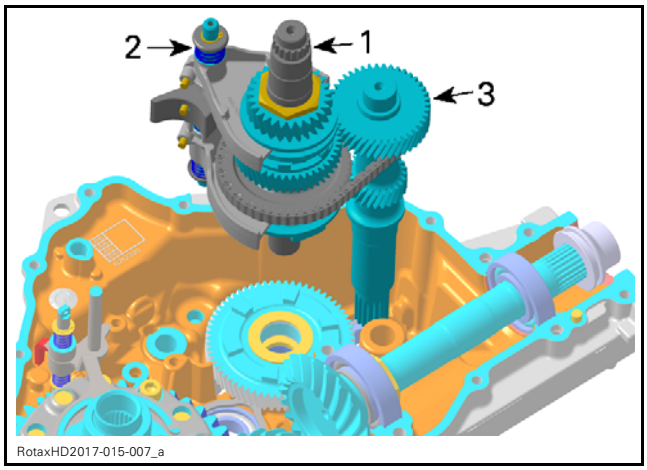

1. *Main shaft assembly*
2. *Shift fork shaft assembly*
3. *Countershaft*

Remove:

- LOW range gear
- Needle bearing
- Thrust washers.

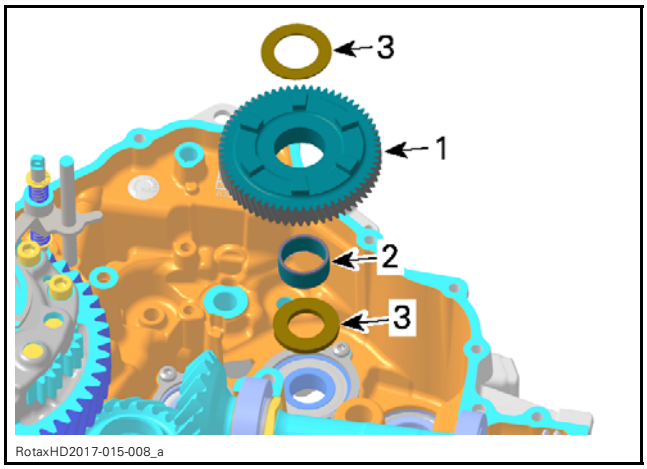

1. *Free pinion LOW range gear*
2. *Needle bearing*
3. *Thrust washer*

Disassembling the Shift Fork Shaft Assembly

NOTICE **Springs are not identical. Mark them to reinstall them in their original position.**

Remove the following parts from the shift fork shaft.

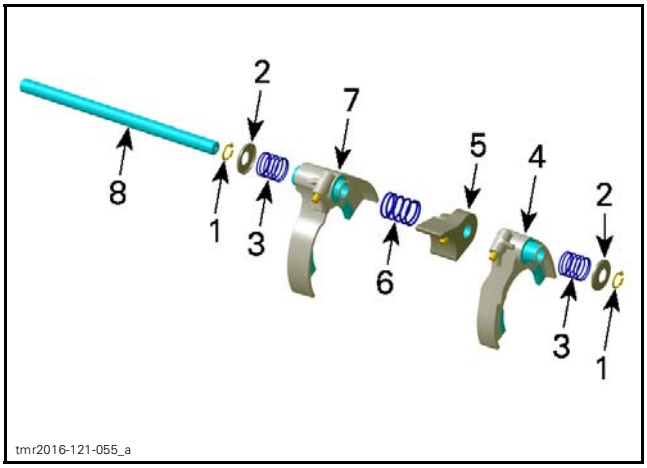

1. *Snap rings*
2. *Spring seat*
3. *Outer springs*
4. *Shift fork HIGH*
5. *Shifting block*
6. *Center spring*
7. *Shift fork LOW/REVERSE*
8. *Shift fork shaft*

Inspecting the Gearbox and Shifting Mechanism

Always verify for the following when inspecting gearbox components:

- Gear teeth damage
- Worn or scoured bearing surfaces
- Rounded engagement dogs and slots
- Worn shift fork engagement groove
- Worn splines on shafts and shifting sleeves.

Bearings

When gearbox is removed check gearbox ball bearings for contamination and/or metal shavings.

Check if ball bearings turn freely and smoothly. Replace if necessary, refer to *GEARBOX HOUSING* in this subsection.

Shifting Sleeves

Check shifting sleeves for worn inner splines and rounded or damaged engagement dogs.

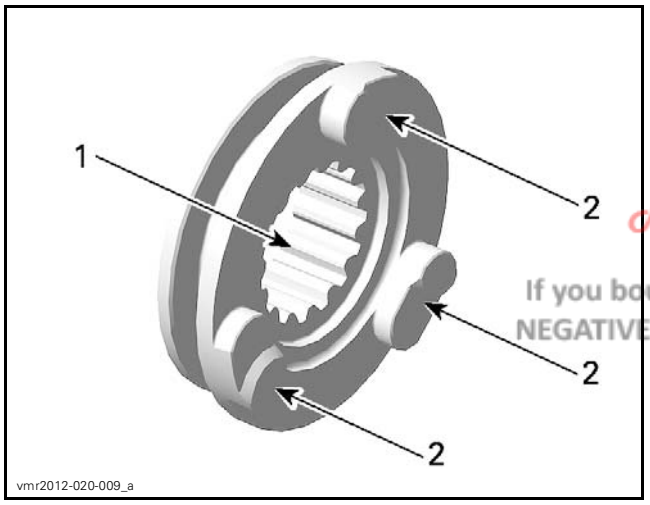

TYPICAL
1. *Inner splines*
2. *Engagement dogs*

Measure the width of shift fork engagement groove.

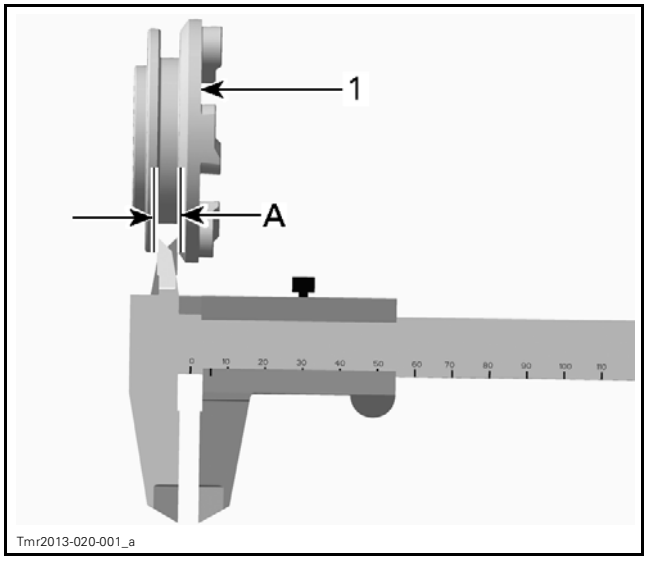

TYPICAL
1. *Shifting sleeve*

A. *Width of shift fork engagement groove*

WIDTH OF SHIFT FORK ENGAGEMENT GROOVE	
New	5.30 mm to 5.40 mm (.209 in to .213 in)
Service limit	5.50 mm (.217 in)

Shafts

Check countershaft bearing journals for wear.

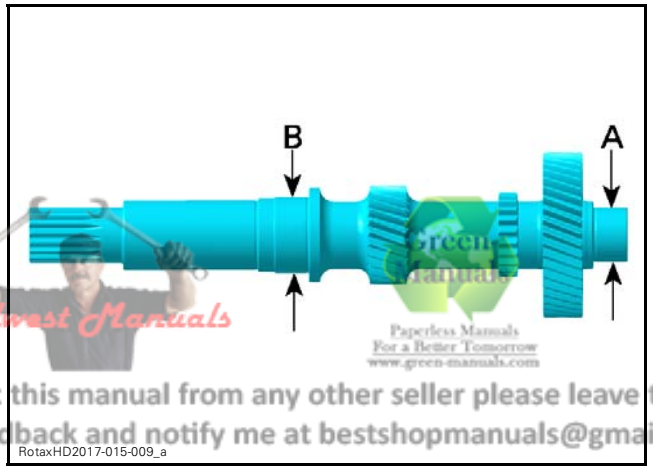

A. *MAG side*
B. *Bearing journal CVT side*

Midwest Manuals
Paperless Manuals For a Better Tomorrow www.green-manuals.com
If you bought this manual from any other seller please leave them NEGATIVE feedback and notify me at bestshopmanuals@gmail.com

COUNTERSHAFT BEARING JOURNALS	
MAG SIDE	
NEW	19.977 mm to 19.990 mm (.786 in to .787 in)
SERVICE LIMIT	19.973 mm (.786 in)
CVT SIDE	
NEW	24.977 mm to 24.990 mm (.983 in to .984 in)
SERVICE LIMIT	24.970 mm (.983 in)

Check main shaft for wear.

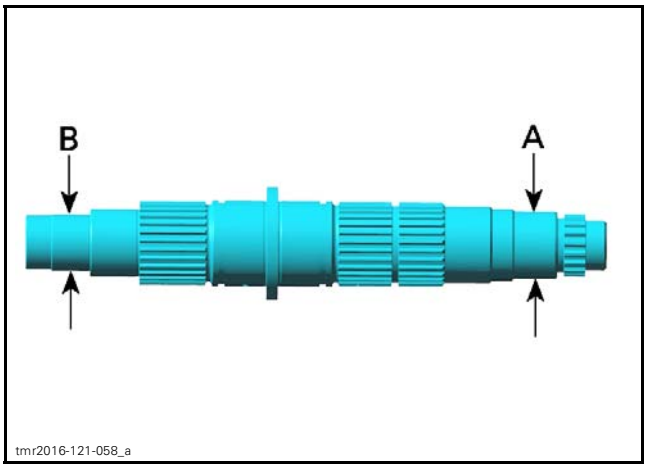

A. *Bearing journal MAG side*
B. *Bearing journal CVT side*

MAIN SHAFT BEARING JOURNAL CVT/MAG SIDE	
New	16.980 mm to 16.991 mm (.669 in to .669 in)
Service limit	16.976 mm (.668 in)

Shift Shaft

Check shift shaft for worn splines and gears.

Check shift shaft spring for damages.

Shift Drum

NOTICE **Do not disassemble shift drum.**

Check shift drum tracks for scouring or heavy wear, like rounded engagement slots.

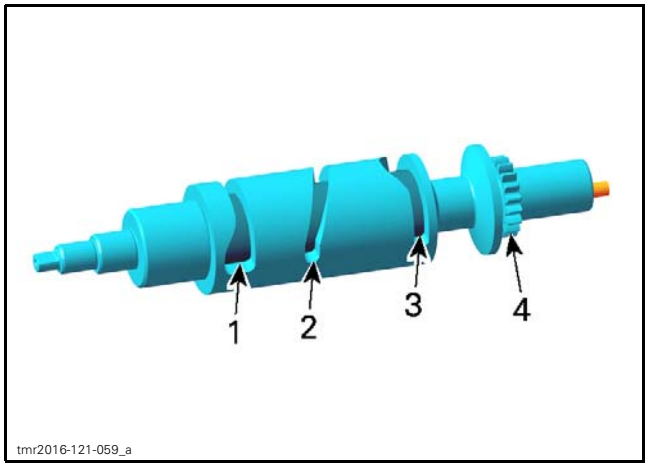

1. Track for the low/reverse range gear shift fork
2. Track for the shifting block
3. Track for the high range gear shift fork
4. Shift drum gear

Shift Forks

Check both shift forks for visible damage, wear or bent shift fork claws.

Check engagement rollers for wear and smooth movement.

Measure the shift fork claw thickness.

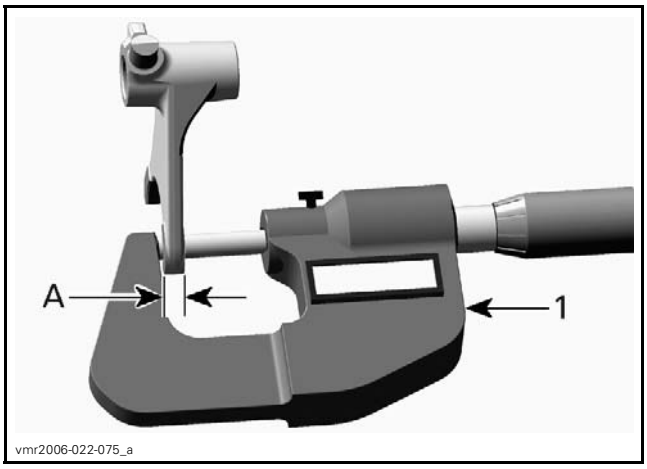

TYPICAL
1. Micrometer
A. Shift fork claw thickness

SHIFT FORK CLAW THICKNESS	
New	5.10 mm to 5.20 mm (.201 in to .205 in)
Service limit	5.00 mm (.197 in)

Shift Fork Shaft

Check shift fork shaft for visible damage or wear.

Check if shift fork shaft is straight.

Index Lever and Parking Lever

Index lever with roller must move freely.

Check parking lever for cracks or other damages.

Assembling the Gearbox and Shifting Mechanism

The assembly of gearbox is essentially the reverse of disassembly procedure. However, pay attention to the following details.

Prior to assembly lubricate ball bearing seats of:
- Main shaft
- Coutnershaft
- Intermediate shaft.

RECOMMENDED SERVICE PRODUCT
COPASLIP (P/N 420 297 430)

Assembling the Shift Fork Shaft Assembly

NOTICE **Springs are not identical.**

Install:
- NEW snap rings
- Spring seats
- Springs
- Shift forks
- Shifting block.

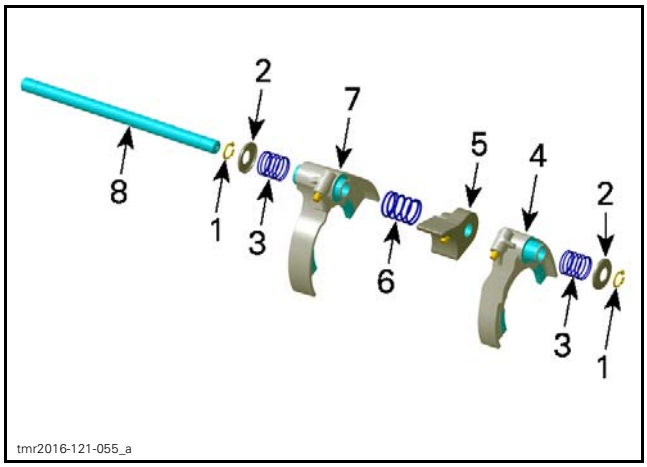

1. *Snap rings*
2. *Spring seat*
3. *Outer springs*
4. *Shift fork HIGH*
5. *Shifting block*
6. *Center spring*
7. *Shift fork LOW/REVERSE*
8. *Shift fork shaft*

Main Shaft, Shift Fork Shaft Assembly and Countershaft

Install shifting sleeve, thrust washer and LOW gear pinion on main shaft assembly.

NOTE: Check if shifting sleeve engages correctly in reverse gear.

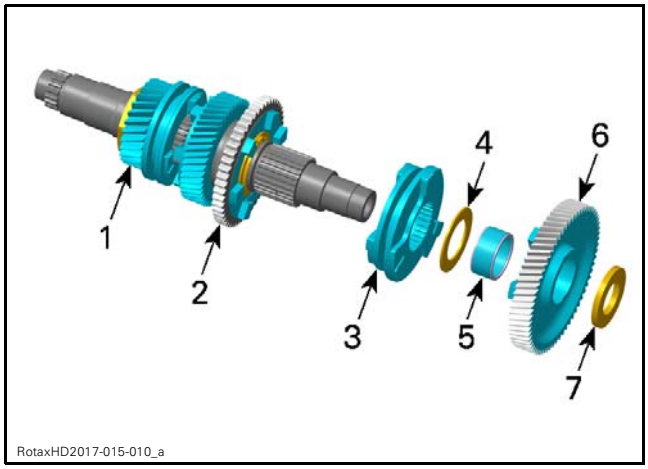

1. *Main shaft assembly*
2. *Reverse gear*
3. *Shifting sleeve*
4. *Thrust washer*
5. *Needle bearing*
6. *LOW gear pinion*
7. *Thrust washer*

Install shift fork shaft assembly, countershaft and main shaft assembly together into gearbox housing.

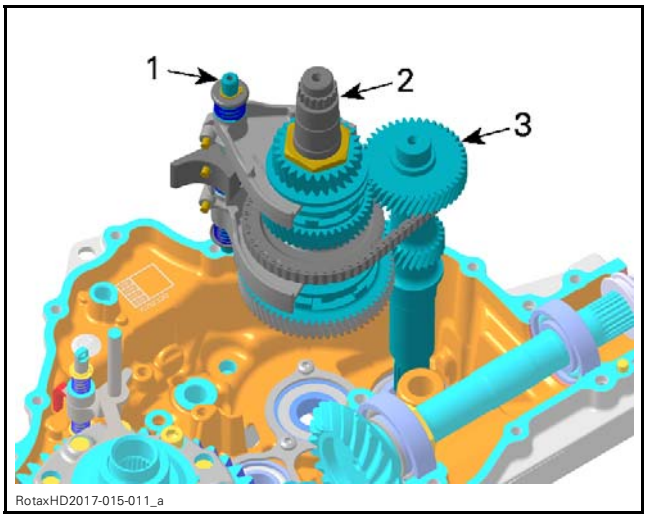

1. *Main shaft assembly*
2. *Shift fork shaft assembly*
3. *Countershaft*

Pinion Drive Shaft and Intermediate Shaft

Ensure distance shim and bevel gear are placed on the pinion drive shaft bearing in gearbox housing.

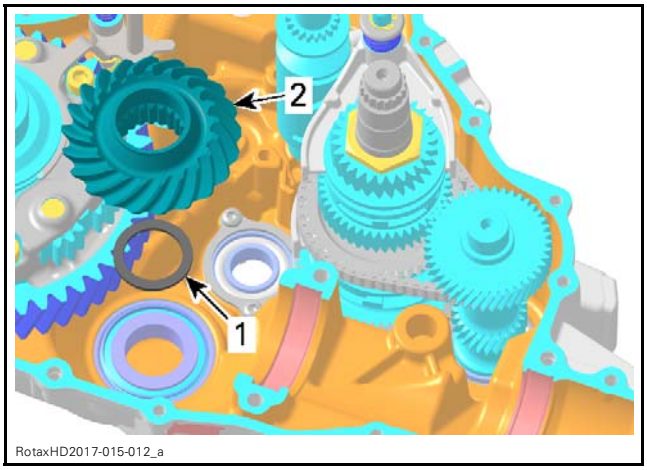

1. *Distance shim*
2. *Bevel gear*

Install:

1. Intermediate shaft
2. Pinion drive shaft.

Carefully fit pinion drive shaft into inner splines of bevel gear.

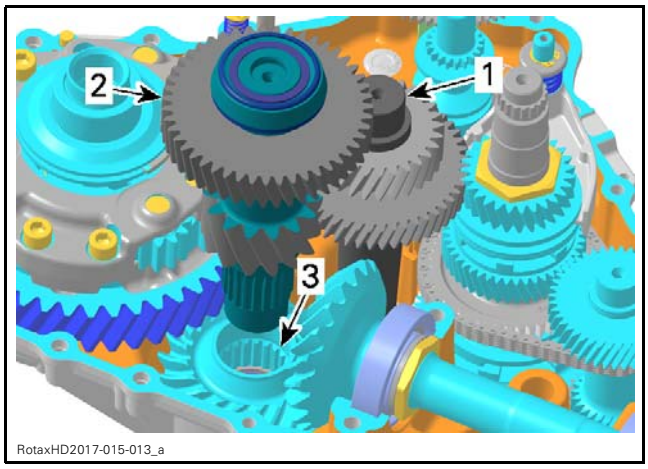

1. *Intermediate shaft*
2. *Pinion drive shaft*
3. *Bevel gear splines*

Shift Shaft Assembly and Shift Drum

Install:

– Shift drum

– Shift shaft assembly.

Align mark on shift shaft with marks on shift drum gear.

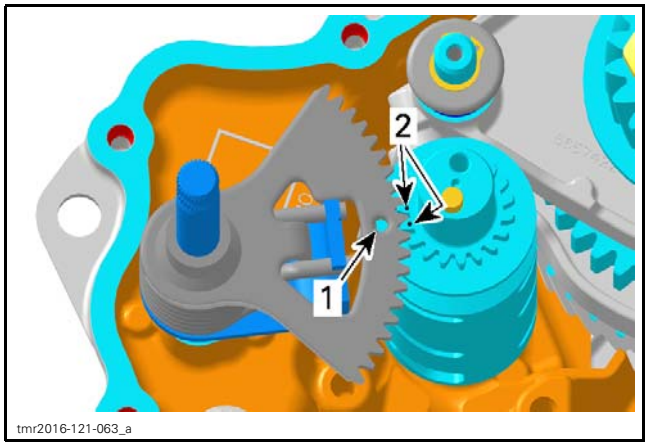

1. *Mark on shift shaft*
2. *Marks on shift drum gear*

Engage shift fork pins into shift drum gates and install shift fork shaft:

1. Lift shift fork HIGH
2. Press shifting block down
3. Move shift fork shaft sidewards.

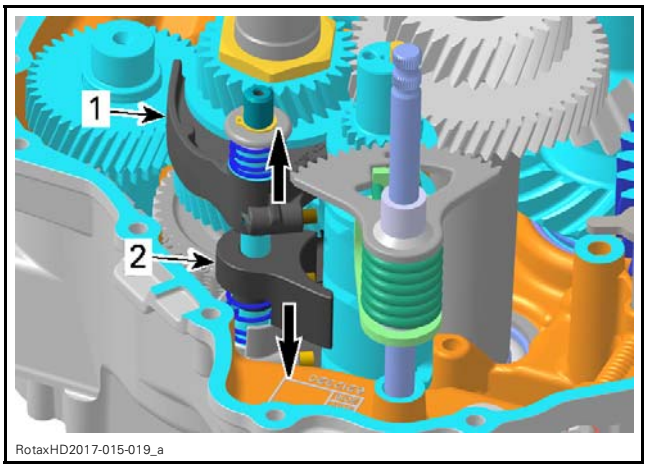

1. *Shift fork HIGH*
2. *Shifting block*

Index Lever, Index Washer and Parking Lock Lever

Fit step ring into index lever.

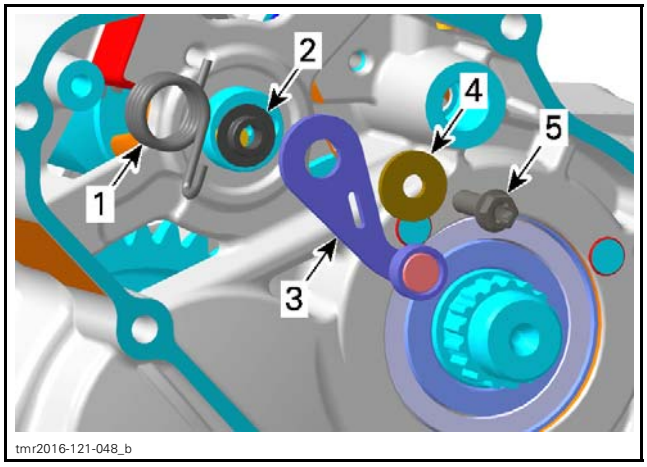

1. *Index spring*
2. *Step ring*
3. *Index lever*
4. *Washer*
5. *Screw*

TIGHTENING TORQUE	
Index lever retaining screw	10 N•m ± 1 N•m (89 lbf•**in** ± 9 lbf•**in**) + LOCTITE 243 (BLUE) (P/N 293 800 060)

Install index washer on shift drum.

Insert a flat screwdriver in the slot of the index lever, turn screwdriver clockwise and engage lever in index washer in NEUTRAL position as per following illustration.

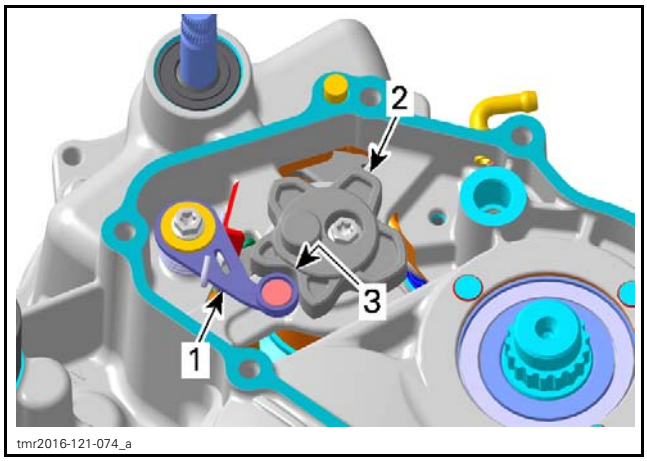

1. *Index lever*
2. *Index washer*
3. *Neutral position*

Install screw retaining the index washer to the shift drum.

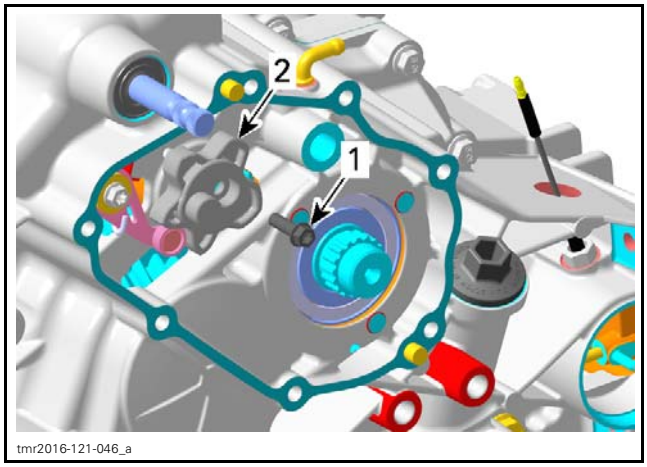

1. *Screw*
2. *Index washer*

TIGHTENING TORQUE	
Index washer retaining screw	10 N•m ± 1 N•m (89 lbf•**in** ± 9 lbf•**in**) + LOCTITE 243 (BLUE) (P/N 293 800 060)

Install:
- Park locking gear
- Spring washer
- Nut
- Pin
- Park locking lever.

Set gearbox to PARK position.

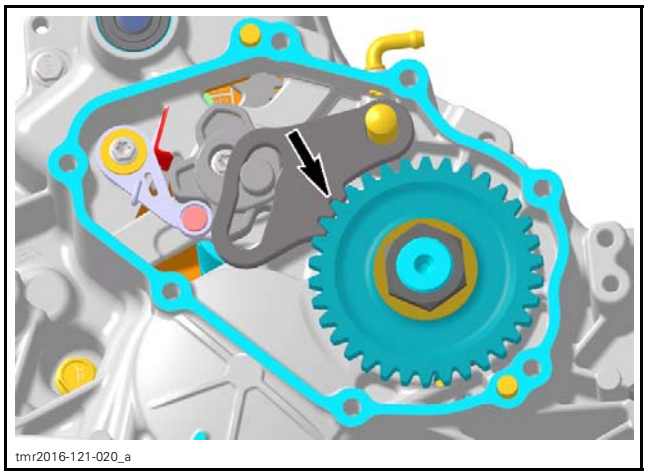

PARK LOCKING LEVER ENGAGED

Tighten nut to specification.

TIGHTENING TORQUE	
Park locking gear nut	170 N•m ± 10 N•m (125 lbf•ft ± 7 lbf•ft) + LOCTITE 648 (GREEN) (P/N 413 711 400)

Install gearbox cover with **NEW** gasket.

Tighten gearbox cover screws as per following sequence.

TIGHTENING TORQUE	
Gearbox cover screws	10 N•m ± 1 N•m (89 lbf•**in** ± 9 lbf•**in**)

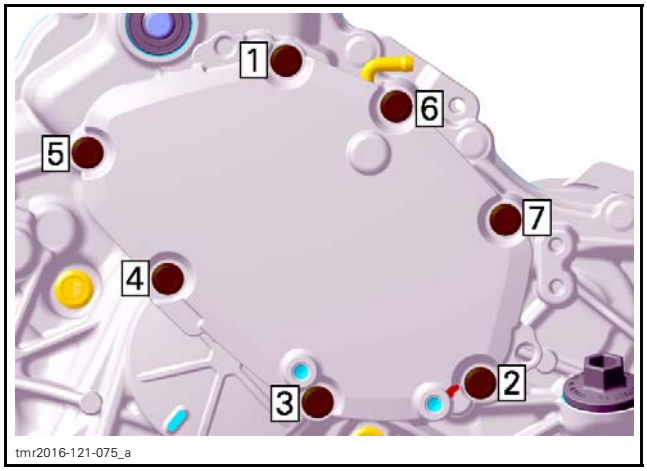

OUTPUT SHAFT AND 4X4 COUPLING MECHANISM

Removing the Output Shaft and 4X4 Coupling Mechanism

Drain gearbox oil. Refer to *REPLACING THE GEARBOX OIL* in this subsection.

Remove *4WD ACTUATOR*, refer to procedure in this subsection.

Detach *GEARBOX ASSEMBLY* from engine, refer to procedure in this subsection.

Remove:
- Screw
- Coupling fork shaft
- Coupling fork.

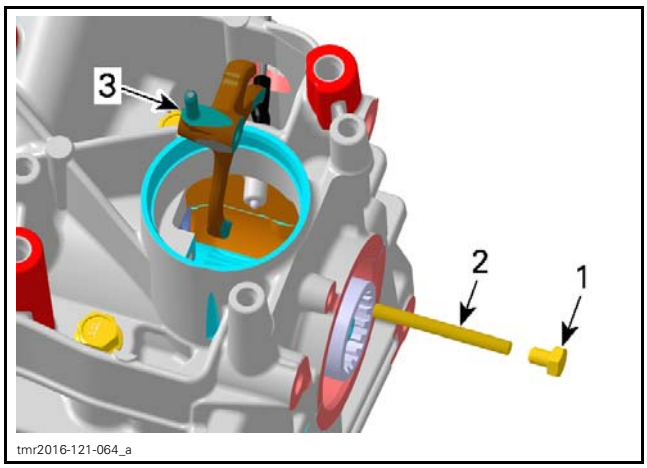

1. *Screw*
2. *Coupling fork shaft*
3. *Coupling fork*

Pull out 4X4 coupling sleeve.

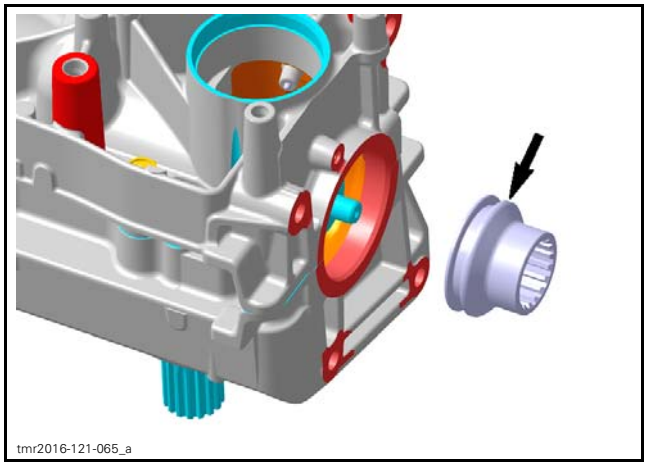

Inspecting the Output Shaft and 4X4 Coupling Mechanism

Output Shaft

Check output shaft and its gear for cracks, bend, pitting or other visible damages.

Check output shaft splines for wear or other damages.

Check if the output shaft bearings turn freely and smoothly.

Replace oil seal if brittle, hard or damaged.

4X4 Coupling Sleeve

Check splines of coupling sleeve for wear or other damages.

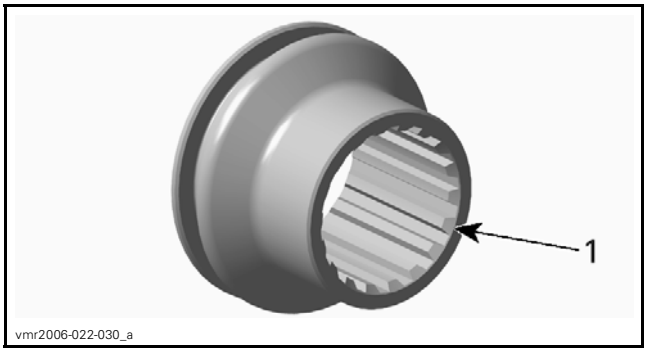

1. *Inspect splines*

Measure the coupling sleeve groove width.

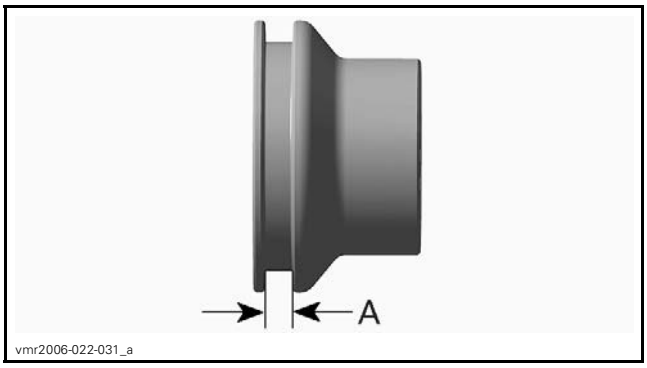

A. *Groove width*

COUPLING SLEEVE GROOVE WIDTH	
New	5.25 mm to 5.35 mm (.207 in to .211 in)
Service limit	5.50 mm (.217 in)

Coupling Fork

Check coupling fork for visible damage, wear or bent coupling fork claws.

Check coupling fork claw thickness.

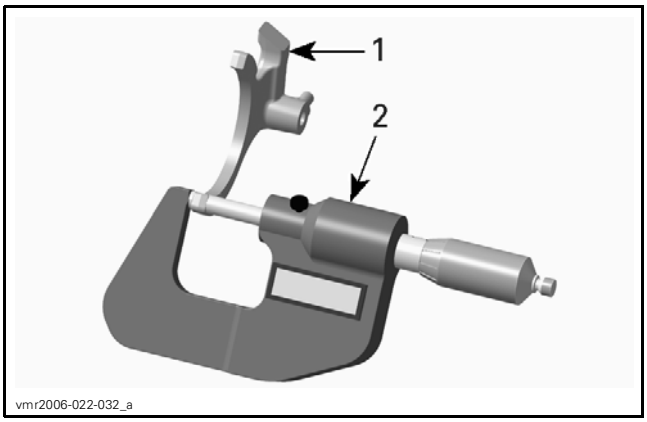

1. *Coupling fork*
2. *Micrometer*

COUPLING FORK CLAW THICKNESS	
New	4.95 mm to 5.05 mm (.195 in to .199 in)
Service limit	4.80 mm (.189 in)

Installing the Output Shaft and 4X4 Coupling Mechanism

Install coupling sleeve onto the output shaft.

Install:

– Coupling fork
– Coupling fork shaft
– Screw.

Ensure that coupling fork engages into the coupling sleeve groove.

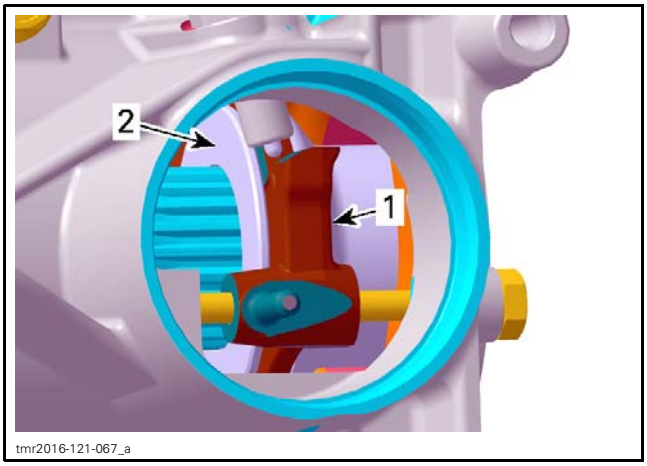

1. *Coupling fork*
2. *Coupling sleeve*

TIGHTENING TORQUE	
Coupling fork shaft screw	6 N•m ± 0.7 N•m (53 lbf•**in** ± 6 lbf•**in**) + LOCTITE 243 (BLUE) (P/N 293 800 060)

DRIVE GEAR

Removing the Drive Gear

Separate gearbox housing, refer to *GEARBOX HOUSING* in this subsection.

Remove drive gear.

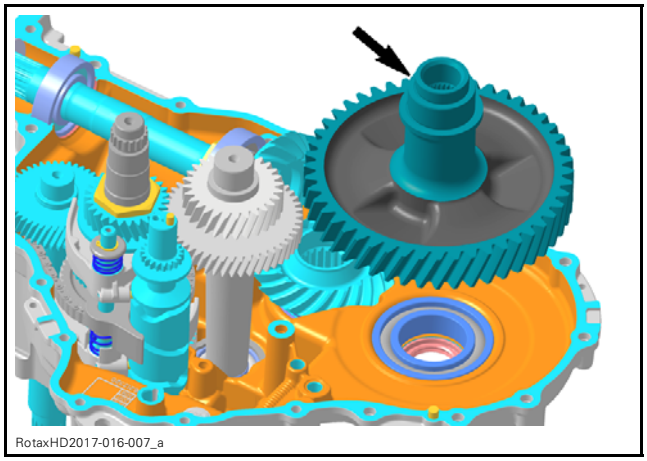

Installing the Drive Gear

Install drive gear.

REQUIRED TOOL	
SLEEVE INSTALLER (P/N 529 036 455)	

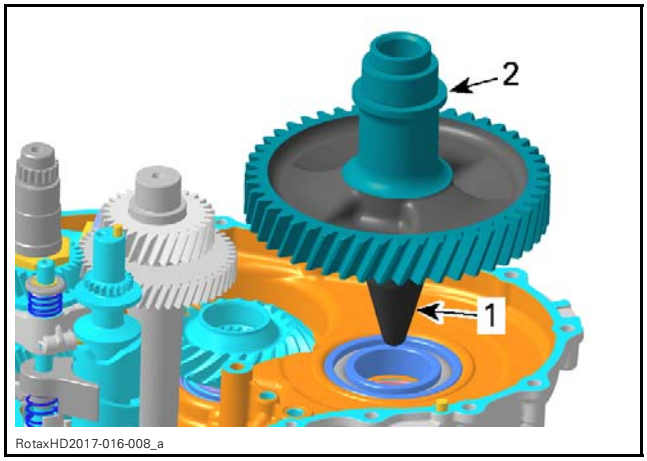

1. *Sleeve installer*
2. *Drive gear*

GEARBOX AND 4X4 COUPLING UNIT (with lockable rear differential)

SERVICE TOOLS

Description	Part Number	Page
ECM ADAPTER TOOL	529 036 166	4
FLUKE 115 MULTIMETER	529 035 868	4
HANDLE	420 877 650	14
M34 SOCKET	529 036 388	16, 21
OIL SEAL INSTALLER (COUNTERSHAFT)	529 036 391	13
OIL SEAL INSTALLER (DIFFERENTIAL OUTPUT)	529 036 456	14
OIL SEAL INSTALLER (GEARBOX)	529 035 758	14
SLEEVE INSTALLER	529 036 455	14, 19, 31
SPLINES SOCKET 1/2"	529 036 389	16, 21

SERVICE TOOLS – OTHER SUPPLIER

Description	Part Number	Page
BACK PROBE TEST WIRES	529 036 063	4

SERVICE PRODUCTS

Description	Part Number	Page
75W140 SYNTHETIC GEAR OIL (EUR)	779215	4
75W140 SYNTHETIC GEAR OIL	779160	4
COPASLIP	420 297 430	26
LOCTITE 243 (BLUE)	293 800 060	15, 19, 28, 30
LOCTITE 5910	293 800 081	19, 21
LOCTITE 648 (GREEN)	413 711 400	20–21, 29
LOCTITE CHISEL (GASKET REMOVER)	413 708 500	19
PETAMO GREASE GHY 133N	420 899 271	13
SUPER LUBE GREASE	293 550 030	8–10, 12

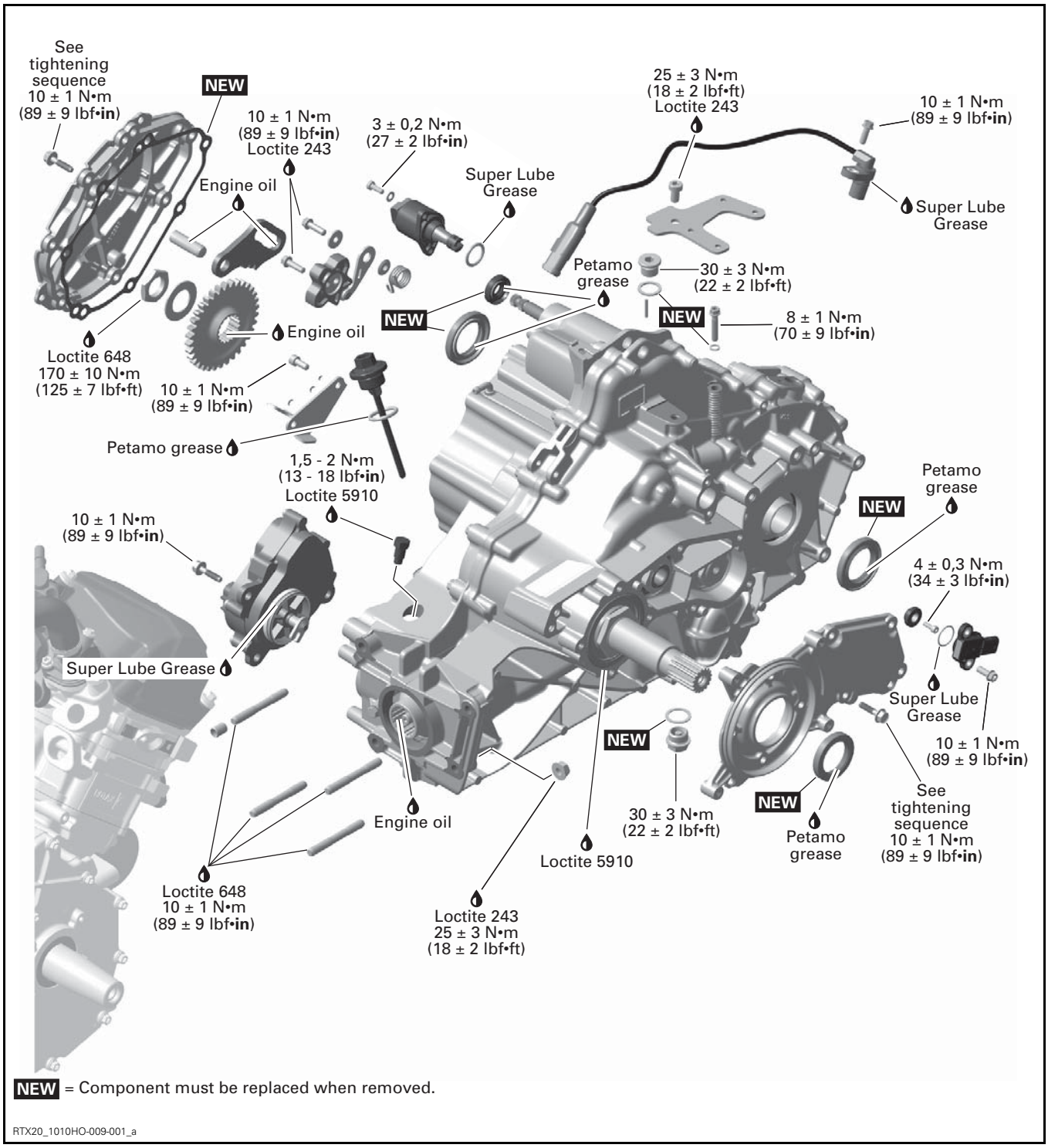
See tightening sequence 10 ± 1 N•m (89 ± 9 lbf•in)
NEW
10 ± 1 N•m (89 ± 9 lbf•in) Loctite 243
3 ± 0,2 N•m (27 ± 2 lbf•in)
Engine oil
Super Lube Grease
25 ± 3 N•m (18 ± 2 lbf•ft) Loctite 243
10 ± 1 N•m (89 ± 9 lbf•in)
Super Lube Grease
Petamo grease
30 ± 3 N•m (22 ± 2 lbf•ft)
NEW
NEW
8 ± 1 N•m (70 ± 9 lbf•in)
Engine oil
Loctite 648 170 ± 10 N•m (125 ± 7 lbf•ft)
10 ± 1 N•m (89 ± 9 lbf•in)
Petamo grease
1,5 - 2 N•m (13 - 18 lbf•in) Loctite 5910
10 ± 1 N•m (89 ± 9 lbf•in)
Petamo grease
NEW
4 ± 0,3 N•m (34 ± 3 lbf•in)
Super Lube Grease
Super Lube Grease
10 ± 1 N•m (89 ± 9 lbf•in)
NEW
NEW
30 ± 3 N•m (22 ± 2 lbf•ft)
Petamo grease
See tightening sequence 10 ± 1 N•m (89 ± 9 lbf•in)
Engine oil
Loctite 5910
Loctite 648 10 ± 1 N•m (89 ± 9 lbf•in)
Loctite 243 25 ± 3 N•m (18 ± 2 lbf•ft)
NEW = Component must be replaced when removed.
RTX20_1010HO-009-001_a

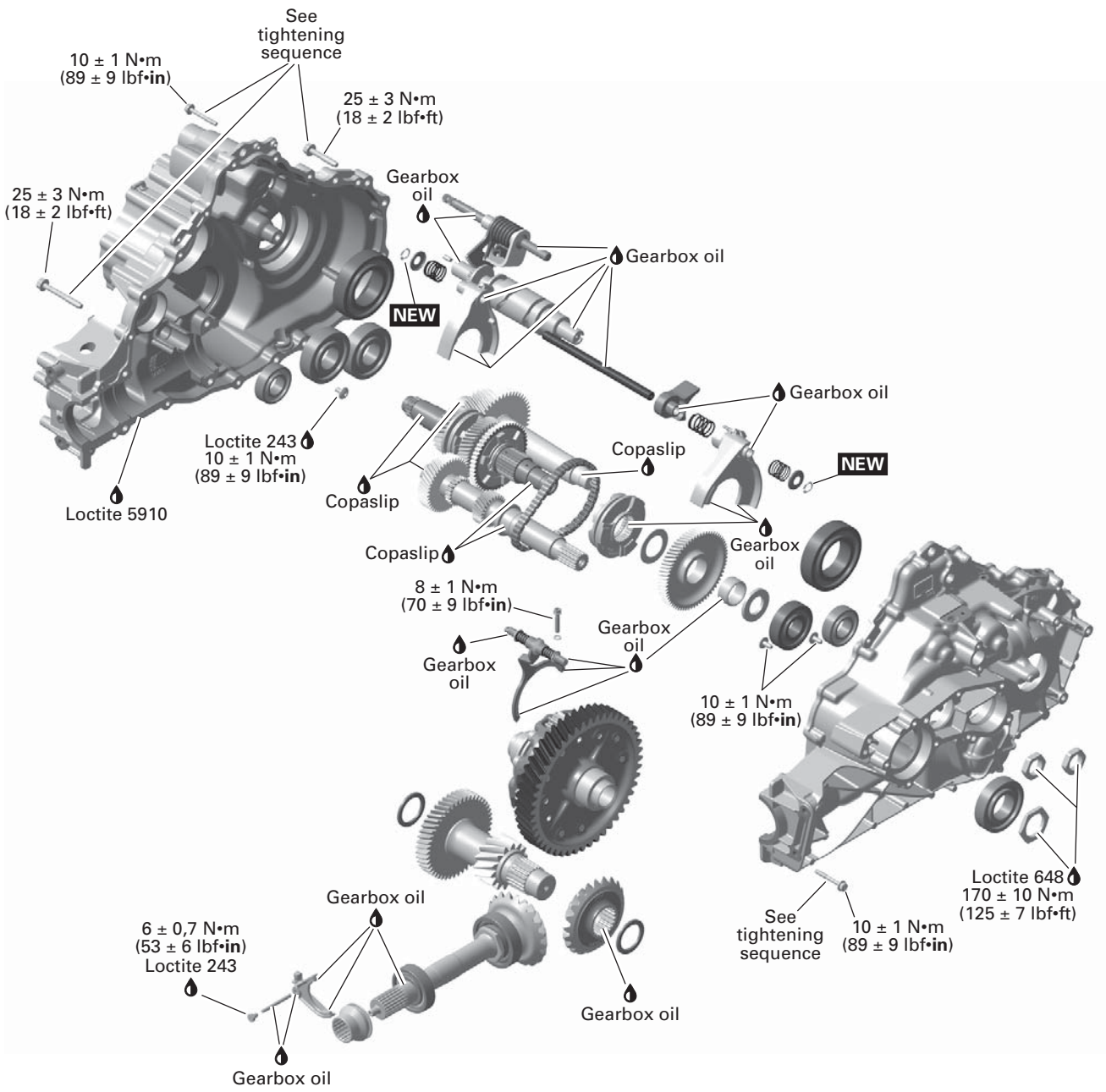

NEW = Component must be replaced when removed.

RTX20_1010HO-009-020_a

GENERAL

The following tools are required for testing most of the electrical components.

REQUIRED TOOLS	
BACK PROBE TEST WIRES (P/N 529 036 063)	
FLUKE 115 MULTIMETER (P/N 529 035 868)	
ECM ADAPTER TOOL (P/N 529 036 166)	

GEARBOX OVERVIEW

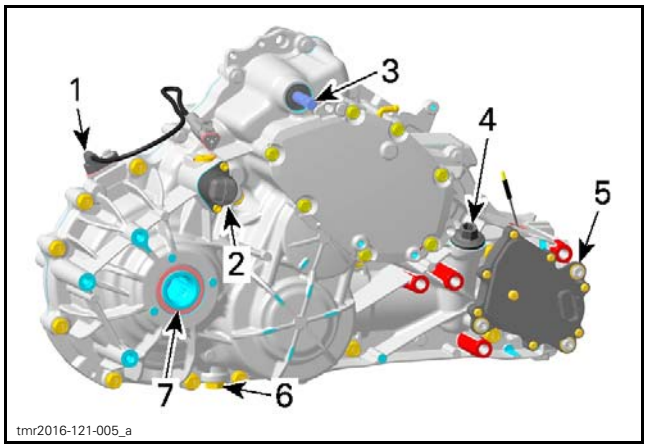

1. *Vehicle speed sensor (VSS)*
2. *Differential locking actuator*
3. *Shift shaft*
4. *Gearbox oil dipstick*
5. *4WD actuator*
6. *Magnetic drain plug*
7. *Rear differential output shaft*

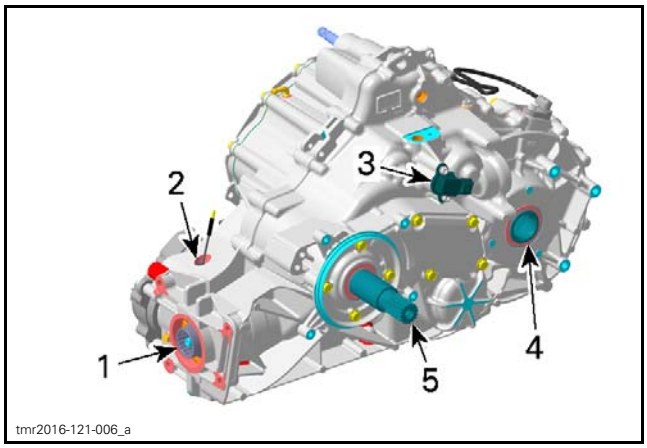

1. *4WD coupling sleeve*
2. *4WD indicator switch*
3. *Gearbox position sensor (GBPS)*
4. *Rear differential output shaft*
5. *Countershaft*

MAINTENANCE

RECOMMENDED GEARBOX OIL

XPS™ RECOMMENDED GEARBOX OIL	
Scandinavia	75W140 SYNTHETIC GEAR OIL (EUR) (P/N 779215)
Other countries	75W140 SYNTHETIC GEAR OIL (P/N 779160)
If THE RECOMMENDED XPS GEARBOX OIL IS NOT AVAILABLE	
Use a 75W140 gearbox oil that meets the API GL-5 specification.	

NOTICE **Do not use another type of oil when servicing.**

VERIFYING THE GEARBOX OIL LEVEL

Place the vehicle on a level surface. Select PARK position.

Tilt the cargo box.

Clean gearbox oil dipstick area.

Unscrew and remove the gearbox oil dipstick wipe clean.

NOTICE **Pay attention not to loose O-ring on oil dipstick.**

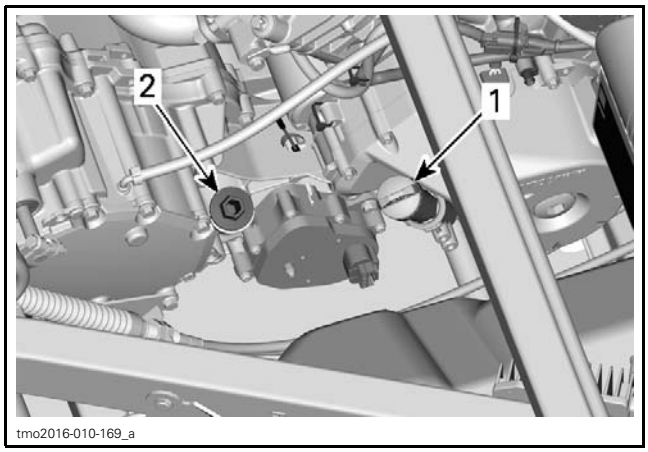

1. *Engine oil dipstick*
2. *Gearbox oil dipstick*

Reinstall dipstick, screw in it completely.

Remove dipstick again and check oil level. It should be near or equal to the upper mark.

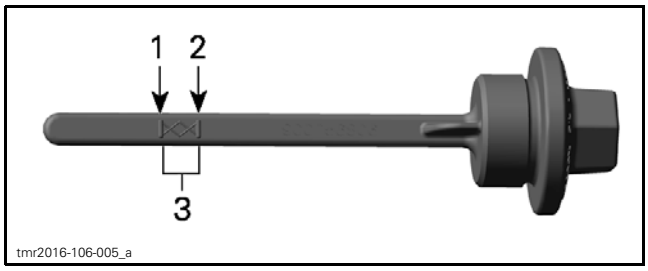

1. *MIN.*
2. *MAX.*
3. *Operating range*

To add oil, place a funnel into the dipstick hole.

Add a small amount of recommended oil and recheck oil level.

Repeat the above procedures until oil level reaches the dipstick's upper mark.

NOTICE **Operating the gearbox with an improper oil level may severely damage gearbox.**

NOTE: Do not overfill. Wipe off any spillage.

Properly tighten oil dipstick.

REPLACING THE GEARBOX OIL

NOTE: When replacing the gearbox oil, it is recommended to clean the vehicle speed sensor (VSS) at the same time.

Draining Procedure

Prior to change the oil, ensure vehicle is on a level surface.

Oil change should be done with a warm engine.

⚠ WARNING

The gearbox oil can be very hot.

Place a drain pan under the gearbox drain plug area.

1. *Oil drain plug*

Clean:

– Drain plug area
– Gearbox oil dipstick area.

Remove magnetic drain plug and discard sealing ring.

Remove oil dipstick.

NOTICE **Pay attention not to loose O-ring on oil dipstick.**

Let oil completely drain from gearbox.

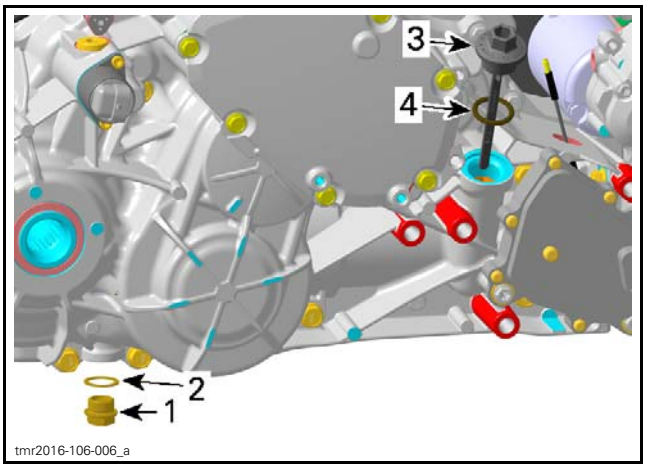

1. *Magnetic drain plug*
2. *Sealing ring*
3. *Oil dipstick*
4. *O-ring*

Dispose gearbox oil as per your local environmental regulations.

Inspection

Oil condition gives information about the teeth condition inside the gearbox. See *TROUBLESHOOTING* in this subsection.

Clean the magnetic drain plug from metal shavings and dirt. Presence of debris gives an indication of failure inside the gearbox. Check gearbox to correct the problem.

Replace O-ring of oil filler screw if brittle, hard or otherwise damaged.

Filling Procedure

Ensure vehicle on a level surface.

Make sure that magnetic drain plug is reinstalled and tight.

Always install a NEW sealing ring.

TIGHTENING TORQUE	
Magnetic drain plug	30 N•m ± 3 N•m (22 lbf•ft ± 2 lbf•ft)

Fill the gearbox through the oil dipstick hole.

CAPACITY
1.25 L (42.3 U.S. oz)

NOTICE **Do not use another type of oil when servicing.**

After filling check the oil level, refer to *VERIFYING THE GEARBOX OIL LEVEL* in this subsection.

NOTE: Wait a while to allow oil to flow down to the gearbox housing.

Install the oil dipstick with its O-ring.

Tighten oil dipstick to specification.

TIGHTENING TORQUE	
Oil dipstick	5 N•m ± 0.6 N•m (44 lbf•**in** ± 5 lbf•**in**)

CLEANING THE VEHICLE SPEED SENSOR (VSS)

Remove the VSS. Refer to *VEHICLE SPEED SENSOR (VSS)* in this subsection.

Remove all metal particles and oil from the VSS magnet.

NOTE: A dirty VSS will cause erratic speedometer readings.

TROUBLESHOOTING

UNUSUAL GEARBOX NOISE AND/OR VIBRATIONS

1. **Low oil level in gearbox.**
   - *Oil leakage from gearbox. Replace damaged gasket(s) and/or oil seal(s).*
2. **Defective bearings.**
   - *Bearing(s) do(es) not turn smoothly. Replace bearing(s).*
3. **Damaged or worn gears.**
   - *Inspect gears for damages or missing teeth. Replace respective gears.*

GEAR INDICATION FAILS

1. **Defective gearbox position sensor (GBPS).**
   - *Perform a gearbox position sensor test (refer to procedure in this subsection).*
   - *Damaged wires. Repair as required.*

GEAR(S) IS (ARE) HARD TO SHIFT

1. **Incorrect shifter cable adjustment.**
   - *Adjust shifter cable (refer to SHIFTER CABLE in SHIFTER subsection.*

4 WHEEL DRIVE INDICATION FAILS

1. **4WD indicator failure.**
   - *Test 4WD actuator.*
   - *Bad contact. Check for corrosion or loose connector.*
   - *Damaged wires. Repair as required.*

4 WHEEL DRIVE DOES NOT ENGAGE OR DISENGAGE

1. **Defective 4WD actuator.**
   - *Test 4WD actuator.*
2. **Damaged or worn shifting fork or sleeve.**
   - *Remove 4WD actuator and inspect shifting fork and sleeve.*

REAR DIFFERENTIAL LOCKING MECHANISM DOES NOT ENGAGE OR DISENGAGE

1. **Locking mechanism braced.**
   - *Ride vehicle and fully turn to the left and right to release stressed locking mechanism.*

NOTICE **Lifting the rear of the vehicle increases the stress to the rear differential.**

2. Defective differential locking actuator.
   - *Press differential switch and listen or feel if actuator works.*
   - *Test the DIFFERENTIAL LOCKING ACTUATOR, refer to procedures in this subsection.*

PROCEDURES

VEHICLE SPEED SENSOR (VSS)

VSS Location

The vehicle speed sensor is located on the rear top side of the left gearbox housing.

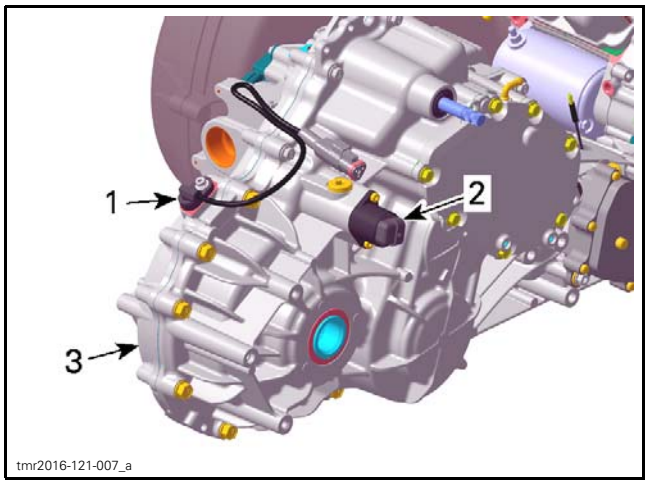

1. VSS (Vehicle Speed Sensor)
2. Differential locking actuator
3. Left housing of gearbox

VSS Wire Identification

FUNCTION	PIN
12-volt input from fuse F5	A
Speed signal (to ECM-A E1)	B
Ground (to ECM-A D4)	C

VSS Circuit Protection

CONDITION	CIRCUIT PROTECTION
Supplied with main relay activated	Fuse 5 of fuse block 2 (from main relay R2)

Testing the VSS Input Voltage

1. Turn ignition switch ON.
2. Back-probe the VSS connector and measure voltage.

VSS INPUT VOLTAGE TEST		
TEST PROBES		MEASUREMENT (KEY ON)
PIN A	PIN C	Battery voltage

If voltage is not as specified, test positive and ground separately.

Testing the VSS Signal

1. Lift rear of vehicle so that rear wheels are off the ground.
2. Set transmission to 2WD and to Neutral.
3. Turn ignition switch ON.
4. Back-probe the VSS connector and measure voltage while slowly rotating rear wheels by hand.

VSS SIGNAL TEST		
TEST PROBES		MEASUREMENT (WHILE ROTATING WHEELS)
PIN B	PIN C	Alternate reading between battery voltage and 0 Vdc

NOTE: Since we measure pulsating voltage, the numeric display will continuously change. The analog display may be easier to follow.

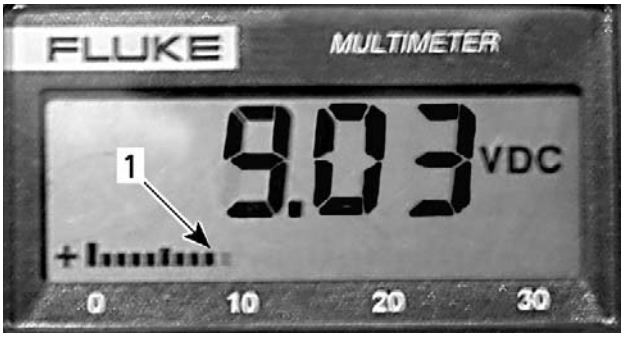

1. Analog display

Removing the VSS

Disconnect VSS connector.

Remove screw retaining the VSS.

Using a long screwdriver, pull out the VSS.

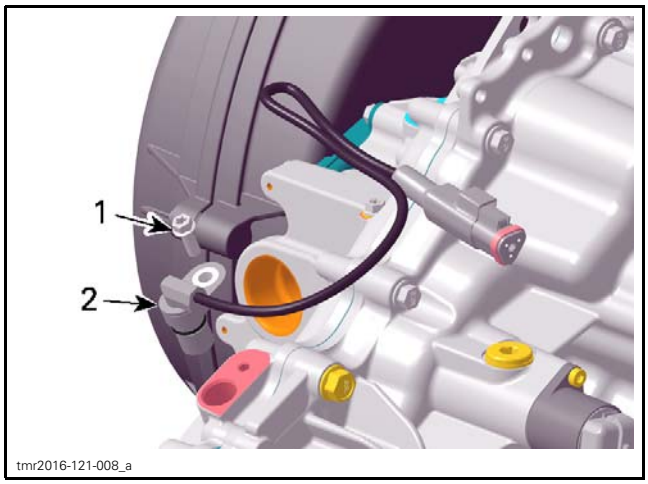

1. Screw
2. VSS

Cleaning the Vehicle Speed Sensor (VSS)

Remove all metal particles and oil from the VSS magnet.

NOTE: A dirty VSS will cause erratic speedometer readings.

Installing the VSS

The installation is the reverse of the removal procedure. However, pay attention to the following.

Lubricate VSS O-ring.

SERVICE PRODUCT
SUPER LUBE GREASE (P/N 293 550 030)

Tighten retaining screw to specification.

TIGHTENING TORQUE	
VSS retaining screw	10 N•m ± 1 N•m (89 lbf•**in** ± 9 lbf•**in**)

GEARBOX POSITION SENSOR (GBPS) AND MAGNET

GBPS Reset

When replacing the gearbox position sensor (GBPS), it is required to reset (re-zero) its values for proper operation.

A reset must be carried out each time any of the following parts has been replaced:

– Gearbox assembly
– Shift drum
– GBPS
– ECM.

1. Connect the vehicle to the BRP diagnostic software (BUDS2).
2. In BUDS2, select the following:
   – **Settings** page
   – **ECM** tab
   – **Initialization - Reset Gear Position Sensor**.
3. Follow instructions display in the screen.

If an error occurred or the GBPS is not within the allowed range while resetting, the ECM will generate a fault code and will not accept the setting.

4. If a fault message is displayed, follow the instructions in the message(s).
5. Check for fault codes.

If a fault code is generated:

– Carry out the service action.
– Reset the fault code.
– Repeat the reset procedure.

6. Close and disconnect BUDS2.

NOTE: Do not turn ignition key OFF.

7. Verify gears engagement.
   7.1 With the vehicle on ground and in NEUTRAL position, start engine.
   7.2 During 4-5 seconds, rev engine to 2500 ± 200 RPM.
   7.3 Let engine returns to idle.
   7.4 Select an other position (P, R, H or L). Repeat substeps 7.2 and 7.3 until all position are verified.

   NOTE: The vehicle must be in movement to complete the procedure on R, H and L position.

Testing the GBPS Input Voltage

NOTE: Prior to conduct testing, check fault codes in BUDS2.

Set shift lever in NEUTRAL position.

Back-probe the GBPS connector.

Test as follow:

GBPS INPUT VOLTAGE TEST		
GBPS CONNECTOR PIN		MEASUREMENT
1	2	5 volts

If voltage is adequate, check GBPS signal wire.

If there is no voltage, check each GBPS input as follows.

GBPS INPUT VOLTAGE TEST		
GBPS CONNECTOR PIN	BATTERY	MEASUREMENT
1	Negative (-) post	5 volts
2	Positive (+) post	Battery voltage

If there is no voltage, check wires and connector pins. Replace or repair defective parts and reset fault codes.

Testing the GBPS Communication Link Continuity

Unplug ECM-A connector from ECM and connect it to the ECM adapter tool.

GBPS INPUT VOLTAGE TEST		
GBPS CONNECTOR PIN	ECM ADAPTER PIN	MEASUREMENT @ 20°C (68°F)
3	A-F4	Below 1 Ω

If resistance is out of specification, check wires and connectors. Repair and reset fault codes.

If resistance is good and the other tests succeeded, replace the GBPS and reset fault codes.

NOTE: The GBPS must be reset.

Removing the GBPS and Magnet

Set shift lever in NEUTRAL position.

Unplug GBPS connector.

Remove screws and withdraw GBPS.

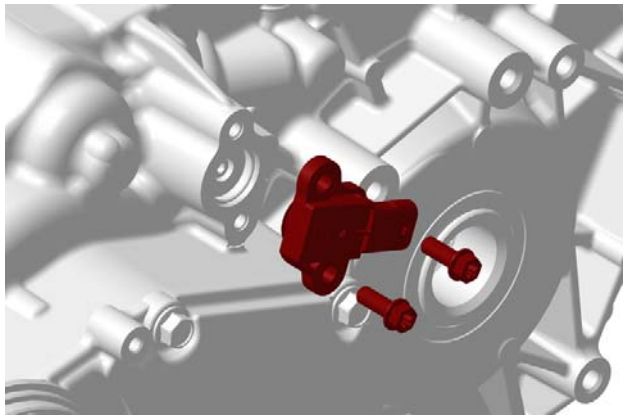

RTX20_1010HO-009-002

Remove:
- Retaining screw
- Magnet.

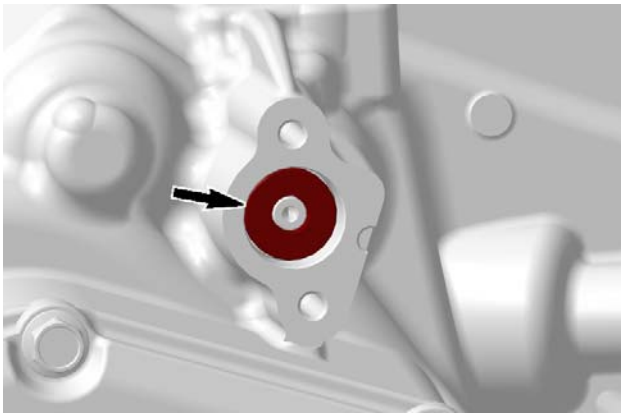

RTX20_1010HO-009-003_a

Installing the GBPS and Magnet

The installation is the reverse of the removal procedure. However, pay attention to the following details.

Shift lever must be in the NEUTRAL position.

Align nose on the backside of the magnet with the notch in the shift drum.

Tighten magnet retaining screw to specification.

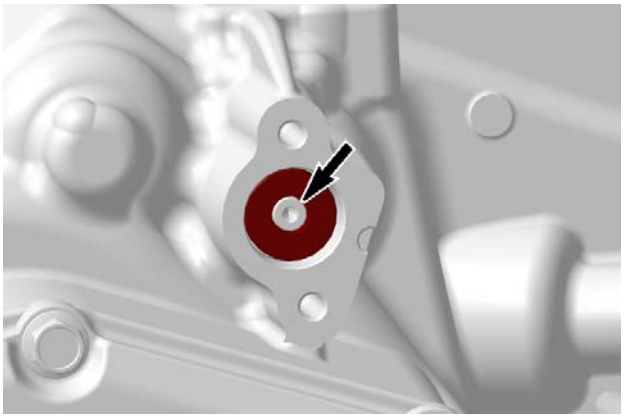

RTX20_1010HO-009-003_b

TIGHTENING TORQUE	
Magnet retaining screw	4 N•m ± 0.3 N•m (35 lbf•**in** ± 3 lbf•**in**)

Lubricate GBPS O-ring.

SERVICE PRODUCT
SUPER LUBE GREASE (P/N 293 550 030)

Tighten GBPS retaining screws to specification.

TIGHTENING TORQUE	
GBPS retaining screws	10 N•m ± 1 N•m (89 lbf•**in** ± 9 lbf•**in**)

Reset the GBPS. Refer to *GBPS RESET* in this subsection.

4WD ACTUATOR

Testing the Actuator Power Input

Unplug 4WD actuator connector.

Turn ignition key ON.

Measure voltage as follows.

ACTUATOR INPUT VOLTAGE TEST		
GBPS CONNECTOR PIN		MEASUREMENT
1	2	Battery voltage

If the result is out of specifications, check power input circuit. Refer to wiring diagram.

If the result is good, check the 4WD circuit continuity.

Testing the 4WD Circuit Continuity

1. Turn ignition switch OFF.
2. Unplug:
   - Right steering switch (RSS)
   - 4WD Actuator connector
   - HIC connector.
3. Measure continuity.

ACTUATOR CIRCUIT CONTINUITY TEST		
VEHICLE HARNESS CONNECTOR		MEASUREMENT
RSS 3	HIC B	Close to 0 Ω
RSS 2	Frame (ground)	
CL 6	HIC H	

ACTUATOR CIRCUIT CONTINUITY TEST		
ACTUATOR CONNECTOR PIN	HIC PIN	MEASUREMENT
3	H	Close to 0 Ω
4	B	

If continuity is good, replace 4WD actuator.

If continuity is out of specification repair wires and / or connectors, or replace actuator switch.

Removing the 4WD Actuator

NOTE: Before beginning any servicing on the 4WD actuator, make sure the vehicle is in 4WD position. No need to remove engine from vehicle.

Drain gearbox oil, refer to *REPLACING THE GEARBOX OIL* in this subsection.

Remove:
- 4WD actuator screws
- 4WD actuator.

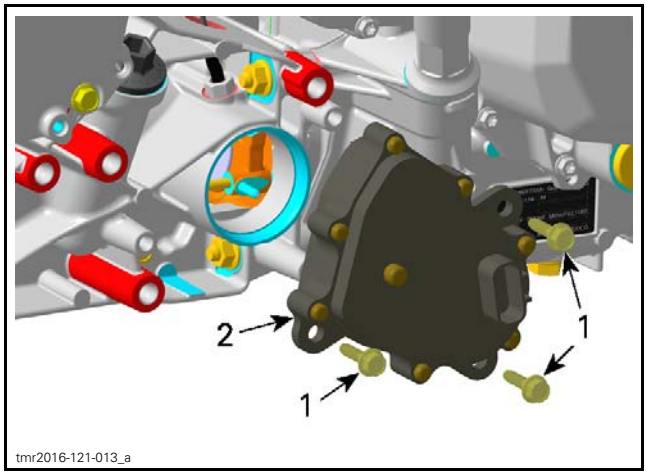

1. Screws
2. 4WD actuator

Installing the 4WD Actuator

Lubricate 4WD actuator O-ring.

SERVICE PRODUCT
SUPER LUBE GREASE (P/N 293 550 030)

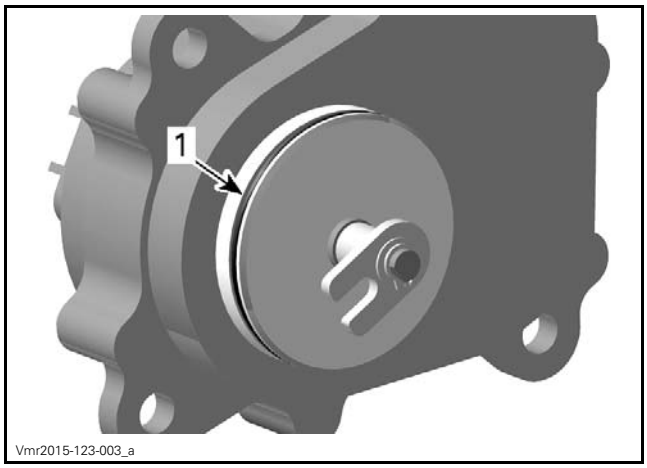

1. 4WD actuator O-ring

Ensure coupling fork is in 4WD position (toward the front of vehicle).

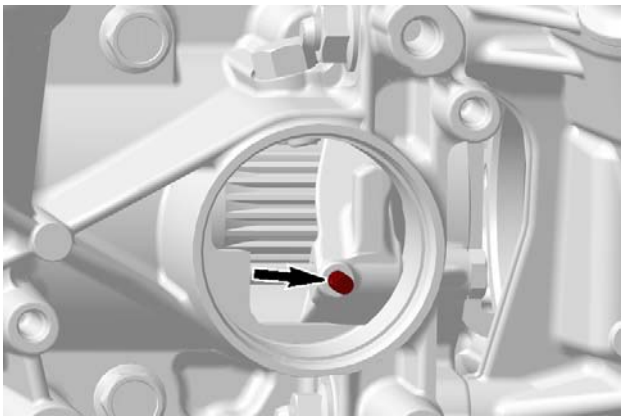
RTX20_1010HO-009-004_a

Align the 4WD actuator fork with the pin on coupling fork then push the 4WD actuator in the housing. See the following illustration to position the 4WD actuator correctly.

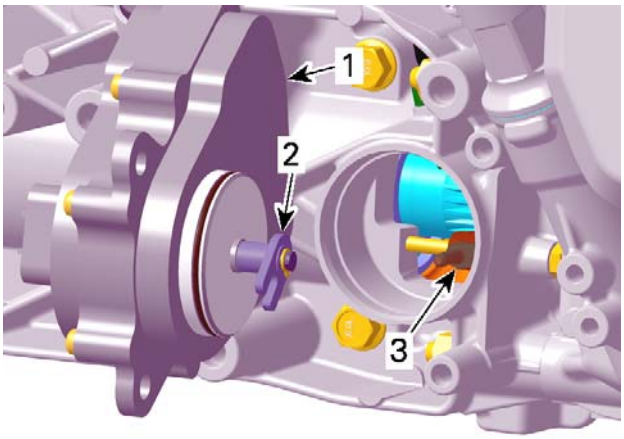

tmr2016-121-016_a

1. 4WD actuator
2. 4WD actuator fork
3. Coupling fork

Rotate the 4WD actuator counterclockwise until it orients itself to mounting position.

NOTICE **Do not cut or break the 4WD actuator O-ring.**

Install all 4WD actuator screws and tighten them.

TIGHTENING TORQUE	
4WD actuator screws	10 N•m ± 1 N•m (89 lbf•**in** ± 9 lbf•**in**)

Connect 4WD actuator.

Set gearbox to PARK position.

Lift the front of vehicle.

Turn front wheels. The front propeller shaft should not turn.

If the front propeller shaft turns, the 4WD actuator is not installed correctly. Remove 4WD actuator and reinstall it.

Place ignition switch to ON position and select the 2WD position.

Turn front wheel again. The front propeller shaft should turn easily.

If the front propeller shaft does not turn, the 4WD actuator is not installed correctly. Remove 4WD actuator and reinstall it.

Refill missing gearbox oil. Refer to *REPLACING THE GEARBOX OIL* in this subsection.

Install all other removed parts.

DIFFERENTIAL LOCKING ACTUATOR

Testing the Differential Locking Actuator

Testing the Differential Locking Actuator Function

1. Set shift lever on NEUTRAL.
2. Turn ignition switch to ON. Do not start the engine.
3. Place the rear differential switch in LOCK position.

NOTE: The rear differential is locked when the switch is pushed upwards.

4. Lift the rear of the vehicle until rear wheels are off the ground.
5. Turn a rear wheel.
   – If both wheels turn, the actuator is in LOCK position. Continue with step 6
   – If only one wheel turns, check the switch position and turn the wheel again. If the result is the same, carry out *TESTING THE DIFFERENTIAL LOCKING ACTUATOR RESISTANCE*.
6. Move the rear differential switch in UNLOCK position.

NOTE: The rear differential is unlocked when the switch is pushed downwards.

7. Turn a rear wheel.
   – If only one wheel turns the actuator and its electrical system work properly.
   – If both wheels turn, check the switch position and turn the wheel again. If the result is same, carry out *TESTING THE DIFFERENTIAL LOCKING ACTUATOR RESISTANCE*.

Testing the Differential Locking Actuator Resistance

Disconnect differential locking actuator connector.

Set multimeter to Ω.

Probe terminals as per following table.

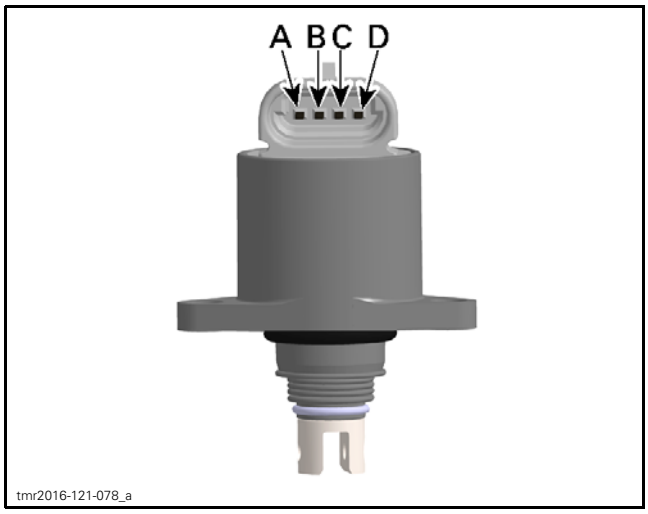

DIFFERENTIAL ACTUATOR RESISTANCE TEST		
ACTUATOR PIN		MEASUREMENT @ 20°C (68°F)
A	D	28 - 34 Ω
B	C	

If resistance is not within specifications, replace the actuator.

If resistance tests good, **reconnect** the actuator connector.

Install ECM-A connector on ECM adapter.

Using a multimeter, recheck resistance as per table.

DIFFERENTIAL ACTUATOR RESISTANCE TEST		
ECM ADAPTOR PIN		MEASUREMENT @ 20°C (68°F)
A-C2	A-C1	28 - 34 Ω
A-B2	A-A4	

If resistance value is correct replace ECM, refer to *ELECTRONIC FUEL INJECTION (EFI)* subsection.

If resistance value is incorrect, repair the connectors or replace the wiring harness between ECM connector and the actuator.

Removing the Differential Locking Actuator

Remove plug screw and pin.

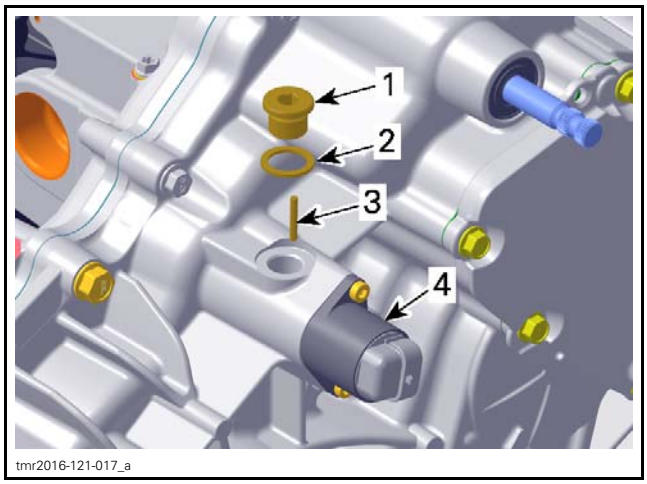

1. *Plug screw*
2. *Sealing ring (discard it)*
3. *Pin*
4. *Differential locking actuator*

Remove the differential actuator.

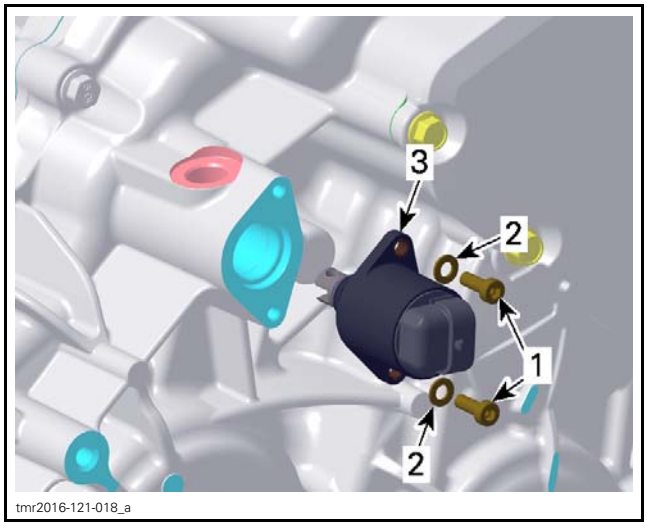

1. *Retaining screws*
2. *Washers*
3. *Differential locking actuator*

Installing the Differential Locking Actuator

Lubricate actuator O-ring.

SERVICE PRODUCT
SUPER LUBE GREASE (P/N 293 550 030)

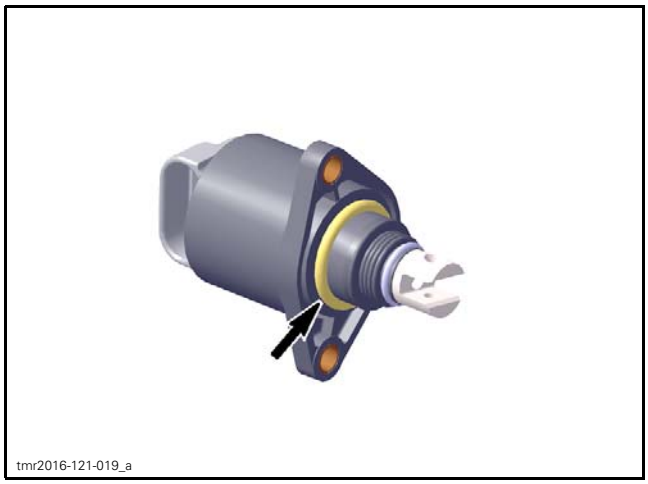
tmr2016-121-019_a

Tighten retaining screws to specification.

TIGHTENING TORQUE	
Differential locking actuator retaining screws	3 N•m ± 0.2 N•m (27 lbf•**in** ± 2 lbf•**in**)

Install a **NEW** sealing ring and tighten plug screw to specification.

TIGHTENING TORQUE	
Plug screw	30 N•m ± 3 N•m (22 lbf•ft ± 2 lbf•ft)

GEARBOX OIL SEALS

Replacing the Gearbox Oil Seal

Replace oil seals if they are brittle, hard or damaged.

A small flat screwdriver can be used to remove most of these oil seals.

NOTICE **Avoid scoring parts during oil seal removal.**

When replacing an oil seal, take this opportunity to inspect the following:

- Check bearings behind each oil seal for contamination and/or metal shavings.
- Check oil seal running surfaces for scratches.

Lubricating the Oil Seal

Lubricate sealing lips all around.

Fill up the room between sealing lips halfway around the perimeter.

SERVICE PRODUCT
PETAMO GREASE GHY 133N (P/N 420 899 271)

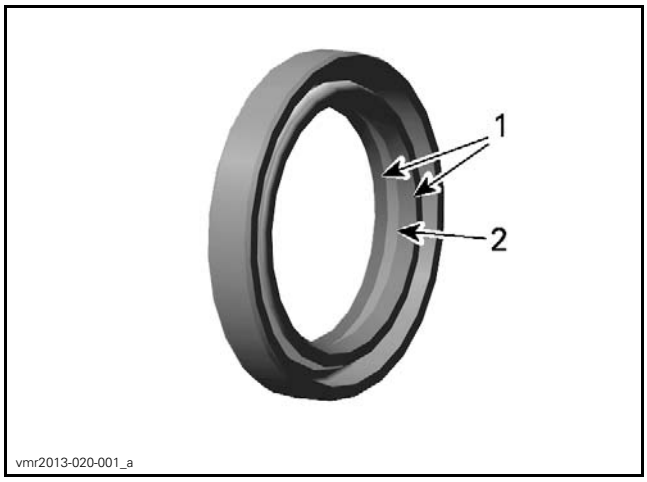

vmr2013-020-001_a

1. *Sealing lips*
2. *Room between sealing lips*

Countershaft Oil Seal

To replace the countershaft oil seal, remove:

- Drive and driven pulleys
- CVT air guide.

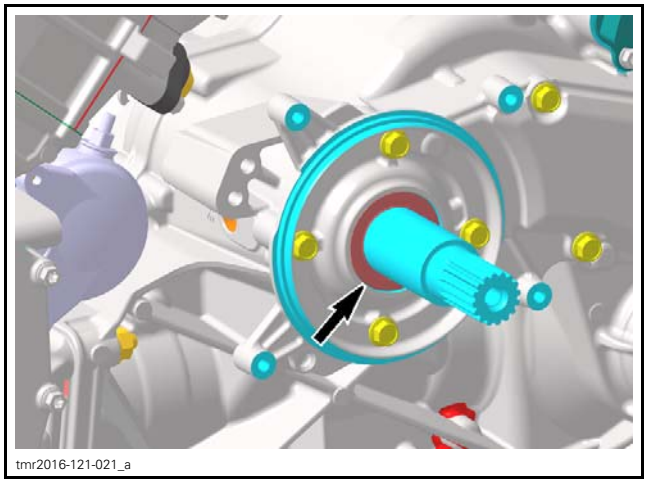
tmr2016-121-021_a

Install countershaft oil seal.

REQUIRED TOOL	
OIL SEAL INSTALLER (COUNTERSHAFT) (P/N 529 036 391)	

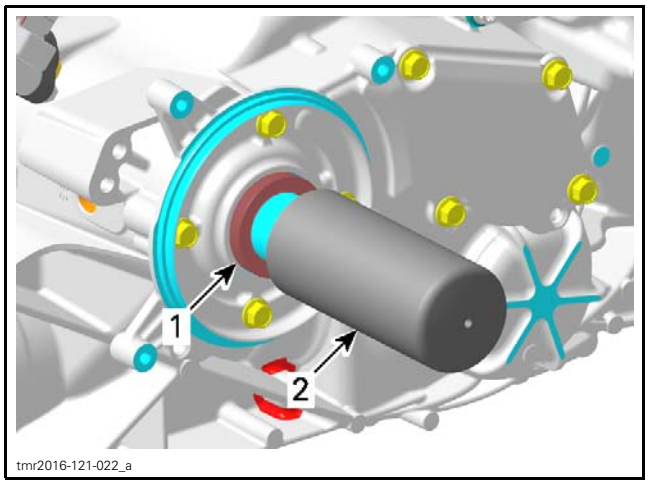

1. *Countershaft oil seal*
2. *Oil seal installer*

Shift Shaft Oil Seal

Remove the shift plate. Refer to *SHIFTER* subsection.

The shift shaft oil seal can be removed without removing the gearbox from the vehicle.

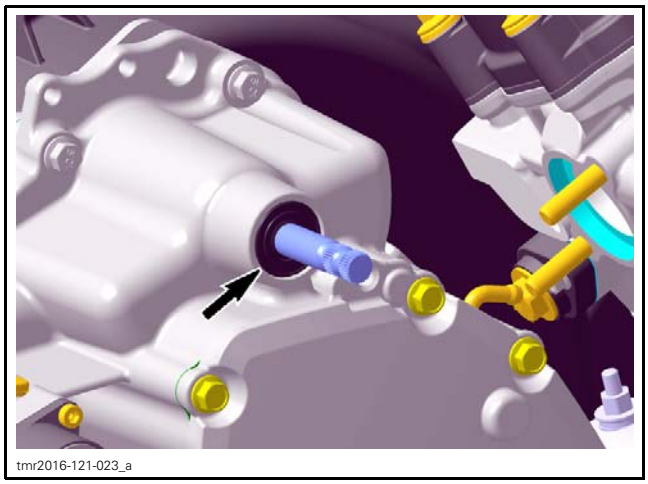

Use a suitable tube with the proper diameter to install the oil seal.

If gearbox housing is apart, use following tools for shift shaft oil seal installation.

REQUIRED TOOLS	
OIL SEAL INSTALLER (GEARBOX) (P/N 529 035 758)	
HANDLE (P/N 420 877 650)	

NOTICE **Oil seal must be installed with sealing lip toward gearbox.**

Output Shaft Oil Seals

Remove the appropriate drive shaft. Refer to *REAR DRIVE* subsection.

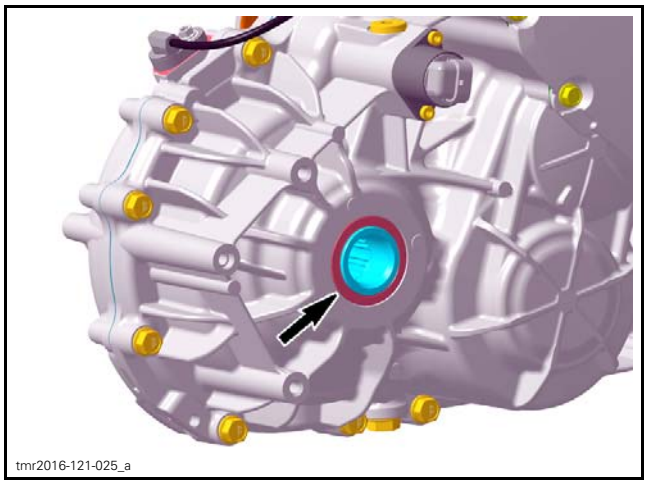

RIGHT SIDE

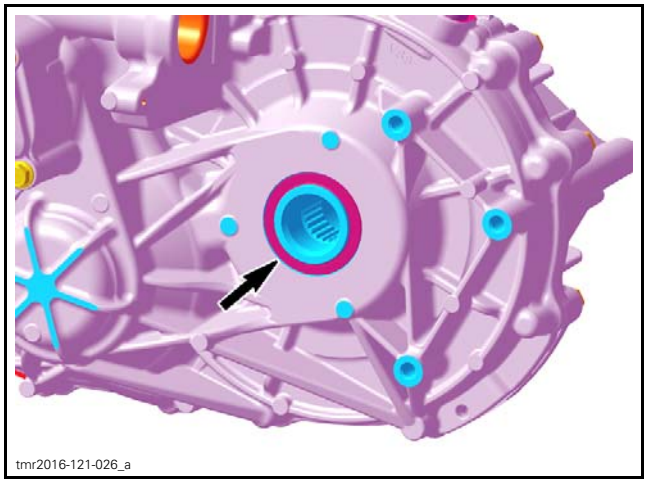

LEFT SIDE

Punch a sharp screwdriver through oil seal for removal.

Place oil seal on output shaft and install it using the following tools.

REQUIRED TOOLS	
SLEEVE INSTALLER (P/N 529 036 455)	
OIL SEAL INSTALLER (DIFFERENTIAL OUTPUT) (P/N 529 036 456)	

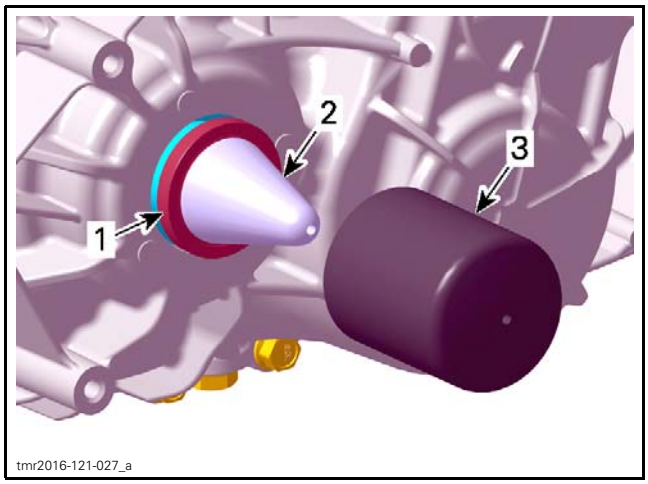

1. *Output shaft oil seal*
2. *Sleeve installer*
3. *Oil seal installer*

GEARBOX ASSEMBLY

Removing the Gearbox Assembly

Remove engine from vehicle. Refer to *ENGINE REMOVAL AND INSTALLATION* for the procedure.

Refer to *CONTINUOUSLY VARIABLE TRANSMISSION (CVT)* subsection to remove following parts:

– CVT cover
– Drive and driven pulleys
– CVT air guide.

Drain gearbox oil. Refer to *REPLACING THE GEARBOX OIL* in this subsection.

Remove the 4WD actuator, see procedure in this subsection.

Unscrew the four (4) gearbox retaining nuts.

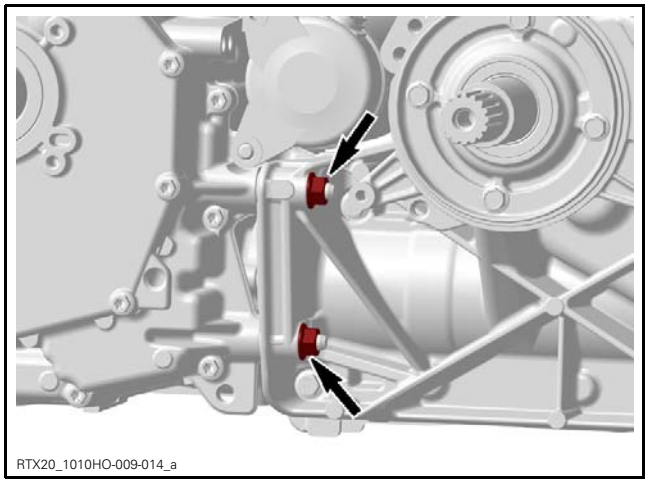

LH SIDE OF ENGINE

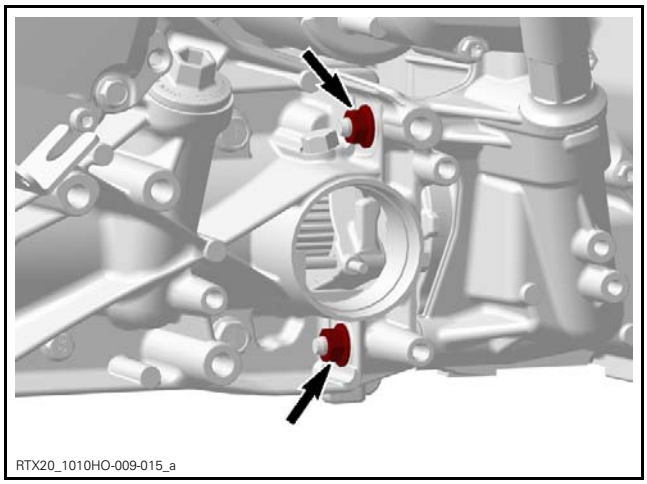

RH SIDE OF ENGINE

Pull gearbox to separate it from engine.

Installing the Gearbox

The installation is the reverse of the removal procedure. However, pay attention to following.

Before gearbox installation check O-ring on bearing cover if brittle, hard or damaged. Replace if necessary.

Lubricate O-ring on rear bearing cover.

SERVICE PRODUCT
Engine oil

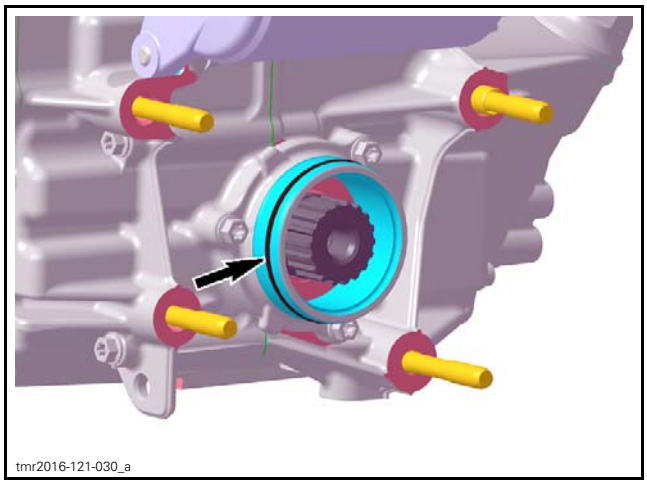

Tighten gearbox retaining nuts to specification.

TIGHTENING TORQUE	
Gearbox retaining nuts	25 N•m ± 3 N•m (18 lbf•ft ± 2 lbf•ft) + LOCTITE 243 (BLUE) (P/N 293 800 060)

After installation refill gearbox oil, refer to *REPLACING THE GEARBOX OIL* in this subsection.

GEARBOX HOUSING

Disassembling the Gearbox Housing

See procedures in this subsection to remove:

- *4WD ACTUATOR*
- *GBPS (GEARBOX POSITION SENSOR)*
- *DIFFERENTIAL LOCKING ACTUATOR.*

Set gearbox to PARK position.

Remove bearing cover.

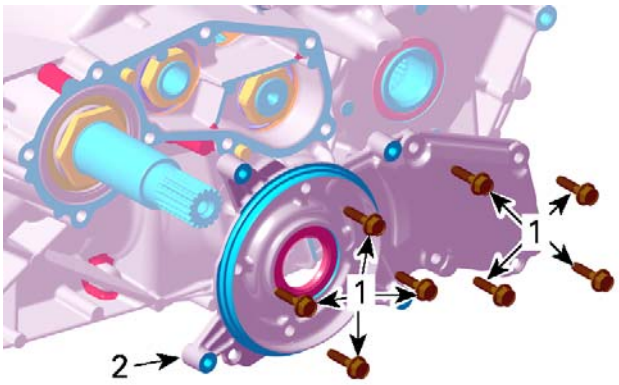

tmr2016-121-031_a

1. *Retaining screws*
2. *Bearing cover*

Remove countershaft nut.

NOTE: Heat up nut with a heat gun to break threadlocker.

CAUTION Nut can loosen abruptly.

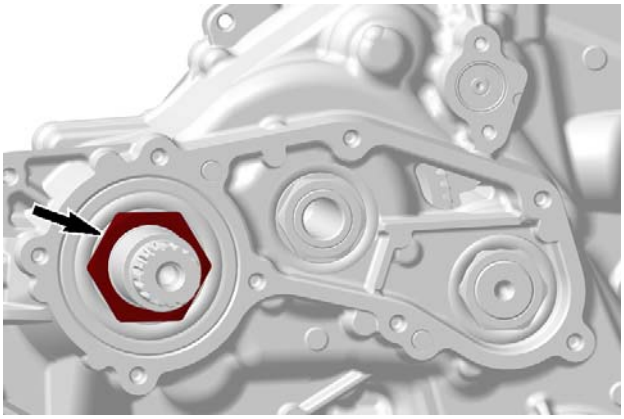

RTX20_1010HO-009-005_a

REQUIRED TOOLS	
M34 SOCKET (P/N 529 036 388)	
SPLINES SOCKET 1/2" (P/N 529 036 389)	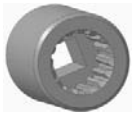

Install 4 screws to retain the M34 socket and tighten them to specification.

TIGHTENING TORQUE	
M34 socket retaining screws	10 N•m ± 1 N•m (89 lbf•**in** ± 9 lbf•**in**)

NOTICE Turn spline socket clockwise to loosen the nut.

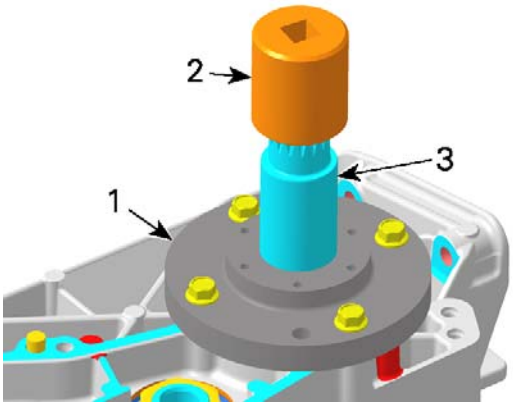

tmr2016-121-032_a

1. *M34 socket*
2. *Spline socket*
3. *Countershaft*

Remove nuts of main shaft and intermediate shaft.

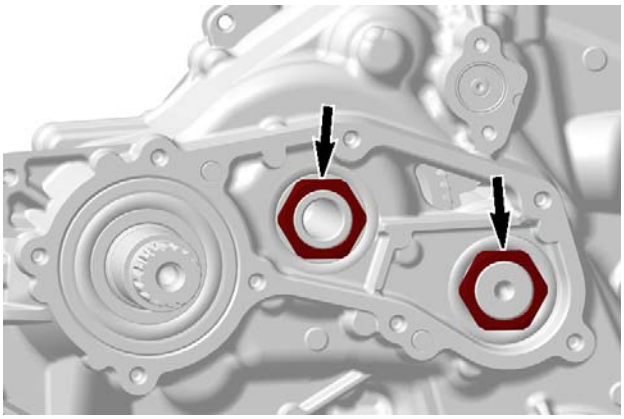

RTX20_1010HO-009-006_a

Refer to *GEARBOX AND SHIFTING MECHANISM* in this subsection and remove:

– Parking lock gear
– Index washer.

Remove all gearbox housing screws:

1. Start removing the M6 screws.
2. Then remove the M8 screws.

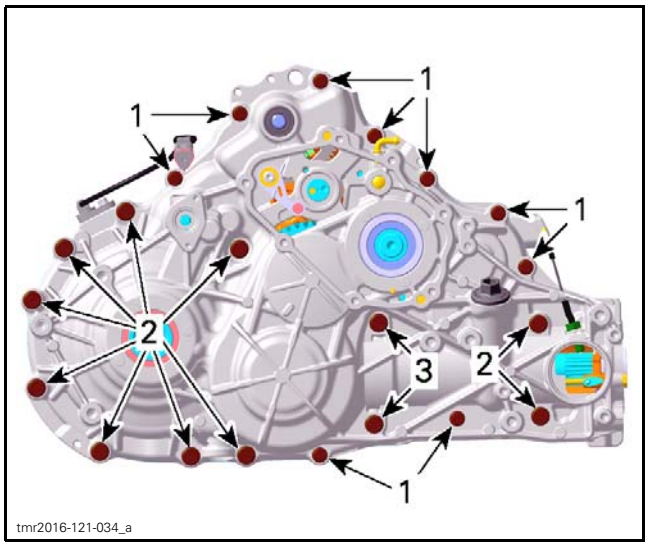

1. 11 screws M6 x 45
2. 10 screws M8 x 45
3. 2 screws M8 x 65

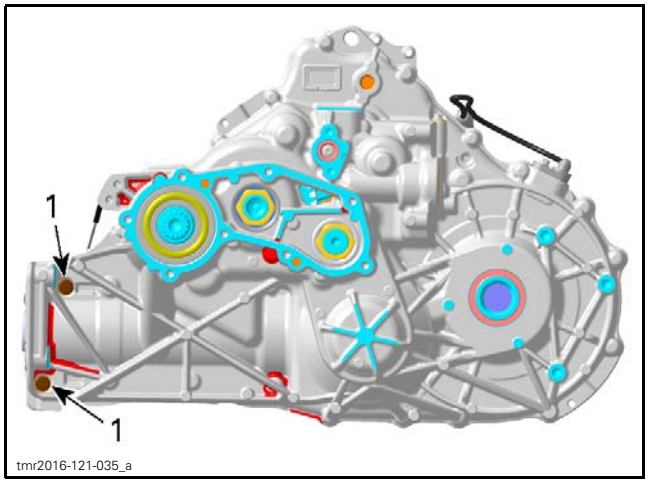

1. 2 screws M6 x 45

Separate gearbox housing, use 2 big screwdrivers.

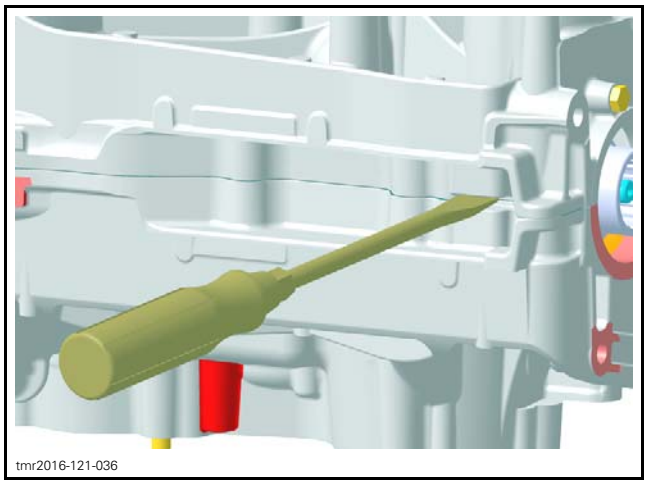

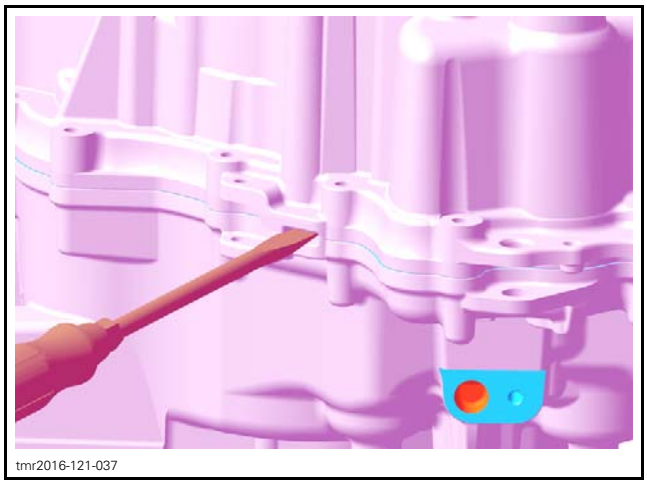

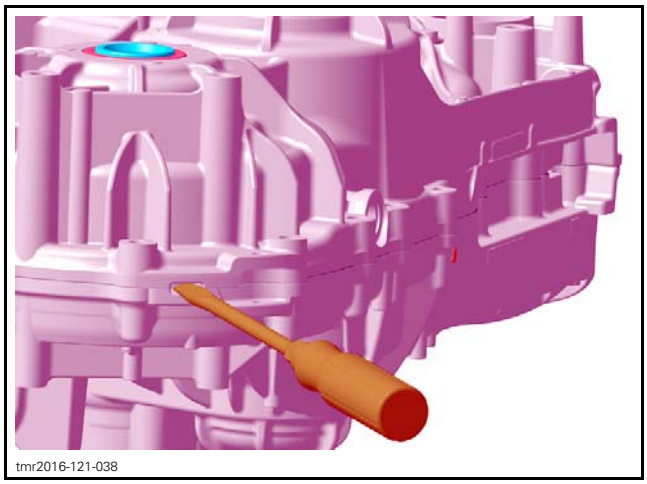

If necessary, refer to procedures in this subsection and remove:

– *GEARBOX AND SHIFTING MECHANISM*
– *OUTPUT SHAFT AND COUPLING MECHANISM*
– *REAR DIFFERENTIAL AND LOCKING MECHANISM*.

Inspecting the Gearbox Housing

Check gearbox ball bearings for: contamination and/or metal shavings.

Check if ball bearings turn freely and smoothly. Replace if necessary.

Replacing the Bearing

If necessary heat housing up to 100°C (212°F) before removing ball bearings.

⚠ WARNING

Clean oil, outside and inside, from housing before heating.

NOTICE **Always support gearbox housings properly when ball bearings are removed. Housing damages may occur if this procedure is not performed correctly.**

Use a blind hole bearing puller to remove ball bearings of:

– Countershaft (right cover)
– Intermediate shaft (right cover).

Remove retaining plate securing the main shaft and intermediate shaft bearings in the left housing.

Remove screw securing the main shaft bearing in the right cover.

Use a suitable puller to remove ball bearings of:

– Main shaft (right and left cover)
– Countershaft (left cover)
– Intermediate shaft (left cover)
– Differential ball bearings (right and left cover).

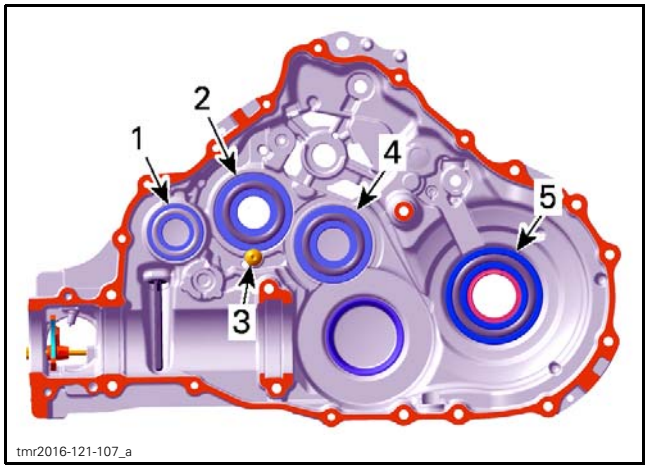

RIGHT GEARBOX HOUSING
1. *Ball bearing countershaft*
2. *Ball bearing main shaft*
3. *Screw*
4. *Ball bearing intermediate shaft*
5. *Ball bearing differential*

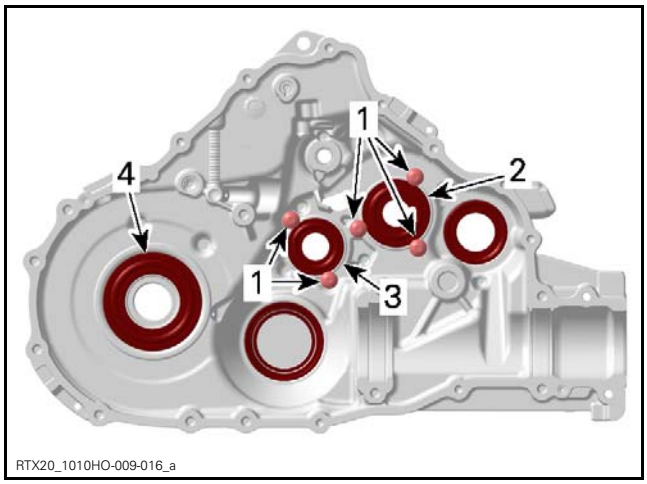

LEFT GEARBOX HOUSING
1. *Screws*
2. *Ball bearing main shaft*
3. *Ball bearing intermediate shaft*
4. *Ball bearing differential*

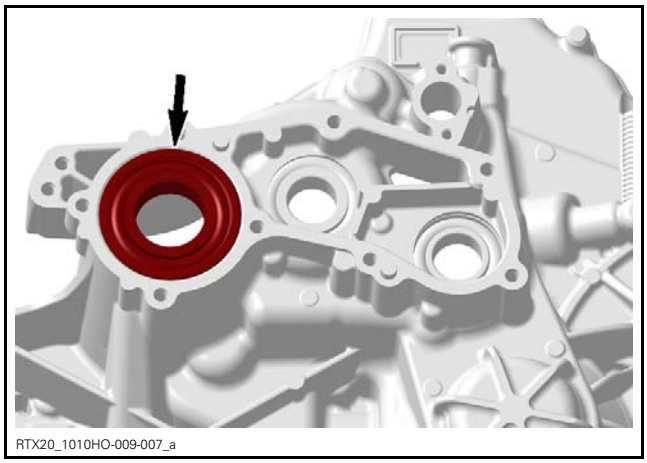

LEFT GEARBOX HOUSING - BALL BEARING COUNTERSHAFT

Unless otherwise instructed, never use hammer to install ball bearings. Use press machine only.

If necessary heat housings up to 100°C (212°F) before installing ball bearings.

⚠ WARNING

Clean oil, outside and inside, from housing before heating.

Place new bearing in freezer for 10 minutes before installation.

Use a suitable installer for installing ball bearings of countershaft, main shaft and intermediate shaft.

NOTE: Place gearbox housings on a wood stand before installing ball bearings.

TIGHTENING TORQUE	
Bearing retaining screws (left cover)	10 N•m ± 1 N•m (89 lbf•**in** ± 9 lbf•**in**)

TIGHTENING TORQUE	
Retaining screw main shaft bearing (right cover)	10 N•m ± 1 N•m (89 lbf•**in** ± 9 lbf•**in**) + LOCTITE 243 (BLUE) (P/N 293 800 060)

Install new oil seals with the proper installer (refer to *GEARBOX OIL SEALS* in this subsection).

Assembling the Gearbox Housing

Clean all metal components in a solvent.

Gearbox housing mating surfaces are best cleaned using a combination of LOCTITE CHISEL (GASKET REMOVER) (P/N 413 708 500) and a brass brush. Brush a first pass in one direction then make the final brushing perpendicularly (90°) to the first pass cross (hatch).

NOTICE **Do not wipe with rags. Use a new clean hand towel only.**

IMPORTANT: When beginning the application of the gear housing sealant, the assembly and the first torquing should be done within 10 minutes. It is suggested to have all you need on hand to save time.

Place sleeve installer on rear differential.

REQUIRED TOOL	
SLEEVE INSTALLER (P/N 529 036 455)	

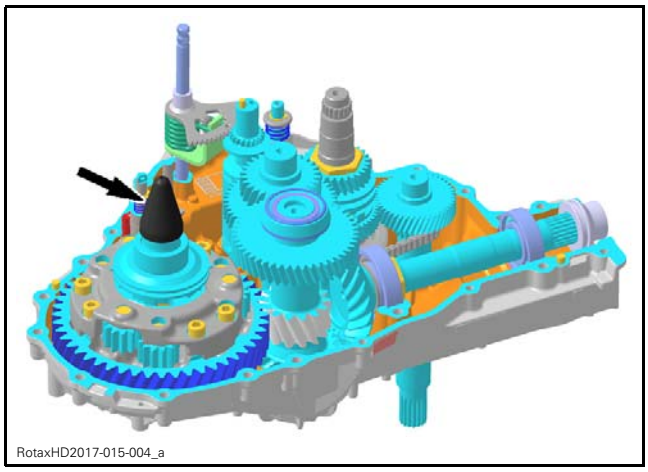

Apply sealant on mating surface.

SERVICE PRODUCT
LOCTITE 5910 (P/N 293 800 081)

Do not apply in excess as it will spread out inside gearbox housing.

NOTE: It is recommended to apply this specific sealant as described here to get a uniform application without lumps.

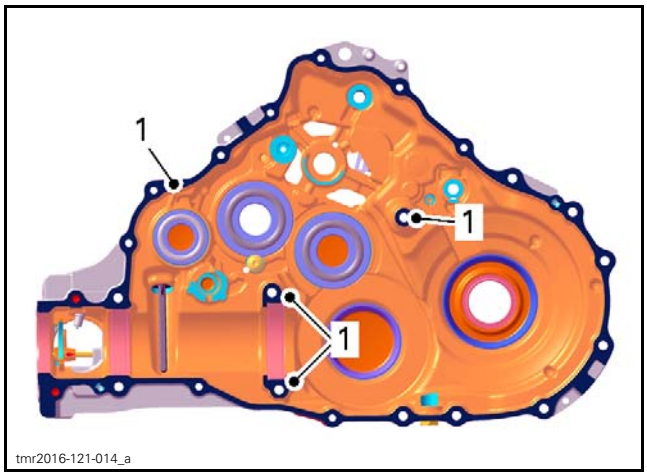

1. Apply sealant here

During installation of the right gearbox housing align the coupling fork with the groove in the coupling sleeve.

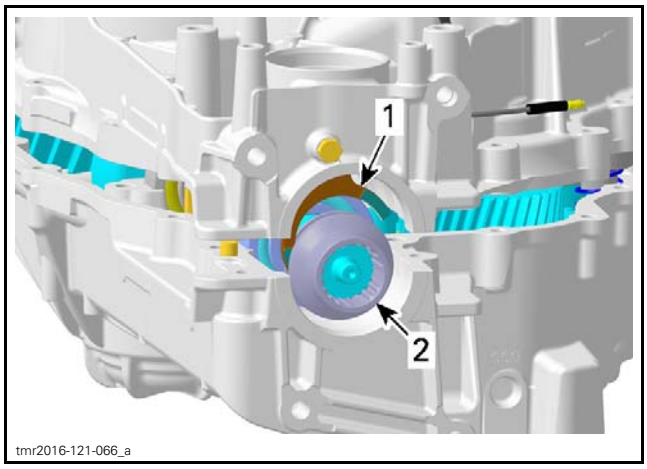

1. Coupling fork
2. Coupling sleeve

Install all gearbox housing screws.

Tighten M8 gearbox housing screws as per following sequence.

TIGHTENING TORQUE	
M8 gearbox housing screws	25 N•m ± 3 N•m (18 lbf•ft ± 2 lbf•ft)

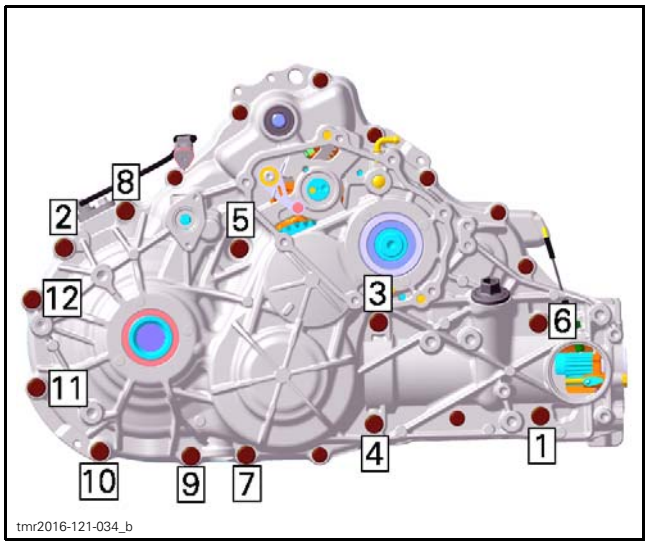

tmr2016-121-034_b

Tighten M6 gearbox housing screws as per following sequence.

TIGHTENING TORQUE	
M6 gearbox housing screws	10 N•m ± 1 N•m (89 lbf•**in** ± 9 lbf•**in**)

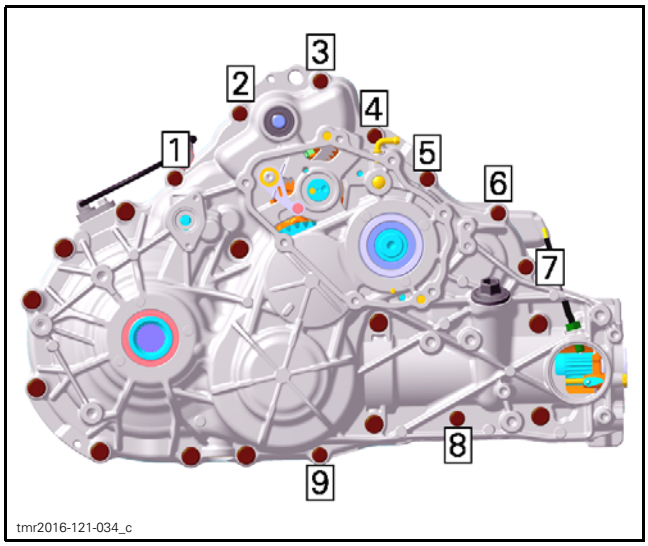

tmr2016-121-034_c

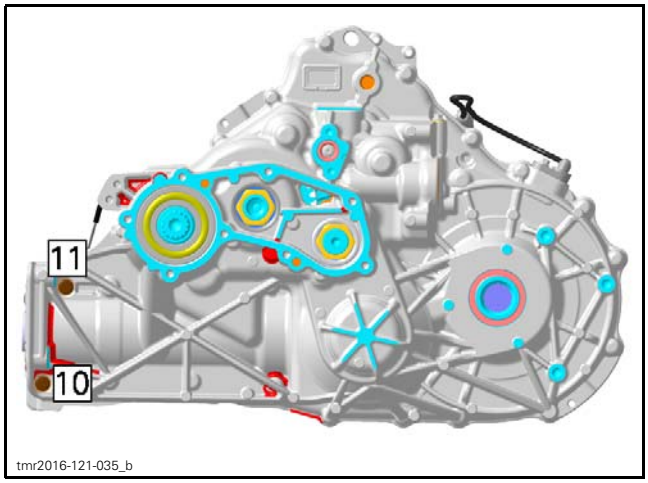

tmr2016-121-035_b

Refer to *GEARBOX AND SHIFTING MECHANISM* in this subsection to install:

- Index lever
- Index washer
- Parking lock gear
- Parking lock lever.

Set gearbox to PARK position.

Tighten main shaft and intermediate shaft nuts to specification.

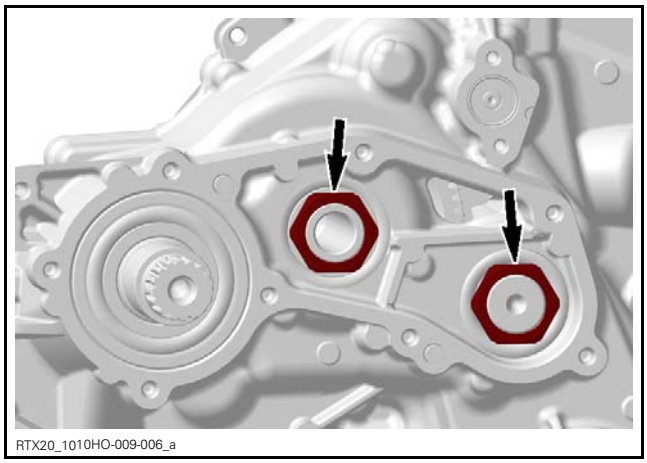
RTX20_1010HO-009-006_a

TIGHTENING TORQUE	
Main shaft and intermediate shaft nuts	170 N•m ± 10 N•m (125 lbf•ft ± 7 lbf•ft) + LOCTITE 648 (GREEN) (P/N 413 711 400)

Tighten countershaft nut to specification.

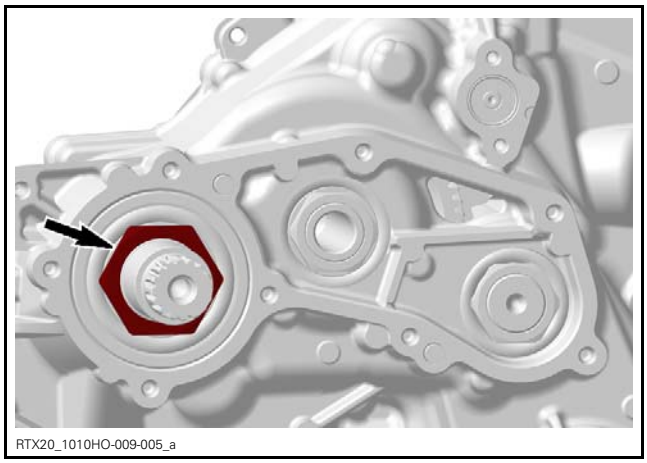
RTX20_1010HO-009-005_a

TIGHTENING TORQUE	
Countershaft nut	170 N•m ± 10 N•m (125 lbf•ft ± 7 lbf•ft) + LOCTITE 648 (GREEN) (P/N 413 711 400)

REQUIRED TOOLS	
M34 SOCKET (P/N 529 036 388)	
SPLINES SOCKET 1/2" (P/N 529 036 389)	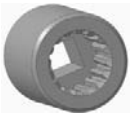

Install 4 screws to retain the M34 socket and tighten them to specification.

TIGHTENING TORQUE	
M34 socket retaining screws	10 N•m ± 1 N•m (89 lbf•**in** ± 9 lbf•**in**)

NOTICE **Turn spline socket counterclockwise to tighten the nut.**

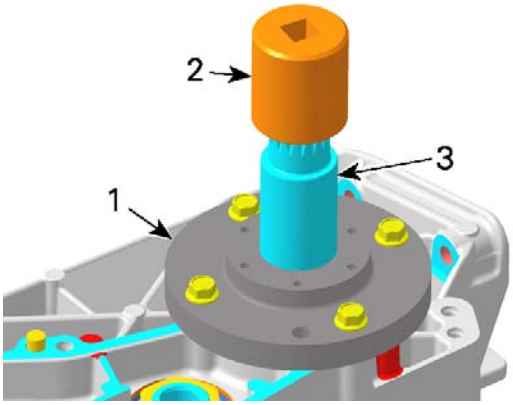

tmr2016-121-032_a

1. *M34 socket*
2. *Spline socket*
3. *Countershaft*

Apply sealant on mating surface of bearing housing.

SERVICE PRODUCT
LOCTITE 5910 (P/N 293 800 081)

Install bearing housing screws and tighten them as per following sequence.

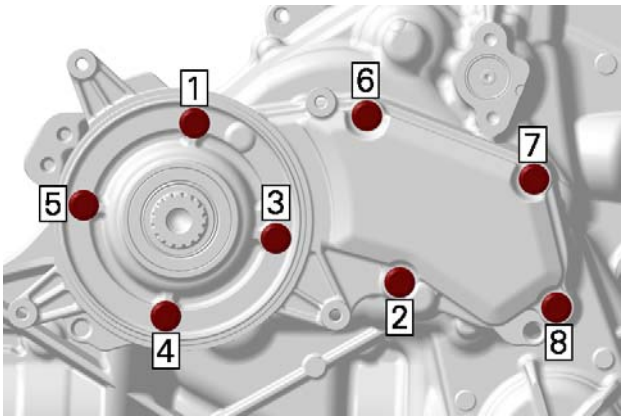

RTX20_1010HO-009-008_a

TIGHTENING TORQUE	
Bearing housing screws	10 N•m ± 1 N•m (89 lbf•**in** ± 9 lbf•**in**)

GEARBOX AND SHIFTING MECHANISM

Disassembling the Gearbox and Shifting Mechanism

NOTE: During gearbox and shifting mechanism disassembly, inspect the condition of each part closely.

Index Lever, Index Washer and Parking Lock Lever

Set gearbox to PARK position.

Remove the gearbox cover.

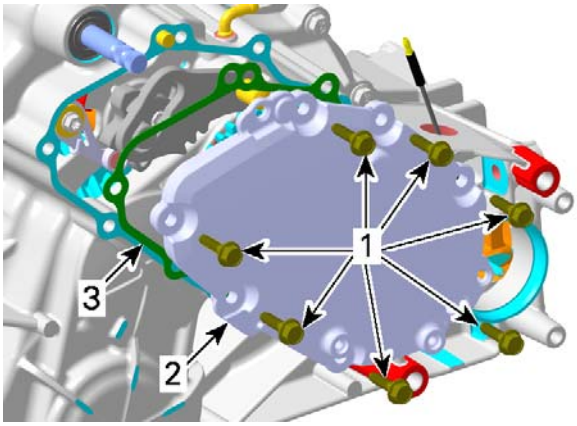

tmr2016-121-043_a

1. *Retaining screws*
2. *Gearbox cover*
3. *Gasket (discard it)*

Remove the park locking gear.

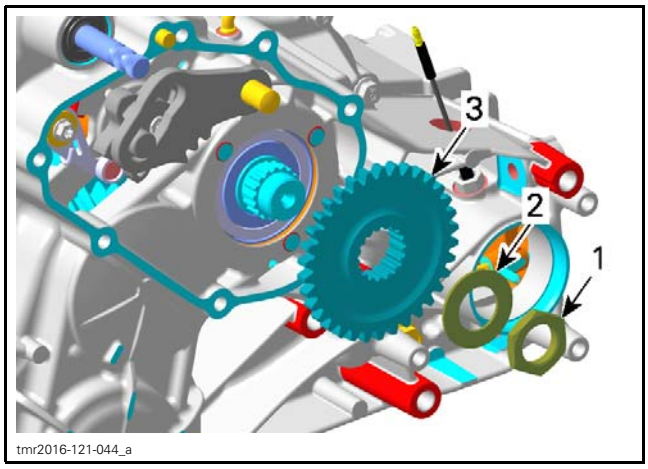

1. *Nut*
2. *Spring washer*
3. *Park locking gear*

Remove the parking locking lever.

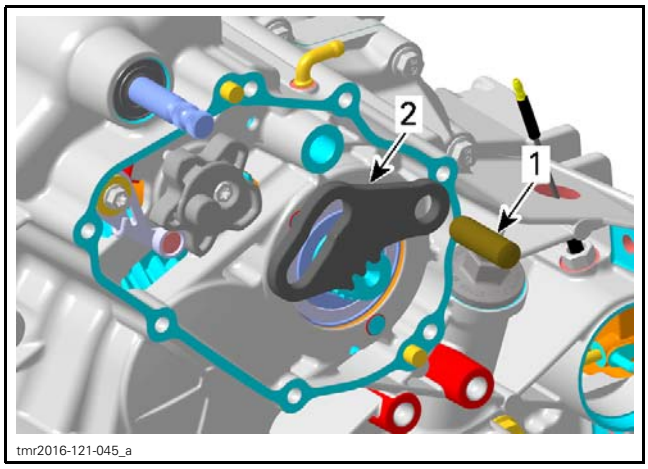

1. *Pin*
2. *Park locking lever*

Remove screw retaining the index washer to the shift drum.

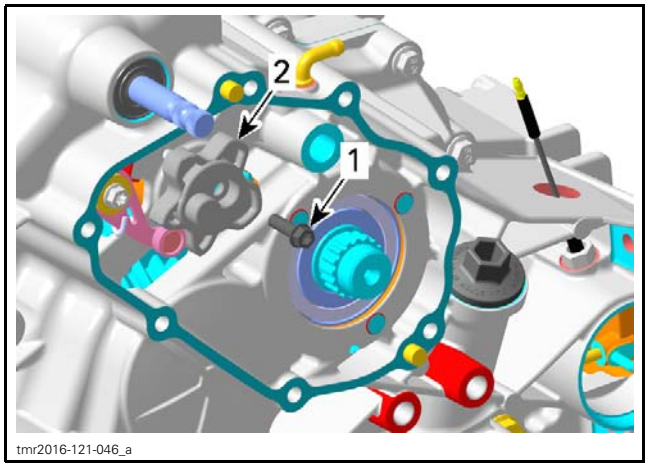

1. *Screw*
2. *Index washer*

Insert a flat screwdriver in the slot of index lever. Turn screwdriver clockwise and remove index washer.

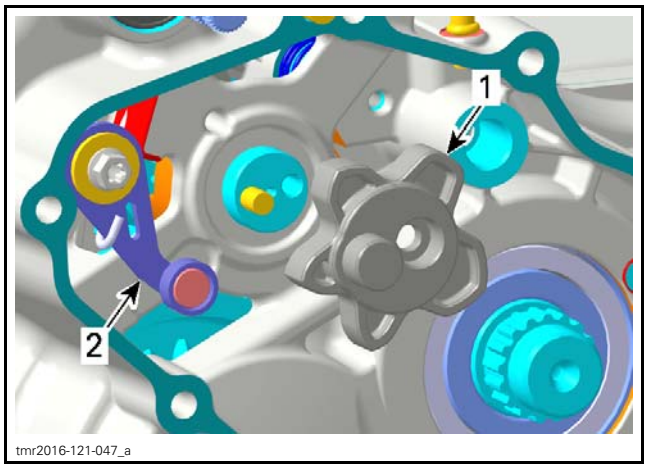

1. *Index washer*
2. *Index lever*

Remove the index lever with washer, step ring and spring.

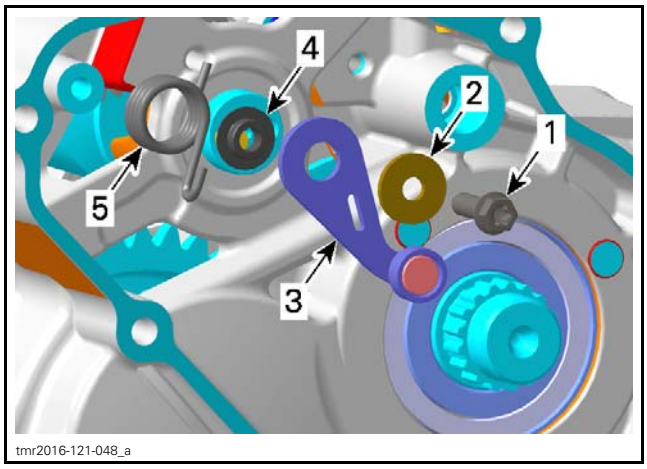

1. *Screw*
2. *Washer*
3. *Index lever*
4. *Step ring*
5. *Index spring*

Shift Shaft Assembly and Shift Drum

Separate gearbox housing, refer to *GEARBOX HOUSING* in this subsection.

Withdraw shift shaft assembly.

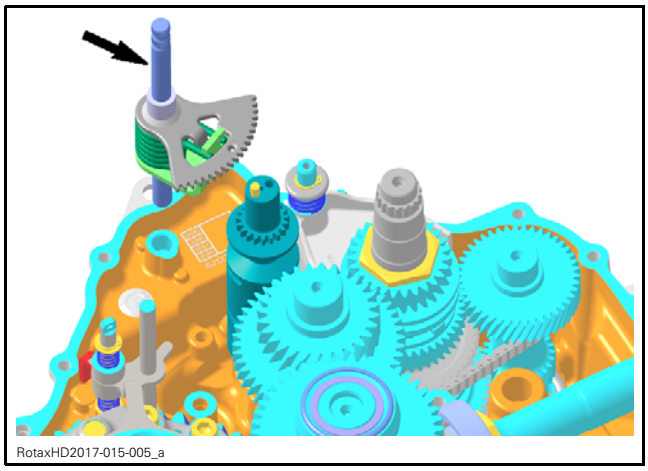
RotaxHD2017-015-005_a

Lift shift fork shaft assembly and move it aside to disengage shift forks from shift drum.

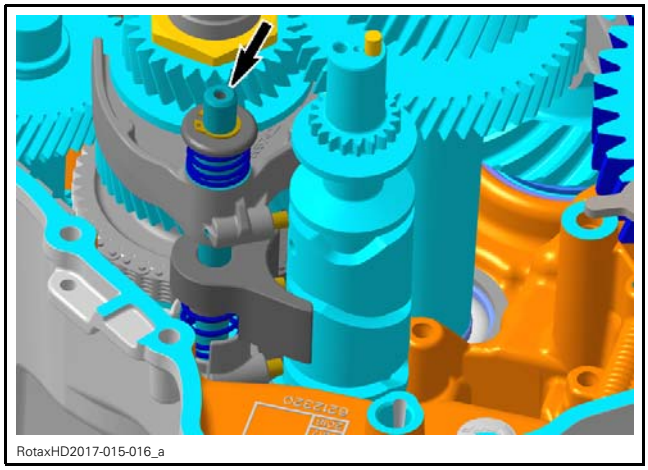
RotaxHD2017-015-016_a

Withdraw shift drum.

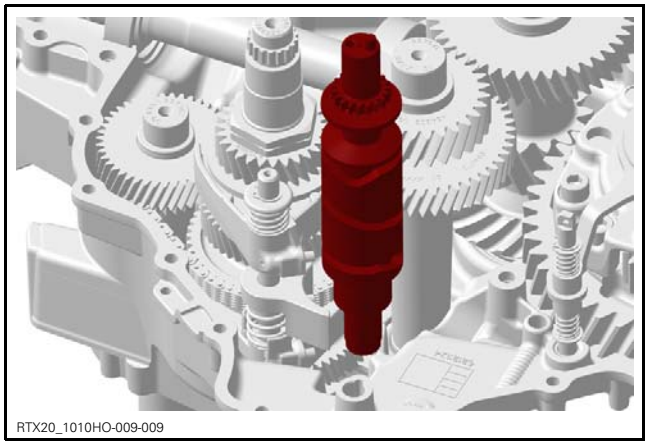
RTX20_1010HO-009-009

Pinion Drive Shaft and Intermediate Shaft

Separate gearbox housing, refer to *GEARBOX HOUSING* in this subsection.

Remove:

1. Pinion drive shaft
2. Intermediate shaft.

NOTE: Bevel gear and distance shim remain in gearbox housing.

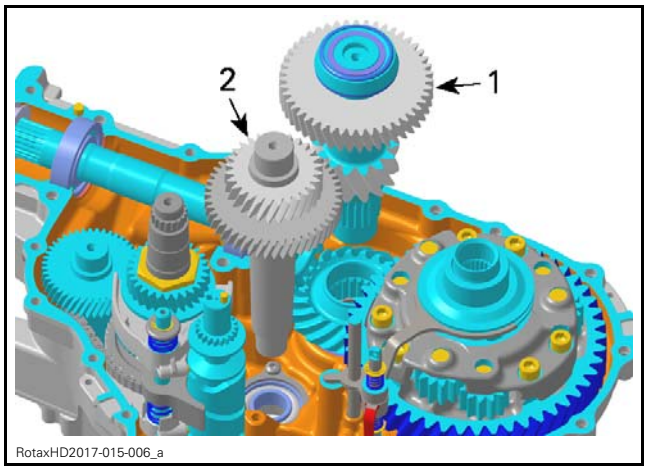

RotaxHD2017-015-006_a

1. *Pinion drive shaft*
2. *Intermediate shaft*

Main Shaft, Shift Fork Shaft Assembly and Countershaft

Separate gearbox housing, refer to *GEARBOX HOUSING* in this subsection.

See procedures in this subsection to remove:

- Pinion drive shaft
- Intermediate shaft
- Shift fork shaft assembly
- Shift drum.

Remove main shaft assembly together with shift fork shaft assembly and countershaft.

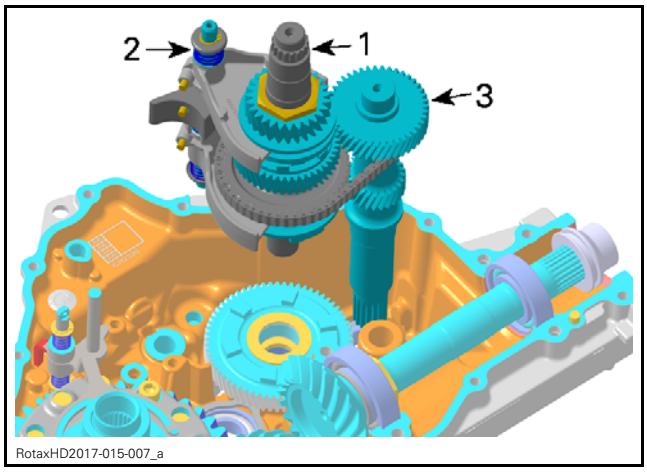

RotaxHD2017-015-007_a

1. *Main shaft assembly*
2. *Shift fork shaft assembly*
3. *Countershaft*

Remove the LOW range gear.

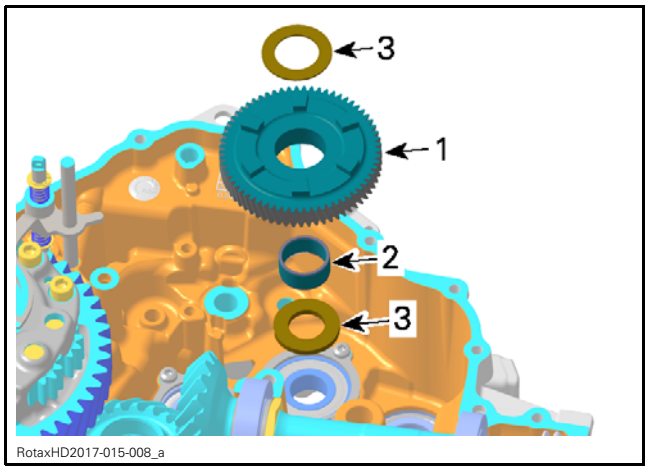

1. *Free pinion LOW range gear*
2. *Needle bearing*
3. *Thrust washer*

Disassembling the Shift Fork Shaft Assembly

NOTICE **Springs are not identical. Mark them to reinstall them in their original position.**

Remove the following parts from the shift fork shaft.

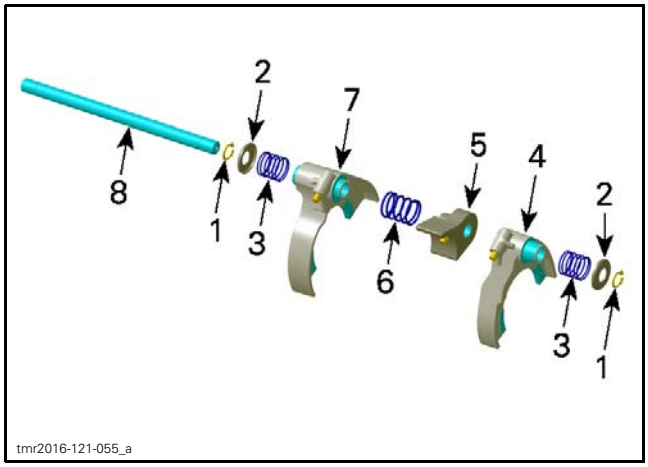

1. *Snap rings (discard them)*
2. *Spring seat*
3. *Outer springs*
4. *Shift fork HIGH*
5. *Shifting block*
6. *Center spring*
7. *Shift fork LOW/REVERSE*
8. *Shift fork shaft*

Inspecting the Gearbox and Shifting Mechanism

Always verify for the following when inspecting gearbox components:

- Gear teeth damage
- Worn or scoured bearing surfaces
- Rounded engagement dogs and slots
- Worn shift fork engagement groove
- Worn splines on shafts and shifting sleeves.

Bearings

When gearbox is removed check gearbox ball bearings for contamination and/or metal shavings.

Check if ball bearings turn freely and smoothly. Replace if necessary, refer to *GEARBOX HOUSING* in this subsection.

Shifting Sleeves

Check shifting sleeves for worn inner splines and rounded or damaged engagement dogs.

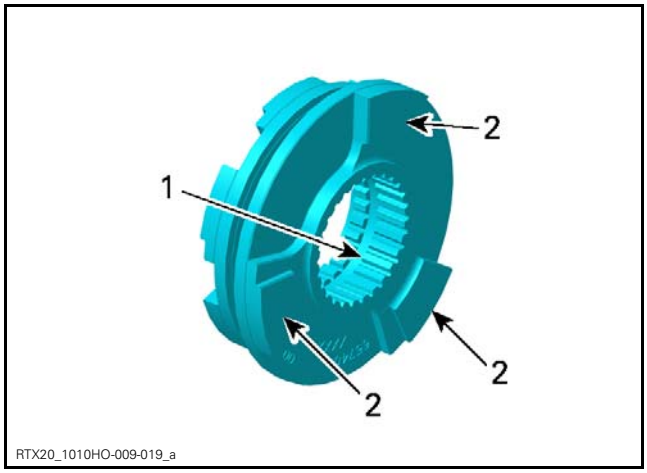

TYPICAL
1. *Inner splines*
2. *Engagement dogs*

Measure the width of shift fork engagement groove.

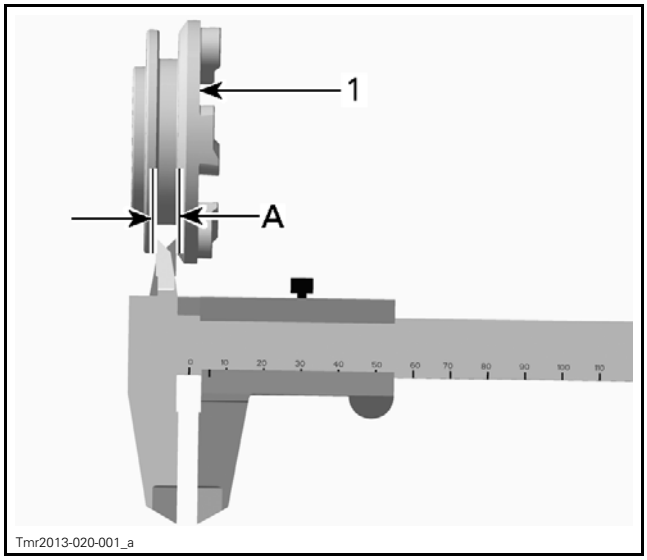

TYPICAL
1. *Shifting sleeve*

A. *Width of shift fork engagement groove*

WIDTH OF SHIFT FORK ENGAGEMENT GROOVE	
New	6.10 mm to 6.25 mm (.24 in to .246 in)
Service limit	6.30 mm (.248 in)

Shafts

Check countershaft bearing journals for wear.

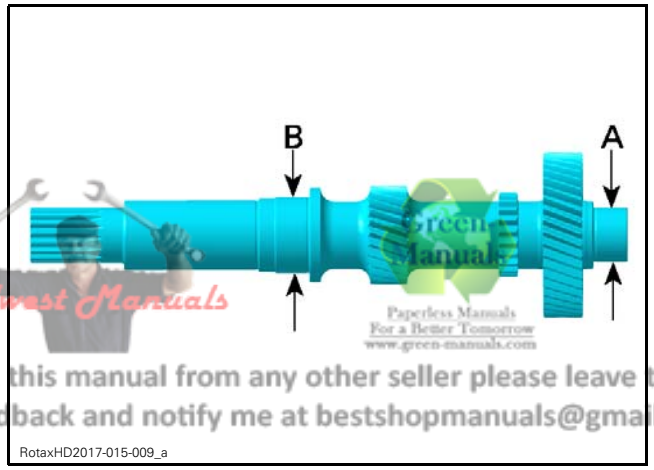

A. MAG side
B. Bearing journal CVT side

If you bought this manual from any other seller please leave them NEGATIVE feedback and notify me at bestshopmanuals@gmail.com

COUNTERSHAFT BEARING JOURNALS	
MAG SIDE	
NEW	19.977 mm to 19.990 mm (.786 in to .787 in)
SERVICE LIMIT	19.973 mm (.786 in)
CVT SIDE	
NEW	24.977 mm to 24.990 mm (.983 in to .984 in)
SERVICE LIMIT	24.970 mm (.983 in)

Check main shaft for wear.

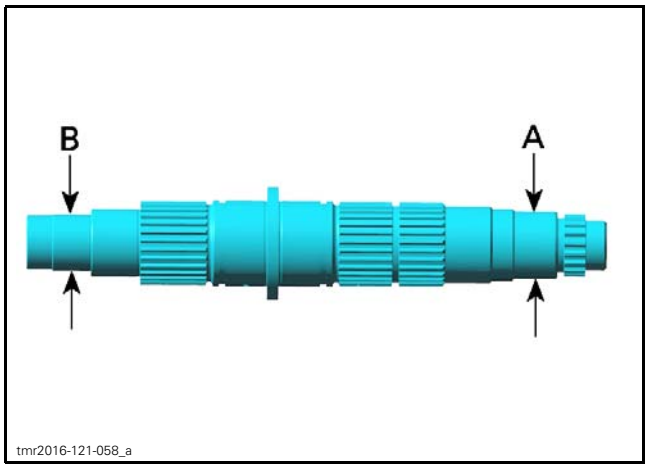

A. Bearing journal MAG side
B. Bearing journal CVT side

MAIN SHAFT BEARING JOURNAL CVT/MAG SIDE	
New	16.980 mm to 16.991 mm (.669 in to .669 in)
Service limit	16.976 mm (.668 in)

Shift Shaft

Check shift shaft for worn splines and gears.

Check shift shaft spring for damages.

Shift Drum

NOTICE **Do not disassemble shift drum.**

Remove GBPS magnet only if necessary.

Check shift drum tracks for scouring or heavy wear, like rounded engagement slots.

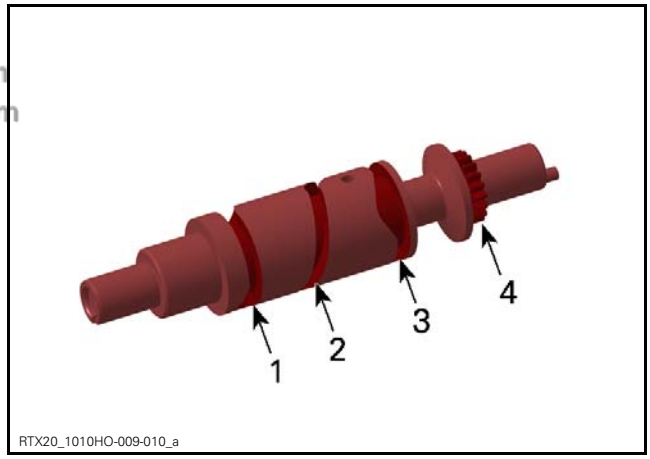

1. Track for the low/reverse range gear shift fork
2. Track for the shifting block
3. Track for the high range gear shift fork
4. Shift drum gear

Shift Forks

Check both shift forks for visible damage, wear or bent shift fork claws.

Check engagement rollers for wear and smooth movement.

Measure the shift fork claw thickness.

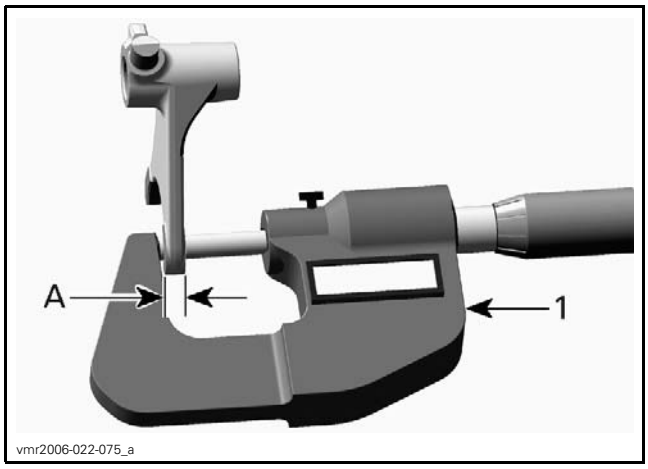

TYPICAL
1. *Micrometer*

A. Shift fork claw thickness

SHIFT FORK CLAW THICKNESS	
New	5.92 mm to 6.00 mm (.233 in to .236 in)
Service limit	5.80 mm (.228 in)

Shift Fork Shaft

Check shift fork shaft for visible damage or wear.

Check if shift fork shaft is straight.

Index Lever and Parking Lever

Index lever with roller must move freely.

Check parking lever for cracks or other damages.

Assembling the Gearbox and Shifting Mechanism

The assembly of gearbox is essentially the reverse of disassembly procedure. However, pay attention to the following details.

Prior to assembly lubricate ball bearing seats of:
- Main shaft
- Countershaft
- Intermediate shaft.

SERVICE PRODUCT
COPASLIP (P/N 420 297 430)

Assembling the Shift Fork Shaft Assembly

NOTICE **Springs are not identical.**

Install:
- NEW snap rings
- Spring seats
- Springs
- Shift forks
- Shifting block.

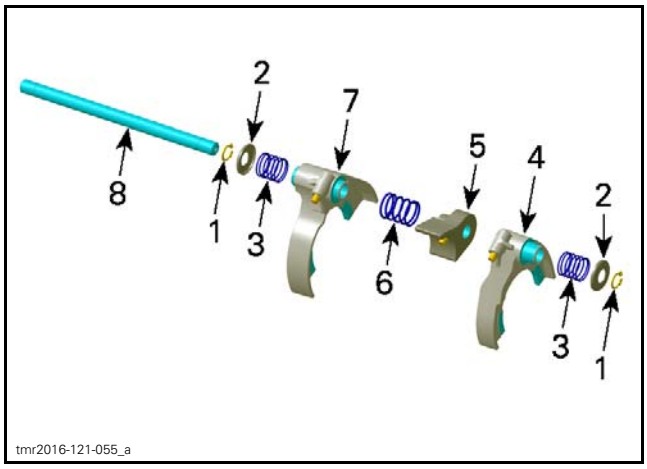

1. *Snap rings*
2. *Spring seat*
3. *Outer springs*
4. *Shift fork HIGH*
5. *Shifting block*
6. *Center spring*
7. *Shift fork LOW/REVERSE*
8. *Shift fork shaft*

Main Shaft, Shift Fork Shaft Assembly and Countershaft

Install shifting sleeve, thrust washer and LOW gear pinion on main shaft assembly.

NOTE: Check if shifting sleeve engages correctly in reverse gear.

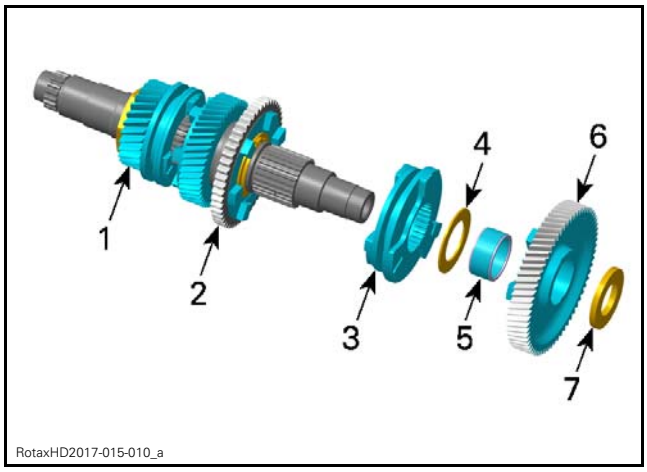

1. *Main shaft assembly*
2. *Reverse gear*
3. *Shifting sleeve*
4. *Thrust washer*
5. *Needle bearing*
6. *LOW gear pinion*
7. *Thrust washer*

Install shift fork shaft assembly, countershaft and main shaft assembly together into gearbox housing.

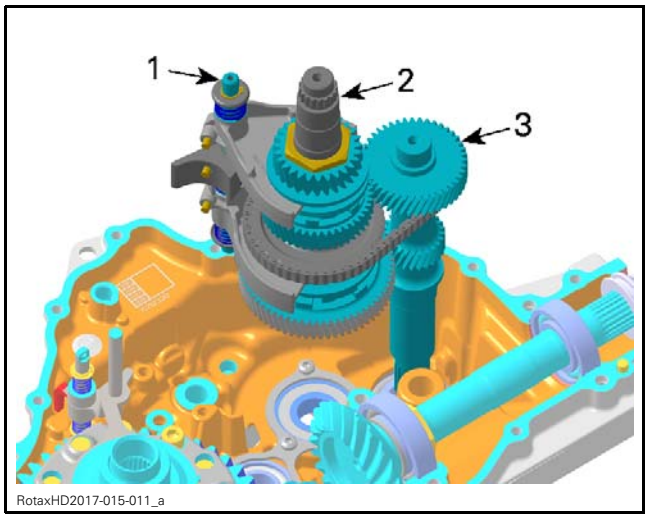

1. *Shift fork shaft assembly*
2. *Main shaft assembly*
3. *Countershaft*

Pinion Drive Shaft and Intermediate Shaft

Ensure distance shim and bevel gear are placed on the pinion drive shaft bearing in gearbox housing.

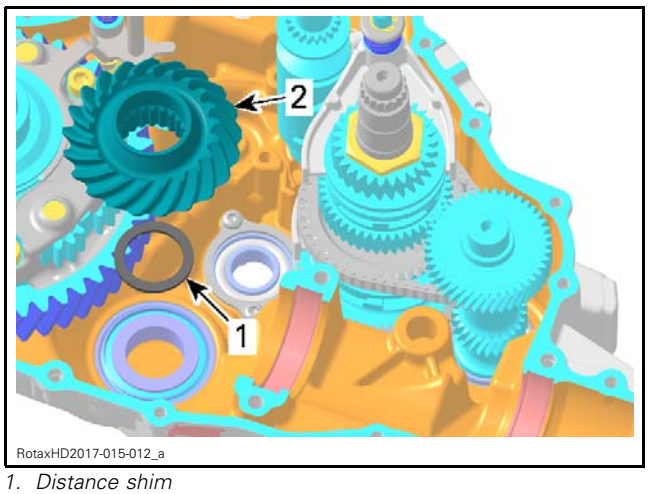

1. *Distance shim*
2. *Bevel gear*

Install:

1. Intermediate shaft
2. Pinion drive shaft.

Carefully fit pinion drive shaft into inner splines of bevel gear.

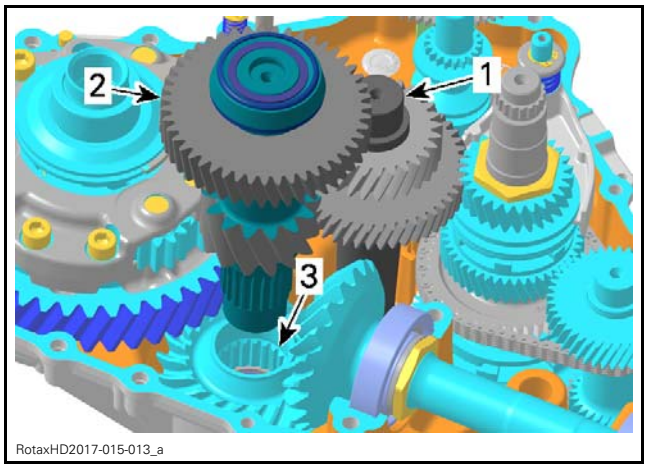

1. *Intermediate shaft*
2. *Pinion drive shaft*
3. *Bevel gear splines*

Shift Shaft Assembly and Shift Drum

Install:

– Shift drum
– Shift shaft assembly.

Align mark on shift shaft with marks on shift drum gear.

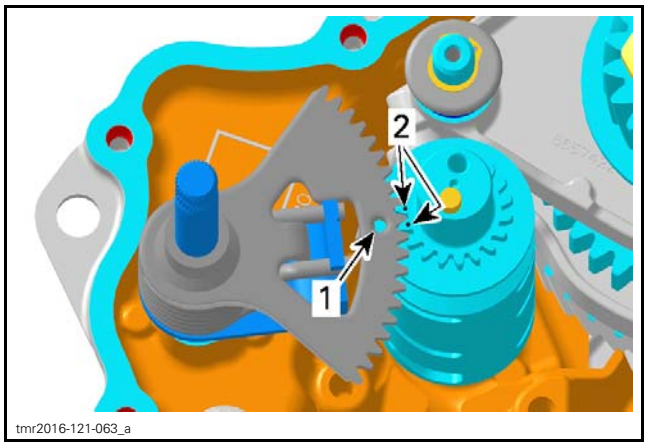

1. *Mark on shift shaft*
2. *Marks on shift drum gear*

Engage shift fork pins into shift drum gates and install shift fork shaft:

1. Lift shift fork HIGH
2. Press shifting block down
3. Move shift fork shaft sidewards

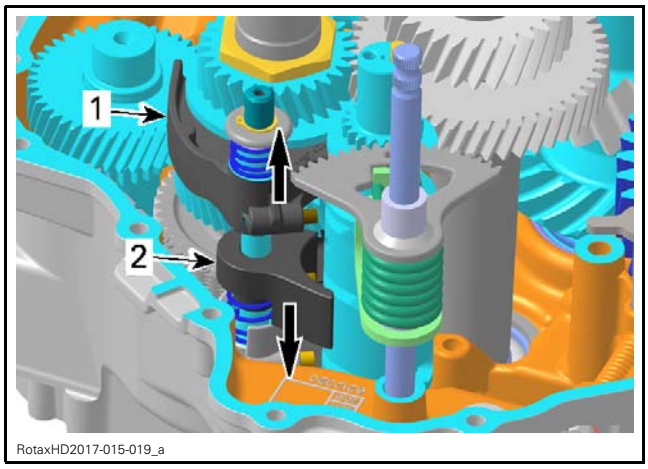

1. Shift fork HIGH
2. Shifting block

Index Lever, Index Washer and Parking Lock Lever

Fit step ring into index lever.

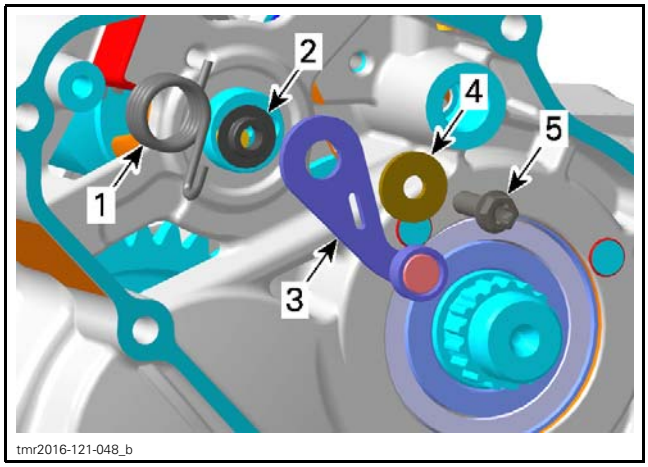

1. Index spring
2. Step ring
3. Index lever
4. Washer
5. Screw

TIGHTENING TORQUE	
Index lever retaining screw	10 N•m ± 1 N•m (89 lbf•**in** ± 9 lbf•**in**) + LOCTITE 243 (BLUE) (P/N 293 800 060)

Install index washer on shift drum.

Insert a flat screwdriver in the slot of the index lever, turn screwdriver clockwise and engage lever in index washer in NEUTRAL position as per following illustration.

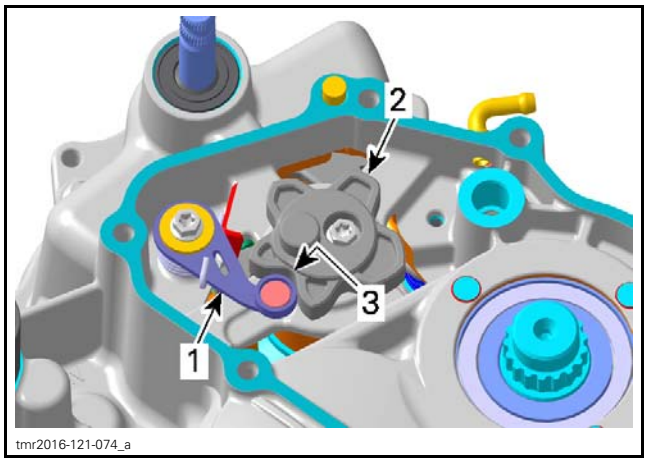

1. Index lever
2. Index washer
3. Neutral position

Install screw retaining the index washer to the shift drum.

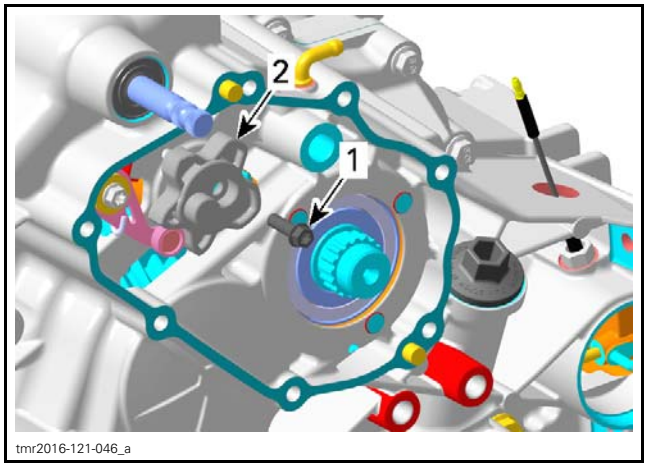

1. Screw
2. Index washer

TIGHTENING TORQUE	
Index washer retaining screw	10 N•m ± 1 N•m (89 lbf•**in** ± 9 lbf•**in**) + LOCTITE 243 (BLUE) (P/N 293 800 060)

Install:
- Park locking gear
- Spring washer
- Nut
- Pin
- Park locking lever.

Set gearbox to PARK position.

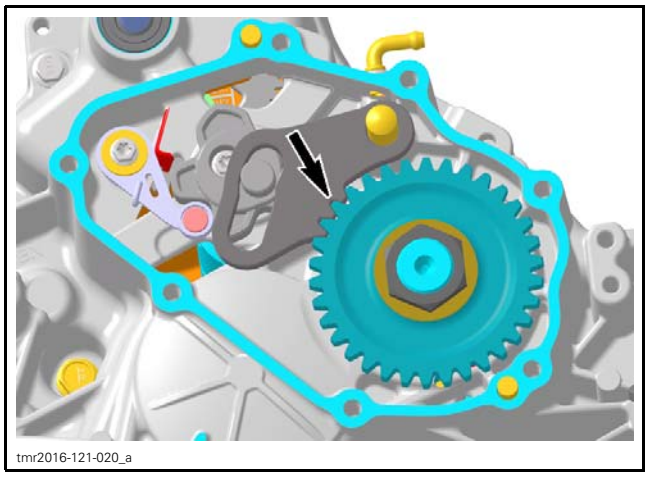

PARK LOCKING LEVER ENGAGED

Tighten nut to specification.

TIGHTENING TORQUE	
Park locking gear nut	170 N•m ± 10 N•m (125 lbf•ft ± 7 lbf•ft) + LOCTITE 648 (GREEN) (P/N 413 711 400)

Install gearbox cover with **NEW** gasket.

Tighten gearbox cover screws as per following sequence.

TIGHTENING TORQUE	
Gearbox cover screws	10 N•m ± 1 N•m (89 lbf•**in** ± 9 lbf•**in**)

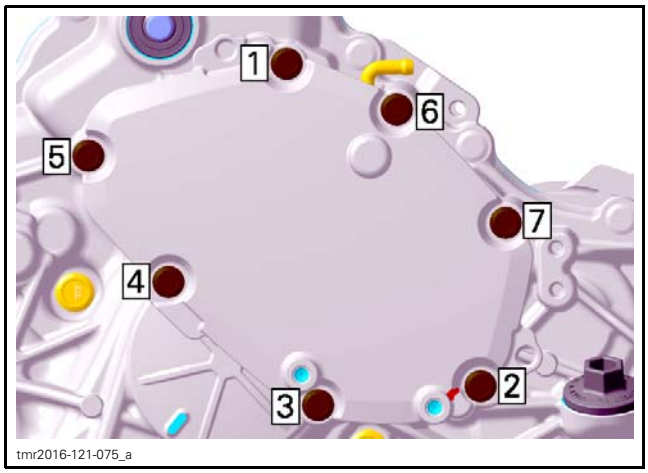

OUTPUT SHAFT AND 4X4 COUPLING MECHANISM

Removing the Output Shaft and 4X4 Coupling Mechanism

Drain gearbox oil. Refer to *REPLACING THE GEARBOX OIL* in this subsection.

Remove *4WD ACTUATOR*, refer to procedure in this subsection.

Detach *GEARBOX ASSEMBLY* from engine, refer to procedure in this subsection.

Remove the coupling fork.

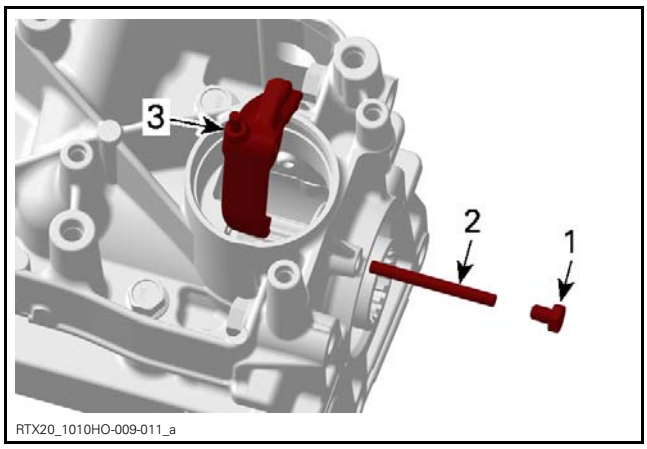

1. *Screw*
2. *Coupling fork shaft*
3. *Coupling fork*

Pull out 4X4 coupling sleeve.

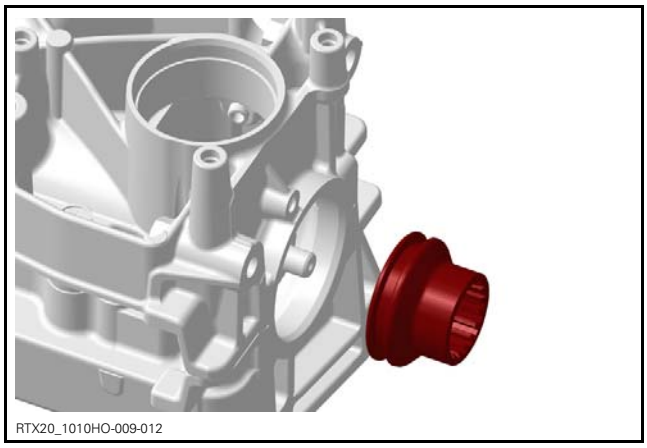

Inspecting the Output Shaft and 4X4 Coupling Mechanism

Output Shaft

Check output shaft and its gear for cracks, bend, pitting or other visible damages.

Check output shaft splines for wear or other damages.

Check if the output shaft bearings turn freely and smoothly.

Replace oil seal if brittle, hard or damaged.

4X4 Coupling Sleeve

Check splines of coupling sleeve for wear or other damages.

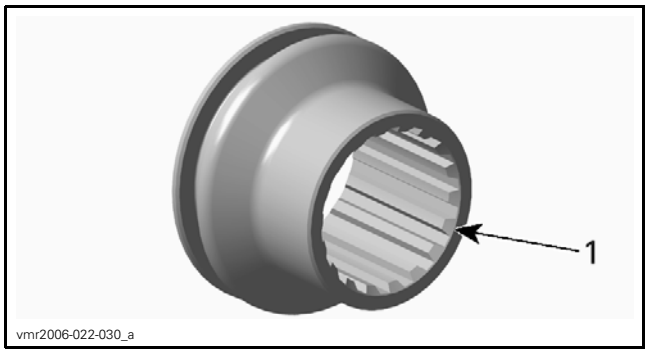

1. Inspect splines

Measure the coupling sleeve groove width.

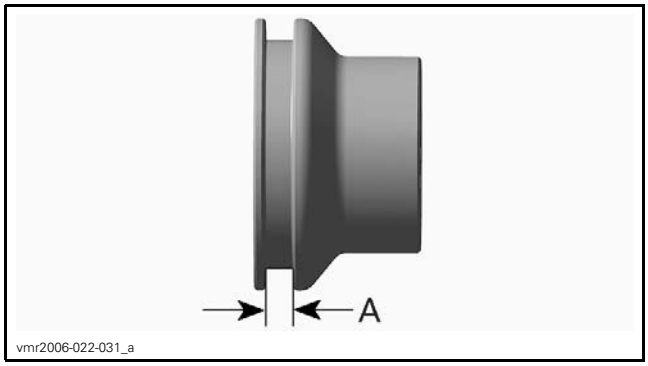

A. Groove width

COUPLING SLEEVE GROOVE WIDTH	
New	5.25 mm to 5.35 mm (.207 in to .211 in)
Service limit	5.50 mm (.217 in)

Coupling Fork

Check coupling fork for visible damage, wear or bent coupling fork claws.

Check coupling fork claw thickness.

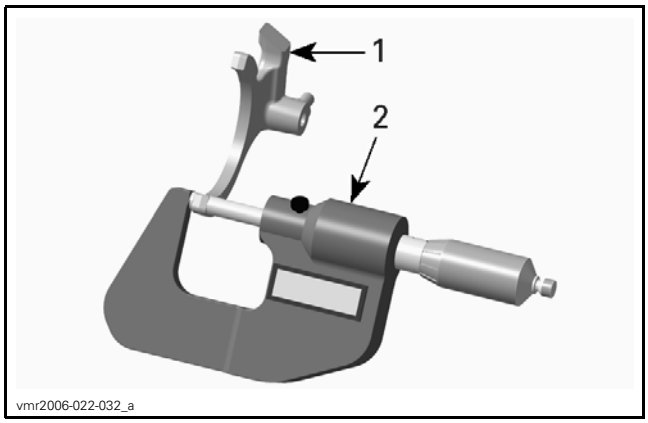

1. Coupling fork
2. Micrometer

COUPLING FORK CLAW THICKNESS	
New	4.95 mm to 5.05 mm (.195 in to .199 in)
Service limit	4.80 mm (.189 in)

Installing the Output Shaft and 4X4 Coupling Mechanism

Install coupling sleeve onto the output shaft.

Install:
- Coupling fork
- Coupling fork shaft
- Screw.

Ensure that coupling fork engages into the coupling sleeve groove.

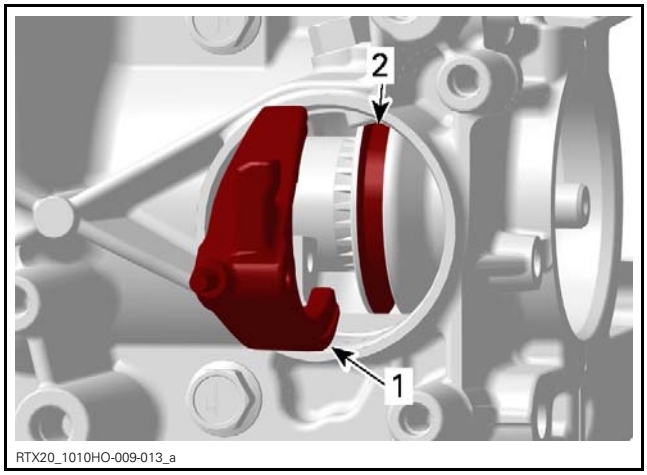

1. Coupling fork
2. Coupling sleeve groove

TIGHTENING TORQUE	
Coupling fork shaft screw	6 N•m ± 0.7 N•m (53 lbf•**in** ± 6 lbf•**in**) + LOCTITE 243 (BLUE) (P/N 293 800 060)

REAR DIFFERENTIAL AND LOCKING MECHANISM

Removing the Rear Differential and Locking Mechanism

Separate gearbox housing, refer to *GEARBOX HOUSING* in this subsection.

Remove rear differential together with locking mechanism.

Take care not losing the distance shim underneath tapered roller bearing.

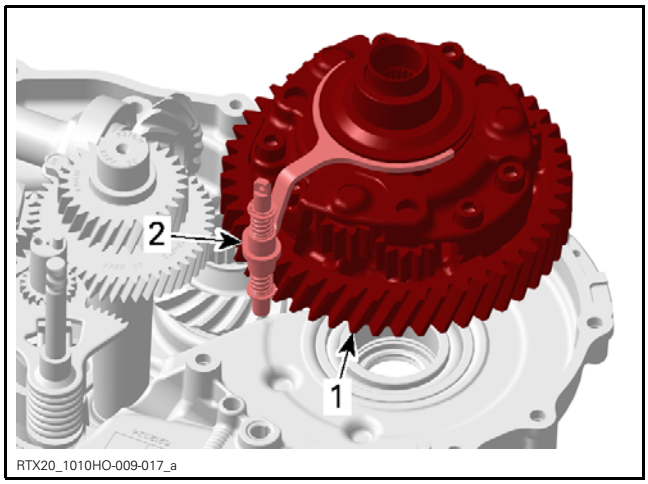

1. *Rear differential*
2. *Locking mechanism*

Inspecting the Rear Differential

Turn differential output shafts and check if differential gears turn smoothly. Replace rear differential if necessary.

Installing the Rear Differential and Locking Mechanism

Install rear differential and the locking mechanism.

REQUIRED TOOL	
SLEEVE INSTALLER (P/N 529 036 455)	

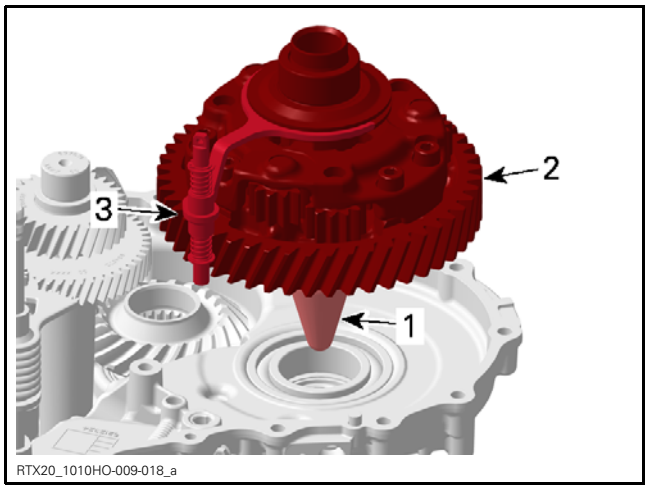

1. *Sleeve installer*
2. *Rear differential*
3. *Locking mechanism*

GEARBOX AND 4X4 COUPLING UNIT (with lockable rear differential)

SERVICE TOOLS

Description	Part Number	Page
ECM ADAPTER TOOL	529 036 166	4
FLUKE 115 MULTIMETER	529 035 868	4
HANDLE	420 877 650	14
M34 SOCKET	529 036 388	16, 21
OIL SEAL INSTALLER (COUNTERSHAFT)	529 036 391	13
OIL SEAL INSTALLER (DIFFERENTIAL OUTPUT)	529 036 456	14
OIL SEAL INSTALLER (GEARBOX)	529 035 758	14
SLEEVE INSTALLER	529 036 455	14, 19, 31
SPLINES SOCKET 1/2"	529 036 389	16, 21

SERVICE TOOLS – OTHER SUPPLIER

Description	Part Number	Page
BACK PROBE TEST WIRES	529 036 063	4

SERVICE PRODUCTS

Description	Part Number	Page
75W140 SYNTHETIC GEAR OIL (EUR)	779215	4
75W140 SYNTHETIC GEAR OIL	779160	4
COPASLIP	420 297 430	26
LOCTITE 243 (BLUE)	293 800 060	15, 19, 28, 30
LOCTITE 5910	293 800 081	19, 21
LOCTITE 648 (GREEN)	413 711 400	20–21, 29
LOCTITE CHISEL (GASKET REMOVER)	413 708 500	19
PETAMO GREASE GHY 133N	420 899 271	13
SUPER LUBE GREASE	293 550 030	8–10, 12

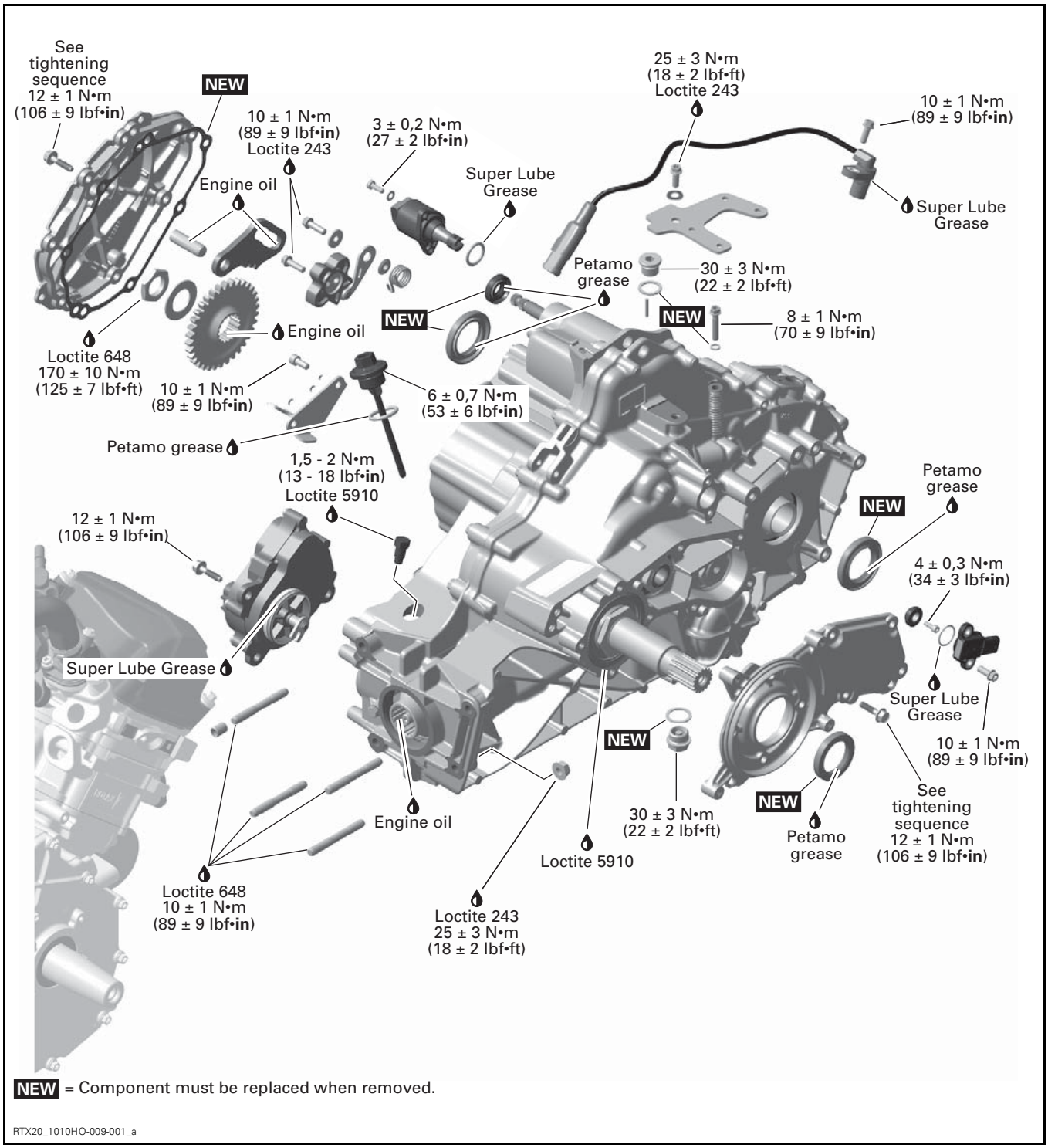

NEW = Component must be replaced when removed.

RTX20_1010HO-009-001_a

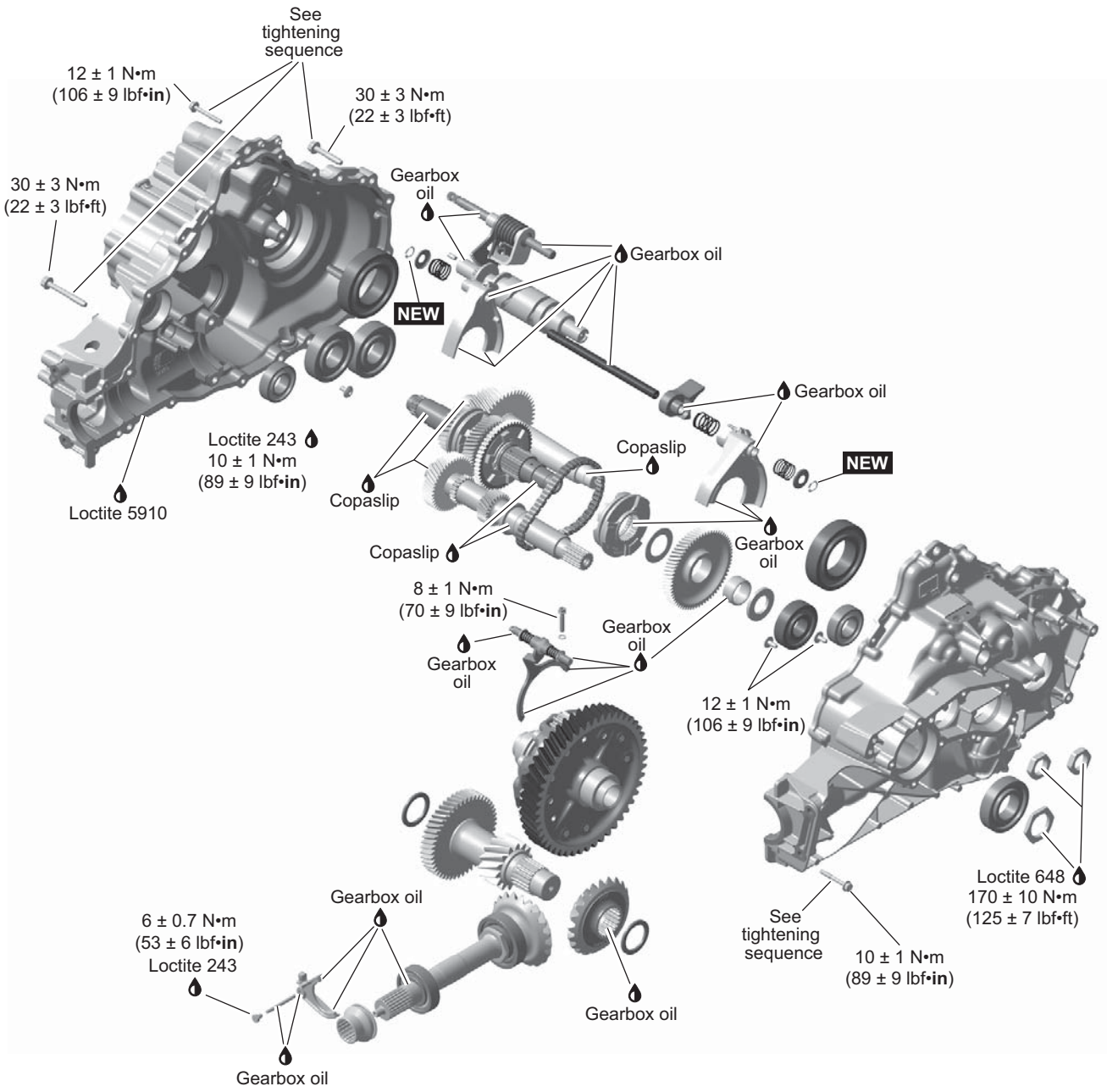

NEW = Component must be replaced when removed.

RTX20_1010HO-009-020_a

GENERAL

The following tools are required for testing most of the electrical components.

REQUIRED TOOLS	
BACK PROBE TEST WIRES (P/N 529 036 063)	
FLUKE 115 MULTIMETER (P/N 529 035 868)	
ECM ADAPTER TOOL (P/N 529 036 166)	

GEARBOX OVERVIEW

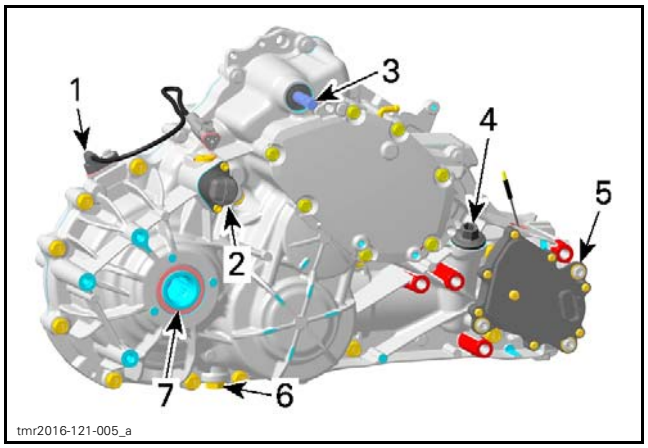

1. *Vehicle speed sensor (VSS)*
2. *Differential locking actuator*
3. *Shift shaft*
4. *Gearbox oil dipstick*
5. *4WD actuator*
6. *Magnetic drain plug*
7. *Rear differential output shaft*

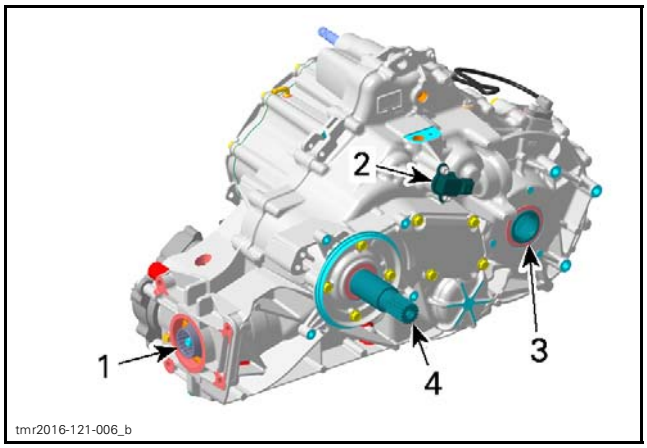

1. *4WD coupling sleeve*
2. *Gearbox position sensor (GBPS)*
3. *Rear differential output shaft*
4. *Countershaft*

MAINTENANCE

RECOMMENDED GEARBOX OIL

XPS™ RECOMMENDED GEARBOX OIL	
Scandinavia	75W140 SYNTHETIC GEAR OIL (EUR) (P/N 779215)
Other countries	75W140 SYNTHETIC GEAR OIL (P/N 779160)
If THE RECOMMENDED XPS GEARBOX OIL IS NOT AVAILABLE	
Use a 75W140 gearbox oil that meets the API GL-5 specification.	

NOTICE **Do not use another type of oil when servicing.**

VERIFYING THE GEARBOX OIL LEVEL

Place the vehicle on a level surface. Select PARK position.

Tilt the cargo box.

Clean gearbox oil dipstick area.

Unscrew and remove the gearbox oil dipstick wipe clean.

NOTICE **Pay attention not to loose O-ring on oil dipstick.**

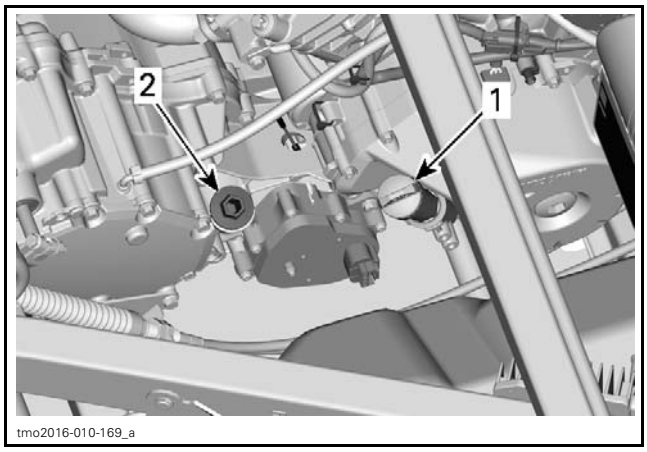

TYPICAL
1. *Engine oil dipstick*
2. *Gearbox oil dipstick*

Reinstall dipstick, screw in it completely.

Remove dipstick again and check oil level. It should be near or equal to the upper mark.

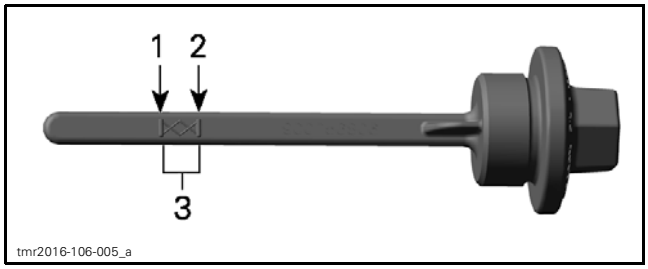

1. *MIN.*
2. *MAX.*
3. *Operating range*

To add oil, place a funnel into the dipstick hole.

Add a small amount of recommended oil and recheck oil level.

Repeat the above procedures until oil level reaches the dipstick's upper mark.

NOTICE **Operating the gearbox with an improper oil level may severely damage gearbox.**

NOTE: Do not overfill. Wipe off any spillage.

Properly tighten oil dipstick.

REPLACING THE GEARBOX OIL

NOTE: When replacing the gearbox oil, it is recommended to clean the vehicle speed sensor (VSS) at the same time.

Draining Procedure

Prior to change the oil, ensure vehicle is on a level surface.

Oil change should be done with a warm engine.

⚠ WARNING

The gearbox oil can be very hot.

Place a drain pan under the gearbox drain plug area.

1. *Oil drain plug*

Clean:
- Drain plug area
- Gearbox oil dipstick area.

Remove magnetic drain plug and discard sealing ring.

Remove oil dipstick.

NOTICE **Pay attention not to loose O-ring on oil dipstick.**

Let oil completely drain from gearbox.

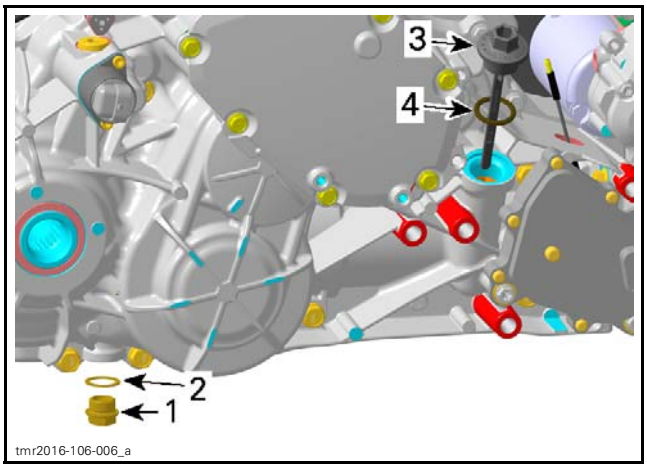

1. *Magnetic drain plug*
2. *Sealing ring*
3. *Oil dipstick*
4. *O-ring*

Dispose gearbox oil as per your local environmental regulations.

Inspection

Oil condition gives information about the teeth condition inside the gearbox. See *TROUBLESHOOTING* in this subsection.

Clean the magnetic drain plug from metal shavings and dirt. Presence of debris gives an indication of failure inside the gearbox. Check gearbox to correct the problem.

Replace O-ring of oil filler screw if brittle, hard or otherwise damaged.

Filling Procedure

Ensure vehicle on a level surface.

Make sure that magnetic drain plug is reinstalled and tight.

Always install a NEW sealing ring.

TIGHTENING TORQUE	
Magnetic drain plug	30 N•m ± 3 N•m (22 lbf•ft ± 2 lbf•ft)

Fill the gearbox through the oil dipstick hole.

CAPACITY
1.25 L (42.3 U.S. oz)

NOTICE **Do not use another type of oil when servicing.**

After filling check the oil level, refer to *VERIFYING THE GEARBOX OIL LEVEL* in this subsection.

NOTE: Wait a while to allow oil to flow down to the gearbox housing.

Install the oil dipstick with its O-ring.

Tighten oil dipstick to specification.

TIGHTENING TORQUE	
Oil dipstick	6 N•m ± 0.7 N•m (53 lbf•**in** ± 6 lbf•**in**)

CLEANING THE VEHICLE SPEED SENSOR (VSS)

Remove the VSS. Refer to *VEHICLE SPEED SENSOR (VSS)* in this subsection.

Remove all metal particles and oil from the VSS magnet.

NOTE: A dirty VSS will cause erratic speedometer readings.

TROUBLESHOOTING

UNUSUAL GEARBOX NOISE AND/OR VIBRATIONS

1. **Low oil level in gearbox.**
   - *Oil leakage from gearbox. Replace damaged gasket(s) and/or oil seal(s).*
2. **Defective bearings.**
   - *Bearing(s) do(es) not turn smoothly. Replace bearing(s).*
3. **Damaged or worn gears.**
   - *Inspect gears for damages or missing teeth. Replace respective gears.*

GEAR INDICATION FAILS

1. **Defective gearbox position sensor (GBPS).**
   - *Perform a gearbox position sensor test (refer to procedure in this subsection).*
   - *Damaged wires. Repair as required.*

GEAR(S) IS (ARE) HARD TO SHIFT

1. **Incorrect shifter cable adjustment.**
   - *Adjust shifter cable (refer to SHIFTER CABLE in SHIFTER subsection.*

4 WHEEL DRIVE INDICATION FAILS

1. **4WD indicator failure.**
   - *Test 4WD actuator.*
   - *Bad contact. Check for corrosion or loose connector.*
   - *Damaged wires. Repair as required.*

4 WHEEL DRIVE DOES NOT ENGAGE OR DISENGAGE

1. **Defective 4WD actuator.**
   - *Test 4WD actuator.*
2. **Damaged or worn shifting fork or sleeve.**
   - *Remove 4WD actuator and inspect shifting fork and sleeve.*

REAR DIFFERENTIAL LOCKING MECHANISM DOES NOT ENGAGE OR DISENGAGE

1. **Locking mechanism braced.**
   - *Ride vehicle and fully turn to the left and right to release stressed locking mechanism.*

NOTICE **Lifting the rear of the vehicle increases the stress to the rear differential.**

2. Defective differential locking actuator.
   - *Press differential switch and listen or feel if actuator works.*
   - *Test the DIFFERENTIAL LOCKING ACTUATOR, refer to procedures in this subsection.*

PROCEDURES

VEHICLE SPEED SENSOR (VSS)

VSS Location

The vehicle speed sensor is located on the rear top side of the left gearbox housing.

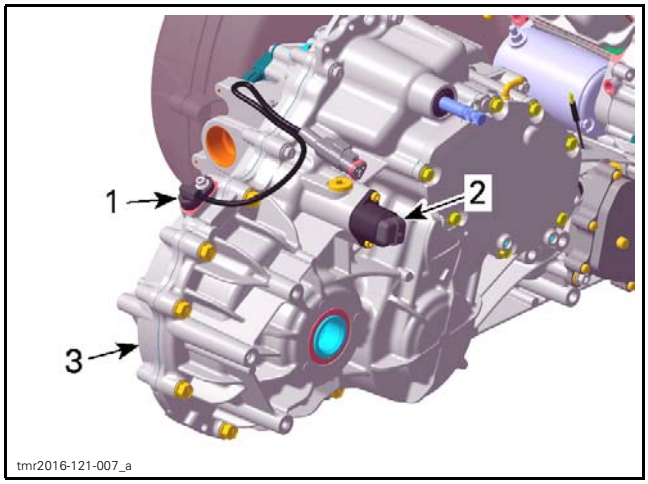

1. VSS (Vehicle Speed Sensor)
2. Differential locking actuator
3. Left housing of gearbox

VSS Wire Identification

FUNCTION	PIN
12-volt input from fuse F5	A
Speed signal (to ECM-A E1)	B
Ground (to ECM-A D4)	C

VSS Circuit Protection

CONDITION	CIRCUIT PROTECTION
Supplied with main relay activated	Fuse 5 of fuse block 2 (from main relay R2)

Testing the VSS Input Voltage

1. Turn ignition switch ON.
2. Back-probe the VSS connector and measure voltage.

VSS INPUT VOLTAGE TEST		
TEST PROBES		MEASUREMENT (KEY ON)
PIN A	PIN C	Battery voltage

If voltage is not as specified, test positive and ground separately.

Testing the VSS Signal

1. Lift rear of vehicle so that rear wheels are off the ground.
2. Set transmission to 2WD and to Neutral.
3. Turn ignition switch ON.
4. Back-probe the VSS connector and measure voltage while slowly rotating rear wheels by hand.

VSS SIGNAL TEST		
TEST PROBES		MEASUREMENT (WHILE ROTATING WHEELS)
PIN B	PIN C	Alternate reading between battery voltage and 0 Vdc

NOTE: Since we measure pulsating voltage, the numeric display will continuously change. The analog display may be easier to follow.

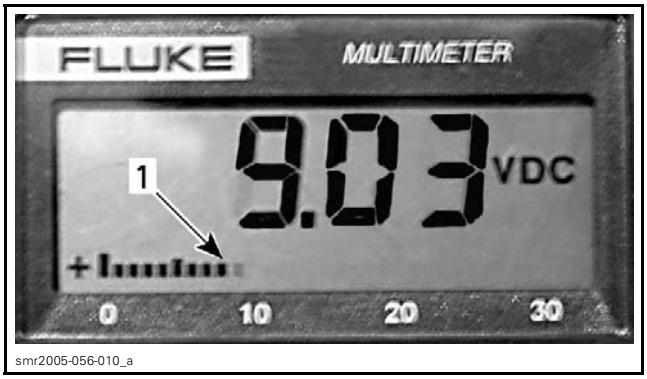

1. Analog display

Removing the VSS

Disconnect VSS connector.

Remove screw retaining the VSS.

Using a long screwdriver, pull out the VSS.

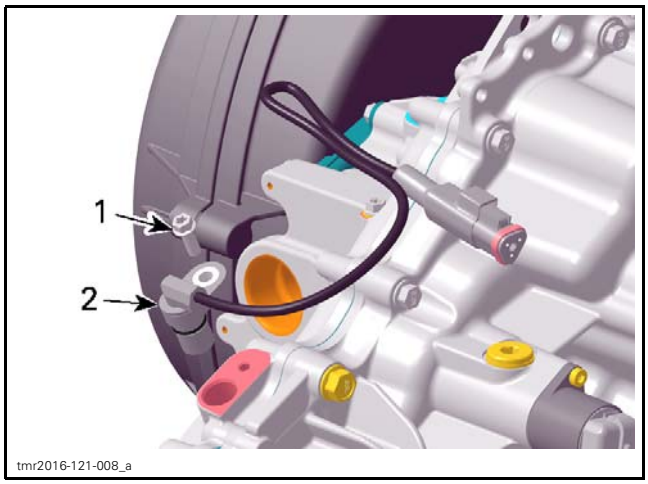

1. Screw
2. VSS

Cleaning the Vehicle Speed Sensor (VSS)

Remove all metal particles and oil from the VSS magnet.

NOTE: A dirty VSS will cause erratic speedometer readings.

Installing the VSS

The installation is the reverse of the removal procedure. However, pay attention to the following.

Lubricate VSS O-ring.

SERVICE PRODUCT
SUPER LUBE GREASE (P/N 293 550 030)

Tighten retaining screw to specification.

TIGHTENING TORQUE	
VSS retaining screw	10 N•m ± 1 N•m (89 lbf•**in** ± 9 lbf•**in**)

GEARBOX POSITION SENSOR (GBPS) AND MAGNET

GBPS Reset

When replacing the gearbox position sensor (GBPS), it is required to reset (re-zero) its values for proper operation.

A reset must be carried out each time any of the following parts has been replaced:

– Gearbox assembly
– Shift drum
– GBPS
– ECM.

1. Connect the vehicle to the BRP diagnostic software (BUDS2).
2. In BUDS2, select the following:
   – **Settings** page
   – **ECM** tab
   – **Initialization - Reset Gear Position Sensor**.
3. Follow instructions display in the screen.

If an error occurred or the GBPS is not within the allowed range while resetting, the ECM will generate a fault code and will not accept the setting.

4. If a fault message is displayed, follow the instructions in the message(s).
5. Check for fault codes.

If a fault code is generated:

– Carry out the service action.
– Reset the fault code.
– Repeat the reset procedure.

6. Close and disconnect BUDS2.

NOTE: Do not turn ignition key OFF.

7. Verify gears engagement.
   7.1 With the vehicle on ground and in NEUTRAL position, start engine.
   7.2 During 4-5 seconds, rev engine to 2500 ± 200 RPM.
   7.3 Let engine returns to idle.
   7.4 Select an other position (P, R, H or L). Repeat substeps 7.2 and 7.3 until all position are verified.

   NOTE: The vehicle must be in movement to complete the procedure on R, H and L position.

Testing the GBPS Input Voltage

NOTE: Prior to conduct testing, check fault codes in BUDS2.

Set shift lever in NEUTRAL position.

Back-probe the GBPS connector.

Test as follow:

GBPS INPUT VOLTAGE TEST		
GBPS CONNECTOR PIN		MEASUREMENT
1	2	5 volts

If voltage is adequate, check GBPS signal wire.

If there is no voltage, check each GBPS input as follows.

GBPS INPUT VOLTAGE TEST		
GBPS CONNECTOR PIN	BATTERY	MEASUREMENT
1	Negative (-) post	5 volts
2	Positive (+) post	Battery voltage

If there is no voltage, check wires and connector pins. Replace or repair defective parts and reset fault codes.

Testing the GBPS Communication Link Continuity

Unplug ECM-A connector from ECM and connect it to the ECM adapter tool.

GBPS INPUT VOLTAGE TEST		
GBPS CONNECTOR PIN	ECM ADAPTER PIN	MEASUREMENT @ 20°C (68°F)
3	A-F4	Below 1 Ω

If resistance is out of specification, check wires and connectors. Repair and reset fault codes.

If resistance is good and the other tests succeeded, replace the GBPS and reset fault codes.

NOTE: The GBPS must be reset.

Removing the GBPS and Magnet

Set shift lever in NEUTRAL position.

Unplug GBPS connector.

Remove screws and withdraw GBPS.

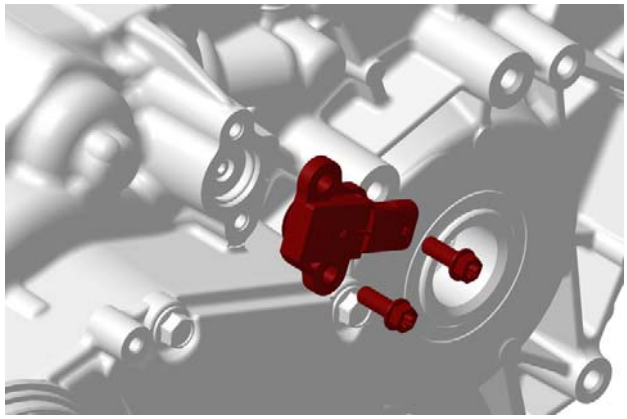

RTX20_1010HO-009-002

Remove:
- Retaining screw
- Magnet.

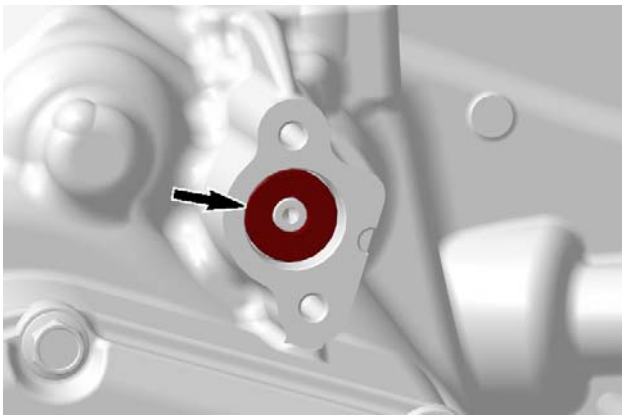

RTX20_1010HO-009-003_a

Installing the GBPS and Magnet

The installation is the reverse of the removal procedure. However, pay attention to the following details.

Shift lever must be in the NEUTRAL position.

Align nose on the backside of the magnet with the notch in the shift drum.

Tighten magnet retaining screw to specification.

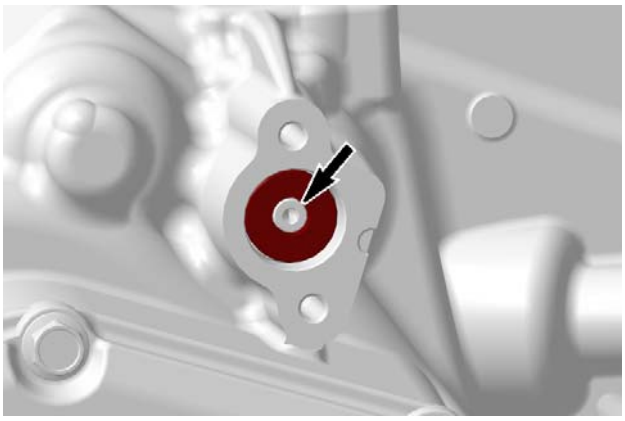

RTX20_1010HO-009-003_b

TIGHTENING TORQUE	
Magnet retaining screw	4 N•m ± 0.3 N•m (35 lbf•**in** ± 3 lbf•**in**)

Lubricate GBPS O-ring.

SERVICE PRODUCT
SUPER LUBE GREASE (P/N 293 550 030)

Tighten GBPS retaining screws to specification.

TIGHTENING TORQUE	
GBPS retaining screws	10 N•m ± 1 N•m (89 lbf•**in** ± 9 lbf•**in**)

Reset the GBPS. Refer to *GBPS RESET* in this subsection.

4WD ACTUATOR

Testing the Actuator Power Input

Unplug 4WD actuator connector.

Turn ignition key ON.

Measure voltage as follows.

ACTUATOR INPUT VOLTAGE TEST		
GBPS CONNECTOR PIN		MEASUREMENT
1	2	Battery voltage

If the result is out of specifications, check power input circuit. Refer to wiring diagram.

If the result is good, check the 4WD circuit continuity.

Testing the 4WD Circuit Continuity

1. Turn ignition switch OFF.
2. Unplug:
   - Right steering switch (RSS)
   - 4WD Actuator connector
   - HIC connector.
3. Measure continuity.

ACTUATOR CIRCUIT CONTINUITY TEST		
VEHICLE HARNESS CONNECTOR		MEASUREMENT
RSS 3	HIC B	Close to 0 Ω
RSS 2	Frame (ground)	
CL 6	HIC H	

ACTUATOR CIRCUIT CONTINUITY TEST		
ACTUATOR CONNECTOR PIN	HIC PIN	MEASUREMENT
3	H	Close to 0 Ω
4	B	

If continuity is good, replace 4WD actuator.

If continuity is out of specification repair wires and / or connectors, or replace actuator switch.

Removing the 4WD Actuator

NOTE: Before beginning any servicing on the 4WD actuator, make sure the vehicle is in 4WD position. No need to remove engine from vehicle.

Drain gearbox oil, refer to *REPLACING THE GEARBOX OIL* in this subsection.

Remove:
- 4WD actuator screws
- 4WD actuator.

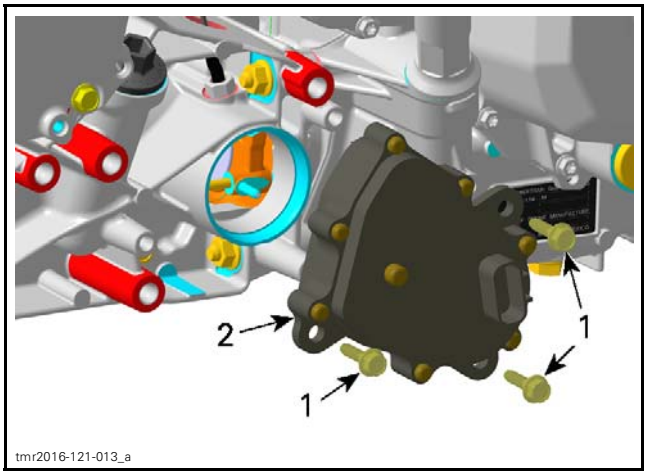

1. Screws
2. 4WD actuator

Installing the 4WD Actuator

Lubricate 4WD actuator O-ring.

SERVICE PRODUCT
SUPER LUBE GREASE (P/N 293 550 030)

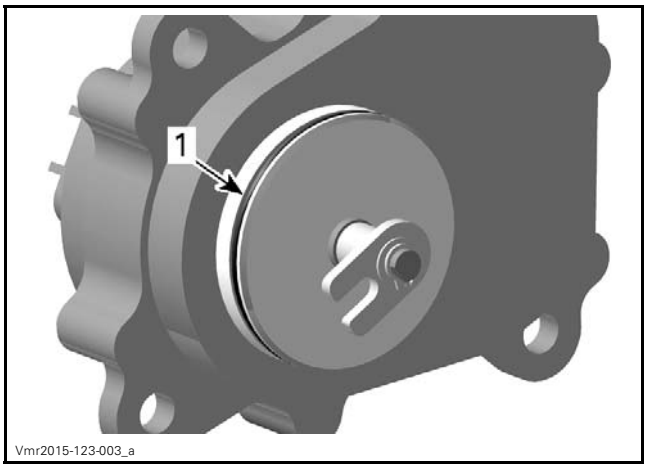

1. 4WD actuator O-ring

Ensure coupling fork is in 4WD position (toward the front of vehicle).

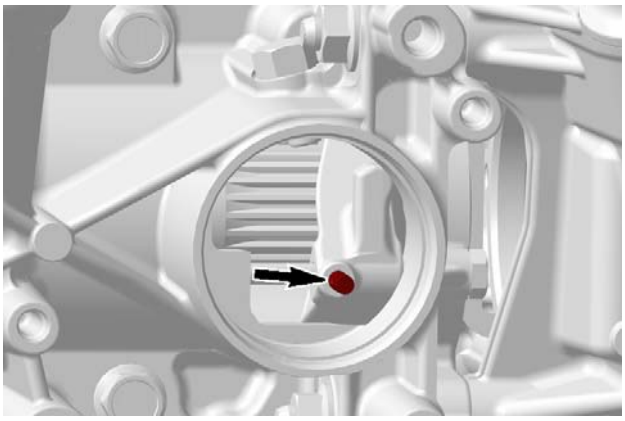
RTX20_1010HO-009-004_a

Align the 4WD actuator fork with the pin on coupling fork then push the 4WD actuator in the housing. See the following illustration to position the 4WD actuator correctly.

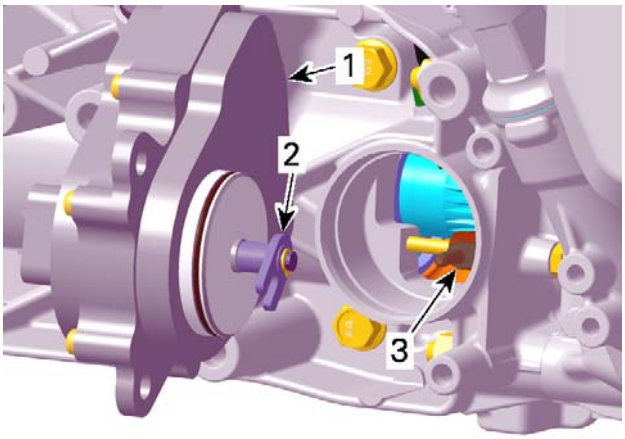

tmr2016-121-016_a

1. 4WD actuator
2. 4WD actuator fork
3. Coupling fork

Rotate the 4WD actuator counterclockwise until it orients itself to mounting position.

NOTICE **Do not cut or break the 4WD actuator O-ring.**

Install all 4WD actuator screws and tighten them.

TIGHTENING TORQUE	
4WD actuator screws	10 N•m ± 1 N•m (89 lbf•**in** ± 9 lbf•**in**)

Connect 4WD actuator.

Set gearbox to PARK position.

Lift the front of vehicle.

Turn front wheels. The front propeller shaft should not turn.

If the front propeller shaft turns, the 4WD actuator is not installed correctly. Remove 4WD actuator and reinstall it.

Place ignition switch to ON position and select the 2WD position.

Turn front wheel again. The front propeller shaft should turn easily.

If the front propeller shaft does not turn, the 4WD actuator is not installed correctly. Remove 4WD actuator and reinstall it.

Refill missing gearbox oil. Refer to *REPLACING THE GEARBOX OIL* in this subsection.

Install all other removed parts.

DIFFERENTIAL LOCKING ACTUATOR

Testing the Differential Locking Actuator

Testing the Differential Locking Actuator Function

1. Set shift lever on NEUTRAL.
2. Turn ignition switch to ON. Do not start the engine.
3. Place the rear differential switch in LOCK position.

NOTE: The rear differential is locked when the switch is pushed upwards.

4. Lift the rear of the vehicle until rear wheels are off the ground.
5. Turn a rear wheel.
   – If both wheels turn, the actuator is in LOCK position. Continue with step 6
   – If only one wheel turns, check the switch position and turn the wheel again. If the result is the same, carry out *TESTING THE DIFFERENTIAL LOCKING ACTUATOR RESISTANCE*.
6. Move the rear differential switch in UNLOCK position.

NOTE: The rear differential is unlocked when the switch is pushed downwards.

7. Turn a rear wheel.
   – If only one wheel turns the actuator and its electrical system work properly.
   – If both wheels turn, check the switch position and turn the wheel again. If the result is same, carry out *TESTING THE DIFFERENTIAL LOCKING ACTUATOR RESISTANCE*.

Testing the Differential Locking Actuator Resistance

Disconnect differential locking actuator connector.

Set multimeter to Ω.

Probe terminals as per following table.

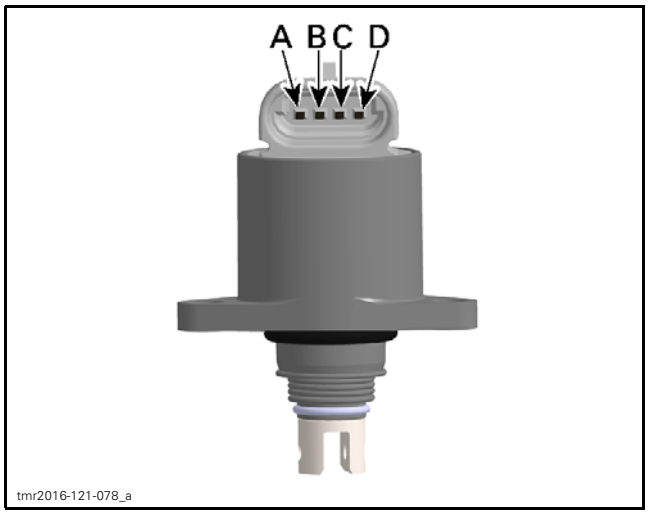

DIFFERENTIAL ACTUATOR RESISTANCE TEST		
ACTUATOR PIN		MEASUREMENT @ 20°C (68°F)
A	D	28 - 34 Ω
B	C	

If resistance is not within specifications, replace the actuator.

If resistance tests good, **reconnect** the actuator connector.

Install ECM-A connector on ECM adapter.

Using a multimeter, recheck resistance as per table.

DIFFERENTIAL ACTUATOR RESISTANCE TEST		
ECM ADAPTOR PIN		MEASUREMENT @ 20°C (68°F)
A-C2	A-C1	28 - 34 Ω
A-B2	A-A4	

If resistance value is correct replace ECM, refer to *ELECTRONIC FUEL INJECTION (EFI)* subsection.

If resistance value is incorrect, repair the connectors or replace the wiring harness between ECM connector and the actuator.

Removing the Differential Locking Actuator

Remove plug screw and pin.

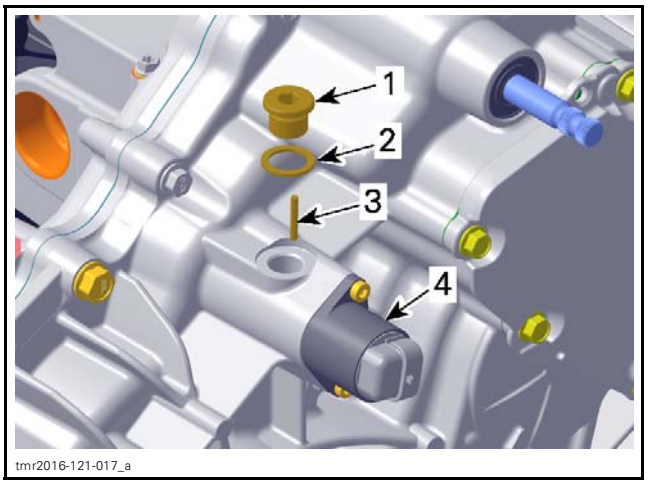

1. *Plug screw*
2. *Sealing ring (discard it)*
3. *Pin*
4. *Differential locking actuator*

Remove the differential actuator.

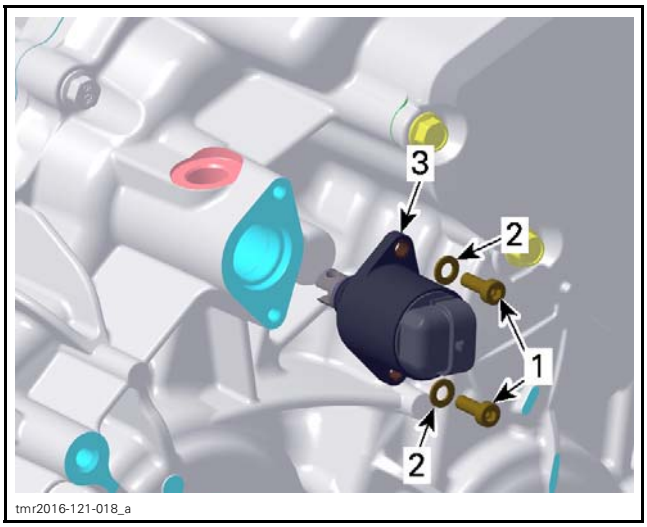

1. *Retaining screws*
2. *Washers*
3. *Differential locking actuator*

Installing the Differential Locking Actuator

Lubricate actuator O-ring.

SERVICE PRODUCT
SUPER LUBE GREASE (P/N 293 550 030)

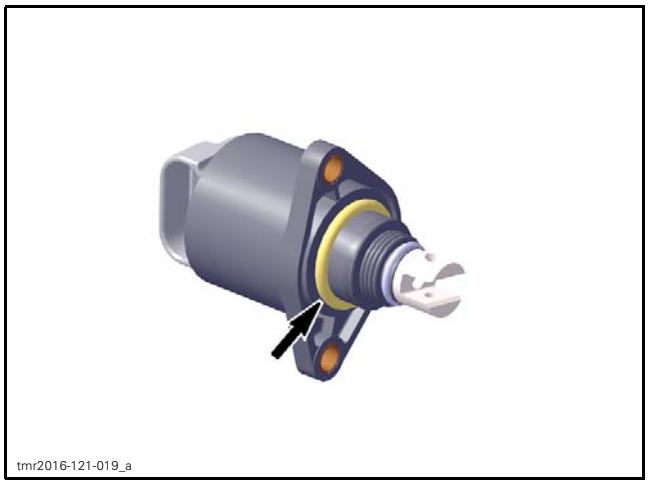

Tighten retaining screws to specification.

TIGHTENING TORQUE	
Differential locking actuator retaining screws	3 N•m ± 0.2 N•m (27 lbf•**in** ± 2 lbf•**in**)

Install a **NEW** sealing ring and tighten plug screw to specification.

TIGHTENING TORQUE	
Plug screw	30 N•m ± 3 N•m (22 lbf•ft ± 2 lbf•ft)

GEARBOX OIL SEALS

Replacing the Gearbox Oil Seal

Replace oil seals if they are brittle, hard or damaged.

A small flat screwdriver can be used to remove most of these oil seals.

NOTICE **Avoid scoring parts during oil seal removal.**

When replacing an oil seal, take this opportunity to inspect the following:

- Check bearings behind each oil seal for contamination and/or metal shavings.
- Check oil seal running surfaces for scratches.

Lubricating the Oil Seal

Lubricate sealing lips all around.

Fill up the room between sealing lips halfway around the perimeter.

SERVICE PRODUCT
PETAMO GREASE GHY 133N (P/N 420 899 271)

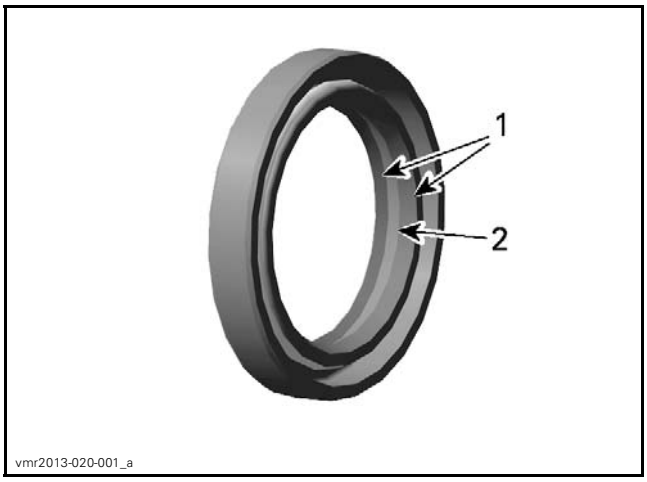

1. Sealing lips
2. Room between sealing lips

Countershaft Oil Seal

To replace the countershaft oil seal, remove:

- Drive and driven pulleys
- CVT air guide.

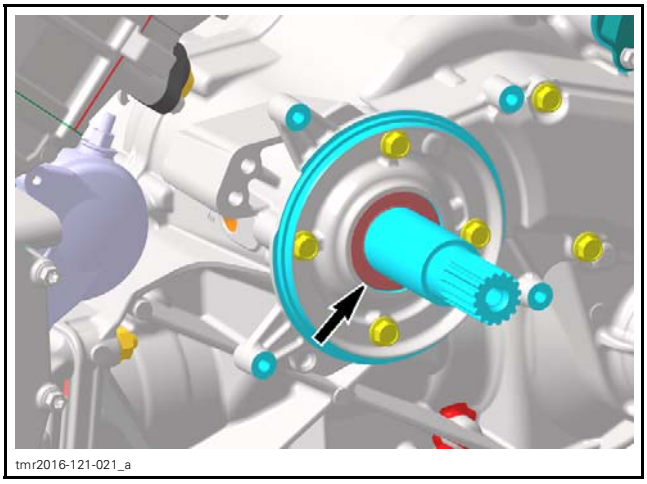

Install countershaft oil seal.

REQUIRED TOOL	
OIL SEAL INSTALLER (COUNTERSHAFT) (P/N 529 036 391)	

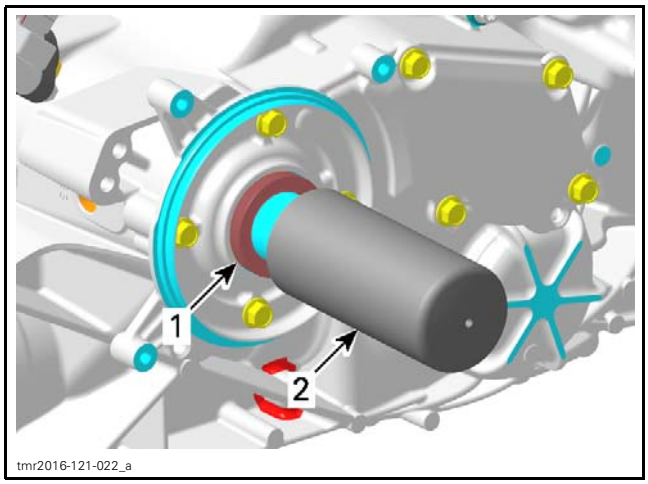

1. *Countershaft oil seal*
2. *Oil seal installer*

Shift Shaft Oil Seal

Remove the shift plate. Refer to *SHIFTER* subsection.

The shift shaft oil seal can be removed without removing the gearbox from the vehicle.

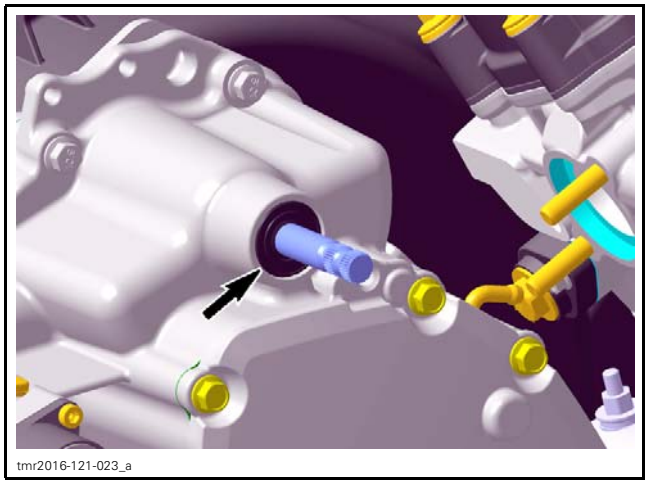

Use a suitable tube with the proper diameter to install the oil seal.

If gearbox housing is apart, use following tools for shift shaft oil seal installation.

REQUIRED TOOLS	
OIL SEAL INSTALLER (GEARBOX) (P/N 529 035 758)	
HANDLE (P/N 420 877 650)	

NOTICE **Oil seal must be installed with sealing lip toward gearbox.**

Output Shaft Oil Seals

Remove the appropriate drive shaft. Refer to *REAR DRIVE* subsection.

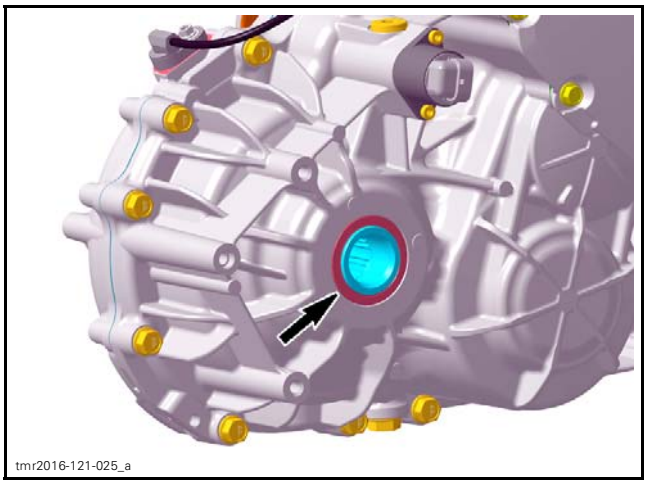

RIGHT SIDE

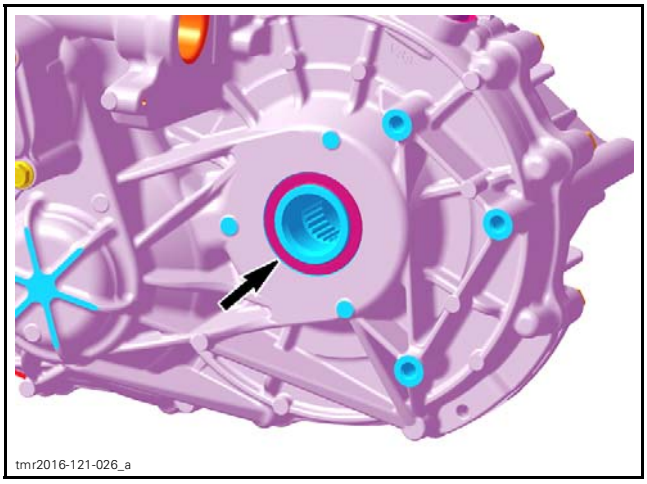

LEFT SIDE

Punch a sharp screwdriver through oil seal for removal.

Place oil seal on output shaft and install it using the following tools.

REQUIRED TOOLS	
SLEEVE INSTALLER (P/N 529 036 455)	
OIL SEAL INSTALLER (DIFFERENTIAL OUTPUT) (P/N 529 036 456)	

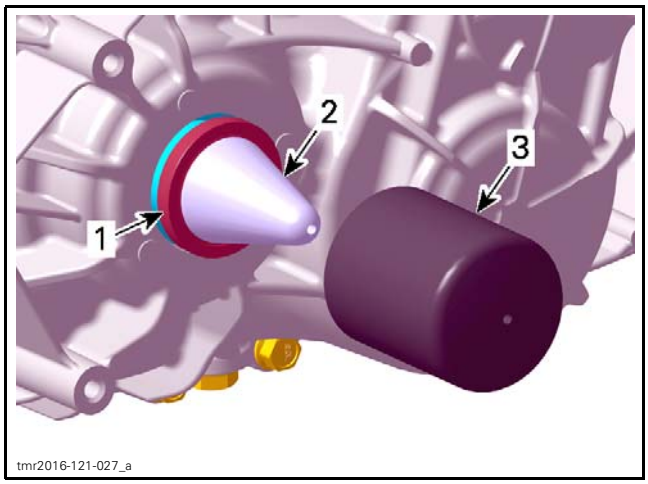

1. *Output shaft oil seal*
2. *Sleeve installer*
3. *Oil seal installer*

GEARBOX ASSEMBLY

Removing the Gearbox Assembly

Remove engine from vehicle. Refer to *ENGINE REMOVAL AND INSTALLATION* for the procedure.

Refer to *CONTINUOUSLY VARIABLE TRANSMISSION (CVT)* subsection to remove following parts:

– CVT cover
– Drive and driven pulleys
– CVT air guide.

Drain gearbox oil. Refer to *REPLACING THE GEARBOX OIL* in this subsection.

Remove the 4WD actuator, see procedure in this subsection.

Unscrew the four (4) gearbox retaining nuts.

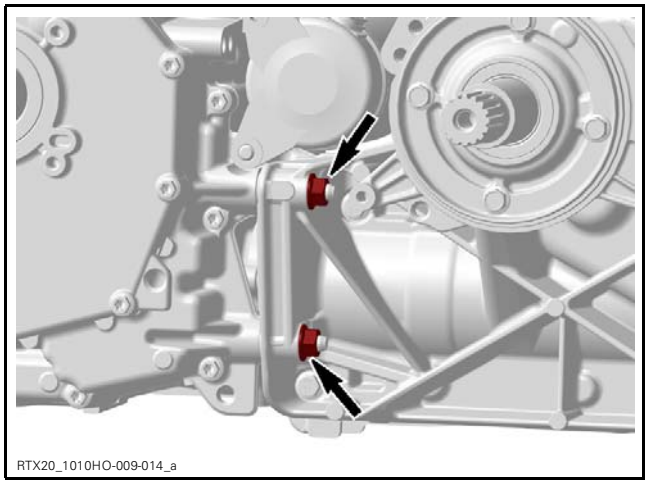

LH SIDE OF ENGINE

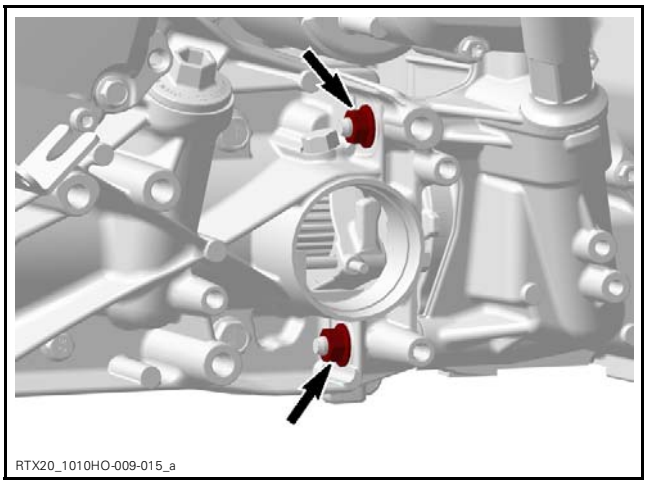

RH SIDE OF ENGINE

Pull gearbox to separate it from engine.

Installing the Gearbox

The installation is the reverse of the removal procedure. However, pay attention to following.

Before gearbox installation check O-ring on bearing cover if brittle, hard or damaged. Replace if necessary.

Lubricate O-ring on rear bearing cover.

SERVICE PRODUCT
Engine oil

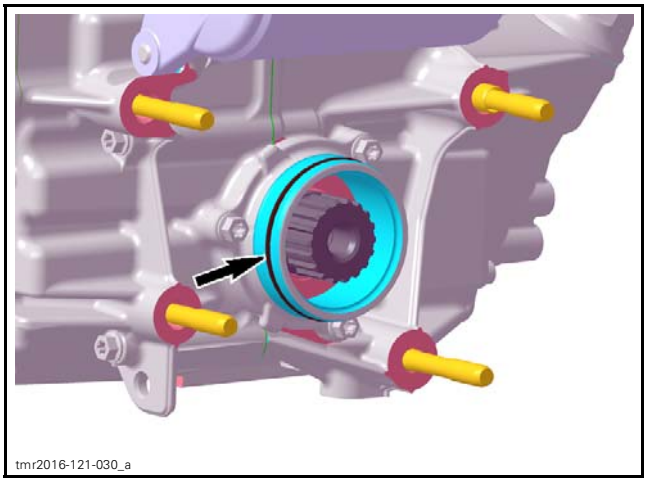

Tighten gearbox retaining nuts to specification.

TIGHTENING TORQUE	
Gearbox retaining nuts	25 N•m ± 3 N•m (18 lbf•ft ± 2 lbf•ft) + LOCTITE 243 (BLUE) (P/N 293 800 060)

After installation refill gearbox oil, refer to *REPLACING THE GEARBOX OIL* in this subsection.

GEARBOX HOUSING

Disassembling the Gearbox Housing

See procedures in this subsection to remove:
- *4WD ACTUATOR*
- *GBPS (GEARBOX POSITION SENSOR)*
- *DIFFERENTIAL LOCKING ACTUATOR.*

Set gearbox to PARK position.

Remove bearing cover.

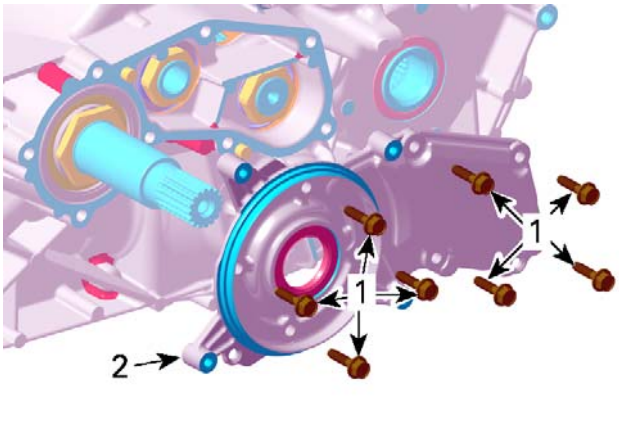

tmr2016-121-031_a

1. *Retaining screws*
2. *Bearing cover*

Remove countershaft nut.

NOTE: Heat up nut with a heat gun to break threadlocker.

CAUTION Nut can loosen abruptly.

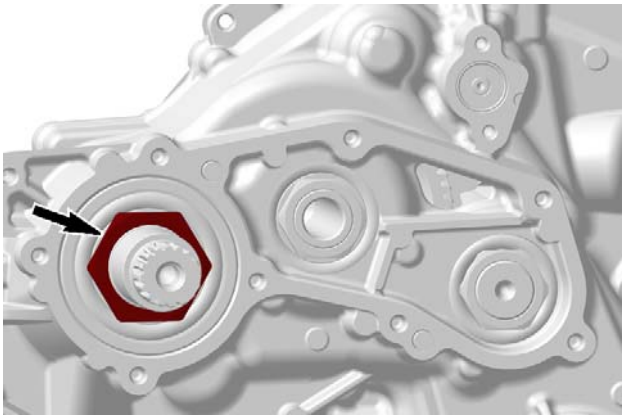
RTX20_1010HO-009-005_a

REQUIRED TOOLS	
M34 SOCKET (P/N 529 036 388)	
SPLINES SOCKET 1/2" (P/N 529 036 389)	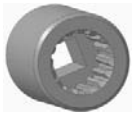

Install 4 screws to retain the M34 socket and tighten them to specification.

TIGHTENING TORQUE	
M34 socket retaining screws	10 N•m ± 1 N•m (89 lbf•**in** ± 9 lbf•**in**)

NOTICE Turn spline socket clockwise to loosen the nut.

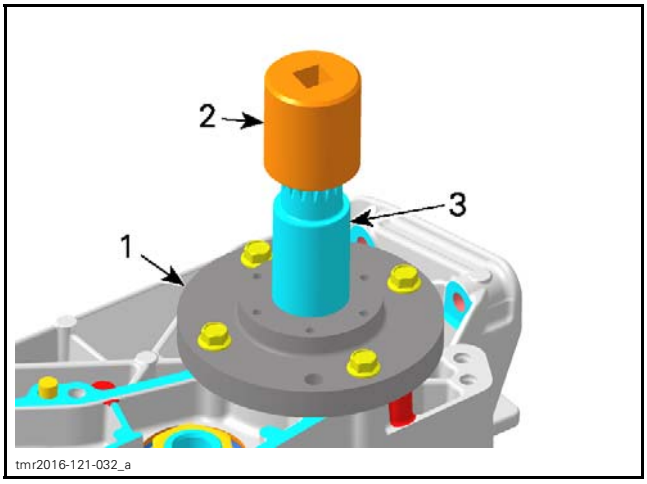

tmr2016-121-032_a

1. *M34 socket*
2. *Spline socket*
3. *Countershaft*

Remove nuts of main shaft and intermediate shaft.

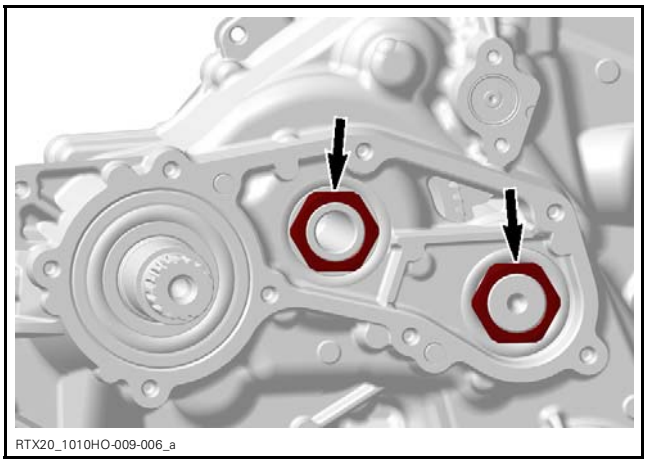
RTX20_1010HO-009-006_a

Refer to *GEARBOX AND SHIFTING MECHANISM* in this subsection and remove:

– Parking lock gear
– Index washer.

Remove all gearbox housing screws:

1. Start removing the M6 screws.
2. Then remove the M8 screws.

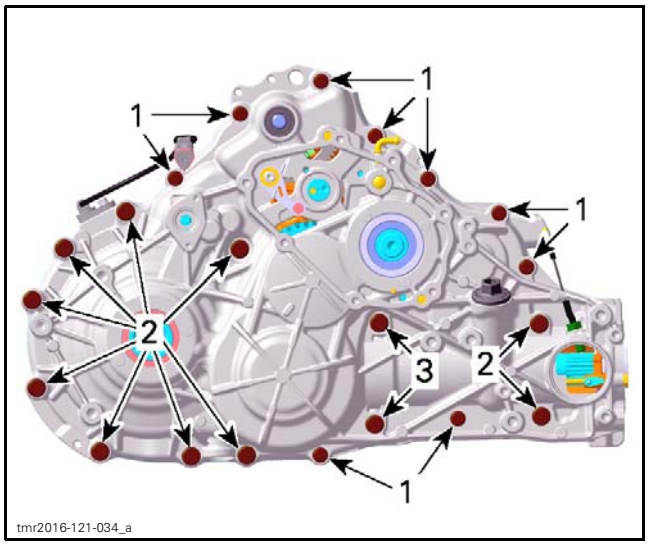

1. 11 screws M6 x 45
2. 10 screws M8 x 45
3. 2 screws M8 x 65

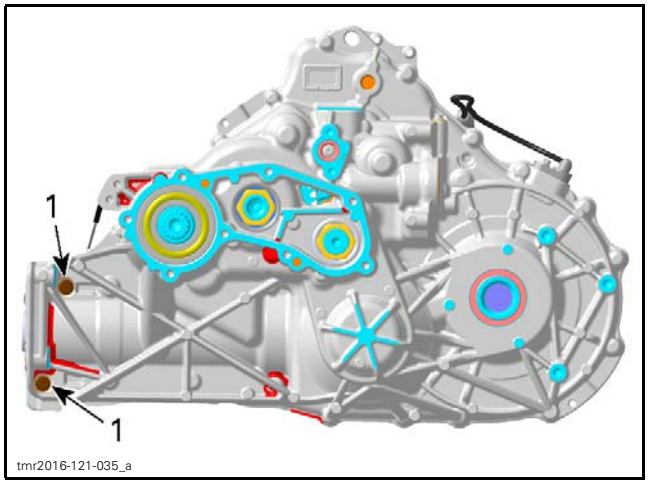

1. 2 screws M6 x 45

Separate gearbox housing, use 2 big screwdrivers.

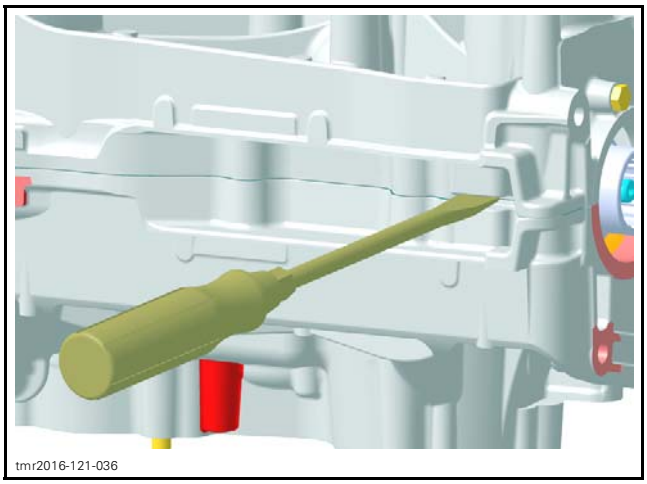

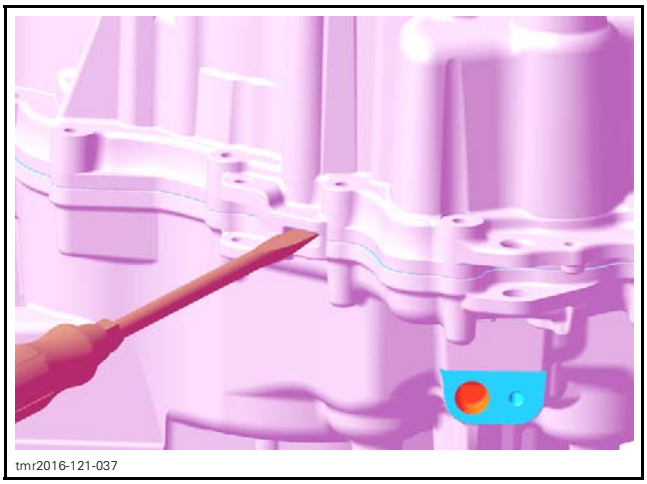

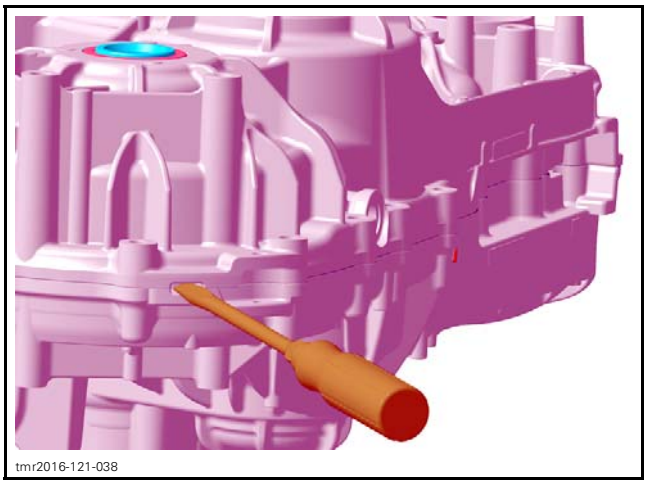

If necessary, refer to procedures in this subsection and remove:

– *GEARBOX AND SHIFTING MECHANISM*
– *OUTPUT SHAFT AND COUPLING MECHANISM*
– *REAR DIFFERENTIAL AND LOCKING MECHANISM*.

Inspecting the Gearbox Housing

Check gearbox ball bearings for: contamination and/or metal shavings.

Check if ball bearings turn freely and smoothly. Replace if necessary.

Replacing the Bearing

If necessary heat housing up to 100°C (212°F) before removing ball bearings.

⚠ WARNING

Clean oil, outside and inside, from housing before heating.

NOTICE **Always support gearbox housings properly when ball bearings are removed. Housing damages may occur if this procedure is not performed correctly.**

Use a blind hole bearing puller to remove ball bearings of:

- Countershaft (right cover)
- Intermediate shaft (right cover).

Remove retaining plate securing the main shaft and intermediate shaft bearings in the left housing.

Remove screw securing the main shaft bearing in the right cover.

Use a suitable puller to remove ball bearings of:

- Main shaft (right and left cover)
- Countershaft (left cover)
- Intermediate shaft (left cover)
- Differential ball bearings (right and left cover).

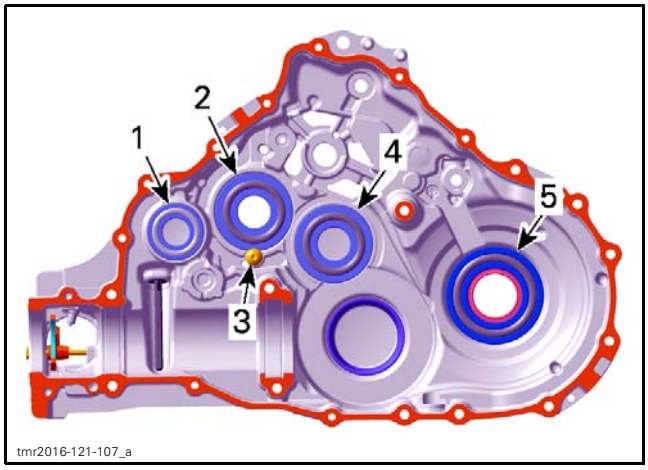

RIGHT GEARBOX HOUSING
1. *Ball bearing countershaft*
2. *Ball bearing main shaft*
3. *Screw*
4. *Ball bearing intermediate shaft*
5. *Ball bearing differential*

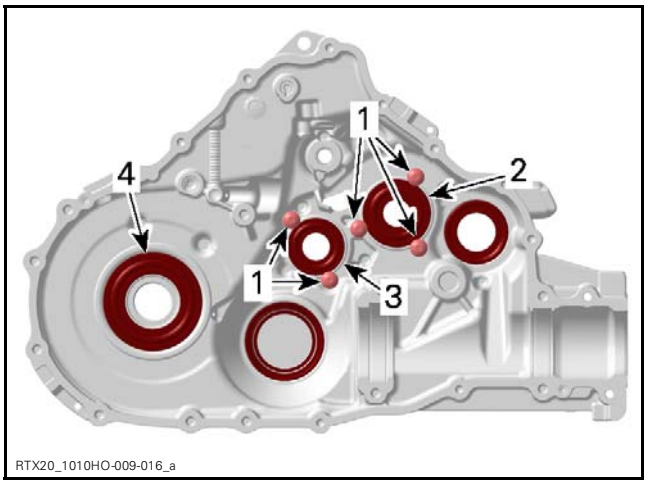

LEFT GEARBOX HOUSING
1. *Screws*
2. *Ball bearing main shaft*
3. *Ball bearing intermediate shaft*
4. *Ball bearing differential*

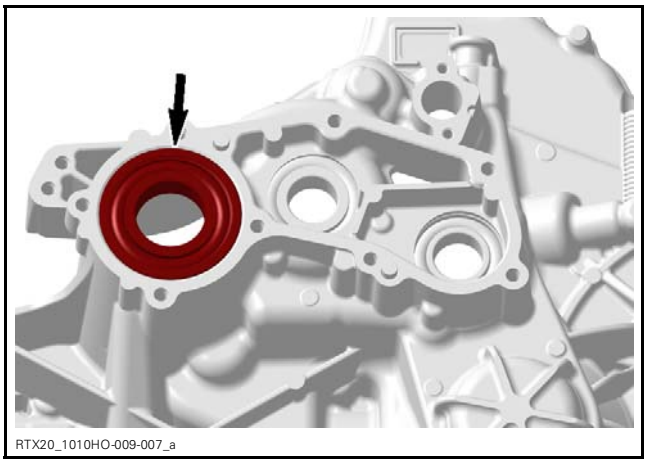

LEFT GEARBOX HOUSING - BALL BEARING COUNTERSHAFT

Unless otherwise instructed, never use hammer to install ball bearings. Use press machine only.

If necessary heat housings up to 100°C (212°F) before installing ball bearings.

⚠ WARNING

Clean oil, outside and inside, from housing before heating.

Place new bearing in freezer for 10 minutes before installation.

Use a suitable installer for installing ball bearings of countershaft, main shaft and intermediate shaft.

NOTE: Place gearbox housings on a wood stand before installing ball bearings.

TIGHTENING TORQUE	
Bearing retaining screws (left cover)	10 N•m ± 1 N•m (89 lbf•**in** ± 9 lbf•**in**)

TIGHTENING TORQUE	
Retaining screw main shaft bearing (right cover)	10 N•m ± 1 N•m (89 lbf•**in** ± 9 lbf•**in**) + LOCTITE 243 (BLUE) (P/N 293 800 060)

Install new oil seals with the proper installer (refer to *GEARBOX OIL SEALS* in this subsection).

Assembling the Gearbox Housing

Clean all metal components in a solvent.

Gearbox housing mating surfaces are best cleaned using a combination of LOCTITE CHISEL (GASKET REMOVER) (P/N 413 708 500) and a brass brush. Brush a first pass in one direction then make the final brushing perpendicularly (90°) to the first pass cross (hatch).

NOTICE **Do not wipe with rags. Use a new clean hand towel only.**

IMPORTANT: When beginning the application of the gear housing sealant, the assembly and the first torquing should be done within 10 minutes. It is suggested to have all you need on hand to save time.

Place sleeve installer on rear differential.

REQUIRED TOOL	
SLEEVE INSTALLER (P/N 529 036 455)	

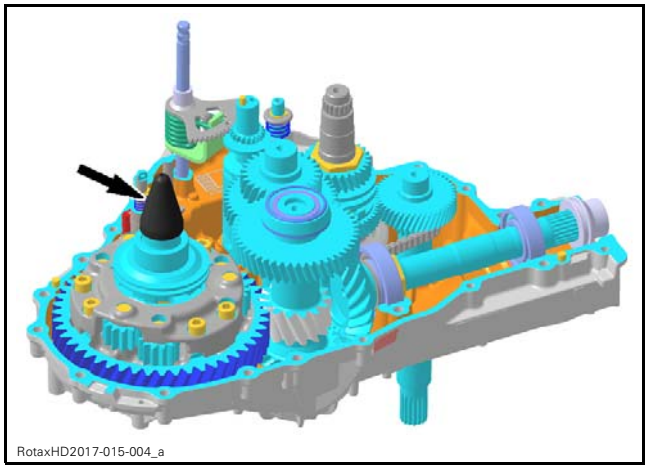

Apply sealant on mating surface.

SERVICE PRODUCT
LOCTITE 5910 (P/N 293 800 081)

Do not apply in excess as it will spread out inside gearbox housing.

NOTE: It is recommended to apply this specific sealant as described here to get a uniform application without lumps.

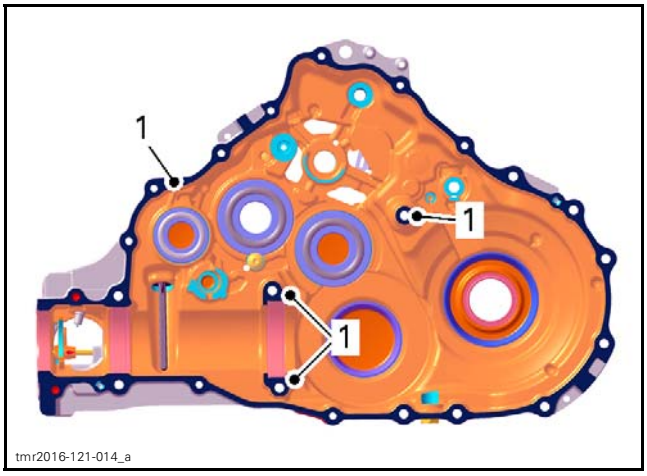

1. Apply sealant here

During installation of the right gearbox housing align the coupling fork with the groove in the coupling sleeve.

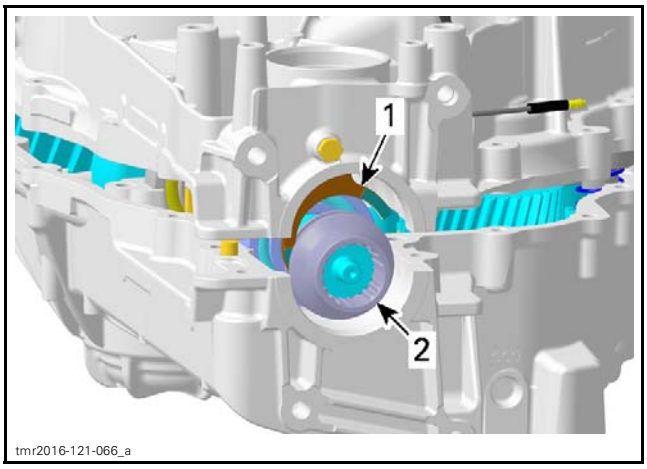

1. Coupling fork
2. Coupling sleeve

Install all gearbox housing screws.

Tighten M8 gearbox housing screws as per following sequence.

TIGHTENING TORQUE	
M8 gearbox housing screws	25 N•m ± 3 N•m (18 lbf•ft ± 2 lbf•ft)

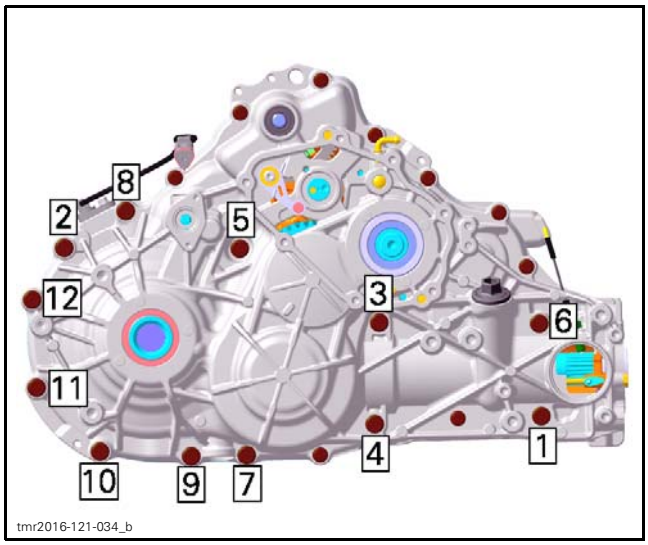

tmr2016-121-034_b

Tighten M6 gearbox housing screws as per following sequence.

TIGHTENING TORQUE	
M6 gearbox housing screws	10 N•m ± 1 N•m (89 lbf•**in** ± 9 lbf•**in**)

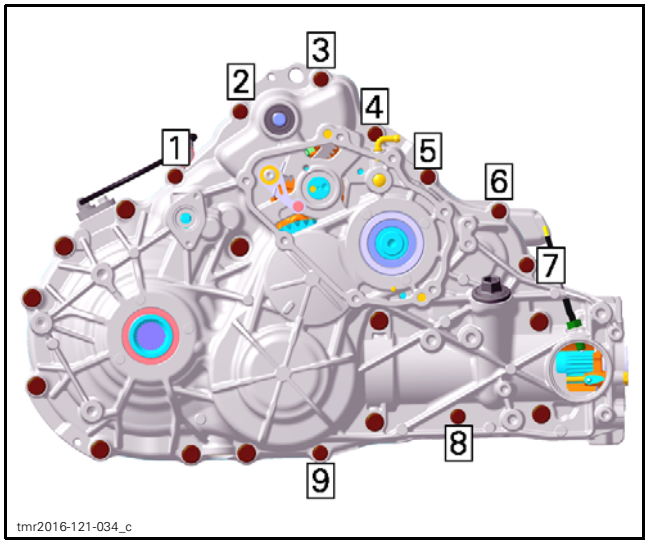

tmr2016-121-034_c

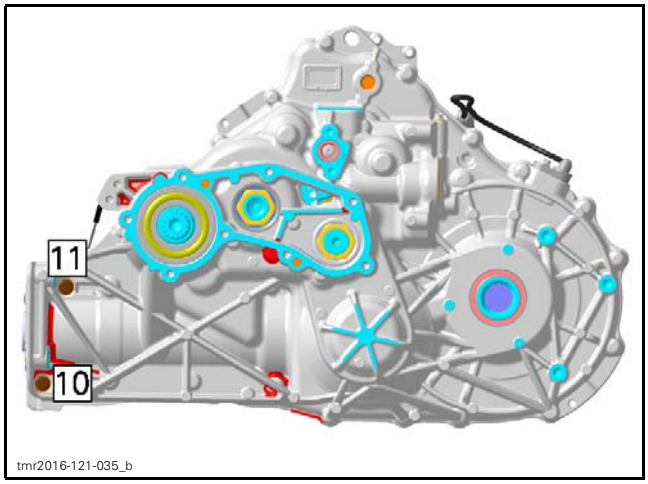

tmr2016-121-035_b

Refer to *GEARBOX AND SHIFTING MECHANISM* in this subsection to install:

- Index lever
- Index washer
- Parking lock gear
- Parking lock lever.

Set gearbox to PARK position.

Tighten main shaft and intermediate shaft nuts to specification.

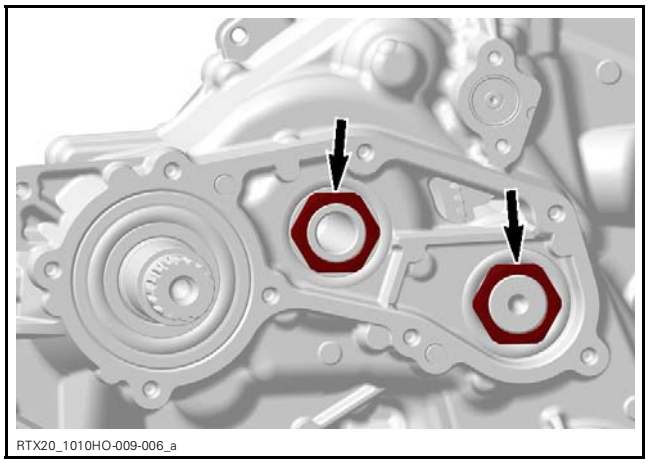
RTX20_1010HO-009-006_a

TIGHTENING TORQUE	
Main shaft and intermediate shaft nuts	170 N•m ± 10 N•m (125 lbf•ft ± 7 lbf•ft) + LOCTITE 648 (GREEN) (P/N 413 711 400)

Tighten countershaft nut to specification.

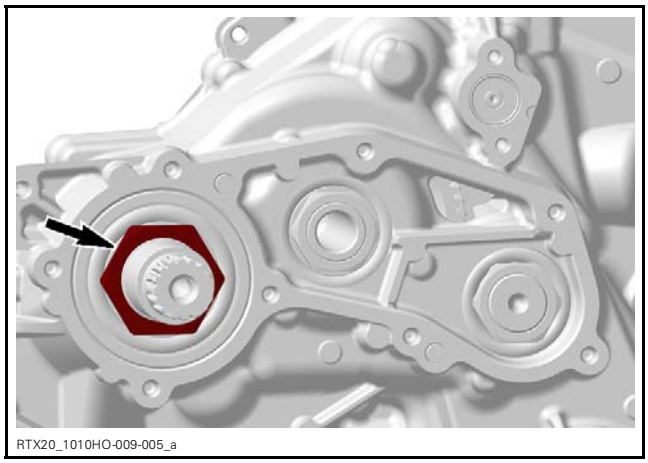
RTX20_1010HO-009-005_a

TIGHTENING TORQUE	
Countershaft nut	170 N•m ± 10 N•m (125 lbf•ft ± 7 lbf•ft) + LOCTITE 648 (GREEN) (P/N 413 711 400)

REQUIRED TOOLS	
M34 SOCKET (P/N 529 036 388)	
SPLINES SOCKET 1/2" (P/N 529 036 389)	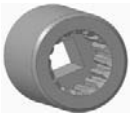

Install 4 screws to retain the M34 socket and tighten them to specification.

TIGHTENING TORQUE	
M34 socket retaining screws	10 N•m ± 1 N•m (89 lbf•**in** ± 9 lbf•**in**)

NOTICE **Turn spline socket counterclockwise to tighten the nut.**

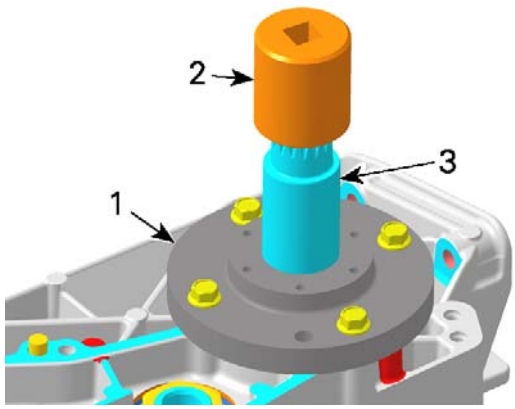

tmr2016-121-032_a

1. *M34 socket*
2. *Spline socket*
3. *Countershaft*

Apply sealant on mating surface of bearing housing.

SERVICE PRODUCT
LOCTITE 5910 (P/N 293 800 081)

Install bearing housing screws and tighten them as per following sequence.

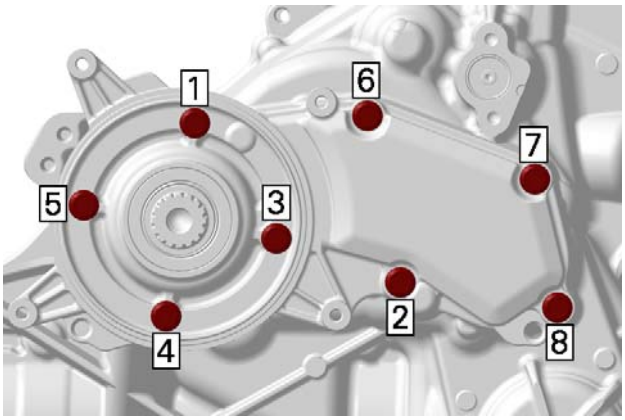

RTX20_1010HO-009-008_a

TIGHTENING TORQUE	
Bearing housing screws	10 N•m ± 1 N•m (89 lbf•**in** ± 9 lbf•**in**)

GEARBOX AND SHIFTING MECHANISM

Disassembling the Gearbox and Shifting Mechanism

NOTE: During gearbox and shifting mechanism disassembly, inspect the condition of each part closely.

Index Lever, Index Washer and Parking Lock Lever

Set gearbox to PARK position.

Remove the gearbox cover.

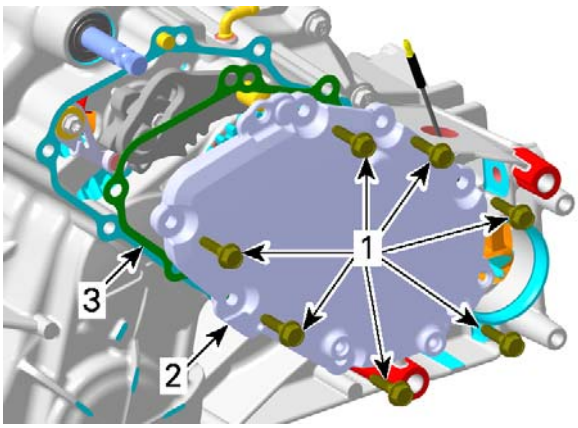

tmr2016-121-043_a

1. *Retaining screws*
2. *Gearbox cover*
3. *Gasket (discard it)*

Remove the park locking gear.

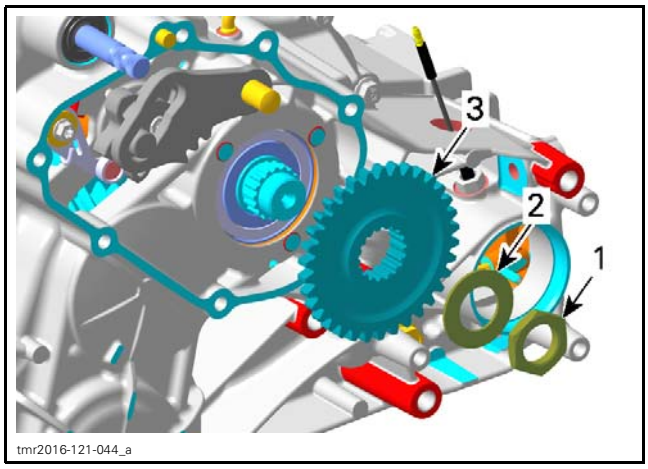

1. *Nut*
2. *Spring washer*
3. *Park locking gear*

Remove the parking locking lever.

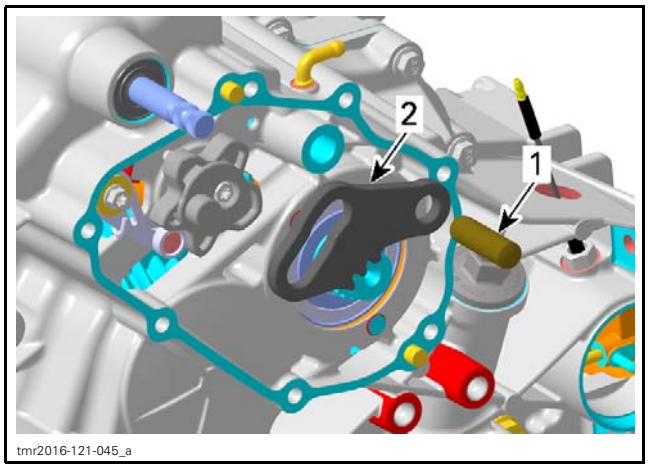

1. *Pin*
2. *Park locking lever*

Remove screw retaining the index washer to the shift drum.

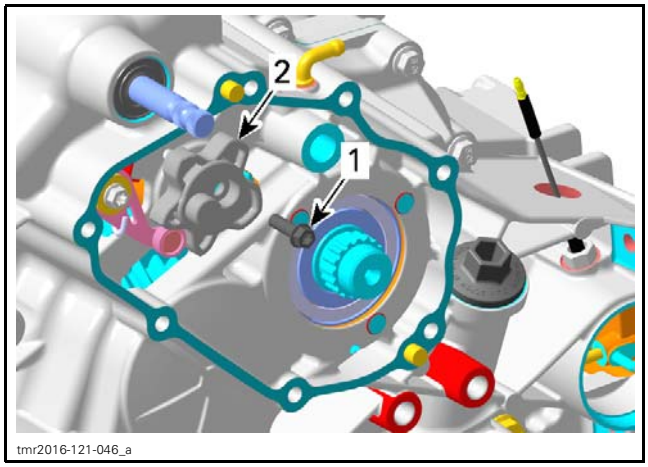

1. *Screw*
2. *Index washer*

Insert a flat screwdriver in the slot of index lever. Turn screwdriver clockwise and remove index washer.

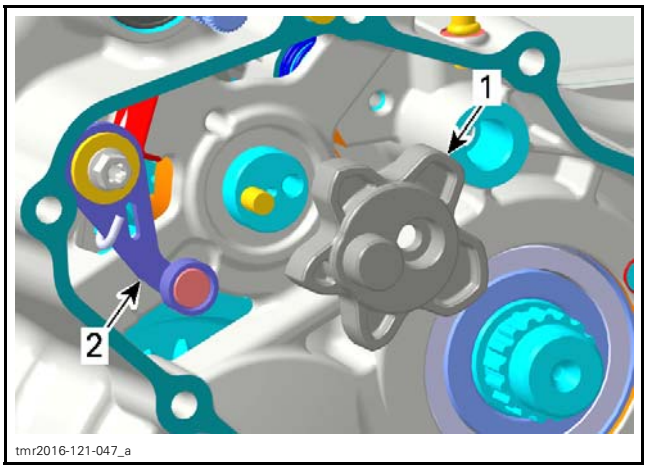

1. *Index washer*
2. *Index lever*

Remove the index lever with washer, step ring and spring.

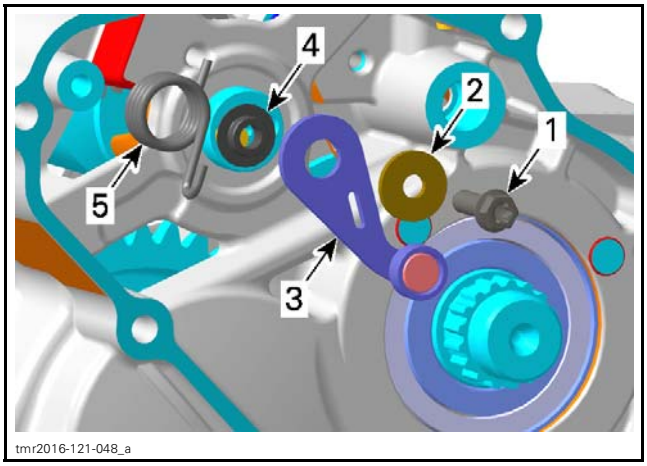

1. *Screw*
2. *Washer*
3. *Index lever*
4. *Step ring*
5. *Index spring*

Shift Shaft Assembly and Shift Drum

Separate gearbox housing, refer to *GEARBOX HOUSING* in this subsection.

Withdraw shift shaft assembly.

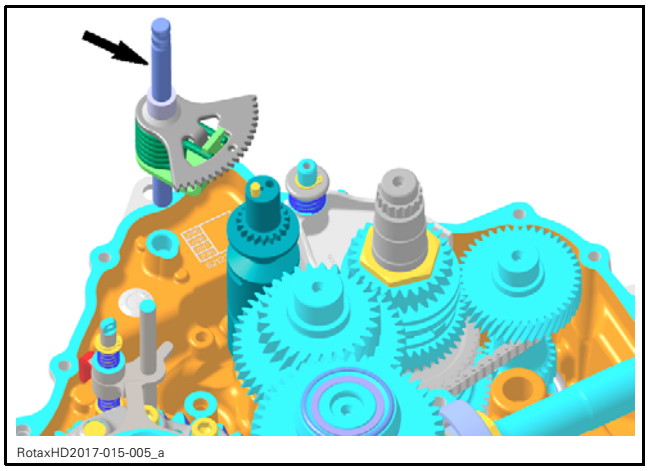
RotaxHD2017-015-005_a

Lift shift fork shaft assembly and move it aside to disengage shift forks from shift drum.

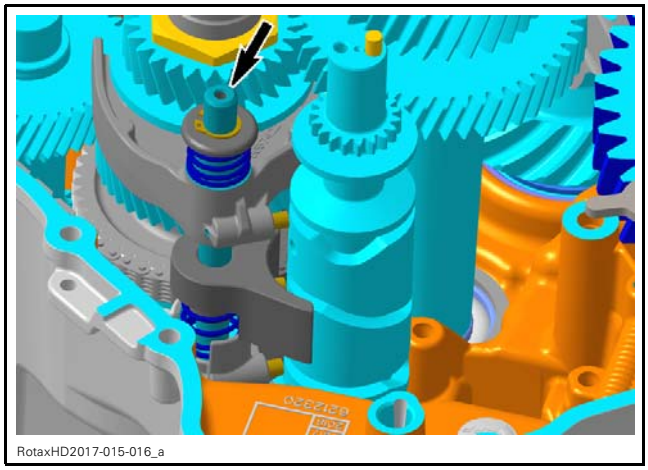
RotaxHD2017-015-016_a

Withdraw shift drum.

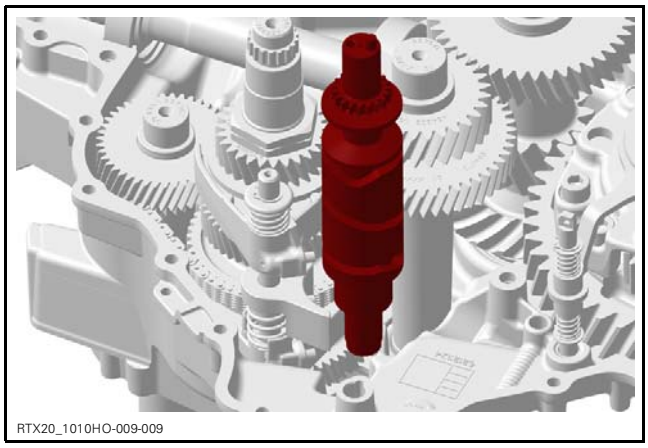
RTX20_1010HO-009-009

Pinion Drive Shaft and Intermediate Shaft

Separate gearbox housing, refer to *GEARBOX HOUSING* in this subsection.

Remove:

1. Pinion drive shaft
2. Intermediate shaft.

NOTE: Bevel gear and distance shim remain in gearbox housing.

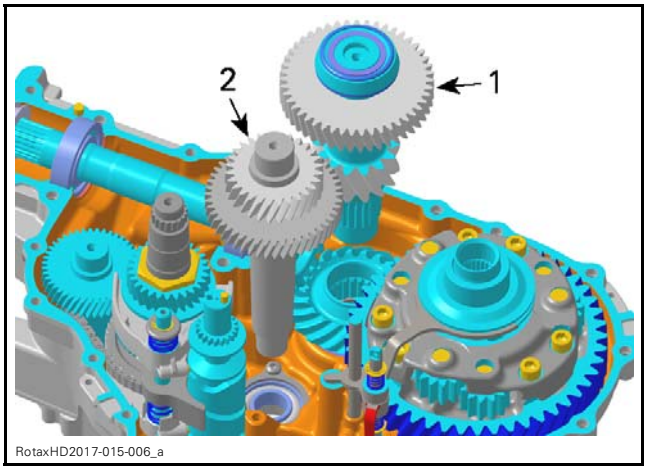

RotaxHD2017-015-006_a

1. *Pinion drive shaft*
2. *Intermediate shaft*

Main Shaft, Shift Fork Shaft Assembly and Countershaft

Separate gearbox housing, refer to *GEARBOX HOUSING* in this subsection.

See procedures in this subsection to remove:

- Pinion drive shaft
- Intermediate shaft
- Shift fork shaft assembly
- Shift drum.

Remove main shaft assembly together with shift fork shaft assembly and countershaft.

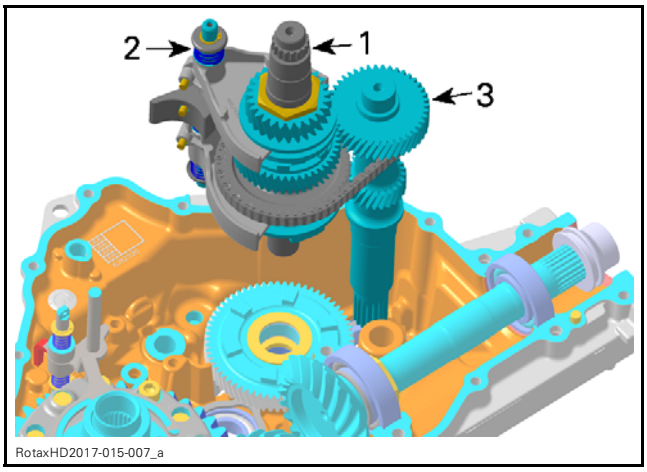

RotaxHD2017-015-007_a

1. *Main shaft assembly*
2. *Shift fork shaft assembly*
3. *Countershaft*

Remove the LOW range gear.

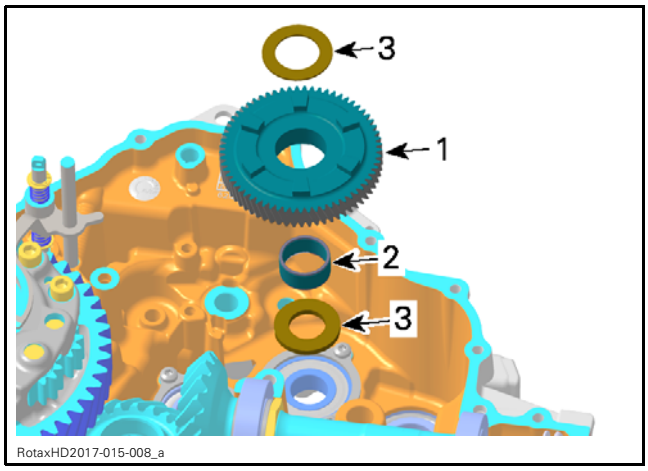

1. Free pinion LOW range gear
2. Needle bearing
3. Thrust washer

Disassembling the Shift Fork Shaft Assembly

NOTICE **Springs are not identical. Mark them to reinstall them in their original position.**

Remove the following parts from the shift fork shaft.

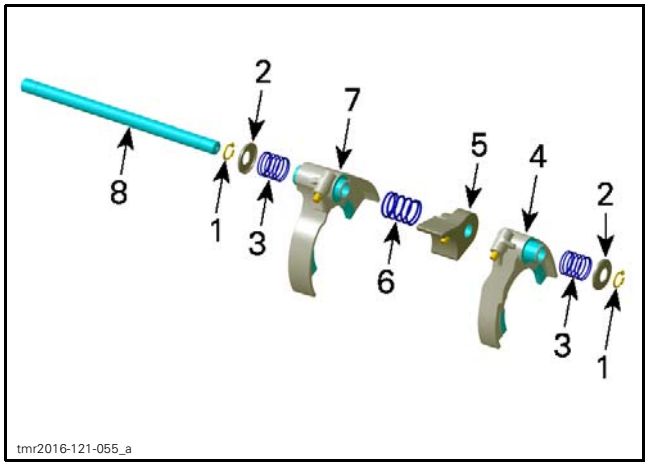

1. Snap rings (discard them)
2. Spring seat
3. Outer springs
4. Shift fork HIGH
5. Shifting block
6. Center spring
7. Shift fork LOW/REVERSE
8. Shift fork shaft

Inspecting the Gearbox and Shifting Mechanism

Always verify for the following when inspecting gearbox components:

- Gear teeth damage
- Worn or scoured bearing surfaces
- Rounded engagement dogs and slots
- Worn shift fork engagement groove
- Worn splines on shafts and shifting sleeves.

Bearings

When gearbox is removed check gearbox ball bearings for contamination and/or metal shavings.

Check if ball bearings turn freely and smoothly. Replace if necessary, refer to *GEARBOX HOUSING* in this subsection.

Shifting Sleeves

Check shifting sleeves for worn inner splines and rounded or damaged engagement dogs.

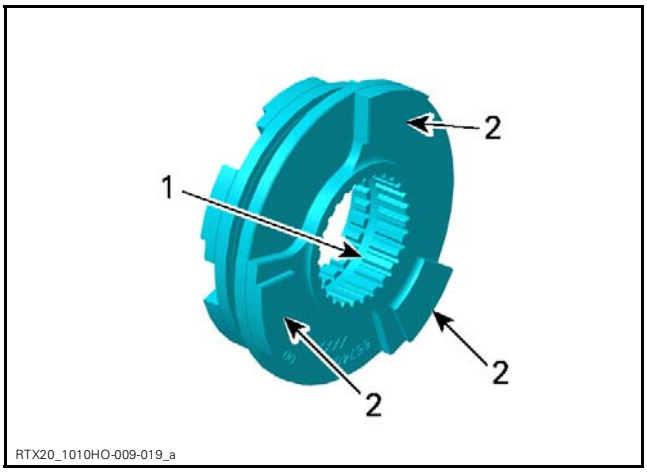

TYPICAL
1. Inner splines
2. Engagement dogs

Measure the width of shift fork engagement groove.

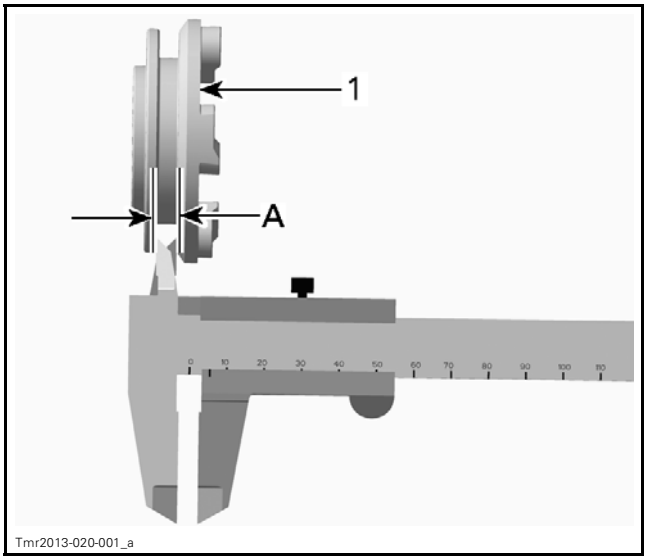

TYPICAL
1. Shifting sleeve
A. Width of shift fork engagement groove

WIDTH OF SHIFT FORK ENGAGEMENT GROOVE	
New	6.10 mm to 6.25 mm (.24 in to .246 in)
Service limit	6.30 mm (.248 in)

Shafts

Check countershaft bearing journals for wear.

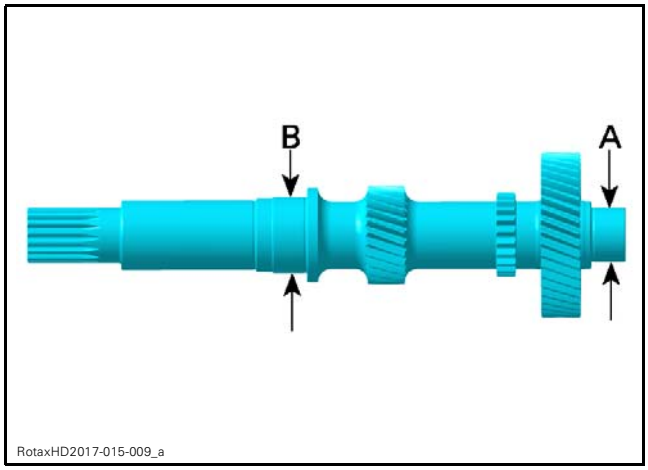

A. MAG side
B. Bearing journal CVT side

COUNTERSHAFT BEARING JOURNALS	
MAG SIDE	
NEW	19.977 mm to 19.990 mm (.786 in to .787 in)
SERVICE LIMIT	19.973 mm (.786 in)
CVT SIDE	
NEW	24.977 mm to 24.990 mm (.983 in to .984 in)
SERVICE LIMIT	24.970 mm (.983 in)

Check main shaft for wear.

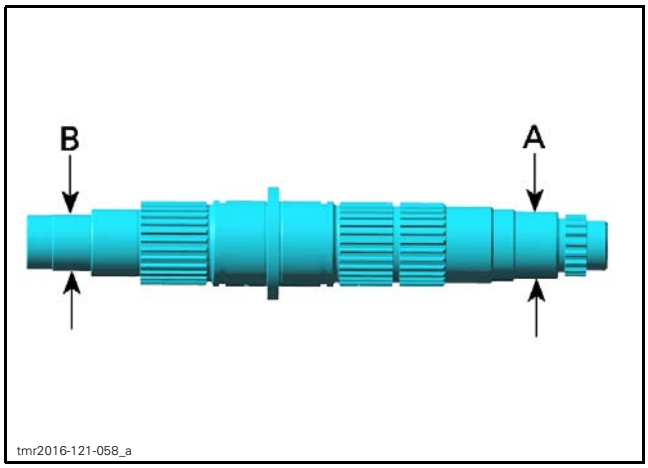

A. Bearing journal MAG side
B. Bearing journal CVT side

MAIN SHAFT BEARING JOURNAL CVT/MAG SIDE	
New	16.980 mm to 16.991 mm (.669 in to .669 in)
Service limit	16.976 mm (.668 in)

Shift Shaft

Check shift shaft for worn splines and gears.

Check shift shaft spring for damages.

Shift Drum

NOTICE **Do not disassemble shift drum.**

Remove GBPS magnet only if necessary.

Check shift drum tracks for scouring or heavy wear, like rounded engagement slots.

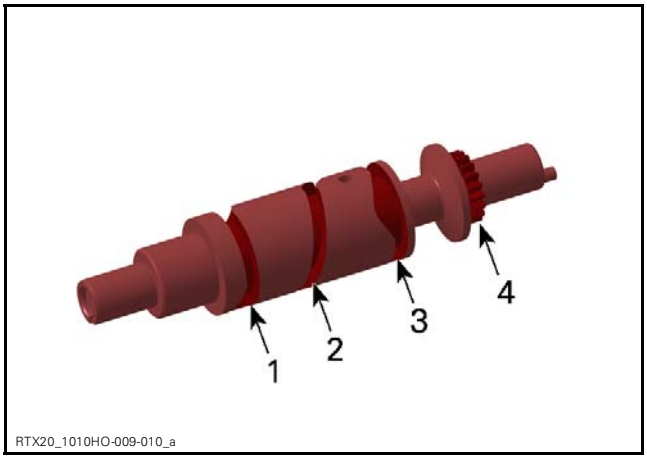

1. Track for the low/reverse range gear shift fork
2. Track for the shifting block
3. Track for the high range gear shift fork
4. Shift drum gear

Shift Forks

Check both shift forks for visible damage, wear or bent shift fork claws.

Check engagement rollers for wear and smooth movement.

Measure the shift fork claw thickness.

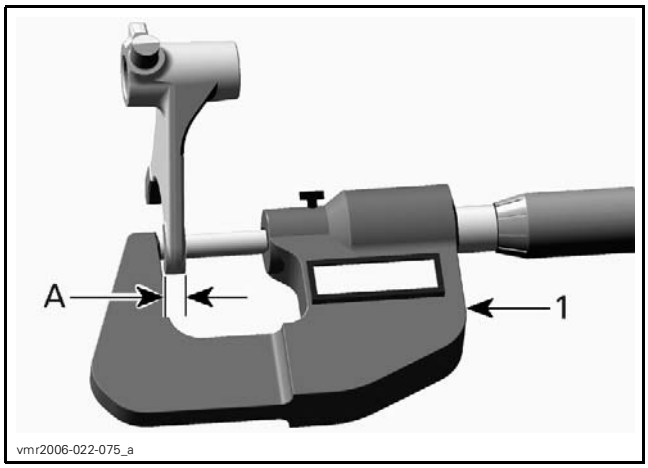

TYPICAL
1. *Micrometer*

A. *Shift fork claw thickness*

SHIFT FORK CLAW THICKNESS	
New	5.92 mm to 6.00 mm (.233 in to .236 in)
Service limit	5.80 mm (.228 in)

Shift Fork Shaft

Check shift fork shaft for visible damage or wear.

Check if shift fork shaft is straight.

Index Lever and Parking Lever

Index lever with roller must move freely.

Check parking lever for cracks or other damages.

Assembling the Gearbox and Shifting Mechanism

The assembly of gearbox is essentially the reverse of disassembly procedure. However, pay attention to the following details.

Prior to assembly lubricate ball bearing seats of:
- Main shaft
- Countershaft
- Intermediate shaft.

SERVICE PRODUCT
COPASLIP (P/N 420 297 430)

Assembling the Shift Fork Shaft Assembly

NOTICE **Springs are not identical.**

Install:
- NEW snap rings
- Spring seats
- Springs
- Shift forks
- Shifting block.

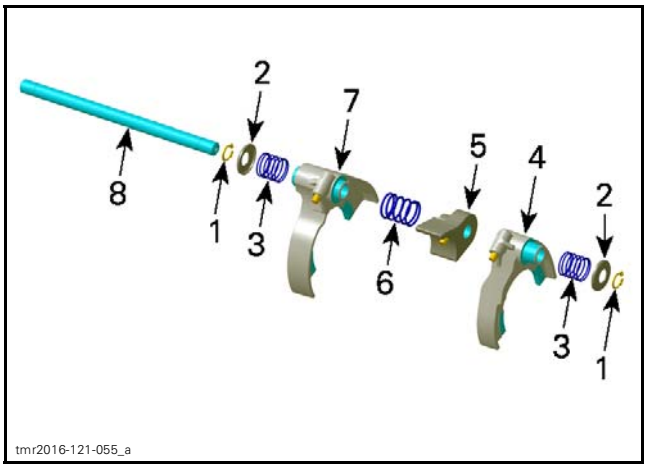

1. *Snap rings*
2. *Spring seat*
3. *Outer springs*
4. *Shift fork HIGH*
5. *Shifting block*
6. *Center spring*
7. *Shift fork LOW/REVERSE*
8. *Shift fork shaft*

Main Shaft, Shift Fork Shaft Assembly and Countershaft

Install shifting sleeve, thrust washer and LOW gear pinion on main shaft assembly.

NOTE: Check if shifting sleeve engages correctly in reverse gear.

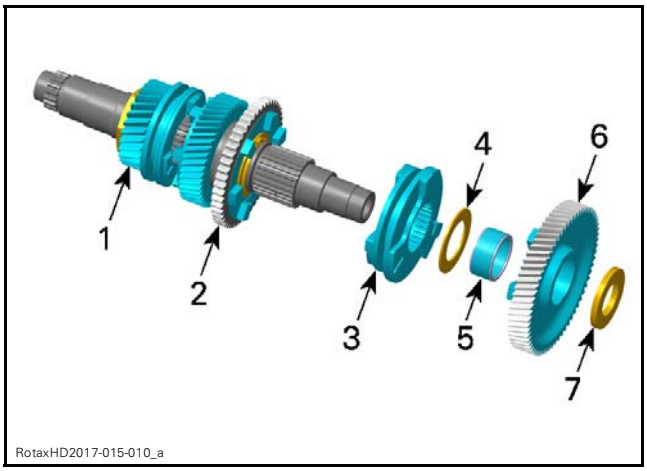

1. *Main shaft assembly*
2. *Reverse gear*
3. *Shifting sleeve*
4. *Thrust washer*
5. *Needle bearing*
6. *LOW gear pinion*
7. *Thrust washer*

Install shift fork shaft assembly, countershaft and main shaft assembly together into gearbox housing.

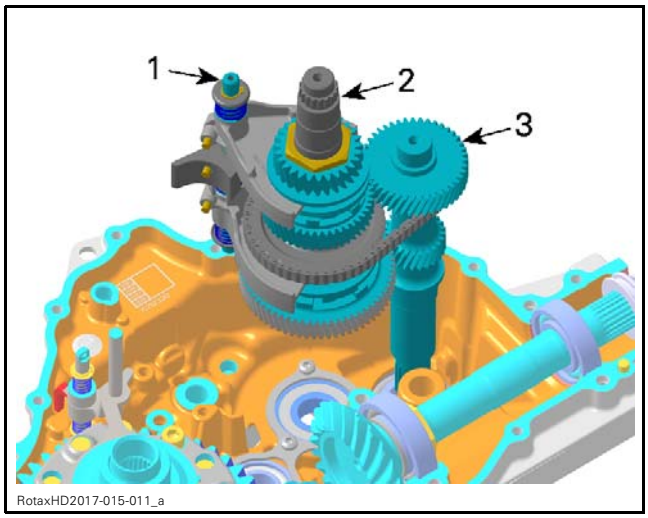

1. *Shift fork shaft assembly*
2. *Main shaft assembly*
3. *Countershaft*

Pinion Drive Shaft and Intermediate Shaft

Ensure distance shim and bevel gear are placed on the pinion drive shaft bearing in gearbox housing.

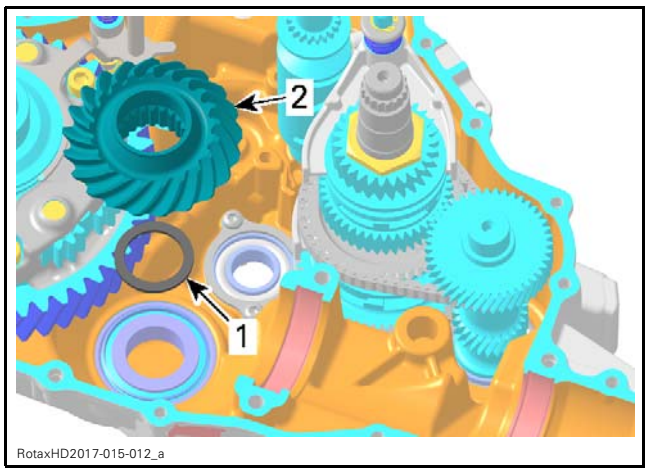

1. *Distance shim*
2. *Bevel gear*

Install:

1. Intermediate shaft
2. Pinion drive shaft.

Carefully fit pinion drive shaft into inner splines of bevel gear.

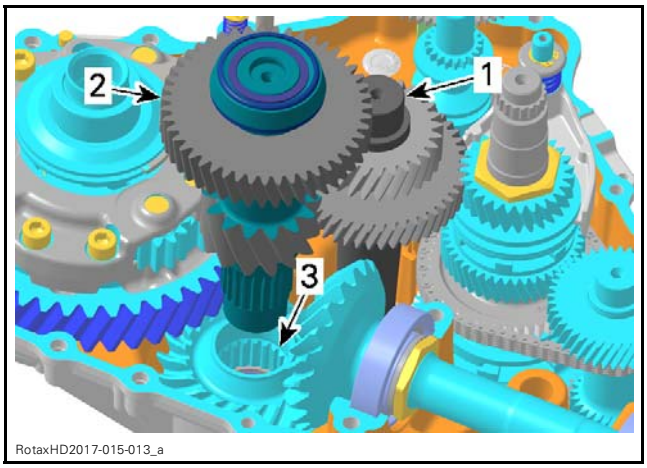

1. *Intermediate shaft*
2. *Pinion drive shaft*
3. *Bevel gear splines*

Shift Shaft Assembly and Shift Drum

Install:

– Shift drum
– Shift shaft assembly.

Align mark on shift shaft with marks on shift drum gear.

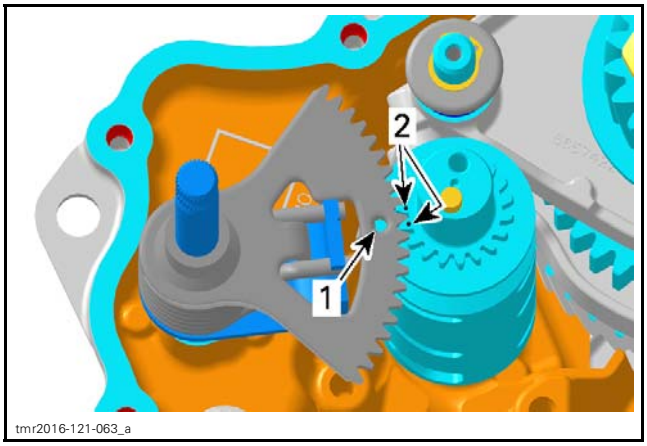

1. *Mark on shift shaft*
2. *Marks on shift drum gear*

Engage shift fork pins into shift drum gates and install shift fork shaft:

1. Lift shift fork HIGH
2. Press shifting block down
3. Move shift fork shaft sidewards

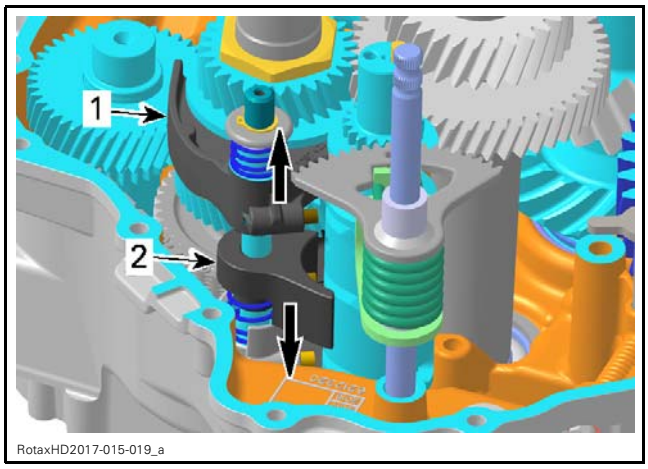

1. Shift fork HIGH
2. Shifting block

Index Lever, Index Washer and Parking Lock Lever

Fit step ring into index lever.

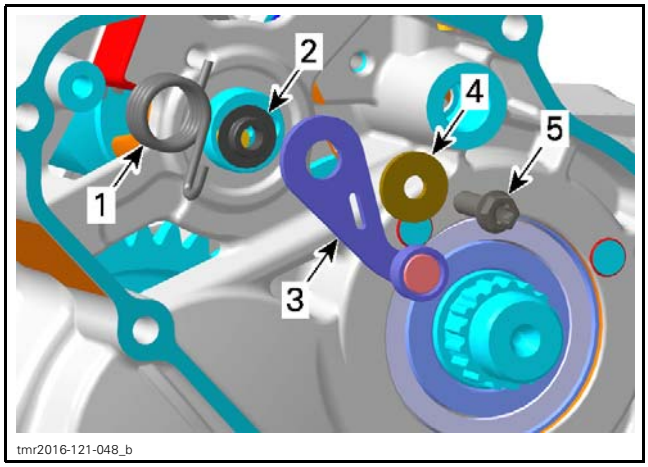

1. Index spring
2. Step ring
3. Index lever
4. Washer
5. Screw

TIGHTENING TORQUE	
Index lever retaining screw	10 N•m ± 1 N•m (89 lbf•**in** ± 9 lbf•**in**) + LOCTITE 243 (BLUE) (P/N 293 800 060)

Install index washer on shift drum.

Insert a flat screwdriver in the slot of the index lever, turn screwdriver clockwise and engage lever in index washer in NEUTRAL position as per following illustration.

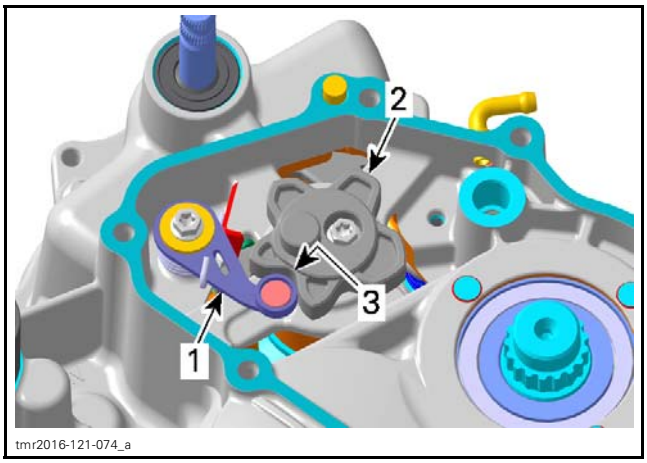

1. Index lever
2. Index washer
3. Neutral position

Install screw retaining the index washer to the shift drum.

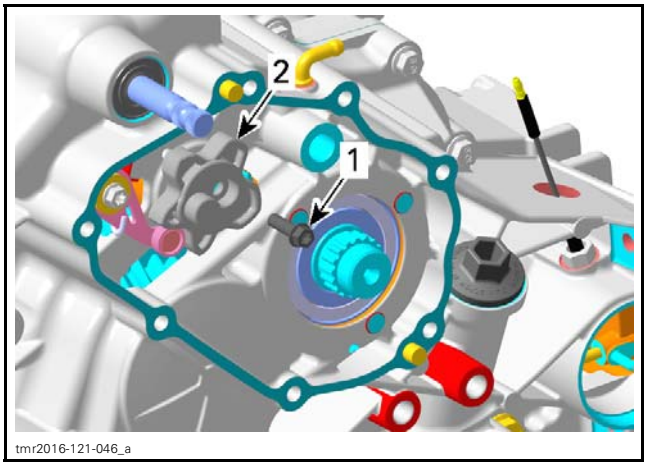

1. Screw
2. Index washer

TIGHTENING TORQUE	
Index washer retaining screw	10 N•m ± 1 N•m (89 lbf•**in** ± 9 lbf•**in**) + LOCTITE 243 (BLUE) (P/N 293 800 060)

Install:
- Park locking gear
- Spring washer
- Nut
- Pin
- Park locking lever.

Set gearbox to PARK position.

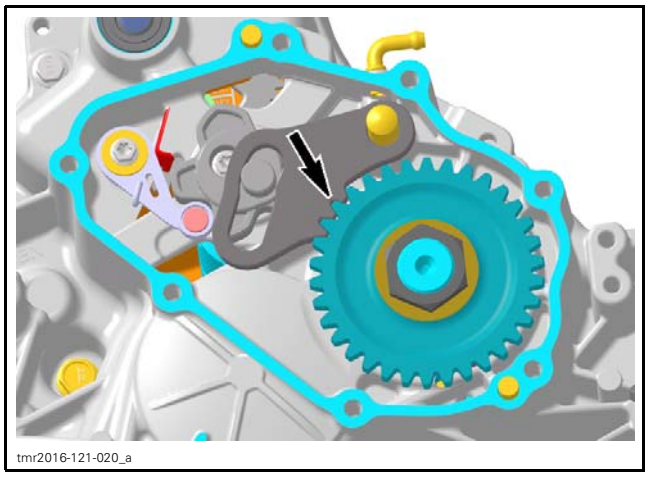

PARK LOCKING LEVER ENGAGED

Tighten nut to specification.

TIGHTENING TORQUE	
Park locking gear nut	170 N•m ± 10 N•m (125 lbf•ft ± 7 lbf•ft) + LOCTITE 648 (GREEN) (P/N 413 711 400)

Install gearbox cover with **NEW** gasket.

Tighten gearbox cover screws as per following sequence.

TIGHTENING TORQUE	
Gearbox cover screws	10 N•m ± 1 N•m (89 lbf•**in** ± 9 lbf•**in**)

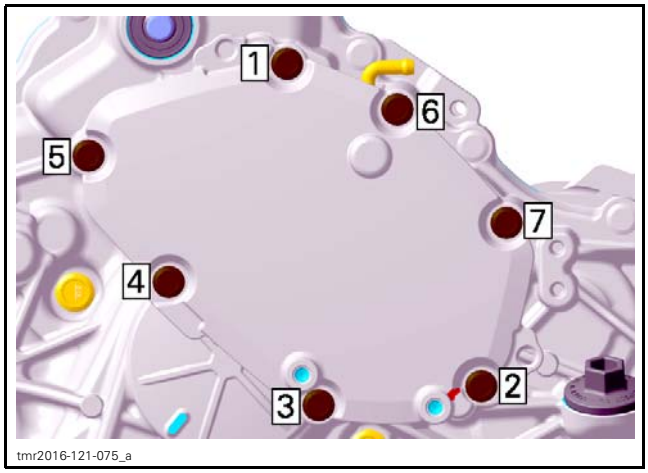

OUTPUT SHAFT AND 4X4 COUPLING MECHANISM

Removing the Output Shaft and 4X4 Coupling Mechanism

Drain gearbox oil. Refer to *REPLACING THE GEARBOX OIL* in this subsection.

Remove *4WD ACTUATOR*, refer to procedure in this subsection.

Detach *GEARBOX ASSEMBLY* from engine, refer to procedure in this subsection.

Remove the coupling fork.

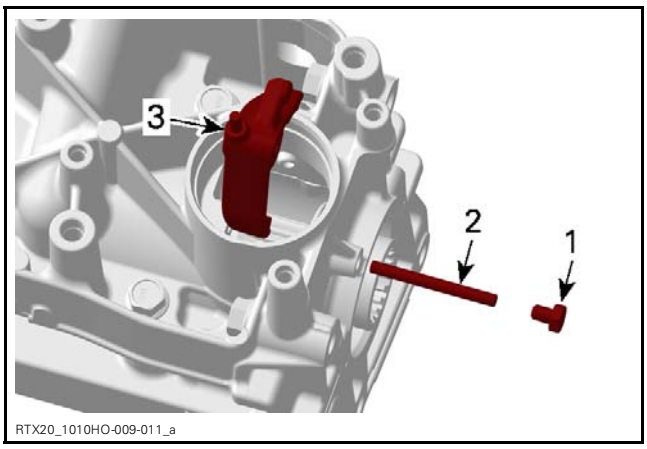

1. *Screw*
2. *Coupling fork shaft*
3. *Coupling fork*

Pull out 4X4 coupling sleeve.

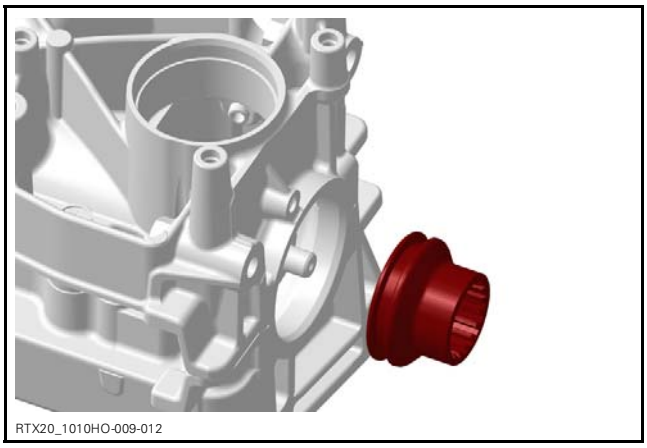

Inspecting the Output Shaft and 4X4 Coupling Mechanism

Output Shaft

Check output shaft and its gear for cracks, bend, pitting or other visible damages.

Check output shaft splines for wear or other damages.

Check if the output shaft bearings turn freely and smoothly.

Replace oil seal if brittle, hard or damaged.

4X4 Coupling Sleeve

Check splines of coupling sleeve for wear or other damages.

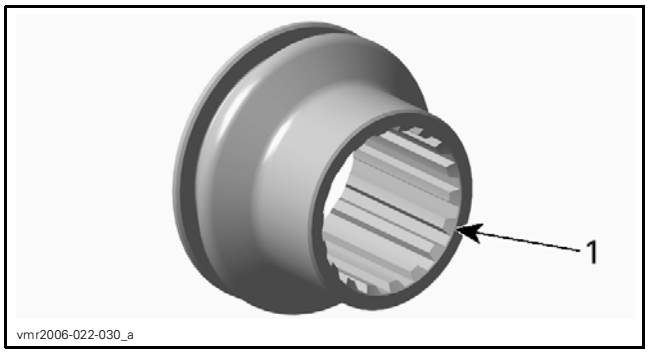

1. Inspect splines

Measure the coupling sleeve groove width.

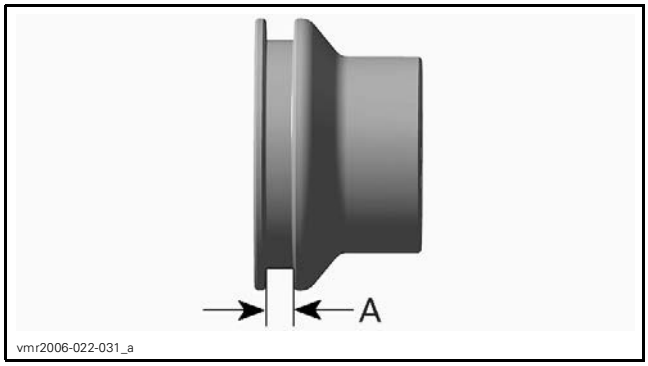

A. Groove width

COUPLING SLEEVE GROOVE WIDTH	
New	5.25 mm to 5.35 mm (.207 in to .211 in)
Service limit	5.50 mm (.217 in)

Coupling Fork

Check coupling fork for visible damage, wear or bent coupling fork claws.

Check coupling fork claw thickness.

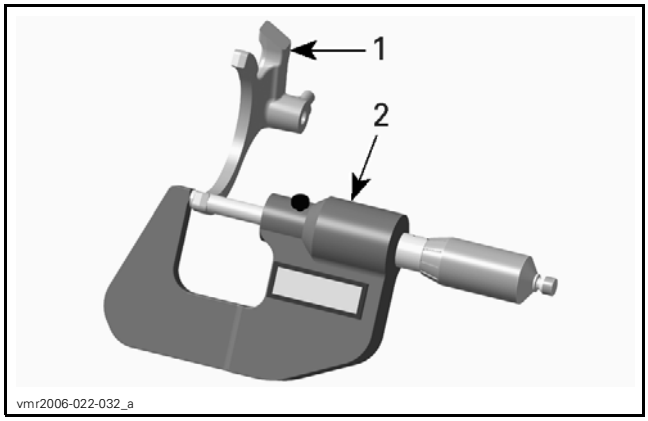

1. Coupling fork
2. Micrometer

COUPLING FORK CLAW THICKNESS	
New	4.95 mm to 5.05 mm (.195 in to .199 in)
Service limit	4.80 mm (.189 in)

Installing the Output Shaft and 4X4 Coupling Mechanism

Install coupling sleeve onto the output shaft.

Install:
- Coupling fork
- Coupling fork shaft
- Screw.

Ensure that coupling fork engages into the coupling sleeve groove.

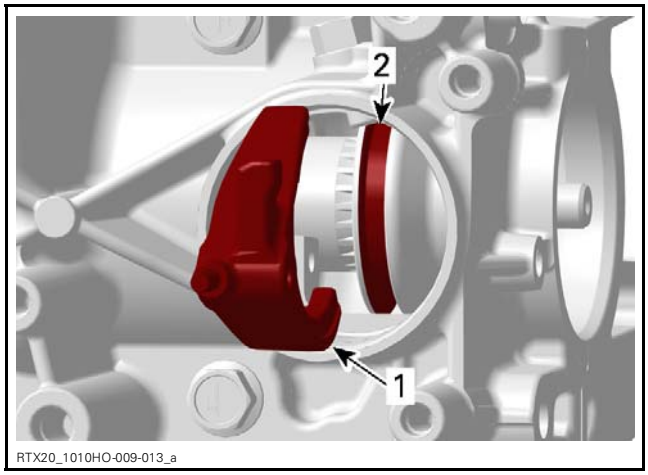

1. Coupling fork
2. Coupling sleeve groove

TIGHTENING TORQUE	
Coupling fork shaft screw	6 N•m ± 0.7 N•m (53 lbf•**in** ± 6 lbf•**in**) + LOCTITE 243 (BLUE) (P/N 293 800 060)

REAR DIFFERENTIAL AND LOCKING MECHANISM

Removing the Rear Differential and Locking Mechanism

Separate gearbox housing, refer to *GEARBOX HOUSING* in this subsection.

Remove rear differential together with locking mechanism.

Take care not losing the distance shim underneath tapered roller bearing.

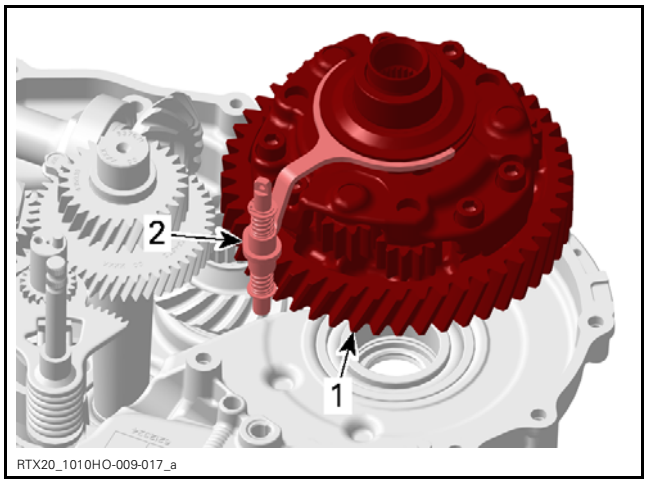

1. Rear differential
2. Locking mechanism

Inspecting the Rear Differential

Turn differential output shafts and check if differential gears turn smoothly. Replace rear differential if necessary.

Installing the Rear Differential and Locking Mechanism

Install rear differential and the locking mechanism.

REQUIRED TOOL	
SLEEVE INSTALLER (P/N 529 036 455)	

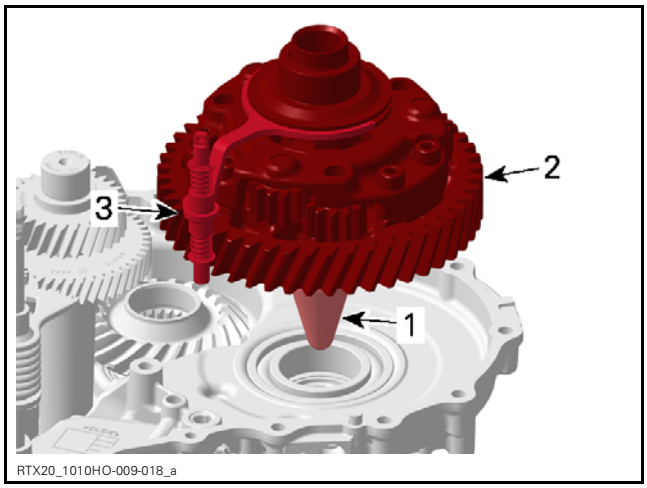

1. Sleeve installer
2. Rear differential
3. Locking mechanism

SHIFTER

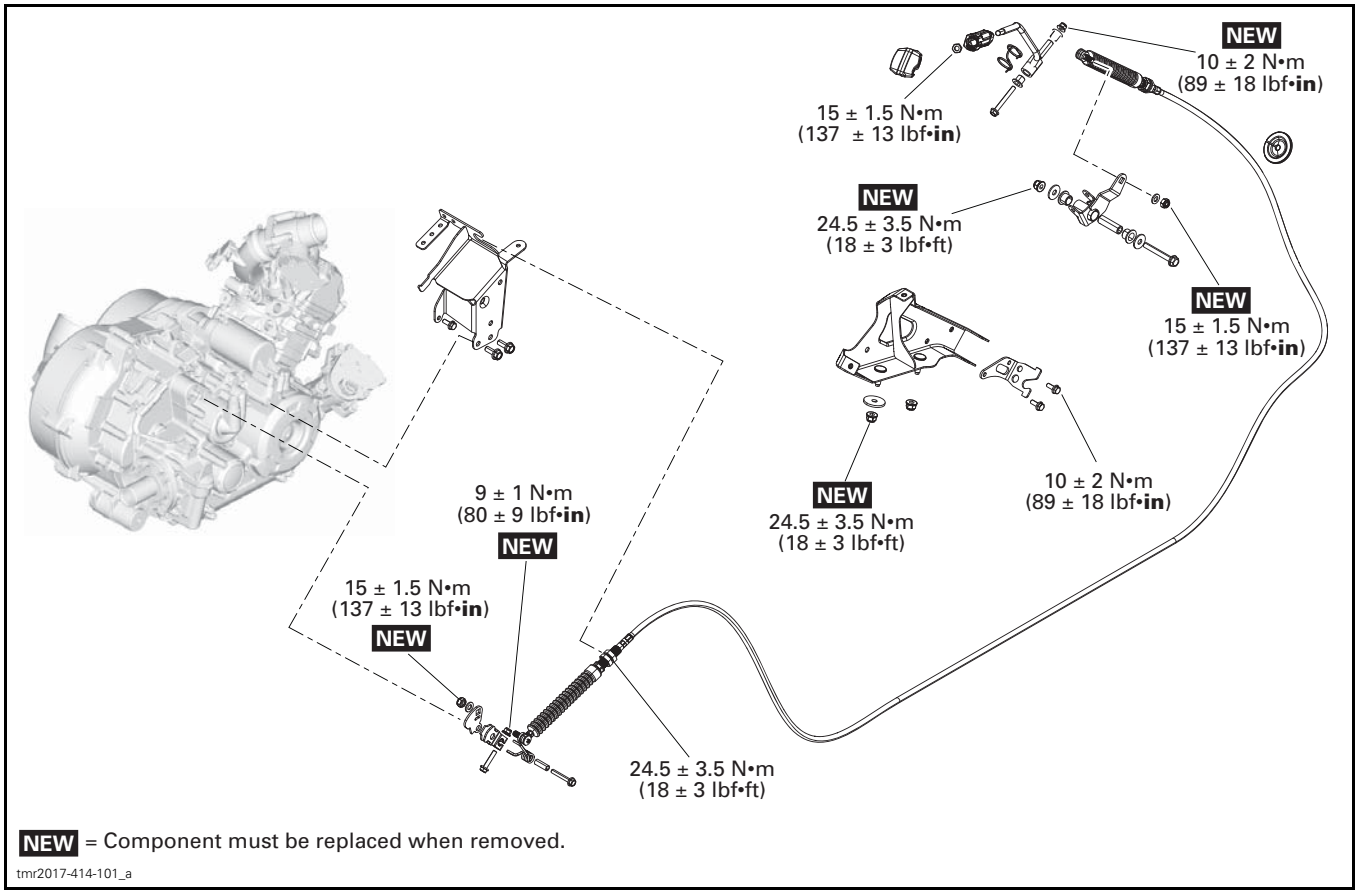
NEW
10 ± 2 N•m
(89 ± 18 lbf•in)
15 ± 1.5 N•m
(137 ± 13 lbf•in)
NEW
24.5 ± 3.5 N•m
(18 ± 3 lbf•ft)
NEW
15 ± 1.5 N•m
(137 ± 13 lbf•in)
NEW
24.5 ± 3.5 N•m
(18 ± 3 lbf•ft)
10 ± 2 N•m
(89 ± 18 lbf•in)
9 ± 1 N•m
(80 ± 9 lbf•in)
NEW
15 ± 1.5 N•m
(137 ± 13 lbf•in)
NEW
24.5 ± 3.5 N•m
(18 ± 3 lbf•ft)
NEW = Component must be replaced when removed.
tmr2017-414-101_a

PROCEDURES

SHIFT LEVER

Removing the Shift Lever

1. Place shift lever in **NEUTRAL** position.
2. Secure vehicle using wheel blocks.
3. Hold the jam nut located underneath the shift lever knob and unscrew the knob.

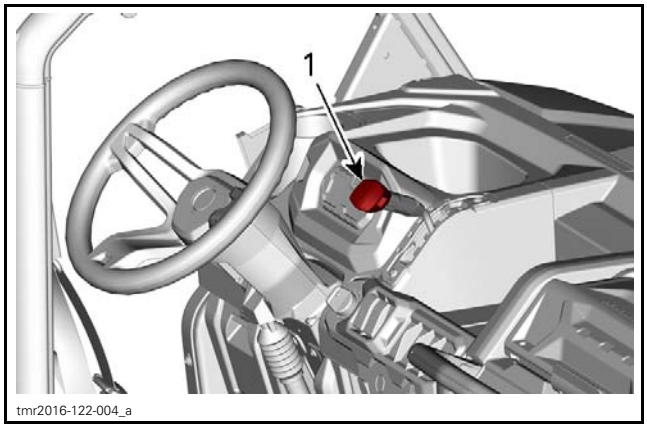

1. Knob

4. Remove the jam nut.
5. Remove shift lever trim.

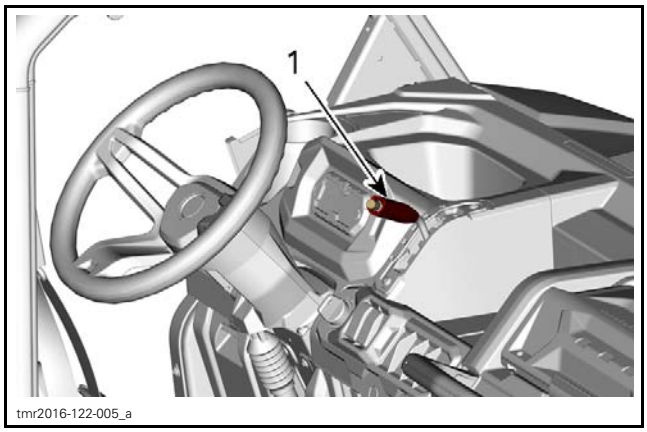

1. Trim

6. Detach shifter cable from shift lever by removing nut and washer.

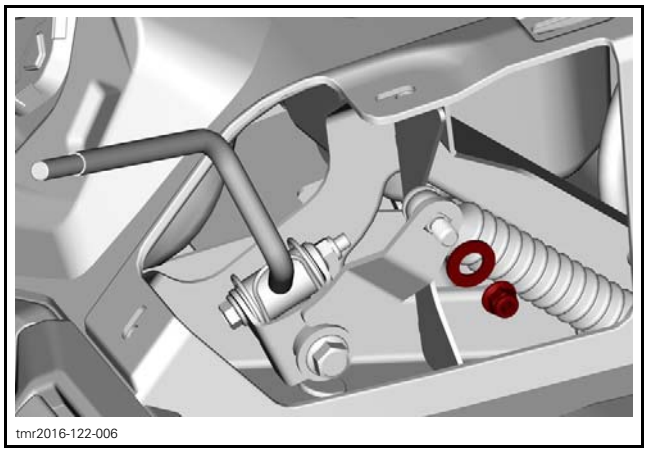

7. Remove shift lever pivot bolt and nut.

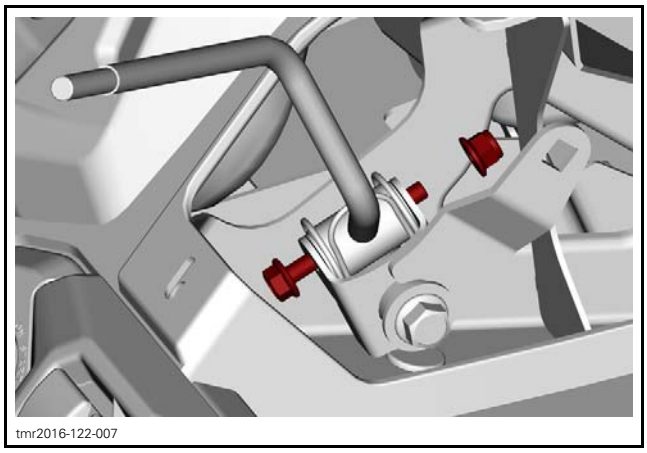

8. Remove shift lever.

Inspecting the Shift Lever

Check shift lever for bending or cracks.

Check spring and bushing condition.

Replace all damaged parts.

Installing the Shift Lever

The installation is the reverse of the removal procedure. However, pay attention to the following.

Ensure shift lever is tilting toward the center of vehicle

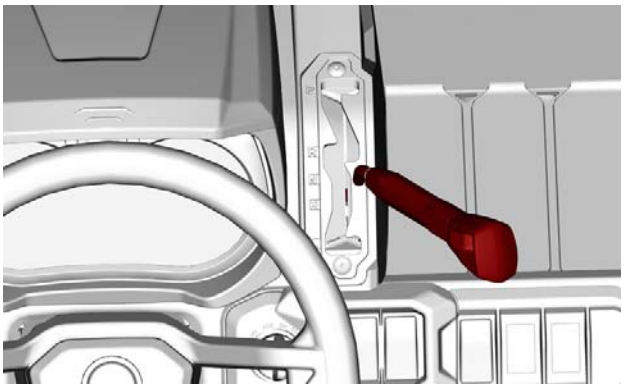

TYPICAL

Screw the jam nut all the way down the threads.

Screw the knob on the shift lever until it reaches the jam nut.

Place it at the right position.

Lock the knob in place using the jam nut.

TIGHTENING TORQUE	
Shift lever knob jam nut	15.5 N•m ± 1.5 N•m (137 lbf•**in** ± 13 lbf•**in**)

Adjust shifter cable, refer to *ADJUSTING THE SHIFTER CABLE* in this subsection.

Check if shift lever works properly in all positions.

SHIFTER CABLE

Adjusting the Shifter Cable

1. Place shift lever in **NEUTRAL** position.
2. Move the vehicle forward and backward to ensure that the gearbox is engaged in neutral.
3. Secure vehicle using wheel blocks.
4. Loosen cable adjustment nuts (engine side).

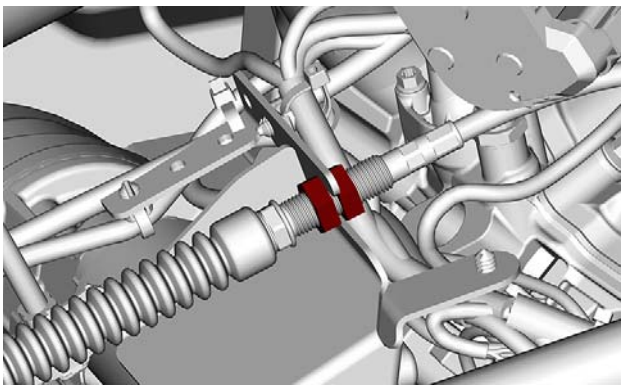

5. Adjust cable nuts until the shift lever is **well centred** in the neutral notch.

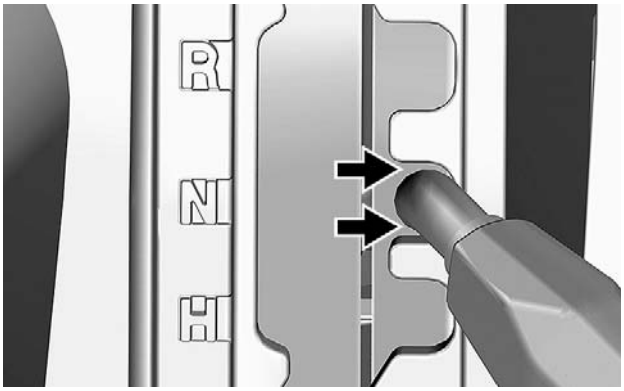

SHIFT LEVER WELL CENTERED

NOTE: The free play must be equal before and behind the lever.

6. Tighten cable adjustment nuts to specification.

TIGHTENING TORQUE	
Cable adjustment nuts	24.5 N•m ± 3.5 N•m (18 lbf•ft ± 3 lbf•ft)

7. Move shift lever in **R** position then in **H** position.
8. Place shift lever in **NEUTRAL** position.
9. Check if shift lever is properly centered with neutral notch. Readjust if required.
10. Test the shifter to confirm that the system works properly in all positions.

⚠ WARNING

After adjustment, make sure that PARK position works properly.

SHIFT PLATE

Removing the Shift Plate

Do not remove shift plate needlessly.

1. Remove shifter cable from shift plate.

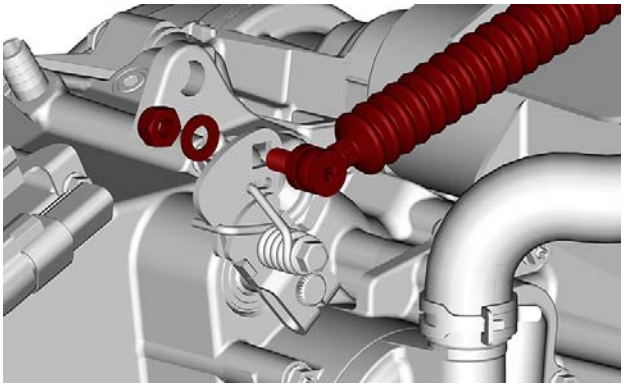

2. Mark the indexation between the main shift plate and the shift shaft.

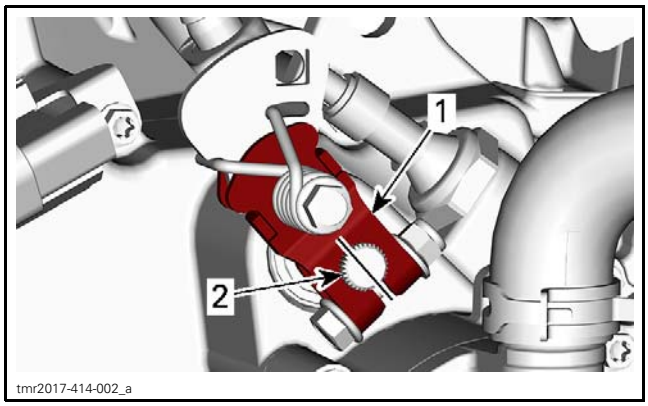

1. Main shift plate
2. Shift shaft

3. Remove shift plate pinch bolt.

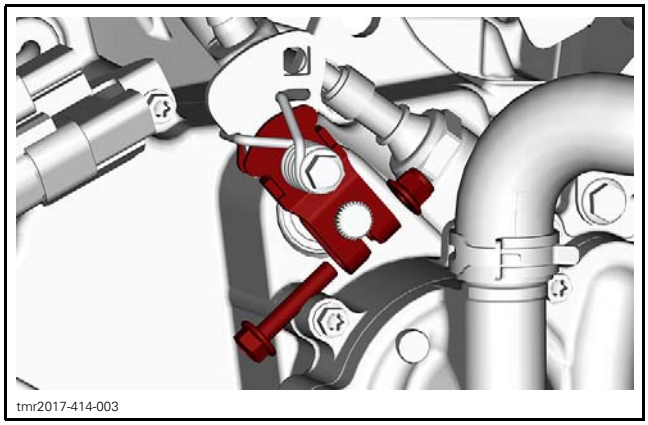

4. Remove shift plate.

Inspecting the Shift Plate

Check shift plate components for:
- Excessive play between parts
- Cracks
- Bending
- Splines condition.

Disassembling the Shift Plate

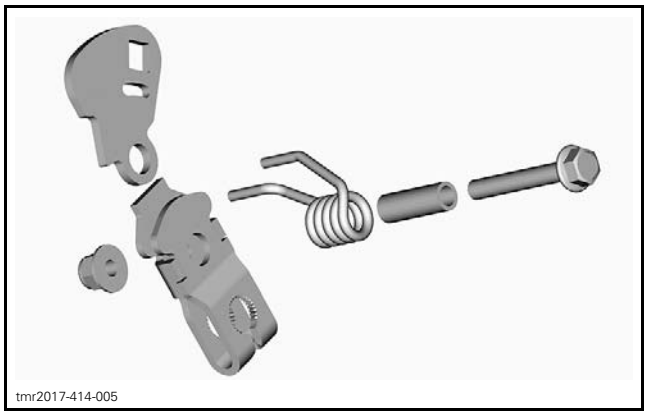

Assembling the Shift Plate

The assembling is the reverse of the disassembling procedure. However, pay attention to the following.

Index the plates and spring as shown.

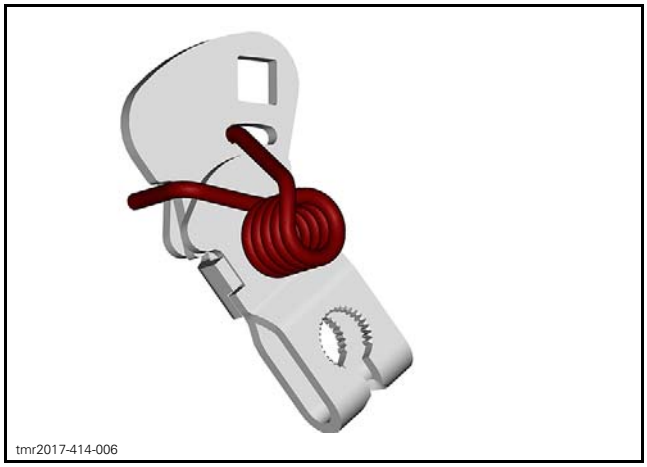

Installing the Shift Plate

The installation is the reverse of the removal procedure. However, pay attention to the following.

Place the gearbox in NEUTRAL before shift plate installation.

Install and align shift plate using marks previously traced.

If shift plate is installed on a new engine, install it in the indicated angle.

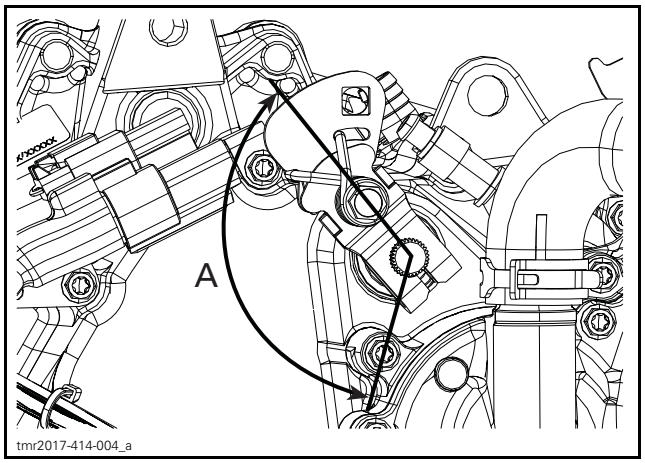

CORRECT ANGLE IN NEUTRAL
A. 120°

NOTE: When correctly installed, the upper shift plate is square with the shifter cable.

Tighten shift plate nut to specification.

TIGHTENING TORQUE	
Shift plate nut	9 N•m ± 1 N•m (80 lbf•**in** ± 9 lbf•**in**)

Install and adjust shifter cable, refer to *ADJUSTING THE SHIFTER CABLE* in this subsection.

SHIFTER

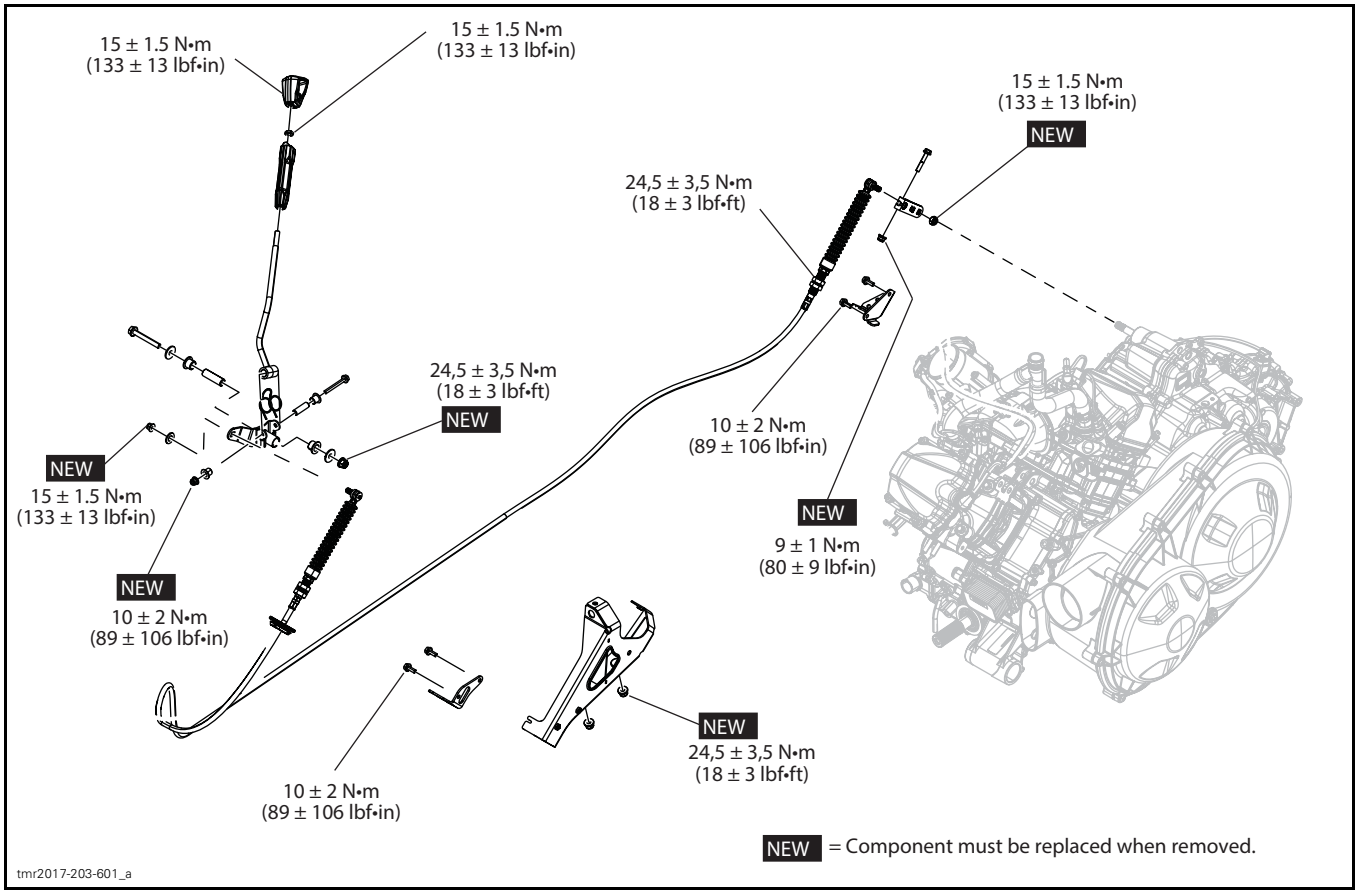
15 ± 1.5 N•m
(133 ± 13 lbf•in)
15 ± 1.5 N•m
(133 ± 13 lbf•in)
15 ± 1.5 N•m
(133 ± 13 lbf•in)
NEW
24,5 ± 3,5 N•m
(18 ± 3 lbf•ft)
24,5 ± 3,5 N•m
(18 ± 3 lbf•ft)
NEW
10 ± 2 N•m
(89 ± 106 lbf•in)
NEW
15 ± 1.5 N•m
(133 ± 13 lbf•in)
NEW
9 ± 1 N•m
(80 ± 9 lbf•in)
NEW
10 ± 2 N•m
(89 ± 106 lbf•in)
NEW
24,5 ± 3,5 N•m
(18 ± 3 lbf•ft)
10 ± 2 N•m
(89 ± 106 lbf•in)
NEW = Component must be replaced when removed.
tmr2017-203-601_a

PROCEDURES

SHIFT LEVER

Removing the Shift Lever

1. Place shift lever in **NEUTRAL** position.
2. Secure vehicle using wheel blocks.
3. Unscrew shift lever handle.

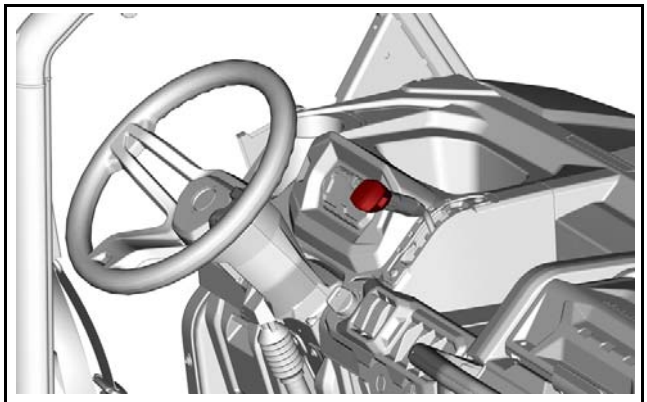
tmr2016-122-004

4. Remove shift lever trim

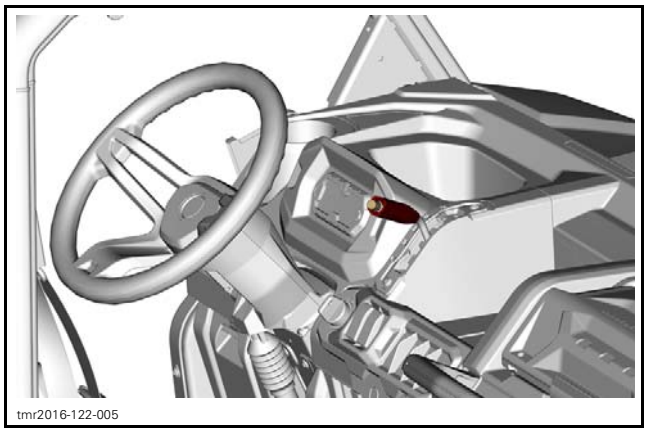
tmr2016-122-005

5. Detach shifter cable from shift lever by removing nut and washer.

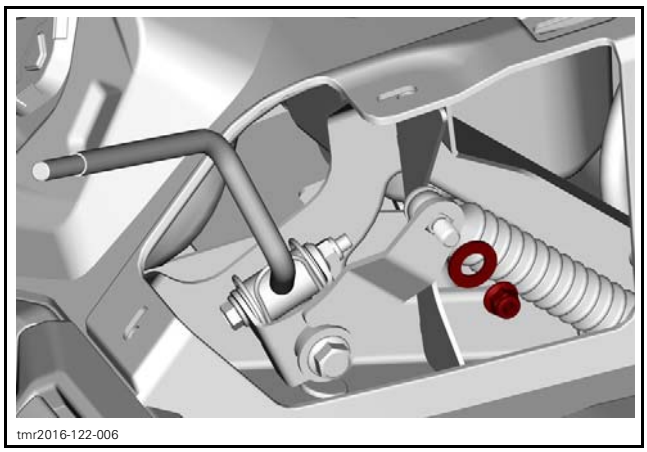
tmr2016-122-006

6. Remove shift lever pivot bolt and nut.

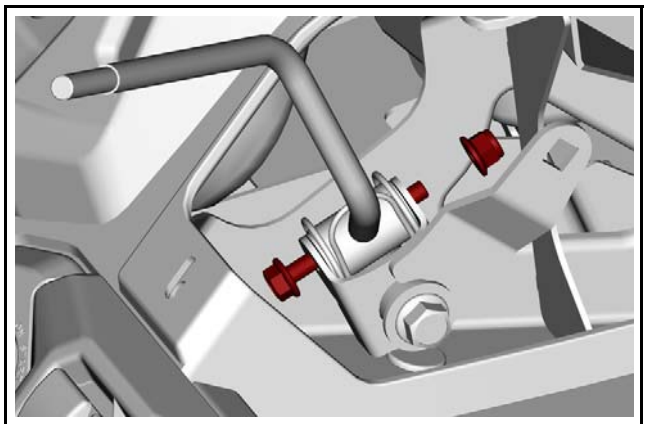
tmr2016-122-007

7. Remove shift lever.

Inspecting the Shift Lever

Check shift lever for bending or cracks.

Check spring and bushing condition.

Replace all damaged parts.

Installing the Shift Lever

The installation is the reverse of the removal procedure. However, pay attention to the following.

Ensure shift lever is tilting toward the center of vehicle

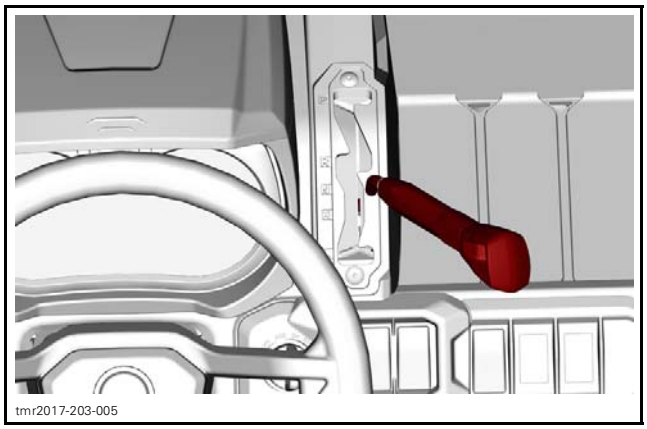
tmr2017-203-005

Tighten shift lever handle nut to specification.

TIGHTENING TORQUE	
Shift lever handle nut	15.5 N•m ± 1.5 N•m (137 lbf•**in** ± 13 lbf•**in**)

Adjust shifter cable, refer to *ADJUSTING THE SHIFTER CABLE* in this subsection.

Check if shift lever works properly in all positions.

SHIFTER CABLE

Adjusting the Shifter Cable

1. Place shift lever in **NEUTRAL** position.

NOTE: Move vehicle back and forth to ensure gearbox is set in neutral position.

2. Secure vehicle using wheel blocks.
3. Loosen cable adjustment nuts at engine end of cable.

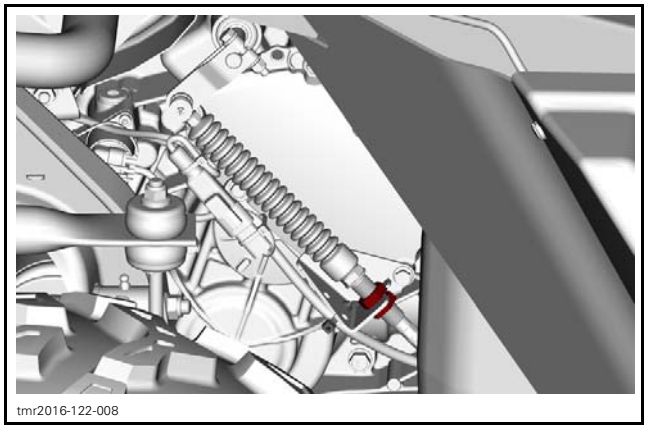
tmr2016-122-008

4. Adjust cable nuts in order to center shift lever with neutral notch.

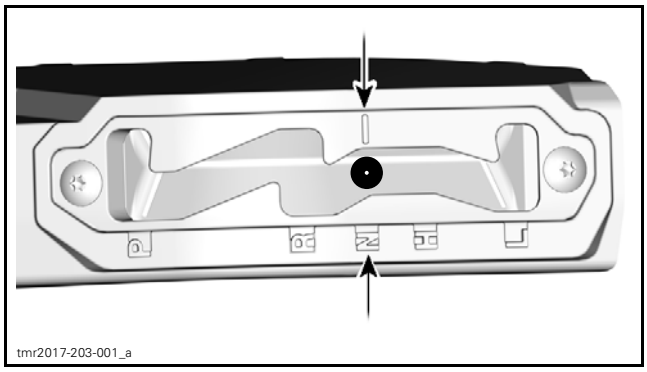
tmr2017-203-001_a

CORRECT ADJUSTMENT

NOTE: UP and DOWN shifter arm free play must be symmetrical about the center line of neutral notch.

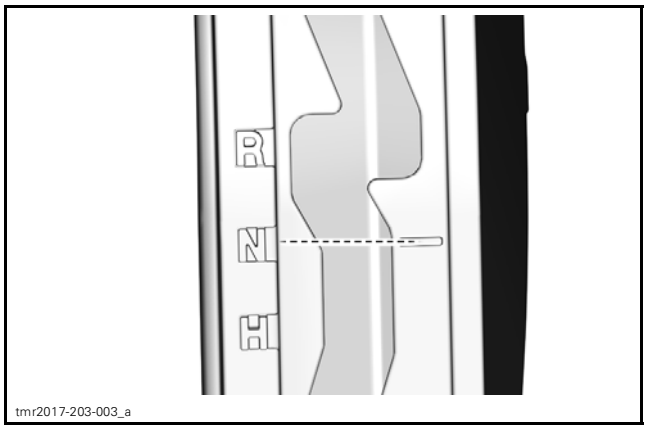

tmr2017-203-003_a

5. Tighten cable adjustment nuts to specification.

TIGHTENING TORQUE	
Cable adjustment nuts	24.5 N•m ± 3.5 N•m (18 lbf•ft ± 3 lbf•ft)

6. Move shift lever in **R** position then in **H** position.
7. Place shift lever in **NEUTRAL** position.
8. Check if shift lever is properly centered with neutral notch. Readjust as required.

NOTE: To properly check shift lever alignment with notch, move shift lever toward the LH side then let it return to position.

9. Test the shifter to confirm that the system works properly in all positions.

⚠ WARNING

After adjustment, make sure that PARK position works properly.

SHIFT PLATE

Removing the Shift Plate

Do not remove shift plate needlessly.

1. Place gearbox in **NEUTRAL** position.
2. If the engine is still in the vehicle, detach shifter cable from shift plate.

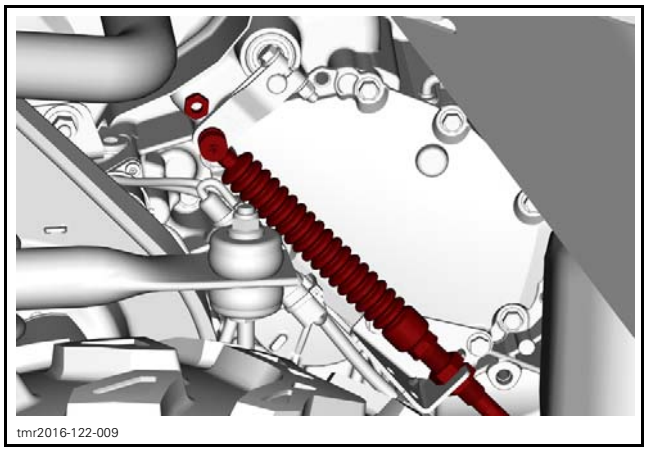
tmr2016-122-009

3. Mark the shift plate position on the shift shaft end and on the housing

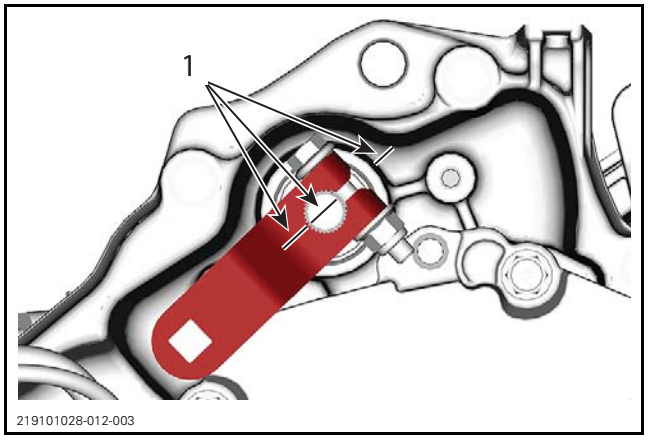

219101028-012-003

1. Trace a mark here

4. Remove shift plate bolt. Discard the nut.

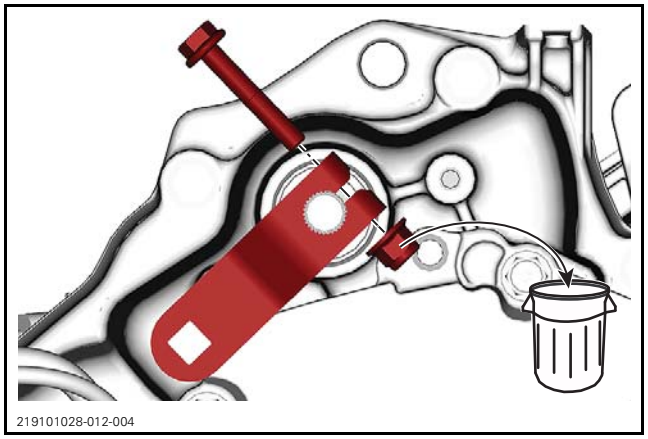
219101028-012-004

5. Remove shift plate.

Inspecting the Shift Plate

Check shift plate for:
- Cracks
- Bending
- Spline condition.

Installing the Shift Plate

The installation is the reverse of the removal procedure. However, pay attention to the following.

Ensure gearbox in NEUTRAL position before shift plate installation.

Install and align shift plate using marks previously traced.

If shift plate is installed on a new engine, align the shift plate opening with the gearbox screw as per the following illustration.

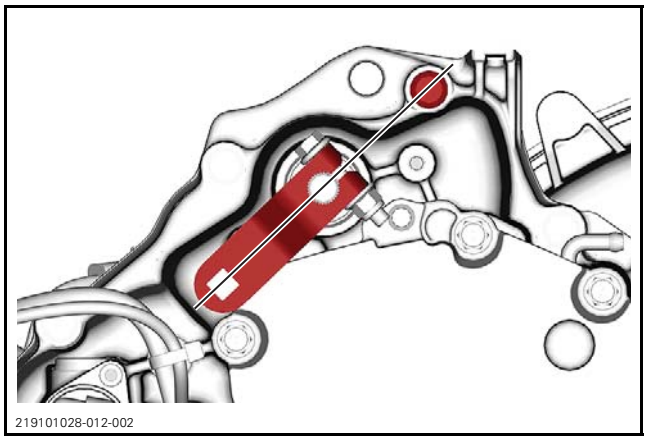
219101028-012-002

Adjust shifter cable, refer to *ADJUSTING THE SHIFTER CABLE* in this subsection.

NOTE: The shift cable must be positioned at 90° from the shift plate.

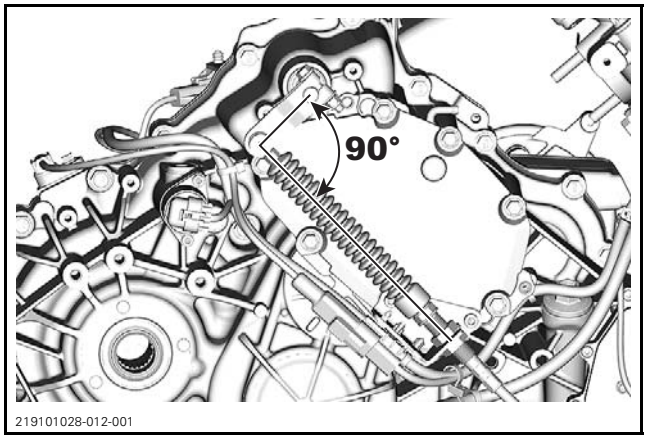

219101028-012-001

Tighten shift plate nut to specification.

TIGHTENING TORQUE	
Shift plate nut	9 N•m ± 1 N•m (80 lbf•**in** ± 9 lbf•**in**)

AIR CONDITIONING - ENGINE COMPONENTS

SERVICE TOOLS

Description	Part Number	Page
A/C BELT TOOL	529 036 503	5
FLUKE 115 MULTIMETER	529 035 868	8
HANDLE	420 877 650	7
MAGNET COUPLING KEY	529 036 511	10, 12
OIL SEAL INSTALLER	529 036 507	7
TENSIOMETER	414 348 200	4

SERVICE PRODUCTS

Description	Part Number	Page
CLUTCH AND PULLEY FLANGE CLEANER PRO S1	779244	7
PETAMO GREASE GHY 133N	420 899 271	7

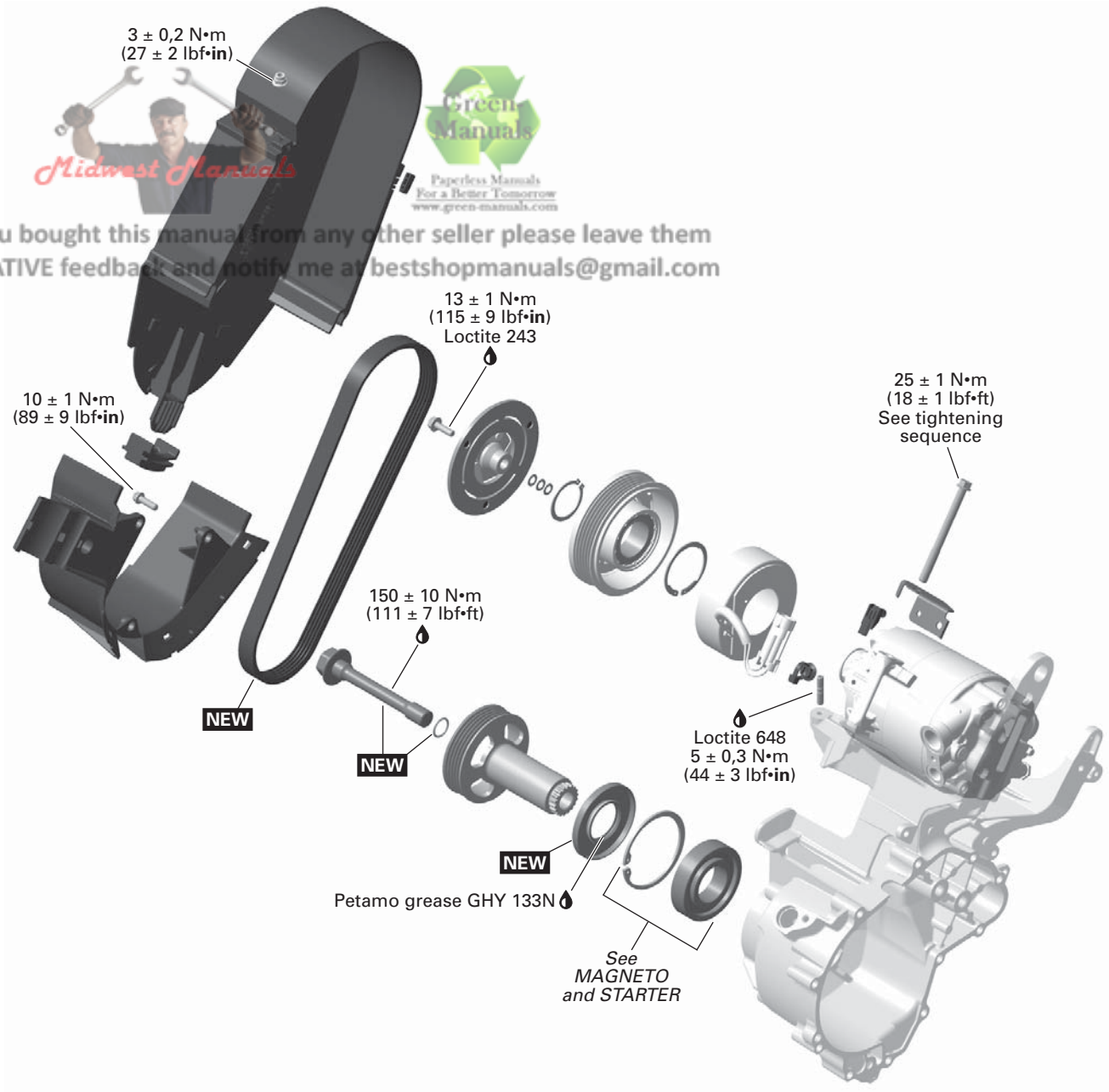

Midwest Manuals
Green Manuals
Paperless Manuals For a Better Tomorrow www.green-manuals.com
If you bought this manual from any other seller please leave them NEGATIVE feedback and notify me at bestshopmanuals@gmail.com

NEW = Component must be replaced when removed.

RTX20_1010HVAC-015-001_a

TROUBLESHOOTING

AIR CONDITIONING COMPRESSOR DOES NOT WORK OR WORKS IMPROPERLY

1. Slipping or broken compressor drive belt.
   - *Inspect the compressor drive belt and verify its deflection. See procedures in this subsection.*
2. Slipping or not engaging magnetic clutch.
   - *Check magnetic clutch coil input voltage. Voltage lower than 7,5 V causes clutch malfunction. See procedure in this subsection.*
   - *Check for oil on magnetic clutch friction plates.*
   - *Check magnetic clutch friction plate air gap. See procedure in this subsection.*
   - *Check for defective magnetic clutch and / or coil. See procedures in this subsection.*
3. Scoring or seized magnetic clutch pulley.
   - *With clutch disengaged check if pulley turns freely and smoothly, no wobbling or roughness.*
4. Internal air conditioning compressor malfunction.
   - *Check if air conditioning compressor turns easily and smoothly. See procedures in this subsection.*

PROCEDURES

COMPRESSOR DRIVE BELT COVER

Removing the Compressor Drive Belt Cover

Remove lock nut and withdraw the cover.

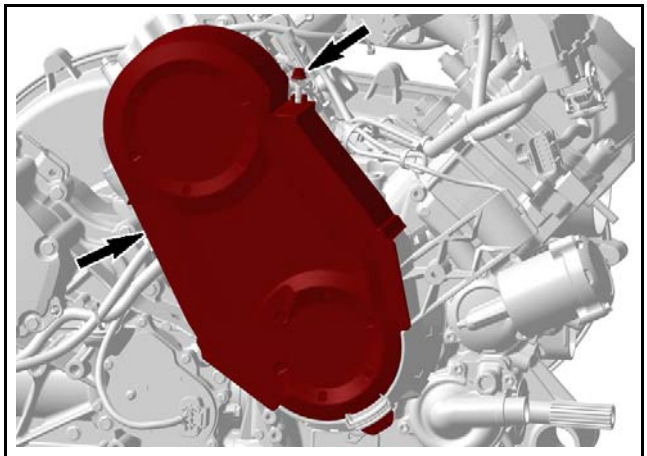

RTX20_1010HVAC-015-002_a

Inspecting the Compressor Drive Belt Cover

Check silent blocks for wear or damages. Replace if necessary.

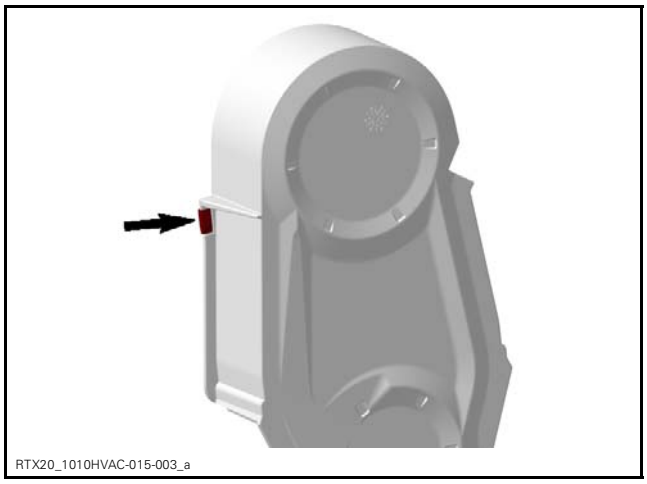

RTX20_1010HVAC-015-003_a

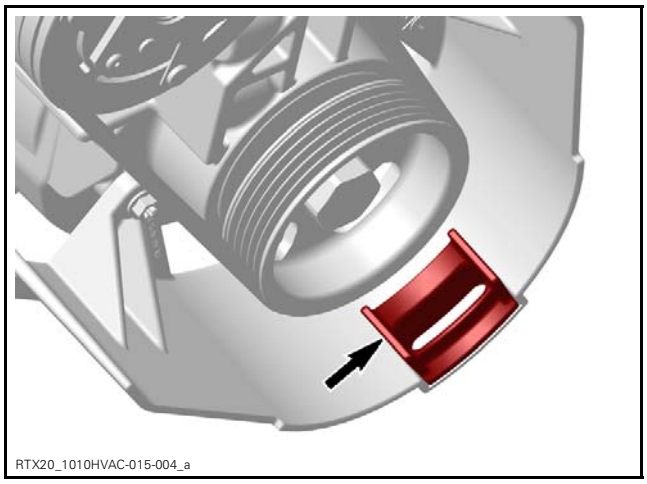

RTX20_1010HVAC-015-004_a

Clean the inner of the compressor drive belt cover.

Check the cover for cracks or damages. Replace if necessary.

Installing the Compressor Drive Belt Cover

1. Loosen the fuel tank strap and move the tank away from the engine as much as possible.
2. Engage the cover lug in lower silent block.

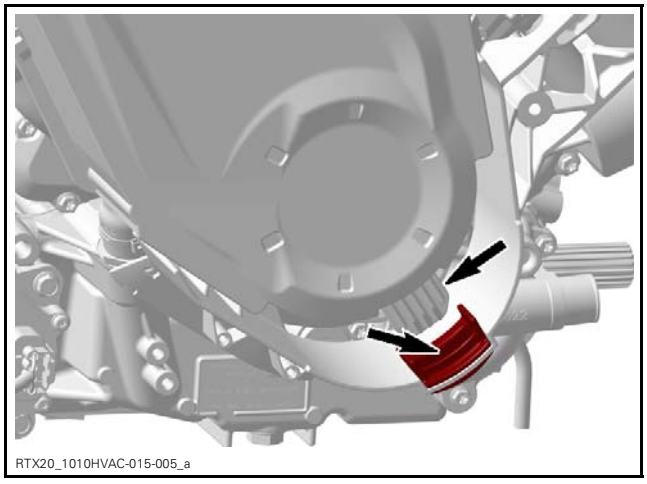

RTX20_1010HVAC-015-005_a

3. Engage the cover with upper silent block in recess of magneto cover.

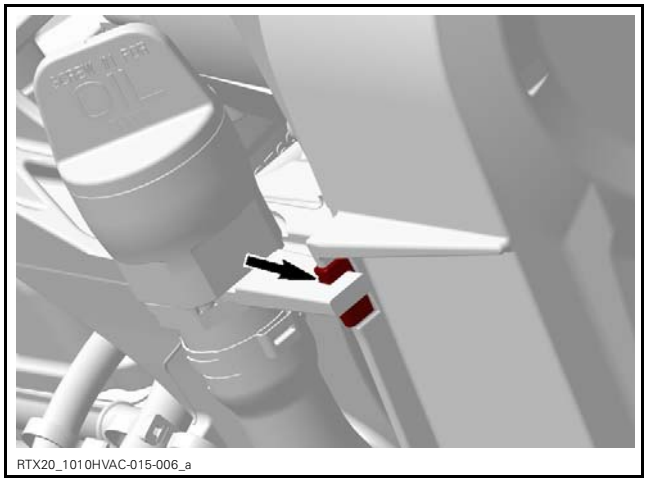

RTX20_1010HVAC-015-006_a

4. Ensure the cover is engaged correctly on its support.

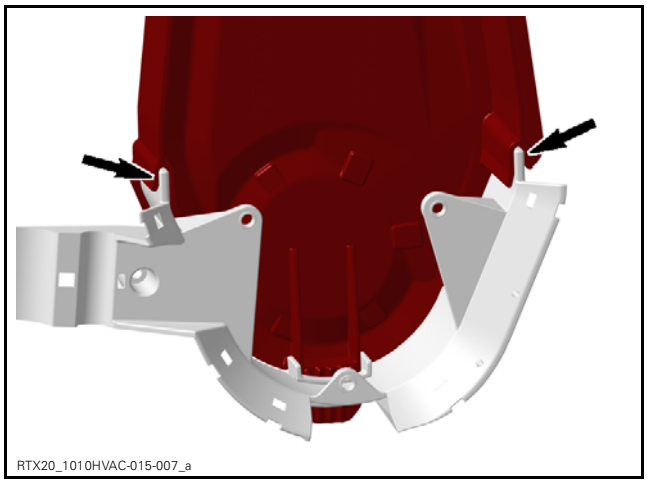
RTX20_1010HVAC-015-007_a

5. Engage the cover on stud and tighten lock nut to specification.

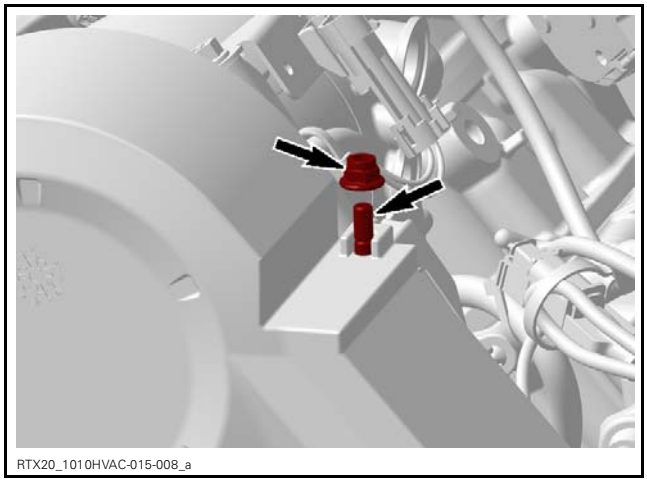
RTX20_1010HVAC-015-008_a

TIGHTENING TORQUE	
Lock nut	3 N•m ± 0.2 N•m (27 lbf•**in** ± 2 lbf•**in**)

COMPRESSOR DRIVE BELT

Inspecting the Compressor Drive Belt

Inspect the compressor drive belt for:

– Cracks
– Fraying
– Abnormal wear
– Debris in the belt ribs.

Replace if necessary.

Verifying the Compressor Drive Belt Deflection

REQUIRED TOOL	
TENSIOMETER (P/N 414 348 200)	
Reference rule	

1. Remove compressor drive belt cover. Refer to procedure in this subsection.
2. Set upper O-ring to 6.8 kgf (15 lbf).

mmr2009-133-003_a

1. Upper O-ring

3. Set bottom O-ring to service limit.

mmr2009-133-003_b

1. Bottom O-ring

4. Position a reference rule on the outer side of the compressor drive belt.
5. Apply pressure until upper O-ring (selected force) is flush with tension meter cylinder.
6. Read belt deflection.

If bottom O-ring is in level or lower than reference rule the service limit is achieved. Replace compressor drive belt if necessary.

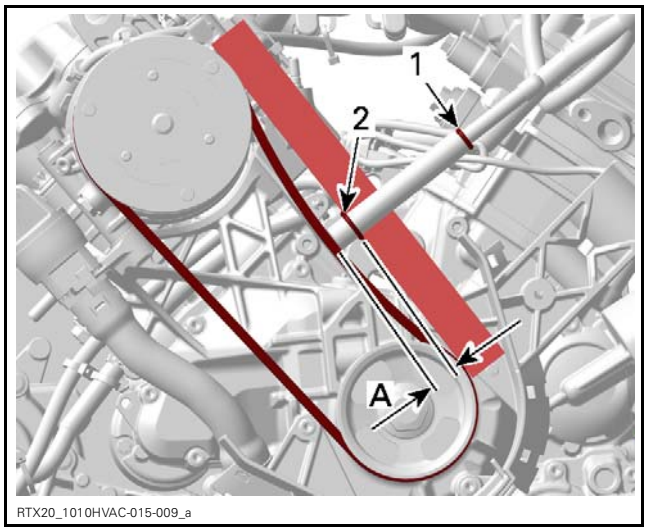

BELT DEFLECTION AT SERVICE LIMIT
1. *Upper O-ring*
2. *Bottom O-ring*

A. Belt deflection

BELT DEFLECTION	
Service limit	11 mm (.43 in)

Removing the Compressor Drive Belt

Cut the compressor drive belt using a shears.

NOTICE **Removed belt must not be reused again.**

Installing the Compressor Drive Belt

Install the service tool on air conditioning drive pulley and secure it with a set screw.

REQUIRED TOOL	
A/C BELT TOOL (P/N 529 036 503)	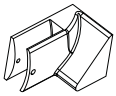

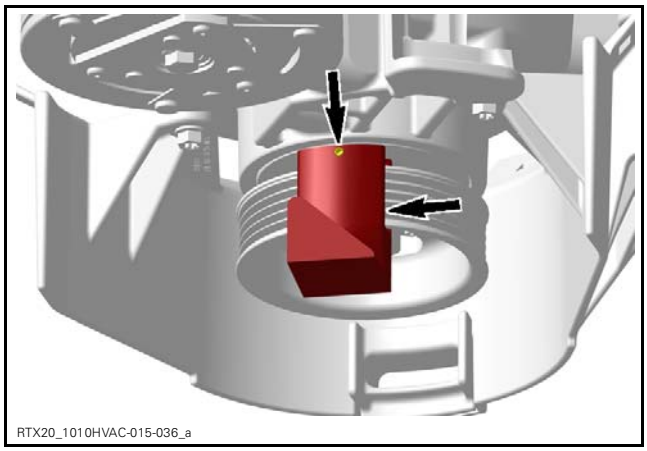

Place the NEW compressor drive belt on the compressor pulley.

NOTE: Ensure belt ribs are properly aligned with pulley grooves at belt installation to avoid belt damages.

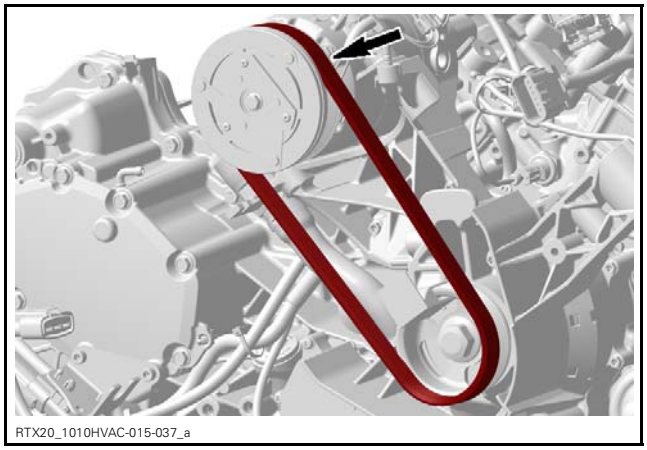

Loop the compressor drive belt along the compressor pulley, then engage the belt on service tool.

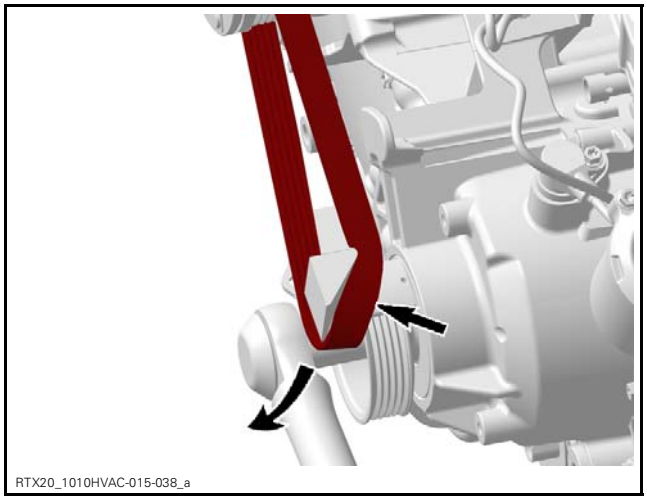

Turn air conditioning pulley clockwise until compressor drive belt is fully engaged on pulley.

NOTE: Ensure the belt is always positioned well on service tool.

NOTICE **To avoid the belt jumping off during installation keep the belt twisted.**

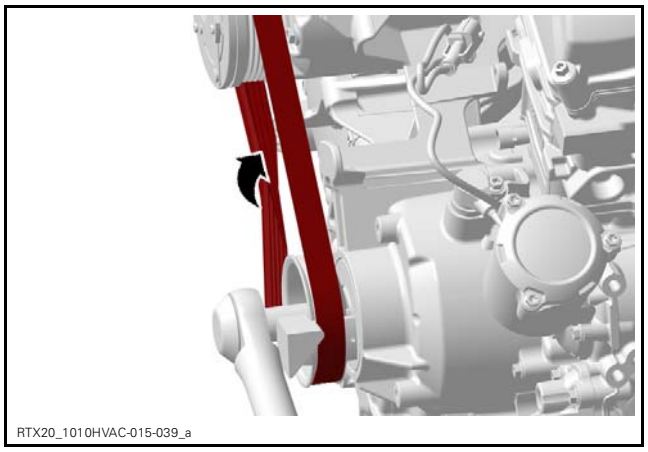
RTX20_1010HVAC-015-039_a

Remove set screw and withdraw service tool.

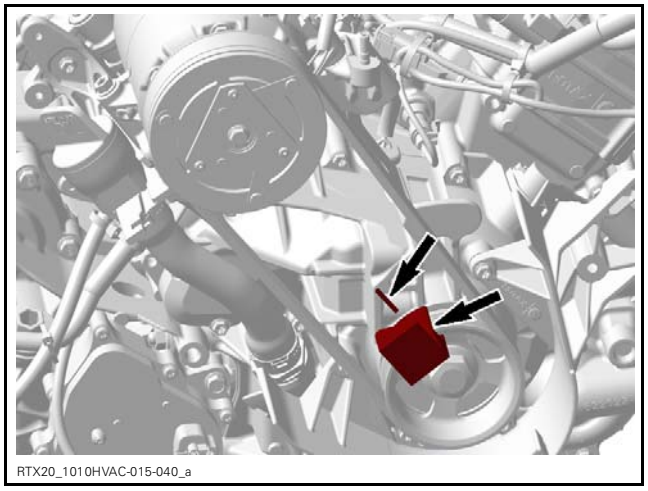
RTX20_1010HVAC-015-040_a

AIR CONDITIONING DRIVE PULLEY

Removing the Air Conditioning Drive Pulley

Lock crankshaft, refer to *CRANKSHAFT LOCKING PROCEDURE* in the *CYLINDER BLOCK* subsection.

Remove the compressor drive belt, refer to procedure in this subsection.

Clean area around drive pulley and oil seal.

Remove the A/C drive pulley.

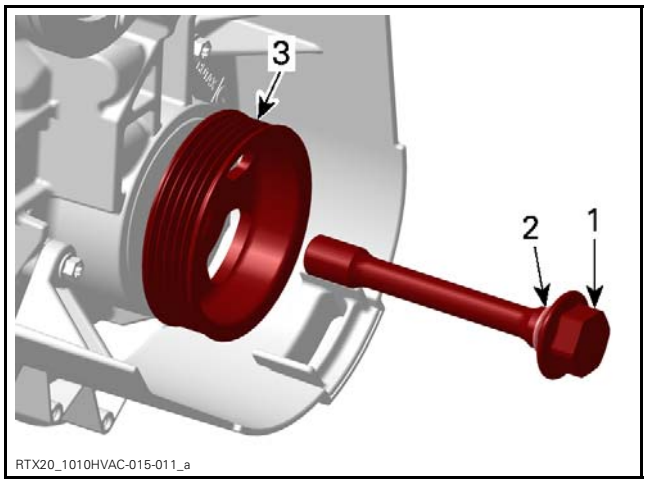

RTX20_1010HVAC-015-011_a

1. *Retaining screw*
2. *O-ring*
3. *Air conditioning drive pulley*

Inspecting the Air Conditioning Drive Pulley

Check:

– if oil seal running surface is not damaged or worn.
– if splines are damaged.
– drive pulley for damages.

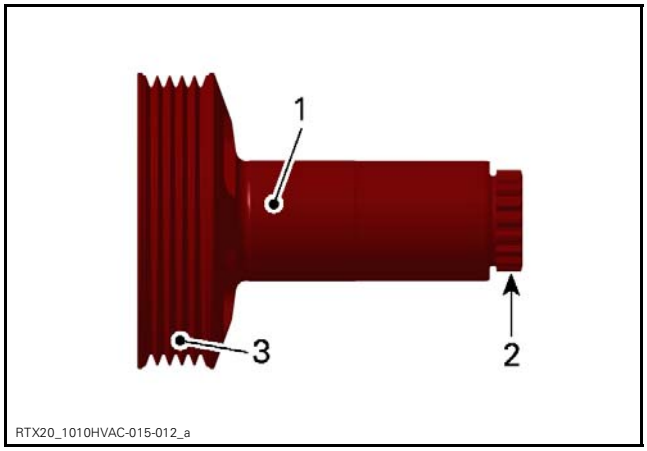

RTX20_1010HVAC-015-012_a

1. *Oil seal running surface*
2. *Splines*
3. *Drive pulley*

Check ball bearing for smooth operation, excessive play and/or pitting. Replace if necessary, refer to *MAGNETO COVER* in the *MAGNETO AND STARTER* subsection.

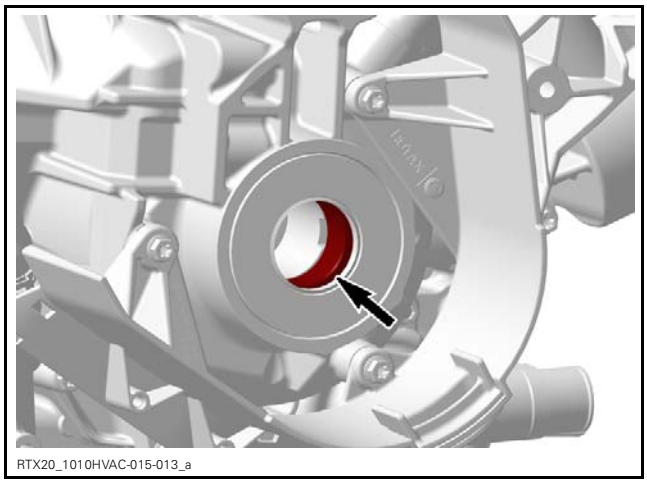
RTX20_1010HVAC-015-013_a

Drive Pulley Oil Seal Replacement

Pry out oil seal using a flat screwdriver or any appropriate tool.

NOTICE **Avoid scoring or damaging parts during oil seal removal.**

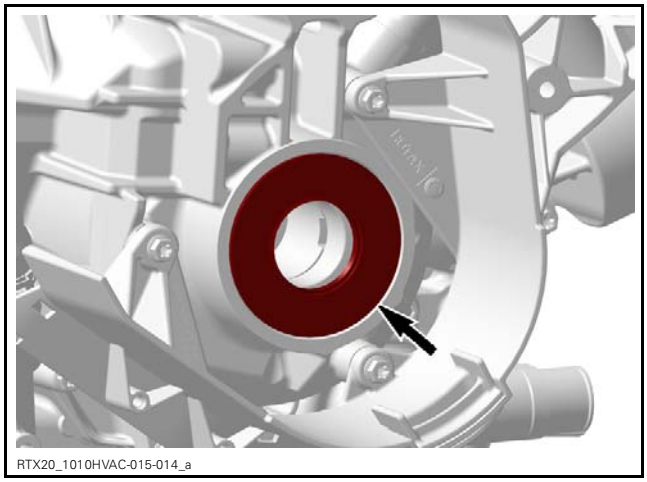
RTX20_1010HVAC-015-014_a

NOTICE **Ensure oil seal seat is free of oil and grease before oil seal installation.**

Install **NEW** oil seal.

REQUIRED TOOLS	
OIL SEAL INSTALLER (P/N 529 036 507)	
HANDLE (P/N 420 877 650)	

Lubricate sealing lips of oil seal.

SERVICE PRODUCT
PETAMO GREASE GHY 133N (P/N 420 899 271)

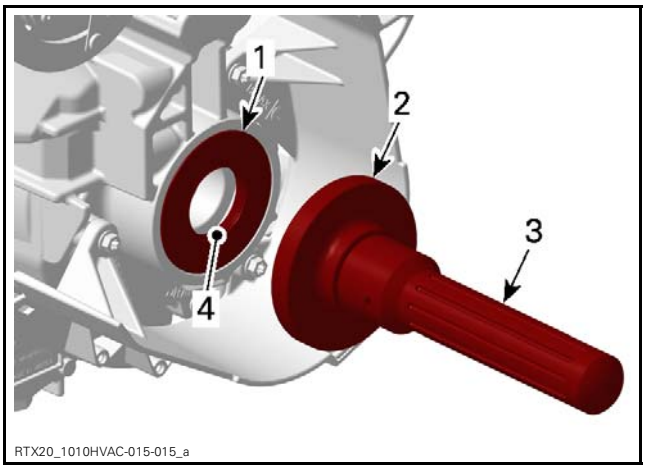

RTX20_1010HVAC-015-015_a

1. *Oil seal*
2. *Oil seal installer*
3. *Handle*
4. *Lubricate sealing lips*

Installing the Air Conditioning Drive Pulley

Decrease crankshaft thread.

NOTICE **Ensure oil passage to rotor is not clogged be any debris.**

SERVICE PRODUCT
CLUTCH AND PULLEY FLANGE CLEANER PRO S1 (P/N 779244)

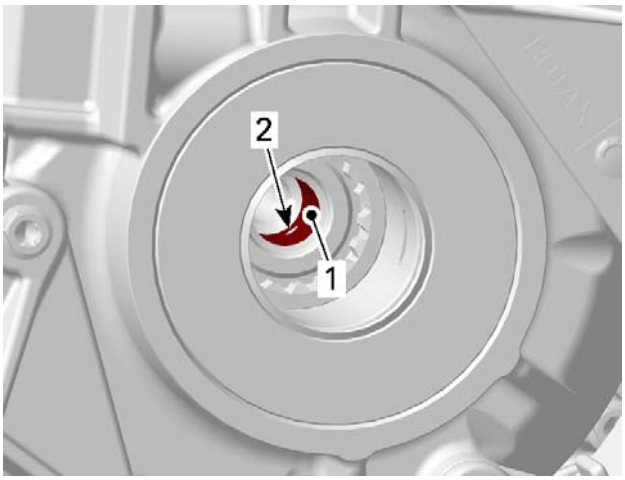

RTX20_1010HVAC-015-041_a

1. *Crankshaft threads*
2. *Oil passage to rotor*

Lubricate sealing lips of oil seal.

SERVICE PRODUCT
PETAMO GREASE GHY 133N (P/N 420 899 271)

Turn the drive pulley shaft during installation until it bottoms.

NOTICE Turn shaft during installation to:
- avoid oil seal damage
- ensure full engagement in the magneto hub inner splines.

Take care not to damage oil seal with splines of drive pulley shaft during installation.

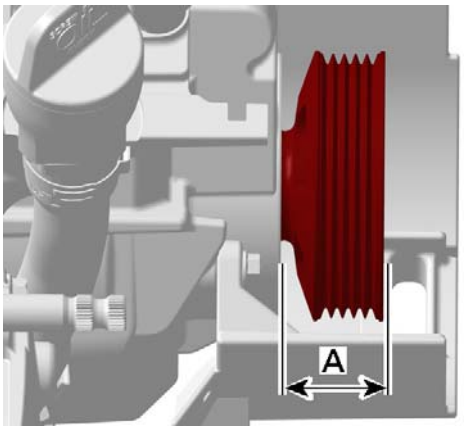

RTX20_1010HVAC-015-016_a

DRIVE PULLEY SHAFT CORRECTLY INSTALLED
A. 31.4 mm to 33.6 mm (1.24 in to 1.32 in)

Install NEW drive pulley screw with NEWO-ring and tighten to specification.

TIGHTENING TORQUE	
Drive pulley retaining screw	150 N•m ± 10 N•m (111 lbf•ft ± 7 lbf•ft)

MAGNETIC CLUTCH

Inspecting the Magnetic Clutch

Remove the compressor drive belt, refer to procedure in this subsection.

With clutch disengaged check if pulley turns freely and smoothly, no wobbling or roughness.

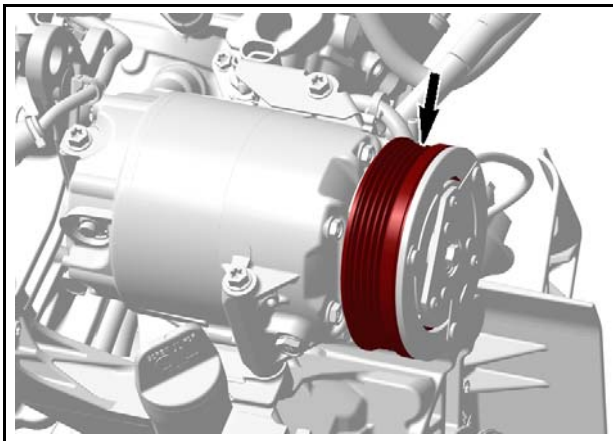

RTX20_1010HVAC-015-017_a

If any resistance is felt, remove pulley and check if coil touches the inner diameter of the pulley.

RTX20_1010HVAC-015-018

Check if coil seat on the compressor housing is worn out or damaged, refer to *INSPECTING THE MAGNETIC CLUTCH* in this subsection. Replace air conditioning compressor if necessary.

Testing the Magnetic Clutch Coil Resistance

1. Disconnect compressor connector.

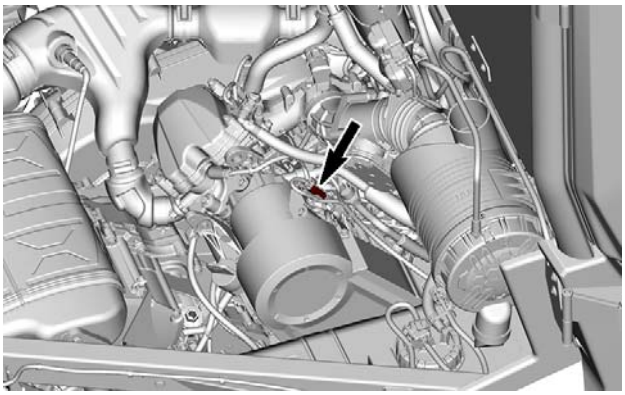

219101028-006-080

2. Check resistance of magnetic clutch coil.

REQUIRED TOOL	
FLUKE 115 MULTIMETER (P/N 529 035 868)	

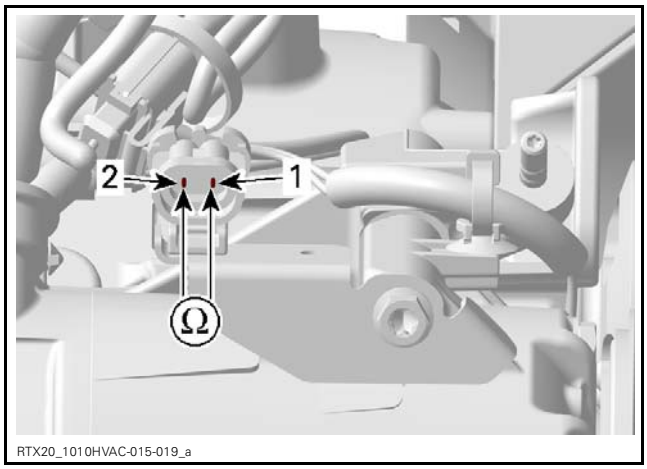

1. *Pin A (black wire)*
2. *Pin B (red wire)*

MAGNETIC CLUTCH COIL RESISTANCE		
Pin A	Pin B	3.0 - 5.0 Ω

3. If any reading is out of specification, replace magnetic clutch.
4. Reconnect the compressor connector.

Testing the Magnetic Clutch Coil Static Insulation

1. Disconnect compressor connector.

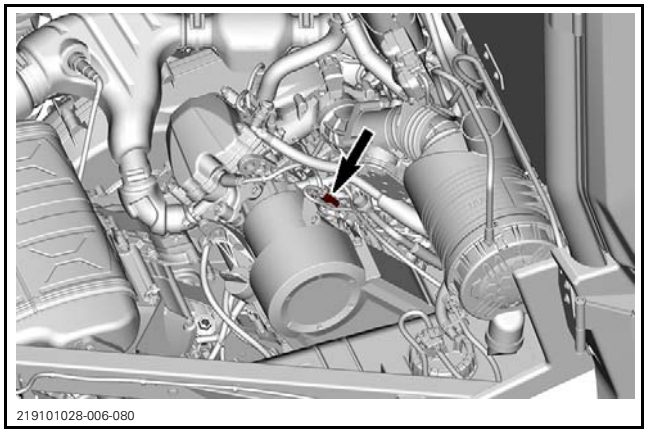

2. Check insulation of magnetic clutch coil.

MAGNETIC CLUTCH COIL RESISTANCE		
Pin A (black)	Engine ground	Infinite (open circuit)

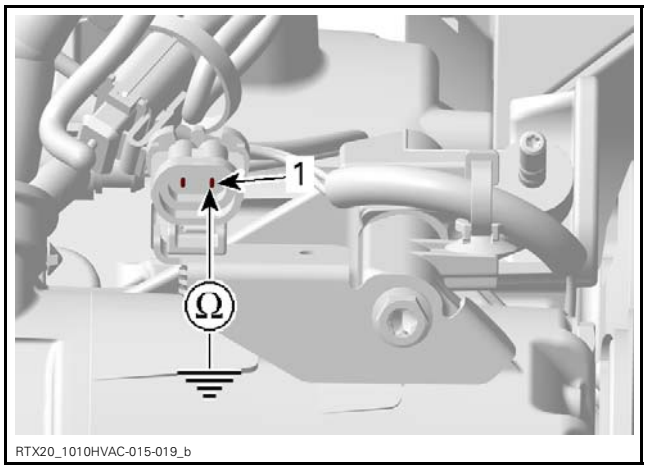

1. *Pin A (black wire)*

If any reading is out of specification, replace magnetic clutch.

Testing the Magnetic Clutch Coil Input Voltage

1. Turn the A/C ON, select cooling mode, Tmin and fan MAX, and let operate for at least 30 seconds to be sure that the climate control module sends the request to turn the compressor on.
2. Disconnect compressor connector.

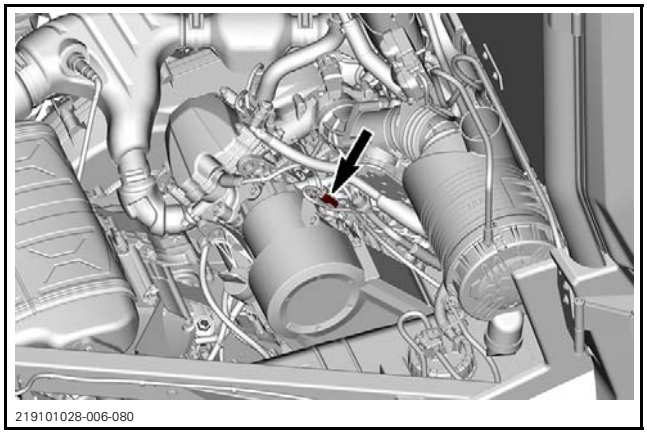

MAGNETIC CLUTCH COIL INPUT VOLTAGE	
Nominal	12 V
Minimum	7.5 V

If input voltage is out of specification check battery voltage.

NOTICE **Input voltage below minimum specification causes a slipping magnetic clutch.**

Inspecting the Magnetic Clutch Friction Plate Air Gap

Check if friction plate is worn out. Replace magnetic clutch.

MAGNETIC CLUTCH FRICTION PLATE AIR GAP	
New	0.4 mm to 0.8 mm (.016 in to .031 in)
Service limit	1.3 mm (.051 in)

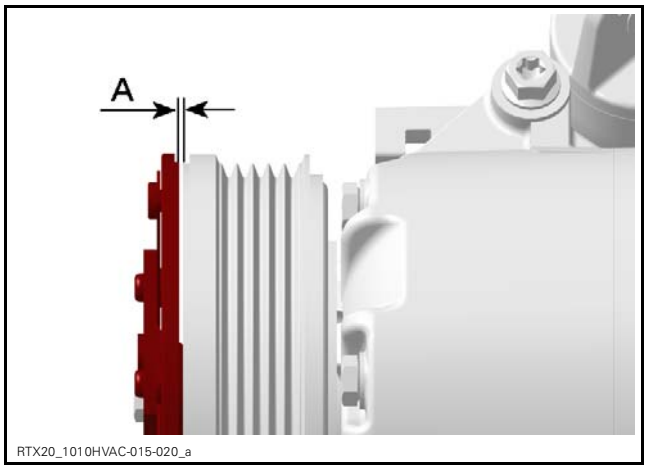

A. Friction plate air gap

Removing the Magnetic Clutch

1. Cut locking tie securing the coil wiring.

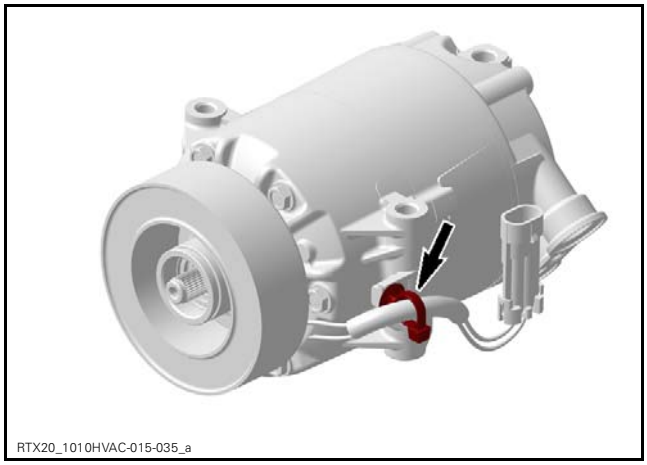

2. Hold clutch friction plate assembly stationary while removing retaining screw.

REQUIRED TOOL	
MAGNET COUPLING KEY (P/N 529 036 511)	

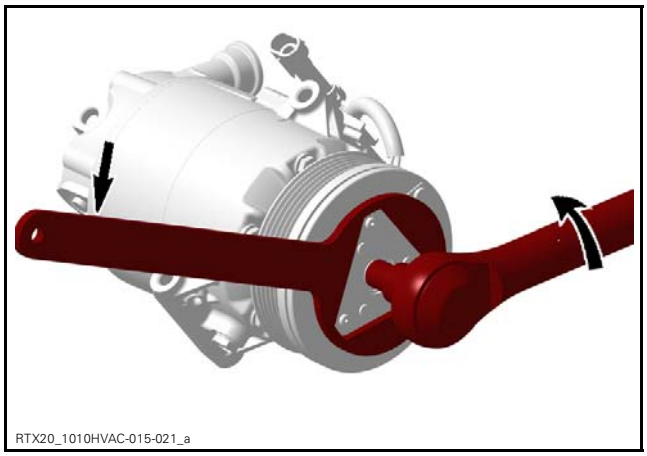

3. Withdraw:
   - Clutch friction plate assembly
   - Adjustment shims.

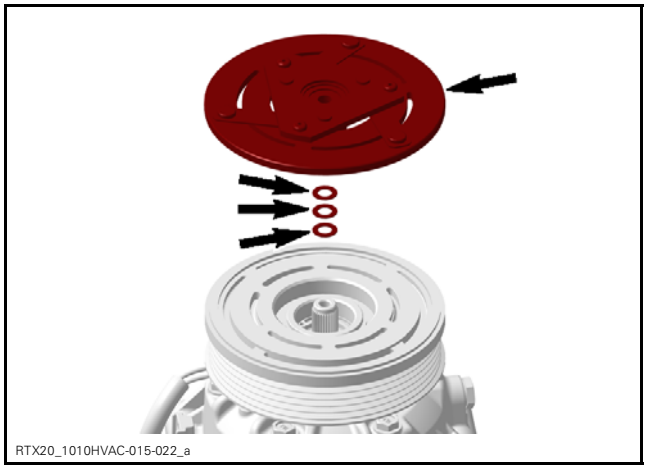

4. Remove:
   - Pulley retaining ring
   - Pulley.

If necessary use a standard 3-arm puller for pulley removal.

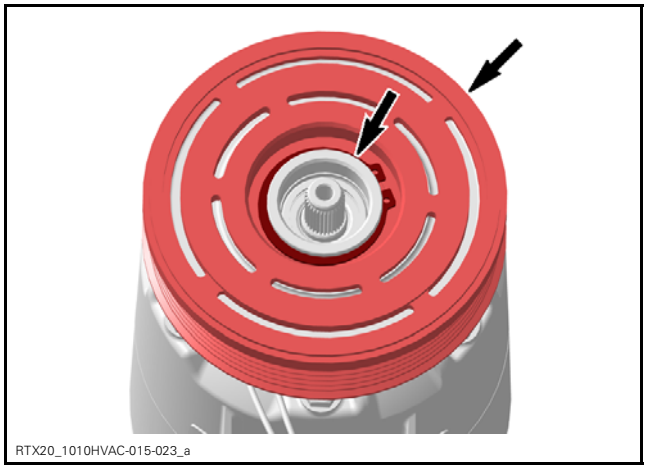

5. Remove coil retaining ring and withdraw coil.

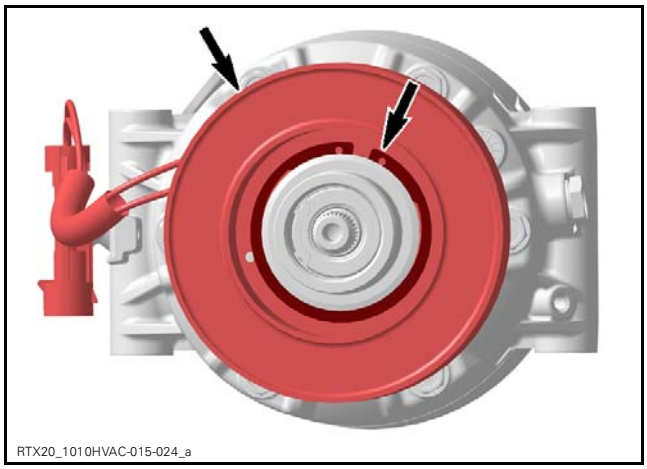
RTX20_1010HVAC-015-024_a

Inspecting the Magnetic Clutch

Check coil outer diameter for signs of scoring. Inspect the coil seat on the compressor housing for damages. Replace air conditioning compressor if necessary.

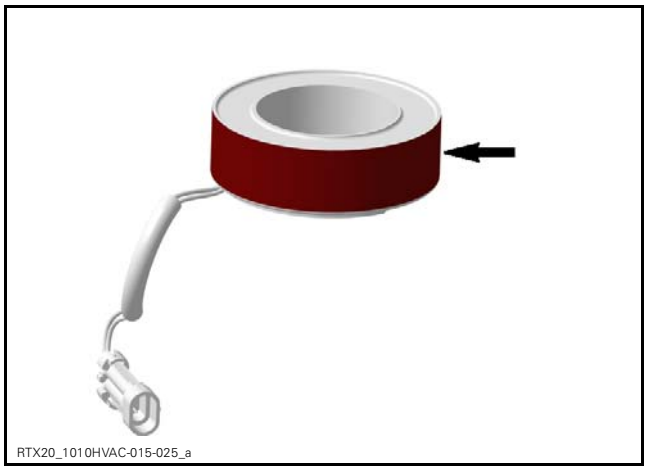
RTX20_1010HVAC-015-025_a

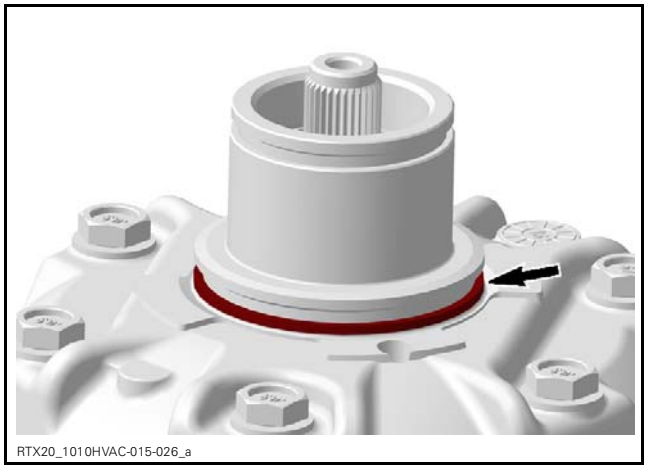
RTX20_1010HVAC-015-026_a

Installing the Magnetic Clutch

The installation is the reverse of the removal procedure. However, pay attention to the following.

Place coil on compressor housing.

Ensure:

- Nose on coil bottom side must be aligned with the recess in the housing.
- Coil wiring must face towards hose connection side on the housing.

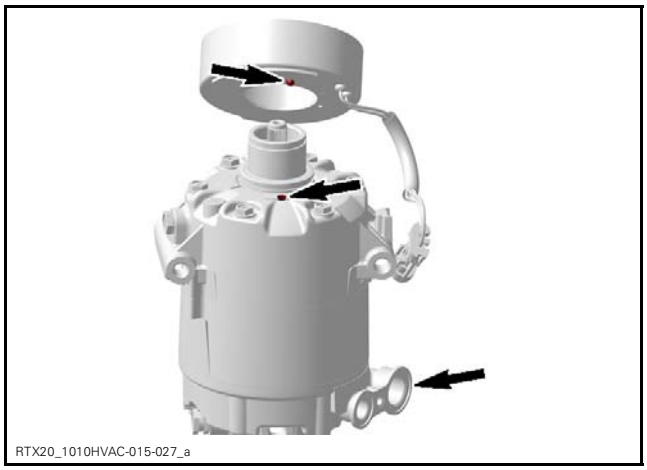
RTX20_1010HVAC-015-027_a

Install retaining ring with chamfer facing upwards.

NOTICE **Ensure proper installation orientation to avoid damages on the compressor housing.**

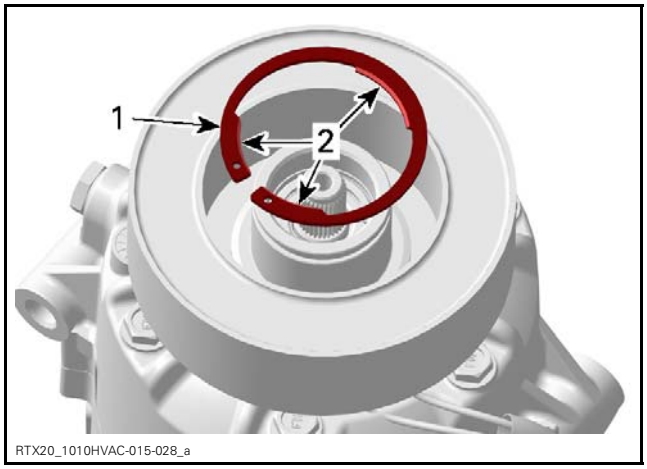

RTX20_1010HVAC-015-028_a

1. *Retaining ring*
2. *Chamfer*

NOTICE **After retaining ring assembly no movement of the coil is allowed.**

Install adjustment shims.

NOTE: Shim selection determines magnetic clutch friction plate air gap. When installing a clutch on a used compressor, try the original shims first.

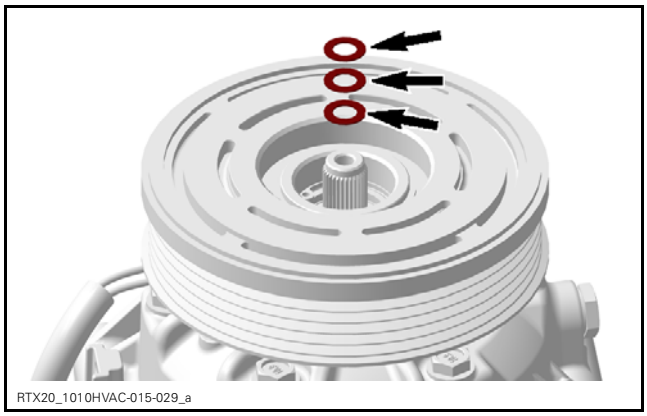
RTX20_1010HVAC-015-029_a

Install friction plate and tighten **OLD** screw to specification.

REQUIRED TOOL	
MAGNET COUPLING KEY (P/N 529 036 511)	

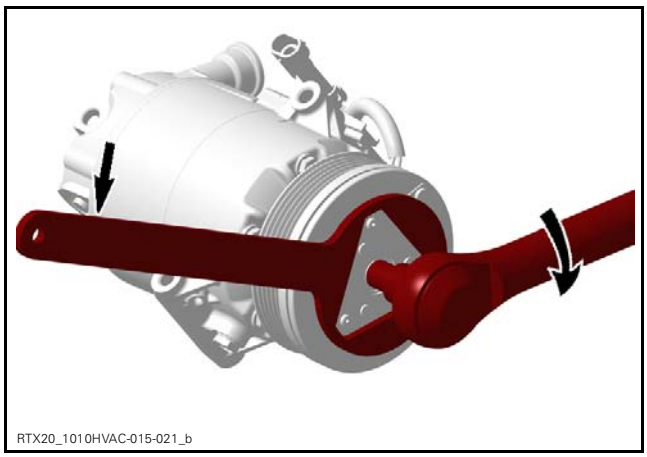
RTX20_1010HVAC-015-021_b

TIGHTENING TORQUE	
Friction plate retaining screw	13 N•m ± 1 N•m (115 lbf•**in** ± 9 lbf•**in**)

Check gap of the friction plate air using a feeler gauge. Take several measures all around the friction plate.

– If gap is within specification proceed with procedure.
– If gap is out of specification replace adjustment shims by proper thickness.

MAGNETIC CLUTCH FRICTION PLATE AIR GAP	
New	0.4 mm to 0.8 mm (.016 in to .031 in)
Service limit	1.3 mm (.051 in)

Replace **OLD** screw by the **NEW** one and tighten to specification.

REQUIRED TOOL	
MAGNET COUPLING KEY (P/N 529 036 511)	

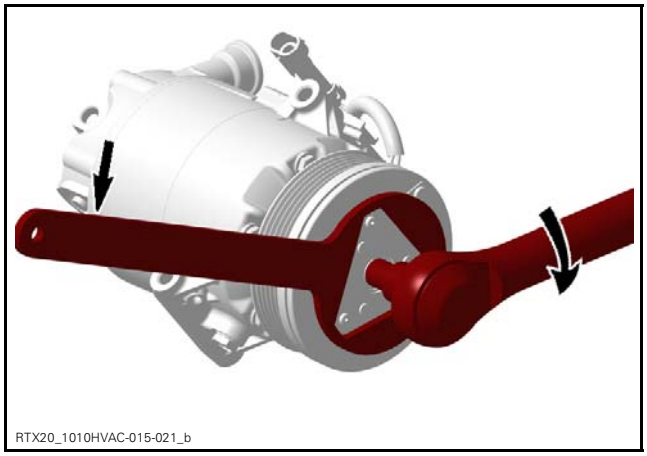
RTX20_1010HVAC-015-021_b

TIGHTENING TORQUE	
Friction plate retaining screw	13 N•m ± 1 N•m (115 lbf•**in** ± 9 lbf•**in**)

AIR CONDITIONING COMPRESSOR

Inspecting the Air Conditioning Compressor

1. Disconnect compressor connector.

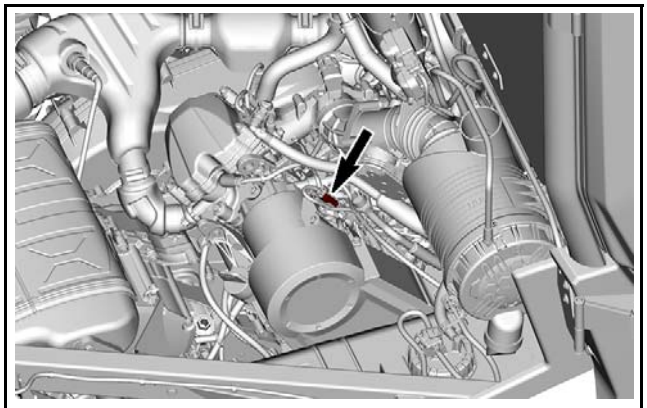
219101028-006-080

2. Check if compressor turns easily and smoothly. If not, remove magnetic clutch and try again.

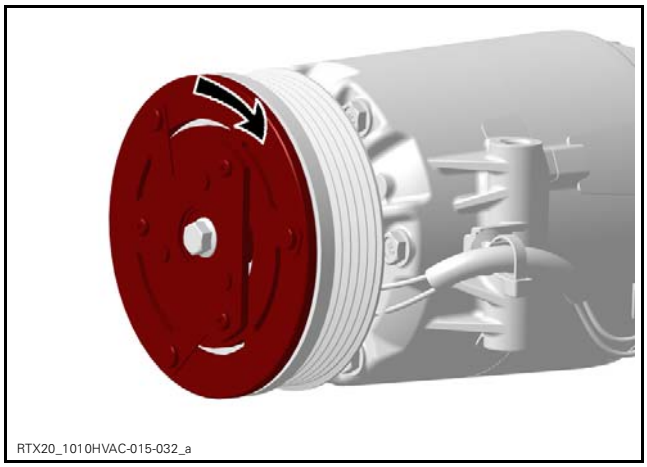
RTX20_1010HVAC-015-032_a

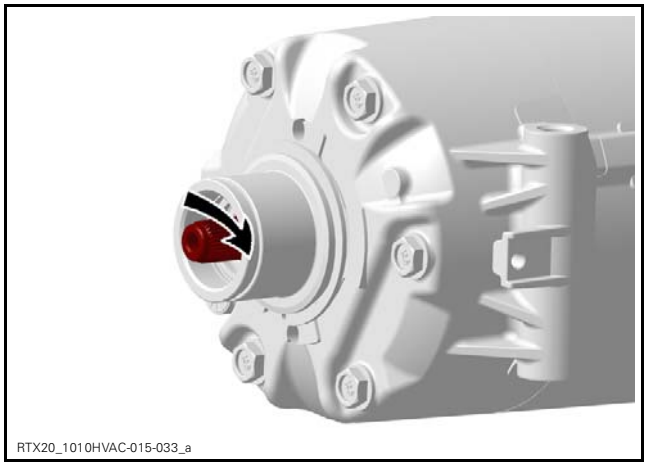
RTX20_1010HVAC-015-033_a

Removing the Air Conditioning Compressor

1. Recover the refrigerant in the HVAC system. Refer to a certified technician.
2. Remove the compressor drive belt.
3. Disconnect the compressor connector and disengage the housing from its bracket.

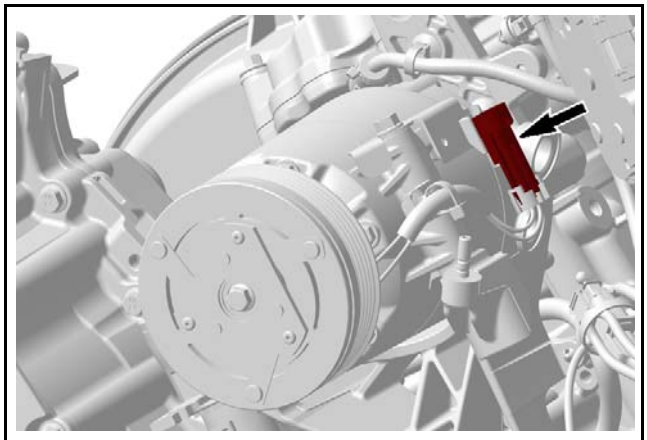
RTX20_1010HVAC-015-030_a

4. Remove screw securing A/C hoses to the compressor.

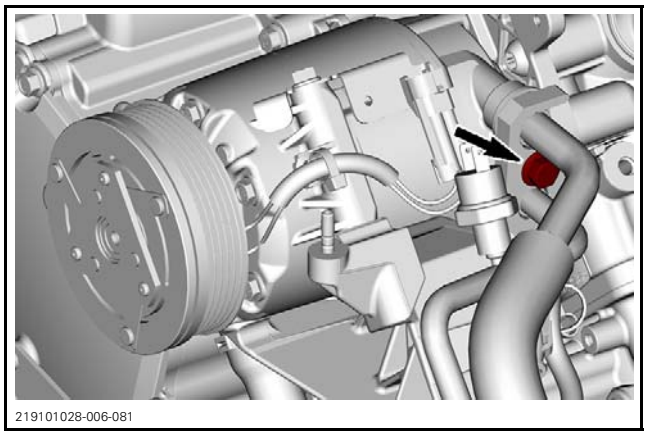
219101028-006-081

5. Remove screws retaining the connector bracket and the compressor.

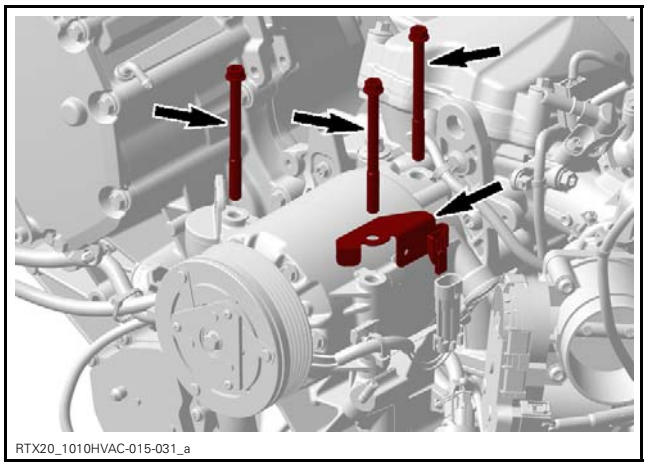
RTX20_1010HVAC-015-031_a

Installing the Air Conditioning Compressor

NOTICE **The air conditioning compressor is factory filled with 150 ml (.32 pt (U.S. liq.)) of PAG 46 oil. If the air conditioning compressor is replaced by a NEW one no oil must be added.**

Tighten compressor retaining screws using the following sequence.

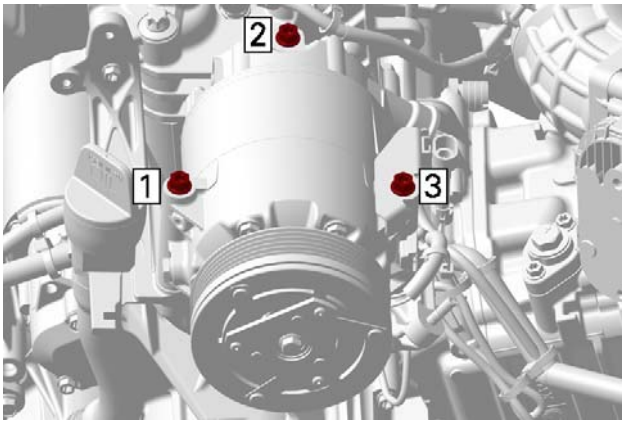

RTX20_1010HVAC-015-034_a

TIGHTENING TORQUE	
Compressor retaining screws	25 N•m ± 1 N•m (18 lbf•ft ± 1 lbf•ft)

Install A/C hoses. Refer to *AIR CONDITIONING - VEHICLE COMPONENTS* subsection for procedure.

Secure the compressor connector housing to its bracket and plug the connector.

Install the compressor drive belt, refer to procedure in this subsection.

Replace the desiccant cartridge. Refer to *AIR CONDITIONING - VEHICLE COMPONENTS* subsection.

Have the HVAC system recharged and checked by a certified technician.

AIR CONDITIONING - VEHICLE COMPONENTS

AIR CONDITIONING SYSTEM

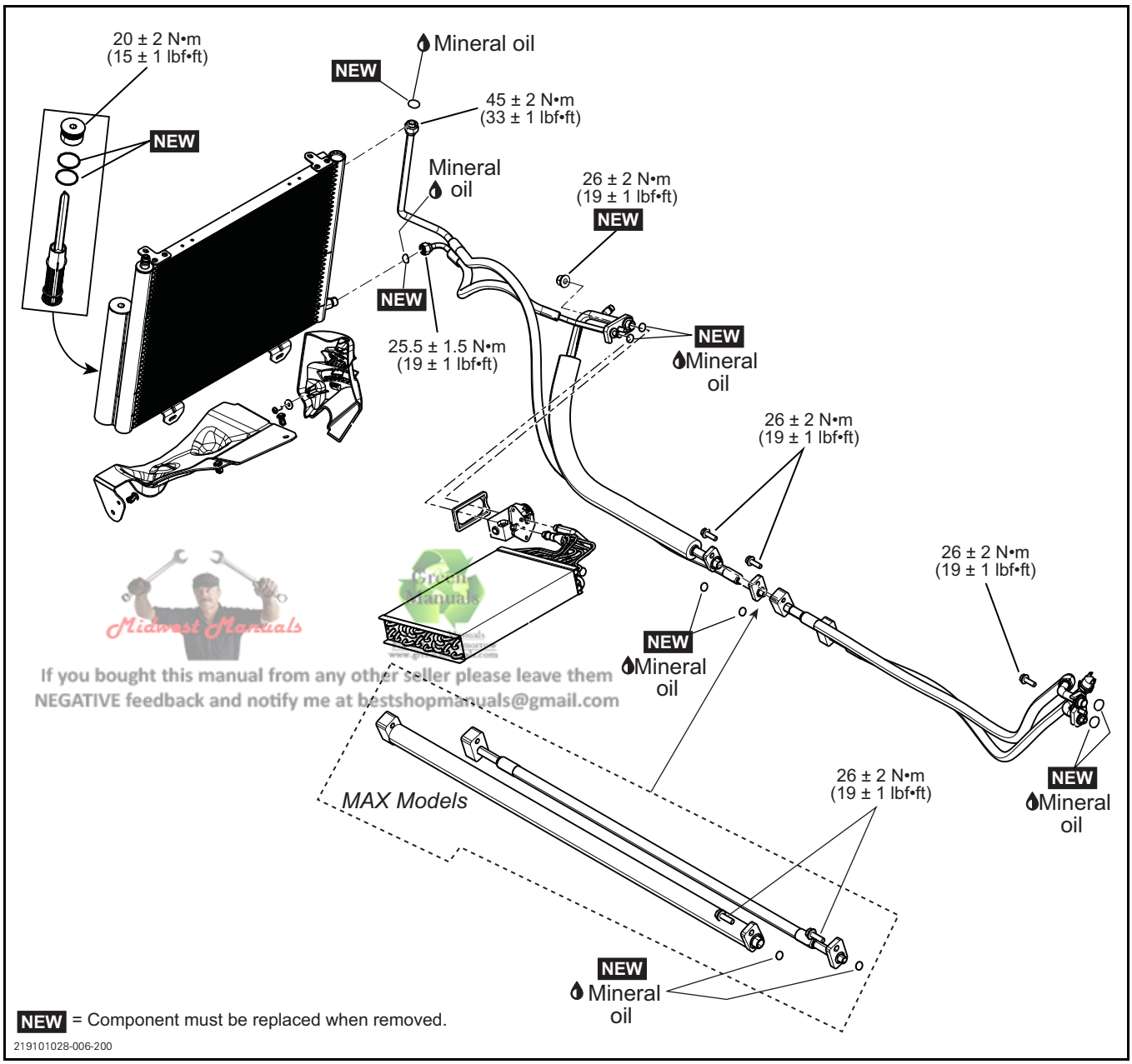

If you bought this manual from any other seller please leave them NEGATIVE feedback and notify me at bestshopmanuals@gmail.com

GENERAL

SYSTEM COMPONENTS

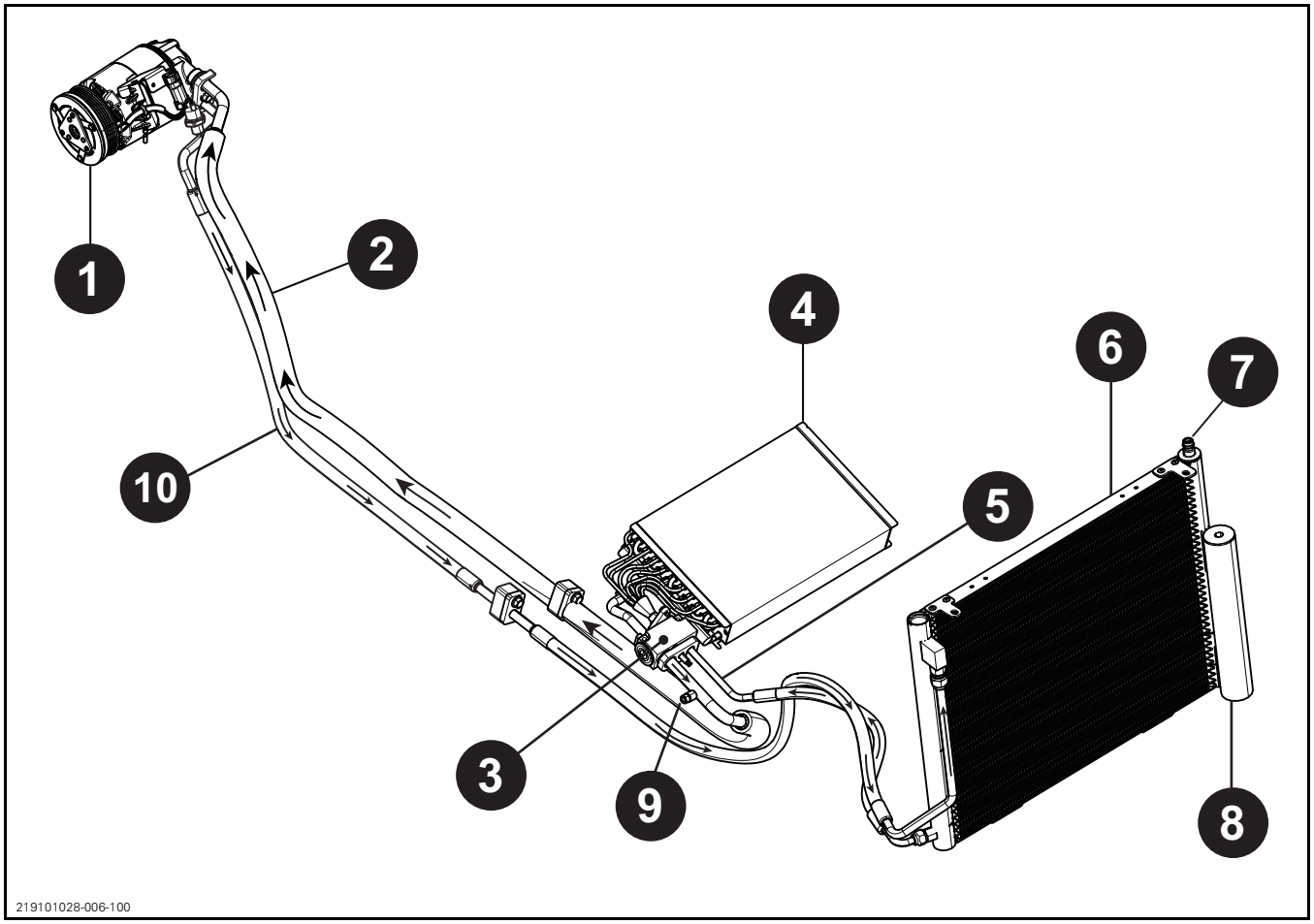

1. *Compressor*
2. *Low pressure gas hose*
3. *Expansive valve*
4. *Evaporator*
5. *High pressure liquid hose*
6. *Condenser*
7. *High pressure side service port*
8. *Receiver / drier (including the desiccant cartridge)*
9. *Low pressure side service port*
10. *High pressure gas hose*

In an air conditioning system, the heat is evacuated from the cockpit by circulating a refrigerant through a closed system containing several components. At each component the refrigerant goes through pressure and temperature changes.

The compressor: The compressor is fastened on the engine. It is driven by a belt and engaged by an electromechanical clutch. It is responsible for compressing and transferring refrigerant gas. The compressor takes in the low pressure refrigerant, pressurized it towards the condenser. The compressor is loaded in function of cooling demand. Less demand equals less torque request from compressor to the engine.

The condenser: Ambient air passing through the condenser removes the heat from the refrigerant. This action transforms the gas to liquid.

Then, the liquid moves into the receiver / drier where it is filtered to remove moisture and dirt. The receiver / drier also serves as the storage tank for the refrigerant in liquid state.

The expansion valve: After the receiver / drier, the refrigerant is sent towards the expansion valve. This valve has a controlled restriction to create an important refrigerant pressure drop and change of phase from liquid to gas. Thus the refrigerant in the evaporator is cold.

The evaporator: The refrigerant flowing inside the evaporator coil absorbs the heat from the warm air flowing on the evaporator coil. Thus the moisture from the warm air condensates on the evaporator coil and drips from the cab.

The refrigerant cycle is completed when the heated low pressure gas is again drawn into the compressor.

Receiver / drier: The liquid refrigerant coming from the condenser passes through the receiver / drier to remove moisture and foreign matter from the system. The only time the receiver / drier must be opened is to replace the desiccant cartridge when the refrigerant system is opened to ambient air (e.g.: during A/C component replacement) or a major leak has occurred within the systems components.

The low pressure side service port: Located on the front portion of the low pressure gas hose. Accessible behind the right front wheel.

The high pressure side service port: Located on the top of the condenser, on the left side of the vehicle. Accessible through the front service center.

A/C Service Products

Refrigerant	Type	R-134a
	Filling capacity	520 g (18 oz)
Oil	Type	PAG 46
	Quantity	Factory filled 155 ml (.33 pt (U.S. liq.))

Safe Practices with R134a Refrigerant

All technicians who work on the air conditioning system must be trained (certified) to use the refrigerant products and the recovery, recycling and refrigerant charging stations.

BRP is not offering training on A/C system to be certified. The majority of non-A/C parts can be replaced without having to disconnect refrigerant lines. The engine can be removed without disconnecting the refrigerant lines from the compressor.

In the event the refrigerant lines need to be disconnected:

- The refrigerant in the system must be recuperated by a certified technician using the proper equipment and having the knowledge and the experience to service refrigeration equipment.
- The vehicle can now repaired by a non-certified technician.
- After the repair, the system must be leak tested (no leak accepted) and charged by a certified technician using proper equipment.

The R-134a refrigerant inside the A/C system is under pressure. In case of major leak, the refrigerant temperature drops below freezing level instantly.

If the refrigerant splashes on the skin or eyes, rinse the area thoroughly with COOL water and consult a medical promptly.

⚠ CAUTION Safety glasses or a transparent face shield are mandatory safety items and one or the other is absolutely required when working with R134a refrigerant.

⚠ WARNING

R-134a refrigerant is dangerous if not properly handled.
Liquid R-134a may cause blindness when contacts the eyes and may cause serious frostbite when contacts the skin.
Gaseous R-134a, in ambient air, can be flammable if it contacts open flame or very hot substances.
Any servicing work that involves release or addition of R-134a to the system must be done by a certified technician using the proper equipment and having the knowledge and the experience to service refrigeration equipment.

Air Conditioning System Functioning Prerequisite

The engine RPM must be greater than 800 rpm.

The compressor will NOT be activated if the engine coolant temperature is lower than 10°C (50°F) or is higher than 120°C (248°F).

Also, the battery voltage must be above 11 volts.

If these conditions are not satisfied, the compressor clutch is not activated.

HVAC Sensors

Various sensors are used to monitor and control the HVAC system.

- Outside temperature sensor - located under the hood.
- Inside temperature sensor - located in the bottom of the HVAC unit, in the air, before the evaporator coil.

– Coil temperature sensor - located in the air after evaporator and heater coils.
– Evaporator De-icing sensor - located on the evaporator coil refrigerant outlet tube.
– Pressure switch - located on the high pressure gas line, near the compressor.

Temperature sensors: Measures internal and external temperatures to allow the controller to determine the best parameters to be used.

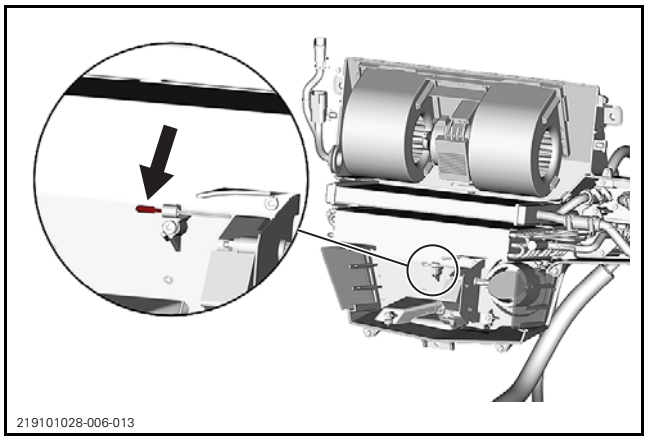
219101028-006-013

INSIDE TEMPERATURE SENSOR

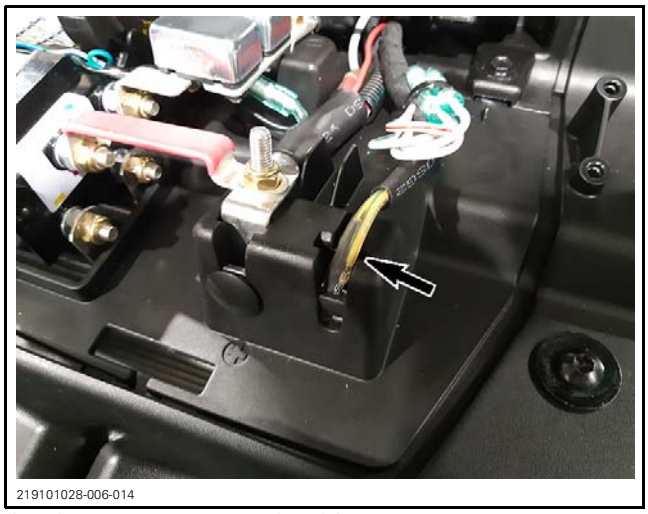
219101028-006-014

OUTSIDE TEMPERATURE SENSOR

Coil temperature sensor: Used to know the air temperature that comes out from the blower.

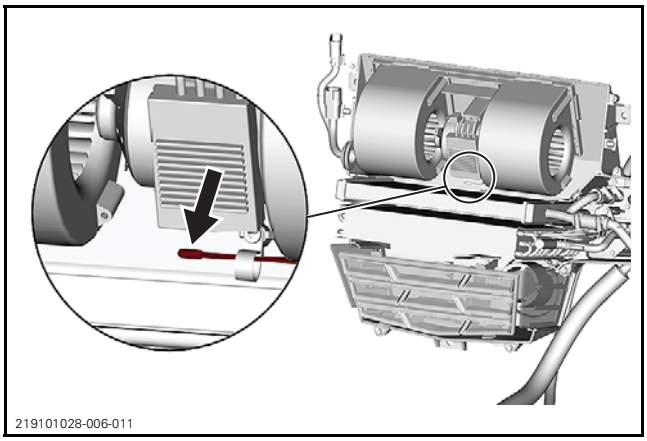
219101028-006-011

Evaporator De-icing sensor: Detects freezing on the evaporator coil and starts the de-ice mode.

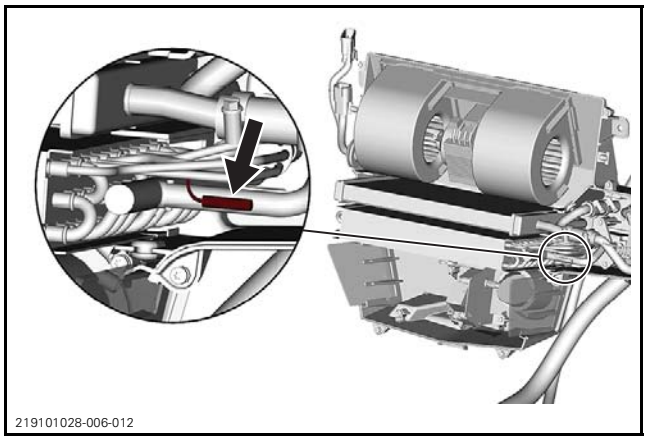
219101028-006-012

Pressure switch: Reacts to the refrigerant high side pressure and opens the circuit (shutting off compressor) if the pressure is over or below the defined thresholds.

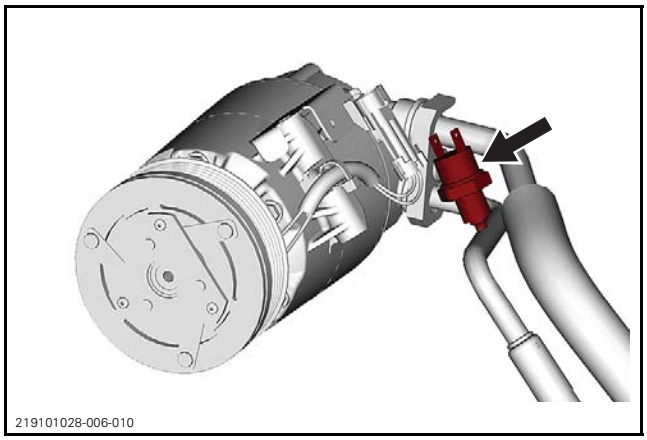
219101028-006-010

MAINTENANCE

INSPECTING AND REPLACING THE A/C AIR FILTERS

NOTICE **The cleaning of the filters must be performed more often than recommended when riding in dusty conditions or sand.**

Fresh Air Filter

Open hood to access fresh air filter.

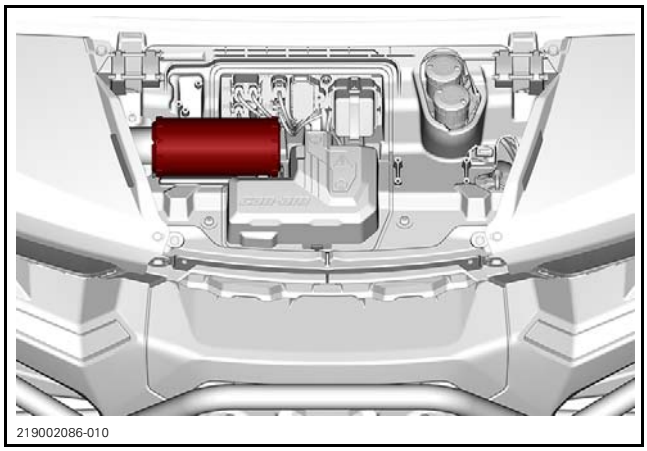

Lift and slide filter to remove.

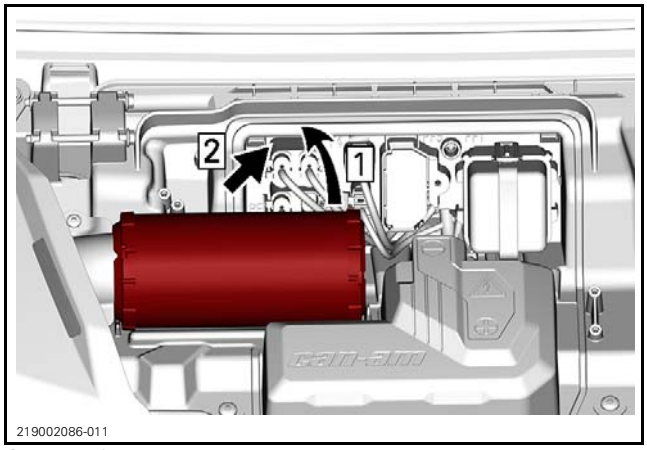

Step 1: Lift
Step 2: Slide

Inspect the filter for any signs of leaks. A streak of dust on the clean side of the filter is a telltale sign. Replace filter if there is any damage. Eliminate any source of air leaks before installing a new filter.

Clean the air filter by tapping out heavy dust from paper element, this will allow dirt and dust to get out of the paper filter.

NOTICE **It is not recommended to blow compressed air on the paper element; this could damage the paper fibers and reduce its filtration ability when used in dusty environments. If air filter is too dirty and cannot be cleaned following the recommended procedure, it should be replaced.**

Use a clean damp cloth to wipe both the filter sealing surface and the inside of the outlet tube. Ensure that the outlet tube sealing area is undamaged.

The installation is the reverse of the removal procedure.

Cockpit Air filters

Cockpit air filters are located at the bottom of the center console. There are 3 filters:

– One at the front of the unit
– One on each side of the unit.

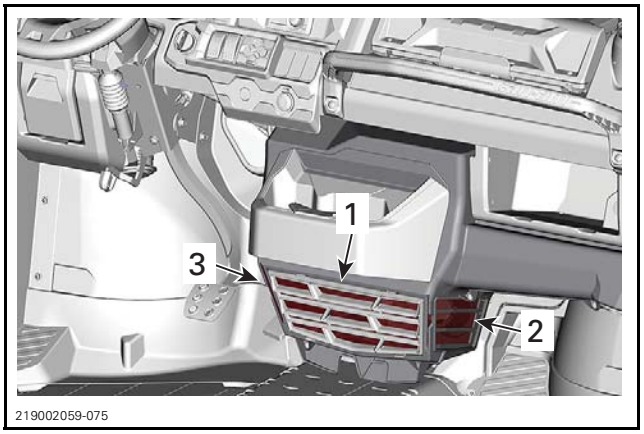

1. Front cockpit air filter
2. Lateral cockpit air filter - passenger side
3. Lateral cockpit air filter - driver side

Front Cockpit Air Filter

To remove this filter, lift the grille tabs and pull up.

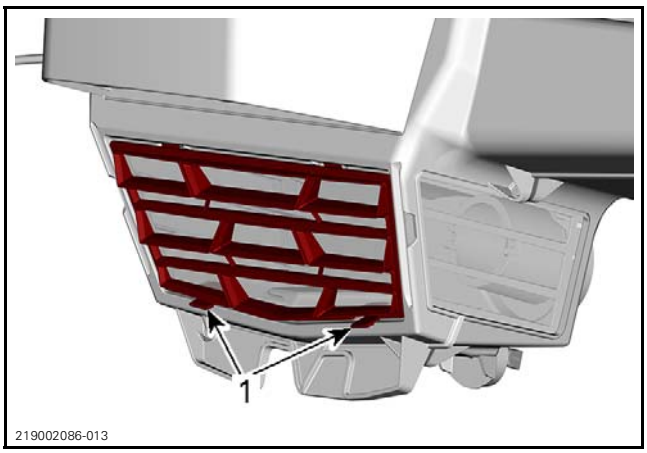

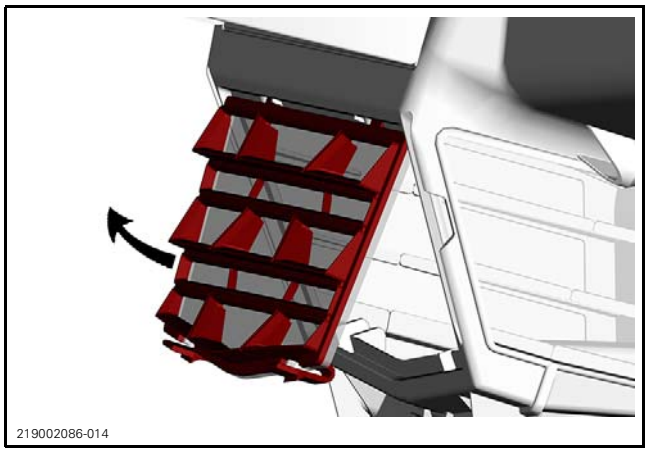

Clean air filter by washing it in lukewarm water with mild soap. Remove excess water and air dry before installation.

Before installing the filter, clean the inside of the heating/air conditioning unit and the evaporator coil using vacuum cleaner and a soft brush.

NOTICE **Be careful when brushing to avoid damaging the evaporator coil fins.**

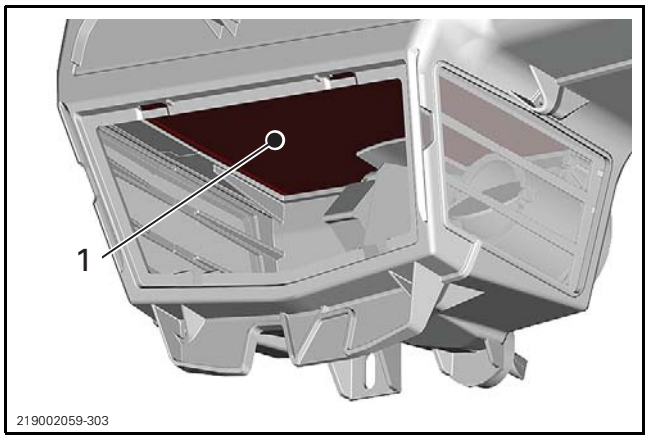

1. Evaporator

The installation is the reverse of the removal procedure.

Lateral Cockpit Air Filters

To remove these filters, grab the grille tab and pull.

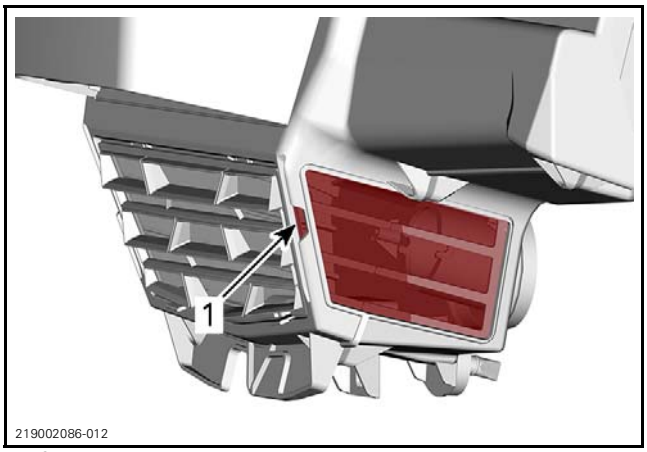

1. Grille tab

Clean air filters by washing them in lukewarm water with mild soap. Remove excess water and air dry before installation.

The installation is the reverse of the removal procedure.

INSPECTING THE COMPRESSOR DRIVE BELT

Refer to *AIR CONDITIONING - ENGINE COMPONENTS* for complete procedure to inspect or replace the compressor drive belt.

CLEANING THE CONDENSER

The condenser should be cleaned occasionally using water and a mild cleaner only.

The condenser is located in front of the radiator.

To reach the condenser, remove the front grille.

– Pull the bottom of the grille to release both retaining tabs.
– Remove the grille.

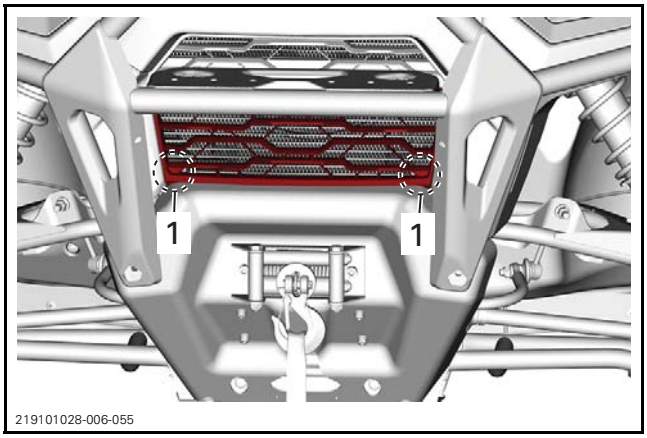

1. Retaining tab location

TROUBLESHOOTING

BLOWER MOTOR DOES NOT OPERATE

POSSIBLE CAUSE	INSPECTION	SOLUTION
1 - Blown fuse	Inspect fuse and wiring harness.	Replace fuse or repair wiring harness.
2 - Relay	Check power into and out of the relay.	Replace the relay or repair the wiring harness.
3 - Broken wire or bad connection	Check ground and connections of the blower motor.	Repair wiring harness or connector.
4 - Blower motor malfunction	Check the motor power wires.	Replace the motor.

BLOWER MOTOR OPERATES NORMALLY, BUT AIR FLOW IS INSUFFICIENT

POSSIBLE CAUSE	INSPECTION	SOLUTION
1 - Evaporator inlet is obstructed	Check evaporator for obstruction.	Remove obstruction and clean the evaporator fins.
2 - Clogged cockpit air filters	Check the cockpit air filters.	Clean or replace the cockpit air filters.
3 - Ice on evaporator	Check the de-icing sensor status in the climate control module.	Clear code and replace the sensor.
4 - Clogged air ducts	Check cleanliness of ducts.	Clean ducts.

A/C UNIT NOT COOLING SUFFICIENTLY

POSSIBLE CAUSE	INSPECTION	SOLUTION
1 - Broken compressor drive belt	Check the condition of the compressor drive belt.	Replace the compressor drive belt.
2 - System low on refrigerant or empty	The pressure on the high pressure side will be low.	Recover the refrigerant. Repair any leaks. Recharge the system with proper quantity.
3 - Excessive quantity of refrigerant	The pressure on the high pressure side will be high.	Recover refrigerant and recharge the system with proper quantity.
4 - Air in the system	The pressure is high on the high pressure and low pressure sides.	Recover refrigerant and recharge the system with proper quantity.
5 - Dirty evaporator or condenser	Check evaporator and condenser cleanliness.	Clean evaporator and/or condenser.

PRESSURE GAUGE - RELATED TROUBLESHOOTING

As a general rule, the pressure on the high pressure side will be around 8 times greater than the pressure on the low pressure side.

The Pressure on the Low Pressure Side Too High

The pressure on the low pressure side becomes too high when the pressure on the high pressure side is too high.

POSSIBLE CAUSE	INSPECTION	SOLUTION
1 - Expansive valve opens too far	Frost on the line between condenser and the expansive valve.	Replace expansion valve.
2 - Defective compressor	The pressure gauges (high and low pressure) equalize when the magnetic clutch is disengaged.	Replace the compressor.

The Pressure on the Low Pressure Side Too Low

POSSIBLE CAUSE	INSPECTION	SOLUTION
1 - Low refrigerant quantity	The pressure on the high pressure side will be low and bubbles may be present in the system.	Recover the refrigerant. Repair any leaks. Recharge the system with proper quantity.
2 - Restriction between condenser and the block valve	Frost on the line between condenser and the expansive valve.	Recover refrigerant and recharge the system with proper quantity. Replace the hose.

The Pressure on the High Pressure Side Too High

POSSIBLE CAUSE	INSPECTION	SOLUTION
1 - Poor condenser performance	Dirt or clogged condenser fins.	Clean condenser fins.
2 - Excessive quantity of refrigerant	Refer to the Pressure-Temperature charts.	Recover refrigerant and recharge the system with proper quantity.
3 - Excessive quantity of oil	The pressure on the high pressure side will be too high.	Recover refrigerant. Remove oil from compressor and condenser. Flush the system using nitrogen. Recharge the system with appropriate oil and recommended quantity.
4 - Air in the system	Pressure is high on the high pressure and low pressure sides.	Recover refrigerant and recharge the system with proper quantity.
5 - Restriction in the receiver/drier, in the condenser or in hoses of the high pressure side.	The pressure on the high pressure side will be high, and the pressure on the low pressure side will be low.	Recover refrigerant. Flush the system using nitrogen. Replace defective part(s). Recharge the system with proper quantity.

The Pressure on the High Pressure Side Too Low

POSSIBLE CAUSE	INSPECTION	SOLUTION
1 - Low refrigerant quantity	The pressure on the high pressure side will be low.	Recover the refrigerant. Repair any leaks. Recharge the system with proper quantity.
2 - Compressor not operating	The pressure is equal on the high pressure and the low pressure side.	Replace the compressor or ccmpressor clutch.
	Check if compressor is clutching at cooling mode (Temperature = Minimum and Fan Speed = Maximum)	
	Check if there 12V at the clutch connector.	No voltage - check fuse, relay and wiring harness. If 12V but clutch does not engage - replace the clutch magnet.

PROCEDURES

CONTROL OF THE AIR CONDITIONING SYSTEM TEMPERATURE

1. Inspect all A/C air filters. Replace if necessary.
2. Check cleanliness of condenser and evaporator. Clean if necessary.
3. Open all doors.
4. Close both windshield air vents but open all other (6x).
5. Start the engine.
6. Power on the climate control module and select the following:

COOL temperature mode	
Lower temperature setting	
Maximum fan speed	

7. Let engine running to idle at least 5 minutes.
8. Measure and record the ambient temperature and the air humidity.
9. Measure and record the air temperature in both air vents located in the center of the dash.

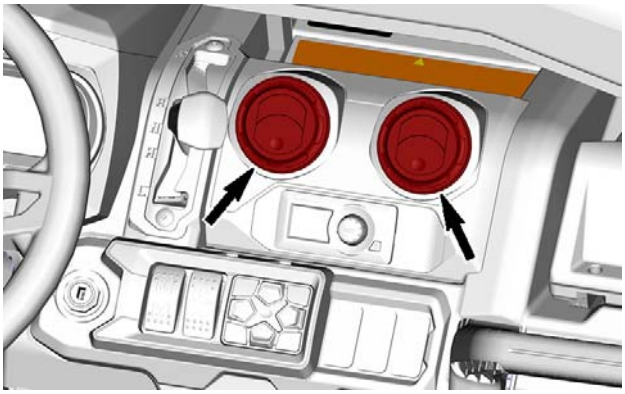

219101028-006-020

10. Calculate the average of the measured temperatures and compare the result with the following table.

AMBIENT AIR TEMPERATURE	HIGHEST ALLOWABLE AVERAGE TEMPERATURE	
	LOW AMBIENT HUMIDITY (10- 15%)	HIGH AMBIENT HUMIDITY (50- 75%)
20°C (68°F)	10.1°C (50.2°F)	11.6°C (52.9°F)
21°C (70°F)	10.4°C (50.7°F)	12.4°C (54.3°F)
22°C (72°F)	10.7°C (51.3°F)	13.2°C (55.8°F)
23°C (73°F)	11.0°C (51.8°F)	14.0°C (57.2°F)
24°C (75°F)	11.3°C (52.3°F)	14.7°C (58.5°F)
25°C (77°F)	11.7°C (53.1°F)	15.5°C (59.9°F)
26°C (79°F)	12.1°C (53.8°F)	16.3°C (61.3°F)
27°C (81°F)	12.5°C (54.5°F)	17.0°C (62.6°F)
28°C (82°F)	13.0°C (55.4°F)	17.7°C (63.9°F)

AMBIENT AIR TEMPERATURE	HIGHEST ALLOWABLE AVERAGE TEMPERATURE	
	LOW AMBIENT HUMIDITY (10- 15%)	HIGH AMBIENT HUMIDITY (50- 75%)
29°C (84°F)	13.5°C (56.3°F)	18.5°C (65.3°F)
30°C (86°F)	14.0°C (57.2°F)	19.2°C (66.6°F)
31°C (88°F)	14.5°C (58.1°F)	19.9°C (67.8°F)
32°C (90°F)	15.1°C (59.2°F)	20.6°C (69.1°F)
33°C (91°F)	15.7°C (60.3°F)	21.3°C (70.3°F)
34°C (93°F)	16.3°C (61.3°F)	22.0°C (71.6°F)
35°C (95°F)	17.0°C (62.6°F)	22.7°C (72.9°F)
36°C (97°F)	17.6°C (63.7°F)	23.4°C (74.1°F)
37°C (99°F)	18.4°C (65.1°F)	24.0°C (75.2°F)
38°C (100°F)	19.1°C (66.4°F)	24.7°C (76.5°F)
39°C (102°F)	19.8°C (67.6°F)	25.4°C (77.7°F)
40°C (104°F)	20.6°C (69.1°F)	26.0°C (78.8°F)
41°C (106°F)	21.5°C (70.7°F)	26.6°C (79.9°F)
42°C (108°F)	22.3°C (72.1°F)	27.3°C (81.1°F)
43°C (109°F)	23.2°C (73.8°F)	27.9°C (82.2°F)
44°C (111°F)	24.1°C (75.4°F)	28.5°C (83.3°F)
45°C (113°F)	25.0°C (77°F)	29.1°C (84.4°F)

11. If results are out of specification, connect the vehicle to A/C pressure gauges.
12. Observe and record the system pressures (low and high pressure) with A/C still operating.
13. Active the diagnostic mode of the climate control module. Go in the window VIEW 1 and note the COIL temperature.
14. Compare results with the following tables.

NOTE: In the following tables, the data in **BOLD** indicate the normal temperature range.

COIL TEMPERATURE	PRESSURE ON THE LOW PRESSURE SIDE
-3.3°C (26°F)	108.18 kPa (15.69 PSI)
-2.2°C (28°F)	117.49 kPa (17.04 PSI)
-1.1°C (30°F)	**127.07 kPa (18.43 PSI)**
0°C (32°F)	**137 kPa (19.87 PSI)**
1.1°C (34°F)	**147.2 kPa (21.35 PSI)**
2.2°C (36°F)	**157.75 kPa (22.88 PSI)**

COIL TEMPERATURE	PRESSURE ON THE LOW PRESSURE SIDE
3.3°C (38°F)	**168.71 kPa (24.47 PSI)**
4.4°C (40°F)	**179.95 kPa (26.10 PSI)**
5.6°C (42°F)	**191.61 kPa (27.79 PSI)**
6.7°C (44°F)	**203.53 kPa (29.52 PSI)**
7.8°C (46°F)	**215.94 kPa (31.32 PSI)**
8.9°C (48°F)	**228.7 kPa (33.17 PSI)**
10°C (50°F)	**241.8 kPa (35.07 PSI)**
11.1°C (52°F)	**255.31 kPa (37.03 PSI)**
12.2°C (54°F)	**269.24 kPa (39.05 PSI)**
12.8°C (55°F)	**276.41 kPa (40.09 PSI)**
15.6°C (60°F)	313.57 kPa (45.48 PSI)
18.3°C (65°F)	353.49 kPa (51.27 PSI)
21.1°C (70°F)	396.24 kPa (57.47 PSI)
23.9°C (75°F)	441.95 kPa (64.10 PSI)
26.7°C (80°F)	490.84 kPa (71.19 PSI)
29.4°C (85°F)	542.96 kPa (78.75 PSI)
32.2°C (90°F)	598.47 kPa (86.80 PSI)
35°C (95°F)	657.76 kPa (95.40 PSI)
37.8°C (100°F)	719.81 kPa (104.40 PSI)
38.3°C (101°F)	732.91 kPa (106.30 PSI)
38.9°C (102°F)	746.01 kPa (108.20 PSI)

OUTSIDE TEMPERATURE	PRESSURE ON THE HIGH PRESSURE SIDE
11.7°C (53°F)	759.8 kPa (110.20 PSI)
12.2°C (54°F)	772.9 kPa (112.10 PSI)
12.8°C (55°F)	786.69 kPa (114.10 PSI)
15.6°C (60°F)	857.02 kPa (124.30 PSI)
16.7°C (62°F)	885.98 kPa (128.50 PSI)
17.8°C (64°F)	916.31 kPa (132.90 PSI)
18.9°C (66°F)	946.65 kPa (137.30 PSI)
20°C (68°F)	**978.37 kPa (141.90 PSI)**
21.1°C (70°F)	**1 010.08 kPa (146.50 PSI)**
22.2°C (72°F)	**1 043.18 kPa (151.30 PSI)**
23.3°C (74°F)	**1 076.27 kPa (156.10 PSI)**
24.4°C (76°F)	**1 110.75 kPa (161.10 PSI)**
25.6°C (78°F)	**1 145.22 kPa (166.10 PSI)**
26.7°C (80°F)	**1 181.07 kPa (171.30 PSI)**

OUTSIDE TEMPERATURE	PRESSURE ON THE HIGH PRESSURE SIDE
27.8°C (82°F)	**1 217.61 kPa (176.60 PSI)**
28.9°C (84°F)	**1 254.85 kPa (182.00 PSI)**
30°C (86°F)	**1 292.77 kPa (187.50 PSI)**
31.1°C (88°F)	**1 331.38 kPa (193.10 PSI)**
32.2°C (90°F)	**1 371.37 kPa (198.90 PSI)**
35°C (95°F)	**1 473.41 kPa (213.70 PSI)**
37.8°C (100°F)	**1 581.66 kPa (229.40 PSI)**

OUTSIDE TEMPERATURE	PRESSURE ON THE HIGH PRESSURE SIDE
40.6°C (105°F)	**1 694.73 kPa (245.80 PSI)**
43.3°C (110°F)	**1 813.32 kPa (263.00 PSI)**
46.1°C (115°F)	**1 938.12 kPa (281.10 PSI)**
48.9°C (120°F)	**2 069.12 kPa (300.10 PSI)**
51.7°C (125°F)	2 206.32 kPa (320.00 PSI)
54.4°C (130°F)	2 349.73 kPa (340.80 PSI)

OPERATING PRESSURES DIAGNOSIS

PRESSURE		**HOSES**		**AIR FLOW**	**CONDITION**
LOW PRESSURE SIDE	HIGH PRESSURE SIDE	LIQUID REFRIGERANT	GAS REFRIGERANT		
Very low	Very low	Slightly warm	Slightly warm	Warm	Lack of refrigerant
Low	Low	Warm	Warm to very warm	Warm to very warm	Lost of refrigerant
Low	Low	Warm	Warm	Very warm	Expansion valve closed
Normal (may decrease)	Normal	Warm	Warm	Slightly cold	Lack of refrigerant and air in the system
Normal (may decrease)	Normal (may decrease)	Warm	Very warm	Warm	Humidity in the system
Normal	High	Warm	Warm	Slightly cold	Clogged condenser or refrigerant overload
High	High	Warm	Very warm	Slightly cold	Expansion valve opened
High	High	Warm	Very warm	Warm	Contaminated refrigerant and air in the system
High	High	Very warm	Very warm	Very warm	Defective condenser

COMPRESSOR AND DRIVE BELT

Refer to *AIR CONDITIONING - ENGINE COMPONENTS* subsection.

AIR VENTS

Removing the Air Vent

Windshield Air Vent

1. Open the windshield.
2. Remove screws retaining the windshield air vent.

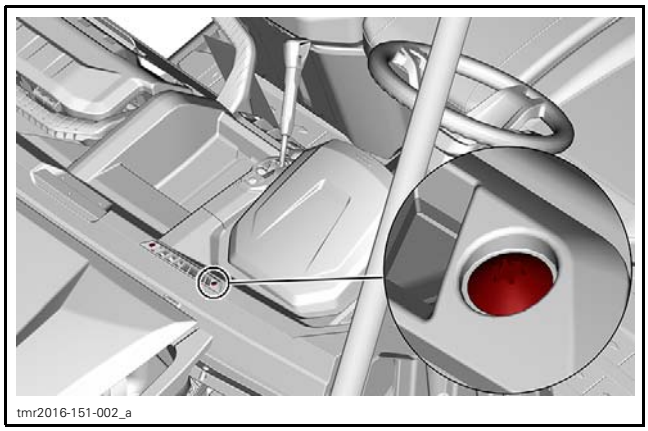
tmr2016-151-002_a

3. Pull on the windshield air vent and remove it.

Central Air Vents (Left and Right)

1. Unclip the vent and lift it.
2. Cut locking tie.

Central Air Vents (in the middle of dash)

1. Unclip the bottom of the central console panel.

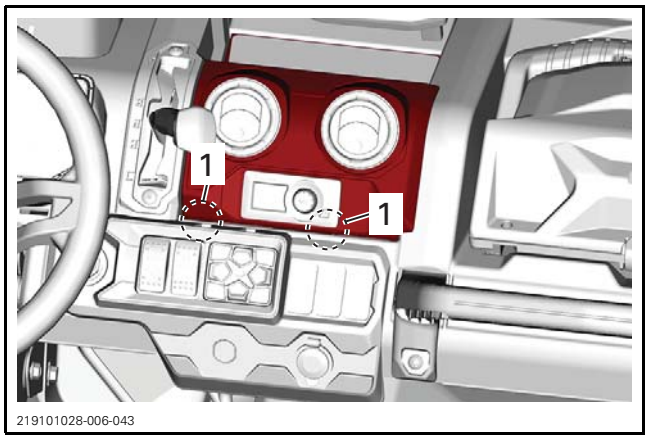

219101028-006-043

1. Locking tab location

2. Lift the panel and cut locking tie.

Installing the Air Vents

The installation is the reverse of the removal procedure. However, pay attention to the following.

TIGHTENING TORQUE	
Windshield air vent screws	1.6 N•m ± 0.4 N•m (14 lbf•**in** ± 4 lbf•**in**)

AIR DUCTS

Removing the Air Ducts

To remove air ducts, the dash removal is required.

Installing the Air Ducts

The installation is the reverse of the removal procedure.

HVAC UNIT

Removing the HVAC Unit Cover

1. Remove screws securing the cover.

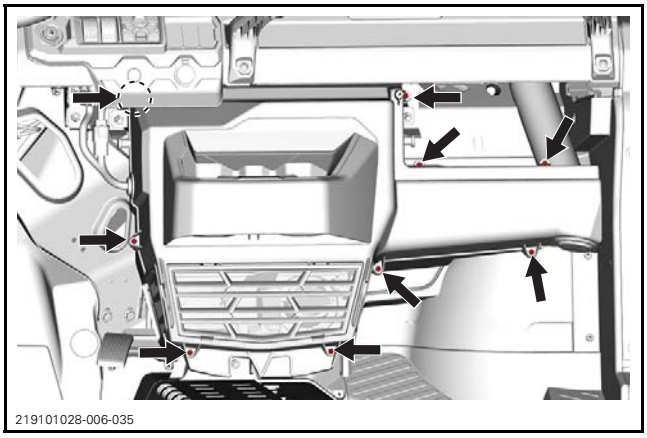
219101028-006-035

2. Pull the cover to remove it.

Installing the HVAC Unit Cover

The installation is the reverse of the removal procedure. However, pay attention to the following.

TIGHTENING TORQUE	
HVAC unit cover screws	1.35 N•m (12 lbf•**in**)

Removing the HVAC Unit

1. Remove the right storage compartment.

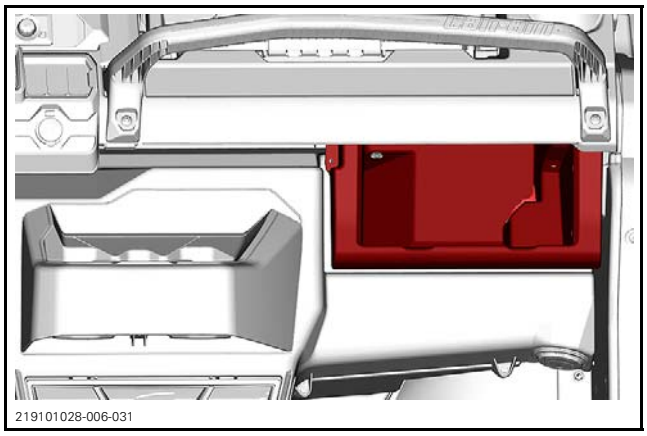
219101028-006-031

2. Remove the nuts on both side of the HVAC unit.

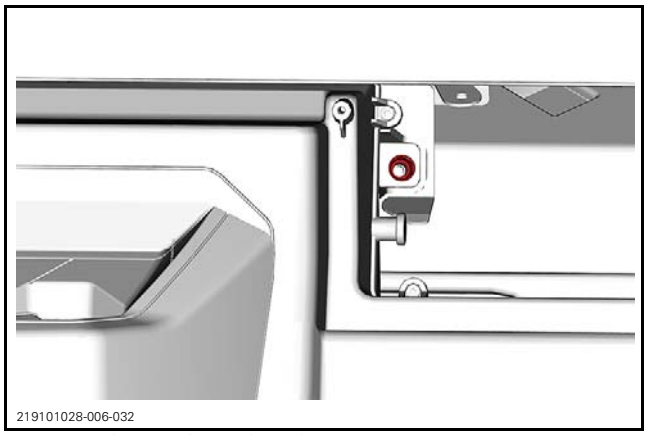

RETAINING NUT ON RIGHT SIDE

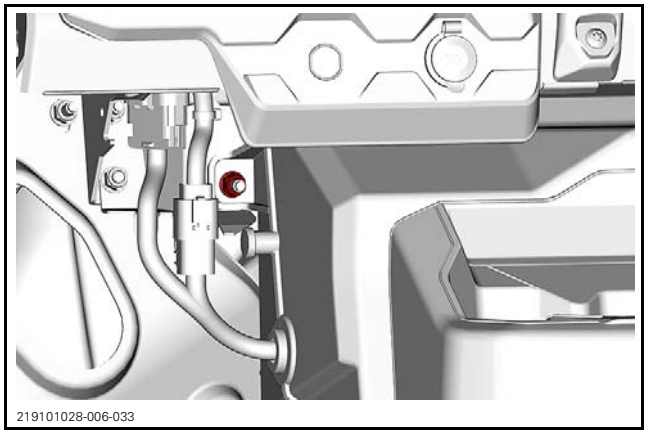

RETAINING NUT ON LEFT SIDE

3. Remove the lower central retaining nut.

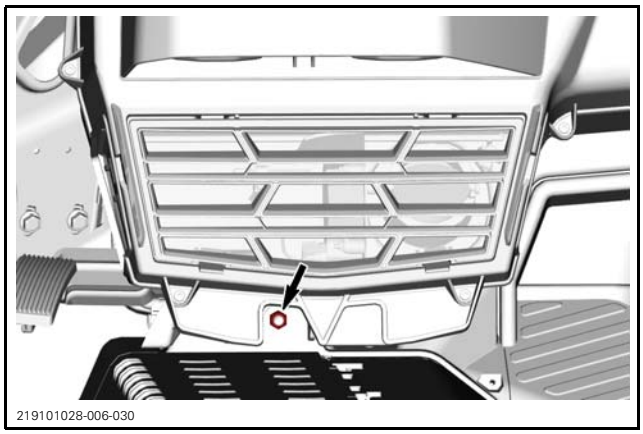

If the HVAC unit must be moved aside to work behind, pull the unit slightly and turn it towards the right side of the vehicle to make room.

If the unit must be removed from the vehicle, do the following.

4. Recover the refrigerant in the HVAC system. Refer to a certified technician.
5. Unplug the blower and HVAC connectors.

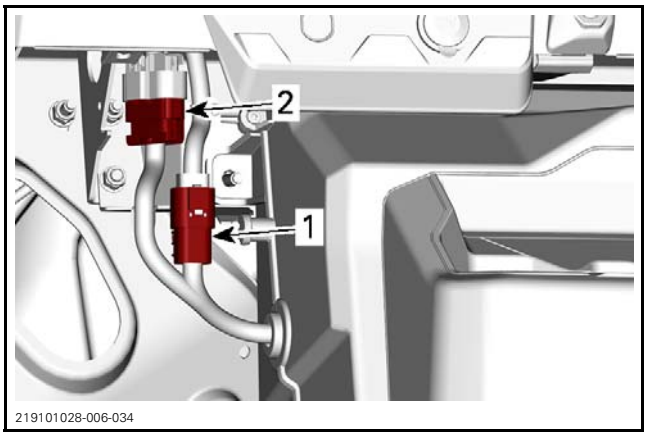

1. *Blower connector*
2. *HVAC connector*

6. From behind the front right wheel, install a hose pincher on each coolant hose.

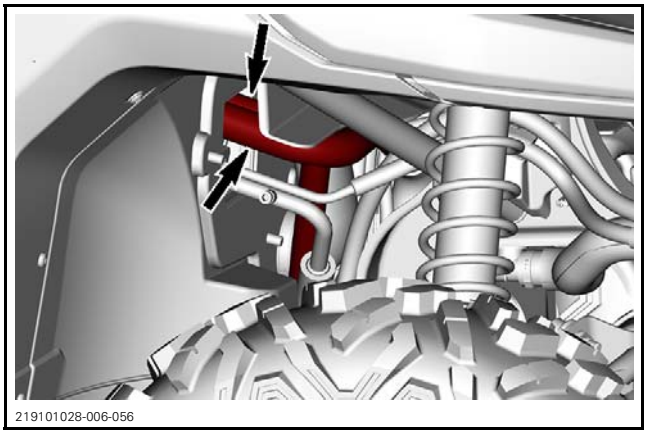

7. Unplug hoses and recover any coolant flow.

NOTICE **Clean any coolant on the A/C hoses.**

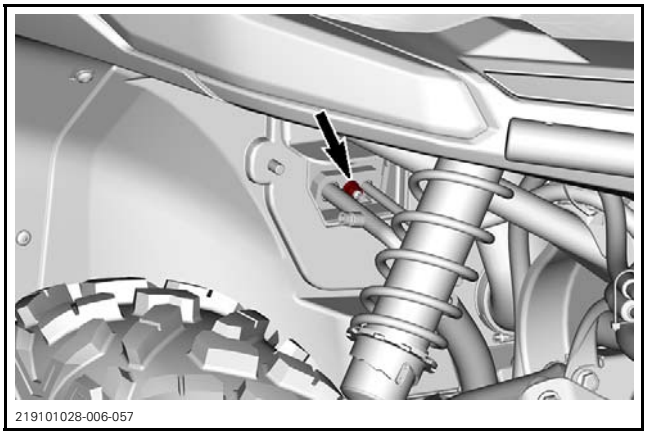

8. Remove the nut securing A/C hoses to the expansion valve.

NOTICE **Block A/C hoses and expansion valve opening to avoid contamination.**

9. Pull the unit.

10. Remove the HVAC unit from the vehicle.

Installing the HVAC Unit

The installation is the reverse of the removal procedure. However, pay attention to the following.

TIGHTENING TORQUE	
HVAC unit retaining nuts	5 N•m ± 1 N•m (44 lbf•**in** ± 9 lbf•**in**)

Fill and bleed the cooling system. Refer to *COOLING SYSTEM - VEHICLE COMPONENTS* subsection.

Check for coolant leaks.

Replace the desiccant cartridge.

Have the HVAC system recharged and checked by a certified technician.

BLOWER

The blower assembly includes the blower resistor, the blower motor and the blower fans.

HVAC Unit Fuses and Relays Location

The fuse box is located into the front service compartment.

219101010-017-066

Testing the Blower Motor

Turn the vehicle key switch to ON.

Turn the blower speed switch to low, medium, then high.

HVAC UNIT TROUBLESHOOTING CHART		
Is blower working?	YES →	Everything is OK
NO ↓		
Check for power on main accessory posts under dashboard	NO →	Refer to *POWER DISTRIBUTION AND GROUNDS* subsection
YES ↓		
Check blower fuse (20A). Is fuse burnt?	YES →	Replace fuse Is blower working?
NO ↓		
Check wiring harness, connectors, and ground		
↓		
Harness and connectors good?	NO →	Repair or replace defective part(s)
YES ↓		
Blower turns?	YES →	Reinstall all removed parts
NO ↓		
Bypass blower speed switch		
↓		
Blower turns?	YES →	Replace blower speed switch Is blower working?
	NO →	Replace blower

Blower Motor Resistor

The blower motor resistor provides electrical resistance in series to the blower motor.

The fan speed control switch sends current to one blower resistor pin based on selected fan speed.

Adding resistance to the circuit slows the blower motor.

Removing resistance from the circuit speeds the blower motor.

Testing the Blower Motor Resistor

Refer to the appropriate *WIRING DIAGRAM*.

The blower motor resistor cannot be tested independently from the blower motor.

1. Turn the fan on to low, medium, then high.

2. Read the voltage at the blower assembly connector for each speed.

If battery voltage is available at each pin of the blower assembly connector and the blower motor does not come on. Ensure there is a good ground.

If all electrical tests are good, replace the blower.

Removing the Blower

1. Remove the HVAC unit cover.
2. Remove the blower retaining screws.

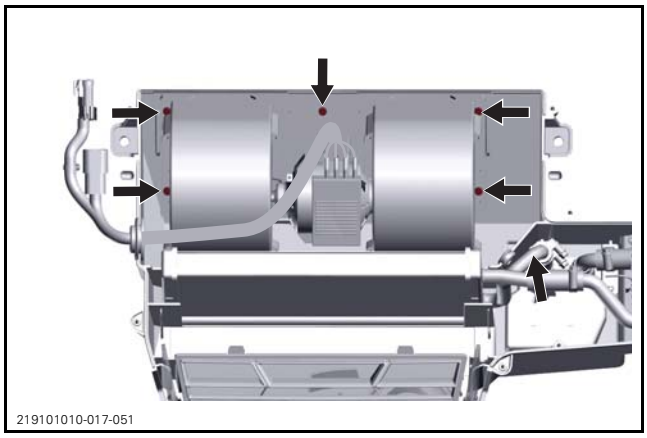
219101010-017-051

3. Remove blower harness from the rubber grommet.

Installing the Blower

The installation is the reverse of the removal procedure. However, pay attention to the following.

TIGHTENING TORQUE	
Blower retaining screws	1.35 N•m (12 lbf•**in**)

HEATER VALVE

The heater valve includes the valve and the actuator.

The actuator controls the valve opening or closing to allow or not the circulation of the heated coolant through the heater unit.

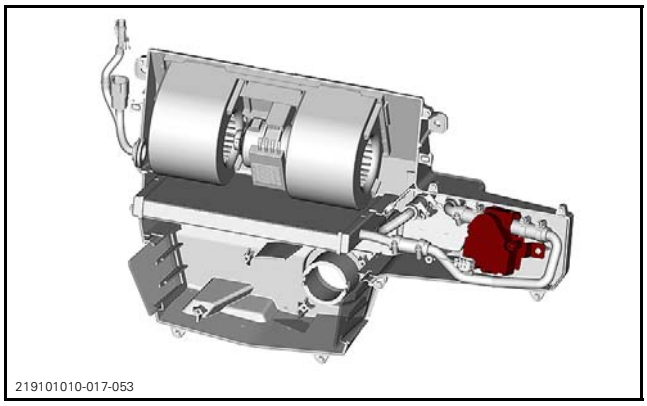
219101010-017-053

Testing the Heater Valve

1. Disconnect the HVAC connector, located on the left side of the HVAC unit.

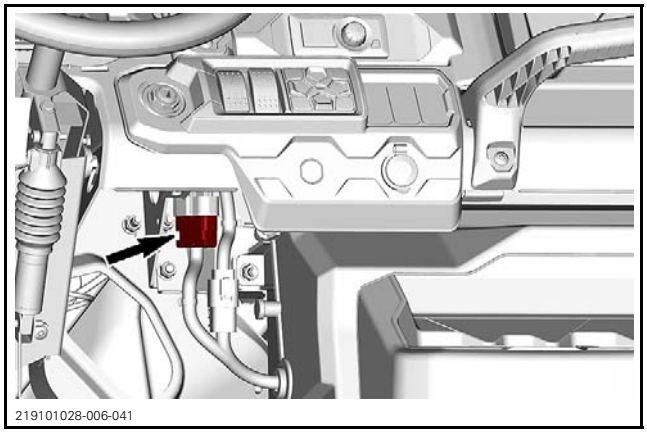
219101028-006-041

2. On vehicle connector, verify the voltage.

HEATER VALVE CONNECTOR PINS		RESULT
N	P	Battery voltage

No battery voltage, check fuse F1 and wiring harness.

Low battery voltage, recharge or replace battery by a fully charge one and retest.

3. Good battery voltage; check the signal from the climate control module.

HEATER VALVE CONNECTOR PINS		RESULT
L	K	Voltage should vary when the temperature is modified.

If the voltage vary, replace the heater valve.

If not, replace the climate control module.

Removing the Heater Valve

1. From behind the front right wheel, install a hose pincher on each coolant hose.

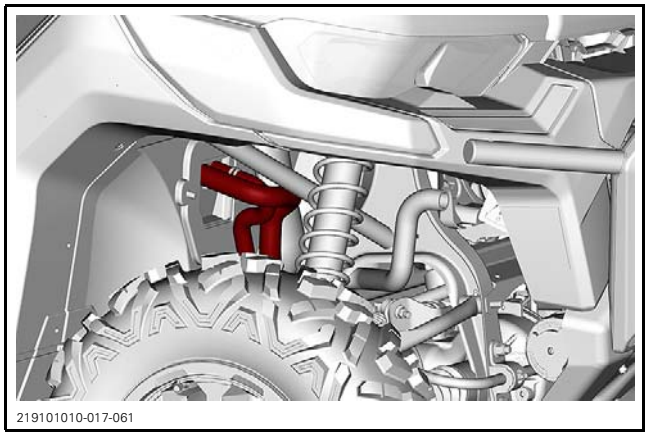
219101010-017-061

2. Remove the HVAC unit cover. See procedure in this subsection.
3. Disconnect the heater valve connector.
4. Loosen gear clamps on both side of the heater valve.

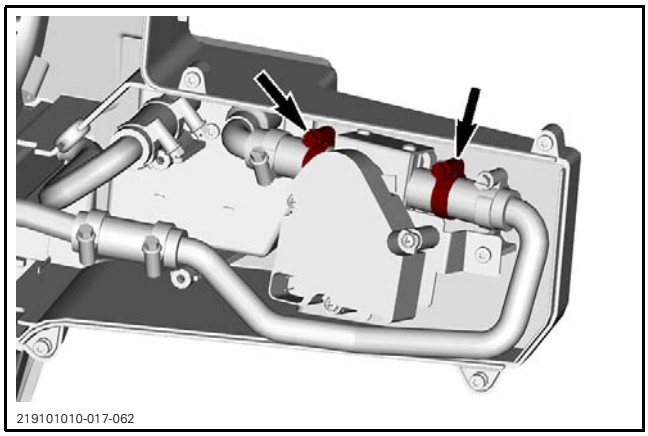
219101010-017-062

5. Remove the heater valve retaining screw.

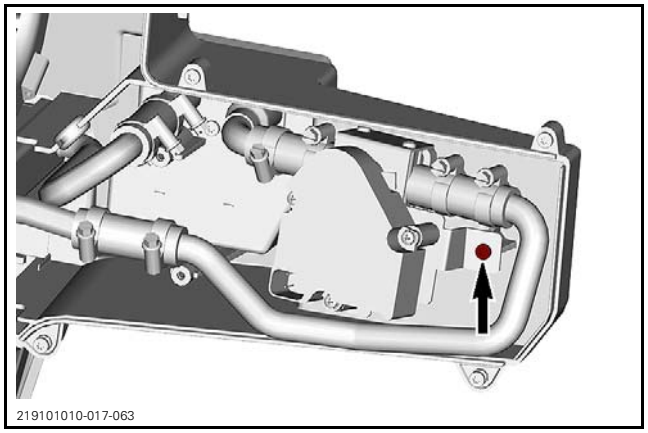
219101010-017-063

6. Remove the heater valve.
7. Catch and clean coolant flow.

Installing the Heater Valve

The installation is the reverse of the removal procedure. However, pay attention to the following.

TIGHTENING TORQUE	
Heater valve retaining screw	1.35 N•m (12 lbf•**in**)
Gear clamp	3 N•m (27 lbf•**in**)

Fill and bleed the cooling system with the recommended coolant. Refer to *COOLING SYSTEM - VEHICLE COMPONENTS* subsection.

Check for coolant leaks.

HEATER CORE

Removing the Heater Core

1. From behind the front right wheel, install a hose pincher on each coolant hose.

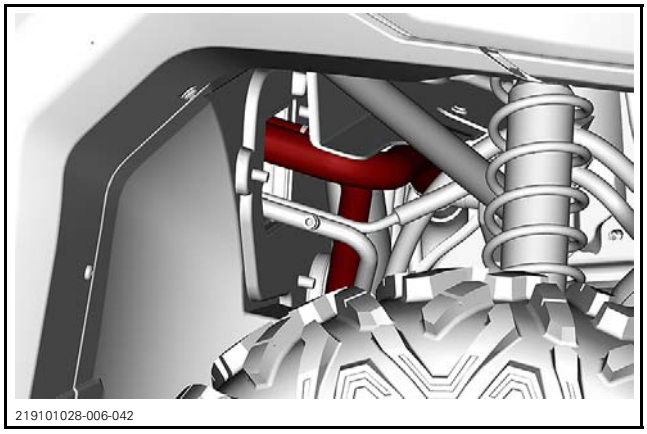
219101028-006-042

2. Remove the HVAC unit cover. See procedure in this subsection.
3. Loosen gear clamps securing the rubber hoses to the rigid tubes of the heater core.

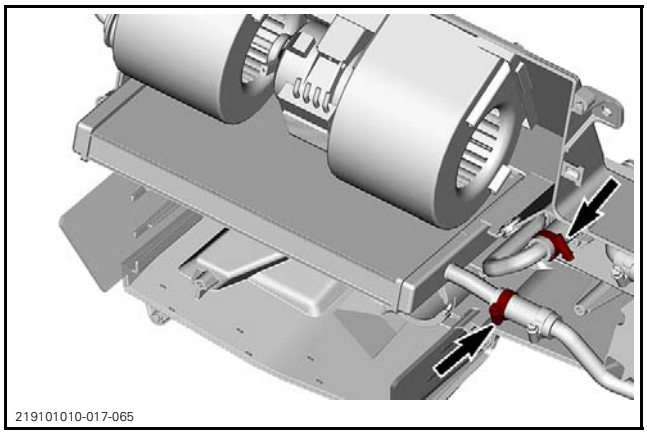
219101010-017-065

4. Remove the heater core.
5. Catch and clean coolant flow.

Installing the Heater Core

The installation is the reverse of the removal procedure. However, pay attention to the following.

TIGHTENING TORQUE	
Gear clamp	3 N•m (27 lbf•**in**)

Fill and bleed the cooling system with the recommended coolant. Refer to *COOLING SYSTEM - VEHICLE COMPONENTS* subsection.

Check for coolant leaks.

EVAPORATOR

Removing the Evaporator

1. Recover the refrigerant in the HVAC system. Refer to a certified technician.
2. Remove the HVAC unit cover. See procedure in this subsection.
3. From behind the front right wheel, remove the nut securing A/C hoses.

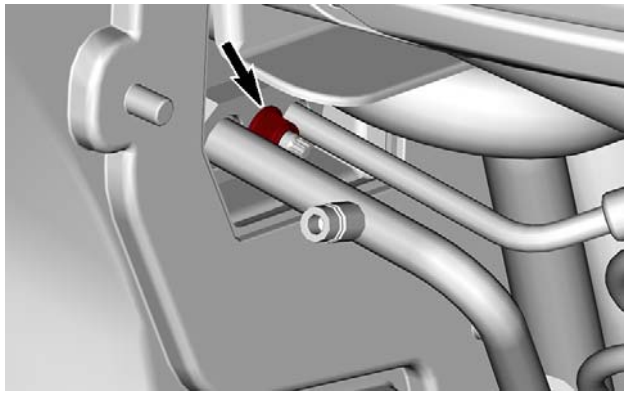

219101028-006-048

4. Remove evaporator retaining screws.

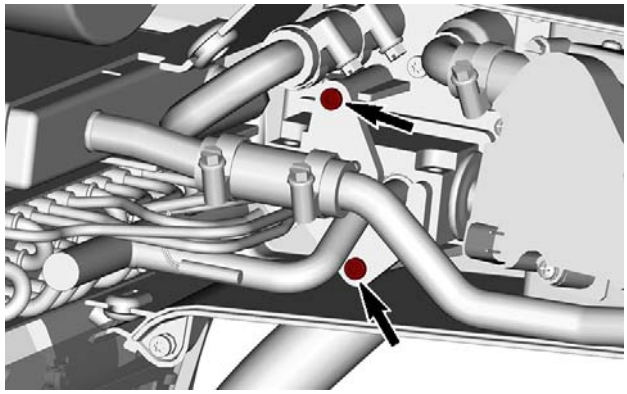

219101028-006-049

5. Remove the evaporator and the block valve in an assembly.

Installing the Evaporator

The installation is the reverse of the removal procedure. However, pay attention to the following.

TIGHTENING TORQUE	
Evaporator screws	1.35 N•m (12 lbf•**in**)
Expansion valve nut	26 N•m ± 2 N•m (19 lbf•ft ± 1 lbf•ft)

Have the HVAC system recharged and checked by a certified technician.

EXPANSION VALVE

Removing the Expansion Valve

1. Remove the evaporator.
2. Remove the block valve retaining screws.

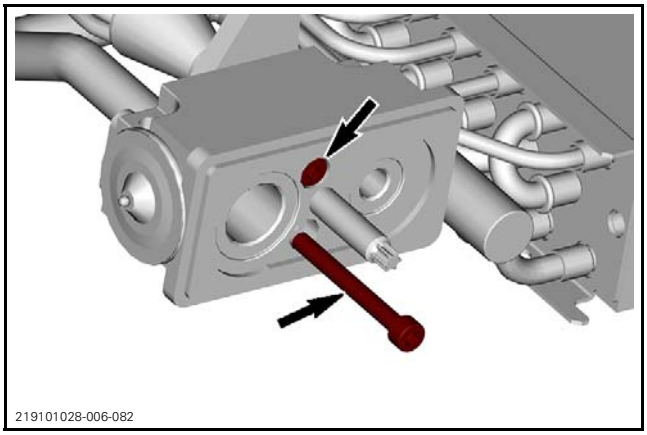

219101028-006-082

3. Remove the expansion valve.

Installing the Expansion Valve

The installation is the reverse of the removal procedure. However, pay attention to the following.

TIGHTENING TORQUE	
Expansion valve retaining screws	4.5 N•m (40 lbf•**in**)

Have the HVAC system recharged and checked by a certified technician.

CLIMATE CONTROL MODULE

Climate Control Module Diagnostic Mode

The climate control module has diagnostic capabilities.

1. Select the FAN SPEED page.
2. Press and hold the power button.
3. Rotate the knob counterclockwise 6 clicks to access to the 4 diagnostic screens:
   - Setup
   - View
   - Error List
   - Statistics

SETUP: This screen allows to show the latest software update date and know the module's software version.

VIEW: Split in 2 screens providing information on current status of sensors and settings.

View 1

Scale:	Celsius or Fahrenheit (as per customer preference)
Setpoint:	Temperature selected by the customer
Inside:	Cockpit temperature from the inside temperature sensor located in the bottom of the HVAC unit.
Outiside:	Outside temperature from the outside temperature sensor located under the hood.
De-Ice:	Temperature from the evaporator de-icing sensor located on the evaporator coil refrigerant outlet tube.
Coil:	Temperature from the coil temperature sensor located in the air after evaporator and heater coils.
Mode:	Display the current mode of the climate control module. Can be AUTO, COOL or HEAT.

View 2

AC:	OFF or ON
Blower:	Fan speed selected by the customer/system
Valve:	Heater valve opening in %
Eng S:	Engine RPM
Eng T:	Engine operating temperature
Bat V:	Battery voltage
Thr P:	Throttle position

ERROR LIST: Split in 3 screens which provides information on sensor / component error counts.

STATISTICS: Split in 2 screens which provide information on activation cycles and duration of the module, compressor and clutch, and the blower.

RESETTING ERROR LIST: From the error page, turn the knob left then push on it to reset the list. The error list must be reset every time a HVAC sensor is replaced.

Removing the Climate Control Module

1. Unclip the bottom of the central console panel.

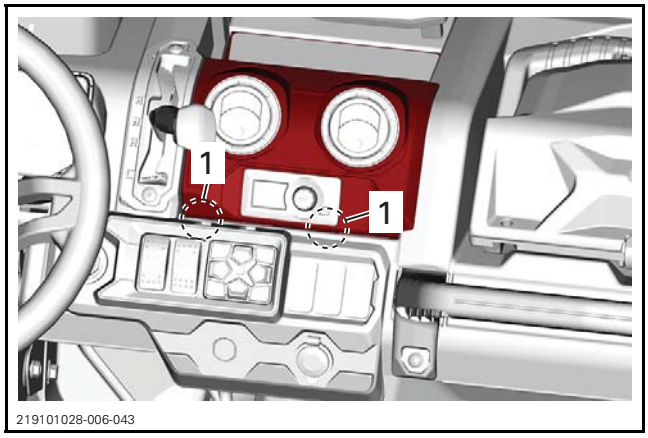

1. Locking tab location

2. Lift the panel and press tabs on each side of the climate control module.
3. Remove module from the panel.
4. Unplug both connectors from the module.

Installing the Climate Control Module

The installation is the reverse of the removal procedure.

CONDENSER

Removing the Condenser

1. Empty the HVAC system. Refer to a certified technician.
2. Remove front fenders.

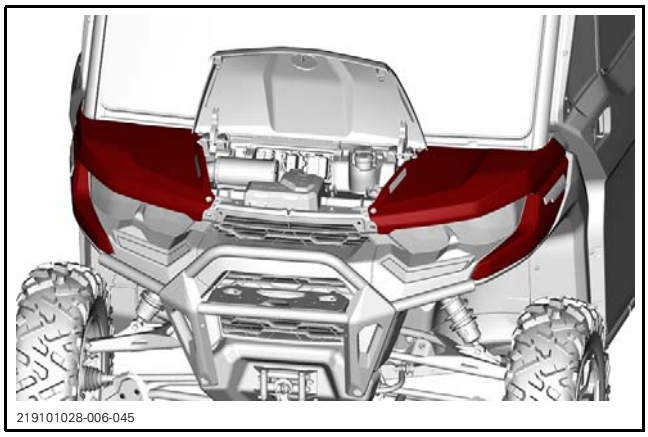
219101028-006-045

3. Remove the front service compartment tray.

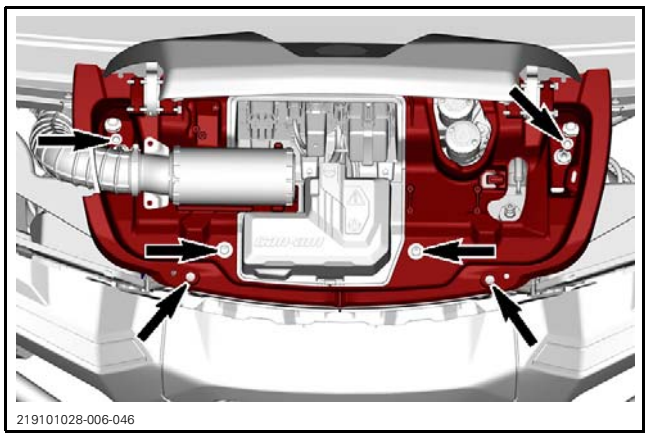
219101028-006-046

4. Move the electrical tray aside to make room.

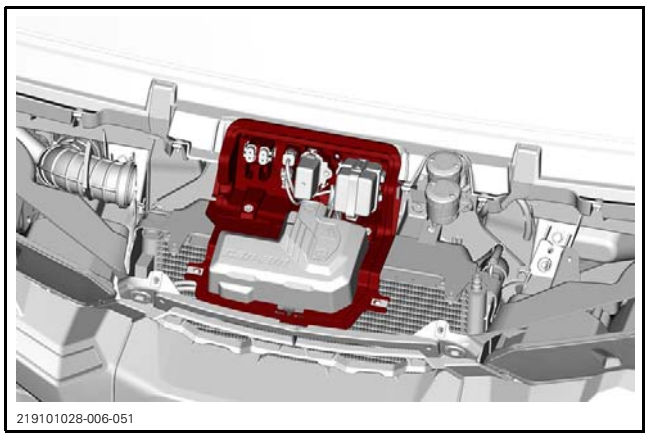
219101028-006-051

5. Remove both retaining screws at the bottom of the condenser.

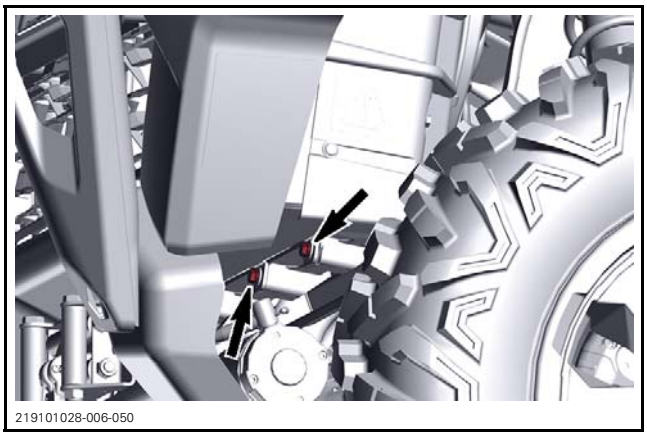
219101028-006-050

6. Disconnect both A/C hoses from the condenser.
7. Remove the condenser from the vehicle.

Installing the Condenser

The installation is the reverse of the removal procedure.

Have the HVAC system recharged and checked by a certified technician.

DESICCANT CARTRIDGE

Desiccant Cartridge Replacement

NOTICE **The desiccant cartridge must be replaced when the refrigerant system is opened to ambient air (e.g.: during A/C component replacement) or when a major leak has occurred.**

1. Ensure the HVAC system is empty. Refer to a certified technician.
2. Remove front fenders.

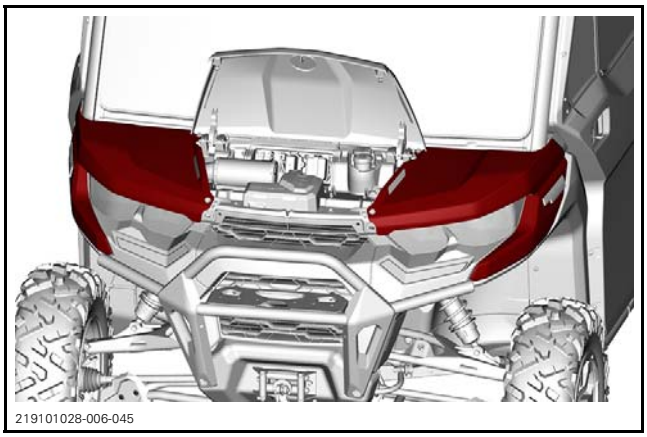
219101028-006-045

3. Remove the front service compartment tray.

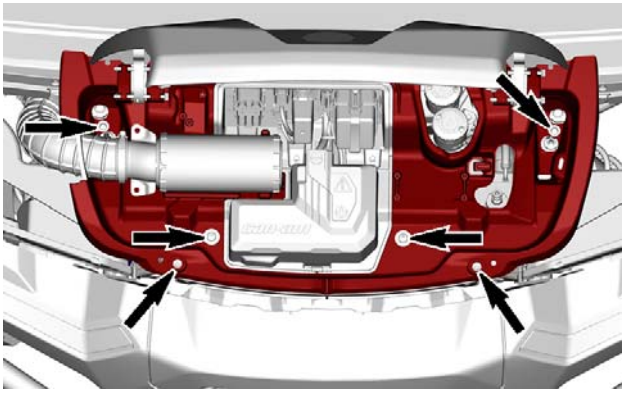

219101028-006-046

4. Using a 10 mm Allen key, remove the receiver / drier cap.

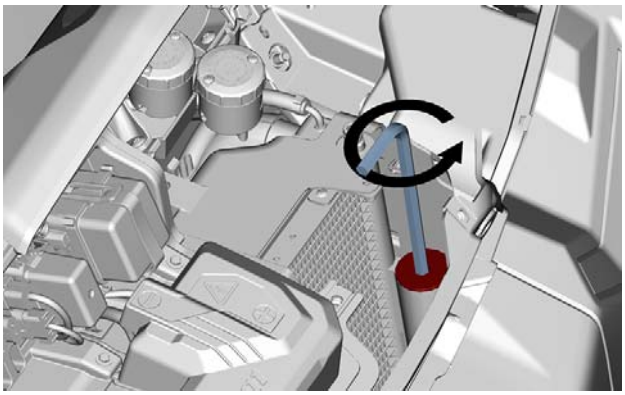

219101028-006-047

5. Replace the desiccant cartridge.
6. Check the condition of the cap and replace it if required.
7. Replace both O-rings and apply mineral oil on them.
8. Reinstall the cap.
9. Have the HVAC system recharged and checked by a certified technician.

ENGINE MANAGEMENT SYSTEM (EMS)

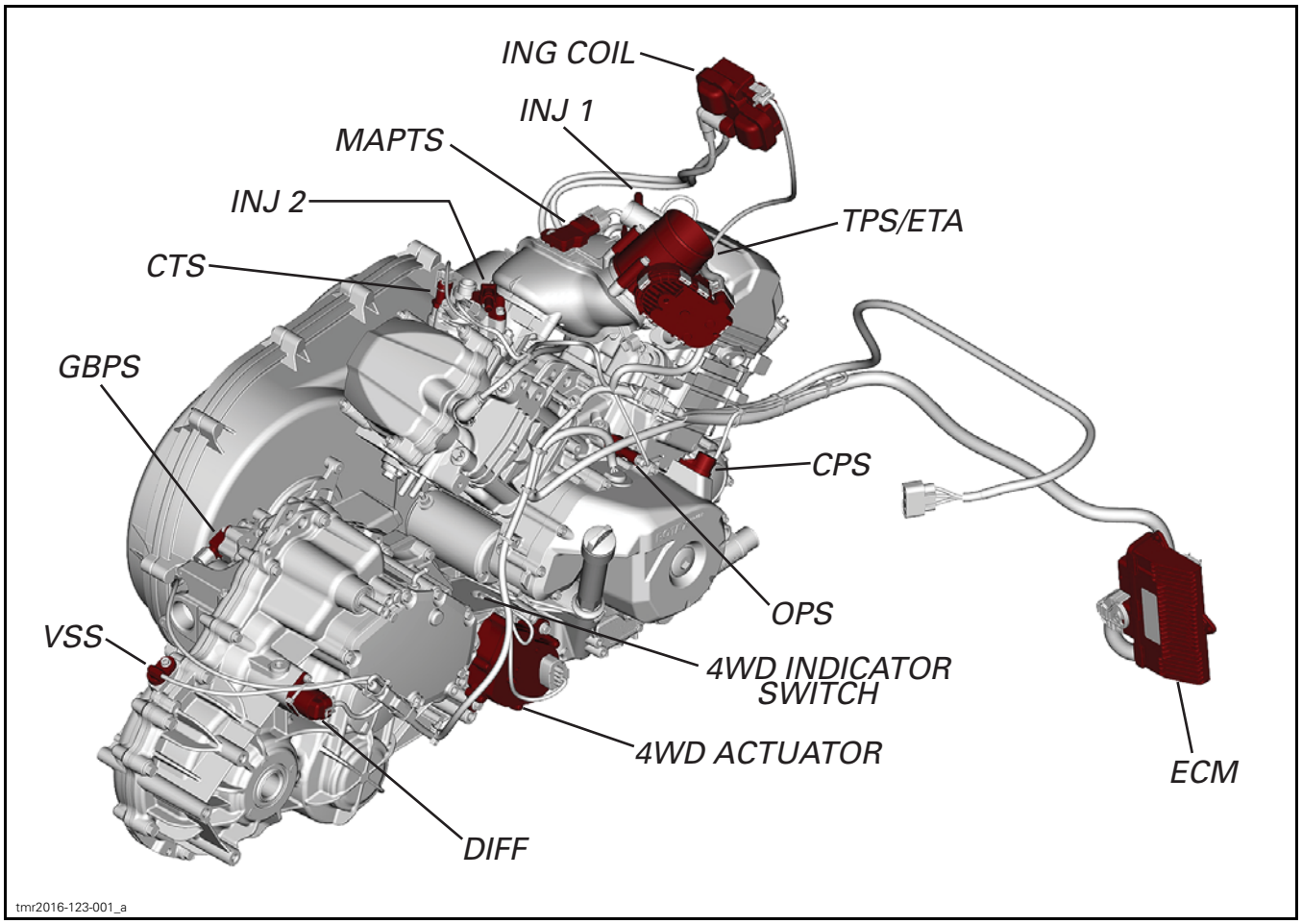

HD8 AND HD10 MODELS

4WD Actuator
4WD Indicator Switch
CPS = Crankshaft Position Sensor
CTS = Cooling Temperature Sensor
DIFF = Differential Locking Actuator
ECM = Engine Control Module
ETA = Electric Throttle Actuator
GBPS = GearBox Position Sensor
IGN COIL = Ignition coil
INJ 1= Injector 1
INJ 2 = Injector 2
MAPTS = Manifold Air Pressure/Temperature Tensor
OPS = Oil Pressure Switch
TPS = Throttle Position Sensor
VSS = Vehicle Speed Sensor

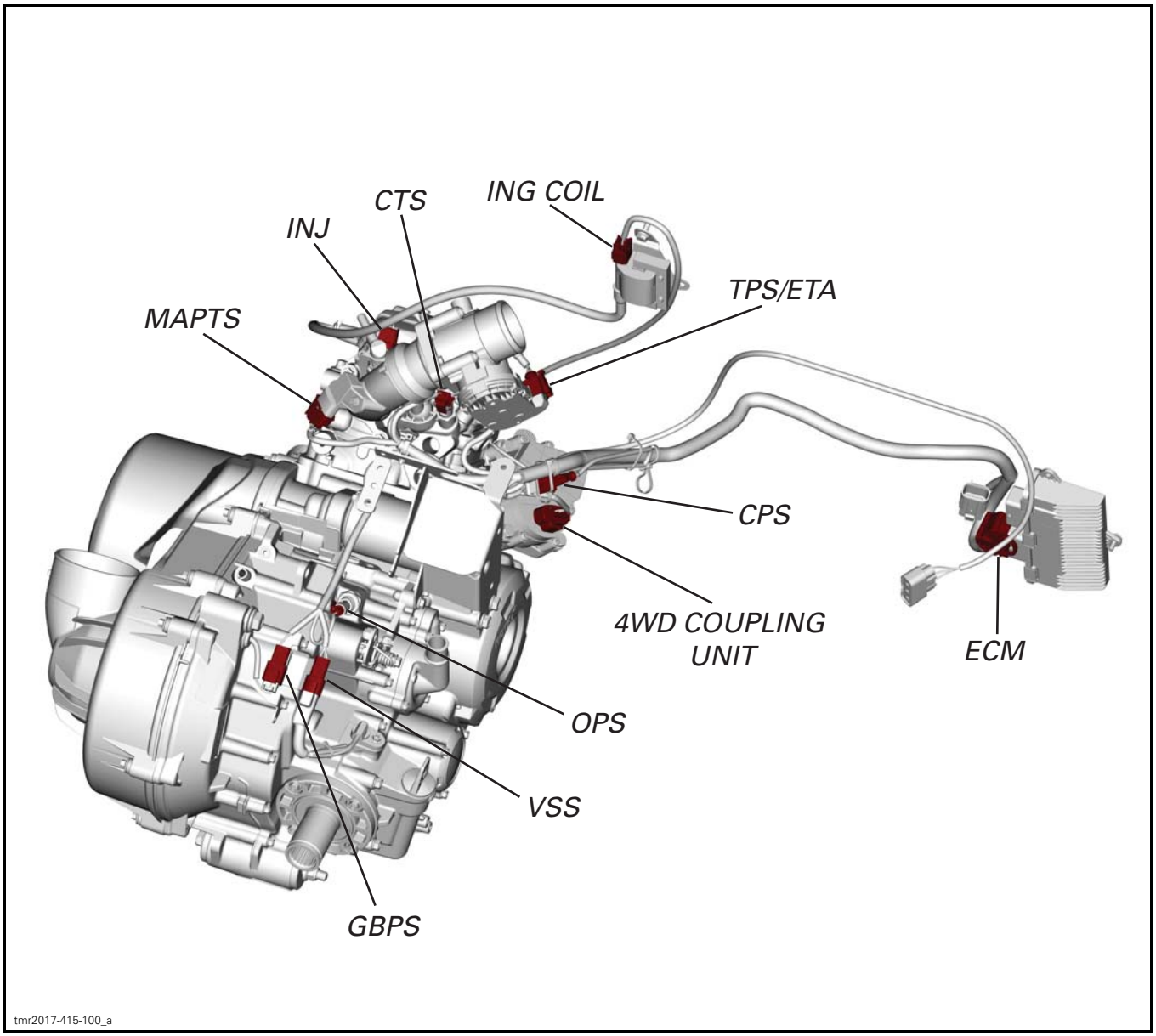

HD5 MODELS

4WD Actuator
CPS = Crankshaft Position Sensor
CTS = Cooling Temperature Sensor
ECM = Engine Control Module
ETA = Electric Throttle Actuator
GBPS = Gearbox Position Sensor
IGN COIL = Ignition coil
INJ= Fuel Injector
MAPTS = Manifold Air Pressure/Temperature Tensor
OPS = Oil Pressure Switch
TPS = Throttle Position Sensor
VSS = Vehicle Speed Sensor

GENERAL

SYSTEM DESCRIPTION

The ECM ensures a high power output with clean combustion.

There are 7 main systems that are controlled by the ECM:

1. Electronic Fuel Injection (EFI)
2. Intelligent throttle control
3. Cooling system (cooling fan)
4. Ignition system
5. Starting system
6. Fuel system

NOTE: For further information related to these systems, refer to the applicable subsection.

The ECM is the central point of the engine management system.

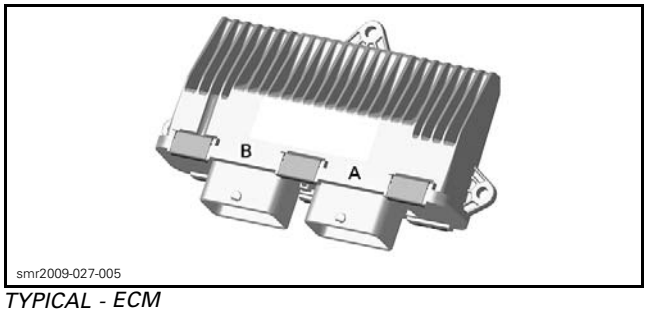

TYPICAL - ECM

The ECM is located under the right passenger's seat, to the right of the fuse box and behind the starter solenoid.

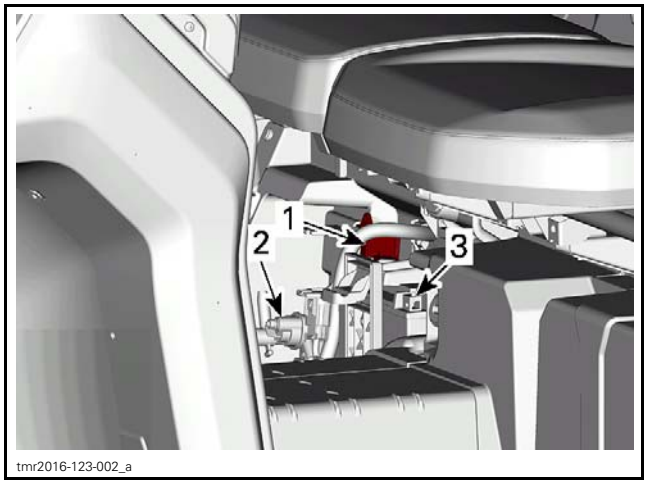

ECM LOCATION
1. ECM
2. Starter solenoid
3. Battery

The ECM reads input signals from various switches, controls, and sensors, that it compares to predetermined parameters, makes computations, and provides control signal outputs required for proper engine management.

The ECM also interacts through CAN bus with the gauge module for various functions, information exchange and display of messages. Refer to *CONTROLLER AREA NETWORK (CAN)* and appropriate *GAUGE* subsections.

The ECM also features a permanent memory that will store the information on the various ignition keys programmed to the vehicle, fault codes, customer information, and other engine information, even when the battery is removed from the vehicle.

Diagnostic Mode

The ECM features a self-diagnostic mode that is activated on system power up (ignition key ON) for certain systems and components, and when the engine is running for others. Refer to *DIAGNOSTIC AND FAULT CODES* subsection for more information.

Monitoring System

The MONITORING SYSTEM monitors various electrical and electronic components of the engine control systems such as the:

– ETA (Electric Throttle Actuator)
– TPS (Throttle Position Sensor)
– TAS (Throttle Accelerator Sensor)
– ECM (Engine Control Module).

The engine management system provides for redundancies in these components should a failure or partial failure occur to which it will adjust system operation to protect the vehicle and most of importantly, the driver.

Should the engine management system not respond (or not respond correctly) to a failure, then the monitoring system will react to ensure vehicle and driver safety.

The monitoring system therefore ensures the engine management system is functioning correctly.

Limp Home Mode

When a major component of the EMS is not operating properly, limp home mode will be set.

Engine RPM will be limited and/or engine behavior and control may be modified depending on the cause of the failure.

LIMP HOME will be displayed in the multifunction gauge and the CHECK ENGINE light symbol will be on in the gauge.

A failure of any of the following major components will force the vehicle into LIMP HOME MODE:

- TPS / ETC / TAS
- GBPS
- Injectors
- Low oil pressure
- High engine coolant temp
- MAPTS signal fault.

CONTROLLER AREA NETWORK (CAN)

GENERAL

SYSTEM DESCRIPTION

The CAN (Controller Area Network) protocol is an ISO standard for serial data communication.

The CAN bus links the ECM and multifunction gauge together so that they communicate to interact as required. The components are connected together by 2 wires and they are in constant communication with each other at a rate of about every 20 milliseconds. CAN lines consist of a pair of twisted wires (WHITE/BEIGE and WHITE/BLACK).

If a component or system malfunction is detected, a module may generate a fault code, which it transmits through the CAN bus as a signal. The fault signal may be used for various functions such as triggering the display of an error message in the multifunction gauge display, turning on a fault indicator light, limiting or inhibiting vehicle or engine operation, or viewed using the BRP diagnostic software BUDS2 for troubleshooting.

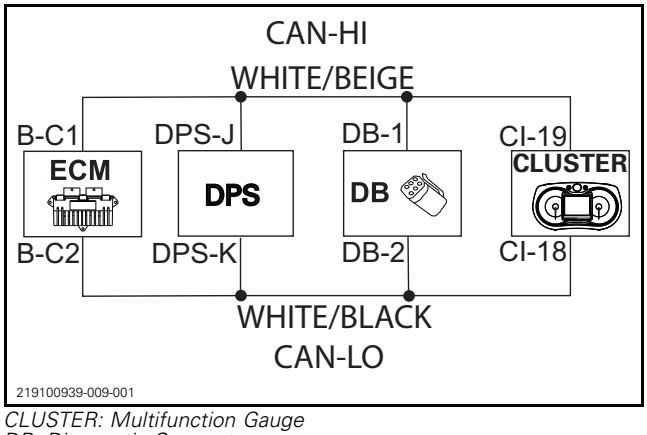

CLUSTER: Multifunction Gauge
DB: Diagnostic Connector
DPS: Dynamic Power Steering
ECM: Engine Control Module

COMMUNICATION TOOLS

SERVICE TOOLS

Description	Part Number	Page
12 V BATTERY SUPPLY CABLE	529 035 997	1
DIAGNOSTIC CABLE	710 000 851	1
MPI-2 INTERFACE CARD	529 036 018	1
MPI-3 INTERFACE CARD	529 036 353	1

GENERAL

Refer to the **B.U.D.S. directory** on *KNOWLEDGE CENTER* for all BUDS related information, including:

- Download link
- User manual (programming keys, reading fault codes, navigation through menus, writing data to modules etc.)
- Installation instructions.

Download and install the software on a PC.

Connect the vehicle to the BRP diagnostic software (BUDS2).

REQUIRED TOOLS

MANDATORY TOOLS	
A personal computer (laptop or desktop)	
MPI-2 INTERFACE CARD (P/N 529 036 018) **OR** MPI-3 INTERFACE CARD (P/N 529 036 353)	
DIAGNOSTIC CABLE (P/N 710 000 851)	
12 V BATTERY SUPPLY CABLE (P/N 529 035 997)	
OPTIONAL TOOL	
Extension cable available at electronic retail outlets. Do not exceed 7.5 m (25 ft)	

Multi-Purpose Interface Card (MPI-2 or MPI-3)

The Multi-Purpose Interface (MPI) in conjunction with the diagnostic cable is used with BUDS2 to communicate with the engine control module (ECM) and other modules.

The MPI card uses the power from the PC computer's USB port.

DIAGNOSTIC CONNECTOR LOCATION

The diagnostic connector is located under the hood, stored in it's protective cap.

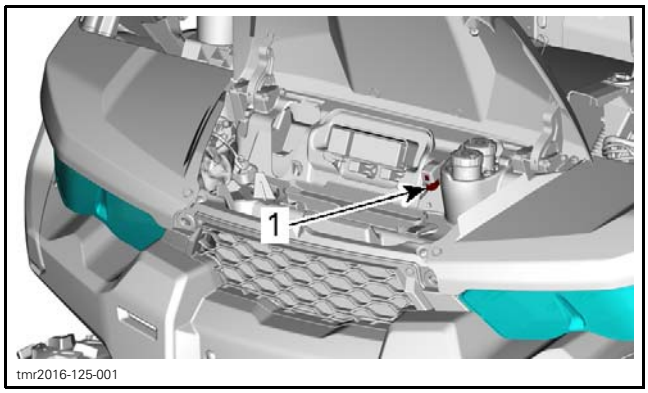

1. Diagnostic connector

TROUBLESHOOTING

DIAGNOSTIC TIPS

IMPORTANT: Make sure all connections are made and vehicle is powered up **before starting the BRP diagnostic software (BUDS2)** to allow proper communication between the vehicle and BUDS2.

Multi-Purpose Interface Card Connection Troubleshooting

MPI Status Lights

The MPI card includes 2 status lights that indicate the connection condition: USB and CAN. **Both lights must be GREEN** to function properly. Otherwise, refer to the following charts.

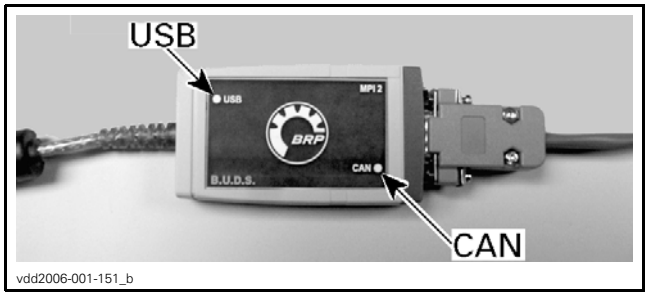

MPI-2 CARD

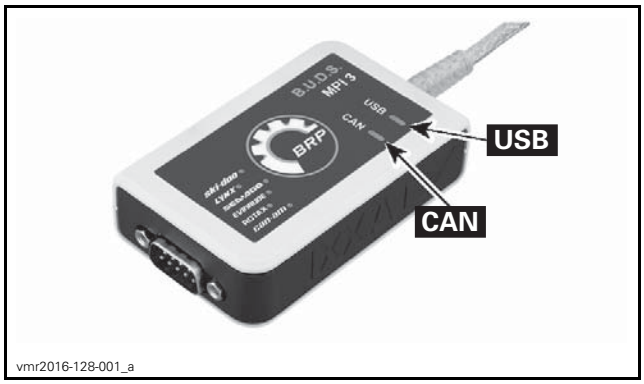

MPI-3 CARD

Prerequisite for USB Communication:

– Computer turned on.
– MPI card connected to computer.

COMMUNICATION PROBLEM (USB)	
STATUS	WHAT TO DO
Light is OFF	Check USB connection between MPI card and computer. Check USB operation on computer (hardware or USB drivers)
Light is GREEN	Connections are GOOD. Communication can take place on USB side

Prerequisite for CAN Communication:

– MPI card connected to diagnostic connector on vehicle.
– Computer turned ON
– The D.E.S.S. key installed on the engine D.E.S.S. post (if applicable).
– ECM is powered.
– Ignition key installed and turned to ON (electrical system powered up without engine started).
– BUDS2 started and logged on.

COMMUNICATION PROBLEM (CAN)	
STATUS	WHAT TO DO
CAN Light is OFF	– BUDS2 does not communicate with the vehicle. – Check if ignition key is in *ON* position. – Check connections from computer to vehicle. – Check if BUDS2. is started. – Check if vehicle is powered: is cluster turned ON?
CAN Light is RED	This occurs when BUDS2 looses communication with vehicle. – Check if ignition key is in *ON* position. – Check connections from computer to vehicle. – Check if vehicle is powered: is cluster turned ON?
CAN Light is GREEN	– Connections are GOOD. BUDS2 communicates normally with the vehicle.

DIAGNOSTIC AND FAULT CODES

GENERAL

MONITORING SYSTEM

The Engine Management System (EMS) features a monitoring system that self-diagnoses various electrical and electronic components. This mode becomes active when the ignition key is turned ON.

NOTE: Some components require the engine to be running to be monitored (fuel injectors for example).

The monitoring system continuously validates that the components (control modules, sensors and actuators) are not faulty or defective. When a malfunction is detected, the related electronic module(s):

- Sets an active fault code.
- Adapts the proper protection strategy according to the failure.
- Sends out signals to the digital display to inform the rider of a particular condition.

A fault code is an indication that a glitch or malfunction is detected by the monitoring system of the vehicle.

If a minor fault occurs, the engine and vehicle will continue to operate without noticeable loss of performance.

If a more important fault occurs, engine RPM may be limited. The engine/vehicle will continue to operate with reduced performance.

If a major component of the EMS fails, engine RPM will be limited as well as vehicle speed.

These strategies are used to protect engine and electrical system from damage and to maintain safe operation of the vehicle. In extreme cases, the engine may also be completely shut down.

Message in Gauge for Problematic Conditions

If an abnormal condition occurs, the gauge will display one of the following messages. It can be combined with a pilot lamp.

MESSAGE	DESCRIPTION
D.E.S.S. KEY NOT RECOGNIZED	**Optionnal D.E.S.S. key installed**: D.E.S.S. key requires cleaning.
BAD KEY	**Optionnal D.E.S.S. key installed**:Wrong key used in the ignition switch. Use the right key for the vehicle.
CHECK ENGINE	All active or previously activated faults that require attention. No engine limitation engaged.
LIMP HOME	Critical faults requiring diagnostic as soon as possible. An engine limitation is engaged and/or the engine behavior is modified.
ECM CRC ERROR	Error message from ECM.
TPS FAULT	Throttle body fault, generally followed by a Limp Home message.
BRAKE SWITCH FAULT	Brake signal fault.
ECM NOT RECOGNIZED	Message displayed when the gauge is unable to identify the ECM.
CHECK DPS (models with DPS)	Check engine pilot light on. Indicates that the DPS (Dynamic Power Steering) does not work properly.
PPS FAULT	Faulty Pedal Position Sensor(s) (PPS).
FUEL SENDER RANGE PERFORMANCE	When the fuel sender resistor value is out of range the digital display will detect it and display the message.

Limp Home Mode

When a major component of the EMS is not operating properly, limp home mode will be set.

Engine RPM will be limited and/or engine behavior and control may be modified depending on the cause of the failure.

This mode allows the rider to return home, which would otherwise not be possible without this advanced system.

LIMP HOME will be displayed in the digital display and the CHECK ENGINE light symbol will be on in the gauge.

FAULT CODES

Fault Code Categories

A fault code consists of an alphanumeric designator followed by a hexadecimal number of 3 digits. The alphanumeric designator defines the category of the fault code while the hexadecimal number refers to a unique fault.

FAULT CODE CATEGORIES		
ALPHANUMERIC DESIGNATOR	MODULE/ SYSTEM	EXAMPLE OF FAULT CODE
From P0 to P3	Power train and DPS	P0116
From U0 to U3	Communication between module and sensors	U0073

RELATED MODULE AND FAULTS	
MODULE	FAULT CODE CATEGORY
ECM	P and U
DPS	P and U
Cluster	P and U
Smart-Lok	P and U

Fault Code States

Fault codes have 3 possible states:
- Active
- Occurred
- Inactive.

Active Fault Codes

An active fault code is an indication of a fault that is **currently triggered**.

The active fault may or may not compromise normal operation of the system(s). Service action should be taken to correct the problem that caused the fault code.

Once the fault condition(s) of the active fault is no longer present, its state will change to "occurred".

Occurred Fault Codes

An occurred fault code indicates a fault that was active, but **no longer** is.

The occurred fault does not presently affect system or component operation but is retained as a history of the faults that were detected.

The fault may have been generated due to a system or component that was momentarily operating outside normal parameters. Repeated occurred faults of this type should be considered when troubleshooting a problem, and may require that maintenance action be taken.

An occurred fault may also be generated when disconnecting and reconnecting a component, replacing a burnt fuse, when the software update of an electronic module has been carried out, or may be due to a momentary high or low voltage.

Inactive Fault Codes

An inactive fault code represents a fault code that is neither active, nor occurred. It is simply part of a list of all possible faults that can be monitored by the ECM and digital display, which may become active or occurred if the monitoring system detects an applicable fault. These codes can be viewed in the BRP diagnostic software (BUDS2).

How to Read Fault Codes Using the Digital Display

NOTE: A fault code must be in an "Active" state to be displayed in the Digital Display. The BRP diagnostic software (BUDS2) must be used to read all fault codes states.

Proceed as follows to view the active fault codes:

1. Turn ignition key to ON position.

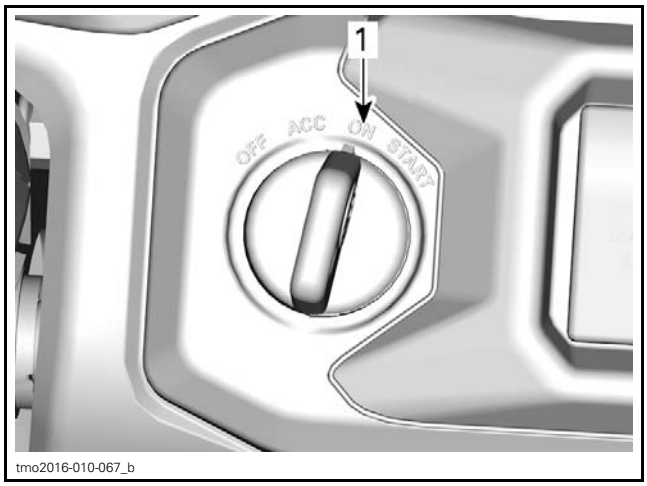

1. Key ON

7.6" Digital Display

NOTE: Only when fault codes are actives.

Using MENU button, in settings select **CODES** and hold to see active fault codes. Fault codes will be scrolled on the Lower Display.

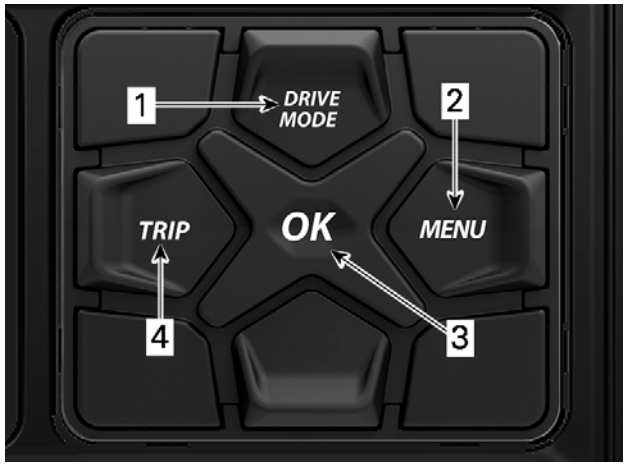

219002049-302

1. *DRIVE MODE button*
2. *MENU button*
3. *OK button*
4. *TRIP button*

4.5" Digital Display

NOTE: Only when codes are actives.

Using LOWER button, in settings select **CODES** and hold to see actives fault codes. Fault codes will be scrolled on the Lower Display.

219002066-007

1. *Upper button*
2. *Lower button*

If there are multiple fault codes, the display will cycle through each fault code repeatedly. A maximum of 10 fault codes may be displayed.

How to Read Fault Codes Using BUDS2

1. Connect the vehicle to the BRP diagnostic software (BUDS2).
2. In BUDS2, go to:
   – **Faults** page
   – **Vehicle** button
   – **Active/Occurred** tab.

Only active or occurred faults are displayed in this tab. The areas stay empty if there is no detected faults.

FAULT NOMENCLATURE	
COLUMN	INFORMATION
Code	Fault code number. When 2 stars (**) precedes the code, detailed conditions when the fault occurred, can be displayed by clicking the "More details" button
State	Display the fault state (active, occurred, inactive)
Module	Displays the module that reports the fault code. This is the module that detects or has received a message of an anomaly and reports it. List of modules: - Cluster (digital display) - DPS (dynamic power steering) - ECM (engine control module)
Description	Provides a short description of the fault

How to Clear Fault Codes Using BUDS2

1. Connect the vehicle to the BRP diagnostic software (BUDS2).
2. In BUDS2, go to:
   – **Faults** page
   – **Vehicle** button
   – **Active/Occurred** tab.

By selecting the refresh or the clear button on the top right of the Active/Occurred Tab, the faults are reloaded from the vehicle, or cleared.

How to Find Fault Code Descriptions

Connect the vehicle to the BRP diagnostic software (BUDS2) and go to **Faults** page.

In the list, select the related fault code.

Check in the **Possible Causes** tab of the bottom table for the problem description.

DIAGNOSTIC AND FAULT CODES

GENERAL

FAULT CODE TABLE

PCODE	MODULE	DESCRIPTION	CAUSE	ACTION
C0051	DPS GLOBE	ROTOR ENCODER SPI COM FAIL	internal comm fail error or damaged DPS	change dps if condition still active after key-on cycle
C0052	DPS GLOBE	ROTOR INCODER VARIANCE	internal INCODER fail or damaged DPS	change dps if condition still active after key-on cycle
C1203	DPS GLOBE	TORQUE SENSOR OUT OF RANGE	internal error or damaged DPS	change dps if condition still active after key-on cycle
C1304	DPS GLOBE	TORQUE SENSOR LINEARITY CHECK FAIL	internal error or damaged DPS	change dps if condition still active after key-on cycle
C1309	DPS GLOBE	TEMPERATURE HIGH	DPS temp upper range due to excessive use of DPS	verify with customer condition when dps ovr show-up
C1310	DPS GLOBE	TEMPERATURE OVER	DPS temp exceed due to excessive use of DPS	verify with customer condition when dps ovr show-up
C1318	DPS GLOBE	SEPIC LOW	internal error or damaged DPS	change DPS
C1319	DPS GLOBE	SEPIC HIGH	internal error or damaged DPS	change DPS
C2109	SCM	Release Valve Activation delay Exceed	If pressure threshold not reach after calibrated time delay (When release valve activated)	Open SCM Activation page in BUDS, performe a combined test in System self test sequence section
C210A	SCM	Suspension Valve Activation time Exceed	If the suspension valve maximum allowed activation time in a specific time window is exceeded for (counter > CntExceed).	Open SCM Activation page in BUDS, performe a combined test in System self test sequence section
C210B	SCM	Outlet Valve Activation time Exceed	If the suspension valve maximum allowed activation time in a specific time window is exceeded for (counter > CntExceed).	Open SCM Activation page in BUDS, performe a combined test in System self test sequence section
C2111	SCM	Pressure sensor signal Invalid	Sensor input voltage < 0.5V for hardcoded debounce time	Open SCM Activation page in BUDS, performe a pressure sensor test in System self test sequence section

PCODE	MODULE	DESCRIPTION	CAUSE	ACTION
C21D0	SCM	Pressure threshold not Reach outlet adjustment	If pressure threshold not reach after calibrated time delay (threshold change in function of compressor temperature) (When outlet pressure adjustment activated)	Open SCM Activation page in BUDS, performe a combined test in System self test sequence section
C21D2	SCM	Compressor over temperature condition	If over temp threshold reach for time delay	Open SCM Activation page in BUDS, performe a pressure test in System self test sequence section
C21D3	SCM	Over pressure detected	If pressure > 350PSI	Open SCM Activation page in BUDS, performe a pressure sensor test in System self test sequence section
C21E0	SCM	Pressure threshold not reach Rear suspension adjustment	If pressure threshold not reach after calibrated time delay (threshold change in function of compressor temperature) (When Rear suspension adjustment activated)	Open SCM Activation page in BUDS, performe a combined test in System self test sequence section
C21E1	SCM	Air Leak Plausibility check Rear suspension	If maximum number of readjustment for rear suspension is reach	Open SCM Activation page in BUDS, performe a combined test in System self test sequence section
C21F0	SCM	Pressure threshold not reach Front suspension adjustment	If pressure threshold not reach after calibrated time delay (threshold change in function of compressor temperature) (When front suspension adjustment activated)	Open SCM Activation page in BUDS, performe a combined test in System self test sequence section
C21F3	SCM	Air Leak Plausibility check Front Right suspension	If maximum number of readjustment for front right suspension is reach	Open SCM Activation page in BUDS, performe a combined test in System self test sequence section
C21F4	SCM	Air Leak Plausibility check Front left suspension	If maximum number of readjustment for front left suspension is reach	Open SCM Activation page in BUDS, performe a combined test in System self test sequence section

PCODE	MODULE	DESCRIPTION	CAUSE	ACTION
P0030	ECM	Internal fault path number for Signal error : power stage of heater of Sensor upstream catalyst	Damaged O2 sensor, damaged circuit wires, damaged connector or damaged ECM output pins.	Check related fuse(s) Disconnect the 1st oxygen sensor (FRONT cylinder) and measure his resistance (Expected value: 7 to 12 Ohms) Measure the voltage of the harness power wire relative to ground (Expected value: Battery voltage) Disconnect the associated ECM connector and measure resistance between harness wires and ground (Expected value: open) Measure the resistance of the harness wires, between the ECM and sensor connectors (Expected value < 2 Ohms)
P0031	ECM	Internal fault path number for Min error : power stage of heater of Sensor upstream catalyst	Damaged O2 sensor, damaged circuit wires,damaged connector or damaged ECM output pins.	Check related fuse(s) Disconnect the 1st oxygen sensor (FRONT cylinder) and measure his resistance (Expected value: 7 to 12 Ohms) Measure the voltage of the harness power wire relative to ground (Expected value: Battery voltage) Disconnect the associated ECM connector and measure resistance between harness wires and ground (Expected value: open) Measure the resistance of the harness wires, between the ECM and sensor connectors (Expected value < 2 Ohms)

Midwest Manuals
Green Manuals
Paperless Manuals
For a Better Tomorrow
www.green-manuals.com
If you bought this manual from any other seller please leave them NEGATIVE feeddback and notify me at bestshopmanuals@gmail.com

PCODE	MODULE	DESCRIPTION	CAUSE	ACTION
P0032	ECM	Internal fault path number for Max error: power stage of heater of Sensor upstream catalyst	Damaged O2 sensor, damaged circuit wires,damaged connector or damaged ECM output pins.	Check related fuse(s) Disconnect the 1st oxygen sensor (FRONT cylinder) and measure his resistance (Expected value: 7 to 12 Ohms) Measure the voltage of the harness power wire relative to ground (Expected value: Battery voltage) Disconnect the associated ECM connector and measure resistance between harness wires and ground (Expected value: open) Measure the resistance of the harness wires, between the ECM and sensor connectors (Expected value < 2 Ohms)
P0037	ECM	Internal fault path number for Min error : power stage of heater of Sensor upstream catalyst, LSU 2	Blown fuse, damaged or disconnected O2 sensor, damaged or disconnected circuit wires, damaged ECM output pins.	Check related fuse(s) Disconnect the 2nd oxygen sensor (REAR cylinder) and measure his resistance (Expected value: 7 to 12 Ohms) Measure the voltage of the harness power wire relative to ground (Expected value: Battery voltage) Disconnect the associated ECM connector and measure resistance between harness wires and ground (Expected value: open) Measure the resistance of the harness wires, between the ECM and sensor connectors (Expected value < 2 Ohms)

PCODE	MODULE	DESCRIPTION	CAUSE	ACTION
P0038	ECM	Internal fault path number for Max error: power stage of heater of Sensor upstream catalyst, LSU 2	Blown fuse, damaged or disconnected O2 sensor, damaged or disconnected circuit wires, damaged ECM output pins.	Check related fuse(s) Disconnect the 2nd oxygen sensor (REAR cylinder) and measure his resistance (Expected value: 7 to 12 Ohms) Measure the voltage of the harness power wire relative to ground (Expected value: Battery voltage) Disconnect the associated ECM connector and measure resistance between harness wires and ground (Expected value: open) Measure the resistance of the harness wires, between the ECM and sensor connectors (Expected value < 2 Ohms)
P0106	ECM	Manifold Absolute Pressure circuit range/performance	Damaged sensor, damaged circuit wires, damaged connector or damaged ECM pins, ECM voltage supply	Make sure sensor connector is well inserted Disconnect the sensor, measure the voltage of the harness power wires (Expected value: 4.8 to 5.1 Volts) Measure the resistance of the harness wires, between the ECM and sensor connectors (Expected value < 2 Ohms)
P0107	ECM	Manifold Air Pressure Sensor voltage too Low	Damaged sensor, damaged circuit wires, damaged connector or damaged ECM pins, ECM voltage supply Low	Make sure sensor connector is well inserted Disconnect the sensor, measure the voltage of the harness power wires (Expected value: 4.8 to 5.1 Volts) Measure the resistance of the harness wires, between the ECM and sensor connectors (Expected value < 2 Ohms)

PCODE	MODULE	DESCRIPTION	CAUSE	ACTION
P0108	ECM	Manifold Air Pressure Sensor voltage too High	Damaged sensor, wires shorted to battery +, ECM voltage supply too High.	Make sure sensor connector is well inserted Disconnect the sensor, measure the voltage of the harness power wires (Expected value: 4.8 to 5.1 Volts) Measure the resistance of the harness wires, between the ECM and sensor connectors (Expected value < 2 Ohms)
P0112	ECM	Intake Air Temperature Sensor 1 circuit Low	Damaged sensor, damaged circuit wires, damaged connector or damaged ECM pins, ECM voltage supply Low	Make sure sensor connector is well inserted Disconnect the sensor, measure the voltage of the harness power wires (Expected value: 4.8 to 5.1 Volts) Measure the resistance of the harness wires, between the ECM and sensor connectors (Expected value < 2 Ohms)
P0113	ECM	Intake Air Temperature Sensor 1 circuit High	Damaged sensor, wires shorted to battery +, ECM voltage supply too High.	Make sure sensor connector is well inserted Disconnect the sensor, measure the voltage of the harness power wires (Expected value: 4.8 to 5.1 Volts) Measure the resistance of the harness wires, between the ECM and sensor connectors (Expected value < 2 Ohms)

PCODE	MODULE	DESCRIPTION	CAUSE	ACTION
P0116	ECM	Engine Coolant Temperature Sensor 1 circuit range/performance	Damaged sensor, wires shorted to battery +, ECM voltage supply.	Disconnect the sensor and check for a change in the fault code. If the fault code stays the same, look for a short circuit on the harness. If the fault code is different, replace the sensor Measure the sensor resistance (Expected value: 2280 to 2736 Ohms at 19 to 21°C (66 to 70°F)) Measure the resistance of the harness wires, between the ECM and sensor connectors (Expected value < 2 Ohms)
P0117	ECM	Engine Coolant Temperature Sensor 1 circuit Low	Engine temperature sensor or circuit wires shorted to ground.	Disconnect the sensor and check for a change in the fault code. If the fault code stays the same, look for a short circuit on the harness. If the fault code is different, replace the sensor Measure the sensor resistance (Expected value: 2280 to 2736 Ohms at 19 to 21°C (66 to 70°F)) Measure the resistance of the harness wires, between the ECM and sensor connectors (Expected value < 2 Ohms)
P0118	ECM	Engine Coolant Temperature Sensor 1 circuit High	Disconnected sensor, or sensor resistance too High.	Make sure sensor connector is well inserted Measure the sensor resistance (Expected value: 2280 to 2736 Ohms at 19 to 21°C (66 to 70°F)) Measure the resistance of the harness wires, between the ECM and sensor connectors (Expected value < 2 Ohms)

PCODE	MODULE	DESCRIPTION	CAUSE	ACTION
P0122	ECM	First Throttle Accelerator Sensor (TAS) Short circuit to GND	Damaged circuit wires, damaged sensor or damaged ECM pins.	Make sure sensor connector is well inserted Measure the resistance of the harness wires, between the ECM and sensor connectors (Expected value < 2 Ohms)
P0123	ECM	First Throttle Accelerator Sensor (TAS) shorted to battery +	Damaged circuit wires, damaged sensor or damaged ECM pins.	Make sure sensor connector is well inserted Measure the resistance of the harness wires, between the ECM and sensor connectors (Expected value < 2 Ohms)
P0127	ECM	Intake Air Temperature too High	Air Temperature in intake High	
P0130	ECM	ECU int. fault path no.: electrical diagnosis for lambda sensor upstream catalyst. npl-error	Damaged O2 sensor, damaged circuit wires, damaged connector or damaged ECM output pins.	Check related fuse(s) Disconnect the 1st oxygen sensor (FRONT cylinder) and measure his resistance (Expected value: 7 to 12 Ohms) Measure the voltage of the harness power wire relative to ground (Expected value: Battery voltage) Disconnect the associated ECM connector and measure resistance between harness wires and ground (Expected value: open) Measure the resistance of the harness wires, between the ECM and sensor connectors (Expected value < 2 Ohms)

PCODE	MODULE	DESCRIPTION	CAUSE	ACTION
P0131	ECM	ECU int. fault path no.: electrical diagnosis for lambda sensor upstream cat. min-error	Damaged O2 sensor, damaged circuit wires, damaged connector or damaged ECM output pins.	Check related fuse(s) Disconnect the 1st oxygen sensor (FRONT cylinder) and measure his resistance (Expected value: 7 to 12 Ohms) Measure the voltage of the harness power wire relative to ground (Expected value: Battery voltage) Disconnect the associated ECM connector and measure resistance between harness wires and ground (Expected value: open) Measure the resistance of the harness wires, between the ECM and sensor connectors (Expected value < 2 Ohms)
P0132	ECM	ECU int. fault path no.: electrical diagnosis for lambda sensor upstream cat. max-error	Damaged O2 sensor, damaged circuit wires, damaged connector or damaged ECM output pins.	Check related fuse(s) Disconnect the 1st oxygen sensor (FRONT cylinder) and measure his resistance (Expected value: 7 to 12 Ohms) Measure the voltage of the harness power wire relative to ground (Expected value: Battery voltage) Disconnect the associated ECM connector and measure resistance between harness wires and ground (Expected value: open) Measure the resistance of the harness wires, between the ECM and sensor connectors (Expected value < 2 Ohms)

PCODE	MODULE	DESCRIPTION	CAUSE	ACTION
P0133	ECM	ECU int. fault path no.: diagnosis lambda sensor upstream catalyst	Damaged O2 sensor, damaged circuit wires, damaged connector or damaged ECM output pins.	Check related fuse(s) Disconnect the 1st oxygen sensor (FRONT cylinder) and measure his resistance (Expected value: 7 to 12 Ohms) Measure the voltage of the harness power wire relative to ground (Expected value: Battery voltage) Disconnect the associated ECM connector and measure resistance between harness wires and ground (Expected value: open) Measure the resistance of the harness wires, between the ECM and sensor connectors (Expected value < 2 Ohms)
P0135	ECM	ECU int. fault path no.: lambda sensor heating upstream cat.	Damaged O2 sensor, damaged circuit wires, damaged connector or damaged ECM output pins.	Check related fuse(s) Disconnect the 1st oxygen sensor (FRONT cylinder) and measure his resistance (Expected value: 7 to 12 Ohms) Measure the voltage of the harness power wire relative to ground (Expected value: Battery voltage) Disconnect the associated ECM connector and measure resistance between harness wires and ground (Expected value: open) Measure the resistance of the harness wires, between the ECM and sensor connectors (Expected value < 2 Ohms)

PCODE	MODULE	DESCRIPTION	CAUSE	ACTION
P0136	ECM	ECU int. fault path no.: electrical diagnosis for second lambda sensor upstream cat. npl-error	Damaged O2 sensor, damaged circuit wires, damaged connector or damaged ECM output pins.	Check related fuse(s) Disconnect the 2nd oxygen sensor (REAR cylinder) and measure his resistance (Expected value: 7 to 12 Ohms) Measure the voltage of the harness power wire relative to ground (Expected value: Battery voltage) Disconnect the associated ECM connector and measure resistance between harness wires and ground (Expected value: open) Measure the resistance of the harness wires, between the ECM and sensor connectors (Expected value < 2 Ohms)
P0137	ECM	ECU int. fault path no.: electrical diagnosis for second lambda sensor upstream cat. min-error	Damaged O2 sensor, damaged circuit wires, damaged connector or damaged ECM output pins.	Check related fuse(s) Disconnect the 2nd oxygen sensor (REAR cylinder) and measure his resistance (Expected value: 7 to 12 Ohms) Measure the voltage of the harness power wire relative to ground (Expected value: Battery voltage) Disconnect the associated ECM connector and measure resistance between harness wires and ground (Expected value: open) Measure the resistance of the harness wires, between the ECM and sensor connectors (Expected value < 2 Ohms)

PCODE	MODULE	DESCRIPTION	CAUSE	ACTION
P0138	ECM	ECU int. fault path no.: electrical diagnosis for second lambda sensor upstream cat. max-error	Damaged O2 sensor, damaged circuit wires, damaged connector or damaged ECM output pins.	Check related fuse(s) Disconnect the 2nd oxygen sensor (REAR cylinder) and measure his resistance (Expected value: 7 to 12 Ohms) Measure the voltage of the harness power wire relative to ground (Expected value: Battery voltage) Disconnect the associated ECM connector and measure resistance between harness wires and ground (Expected value: open) Measure the resistance of the harness wires, between the ECM and sensor connectors (Expected value < 2 Ohms)
P0139	ECM	ECU int. fault path no.: diagnosis lambda sensor upstream catalyst (exhaust bank2)	Damaged O2 sensor, damaged circuit wires, damaged connector or damaged ECM output pins.	Check related fuse(s) Disconnect the 2nd oxygen sensor (REAR cylinder) and measure his resistance (Expected value: 7 to 12 Ohms) Measure the voltage of the harness power wire relative to ground (Expected value: Battery voltage) Disconnect the associated ECM connector and measure resistance between harness wires and ground (Expected value: open) Measure the resistance of the harness wires, between the ECM and sensor connectors (Expected value < 2 Ohms)

PCODE	MODULE	DESCRIPTION	CAUSE	ACTION
P0141	ECM	ECU int. fault path no.: lambda sensor heating upstream cat.	Damaged O2 sensor, damaged circuit wires, damaged connector or damaged ECM output pins.	Check related fuse(s) Disconnect the 2nd oxygen sensor (REAR cylinder) and measure his resistance (Expected value: 7 to 12 Ohms) Measure the voltage of the harness power wire relative to ground (Expected value: Battery voltage) Disconnect the associated ECM connector and measure resistance between harness wires and ground (Expected value: open) Measure the resistance of the harness wires, between the ECM and sensor connectors (Expected value < 2 Ohms)
P0201	ECM	Power stage sig error injector 2	ECM injector power stage error	Open ECM ACTIVATION page in BUDS. Activate injector and check if injector is reacting as expected
P0202	ECM	Power stage sig error injector 1	ECM injector power stage error	Open ECM ACTIVATION page in BUDS. Activate injector and check if injector is reacting as expected
P0217	ECM	Engine Coolant over temperature condition	Coolant fluid temperature too high	Check for coolant fluid leak and coolant fluid level Check radiator condition Check for other fault, Check thermostat
P0222	ECM	2nd Throttle Accelerator Sensor (TAS) shorted to GND	Damaged circuit wires, damaged sensor, or damaged ECM pins.	Make sure sensor connector is well inserted Measure the resistance of the harness wires, between the ECM and sensor connectors (Expected value < 2 Ohms)

Midwest Manuals
Green Manuals
Paperless Manuals For a Better Tomorrow www.green-manuals.com
If you bought this manual from any other seller please leave them NEGATIVE feeddback and notify me at bestshopmanuals@gmail.com

PCODE	MODULE	DESCRIPTION	CAUSE	ACTION
P0223	ECM	2nd Throttle Accelerator Sensor (TAS) shorted to battery +	Damaged circuit wires, damaged sensor, or damaged ECM pins.	Make sure sensor connector is well inserted Measure the resistance of the harness wires, between the ECM and sensor connectors (Expected value < 2 Ohms)
P0231	ECM	Fuel Pump circuit shorted to ground, or open circuit	Blown fuse, damaged or disconnected fuel pump, damaged circuit wires, damaged connectors or damaged ECM output pins.	Check related fuse(s) Disconnect the fuel pump and measure his winding resistance (Expected value < 2 Ohms) Measure the voltage of the harness power wire relative to ground (Expected value: Battery voltage) Disconnect the associated ECM connector Measure the resistance of the harness wire, between the ECM and fuel pump connectors (Expected value < 2 Ohms)
P0232	ECM	Fuel Pump circuit shorted to battery +	Damaged fuel pump, damaged circuit wires, damaged connectors or damaged ECM output pins.	Check related fuse(s) Disconnect the fuel pump and measure his winding resistance (Expected value < 2 Ohms) Measure the voltage of the harness power wire relative to ground (Expected value: Battery voltage) Disconnect the associated ECM connector Measure the resistance of the harness wire, between the ECM and fuel pump connectors (Expected value < 2 Ohms)

PCODE	MODULE	DESCRIPTION	CAUSE	ACTION
P0261	ECM	Cylinder 1 injector open circuit or shorted to ground	Blown fuse, damaged or disconnected injector, damaged or disconnected circuit wires, damaged ECM output pins.	Check related fuse(s) Disconnect injector 1 and measure his resistance (Expected value: 14 to 15 Ohms) Measure the voltage of the harness power wire relative to ground (Expected value: Battery voltage) Disconnect the associated ECM connector Measure the resistance of the harness wire, between the ECM and injector 1 connectors (Expected value < 2 Ohms) Check if HIC connector is connecting the engine harness to the vehicle harness
P0262	ECM	Cylinder 1 injector shorted to battery +	Damaged injector, damaged circuit wires, damaged connector or damaged ECM output pins.	Check related fuse(s) Disconnect injector 1 and measure his resistance (Expected value: 14 to 15 Ohms) Measure the voltage of the harness power wire relative to ground (Expected value: Battery voltage) Disconnect the associated ECM connector Verify the isolation between harness injectors signals (Expected value: open) Measure the resistance of the harness wire, between the ECM and injector 1 connectors (Expected value < 2 Ohms) Check if HIC connector is connecting the engine harness to the vehicle harness

PCODE	MODULE	DESCRIPTION	CAUSE	ACTION
P0264	ECM	Cylinder 2 injector open circuit or shorted to ground	Blown fuse, damaged or disconnected injector, damaged or disconnected circuit wires, damaged ECM output pins.	Check related fuse(s) Disconnect injector 2 and measure his resistance (Expected value: 14 to 15 Ohms) Measure the voltage of the harness power wire relative to ground (Expected value: Battery voltage) Disconnect the associated ECM connector Measure the resistance of the harness wire, between the ECM and injector 2 connectors (Expected value < 2 Ohms) Check if HIC connector is connecting the engine harness to the vehicle harness
P0265	ECM	Cylinder 2 injector shorted to battery +	Damaged injector, damaged circuit wires, damaged connector or damaged ECM output pins.	Check related fuse(s) Disconnect injector 2 and measure his resistance (Expected value: 14 to 15 Ohms) Measure the voltage of the harness power wire relative to ground (Expected value: Battery voltage) Disconnect the associated ECM connector Verify the isolation between harness injectors signals (Expected value: open) Measure the resistance of the harness wire, between the ECM and injector 2 connectors (Expected value < 2 Ohms) Check if HIC connector is connecting the engine harness to the vehicle harness
P0324	ECM	Diagnostic Fault Code for min error of knock sensor	Damaged knock sensor, damaged circuit wires, damaged connector or damaged ECM output pins.	Make sure sensor connector is fully inserted and check knock system.

PCODE	MODULE	DESCRIPTION	CAUSE	ACTION
P032A	ECM	Diagnostic Fault Code for min error of knock sensor	Damaged knock sensor, damaged circuit wires, damaged connector or damaged ECM output pins.	Make sure sensor connector is fully inserted and check knock system.
P0335	ECM	Crankshaft Position Sensor	Damaged CPS, damaged circuit wires, damaged connector or damaged ECM output pins.	Make sure sensor connector is well inserted Disconnect the associated ECM connector Measure the resistance of the harness wires, between the ECM and sensor connectors (Expected value < 2 Ohms)
P0359	ECM	Ignition coil	Damaged ignition coil, damaged circuit wires, damaged connector or damaged ECM output pins.	Open the ECM Activation page in BUDS Perform an ignition coil activation and check if ignition coil is reacting as expected Check related fuse(s) Measure the voltage of the harness power wire relative to ground (Expected value: Battery voltage) Disconnect the associated ECM connector Measure the resistance of the harness wires, between the ECM and tested device connectors (Expected value < 2 Ohms) Check if HIC connector is connecting the engine harness to the vehicle harness Refer to the service manual for detailed ignition coil testing procedure

PCODE	MODULE	DESCRIPTION	CAUSE	ACTION
P0360	ECM	Ignition coil	Damaged ignition coil, damaged circuit wires, damaged connector or damaged ECM output pins.	Open the ECM Activation page in BUDS Perform an ignition coil activation and check if ignition coil is reacting as expected Check related fuse(s) Measure the voltage of the harness power wire relative to ground (Expected value: Battery voltage) Disconnect the associated ECM connector Measure the resistance of the harness wires, between the ECM and tested device connectors (Expected value < 2 Ohms) Check if HIC connector is connecting the engine harness to the vehicle harness Refer to the service manual for detailed ignition coil testing procedure
P0361	ECM	Ignition coil range/performance	Damaged ignition coil, damaged circuit wires, damaged connector or damaged ECM output pins.	Open the ECM Activation page in BUDS Perform an ignition coil activation and check if ignition coil is reacting as expected Check related fuse(s) Measure the voltage of the harness power wire relative to ground (Expected value: Battery voltage) Disconnect the associated ECM connector Measure the resistance of the harness wires, between the ECM and tested device connectors (Expected value < 2 Ohms) Check if HIC connector is connecting the engine harness to the vehicle harness Refer to the service manual for detailed ignition coil testing procedure

PCODE	MODULE	DESCRIPTION	CAUSE	ACTION
P0362	ECM	Ignition coil range/performance	Damaged ignition coil, damaged circuit wires, damaged connector or damaged ECM output pins.	Open the ECM Activation page in BUDS Perform an ignition coil activation and check if ignition coil is reacting as expected Check related fuse(s) Measure the voltage of the harness power wire relative to ground (Expected value: Battery voltage) Disconnect the associated ECM connector Measure the resistance of the harness wires, between the ECM and tested device connectors (Expected value < 2 Ohms) Check if HIC connector is connecting the engine harness to the vehicle harness Refer to the service manual for detailed ignition coil testing procedure
P0480	ECM	Radiator cooling fan relay	Blown fuse, damaged or disconnected relay, damaged circuit wires or connectors, damaged ECM output pins, damaged Relay.	Check related fuse(s) Disconnect relay and measure his coil resistance (Expected value: 70 to 90 Ohms) Disconnect the associated ECM connector and measure resistance between harness wires and ground (Expected value: open) Measure the resistance of the harness wire, between the ECM and tested device connectors (Expected value < 2 Ohms)

PCODE	MODULE	DESCRIPTION	CAUSE	ACTION
P0500	DPS	Invalid or missing vehicle speed	No vehicle speed available & Vehicle is in (H or L Gear) with Engine RPM over 4000RPM. Damaged Vehicle Speed sensor circuit, Damaged sensor, Wrong mounting position of speed sensor.	Check if vehicle speed is available in BUDS Monitoring page Check related fuse(s) Disconnect the sensor, measure the voltage of the harness power wire relative to ground (Expected value: Battery voltage) Measure the resistance of the harness wires, between the ECM and sensor connectors (Expected value < 5 Ohms)
P0501	ECM	Vehicle speed not plausible	Vehicle speed correlation check failed	Check if vehicle speed is available in Monitoring page in BUDS Check related fuse(s) Disconnect the sensor, measure the voltage of the harness power wire relative to ground (Expected value: Battery voltage) Measure the resistance of the harness wires, between the ECM and sensor connectors (Expected value < 5 Ohms)
P0504	ECM	Brake signal not plausible	Brake signal correlation check failed	Open the ECM Monitoring page in BUDS. Check fuse Press on brake pedal. Ensure that brake switch light comes on ECM Monitoring page
P0512	ECM	Starter control circuit	Damaged or disconnected relay, damaged circuit wires, damaged connectors or damaged ECM output pins.	Measure voltage between harness connector SS1 and ground (Expected value: 11 to 13 volts) Measure resistance from connector: ECMB-L4 to SS2 (Expected value: < 2 ohms)
P0513	ECM	Invalid Access Key Detected	A non stored access key was detected when key switch was turned to ON.	Use a stored access key to turn key switch. If no stored access keys are available program one and try again

PCODE	MODULE	DESCRIPTION	CAUSE	ACTION
P0520	ECM	Engine oil pressure sensor circuit malfunction	Damaged switch, damaged circuit wires, damaged connector, damaged ECM pins.	Measure resistance between harness connector EOP and ground When engine stopped. (Expected value < 2 Ohms) Measure resistance between harness connector EOP and ground When engine running. (Expected value = open) Measure resistance from harness connector: EOP to ECMA-E3 (Expected value: < 2 Ohms) Check if HIC connector is properly connected (engine harness to the vehicle harness).
P0523	ECM	Engine oil pressure sensor sticking	Damaged switch, damaged circuit wires, damaged connector, damaged ECM pins.	Measure resistance between harness connector EOP and ground When engine stopped. (Expected value < 2 Ohms) Measure resistance between harness connector EOP and ground When engine running. (Expected value = open) Measure resistance from harness connector: EOP to ECMA-E3 (Expected value: < 2 Ohms) Check if HIC connector is properly connected (engine harness to the vehicle harness).

PCODE	MODULE	DESCRIPTION	CAUSE	ACTION
P0524	ECM	Engine oil pressure too Low	Damaged switch, damaged circuit wires, damaged connector, damaged ECM pins.	Measure resistance between harness connector EOP and ground When engine stopped. (Expected value < 2 Ohms) Measure resistance between harness connector EOP and ground When engine running. (Expected value = open) Measure resistance from harness connector: EOP to ECMA-E3 (Expected value: < 2 Ohms) Check if HIC connector is properly connected (engine harness to the vehicle harness)
P0551	DPS	TORQUE_SENSOR_ OPEN	Damaged DPS	External troubleshooting is not possible Clear the Fault. If Fault becomes Active Replace the DPS
P0552	DPS	TORQUE_SENSOR_ SHORT_GND	Damaged DPS	External troubleshooting is not possible Clear the Fault. If Fault becomes Active Replace the DPS
P0553	DPS	TORQUE_SENSOR_ SHORT_5V	Damaged DPS	External troubleshooting is not possible Clear the Fault. If Fault becomes Active Replace the DPS
P0560	ECM	Non-plausibility error on system voltage	Battery failure, voltage regulator failure, damaged circuit wires or connection, damaged magneto generator. An external battery charger may have been used.	Measure battery voltage with engine stopped. (Expected value: 11 to 13 volts) Measure battery voltage with engine running. (Expected value: 13 to 14.7 volts) Check connections on voltage regulator. Check ground and positive connections on battery. Check ground on vehicle frame

PCODE	MODULE	DESCRIPTION	CAUSE	ACTION
P0562	DPS	System voltage low	Blown fuse, battery low (damaged magneto/regulator), damaged circuit wires or connection, Intense usage of WINCH	Check related fuse(s) Measure battery voltage with engine stopped (Expected value: 11 to 13 Volts) Check ground and positive connections on battery Validate that all the DPS connectors are secured On the DPS power connector, measure the voltage between the two harness wires (Expected value: Battery voltage)
P0562	DPS GLOBE	BATTERY LOW	Battery low (damaged magneto/regulator), damaged circuit wires or connection. Intense usage of WINCH	Measure battery voltage with engine stopped (Expected value: 11 to 13 Volts) Check ground and positive connections on battery Validate that all the DPS connectors are secured On the DPS power connector pins, measure the voltage between the two harness power wires (Expected value: Battery voltage) Measure the resistance of the harness wire, between the DPS power connector and ground (Expected value < 2 Ohms)
P0562	ECM	System voltage low	Blown fuse FC, battery failure, voltage regulator failure, damaged circuit wires or connection, damaged magneto generator. An external battery charger may have been used. Intense usage of WINCH	Measure battery voltage with engine stopped. (Expected value: 11 to 13 volts) Measure battery voltage with engine running. (Expected value: 13 to 14.7 volts) Check connections on voltage regulator. Check ground and positive connections on battery. Check ground on vehicle frame

PCODE	MODULE	DESCRIPTION	CAUSE	ACTION
P0563	DPS	system voltage high	Rectifier failure, damaged circuit wires or connection.	Measure battery voltage with engine stopped. (Expected value: 11 to 13 volts) Measure battery voltage with engine Running at 3500RPM. (Expected value: 13 to 14.7 volts) Check connections on voltage regulator. Check ground and positive connections on battery.
P0563	DPS GLOBE	BATTERY HIGH	Rectifier failure, damaged circuit wires or connection./ Improper battery charger could raise that fault	Measure battery voltage with engine stopped. (Expected value: 11 to 13 volts) Measure battery voltage with engine Running at 3500RPM. (Expected value: 13 to 14.7 volts) Check connections on voltage regulator. Check ground and positive connections on battery.
P0563	ECM	System voltage high	Damaged regulator. An external battery charger may have been used.	Measure battery voltage with engine stopped. (Expected value: 11 to 13 volts) Measure battery voltage with engine running. (Expected value: 13 to 14.7 volts) Check connections on voltage regulator. Check ground and positive connections on battery. Check ground on vehicle frame
P0601	DPS	CALIBRATION FAULT	DPS not calibrated or damage DPS	Try updating the DPS
P0601	SCM	SCM calibration fault	Calibration Checksum err	Update SCM
P0602	DPS GLOBE	Manufacturing CRC Programming Error	Internal error or damaged DPS	change dps if condition always active
P0605	SCM	EEPROM COMMUNICATION FAULT	Last minute memory or last modes memory check	External troubleshooting is not possible Check for communication fault using BUDS
P0606	DPS GLOBE	Application CRC(boot)	Application CRC(boot)	reflash DPS

PCODE	MODULE	DESCRIPTION	CAUSE	ACTION
P0606	ECM	Control Module Processor	Faulty calibration Faulty programming Damaged ECM	Try updating the ECM calibration If the problem persists, reflash ECM If the problem persists, replace the ECM.
P0607	DPS GLOBE	Boot Count(boot)	Battery low (damaged magneto/regulator), damaged circuit wires or connection. Intense usage of WINCH	Measure battery voltage with engine stopped (Expected value: 11 to 13 Volts) Check ground and positive connections on battery Validate that all the DPS connectors are secured On the DPS power connector, measure the voltage between the two harness power wires (Expected value: Battery voltage)
P060D	ECM	Throttle Accelerator Sensor (TAS) synchronistic error between sensor 1 and 2	Throttle Accelerator Sensors (TAS) plausibility check error	Make sure sensor connector is well inserted Disconnect the associated ECM connector Measure the resistance of the harness wires, between the ECM and sensor connectors (Expected value < 2 Ohms)
P060E	ECM	Throttle position performance	TPS plausibility check error	Disconnect the associated ECM connector Measure the resistance of the harness wires, between the ECM and sensor connectors (Expected value < 2 Ohms)
P0610	ECM	Variant Coding error	Faulty variant coding Faulty programming Wrong ECM after replacement	Try updating the ECM variant or calibration If the problem persists, reflash ECM If the problem persists, replace ECM.
P062F	DPS GLOBE	EEPROM SPI	internal error or damaged DPS, EEPROM SPI	change dps if condition still active after key-on cycle external troobleshooting not possible

PCODE	MODULE	DESCRIPTION	CAUSE	ACTION
P062F	ECM	Internal control module EEPROM error	Faulty calibration or variant Faulty programming Damaged ECM	Try updating the ECM variant or calibration If the problem persists, reflash ECM If the problem persists, replace ECM.
P0635	DPS GLOBE	EXCESSIVE ERROR CURRENT	internal error or damaged DPS	change DPS
P0636	DPS	MOTOR LOW CURRENT FAULT	Internal error or damaged DPS	External troubleshooting is not possible Clear the Fault. If Fault becomes Active Replace the DPS
P0637	DPS	MOTOR HIGH CURRENT FAULT	Internal error or damaged DPS	External troubleshooting is not possible Clear the Fault. If Fault becomes Active Replace the DPS
P0637	DPS GLOBE	OVER CURRENT	short-circuit in motor/ internal error	change DPS
P0658	DPS	PHASE A_LOW	DPS motor supply Damaged DPS	External troubleshooting is not possible Clear the Fault. If Fault becomes Active Replace the DPS
P0659	DPS	PHASE A_HIGH	DPS motor supply Damaged DPS	External troubleshooting is not possible Clear the Fault. If Fault becomes Active Replace the DPS
P0666	DPS	HIGH TEMPERATURE	High temperature of the DPS. Extreme usage of the unit.	Let the unit cool down.
P0685	ECM	Accessory relay circuit	Blown fuse, damaged or disconnected relay, damaged circuit wires, damaged connectors or damaged ECM output pins	Check related fuse(s) Disconnect Accessories and Lights relays, turn key switch (on w/lights) Measure coil resistance of both relays (Expected value: 70 to 90 Ohms) Measure the voltage of the harness power wires of both relays relative to ground (Expected value: Battery voltage) Disconnect the associated ECM connector Measure the resistance of the harness wires, between the ECM and both relays (Expected value < 2 Ohms)

PCODE	MODULE	DESCRIPTION	CAUSE	ACTION
P0686	ECM	Accessory relay circuit shorted to ground or open circuit	Blown fuse, damaged or disconnected relay, damaged circuit wires, damaged connectors or damaged ECM output pins	Check related fuse(s) Disconnect Accessories and Lights relays, turn key switch (on w/lights) Measure coil resistance of both relays (Expected value: 70 to 90 Ohms) Measure the voltage of the harness power wires of both relays relative to ground (Expected value: Battery voltage) Disconnect the associated ECM connector Measure the resistance of the harness wires, between the ECM and both relays (Expected value < 2 Ohms)
P0687	ECM	Accessory relay circuit shorted to battery +	Damaged relay, damaged circuit wires, damaged connector or damaged ECM output pins.	Check related fuse(s) Disconnect Accessories and Lights relays, turn key switch (on w/lights) Measure coil resistance of both relays (Expected value: 70 to 90 Ohms) Measure the voltage of the harness power wires of both relays relative to ground (Expected value: Battery voltage) Disconnect the associated ECM connector Measure the resistance of the harness wires, between the ECM and both relays (Expected value < 2 Ohms)
P0691	ECM	Radiator fan circuit shorted to ground or open circuit	Blown fuse, damaged or disconnected fan relay, damaged circuit wires, damaged connectors or damaged ECM output pins.	Check related fuse(s) Disconnect radiator fan relay and measure his coil resistance (Expected value: 70 to 90 Ohms) Measure the voltage of the harness power wire of relay relative to ground (Expected value: Battery voltage) Disconnect the associated ECM connector Measure the resistance of the harness wire, between the ECM and relay (Expected value < 2 Ohms)

PCODE	MODULE	DESCRIPTION	CAUSE	ACTION
P0692	ECM	Radiator fan circuit shorted to battery +	Damaged fan relay, damaged circuit wires, damaged connector or damaged ECM output pins.	Check related fuse(s) Disconnect radiator fan relay and measure his coil resistance (Expected value: 70 to 90 Ohms) Measure the voltage of the harness power wire of relay relative to ground (Expected value: Battery voltage) Disconnect the associated ECM connector Measure the resistance of the harness wire, between the ECM and relay (Expected value < 2 Ohms)
P0790	ECM	Check of Override Button	Damaged switch, damaged circuit wires, damaged connector, damaged ECM pins.	Open the ECM Monitoring page in BUDS. Press on Override button. Ensure that the 2 switch light change of state.
P0811	ECM	Clutch slippage detected	Excessive clutch slippage	Check clutch for proper clutch behavior
P1036	ECM	Internal fault path number for Signal error : power stage of heater of Sensor upstream catalyst, LSU 2	Blown fuse, damaged or disconnected O2 sensor, damaged or disconnected circuit wires, damaged ECM output pins.	Check related fuse(s) Disconnect the 2nd oxygen sensor and measure his resistance (Expected value: 7 to 12 Ohms) Measure the voltage of the harness power wire relative to ground (Expected value: Battery voltage) Disconnect the associated ECM connector and measure resistance between harness wires and ground (Expected value: open) Measure the resistance of the harness wires, between the ECM and sensor connectors (Expected value < 2 Ohms)
P1120	ECM	Wrong Throttle Accelerator Sensor (TPS) position	Wrong TPS sensor position. Both TPS position failed test.	Check TAS adjustment.

PCODE	MODULE	DESCRIPTION	CAUSE	ACTION
P1130	ECM	ECU int. fault path no.: electrical diagnosis for lambda sensor upstream cat. Sig-error	Damaged O2 sensor, damaged circuit wires, damaged connector or damaged ECM output pins.	Check related fuse(s) Disconnect the 1st oxygen sensor (FRONT cylinder) and measure his resistance (Expected value: 7 to 12 Ohms) Measure the voltage of the harness power wire relative to ground (Expected value: Battery voltage) Disconnect the associated ECM connector and measure resistance between harness wires and ground (Expected value: open) Measure the resistance of the harness wires, between the ECM and sensor connectors (Expected value < 2 Ohms)
P1136	ECM	ECU int. fault path no.: electrical diagnosis for second lambda sensor upstream cat. Sig-error	Damaged O2 sensor, damaged circuit wires, damaged connector or damaged ECM output pins.	Check related fuse(s) Disconnect the 2nd oxygen sensor (REAR cylinder) and measure his resistance (Expected value: 7 to 12 Ohms) Measure the voltage of the harness power wire relative to ground (Expected value: Battery voltage) Disconnect the associated ECM connector and measure resistance between harness wires and ground (Expected value: open) Measure the resistance of the harness wires, between the ECM and sensor connectors (Expected value < 2 Ohms)

PCODE	MODULE	DESCRIPTION	CAUSE	ACTION
P1171	ECM	Diagnostic Fault code for Fuel Supply System (ORA Max Fault) Exhaust Bank1	Injection and fuel supply system. Adaptation of the air charge reaching the limits (min and max) based on the lambda sensors feedback. Too much variation in the engine itself in reference to a nominal engine. It can be cause by an engine that has been modified or out of spec (airbox, air filter, injectors, exhaust system, valve clearance, etc.) or any other components that can influence the engine performance.	Check injector and fuel supply system.
P1172	ECM	Diagnostic Fault code for Fuel Supply System (ORA Min Fault) Exhaust Bank1	Injection and fuel supply system. Adaptation of the air charge reaching the limits (min and max) based on the lambda sensors feedback. Too much variation in the engine itself in reference to a nominal engine. It can be cause by an engine that has been modified or out of spec (airbox, air filter, injectors, exhaust system, valve clearance, etc.) or any other components that can influence the engine performance.	Check injector and fuel supply system.
P1174	ECM	Diagnostic Fault code for Fuel Supply System (ORA Max Fault) Exhaust Bank2	Injection and fuel supply system. Adaptation of the air charge reaching the limits (min and max) based on the lambda sensors feedback. Too much variation in the engine itself in reference to a nominal engine. It can be cause by an engine that has been modified or out of spec (airbox, air filter, injectors, exhaust system, valve clearance, etc.) or any other components that can influence the engine performance.	Check injector and fuel supply system.

PCODE	MODULE	DESCRIPTION	CAUSE	ACTION
P1175	ECM	Diagnostic Fault code for Fuel Supply System (ORA Min Fault) Exhaust Bank2	Injection and fuel supply system. Adaptation of the air charge reaching the limits (min and max) based on the lambda sensors feedback. Too much variation in the engine itself in reference to a nominal engine. It can be cause by an engine that has been modified or out of spec (airbox, air filter, injectors, exhaust system, valve clearance, etc.) or any other components that can influence the engine performance.	Check injector and fuel supply system.
P1339	ECM	Signal fault at phase determination	backup phase detection strategies not able to find the correct phase	
P1606	ECM	Control Module Processor	Internal ECM problem	Check for ECM fault External troubleshooting not possible
P160E	ECM	Electrical Throttle Actuator (ETA) control fault	Damaged ETC, damaged circuit wires, damaged connector or damaged ECM output pins.	Disconnect ETC Measure the resistance of the harness wires, between the ECM and tested device connectors (Expected value < 2 Ohms)
P1610	ECM	Electrical Throttle Actuator (ETA) shorted to V +	Damaged ETC, damaged circuit wires, damaged connector or damaged ECM output pins.	Disconnect ETC Measure the resistance of the harness wires, between the ECM and tested device connectors (Expected value < 2 Ohms)
P1611	ECM	Electrical Throttle Actuator (ETA) shorted to ground	Damaged ETC, damaged circuit wires, damaged connector or damaged ECM output pins.	Disconnect ETC Measure the resistance of the harness wires, between the ECM and tested device connectors (Expected value < 2 Ohms)
P1612	ECM	Electrical Throttle Actuator (ETA) signal not plausible	Damaged ETC, damaged circuit wires, damaged connector or damaged ECM output pins.	Disconnect ETC Measure the resistance of the harness wires, between the ECM and tested device connectors (Expected value < 2 Ohms)

PCODE	MODULE	DESCRIPTION	CAUSE	ACTION
P1613	ECM	Electrical Throttle Actuator (ETA)	Damaged ETC, damaged circuit wires, damaged connector or damaged ECM output pins.	Disconnect ETC Measure the resistance of the harness wires, between the ECM and tested device connectors (Expected value < 2 Ohms)
P1614	ECM	Throttle idle position failure on throttle release	Throttle mechanical adjustment No initialization after throttle body/ ECM replacement	Check throttle mechanical adjustment. Check idle stop for wear. Ensure throttle plate is against throttle stop. Check throttle angle at idle. Perform THROTTLE POSITION SENSOR RESET in BUDS with throttle completely OFF. Refer to the service manual for more details.
P1615	ECM	TPS position deviation fault	Throttle mechanical adjustment No initialization after throttle body/ ECM replacement	Check throttle mechanical adjustment. Check idle stop for wear. Ensure throttle plate is against throttle stop. Check throttle angle at idle. Perform THROTTLE POSITION SENSOR INITIALIZATION in BUDS with throttle completely OFF. Refer to the service manual for more details.
P1616	ECM	Throttle limp-home-position failed	Throttle mechanical stop No initialization after throttle body/ ECM replacement	Check throttle mechanical adjustment. Check idle stop for wear. Ensure throttle plate is against throttle stop. Check throttle angle at idle. Perform THROTTLE POSITION SENSOR INITIALIZATION in BUDS with throttle completely OFF.. Refer to the service manual for more details.

PCODE	MODULE	DESCRIPTION	CAUSE	ACTION
P1619	ECM	TPS adaptation failure	Wrong throttle body mechanical position during reset of closed TPS or no initialization after ECM replacement.	Check THROTTLE cable adjustment. Check idle stop for wear. Ensure throttle plate is against throttle stop. Perform THROTTLE POSITION SENSOR INITIALIZATION in BUDS with throttle completely OFF.FF.
P1620	ECM	TPS adaptation failure	Wrong throttle body mechanical position during reset of closed TPS or no initialization after ECM replacement.	Check cable adjustment. Check idle stop for wear. Make sure throttle plate is against throttle stop. Perform THROTTLE POSITION SENSOR INITIALIZATION in BUDS with throttle completely OFF.
P1621	ECM	TPS adaptation cancelled lower mechanical stop failed	Throttle mechanical stop No initialization after throttle body/ ECM replacement	Check cable adjustment. Check idle stop for wear. Ensure throttle plate is against throttle stop. Check throttle angle at idle. Perform THROTTLE POSITION SENSOR INITIALIZATION in BUDS with throttle completely OFF. Refer to the service manual for more details.
P1622	ECM	TPS adaptation failed	Throttle mechanical stop No initialization after throttle body/ ECM replacement	Check cable adjustment. Check idle stop for wear. Ensure throttle plate is against throttle stop.. Check throttle angle at idle. Perform THROTTLE POSITION SENSOR INITIALIZATION in BUDS with throttle completely OFF. Refer to the service manual for more details.
P16C0	ECM	ECU ADC plausibility check	Monitoring plausibility check failed	Check for ECM fault
P16C1	ECM	ECU ADC test failed	Monitoring plausibility check failed	Check for ECM fault
P16C2	ECM	ECU monitoring error	Monitoring plausibility check failed	Check for ECM fault
P16C3	ECM	Throttle Accelerator Sensors (TAS) monitoring check fault	Monitoring plausibility check failed	Check for ECM fault

PCODE	MODULE	DESCRIPTION	CAUSE	ACTION
P16C4	ECM	Engine speed monitoring check fault	Monitoring plausibility check failed	Check for ECM fault
P16C5	ECM	Safety fuel cut-off activated monitoring check level 1	Monitoring plausibility check failed	Check for ECM fault
P16C6	ECM	Safety fuel cut-off activated monitoring check level 2	Monitoring plausibility check failed	Check for ECM fault
P16C7	ECM	Throttle valve plausibility check failed	Monitoring plausibility check failed	Check for ECM fault
P16C8	ECM	Permitted throttle valve position monitoring check exceeded	Monitoring plausibility check failed	Check for ECM fault
P1F01	DPS	Power output overload	Motor short circuit or power output failed	Reset fault, If fault re-occur, replace DPS unit
P1F02	DPS	Power output overload (18V).	High voltage at the unit input.	Measure battery voltage with engine stopped. (Expected value: 11 to 13 volts) Measure battery voltage with engine running. (Expected value: 13 to 14.7 volts) test charging system as per shop manual
P1F03	DPS	Electronic Circuit Overheat	Hi temperature detected by on board temperature sensor.	Fault may become Active in extreme use situations. Reset fault and let DPS cool down. If fault re-occur in normal riding conditions, replace DPS unit
P1F05	DPS	Motor current sensor range/performance	Motor input vs output Current correlation check failed	External troubleshooting is not possible Clear the Fault. If Fault becomes Active Replace the DPS
P20EB	ECM	Main relay de-energized too late or sticking	Damaged circuit wires, damaged connectors or damaged ECM output pins. Damaged relay	Disconnect main relay and measure his coil resistance (Expected value: 70 to 90 Ohms)

PCODE	MODULE	DESCRIPTION	CAUSE	ACTION
P212C	ECM	2nd Throttle Accelerator Sensors (TPS) low	Damaged TPS, damaged circuit wires, damaged connector or damaged ECM output pins.	Make sure sensor connector is well inserted Disconnect the sensor and associated ECM connector Measure the resistance of the harness wires, between the ECM and sensor connectors (Expected value < 2 Ohms)
P212D	ECM	2nd Throttle Accelerator Sensors (TPS) high	Damaged TPS, damaged circuit wires, damaged connector or damaged ECM output pins.	Make sure sensor connector is well inserted Disconnect the sensor and associated ECM connector Measure the resistance of the harness wires, between the ECM and sensor connectors (Expected value < 2 Ohms)
P2228	ECM	Ambient pressure sensor shorted to ground	Damaged sensor, damaged circuit wires, damaged connector or damaged ECM pins, ECM voltage supply low	Make sure sensor connector is well inserted Disconnect the sensor, measure the voltage of the harness power wires (Expected value: 4.8 to 5.1 Volts) Measure the resistance of the harness wires, between the ECM and sensor connectors (Expected value < 2 Ohms)
P2229	ECM	Ambient pressure sensor short to V +	Damaged sensor, wires shorted to battery +, ECM voltage supply too high.	Make sure sensor connector is well inserted Disconnect the sensor, measure the voltage of the harness power wires (Expected value: 4.8 to 5.1 Volts) Measure the resistance of the harness wires, between the ECM and sensor connectors (Expected value < 2 Ohms)
P2279	ECM	Intake Air System leak	Check for cracked plenum	Intake or throttle body air leak

PCODE	MODULE	DESCRIPTION	CAUSE	ACTION
P2299	ECM	Throttle and break pedal are used at the same time	If the accelerator pedal and the brake are activated simultaneously for a delay time and the vehicle is moving faster than Speed-threshold	
P2416	ECM	exchanged lambda sensors upstream catalyst	Wrong O2 sensor position after O2 replacement or wire replacement.	Swap O2 sensor wires.
P2530	ECM	Ignition switch state not plausible	Ignition key switch connection or internal switch fault	Check ignition key contacts and wire connections
P2620	ECM	Throttle Accelerator Sensors (TPS) position	Wrong TPS sensor position.	Check TAS adjustment.
P2621	ECM	First Throttle Accelerator Sensor (TPS) low	Damaged TPS, damaged circuit wires, damaged connector or damaged ECM output pins.	Make sure sensor connector is well inserted Disconnect the sensor and associated ECM connector Measure the resistance of the harness wires, between the ECM and sensor connectors (Expected value < 2 Ohms)
P2622	ECM	First Throttle Accelerator Sensors (TPS) high	Damaged TPS, damaged circuit wires, damaged connector or damaged ECM output pins.	Make sure sensor connector is well inserted Disconnect the sensor and associated ECM connector Measure the resistance of the harness wires, between the ECM and sensor connectors (Expected value < 2 Ohms)
P2670	DPS	PHASE B_LOW	DPS motor supply Damaged DPS	External troubleshooting is not possible Clear the Fault. If Fault becomes Active Replace the DPS
P2671	DPS	PHASE B_HIGH	DPS motor supply Damaged DPS	External troubleshooting is not possible Clear the Fault. If Fault becomes Active Replace the DPS

PCODE	MODULE	DESCRIPTION	CAUSE	ACTION
P2801	ECM	Gear position sensor invalid range	Damaged circuit wires, damaged gear position sensor, damaged ECM pins or damaged transmission.	Open ECM Monitoring page in BUDS, Verify that gear position information changes with gear selection changes on vehicle. Disconnect GBPS Measure voltage between harness connector 5-GBPS-1 and 5-GBPS-3. (Expected value: 4.8 to 5.1 Volts) Measure resistance from connector: 5-ECM-B13 to 5-GBPS-2 (Expected value: < 2 Ohms) Measure resistance from connector: 5-ECM-B22 to 5-GBPS-3 (Expected value: < 2 Ohms)
P2806	ECM	Gear position sensor angle defined area vs position not plausible	Damaged circuit wires, damaged gear position sensor, damaged ECM pins or damaged transmission.	Open ECM Monitoring page in BUDS, Verify that gear position information changes with gear selection changes on vehicle. Disconnect GBPS Measure voltage between harness connector 5-GBPS-1 and 5-GBPS-3. (Expected value: 4.8 to 5.1 Volts) Measure resistance from connector: 5-ECM-B13 to 5-GBPS-2 (Expected value: < 2 Ohms) Measure resistance from connector: 5-ECM-B22 to 5-GBPS-3 (Expected value: < 2 Ohms)
U0073	DPS	CAN bus off, no messages	Damaged circuit wires or damaged DPS pins.	On the Diagnostic connector, measure the resistance between the two CAN lines (Expected value: 50 to 70 Ohms) Measure the resistance of each CAN wire in the harness, between the Diagnostic and DPS connectors (Expected value < 5 Ohms)

PCODE	MODULE	DESCRIPTION	CAUSE	ACTION
U0073	DPS GLOBE	CAN LOSS/CANBUS FAILURE/CANBUSS OFF	Damaged CAN Bus wires to Network, damaged DPS pins or wires.	On the Diagnostic connector, measure the resistance between the two CAN lines (Expected value: 50 to 70 Ohms) Measure the resistance of each CAN wire in the harness, between the Diagnostic and DPS connectors (Expected value < 5 Ohms)
U0073	SCM	CAN-Bus failure, CAN-Bus OFF	Damaged circuit wires or damaged SCM pins.	On the Diagnostic connector, measure the resistance between the two CAN lines (Expected value: 50 to 70 Ohms) Measure the resistance of each CAN wire in the harness, between the Diagnostic and SCM connectors (Expected value < 2 Ohms)
U0100	DPS	Lost communication with ECM (lost of CAN ID's)	Damaged CAN Bus wires to ECM, damaged DPS/ECM pins.	On the Diagnostic connector, measure the resistance between the two CAN lines (Expected value: 50 to 70 Ohms) Measure the resistance of each CAN wire in the harness, between the Diagnostic and ECM connectors (Expected value < 5 Ohms)
U0100	DPS GLOBE	ECM CAN COMMUNICATION OFF	Damaged CAN Bus wires to Network, damaged DPS pins or wires.	On the Diagnostic connector, measure the resistance between the two CAN lines (Expected value: 50 to 70 Ohms) Measure the resistance of each CAN wire in the harness, between the Diagnostic and DPS connectors (Expected value < 5 Ohms)
U0100	SCM	Lost Communication With ECM (lost of CAN ID's)	Missing CAN ID from ECM Internal module error Damaged circuit wires or damaged module pins.	On the Diagnostic connector, measure the resistance between the two CAN lines (Expected value: 50 to 70 Ohms) Measure the resistance of each CAN wire in the harness, between the Diagnostic and ECM connectors (Expected value < 2 Ohms)

PCODE	MODULE	DESCRIPTION	CAUSE	ACTION
U0155	DPS	Lost communication with CLUSTER	Damage CAN Bus wires to cluster Damaged circuit wires or damaged Cluster module pins.	On the Cluster power connector, measure the voltage between the two harness power wires (Expected value: Battery voltage) On the Diagnostic connector, measure the resistance between the two CAN lines (Expected value: 50 to 70 Ohms) Measure the resistance of each CAN wire in the harness, between the Diagnostic and Cluster connectors (Expected value < 2 Ohms)
U0155	ECM	Lost communication with CLUSTER (lost of CAN ID's)	Missing CAN ID Module internal error Damaged circuit wires or damaged module pins.	With vehicle connected to BUDS with MPI2, check for CLUSTER fault or ECM fault Disconnect the cluster connector Measure the voltage of the harness power wires relative to ground (Expected value: Battery voltage) Disconnect MPI2 from DB connector Measure the resistance between the two CAN lines (Expected value: 50 to 70 Ohms) Disconnect the ECM connector Measure the resistance of each CAN wire in the harness, between the Diagnostic and ECM connectors (Expected value < 2 Ohms) Measure the resistance of each CAN wire in the harness, between the Diagnostic and Cluster connectors (Expected value < 2 Ohms)

PCODE	MODULE	DESCRIPTION	CAUSE	ACTION
U0155	ECM	Lost communication with CLUSTER (lost of CAN ID's)	Missing CAN ID Module internal error Damaged circuit wires or damaged module pins.	With vehicle connected to BUDS with MPI2, check for CLUSTER fault or ECM fault Disconnect the cluster connector Measure the voltage of the harness power wires relative to ground (Expected value: Battery voltage) Disconnect MPI2 from DB connector Measure the resistance between the two CAN lines (Expected value: 50 to 70 Ohms) Disconnect the ECM connector Measure the resistance of each CAN wire in the harness, between the Diagnostic and ECM connectors (Expected value < 2 Ohms) Measure the resistance of each CAN wire in the harness, between the Diagnostic and Cluster connectors (Expected value < 2 Ohms)
U0155	SCM	Lost Communication With Cluster (lost of CAN ID's)	Missing CAN ID Module internal error Damaged circuit wires or damaged module pins.	Check for Cluster fault Measure the voltage of the cluster harness power wires relative to ground (Expected value: Battery voltage) On the Diagnostic connector, measure the resistance between the two CAN lines (Expected value: 50 to 70 Ohms) Measure the resistance of each CAN wire in the harness, between the Diagnostic and SCM connectors (Expected value < 2 Ohms) Measure the resistance of each CAN wire in the harness, between the Diagnostic and Cluster connectors (Expected value < 2 Ohms)

PCODE	MODULE	DESCRIPTION	CAUSE	ACTION
U0167	ECM	Lost communication with Vehicle Immobilizer Control Module	The Vehicle Immobilizer is reporting an electrical fault on the communication line.	Check for dirty or oxidized Key contact. Clean key contact if needed. Check for broke key contact Ensure sensor connector is fully inserted. Measure resistance between ECMB-A1 and CC-C (Expected value < 2 Ohms). Measure resistance between ECMB-C2 and CC-E (Expected value < 2 Ohms).
U0300	ECM	Invalid Security Exchange received	Incorrect ECM or CLUSTER, Incorrect software version.	Install the proper ECM or CLUSTER on vehicle. Update security coding using BUDS
U0301	ECM	Variant Coding, software incompatibility (DFC_MoFVar)	Faulty calibration or variant Faulty programming Damaged ECM	Try updating the ECM variant or calibration If the problem persists, reflash ECM If the problem persists, replace ECM.
U0302	ECM	Variant Coding, software incompatibility (DFC_MTVARNPL)	Faulty calibration or variant Faulty programming Damaged ECM	Try updating the ECM variant or calibration If the problem persists, reflash ECM If the problem persists, replace ECM.
U0400	DPS	Variant Coding failure Software incompatibility	Faulty variant coding Faulty programming	Check in the BUDS Tab "vehicle configuration" if the DPS option is checked. Reflash the DPS with the latest software
U0400	DPS GLOBE	VARIANT IMCOMPATIBILITY	vehicle configuration error or DPS software mismatch or error	look at BUDS vehicle config. check DPS for reflash write config and cycle on/off vehicle
U0400	SCM	Variant Coding failure Software incompatibility	SCM not install on expected vehicle Faulty programming	Check if SCM is install on a valid vehicle Update SCM Open Vehicle Configuration in Setting page in BUDS & if check vehicle configuration is set as expected for the vehicle.

PCODE	MODULE	DESCRIPTION	CAUSE	ACTION
U0416	DPS GLOBE	VEHICLE SPEED ERROR VALUE	vehicle speed error value received from ECM	Check if vehicle speed is available in Monitoring page in BUDS Check related fuse(s) Remove the sensor connector, measure the voltage of the harness power wire relative to ground (Expected value: Battery voltage) Measure the resistance of the harness wires, between the ECM and sensor connectors (Expected value < 5 Ohms)
U0426	ECM	Invalid Data Received From Vehicle Immobilizer Control Module	The Vehicle Immobilizer could not read the number of the access key.	Check for dirty or oxidized Key contact. Clean key contact if needed. Check for broke key contact Ensure sensor connector is fully inserted. Measure resistance between ECMB-A1 and CC-C (Expected value < 2 Ohms). Measure resistance between ECMB-C2 and CC-E (Expected value < 2 Ohms).
U220E	ECM	Invalid Check Sum from CLUSTER message	Check Sum error	External troubleshooting is not possible Check for communication fault
U3001	DPS	Module improper shutdown	Lost of power on DPS that can be caused by damaged circuit wires or damaged DPS pins.	Check the two DPS fuses Ensure DPS connector is fully inserted. Check for Damaged tail light, DPS, Cluster circuit wires Check for damaged DPS pins.
U3001	SCM	Module improper shutdown	Lost of power on SCM Damaged circuit wires or damaged SCM pins.	Check fuse Ensure SCM connector is fully inserted. Check for Damaged circuit wires or damaged SCM pins.

INTELLIGENT THROTTLE CONTROL (iTC)

GENERAL

SYSTEM DESCRIPTION

The iTC is an electronic throttle control system that includes:

– Throttle accelerator sensor (TAS)
– Electric throttle actuator (ETA)
– Throttle position sensor (TPS).

The TAS is part of the accelerator pedal module. The ETA and TPS are comprised in the throttle body.

The iTC is often referred to as a "throttle by wire" system (no throttle cable is used).

According to the accelerator pedal position and other EMS inputs, the ECM powers the ETA motor using pulse width modulation (PWM), to control the throttle plate. When the ECM detects through the TPS that the throttle plate has reached the targeted position, the ECM stops the throttle actuator.

Depending on various conditions and the type of key used, the iTC can modify the ETA response, limit the engine torque or vehicle speed.

For torque limitation, the ECM processes the TAS input differently depending on the specific mode. In other words, the driver's demand may not necessarily result in the corresponding throttle opening.

For vehicle speed limitation, the iTC controls the throttle opening to maintain a maximum set speed even if the accelerator is pedal fully depressed.

SYSTEM MAIN FEATURES

The use of the iTC allows the following features:

– Types of keys
– ECO/ECO OFF/Work modes

Types of Keys

OptionalPerformance Key

No limitation, just like the non-DESS keys that come with the Defender.

Optional ECO OFF Key

Limits vehicle speed to maximum 70 km/h (43 MPH) with only 90% engine torque available.

Optional Work Key

Limits vehicle speed to maximum 40 km/h (25 MPH) with full engine torque available.

ECO/ECO OFF/Work Modes

The ECO (fuel economy mode) setting reduces fuel consumption by limiting throttle response and maximum throttle opening to maintain an optimal cruising setting. Use ECO mode on bumpy trails to provide smoother ride conditions

The ECO OFF mode offers no engine torque reduction as well as a sportier driving experience.

The work mode is optimized to be able to work with high loads in a smooth way but still with the full engine torque available. This mode is also effective for getting over obstacles and rough terrain.

SYSTEM OTHER FEATURES

Driver's Seat Belt Monitoring

If driver's seat belt not fastened, speed is limited to approximately 20 km/h (12 MPH).

Brake Monitoring

If the ECM receives a brake switch signal while gearbox is in gear and the vehicle moving, the ETA will decrease throttle plate opening and engine speed will drop to idle.

NOTE: A defective brake light switch that would stay in a closed position would force the engine to run at idle.

Low Range Operation

When gearbox is in low range, engine delivers less than the accelerator pedal demand and the accelerator pedal response is smoother than in high gear.

NOTE: All three driving modes are available in LOW gear.

Drive Shaft Saver

In a case where the drive wheels would momentarily leave the ground while the driver holds the throttle, this mode protects the drive system.

The system will enter the drive shaft saver mode if the ECM detects an excessive wheel acceleration rate. In such a case, the iTC will reduce the engine torque. .

Engine Temperature Monitoring

If coolant gets too hot, engine will deliver less than the accelerator pedal demand. The limitation is proportional to the overheat degree.

Battery Voltage Monitoring

If the battery voltage gets low, the engine idle RPM will be increased at approximately 1350 RPM.

Drowned Mode

In case of a fuel flood, the engine can be cranked without fuel injection.

To enter the drowned mode, depress and hold accelerator pedal (at least 50% of the travel) while cranking engine.

Limp Home Mode

When certain faults are occurring, the ECM will enter the limp home mode. In this mode, the engine will deliver less than the accelerator pedal demand.

PROCEDURES

ECO/ECO OFF/WORK MODE SWITCH

ECO/ECO OFF/Work Mode Switch Wire Information

FUNCTION	PIN
ECO signal (to ECM B pin D4)	1
Ground	2
WORK signal (to ECM B pin C4)	3

SEAT BELT SWITCH

Seat Belt Switch Wire Information

FUNCTION	PIN
Signal (to ECM B pin E3)	1
Ground through ECM (to ECM B pin A1)	2

THROTTLE ACCELERATOR SENSOR (TAS)

TAS Description

The throttle accelerator sensor (TAS) is a double hall effect sensor that sends a signal to the ECM which is proportional to the accelerator pedal. The redundancy is used for security purposes.

The voltage output of the hall effect sensors are different.

TAS Removal and Installation

The TAS is part of the accelerator pedal.

1. Note the wire routing and locking tie position.
2. Disconnect electrical connector.
3. Remove both accelerator pedal retaining nuts by outside near the steering column. Reach nuts by the LH side of the vehicle.

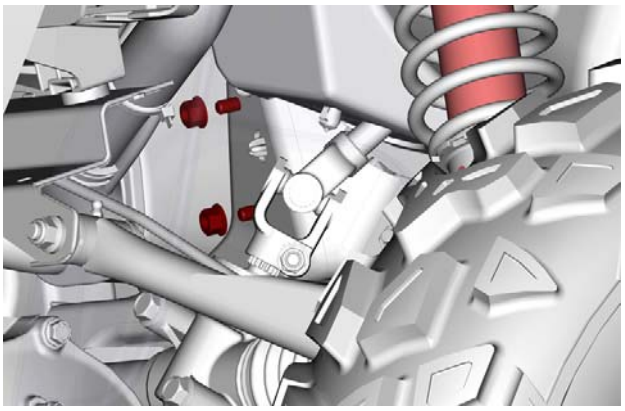

tmr2016-127-001

To install, reverse the removal procedure, however pay attention to the following:

Route and attach wires correctly.

Tighten nuts to the specified torque.

TIGHTENING TORQUE	
Accelerator pedal retaining nuts	13 N•m ± 1 N•m (115 lbf•**in** ± 9 lbf•**in**)

Carry out the *ECM FIRST INITIALIZATION*, refer to *ELECTRONIC FUEL INJECTION (EFI)* subsection.

TAS Wire Information

FUNCTION	PIN
Signal	A
Ground through ECM	B
Voltage input (5 volt)	C

FUNCTION	PIN
Voltage input (5 volt)	D
Signal	E
Ground through ECM	F

TAS Failure

If one TAS signal fails, the vehicle will enter the limp home mode.

If both TAS signals fail, the engine speed will drop to idle.

TAS Test with BUDS2

Connect the vehicle to the BRP diagnostic software (BUDS2).

In BUDS2, go to:

– **Measurements** page
– **Vehicle** or **ECM** button
– **ECM-Basic** tab.

In the bottom table, look the **Throttle Opening** line.

The TAS signal should vary from near 0% to near 100% depending on the pedal position and selected driving mode, which confirms the TAS signal reaches the ECM.

If the TAS signal is above 2% with the accelerator pedal at release. replace the accelerator pedal assembly.

ELECTRONIC FUEL INJECTION (EFI) (HD5)

SERVICE TOOLS

Description	Part Number	Page
ECM ADAPTER TOOL	529 036 166	1
FLUKE 115 MULTIMETER	529 035 868	1
OETIKER PLIER	295 000 070	9

SERVICE PRODUCTS

Description	Part Number	Page
LOCTITE 243 (BLUE)	293 800 060	15
SYNTHETIC GREASE	779162	13

GENERAL

The following tools are required to test most of the electrical parts.

REQUIRED TOOL	
FLUKE 115 MULTIMETER (P/N 529 035 868)	
ECM ADAPTER TOOL (P/N 529 036 166)	

⚠ WARNING

Fuel is flammable and explosive under certain conditions.
Ensure work area is well ventilated.
Do not smoke or allow open flames or sparks in the vicinity.
Fuel lines remain under pressure at all times. Always proceed with care and use appropriate safety equipment when working on pressurized fuel system.
Wipe off any fuel spillage.
Do not allow fuel to spill on hot engine parts and/or on electrical connectors.
Replace any damaged, leaking or deteriorated fuel lines or connections.
Always, pressurize the fuel system if any fuel related component was disconnected or removed.
Proceed with care when removing/installing high pressure test equipment.

SYSTEM DESCRIPTION

Refer to the *ENGINE MANAGEMENT SYSTEM* subsection for a general layout of the various EFI system components.

The electronic fuel injection system (EFI) is comprised of various sensors used for detecting ongoing operating conditions of the engine and vehicle, and includes all the components that perform the required adjustments to the engine.

Electrical System

ECM (Engine Control Module)

From input signals, the ECM acknowledges driver demands and converts them to an engine torque requirement through calculation of several variables. Then, the ECM controls the iTC, the injection system and the ignition system to meet the torque requirement.

The ECM manages the engine torque requirements and controls engine operation to ensure it is delivering optimum performance and fuel economy. The ECM also controls idle RPM and limits maximum engine speed through the iTC system.

EFI Sensors

The ECM reads the inputs from the sensors which it compares to predetermined parameters stored in the ECM, makes computations, and activates the outputs accordingly (injector, ignition coil etc.).

Signals from sensors are used by the ECM to determine the injection and ignition parameters (referenced to fuel maps) as required to maintain the optimum air-fuel ratio.

Air Intake System

Air Filter

Air, drawn into the air filter housing, first passes through an inlet duct.

After it passes through the air filter, an air duct (intake adapter) is used to channel the air to the throttle body.

Throttle Body

The throttle body is mounted on the intake manifold.

Air for combustion, drawn in by the engine, flows through the air intake system, then through the throttle body where it is regulated by the electronic throttle actuator (ETA).

The ETA allows the ECM to control the throttle plate, and therefore engine torque.

The TPS is also incorporated in the throttle body. It provides a signal to the ECM of the actual throttle plate position.

Fuel System

Fuel Rail

The fuel rail is mounted on the intake manifold. The fuel rail secures the injector to the manifold and also provides the injector the fuel pressure that is received from the fuel pump.

The fuel pressure applied to the fuel rail is regulated by the fuel pressure regulator located in the fuel pump module.

Fuel Injector

The fuel injector is used to inject fuel into the intake port of the cylinder head.

Fuel Pump

An electric fuel pump with an integrated pressure regulator and fuel system filters is used. For more details on the fuel pump unit, refer to *FUEL TANK AND FUEL PUMP* subsection.

ADJUSTMENT

IDLE SPEED

Idle speed is not adjustable. The ECM controls the idle speed of the engine primarily through control of the throttle plate position.

The vehicle multifunction gauge can provide an accurate digital readout of the engine's idle speed.

The engine RPM may also be verified using the BRP diagnostic software (BUDS2).

Connect the vehicle to BUDS2. Refer to *COMMUNICATION TOOLS* subsection.

Select the following:
- **Measurements**
- **Presets**
- **ECM - basic**.

NOTE: The multifunction gauge and the BRP diagnostic software use the same signal to provide the engine RPM indication.

TROUBLESHOOTING

DIAGNOSTIC TIPS

The first step in troubleshooting the EFI system is to check for fault codes using the BRP diagnostic software BUDS2. Refer to *COMMUNICATION AND TOOLS* and *DIAGNOSTIC AND FAULT CODES* subsections.

However, engine problems are not necessarily related to the electronic fuel injection system.

It is important to ensure that the engine, fuel delivery system and electrical systems are operating normally.

After a problem has been solved, be sure to clear the fault(s) in the ECM using the BRP diagnostic software.

⚠ WARNING

Electrical actuators and electronic modules may be powered up as soon as the ignition switch is set to ON. Always disconnect the battery prior to disconnecting any electrical or electronic parts.

Never use a battery charger to temporarily substitute the battery as it may cause the ECM to function erratically, or not at all.

Check related-circuit fuse solidity and condition with an ohmmeter. A visual inspection could lead to a false diagnosis.

Electrical Related Problems

It is important to check the following in the electrical system:
- Battery voltage
- Fuses
- Ground connections
- Wiring and connectors.

Ensure that all electronic components are genuine OEM. Any modification to the wiring harness may lead to poor system operation or generate fault codes.

Electrical Connections

Pay particular attention to ensure that terminals and pins are not out of their connectors, corroded, or out of shape.

When probing terminals, pay attention not to deform the terminals as this could cause a loose or intermittent connection that would be difficult to troubleshoot.

PROCEDURES

ENGINE CONTROL MODULE (ECM)

NOTE: As a first troubleshooting step, always check for applicable fault codes using the BRP diagnostic software (BUDS2).

Quick Test to Validate ECM Operation

Turn ignition key to ON.

NOTE: Setting the ignition switch to ON wakes up the ECM, which then turns on the following.

QUICK INDICATION THAT ECM IS FUNCTIONING (ASSUMING THE OBSERVED COMPONENT IS IN GOOD WORKING ORDER)
Multifunction gauge turns ON.
Fuel pump turns on for approx. 5 seconds.
Rear lights turn on.

ECM First Initialization

This procedure performs a reset of the following values in the ECM:

– TAS (Throttle Accelerator Sensor)
– TPS (Throttle Position sensor)
– GBPS (Gearbox Position Sensor).

This reset **must** be carried out whenever the ECM has been replaced.

This reset **may** be carried out whenever any of the following components have been replaced instead of their respective reset procedures:

– Throttle body (for TPS)
– GBPS (Gearbox Position Sensor).

1. Connect vehicle to the BRP diagnostic software, refer to *COMMUNICATION TOOLS* subsection.
2. Select the following:
   – **Setting** tab
   – **ECM** tab.
   – **ECM first initialization** tab.

If the operation is successful, a message will be displayed stating that the reset was successful.

If an error occurred or a component is out of range, a message may be displayed. Follow the instructions in the message and repeat the procedure.

3. Check for fault codes.

If a fault code is generated, carry out the service actions, reset the fault and repeat the reset procedure.

4. Start engine and make sure it operates normally throughout its full engine RPM range.

ECM Access

The ECM is located under the right passenger's seat, to the right of the fuse box and behind the starter solenoid.

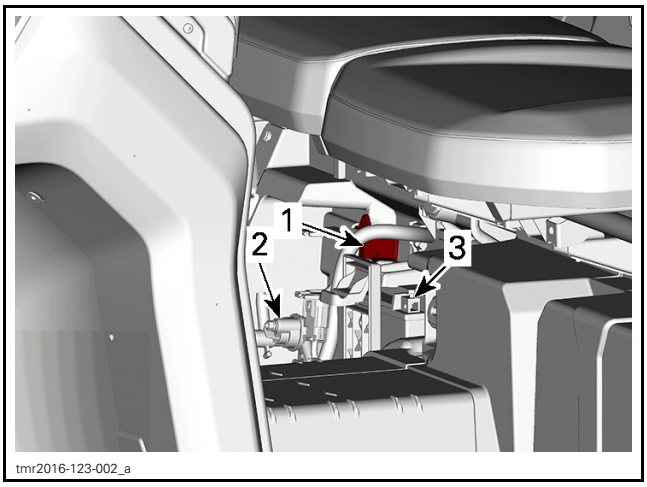

ECM LOCATION
1. ECM
2. Starter solenoid
3. Battery

ECM Connector Identification

There are 2 connectors connected to the ECM:

– Engine harness connected to ECM-A
– Vehicle system control harness connected to ECM-B.

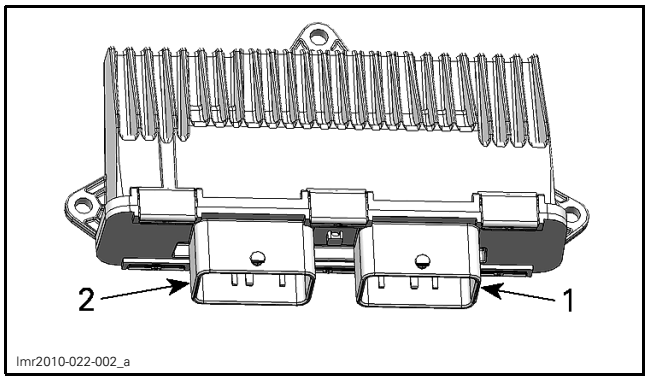

1. *Connector A*
2. *Connector B*

The ECM connectors have 48 pins.

NOTE: For connector information, cleaning and probing, refer to *WIRING HARNESS AND CONNECTOR* subsection.

ECM Adapter Tool

To probe ECM connector terminals, use the ECM adapter tool.

NOTE: This tool will prevent deforming or enlarging terminals which would lead to bad ECM terminal contact creating intermittent or permanent problems.

ECM Power Supply Test

1. Disconnect connector "B" from the ECM.
2. Install ECM connector "B" on the ECM adapter tool.
3. Install a jumper wire between B-H2 and B-M2 on the ECM adapter tool.
4. Turn the ignition switch to ON.
5. Use the multimeter and select Vdc.
6. Check for voltage as follows.

ECM ADAPTER	BATTERY	VOLTAGE
B-M4	Negative post	Battery voltage

If voltage is not measured, check the following:

– Main relay
– Wiring and connections, refer to the *WIRING DIAGRAM*.

Testing the Continuity of ECM Ground Circuits

1. Disconnect connector "B" from ECM.
2. Install the ECM adapter tool on ECM-B connector.
3. Use the multimeter and select Ω.
4. Probe adapter terminals as per following table.

ECM ADAPTER	BATTERY POST	RESISTANCE
Pins B-L1, B-M2 and B-M3	Ground	Close to 0 Ω (continuity)

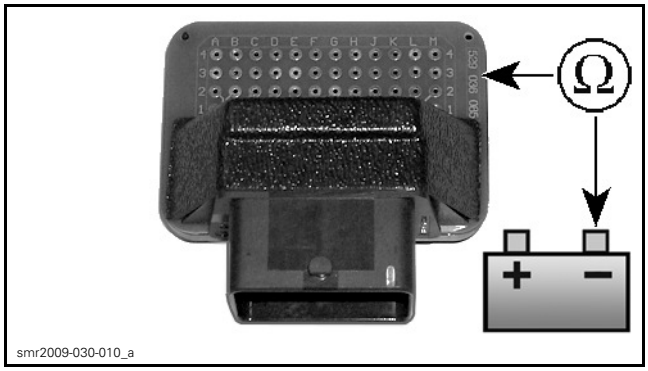

If any measurement is out of specification, check the grounds. Refer to *POWER DISTRIBUTION AND GROUNDS* subsection.

Removing the ECM

NOTE: If a new ECM is to be installed, first read the procedures in *REPLACING THE ECM* in this subsection.

1. Disconnect battery cables.

NOTICE **Always disconnect the BLACK negative (–) battery cable first, then disconnect RED positive (+) cable.**

2. Disconnect both ECM connectors from ECM.
3. Unscrew all retaining screws and remove the ECM from its support.

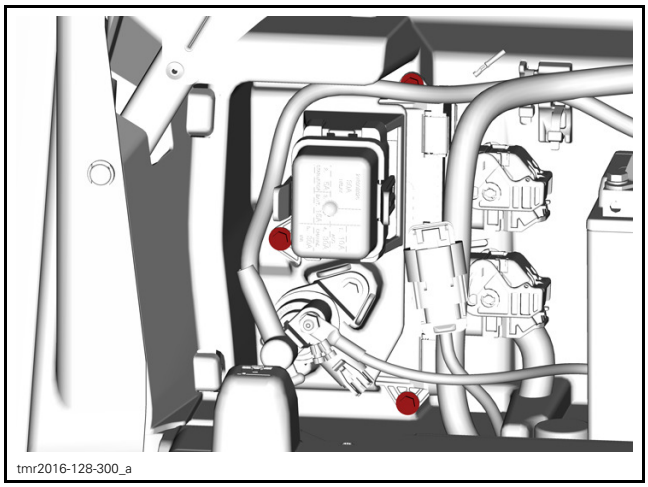

Installing the ECM

Reverse removal procedure however, pay attention to the following.

TIGHTENING TORQUE	
ECM retaining screws	2.5 N•m ± 0.5 N•m (22 lbf•**in** ± 4 lbf•**in**)

1. Reconnect ECM connectors.
2. Reconnect battery cables.

⚠ WARNING

Always reconnect the RED positive (+) battery cable first, then reconnect BLACK negative (–) cable.

3. If a new ECM is installed, refer to *REPLACING THE ECM* in this subsection.

Replacing the ECM

NOTE: Prior to replacing an ECM, ensure that all the recommendations in the general introduction of this subsection have been followed and all applicable testing procedures have been carried out.

When the ECM is replaced, data must be entered into the new ECM . Refer to *ECM MANUAL DATA ENTRY FOR ECM REPLACEMENT* further in this subsection.

ECM Data Entry for ECM Replacement

Use one of the following 2 methods to collect the required information. The 1st being the easiest:

1. Use BUDS2 to obtain the data from a saved "*.buds2" file on your PC computer.
2. Collect the information from the vehicle and on the Knowledge Center.

Once the required information has been collected, refer to *ENTERING THE COLLECTED INFORMATION INTO THE ECM*.

1st Collecting Method: Obtaining the Data from a Saved .buds2 File

1. Start BUDS2.

NOTE: It is not necessary to perform any connection. The PC computer can be used alone.

2. In BUDS2, click on the **Open a BUDS2 file** button.

Make sure you are at: C:\Program Files(x86)\BRP\BUDS2\Files.

IMPORTANT: Be sure to use the file that specifically matches the vehicle you are servicing.

NOTE: The file name structure is as follows:
VIN_date read (yyyymmdd)_hour read (hhmmss).mpem
Example: **2BPSBK8C68V000168_20090206_111640.buds2** Therefore: VIN: 2BPSBK8C68V000168 Date: 2009 02 06 Hour: 11h 16m 40s

3. Select the **Summary/ Vehicle** page tab and record (write down) the following information.
   1. Vehicle serial number
   2. Engine serial number
   3. Vehicle model number
   4. Customer name.

2nd Collecting Method: Collect the Information from the Vehicle and BOSSWeb

1. Record engine serial number.

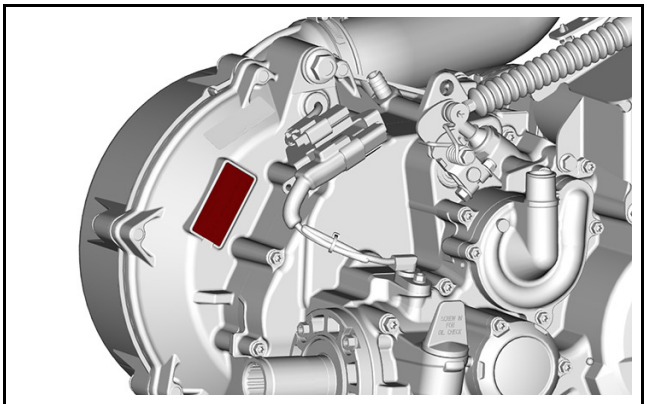

RHD5MY17-011-200

2. Record the following numbers from BOSSWeb. Look in **Sales** menu and choose **Unit history**.
   1. Vehicle serial number
   2. Vehicle model number
   3. Customer name.

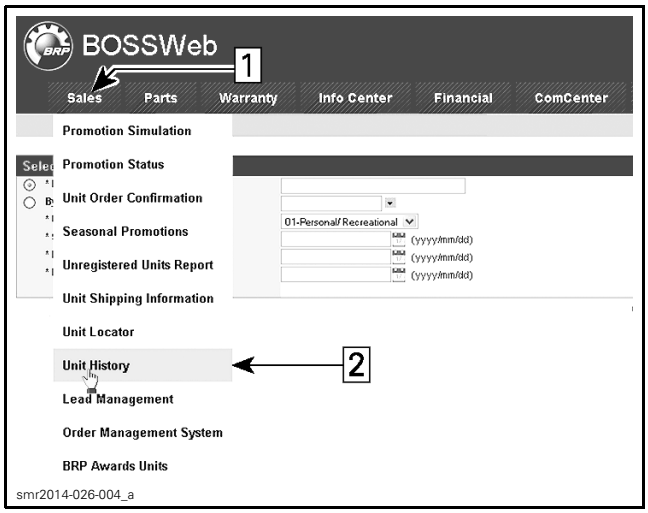

SERVICE, UNIT HISTORY
1. *Click on* SALES *menu*
2. *Select* Unit History

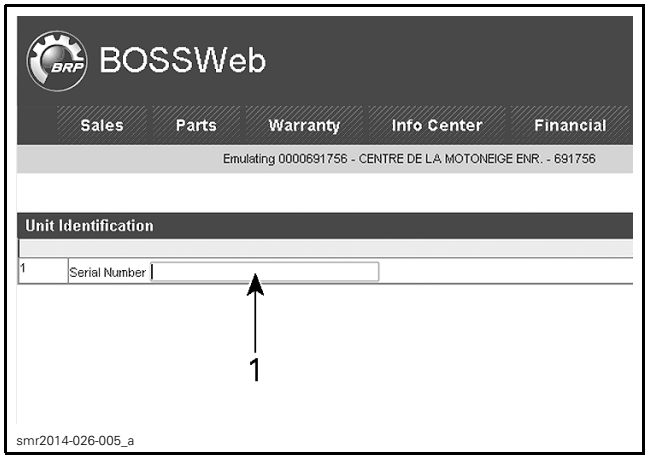

1. *Vehicle Serial Number here*

3. Enter the recorded data in the new ECM as detailed in *ENTERING THE COLLECTED INFORMATION INTO THE ECM*.

Entering the Collected Information Into the ECM

1. Connect the vehicle to BUDS2. Refer to *COMMUNICATION TOOLS* subsection.
2. In BUDS2, click the **Scan** button to read the new ECM.
3. Select the **Summary/ Vehicle** page tab and write all of the following information you recorded previously.
   1. Vehicle serial number (VIN)
   2. Engine serial number
   3. Vehicle model number
   4. Customer name.

NOTICE . Enter only the appropriate product model number as obtained when gathering the information.

NOTICE Pay particular attention when typing the V.I.N. and model numbers. Once **Write Data** button is pressed, the data cannot be modified.

4. Perform the *CLOSED THROTTLE RESET* procedure, refer to *ADJUSTMENTS* in this subsection.
5. Start the engine and ensure proper operation.
6. Reinstall any remaining removed parts.

FUEL INJECTOR

Testing the Fuel Injector Operation (Dynamic)

NOTE: As a first troubleshooting step, always check for applicable fault codes using BRP diagnostic software (BUDS2)

1. Connect vehicle to BUDS2 software. Refer to *COMMUNICATION TOOLS*
2. Turn key to the **ON** position.
3. Click the following:
   – **Scan** button
   – **Functions** tab.
   – **Activate Fuel Injector**

You should hear the fuel injector "clic" when activating, if not, carry out *TESTING THE FUEL INJECTOR RESISTANCE*.

Testing for Fuel Injector Leaks

Carry out the *TESTING THE FUEL PUMP PRESSURE* as detailed in the *FUEL TANK AND FUEL PUMP* subsection.

Testing the Fuel Injector Resistance

Disconnect connector “A” from the ECM.

Disconnect the engine connector (HIC).

NOTE: The HIC connector is located to the right of the ECM.

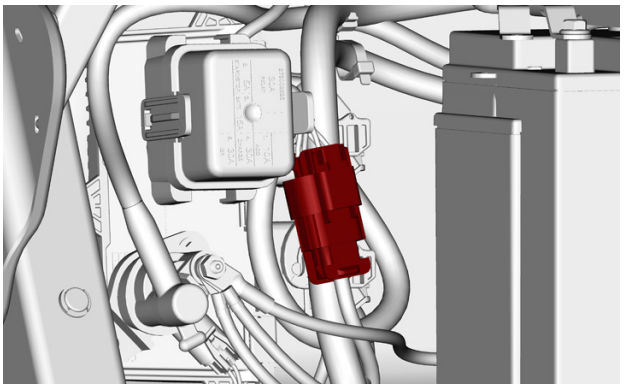
tmr2016-128-301_a

Check resistance value between terminals as follows.

FUEL INJECTOR RESISTANCE TEST AT HIC CONNECTOR		
HIC CONNECTOR	ECM CONNECTOR "A"	RESISTANCE @ 20°C (68°F)
D	A-K1	11.4 - 12.6 Ω

If resistance value obtained is incorrect, remove injector connector and check resistance value between injector pins as follows.

FUEL INJECTOR RESISTANCE TEST AT INJECTOR CONNECTOR		
INJECTOR PIN		RESISTANCE @ 20°C (68°F)
1	2	11.4 - 12.6 Ω

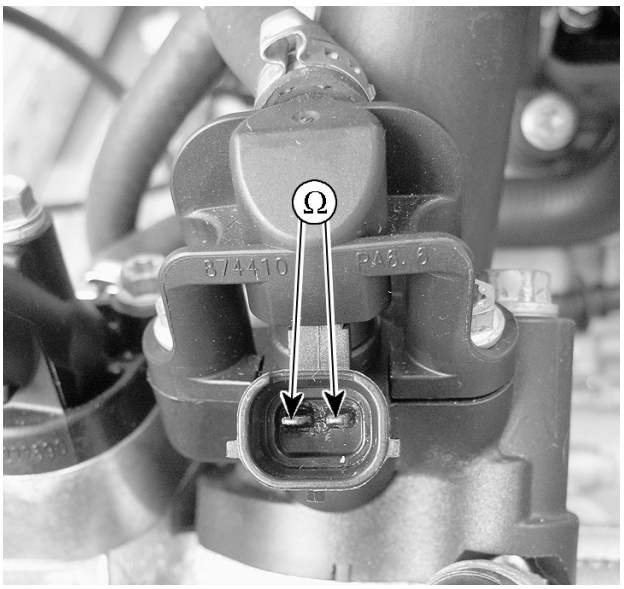

vmr2007-043-006_a

TYPICAL

If readings are out of specifications, replace injector.

If readings are good, carry out *TESTING THE FUEL INJECTOR INPUT VOLTAGE*.

Testing the Fuel Injector Input Voltage

Reconnect connector "A" to ECM.

Disconnect the fuel injector connector.

NOTE: If the connector is hard to unlock, gently use a screwdriver to release connector.

vmr2006-014-001_a

TYPICAL

NOTE: It is not necessary to activate the injector since it is continuously powered when the ignition key is set to ON.

Use a multimeter and set it to Vdc. Read voltage.

INJECTOR CONNECTOR		
WIRE		MEASUREMENT
VIOLET/ BLUE	Battery ground	Battery voltage

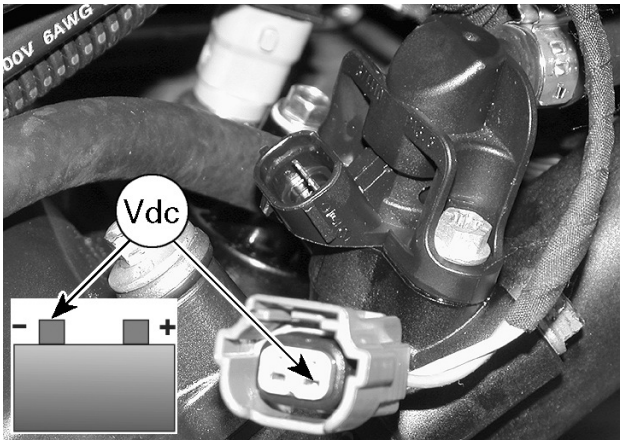

vmr2006-014-075_a

TYPICAL

If supply voltage is not good, check continuity between fuse F5 and injector (see *WIRING DIAGRAMS*).

NOTE: Probe fuse exactly as shown. This validates fuse at the same time.

Use a multimeter and set it to Ω. Read resistance.

INJECTOR CIRCUIT		MEASUREMENT
WIRE		
VIOLET/ BLUE	Fuse F5	Close to 0 Ω

If continuity is good, check relay and wiring from battery.

If continuity is faulty, check fuse and if OK, repair/replace wiring going to injector.

If supply voltage is good, check ground circuit between injector and ECM (see *WIRING DIAGRAMS*).

– If ground circuit is faulty, repair/replace wiring and connectors.
– If ground circuit is good, refer to *REPLACING THE ECM*.

Removing the Fuel Injector

Remove the fuel rail refer to *FUEL RAIL* for the procedure.

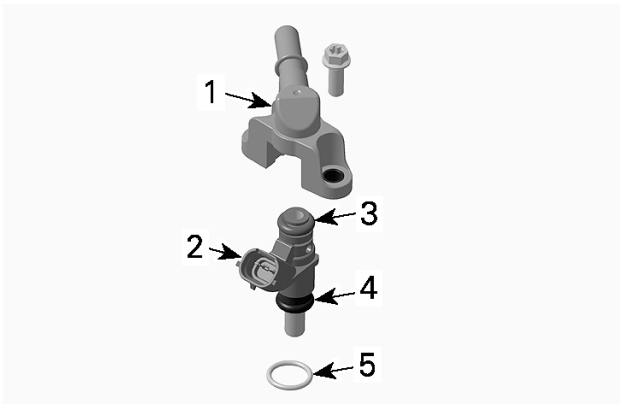

vmr2009-022-001_a

TYPICAL - FUEL RAIL ASS'Y
1. *Fuel rail*
2. *Fuel injector*
3. *Injector top O-ring*
4. *Injector bottom O-ring*
5. *Manifold O-ring*

Then pull fuel injector out of the fuel rail.

Installing the Fuel Injector

For the installation, reverse the removal procedure. Pay attention to the following details.

NOTICE **If installing the removed injector(s), always install NEW O-rings.**

Lubricate O-rings to ease insertion in rail.

FUEL INJECTOR O-RINGS	
Service product	Engine oil

Install fuel injector with your hand. Do not use any tool.

Position the manifold O-ring on injector as in following illustration.

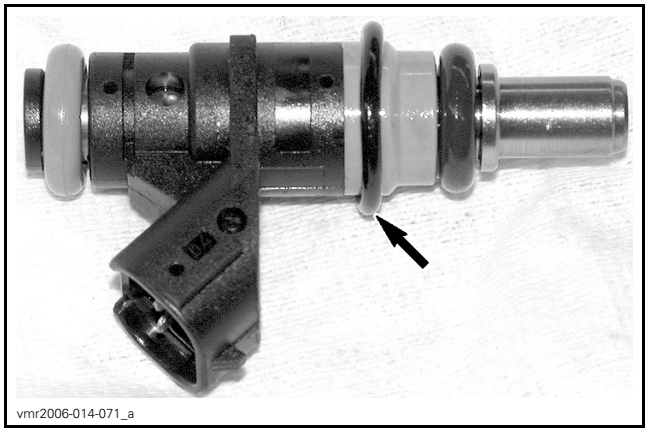

vmr2006-014-071_a

TYPICAL - MANIFOLD O-RING POSITION

Carefully insert injector in manifold paying attention to the manifold O-ring.

NOTICE **Gently push O-ring in evenly all around while inserting injector. O-ring must be completely inserted and not visible, before completing the insertion of the injector.**

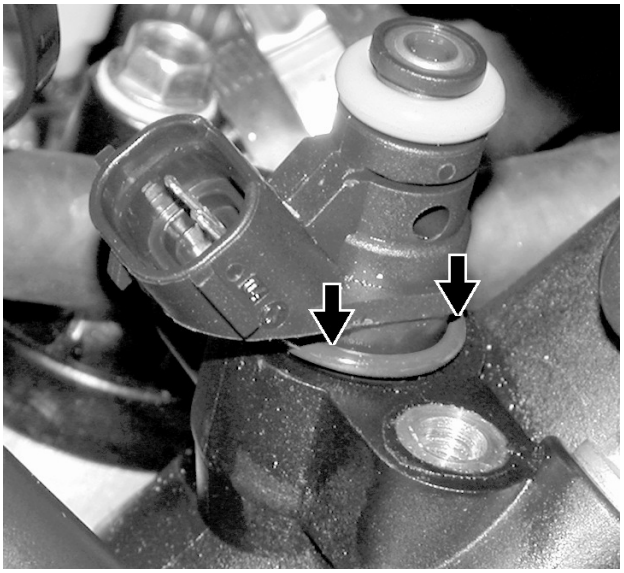

vmr2006-014-072_a

Firmly push injector until it bottoms out.

Reinstall fuel rail.

FUEL RAIL

Replacing the Fuel Rail

Removing the Fuel Rail

1. Disconnect the battery.
2. Wrap a rag around the inlet hose and release the quick fitting.

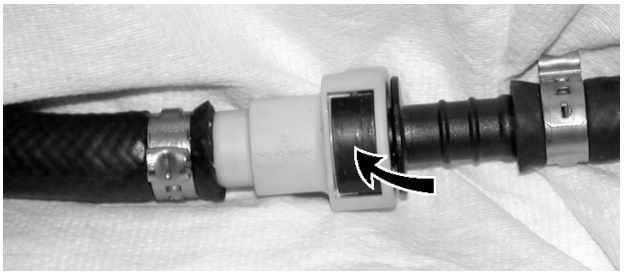

vmr2006-014-070_a

TYPICAL

3. Unscrew rail retaining screws.
4. Gently pull rail off by hand.

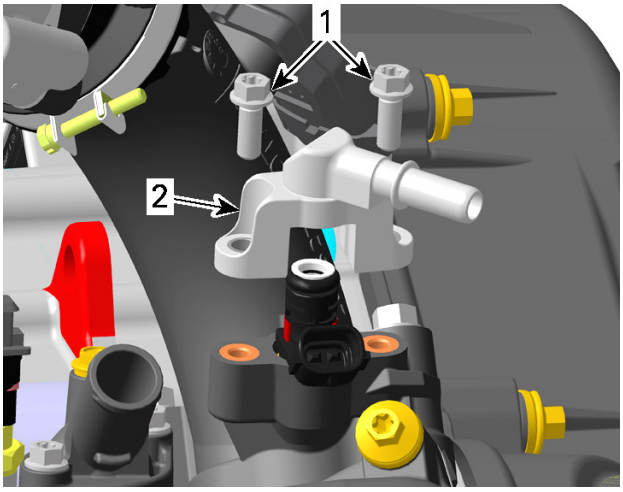

RHD5MY17-011-001_a

1. *Retaining screws*
2. *Fuel rail*

To disconnect fuel rail from hose, cut clamp on fuel hose. Refer to *FUEL TANK AND FUEL PUMP* for clamp removal/installation procedures.

REQUIRED TOOL	
OETIKER PLIER (P/N 295 000 070)	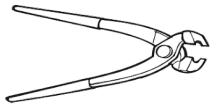

NOTE: If fuel rail is removed for access to fuel injector, it is not necessary to cut hose clamp. Only to replace fuel rail.

Installing the Fuel Rail

For installation, reverse the removal process however, pay attention to the following.

Install new clamps using pliers as per removal (if fuel rail was replaced).

Lubricate fuel injector O-rings to ease insertion in rail.

FUEL INJECTOR O-RINGS	
Service product	Engine oil

Install fuel rail and evenly tighten screws a little at a time each side.

TIGHTENING TORQUE	
Fuel rail retaining screws	10 N•m ± 1 N•m (89 lbf•**in** ± 9 lbf•**in**)

⚠ WARNING

Perform a fuel pressure test and ensure that there is no leak. Refer to *FUEL TANK AND FUEL PUMP*. Run engine and check for leaks.

THROTTLE BODY

Throttle Body Description

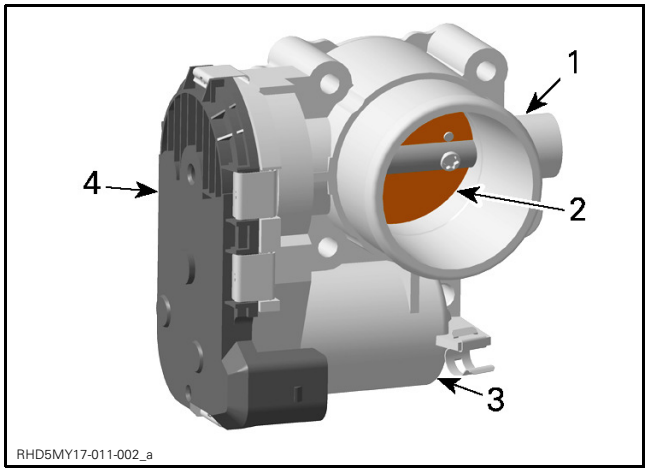

1. *Throttle body*
2. *Throttle plate*
3. *Electronic throttle actuator (electric motor inside)*
4. *Throttle position sensor (TPS) (inside)*

Throttle Body Access

Tilt cargo box.

Lubricating the Throttle Body

No lubrication is required.

Cleaning the Throttle Body

1. Remove air inlet bellow from throttle body.
2. Check throttle body cleanliness using a flashlight. Fully open throttle plate and verify:
   - Throttle body bore
   - Throttle plate edge.

   Look for:
   - Dirt
   - Oily surfaces
   - Carbon and salt deposits on throttle plate and the surrounding bore.
3. Clean as necessary.

THROTTLE BODY CLEANING	
Service product	GUNK INTAKE MEDIC or an equivalent throttle body cleaner

NOTICE Only use an appropriate throttle body cleaner that will not damage O-rings and EFI sensors.

CAUTION Use the product in a well ventilated area. Refer to product manufacturer's warnings.

4. To avoid getting dirt into engine, spray cleaner on a clean rag then rub rag against throttle plate and bore. A toothbrush may also be used.

CAUTION Ensure key is removed so that nobody can activate the electrical system, otherwise the ECM would turn on and the throttle actuator (ETA) would cycle. This could cause serious finger injury as the throttle plate moves quickly.

5. Gently open throttle plate and hold fully open to reach all surfaces.
6. To remove residual dirt, spray cleaner on throttle plate and on bore.
7. Reinstall removed parts.

Removing the Throttle Body

1. Disconnect air inlet bellow from throttle body.
2. Disconnect throttle body connector.

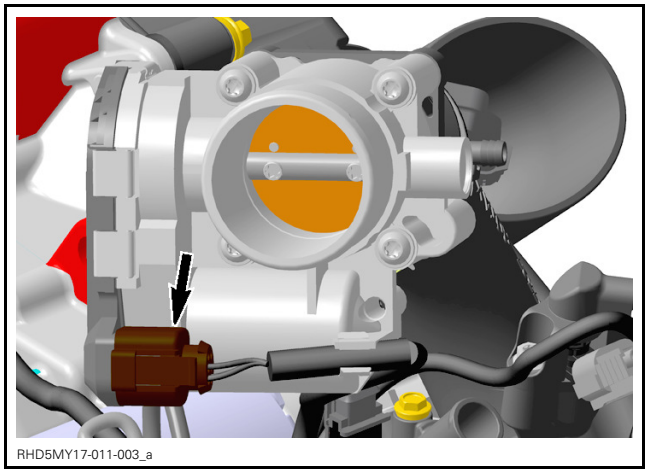

3. Remove screws retaining throttle body to intake adapter.

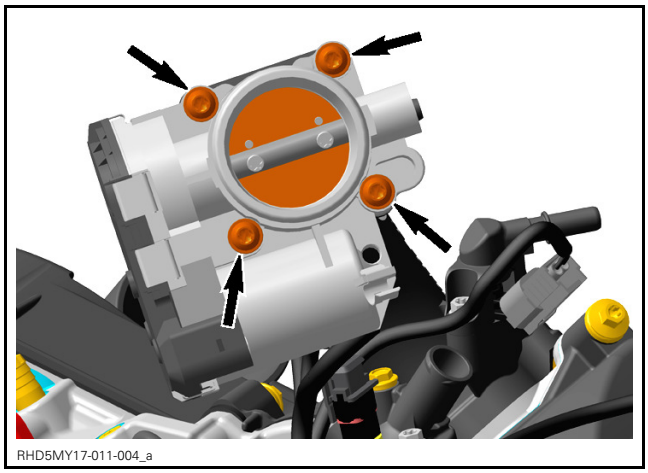

4. Pull throttle body off intake adapter.

Installing the Throttle Body

Installation of the throttle body is the reverse of the removal procedure. However, pay attention to the following.

TIGHTENING TORQUE	
Throttle body retaining screws	10 N•m ± 1 N•m (89 lbf•**in** ± 9 lbf•**in**)

1. Perform the *INITIALIZATION OF THE THROTTLE POSITION SENSOR* reset procedure. Refer to *THROTTLE POSITION SENSOR (TPS)* in this subsection.

THROTTLE POSITION SENSOR (TPS)

TPS Description

NOTE: The TPS is part of the throttle body.

The throttle position sensor (TPS) is a double potentiometer that sends signals to the ECM that are proportional to the throttle plate angle.

NOTE: As a first troubleshooting step, always check for applicable fault codes using B.U.D.S. software.

Initialization of the Throttle Position Sensor

NOTE: The TPS initialization procedure **must** be carried out whenever the throttle body (ETC) is replaced, unless an ECM first initialization reset is carried out.

This operation performs a reset of the TPS basic values in the ECM. This reset is very important as the TPS values are part of the basic parameters for all fuel mapping calculations and control of several settings such as for idle speed, LIMP HOME mode and maximum RPM of the engine.

NOTICE **An improperly set TPS may lead to improper idle speed (too low or too high), poor engine performance, poor engine starting and engine stop on deceleration, fault codes and possible engine damage. Emission compliance may also be affected.**

Use the BUDS2 software to perform this setting. Refer to *COMMUNICATION TOOLS* subsection.

1. Turn key to the **ON** position.
2. Ensure throttle lever is completely released.
3. In BUDS2, select
   - **Settings** button
   - **ECM** page tab
   - **Initialization Tab** page
   - **Reset TPS**.

Reset is completed.

Exit BUDS2.

NOTE: If the throttle valve was not within the allowed range when the Closed Throttle Reset was carried out, no error message would be displayed. However, a fault code would be set when the engine is started.

4. Start engine and make sure it operates normally through its full engine RPM range.
5. Check for fault codes using BUDS2, If a fault code related to the throttle actuator appears, clear it, then carry out another Closed Throttle Reset procedure. To clear faults, refer to *DIAGNOSTIC AND FAULT CODES* subsection.

Testing the TPS Wear

1. With the engine turned off, slowly press on the throttle lever and pay attention for smooth operation without physical stops.
2. Activate the electrical system to wake up the ECM.
3. Connect vehicle to BUDS2 software. Refer to *COMMUNICATION TOOLS* subsection.
4. Select the following:
   - **Measurements** tab
   - **ECM** tab.
5. Slowly and regularly move the throttle lever.
6. Observe the Throttle Opening indication movement

NOTE: The indication should move gradually and regularly as you move the throttle lever. If the TPS indication is erratic or suddenly drops off, it may indicate a worn TPS that needs to be replaced. An initial slight delay after the throttle lever is moved and before the indication starts to move is normal.

If the indication behavior is not as expected, proceed with the following steps.

7. Manually move the throttle plate in the throttle body using a blunt tool (without sharp tip).

⚠ CAUTION **Do not move throttle plate with your fingers. Otherwise, if ECM should turn off, it would quickly close the throttle plate which could cause finger injury.**

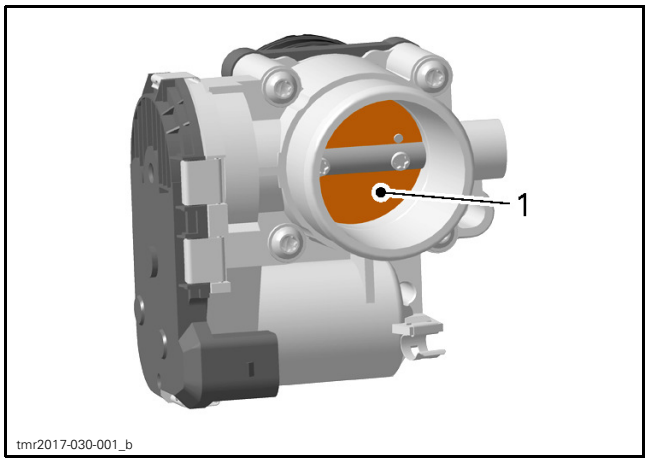

1. Push here

8. Check the indication movement again.
– If the indication moves as expected, check the throttle accelerator sensor (TAS). Refer to *THROTTLE ACCELERATOR SENSOR (TAS)* in this subsection.
– If the indication does not move as expected, perform the *TPS RESISTANCE TEST* in this subsection.

Testing the TPS Resistance

1. Ensure the throttle body connector is properly connected.
2. Disconnect ECM connector A from the ECM and install it on the ECM adapter tool.
3. Set multimeter to Ω.
4. Probe circuit as per following table while using your hand to manually move throttle plate.

ECM ADAPTER		FULLY CLOSED THROTTLE PLATE (1)		FULLY OPEN THROTTLE PLATE	
		RESISTANCE (Ω)			
PIN		MIN.	MAX.	MIN.	MAX.
A-A2	A-K4	875	1625	875	1625
A-A2	A-K3	954	1934	228	585
A-A2	A-F3	254	634	980	1983
A-K3	A-K4	228	585	954	1934
A-K3	A-F3	1385	2315	1385	2315
A-K4	A-F3	980	1983	254	634

(1) To obtain the fully closed position, it is necessary to push against the throttle plate in the throttle body with your hand and hold it in this position for the measurement.

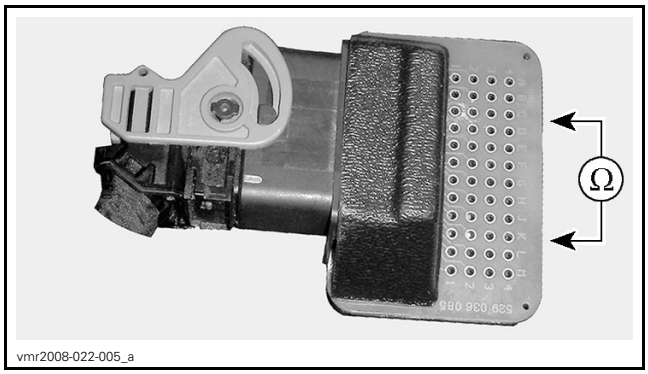

If any resistance value is incorrect, check wire continuity between ECM and throttle body before assuming the TPS is at fault. Refer to *WIRING DIAGRAM* subsection.

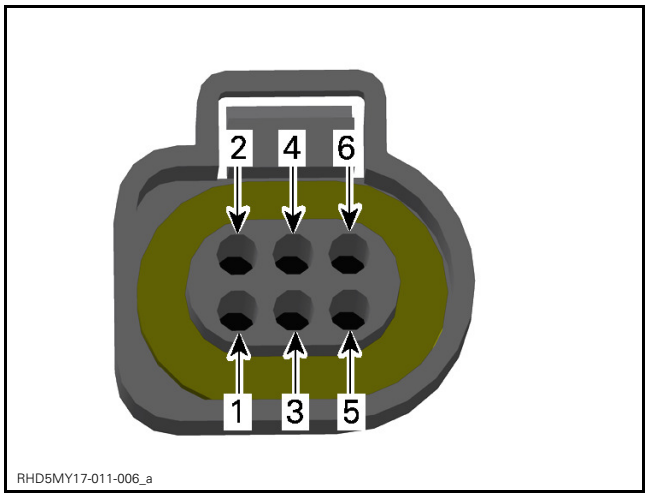

THROTTLE BODY CONNECTOR PIN-OUT

Replacing the TPS

Carry out a *INITIALIZATION OF THE THROTTLE POSITION SENSOR* procedure as detailed in *THROTTLE BODY* of this subsection.

CRANKSHAFT POSITION SENSOR (CPS)

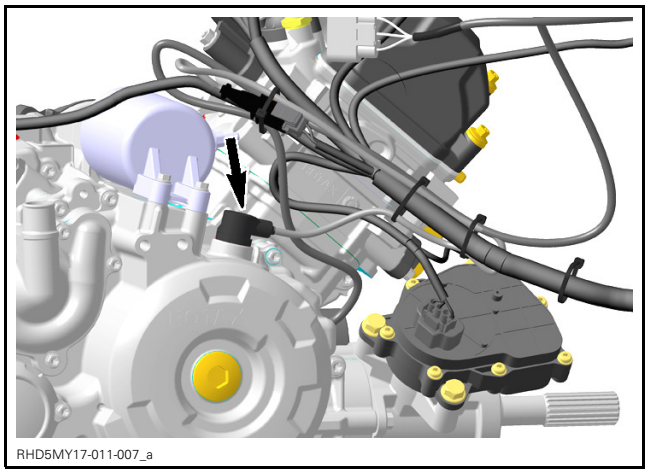

CPS

NOTE: Take into account that a CPS fault can be triggered by bent or missing encoder wheel teeth. First check fault codes using B.U.D.S., then check the encoder wheel teeth condition if necessary (refer to *MAGNETO AND STARTER* subsection).

Testing the CPS Resistance

Disconnect CPS wiring harness connector.

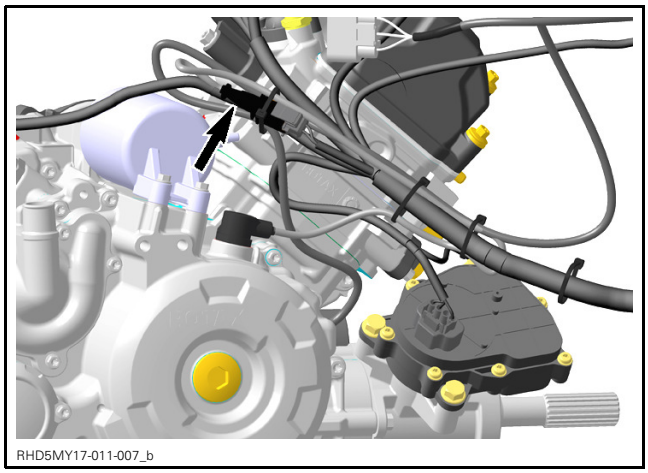

CPS CONNECTOR LOCATION

Probe terminals as per following table.

CPS CONNECTOR		MEASUREMENT
PIN		RESISTANCE Ω @ 20°C (68°F)
1	2	700 - 900 Ω

If resistance is not within specifications, replace the CPS.

If resistance tests good, **reconnect** the CPS connector.

Install ECM-A connector on ECM adapter.

Using a multimeter, recheck resistance as per table.

ECM CONNECTOR		MEASUREMENT
PIN		RESISTANCE Ω @ 20°C (68°F)
A-H1	A-K2	700 - 900 Ω

If resistance value is correct, refer to *REPLACING THE ECM*.

If resistance value is incorrect, repair the connectors or replace the wiring harness between ECM connector and the CPS.

Replacing the CPS

Disconnect CPS connector and cut harness locking tie.

Remove CPS retaining screw and pull out CPS.

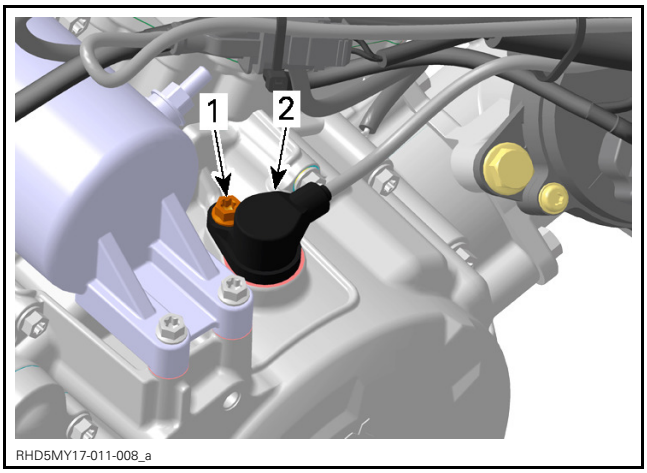

1. *Retaining screw*
2. *CPS*

Install new CPS and secure harness with a new locking tie.

CPS O-RING LUBRICATION	
Service product	SYNTHETIC GREASE (P/N 779162)

TIGHTENING TORQUE	
CPS retaining screw	10 N•m ± 1 N•m (89 lbf•**in** ± 9 lbf•**in**)

MANIFOLD AIR PRESSURE AND TEMPERATURE SENSOR (MAPTS)

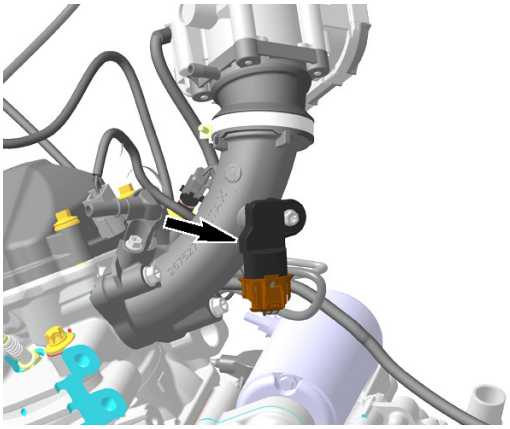
RHD5MY17-011-009_a

NOTE: This sensor is a multifunction device.

MAPTS Pressure Function

Before the engine is started, when power is applied to the system, the sensor measures the ambient air atmospheric pressure. The ambient pressure is, at that moment, stored in the ECM. Thereafter, once the engine is started, it measures the air pressure in the intake manifold at operating RPMs.

The sensor must be correctly installed on intake manifold. Otherwise, the MAPTS could generate a fault code for an unexpected sensor range at idle when it reads the atmospheric pressure. If this is the case, remove sensor and check for oil or dirt on its end and if problem persists, check throttle plate condition/position and the wiring harness. Perform the following tests.

Testing the MAPTS (Pressure Function)

1. Connect vehicle to BUDS2. Refer to *COMMUNICATION TOOLS* subsection.
2. Select the following:
   - **Measurements** page tab
   - **ECM** page.
3. Look for and take note of the MAPTS pressure reading while the engine is stopped.

NOTE: The indicated intake air pressure in BUDS2 must be within 3.4 kPa (.5 PSI) of local atmospheric pressure when the engine is stopped.

MAPTS PRESSURE FUNCTION QUICK TEST			
RESULT	SERVICE ACTION		
NO READING	Circuit Continuity Test of MAPTS Pressure Function	MAPTS Input Voltage Test	Repair or replace wiring
VALUE IS OUT OF RANGE	Replace MAPTS		

4. Perform the same test with a new MAPTS and compare both readings.

Testing the MAPTS Input Voltage

Check the voltage output from ECM to the pressure sensor.

1. Turn ignition key ON.
2. Remove electrical connector from MAPTS.
3. Measure input voltage as per following table.

MAPTS CONNECTOR		MEASUREMENT
PIN		VOLTAGE
1	3	5 Vdc

If voltage test is good, replace the MAPTS.

If voltage test is not good, carry out *TESTING THE MAPTS CIRCUIT CONTINUITY (PRESSURE FUNCTION)*.

Testing the MAPTS Circuit Continuity (Pressure Function)

1. Disconnect the ECM "A" connector.
2. Install ECM-A connector on ECM adapter tool.
3. Check continuity of the following circuits.

TESTING THE MAPTS CIRCUIT CONTINUITY (PRESSURE FUNCTION)		
ECM-A	MAPTS CONNECTOR	RESISTANCE VALUE
Pin B4	Pin 3	Close to 0 Ω
Pin G4	Pin 4	
Pin H2	Pin 1	

If resistance is not within specification, repair or replace the wiring harness between ECM connector and the MAPTS.

MAPTS Temperature Function

The sensor monitors the temperature in the intake manifold.

Testing the MAPTS (Temperature Function)

1. Connect vehicle to BUDS2. Refer to *COMMUNICATION TOOLS* subsection.
2. Select the following:
   - **Measurements** page tab
   - **ECM** page.
3. Look for and take note of the MAPTS temperature reading while the engine is stopped.

NOTE: If the complete vehicle is at room temperature, BUDS2 should display the ambient air temperature at the intake manifold.

4. Perform the same test with a new MAPTS and compare both readings.

If the engine's MAPTS temperature reading is significantly different than the new MAPTS, replace it.

NOTE: Both sensors must feel same ambient air temperature.

If there is no reading, carry out *TESTING THE MAPTS RESISTANCE (TEMPERATURE FUNCTION)*.

Testing the MAPTS Resistance (Temperature Function)

Disconnect the connector from the MAPTS.

Check the resistance of the sensor itself as shown.

MAPTS		MEASUREMENT
PIN		RESISTANCE Ω @ 20°C (68°F)
1	2	2280 - 2740

If resistance is not within specification, replace the MAPTS.

If resistance tests good, **reconnect** the MAPTS and disconnect the connector "A" from the ECM.

Install ECM-A connector on ECM adapter tool.

Using a multimeter, recheck resistance value as per following table.

ECM CONNECTOR		MEASUREMENT
PIN		RESISTANCE Ω @ 20°C (68°F)
A-H2	A-H3	2280 - 2740

MAPTS TEMPERATURE SENSOR TEST RESULTS			
RESULT	SERVICE ACTION		
NO READING	Circuit Continuity Test of MAPTS Temperature Function	MAPTS Input Voltage Test	Repair or replace wiring
INCORRECT RESISTANCE VALUE	Replace MAPTS		

Testing the MAPTS Circuit Continuity (Temperature Function)

TESTING THE MAPTS CIRCUIT CONTINUITY (TEMPERATURE FUNCTION)		
ECM-A	MAPTS CONNECTOR	RESISTANCE VALUE
Pin H2	Pin 1	Close to 0 Ω
Pin H3	Pin 2	

MAPTS Replacement

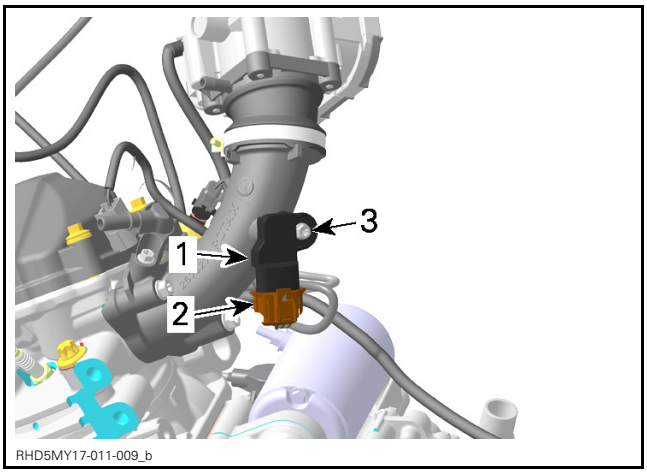

1. MAPTS
2. MAPTS connector
3. Retaining screw

Disconnect MAPTS connector and remove the MAPTS from the plenum.

Install new MAPTS as per following table.

TIGHTENING TORQUE	
MAPTS retaining screw	6 N•m ± 0.7 N•m (53 lbf•**in** ± 6 lbf•**in**) + LOCTITE 243 (BLUE) (P/N 293 800 060)

COOLANT TEMPERATURE SENSOR (CTS)

CTS Location

The CTS is located on the RH side of the engine, on the cylinder head.

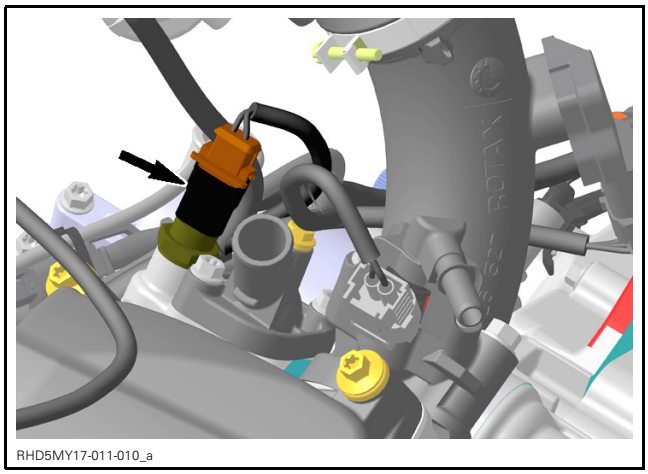

Testing the CTS using BUDS2

1. Connect the vehicle to BUDS2. Refer to *COMMUNICATION TOOLS* subsection.
2. Select the following:
   - **Measurements** page tab
   - **ECM** page.
3. Look for the engine temperature indication.

The engine temperature gauge in BUDS2 should provide an indication of the actual engine coolant temperature. Otherwise, perform *TESTING THE CTS RESISTANCE*.

Testing the CTS Resistance

1. Disconnect the plug connector from the CTS and check the resistance of the sensor itself.

CTS SENSOR		MEASUREMENT
PIN		RESISTANCE Ω @ 20°C (68°F)
1	2	2280 - 2740

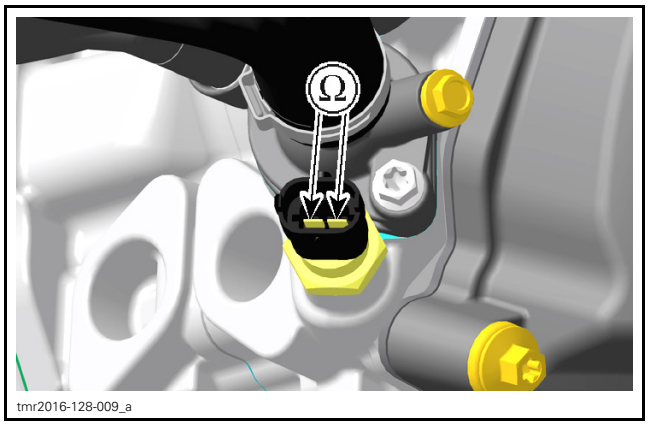

If resistance is out of specification, replace the CTS.

If resistance test is good, **reconnect** the CTS and disconnect the ECM connector "A" from the ECM.

2. Install ECM-A connector on ECM adapter tool.
3. Using a multimeter, recheck resistance from the ECM connector as per table.

ECM "A" CONNECTOR		MEASUREMENT
PIN		RESISTANCE Ω @ 20°C (68°F)
A1	J2	2280 - 2740

If resistance value is correct, refer to *ECM REPLACEMENT*.

If resistance value is incorrect, repair the connectors or replace the wiring harness between ECM connector and the CTS.

Replacing the CTS

1. Drain coolant, refer to *PERIODIC MAINTENANCE PROCEDURES* subsection.
2. Disconnect CTS connector and remove CTS.
3. Install the new CTS and torque as specified.

TIGHTENING TORQUE	
CTS	16 N•m ± 2 N•m (142 lbf•**in** ± 18 lbf•**in**)

4. Reinstall remaining removed parts.
5. Refill and bleed the cooling system, refer to *COOLING SYSTEM* subsection.

ELECTRONIC FUEL INJECTION (EFI) (HD8, HD10)

SERVICE TOOLS

Description	Part Number	Page
ECM ADAPTER TOOL	529 036 166	1
FLUKE 115 MULTIMETER	529 035 868	1

SERVICE PRODUCTS

Description	Part Number	Page
LOCTITE 243 (BLUE)	293 800 060	15
LOCTITE 767 (ANTISEIZE LUBRICANT)	293 800 070	17
SYNTHETIC GREASE	779162	13

GENERAL

The following tools are required to test most of the electrical parts.

REQUIRED TOOL	
FLUKE 115 MULTIMETER (P/N 529 035 868)	
ECM ADAPTER TOOL (P/N 529 036 166)	

⚠ WARNING

Fuel is flammable and explosive under certain conditions.
Ensure work area is well ventilated.
Do not smoke or allow open flames or sparks in the vicinity.
Fuel lines remain under pressure at all times.
Always proceed with care and use appropriate safety equipment when working on pressurized fuel system.
Wipe off any fuel spillage.
Do not allow fuel to spill on hot engine parts and/or on electrical connectors.
Replace any damaged, leaking or deteriorated fuel lines or connections.
Always, pressurize the fuel system if any fuel related component was disconnected or removed.
Proceed with care when removing/installing high pressure test equipment.

SYSTEM DESCRIPTION

Refer to the *ENGINE MANAGEMENT SYSTEM* subsection for a general layout of the various EFI system components.

The electronic fuel injection system (EFI) is comprised of various sensors used for detecting ongoing operating conditions of the engine and vehicle, and includes all the components that perform the required adjustments to the engine.

Electrical System

ECM (Engine Control Module)

From input signals, the ECM acknowledges driver demands and converts them to an engine torque requirement through calculation of several variables. Then, the ECM controls the iTC, the injection system and the ignition system to meet the torque requirement.

The ECM manages the engine torque requirements and controls engine operation to ensure it is delivering optimum performance and fuel economy. The ECM also controls idle RPM and limits maximum engine speed through the iTC system.

EFI Sensors

The ECM reads the inputs from the sensors which it compares to predetermined parameters stored in the ECM, makes computations, and activates the outputs accordingly (injectors, ignition coils etc.).

Signals from sensors are used by the ECM to determine the injection and ignition parameters (referenced to fuel maps) as required to maintain the optimum air-fuel ratio.

Air Intake System

Air Filter

Air, drawn into the air filter housing, first passes through an inlet duct.

After it passes through the air filter, an air duct (intake adapter) is used to channel the air to the throttle body.

Throttle Body

The throttle body is mounted on the front end of the plenum, aft of the air filter housing.

Air for combustion, drawn in by the engine, flows through the air intake system, then through the throttle body where it is regulated by the electronic throttle actuator (ETA).

The ETA allows the ECM to control the throttle plate, and therefore engine torque.

The TPS is also incorporated in the throttle body. It provides a signal to the ECM of the actual throttle plate position.

Plenum

After the air flows through the throttle body, it enters the plenum. The plenum provides a resonance effect which leads to an improved cylinder charge.

Fuel System

Fuel Rail

Two fuel rails, one for each injector, are mounted on the intake sockets. The fuel rails, which are used to secure the injectors to the sockets, also provide to the injectors the fuel pressure that they receive from the fuel pump.

The fuel pressure applied to the fuel rails is regulated by the fuel pressure regulator located in the fuel pump module.

Fuel Injectors

The fuel injectors are used to inject fuel into the intake ports of the cylinder head. One injector is used per cylinder.

Fuel Pump

An electric fuel pump with an integrated pressure regulator and fuel system filters is used. For more details on the fuel pump unit, refer to *FUEL TANK AND FUEL PUMP* subsection.

ADJUSTMENT

IDLE SPEED

Idle speed is not adjustable. The ECM controls the idle speed of the engine primarily through control of the throttle plate position.

The vehicle multifunction gauge can provide an accurate digital readout of the engine's idle speed.

The engine RPM may also be verified using the BRP diagnostic software (BUDS2).

Connect the vehicle to BUDS2. Refer to *COMMUNICATION TOOLS* subsection.

In BUDS2, go to:

– **Measurements** page
– **ECM** button.

NOTE: The multifunction gauge and the BRP diagnostic software (BUDS2) use the same signal to provide the engine RPM indication.

TROUBLESHOOTING

DIAGNOSTIC TIPS

Engine problems are not necessarily related to the fuel injection system.

It is important to ensure that the engine and propulsion system, fuel delivery and electrical systems are functioning normally.

For diagnostics purposes, use the BRP diagnostic software (BUDS2).

After a problem has been solved, be sure to clear the fault(s) in the ECM using the BRP diagnostic software.

⚠ WARNING

Electrical actuators and electronic modules may be powered up as soon as the ignition switch is set to ON. Always disconnect the battery prior to disconnecting any electrical or electronic parts.

Never use a battery charger to temporarily substitute the battery as it may cause the ECM to function erratically, or not at all.

Check related-circuit fuse solidity and condition with an ohmmeter. A visual inspection could lead to a false diagnosis.

Electrical Related Problems

It is important to check the following in the electrical system:

– Battery voltage
– Fuses
– Ground connections
– Wiring and connectors.

Ensure that all electronic components are genuine OEM. Any modification to the wiring harness may lead to poor system operation or generate fault codes.

Electrical Connections

Pay particular attention to ensure that terminals and pins are not out of their connectors, corroded, or out of shape.

When probing terminals, pay attention not to deform the terminals as this could cause a loose or intermittent connection that would be difficult to troubleshoot.

PROCEDURES

ENGINE CONTROL MODULE (ECM)

NOTE: As a first troubleshooting step, always check for applicable fault codes using the BRP diagnostic software (BUDS2).

Quick Test to Validate ECM Operation

Turn ignition key to ON.

NOTE: Setting the ignition switch to ON wakes up the ECM, which then turns on the following.

QUICK INDICATION THAT ECM IS FUNCTIONING (ASSUMING THE OBSERVED COMPONENT IS IN GOOD WORKING ORDER)
Multifunction gauge turns ON.
Fuel pump turns on for approx. 5 seconds.
Rear lights turn on.

ECM First Initialization

This procedure performs a reset of the following values in the ECM:

– TAS (Throttle Accelerator Sensor)
– TPS (Throttle Position sensor)
– GBPS (Gearbox Position Sensor).

This reset **must** be carried out whenever the ECM has been replaced.

This reset **may** be carried out whenever any of the following components have been replaced instead of their respective reset procedures:

– Throttle body (for TPS)
– GBPS (Gearbox Position Sensor).

1. Connect the vehicle to the BRP diagnostic software (BUDS2).
2. In B.U.D.S., select the following:
   – **Setting** page
   – **ECM** button
   – **Initializations** tab
   – **ECM First Initialization**
3. In the **ECM first initialization** field, click on the **Reset** button.
4. Follow the instructions in the message boxes that appear.

If the operation is successful, a message will be displayed stating that the reset was successful.

If an error occurred or a component is out of range, a message may be displayed. Follow the instructions in the message and repeat the procedure.

5. Check for fault codes.

If a fault code is generated, carry out the service actions, reset the fault and repeat the reset procedure.

6. Start engine and make sure it operates normally throughout its full engine RPM range.

ECM Location

The ECM is located behind the driver's seat backrest.

ECM Connector Identification

There are 2 connectors connected to the ECM:
- Engine harness connected to ECM-A
- Vehicle system control harness connected to ECM-B.

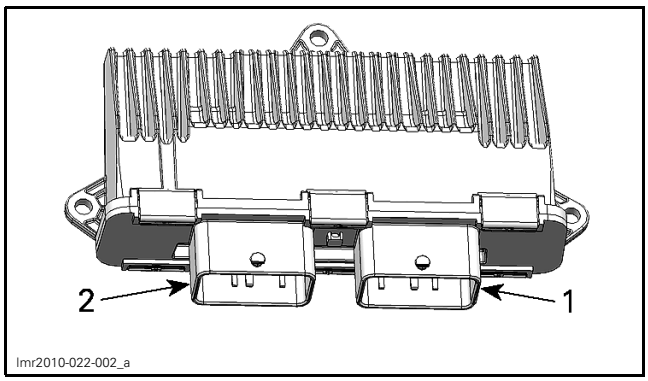

1. *Connector A*
2. *Connector B*

The ECM connectors have 48 pins.

NOTE: For connector information, cleaning and probing, refer to *WIRING HARNESS AND CONNECTORS* subsection.

ECM Power Supply Test

1. Disconnect connector "B" from the ECM.
2. Install ECM connector "B" on the ECM adapter tool.
3. Install a jumper wire between B-H2 and B-M2 on the ECM adapter tool.
4. Turn the ignition switch to ON.
5. Set the multimeter to Vdc.
6. Check for voltage as follows.

ECM ADAPTER	BATTERY	VOLTAGE
B-M4	Negative post	Battery voltage

If voltage is not measured, check the following:
- Main relay
- Wiring and connections, refer to the *WIRING DIAGRAM*.

Testing the Continuity of ECM Ground Circuits

1. Disconnect connector "B" from ECM.
2. Install the ECM-B connector on the ECM adapter tool.
3. Set the multimeter to Ω.
4. Probe adapter terminals as per following table.

ECM ADAPTER	BATTERY POST	RESISTANCE
Pins B-L1, B-M2 and B-M3	Ground	Close to 0 Ω (continuity)

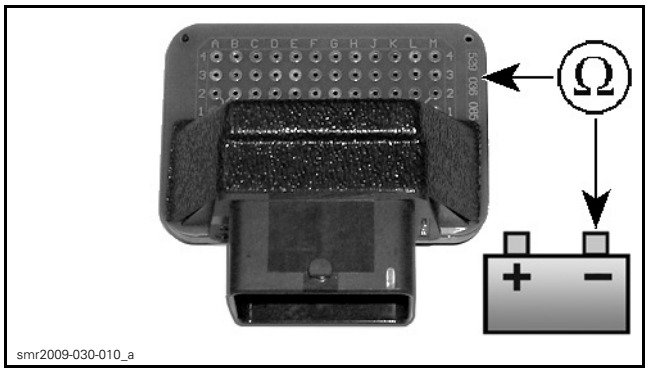

If any measurement is out of specification, check the grounds. Refer to *POWER DISTRIBUTION AND GROUNDS* subsection.

Removing the ECM

NOTE: If a new ECM is to be installed, first read the procedures in *REPLACING THE ECM* in this subsection.

1. Disconnect battery cables.

NOTICE **Always disconnect the BLACK negative (–) battery cable first, then disconnect RED positive (+) cable.**

2. Disconnect both ECM connectors from ECM.
3. Unscrew all retaining screws and remove the ECM from its support.

Installing the ECM

Reverse removal procedure however, pay attention to the following.

TIGHTENING TORQUE	
ECM retaining screws	2.5 N•m ± 0.5 N•m (22 lbf•**in** ± 4 lbf•**in**)

1. Reconnect ECM connectors.
2. Reconnect battery cables.

NOTICE **Always reconnect the RED positive (+) battery cable first, then reconnect BLACK negative (–) cable.**

3. If a new ECM is installed, refer to *REPLACING THE ECM* in this subsection.

Replacing the ECM

Prior to replacing an ECM, ensure that all the recommendations in the general introduction of this section have been followed.

NOTE: Proceed with an *ECM FIRST INITIALIZATION* as it may resolve the problem.

If the ECM is replaced, data must be transferred into the new ECM.

ECM Data Entry for ECM Replacement

Use one of the following 2 methods to collect the required information. The 1st being the easiest:

1. Use BUDS2 to obtain the data from a saved "*.buds2" file on your PC computer.
2. Collect the information from the vehicle and on the Knowledge Center.

Once the required information has been collected, refer to *ENTERING THE COLLECTED INFORMATION INTO THE ECM*.

1st Collecting Method: Obtaining the Data from a Saved .buds2 File

1. Start BUDS2.

NOTE: It is not necessary to perform any connection. The PC computer can be used alone.

2. In BUDS2, click on the **Open a BUDS2 file** button.

Make sure you are at: C:\Program Files(x86)\BRP\BUDS2\Files.

IMPORTANT: Be sure to use the file that specifically matches the vehicle you are servicing.

NOTE: The file name structure is as follows:
VIN_date read (yyyymmdd)_hour read (hhmmss).mpem
Example: **2BPSBK8C68V000168_20090206_111640.buds2** Therefore: VIN: 2BPSBK8C68V000168 Date: 2009 02 06 Hour: 11h 16m 40s

3. Select the **Summary** page then the **Vehicle** tab and record (write down) the following information.
   1. Vehicle serial number
   2. Engine serial number
   3. Vehicle model number
   4. Customer name.

2nd Collecting Method: Collect the Information from the Vehicle and BOSSWeb

1. Record engine serial number.
2. Record the following numbers from BOSSWeb. Look in **Sales** menu and choose **Unit history**.
   1. Vehicle serial number
   2. Vehicle model number
   3. Customer name.

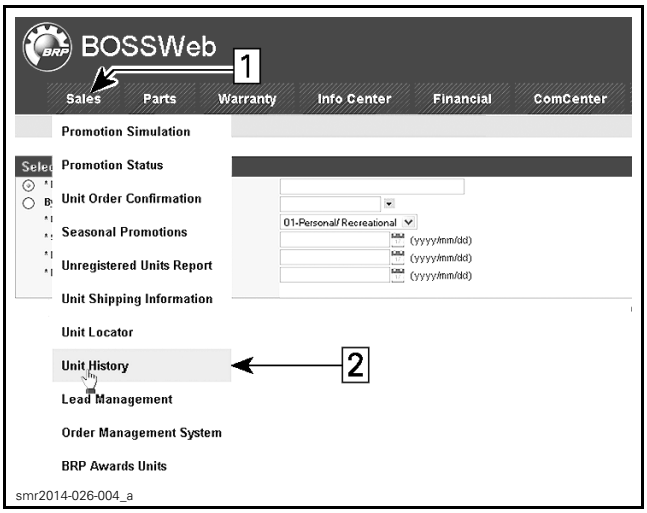

SERVICE, UNIT HISTORY
1. *Click on* SALES *menu*
2. *Select* Unit History

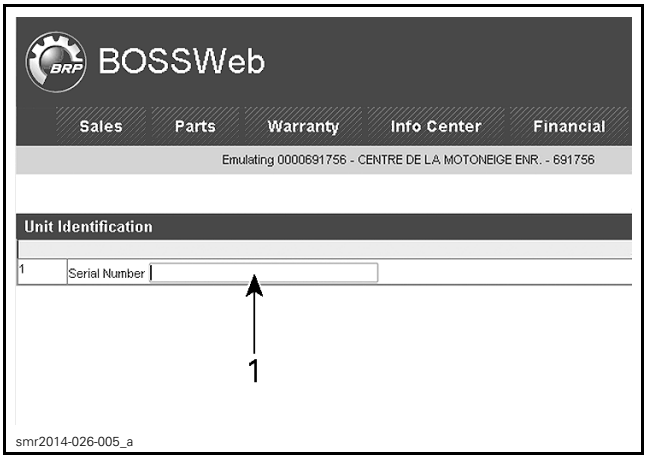

1. *Vehicle Serial Number here*

3. Enter the recorded data in the new ECM as detailed in *ENTERING THE COLLECTED INFORMATION INTO THE ECM*.

Entering the Collected Information Into the ECM

1. Connect the vehicle to the BRP diagnostic software (BUDS2).

2. In BUDS2, click the **Scan** button to read the new ECM.
3. Select:
   – **Summary** page
   – **Vehicle** button.
4. Write all of the following information you recorded previously.
   1. Vehicle serial number (VIN)
   2. Engine serial number
   3. Vehicle model number
   4. Customer name.

NOTICE **Enter only the appropriate product model number as obtained when gathering the information.**

NOTICE **Pay particular attention when typing the V.I.N. and model numbers. Once Write Data button is pressed, the data cannot be modified.**

5. Perform the *THROTTLE POSITION SENSOR INITIALIZATION* procedure, refer to *THROTTLE POSITION SENSOR (TPS)* in this subsection.
6. Start the engine and ensure proper operation.
7. Reinstall any remaining removed parts.

FUEL INJECTOR

Testing the Fuel Injector Operation Using BUDS2 (Dynamic)

NOTE: As a first troubleshooting step, always check for applicable fault codes using the BRP diagnostic software (BUDS2).

1. Connect the vehicle to the BRP diagnostic software (BUDS2).
2. Start engine.
3. In BUDS2, select the following:
   – **Scan** button
   – **Functions** tab
   – **Activate Fuel Injector** .

If the engine RPM drops momentarily when clicking on a cylinder, the injector on this cylinder is functioning normally.

If the engine RPM does not drop momentarily when clicking on a cylinder, this cylinder is not functioning properly. Check the following:

– Fuel injector operation. Refer to *TESTING THE FUEL INJECTOR BALANCE USING BUDS2*
– Spark plug and ignition coil. Refer to *IGNITION SYSTEM* subsection.
– Engine condition.

Testing the Fuel Injector Balance Using BUDS2

NOTICE **After fuel injector activation using BUDS2, always crank engine in drowned mode to ventilate engine and prevent a potential backfire due to fuel accumulation in engine.**

1. Install a fuel pressure gauge as described in *TESTING THE FUEL PUMP PRESSURE* of *FUEL TANK AND FUEL PUMP* subsection.
2. Connect the vehicle to the BRP diagnostic software (BUDS2).
3. Press the Start button to activate the ECM.
4. In BUDS2, select the following:
   – **Functions** page
   – **ECM** button
   – **Activate Fuel Pump**.
5. Click on the **ACTIVATE** button to activate fuel pump.
6. Fuel pressure must be within specification. Refer to *FUEL TANK AND FUEL PUMP* subsection. Re-activate fuel pump as necessary.
7. In BUDS2, energize fuel injector **no. 1**.

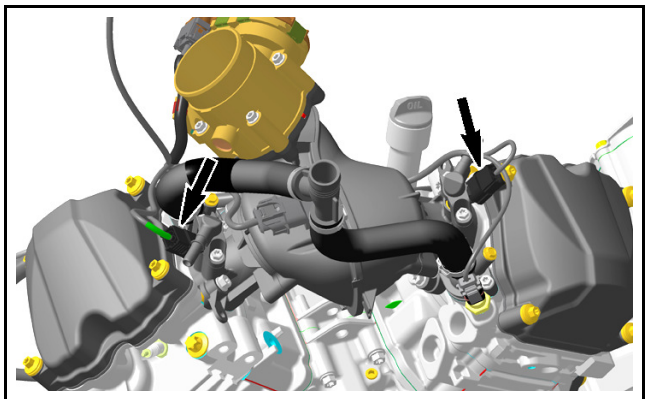
tmr2016-128-001_a

8. Record the fuel pressure drop for injector **no. 1**.
9. Re-activate fuel pump.
10. Repeat the procedure for fuel injector **no. 2** and record the pressure drop for each injector.
11. The maximum fuel pressure drop between injectors should not exceed the following specification:

MAXIMUM FUEL PRESSURE DROP ALLOWED BETWEEN FUEL INJECTORS
10 kPa (1.5 PSI)

If pressure drop of any fuel injector is greater than the specification, replace that injector then repeat the test.

12. Using the valve on the fuel pressure gauge, release the pressure in the system (if so equipped).
13. Remove fuel pressure gauge and reinstall removed parts.

Testing for Fuel Injector Leaks

Carry out the *TESTING THE FUEL PUMP PRESSURE* as detailed in the *FUEL TANK AND FUEL PUMP* subsection.

Testing the Fuel Injector Resistance

Disconnect connector "A" from the ECM.

Disconnect the engine connector (HIC). Refer to *WIRING HARNESS AND CONNECTORS* subsection.

Check resistance value between terminals as follows.

FUEL INJECTOR RESISTANCE TEST AT HIC CONNECTOR			
INJECTOR	**HIC CONNECTOR**	**ECM CONNECTOR "A"**	**RESISTANCE @ 20°C (68°F)**
FRONT	D	A-J1	11.4 - 12.6 Ω
REAR		A-K1	

If resistance value obtained is incorrect, remove injector connector and check resistance value between injector pins as follows.

FUEL INJECTOR RESISTANCE TEST AT INJECTOR CONNECTOR			
INJECTOR	**INJECTOR PIN**		**RESISTANCE @ 20°C (68°F)**
FRONT	1	2	11.4 - 12.6 Ω
REAR			

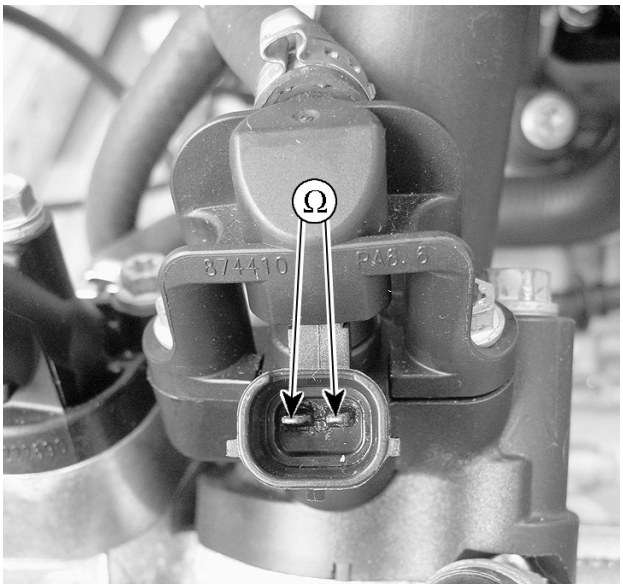

vmr2007-043-006_a

TYPICAL

If readings are out of specifications, replace injector.

If readings are good, carry out *TESTING THE FUEL INJECTOR INPUT VOLTAGE*.

Testing the Fuel Injector Input Voltage

Disconnect the fuel injector connector.

NOTE: If the connector is hard to unlock, gently use a screwdriver to release connector.

vmr2006-014-001_a

TYPICAL

NOTE: It is not necessary to activate the injector since it is continuously powered when the ignition key is set to ON.

Use a multimeter and set it to Vdc. Read voltage.

CYLINDER	INJECTOR CONNECTOR		MEASUREMENT
	WIRE		
FRONT	VIOLET/ BLUE	Battery ground	Battery voltage
REAR			

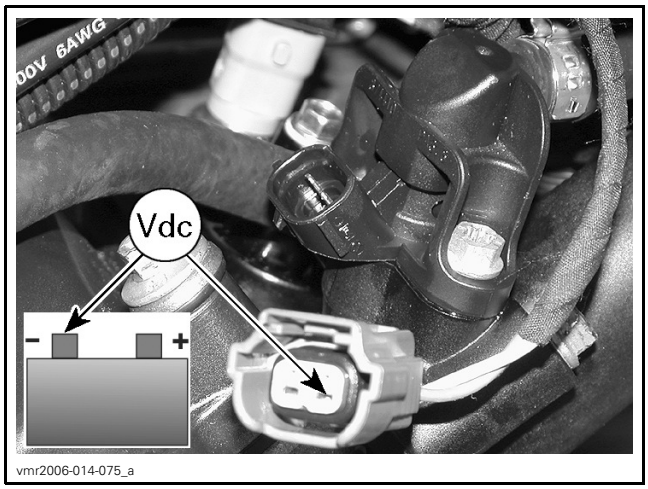

vmr2006-014-075_a

TYPICAL

If supply voltage is not good, check continuity between fuse F5 and injector (see *WIRING DIAGRAMS*).

NOTE: Probe fuse exactly as shown. This validates fuse at the same time.

Use a multimeter and set it to Ω. Read resistance.

CYLINDER	INJECTOR CIRCUIT		MEASUREMENT
	WIRE		
FRONT	VIOLET/ BLUE	Fuse F5	Close to 0 Ω
REAR			

If continuity is good, check relay and wiring from battery.

If continuity is faulty, check fuse and if OK, repair or replace wiring going to injector.

If supply voltage is good, check ground circuit between injector and ECM (see *WIRING DIAGRAMS*).

– If ground circuit is faulty, repair/replace wiring and connectors.
– If ground circuit is good, refer to *REPLACING THE ECM* .

Removing the Fuel Injector

Remove the fuel rail refer to *FUEL RAIL* for the procedure.

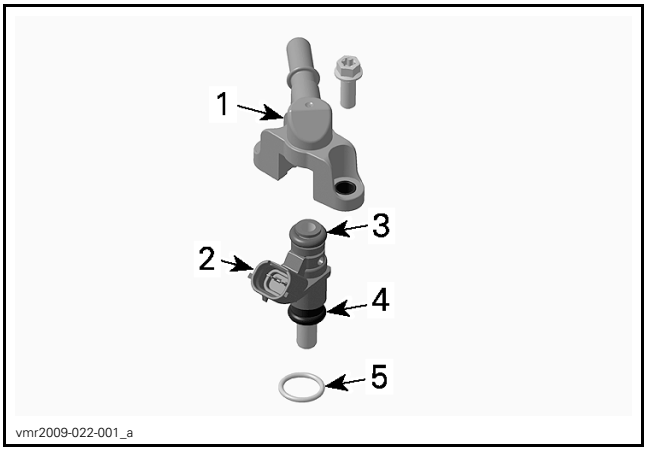

vmr2009-022-001_a

TYPICAL - FUEL RAIL ASS'Y
1. *Fuel rail*
2. *Fuel injector*
3. *Injector top O-ring*
4. *Injector bottom O-ring*
5. *Manifold O-ring*

Then pull fuel injector out of the fuel rail.

Installing the Fuel Injector

The installation is the reverse of the removal procedure. However, pay attention to the following details.

NOTICE **If installing the removed injector(s), always install NEW O-rings.**

Lubricate O-rings to ease insertion in rail.

FUEL INJECTOR O-RINGS	
Service product	Engine oil

Install fuel injector with your hand. Do not use any tool.

Position the manifold O-ring on injector as in following illustration.

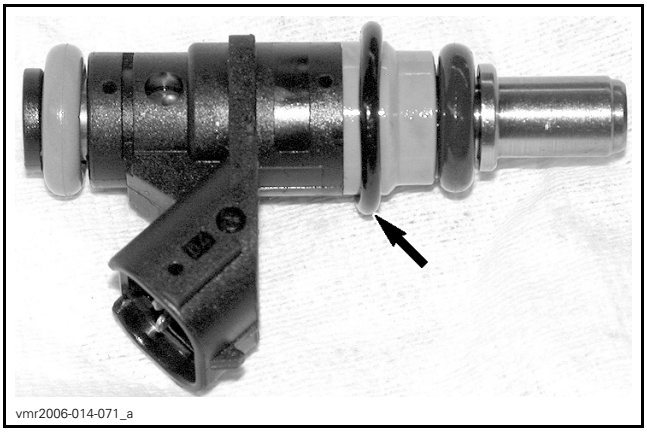
vmr2006-014-071_a

TYPICAL - MANIFOLD O-RING POSITION

Carefully insert injector in manifold paying attention to the manifold O-ring.

NOTICE Gently push O-ring in evenly all around while inserting injector. O-ring must be completely inserted and not visible, before completing the insertion of the injector.

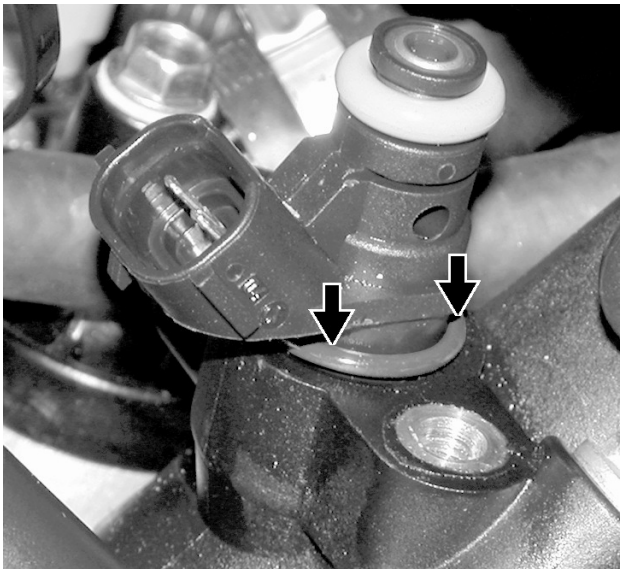
vmr2006-014-072_a

Firmly push injector until it bottoms out.

Reinstall fuel rail.

FUEL RAIL

Replacing the Fuel Rail

Removing the Fuel Rail

1. Connect the vehicle to the BRP diagnostic software (BUDS2).
2. Go to this location and follow the instructions:
   - **Function** page
   - **ECM** button
   - **Execute Fuel Pressure Relief**.
3. Wrap a rag around the inlet hose and release the quick fitting.

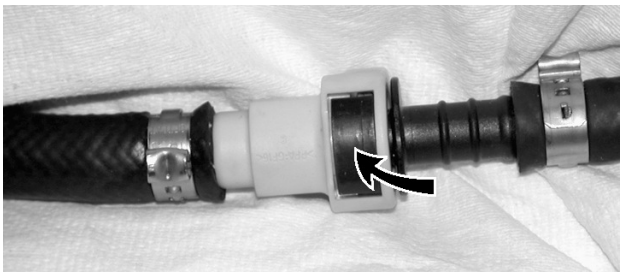
vmr2006-014-070_a

TYPICAL

4. Unscrew rail retaining screws.
5. Gently pull rail off by hand.

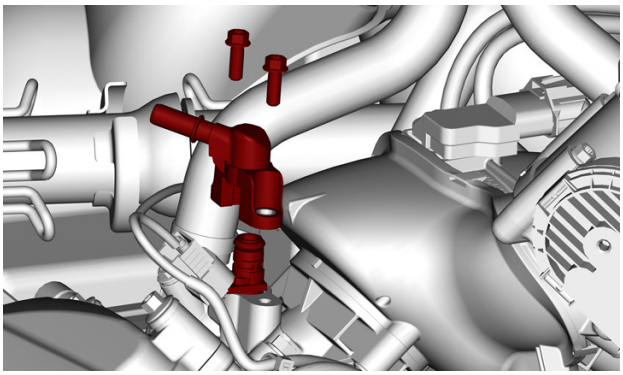
tmr2016-128-305_a

To disconnect fuel rail from hose, cut clamp on fuel hose. Refer to *FUEL TANK AND FUEL PUMP* for clamp removal/installation procedures.

NOTE: If fuel rail is removed for access to fuel injector, it is not necessary to cut hose clamp. Only to replace fuel rail.

Installing the Fuel Rail

The installation is the reverse of the removal procedure. However, pay attention to the following details.

Install new clamps using pliers as per removal (if fuel rail was replaced).

Lubricate fuel injector O-rings to ease insertion in rail.

FUEL INJECTOR O-RINGS	
Service product	Engine oil

Install fuel rail and evenly tighten screws a little at a time each side.

TIGHTENING TORQUE	
Fuel rail retaining screws	10 N•m ± 1 N•m (89 lbf•**in** ± 9 lbf•**in**)

⚠ WARNING

Perform a fuel pressure test and ensure that there is no leak. Refer to *FUEL TANK AND FUEL PUMP*. Run engine and check for leaks.

THROTTLE BODY

Throttle Body Description

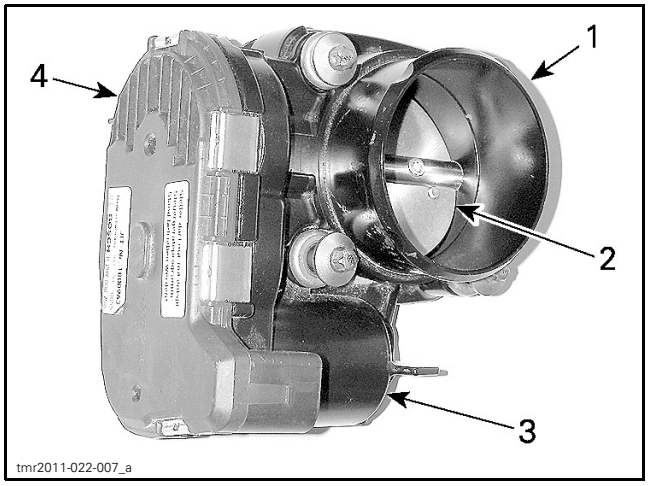

1. *Throttle body*
2. *Throttle plate*
3. *Electronic throttle actuator (electric motor inside)*
4. *Throttle position sensor (TPS) (inside)*

Lubricating the Throttle Body

No lubrication is required.

Cleaning the Throttle Body

1. Remove air inlet bellow from throttle body.
2. Check throttle body cleanliness using a flashlight. Fully open throttle plate and verify:
   - Throttle body bore
   - Throttle plate edge.

Look for:
- Dirt
- Oily surfaces
- Carbon and salt deposits on throttle plate and the surrounding bore.

3. Clean as necessary.

THROTTLE BODY CLEANING	
Service product	GUNK INTAKE MEDIC or an equivalent throttle body cleaner

NOTICE **Only use an appropriate throttle body cleaner that will not damage O-rings and EFI sensors.**

⚠ CAUTION **Use the product in a well ventilated area. Refer to product manufacturer's warnings.**

4. To avoid getting dirt into engine, spray cleaner on a clean rag then rub rag against throttle plate and bore. A toothbrush may also be used.

⚠ CAUTION **Ensure key is removed so that nobody can activate the electrical system, otherwise the ECM would turn on and the throttle actuator (ETA) would cycle. This could cause serious finger injury as the throttle plate moves quickly.**

5. Gently open throttle plate and hold fully open to reach all surfaces.
6. To remove residual dirt, spray cleaner on throttle plate and on bore.
7. Reinstall removed parts.

Removing the Throttle Body

1. Disconnect air inlet bellow from throttle body.
2. Disconnect throttle body connector.

Simultaneously press the end of both connector locking tabs to unlock.

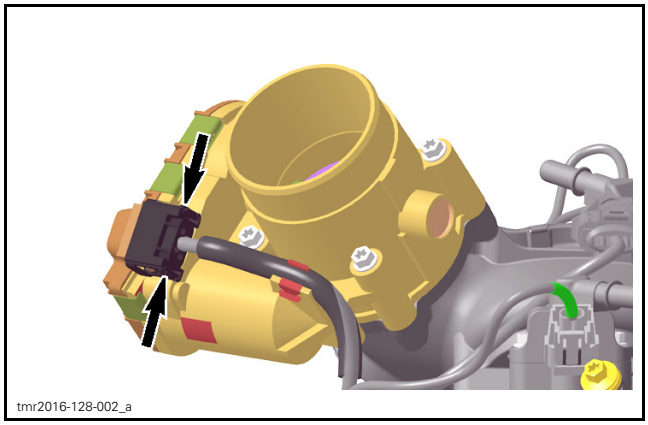

3. Remove screws retaining throttle body to plenum.

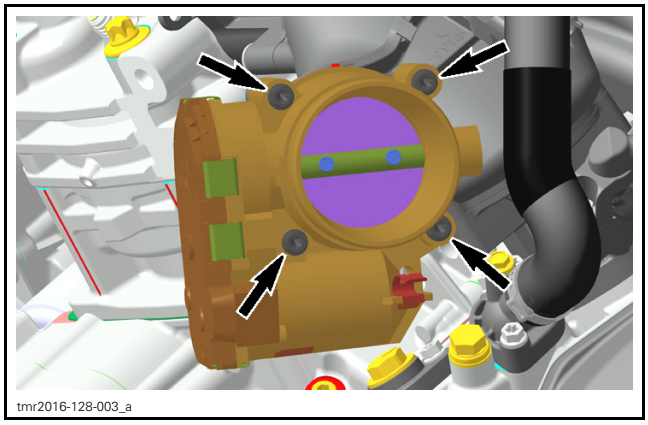

4. Pull throttle body off plenum.

Installing the Throttle Body

The installation is the reverse of the removal procedure. However, pay attention to the following details.

TIGHTENING TORQUE	
Throttle body retaining screws	10 N•m ± 1 N•m (89 lbf•**in** ± 9 lbf•**in**)

1. Perform the *THROTTLE POSITION SENSOR INITIALIZATION* reset procedure. Refer to *THROTTLE POSITION SENSOR (TPS)* in this subsection.

THROTTLE POSITION SENSOR (TPS)

TPS Description

The TPS is part of the throttle body.

The throttle position sensor (TPS) is a double potentiometer that sends signals to the ECM that are proportional to the throttle plate angle.

NOTE: As a first troubleshooting step, always check for applicable fault codes using the BRP diagnostic software (BUDS2).

Throttle Position Sensor Initialization

NOTE: The TPS iniatialization procedure **must** be carried out whenever the throttle body is replaced, unless an ECM first initialization reset is carried out.

This operation performs a reset of the TPS basic values in the ECM. This reset is very important as the TPS values are part of the basic parameters for all fuel mapping calculations and control of several settings such as for idle speed, LIMP HOME mode and maximum RPM of the engine.

NOTICE **An improperly set TPS may lead to improper idle speed (too low or too high), poor engine performance, poor engine starting and engine stop on deceleration, fault codes and possible engine damage. Emission compliance may also be affected.**

1. Connect the vehicle to the BRP diagnostic software (BUDS2). Refer to *COMMUNICATION TOOLS AND B.U.D.S.* subsection.
2. In BUDS2, select the following:
   – **Setting** page
   – **ECM** button
   – **Reset TPS**.
3. Ensure the accelerator pedal is fully released and at the idle position.
4. In the **Reset TPS** box, click on the **Reset** button.

A message will be displayed if the operation is successful.

If an error occurred or the TPS is not within the allowed range while resetting, the ECM will generate a fault code and will not accept the setting.

5. If a fault message is displayed, follow the instructions in the message(s).
6. Check for fault codes.
7. If a fault code is generated,
   – Carry out the service actions.
   – Reset the fault.
   – Repeat the reset procedure.
8. Start engine and make sure it operates normally throughout its full engine RPM range.

Testing the TPS Resistance

1. Ensure the throttle body connector is properly connected.
2. Disconnect ECM connector A from the ECM and install it on the ECM adapter tool.
3. Set multimeter to Ω.
4. Probe circuit as per following table while using your hand to manually move throttle plate.

ECM ADAPTER		FULLY CLOSED THROTTLE PLATE (1)		FULLY OPEN THROTTLE PLATE	
		RESISTANCE (Ω)			
PIN		MIN.	MAX.	MIN.	MAX.
A-A2	A-K4	875	1625	875	1625
A-A2	A-K3	954	1934	228	585
A-A2	A-F3	254	634	980	1983
A-K3	A-K4	228	585	954	1934
A-K3	A-F3	1385	2315	1385	2315
A-K4	A-F3	980	1983	254	634

(1) To obtain the fully closed position, it is necessary to push against the throttle plate in the throttle body with your hand and hold it in this position for the measurement.

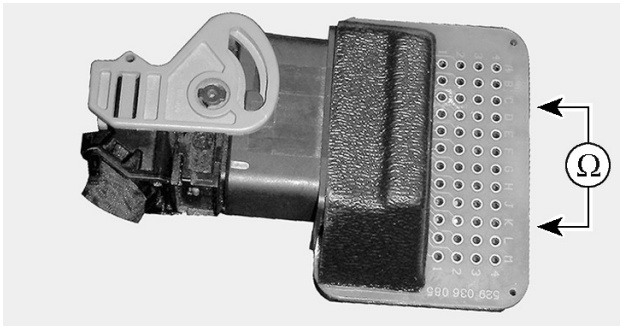

vmr2008-022-005_a

If any resistance value is incorrect, check wire continuity between ECM and throttle body before assuming the TPS is at fault. Refer to *WIRING DIAGRAM* subsection.

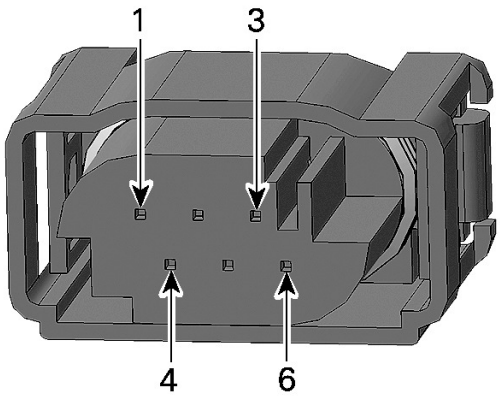

tmr2011-022-019_a

THROTTLE BODY CONNECTOR PIN-OUT

Replacing the TPS

Carry out a *THROTTLE POSITION SENSOR INITIALIZATION* procedure as detailed in *THROTTLE BODY* of this subsection.

CRANKSHAFT POSITION SENSOR (CPS)

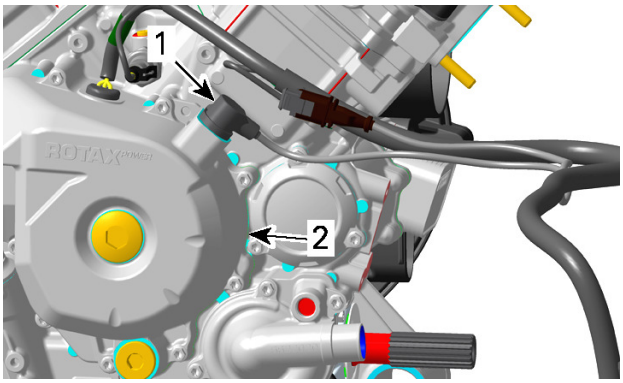

tmr2016-128-004_a

1. *CPS*
2. *Magneto cover*

NOTE: Take into account that a CPS fault can be triggered by bent or missing encoder wheel teeth. First check fault codes using the BRP diagnostic software (BUDS2), then check the encoder wheel teeth condition if necessary (refer to *MAGNETO AND STARTER* subsection).

Testing the CPS Resistance

Disconnect CPS wiring harness connector.

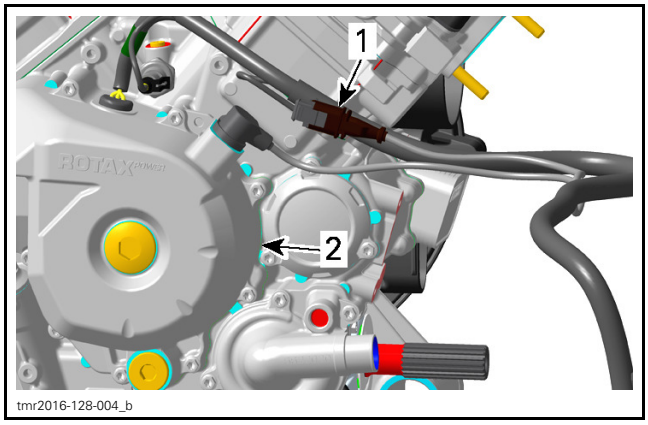

tmr2016-128-004_b

1. *CPS connector location*
2. *Magneto cover*

Probe terminals as per following table.

CPS CONNECTOR		MEASUREMENT
PIN		RESISTANCE Ω @ 20°C (68°F)
1	2	700 - 900 Ω

If resistance is not within specifications, replace the CPS.

If resistance tests good, **reconnect** the CPS connector.

Install ECM-A connector on ECM adapter.

Using a multimeter, recheck resistance as per table.

ECM CONNECTOR		MEASUREMENT
PIN		RESISTANCE Ω @ 20°C (68°F)
A-H1	A-K2	700 - 900 Ω

If resistance value is correct, refer to *REPLACING THE CPS*.

If resistance value is incorrect, repair the connectors or replace the wiring harness between ECM connector and the CPS.

Replacing the CPS

Disconnect CPS connector and cut harness locking tie.

Remove CPS retaining screw and pull out CPS.

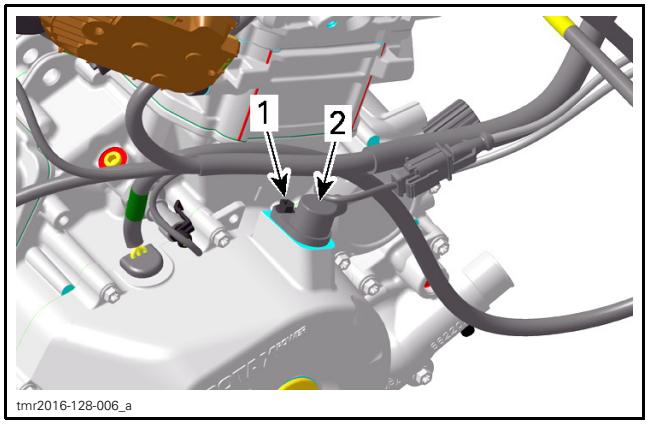

1. Retaining screw
2. CPS

Lubricate O-ring of CPS.

CPS O-RING LUBRICATION	
Service product	SYNTHETIC GREASE (P/N 779162)

Install new CPS and secure harness with a new locking tie.

TIGHTENING TORQUE	
CPS retaining screw	10 N•m ± 1 N•m (89 lbf•**in** ± 9 lbf•**in**)

MANIFOLD AIR PRESSURE AND TEMPERATURE SENSOR (MAPTS)

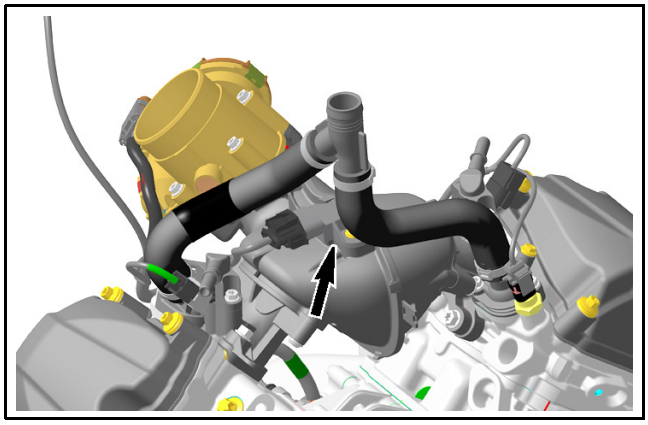

NOTE: This sensor is a multifunction device.

MAPTS Pressure Function

Before the engine is started, when power is applied to the system, the sensor measures the ambient air atmospheric pressure. The ambient pressure is, at that moment, stored in the ECM. Thereafter, once the engine is started, it measures the air pressure in the inlet end of the plenum at operating RPMs.

The sensor must be correctly installed on plenum. Otherwise, the MAPTS could generate a fault code for an unexpected sensor range at idle when it reads the atmospheric pressure. If this is the case, remove sensor and check for oil or dirt on its end and if problem persists, check throttle plate condition/position and the wiring harness. Perform the following tests.

Testing the MAPTS (Pressure Function)

1. Connect vehicle to the .BRP diagnostic software (BUDS2)
2. In BUDS2, select the following:
   –
   – **Measurements** page
   – **ECM** button
   – **Custom** tab
   – **Manifold Pressure With Altitude Correction**.
3. Look for and take note of the MAPTS pressure reading while the engine is stopped.
4. Perform the same test with a new MAPTS and compare both readings.

Values have to be within ± 3.4 kPa (.5 PSI).

NOTE: 1 kPa = 10 hPa.

TESTING THE MAPTS PRESSURE FUNCTION			
RESULT	SERVICE ACTION		
NO READING	Circuit Continuity Test of MAPTS Pressure Function	MAPTS Input Voltage Test	Repair or replace wiring
VALUE IS OUT OF RANGE	Replace MAPTS		

Testing the MAPTS Input Voltage

Check the voltage output from ECM to the pressure sensor.

1. Turn ignition key ON.
2. Remove electrical connector from MAPTS.
3. Measure input voltage as per following table.

MAPTS CONNECTOR		MEASUREMENT
PIN		VOLTAGE
1	3	5 Vdc

If voltage test is good, replace the MAPTS.

If voltage test is not good, carry out *TESTING THE MAPTS CIRCUIT CONTINUITY (PRESSURE FUNCTION)*.

Testing the MAPTS Circuit Continuity (Pressure Function)

1. Disconnect the ECM "A" connector.
2. Install ECM-A connector on ECM adapter tool.
3. Check continuity of the following circuits.

TESTING THE MAPTS CIRCUIT CONTINUITY (PRESSURE FUNCTION)		
ECM-A	MAPTS CONNECTOR	RESISTANCE VALUE
Pin B4	Pin 3	Close to 0 Ω
Pin G4	Pin 4	
Pin H2	Pin 1	

If resistance is not within specification, repair or replace the wiring harness between ECM connector and the MAPTS.

MAPTS Temperature Function

The sensor monitors the temperature in the inlet of the plenum.

Testing the MAPTS (Temperature Function)

1. Connect the vehicle to the BRP diagnostic software (BUDS2).
2. In BUDS2, select the following:
   - **Monitoring** page
   - **ECM** button
   - **Custom** tab..
3. Look for the **Intake Temperature** reading while the engine is stopped.
4. Perform the same test with a new MAPTS and compare both readings.

If the engine's MAPTS temperature reading is significantly different than the new MAPTS, replace it.

NOTE: Both sensors must measure the same ambient air temperature.

If there is no reading, carry out *TESTING THE MAPTS RESISTANCE (TEMPERATURE FUNCTION)*.

Testing the MAPTS Resistance (Temperature Function)

Disconnect the connector from the MAPTS.

Check the resistance of the sensor itself as shown.

MAPTS		MEASUREMENT
PIN		RESISTANCE Ω @ 20°C (68°F)
1	2	2280 - 2740

If resistance is not within specification, replace the MAPTS.

If resistance tests good, **reconnect** the MAPTS and disconnect the connector "A" from the ECM.

Install ECM-A connector on ECM adapter tool.

Recheck resistance value as per following table.

ECM CONNECTOR		MEASUREMENT
PIN		RESISTANCE Ω @ 20°C (68°F)
A-H2	A-H3	2280 - 2740

MAPTS TEMPERATURE SENSOR TEST RESULTS			
RESULT	SERVICE ACTION		
NO READING	Circuit Continuity Test of MAPTS Temperature Function	MAPTS Input Voltage Test	Repair or replace wiring
INCORRECT RESISTANCE VALUE	Replace MAPTS		

Testing the MAPTS Circuit Continuity (Temperature Function)

TESTING THE MAPTS CIRCUIT CONTINUITY (TEMPERATURE FUNCTION)		
ECM-A	MAPTS CONNECTOR	RESISTANCE VALUE
Pin H2	Pin 1	Close to 0 Ω
Pin H3	Pin 2	

Replacing the MAPTS

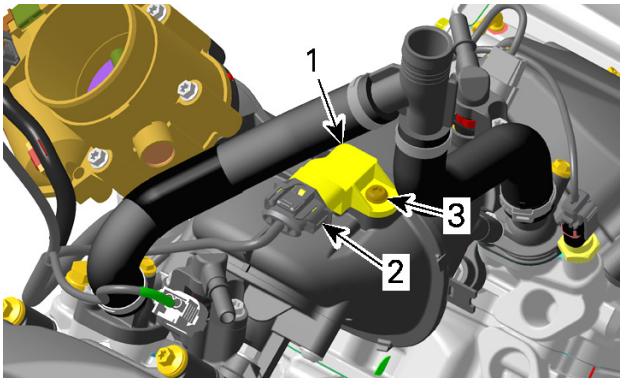

tmr2016-128-007_a

1. *MAPTS*
2. *MAPTS connector*
3. *Retaining screw*

Disconnect MAPTS connector and remove the MAPTS from the plenum.

Install new MAPTS as per following table.

TIGHTENING TORQUE	
MAPTS retaining screw	6 N•m ± 0.7 N•m (53 lbf•**in** ± 6 lbf•**in**) + LOCTITE 243 (BLUE) (P/N 293 800 060)

COOLANT TEMPERATURE SENSOR (CTS)

CTS Location

The CTS is located on the LH of the engine, aft cylinder.

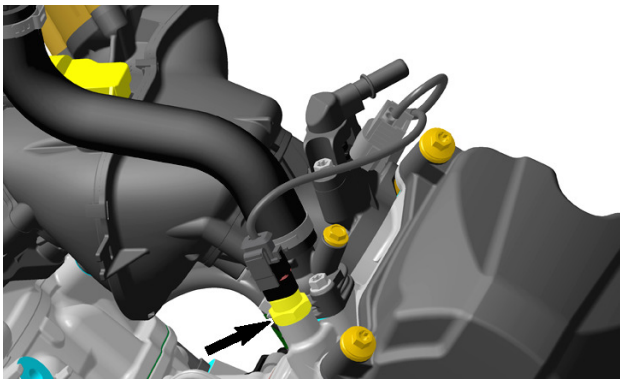
tmr2016-128-008_a

Testing the CTS Resistance

1. Disconnect the plug connector from the CTS and check the resistance of the sensor itself.

CTS SENSOR		MEASUREMENT
PIN		RESISTANCE Ω @ 20°C (68°F)
1	2	2280 - 2740

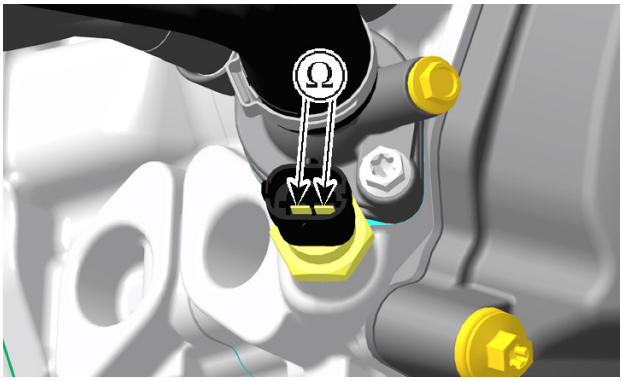

tmr2016-128-009_a

If resistance is out of specification, replace the CTS.

If resistance test is good, **reconnect** the CTS and disconnect the ECM connector "A" from the ECM.

2. Install ECM-A connector on ECM adapter tool.
3. Using a multimeter, recheck resistance from the ECM connector as per table.

ECM "A" CONNECTOR		MEASUREMENT
PIN		RESISTANCE Ω @ 20°C (68°F)
A1	J2	2280 - 2740

If resistance value is correct, refer to *REPLACING THE CTS*.

If resistance value is incorrect, repair the connectors or replace the wiring harness between ECM connector and the CTS.

Replacing the CTS

1. Disconnect CTS connector and remove CTS.
2. Install the new CTS and torque as specified.

TIGHTENING TORQUE	
CTS	16 N•m ± 2 N•m (142 lbf•**in** ± 18 lbf•**in**)

3. Reinstall remaining removed parts.
4. Refill and bleed the cooling system, refer to *COOLING SYSTEM* subsection.

HEATED OXYGEN SENSOR (HO_2S)

Oxygen Sensor General Precautions

Take the following precautions to avoid sensor malfunction:

– Do not use any product on sensor probe.
– Do not expose sensor to water, oil, windshield cleaner, anticorrosion oil, grease, terminal cleaner, etc.
– Do not drop or use an oxygen sensor that has been dropped.
– Do not use any compound on sensor threads unless labeled as compatible with oxygen sensor.
– Do not use impact wrench or conventional socket type wrench to install sensor.
– Do not allow sensor or wire to touch exhaust system or any other hot component.
– Do not route sensor wires to create tension in the wires. This could cause faults or sensor malfunction.

Oxygen Sensor Troubleshooting

Always use the BRP diagnostic software (BUDS2) to check for fault codes. Carry out service actions.

Also check oxygen sensor voltage and refer to following table.

In BUDS2, go to:

– **Measurement** page
– **ECM** button
– **ECM - Fuel Trim** tab.

OXYGEN SENSOR VOLTAGE IN BUDS2	
VOLTAGE READING	CONDITION
Varies 0.1 to 0.8 Volts	Normal oxygen sensor operation in closed loop
Constant 0.45 Volts	Oxygen sensor circuit open
Constant low voltage	Indicates fuel mixture too lean, possible oxygen sensor fault, possible fuel system fault, possible air leak
Constant high voltage	Indicates fuel mixture too rich, possible fuel system fault, possible fuel canister problem

Testing the Oxygen Sensor

Testing for Oxygen Sensor Input Voltage

NOTE: This test validates the heater element circuit.

1. Ensure main power relay (R2) in installed in fuse box 2.
2. Disconnect the oxygen sensor connector.
3. Turn ignition switch ON.
4. Using a multimeter set to Vdc, read the input voltage provided to the sensor heater.

OXYGEN SENSOR CONNECTOR (HARNESS SIDE)		**MEASUREMENT**
PIN		
C	Battery ground	Battery voltage

If Input voltage is good, refer to *TESTING THE RESISTANCE OF THE OXYGEN SENSOR HEATER* and *TESTING FOR OXYGEN SENSOR CIRCUIT CONTINUITY*.

If input voltage is not good, test the continuity of the power circuit from fuse F18 in fuse box 2. Refer to the applicable *WIRING DIAGRAM* for details.

If input voltage wire continuity is at fault, repair or replace wiring or connector.

Testing the Resistance of the Oxygen Sensor Heater

Test the resistance value of the oxygen sensor between the sensor pins as follows.

OXYGEN SENSOR PIN		RESISTANCE @ 20°C (68°F)
C	D	Approximately 7 - 11 Ω

If reading is **not** within specification, replace the oxygen sensor.

Testing for Oxygen Sensor Circuit Continuity

NOTE: This test validates the heater element circuit and the sensor circuits.

1. Remove main power relay (R2) in fuse box 2.
2. Disconnect ECM-B connector and install it on the ECM adapter tool.
3. Using a multimeter set to "Ω", test for continuity between the oxygen sensor harness connector and the ECM adaptor as per following tables.

OXYGEN SENSOR CIRCUIT CONTINUITY TEST		
OXYGEN SENSOR PIN	ECM CONNECTOR "B"	RESISTANCE @ 20°C (68°F)
A	J1	Close to 0 Ω
B	D2	
D	L2	

If a resistance value is NOT as specified, repair or replace the wiring and connectors.

Replacing the Oxygen Sensor

1. Remove main power relay (R2) in fuse box 2.

⚠ CAUTION **Exhaust system and oxygen sensor may be hot. To avoid possible injury, allow exhaust system components time to cool before proceeding.**

2. Disconnect oxygen sensor connector.
3. Cut locking tie securing oxygen sensor harness.
4. Unscrew oxygen sensor from exhaust pipe.

NOTICE **Handle oxygen sensor with clean hands. Oxygen sensor probe must remain free of oil, grease, antiseize lubricant and any other foreign matter that could affect its operation.**

If a new oxygen sensor is installed, its threads are already coated with an anti-seize product. Sensor is ready for installation.

If the same oxygen sensor is installed, apply LOCTITE 767 (ANTISEIZE LUBRICANT) (P/N 293 800 070) on its **first two threads**.

NOTICE **Always use a product that is oxygen sensor safe.**

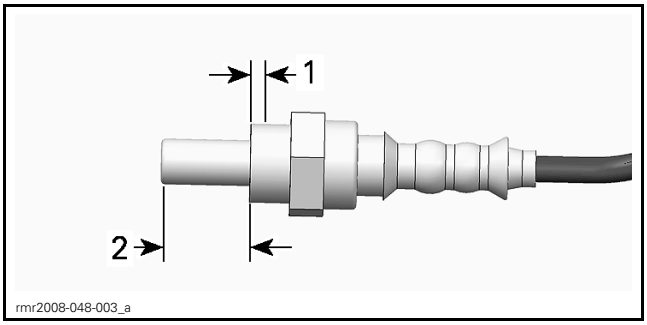

TYPICAL
1. Apply antiseize lubricant first two threads
2. Must be free of any product

NOTICE **Do not apply any antiseize lubricant to the sensor probe as it could affect its operation.**

5. Screw sensor in exhaust pipe.

TIGHTENING TORQUE	
Oxygen sensor	50 N•m ± 10 N•m (37 lbf•ft ± 7 lbf•ft) + LOCTITE 767 (ANTISEIZE LUBRICANT) (P/N 293 800 070)

6. Install all other removed parts.

FUEL TANK AND FUEL PUMP (HD5)

SERVICE TOOLS

Description	Part Number	Page
FLUKE 115 MULTIMETER	529 035 868	10
FUEL HOSE ADAPTER	529 036 396	5
FUEL PUMP NUT TOOL	529 035 899	11
OETIKER PLIER	295 000 070	8
PRESSURE GAUGE	529 036 395	5
SMALL HOSE PINCHER	295 000 076	4, 15
VACUUM/PRESSURE PUMP	529 021 800	4, 15

SERVICE TOOLS – OTHER SUPPLIER

Description	Part Number	Page
FLUKE RIGID BACK PROBE	TP88	10

SERVICE PRODUCTS

Description	Part Number	Page
BRAKE AND PARTS CLEANER PRO S2	779245	13

Midwest Manuals
Green Manuals
Paperless Manuals For a Better Tomorrow www.green-manuals.com
If you bought this manual from any other seller please leave them NEGATIVE feedback and notify me at bestshopmanuals@gmail.com

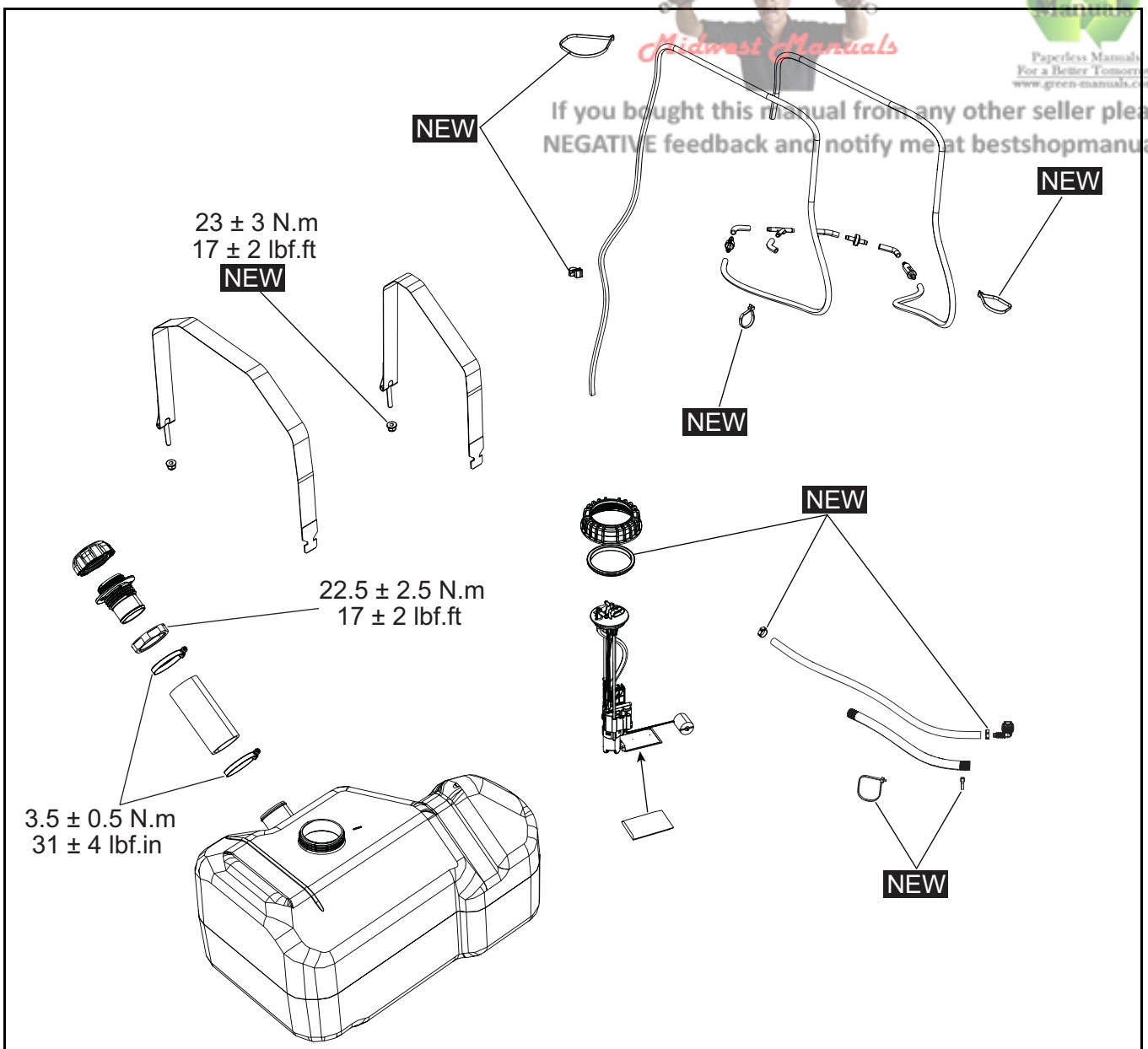

NEW=Component must be replaced when removed.

tmr2017-420-101_a

GENERAL

⚠ WARNING

Fuel is flammable and explosive under certain conditions. Ensure work area is well ventilated. Do not smoke or allow open flames or sparks in the vicinity.

⚠ WARNING

Always disconnect battery prior disconnecting a fuel system pressure hose.

⚠ WARNING

Always proceed with care and use appropriate safety equipment when working on pressurized fuel system. Wear safety glasses.

⚠ WARNING

Do not allow fuel to spill on hot engine parts and/or on electrical connectors.

When the repair is completed, ensure that all hoses are connected and secured. Perform the *TESTING THE FUEL PRESSURE* and the *TESTING FOR A FUEL TANK LEAK* as explained in this subsection.

Fuel lines remain under pressure at all times. Proceed with care when removing/installing high pressure test equipment.

SYSTEM DESCRIPTION

Fuel Tank Vent System

The vent system provides the relief of overpressure or negative pressure in the fuel tank

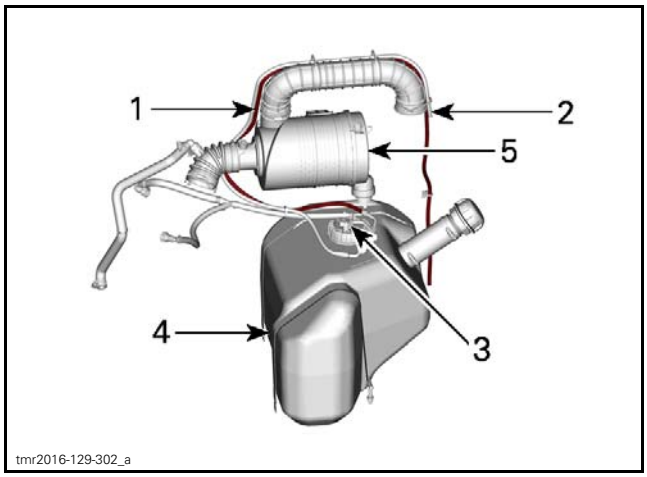

TYPICAL - FUEL TANK VENT SYSTEM
1. *Vent hose*
2. *Vent system hose inlet*
3. *Vent system connected to fuel pump*
4. *Fuel tank*
5. *Engine air intake system*

Air can enter the fuel tank at all times through the vent system INLET check valve. This prevents negative pressure within the fuel tank which could cause a fuel starvation.

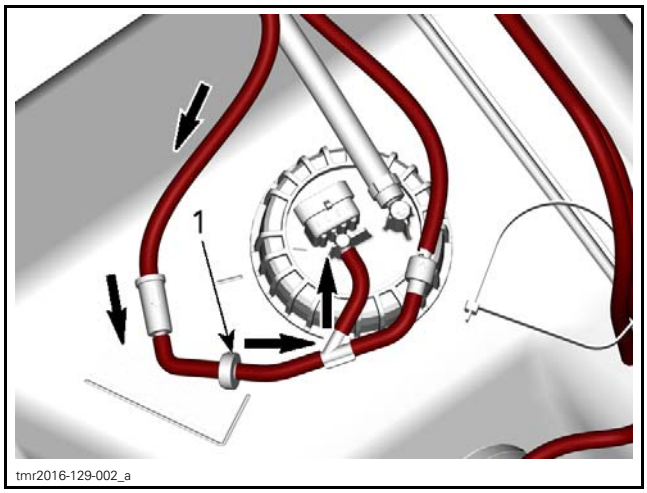

TYPICAL - AMBIENT AIR PRESSURE IN
1. *Vent inlet check valve*

The inlet check valve also prevents fuel from flowing out through the inlet of the vent system.

If the pressure in the fuel tank builds up and exceeds 2.5 kPa - 7.6 kPa (.36 PSI - 1.1 PSI), the pressure relief valve opens and lets the excess pressure evacuate through the vent system OUTLET hose.

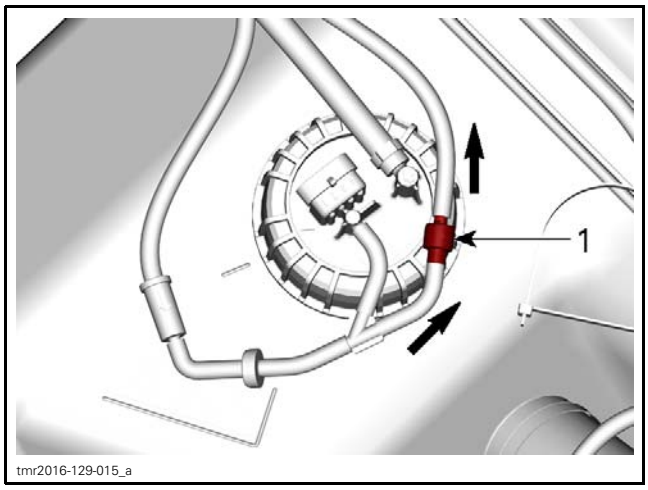

TYPICAL - OVER PRESSURE RELIEF
1. Outlet pressure relief valve

Fuel Tank Vent Breather Filter

The vent system is equipped with an in-line breather filter that prevents the entry of particles such as dust or small insects. It is located next to the fuel pump, on the inlet hose, before the air inlet check valve.

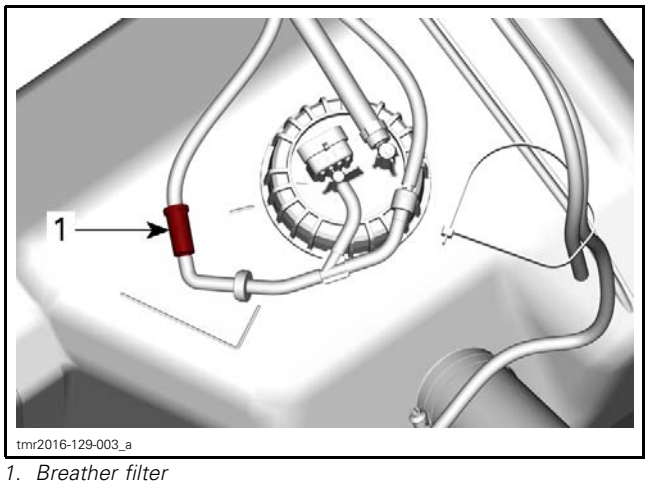

1. Breather filter

Fuel Pump Module

The fuel pump module is inserted in the fuel tank. It provides fuel delivery for the EFI system and encompasses the following components:

– Electric fuel pump
– Fuel pump pre-filter
– Fuel pressure regulator
– Fuel level sender.

Fuel Filters

The system comprises one level of filtration:

– A replaceable pre-filter element attached to the bottom of the fuel pump.

Fuel Pump Pressure Regulator

The fuel pressure regulator is integral to the fuel pump module. The pressure regulator maintains proper fuel pressure for the EFI system.

INSPECTION

TESTING FOR A FUEL TANK LEAK

⚠ WARNING

Always carry out a fuel tank leak test whenever the fuel tank shows signs of wear or damage which may cause a leak, or when the fuel pump has been removed or replaced, or if you suspect a leak. If the fuel tank is damaged, the fuel tank should be replaced even if no leak is present. Do not attempt to repair the fuel tank.

1. Refill fuel tank and ensure fuel tank cap is in good condition and properly installed.
2. Block the outlet vent hose using a small hose pincher.

REQUIRED TOOL	
SMALL HOSE PINCHER (P/N 295 000 076)	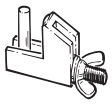

3. Pressurize the fuel tank through the inlet vent hose.

REQUIRED TOOL	
VACUUM/PRESSURE PUMP (P/N 529 021 800)	

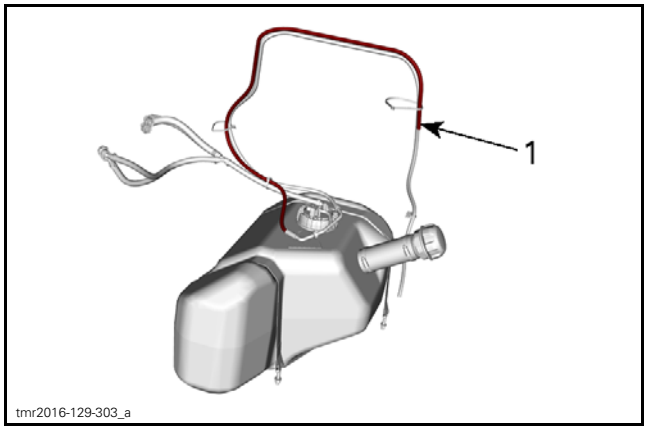

1. Fuel tank vent hose inlet

PRESSURE	TIME WITHOUT PRESSURE DROP
14 kPa (2 PSI)	3 minutes

If pressure drops, locate fuel leak(s) and repair or replace leaking component(s).

To locate a leak, check for a fuel smell or leaking fuel.

To ease locating leak(s), spray soapy water on all hose connections and components; bubbles will indicate the leak location(s).

TESTING THE FUEL PRESSURE

The pressure test will show the available pressure in the system. It validates the pressure regulator and the fuel pump, and allows for checking the fuel system for leaks (high pressure side).

Ensure there are no leaks from hoses and fittings. Repair any leaks.

NOTE: Refer to the *FUEL SYSTEM DIAGNOSTIC FLOW CHART* in this subsection to help diagnose a fuel system related problem.

1. Ensure the fuel level in the tank is sufficient.
2. Ensure the battery voltage is over 12 volts.
3. Disconnect fuel pump electric connector
4. Release fuel pressure by running the engine until it runs out of gas.
5. Disconnect the fuel pressure hose. Refer to *DISCONNECTING A FUEL PRESSURE HOSE* in *FUEL HOSE AND OETIKER CLAMPS*.

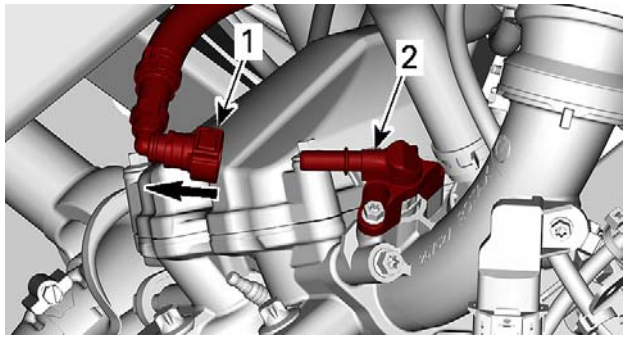

tmr2017-420-002_a

1. Fuel pressure hose fitting
2. Fuel rail

REQUIRED TOOLS	
PRESSURE GAUGE (P/N 529 036 395)	
FUEL HOSE ADAPTER (P/N 529 036 396)	

6. Install the fuel hose adapter between the disconnected fitting and the fuel rail (in-line installation).

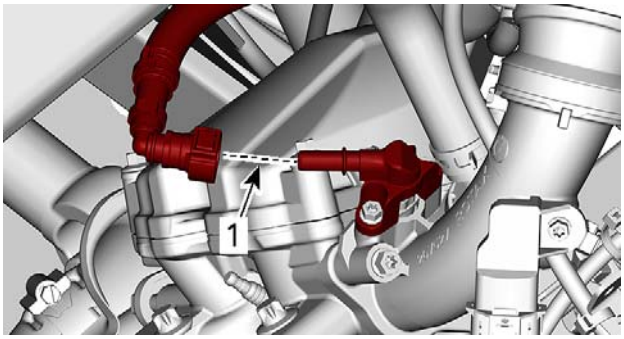

tmr2017-420-002_b

1. Fuel hose adapter location

7. Install the pressure gauge on the fuel hose adapter.
8. Reconnect the fuel pump electric connector.
9. Clear fault codes using the appropriate BRP diagnostic software. Refer to the *COMMUNICATION TOOLS*.
10. Turn ignition key ON or activate the fuel pump using the BRP diagnostic software.
11. Monitor the fuel pressure reading and compare to the specification.

FUEL PRESSURE (AT 12V ± 0.1V)
350 kPa ± 10 kPa (51 PSI ± 1 PSI)

12. Start engine and observe fuel pressure.
13. Stop engine.
14. Refer to *TEST RESULT*.

Test Result

The fuel pressure should be within specification in static or dynamic tests.

Rapid Pressure Drop

If there is a rapid pressure drop after the engine is stopped, check for leakage at:

– A fuel hose

– The fuel rail.

NOTE: The fuel pump check valve (integral to the fuel pump module) may also be at fault.

If no leak is detected, replace fuel pump.

Slow Pressure Drop

If there is a slow pressure drop after the engine is stopped, check the fuel injector for leaks as follows:

NOTE: The fuel pressure regulator or fuel pump check valve (integral to the fuel pump module) may also be at fault.

1. With the fuel rail connected, remove the intake manifold from the cylinder head.
2. From the inside of the intake manifold, check if the fuel injector tip is leaking.

If the fuel injector leaks, replace it.

If no leak is detected, replace the fuel pump.

3. Reinstall the intake manifold.

TIGHTENING TORQUE	
Intake manifold retaining screws	20 N•m ± 2 N•m (15 lbf•ft ± 1 lbf•ft)

TROUBLESHOOTING

FUEL SYSTEM DIAGNOSTIC FLOW CHART

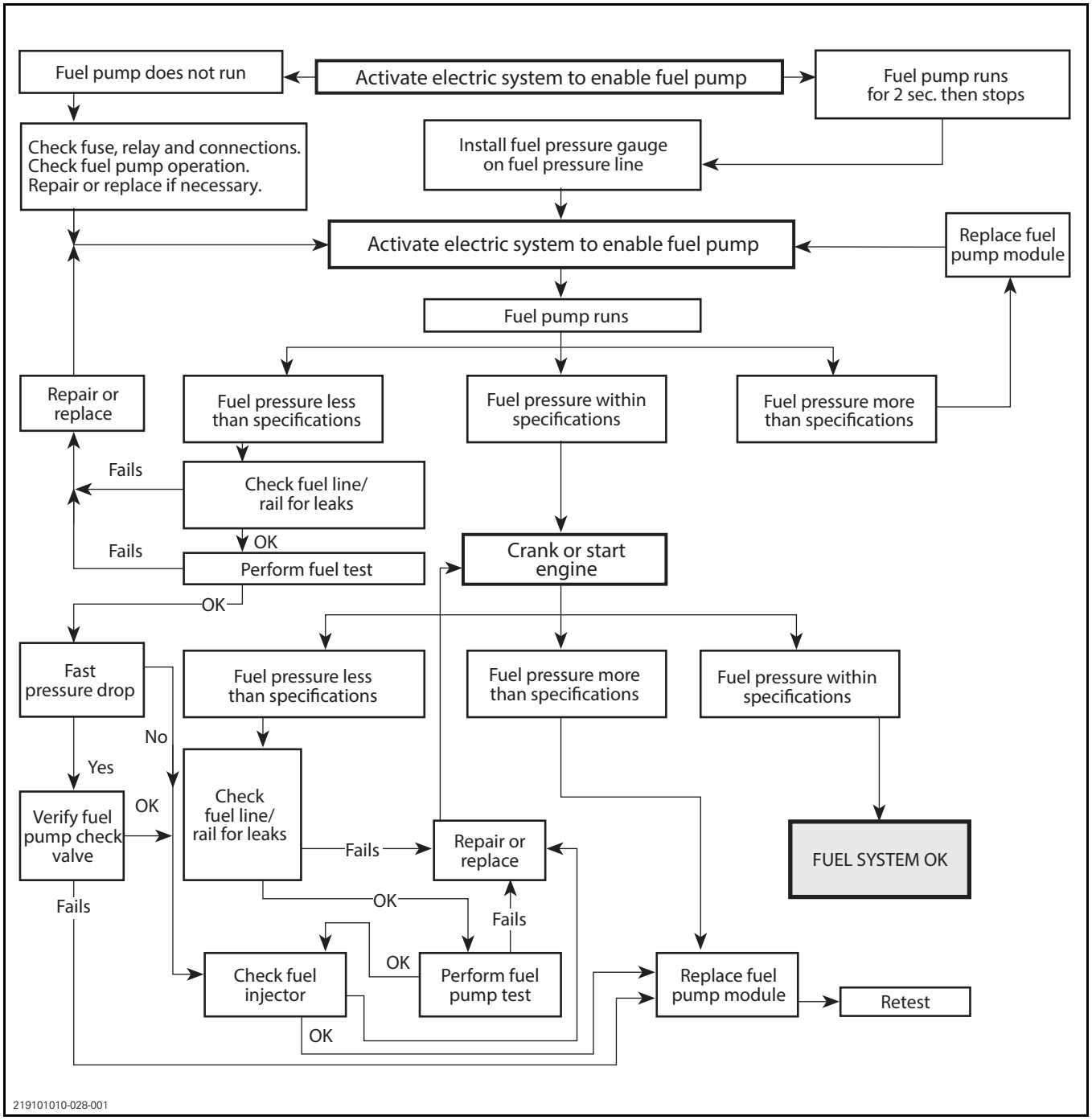

PROCEDURES

FUEL HOSE AND OETIKER CLAMPS

Disconnecting a Fuel Pressure Hose

1. Drain fuel tank. Refer to *DRAINING THE FUEL TANK*.
2. Release fuel pressure by running engine until it runs out of fuel.
3. Carefully disconnect the fuel hose fitting from the injector by pressing on the release tab of the quick disconnect fitting.

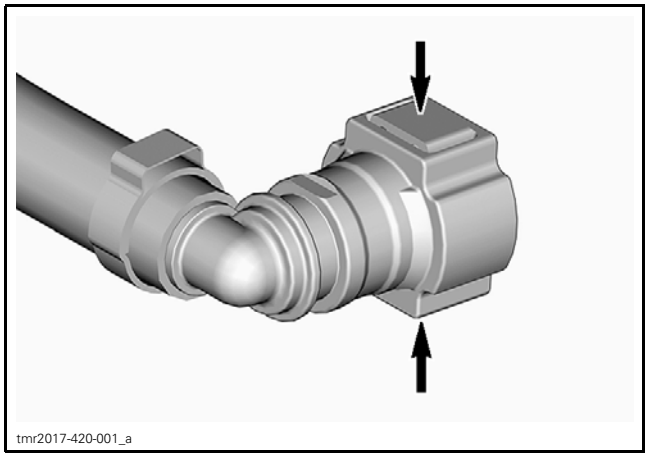

Replacing a Fuel Hose

When replacing fuel hoses, be sure to use hoses and clamps as available from BRP parts department. This will ensure continued proper and safe operation.

⚠ WARNING

Use of fuel lines other than those recommended by BRP may compromise fuel system integrity.

⚠ WARNING

Whenever removing a hose in the fuel system, always use new Oetiker clamps at assembly. Then validate fuel system tightness by performing a fuel pressure test.

Replacing an Oetiker Clamp

REQUIRED TOOL	
OETIKER PLIER (P/N 295 000 070)	

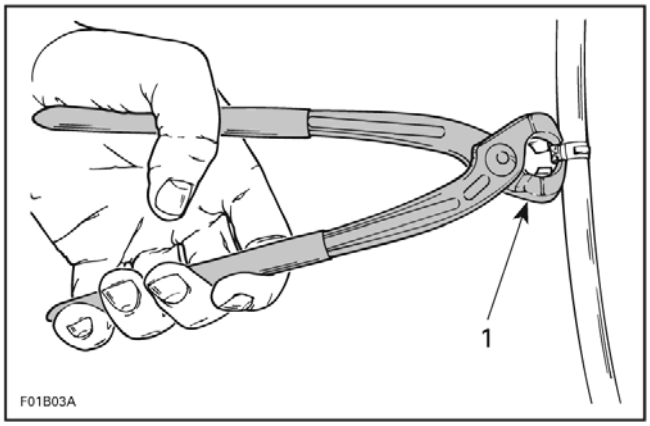

1. Cutting clamp

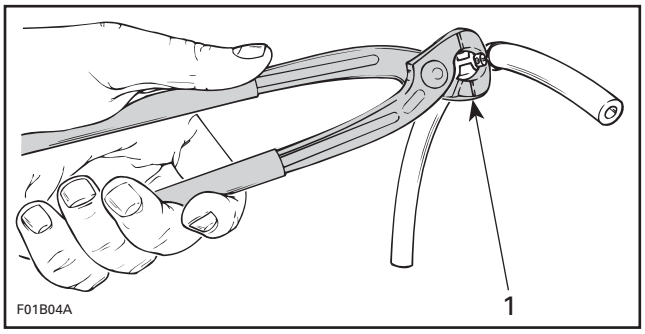

1. Securing clamp

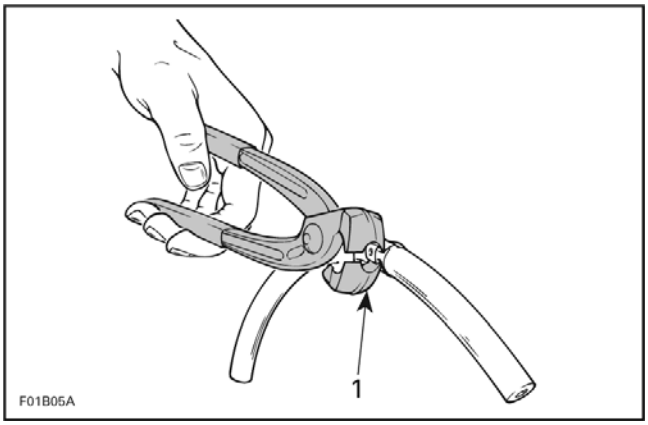

1. Securing clamp in limited access

FUEL TANK

Draining the Fuel Tank

Remove fuel tank cap and siphon gas into an approved fuel container.

Removing the Fuel Tank

1. Drain fuel tank. Refer to *DRAINING THE FUEL TANK* in this subsection.
2. Disconnect fuel pressure hoses from the fuel rail. Refer to *DISCONNECTING A FUEL PRESSURE HOSE* in *FUEL HOSE AND OETIKER CLAMPS*.

3. Disconnect the following from the fuel pump module:
   – Fuel pump electric connector
   – Vent hose

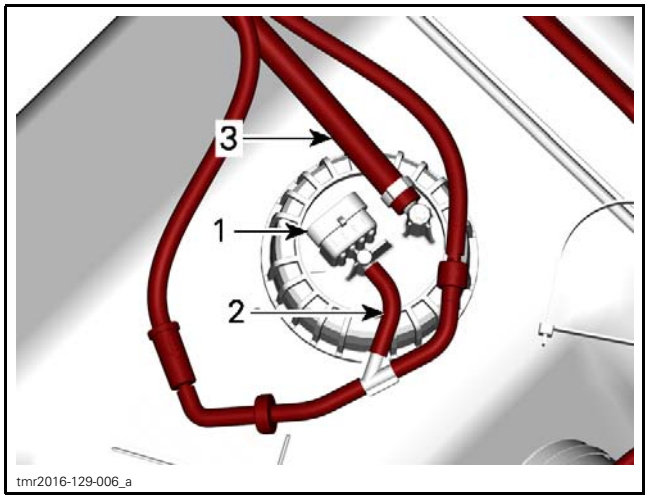

1. Fuel pump connector
2. Vent hose
3. High pressure fuel hose

4. Unscrew fuel tank retaining nuts (2) and unhook straps.

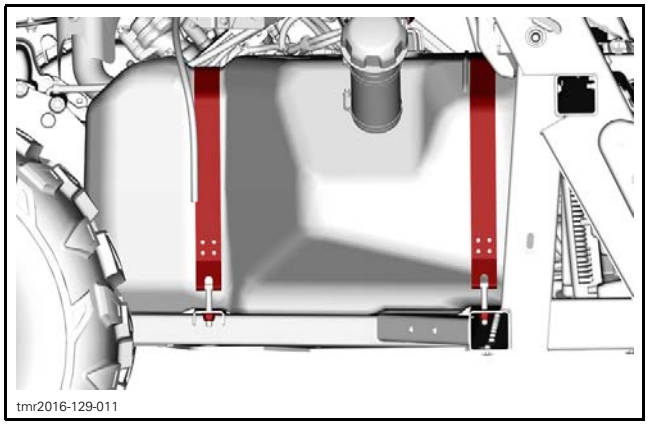

5. Loosen fuel filler neck hose clamp.
6. Remove fuel tank.

Inspecting the Fuel Tank

1. Visually inspect fuel tank for cracks, wear marks, signs of leakage or any other damages.
2. Visually inspect fuel system hoses for proper rooting, cracking, wear marks, signs of leakage or any other damages.
3. Refer to *TESTING FOR A FUEL TANK LEAK* and carry out instructions.

⚠ WARNING

All fuel system leaks must be repaired. Damaged, worn or leaking fuel system components should be replaced to ensure fuel system tightness.

If cracks, gouges or other damages which may lead to a fuel leak, or damages to attachment points that could prevent the tank from being secure are found, replace fuel tank.

Replacing Fuel Tank Vent Breather Filter

Ensure breather filter is installed with the flow arrow pointing towards the vent hose.

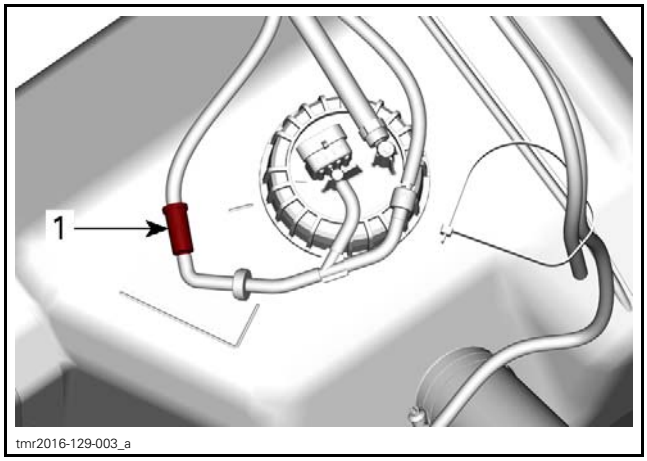

1. Fuel tank vent breather filter

Installing the Fuel Tank

Installation is the reverse of the removal procedure. However, pay attention to the following.

Use **NEW** retaining nuts.

TIGHTENING TORQUE	
Fuel tank straps retaining nuts	23 N•m ± 3 N•m (17 lbf•ft ± 2 lbf•ft)

Be sure to properly connect and route:
– Fuel tank vent tube
– Fuel pump pressure hose
– Electrical connector.

Refill tank and ensure there are no leaks by performing a *TESTING FOR A FUEL TANK LEAK* and a *TESTING THE FUEL PRESSURE* as described in this subsection.

FUEL PUMP

Testing the Fuel Pressure

Refer to *INSPECTION* in this subsection.

Testing the Fuel Pump Operation (Quick Test)

1. Turn ignition key to ON.
2. Listen for fuel pump operation.

NOTE: Fuel pump should come ON for a few seconds, then stop.

If fuel pump does not come ON, carry out the following:

– Check fuel pump relay fuse (F5) and Main relay (R2).
– Use the applicable BRP diagnostic software to read fault codes. Refer to the *COMMUNICATION TOOLS* subsection.
– Carry out a fuel pump input voltage test.

Testing the Fuel Pump Input Voltage

1. Disconnect the fuel pump connector.
2. Turn ignition key ON.
3. Read voltage as follows.

NOTE: The fuel pump voltage will be read only when the fuel pump is activated.

REQUIRED TOOLS	
FLUKE 115 MULTIMETER (P/N 529 035 868)	
FLUKE RIGID BACK PROBE (P/N TP88)	

FUEL PUMP INPUT VOLTAGE TEST		
TEST PROBES		VOLTAGE READING
Fuel pump connector Pin 3	Fuel pump connector Pin 4	Battery voltage

If battery voltage is read, carry out a fuel pump resistance test.

If battery voltage is not read, test fuel pump power input as follows.

FUEL PUMP POWER WIRE TEST		
TEST PROBES		VOLTAGE READING
Fuel pump connector Pin 3	Battery ground	Battery voltage

If battery voltage is now read, check fuel pump ground circuit between fuel pump connector FP-4 and battery ground.

If battery voltage is still not read, check the following:

– Fuse (F5)
– Main relay (R2)
– Fuel pump relay input voltage (control and power circuits)
– Fuel pump relay control circuit continuity to ECM-B M1
– Wiring and connectors.

Testing the Fuel Pump Resistance

1. Ensure fuel pump connector is properly connected.
2. Remove main relay (R2).

Disconnect fuel pump connector and measure resistance at fuel pump connector.

FUEL PUMP RESISTANCE TEST		
TEST PROBES		RESISTANCE READING
Fuel pump connector (pump side) Pin 3	Fuel pump connector (pump side) Pin 4	Approximately 2 Ω

If test failed at pump connector, replace fuel pump.

If test succeeded at pump connector, check wiring and connectors from:

– Fuse box to fuel pump
– Fuel pump to battery ground.

Repair or replace as necessary.

Releasing Fuel System Pressure

Refer to *DISCONNECTING A FUEL PRESSURE HOSE* in this subsection.

Removing the Fuel Pump

1. Release the pressure of the fuel system.
2. Disconnect the following from the fuel pump:
   – Fuel pump electric connector

– Fuel system vent hose
– Fuel pump pressure hose.

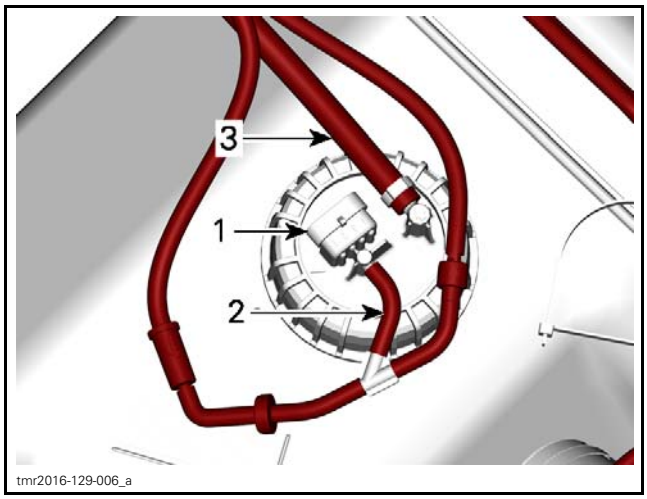

1. Fuel pump connector
2. Vent hose
3. High pressure fuel hose

3. Remove fuel pump retaining nut.

⚠ WARNING

Fuel vapors are flammable and explosive under certain conditions. Use only non-sparking tools.

⚠ CAUTION Replace fuel pump gasket whenever fuel pump retaining nut is loosened.

REQUIRED TOOL	
FUEL PUMP NUT TOOL (P/N 529 035 899)	

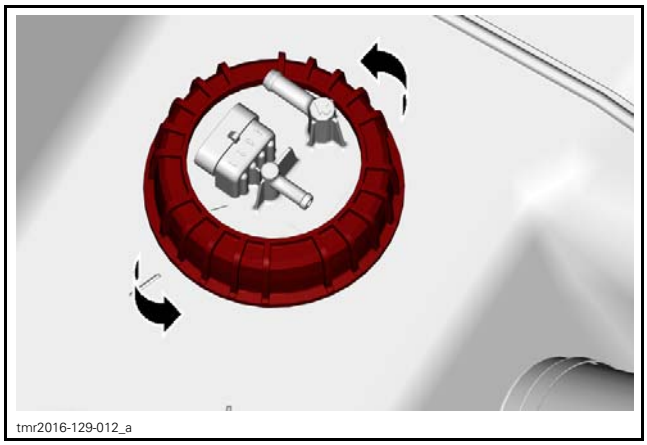

TYPICAL - FUEL PUMP REMOVAL
1. Fuel pump retaining nut

4. Carefully pull out and rotate fuel pump as required.

NOTICE Pay attention not to damage fuel sender and fuel pump prefilter.

5. Discard gasket ring.
6. Wipe off any fuel spillage.

Installing the Fuel Pump

The installation is the reverse of the removal procedure. However, pay attention to the following.

Rotate fuel pump during insertion as per removal procedure.

NOTICE Pay attention not to damage fuel sender and fuel pump pre-filter.

1. Install a NEW gasket ring.
2. Place gasket so that it is properly located between fuel pump and fuel pump mounting neck on fuel tank.

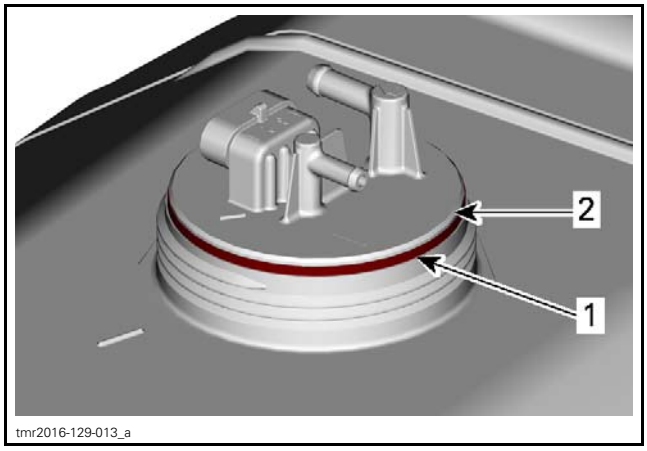

TYPICAL
1. Gasket ring here
2. Fuel pump flange

NOTICE Ensure gasket ring makes good contact all around fuel pump and fuel pump mounting neck on fuel tank.

3. Ensure proper fuel pump orientation as in following illustration.

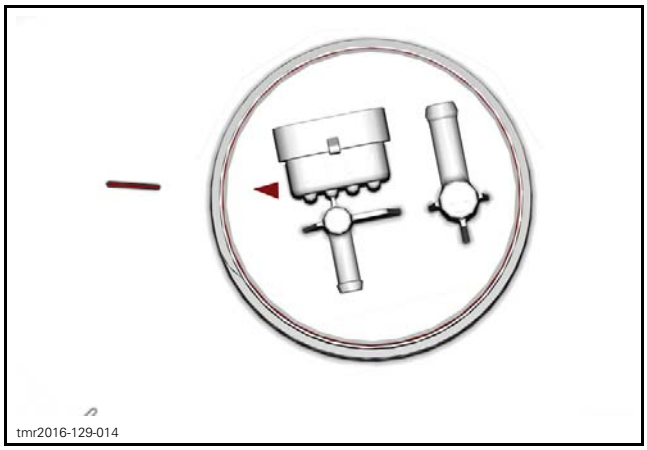

4. Insert fuel pump retaining nut over the fuel pressure hose and electrical wiring connector.
5. While firmly holding pump against tank, engage fuel pump retaining nut on fuel tank flange.

NOTE: If necessary, move the pump in order to ensure the flange is sitting completely flat on the tank.

6. Tighten fuel pump retaining nut to specification.
   6.1 Ensure pump locking ring is fully engaged.
   6.2 To apply the proper torque to the fuel pump retaining nut, install the fuel pump nut tool on a torque wrench with it's handle perpendicularly (90°) to the torque wrench.
   6.3 Ensure pump is properly aligned with index marks after nut it tightened to specification.

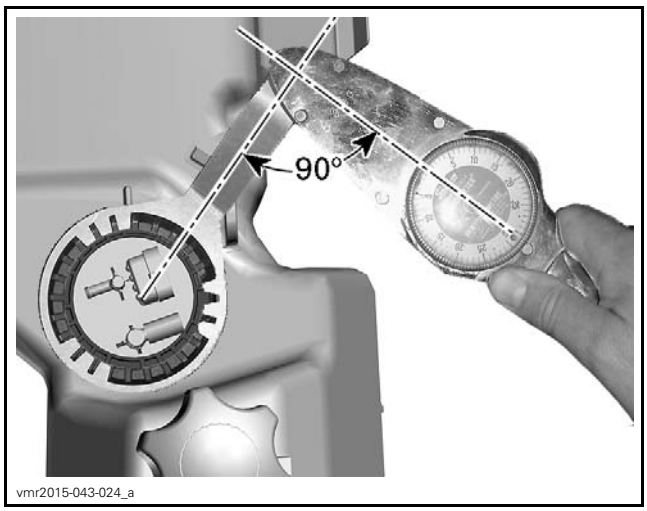

TYPICAL - TORQUE WRENCH PERPENDICULAR TO TOOL HANDLE

TIGHTENING TORQUE	
Fuel pump retaining nut	29 N•m ± 1 N•m (21 lbf•ft ± 1 lbf•ft)

7. Install fuel pressure hose on fuel pump using a NEW Oetiker clamp.
8. Install fuel vent tube on fuel pump.
9. Install electrical connector on fuel pump.
10. Refuel tank and ensure there are no leaks by performing a *TESTING FOR FUEL TANK LEAK* and *TESTING THE FUEL PRESSURE* as described in this subsection.
11. Check fuel level sender operation.

FUEL PUMP PRE-FILTER (STRAINER)

Replacing the Fuel Pump Pre-filter

1. Remove *FUEL PUMP*, see *REMOVING THE FUEL PUMP* in this subsection.
2. Unlock 3 tabs on strainer plastic ring.

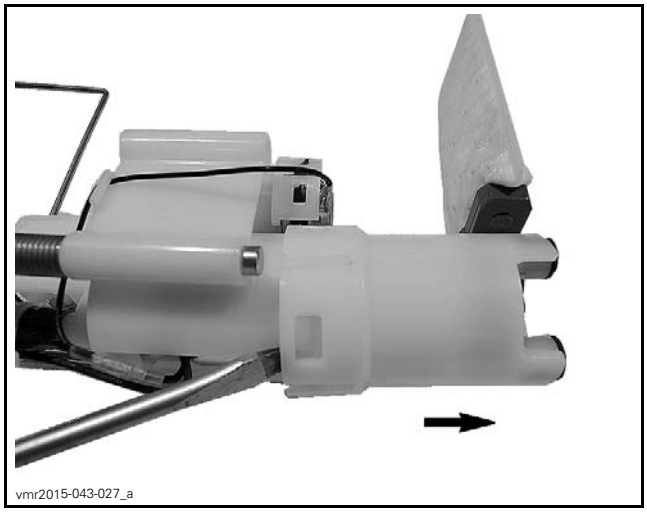

3. Remove rubber pad.

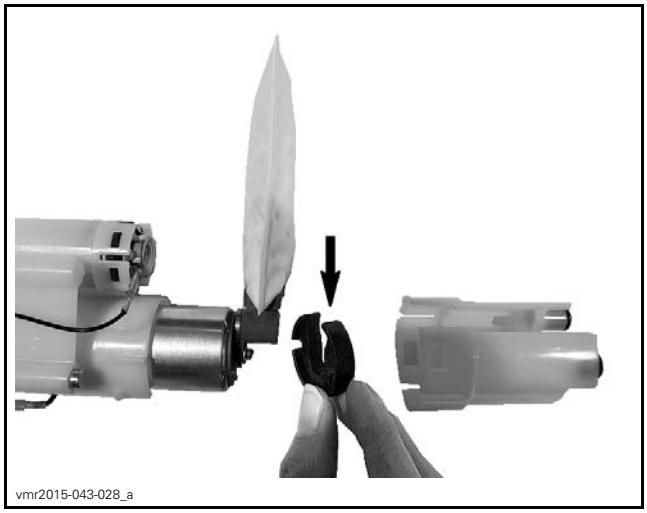

4. Remove push nut securing strainer to fuel pump. Be careful not to break the assembly locator pin.

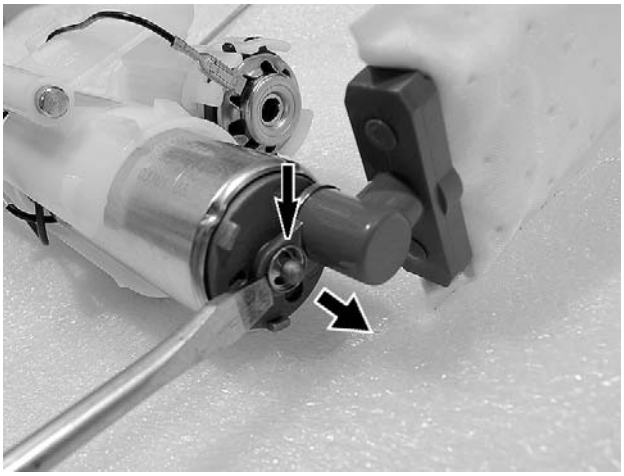
vmr2015-043-029_a

5. Pull strainer off fuel pump.

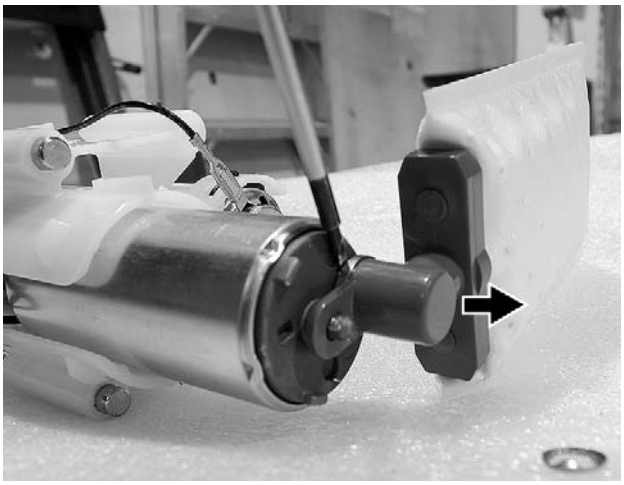
vmr2015-043-030_a

6. Before installing new strainer on fuel pump, lubricate assembly areas circled, with o-ring lubricant or clean oil.

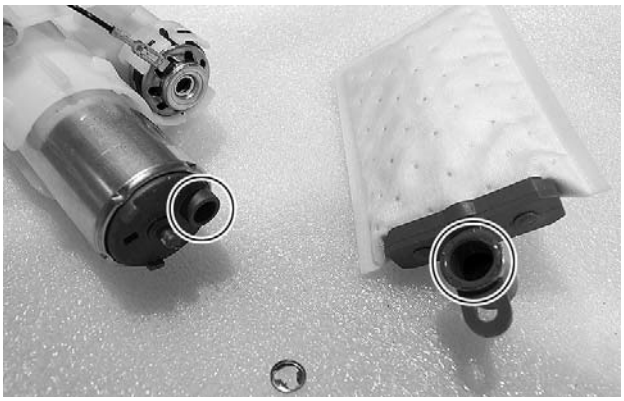
vmr2015-043-031_a

7. Insert the new strainer on fuel pump making sure to press it in fully and tightly against the fuel pump surface.
8. Using a small nut driver or socket, press in a **NEW** push nut to secure strainer.
9. Reinstall remaining removed parts.

Cleaning Fuel Pump Prefilter

1. Remove fuel pump from fuel tank, refer to *REMOVING THE FUEL PUMP* in *FUEL TANK AND FUEL PUMP* subsection.
2. Clean the fuel pump prefilter (strainer) using the recommended products and low pressure air.

RECOMMENDED PRODUCTS
BRAKE AND PARTS CLEANER PRO S2 (P/N 779245)

3. If the fuel pump prefilter is heavily soiled, clogged or damaged:
   – Replace it with a new one. Refer to *REPLACING THE FUEL PUMP STRAINER* in the *FUEL TANK AND FUEL PUMP* subsection.
   – Inspect inside of fuel tank for contaminants.
   – Clean fuel tank as required.
   – Inspect fuel tank vent breather filter. Replace as necessary. Refer to *FUEL TANK VENT BREATHER FILTER* in *FUEL TANK AND FUEL PUMP* subsection.

FUEL LEVEL SENDER

The fuel level sender is a float actuated variable resistance type that is part of the fuel pump.

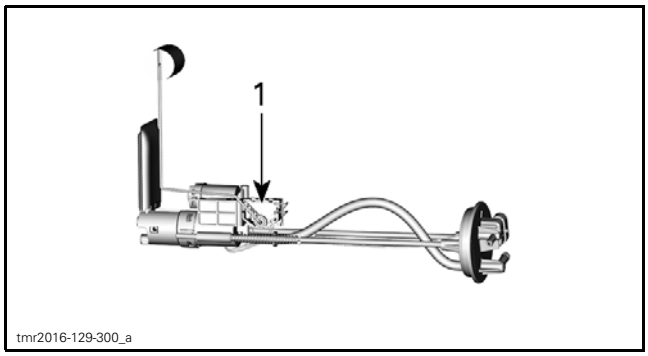

1. Fuel level sender

Testing the Fuel Level Sender Resistance (Fuel Pump Module Installed)

1. Disconnect multifunction gauge, refer to the *LIGHTS/GAUGE/ACCESSORIES* subsection.
2. Measure the resistance of the fuel level sender as follows.

FUEL LEVEL SENDER RESISTANCE TEST		
FUEL LEVEL	GAUGE CONNECTOR	RESISTANCE Ω @ 20°C (68°F)
Full	Pins 4 and 21	6 Ω ± 1
Empty		90 Ω ± 4.5

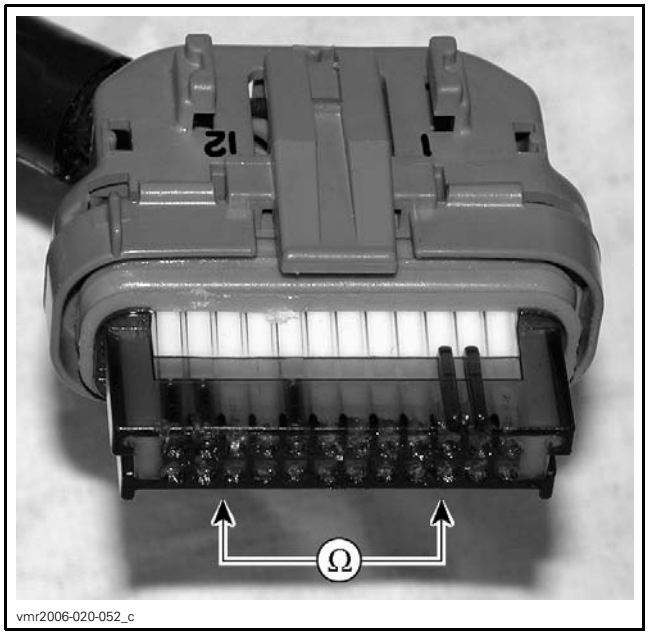

MULTIFUNCTION GAUGE CONNECTOR

If readings are out of specification, refer to *TESTING THE FUEL LEVEL SENDER RESISTANCE (AT FUEL PUMP CONNECTOR)*.

If readings are as specified, refer to *TESTING THE FUEL LEVEL SENDER INPUT VOLTAGE*.

Testing the Fuel Level Sender Resistance (at Fuel Pump Connector)

FUEL LEVEL SENDER RESISTANCE TEST		
FUEL LEVEL	FUEL PUMP CONNECTOR (PUMP SIDE)	RESISTANCE Ω @ 20°C (68°F)
Full	Pins 1 and 2	6 Ω ± 1
Empty		90 Ω ± 4.5

If resistance test at fuel pump connector is failed, replace fuel pump module.

Testing the Fuel Level Sender Input Voltage

1. Set ignition switch to ON.
2. Disconnect fuel pump connector.
3. Measure for input voltage as follows.

FUEL LEVEL SENDER INPUT VOLTAGE TEST		
FUEL PUMP CONNECTOR (HARNESS SIDE)	BATTERY	VOLTAGE
Pin 2	Negative terminal	5V

TEST RESULT	SERVICE ACTION
5V is not read	Test wiring continuity between fuel level sender and multifunction gauge
Wiring continuity is good	Replace multifunction gauge
Wiring continuity is not obtained	Repair or replace wiring

Replacing the Fuel Level Sender Replacement

Replace fuel pump. Refer to *FUEL PUMP* in this subsection.

FUEL TANK VENT VALVES

Testing the Fuel Tank Vent Valve

Testing the Inlet Check Valve

1. Install a small hose pincher between the pressure relief valve and the vent inlet.

REQUIRED TOOL	
SMALL HOSE PINCHER (P/N 295 000 076)	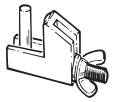

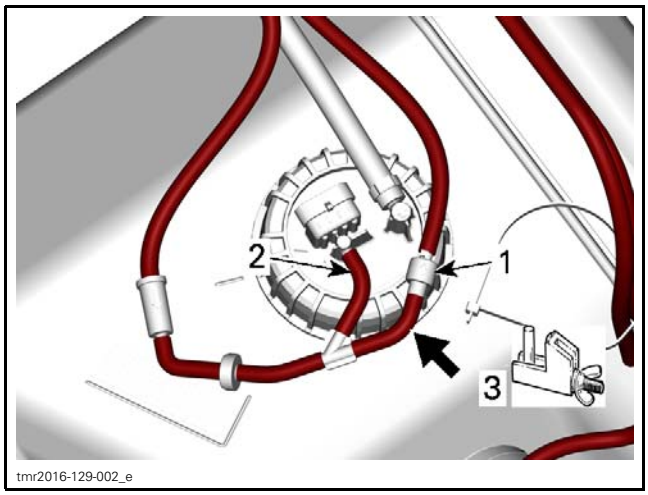

TYPICAL
1. *Pressure relief valve*
2. *Fuel pump vent inlet*
3. *Install small hose pincher here*

2. Connect the vacuum/pressure pump to the fuel tank vent hose inlet.

REQUIRED TOOL	
VACUUM/PRESSURE PUMP (P/N 529 021 800)	

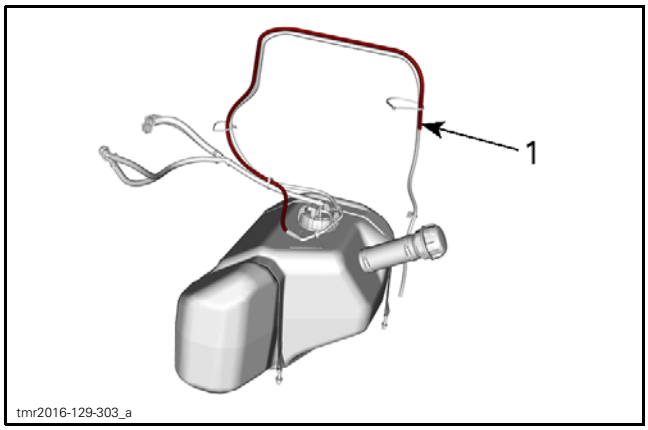

1. *Fuel tank vent hose inlet*

3. Remove fuel tank cap.
4. Set vacuum/pressure pump to **PRESSURE** and activate pump. The gauge on the pump **should not change in reading**.
5. Set vacuum/pressure pump to **VACUUM** and activate pump. The **gauge should increase in reading**.

If the test failed, carry out the following:
- Ensure breather filter is properly installed, refer to *PERIODIC MAINTENANCE PROCEDURES*.
- Ensure inlet check valve is properly installed, refer to *INSTALLING THE FUEL TANK VENT VALVE* in this subsection.
- Test inlet check valve separately. If good, replace the breather filter, refer to *PERIODIC MAINTENANCE PROCEDURES*.

Testing the Pressure Relief Valve

1. Install the small hose pincher between the inlet check valve and the inlet fitting.

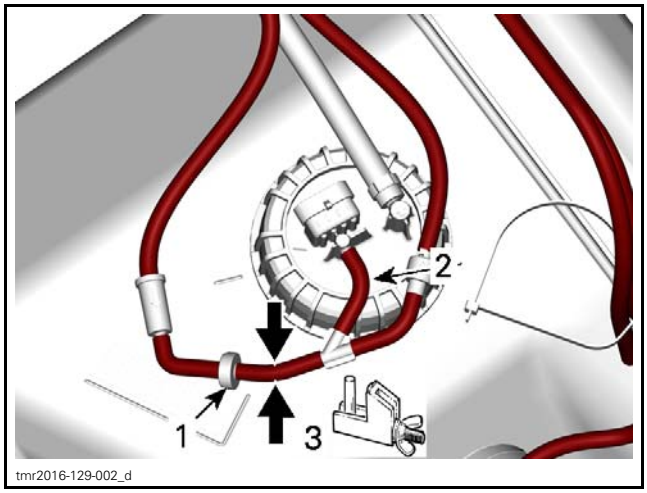

TYPICAL
1. *Inlet check valve*
2. *Vent inlet fitting*
3. *Install small hose pincher here*

2. Set vacuum/pressure pump to **PRESSURE** and activate pump. The **gauge should increase in reading**.
3. Set vacuum/pressure pump to **VACUUM** and activate pump. The gauge on the pump **should not change in reading**.

If the test failed, carry out the following:
- Ensure pressure relief valve is properly installed, refer to *INSTALLING THE PRESSURE RELIEF VALVE* in this subsection.
- Replace pressure relief valve if it fails the test.

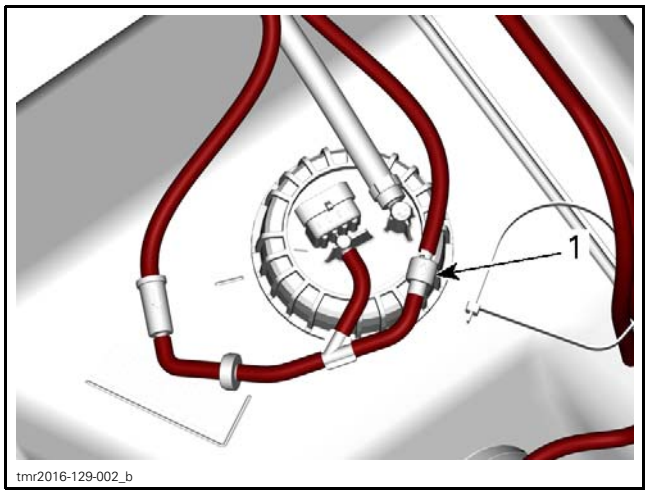

TYPICAL
1. Pressure relief valve flow direction arrow

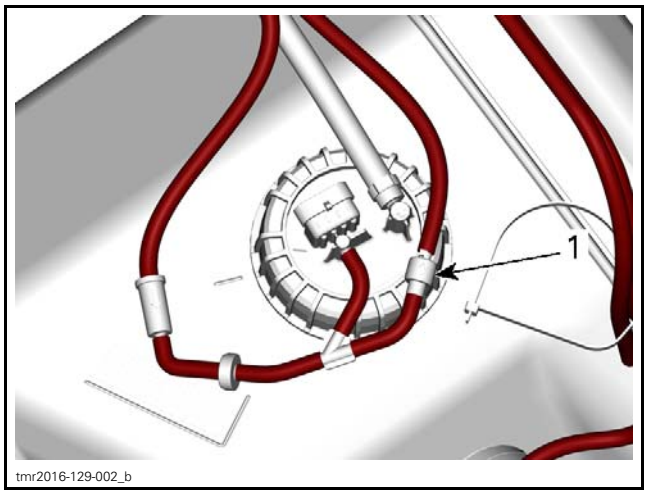

TYPICAL
1. Pressure relief valve flow direction arrow

Installing the Fuel Tank Vent Valve

Installing the Inlet Check Valve

Ensure white portion of inlet check valve is towards the vent breather filter.

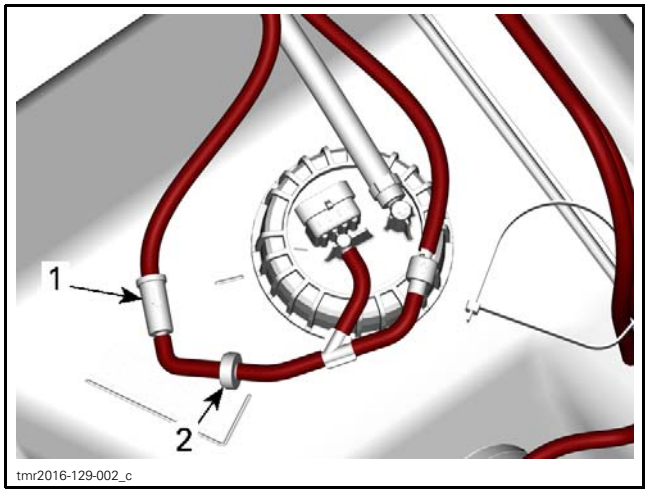

TYPICAL
1. Vent breather filter
2. White portion of inlet check valve

Installing the Pressure Relief Valve

Ensure pressure relief valve flow arrow is pointing away from fuel pump vent fitting.

FUEL TANK AND FUEL PUMP (HD8 - HD10)

SERVICE TOOLS

Description	Part Number	Page
FLUKE 115 MULTIMETER	529 035 868	9
FUEL HOSE ADAPTER	529 036 396	5
FUEL PUMP NUT TOOL	529 035 899	10
OETIKER PLIER	295 000 070	8
PRESSURE GAUGE	529 036 395	5
SMALL HOSE PINCHER	295 000 076	14
VACUUM/PRESSURE PUMP	529 021 800	5, 14

SERVICE TOOLS – OTHER SUPPLIER

Description	Part Number	Page
FLUKE RIGID BACK PROBE	TP88	9

SERVICE PRODUCTS

Description	Part Number	Page
BRAKE AND PARTS CLEANER PRO S2	779245	13
XPS BRAKES AND PARTS CLEANER (USA)	219 701 705	13

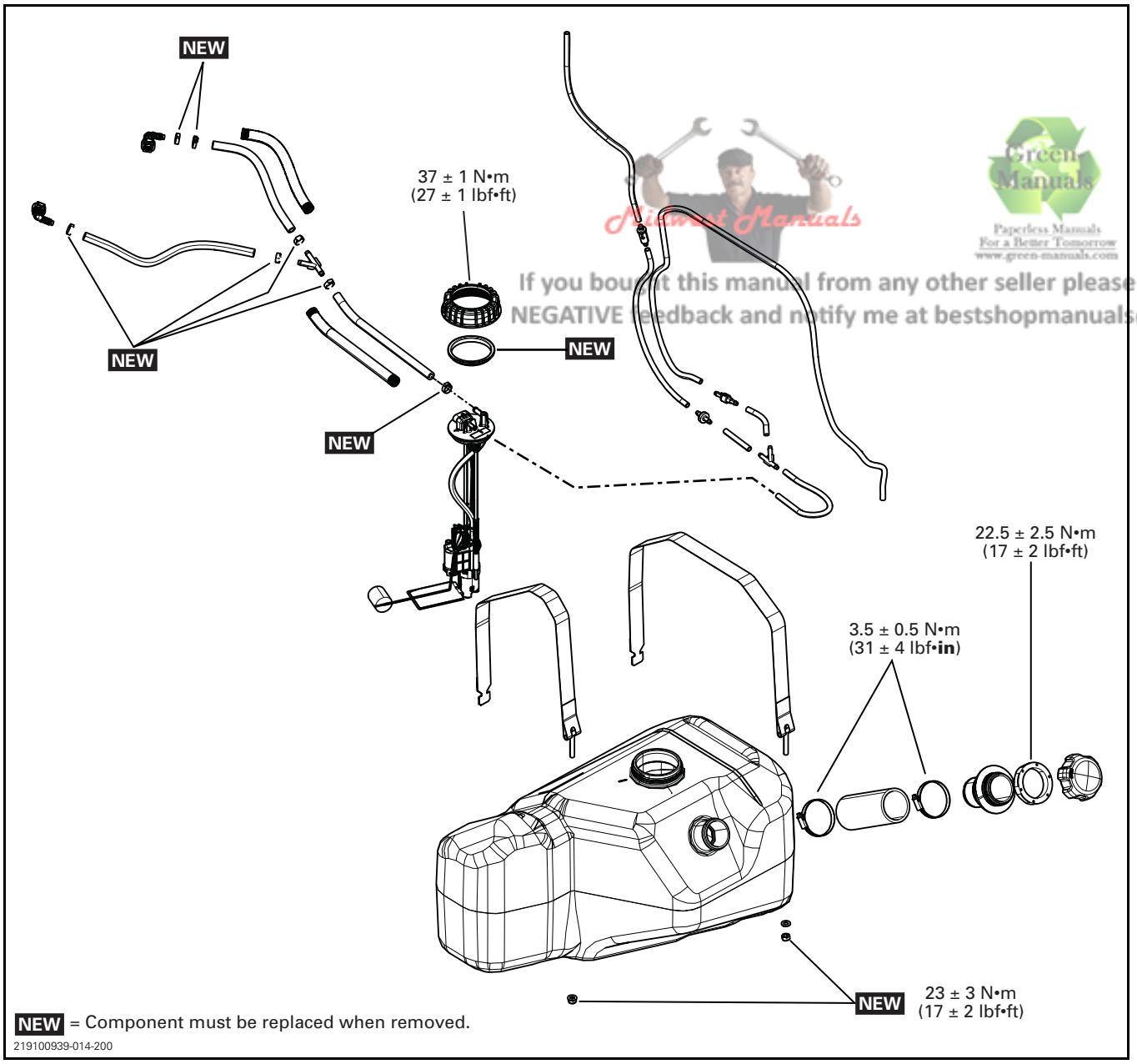

If you bought this manual from any other seller please leave them NEGATIVE feedback and notify me at bestshopmanuals@gmail.com

GENERAL

⚠ WARNING

Fuel is flammable and explosive under certain conditions. Ensure work area is well ventilated. Do not smoke or allow open flames or sparks in the vicinity.

⚠ WARNING

Always disconnect battery prior disconnecting a fuel system pressure hose.

⚠ WARNING

Always proceed with care and use appropriate safety equipment when working on pressurized fuel system. Wear safety glasses.

⚠ WARNING

Do not allow fuel to spill on hot engine parts and/or on electrical connectors.

When the repair is completed, ensure that all hoses are connected and secured. Perform the *TESTING THE FUEL PRESSURE* and the *TESTING FOR A FUEL TANK LEAK* as explained in this subsection.

Fuel lines remain under pressure at all times. Proceed with care when removing/installing high pressure test equipment.

SYSTEM DESCRIPTION

Fuel Tank Vent System

The fuel tank is equipped with a vent system that provides over pressure relief and negative pressure relief of the fuel tank.

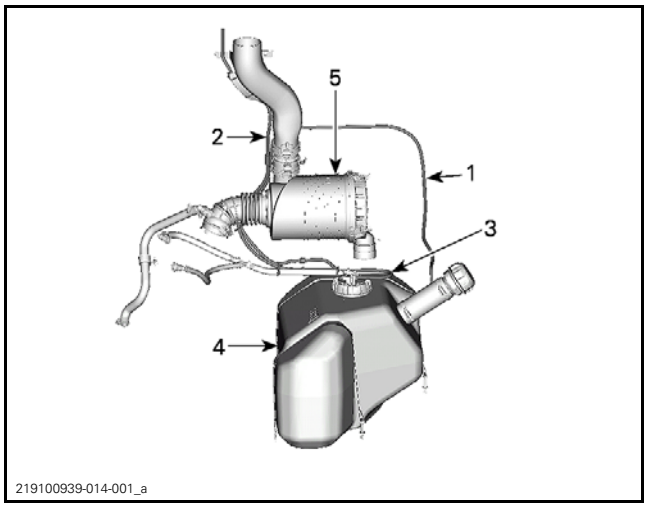

TYPICAL - FUEL TANK VENT SYSTEM
1. *Vent hose*
2. *Vent system hose inlet*
3. *Vent system connected to fuel pump*
4. *Fuel tank*
5. *Engine air intake system*

Air can enter the fuel tank at all times through the vent system INLET check valve. This prevents negative pressure within the fuel tank which could cause fuel starvation.

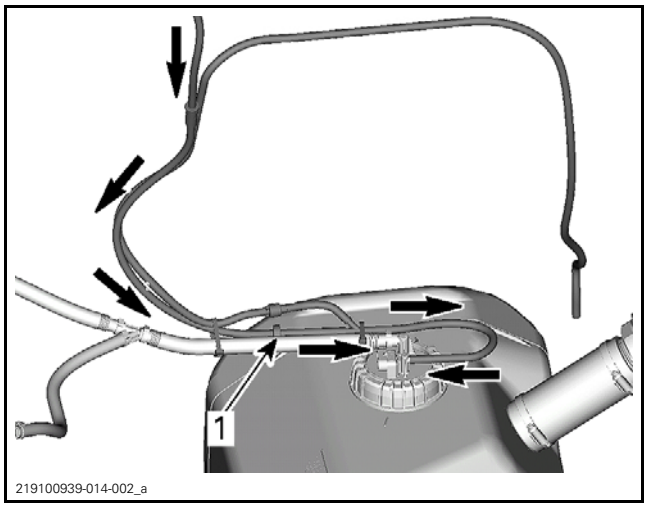

TYPICAL - AMBIENT AIR PRESSURE IN
1. *Vent inlet check valve*

The vent inlet check valve also prevents fuel from flowing out through the inlet of the vent system.

If the pressure in the fuel tank builds up and exceeds 2.5 kPa - 7.6 kPa (.36 PSI - 1.1 PSI), the pressure relief valve opens and lets the excess pressure evacuate through the vent system OUTLET hose.

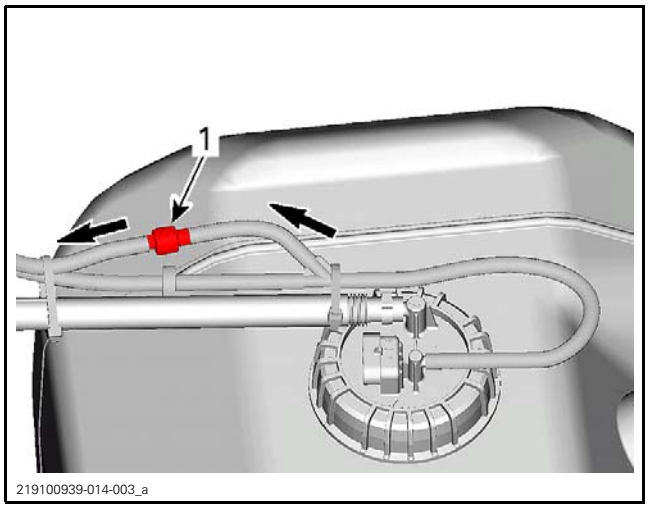

TYPICAL - OVER PRESSURE RELIEF
1. Outlet pressure relief valve

Fuel Tank Vent Breather Filter

The vent system is equipped with an in-line breather filter that prevents entry of particles such as dust or small insects. It is located next to the fuel pump, on the inlet hose, before the air inlet check valve.

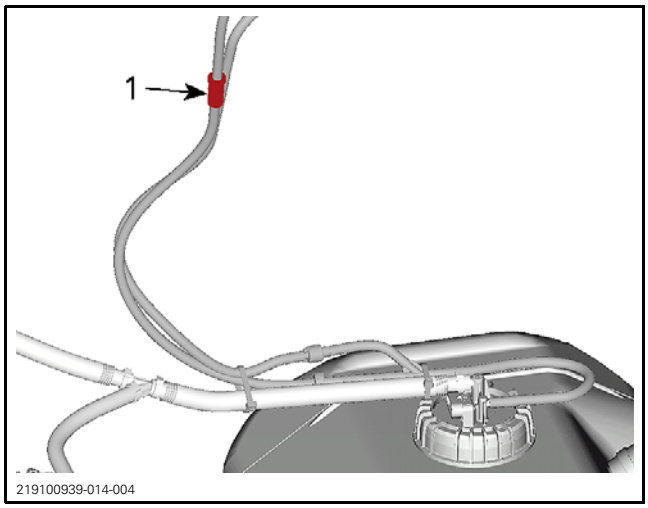

Replacing Fuel Tank Vent Breather Filter

Ensure breather filter is installed with the flow arrow pointing towards the vent hose.

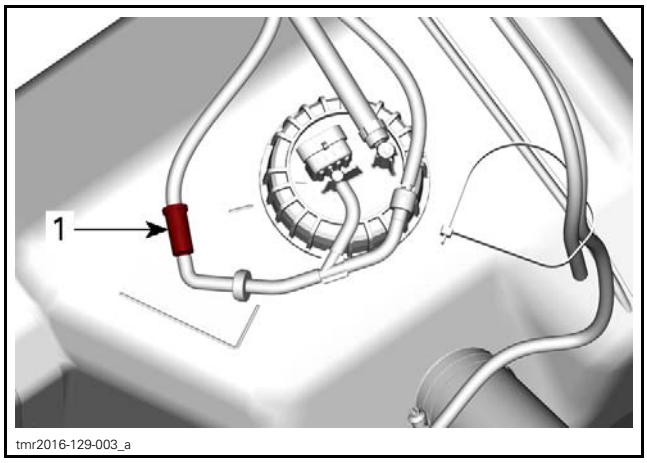

1. Fuel tank vent breather filter

Fuel Pump Module

The fuel pump module is inserted in the fuel tank. It provides fuel delivery for the EFI system and encompasses the following components:

– Electric fuel pump
– Fuel pump pre-filter
– Fuel pressure regulator
– Fuel level sender.

Fuel Filters

The system comprises one level of filtration:

– A replaceable pre-filter element attached to the bottom of the fuel pump.

Fuel Pump Pressure Regulator

The fuel pressure regulator is integral to the fuel pump module. The pressure regulator maintains proper fuel pressure for the EFI system.

INSPECTION

TESTING FOR A FUEL TANK LEAK

⚠ WARNING

Always carry out a fuel tank leak test whenever the fuel tank shows signs of wear or damage which may cause a leak, or when the fuel pump has been removed or replaced, or if you suspect a leak. If the fuel tank is damaged, the fuel tank should be replaced even if no leak is present. Do not attempt to repair the fuel tank.

1. Refill fuel tank and ensure fuel tank cap is in good condition and properly installed.
2. Pressurize the fuel tank through the vent hose.

REQUIRED TOOL	
VACUUM/PRESSURE PUMP (P/N 529 021 800)	

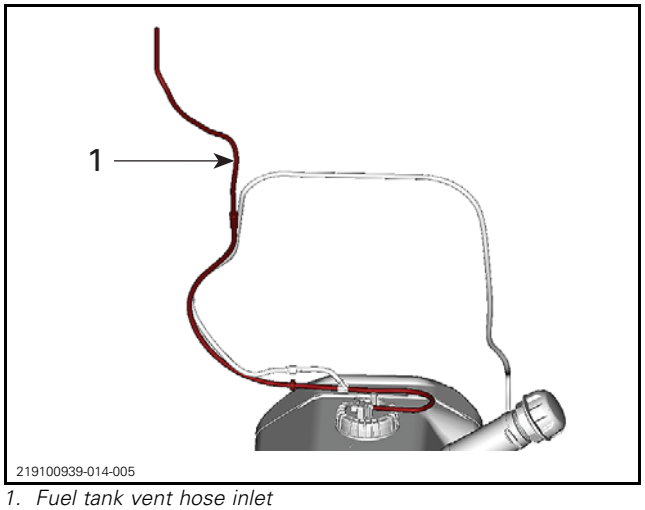

1. *Fuel tank vent hose inlet*

PRESSURE	TIME WITHOUT PRESSURE DROP
14 kPa (2 PSI)	3 minutes

If pressure drops, locate fuel leak(s) and repair or replace leaking component(s).

To locate a leak, check for a fuel smell or leaking fuel.

To ease locating leak(s), spray soapy water on all hose connections and components; bubbles will indicate the leak location(s).

TESTING THE FUEL PRESSURE

The pressure test will show the available pressure in the system. It validates the pressure regulator and the fuel pump, and allows for checking the fuel system for leaks (high pressure side).

Ensure there are no leaks from hoses and fittings. Repair any leaks.

NOTE: Refer to the *FUEL SYSTEM DIAGNOSTIC FLOW CHART* in this subsection to help diagnose a fuel system related problem.

1. Ensure the fuel level in the tank is sufficient.
2. Ensure the battery voltage is over 12 volts.
3. Disconnect fuel pump electric connector
4. Release fuel pressure by running the engine until it runs out of gas.
5. Disconnect both fuel pressure hoses. Refer to *DISCONNECTING A FUEL PRESSURE HOSE* in *FUEL HOSE AND OETIKER CLAMPS*.

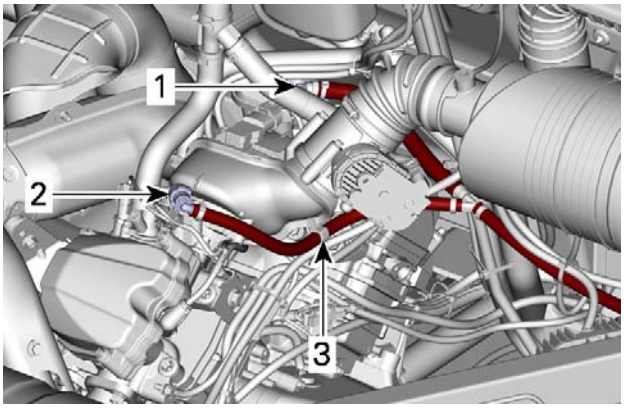

1. *Front cylinder injector fitting*
2. *Rear cylinder injector fitting*
3. *Hose retaining hook*

6. Install the fuel pressure gauge and fuel hose adapter between the disconnected injector fitting and fuel rail (in-line installation).

REQUIRED TOOLS	
PRESSURE GAUGE (P/N 529 036 395)	
FUEL HOSE ADAPTER (P/N 529 036 396)	

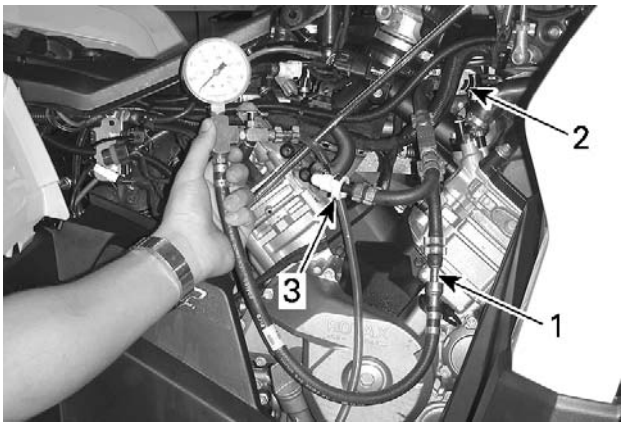

TYPICAL - PRESSURE GAUGE SETUP
1. *Pressure gauge to fuel hose adapter*
2. *Fuel hose adapter to fuel rail*
3. *Fuel hose adapter to fuel pump pressure hose*

7. Reconnect the fuel pump electric connector. Clear all fault codes using the BRP diagnostic software (BUDS2).

8. Turn ignition key ON and observe fuel pressure.

FUEL PRESSURE (Valid at 12v ± 0.1v)	350 kPa ± 10 kPa (51 PSI ± 1 PSI)

9. Start engine and observe fuel pressure.
10. Stop engine.
11. Remove test equipment and reconnect fuel hose to injector fuel rail by proceeding in the same manner as for its installation.

Test Conclusion

The fuel pressure should be within specification in static or dynamic tests.

Rapid Pressure Drop

If there is a rapid pressure drop after the engine is stopped, check for leakage at:

– A fuel hose
– A fuel rail.

NOTE: The fuel pump check valve integral to the fuel pump module may also be at fault.

If no leak is detected, replace fuel pump.

Slow Pressure Drop

If there is a slow pressure drop after the engine is stopped, check for a fuel injector leak. Refer to *ELECTRONIC FUEL INJECTION (EFI)* subsection.

NOTE: The fuel pressure regulator or fuel pump check valve integral to the fuel pump module may also be at fault.

If no leak is detected, replace fuel pump.

TROUBLESHOOTING

FUEL SYSTEM DIAGNOSTIC FLOW CHART

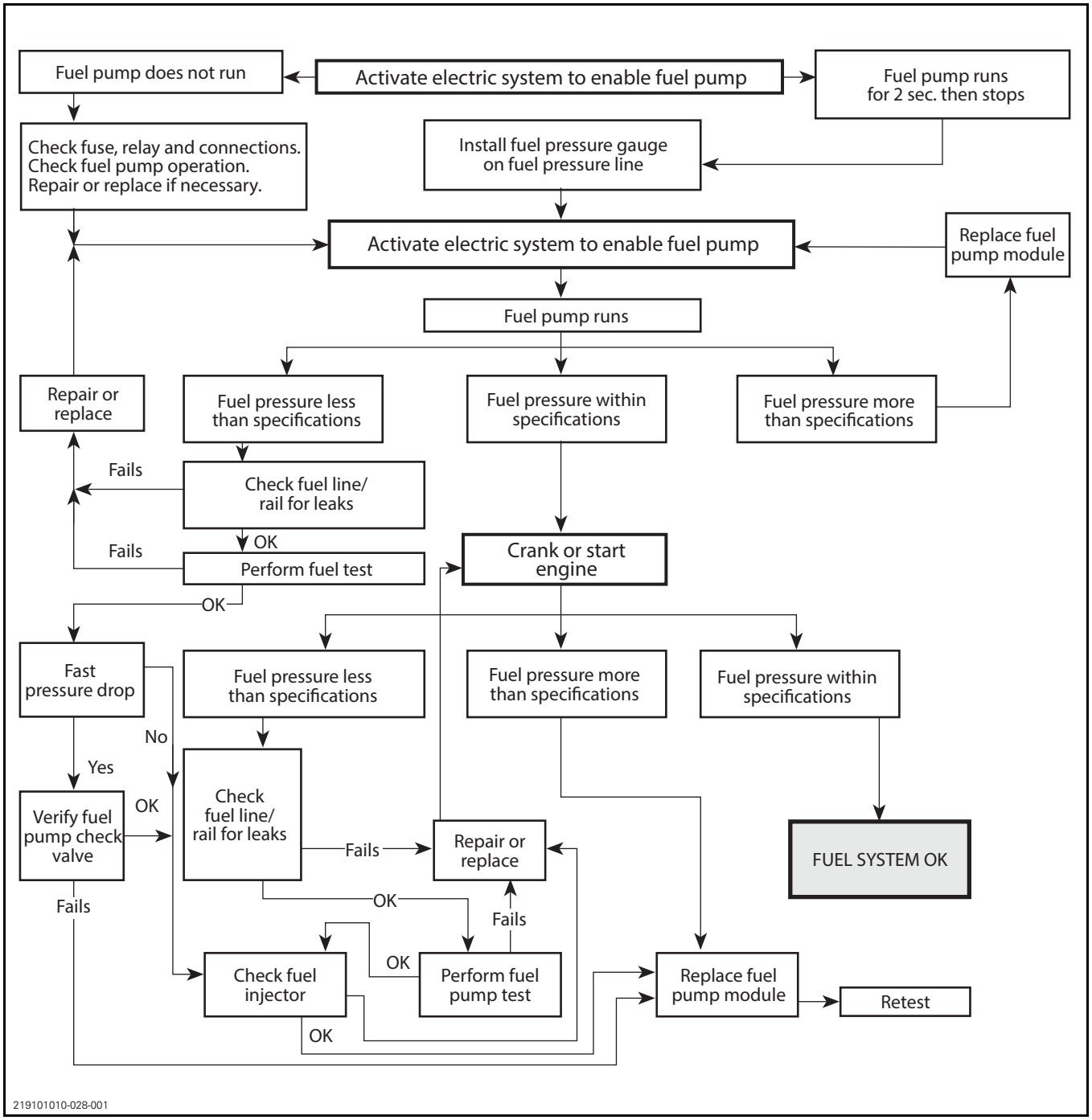

PROCEDURES

FUEL HOSE AND OETIKER CLAMPS

Disconnecting a Fuel Pressure Hose

1. Drain fuel tank. Refer to *DRAINING THE FUEL TANK*.
2. Release fuel pressure by running engine until it runs out of fuel.
3. Carefully disconnect the fuel hose fitting from the injector by pressing on the release tab of the quick disconnect fitting.

Replacing the Fuel Hose

When replacing fuel hoses, be sure to use hoses and clamps as available from BRP parts department. This will ensure continued proper and safe operation.

⚠ WARNING

Use of fuel lines other than those recommended by BRP may compromise fuel system integrity.

⚠ WARNING

Whenever removing a hose in the fuel system, always use new Oetiker clamps at assembly. Then validate fuel system tightness by performing a fuel pressure test.

Replacing the Oetiker Clamp

REQUIRED TOOL	
OETIKER PLIER (P/N 295 000 070)	

FUEL TANK

Draining the Fuel Tank

Remove fuel tank cap and siphon gas into an approved fuel container.

Removing the Fuel Tank

1. Drain fuel tank. Refer to *DRAINING THE FUEL TANK* in this subsection.
2. Disconnect fuel pressure hoses from the fuel injector fuel rails. Refer to *DISCONNECTING A FUEL PRESSURE HOSE* in *FUEL HOSE AND OETIKER CLAMPS*.
3. Disconnect the following from the fuel pump module:
   – Fuel pump electric connector
   – Fuel system vent hose

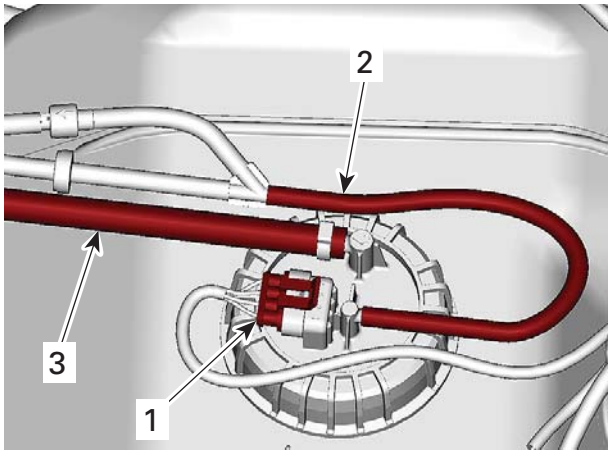

219100939-014-006

1. Fuel pump connector
2. Vent hose
3. High pressure fuel hose

4. Unscrew fuel tank retaining nuts (2) and unhook straps.

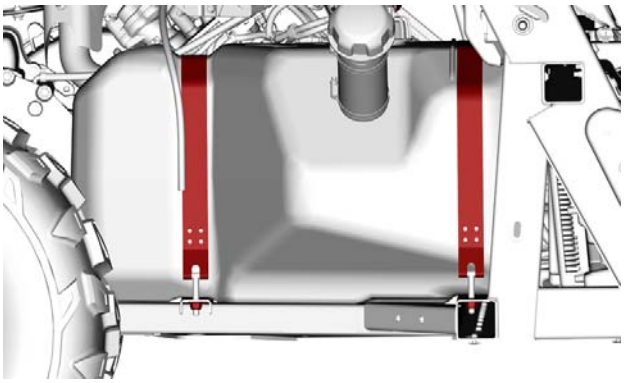

tmr2016-129-011

5. Loosen fuel filler neck hose clamp.
6. Remove fuel tank.

Inspecting the Fuel Tank

1. Visually inspect fuel tank for cracks, wear marks, signs of leakage or any other damages.
2. Visually inspect fuel system hoses for proper rooting, cracking, wear marks, signs of leakage or any other damages.
3. Carry out a *TESTING FOR A FUEL TANK LEAK*, refer to *FUEL TANK AND FUEL PUMP* subsection.

⚠ WARNING

All fuel system leaks must be repaired. Damaged, worn or leaking fuel system components should be replaced to ensure fuel system tightness.

If cracks, gouges or other damages which may lead to a fuel leak, or damages to attachment points that could prevent the tank from being secure are found, replace fuel tank.

Installing the Fuel Tank

Installation is the reverse of the removal procedure. However, pay attention to the following.

Use NEW retaining nuts.

Apply specified torque to fuel tank retaining nuts.

TIGHTENING TORQUE	
Fuel tank retaining nuts	23 N•m ± 3 N•m (17 lbf•ft ± 2 lbf•ft)

Be sure to properly connect and route:
- Fuel tank vent tube
- Fuel pump pressure hose
- Electrical connector.

Refuel tank and ensure there are no leaks by performing a *TESTING FOR A FUEL TANK LEAK* and a *TESTING THE FUEL PRESSURE* as described in this subsection.

FUEL PUMP

Testing the Fuel Pressure

Refer to *INSPECTION* in this subsection.

Quickly Testing the Fuel Pump

1. Turn ignition key to ON.
2. Listen for fuel pump operation.

NOTE: Fuel pump should come ON for a few seconds, then stop.

If fuel pump does not come ON, carry out the following:
- Check fuel pump relay fuse (F5) and Main relay (R2).
- Check in the BRP diagnostic software (BUDS2) for applicable fault codes.
- Carry out a fuel pump input voltage test.

Testing the Fuel Pump Input Voltage

1. Disconnect the fuel pump connector.
2. Turn ignition key ON.
3. Read voltage as follows.

NOTE: The fuel pump voltage will be read only when the fuel pump is activated.

REQUIRED TOOLS	
FLUKE 115 MULTIMETER (P/N 529 035 868)	
FLUKE RIGID BACK PROBE (P/N TP88)	

TESTING THE FUEL PUMP INPUT VOLTAGE		
TEST PROBES		VOLTAGE READING
Fuel pump connector Pin 3	Fuel pump connector Pin 4	Battery voltage

If battery voltage is read, carry out a fuel pump resistance test.

If battery voltage is not read, test fuel pump power input as follows.

TESTING THE FUEL PUMP POWER WIRE		
TEST PROBES		VOLTAGE READING
Fuel pump connector Pin 3	Battery ground	Battery voltage

If battery voltage is now read, check fuel pump ground circuit between fuel pump connector FP-4 and battery ground.

If battery voltage is still not read, check the following:
- Fuse (F5)
- Main relay (R2)
- Fuel pump relay input voltage (control and power circuits)
- Fuel pump relay control circuit continuity to ECM-M1
- Wiring and connectors.

Testing the Fuel Pump Resistance

1. Ensure fuel pump connector is properly connected.
2. Remove main relay (R2).

Disconnect fuel pump connector and measure resistance at fuel pump connector.

TESTING THE FUEL PUMP RESISTANCE (AT FUEL PUMP CONNECTOR)	
Pins 3 and 4	Approximately 2 Ω

If test failed at pump connector, replace fuel pump.

If test succeeded at pump connector, check wiring and connectors from:

– Fuse box to fuel pump
– Fuel pump to battery ground.

Repair or replace as necessary.

Releasing the Fuel System Pressure

Refer to *DISCONNECTING A FUEL PRESSURE HOSE* in this subsection.

Removing the Fuel Pump

1. Release the pressure of the fuel system.
2. Disconnect the following from the fuel pump:
   – Fuel pump electric connector
   – Fuel system vent hose
   – Fuel pump pressure hose.

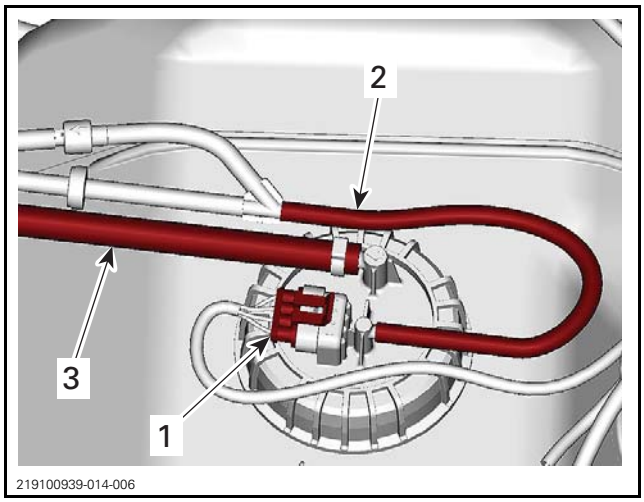

1. Fuel pump connector
2. Vent hose
3. High pressure fuel hose

3. Remove fuel pump retaining nut.

⚠ WARNING

Fuel vapors are flammable and explosive under certain conditions. Use only non-sparking tools.

NOTICE **Replace fuel pump gasket whenever fuel pump retaining nut is loosened.**

REQUIRED TOOL	
FUEL PUMP NUT TOOL (P/N 529 035 899)	

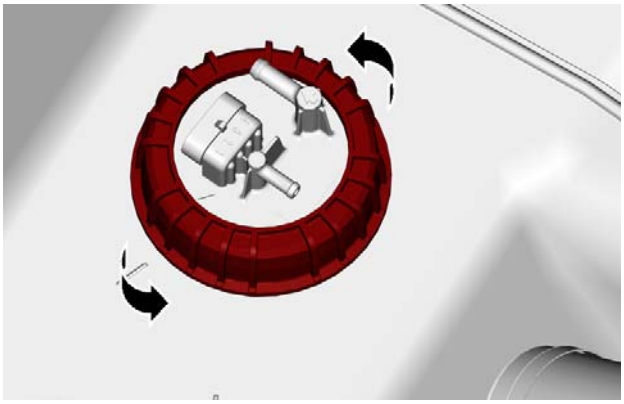

TYPICAL
1. Fuel pump retaining nut

4. Carefully pull out and rotate fuel pump as required.

NOTICE **Pay attention not to damage fuel sender and fuel pump prefilter.**

5. Discard gasket ring.
6. Wipe off any fuel spillage.

Installing the Fuel Pump

The installation is the reverse of the removal procedure. However, pay attention to the following.

Rotate fuel pump during insertion as per removal procedure.

NOTICE **Pay attention not to damage fuel sender and fuel pump pre-filter.**

1. Install a **NEW** gasket ring.
2. Place gasket so that it is properly located between fuel pump and fuel pump mounting neck on fuel tank.

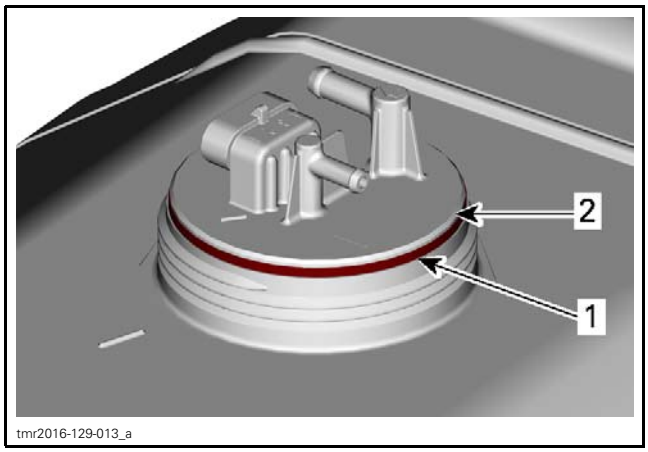

TYPICAL
1. Gasket ring here
2. Fuel pump flange

NOTICE **Ensure gasket ring makes good contact all around fuel pump and fuel pump mounting neck on fuel tank.**

3. Ensure proper fuel pump orientation as in following illustration.

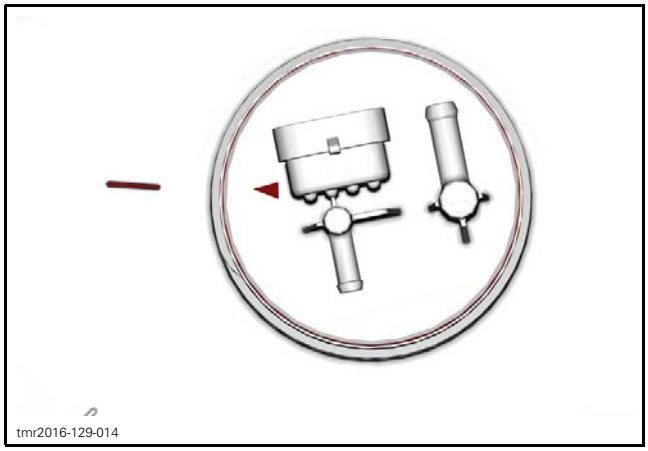

4. Insert fuel pump retaining nut over the fuel pressure hose and electrical wiring connector.
5. While firmly holding pump against tank, engage fuel pump retaining nut on fuel tank flange.

NOTE: If necessary, move the pump in order to ensure the flange is sitting completely flat on the tank.

6. Tighten fuel pump retaining nut to specification.
   6.1 Ensure pump locking ring is fully engaged.
   6.2 To apply the proper torque to the fuel pump retaining nut, install the fuel pump nut tool on a torque wrench with it's handle perpendicularly (90°) to the torque wrench.
   6.3 Ensure pump is properly aligned with index marks after nut it tightened to specification.

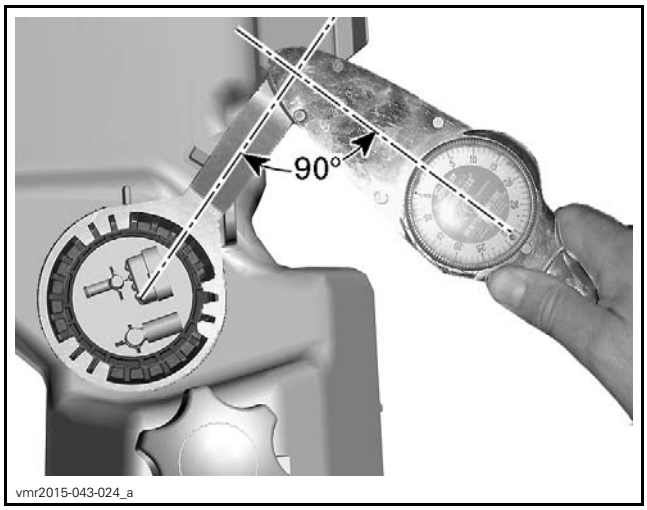

TYPICAL - TORQUE WRENCH PERPENDICULAR TO TOOL HANDLE

TIGHTENING TORQUE	
Fuel pump retaining nut	29 N•m ± 1 N•m (21 lbf•ft ± 1 lbf•ft)

7. Install fuel pressure hose on fuel pump using a NEW Oetiker clamp.
8. Install fuel vent tube on fuel pump.
9. Install electrical connector on fuel pump.
10. Install main relay (R2).
11. Refuel tank and ensure there are no leaks by performing a *FUEL TANK LEAK TEST* and a *FUEL PRESSURE TEST* as described in this subsection.
12. Check fuel level sender operation.

FUEL PUMP PRE-FILTER (STRAINER)

Replacing the Fuel Pump Pre-filter

1. Remove *FUEL PUMP*, see *REMOVING THE FUEL PUMP* in this subsection.
2. Unlock 3 tabs on strainer plastic ring.

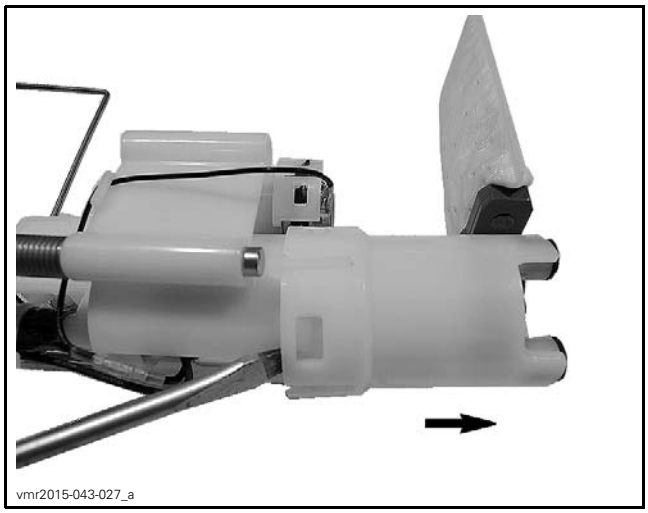
vmr2015-043-027_a

3. Remove rubber pad.

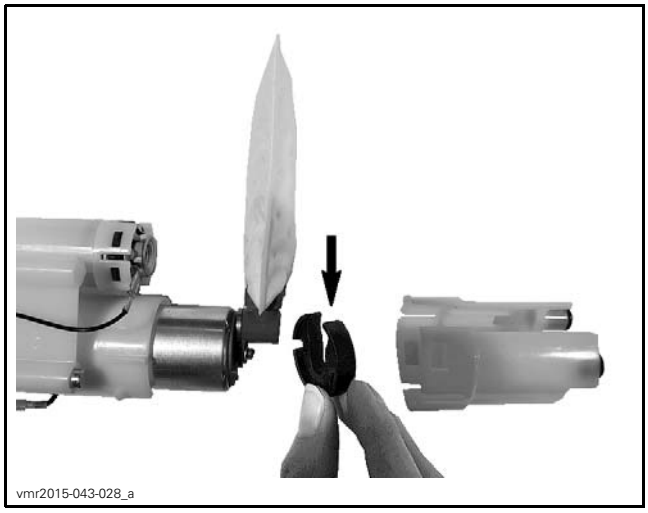
vmr2015-043-028_a

4. Remove push nut securing strainer to fuel pump. Be careful not to break the assembly locator pin.

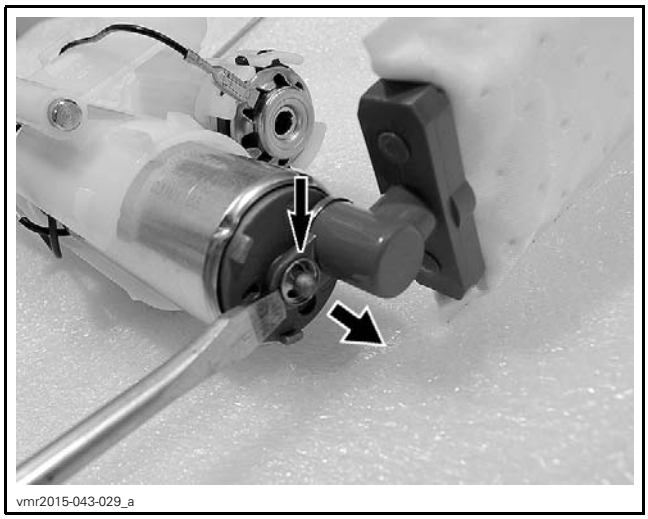
vmr2015-043-029_a

5. Pull strainer off fuel pump.

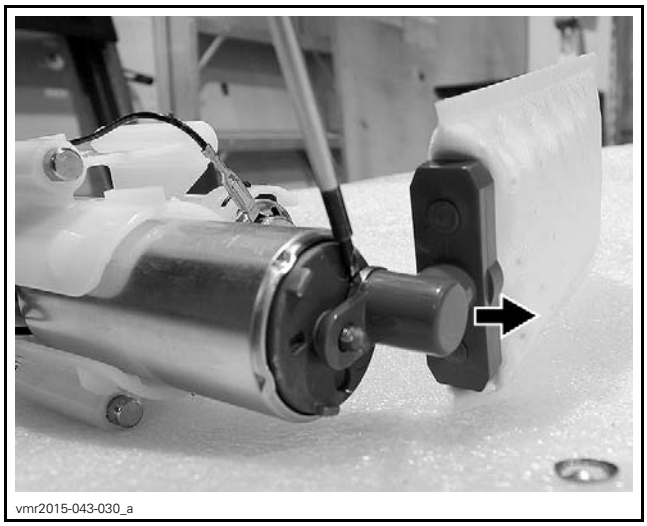
vmr2015-043-030_a

6. Before installing new strainer on fuel pump, lubricate assembly areas circled, with O-ring lubricant or clean oil.

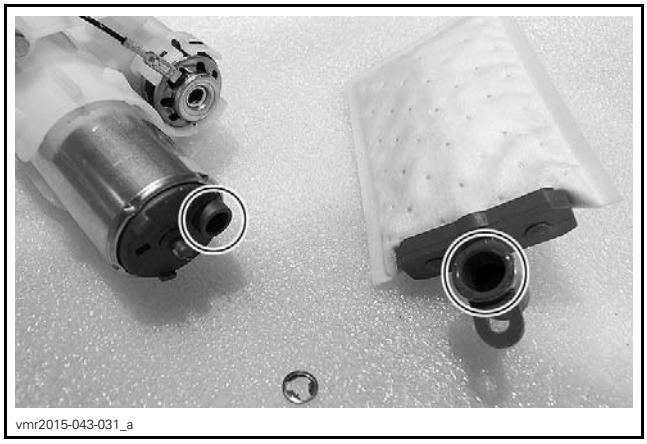
vmr2015-043-031_a

7. Insert the new strainer on fuel pump making sure to press it in fully and tightly against the fuel pump surface.
8. Using a small nut driver or socket, press in a **NEW** push nut to secure strainer.
9. Reinstall remaining removed parts.

Cleaning Fuel Pump Prefilter

1. Remove fuel pump from fuel tank, refer to *REMOVING THE FUEL PUMP* in *FUEL TANK AND FUEL PUMP* subsection.
2. Clean the fuel pump prefilter (strainer) using the recommended products and low pressure air.

RECOMMENDED PRODUCTS
XPS BRAKES AND PARTS CLEANER (USA) (P/N 219 701 705) or BRAKE AND PARTS CLEANER PRO S2 (P/N 779245)

3. If the fuel pump prefilter is heavily soiled, clogged or damaged:
   – Replace it with a new one. Refer to *REPLACING THE FUEL PUMP PRE-FILTER* in the *FUEL TANK AND FUEL PUMP* subsection.
   – Inspect inside of fuel tank for contaminants.
   – Clean fuel tank as required.
   – Inspect fuel tank vent breather filter. Replace as necessary. Refer to *FUEL TANK VENT BREATHER FILTER* in *FUEL TANK AND FUEL PUMP* subsection.

FUEL LEVEL SENDER

The fuel level sender is a float actuated variable resistance type that is part of the fuel pump.

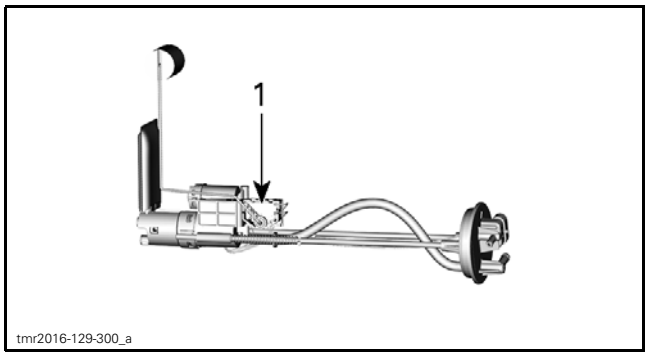

1. Fuel level sender

Testing the Fuel Level Sender Resistance (Fuel Pump Module Installed)

1. Disconnect multifunction gauge.
2. Measure the resistance of the fuel level sender as follows.

TESTING THE FUEL LEVEL SENDER RESISTANCE		
FUEL LEVEL	GAUGE CONNECTOR	RESISTANCE Ω @ 20°C (68°F)
Full	Pins 4 and 21	6 Ω ± 1
Empty		90 Ω ± 4.5

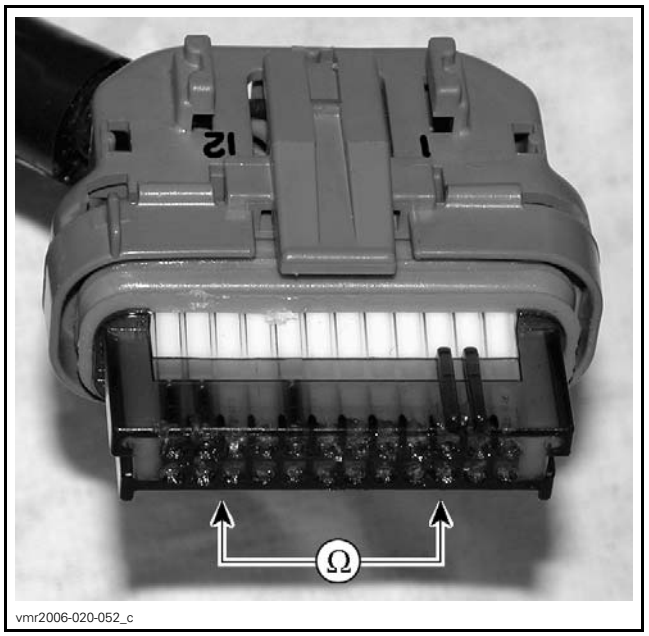

If readings are out of specification, refer to *TESTING THE FUEL LEVEL SENDER RESISTANCE (AT FUEL PUMP CONNECTOR)*.

If readings are as specified, refer to *TESTING THE FUEL LEVEL SENDER INPUT VOLTAGE*.

Testing the Fuel Level Sender Resistance (at Fuel Pump Connector)

TESTING THE FUEL LEVEL SENDER RESISTANCE		
FUEL LEVEL	FUEL PUMP CONNECTOR	RESISTANCE Ω @ 20°C (68°F)
Full	Pins 1 and 2	6 Ω ± 1
Empty		90 Ω ± 4.5

If resistance test at fuel pump connector is failed, replace fuel pump module.

Testing the Fuel Level Sender Input Voltaget

1. Set ignition switch to ON.
2. Disconnect fuel pump connector, refer to *FUEL PUMP CONNECTOR ACCESS* in this subsection.
3. Measure for input voltage as follows.

TESTING FUEL LEVEL SENDER INPUT VOLTAGE		
FUEL PUMP CONNECTOR	BATTERY	VOLTAGE
Pin 2	Negative terminal	5V

TEST RESULT	SERVICE ACTION
5V is not read	Test wiring continuity between fuel level sender and multifunction gauge
Wiring continuity is good	Replace multifunction gauge
Wiring continuity is not obtained	Repair or replace wiring

Replacing the Fuel Level Sender

Replace fuel pump. Refer to *FUEL PUMP* in this subsection.

FUEL TANK VENT VALVES

Testing the Fuel Tank Vent Valves

Testing the Inlet Check Valve

1. Remove rear body module, refer to *BODY* subsection.
2. Install a small hose pincher between the vent pressure relief valve and the fuel pump vent inlet.

REQUIRED TOOL	
SMALL HOSE PINCHER (P/N 295 000 076)	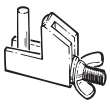

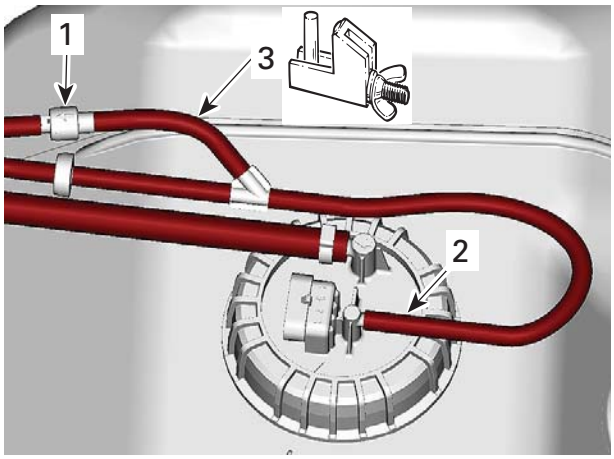

TYPICAL
1. *Pressure relief valve*
2. *Fuel pump vent inlet*
3. *Install small hose pincher here*

3. Connect the vacuum/pressure pump to the fuel tank vent hose inlet.

REQUIRED TOOL	
VACUUM/PRESSURE PUMP (P/N 529 021 800)	

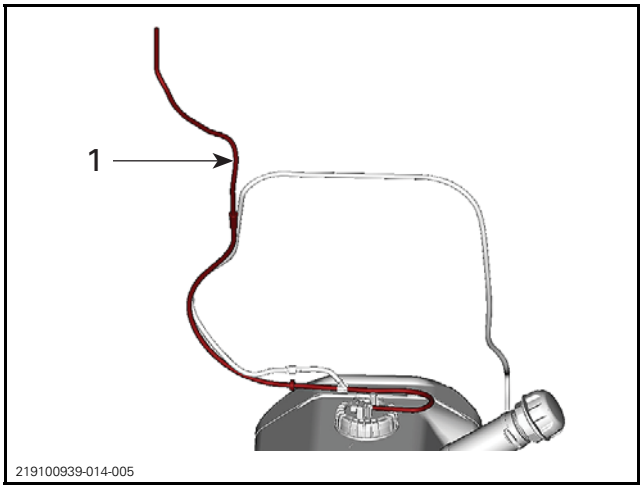

1. *Fuel tank vent hose inlet*

4. Remove fuel tank cap.
5. Set vacuum/pressure pump to **PRESSURE** and activate pump. The gauge on the pump **should not change in reading**.
6. Set vacuum/pressure pump to **VACUUM** and activate pump. The **gauge should increase in reading**.

If the test failed, carry out the following:

– Ensure breather filter is properly installed, refer to *PERIODIC MAINTENANCE PROCEDURES*.

– Ensure inlet check valve is properly installed, refer to *INSTALLING THE FUEL TANK VENT VALVE* in this subsection.
– Test inlet check valve separately. If good, replace the breather filter, refer to *PERIODIC MAINTENANCE PROCEDURES*.

Testing the Pressure Relief Valve

1. Install the small hose pincher between the inlet check valve and the fuel pump vent inlet fitting.

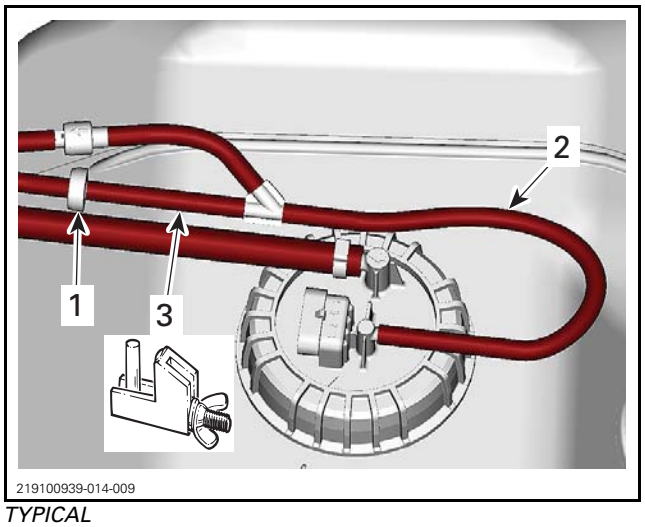

TYPICAL
1. Inlet check valve
2. Fuel pump vent inlet fitting
3. Install small hose pincher here

2. Set vacuum/pressure pump to **PRESSURE** and activate pump. The **gauge should increase in reading**.
3. Set vacuum/pressure pump to **VACUUM** and activate pump. The gauge on the pump **should not change in reading**.

If the test failed, carry out the following:
– Ensure pressure relief valve is properly installed, refer to *INSTALLING THE PRESSURE RELIEF VALVE* in this subsection.
– Replace pressure relief valve if it fails the test.

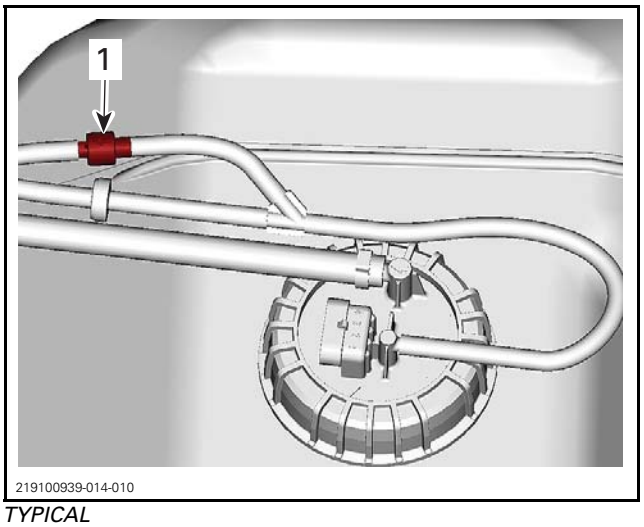

TYPICAL
1. Pressure relief valve

Installing the Fuel Tank Vent Valves

Installing the Inlet Check Valve

Ensure white portion of inlet check valve is towards the vent breather filter.

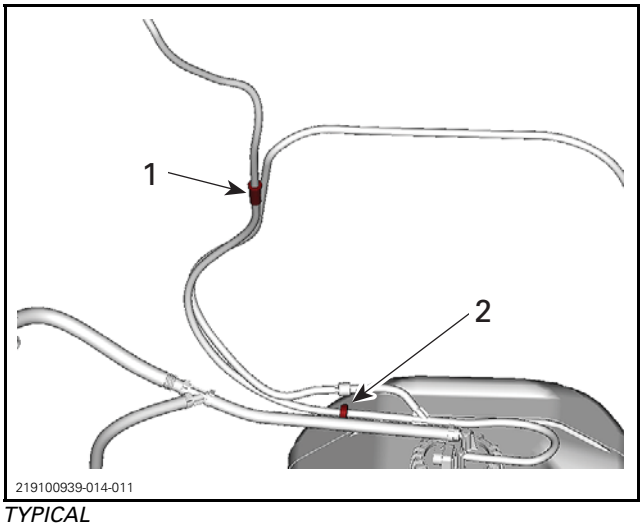

TYPICAL
1. Vent breather filter
2. White portion of inlet check valve

Installing the Pressure Relief Valve

Ensure pressure relief valve flow arrow does not point toward the fuel pump

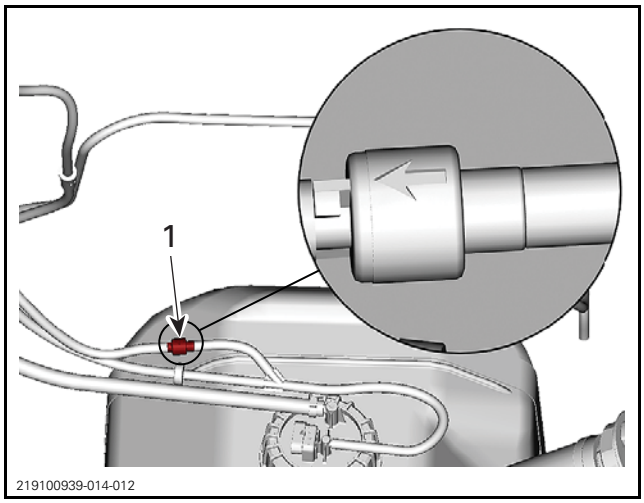

TYPICAL
1. Pressure relief valve flow direction arrow

EVAPORATIVE EMISSION CONTROL SYSTEM (EVAP)

SERVICE TOOLS

Description	Part Number	Page
VACUUM/PRESSURE PUMP	529 021 800	6

SERVICE TOOLS – OTHER SUPPLIER

Description	Part Number	Page
SNAP-ON SMOKE MACHINE	EELD100	5

GENERAL

The evaporative emission control system (EVAP) is designed to prevent fuel vapors from escaping into the atmosphere.

When vehicle is at rest, fuel vapors accumulate in the canister.

When engine is running in predetermined conditions, the ECM controls the purge valve, allowing the engine aspirate the fuel vapors through the intake manifold in order to burn them.

Fresh air is drawn at the other end of the canister through a pre-filter.

NOTE: The illustrations in this document are from a typical system and may not represent the exact parts layout of the vehicle to be serviced.

TYPICAL PARTS IDENTIFICATION

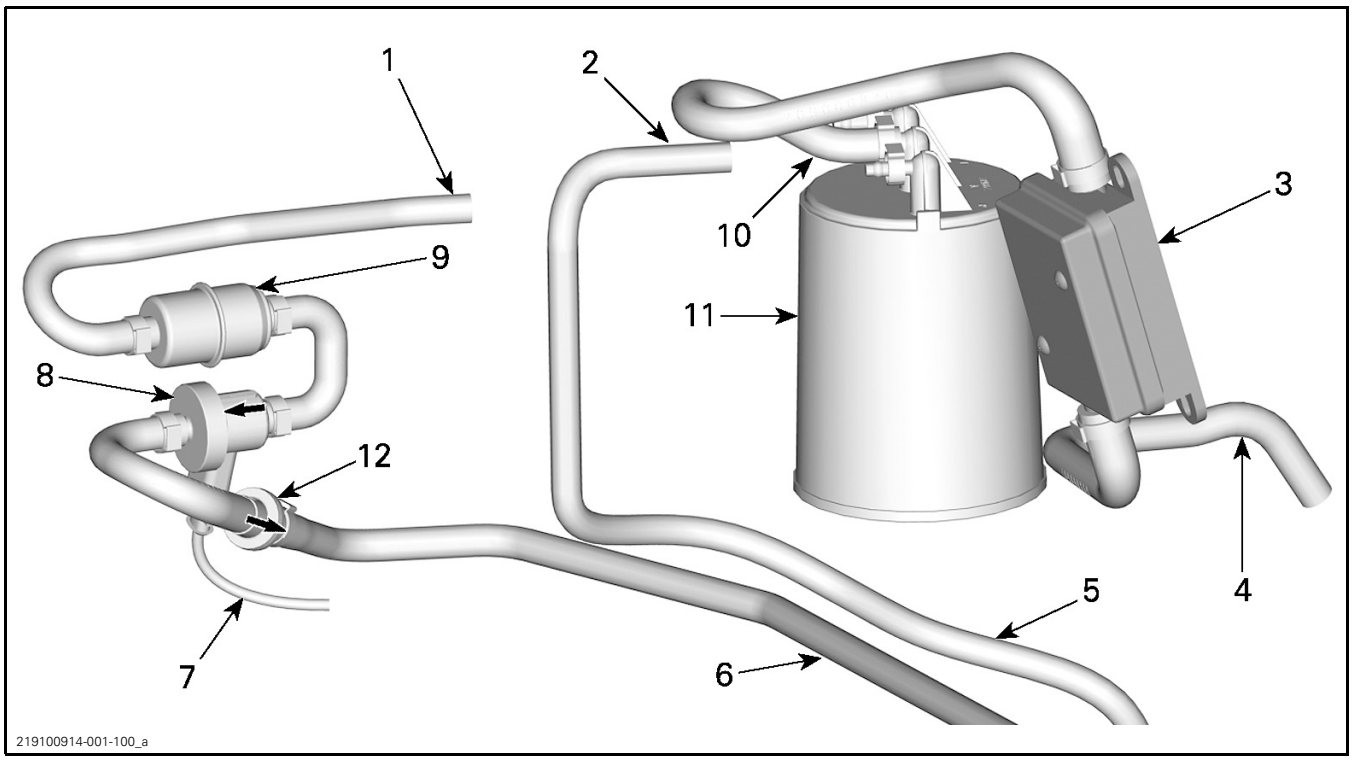

CANISTER AREA

1. *Canister purge hose (to canister port P)*
2. *Fuel tank vent hose (to canister port T)*
3. *Canister vent pre-filter*
4. *Canister vent hose inlet (To chassis)*
5. *Fuel tank vent hose (to fuel tank - rollover valve)*
6. *Canister purge hose (to intake manifold)*
7. *Purge valve wiring harness*
8. *Purge valve*
9. *Filter*
10. *Canister vent hose (to canister port A)*
11. *Canister*
12. *Check valve*

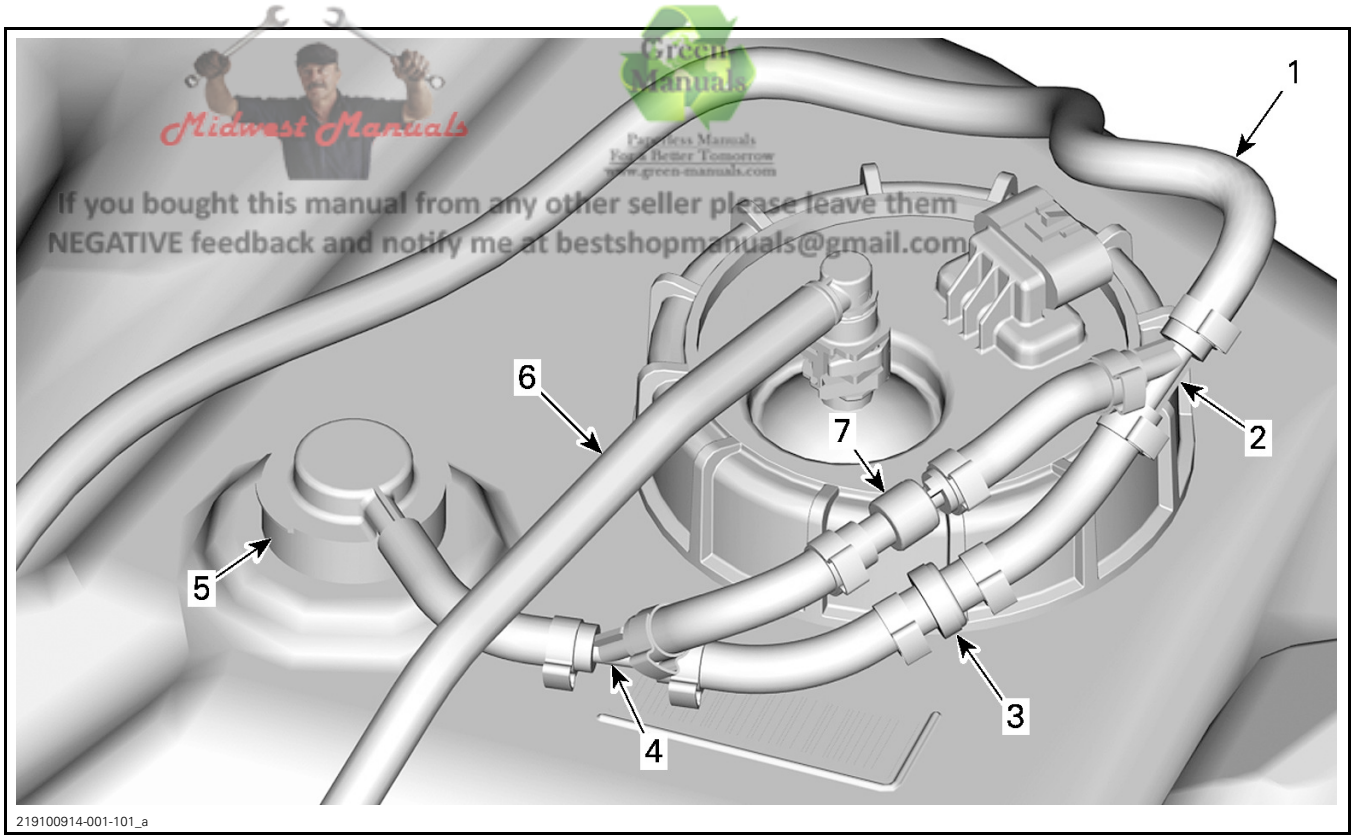

Midwest Manuals
Green Manuals
If you bought this manual from any other seller please leave them NEGATIVE feedback and notify me at bestshopmanuals@gmail.com

FUEL TANK AREA
1. *Fuel tank vent hose (to canister port T)*
2. *Y fitting*
3. *Check valve*
4. *Y fitting*
5. *Rollover valve*
6. *Fuel hose (to fuel injectors)*
7. *Pressure relief valve*

SYSTEM SCHEMATIC

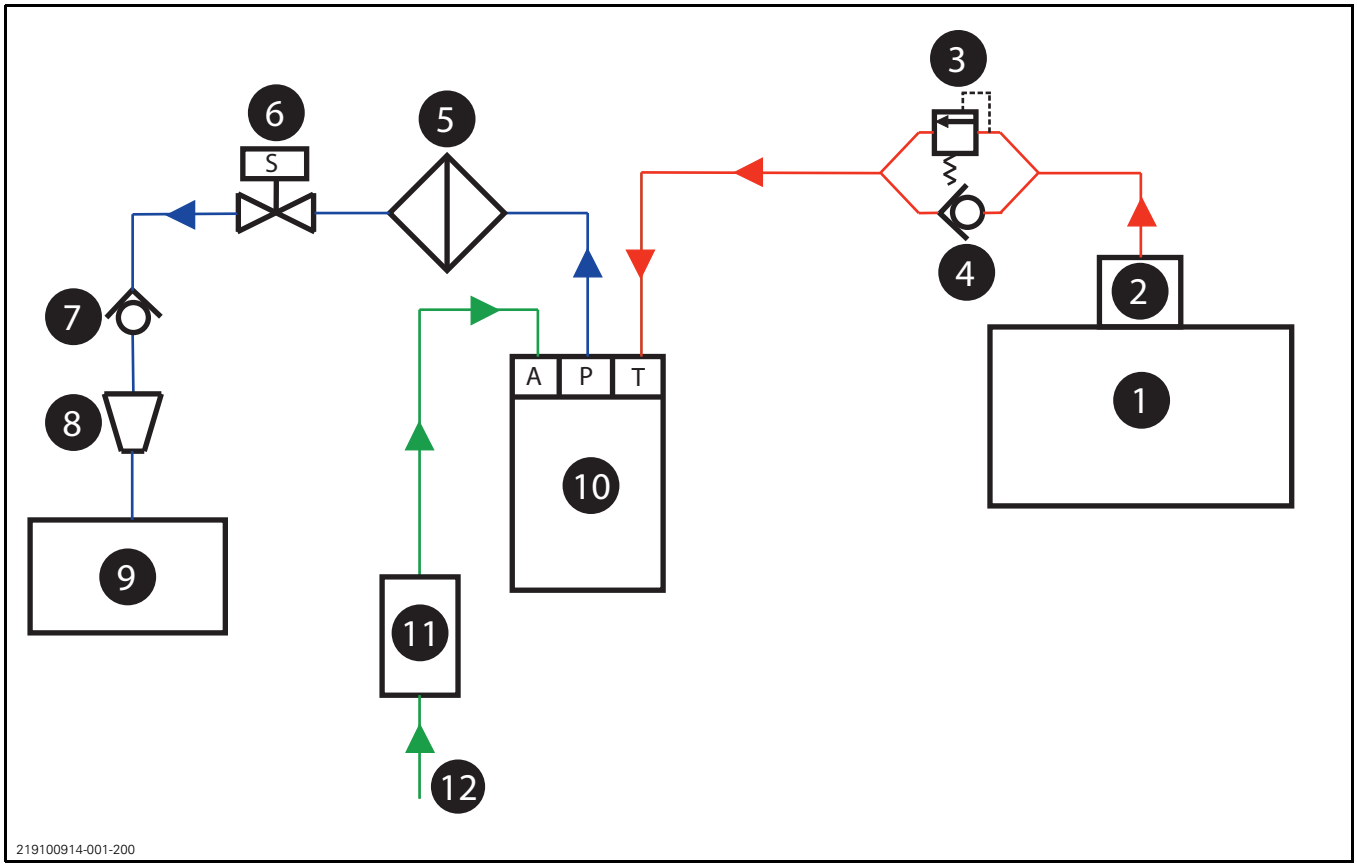

1. *Fuel tank*
2. *Rollover valve*
3. *Pressure relief valve*
4. *Check valve*
5. *Filter*
6. *Purge valve*
7. *Check valve*
8. *Flow reducer (if equipped)*
9. *Engine intake manifold*
10. *Canister*
11. *Vent pre-filter*
12. *Vent hose*

S: Solenoid
A: Vent port (to ambient air)
P: Purge port (to purge valve)
T: Vapor inlet port (to fuel tank)

MAINTENANCE

REPLACING THE CANISTER VENT PRE-FILTER

To replace the pre-filter:

1. Remove the hose clamps.
2. Remove the pre-filter assembly.

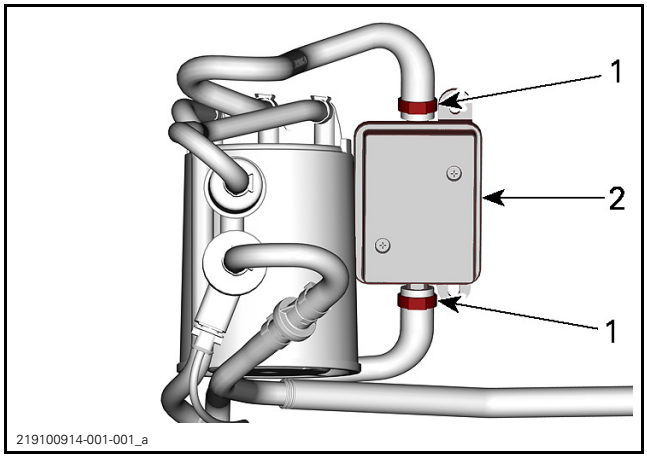

1. Clamps
2. Pre-filter

3. Install the pre-filter assembly with new Oetiker clamps.

NOTE: Install the filter in the direction indicated by the arrow in the illustration.

INSPECTION

INSPECTING THE EVAP COMPONENTS

Check parts and hoses for:

– Proper rooting (ensure there is no kinks)
– Cracks or other damage
– Loose connections
– Clamps condition

TESTING THE FUEL SYSTEM FOR LEAKS

1. Disconnect the fuel tank vent hose from the rollover valve.

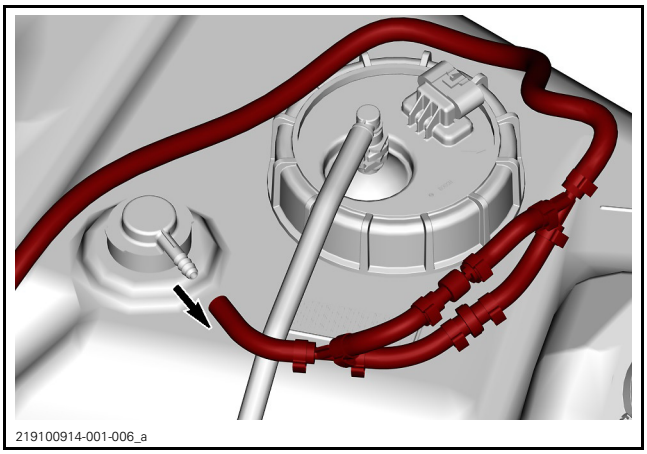

2. Install the SNAP-ON SMOKE MACHINE (P/N EELD100) or equivalent on the hose previously disconnected.

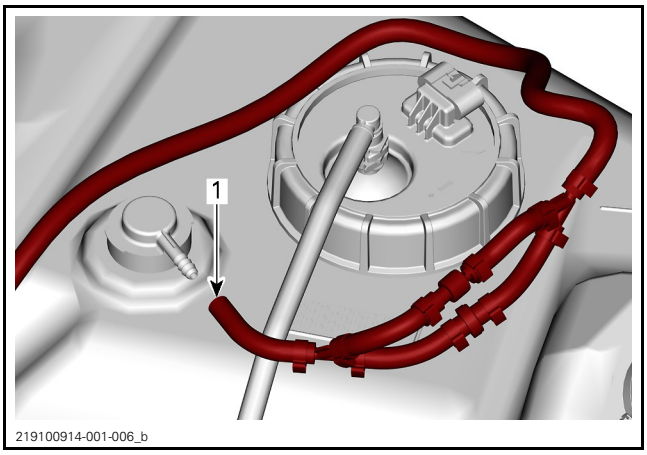

1. Connect here

3. Pinch the canister vent hose.

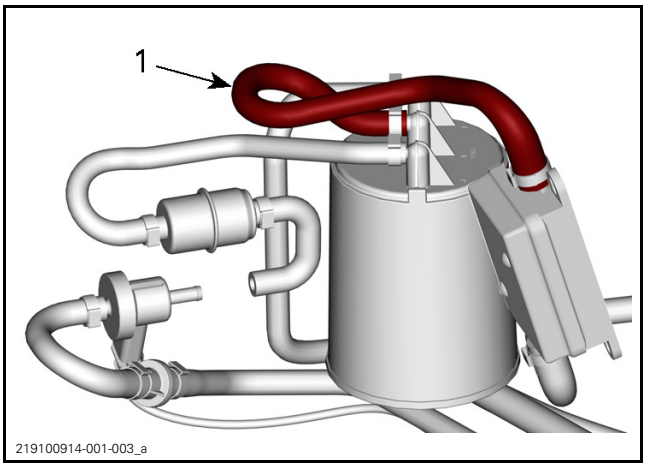

1. Pinch here

4. Pressurize the fuel system as per the following specifications.

FUEL SYSTEM LEAK TEST	
PRESSURE	TIME WITHOUT PRESSURE DROP
21 kPa (3 PSI)	30 seconds

If pressure drops, locate leak(s) and repair.

If pressure does not drop, carry out a *FUEL TANK LEAK TEST*. Refer to *FUEL TANK AND FUEL PUMP* subsection.

5. Reinstall purge hose with a new Oetiker clamp.

PROCEDURES

TESTING THE PURGE SOLENOID VALVE

Before carrying out the following tests:

– Connect vehicle to the BRP diagnostic software (BUDS2) and check for purge valve related fault code(s).
– Make sure the fuse protecting the purge valve is good. Refer to the appropriate *WIRING DIAGRAM*.

Testing the Purge Valve Operation

1. Disconnect the purge hose on the intake manifold side.
2. Install the VACUUM/PRESSURE PUMP (P/N 529 021 800) on the purge hose.

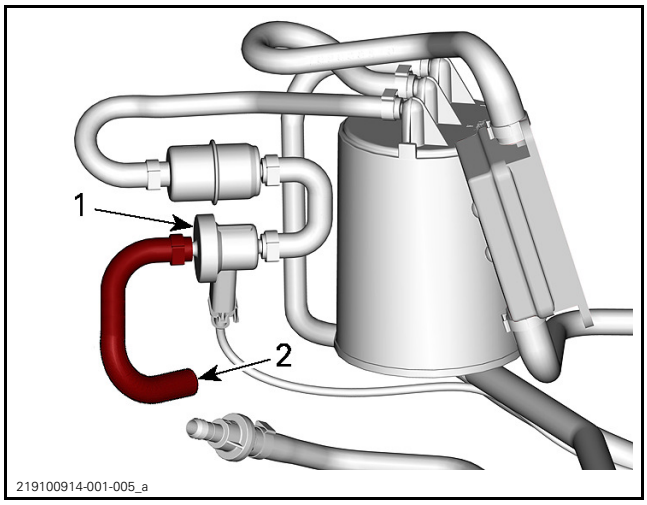

1. Purge valve
2. Connect here

3. Set vacuum/pressure pump to **vacuum** function.
4. Activate vacuum/pressure pump lever until vacuum reaches the specification.

The air must not pass through the purge valve. If passes, replace the purge valve.

EVAP PURGE VALVE VACUUM
20 kPa (3 PSI) for 10 seconds

If the valve cannot stand the vacuum applied for 10 seconds, replace valve.

If the valve stands the vacuum for 10 seconds, continue as follows.

5. In BUDS2, select:
   – **Functions** page
   – **ECM** button
   – **IO Controls** tab
   – **Activate Purge valve**.
6. Follow the instructions on the screen to activate the purge valve.

You should feel it "clicking" and air should flow through the valve.

If the purge valve "clicks" but air does not flow, replace the purge valve.

If the purge valve doesn't not "click" and air doesn't flow, carry out: *TESTING THE PURGE VALVE SOLENOID*.

Testing the Purge Valve Solenoid

1. Disconnect the purge valve connector.

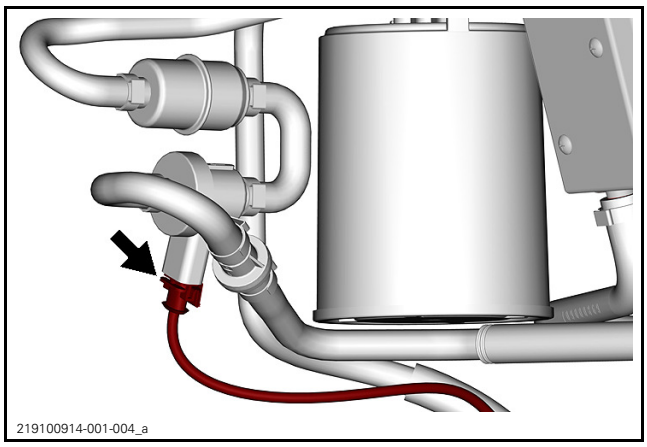

2. Measure the resistance in the valve solenoid as per following table.

PURGE VALVE SOLENOID TEST	
RESISTANCE @ 20°C (68°F)	10 to 20 Ω

If the resistance is out of specification, replace the purge valve.

If resistance is good, carry out *TESTING PURGE VALVE SUPPLY VOLTAGE*.

Testing Purge Valve Supply Voltage

1. Disconnect the purge valve connector.

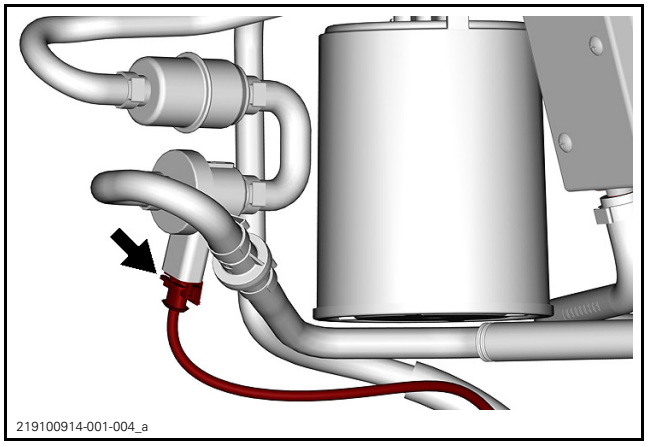

2. Activate the vehicle electrical system.
3. Refer to the appropriate *WIRING DIAGRAM* and identify the positive (voltage supply) wire of the purge valve harness.
4. Set multimeter to Vdc and test circuit voltage as per following table.

TEST PROBES		VOLTAGE (APPROXIMATE)
Purge solenoid voltage supply pin	Chassis ground	12 to 14 Vdc

If voltage is not as specified, verify power supply wiring continuity. Refer to the appropriate *WIRING DIAGRAM* for test points.

If voltage is good, verify wiring continuity in the control circuit. Refer to the appropriate *WIRING DIAGRAM* for test points.

REPLACING PARTS

For proper hose and parts connection, refer to *TYPICAL PARTS IDENTIFICATION* and *SYSTEM SCHEMATIC*.

Secure hoses with new Oetiker clamps.

Carry out *TESTING THE FUEL SYSTEM FOR LEAKS* after any repair.

POWER DISTRIBUTION AND GROUNDS

GENERAL

OVERVIEW

The battery is the primary source of power for the electrical system, it is recharged by the magneto.

Some components are permanently connected to the battery (unswitched) while some require a relay or switch to be closed (switched). Refer to the color *WIRING DIAGRAM* on *KNOWLEDGE CENTER*.

At high RPM if the magneto power is greater than the loads, the rectifier/regulator will regulate power as necessary.

The system uses an external voltage regulator/rectifier.

FUSE HOLDERS PF3 - PF4 - PF7

The fuse holders are located on the front fuse box (PF1) support.

FUSE HOLDERS		
NO	DESCRIPTION	RATING
PF3	DPS	40 A
PF4	Accessory post (Under dash terminal block)	40 A
PF7	Smart-Lok	20 A

FRONT FUSE BOX (PF1)

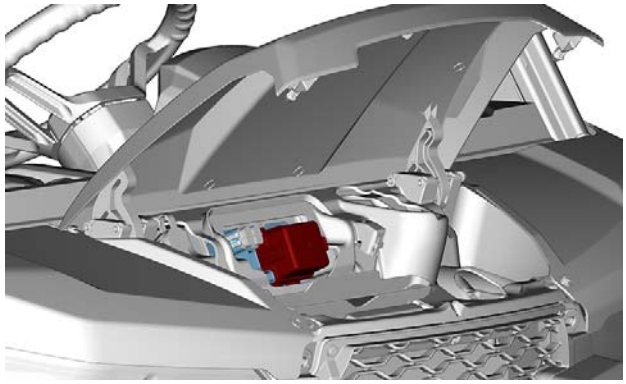

FRONT SERVICE COVER OPEN

Fuses

FUSE IDENTIFICATION			
Fuses			
	F10	Accessories (T models)	10 A
	F11	Headlights **If equipped:** Turn signal module Front position lights Horn Trailer light module F2/F3 in console fuse box	20 A
	F12	Accessories connector (DC3) 12V outlet 1 (DC1)	10 A
	F14	12V accessory outlet USB	10 A
	F16	Taillights Brake lights	10 A
	SP1	N/A	20 A

Relays

RELAY IDENTIFICATION		
Relays	R3	ECM accessory 12V relay
	R8	Brake lights relay
	R9	Keyswitch Accessory relay

REAR FUSE BOX (PF2)

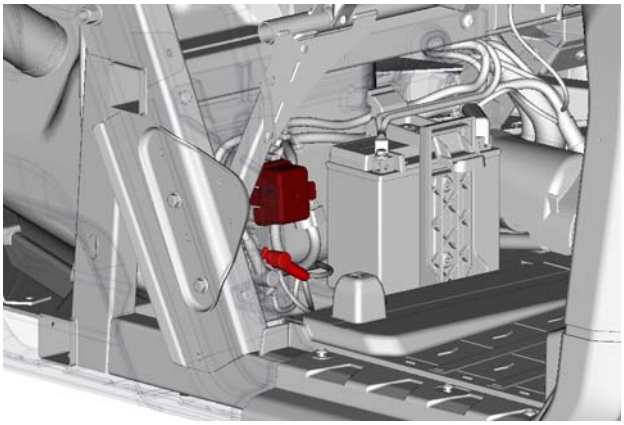

BATTERY COVER REMOVED

Fuses

FUSE IDENTIFICATION			
Fuses	F4	Gauge DPS unit Relay R3 Diagnostic connector Brake light switch F1 in consolefuse box (T Models)	10 A
	F5	Relay R1 Ignition coil Fuel injectors Speed sensor Fuel pump	10 A
	F6	Engine Control Module (ECM)	10 A
	F7	4X4 actuator Switches back lighting	10A
	F8	Ignition switch Clock	10 A
	F9	Cooling fan (thermal fuse)	25 A
	F18	Oxygen sensor Emission control	10 A
	SP1	N/A	10A
	SP2	N/A	10A
	SP3	N/A	10A

Relays

RELAY IDENTIFICATION		
Relays	R1	Cooling fan
	R2	Main

FUSIBLE LINKS

FL-1 is located between BP1 and PF2.

FL-2 is located between POST+ and PF1.

Fusible link gauge (AWG) varies by current capacity.

FUSIBLE LINK IDENTIFICATION			
Fusible links (FL)	FL-1	Protects rear fuse box (PF2)	18 AWG
	FL-2	Protects front fuse box (PF1)	14 AWG

FUSE HOLDER

Voltage Regulator fuse holder is located near battery.

REGULATOR FUSE HOLDER		
NO	DESCRIPTION	RATING
-	Regulator	50 A

GROUND LOCATIONS

For more specific main harness ground locations, refer to *WIRING HARNESS AND CONNECTORS*.

GROUND	
NAME	LOCATIONS
Main Harness	
BAT2	Rear vehicle
BN1	
BN3	Front vehicle
POST-	
Power Harness	
BN_BAT2	Engine
BN_BODY	
BN_ENGINE	

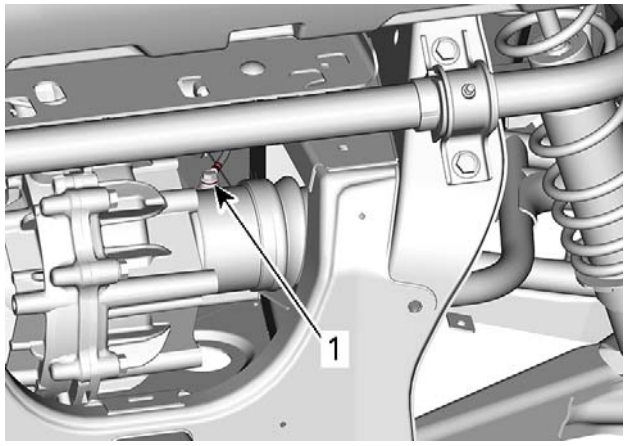

TYPICAL CHASSIS GROUND - REAR SIDE VIEW
1. BN_BODY

TIGHTENING TORQUE	
Battery ground terminal	9 N•m ± 1 N•m (80 lbf•**in** ± 9 lbf•**in**)

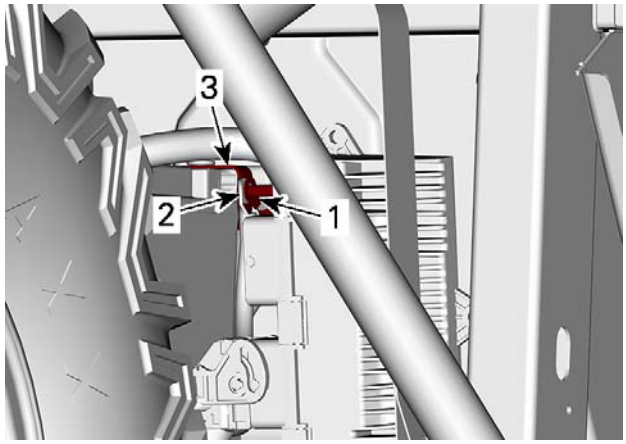

TYPICAL BATTERY GROUND - RIGHT SIDE VIEW
1. *BN1*
2. *BAT2*
3. *BN_BAT2*

TIGHTENING TORQUE	
Chassis ground terminal	9 N•m ± 1 N•m (80 lbf•**in** ± 9 lbf•**in**)

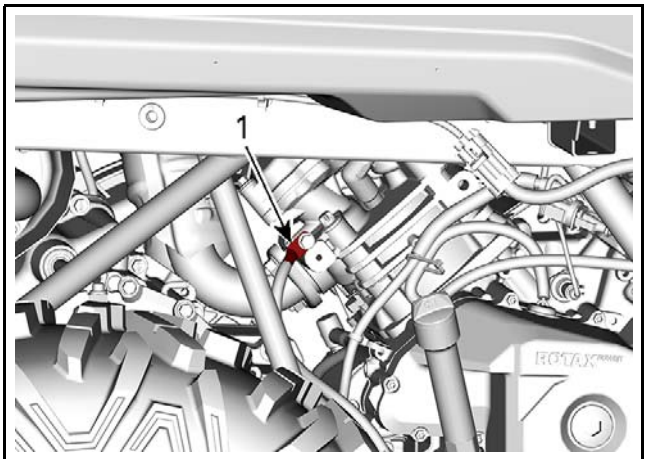

HD8 AND HD10 ENGINE GROUND - RIGHT SIDE VIEW
1. *BN_ENGINE*

TIGHTENING TORQUE	
HD8 and HD10 engine ground terminal	9 N•m ± 1 N•m (80 lbf•**in** ± 9 lbf•**in**)

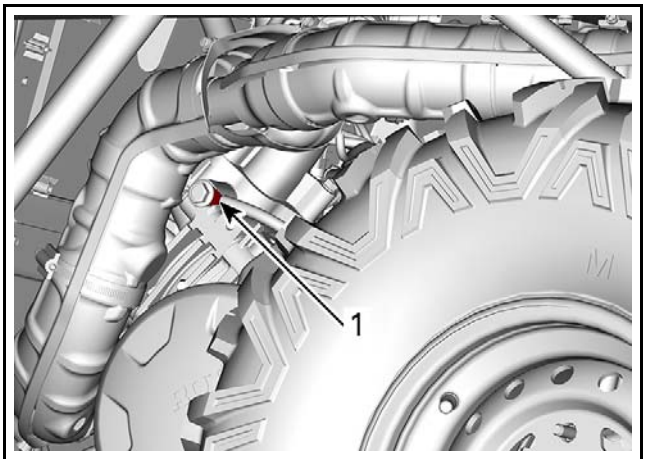

HD5 ENGINE GROUND - LEFT SIDE VIEW
1. *BN_ENGINE*

TIGHTENING TORQUE	
HD5 Engine ground terminal	17.5 N•m ± 2.5 N•m (155 lbf•**in** ± 22 lbf•**in**)

WIRING HARNESS AND CONNECTORS

SERVICE TOOLS

Description	Part Number	Page
ECM ADAPTER TOOL	529 036 166	11
ECM TERMINAL REMOVER 2.25	529 036 175	12
ECM TERMINAL REMOVER 3.36	529 036 174	12

SERVICE TOOLS – OTHER SUPPLIER

Description	Part Number	Page
DELPHI TERMINAL EXTRACTOR	12094429	14–15
FCI TERMINAL EXTRACTOR TOOL	54241678	13
GM TERMINAL EXTRACTOR	12094430	9
MOLEX 150 TERMINAL EXTRACTOR TOOL	63813 - 1500	13

MAIN HARNESS NON T CATEGORY (FRONT)

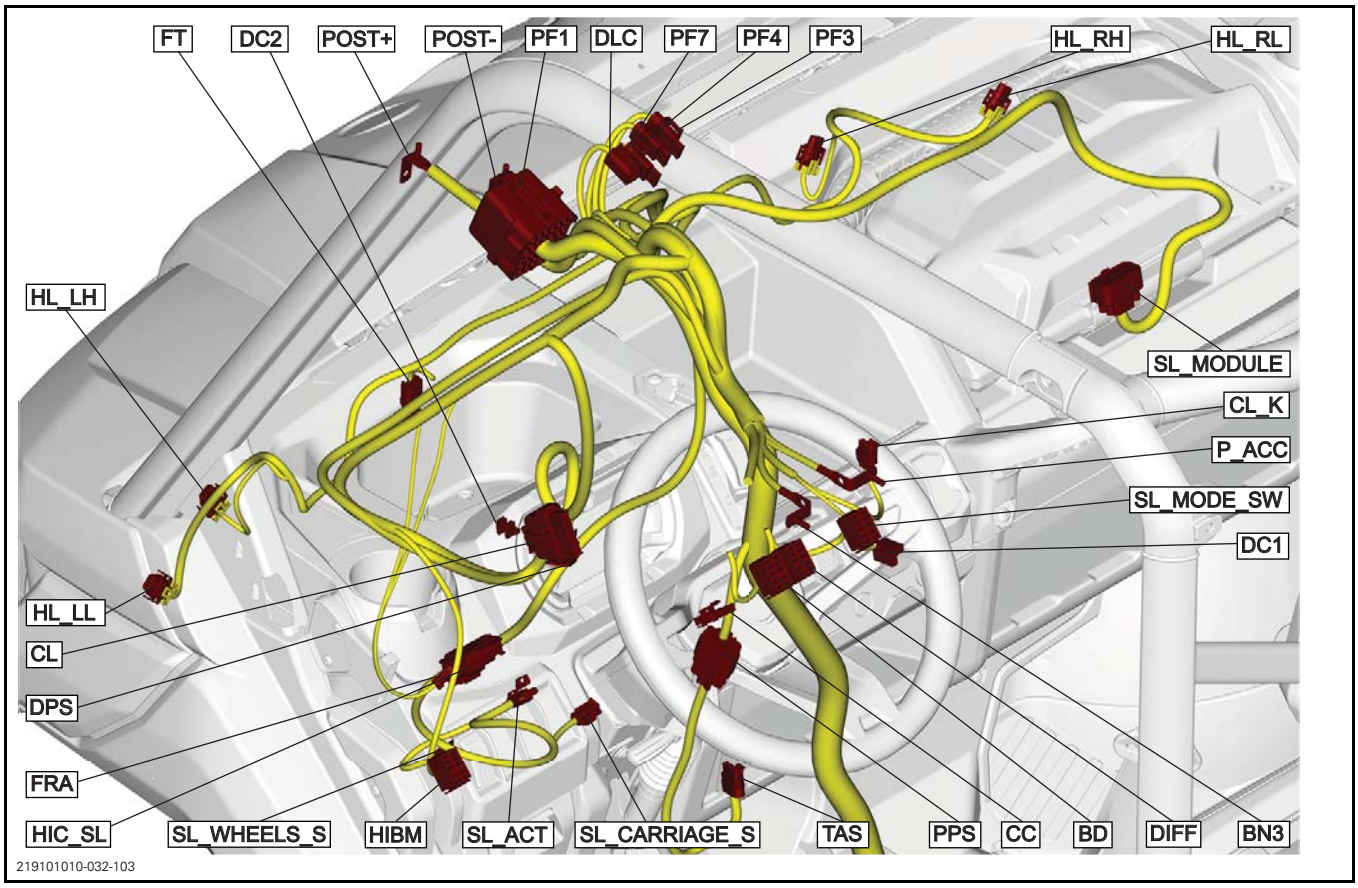

MAIN HARNESS T CATEGORY (FRONT)

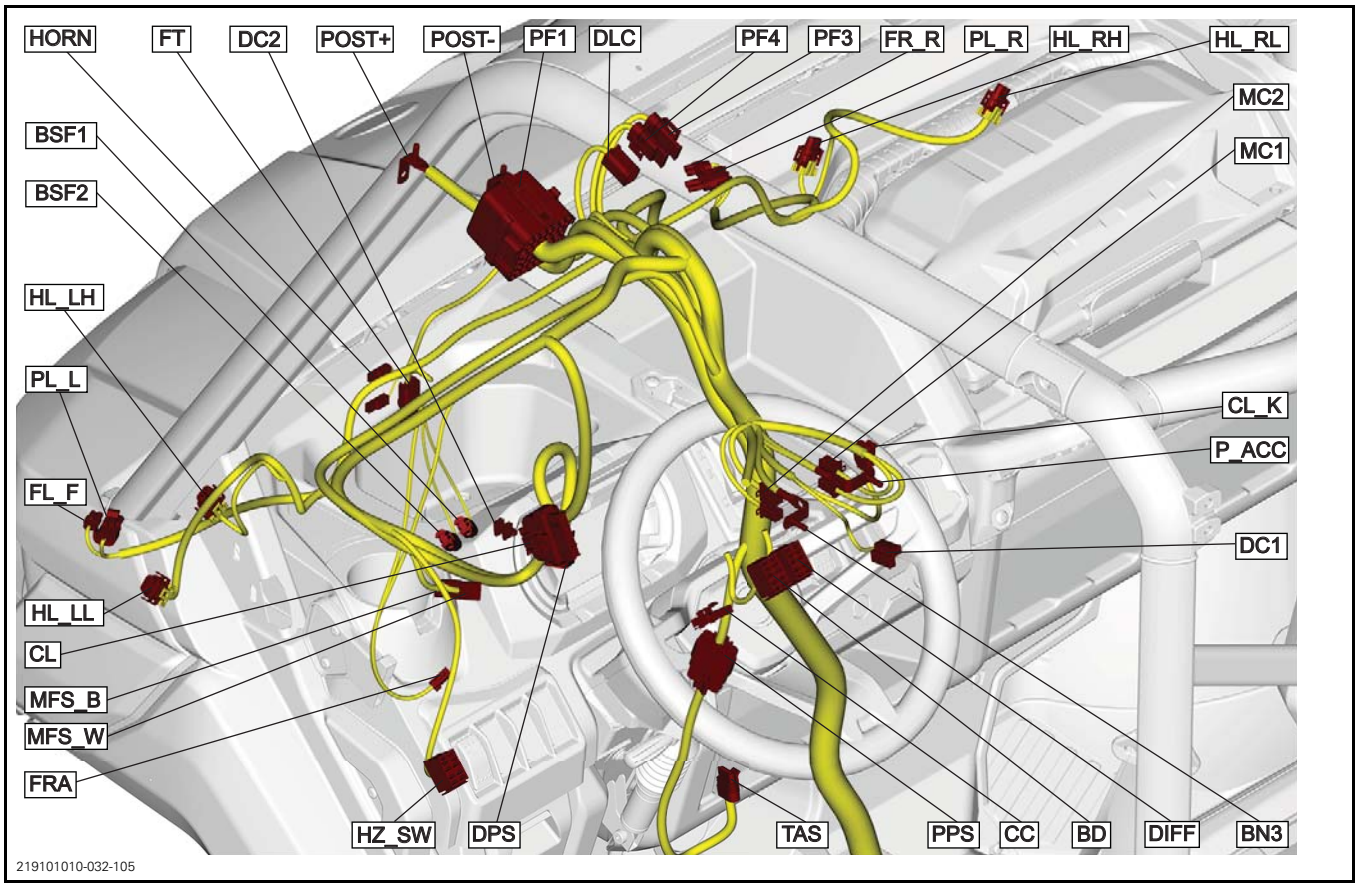

MAIN HARNESS NON T CATEGORY (REAR)

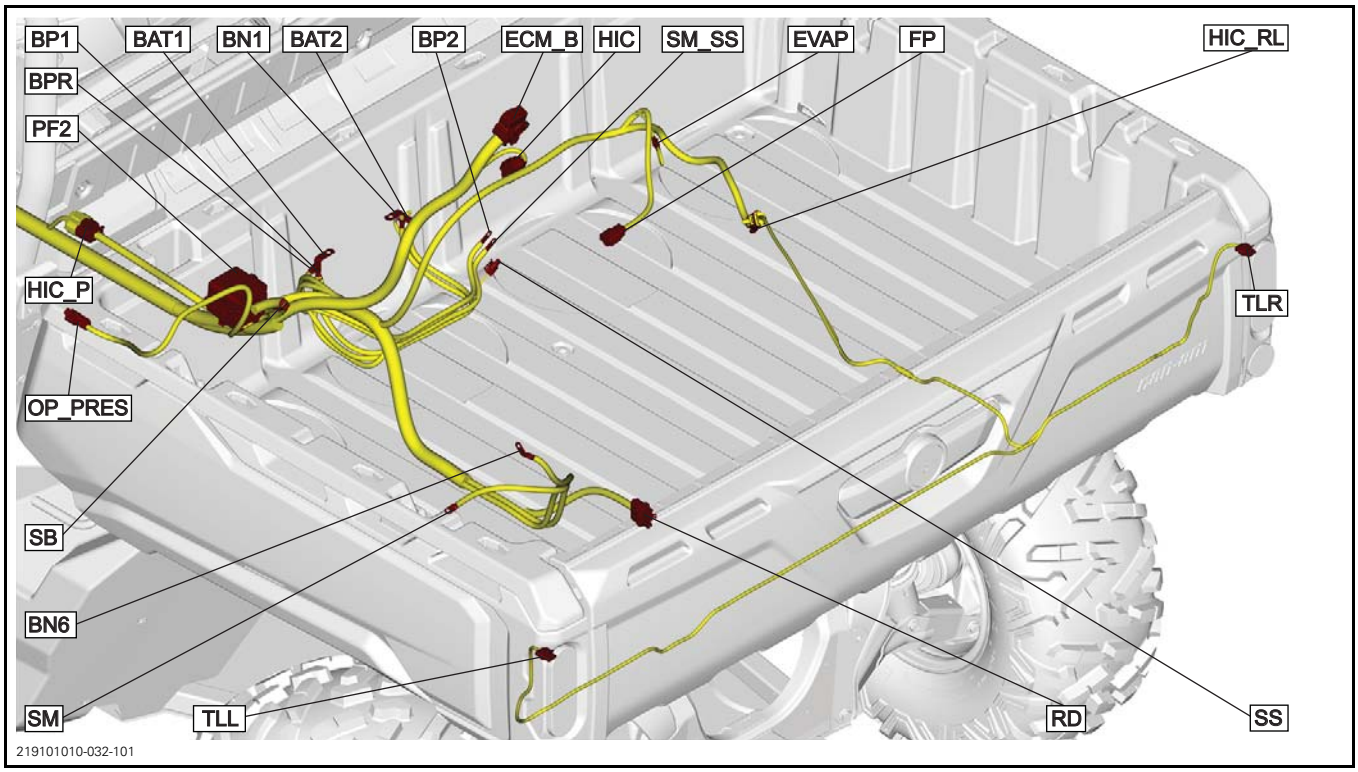

MAIN HARNESS T CATEGORY (REAR)

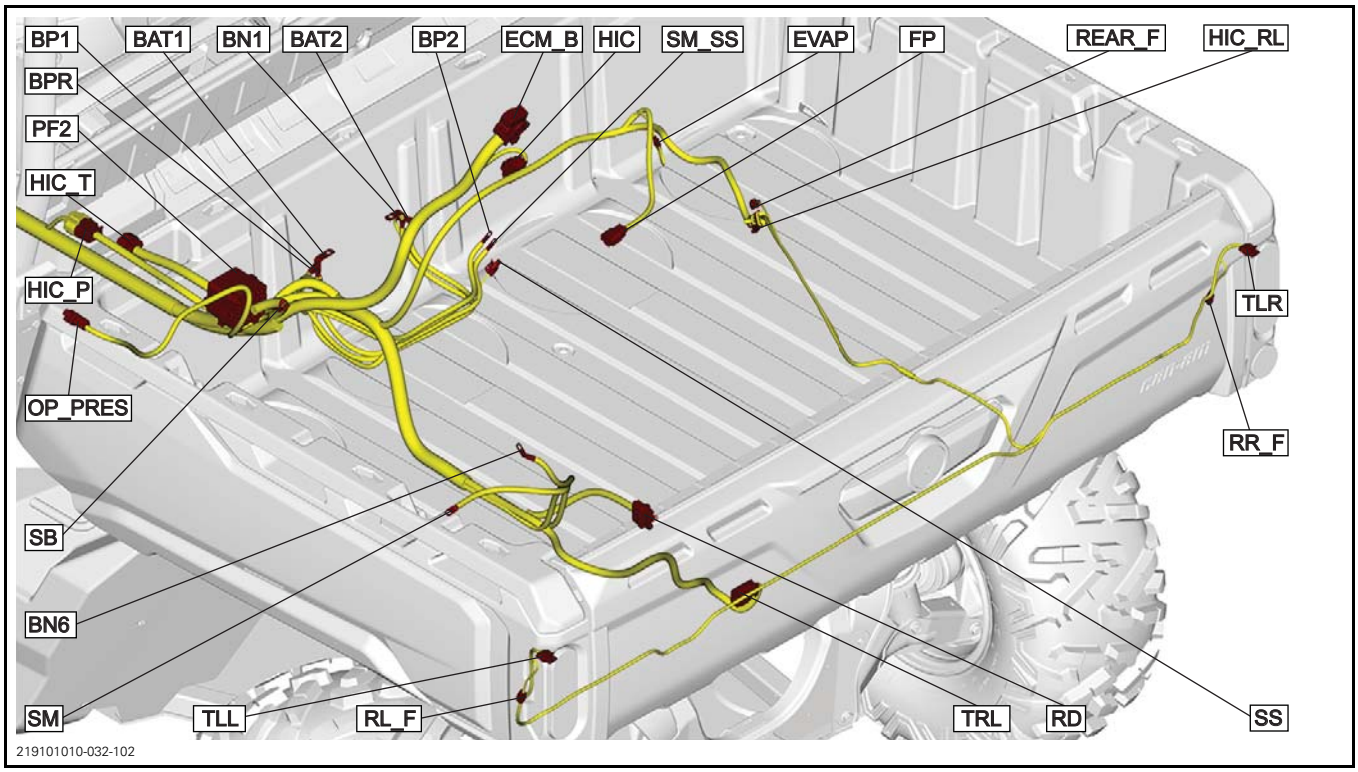

ROOF HARNESS

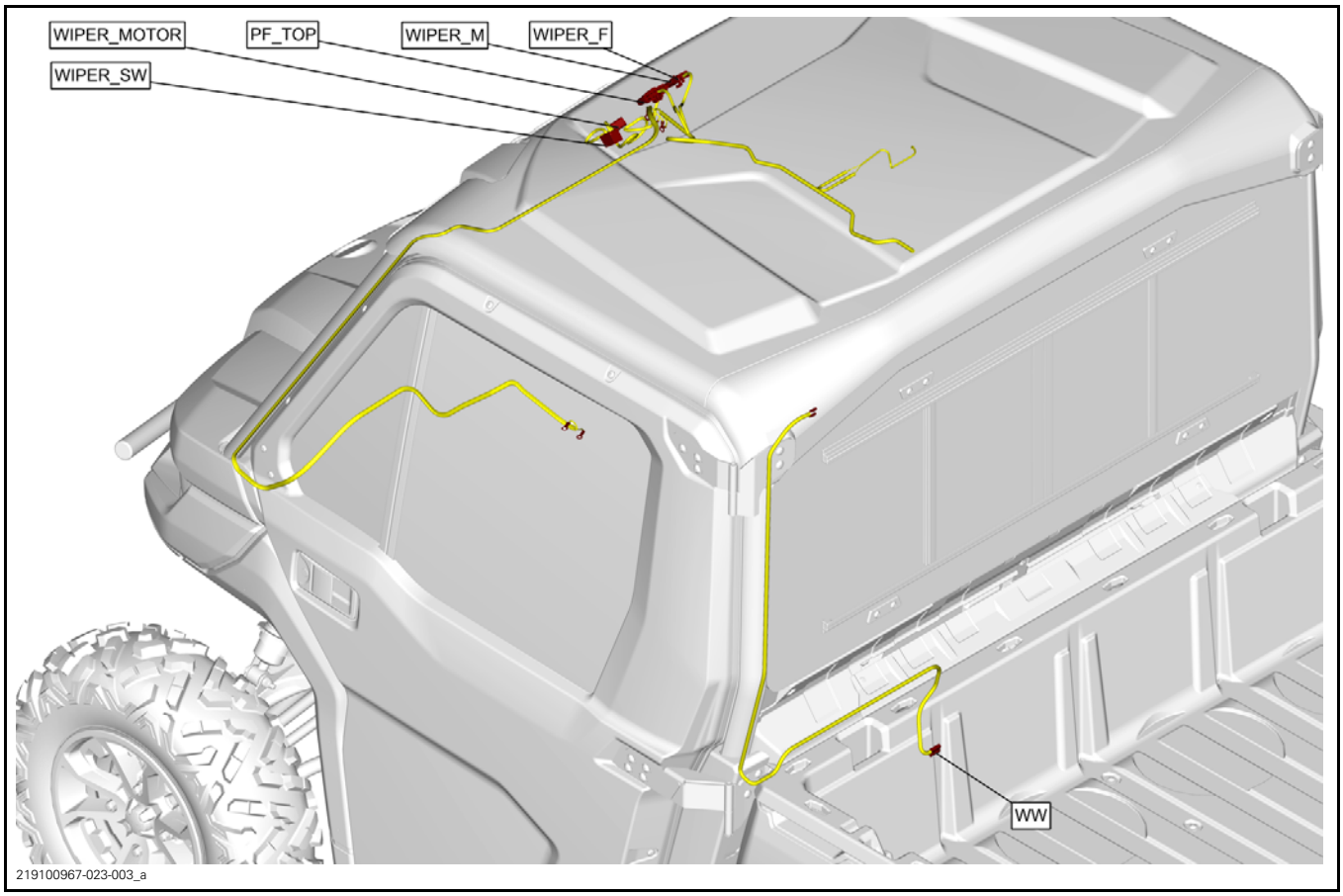

WINCH HARNESS

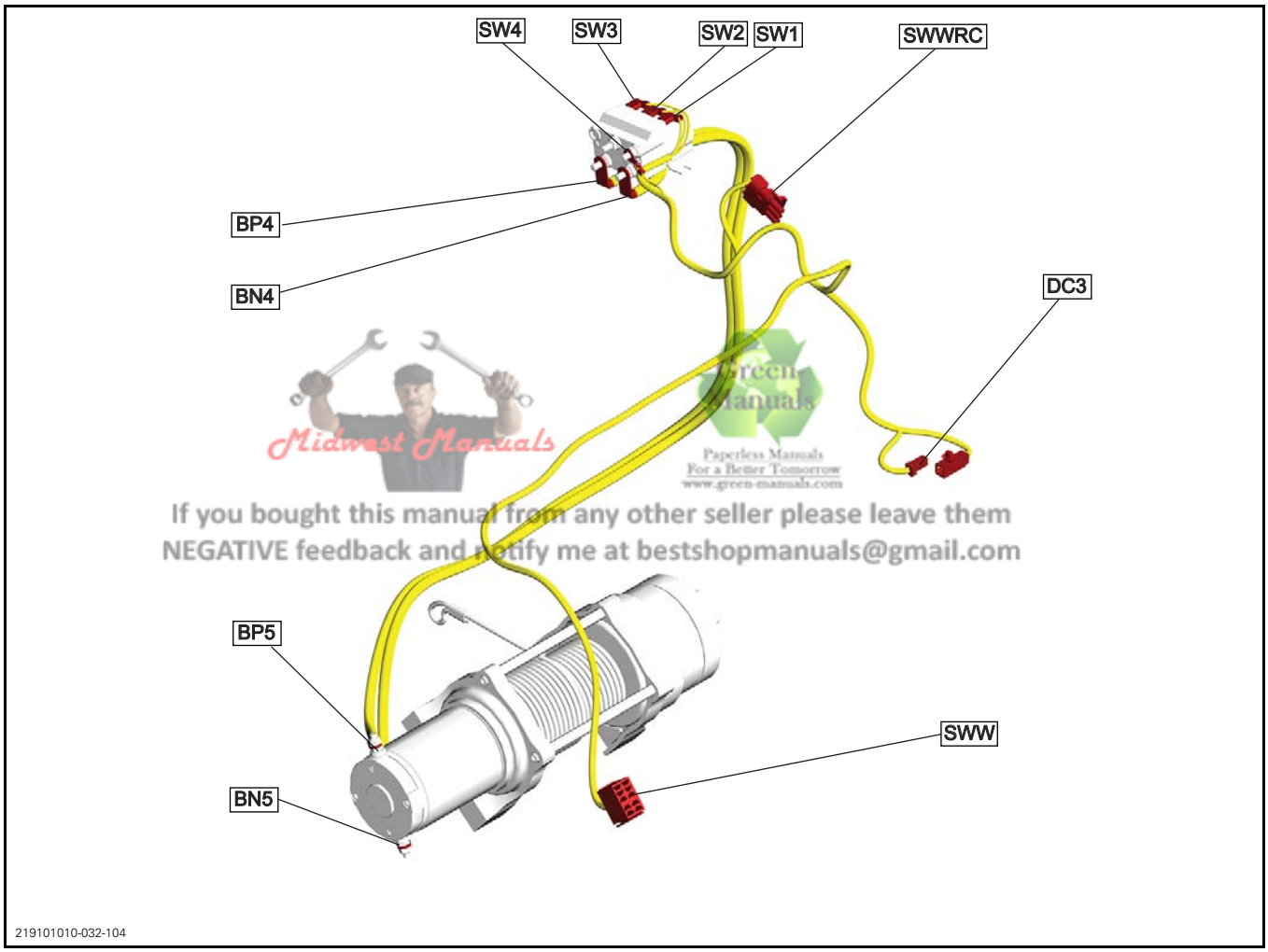

Midwest Manuals
Green Manuals
Paperless Manuals
For a Better Tomorrow
www.green-manuals.com
If you bought this manual from any other seller please leave them
NEGATIVE feedback and notify me at bestshopmanuals@gmail.com

GENERAL

The wiring harnesses illustrations are typical. Several variants of the connector types, such as different number of pin cavities, are used on the vehicle.

For engine harness, consult applicable *ENGINE MANAGEMENT SYSTEM (EMS)* subsection.

CONNECTOR ABBREVIATION DESCRIPTION

ABBREVIATION	DESCRIPTION
BAT	Battery
BD	Multifunction switch
BFS	Break Fluid Sensor (T Category)
BN	Ground terminal
BP	Positive terminal
CC	Key contact
CL	Cluster
CL_K	Cluster keypad
DC	Accessory
DIFF	Mode Switch rear differential
DLC	Diagnostic connector
DPS	Dynamic power steering
ECMB	Engine Control Module (Connector B)
EVAP	EVAP
FL F	Front Left Flasher (T Category)
FP	Fuel pump
FRA	Rear Brake Light
FR F	Front Right Flasher (T Category)
FT	Cooling fan
HIBM	HI Beam
HIC	Harness interconnect Engine
HIC_P	Harness interconnect Power
HIC_RL	Harness interconnect Rear Lights
HIC_SL	Harness interconnect Smart-Lok
HIC_T	Harness interconnect Trailer (T Category)
HL LL	LH LO beam headlight
HL LH	LH HI beam headlight
HL RL	RH LO beam headlight
HL RH	RH HI beam headlight
HORN	Horn (T Category)
HZ_SW	Hazard Switch (T Category)
MC1	Flasher Module 1 (T Category)
MC2	Flasher Module 2 (T Category)
MFS_B	Flasher Module - Flasher and horn switch (T Category)
MFS_W	Flasher Module - Headlamp switch (T Category)
OP_PRES	Operator Presence
P_BN	Post battery negative
P_BP	Post battery positive
P_ACC	Post Accessories
PF	Fuse box
PL_L	Left position light (T Category)
PL_R	Right position light (T Category)
POST	Front accessories
PPS	Pedal Position Sensor
REAR_F	Rear Flasher (T Category)
RL_F	Rear Left Flasher (T Category)
RD	Voltage regulator/rectifier
RR_F	Rear Right Flasher (T Category)
SB	Seat Belt
SL_ACT	Smart-Lok Actuator motor
SL_CARRIAGE_S	Smart-Lok position sensor
SL_MODE_SW	Smart-Lok Mode Switch
SL_MODULE	Smart-Lok Module
SL_WHEELS_S	Smart-Lok Wheel sensor
SM	Starter Motor
SM_SS	Starter Motor Solenoid
SS	Starter solenoid
SW	Winch relay (If winch equipped)
SWW	Winch switch (If winch equipped)

ABBREVIATION	DESCRIPTION
SWWRC	Winch remote control (If winch equipped)
TAS	Throttle Accelerator Sensor
TL_L	Taillight left
TL_R	Taillight right
TRL	Trailer harness (T Category)
WIPER	Wiper connector
WIPER_MOTOR	Wiper motor
WIPER_SW	Wiper Switch
WW	Windshield washer

PROCEDURES

NOTICE When disassembling any connector for repair or replacement on the vehicle, always disconnect the battery to ensure all electrical power is removed and prevent any possibility of a short circuit. Refer to *CHARGING SYSTEM* subsection.

DEUTSCH CONNECTORS

Disassembling and Reassembling a Deutsch Connector

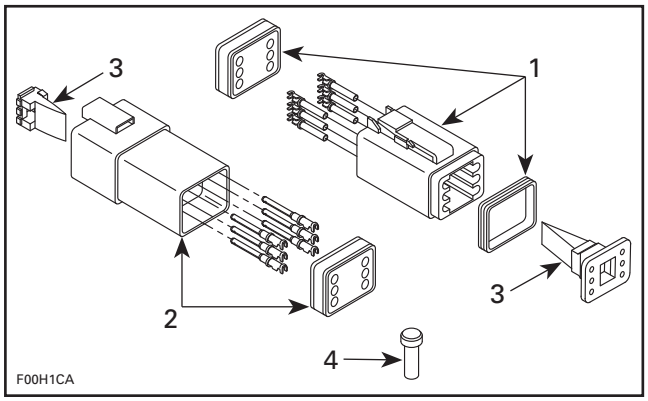

TYPICAL - DEUTSCH CONNECTOR
1. *Male connector*
2. *Female connector*
3. *Secondary lock*
4. *Sealing cap*

NOTICE Do not apply dielectric grease on terminal inside connector.

Removing a Terminal

To remove terminals from connector, proceed as follows:

1. Using long nose pliers, pull out the secondary plastic lock from between the terminals.

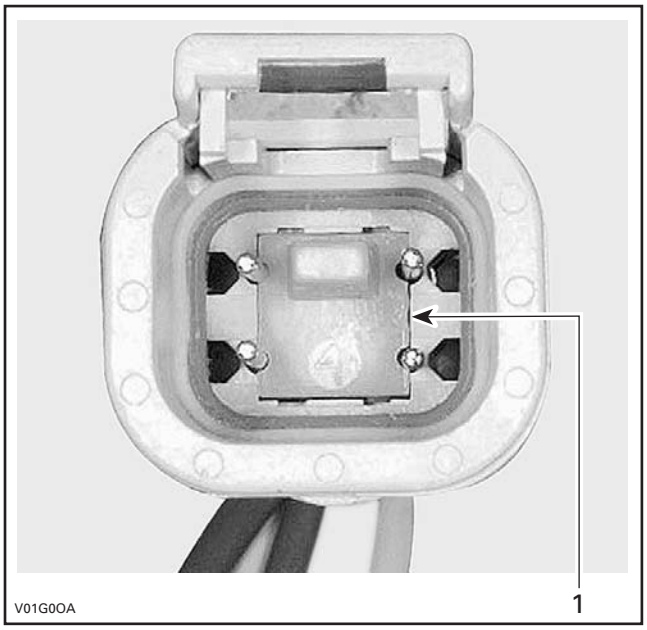

FEMALE CONNECTOR
1. *Female lock*

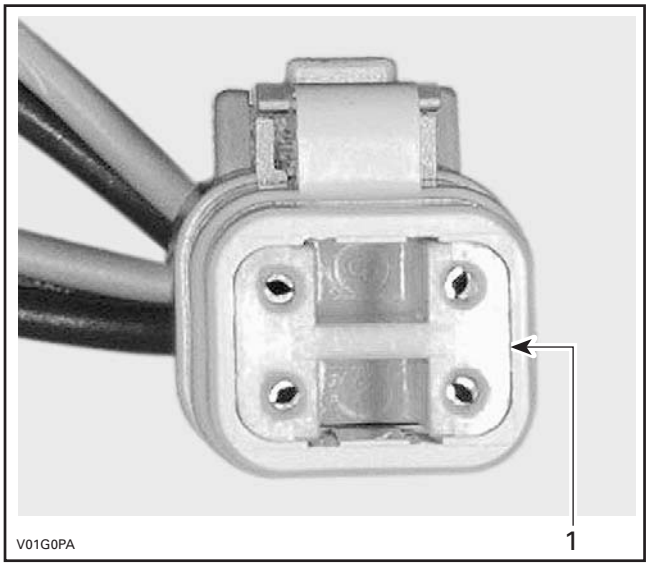

MALE CONNECTOR
1. *Male lock*

NOTE: Before pin extraction, push wire forward to relieve pressure on retaining tab.

2. Insert a 4.8 mm (.189 in) wide screwdriver blade inside the front of the terminal cavity.
3. Pry the retaining tab away from the terminal while gently pulling the wire and terminal out of the back of the connector.

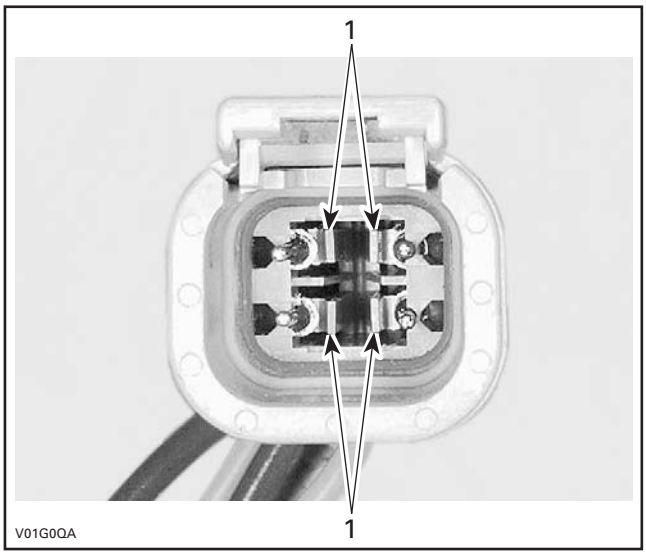

FEMALE CONNECTOR
1. Retaining tab

Inserting a Terminal

1. For insertion of a terminal, ensure the secondary plastic lock is removed.
2. Insert terminal through the back of the connector in the appropriate position, and push it in as far as it will go. You should feel or hear the terminal lock engage.
3. Pull back on the terminal wire to be sure the retention fingers are holding the terminal.
4. After all required terminals have been inserted, the lock must be installed.

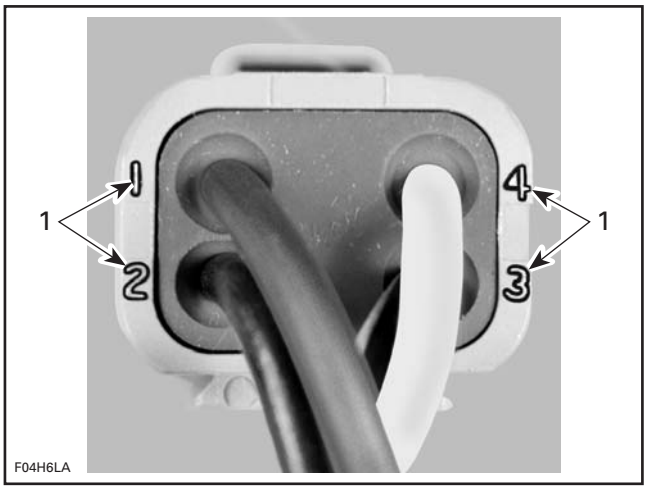

CONNECTOR PIN-OUT
1. Terminal position identification numbers

FURUKAWA CONNECTOR

Furukawa Connector Application

Voltage regulator/rectifier.

Removing a Terminal

1. Remove the secondary lock (plastic insert).

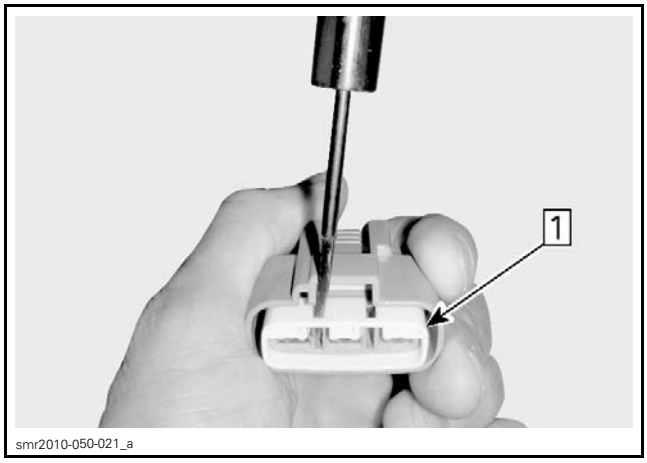

Step 1: Remove the secondary lock

2. Carefully insert the GM terminal extractor between the lock and the pin to release the pin.

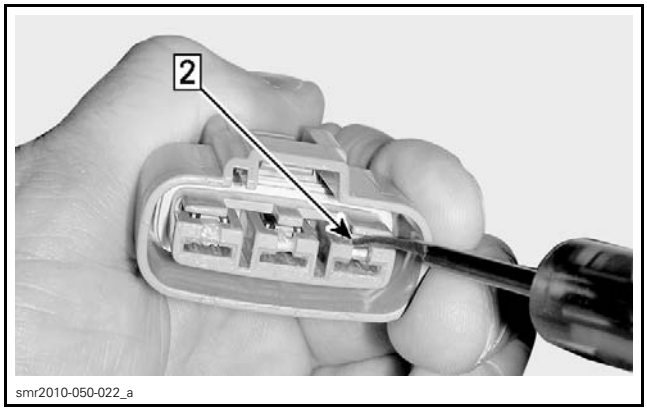

Step 2: Insert GM extractor tool (P/N 12094430)

SERVICE TOOL	
GM TERMINAL EXTRACTOR (P/N 12094430)	

3. Gently pull on the wire to extract the pin out the back of the connector.

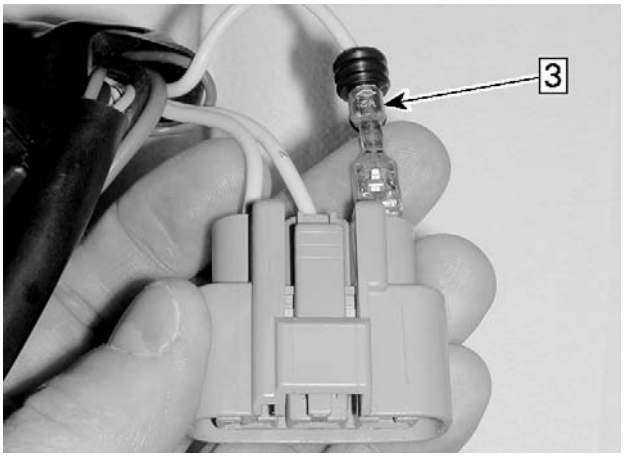

smr2010-050-023_a

Step 3: Pull wire to extract pin

NOTICE **Before installing terminals in the connectors, ensure all terminals are properly crimped on the wires. After installation of the wire terminals in the connectors, ensure they are properly locked by gently pushing on them as if to extract them.**

MOLEX CONNECTOR (ECM)

There are 2 connectors on the ECM.

The engine wiring harness connector is connected to ECM connector "A". The vehicle wiring harness connector is connected to ECM connector "B".

Each ECM connector has 48 pins however, connectors "A" and "B" are not interchangeable due to their specific keyways.

NOTE: If you need to remove the connector, be sure to not disconnect fuel quick-connector at ECM. If you need to remove the ECM or fuel quick connector, insure the ECM electrical connectors are securely in place and avoid fuel intrusion into connector/seal.

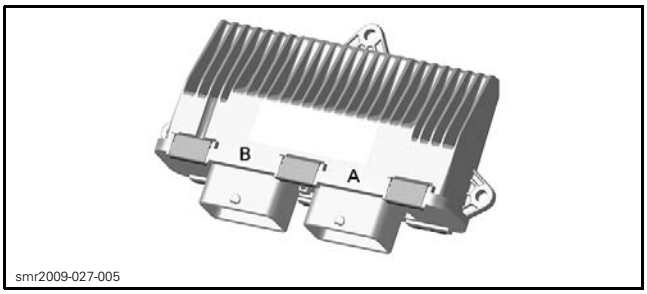

smr2009-027-005

Removing the Connector

1. Press and hold the locking tab on the connector to be disconnected.

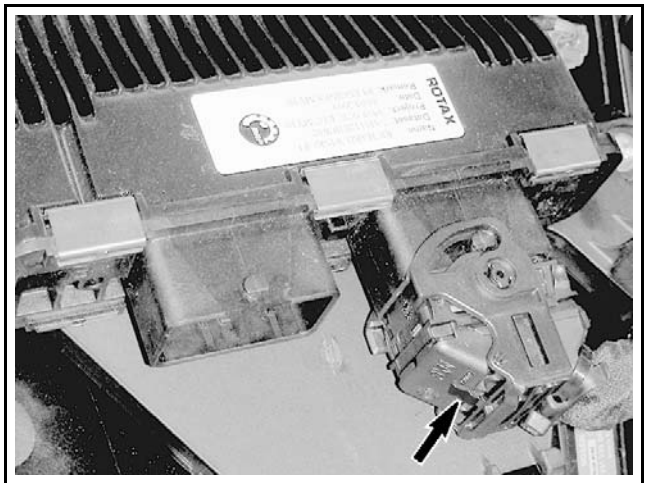

smr2009-045-011_a

LOCKING TAB TO PRESS AND HOLD

2. As you hold the locking tab, rotate the connector locking cam until it stops.

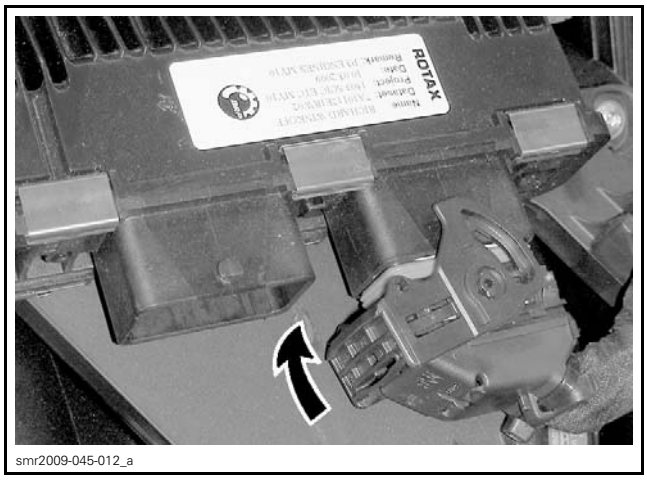

smr2009-045-012_a

CONNECTOR LOCKING CAM ROTATION TO RELEASE

3. Pull connector off ECM.

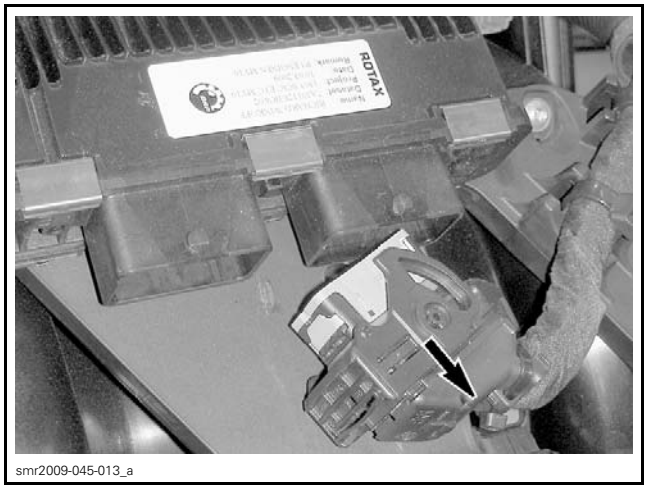

smr2009-045-013_a

Installing the Connector

1. Fully open connector locking cam.

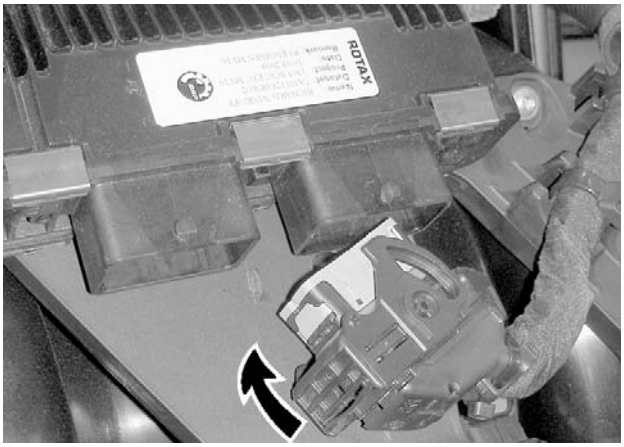

smr2009-045-013_b

CONNECTOR LOCKING CAM IN RELEASE POSITION

2. Insert connector on ECM.
3. As you push the connector onto the ECM, rotate the connector locking cam until it snaps locked.

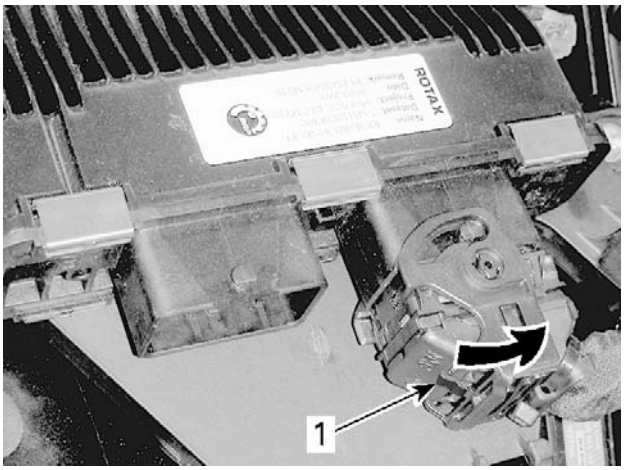

smr2009-045-011_b

1. Locked here

4. Ensure the locking tab is fully out.

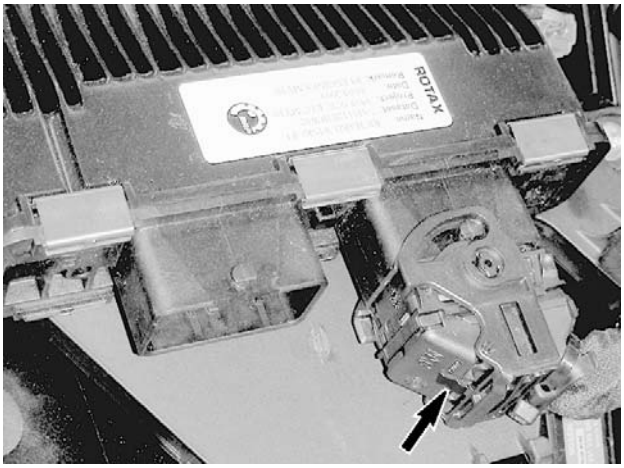

smr2009-045-011_a

LOCKING TAB FULLY OUT

Inspecting the Connector

Before replacing an ECM, always check electrical connections.

1. Ensure connector locking mechanism is functioning properly.
2. Ensure all wire terminals (pins) are properly locked in the connector.
3. Ensure they are very tight, make good contact with the pins in the ECM.
4. Ensure the pins in the harness connector and the ECM connector are clean, shiny and corrosion-free.
5. Check wiring harness for signs of scoring.

NOTE: A "defective ECM module" could possibly be repaired simply by disconnecting and reconnecting it.

NOTICE **Do not apply any lubricant product to the pins of the ECM connector.**

Probing the Connector

The most recommended and safest method to probe the MOLEX (ECM) connector terminals is to use a ECM adapter tool. This tool will prevent deforming or enlarging of the terminals, which would lead to bad ECM terminal contact creating intermittent or permanent problems.

SERVICE TOOL	
ECM ADAPTER TOOL (P/N 529 036 166)	

1. Disconnect the ECM connector to be probed, and reconnect it on the ECM adapter.

2. Probe wire terminals of the circuit to be tested directly in the adapter holes.

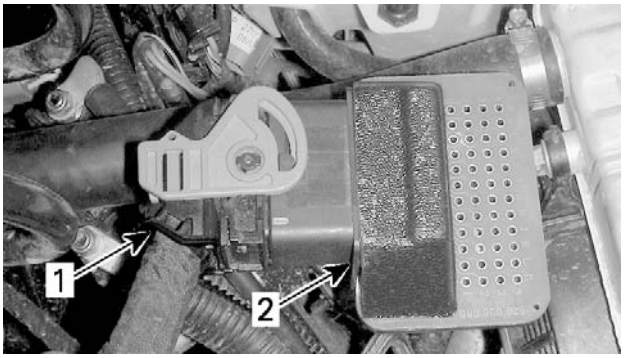

vmr2008-139-016_a

TYPICAL
1. ECM connector
2. ECM adapter

NOTICE Never probe directly on the ECM harness connector. This could change the shape or enlarge the terminals and create intermittent or permanent contact problems.

Removing a Terminal (Harness Connector)

To remove a signal terminal from the ECM harness connector, use a terminal remove 2.25.

To remove a power terminal, use a terminal remover 3.36.

SERVICE TOOL	
ECM TERMINAL REMOVER 2.25 (P/N 529 036 175)	
ECM TERMINAL REMOVER 3.36 (P/N 529 036 174)	

1. Remove rear protector from connector.
2. Pull out the connector lock.

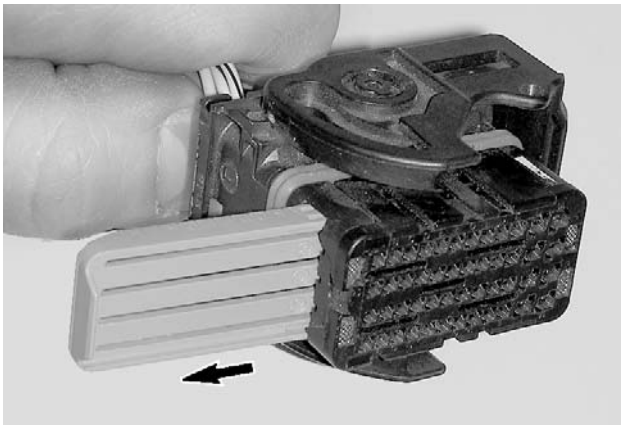
smr2009-045-025_a

3. Insert tool to unlock terminal.

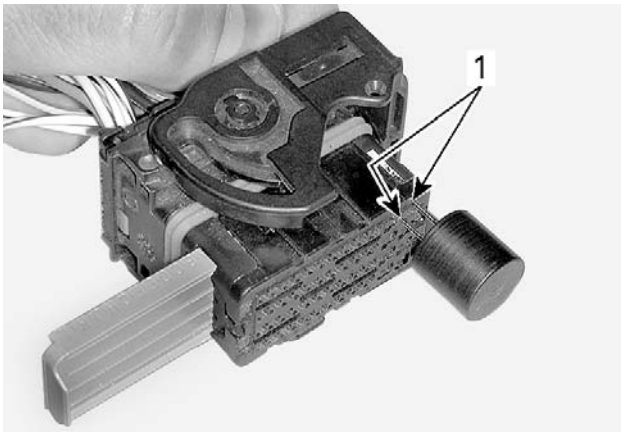

smr2009-045-026_a

1. Unlock here

4. Gently pull on the wire to extract the terminal out the back of the connector.

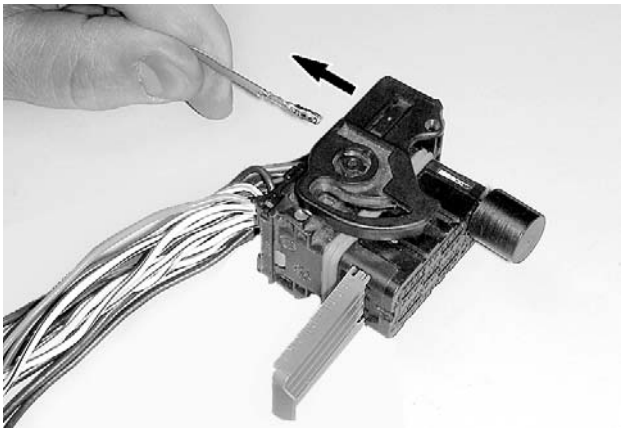
smr2009-045-027_a

NOTICE Before installing wire terminals in the connector, ensure all terminals are properly crimped on wires. After installation of wire terminals in the connectors, ensure they are properly locked by gently pulling on them as if to extract them.

MOLEX CONNECTORS (EXCEPT ECM)

Extracting a Terminal (Female Connector)

The same procedure must be done to remove a seal plug.

1. Insert a small flat screwdriver in the pry holes of the terminal locator, on the terminal side of the connector.

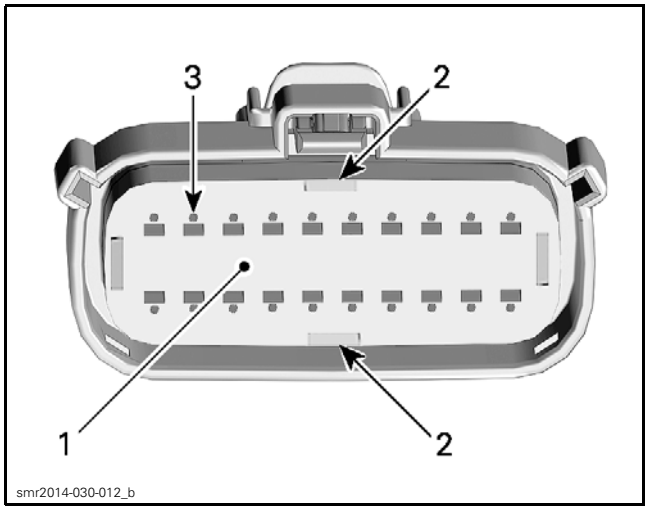

1. Terminal locator
2. Pry holes
3. Holes for inserting terminal extractor tool

2. Apply slight pressure and pry the terminal locator out until it clicks (± 4 mm (.16 in)).

NOTE: Do not remove the terminal locator from the connector housing.

3. Insert an appropriate extractor tool in the small hole adjacent to the terminal.

NOTE: Push the extractor tool in only as far as required to release the lock from the terminal. The tool should slide along the terminal and be inserted between the connector housing and the terminal lock.

REQUIRED TOOL	
FCI TERMINAL EXTRACTOR TOOL (P/N 54241678)	
or,	
MOLEX 150 TERMINAL EXTRACTOR TOOL (P/N 63813 - 1500)	

4. Gently pull on the wire to extract the terminal out the back of the connector.

Extracting the Terminal (Male Connector)

The same procedure must be done to remove a seal plug.

1. Using a pair of thin long nose pliers, pull the terminal locator (the white plastic insert in the connector) out to the detent position (± 13 mm (1/2 in) between terminal locator and connector housing face). This will allow unlocking of the pins.

NOTICE **Do not attempt to remove the terminal locator or damage will occur. Be careful not to bend the pins when using the pliers.**

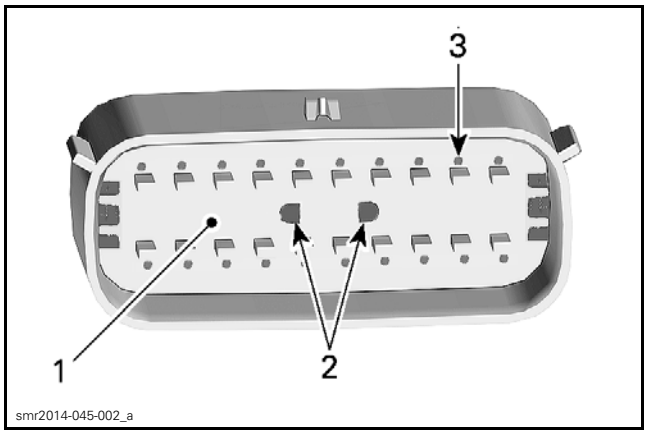

1. Terminal locator
2. Insert long nose pliers here
3. Holes for inserting terminal extractor tool

2. Insert an appropriate extractor tool in the small hole adjacent to the terminal.

NOTE: Push the extractor tool in only as far as required to release the lock from the terminal. The tool should slide along the terminal and be inserted between the connector housing and the terminal lock.

REQUIRED TOOL	
FCI TERMINAL EXTRACTOR TOOL (P/N 54241678)	
or,	
MOLEX 150 TERMINAL EXTRACTOR TOOL (P/N 63813 - 1500)	

3. Gently pull on the wire to extract the terminal out the back of the connector.

Inserting the Terminal

1. Ensure the terminal is properly crimped onto the wire.

2. Ensure the terminal locator (the white plastic insert in the connector) is out in the detent position.
3. Orient the key on the back of the male terminal with the keyway on the rear of the housing

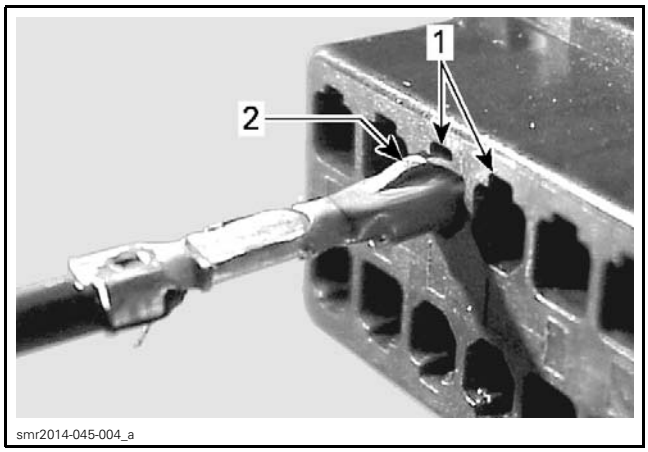

TYPICAL - PIN INSERTION
1. Keyway
2. Terminal key

4. Push the terminal into the housing until it clicks.
5. Gently pull on the terminal to ensure it is properly locked.
6. Repeat previous steps for each terminal to be inserted.
7. Push the terminal locator into the connector to the locked position.

DELPHI/PACKARD CONNECTORS

Removing the Connector Terminal

To remove a terminal (pin) from the connector, use a special tool such as the Delphi terminal extractor.

REQUIRED TOOL	
DELPHI TERMINAL EXTRACTOR (P/N 12094429)	

NOTE: Grinding the tool end to a taper is required.

1. Carefully insert the tool in the space provided to release the pin lock.
2. Push the pin out the front of the connector by pushing on the wire.

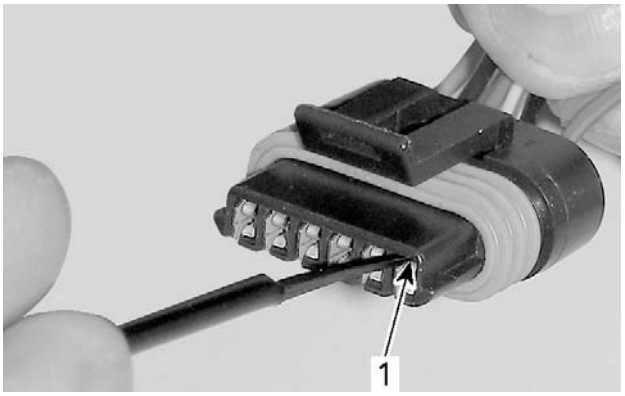

1. Unlock terminal here

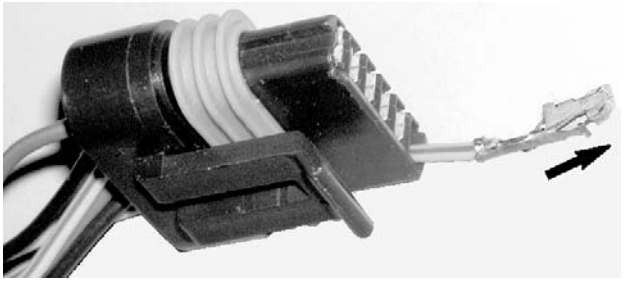

NOTICE Before installing terminals in the connectors, ensure all terminals are properly crimped on the wires. After installation of the wire terminals in the connectors, ensure they are properly locked by gently pushing on them as if to extract them.

DELPHI CONNECTORS

Removing the Terminal

1. To remove a terminal from connector, first remove the locking cap.

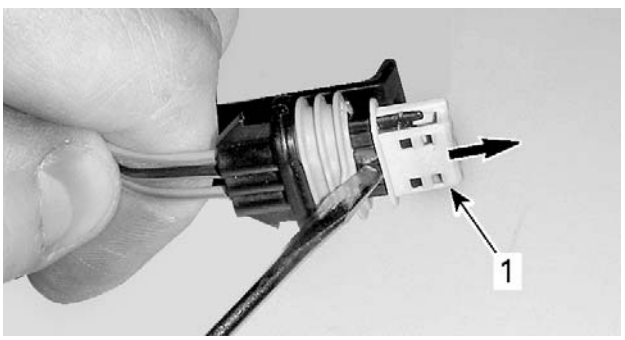

1. Pry out locking cap

2. Carefully insert the Delphi terminal extractor in the space provided to release the pin lock.

REQUIRED TOOL	
DELPHI TERMINAL EXTRACTOR (P/N 12094429)	

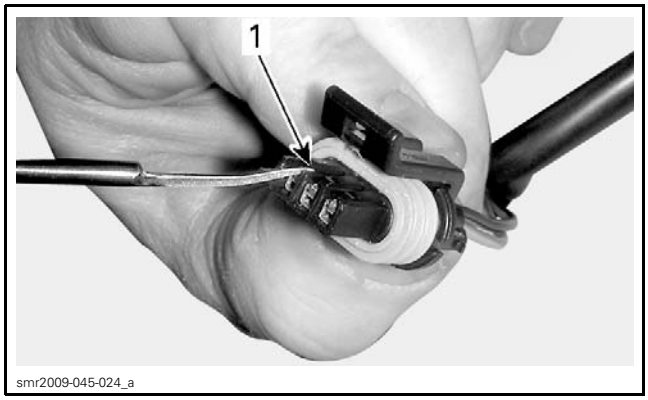

1. Unlock here

3. Gently pull on the wire to extract the pin out the back of the connector.

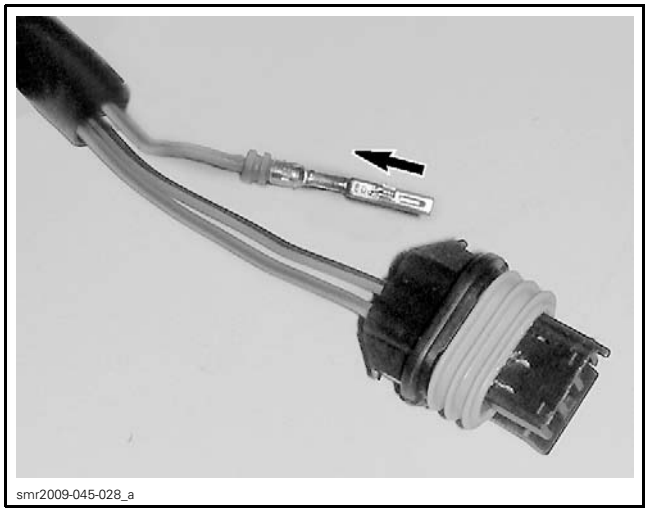

NOTICE Before installing terminals in the connectors, ensure all terminals are properly crimped on the wires. After installation of the wire terminals in the connectors, ensure they are properly locked by gently pushing on them as if to extract them.

BATTERY AND STARTER CABLE TERMINALS

Crimping a Cable

Carefully strip the wire approximately to 10 mm (3/8 in) in length, using a wire stripping tool or sharp blade/knife.

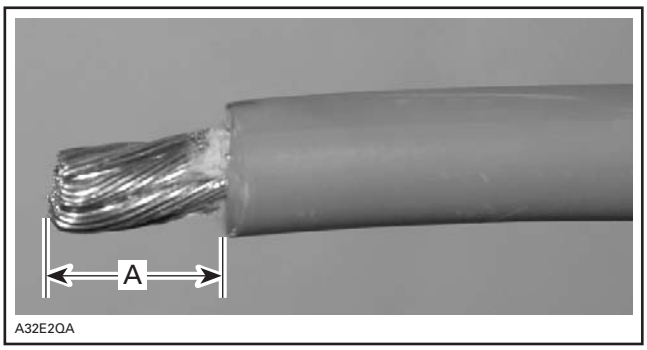

A. 10 mm (3/8 in)

NOTE: Make sure not to cut wire strands while stripping the wire.

Install the appropriate terminal on the wire according to the requirement. Refer to appropriate *PARTS CATALOG*.

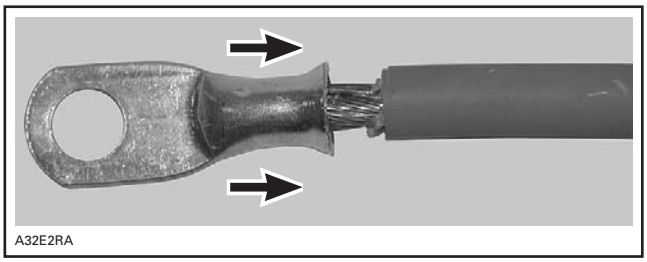

INSTALLATION OF TERMINAL

Use a crimping tool (for heavy gauge wire) and follow the instructions provided with the tool to select the proper position of the tool.

NOTE: Different wires require different crimping pliers settings.

After positioning the crimping pliers, crimp the terminal already installed on wire.

CRIMPING OF WIRE

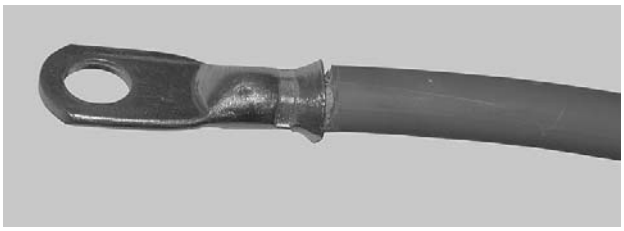
A32E2UA

PROPERLY CRIMPED WIRE

To verify, if the wire is properly crimped, apply some pulling force on wire and the terminal at the same time from both directions.

NOTICE **Never weld the wire to the terminal. Welding can change the property of the wire and it can become brittle and break.**

Install the protective heat shrink rubber tube on the terminal. Heat the heat shrink rubber tube using the heat gun so that it grasps the wire and the terminal.

NOTICE **Make sure that the protective heat shrink rubber tube has been properly installed and no part of wire is exposed.**

SPLICES REPAIR PROCEDURE

1. Make sure to perform the usual tests described in *ELECTRICAL SYSTEM* sections before investigating the harness splices.
2. If an electrical issue can not be found with the usual tests, locate the main harness splice that is involved in the faulty circuit and repair it referring to the following cases.
3. To repair a splice, we recommend the use of a tin solder meeting the followings requirements or an equivalent.

TIN SOLDER REQUIREMENTS
SN 60
PB 40
DIA 0.062
FLUX RA 2%

CASE 1: Wire Detached from Splice

⚠ WARNING

Repairs described in this section should never be performed on harness sections that can be exposed to water.

1. Locate splice. Refer to splices location diagrams.
2. Remove wires from protector tube.
3. Locate the shrink tube protecting the defective splice.

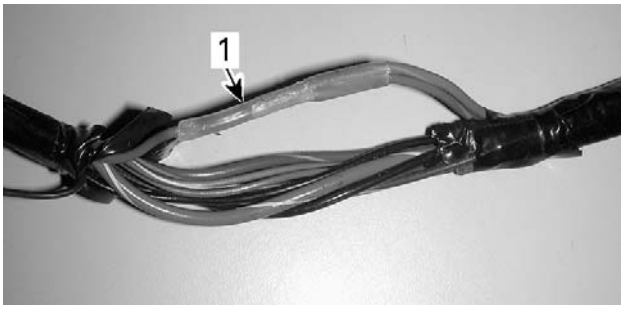

mmr2010-043-001_a

1. Shrink tube

4. Remove the shrink tube.
   4.1 Using a blade, cut the shrink tube.

mmr2010-043-002

NOTICE **Be careful with the blade to avoid cutting wires insulation.**

   4.2 Slightly heat the shrink tube using a heat gun.

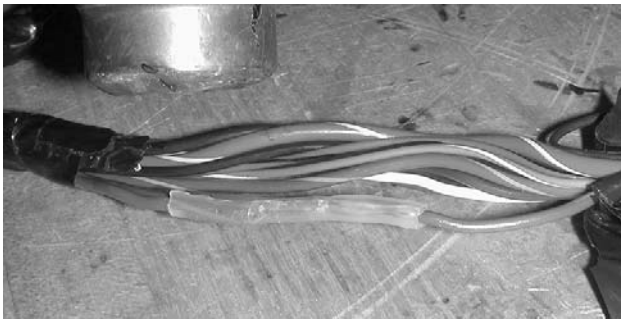
mmr2010-043-003

4.3 Remove the shrink tube with long nose pliers.

5. Locate detached wire from splice.

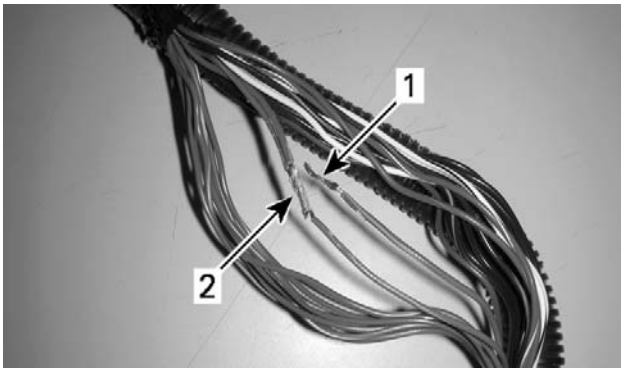

mbg2008-021-116_a

1. *Detached wire*
2. *Splice*

6. Twist detached wire around splice.

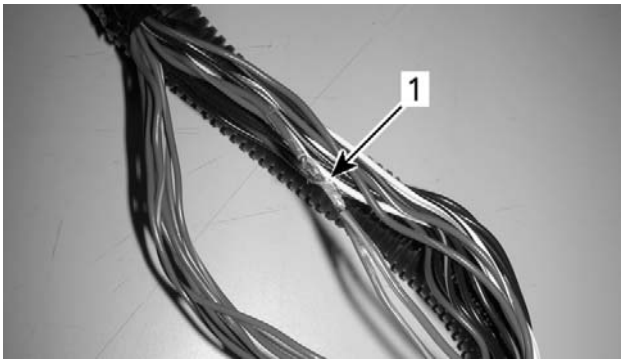

mbg2008-021-117_a

1. *Twisted wire*

7. Perform a tin solder on twisted wire.
8. Apply electrical tape to cover splice.

NOTE: Make sure tape overlaps on wire insulation, approximately 13 mm (1/2 in) each side.

9. Reinstall wires into protector tube.

CASE 2: Wire Broken from Splice

⚠ WARNING

Repairs described in this section should never be performed on harness sections that can be exposed to water.

1. Locate splice. Refer to splices location diagrams.
2. Remove wires from protector tube.
3. Locate the shrink tube protecting the defective splice.

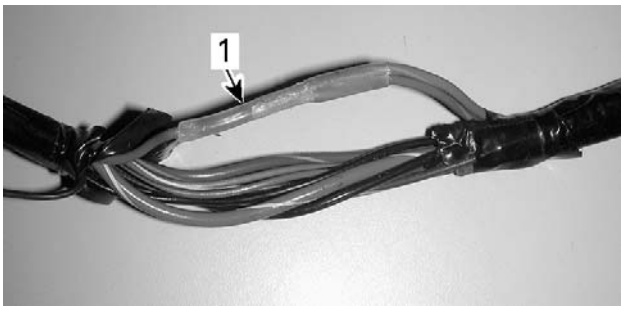

mmr2010-043-001_a

1. *Shrink tube*

4. Remove the shrink tube.

4.1 Using a blade, cut the shrink tube.

mmr2010-043-002

NOTICE **Be careful with the blade to avoid cutting wires insulation.**

4.2 Slightly heat the shrink tube using a heat gun.

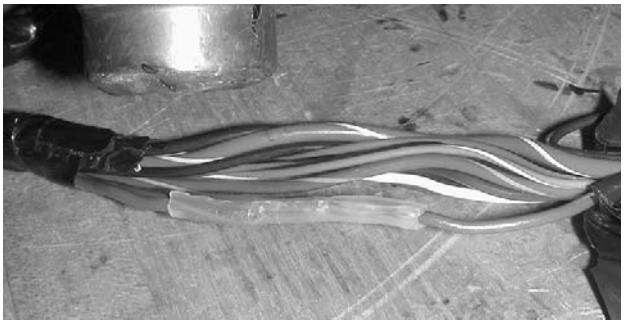

mmr2010-043-003

4.3 Remove the shrink tube with long nose pliers.

5. Locate broken wire from splice.

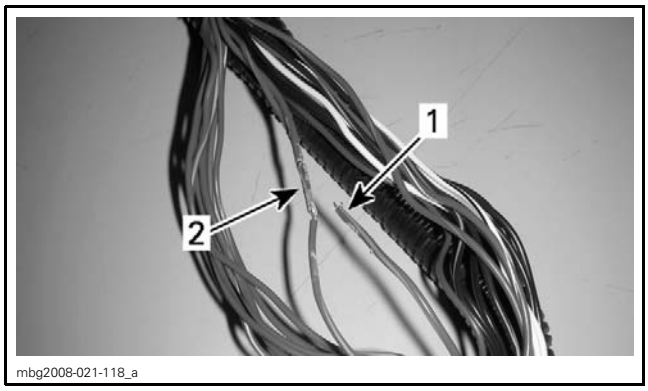

1. Broken wire
2. Splice

6. Strip wire insulation at the end of broken wire.
7. Strip wire insulation below the splice.

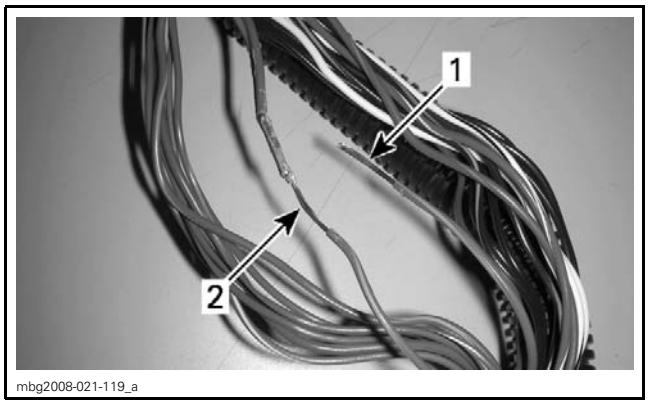

1. Broken wire stripped
2. Splice wire stripped

8. Twist wire around stripped wire.

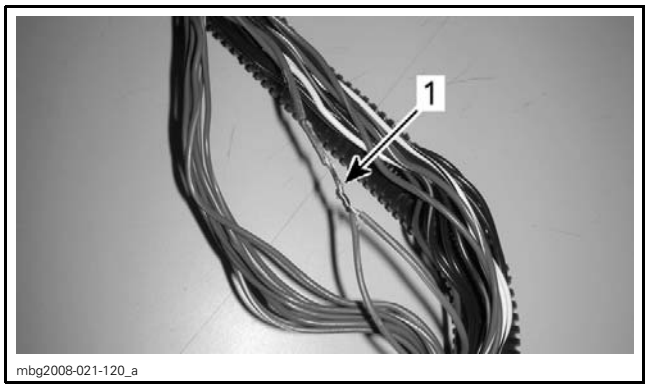

1. Twisted wire

9. Perform a tin solder on twisted wire.
10. Apply electrical tape to cover splice.

NOTE: Make sure tape overlaps on wire insulation, approximately 13 mm (1/2 in) each side.

11. Reinstall wires into protector tube.

NOTE: Always perform a solder on a bigger wire (lower gauge).

IGNITION SYSTEM (1 cyl)

SERVICE TOOLS

Description	Part Number	Page
ECM ADAPTER TOOL	529 036 166	4
FLUKE 115 MULTIMETER	529 035 868	3

GENERAL

SYSTEM DESCRIPTION

The battery supplies the primary side of ignition coil through the main relay (R2) while the ECM completes the circuit for each cylinder by switching it to the ground at the right moment. The ECM can detect open and short circuit in the primary winding but it does not check the secondary winding.

The ECM controls the ignition system. For more information, refer to *ENGINE MANAGEMENT* section.

Ignition Timing

Ignition timing is not adjustable.

TROUBLESHOOTING

It is good practice to check for fault codes using the BRP diagnostic software (BUDS2) as a first troubleshooting step. Refer to *DIAGNOSTIC AND FAULT CODES* subsection.

Always refer to the *WIRING DIAGRAM* when troubleshooting an electrical circuit.

Refer to *POWER DISTRIBUTION* for fuse and relay information.

DIAGNOSTIC GUIDELINES

The following is provided to help in diagnosing the probable cause of a problem. It is a guideline and should not be assumed to list all possible causes.

ENGINE WILL NOT START (ENGINE TURNS OVER)

1. Fouled or defective spark plug
   - *Replace.*
2. Defective CPS
   - *Check operation of CPS and replace if necessary. Refer to ELECTRONIC FUEL INJECTION (EFI).*
3. Defective trigger wheel / Damaged trigger wheel.
   - *Check, refer to ROTOR in the MAGNETO AND STARTER subsection.*
4. Defective ignition circuit
   - *Check fuse 5 of fuse box 2, ignition coil and wiring condition.*
5. Defective fuel pump
   - *Check fuel pump, refer to FUEL SYSTEM.*
6. Defective fuel injectors or circuit
   - *Check fuel injectors, refer to ELECTRONIC FUEL INJECTION (EFI).*

ENGINE HARD TO START

1. Spark plug faulty, fouled or worn out
   - *Check spark plug condition. Replace if necessary.*
2. Low fuel pressure
   - *Test fuel pressure, refer to FUEL SYSTEM.*

ENGINE MISFIRES, RUNS IRREGULARLY

1. Fouled, defective, worn spark plugs
   - *Check/verify heat range/gap/replace.*
2. Defective or loose CPS
   - *Check. Refer to ELECTRONIC FUEL INJECTION (EFI).*
3. Damaged trigger wheel.
   - *Check. Refer to ROTOR in the MAGNETO AND STARTER subsection.*
4. Defective ignition circuit
   - *Check ignition coil, fuse 5, and wiring condition.*
5. Poor engine grounds
   - *Check/clean/repair.*
6. Fuel level indicator lamp is ON
   - *Check fuel level.*

ENGINE CONTINUALLY BACKFIRES

1. Fouled, defective spark plugs
   - *Clean/replace.*

2. Defective or loose CPS
   - *Check, refer to ELECTRONIC FUEL INJECTION (EFI).*
3. Damaged trigger wheel.
   - *Check, refer to ROTOR in the MAGNETO AND STARTER subsection.*

PROCEDURES

SAFETY PRECAUTIONS

⚠ WARNING

To prevent powerful electric shock while cranking engine, do not touch any of the ignition components (ignition coil, spark plug wire, etc.) nor tester leads. Also make sure that tester leads do not touch any metallic object.

IGNITION SWITCH

Testing the Ignition Switch (Quick Test)

Turn ignition switch to ON position.

If multifunction gauge turns on (assuming it works), the ignition switch is good.

If multifunction gauge does not turn on, check the following in this order:
– Battery
– Fusible links between starter solenoid and fuse box 2
– Fuses 4 and 8 of fuse box 2
– ECM is properly powered (refer to *ENGINE MANAGEMENT*)
– Ignition switch.

Ignition Switch Wire Identification

FUNCTION	PIN	WIRE COLOR
Ground signal to ECM in OFF position	A	YE/OG
12 Vdc input from fuse 8 of fuse box 2	B	BG/WH
12 Vdc output (accessories)	C	YE/BU
12 Vdc output (ECM, starter solenoid and start switch)	D	BK/YE
Ground (through ECM)	F	OG/VT

IGNITION COIL

When troubleshooting an ignition coil problem, first carry out a spark occurrence test, refer to *SPARK PLUG* in this subsection.

If there is no spark, carry out *TESTING THE IGNITION COIL INPUT VOLTAGE* and *TESTING THE IGNITION COIL GROUND CIRCUIT CONTINUITY*.

Ignition Coil Access

Tilt the cargo box to reach the ignition coil.

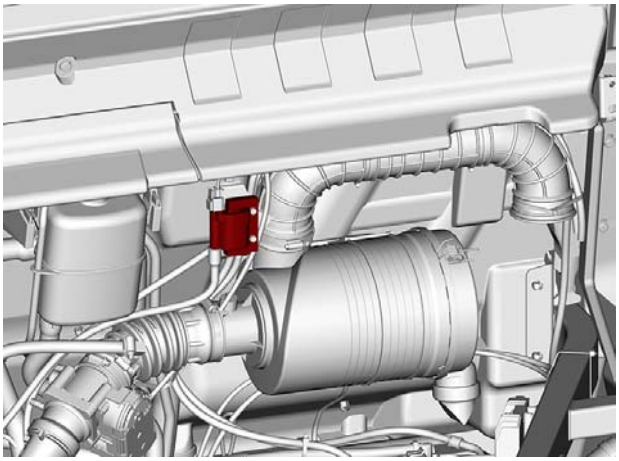

RHD5MY17-012-201

Installing the Ignition Coil

Install new elastic nuts and tighten to the specified torque.

TIGHTENING TORQUE	
Ignition coil retaining bolt	10 N•m ± 1 N•m (89 lbf•**in** ± 9 lbf•**in**)

Quick Test with BUDS2

Connect the vehicle to the BRP diagnostic software (BUDS2). Refer to *COMMUNICATION TOOLS* subsection.

Select:
– **Functions** page
– **Vehicle** or **ECM** button
– **IO Controls** tab
– **Activate Ignition Coil** function.

NOTE: Keep in mind that even if there is a spark during this static test, voltage requirement is higher to produce a spark in the combustion chamber when engine is running. Ignition coil could be not working in real operation. Replacing ignition coil may be necessary as a test. Ensure spark plug cable is on the appropriate cylinder.

Testing the Ignition Coil Input Voltage

Disconnect the ignition coil input connector.

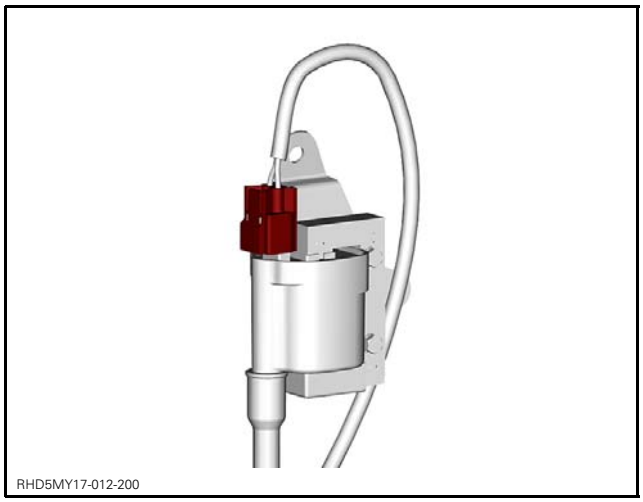

Using a small screwdriver, remove the plastic connector pin lock for easy access to pins.

1. Remove plastic pin lock

Turn ignition switch to ON.

Measure coil input voltage as follows.

REQUIRED TOOL	
FLUKE 115 MULTIMETER (P/N 529 035 868)	

Check the input voltage as per following table.

MULTIMETER PROBE POSITIONS		VOLTAGE
Ignition coil connector pin 1	Battery ground	Battery voltage

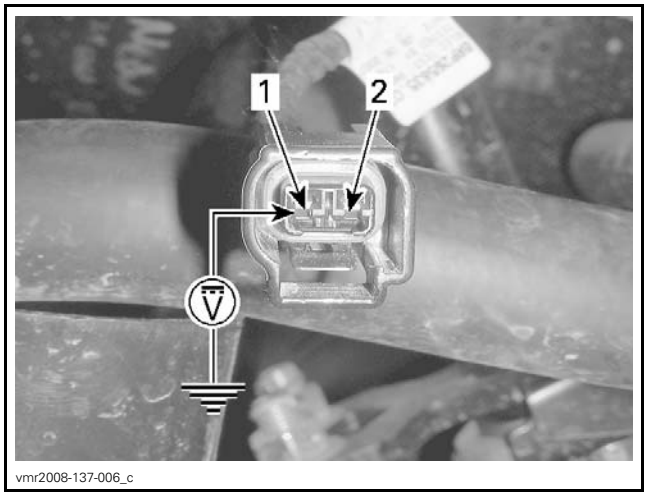

IGNITION COIL INPUT VOLTAGE TEST
1. Pin 1
2. Pin 2

If you did not read battery voltage, check:

– Fuses and relay. Refer to *WIRING DIAGRAM*.
– Continuity of the ignition coil input circuit.

If battery voltage was read, proceed with *TESTING THE IGNITION COIL GROUND CIRCUIT CONTINUITY*.

If the measure is out of specification, verify the coil ground wire and connection.

Testing the Ignition Coil Supply Circuit Continuity

Disconnect the ignition coil connector.

Disconnect the HIC connector.

Check wiring continuity as per following table.

MULTIMETER PROBE POSITIONS		RESISTANCE
Ignition coil connector pin 1	HIC connector pin E	Close to 0 Ω

If circuit is open or has a high resistance, repair the wiring / connectors.

If the resistance is correct, check the continuity of the ignition coil ground circuit.

Testing the Ignition Coil Ground Circuit Continuity

Disconnect ignition coil input connector.

Disconnect ECM connector “A” and connect it to the ECM adapter tool.

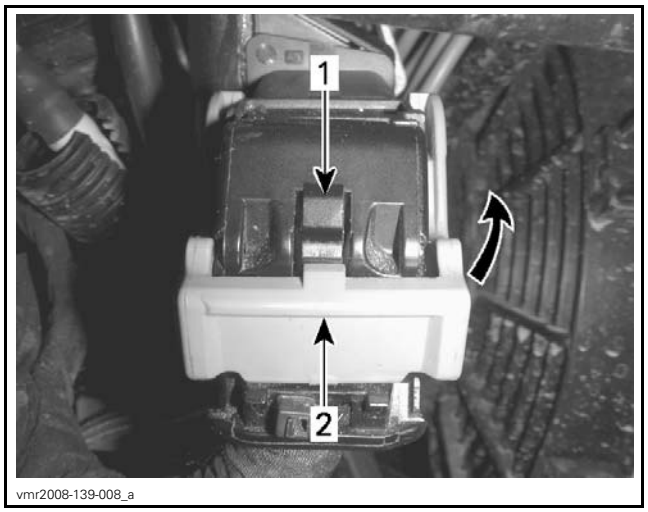

TYPICAL
1. *Press to release connector lock*
2. *Push to rotate connector lock upwards*

REQUIRED TOOL	
ECM ADAPTER TOOL (P/N 529 036 166)	

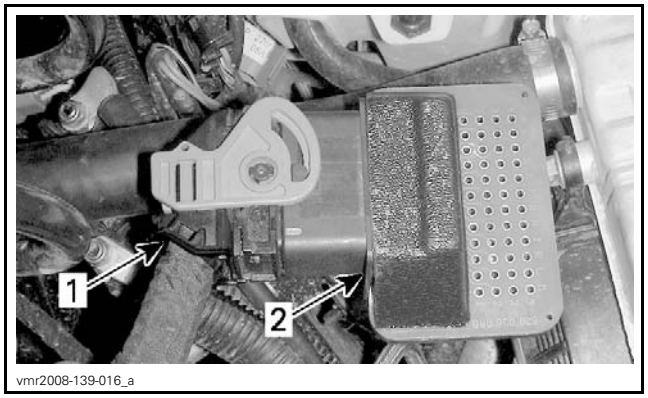

1. *ECM connector*
2. *Adapter tool*

Check wiring continuity as per following table.

IGNITION COIL GROUND CIRCUIT CONTINUITY TEST		
TEST PROBES		RESISTANCE
Coil input connector pin 2	ECM A pin M2	Close to 0 Ω

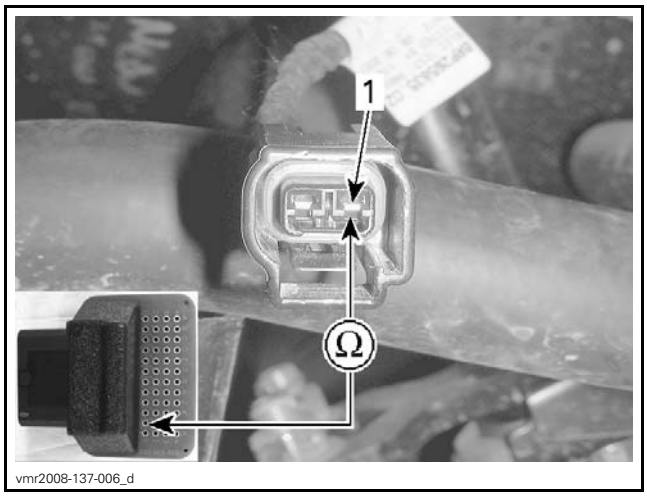

COIL GROUND CIRCUIT CONTINUITY TEST
1. *Pin 2 (BROWN/BLACK)*

Testing the Ignition Coil Resistance

NOTE: An ignition coil with good resistance measurements can still be faulty. Voltage leak can occur at high voltage levels which is not detectable with an ohmmeter. Replacing the ignition coil may be necessary as a test.

Primary Windings

Disconnect ECM "A" connector and connect it to the ECM ADAPTER TOOL (P/N 529 036 166).

Disconnect the HIC connector.

Using a multimeter, check resistance in primary winding as follows.

MULTIMETER PROBE POSITIONS		RESISTANCE @ 25°C (77°F)
ECM A-M2	HIC pin E	0.47 ± 0.05 Ω

If any resistance is not good, measure resistance directly on coil. If second test is ok, check the wiring / connectors.

Secondary Winding

A resistance test of the ignition coil secondary winding is not possible due to internal circuitry.

Testing the Spark Plug Cable Resistance

Disconnect the spark plug cable from the spark plug and the ignition coil.

Measure resistance through the cable.

SPARK PLUG CABLE		RESISTANCE @ 20°C (68°F)
Coil side	Spark plug side	5 KΩ ± 1 KΩ

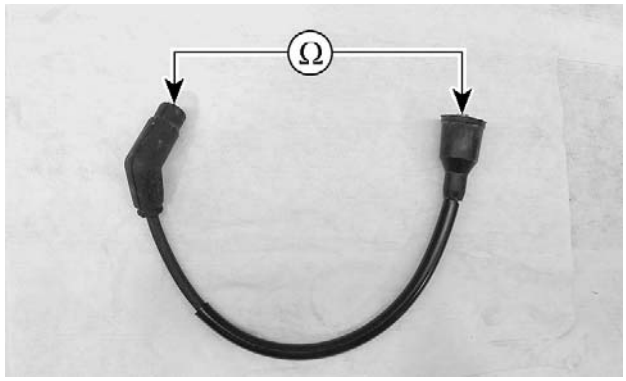

SPARK PLUG CABLE RESISTANCE TEST

If resistance value obtained is not close to value specified, or cable shows signs of deterioration, replace spark plug cable.

SPARK PLUG

Replacing the Spark Plug

Removing the Spark Plug

Unplug the spark plug cable.

Clean the spark plug area with pressurized air.

Unscrew spark plug.

Installing the Spark Plug

Prior to installation make sure that contact surfaces of the cylinder head and spark plug are free of grime.

1. Using a wire feeler gauge, verify the electrode gap as specified in *TECHNICAL SPECIFICATIONS*.
2. Hand screw spark plug into cylinder head, then tighten with a torque wrench and an appropriate socket.

TIGHTENING TORQUE	
Spark plug	11 N•m ± 1 N•m (97 lbf•**in** ± 9 lbf•**in**)

Testing for Spark Occurrence

⚠ WARNING

Never check for ignition spark from an open coil and/or spark plug as spark may cause potential fuel vapors to ignite.

Use an approved inductive type spark tester to test for ignition. Follow spark tester manufacturer procedures.

Remove the LH side panel for access to the spark plug and spark plug cable.

Turn ignition switch to ON.

Set engine stop switch to RUN.

Press and hold the start button.

If nothing happens when the start button is pressed, refer to the *STARTING SYSTEM* subsection.

If the starter rotates the engine and there is no spark indicated by the tester, follow the ignition system troubleshooting sequence as indicated.

If the inductive spark tester indicates ignition to the spark plug, install a new spark plug.

If a known good spark plug does not solve the problem, continue testing the other system components. The ignition spark may not be correct due to other system components being out of tolerance.

NOTE: Keep in mind that even if there is a spark during this static test, the voltage requirement to produce a spark in the combustion chamber is higher when the engine is running. The ignition coil may not be functioning properly. Replacing the ignition coil may be necessary as a test.

Troubleshooting a Fouled Spark Plug

Fouling of the spark plug is indicated by irregular running or misfiring of the engine, decreased engine speed due to misfiring, reduced performance, and increased fuel consumption. This may be due to a loss of compression.

Other possible causes are: a clogged air filter, incorrect or bad fuel, defective ignition system, incorrect spark plug gap, lubricating oil entering the combustion chamber, or use of a spark plug with a temperature rating too cold for the engine requirement.

The plug face of a fouled spark plug has either a wet or dry black carbon deposit. Such coatings form a conductive connection between the center electrode and the ground electrode.

Spark Plug Analysis

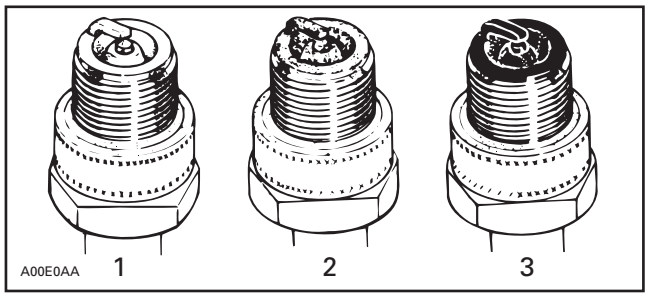

TYPICAL
1. *Overheated (light grey, white)*
2. *Normal (light brown, brown)*
3. *Fouled (black, wet or dry, dark deposits, grey, melted coating)*

The plug face reveals the condition of the engine, operating condition, method of driving and fuel mixture. For this reason it is advisable to inspect the spark plug at prescribed intervals, examining the plug face (i.e. the part of the plug projecting into the combustion chamber).

IGNITION SYSTEM (HD8)

SERVICE TOOLS

Description	Part Number	Page
ECM ADAPTER TOOL	529 036 166	4
FLUKE 115 MULTIMETER	529 035 868	3

SERVICE PRODUCTS

Description	Part Number	Page
LOCTITE 767 (ANTISEIZE LUBRICANT)	293 800 070	1

GENERAL

SYSTEM DESCRIPTION

The battery supplies the primary side of ignition coil through the main relay (R2) while the ECM completes the circuit for each cylinder by switching it to the ground at the right moment. The ECM can detect open and short circuit in the primary winding but it does not check the secondary winding.

The ECM controls the ignition system. For more information, refer to *ENGINE MANAGEMENT* section.

Ignition Timing

Ignition timing is not adjustable.

MAINTENANCE

REPLACING THE SPARK PLUG

Removing the Spark Plug

Unplug the spark plug cable.

Clean the spark plug area with pressurized air.

Unscrew spark plug using a spark plug socket.

Installing the Spark Plug

Prior to installation make sure that contact surfaces of the cylinder head and spark plug are free of grime.

1. Using a wire feeler gauge, verify the electrode gap as specified in *TECHNICAL SPECIFICATIONS*.
2. Apply antiseize lubricant over the spark plug threads to prevent possible seizure.
3. Hand screw spark plug into cylinder head, then tighten with a torque wrench and an appropriate spark plug socket.

CAUTION Do not overtighen spark plugs, engine damage can occur.

TIGHTENING TORQUE	
Service product	LOCTITE 767 (ANTISEIZE LUBRICANT) (P/N 293 800 070)
Spark plug	20 N•m ± 2 N•m (15 lbf•ft ± 1 lbf•ft)

TROUBLESHOOTING

It is good practice to check for fault codes using the BRP diagnostic software (BUDS2) as a first troubleshooting step. Refer to *DIAGNOSTIC AND FAULT CODES* subsection.

Always refer to the *WIRING DIAGRAM* when troubleshooting an electrical circuit.

Refer to *POWER DISTRIBUTION AND GROUNDS* for fuse and relay information.

DIAGNOSTIC GUIDELINES

The following is provided to help in diagnosing the probable cause of a problem. It is a guideline and should not be assumed to list all possible causes.

ENGINE WILL NOT START (ENGINE TURNS OVER)

1. **Fouled or defective spark plug**
   - *Replace.*
2. **Defective CPS**
   - *Check operation of CPS and replace if necessary. Refer to ELECTRONIC FUEL INJECTION (EFI).*

3. Defective trigger wheel / Damaged trigger wheel.
   - *Check, refer to ROTOR in the MAGNETO AND STARTER subsection.*
4. Defective ignition circuit
   - *Check fuse 5 of fuse box 2, ignition coil and wiring condition.*
5. Defective fuel pump
   - *Check fuel pump, refer to FUEL SYSTEM.*
6. Defective fuel injectors or circuit
   - *Check fuel injectors, refer to ELECTRONIC FUEL INJECTION (EFI).*

ENGINE HARD TO START

1. Spark plug faulty, fouled or worn out
   - *Check spark plug condition. Replace if necessary.*
2. Low fuel pressure
   - *Test fuel pressure, refer to FUEL SYSTEM.*

ENGINE MISFIRES, RUNS IRREGULARLY

1. Fouled, defective, worn spark plugs
   - *Check/verify heat range/gap/replace.*
2. Defective or loose CPS
   - *Check. Refer to ELECTRONIC FUEL INJECTION (EFI).*
3. Damaged trigger wheel.
   - *Check. Refer to ROTOR in the MAGNETO AND STARTER subsection.*
4. Defective ignition circuit
   - *Check ignition coil, fuse 5 of fuse box 2, and wiring condition.*
5. Poor engine grounds
   - *Check/clean/repair.*
6. Fuel level indicator lamp is ON
   - *Check fuel level.*

ENGINE CONTINUALLY BACKFIRES

1. Fouled, defective spark plugs
   - *Clean/replace.*
2. Defective or loose CPS
   - *Check, refer to ELECTRONIC FUEL INJECTION (EFI).*
3. Damaged trigger wheel.
   - *Check, refer to ROTOR in the MAGNETO AND STARTER subsection.*

PROCEDURES

SAFETY PRECAUTIONS

⚠ WARNING

To prevent powerful electric shock while cranking engine, do not touch any of the ignition components (ignition coil, spark plug wire, etc.) nor tester leads. Also make sure that tester leads do not touch any metallic object.

IGNITION SWITCH

Testing the Ignition Switch (Quick Test)

Turn ignition switch to ON position.

If multifunction gauge turns on (assuming it works), the ignition switch is good.

If multifunction gauge does not turn on, check the following in this order:

– Battery
– Fusible links between starter solenoid and fuse box 2
– Fuses 4 and 8 of fuse box 2
– ECM is properly powered (refer to *ENGINE MANAGEMENT*)
– Ignition switch.

Ignition Switch Wire Identification

FUNCTION	PIN	WIRE COLOR
Ground signal to ECM in OFF position 12 Vdc to ECM in ON position	A	YE/OG
12 Vdc input	B	BE/WH
12 Vdc output (Accessory relay)	C	YE/BU
12 Vdc output (ECM, starter solenoid and start switch)	D	BK/YE
Ground (through ECM)	F	OG/VI

IGNITION COIL

When troubleshooting an ignition coil problem, first carry out a spark occurrence test, refer to *SPARK PLUG* in this subsection.

If there is no spark, carry out *TESTING THE IGNITION COIL INPUT VOLTAGE* and *TESTING THE IGNITION COIL GROUND CIRCUIT CONTINUITY*.

vmr2006-018-100

Ignition Coil Access

Tilt the cargo box to reach the ignition coils.

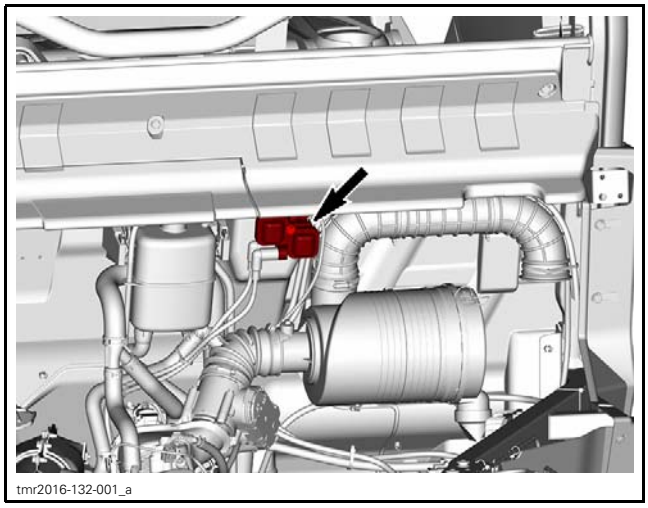
tmr2016-132-001_a

Installing the Ignition Coil

Install a new elastic nut and tighten to the specified torque.

TIGHTENING TORQUE	
Ignition coil retaining bolt	10 N•m ± 1 N•m (89 lbf•**in** ± 9 lbf•**in**)

Quick Test with BUDS2

Connect vehicle to the BRP diagnostic software (BUDS2). Refer to *COMMUNICATION TOOLS* subsection.

In BUDS2, select:

– **Functions** page
– **ECM** button
– **IO Controls** tab
– **Activate Ignition Coils**.

You should hear the spark occurring. In doubt, use an inductive spark tester. If there is no spark, perform the following tests.

NOTE: Producing a good spark in a combustion chamber requires a higher voltage than in a static test. In doubt, try a known good ignition coil.

Testing the Ignition Coil Input Voltage

Disconnect the 3-pin connector from the ignition coil.

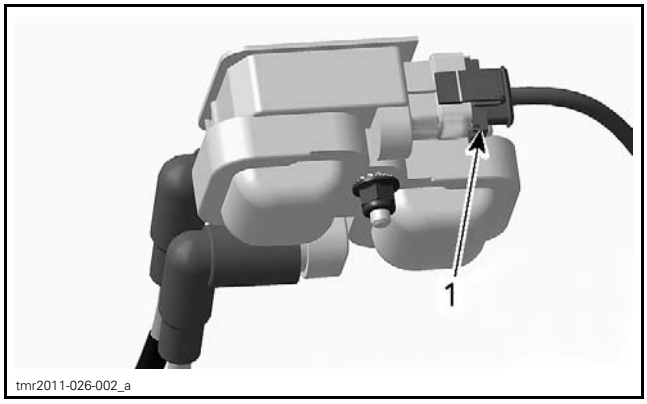

tmr2011-026-002_a

1. *Ignition coil connector*

Turn ignition switch to ON.

Check voltage.

REQUIRED TOOL	
FLUKE 115 MULTIMETER (P/N 529 035 868)	

IGNITION COIL CONNECTOR	VOLTAGE
Pin 2 with battery ground	Battery voltage

Battery voltage should be read.

If battery voltage is NOT read, check continuity of ignition coil supply circuit.

Testing the Ignition Coil Ground Circuit Continuity

Disconnect the ECM connector “A” and connect it to the ECM adapter tool.

REQUIRED TOOL	
ECM ADAPTER TOOL (P/N 529 036 166)	

Check wiring continuity as per following table.

COMPONENT	PIN (IGNITION COIL CONNECTOR)	PIN (ECM CONNECTOR)
Cylinder 1 (front)	1	A-M2
Cylinder 2 (rear)	3	A-M1

Testing the Ignition Coil Resistance

An ignition coil with good resistance measurement can still be faulty. Voltage leak can occur at high voltage level which is not detectable with an ohmmeter. Replacing the ignition coil may be necessary as a test.

Disconnect ignition cables from spark plugs.

Primary Windings

Disconnect ECM "A" connector and connect it to the ECM adapter tool.

REQUIRED TOOL	
ECM ADAPTER TOOL (P/N 529 036 166)	

Using a multimeter, check resistance in primary windings as follows.

PRIMARY CIRCUIT	ENGINE CONNECTOR (HIC)	ECM CONNECTOR "A"	RESISTANCE @ 20°C (68°F)
Cylinder 1 (front)	Fuse F5	A-M2	.3 - .6 Ω
Cylinder 2 (rear)		A-M1	

If any resistance is not good, measure resistance directly on coil. If second test is ok, check wiring / connector.

Secondary Windings

Due to the integrated diode, it is not possible to take any resistance measurement of the secondary winding.

SPARK PLUG

For spark plug replacement procedure, refer to *MAINTENANCE* in this subsection.

Testing for Spark Occurrence

⚠ WARNING

Never check for ignition spark from an open coil and/or spark plug as spark may cause potential fuel vapors to ignite.

Use an approved inductive type spark tester to test for ignition. Follow spark tester manufacturer procedures.

Remove the LH side panel for access to the spark plug and spark plug cable.

Turn ignition switch to ON.

Set engine stop switch to RUN.

Press and hold the start button.

If nothing happens when the start button is pressed, refer to the *STARTING SYSTEM* subsection.

If the starter rotates the engine and there is no spark indicated by the tester, follow the ignition system troubleshooting sequence as indicated.

If the inductive spark tester indicates ignition to the spark plug, install a new spark plug.

If a known good spark plug does not solve the problem, continue testing the other system components. The ignition spark may not be correct due to other system components being out of tolerance.

NOTE: Keep in mind that even if there is a spark during this static test, the voltage requirement to produce a spark in the combustion chamber is higher when the engine is running. The ignition coil may not be functioning properly. Replacing the ignition coil may be necessary as a test.

Troubleshooting Fouled Spark Plug

Fouling of the spark plug is indicated by irregular running of the engine, decreased engine speed due to misfiring, reduced performance, and increased fuel consumption. This is due to a loss of compression. Other possible causes are: prolonged idling or low-speed riding, a clogged air filter, incorrect fuel, defective ignition system, incorrect spark plug gap, lubricating oil entering the combustion chamber, or too cold spark plug. The plug face of a fouled spark plug has either a

wet black deposit or a black carbon fouling. Such coatings form a conductive connection between the center electrode and ground.

Spark Plug Analysis

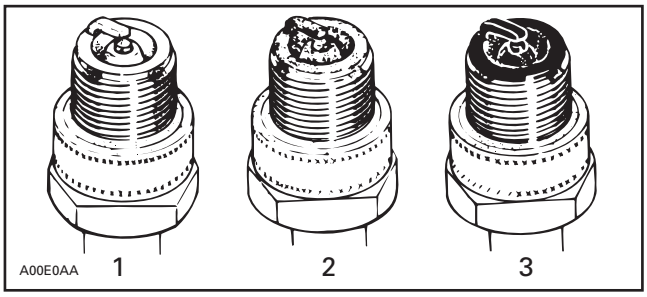

TYPICAL
1. Overheated (light grey, white)
2. Normal (light brown, brown)
3. Fouled (black, wet or dry, dark deposits, grey, melted coating)

The plug face reveals the condition of the engine, operating condition, method of driving and fuel mixture. For this reason it is advisable to inspect the spark plug at regular intervals, examining the plug face (i.e. the part of the plug projecting into the combustion chamber).

IGNITION COILS AND SPARK PLUGS

SERVICE TOOLS

Description	Part Number	Page
ECM ADAPTER TOOL	529 036 166	1
FLUKE 115 MULTIMETER	529 035 868	1

SERVICE PRODUCTS

Description	Part Number	Page
LOCTITE 767 (ANTISEIZE LUBRICANT)	293 800 070	4

GENERAL

REQUIRED TOOLS

The following tools are required to test most of the electrical parts.

REQUIRED TOOLS	
FLUKE 115 MULTIMETER (P/N 529 035 868)	
ECM ADAPTER TOOL (P/N 529 036 166)	

SYSTEM DESCRIPTION

The battery supplies the primary side of ignition coil through the main relay while the ECM completes the circuit for each cylinder by switching it to the ground at the right moment. The ECM can detect open and short circuit in the primary winding but it does not check the secondary winding.

The ECM controls the ignition system. For more information, refer to *ENGINE MANAGEMENT* section.

Ignition Timing

Ignition timing is not adjustable.

TROUBLESHOOTING

It is good practice to check for fault codes using the BRP diagnostic software (BUDS2) as a first troubleshooting step. Refer to *DIAGNOSTIC AND FAULT CODES* subsection.

Always refer to the *WIRING DIAGRAM* when troubleshooting an electrical circuit.

Refer to *POWER DISTRIBUTION AND GROUNDS* for fuse and relay information.

DIAGNOSTIC GUIDELINES

The following is provided to help in diagnosing the probable cause of a problem. It is a guideline and should not be assumed to list all possible causes.

ENGINE WILL NOT START (ENGINE TURNS OVER)

1. **Fouled or defective spark plug**
   - *Replace.*
2. **Defective CPS**
   - *Check operation of CPS and replace if necessary. Refer to ELECTRONIC FUEL INJECTION (EFI) subsection.*
3. **Defective trigger wheel / Damaged trigger wheel.**
   - *Check, refer to ROTOR in the MAGNETO AND STARTER subsection.*
4. **Defective ignition circuit**
   - *Check fuse 5 of fuse box 2, ignition coil and wiring condition.*
5. **Defective fuel pump**
   - *Check fuel pump, refer to FUEL TANK AND FUEL PUMP subsection.*
6. **Defective fuel injectors or circuit**
   - *Check fuel injectors, refer to ELECTRONIC FUEL INJECTION (EFI) subsection.*

ENGINE HARD TO START

1. **Spark plug faulty, fouled or worn out**
   - *Check spark plug condition. Replace if necessary.*
2. **Low fuel pressure**
   - *Test fuel pressure, refer to FUEL TANK AND FUEL PUMP subsection.*

ENGINE MISFIRES, RUNS IRREGULARLY

1. Fouled, defective, worn spark plugs
   - *Check/verify heat range/gap/replace.*
2. Defective or loose CPS
   - *Check. Refer to ELECTRONIC FUEL INJECTION (EFI) subsection.*
3. Damaged trigger wheel.
   - *Check. Refer to ROTOR in the MAGNETO AND STARTER subsection.*
4. Defective ignition circuit
   - *Check ignition coil, fuse 5, and wiring condition.*
5. Poor engine grounds
   - *Check/clean/repair.*
6. Fuel level indicator lamp is ON
   - *Check fuel level.*

ENGINE CONTINUALLY BACKFIRES

1. Fouled, defective spark plugs
   - *Clean/replace.*
2. Defective or loose CPS
   - *Check, refer to ELECTRONIC FUEL INJECTION (EFI) subsection.*
3. Damaged trigger wheel.
   - *Check, refer to ROTOR in the MAGNETO AND STARTER subsection.*

PROCEDURES

IGNITION SWITCH

Testing the Ignition Switch (Quick Test)

Turn ignition switch to ON position.

If multifunction gauge turns on (assuming it works), the ignition switch is good.

If multifunction gauge does not turn on, check the following in this order:

– Battery
– Fusible links between starter solenoid and fuse box 2
– Fuses 4 and 8 of fuse box 2
– ECM is properly powered (refer to *ENGINE MANAGEMENT*)
– Ignition switch.

Ignition Switch Wire Identification

FUNCTION	PIN	WIRE COLOR
Ground signal to ECM in OFF position	A	YE/OG
12 Vdc input	B	BE/WH
12 Vdc output (lights)	C	YE/BU
12 Vdc output (ECM, starter solenoid and start switch)	D	BK/YE
Ground (through ECM)	F	OG/VT

IGNITION COIL

vmr2006-018-100

Ignition Coil Access

Tilt the cargo box to reach the ignition coils.

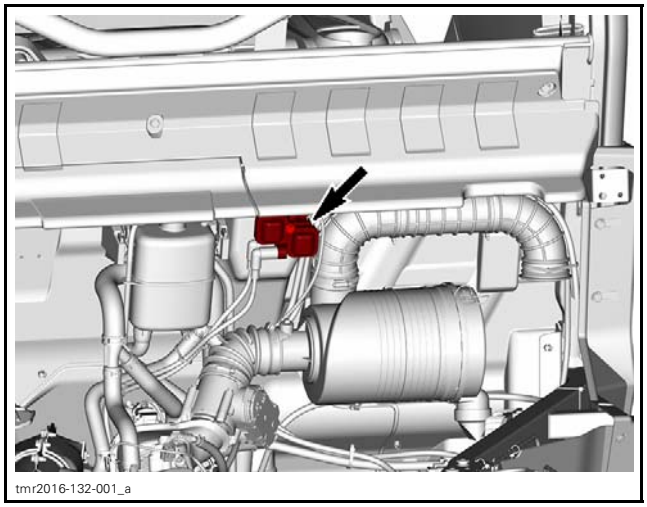
tmr2016-132-001_a

Installing the Ignition Coil

Install a new elastic nut and tighten to the specified torque.

TIGHTENING TORQUE	
Ignition coil retaining bolt	10 N•m ± 1 N•m (89 lbf•**in** ± 9 lbf•**in**)

Quick Test with BUDS2

Connect the vehicle to the BRP diagnostic software (BUDS2).

In BUDS2, select the following:

– **Functions** page
– **ECM** button
– **IO COntrols - Activate Ignition Coils**.

You should hear the spark occurring. In doubt, use an inductive spark tester. If there is no spark, perform the following checks.

NOTE: Keep in mind that even if there is a spark during this static test, voltage requirement is higher to produce a spark in the combustion chamber when engine is running. Ignition coil could be not working in real operation. Replacing ignition coil may be necessary as a test. Ensure spark plug cable is on the appropriate cylinder.

Testing the Ignition Coil Input Voltage

Disconnect the 3-pin connector from the ignition coil.

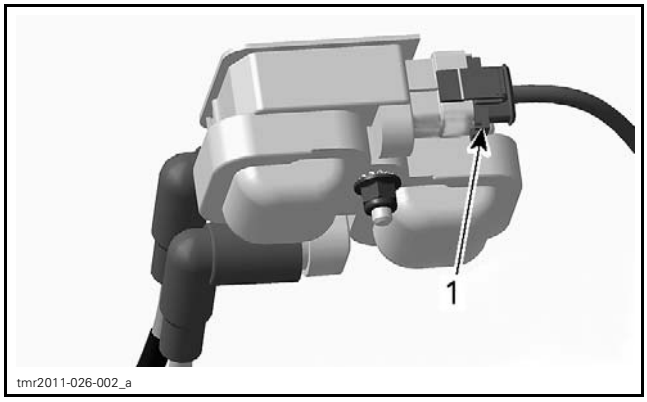

1. Ignition coil connector

Turn ignition switch to ON.

Check voltage.

IGNITION COIL CONNECTOR	VOLTAGE
Pin 2 with battery ground	Battery voltage

Battery voltage should be read.

If Battery voltage is NOT read, check continuity of ignition coil supply circuit.

Testing the Ignition Coil Ground Circuit Continuity

Disconnect the ECM connector "A" and connect it to the ECM adapter tool.

Check wiring continuity as per following table.

COMPONENT	PIN (IGNITION COIL CONNECTOR)	PIN (ECM CONNECTOR)
Cylinder 1 (front)	1	A-M2
Cylinder 2 (rear)	3	A-M1

Testing the Ignition Coil Resistance

An ignition coil with good resistance measurement can still be faulty. Voltage leak can occur at high voltage level which is not detectable with an ohmmeter. Replacing the ignition coil may be necessary as a test.

Disconnect ignition cables from spark plugs.

Primary Windings

Disconnect the ECM connector "A" and connect it to the ECM adapter tool.

Using a multimeter, check resistance in primary windings as follows.

PRIMARY CIRCUIT	ENGINE CONNECTOR (HIC)	ECM CONNECTOR "A"	RESISTANCE @ 20°C (68°F)
Cylinder 1 (front)	E	A-M2	.3 - .6 Ω
Cylinder 2 (rear)		A-M1	

If any resistance is not good, measure resistance directly on coil. If second test is ok, check wiring.

Secondary Windings

Due to the integrated diode, it is not possible to take any resistance measurement of the secondary winding.

SPARK PLUG

Replacing the Spark Plug

Removing the Spark Plug

Open rear cargo box.

Unplug the spark plug cable.

Clean the spark plug area with pressurized air.

Unscrew spark plug using a spark plug socket.

Installing the Spark Plug

Prior to installation make sure that contact surfaces of the cylinder head and spark plug are free of grime.

1. Using a wire feeler gauge, verify the electrode gap as specified in *TECHNICAL SPECIFICATIONS*.
2. Apply antiseize lubricant over the spark plug threads to prevent possible seizure.

SERVICE PRODUCT
LOCTITE 767 (ANTISEIZE LUBRICANT) (P/N 293 800 070)

3. Hand screw spark plug into cylinder head, then tighten with a torque wrench and an appropriate spark plug socket.

CAUTION **Do not overtighten spark plugs, engine damage can occur.**

TIGHTENING TORQUE	
Spark plug	11 N•m ± 1 N•m (97 lbf•**in** ± 9 lbf•**in**)

Troubleshooting Fouled Spark Plug

Fouling of the spark plug is indicated by irregular running of the engine, decreased engine speed due to misfiring, reduced performance, and increased fuel consumption. This is due to a loss of compression. Other possible causes are: prolonged idling or low-speed riding, a clogged air filter, incorrect fuel, defective ignition system, incorrect spark plug gap, lubricating oil entering the combustion chamber, or too cold spark plug. The plug face of a fouled spark plug has either a wet black deposit or a black carbon fouling. Such coatings form a conductive connection between the center electrode and ground.

Spark Plug Analysis

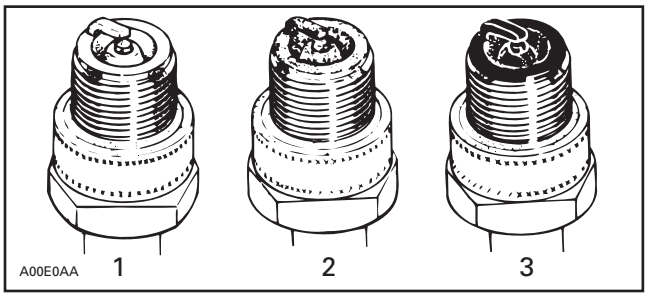

TYPICAL
1. Overheated (light grey, white)
2. Normal (light brown, brown)
3. Fouled (black, wet or dry, dark deposits, grey, melted coating)

The plug face reveals the condition of the engine, operating condition, method of driving and fuel mixture. For this reason it is advisable to inspect the spark plug at regular intervals, examining the plug face (i.e. the part of the plug projecting into the combustion chamber).

CHARGING SYSTEM

GENERAL

SYSTEM DESCRIPTION

The purpose of the charging system is to keep the battery at a full state of charge and to provide the electrical system with the required electrical power for normal vehicle operation.

Magneto

The magneto is the primary source of electrical energy. It transforms magnetic field into electric current (AC).

The magneto has a 3 phase series stator.

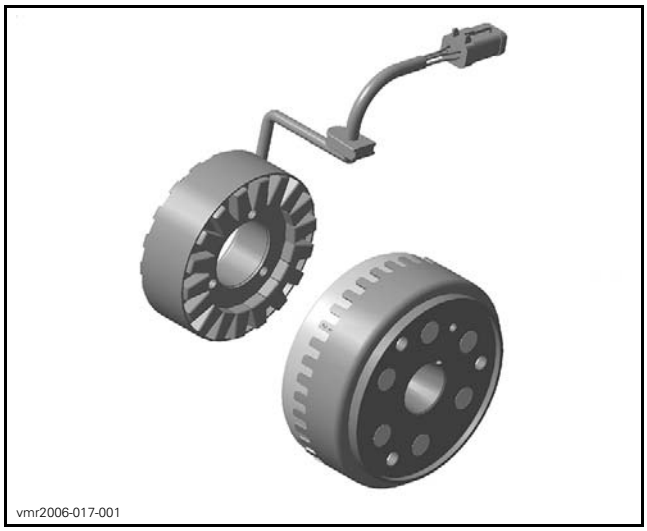

TYPICAL

Voltage Regulator/Rectifier

The rectifier receives AC current from the magneto and transforms it into direct current (DC).

The voltage regulator, included in the same unit, limits voltage to prevent any damage to electrical components.

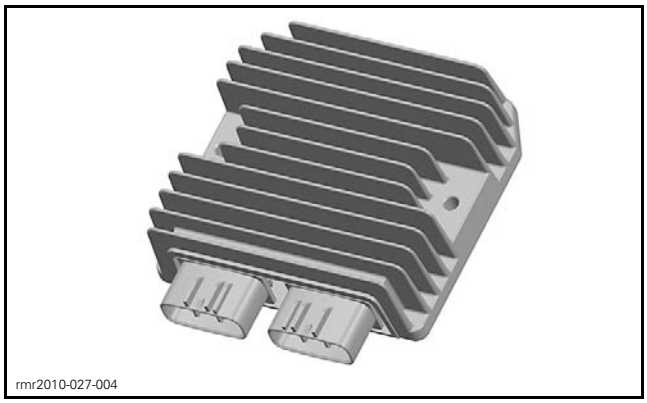

TYPICAL – VOLTAGE REGULATOR/RECTIFIER

Battery

The battery supplies DC power to the electric starter for cranking the engine. During engine starting, it also supplies DC power to the entire electrical system.

At low engine RPM operation and high current load conditions, it supplements the magneto output and helps to maintain a steady system voltage.

INSPECTION

CHARGING SYSTEM OUTPUT

First ensure that battery is in good condition prior to performing the following tests.

Testing the Output Voltage Using BUDS2

1. Connect the vehicle to the BRP diagnostic software (BUDS2).
2. In BUDS2, go to:
   – **Measurements** page
   – **Vehicle** or **ECM** button
   – **ECM - Basic** tab.
3. Start engine with the less consumption as possible (no lights, no accessories).
4. Increase engine RPM as specified in the following table and read voltage in the **Battery Voltage (V)** box.

OUTPUT VOLTAGE TEST USING BUDS2	
ENGINE SPEED	VOLTAGE (DC)
4000 RPM	14.8 ± .4 Vdc

If voltage is above specification, replace voltage regulator/rectifier.

If voltage is below specification, check stator output and wiring harness prior to concluding that voltage regulator/rectifier is defective. Refer to *MAGNETO AND STARTER* subsection.

TROUBLESHOOTING

It is good practice to check for fault codes using the BRP diagnostic software (BUDS2) as a first troubleshooting step.

BATTERY REGULARLY DISCHARGED OR WEAK

1. **Loose or corroded battery cables connections.**
   - *Tighten or repair battery cables connections.*
2. **Worn or defective battery.**
   - *Charge and test battery.*
3. **Defective magneto stator.**
   - *Test stator, refer to MAGNETO AND STARTER subsection.*
4. **Defective regulator/rectifier.**
   - *Test system voltage.*
5. **Damaged magneto rotor or Woodruff key.**
   - *Replace magneto rotor or Woodruff key, refer to MAGNETO AND STARTER subsection.*

PROCEDURES

Ensure battery is fully charged.

Refer to *WIRING HARNESS AND CONNECTORS* subsection for harness layout and connector locations on vehicle.

Refer to appropriate *WIRING DIAGRAM* for additional information.

⚠ WARNING

Ensure vehicle is in PARK when performing charging system tests.

BATTERY LOAD TEST

1. Connect a battery load tester.
2. Ensure proper test conditions.

TEST CONDITIONS	
Initial battery voltage‡	Above 12.5 Vdc
Engine	OFF

TEST CONDITIONS	
Load	3 times the amp-hour (AH) rating
Time	15 seconds
‡ Required for accurate testing	

SPECIFICATION	
Battery	Above 9.6 Vdc

If battery voltage drops below specification during test, replace battery and perform a *CHARGING SYSTEM LOAD TEST*.

CHARGING SYSTEM LOAD TEST

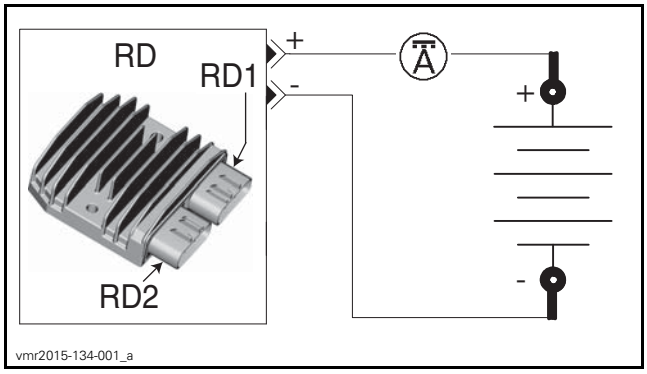

1. Connect a battery load tester.
2. Start vehicle and read voltage on tester.

SPECIFICATION	
Voltage	12.5 - 15 Vdc

If voltage is **above** specification, replace regulator and continue *CHARGING SYSTEM LOAD TEST*.

3. Connect an ammeter around RD1-1 wire.

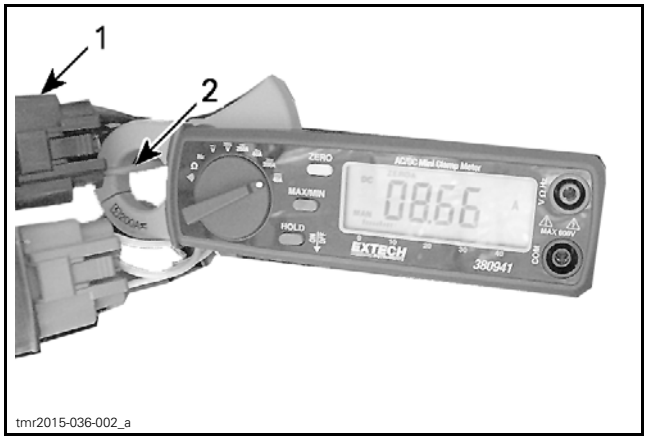

DC CURRENT TEST WITH INDUCTIVE AMMETER
1. Output connector of voltage regulator
2. Ammeter clamped over RED wire

4. Ensure proper test conditions.

TEST CONDITIONS	
Battery voltage at idle‡	Above 12.6 Vdc
Engine	Increase to 4000 RPM
Load	As required to decrease battery voltage to 12 Vdc
Time	15 seconds
‡ Required for accurate testing	

5. Read amperage on ammeter.

MODEL	SPECIFICATION
All models	50 ± 5 Amps

NOTE: With a fully charged battery and no electrical loads, specification is less than 10A.

If amperage or voltage is not within specification, verify magneto and wires. Refer to *MAGNETO AND STARTER* subsection.

If the magneto is within specifications, replace the voltage regulator.

VOLTAGE REGULATOR (RD)

Testing the Voltage Regulator Continuity

Due to internal circuitry, there is no static test available.

Voltage Regulator Location

The voltage regulator is located on the RH member of the extension frame, near the air filter housing.

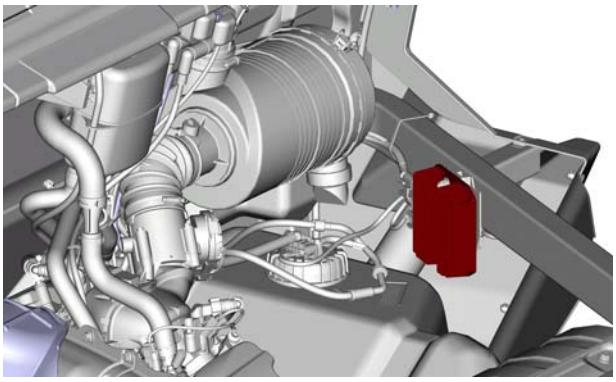

tmr2016-133-001

Voltage Regulator Wire Identification

FUNCTION	PIN	COLOR
12 Vdc output	RD1-1	RD
12 Vdc ground	RD1-3	BK
12 Vac input	RD2-1	YE
12 Vac input	RD2-2	YE
12 Vac input	RD2-3	YE

Testing the Voltage Regulator Power

1. Check voltage at RD1-1.

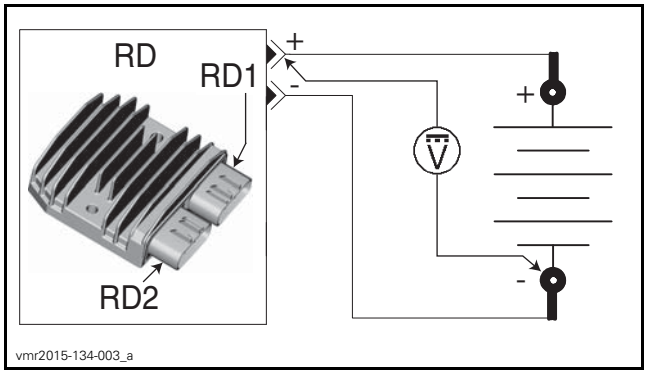

vmr2015-134-003_a

TEST CONDITIONS	
RD1-1	Hot at all times

BACKPROBE	PROBE	SPECIFICATION
RD1-1	BAT2 (-)	Battery voltage

2. Connect a battery load tester.
3. Start vehicle.
4. Ensure proper test conditions.

TEST CONDITIONS	
Battery voltage at idle‡	Above 12.6 Vdc
Engine	Increase to 4000 RPM
Load	As required to decrease battery voltage to 12 Vdc
Time	15 seconds
‡ Required for accurate testing	

5. Measure voltage drop.

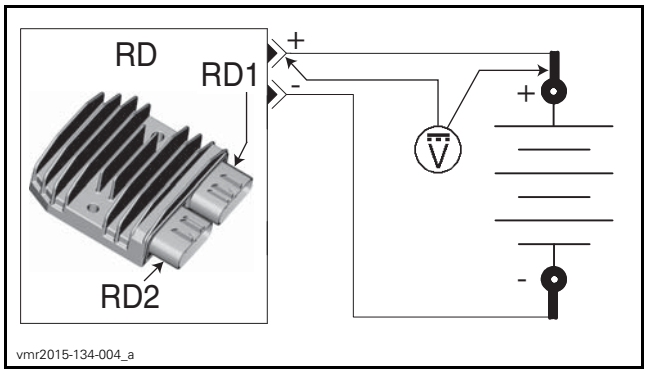

BACKPROBE	PROBE	SPECIFICATION
RD1-1	BAT1 (+)	Under 0.2 Vdc

If voltage drop is above specification, locate and repair damaged connector/wire.

Testing the Voltage Regulator Ground

1. Check ground at RD1-3.

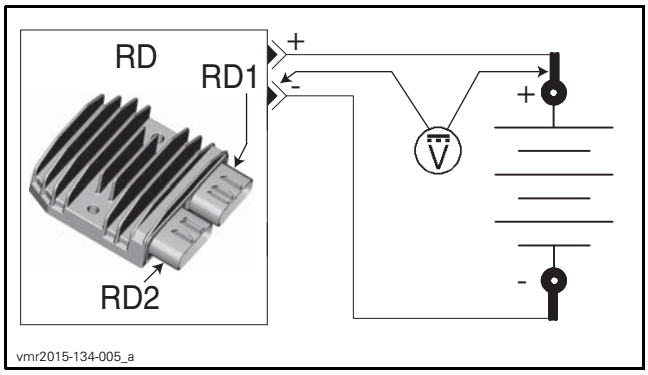

TEST CONDITIONS	
RD1-3	Permanent ground

BACKPROBE	PROBE	SPECIFICATION
RD1-3	BAT1 (+)	Battery voltage

2. Connect a battery load tester.
3. Start vehicle.
4. Ensure proper test conditions.

TEST CONDITIONS	
Battery voltage at idle‡	Above 12.6 Vdc
Engine	Increase to 4000 RPM
Load	As required to decrease battery voltage to 12 Vdc
Time	15 seconds
‡ Required for accurate testing	

5. Measure voltage drop.

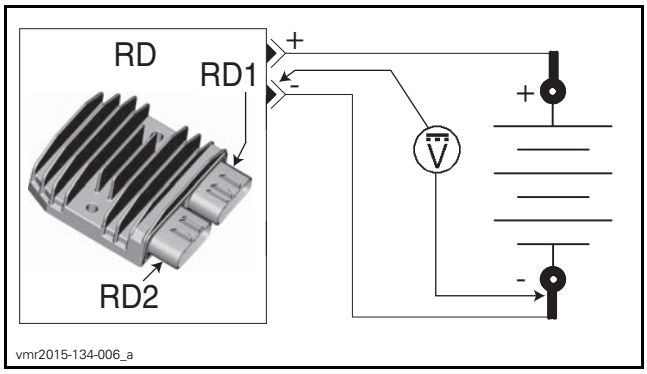

BACKPROBE	PROBE	SPECIFICATION
RD1-3	BAT2 (-)	Under 0.4 Vdc

If voltage drop is above specification, locate and repair damaged connector/wire.

BATTERY

Battery Information

These vehicles are equipped with a VRLA battery (Valve Regulated Lead Acid). **It is a maintenance-free type battery.**

Refer to battery manufacturer's instructions for proper filling, activation and routine charging procedures.

Battery Location

3-UP Models

The battery is located underneath the right passenger's seat.

MAX Models

The battery is located underneath the right rear passenger's seat.

Removing the Battery

1. Remove under seat storage compartment if equipped.
2. Remove battery cover

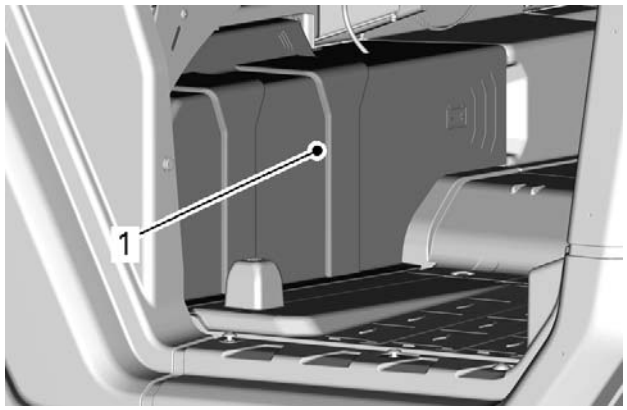

1. Battery cover

3. Disconnect BLACK (-) cable first, then the RED (+) cable.

NOTICE **Always respect this order for removal; disconnect BLACK (-) cable first.**

4. Remove battery holder retaining screws.

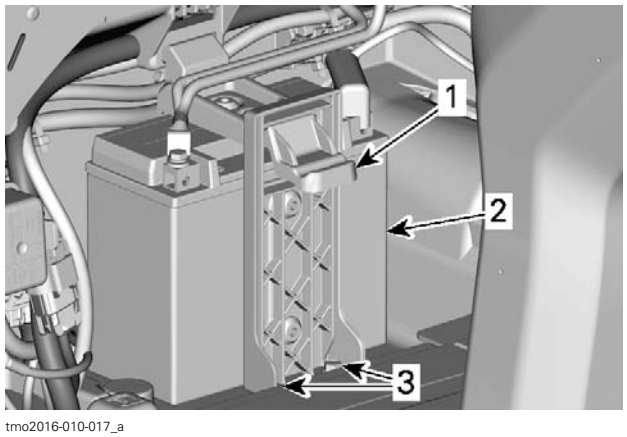

1. Battery holder
2. Battery
3. Battery holder retaining screw(s)

5. Remove battery holder.
6. Remove battery.

Cleaning the Battery

Clean the battery rack, cables and battery posts using a solution of baking soda and water.

Remove corrosion (if so) from battery cable terminals and battery posts using a firm wire brush. Rinse with clear water and dry well.

Inspecting the Battery

Visually inspect battery casing for cracks or any other damages. If casing is damaged, replace battery and thoroughly clean battery support with a water and baking soda solution.

Inspect condition of battery posts, battery support, holding strap and strap attachment points and wire terminal lugs.

Battery Storage

It is not necessary to remove the battery during vehicle storage but it is recommended for long term storage.

If the battery is left in the vehicle during storage or used infrequently, disconnect the BLACK (-) negative battery cable to eliminate battery current drain from the electrical equipment.

Recharge the battery once a month with an approved battery charger as per manufacturer's recommendations.

Clean battery, battery support and connections as required, refer to *CLEANING THE BATTERY* in this section.

For other recommendations during storage, refer to battery manufacturers instructions.

⚠ WARNING

Ensure battery is stored in a safe place, out of reach for children.

Activating a New Battery

Refer to the instructions provided with the battery.

Charging a Battery

⚠ WARNING

Always wear safety equipment and charge in a well ventilated area. Never charge or boost a battery while it is installed on vehicle. Do not open the sealed cap during charging. Do not place battery near open flame.

NOTICE **If battery becomes hot, stop charging and allow it to cool before continuing.**

NOTE: Sealed VRLA batteries have an internal safety valve. If battery pressure increases due to overcharging, the valve opens to release excess pressure, preventing battery damage.

An automatic charger is a fast and convenient way for error-proof charging.

Always follow the battery manufacturer's charging instructions.

When using a constant current charger, charge battery according to the chart below.

Battery Voltage Below 12.8 V and Above 11.5 V

STANDARD CHARGING (RECOMMENDED)	
APPROXIMATE TIME	CHARGE
4 - 9 HOURS	2 A

QUICK CHARGING	
APPROXIMATE TIME	CHARGE
50 MINUTES	10 A

Installing the Battery

The installation is the reverse of the removal procedure. However, pay attention to the following details.

NOTICE **Always connect RED (+) cable first then BLACK (-) cable.**

Tighten battery holder retaining screws to specification.

TIGHTENING TORQUE	
Battery holder retaining screws	3.4 N•m ± 0.3 N•m (30 lbf•**in** ± 3 lbf•**in**)

STARTING SYSTEM

GENERAL

SYSTEM DESCRIPTION

The starting system is composed of an electric starter supplied in current by the battery through a solenoid.

The starter solenoid receives a 12 volt input from the ignition switch and the ground signal is provided by the ECM when the following engine cranking conditions are met.

– Gearbox in Park or Neutral position and/or brake pedal held.
– Ignition switch turned to the start position and held until the engine starts.

NOTE: If the ignition switch is left ON for more than 30 minutes, engine will not start unless ignition switch is turned OFF, then ON again.

TROUBLESHOOTING

It is good practice to check for fault codes using the BRP diagnostic software (BUDS2) as a first troubleshooting step. Refer to *DIAGNOSTIC AND FAULT CODES* subsection.

Clear any fault code after solving a problem.

Always refer to the *WIRING DIAGRAM* when troubleshooting an electrical circuit.

Refer to *POWER DISTRIBUTION* for fuse and relay information.

Check all connections, cables and wires. Tighten any loose connections. Replace any chafed or corroded wires/cables.

DIAGNOSTIC GUIDELINES

FUSE 8 IN FUSE BOX 2 BURNS WHILE ATTEMPTING TO CRANK ENGINE

1. Defective D2 Diode
   - *Test diode, see procedure in this subsection.*
2. Defective starter solenoid
   - *Test starter solenoid, see procedure in this subsection.*
3. Wiring short to ground
   - *Check wiring.*

ENGINE DOES NOT CRANK AND GAUGE DOES NOT TURN ON

1. Burnt fuse F8 in fuse box 2
   - *Check fuse.*
2. Connection problem in the starting system
   - *Check all positive and ground cable connections, tighten or repair if necessary.*
3. Defective or discharged battery
   - *Test battery, refer to CHARGING SYSTEM.*
4. Defective ignition switch or circuit
   - *Check ignition switch, refer to IGNITION SYSTEM.*

ENGINE DOES NOT CRANK BUT GAUGE TURNS ON

1. Connection problem in the starting system
   - *Check all positive and ground cable connections, tighten or repair if necessary.*
2. Defective brake switch
   - *Check brake switch, refer to BRAKES section.*
3. Defective gearbox position sensor (GBPS)
   - *Check GBPS, refer to GEARBOX AND 4X4 COUPLING UNIT subsection.*
4. Defective starter solenoid or circuit
   - *Test starter solenoid, see procedure in this subsection.*
5. Defective starter motor
   - *Check starter motor, refer to MAGNETO AND STARTER subsection.*

PROCEDURES

STARTER SOLENOID

Starter Solenoid Access

3-Up Models

The starter solenoid is located beside the fuse box, underneath passenger seat.

MAX Models

The starter solenoid is located beside the fuse box, underneath rear passenger seat.

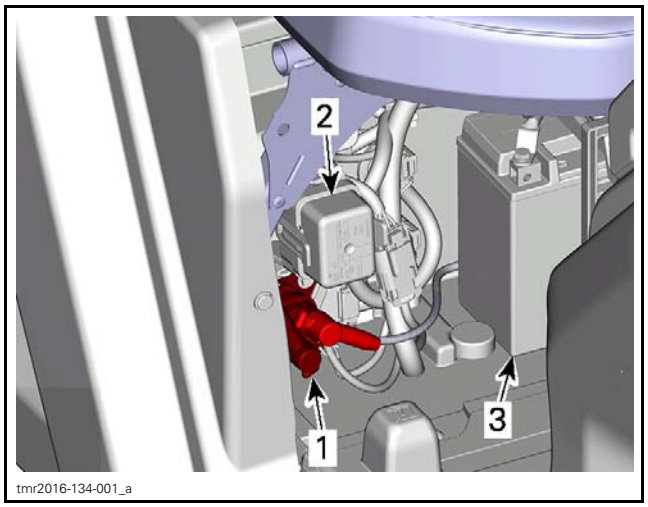

1. *Starter solenoid*
2. *Fuse box*
3. *Battery*

Starter Solenoid Wire Identification

FUNCTION	PIN	WIRE COLOR
12 volt input from ignition switch	SS-A	BK/YE
Ground from ECM-B pin L4	SS-B	OG/BN

Testing the Starter Solenoid Input Voltage

1. Disconnect the starter solenoid connector (SS).

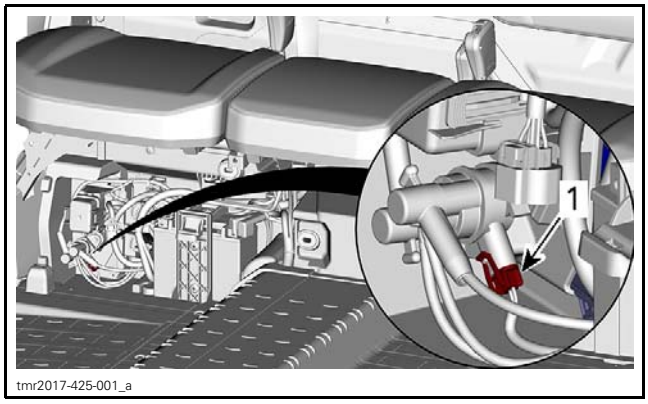

1. *Starter solenoid connector*

2. Hold ignition switch to START.
3. Measure voltage as per following table.

STARTER SOLENOID INPUT VOLTAGE TEST		
TEST PROBES		RESULT
SS connector pin A	Battery ground	Battery voltage

Testing the Starter Solenoid Ground Signal

1. Disconnect the solenoid connector (SS).
2. Hold ignition switch to START.
3. Measure voltage as per following table.

STARTER SOLENOID GROUND SIGNAL TEST		
TEST PROBES		RESULT
SS connector pin B	Battery positive post	Battery voltage

Testing the Starter Solenoid Winding Resistance

Remove the starter solenoid.

NOTICE **Disconnect the battery negative terminal (-) before removing the starter solenoid.**

With a multimeter, measure the resistance in the solenoid winding as follows.

STARTER SOLENOID WINDING RESISTANCE TEST		
TEST PROBES		RESULT @ 20°C (68°F)
Starter solenoid pin A	Starter solenoid pin B	Approximately 5 Ω

If measurement is out of specification, replace solenoid.

Testing the Starter Solenoid Internal Voltage Drop

Measure voltage as per following table while cranking engine in **drowned mode** (to prevent engine starting).

NOTE: For informations on the drowned mode, refer to *ENGINE MANAGEMENT* subsection.

STARTER SOLENOID INTERNAL VOLTAGE DROP TEST		
TEST PROBES		RESULT (WHILE CRANKING)
Post coming from battery	Post going to starter	0.2 Vdc max.

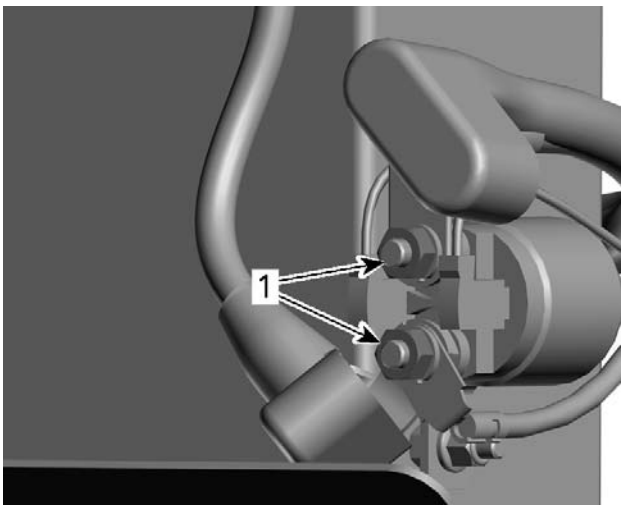

tmr2013-085-001_a

TYPICAL
1. VDC

If voltage is out of specification, replace solenoid.

D2 DIODE (STARTER SOLENOID)

Diode Location

The diode is located in the main harness, near starter solenoid.

Testing the Diode

1. Make sure ignition switch is OFF.
2. Disconnect the starter solenoid connector (SS).

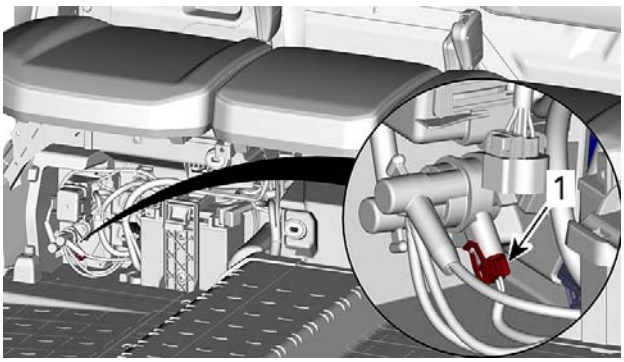

tmr2017-425-001_a

1. Starter solenoid connector

3. Set multimeter to "diode check".

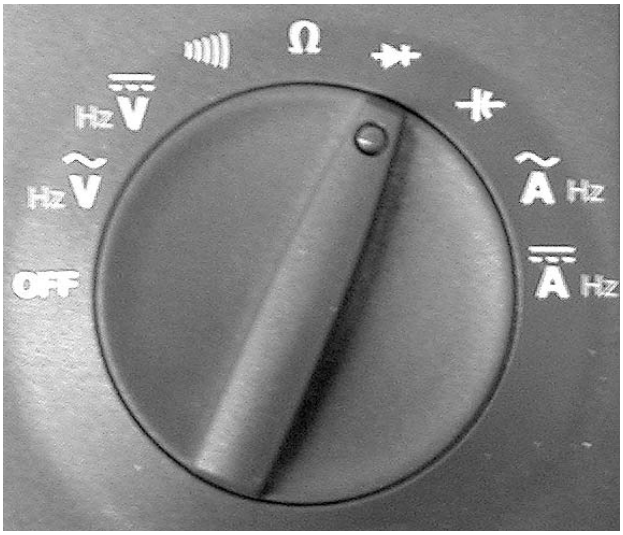

vmr2006-020-005

4. Test diode as per following table.

D2 DIODE TEST		
MULTIMETER POSITIVE PROBE	MULTIMETER NEGATIVE PROBE	RESULT
SS connector pin A	SS connector pin B	Overload (open)
SS connector pin B	SS connector pin A	Approximately 0.5 volts

If diode fails any test, replace it.

LIGHTS

SERVICE PRODUCTS

Description	Part Number	Page
DIELECTRIC GREASE	293 550 004	1

GENERAL

NOTICE It is recommended to always disconnect the battery when replacing any electric or electronic parts. Always disconnect battery exactly in the specified order, BLACK (-) cable first.

TROUBLESHOOTING

DIAGNOSTIC TIPS

IMPORTANT: When troubleshooting an electrical system fault, check battery condition, cables and connections first.

Testing a Circuit

Check the related-circuit fuse condition with a fuse tester or test lamp (a visual inspection could lead to a wrong conclusion).

NOTE: If the ignition switch is left ON for more than 30 minutes, the accessory relay will shut down.

Inspecting an Electrical Connection

When replacing an electric or electronic component, always check electrical connections. Make sure they are tight, make good contact, and are corrosion-free. Dirty, loose or corroded contacts are poor conductors and are often the source of a system or component malfunction.

Pay particular attention to ensure that pins are not bent or pushed out of their connectors.

Ensure all wire terminals are properly crimped on wires, and connector housings are properly fastened.

Check for signs of moisture, corrosion or dullness. Clean pins properly and coat them with dielectric grease or other appropriate lubricant when reassembling them, except if otherwise specified such as for the ECM connectors.

SERVICE PRODUCT
DIELECTRIC GREASE (P/N 293 550 004)

Pay attention to ground wires.

PROCEDURES

HEADLIGHTS

Headlight Wire Identification

LOW BEAM - AT BULB		
FUNCTION	PIN	COLOR
12 volt input from light switch	B	GN
Ground	A	BK

HIGH BEAM - AT BULB		
FUNCTION	PIN	COLOR
12 volt input from multifunction switch	B	BU
Ground	A	BK

Headlights Circuit Protection

CONDITION	CIRCUIT PROTECTION
Supplied with accessory relay (R3) activated	Fuse F11 of fuse block PF1

Testing the Headlight

Disconnect headlight connector.

Turn ignition switch ON.

Using a multimeter, measure the voltage on headlight connector as follows.

SWITCH POSITION	WIRE COLOR		VOLTAGE
LO beam	GN	BK	Battery voltage
HI beam	BU	BK	

Replacing a Headlight Bulb

NOTICE Never touch glass portion of a halogen bulb with bare fingers, it shortens its operating life. If glass is touched, clean it with isopropyl alcohol which will not leave a film on the bulb.

Unplug connector from bulb.

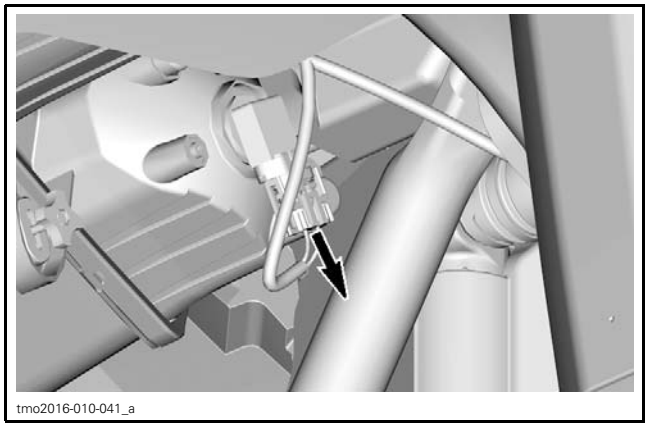

TYPICAL

Rotate bulb.

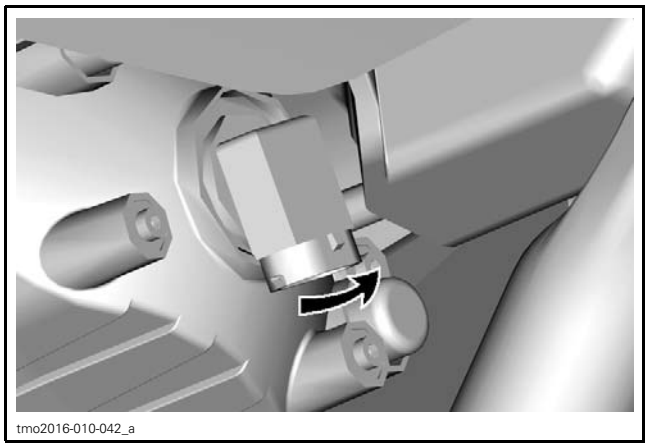

TYPICAL

Pull out bulb.

Reinstall parts in the reverse order.

Validate headlights operation.

Headlamp Beam Aiming

Select high beam.

Beam aiming is correct when center of high beam is 130 mm (5 in) below the headlight horizontal center line, scribed on a test surface, 5 m (16 ft) away.

NOTE: Load vehicle as per normal use.

Measure headlight center distance from the ground. Scribe a line at this height on test surface (wall or screen). Light beam center should be 130 mm (5 in) below scribed line.

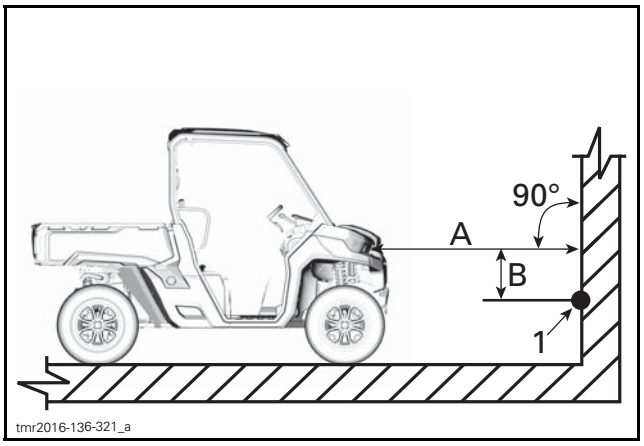

1. Light beam center
A. 5 m (17 ft)
B. 131 mm (5 in)

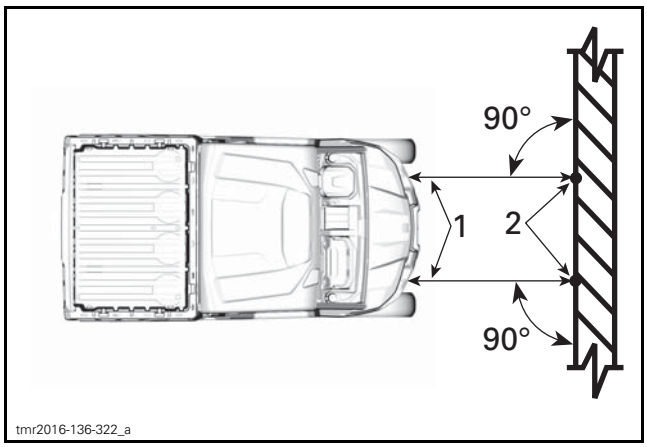

1. Headlight center lines
2. Light beam center

Adjusting Beam Aiming

Turn adjustment screws to adjust beam height and side orientation as described below. Adjust both headlight evenly.

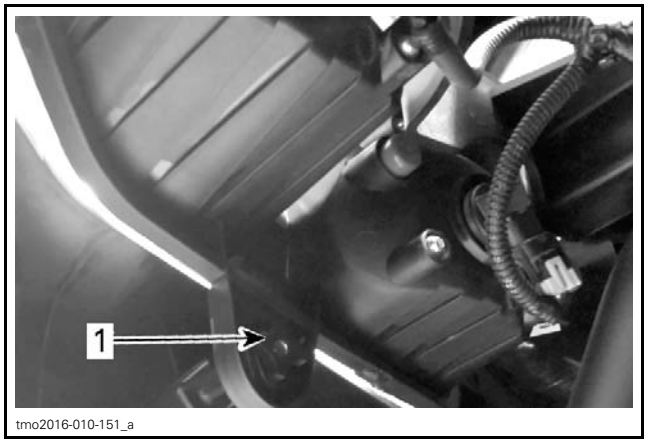

1. Adjustment screws

TAILLIGHTS/BRAKE LIGHTS

Taillight/Brake Light Wire Identification

TAILLIGHT/BRAKE LIGHT ASSEMBLY		
FUNCTION	PIN	COLOR
12 volt input to taillight from accessory relay R3	2	VT/WH
12 volt input to brake light from brake light relay (R8)	3	WH/OG
Common ground	1	BK

BRAKE LIGHT RELAY (R8)		
FUNCTION	PIN	COLOR
12 volt input from fuse F16 (in PF1)	B6	VT/WH
12 volt input from brake light switch (relay winding input)	B5	RD/OG
12 volt output to brake lights	A5	WH/OG
Relay winding ground (to ground terminal BN1)	A6	BK

BRAKE LIGHT SWITCH		
FUNCTION	PIN	COLOR
12 volt input from fuse F4 (of PF2)	2	OG/GN
12 volt output to R8 relay winding	1	RD/OG

Taillight/Brake Light Circuit Protection

CONDITION	CIRCUIT PROTECTION
Supplied with main relay R2 activated	Fuse F4 of fuse block PF2 10A
Supplied with accessory relay R3 activated	Fuse F16 of fuse block PF1 10A

Replacing the Taillight/Brake Light Bulb

If a LEDs in the taillight or brake light fail, the entire taillight must be replaced.

1. Open tail gate.
2. Remove taillight/brake light assembly retaining screws.
3. Pull the taillight/brake light assembly out of the cargo box side wall.

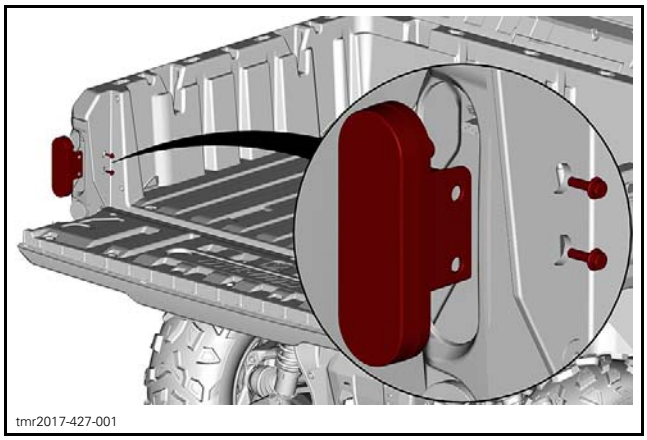

4. Disconnect the electrical connector.
5. Install the new taillight/brake light assembly in the reverse order.

TIGHTENING TORQUE	
Taillight/brake light assembly screws	9.5 N•m ± 1.5 N•m (84 lbf•**in** ± 13 lbf•**in**)

GAUGE 4.5" DIGITAL DISPLAY

SERVICE TOOLS

Description	Part Number	Page
FLUKE 115 MULTIMETER	529 035 868	1

GENERAL

Most of the electrical tests require the following tools.

REQUIRED TOOLS
FLUKE 115 MULTIMETER (P/N 529 035 868)
Test light

Refer to *WIRING DIAGRAM INFORMATION* subsection for diagnostic tips on troubleshooting electrical problems.

NOTICE **It is recommended to always disconnect the battery when replacing any electrical component. Always disconnect battery as specified, BLACK (-) cable first. Do not place tools on battery.**

INDICATOR LAMPS DESCRIPTION

Important information about vehicle condition is displayed on the multifunction gauge. When starting the engine, always look at the gauge for any indicator lamps or special messages.

NOTE: The low oil indicator lamp will stay ON as long as the engine is not started.

Important information messages can also be displayed temporarily in the lower display to assist indicator lamps.

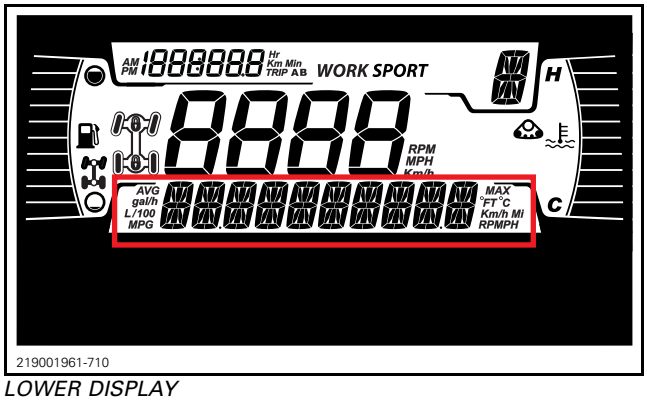

LOWER DISPLAY

NOTE: Depending on the vehicle, not all the indicator lamps and messages will be applicable.

INDICATOR LAMPS (MALFUNCTIONS)			
INDICATOR LAMP	Message	CAUSE	WHAT TO DO
NA	BAD KEY	Defective key	Replace key.
	WRONG KEY	Wrong key	Use the right key for the vehicle.
	CHECK KEY	Problem of reading key	Verify and replace key if necessary.
	HIGH ENGINE TEMPERATURE	Engine is overheating or faulty sensor	– Stop and wait for engine to cool off. – Check for leaks. – Check coolant level and adjust (see *MAINTENANCE PROCEDURES*).
	LO BATT VOLT or HI BATT VOLT	Low battery voltage	– Check charging system. – Check battery connections.
	BRAKE FAILURE - LOW BRAKE FLUID	Low brake fluid level or faulty sensor	– Check for brake fluid leaks. – Check brake fluid level and adjust (see *MAINTENANCE PROCEDURES*).
	CHECK DPS	Dynamic power steering component	Refer to *DYNAMIC POWER STEERING (DPS)* for diagnostic procedure.
	TRANSMISSION SIGNAL FAULT	Transmission Control Module component	– Remove key, wait 20 seconds, and reinsert key. – Diagnose using the BRP diagnostic software (BUDS2)
(ON)	CHECK ENGINE	Engine management component malfunction	Stop the engine. Connect the vehicle to the BRP diagnostic software (BUDS2). Check faults codes and perform recommended actions.
(Flashing)	LIMP HOME MODE	Important engine management component malfunction	Diagnose using the BRP diagnostic software (BUDS2)
	LOW OIL - STOP ENGINE	Low oil pressure	– Check for oil leaks. – Check oil level and adjust (see *MAINTENANCE PROCEDURES*.
(Flashing)	- - -	Faulty sensor	– Check sensor. – Check sensor connection to cluster.
NA = Not applicable			

TROUBLESHOOTING

DIAGNOSTIC TIPS

IMPORTANT: When solving an electrical problem, the first thing to do is to check the battery condition as well as its cables and connections.

Install a battery charger on battery terminals for any tests that involves a prolonged "key ON" period. If battery voltage gets too low, not only test results can be altered, but the vehicle electrical system may not operate normally.

Pay attention to ground wires. They could become loose or corroded which causes them to act as an additional load in a circuit, dropping voltage and reducing current to components. Some components may be grounded through their outer casing and mounting hardware. This should also be considered.

Electrical Connectors

Pay particular attention to ensure that pins are not out of their connectors, loose, or damaged. The troubleshooting procedures may not cover problems resulting from one of these causes.

NOTICE **Ensure all terminals are properly crimped on wires and connector housings are properly fastened. When replacing any electric or electronic part(s), always check electrical connections. Make sure that they are clean, corrosion-free, tight and make good contact. The voltage and current might be too weak to go through dirty or corroded connector pins or terminals.**

MULTIFUNCTION GAUGE TROUBLESHOOTING

GAUGE FUNCTIONS INOPERATIVE OR WORKING INTERMITTENTLY

1. Power supply or ground problem
   - *Check power supply and ground circuits.*

PROCEDURES

MULTIFUNCTION GAUGE

Testing the Multifunction Gauge

Testing the Multifunction Gauge Using BRP Diagnostic Software (BUDS2).

1. Connect the vehicle to the BRP diagnostic software (BUDS2).
2. In BUDS2, select the following:
   – **Functions** page
   – **Cluster** button
   – **Execute WOW Test**

NOTE: The **WOW Test** only tests the gauge **LEDs** and **LCD**. It does not test the actual circuit functions related to each indication.

Testing the Multifunction Gauge Power Input

If the multifunction gauge is inoperative, first check for fault codes with BRP Diagnostic Software, record all faults then erase them. Reactivate the electrical system and recheck for faults. If any fault code appears, perform service actions required. Refer to *COMMUNICATION TOOLS* subsection.

1. Remove multifunction gauge.
2. Perform testing at multifunction gauge connector as per following illustration and tables.

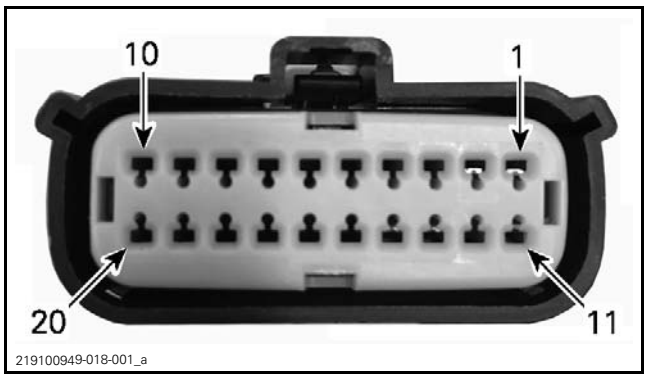

MULTIFUNCTION GAUGE CONNECTOR (PIN-OUT)

MULTIFUNCTION GAUGE POWER TEST			
CL CONNECTOR	BATTERY	IGNITION POSITION	RESULTS
Multifunction connector pin 1	Negative (-) post	Any	Close to battery voltage
Multifunction connector pin 11		ON	Close to battery voltage

If there is no power at pin 1, check fuse F1 and the related circuit.

If there is no power at pin 11, in check fuse F6, relay RY3, and the related circuit.

If the power test is within specification, continue with *TESTING THE MULTIFUNCTION GAUGE GROUND CIRCUIT*.

Testing the Multifunction Gauge Ground Circuit

Test as per the following table.

MULTIFUNCTION GAUGE GROUND TEST		
CL CONNECTOR	BATTERY	RESULT
Pin 2	Negative (-) post	Close to 1 Ω

If the ground at pin 2 is not within specification, check the related circuit.

If the ground tested to specification, continue with *TESTING THE MULTIFUNCTION GAUGE CAN CIRCUIT*.

Testing the Multifunction Gauge CAN Circuit

1. Locate the DLC (Diagnostic Link Connector). Refer to *COMMUNICATION TOOLS* subsection.
2. Test as per the following table.

MULTIFUNCTION GAUGE CAN WIRE TEST		
CL CONNECTOR	DLC	RESULTS
Pin 13 (CAN HI)	Pin 1	Close to 0.4 Ω
Pin 14 (CAN LO)	Pin 2	Close to 0.4 Ω

If the CAN wire verification test fails, check the related circuit.

If the multifunction gauge functions, however there is a suspected communication problem with another component, perform this test between the multifunction gauge and that component.

If the multifunction gauge power, ground and CAN verification tests are all to specifications and the multifunction gauge is inoperative, replace the multifunction gauge.

GAUGE 7.6" DIGITAL DISPLAY

SERVICE TOOLS

Description	Part Number	Page
FLUKE 115 MULTIMETER	529 035 868	1

GENERAL

Most of the electrical tests require the following tool.

REQUIRED TOOL	
FLUKE 115 MULTIMETER (P/N 529 035 868)	

Refer to *WIRING DIAGRAM INFORMATION* subsection for diagnostic tips on troubleshooting electrical problems.

NOTICE **It is recommended to always disconnect the battery when replacing any electrical component. Always disconnect battery as specified, BLACK (-) cable first.**

INDICATOR LAMPS DESCRIPTION

Important information about vehicle condition is displayed on the multifunction gauge. When starting the engine, always look at the gauge for any indicator lamps or special messages.

NOTE: The low oil indicator lamp will stay ON as long as the engine is not started.

Important information messages can also be displayed temporarily in the lower display to assist indicator lamps.

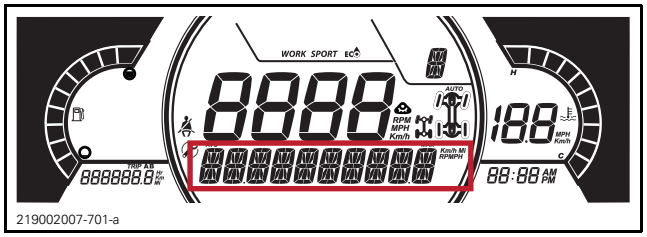

LOWER DISPLAY

NOTE: Depending on the vehicle, not all the indicator lamps and messages will be applicable.

INDICATOR LAMPS (MALFUNCTIONS)			
INDICATOR LAMP	Message	CAUSE	WHAT TO DO
NA	BAD KEY	Defective key	Replace key.
	WRONG KEY	Wrong key	Use the right key for the vehicle.
	CHECK KEY	Problem of reading key	Verify and replace key if necessary.
	HIGH ENGINE TEMPERATURE	Engine is overheating or faulty sensor	– Stop and wait for engine to cool off. – Check for leaks. – Check coolant level and adjust (see *MAINTENANCE PROCEDURES*).
	LO BATT VOLT or HI BATT VOLT	Low battery voltage	– Check charging system. – Check battery connections.

INDICATOR LAMPS (MALFUNCTIONS)			
INDICATOR LAMP	Message	CAUSE	WHAT TO DO
	BRAKE FAILURE - LOW BRAKE FLUID	Low brake fluid level or faulty sensor	– Check for brake fluid leaks. – Check brake fluid level and adjust (see *MAINTENANCE PROCEDURES*).
!	CHECK DPS	Dynamic power steering component	Refer to *DYNAMIC POWER STEERING (DPS)* for diagnostic procedure.
!	TRANSMISSION SIGNAL FAULT	Transmission Control Module component	– Remove key, wait 20 seconds, and reinsert key. – Diagnose using the BRP diagnostic software (BUDS2)
(ON)	CHECK ENGINE	Engine management component malfunction	Stop the engine. Connect the vehicle to the BRP diagnostic software (BUDS2). Check faults codes and perform recommended actions.
(Flashing)	LIMP HOME MODE	Important engine management component malfunction	Diagnose using the BRP diagnostic software (BUDS2)
	LOW OIL - STOP ENGINE	Low oil pressure	– Check for oil leaks. – Check oil level and adjust (see *MAINTENANCE PROCEDURES*.
(Flashing)	- - -	Faulty sensor	– Check sensor. – Check sensor connection to cluster.
NA = Not applicable			

TROUBLESHOOTING

DIAGNOSTIC TIPS

IMPORTANT: When solving an electrical problem, the first thing to do is to check the battery condition as well as its cables and connections.

Make sure the battery is fully charged or install a power pack for any tests that involves a prolonged "key ON" period. If battery voltage gets too low, not only test results can be altered, but the vehicle electrical system may not operate normally.

Pay attention to ground wires. They could become loose or corroded which causes them to act as an additional load in a circuit, dropping voltage and reducing current to components. Some components may be grounded through their outer casing and mounted hardware. This should also be considered.

Electrical Connectors

Pay particular attention to ensure that pins are not out of their connectors, loose, or damaged. The troubleshooting procedures may not cover problems resulting from one of these causes.

NOTICE **Ensure all terminals are properly crimped on wires and connector housings are properly fastened. When replacing any electric or electronic part(s), always check electrical connections. Make sure that they are clean, corrosion-free, tight and make good contact. The voltage and current might be too weak to go through dirty or corroded connector pins or terminals.**

MULTIFUNCTION GAUGE TROUBLESHOOTING

GAUGE FUNCTIONS INOPERATIVE OR WORKING INTERMITTENTLY

1. **Power supply or ground problem**
   - *Check power supply and ground circuits.*

PROCEDURES

MULTIFUNCTION GAUGE

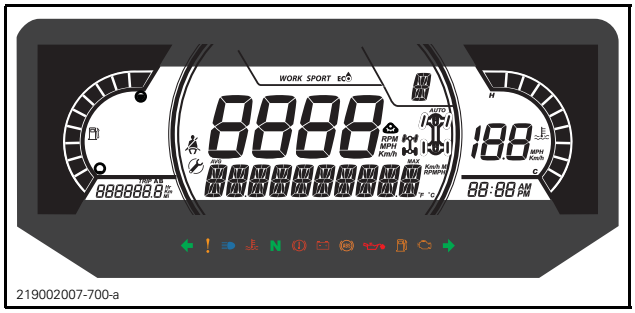

Testing the Multifunction Gauge

Before beginning any troubleshooting, test or repair, always check for fault codes.

1. Check for fault codes using BUDS2.
2. Record all fault codes, then erase them.
3. Perform a complete shutdown of the electrical system and reactivate it.
4. Check fault codes. If a previous fault codes reappears, perform the required service actions.

Testing the Multifunction Gauge Using BRP Diagnostic Software (BUDS2)

Connect the vehicle to the BRP diagnostic software (BUDS2).

In BUDS2, go to:

– **Functions** page
– **Cluster** button
– **Routines - Execute Cluster WOW test**.

All indications will come and stay ON so that you can verify each indication.

NOTE: The **WOW Test** only tests the gauge **LEDs** and **LCD**. It does not test the actual circuit functions related to each indication.

Testing the Multifunction Gauge Power Input

1. Remove multifunction gauge.
2. Perform the test at multifunction gauge connector as per following illustration and tables.

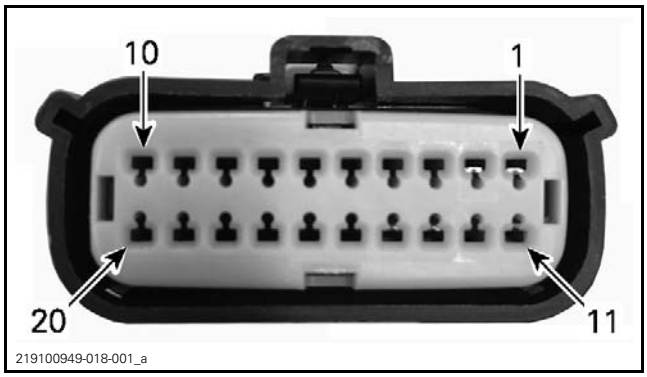

MULTIFUNCTION GAUGE CONNECTOR (PIN-OUT)

MULTIFUNCTION GAUGE POWER TEST			
CL_A CONNECTOR	BATTERY	IGNITION POSITION	RESULTS
Multifunction connector pin 1	Negative (-) post	Any	Close to battery voltage
Multifunction connector pin 11		ON	Close to battery voltage

If there is no power at pin 1, check fuse F8 and the related circuit.

If there is no power at pin 11, in check fuse F4, MAIN relay R2, and the related circuit.

If the power test is within specification, continue with *TESTING THE MULTIFUNCTION GAUGE GROUND CIRCUIT*.

Testing the Multifunction Gauge Ground Circuit

Test as per the following table.

MULTIFUNCTION GAUGE GROUND TEST		
CL CONNECTOR	BATTERY	RESULT
Pin 2	Negative (-) post	Close to 1 Ω

If the ground at pin 2 is not within specification, check the related circuit.

If the ground tested to specification, continue with *TESTING THE MULTIFUNCTION GAUGE CAN WIRE CIRCUIT*.

Testing the Multifunction Gauge CAN Circuit

1. Locate the DLC (Diagnostic Link Connector). Refer to *COMMUNICATION TOOLS* subsection.
2. Test as per the following table.

MULTIFUNCTION GAUGE CAN WIRE TEST		
CL CONNECTOR	DLC	RESULTS
Pin 13 (CAN HI)	Pin 1	Close to 0.4 Ω
Pin 14 (CAN LO)	Pin 2	Close to 0.4 Ω

If the CAN wire verification test fails, check the related circuit.

If the multifunction gauge functions, however there is a suspected communication problem with another component, perform this test between the multifunction gauge and that component.

If the multifunction gauge power, ground and CAN verification tests are all to specifications and the multifunction gauge is inoperative, replace the multifunction gauge.

ACCESSORIES

SERVICE PRODUCTS

Description	Part Number	Page
DIELECTRIC GREASE	293 550 004	1

GENERAL

NOTICE It is recommended to always disconnect the battery when replacing any electric or electronic parts. Always disconnect battery exactly in the specified order, BLACK (-) cable first.

TROUBLESHOOTING

DIAGNOSTIC TIPS

IMPORTANT: When troubleshooting an electrical system fault, check battery condition, cables and connections first.

Testing a Circuit

Check the related-circuit fuse condition with a fuse tester or test lamp (a visual inspection could lead to a wrong conclusion).

NOTE: If the ignition switch is left ON for more than 30 minutes, the accessory relay will shut down.

Inspecting an Electrical Connection

When replacing an electric or electronic component, always check electrical connections. Make sure they are tight, make good contact, and are corrosion-free. Dirty, loose or corroded contacts are poor conductors and are often the source of a system or component malfunction.

Pay particular attention to ensure that pins are not bent or pushed out of their connectors.

Ensure all wire terminals are properly crimped on wires, and connector housings are properly fastened.

Check for signs of moisture, corrosion or dullness. Clean pins properly and coat them with grease or other appropriate lubricant when reassembling them, except if otherwise specified such as for the ECM connectors.

RECOMMENDED PRODUCTS
DIELECTRIC GREASE (P/N 293 550 004)

Pay attention to ground wires.

PROCEDURES

CONSOLE SWITCHES

Switches Access

The switches connectors can be reached by the openings underneath the dash.

Replacing a Switch

Disconnect electrical connector.

Release retaining clips, then push switch out of the console.

TYPICAL
1. Retaining clips

The installation is the reverse of the removal procedure.

Identifying Switches Illumination Wire

SWITCHES BACK LIGHTING		
FUNCTION	PIN	COLOR
12 volt input from fuse PF2-F7	See note	RD/BK

NOTE: The back lighting circuit of all console switches is supplied by the RD/BK wire but the pin location differ from one to another.

Switches Back Lighting Circuit Protection

CONDITION	CIRCUIT PROTECTION
Supplied with main relay PF2-R2 activated	Fuse PF2-F7 (from main relay PF2-R2)

12 VOLT POWER OUTLET

Replacing a 12 Volt Power Outlet

Unplug the connectors of the power outlet.

Unscrew the retaining nut.

The installation is the reverse of the removal procedure.

Identifying 12 Volt Power Outlet Wire

12 VOLT POWER OUTLET		
FUNCTION	PIN	COLOR
12 volt input from fuse PF1-F12	2	RD/BN
Ground	1	BK

12 Volt Power Outlet Circuit Protection

CONDITION	CIRCUIT PROTECTION
Supplied with accessories relay PF1-R3 activated	Fuse PF1-F12 (from accessories relay PF1-R3)

USB CONNECTOR

Replacing USB Connector

Unplug the connectors of the power outlet.

Unscrew the retaining nut.

The installation is the reverse of the removal procedure.

Identifying USB Connector Wire

12 VOLT POWER OUTLET		
FUNCTION	PIN	COLOR
USB connector input from fuse PF1-F14	2	RD/VT
Ground	1	BK

USB Connector Circuit Protection

CONDITION	CIRCUIT PROTECTION
Supplied with accessories relay PF1-R9 activated	Fuse PF1-F14 (from accessories relay PF1-R9)

WINCH

Identifying Winch Wire

WINCH RELAY		
FUNCTION	PIN	COLOR
12 volt input from battery (winch power)	2	RD
Ground	1	BK
12 volt input from switch ("IN")	SW2	GN/BU
12 volt input from switch ("OUT")	SW1	LT BU
Motor power (switches polarity depending on rotation direction)	BP4	RD (with Yellow tape)
Motor power (switches polarity depending on rotation direction)	BN4	RD (without tape)

WINCH SWITCH		
FUNCTION	PIN	COLOR
12 volt input from fuse PF2-F12	2	RD/BK
12 volt output to relay winding ("IN")	1	GN/BU
12 volt output to relay winding ("OUT")	3	LT BU

CAUTION Before testing, make sure the winch is in FREESPOOL mode (Freespool clutch disengaged).

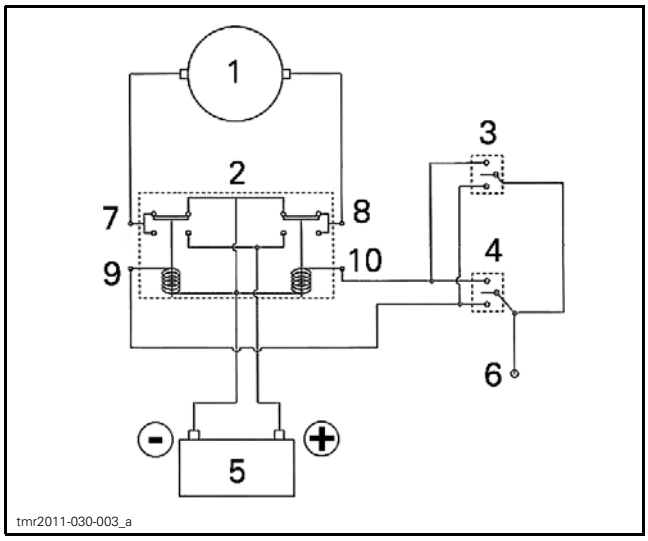

SIMPLIFIED WINCH WIRING DIAGRAM
1. *Winch motor*
2. *Winch relay*
3. *Winch remote control*
4. *Winch switch*
5. *Battery*
6. *12 volt input to switch (switch pin 2 - from fuse 12)*
7. *Winch motor power (BP4)*
8. *Winch motor power (BN4)*
9. *12 volt input to relay winding ("IN" - SW1)*
10. *12 volt input to relay winding ("OUT" - SW2)*

Winch Switch Circuit Protection

CONDITION	CIRCUIT PROTECTION
Supplied with accessories relay activated PF1-R3	Fuse PF1-F12 (from accessories relay PF1-R3)

Winch Motor Circuit Protection

Two circuit breakers (50 A) are used to protect the winch motor in case of overheating.

Removing the Winch

1. Disconnect, the battery BLACK (-) cable first, then the RED (+) cable.

NOTICE **Always respect this order for disassembly; disconnect BLACK (-) cable first.**

2. Remove the hook.
   2.1 Remove and discard the cotter pin.
   2.2 Remove the hook pin.

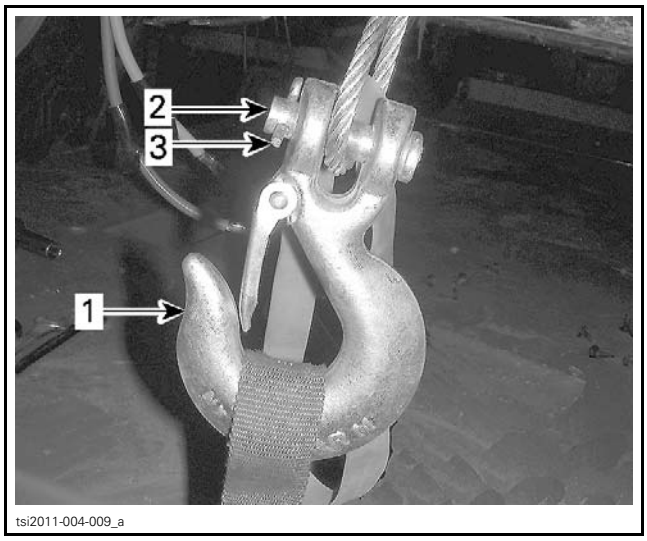

1. *Hook*
2. *Hook pin*
3. *Cotter pin*

3. Remove the four retaining screws from underneath the winch motor.

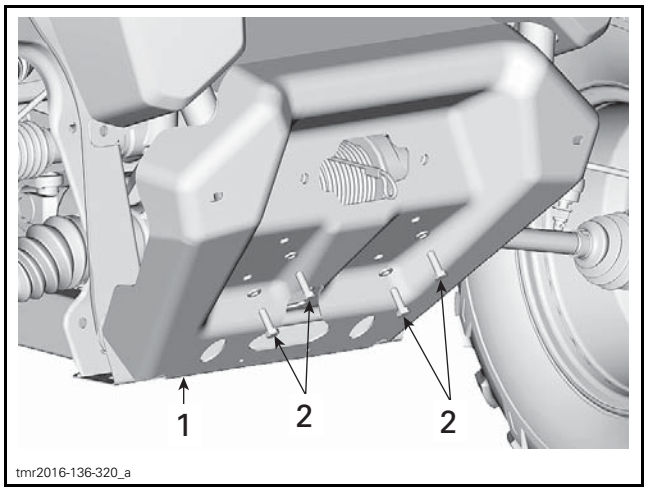

1. *Bumper plate*
2. *Retaining screws*

4. Disconnect both winch power cables.

NOTE: Note the position of the power cables for reinstallation.

5. Pass the cable through the roller fairlead.
6. Remove winch.

Installing the Winch

The installation is the reverse of the removal procedure. However, pay attention to the following.

Tighten winch retaining screws to specification.

TIGHTENING TORQUE	
M8 x 25 Bolt	16 N•m ± 2 N•m (142 lbf•**in** ± 18 lbf•**in**)

Connect wires, the YELLOW wire at front and the BLUE one at back.

Install a **NEW** cotter pin on the hook pin.

WHEELS AND TIRES

PROCEDURES

TIRES

⚠ WARNING

Do not rotate tires. The front and rear tires have a different size. Respect direction of rotation when applicable.

Tire Pressure

⚠ WARNING

Tire pressure greatly affects vehicle handling and stability. Insufficient pressure may cause tire to deflate and rotate on wheel. Excessive pressure may burst the tire. Always follow recommended pressure.

Check pressure when tires are **cold** before using the vehicle. Tire pressure changes with temperature and altitude. Recheck pressure if one of these conditions has changed.

Refer to technical specifications for tire pressure table.

Tire Inspection

Check tire for presence of slits, bulges, wear or other damage. Replace if necessary.

Tire Replacement

Use an automotive tire changer to replace tires.

⚠ WARNING

- **Replace tires only with the same type and size as original tires.**
- **For unidirectional tread pattern, ensure that the tires are installed in the correct direction of rotation.**

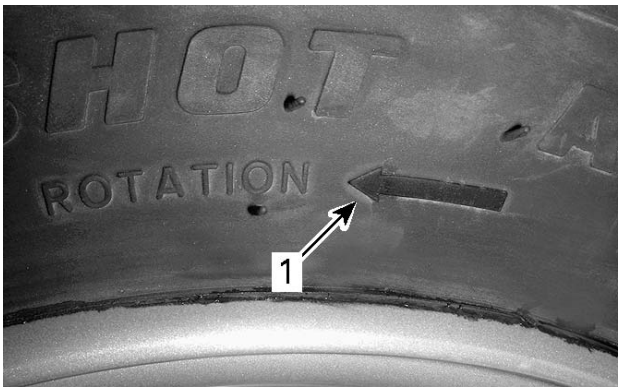

tmr2011-033-002_a

TYPICAL
1. Direction of rotation

WHEELS

Removing the Wheel

Loosen nuts just enough to be able to unscrew them once the vehicle will be off the ground.

Lift and support the vehicle. Refer to *INTRODUCTION* subsection.

Remove nuts, then remove wheel.

Inspecting the Wheel

Inspect wheel for wear or damage especially at the mounting holes.

Installing the Wheel

Check wheel studs and wheel nuts thread condition.

Check if tires are unidirectional.

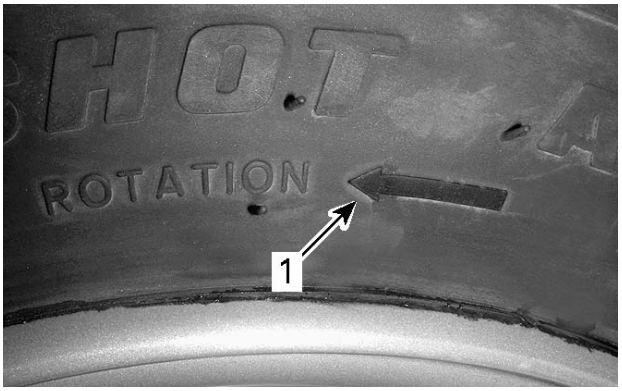

tmr2011-033-002_a

TYPICAL
1. Direction of rotation

Install in the right direction of rotation.

Install lug nuts with the taper towards the wheel.

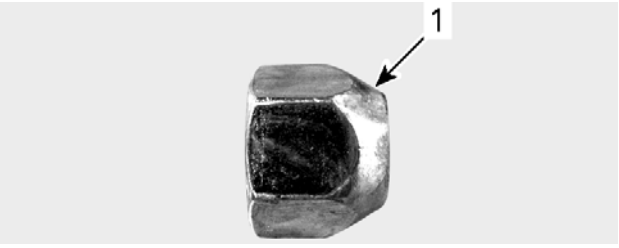

tmr2011-033-001_a

TYPICAL
1. Taper (towards the wheel)

Tighten wheel lug nuts to the specified torque using the illustrated sequence.

TIGHTENING TORQUE	
Wheel lug nuts	100 N•m ± 10 N•m (74 lbf•ft ± 7 lbf•ft)

tmo2011-001-081_a

TIGHTENING SEQUENCE

NOTICE Always use the recommended wheel nuts for the type of wheel. Using a different nut could cause damages to the rim or studs.

FRONT DRIVE

SERVICE TOOLS

Description	Part Number	Page
BACKLASH MEASUREMENT TOOL	529 036 387	10
BELLOWS CLAMP PLIERS	529 036 120	6
CV JOINT EXTRACTOR	529 036 005	6
MULTIFUNCTION DIFFERENTIAL TOOL	529 036 385	12
SPLINE DRIVER	529 036 386	11–12

SERVICE PRODUCTS

Description	Part Number	Page
75W90 SYNTHETIC GEAR OIL (EUR)	779212	4
75W90 SYNTHETIC GEAR OIL	779158	4
LOCTITE 271 (RED)	293 800 005	13–14
SYNTHETIC GREASE	779162	6, 8, 14

FRONT DRIVE SHAFTS AND FRONT PROPELLER SHAFT

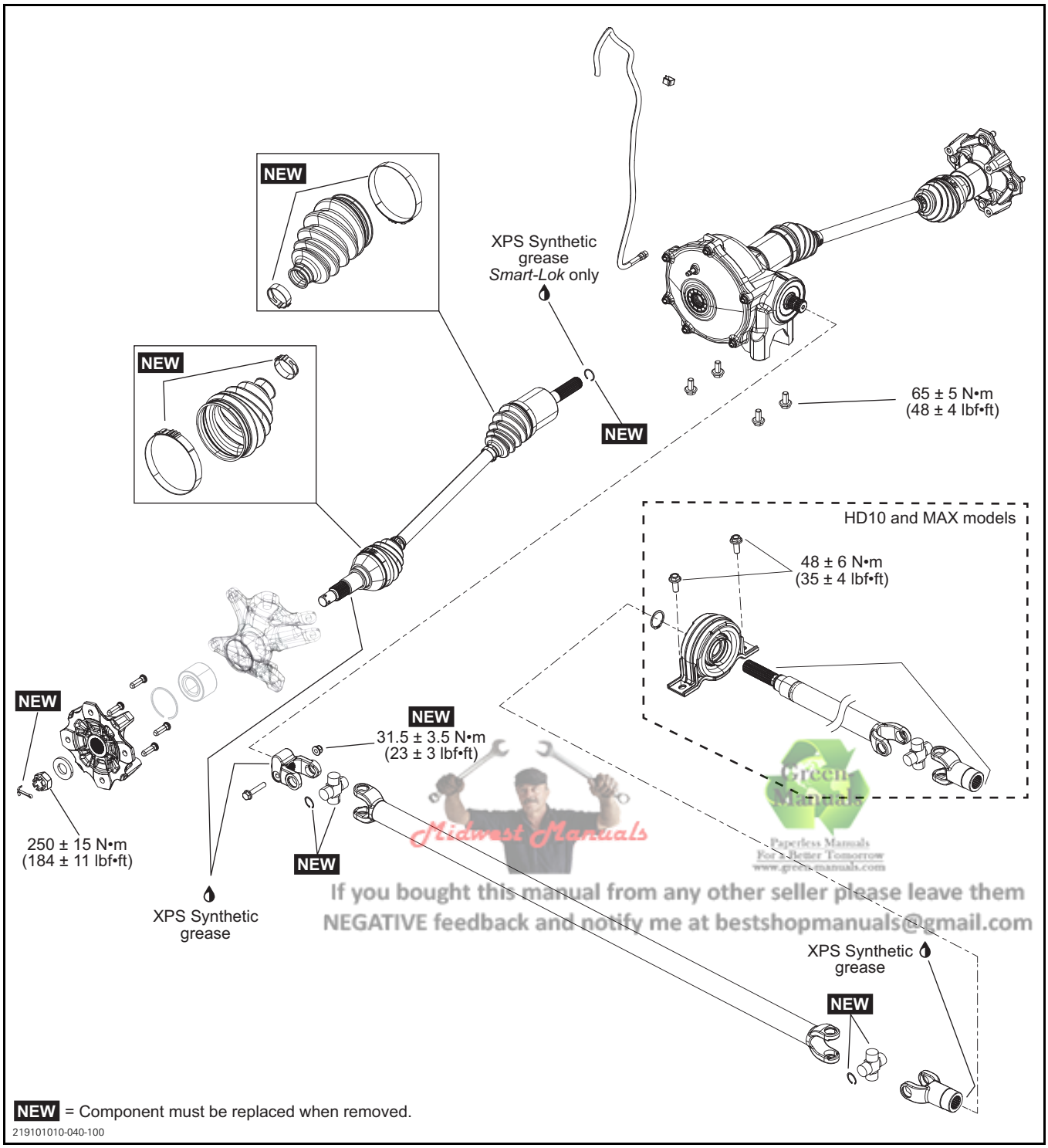

Midwest Manuals
Green Manuals
Paperless Manuals
For a Better Tomorrow
www.green-manuals.com
If you bought this manual from any other seller please leave them
NEGATIVE feedback and notify me at bestshopmanuals@gmail.com

FRONT DIFFERENTIAL

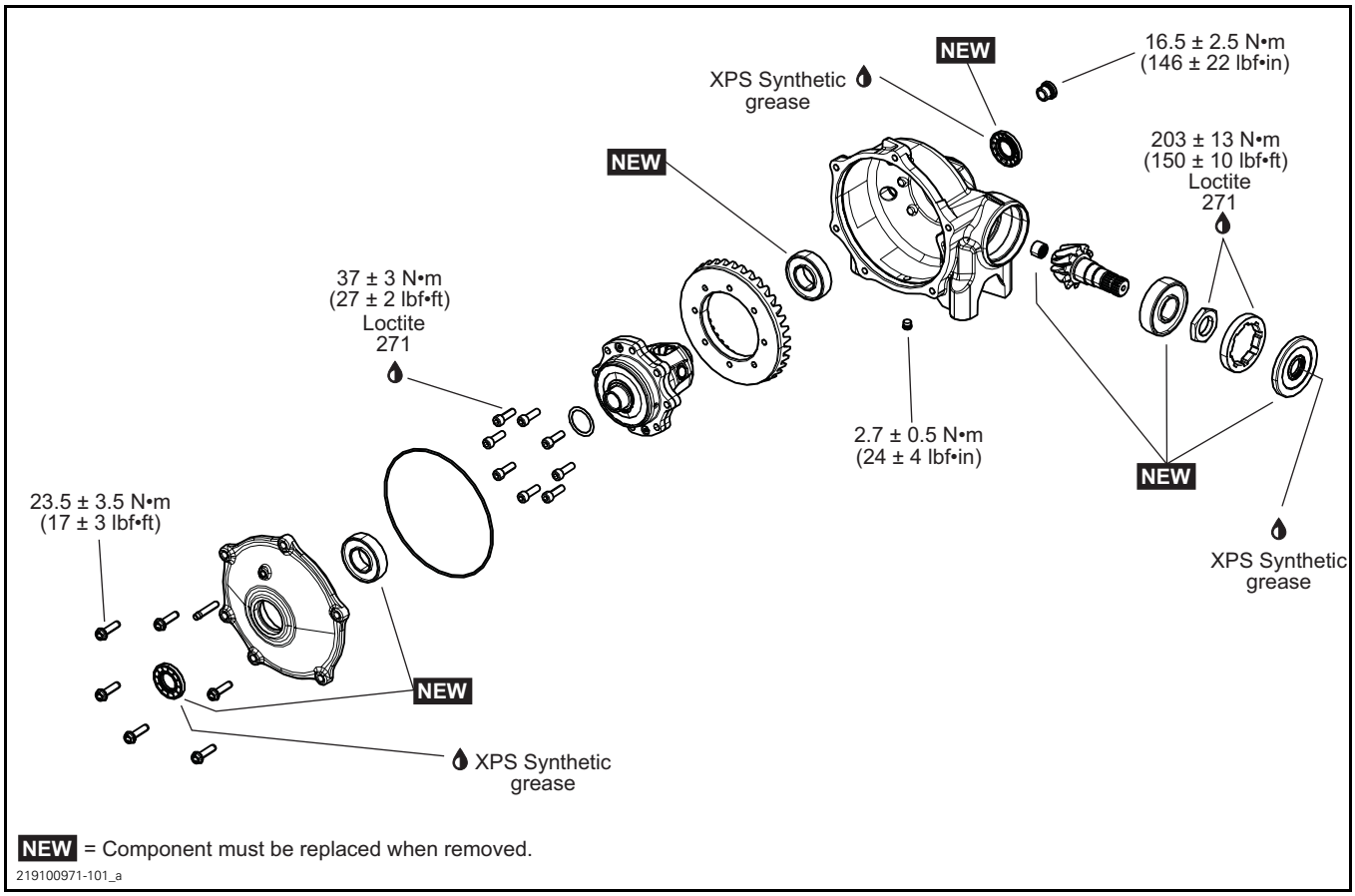

GENERAL

The procedure explained below is the same for the RH and LH sides unless otherwise specified.

IMPORTANT
For any information concerning the inspection, the disassembly and the assembly of a Smart-Lok differential, refer to the *SMART-LOK DIFFERENTIAL* subsection.

SYSTEM DESCRIPTION

When one wheel is spinning above a certain rate faster than the other wheel, the Visco-Lok® system progressively locks the wheels through its multi-plate clutch.

In the event of a failure, the entire Visco-Lok pump and its carrier will have to be replaced. The Visco-Lok pump itself is a non-serviceable item.

NOTE: If the pump was disassembled, its viscous fluid would be lost and it could not be replaced.

MAINTENANCE

VERIFYING THE FRONT DIFFERENTIAL OIL LEVEL

Clean filler plug prior to checking oil level.

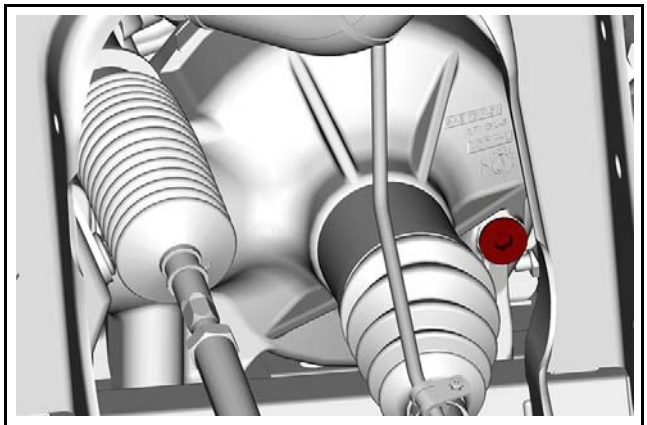

219001807-006

TYPICAL - FRONT RIGHT SIDE OF VEHICLE

With vehicle on a level surface, check oil level by removing filler plug. Oil level must reach the lower edge.

Reinstall filler plug.

TIGHTENING TORQUE	
Filler plug	16.5 N•m ± 2.5 N•m (146 lbf•**in** ± 22 lbf•**in**)

REPLACING THE FRONT DIFFERENTIAL OIL

Place vehicle on a level surface. Set gearbox in park position.

From underneath of vehicle, clean drain plug area.

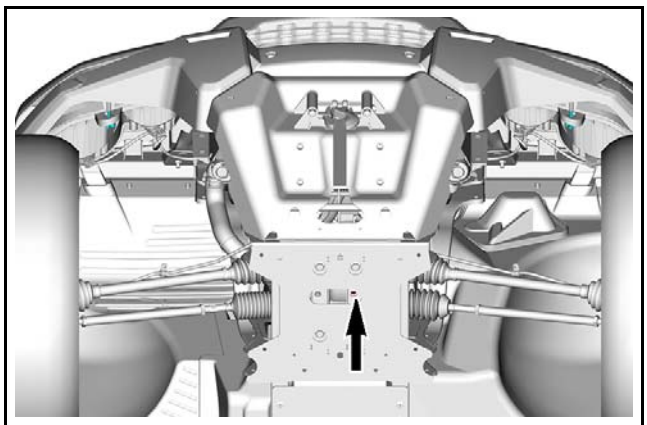

219001807-007_a

TYPICAL
1. Drain plug access hole

Place a drain pan under the front differential.

Remove drain plug.

Unscrew filler plug.

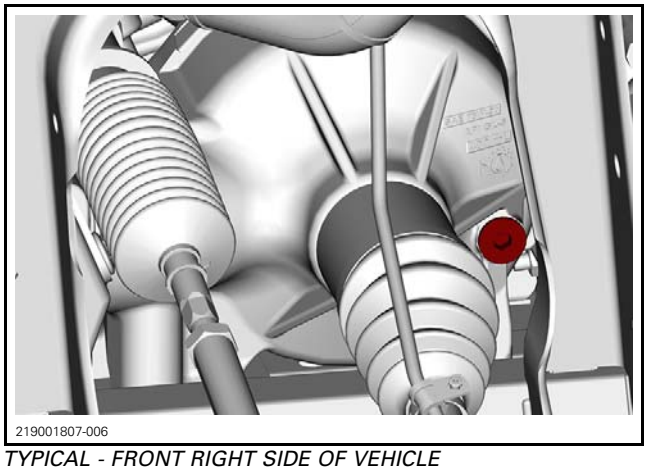

219001807-006

TYPICAL - FRONT RIGHT SIDE OF VEHICLE

Install drain plug.

TIGHTENING TORQUE	
Drain plug	2.7 N•m ± 0.3 N•m (24 lbf•**in** ± 3 lbf•**in**)

Refill front differential with recommended oil.

RECOMMENDED OIL	
Scandinavia	75W90 SYNTHETIC GEAR OIL (EUR) (P/N 779212)
All other countries	75W90 SYNTHETIC GEAR OIL (P/N 779158)

NOTE: The XPS oil is specially formulated to meet the lubrication requirements of this gearbox. BRP strongly recommends the use of its XPS oil. However, if the XPS synthetic gear oil is not available, use the following lubricant:

FRONT DIFFERENTIAL MINIMUM OIL REQUIREMENT
75W 90 API GL-5 synthetic gear oil

CAPACITY
400 ml (13.5 U.S. oz)

NOTICE **Do not use another type of oil when servicing.**

Reinstall filler plug.

TIGHTENING TORQUE	
Filler plug	16.5 N•m ± 2.5 N•m (146 lbf•**in** ± 22 lbf•**in**)

INSPECTING THE DRIVE SHAFT BOOT AND PROTECTOR

Visually inspect each drive shaft boot for grease leak, cracks or opening.

Check if the drive shaft boot protector are fixed firmly, not torn or otherwise damaged.

Replace if necessary.

INSPECTING THE DRIVE SHAFT JOINT

Turn and move drive shaft to detect excessive play.

INSPECTING THE PROPELLER SHAFT U-JOINT

Check yoke U-joints for wear, backlash or axial play, replace if necessary.

PROCEDURES

WHEEL HUB

Removing the Wheel Hub

1. Lift and support vehicle. Refer to *INTRODUCTION* section for proper procedure.
2. Select the 4WD position and place the transmission lever on "P".
3. Remove caliper from knuckle. Refer to *BRAKES* subsection.
4. Remove the following parts:
   - Wheel
   - Cotter pin
   - Castellated nut
   - Belleville washer.

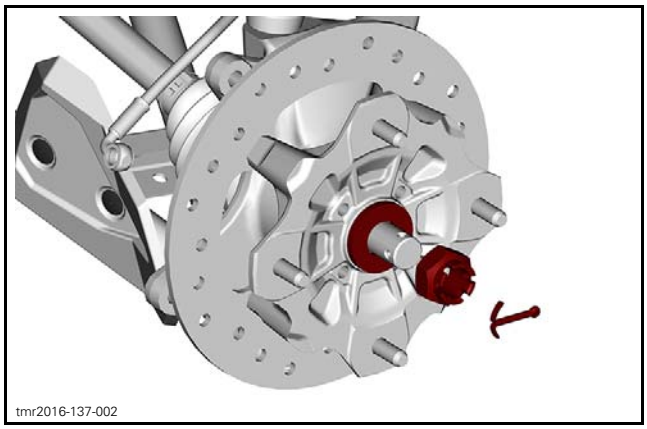
tmr2016-137-002

5. Remove wheel hub.

Inspecting the Wheel Hub

Check wheel studs for damaged threads and overall conditions

Check wheel hub for cracks or other damages.

Check inner splines for wear or other damages.

Replace wheel hub and / or studs if any damage is detected.

Installing the Wheel Hub

The installation is the reverse of removal procedure. However, pay attention to the following.

Install Belleville washer with its domed side outwards.

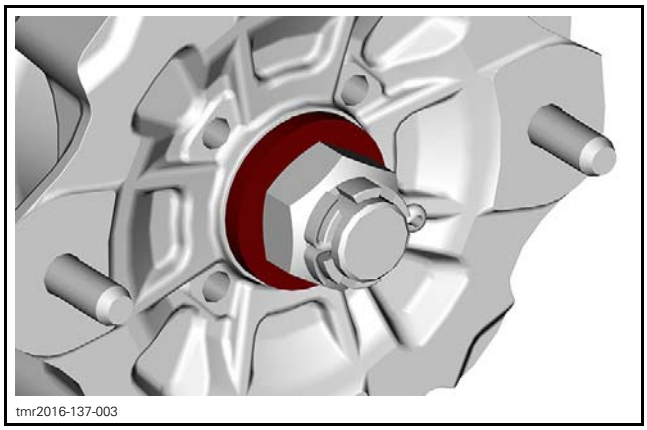
tmr2016-137-003

TIGHTENING TORQUE	
Castellated nut	250 N•m ± 15 N•m (184 lbf•ft ± 11 lbf•ft)

NOTE: Tighten further castellated nut if required to align grooves with drive shaft hole.

Install a new cotter pin.

FRONT DRIVE SHAFT

Removing the Front Drive Shaft

1. Remove the wheel hub. Refer to procedure in this subsection.
2. Remove the knuckle. Refer to *STEERING SYSTEM* subsection.
3. Strongly pull drive shaft out of differential.
4. Discard the stop ring at the end of the shaft.

Inspecting the Front Drive Shaft

Inspect the condition of boots. If there is any damage or evidence of leaking lubricant, replace them. Refer to *DRIVE SHAFT BOOT*.

Check splines for excessive wear. Replace if necessary.

NOTE: If the splines on plunging joint are worn, a check of differential inner splines should be done.

Installing the Front Drive Shaft

The installation is the reverse of the removal procedure. However, pay attention to the following.

Install a new stop ring.

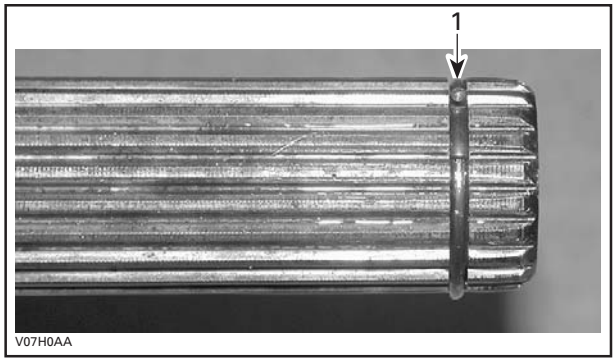

1. Stop ring

Models with Smart-Lok Differential

Apply grease to the differential side splines of the shaft.

SERVICE PRODUCT
SYNTHETIC GREASE (P/N 779162)

All models

Apply grease to the wheel side splines of the shaft.

SERVICE PRODUCT
SYNTHETIC GREASE (P/N 779162)

DRIVE SHAFT BOOT

Removing the Drive Shaft Boot

1. Remove the drive shaft from the vehicle.
2. Remove drive shaft boot clamps.

REQUIRED TOOL	
BELLOWS CLAMP PLIERS (P/N 529 036 120)	

3. Dislodge the large boot end.
4. Separate the joint from the shaft. Two procedures can be done.

Without the Special Tool

1. Clamp joint housing in a vise.
2. Align shaft with joint.
3. Pull hard on shaft to remove from joint.
4. Remove boot from drive shaft.
5. Remove and discard the circlip.

With the Special Tool

REQUIRED TOOL	
CV JOINT EXTRACTOR (P/N 529 036 005)	

1. Place drive shaft in vice with the joint downward.
2. Install the cv joint extractor on the bearing.

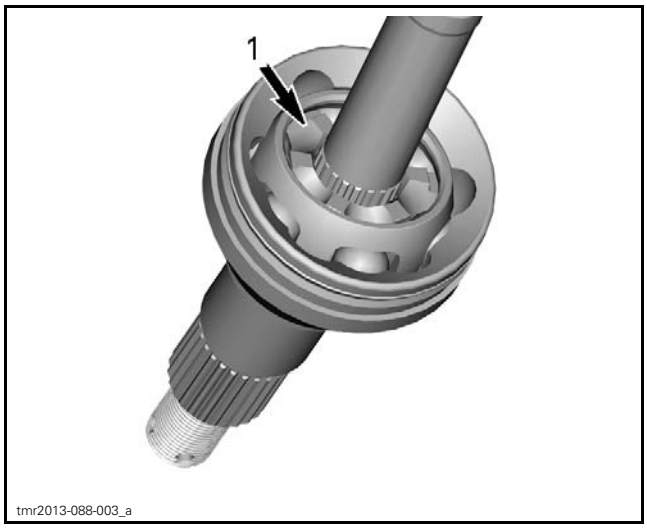

TYPICAL - CV JOINT SHOWN
1. Position joint extractor tool here

3. With a hammer, hit on the tool to separate joint from shaft.
4. When joint and shaft are separated, remove boot from drive shaft.
5. Remove and discard the circlip.

Installing the Drive Shaft Boot

The installation is the reverse of the removal procedure. However, pay attention to the following.

Install the new circlip.

Pack bearing area with grease included with the new boot kit.

NOTE: Do not use or add other grease.

FRONT PROPELLER SHAFT

Removing the Front Propeller Shaft

1. Remove propeller shaft screw and nut on differential end.

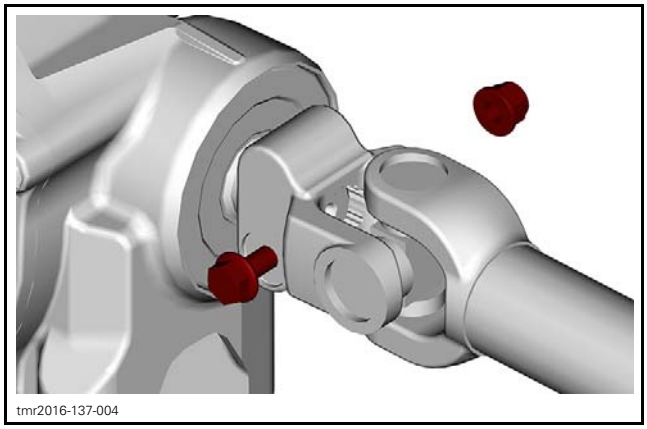

2. Remove the 4 first row of rivets on the central skid plate starting from the rear.

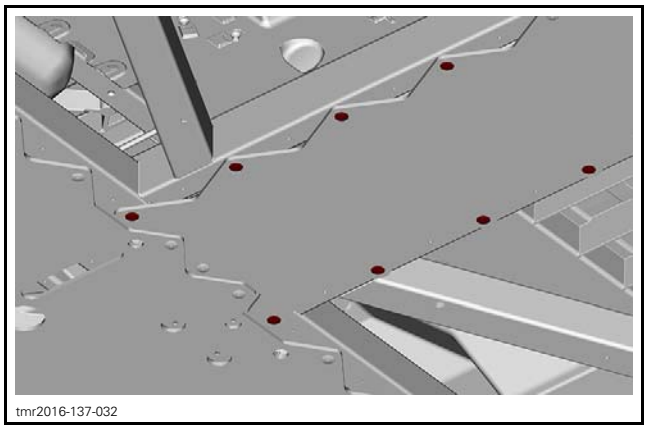

3. Remove both retaining bolts and nuts securing bearing flange.

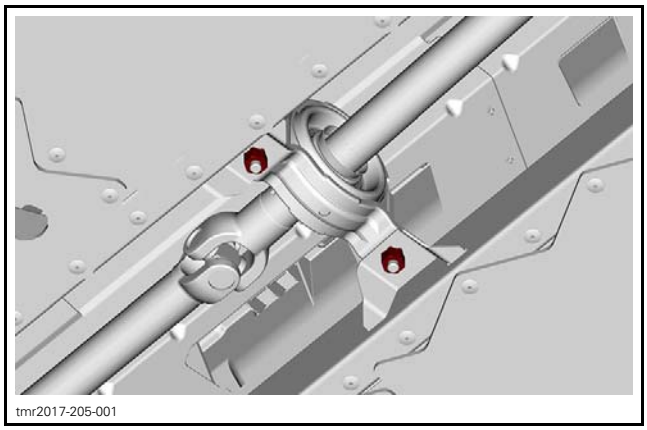

4. Dislodge the propeller shaft from the differential side first by pushing it towards the engine. When it is disengaged from the differential, move it towards front, beside the differential to disengage from the engine.
5. Remove front propeller shaft through skid plate opening.

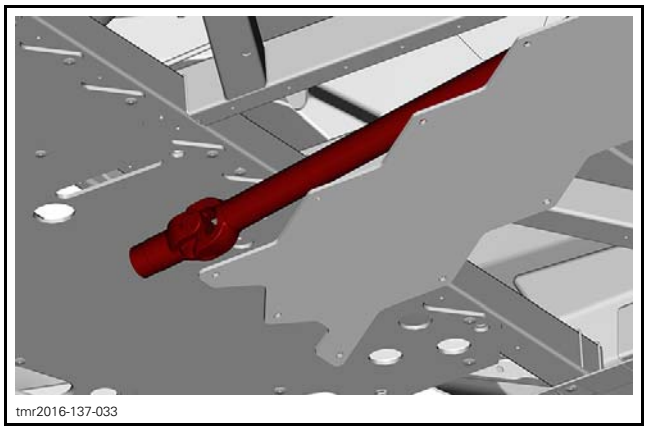

6. Remove circlip to separate propeller shaft halves.

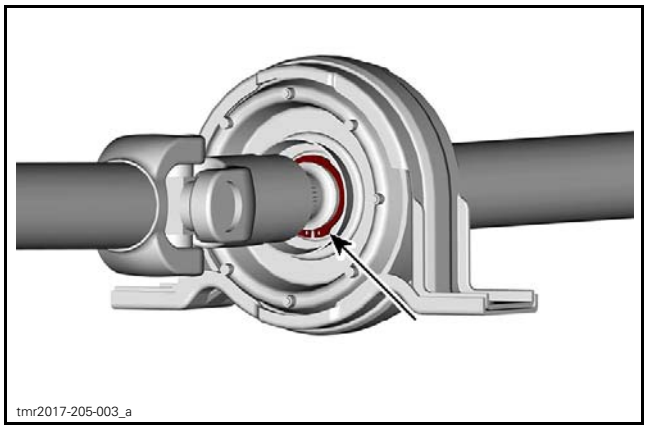
tmr2017-205-003_a

Inspecting the Front Propeller Shaft

Inspect if propeller shaft is not bent or twisted.

Check propeller shaft splines for wear or damage.

Check both U-joint crosses. They should rotate smoothly without any play.

Replace if required.

Installing the Front Propeller Shaft

The installation is the reverse of the removal procedure. However, pay attention to the following.

Apply grease to splines on engine side.

SERVICE PRODUCT
SYNTHETIC GREASE (P/N 779162)

TIGHTENING TORQUE	
Propeller shaft nut	31.5 N•m ± 3.5 N•m (23 lbf•ft ± 3 lbf•ft)
Bearing flange retaining bolts	61 N•m ± 9 N•m (45 lbf•ft ± 7 lbf•ft)

PROPELLER SHAFT U-JOINTS

Removing the Propeller Shaft U-Joint

1. Remove internal snap ring from bearing caps.

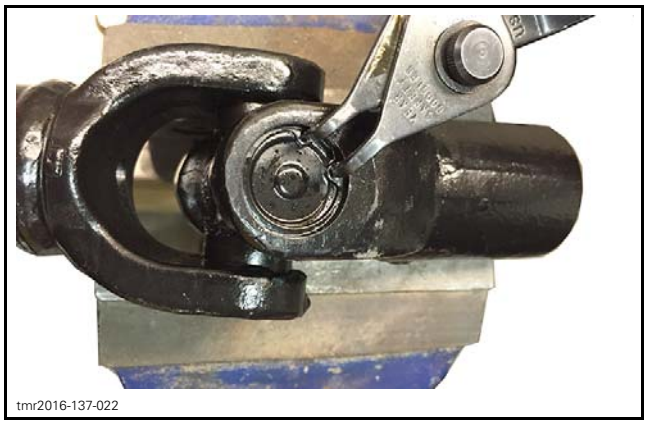
tmr2016-137-022

2. In a vice, use a suitable box to lock the yoke on one side, and a smaller one to push on the U-joint cross on the other side..

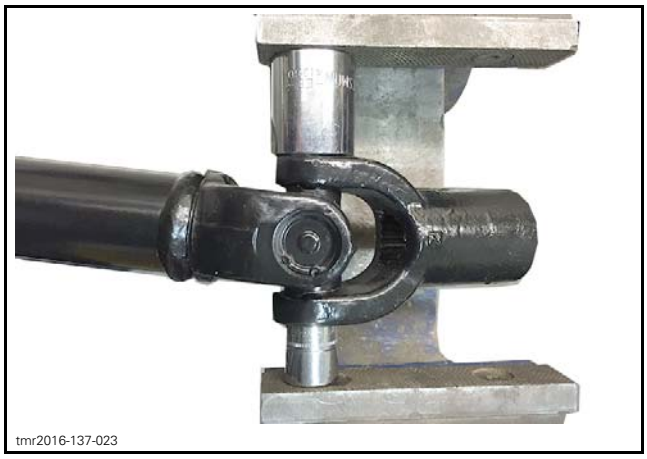
tmr2016-137-023

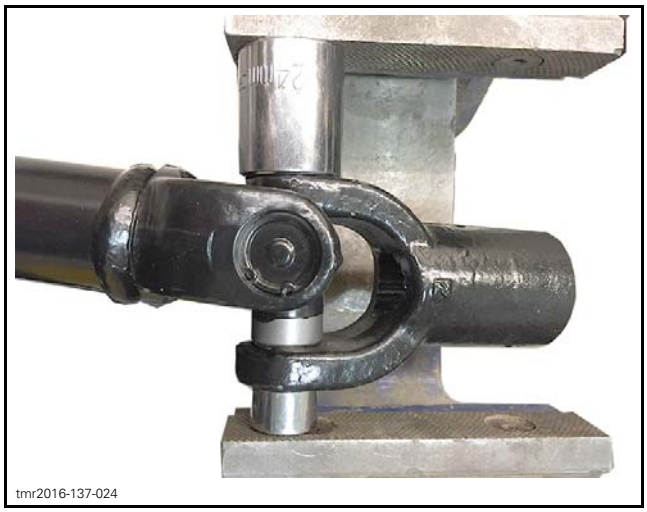
tmr2016-137-024

3. Squeeze the bearing cap in vice and hit the yoke with a soft hammer to remove it.

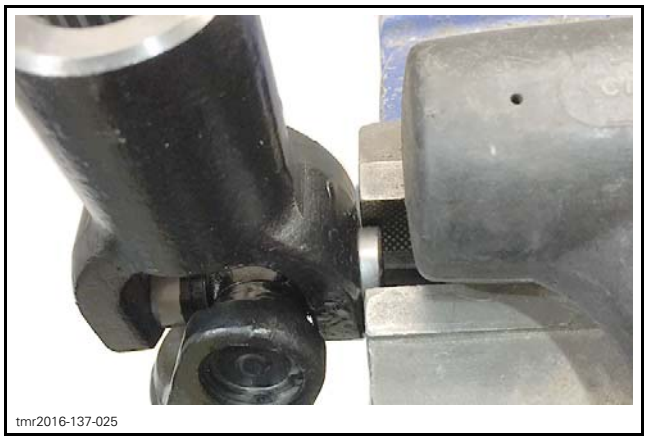
tmr2016-137-025

4. Press the cross on the other side of the yoke to disengage it.

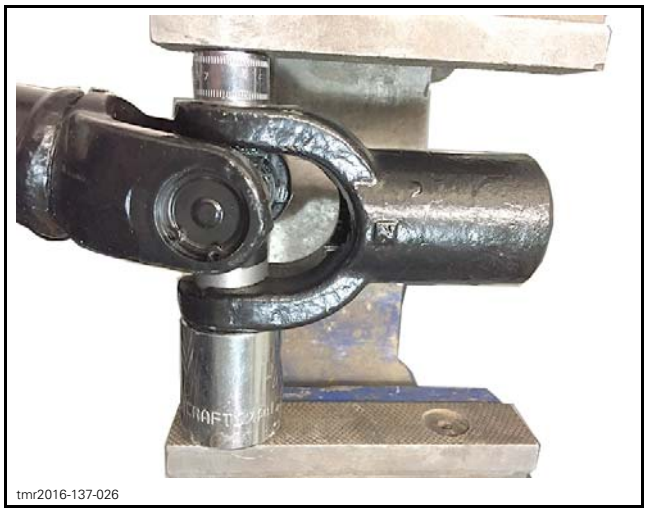
tmr2016-137-026

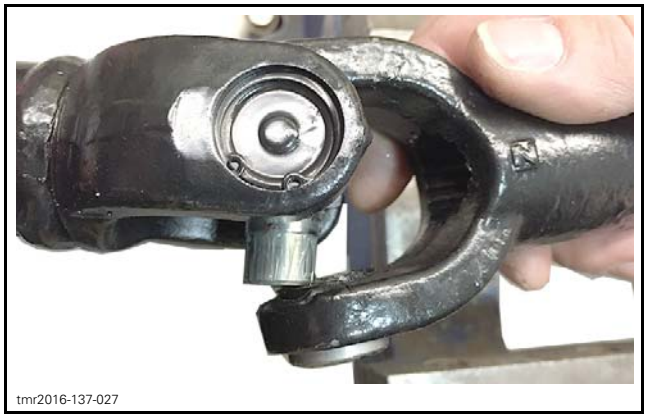
tmr2016-137-027

5. Remove bearing cap.

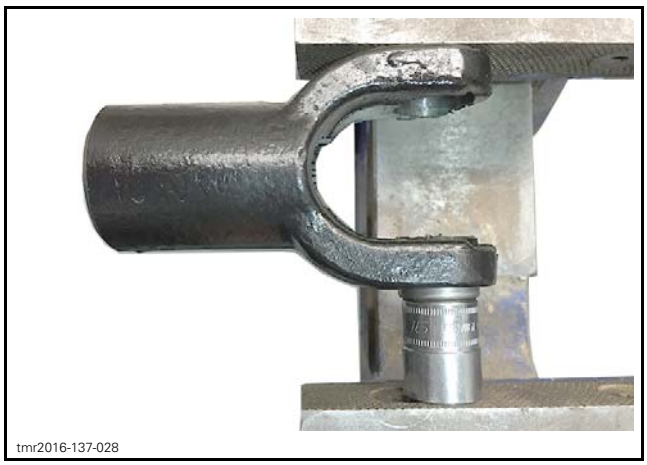
tmr2016-137-028

6. Repeat steps to remove the remaining bearing caps.
7. Remove U-joint cross.

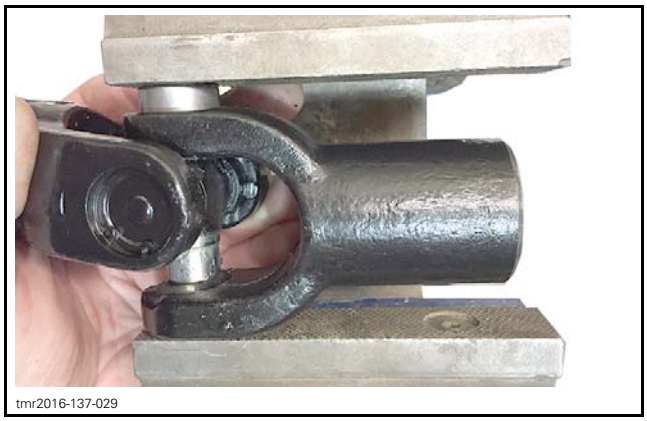
tmr2016-137-029

Installing the Propeller Shaft U-Joint

1. Use a vise to insert the first bearing cap flush with the inner wall of the yoke.

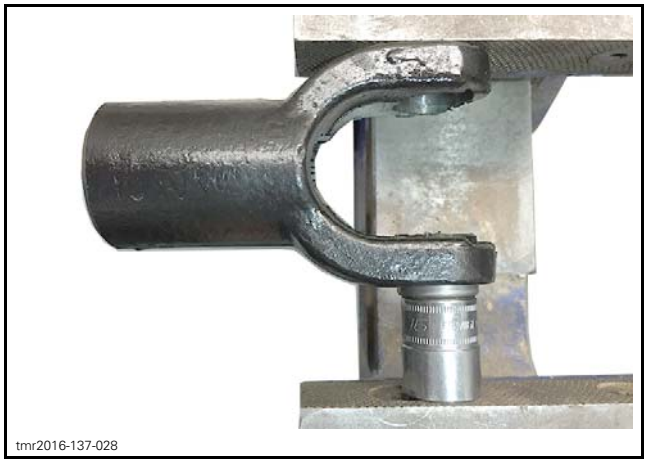
tmr2016-137-028

2. Install new U-joint cross in yoke and slide it in the bearing cap.

NOTICE **Ensure bearing needles are perfectly positioned in caps to avoid damage to cross.**

3. Fully seat bearing cap on one side.

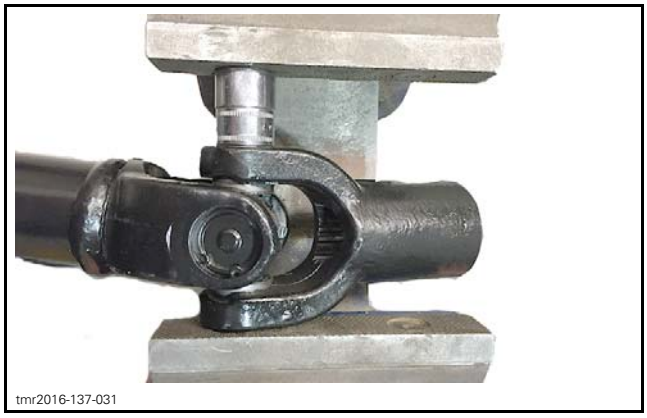
tmr2016-137-031

4. Install snap ring.
5. Install the second bearing cap, then snap ring.

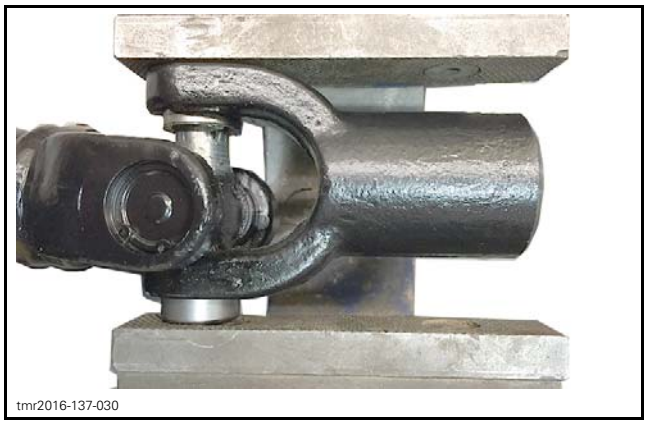
tmr2016-137-030

Ensure U-joint is operating smoothly.

FRONT DIFFERENTIAL

Removing the Front Differential

1. Drain the differential. Refer to *MAINTENANCE* in this subsection.
2. Remove both drive shafts. Refer to *REMOVING THE FRONT DRIVE SHAFT* procedure in this subsection.
3. Remove front bumper. Refer to *FRAME* subsection.
4. Remove the 4 retaining screws from the bottom skid plate.

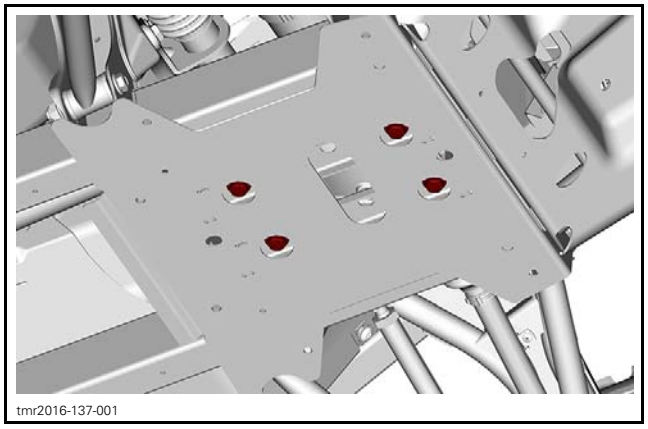
tmr2016-137-001

5. Remove the differential with the propeller shaft from the front of vehicle.
6. Remove the propeller shaft if required.

Inspecting the Front Differential (Assembled)

Check if oil seals are brittle, hard or damaged. Replace if necessary.

Inspecting the Backlash

When measuring backlash, the differential cover should be upside down to pull the ring gear out of mesh.

1. Measure the backlash with a dial indicator.

REQUIRED TOOL	
BACKLASH MEASUREMENT TOOL (P/N 529 036 387)	

2. Place the backlash measurement tool at the end of pinion gear.

tmr2017-205-002

A. 23 mm (29/32 in)

3. Position the dial indicator tip against the tab at a 90° angle and right in the dimple.
4. Gently, move the tab back and forth. Note the result.

NOTE: While measuring the backlash, make sure the ring gear is not moving.

5. Rotate pinion gear 1/2 turn and check backlash again. Note the result.
6. Rotate pinion gear 1 turn and check backlash again.

BACKLASH SPECIFICATION
0.1 mm (.004 in) to 0.25 mm (.01 in)

If backlash is out of specification, split front differential housing and adjust shim thickness as per following guideline.

BACKLASH ADJUSTMENT GUIDELINE	
BACKLASH MEASUREMENT	WHAT TO DO
Below 0.1 mm (.004 in)	Remove shim(s) and recheck backlash
Above 0.25 mm (.01 in)	Add shim(s) and recheck backlash

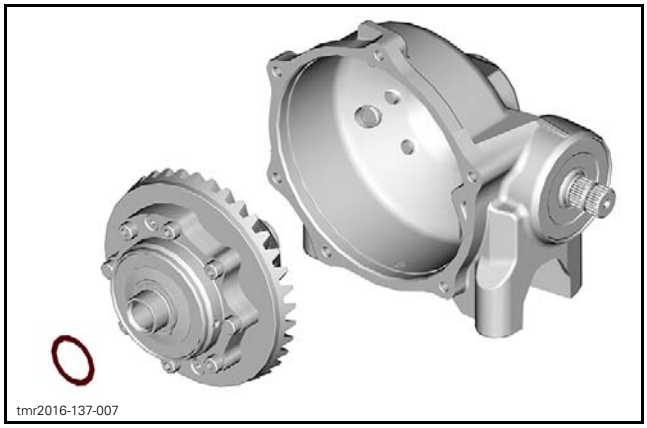

BACKLASH SHIM

Inspecting the Preload

Install the spline adapter tool on the pinion shaft.

REQUIRED TOOL	
SPLINE DRIVER (P/N 529 036 386)	

Using a needle torque wrench, measure the drag torque.

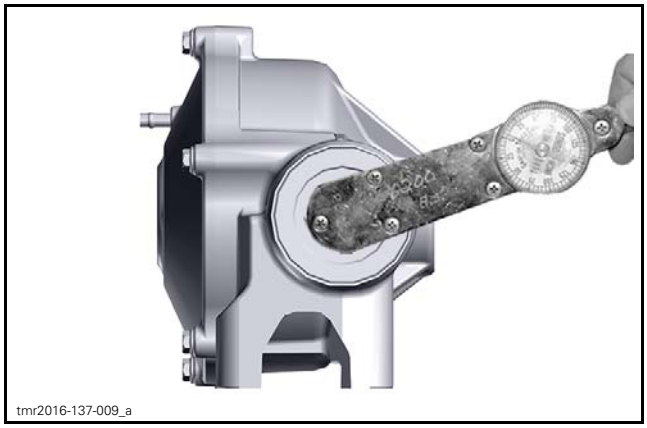

PRELOAD SPECIFICATION
Maximum 0.50 N•m (4 lbf•**in**)

If preload is out of specification, split front differential housing and check all bearings conditions.

Disassembling the Front Differential

Differential Housing

1. Remove front differential housing screws.

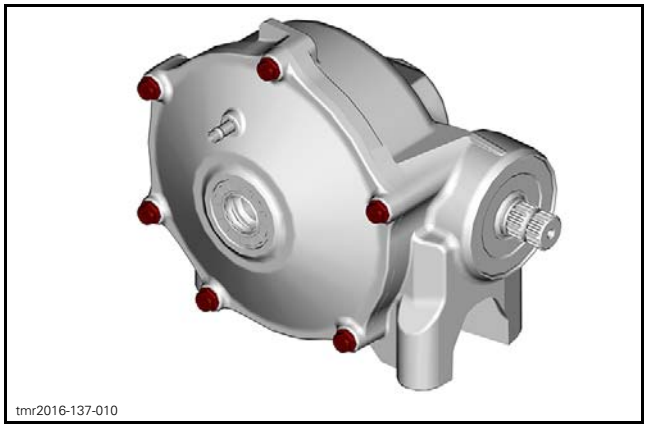

2. Separate half housings.
3. Remove oil seals.

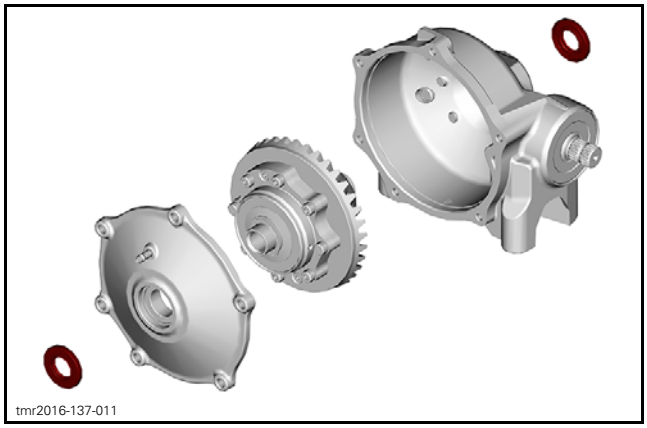

Visco-Lok Carrier/Ring Gear

1. Remove Visco-Lok carrier/ring gear out of half housing.

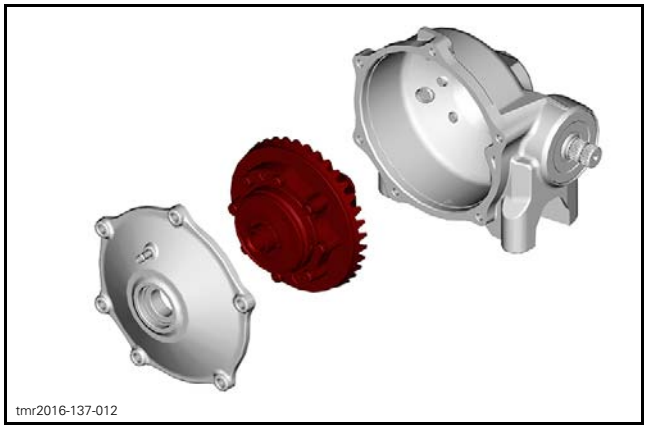

2. Remove screws securing ring gear to Visco-Lok unit.

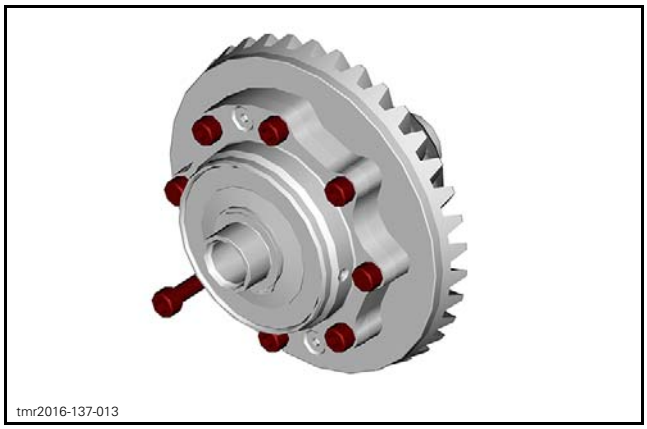
tmr2016-137-013

3. Separate ring gear from Visco-Lok unit.

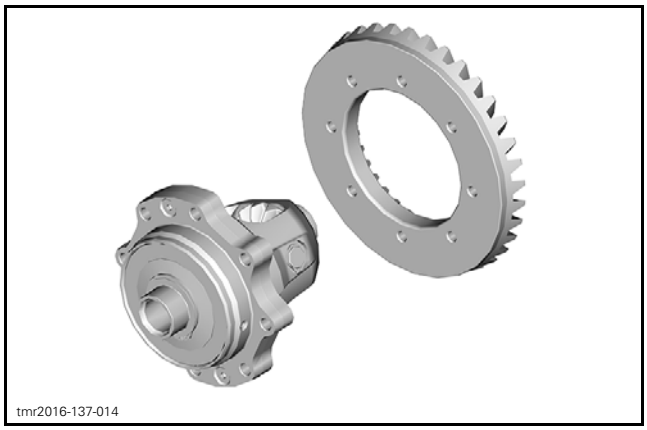
tmr2016-137-014

Pinion Gear

REQUIRED TOOLS	
SPLINE DRIVER (P/N 529 036 386)	
MULTIFUNCTION DIFFERENTIAL TOOL (P/N 529 036 385)	

1. Remove and discard oil seal.

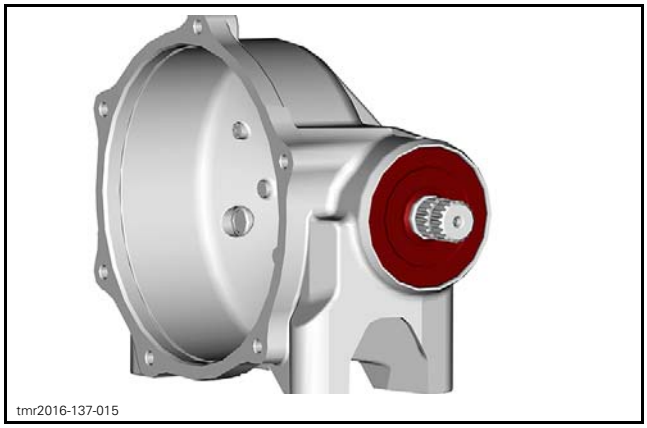
tmr2016-137-015

2. Unscrew the pinion nut.
   2.1 Lock the multifunctional tool with the pinion driver.
   2.2 Slide the tools until it engage the nut.
   2.3 Unscrew the nut.

tmr2016-137-016

3. Remove bearing and pinion gear together.

NOTE: If pinion is hard to pull out, attach the propeller shaft to it and pull while hitting the yoke with a soft hammer.

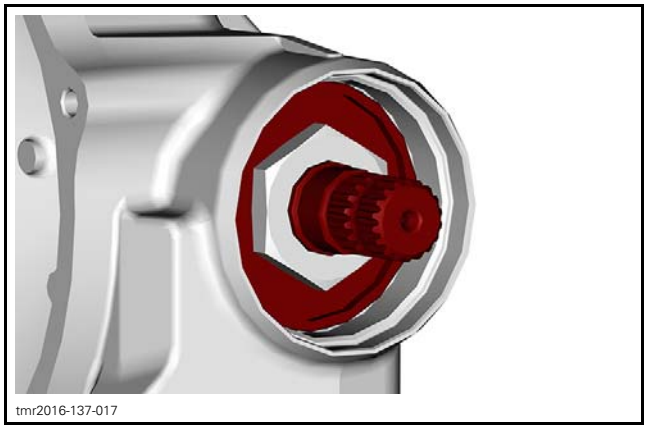
tmr2016-137-017

4. Remove nut from pinion.
   4.1 Install the multifunctional tool in a vice.
   4.2 Slide the spline driver on the pinion shaft.
   4.3 Slide the pinion and the spline driver in the multifunctional tool until the nut is engaged.
   4.4 Turn the spline driver clockwise to unscrew the pinion.

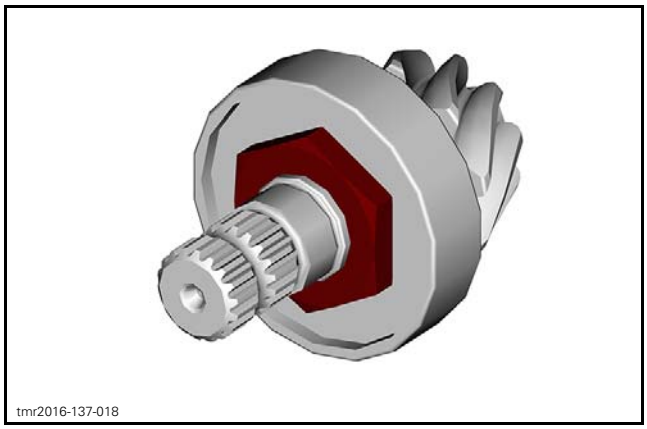

5. Remove bearing from pinion gear.

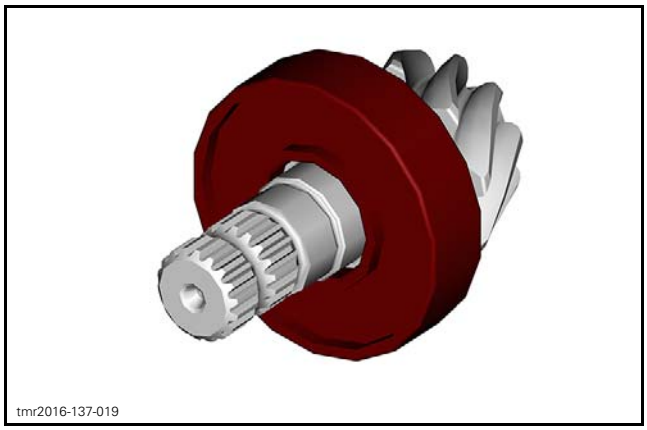

6. Remove and discard the needle bearing.

Assembling the Front Differential

Adjustment is required when any of the following part is changed.

- Pinion gear
- Ring gear
- Viscolok unit
- Housing.

As a preliminary setup, install shim according to the following table.

RECOMMENDED SHIM THICKNESS	
BACKLASH	0.5 mm (.02 in) (as a preliminary adjustment)

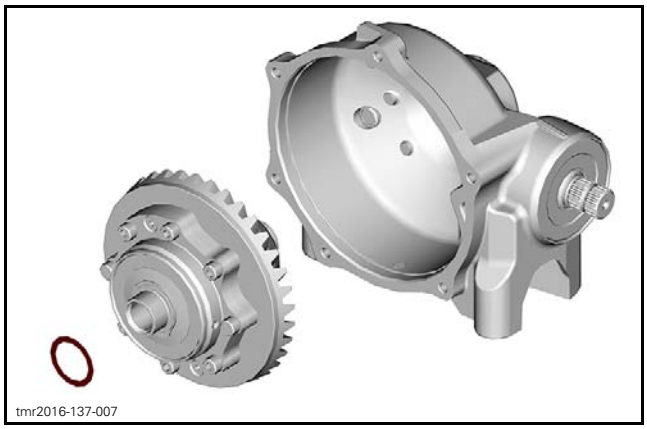

BACKLASH SHIM

Prior to finalizing assembly, proceed in this order:

- Temporarily assemble final drive using recommended torques.
- Do not apply thread locker product.
- Do not install a new pinion nut.
- Check backlash.
- Check preload.

Visco-Lok Carrier/Ring Gear

The installation is the reverse of the removal procedure. However, pay attention to the following.

Tighten ring gear screws to specification.

TIGHTENING TORQUE	
Ring gear screws	37 N•m ± 3 N•m (27 lbf•ft ± 2 lbf•ft) + LOCTITE 271 (RED) (P/N 293 800 005)

Check condition of seal. Replace if damaged.

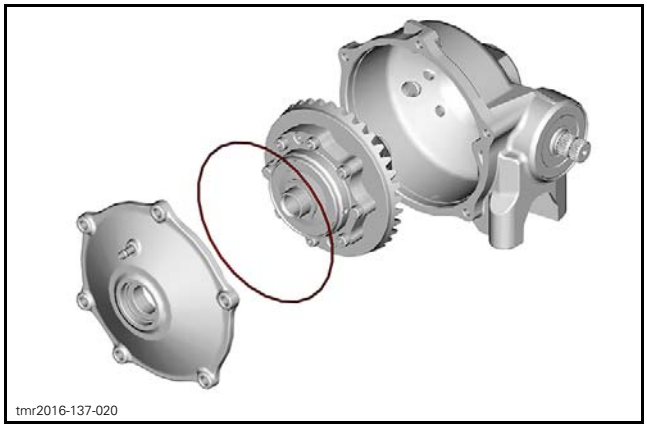

Check bearings. Replace with new bearings if necessary.

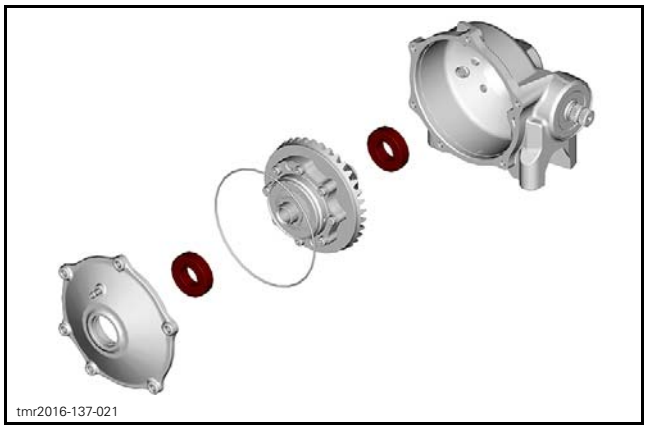

Apply grease on new oil seals and install.

SERVICE PRODUCT
SYNTHETIC GREASE (P/N 779162)

Tighten differential housing screws to specification.

TIGHTENING TORQUE	
Differential housing screws	23.5 N•m ± 3.5 N•m (17 lbf•ft ± 3 lbf•ft)

Pinion Gear

Install a new ball bearing.

Install a new O-ring.

Install a new needle bearing.

Apply loctite to pinion nut.

SERVICE PRODUCT
LOCTITE 271 (RED) (P/N 293 800 005)

Install and tighten the pinion nut to specification.

TIGHTENING TORQUE	
Pinion nut (housing and shaft)	203 N•m ± 13 N•m (150 lbf•ft ± 10 lbf•ft) + LOCTITE 271 (RED) (P/N 293 800 005)

Apply grease on new oil seal and install.

SERVICE PRODUCT
SYNTHETIC GREASE (P/N 779162)

Installing the Front Differential

The installation is the reverse of the removal procedure. However, pay attention to the following.

TIGHTENING TORQUE	
Differential retaining screw	65 N•m ± 5 N•m (48 lbf•ft ± 4 lbf•ft)

Refill the front differential with recommended oil. Refer to *MAINTENANCE* in this subsection.

Green Manuals
Paperless Manuals For a Better Tomorrow www.green-manuals.com
Midwest Manuals
If you bought this manual from any other seller please leave them NEGATIVE feedback and notify me at bestshopmanuals@gmail.com

SMART-LOK DIFFERENTIAL

SERVICE TOOLS

Description	Part Number	Page
BACKLASH MEASUREMENT TOOL	529 036 387	8
MULTIFUNCTION DIFFERENTIAL TOOL	529 036 385	19
SPLINE DRIVER	529 036 386	8, 19

SERVICE PRODUCTS

Description	Part Number	Page
75W90 SYNTHETIC GEAR OIL (EUR)	779212	10
75W90 SYNTHETIC GEAR OIL	779158	10
LOCTITE 5910	293 800 081	15

SMART-LOK DIFFERENTIAL

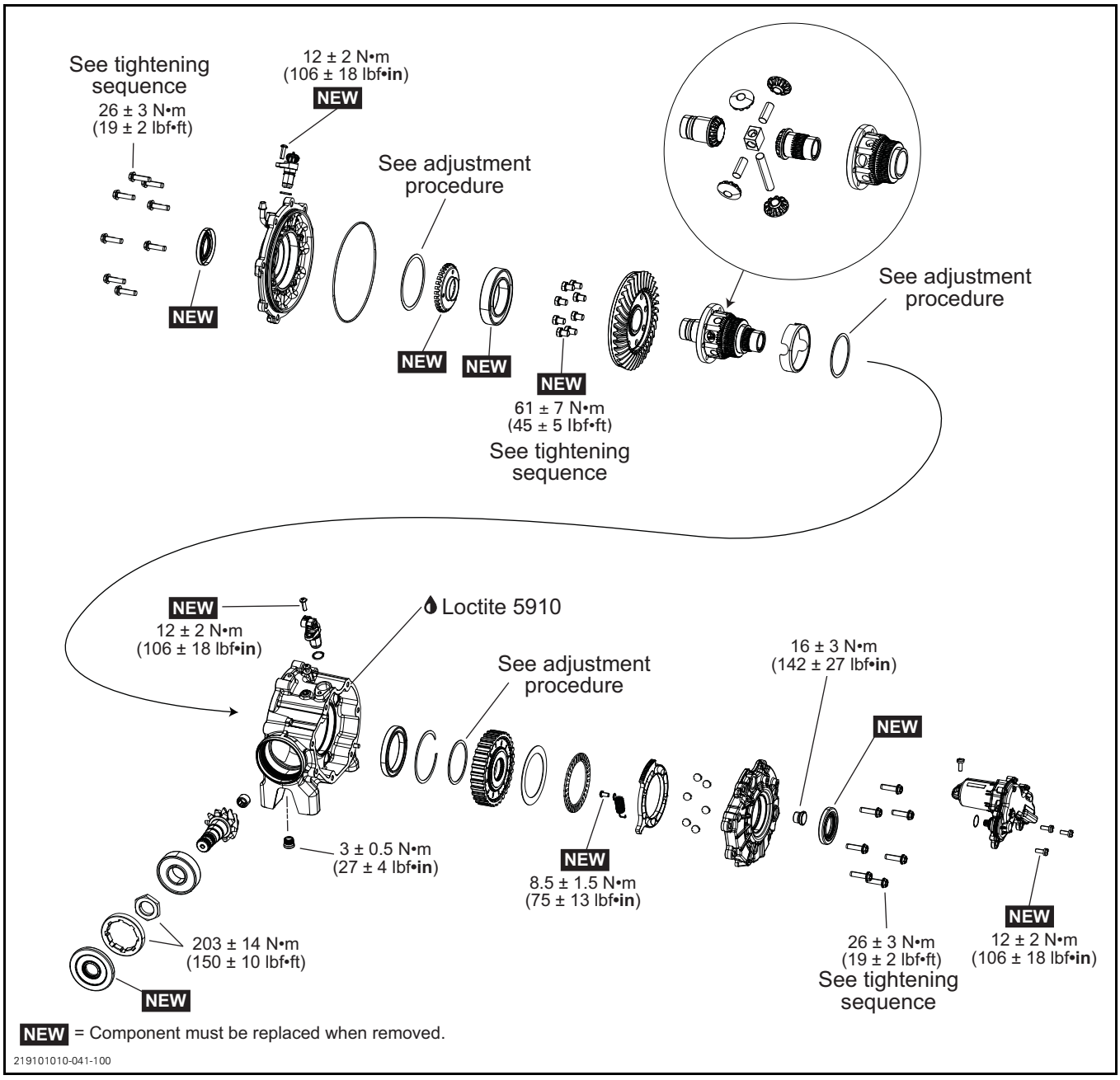

WIRING HARNESS AND CONNECTORS

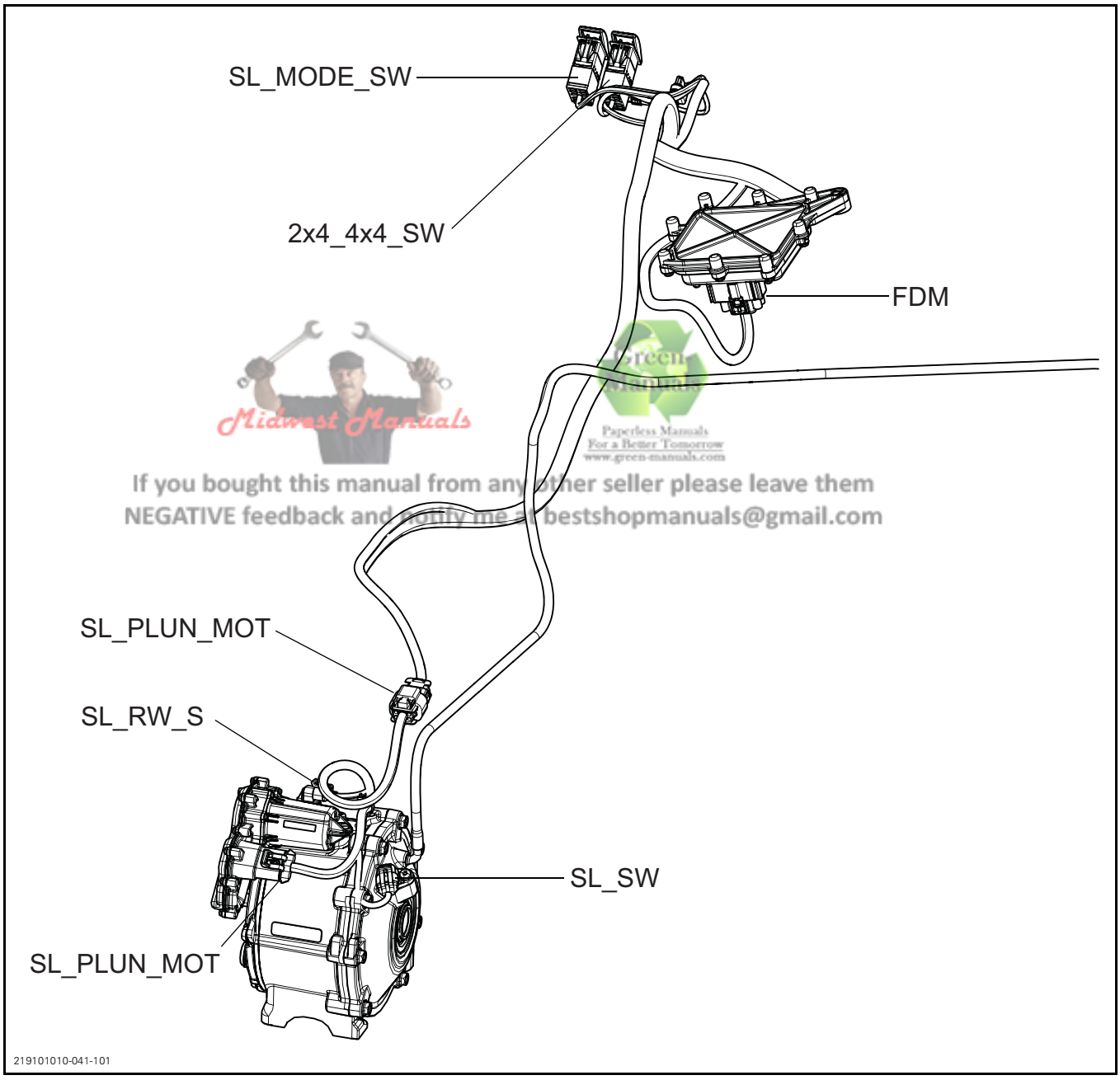

Midwest Manuals
Green Manuals
Paperless Manuals
For a Better Tomorrow
www.green-manuals.com
If you bought this manual from any other seller please leave them
NEGATIVE feedback and notify me at bestshopmanuals@gmail.com

GENERAL

The Front Differential Module (FDM) electronically manages the pressure on the clutch pack in order to optimize the traction and handling characteristics of the vehicle while in 4x4 mode.

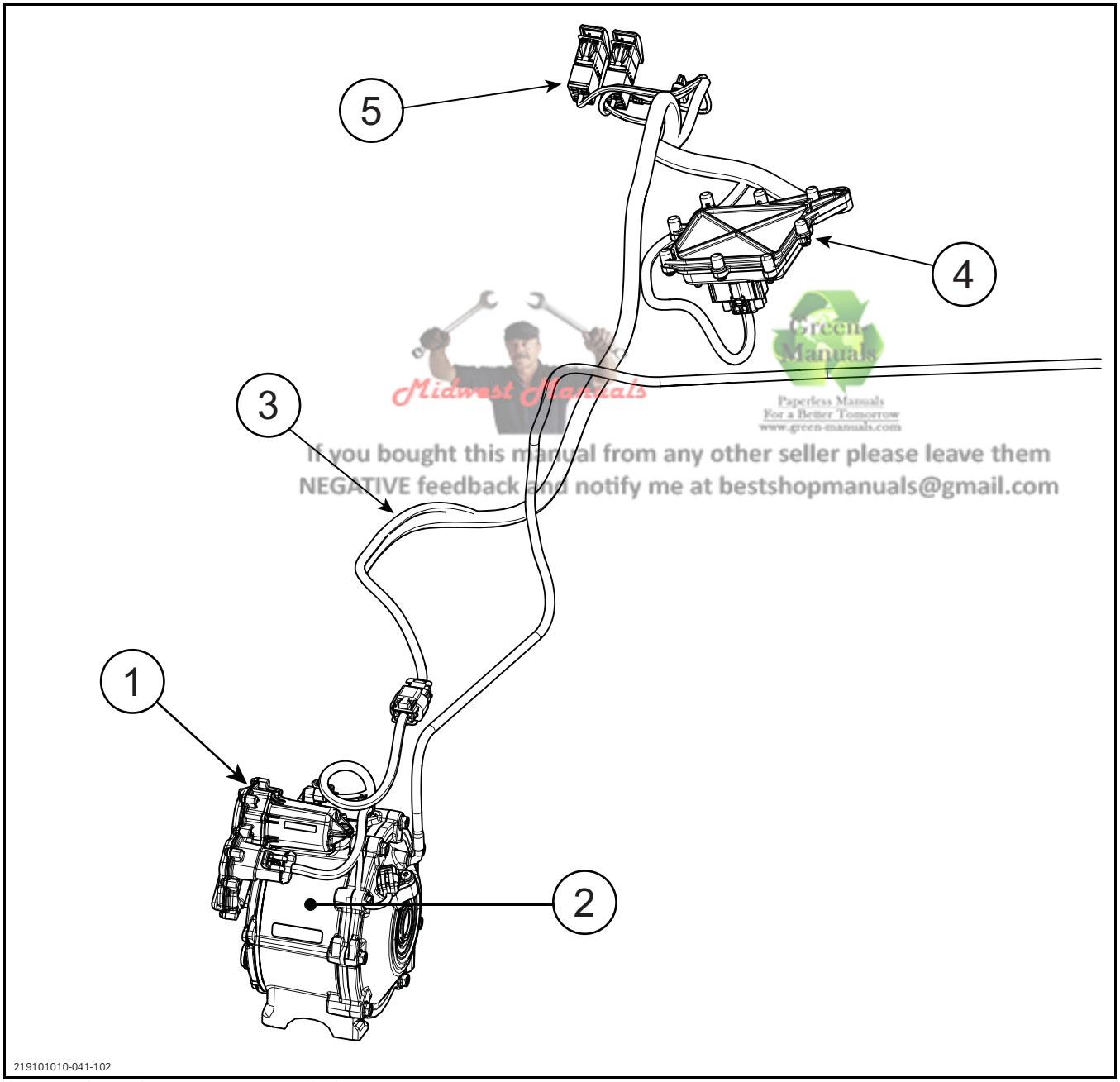

Midwest Manuals
Green Manuals
Paperless Manuals
For a Better Tomorrow
www.green-manuals.com
If you bought this manual from any other seller please leave them
NEGATIVE feedback and notify me at bestshopmanuals@gmail.com

SMART-LOK FRONT DIFFERENTIAL SYSTEM

1. *The actuator motor*
2. *The front differential*
3. *A wiring harness*
4. *The Front Differential Module (FDM)*
5. *The 2 switches on the dash*

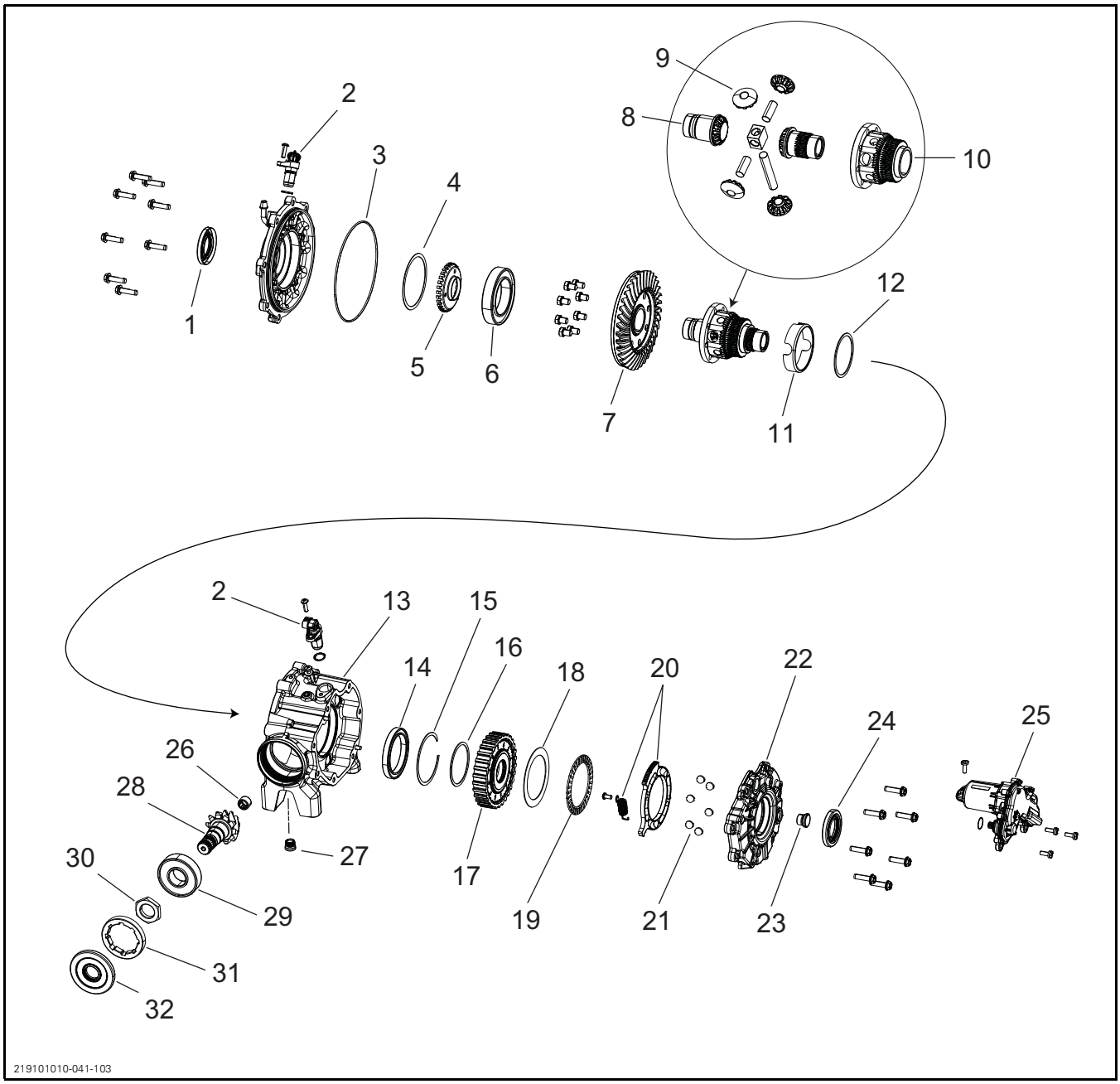

1. Oil seal
2. Speed sensor
3. O-ring
4. Backlash shim
5. Tone ring
6. Ball bearing
7. Ring gear
8. Output gear
9. Spider gear
10. Spider gear housing
11. Cross pin retainer
12. Fill shim
13. Center case
14. Ball bearing
15. Retaining ring
16. Clutch pack adjustment shim
17. Clutch pack
18. Thrust washer
19. Thrust bearing
20. Ball ramp and return spring
21. Balls
22. Right hand cover
23. Fill plug
24. Oil seal
25. Actuator assembly
26. Needle bearing
27. Drain plug
28. Pinion
29. Pinion bearing
30. Nut
31. Nut
32. Pinion seal

LOCKING SEQUENCE

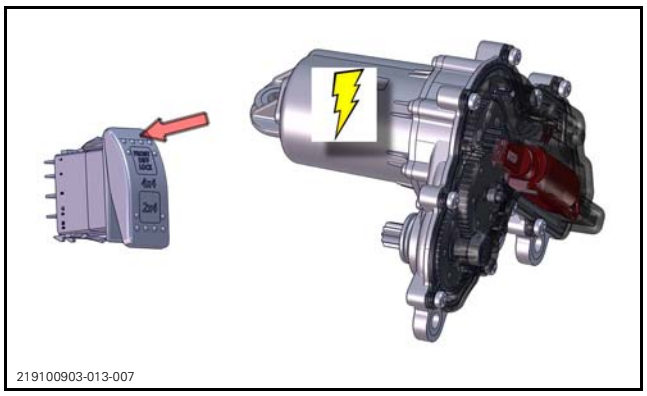

When the FDM receives the lock signal from the front diff lock switch, it applies full current to the actuator motor for 1,5 seconds.

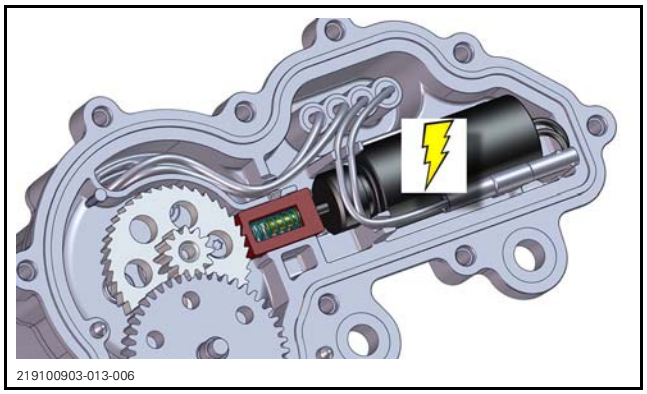

1 second after receiving the lock signal, the FDM will activate the lock solenoid.

The FDM will remove current from the actuator motor, and the locking pawl will maintain the differential in full lock mode.

When the actuator motor turns the locking mechanism, it is possible to hear it.

DIFFERENTIAL

The Smart-Lok differential can be viewed in 3 main sections.

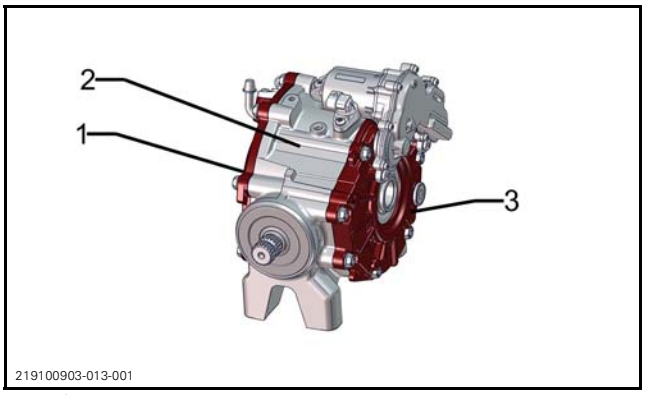

1. *Left hand section*
2. *Middle section*
3. *Right hand section*

Left Hand Section

The left hand section includes the ring gear, backlash adjustment, spider gears, and output gears.

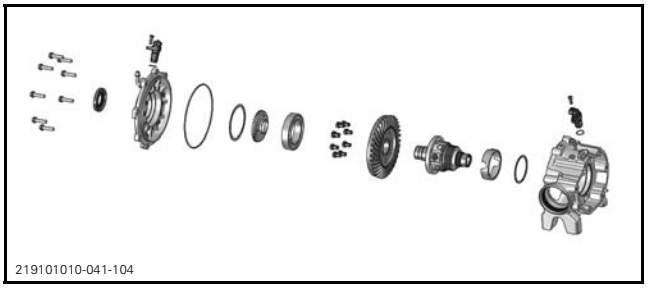

Middle section

The middle section contains the pinion.

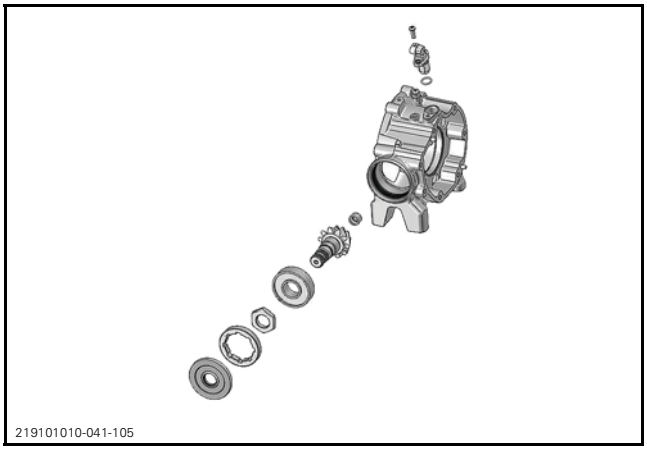

Right hand section

The right hand section contains the ball ramp and clutch pack.

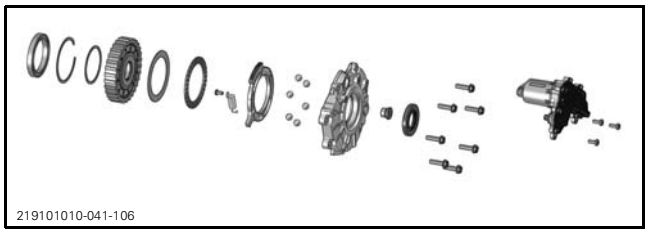
219101010-041-106

ACTUATOR MOTOR ASSEMBLY

The actuator motor assembly includes an electric motor, reduction gears, and a solenoid that controls the locking pawl.

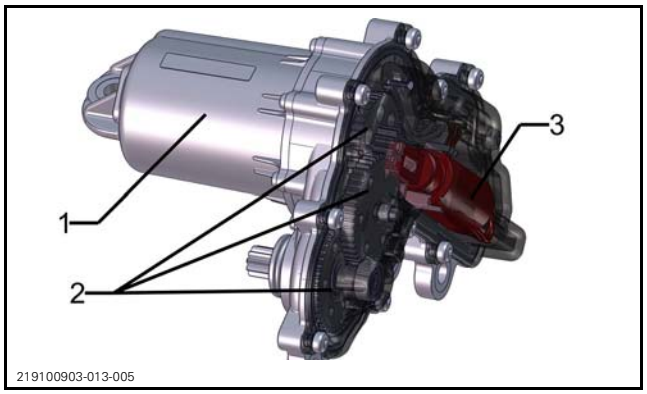

219100903-013-005

1. *Electric motor*
2. *Reduction gears*
3. *Solenoid and pawl*

The solenoid activates the locking pawl when the front differential is locked.

SWITCHES

There are two switches:

– 3 position combination toggle/push button switch (front 2x4, 4x4, diff lock)
– Front differential mode switch (if applicable, according to vehicle package)

When the toggle switch is set to 4X4, the FDM electronically manages the front differential according to the selected mode on the mode switch (modes vary by model, see the *OPERATOR'S GUIDE*).

When the top of the front diff lock switch is pressed, the FDM will begin the *LOCKING SEQUENCE*.

The front differential will remain locked until the button is pressed again, the mode is changed, or the unit is turned off.

FRONT DIFFERENTIAL MODULE (FDM)

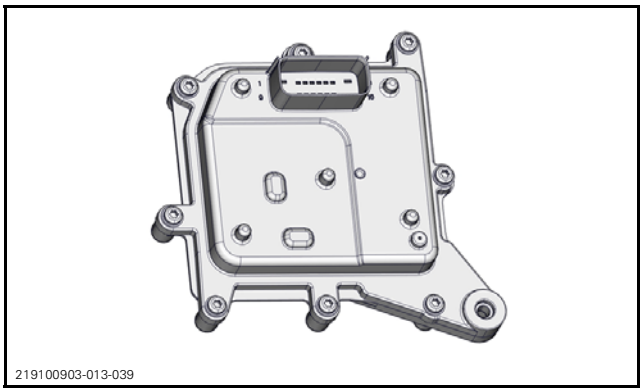
219100903-013-039

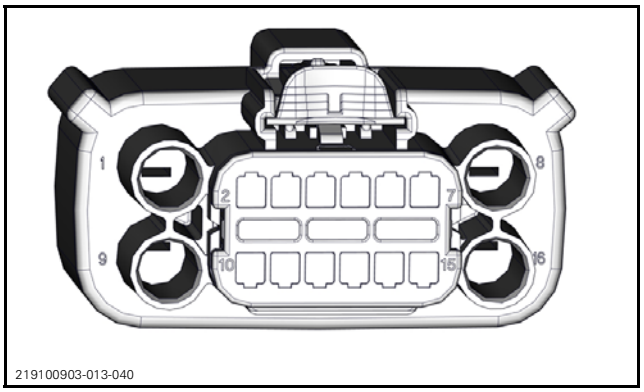

219100903-013-040

The FDM controls the current to the actuator motor, which applies torque to the clutch pack.

FDM Inputs

From the CAN bus:

– Estimated steering position
– Engine speed and torque
– Transmission gear position
– Vehicle speed (from rear wheel speed sensor)
– TAS signal
– Vehicle configuration identifier (CDID).

Direct inputs:

– Diff lock switch
– 4X4 switch
– Mode switch (if applicable, according to vehicle package)
– Front wheel speed sensors
– Switched power supply from vehicle.

FDM Outputs

– Actuator motor
– Lock solenoid
– Switch backlight.

ADJUSTMENT

There are adjustment shims for the backlash and the clutch pack.

The backlash must be adjusted and the left hand side of the differential must be assembled before adjusting the clutch pack shim(s).

PRELOAD

Install the spline driver tool on the pinion shaft.

REQUIRED TOOL	
SPLINE DRIVER (P/N 529 036 386)	

Using a needle torque wrench, measure the drag torque.

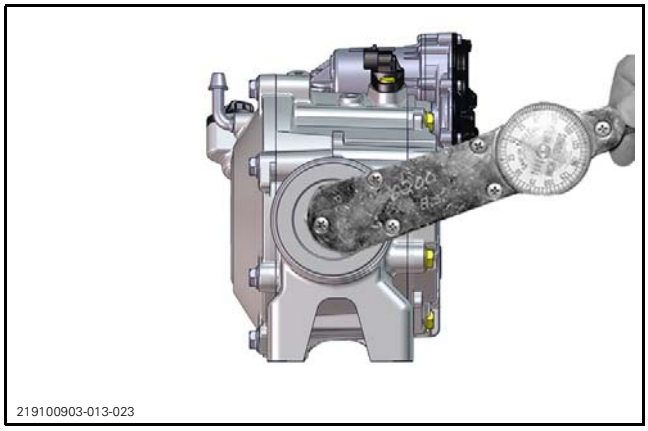
219100903-013-023

PRELOAD SPECIFICATION
Maximum 1.5 N•m (13 lbf•**in**)

If preload is out of specification, split front differential housing and check all bearings conditions.

BACKLASH

Turn the pinion gear by hand 4 full turns before checking backlash, there should be no tight spots or binding.

If rebuilding the differential, check and adjust the backlash without the fill shim.

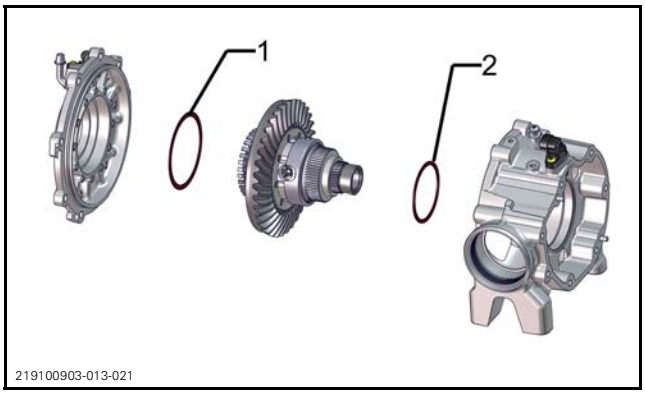

219100903-013-021

1. Backlash shim
2. Fill shim

Inspecting and Adjusting Backlash

Do not damage the speed sensor.

When measuring backlash, the differential cover should be upside down to pull the ring gear out of mesh.

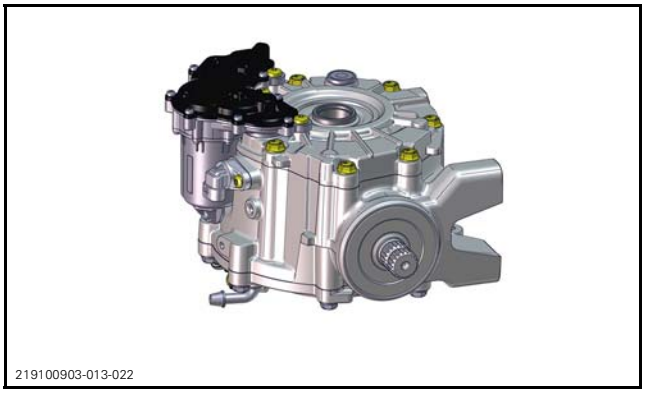
219100903-013-022

1. Measure the backlash with a dial indicator.

REQUIRED TOOL	
BACKLASH MEASUREMENT TOOL (P/N 529 036 387)	

2. Place the backlash measurement tool at the end of pinion gear.

A. 23 mm (29/32 in)

3. Position the dial indicator tip against the tab at a 90° angle and right in the dimple.
4. Gently, move the tab back and forth. Note the result.

NOTE: While measuring the backlash, make sure the ring gear is not moving.

5. Rotate pinion gear 1/2 turn and check backlash again. Note the result.
6. Rotate pinion gear 1 turn and check backlash again.

BACKLASH SPECIFICATION
0.127 mm to 0.305 mm (.005 in to .012 in) to 0.25 mm (.01 in)

If backlash is out of specification, split front differential housing and adjust shim thickness as per following guideline.

BACKLASH ADJUSTMENT GUIDELINE	
BACKLASH MEASUREMENT	WHAT TO DO
Below 0.127 mm (.005 in)	Install a thinner shim and recheck backlash
Above 0.305 mm (.012 in)	Install a thicker shim and recheck backlash

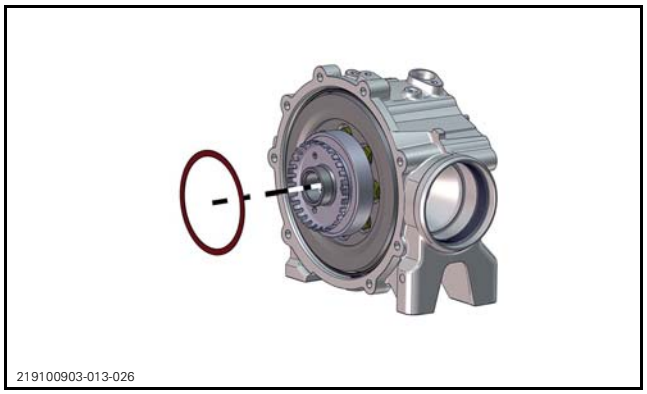

BACKLASH SHIM

Repeat until backlash is within specifications. Then more on to *MEASURING AND SELECTING A FILL SHIM*.

Measuring and Selecting a Fill Shim

NOTICE **It is important to install the correct backlash shim first. Only then move on with measuring and selecting a fill shim.**

1. Measure and note the distance between the middle casing and the bearing inner race **no. A**.

NOTE: Use a straight edge and a slide caliper.

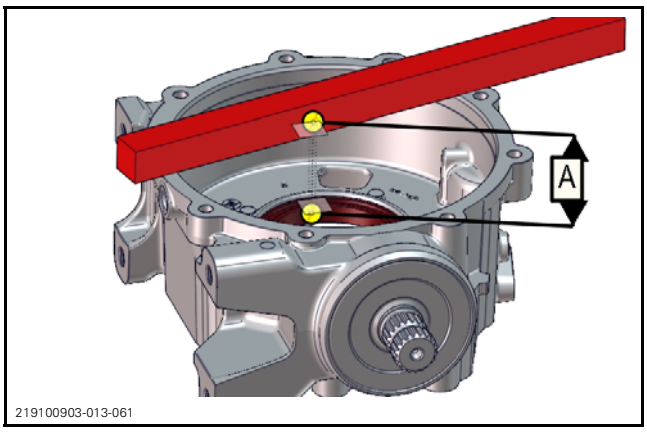

2. With the correct backlash shim installed and the bearing resting on this shim, measure and note the distance between the top of the differential gear assembly and the left hand cover.**no. B**.

NOTE: Use a straight edge and a slide caliper.

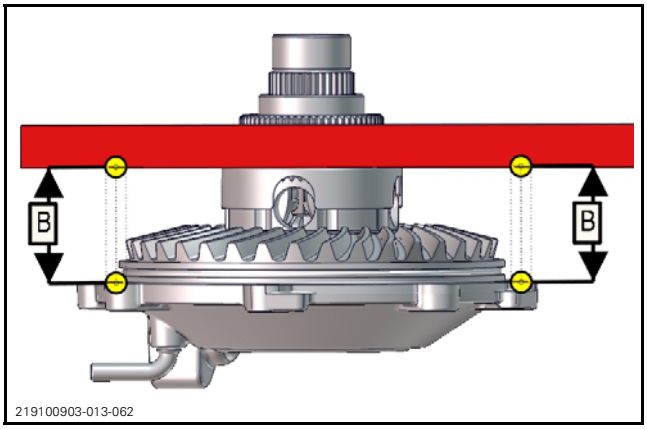

Use a shim thickness equal or less than the calculation result.

FILL SHIM GUIDELINE	
Measurement **no. A** - measurement **no. B**	= Fill shim thickness

3. Choose the correct fill shim from the available service kit.

CLUTCH PACK

Refer to *REPLACING THE CLUTCH PACK* in this subsection.

FLUID LEVEL

Recommended Differential Oil

XPS™ RECOMMENDED DIFFERENTIAL OIL	
Scandinavia	75W90 SYNTHETIC GEAR OIL (EUR) (P/N 779212)
Other countries	75W90 SYNTHETIC GEAR OIL (P/N 779158)
If THE RECOMMENDED XPS DIFFERENTIAL OIL IS NOT AVAILABLE	
Use the or a 75W90 gearbox oil that meets the API GL-5 specification.	

Verifying the Differential Oil Level

1. Park the unit on a level surface.
2. Remove the fill plug.

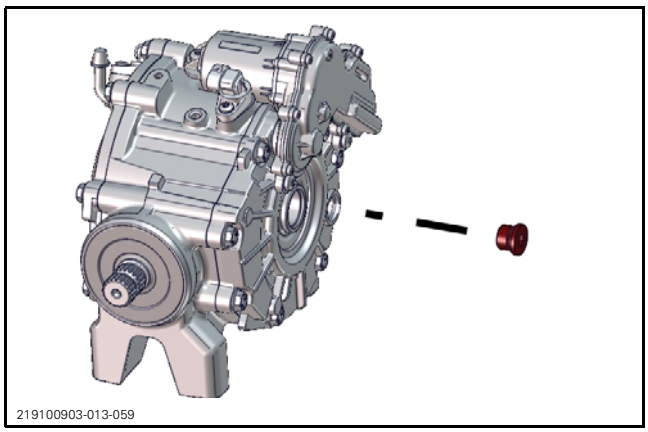

3. The fluid should be level with the bottom of the fill plug hole. Add oil if required.
4. Reinstall the fill plug. Refer to exploded view for specific tightening torque.

TROUBLESHOOTING

Connect the vehicle to the BRP diagnostic software (BUDS2). Correct any occurred faults prior doing any troubleshooting.

If unsure, a good place to start is with the *TESTING THE FDM* procedure in this subsection.

The FDM is able to self diagnose the system. There are several electrical diagnostic, functional diagnostic, and input diagnostics available thru BUDS2.

Wake-up the vehicle. If no connection:

– Validate FDM connections
– Validate switches using the measurement page
– Validate mode selected (Diff lock). The FDM should try to lock, if it fails, follow faults troubleshooting procedure in BUDS2.

DIFFERENTIAL WILL NOT LOCK - CANNOT HEAR ACTUATOR MOVING

1. **Loose connection at connector**
   - *Ensure FDM and all other connectors are corrosion free and properly connected.*
   - *Connect BUDS2 and check the FDM for faults to explain the situation.*
   - *If you cannot see the FDM in BUDS2, check FDM electrical connections.*
   - *Monitor switch functions in measurement page.*
   - *Validate mode selected (Diff lock) -The FDM should try to lock, if it doesn't, follow the fault troubleshooting procedure in BUDS2.*
   - *Use BUDS2 and refer to fault codes P3400 and P3401 for continuity test and actuator test.*

DIFFERENTIAL WILL NOT LOCK - CAN HEAR ACTUATOR MOVING

1. **Lock solenoid not working**
   - *Remove oil fill plug and observe ball ramp movement. Refer to REPLACING THE CLUTCH PACK in this subsection for proper movement and adjustment. If the ball ramp does not stay locked it suggests that the lock solenoid is not engaging.*
   - *Use BUDS2 and refer to fault codes P3402 and P3403 for continuity test and actuator test.*

CANNOT KEEP FRONT WHEELS LOCKED TOGETHER IN LOCK MODE

1. **Worn clutch pack or actuator/solenoid issue.**
   - *Use BUDS2 and refer to fault codes P3400 P3401 (Actuator motor)*
   - *Use BUDS2 and refer to fault codes P3402 P3403 P3404, (solenoid)*
   - *Use BUDS2 and refer to fault codes P3405 P3406 mechanical issues*
   - *Use BUDS2 and refer to fault code P215A for clutches issue (it could be also a left speed sensor fault for this specific code)*
2. **DPS fault, no steering angle calculation transmitted on CAN**
   - *Check for fault codes, module updates, or missing modules.*
3. **CAN system fault**
   - *Check for fault codes, module updates, or missing modules.*

4. Worn clutch pack
   - *Check adjustment. Refer to REPLACING THE CLUTCH PACK in this subsection.*

DIFFERENTIAL WILL NOT UNLOCK

1. Ball ramp not resetting to open position
   - *Check ball ramp return spring.*
2. Lock solenoid stuck
   - *Refer to BUDS2 fault codes for actuator, solenoid and mechanical issues. It could be detectable by the FDM. Check the ball ramp return spring.*
   - *Try a new actuator.*

PROCEDURES

TESTING BALL RAMP RETURN SPRING

NOTICE **Do not activate the actuator when it is removed from the differential, it can damage the actuator.**

1. Remove actuator.
2. Using a flat screwdriver on the ball ramp teeth, try to move the ball ramp counterclockwise.

You should feel the resistance of the spring.

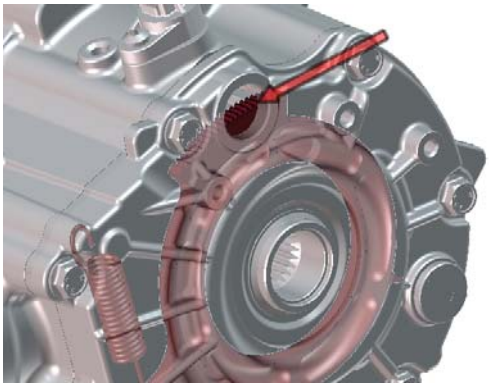

219100903-013-058

3. Remove the screwdriver and the ball ramp should return to it's original position.
4. If ball ramp turns freely (no resistance), remove right hand cover and inspect return spring.

TESTING A SPEED SENSOR

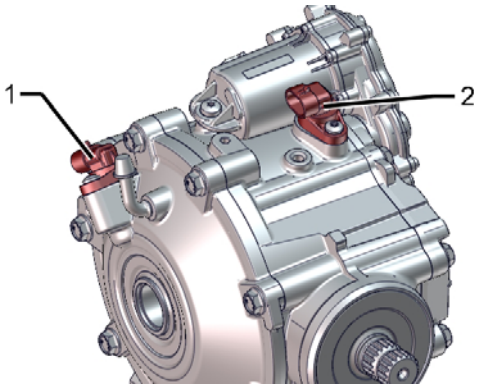

219100903-013-057

1. *Left hand wheel speed sensor (wheel sensor)*
2. *Average wheel speed sensor (Carriage sensor)*

PIN	SPECIFICATION
A	12 volts
B	Signal to FDM
C	Ground

1. Turn ignition ON.
2. Lock and unlock front differential to validate that it functions properly.
3. Verify sensor supply voltage at key-On.

PIN		RESULT
A	C	Battery voltage

4. Verify sensor pull-up voltage at key-On.

PIN		RESULT
B	C	More than 5 volts

5. Verify continuity between the following pins.

CONNECTOR	FDM	RESULT
B	10 or 11	Close to 0 Ω

6. Inspect the sensor and tone ring.

Testing the Speed Sensor Signal

NOTICE **Back probing is not recommended to maintain proper sealing of the electrical connectors.**

1. Lift and support the front of vehicle so that front wheels are off the ground.

2. Block rear wheels to avoid vehicle moving.
3. Set transmission to 2WD and to Neutral.
4. Connect the vehicle to the BRP diagnostic software (BUDS2) and logon.
5. Start the engine.

NOTE: The left speed sensor measures the exact speed from the left wheel. To generate a signal on the average front wheel speed sensor in 2WD mode, the right wheel has to be immobilized, then, by turning the left wheel both wheels sensors should signal a rotation.

6. Turn the wheels manually and observe the results in the BUDS2's Measurement page.
   – If no signal is measured, check the sensor's supply voltage. Refer to *TESTING A SPEED SENSOR* in this subsection.
   – If only one sensor doesn't signal RPM and all the electrical connections and wire continuity are good for the faulty sensor, both sensors may be swapped to validate if it is the speed sensor or a tone ring issue.

SIGNAL TEST		
TEST PROBES		RESULT (WHILE ROTATING WHEELS)
PIN B	PIN C	Alternate reading between battery voltage and 0 Vdc

NOTE: Since a pulsating voltage is measured, the numeric display will continuously change. The analog display may be easier to follow.

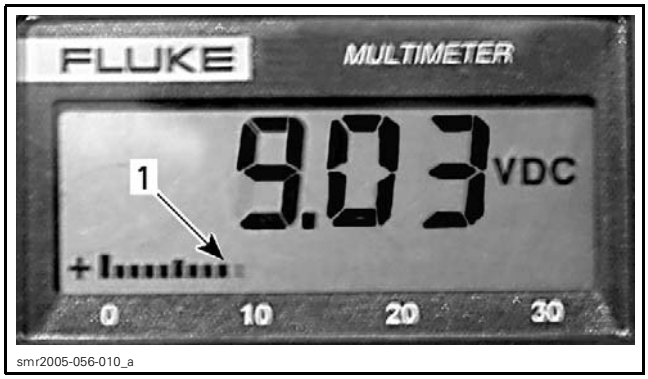

1. Analog display

If signal is not as per specification, remove sensor and inspect the tone ring.

If tone ring is in good condition, replace the sensor.

TESTING THE FDM

There are no specific tests for the FDM.

The FDM should be visible in BUDS2. Check for fault codes and updates.

If the module is not visible in BUDS2, refer to the wiring diagram and check for the following.

PIN	SPECIFICATION
FDM-1	12Vdc Power (hot at all times)
FDM-7	12 Vdc MODULE WAKE-UP at key on
FDM-9	Ground
FDM-2	CAN-HI
FDM-3	CAN-LOW

If the FDM receives power, ground, and CAN communication, test individual system components and their wires to the FDM. Refer to *GENERAL* for an overview of system components.

TESTING THE ACTUATOR

NOTICE Do not bench test the actuator. Always perform the test with the actuator installed on the differential.

1. Lift and support the front of vehicle so that front wheels are off the ground.
2. Wake up the vehicle by pressing the start/stop button or turning ignition switch to ON.
3. Ask an assistant to press the diff lock button and listen for the motor.
   – You should hear the motor turn on for 1.5 seconds.
   – You should hear the lock solenoid engage after 1 second.
   – The front wheels should be locked and should not turn individually.
4. Ask the assistant to press the diff lock button again, to unlock the differential.
   – You should hear the solenoid disengage.
   – The motor should wind down to it's original position.
   – Front wheels should turn individually.

REPLACING THE ACTUATOR

1. Disconnect the actuator's electrical connector.
2. Remove the retaining screws.

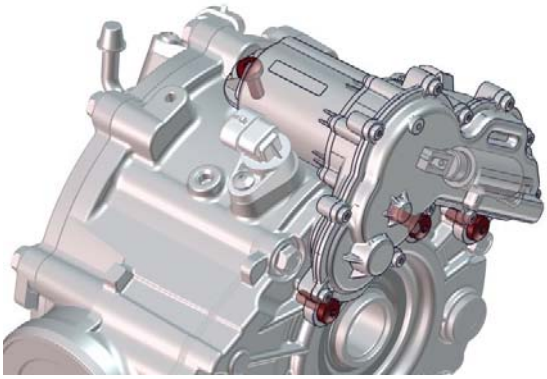
219100903-013-041

3. Remove the actuator.

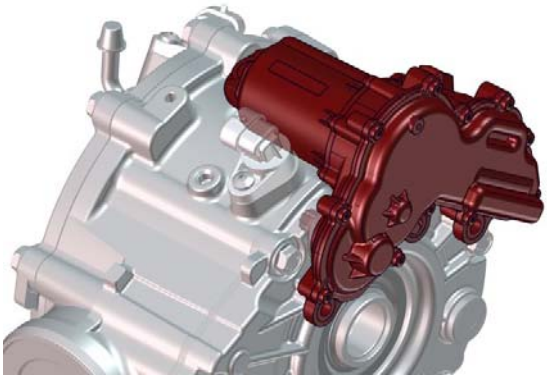
219100903-013-042

4. Lubricate the actuator's O-ring.

RECOMMENDED SERVICE PRODUCT
Differential oil

5. Install the new actuator.
6. Install and tighten the 3 retaining bolts on the right hand cover.

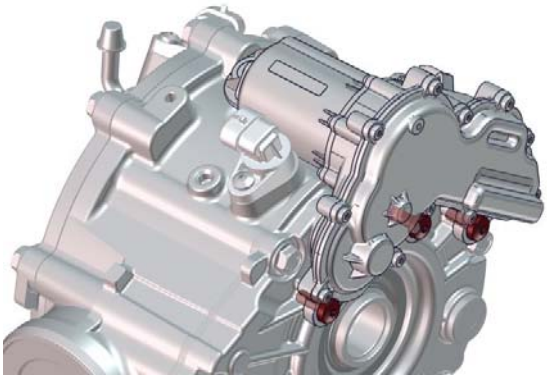
219100903-013-043

7. Install and tighten the remaining screw.
8. Connect the electrical connector.

REPLACING THE CLUTCH PACK

1. Remove the fill plug.

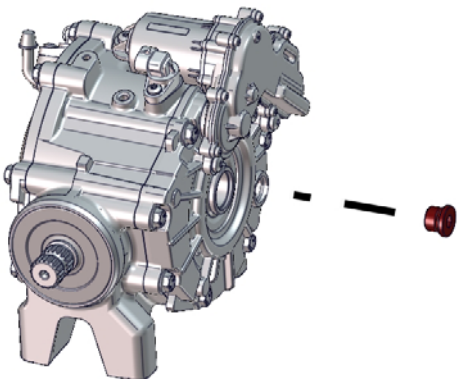
219100903-013-059

2. Remove the drain plug, drain the oil.

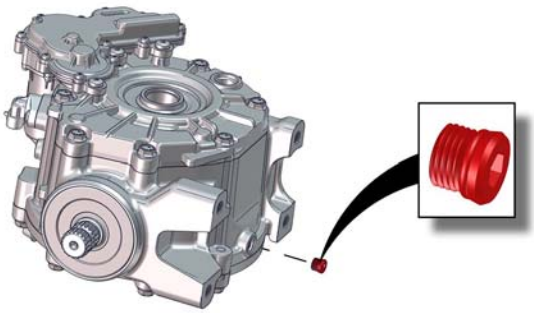
219100903-013-009

3. Remove the actuator assembly.

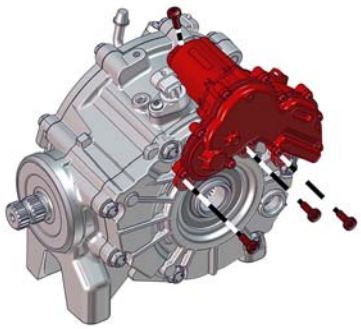
219100903-013-010

4. Remove the right hand cover.

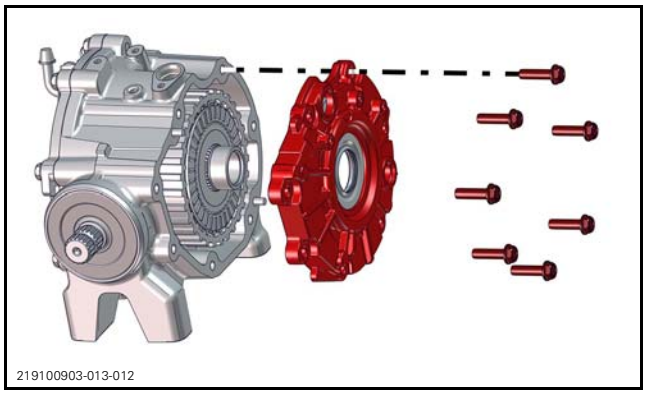

5. Remove the thrust bearing and thrust washer.

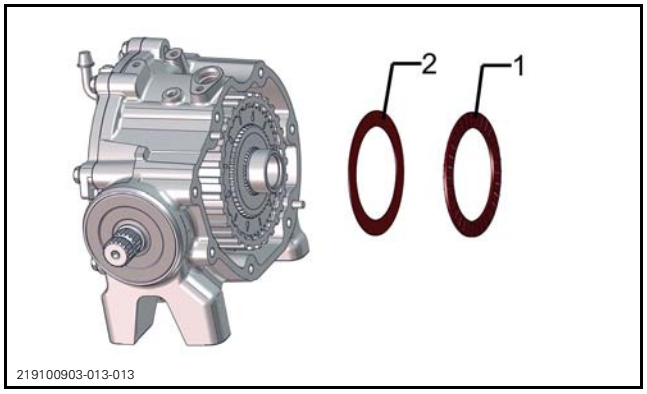

1. *Thrust bearing*
2. *Thrust washer*

6. Remove the clutch pack.

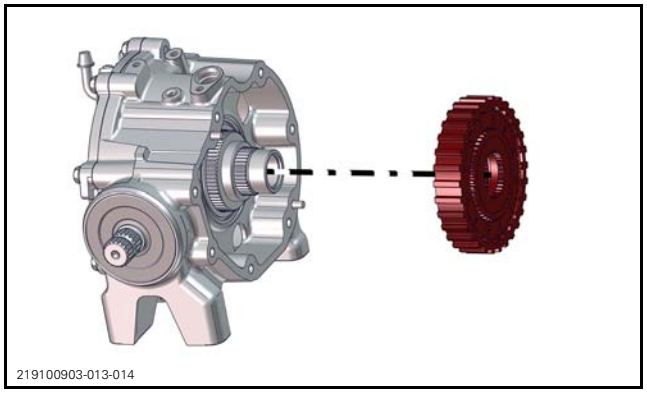

7. Clean the sealant off of the middle and right hand differential sections.

NOTE: Make sure to clean the sealant in the grooves of the right hand cover.

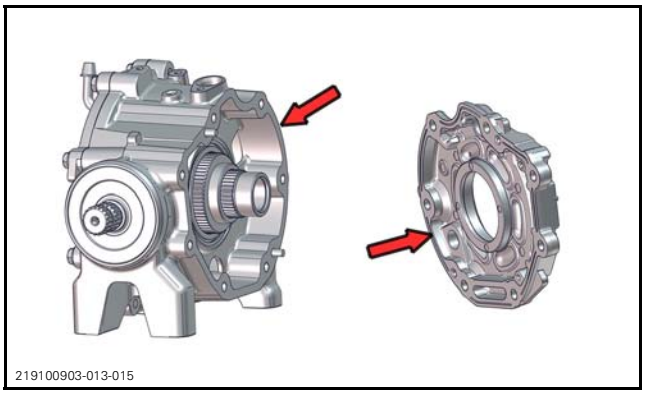

8. Keep the original shim installed in it's place.

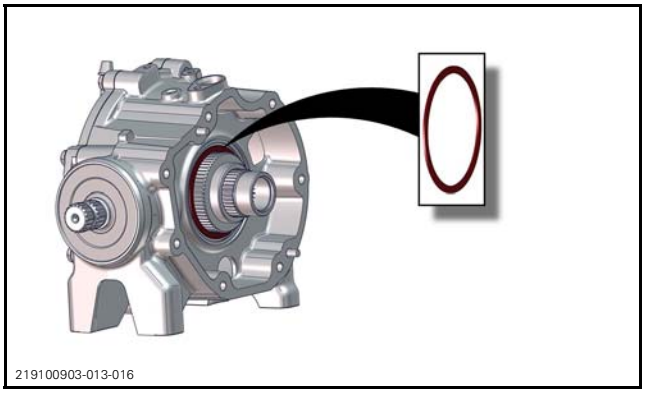

9. Install the new clutch pack, thrust washer, and thrust bearing.
10. Install and torque right hand cover following the sequence **without** any sealant.

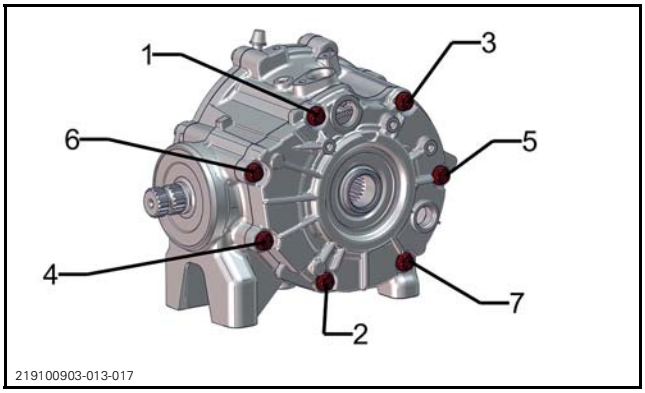

COVER TORQUE SEQUENCE

11. Install the actuator and torque retaining screws.
12. Connect the actuator motor to the electrical harness.
13. Wake-up the vehicle.
14. Observe the ball ramp through the fill plug hole while someone else presses the diff lock switch.

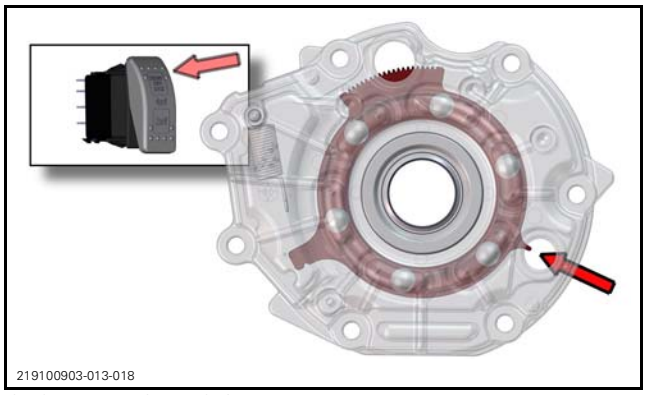

OBSERVE PROTRUSION

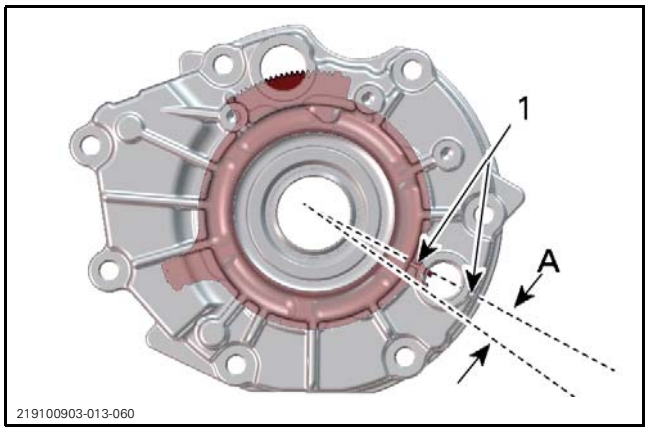

ACCEPTABLE ADJUSTMENT RANGE
1. Detail on right hand cover
A. Acceptable range for protrusion

15. The protrusion on the ball ramp should be within the acceptable range as visible in the fill hole when the differential is fully locked.
    - 15.1 If the protrusion goes past the hole, install a thicker shim.
    - 15.2 If the protrusion stops before the hole, install a thinner shim.
    - 15.3 Repeat until protrusion is visible straight thru the fill plug hole.

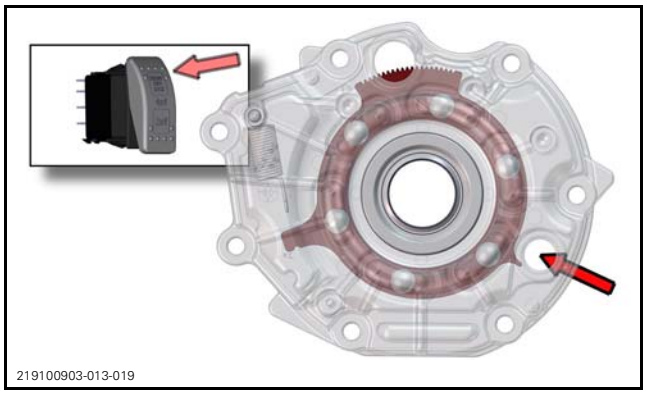

PROTRUSION STOPS BEFORE THE HOLE, INSTALL A THINNER SHIM

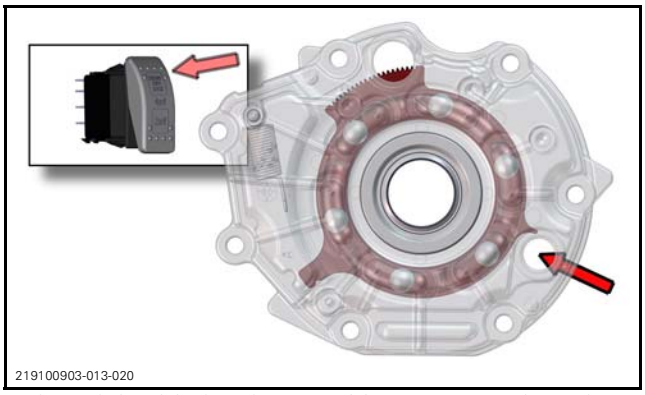

PROTRUSION GOES PAST THE ACCEPTABLE RANGE, INSTALL A THICKER SHIM

16. Once the clutch pack is properly adjusted, remove the right hand cover.
17. Apply sealant. Follow the manufacturer's instruction for the curing time.

RECOMMENDED SERVICE PRODUCT
LOCTITE 5910 (P/N 293 800 081)

18. Install and torque right hand cover following the sequence and specifications.
19. Install the differential on the unit.
20. Connect all electrical connectors.
21. Adjust the differential oil level, refer to *FLUID LEVEL*.

DISASSEMBLING THE DIFFERENTIAL

1. Remove the clutch pack. Refer to *REPLACING THE CLUTCH PACK* in this subsection.
2. Remove speed sensors.

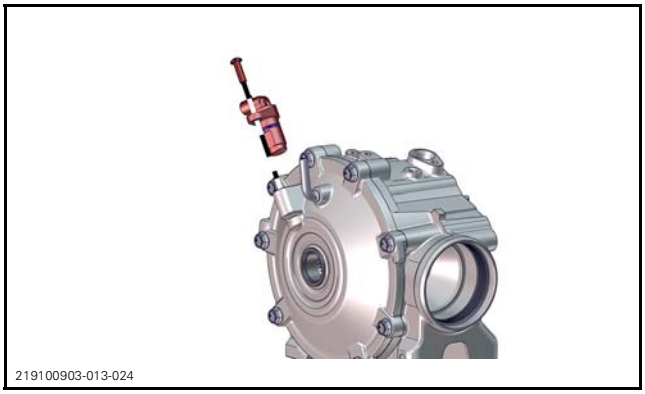

3. Remove the left hand cover.

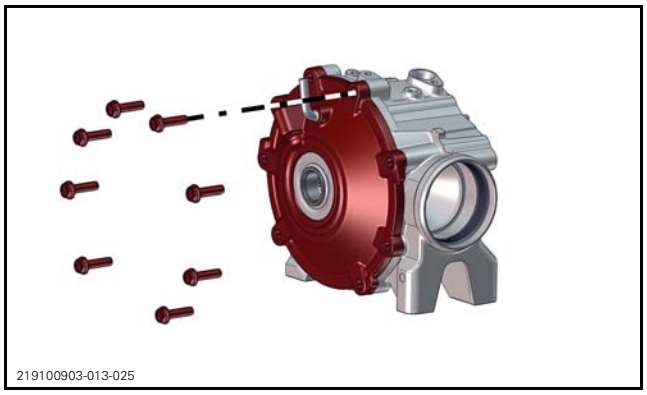
219100903-013-025

4. Inspect O-ring, replace if damaged.

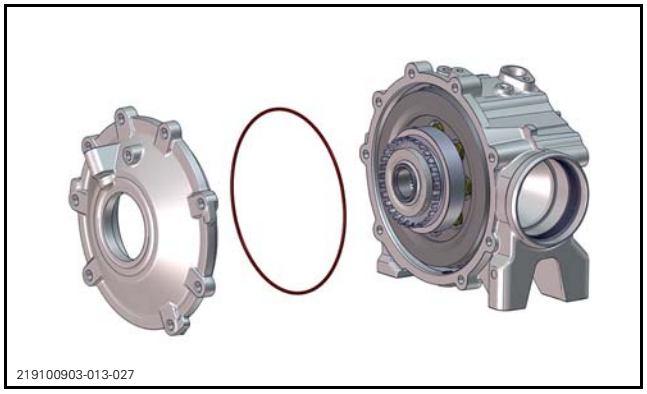
219100903-013-027

5. Remove the backlash shim.

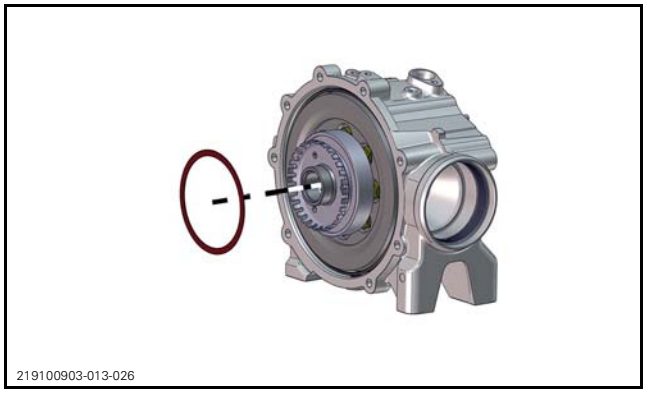
219100903-013-026

6. Remove the differential gear assembly.

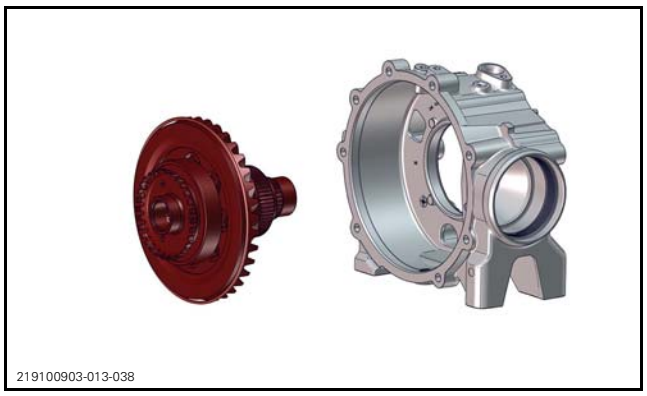
219100903-013-038

7. Remove the fill shim.

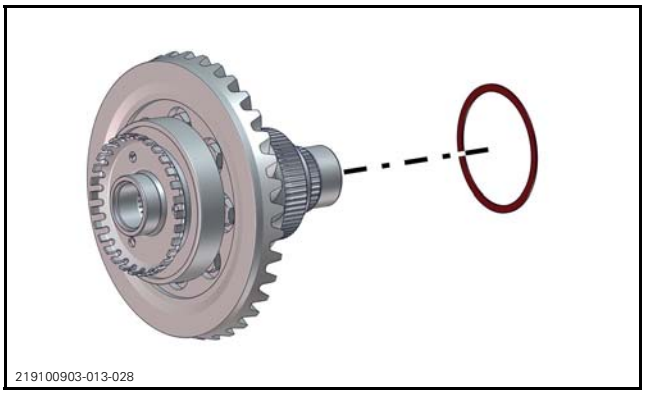
219100903-013-028

8. Use 2 screwdrivers to pry off the tone ring. Discard it.

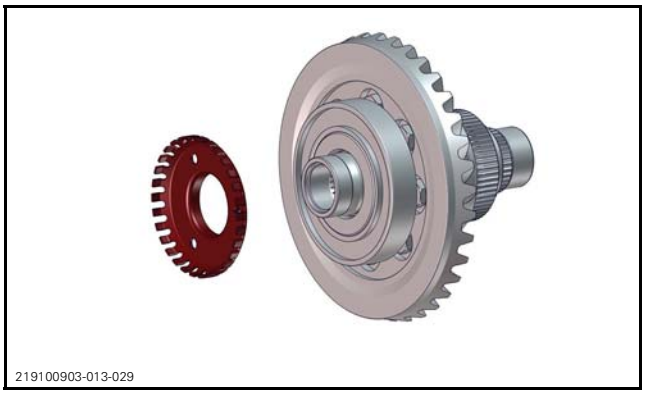
219100903-013-029

9. Use 2 screwdrivers to pry off the bearing. Discard it.

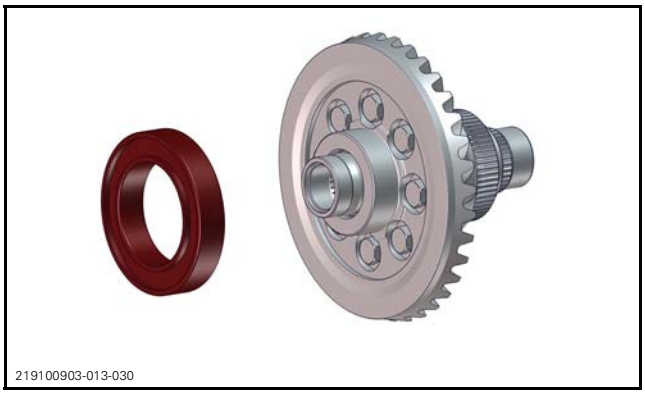
219100903-013-030

10. Mount the differential in a vise.

NOTICE **Use aluminum angle bars to over the jaws to protect the splines.**

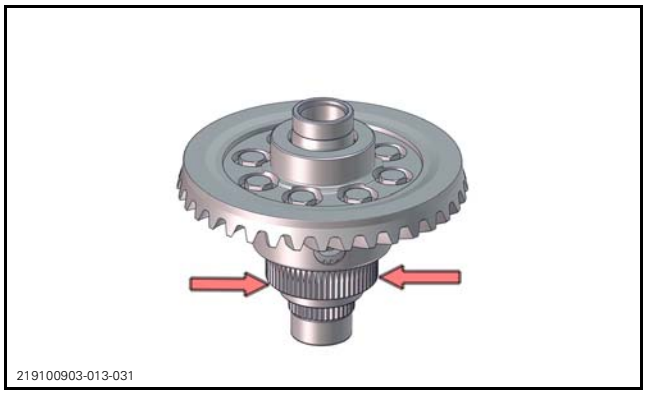

11. Remove the ring gear retaining screws. Discard them.

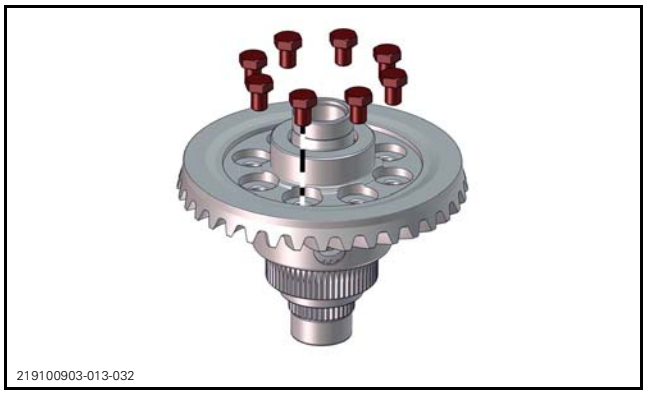

12. Remove the ring gear.

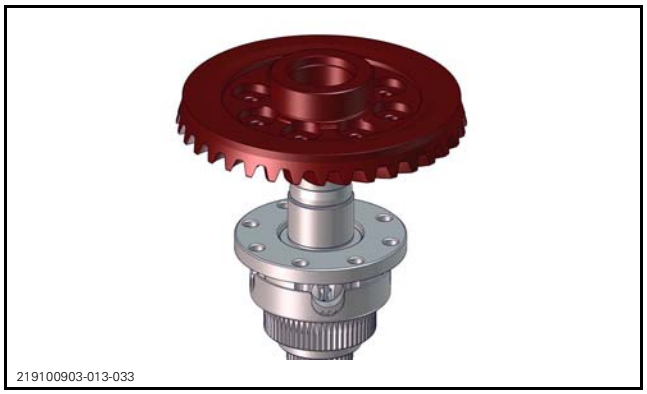

13. Remove the left hand output shaft.

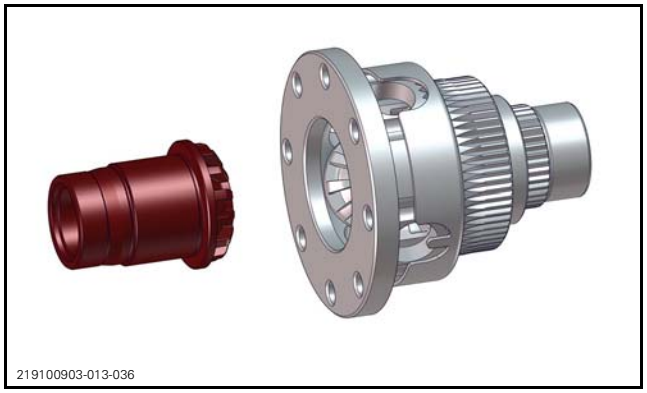

14. Remove the differential from the vise.
15. Straighten the locking tabs.

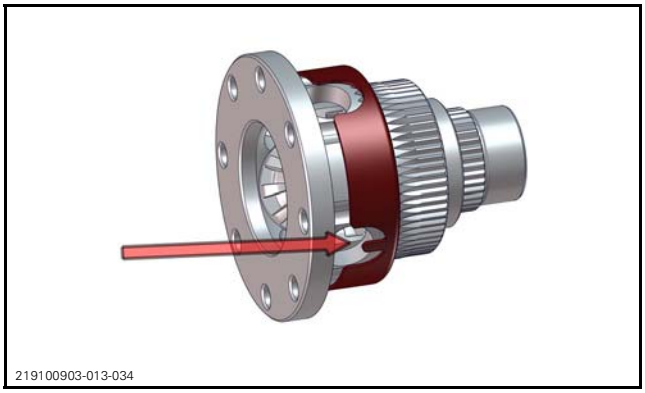

16. Remove the cross pin retainer.

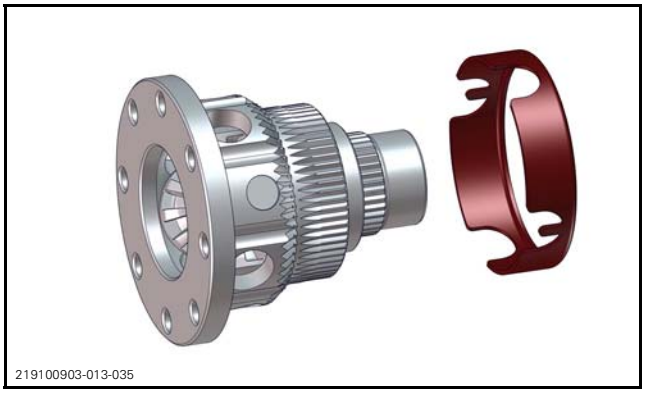

17. Remove the cross pins and coupler.

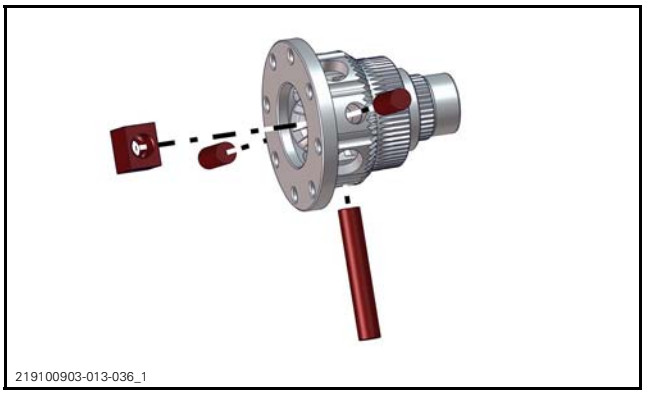

18. Remove spider gears and right hand output shaft.

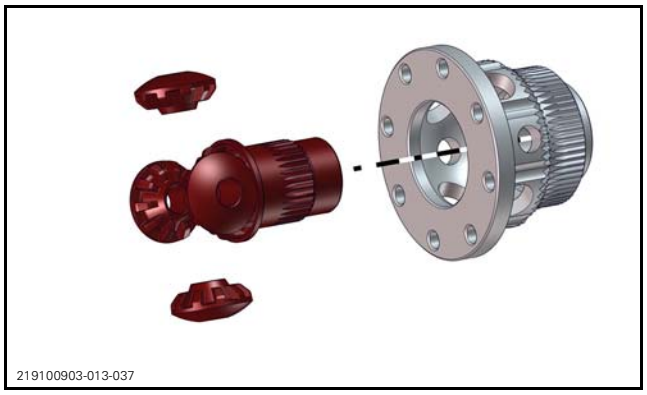
219100903-013-037

ASSEMBLING THE DIFFERENTIAL

Adjustment may be required when any of the following parts are replaced.

- Pinion gear
- Ring gear
- Bearing
- Clutch pack
- Housing.

Prior to finalizing assembly, proceed in this order:

- Temporarily assemble final drive using recommended torques.
- Do not apply thread locker product.
- Do not install a new pinion nut.
- Check backlash.
- Check preload.

NOTICE **Coat moving contact surfaces with differential oil during assembly.**

1. Reassemble the spider gear housing, refer to the illustration at the beginning of this subsection.

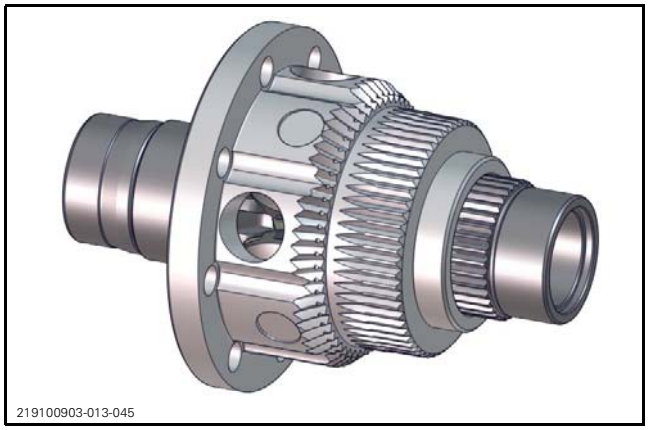
219100903-013-045

2. Install the cross pin retainer and punch down the tabs.

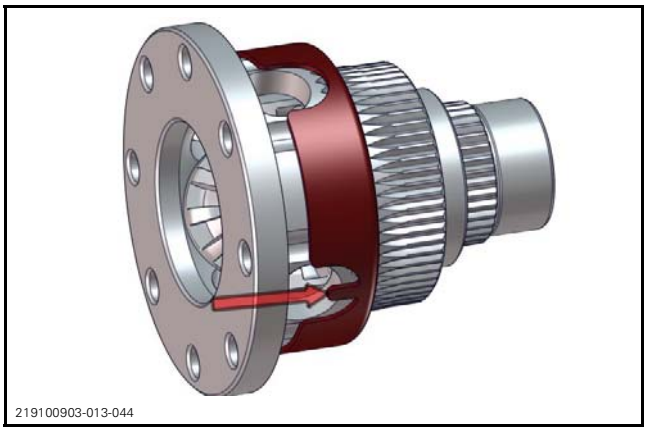
219100903-013-044

3. Install the ring gear and torque the new screws to specifications in a criss-cross pattern.

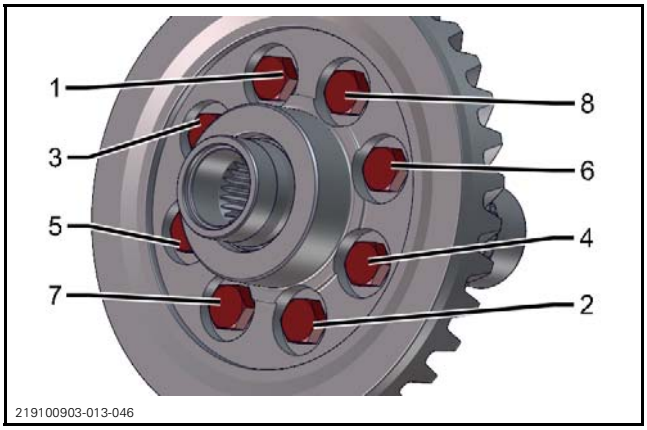

219100903-013-046

4. Recheck torque on all screws.
5. Install a new left hand bearing.

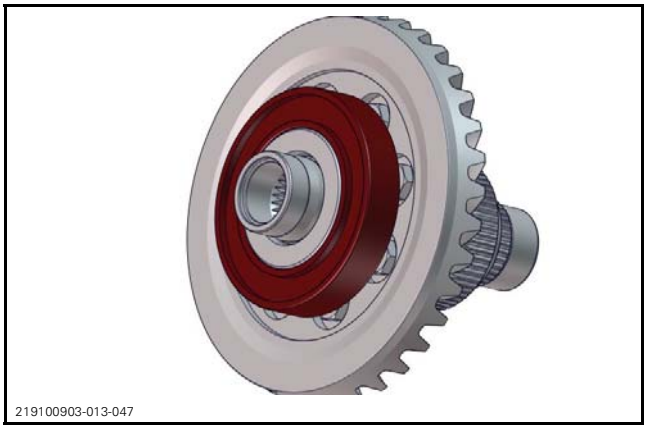
219100903-013-047

6. Install the right hand bearing.

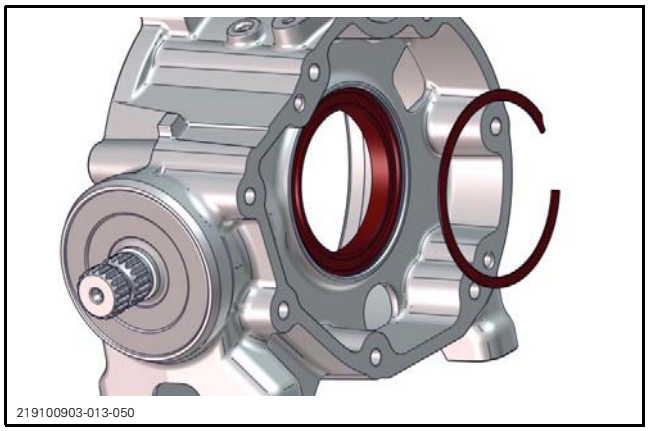
219100903-013-050

7. Install a new tone ring

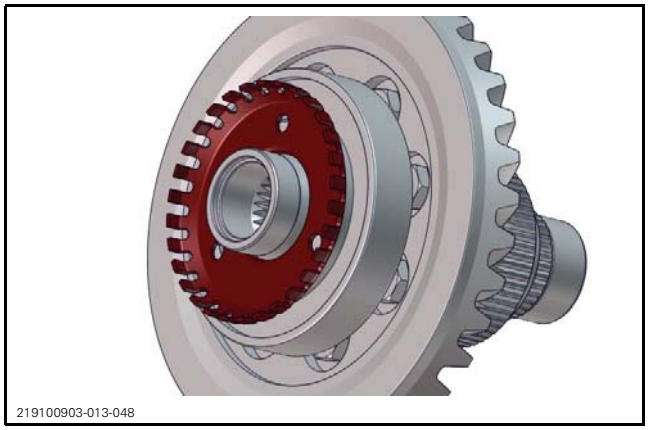
219100903-013-048

8. Install the previously removed backlash shim.

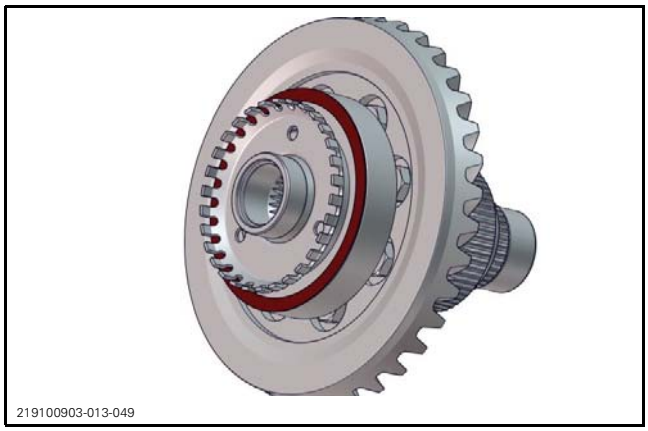
219100903-013-049

9. Install the ring gear assembly without the fill shim.
10. Check the backlash, adjust if necessary. Refer to *BACKLASH* in this subsection.
11. Install the applicable fill shim as specified in the *BACKLASH* adjustment procedure in this subsection.

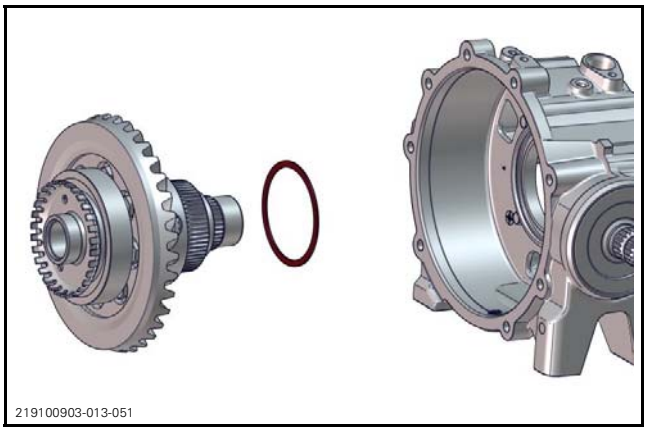
219100903-013-051

Check condition of O-ring. Replace if damaged.

12. Coat O-ring with differential fluid.
13. Install the left hand cover and O-ring.
14. Torque the left hand cover retaining screws.
15. Install the right hand side components. Refer to *REPLACING THE CLUTCH PACK* in this subsection.
16. Coat oil seals with differential oil.
17. Install all oil seals.
18. Check the preload. Refer to *PRELOAD* in this subsection.
19. Install the actuator.
20. Install the drain plug.
21. Install any other removed components like speed sensors.
22. Place the differential on a level work surface.
23. Fill the differential with the recommended oil. Refer to *FLUID LEVEL* in this subsection.
24. Install the differential on the unit.

REPLACING THE PINION

REQUIRED TOOLS	
MULTIFUNCTION DIFFERENTIAL TOOL (P/N 529 036 385)	
SPLINE DRIVER (P/N 529 036 386)	

1. Remove and discard oil seal.

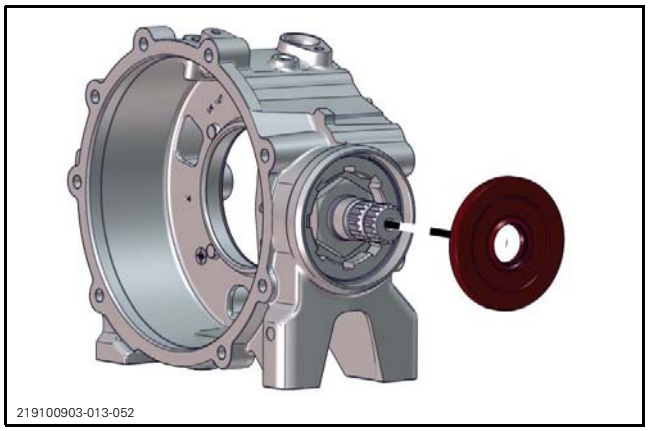
219100903-013-052

2. Unscrew the pinion nut.
   2.1 Lock the multifunctional tool and the spline driver together with a screwdriver.
   2.2 Slide the tools until it engage the nut.
   2.3 Unscrew the nut.

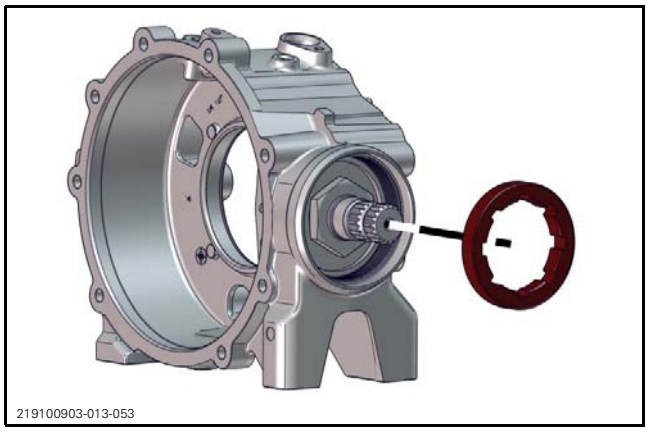
219100903-013-053

3. Remove bearing and pinion gear together.

NOTE: If pinion is hard to pull out, attach the propeller shaft to it and pull while hitting the yoke with a soft hammer.

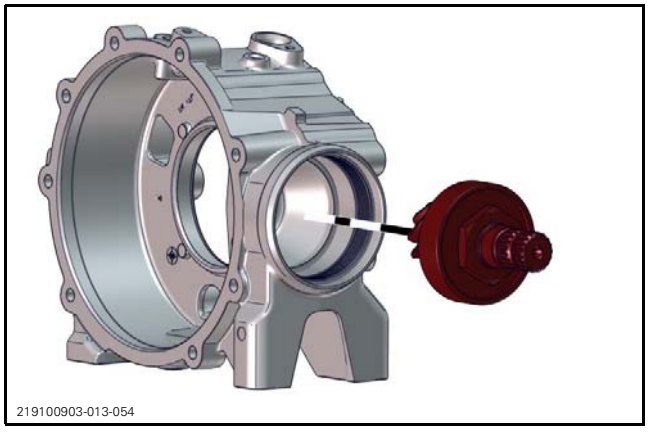
219100903-013-054

4. Remove nut from pinion.
   4.1 Install the multifunctional tool in a vice.
   4.2 Slide the spline driver on the pinion shaft.
   4.3 Slide the pinion and the spline driver in the multifunctional tool until the nut is engaged.
   4.4 Turn the spline driver clockwise to unscrew the pinion.

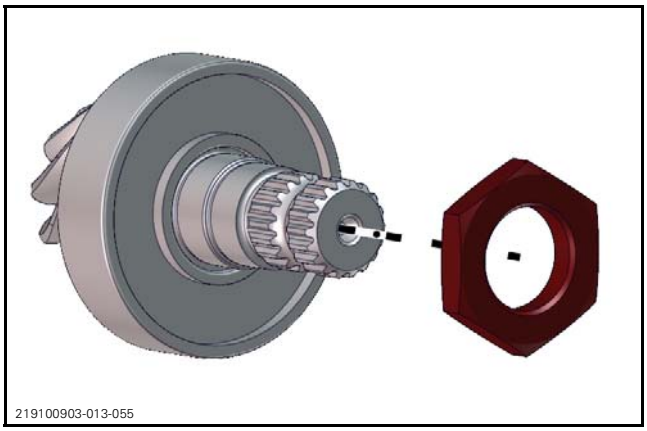
219100903-013-055

5. Remove bearing from pinion gear.

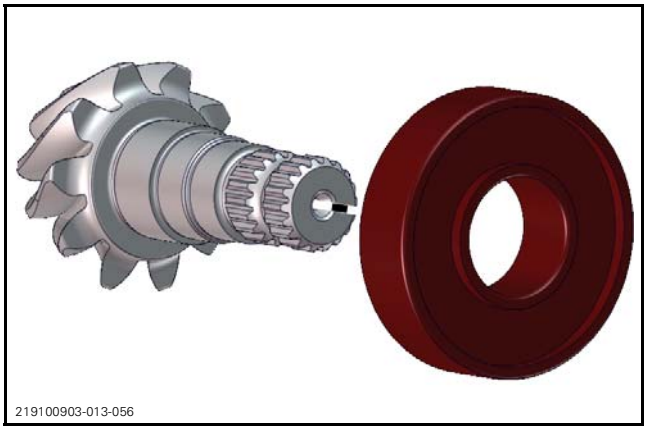
219100903-013-056

6. Remove and discard the bearing.

The assembly is the reverse of the disassembly procedure.

REAR DRIVE (HD5)

SERVICE TOOLS

Description	Part Number	Page
BACKLASH MEASUREMENT TOOL	529 035 665	7
BELLOWS CLAMP PLIERS	529 036 120	5
CV JOINT EXTRACTOR	529 036 005	5
SPANNER SOCKET	529 035 649	9

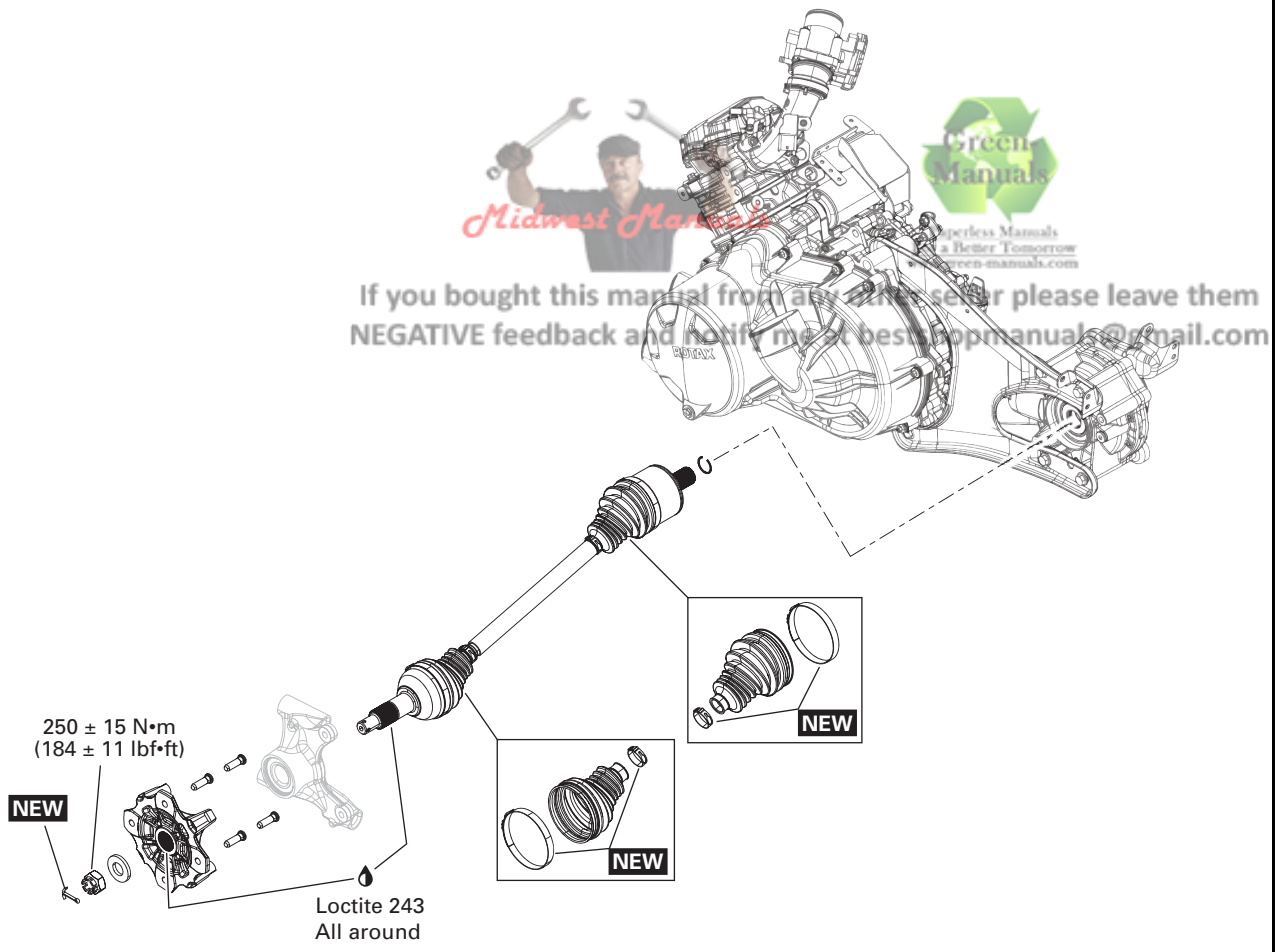

If you bought this manual from any other seller please leave them NEGATIVE feedback and notify me at bestshopmanuals@gmail.com

NEW = Component must be replaced when removed.

tmr2017-432-100_a

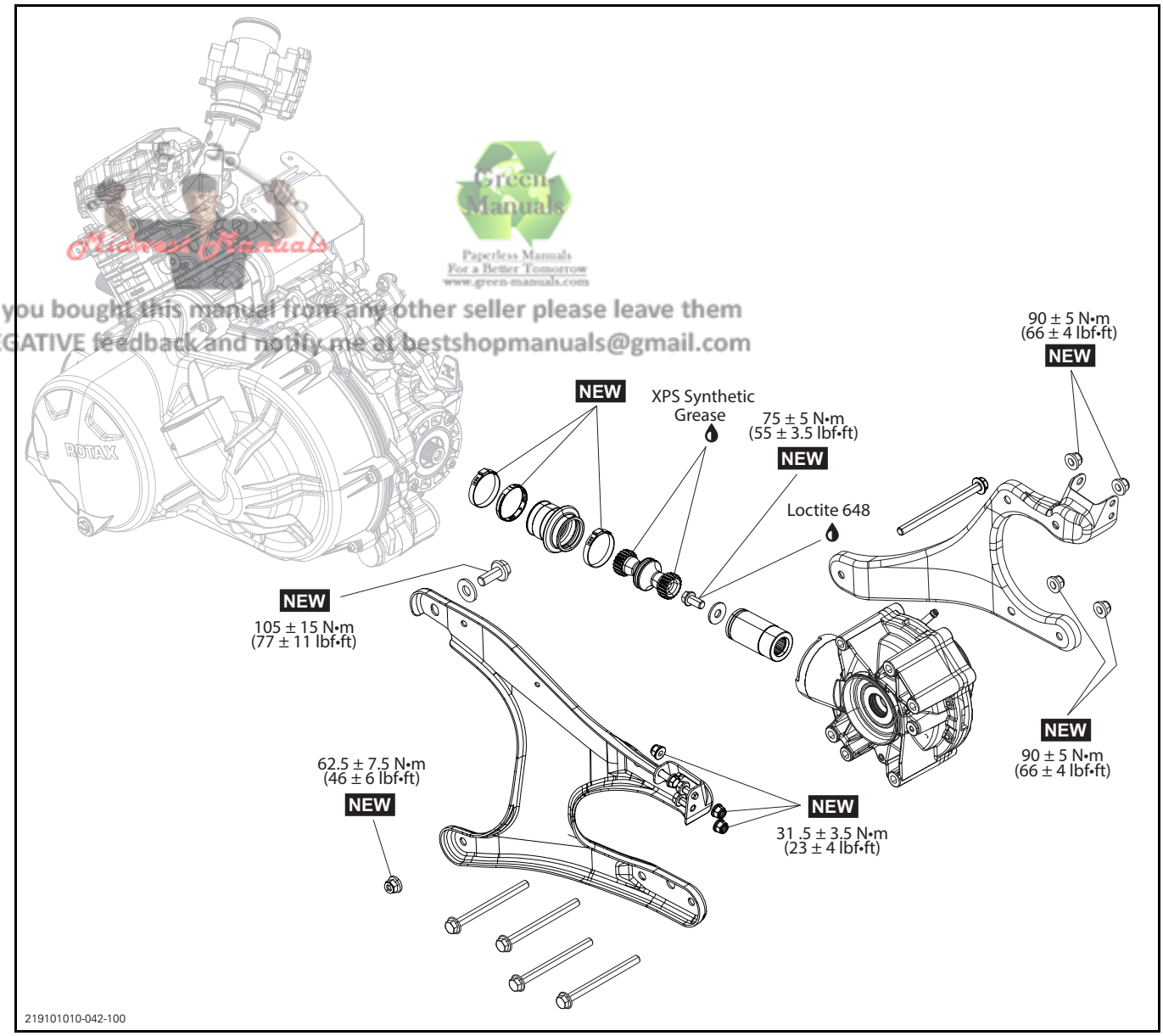

Midwest Manuals
Green Manuals
Paperless Manuals
For a Better Tomorrow
www.green-manuals.com
If you bought this manual from any other seller please leave them
NEGATIVE feedback and notify me at bestshopmanuals@gmail.com

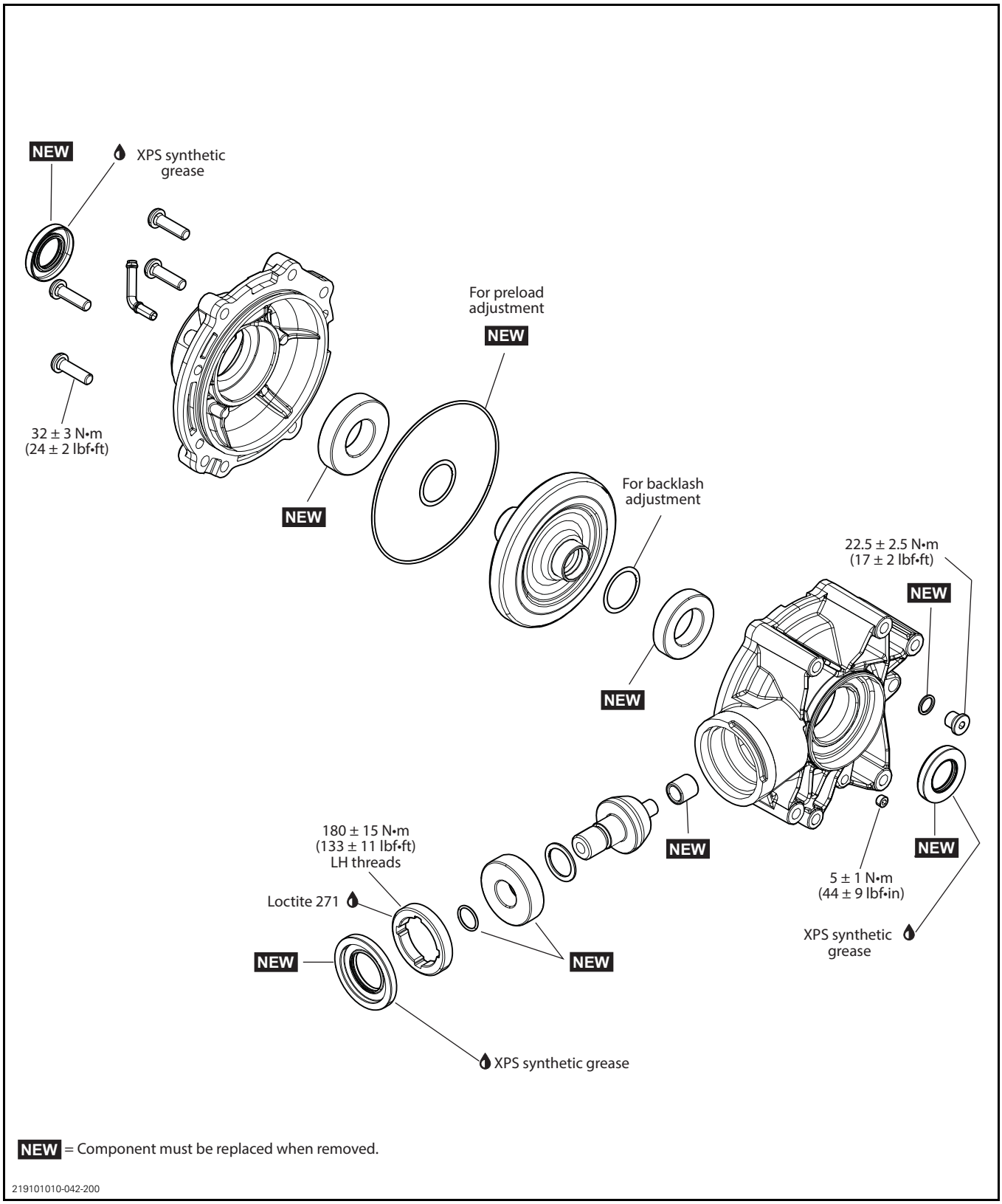
NEW
XPS synthetic grease
32 ± 3 N•m
(24 ± 2 lbf•ft)
For preload adjustment
NEW
NEW
For backlash adjustment
NEW
22.5 ± 2.5 N•m
(17 ± 2 lbf•ft)
NEW
NEW
NEW
5 ± 1 N•m
(44 ± 9 lbf•in)
XPS synthetic grease
180 ± 15 N•m
(133 ± 11 lbf•ft)
LH threads
Loctite 271
NEW
NEW
XPS synthetic grease
NEW = Component must be replaced when removed.
219101010-042-200

PROCEDURES

WHEEL HUB

Removing the Wheel Hub

1. Lift and support vehicle. Refer to *INTRODUCTION* section for proper procedure.
2. Select the 4WD position and place the transmission lever on PARK
3. Remove caliper from knuckle if applicable. Refer to *BRAKES* subsection.
4. Remove the following parts:
   – Cotter pin
   – Castellated nut
   – Belleville washer.

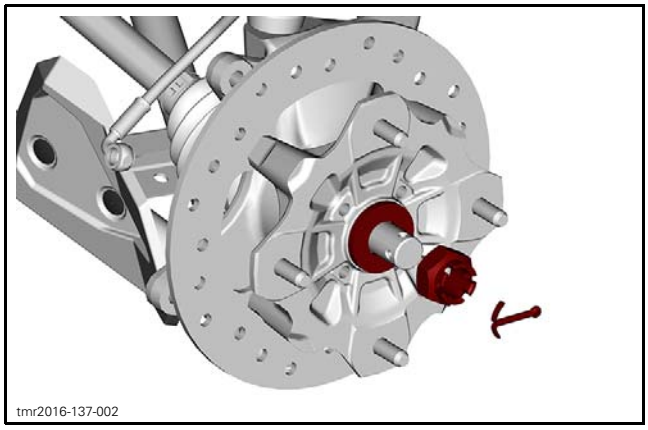
tmr2016-137-002

5. Remove wheel hub.

Inspecting the Wheel Hub

Check wheel studs for damaged threads and overall conditions

Check wheel hub for cracks or other damages.

Check inner splines for wear or other damages.

Replace wheel hub and / or studs if any damage is detected.

Installing the Wheel Hub

The installation is the reverse of removal procedure. However, pay attention to the following.

Apply service products and tighten fasteners as per exploded view.

Install Belleville washer with its domed side outwards.

NOTE: Tighten the castellated nut further if required to be able to install the cotter pin.

Install a new cotter pin.

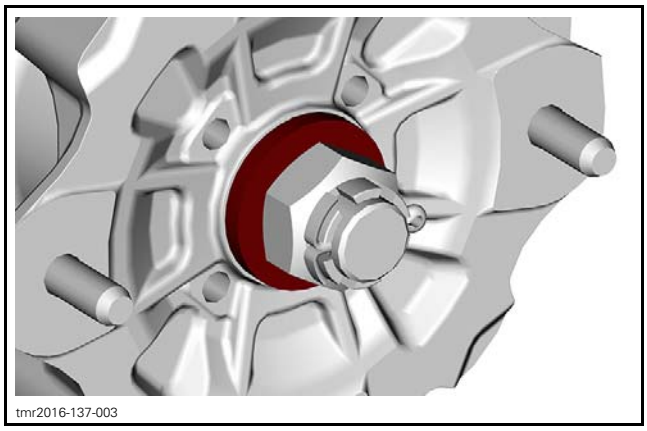
tmr2016-137-003

DRIVE SHAFT

Removing the Rear Drive Shaft

1. Remove the wheel hub. Refer to procedure in this subsection.
2. Remove the knuckle. Refer to *STEERING SYSTEM* subsection.
3. Pry drive shaft out of final drive unit.
4. Discard the stop ring at the end of the shaft.

Inspecting the Rear Drive Shaft

Inspect the condition of boots. If there is any damage or evidence of leaking lubricant, replace them. Refer to *DRIVE SHAFT BELLOWS*.

Check splines for excessive wear. Replace if necessary.

NOTE: If the splines on plunging joint are worn, a check of differential inner splines should be done.

Installing the Rear Drive Shaft

The installation is the reverse of the removal procedure. However, pay attention to the following.

Install a new stop ring.

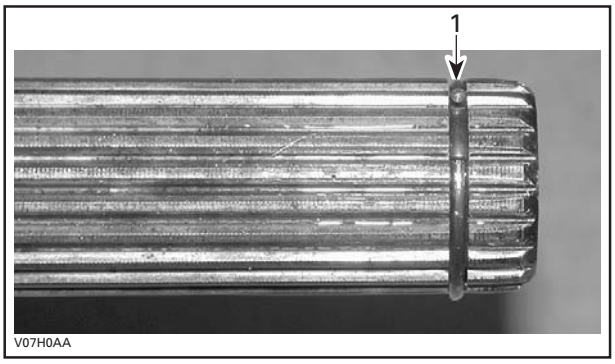

V07H0AA

1. Stop ring

Apply service products and tighten fasteners as per exploded view.

DRIVE SHAFT BELLOWS

Removing the Drive Shaft Bellows

1. Remove the drive shaft from the vehicle.
2. Remove drive shaft bellows clamps.

REQUIRED TOOL	
BELLOWS CLAMP PLIERS (P/N 529 036 120)	

3. Dislodge the large bellows end.
4. Separate the joint from the shaft. Two procedures can be done.

Without the Special Tool

1. Clamp joint housing in a vise.
2. Align shaft with joint.
3. Pull hard on shaft to remove from joint.
4. Remove bellows from drive shaft.
5. Remove and discard the circlip.

With the Special Tool

REQUIRED TOOL	
CV JOINT EXTRACTOR (P/N 529 036 005)	

1. Place drive shaft in vice with the joint downward.
2. Install the cv joint extractor on the bearing.

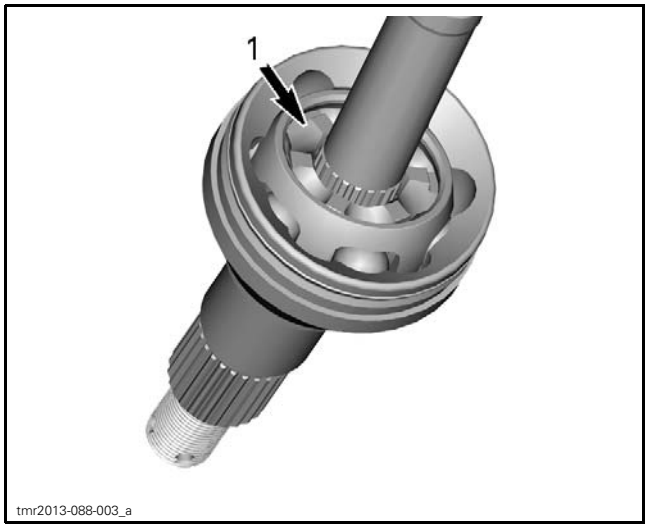

TYPICAL - CV JOINT SHOWN
1. Position joint extractor tool here

3. With a hammer, hit on the tool to separate joint from shaft.
4. When joint and shaft are separated, remove bellows from drive shaft.
5. Remove and discard the circlip.

Installing the Drive Shaft Bellows

The installation is the reverse of the removal procedure. However, pay attention to the following.

Install the new circlip.

Pack bearing area with grease included with the new bellows kit.

NOTE: Do not use or add other grease.

FINAL DRIVE UNIT

NOTE: In the following illustrations, some parts have been hidden for clarity.

Removing the Final Drive Unit (Engine in Vehicle)

1. Drain the final drive unit oil. Refer to *MAINTENANCE PROCEDURES*.
2. Remove both drive shafts. Refer to procedure in this subsection.
3. Disconnect the vent hose.
4. Cut the Oetiker clamp located near the engine.

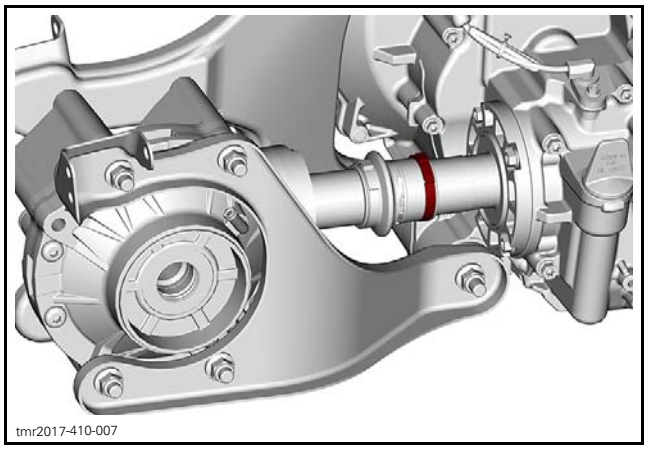

5. Remove the bolts securing the RH support the rear engine support.

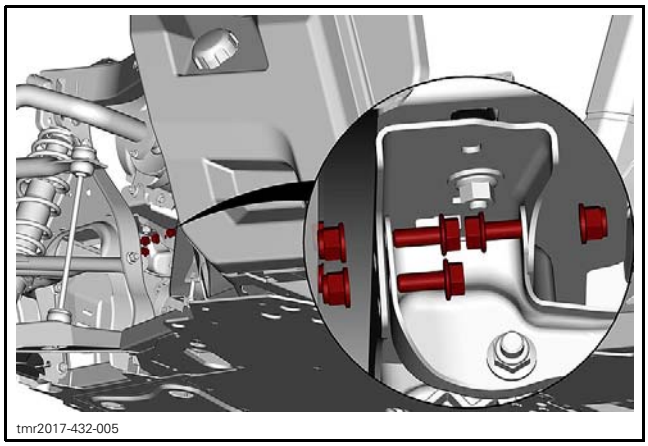
tmr2017-432-005

6. Remove the RH side support but leave the screws in place.

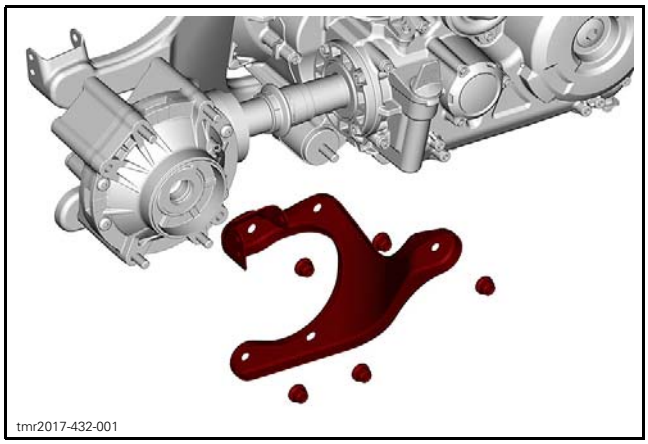
tmr2017-432-001

7. Support the final drive unit and remove the four screws on the LH side.

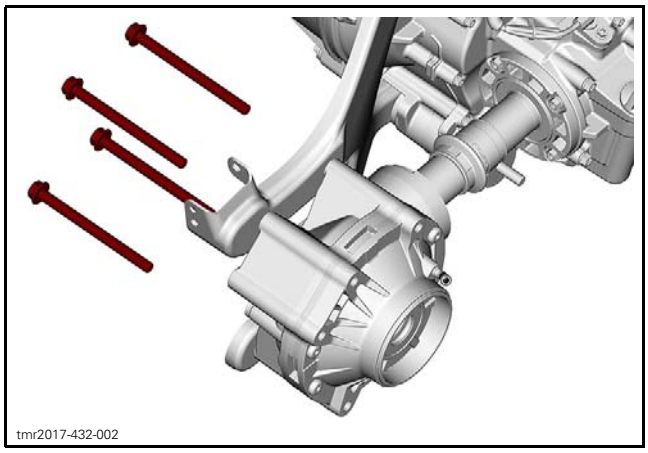
tmr2017-432-002

8. Pull the final drive unit off the engine.

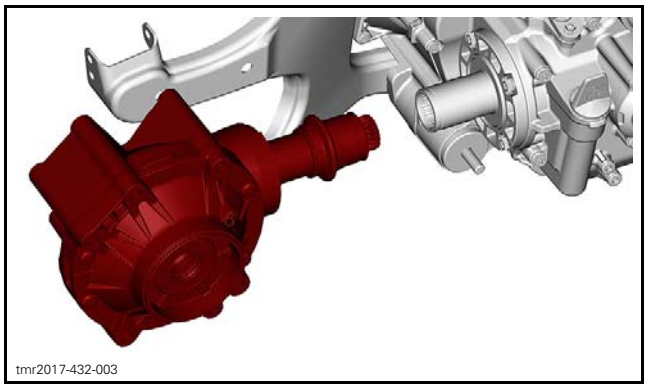
tmr2017-432-003

Removing the Final Drive Unit (Engine Out of the Vehicle)

1. Drain the final drive unit oil. Refer to *MAINTENANCE PROCEDURES*.
2. Remove the exhaust system. Refer to the *EXHAUST SYSTEM* subsection.
3. Remove the rear engine support.

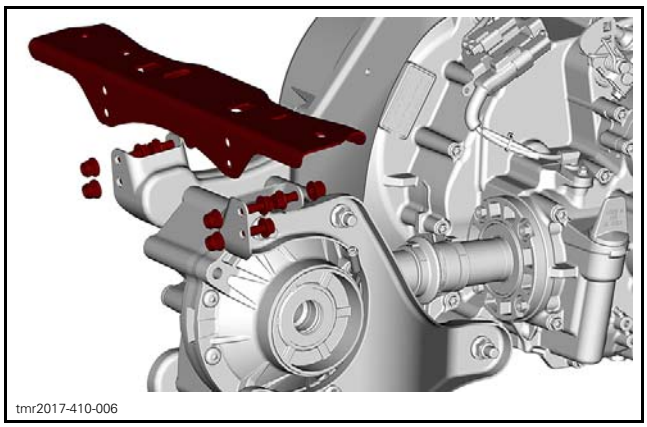
tmr2017-410-006

4. Cut the Oetiker clamp located near the engine.

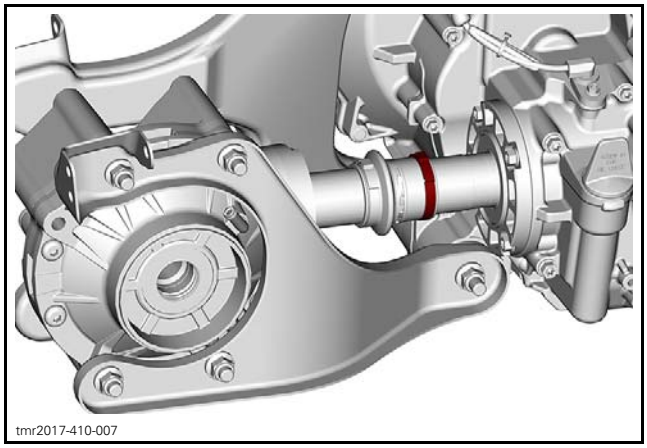
tmr2017-410-007

5. Remove the final drive unit supports front bolt.

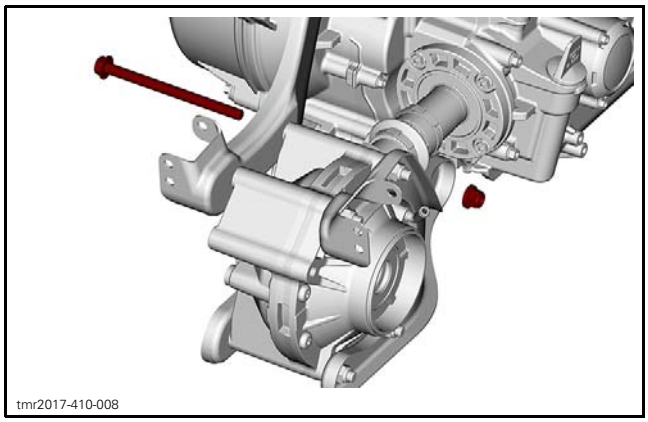
tmr2017-410-008

6. Remove the LH final drive unit support upper screw.

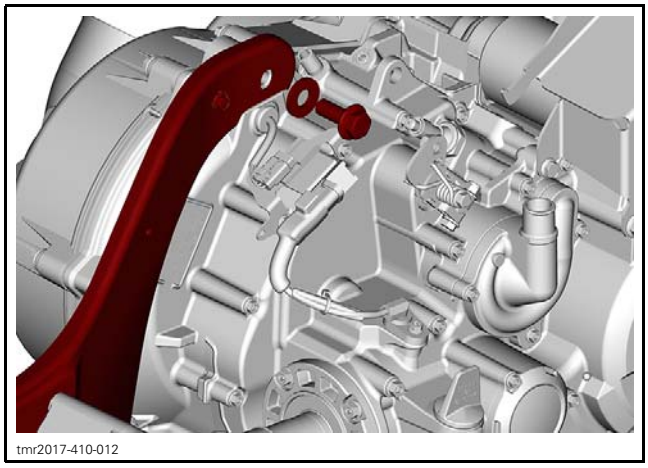
tmr2017-410-012

7. Pull the final drive unit, along with the supports, off the engine.

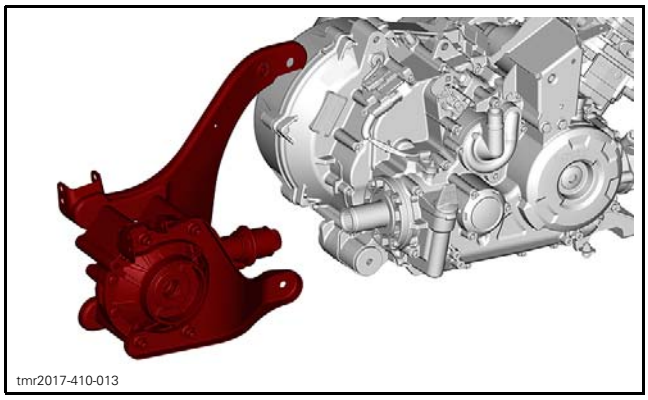
tmr2017-410-013

8. Remove the LH and RH supports from the final drive unit.

Inspecting the Final Drive (Assembled)

Manually turn final drive gear; it should turn smoothly. Repair if necessary.

Check if oil seals are brittle, hard or damaged. Replace if necessary.

Measuring the Backlash

Remove the coupling sleeve from the pinion shaft. Refer to *COUPLING SLEEVES* in this subsection.

Using a dial indicator and the BACKLASH MEASUREMENT TOOL (P/N 529 035 665), measure the backlash.

Place the backlash measurement tool at the end of pinion shaft.

From center of tool bolt, measure 25.4 mm (1 in) and scribe a mark on the tab.

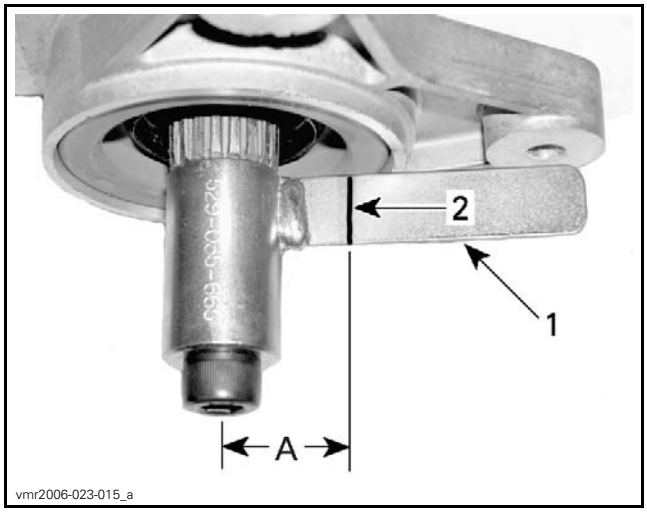

vmr2006-023-015_a

1. *Tab of backlash measurement tool*
2. *Mark on tab*

A. 25.4 mm (1 in)

Position the dial indicator tip against the tab at a 90° angle and right on the previously scribed mark.

Gently, move the tool tab back and forth. Note the backlash result.

vmr2006-023-016

Rotate pinion gear 1/2 turn and recheck backlash. Note the result.

Rotate pinion gear 1 turn and recheck backlash.

BACKLASH SPECIFICATION
0.1 mm (.004 in) to 0.35 mm (.014 in)

If backlash is out of specification, split final drive housing and adjust shim thickness as per following guideline.

BACKLASH ADJUSTMENT GUIDELINE	
BACKLASH MEASUREMENT	WHAT TO DO
Below 0.1 mm (.004 in)	Add shim(s) and recheck backlash
Above 0.35 mm (.014 in)	Remove shim(s) and recheck backlash

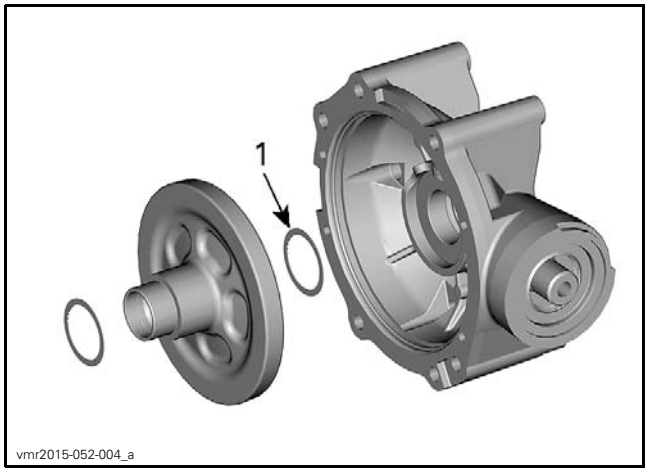

1. Backlash shim

Measuring the Preload Inspection

Screw the propeller shaft screw in pinion gear.

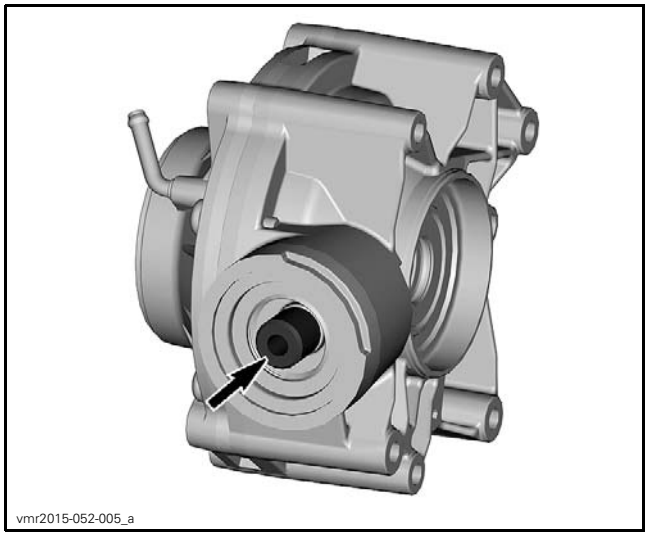

Using a needle torque wrench, measure the preload.

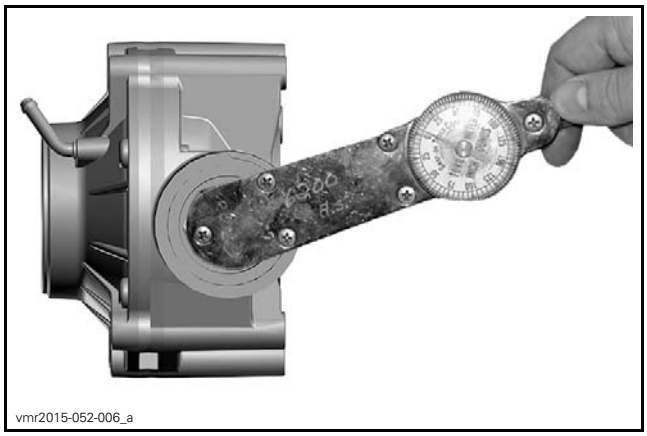

PRELOAD SPECIFICATION
0.06 N•m (.5 lbf•**in**) to 0.50 N•m (4 lbf•**in**)

If preload is out of specification, split final drive housing and adjust shim thickness as per following guideline.

PRELOAD GUIDELINE	
PRELOAD MEASUREMENT	WHAT TO DO
Below 0.06 N•m (.5 lbf•**in**)	Add shim(s) and recheck preload
Above 0.50 N•m (4 lbf•**in**)	Remove shim(s) and recheck preload

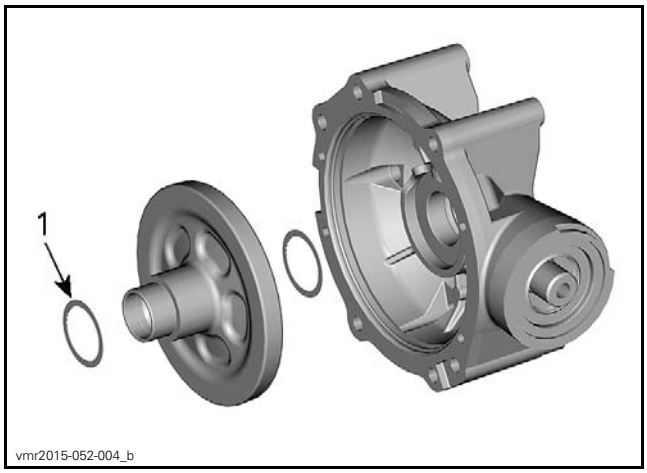

1. Preload shim

Disassembling the Final Drive

Ring Gear

Remove the coupling sleeve from the pinion shaft.

Remove the final drive housing screws.

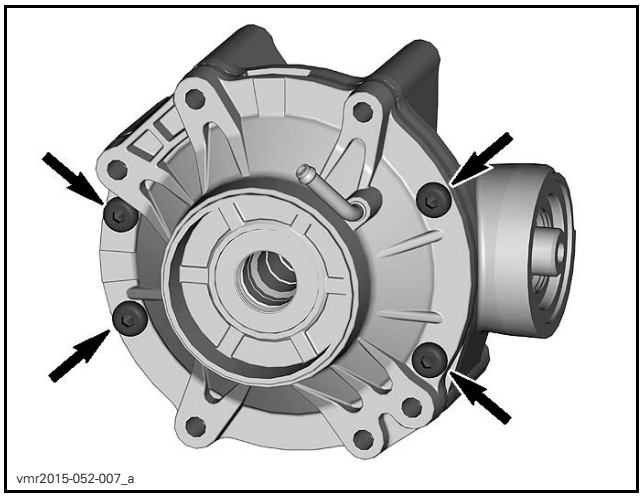

Split final drive housings.

NOTE: Be careful to keep track of shims on ring gear.

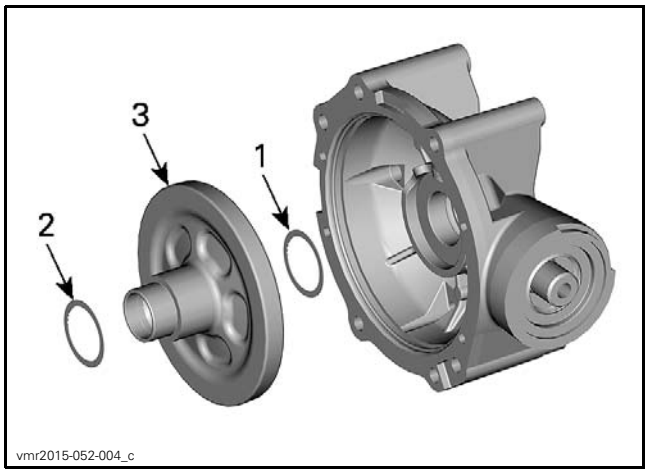

1. *Backlash shim*
2. *Preload shim*
3. *Ring gear*

Extract ring gear out of half housing.

Pinion Gear

Remove and discard oil seal.

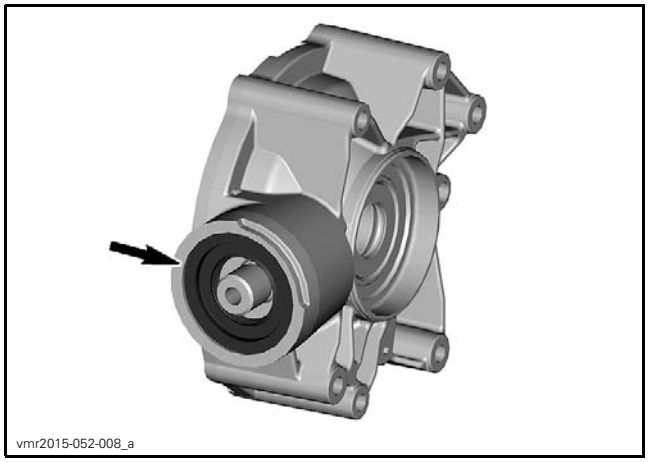

Unscrew the pinion nut. Use the SPANNER SOCKET (P/N 529 035 649).

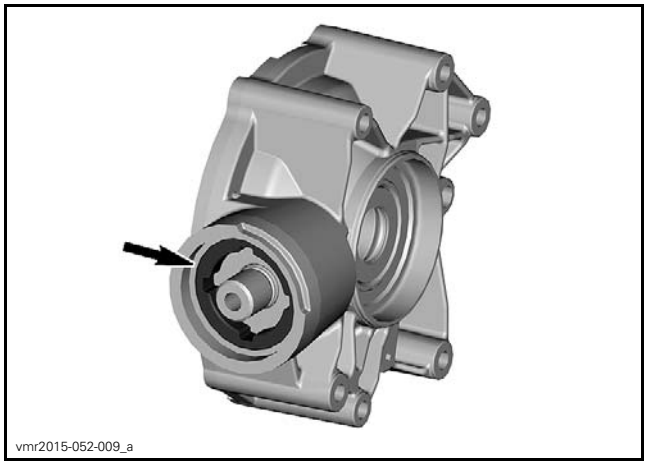

NOTE: The pinion nut is left hand threaded. Unscrew by turning clockwise.

Remove the bearing along with the pinion gear. Be careful to keep track of shims. Discard bearing.

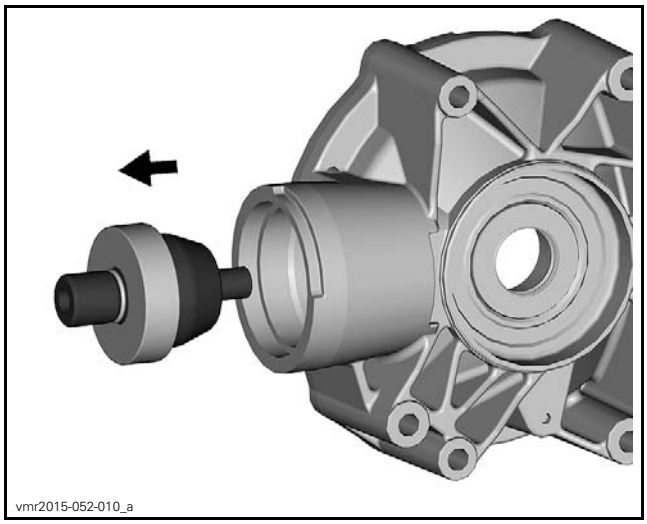

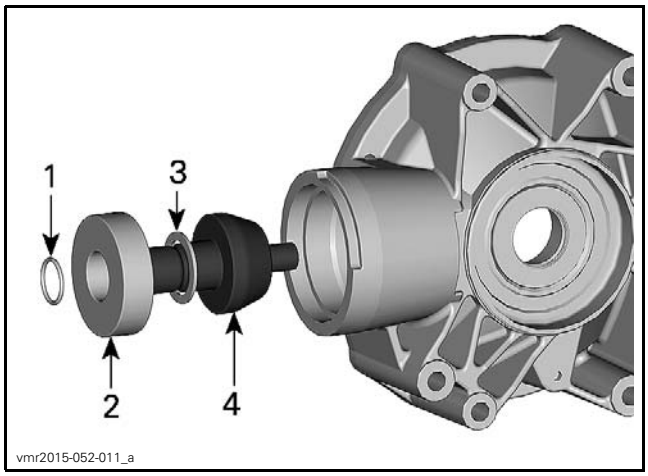

1. O-ring
2. Ball bearing
3. Pinion gear shim
4. Pinion gear

The pinion gear and bearing can be easily removed using the following suggested tool:

PART	QTY
Pipe: 83 mm (3-1/4 in) diameter x 127 mm (5 in)	1
Threaded rod: M10 x 1.25 x 178 mm (7 in)	1
M10 x 1.25 nut	3
Flat bar	1

Remove and discard the needle bearing.

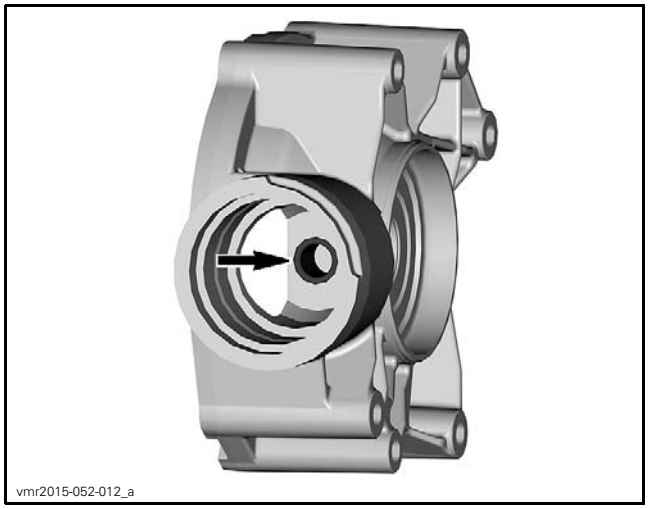

Installing the Final Drive Unit

The installation is the reverse of removal procedure, however, pay attention to the following.

Apply service products and tighten fasteners as per exploded view.

NOTE: If the engine was removed, tighten the final drive unit bolts first.

Fill the final drive unit with recommended oil. Refer to *MAINTENANCE PROCEDURES*.

PROPELLER SHAFT

Removing the Propeller Shaft

1. Remove the final drive unit. Refer to procedure in this subsection.
2. Cut the Oetiker clamp located in the center of the bellows.

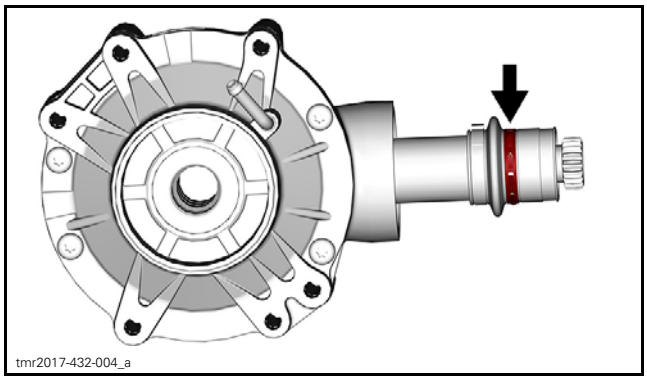

3. Pull the propeller shaft off the final drive unit.

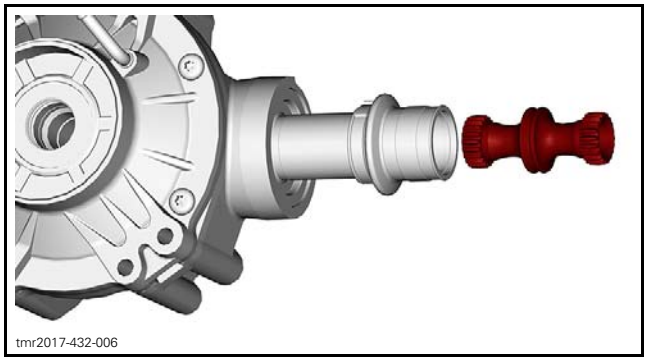

Inspecting the Propeller Shaft

Inspect the bellows. If there is any damage, replace it.

Check splines for excessive wear. Replace if the propeller shaft if damaged.

Installing the Propeller Shaft

The installation is the reverse of removal procedure, however, pay attention to the following.

Apply service products and tighten fasteners as per exploded view.

COUPLING SLEEVES

Removing the Final Drive Unit Coupling Sleeve

1. Remove the propeller shaft, refer to procedure in this subsection.
2. Cut the remaining Oetiker clamp, then remove the propeller shaft bellows.
3. Hold the coupling sleeve in a vice.

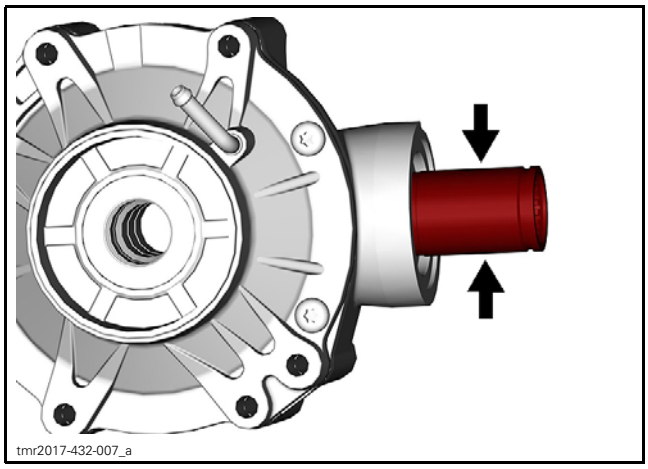

HOLD HERE

NOTICE **Be careful not to damage the coupling sleeve.**

4. While supporting the final drive unit, remove the screw and washer retaining the coupling sleeve to the pinion shaft.

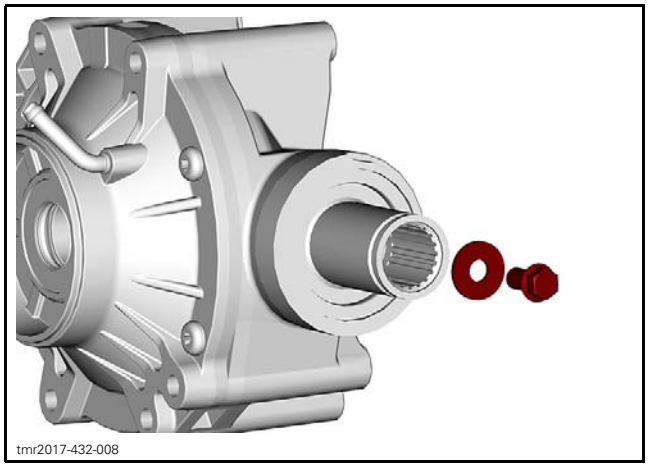

5. Separate the final drive unit and the coupling sleeve.

Removing the Engine Coupling Sleeve

1. Remove the final drive unit. Refer to procedure in this subsection.
2. Place the gearbox in PARK.
3. Remove the screw and washer retaining the coupling sleeve to the output shaft.

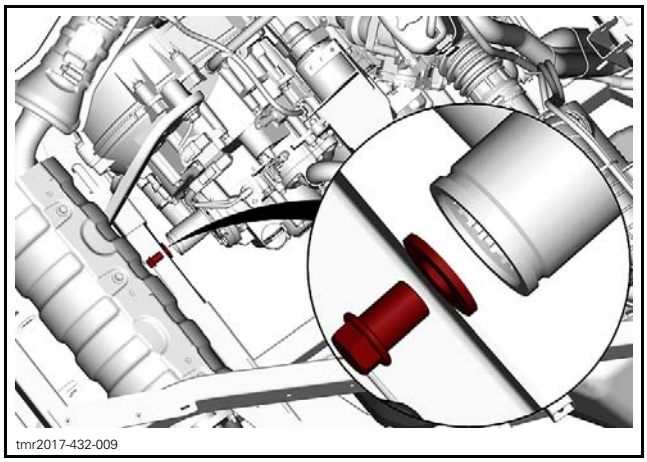

4. Remove the coupling sleeve.

Installing the Coupling Sleeve

The installation is the reverse of removal procedure, however, pay attention to the following.

Apply service products and tighten fasteners as per exploded view.

REAR DRIVE (HD8 - HD10)

SERVICE TOOLS

Description	Part Number	Page
BELLOWS CLAMP PLIERS	529 036 120	3
CV JOINT EXTRACTOR	529 036 005	3

SERVICE PRODUCTS

Description	Part Number	Page
LOCTITE 243 (BLUE)	293 800 060	2–3
SYNTHETIC GREASE (EUR)	779231	3
SYNTHETIC GREASE	779162	3

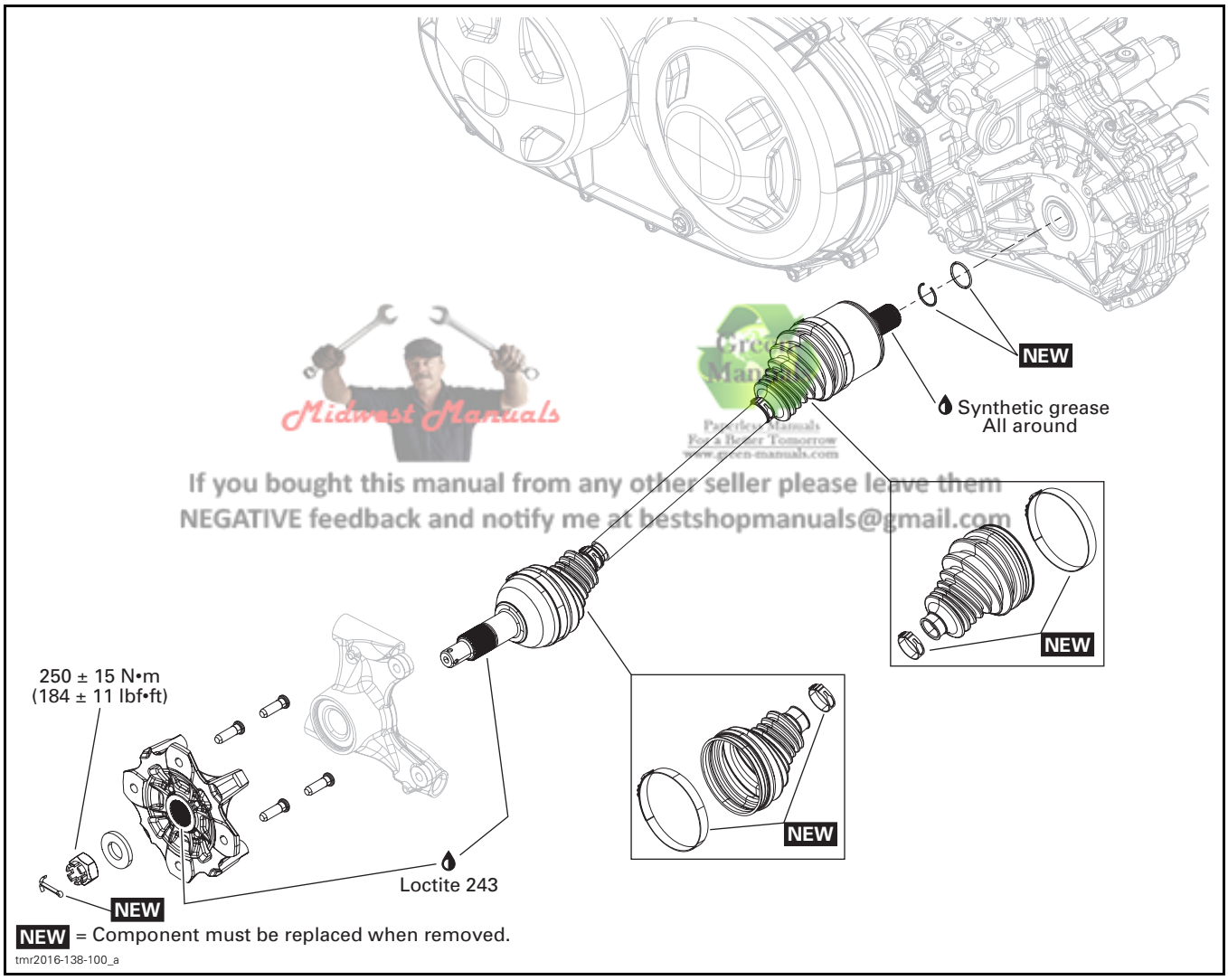

Midwest Manuals
If you bought this manual from any other seller please leave them NEGATIVE feedback and notify me at bestshopmanuals@gmail.com

PROCEDURES

WHEEL HUB

Removing the Wheel Hub

1. Lift and support vehicle. Refer to *INTRODUCTION* subsection for proper procedure.
2. Select the 4WD position, place the transmission lever on "P", and make sure the rear differential is in **Lock** position.
3. Remove caliper from knuckle. Refer to *BRAKES* subsection.
4. Remove the following parts:
   – Cotter pin
   – Castellated nut
   – Belleville washer.

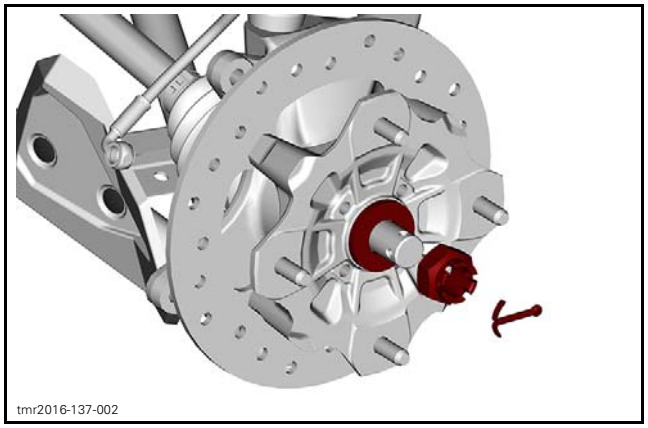
tmr2016-137-002

5. Remove wheel hub.

Inspecting the Wheel Hub

Check wheel studs for damaged threads and overall conditions

Check wheel hub for cracks or other damages.

Check inner splines for wear or other damages.

Replace wheel hub and / or studs if any damage is detected.

Installing the Wheel Hub

The installation is the reverse of removal procedure. However, pay attention to the following.

Apply the recommended service product all around drive shaft and wheel hub splines.

RECOMMENDED SERVICE PRODUCT
LOCTITE 243 (BLUE) (P/N 293 800 060)

Install Belleville washer with its domed side outwards.

Tighten the castellated nut.

TIGHTENING TORQUE	
Castellated nut	250 N•m ± 15 N•m (184 lbf•ft ± 11 lbf•ft)

NOTICE **Tighten further castellated nut if required to align grooves with drive shaft hole.**

Install a new cotter pin.

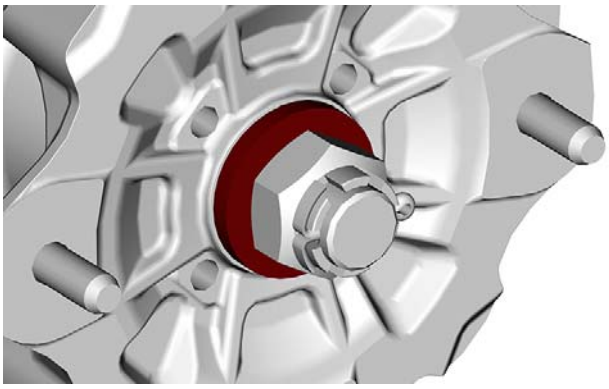
tmr2016-137-003

DRIVE SHAFT

Removing the Rear Drive Shaft

1. Remove the wheel hub. Refer to procedure in this subsection.
2. Remove the knuckle. Refer to *STEERING SYSTEM* subsection.
3. Strongly pull drive shaft out of gearbox.

NOTE: Keep track of the O-ring between the drive shaft and the gearbox.

4. Discard the stop ring at the end of the shaft.

Inspecting the Rear Drive Shaft

Inspect the condition of bellows. If there is any damage or evidence of leaking lubricant, replace them. Refer to *DRIVE SHAFT BELLOWS*.

Check splines for excessive wear. Replace if necessary.

NOTE: If the splines on plunging joint are worn, a check of differential inner splines should be done.

Installing the Rear Drive Shaft

The installation is the reverse of the removal procedure. However, pay attention to the following.

Apply the recommended service product all around drive shaft and wheel hub splines.

RECOMMENDED SERVICE PRODUCT
LOCTITE 243 (BLUE) (P/N 293 800 060)

Install a new stop ring.

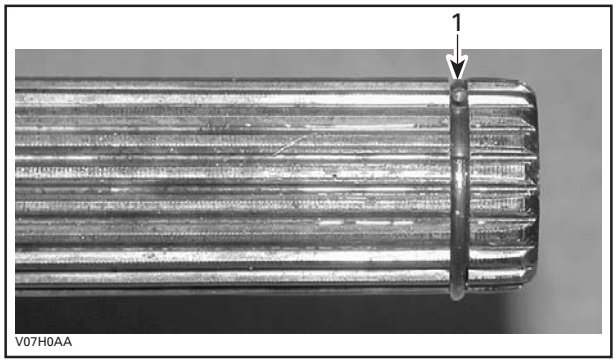

1. Stop ring

Apply grease all around splines at the gearbox end, from the plunging joint up to the stop ring.

RECOMMENDED SERVICE PRODUCT	
Scandinavia	SYNTHETIC GREASE (EUR) (P/N 779231)
Other countries	SYNTHETIC GREASE (P/N 779162)

Ensure the O-ring is properly installed.

DRIVE SHAFT BELLOWS

Removing the Drive Shaft Bellows

1. Remove the drive shaft from the vehicle.
2. Remove drive shaft bellows clamps.

REQUIRED TOOL	
BELLOWS CLAMP PLIERS (P/N 529 036 120)	

3. Dislodge the large bellows end.
4. Separate the joint from the shaft. Two procedures can be done.

Without the Special Tool

1. Clamp joint housing in a vise.
2. Align shaft with joint.
3. Pull hard on shaft to remove from joint.
4. Remove bellows from drive shaft.
5. Remove and discard the circlip.

With the Special Tool

REQUIRED TOOL	
CV JOINT EXTRACTOR (P/N 529 036 005)	

1. Place drive shaft in vice with the joint downward.
2. Install the cv joint extractor on the bearing.

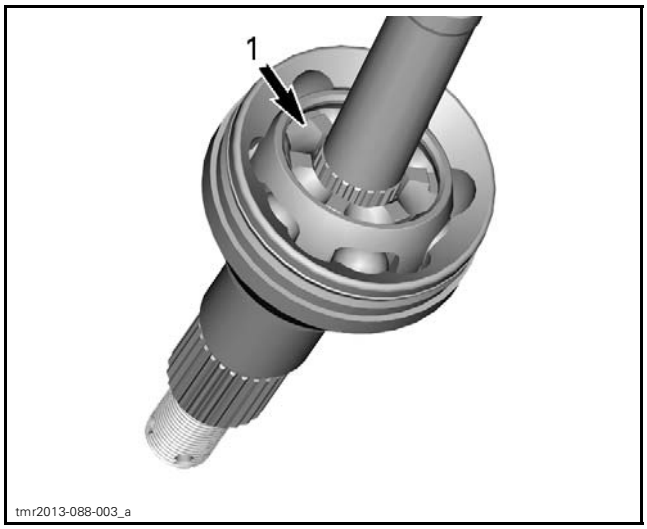

TYPICAL - CV JOINT SHOWN
1. Position joint extractor tool here

3. With a hammer, hit on the tool to separate joint from shaft.
4. When joint and shaft are separated, remove bellows from drive shaft.
5. Remove and discard the circlip.

Installing the Drive Shaft Bellows

The installation is the reverse of the removal procedure. However, pay attention to the following.

Install the new circlip.

Pack bearing area with grease included with the new bellows kit.

NOTE: Do not use or add other grease.

STEERING SYSTEM

SERVICE PRODUCTS

Description	Part Number	Page
LOCTITE 767 (ANTISEIZE LUBRICANT)	293 800 070	7
SYNTHETIC GREASE (EUR)	779231	7
SYNTHETIC GREASE	779162	7

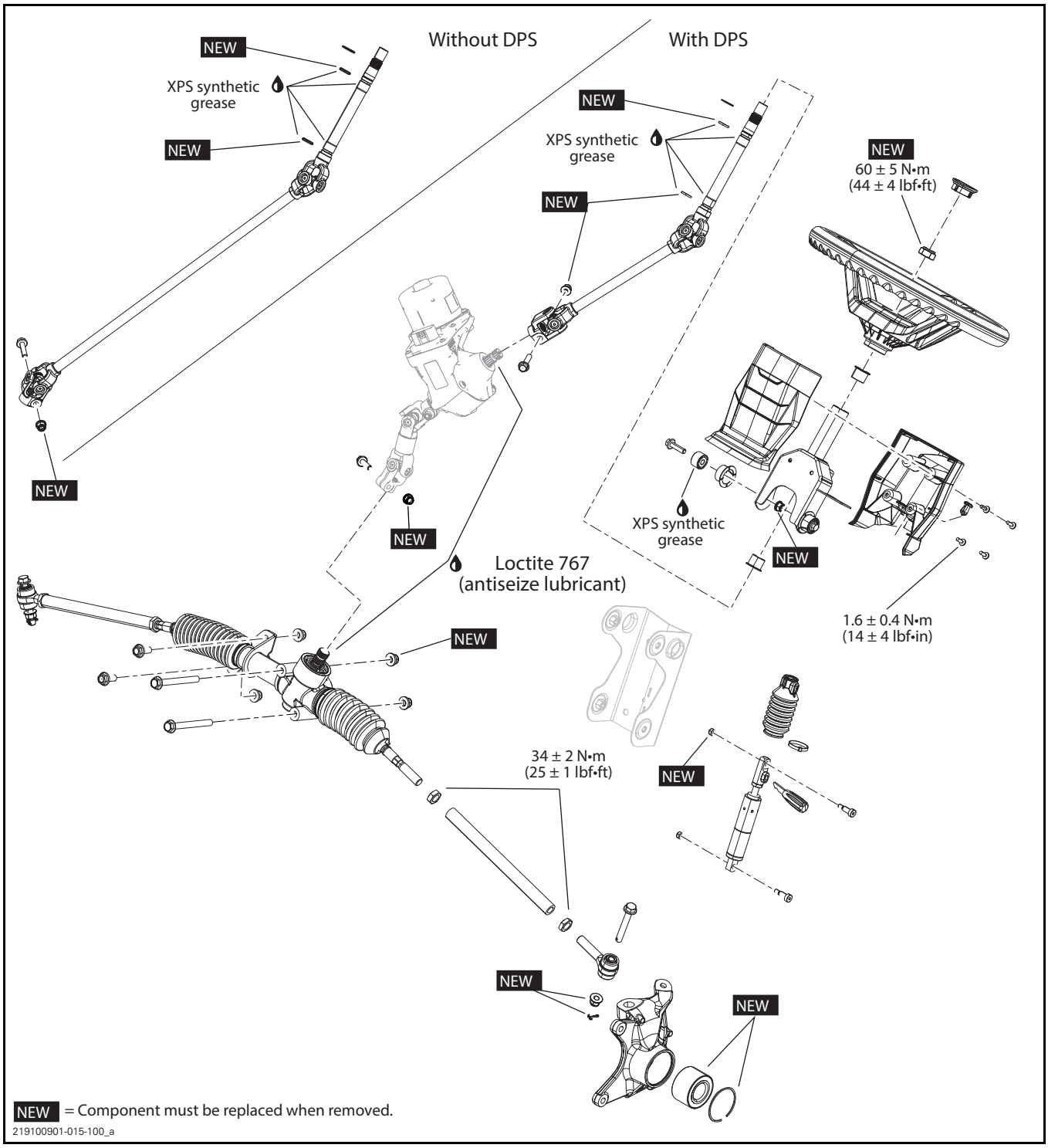
Without DPS
With DPS
NEW
XPS synthetic grease
NEW
NEW
XPS synthetic grease
NEW
NEW
60 ± 5 N•m
(44 ± 4 lbf•ft)
NEW
NEW
XPS synthetic grease
NEW
Loctite 767
(antiseize lubricant)
1.6 ± 0.4 N•m
(14 ± 4 lbf•in)
NEW
34 ± 2 N•m
(25 ± 1 lbf•ft)
NEW
NEW
NEW
NEW = Component must be replaced when removed.
219100901-015-100_a

GENERAL

NOTICE **Never perform arc welding in the DPS area. Otherwise, poor DPS operation might occur.**

The procedures described below are the same for the RH and LH sides, unless otherwise instructed.

ADJUSTMENT

ALIGNING THE WHEELS

1. Place vehicle on a level surface.
2. Inflate tires to recommended pressure.
3. Find rack and pinion center to center as follows:
   3.1 Calculate the total steering wheel rotations from side to side.
   3.2 Position the steering wheel at **half** the total rotations.
4. Check steering wheel position:
   4.1 If steering wheel is centered (within ± 5°), go to **step 6**.
   4.2 If steering wheel is offset more than 5°, go to **step 5**.

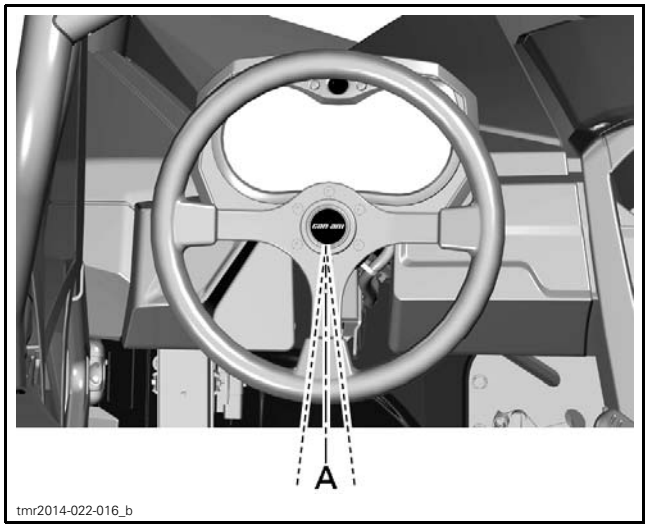

TYPICAL
A. Steering wheel angle ± 5°

5. Reposition steering wheel on steering shaft as follows:

   NOTICE **Make sure rack and pinion does not move during steering wheel repositioning.**

   5.1 Remove steering wheel. Refer to *REMOVING THE STEERING COLUMN*.
   5.2 Reinstall steering wheel to the closest centered position (nearest spline).
6. Center steering wheel.

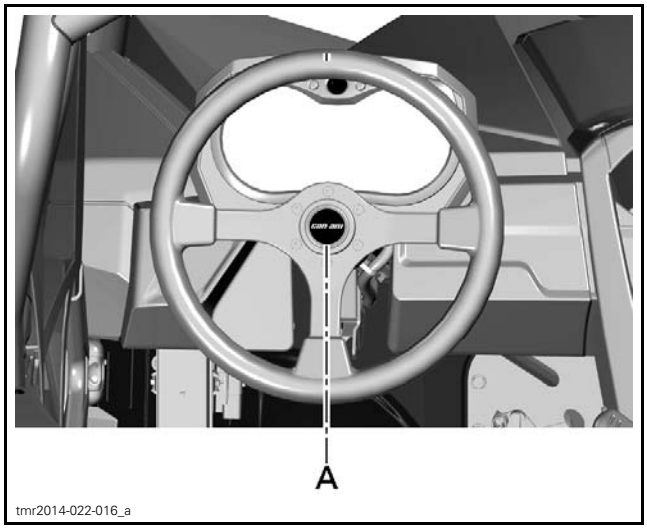

TYPICAL
A. Steering wheel centered

7. Place one mark on each front tire with a chalk at height of the center of the wheel. The mark must be under the frame, from a side point of view.

NOTE: The marks must be at the exact same height on each front tire.

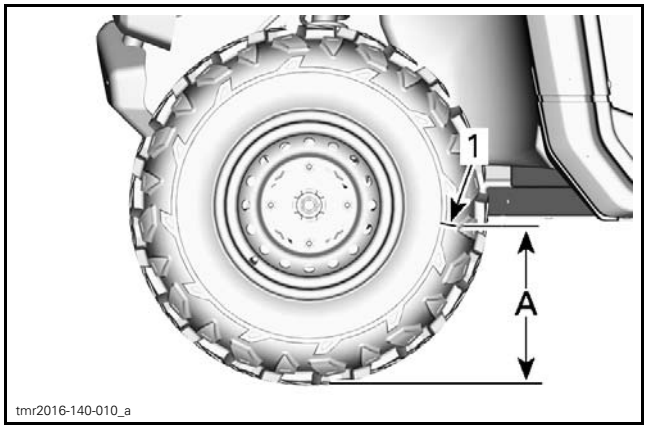

FRONT LH VIEW
1. Mark tire
A. Distance from ground to mark

8. Measure and note the distance between the center of the wheels, level with the marks on the tires.

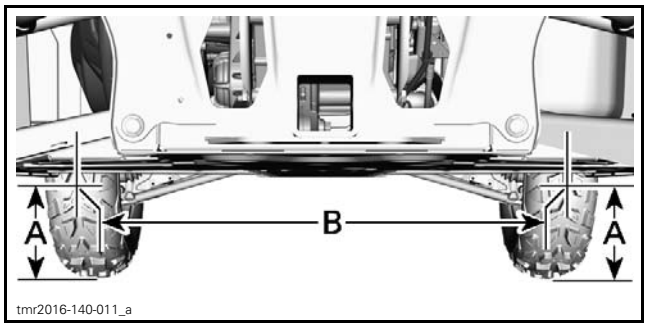

REAR VIEW
A. Height of mark
B. Measure distance

9. Move vehicle so that the marks are positioned towards front at the same height.

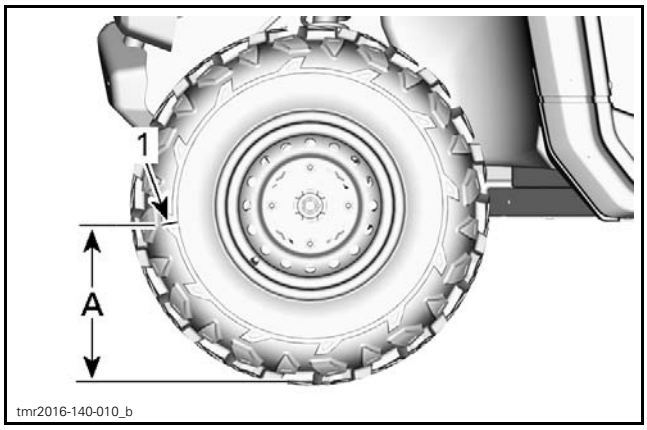

FRONT LH VIEW AFTER ROTATION
A. Height of mark

10. Measure and note the distance between the same two marks as step 8.

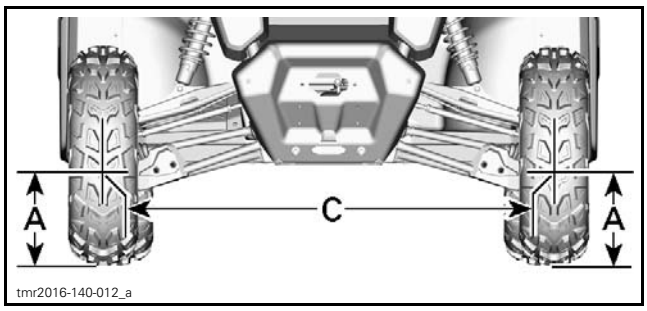

FRONT VIEW
A. Height of mark
C. Measure distance

11. The difference between the front and the rear measurements must be as per the following specification:

MAXIMUM TOE
0 mm ± 4.8 mm (0 in ± .19 in)

Adjusting the Front Toe

1. If the front wheel toe measurement is out of specification lock steering wheel at center.
2. Measure the distance between vehicle center and each wheel.

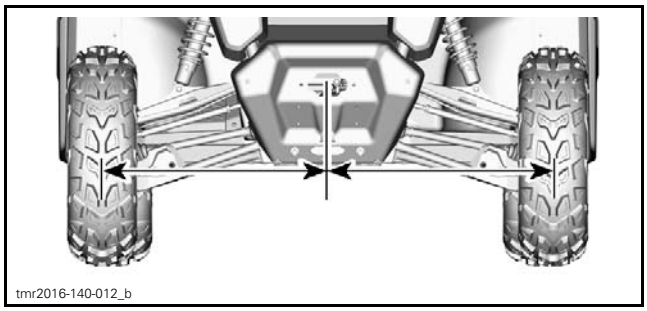

DISTANCE BETWEEN VEHICLE CENTER AND WHEEL

3. Loosen tie-rod end locking nut.

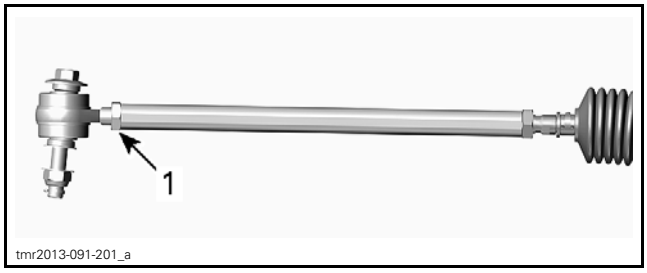

FRONT TIE ROD ASSEMBLY
1. Tie rod end locking nut

4. Turn tie-rod adjustment sleeve until distance measured in step 2 is equal for each wheel.

NOTE: Adjustment sleeve and inner tie rod will turn together.

⚠ WARNING

The minimum inner tie-rod and tie rod end engagement in adjustment sleeve must be 25 mm (1 in).

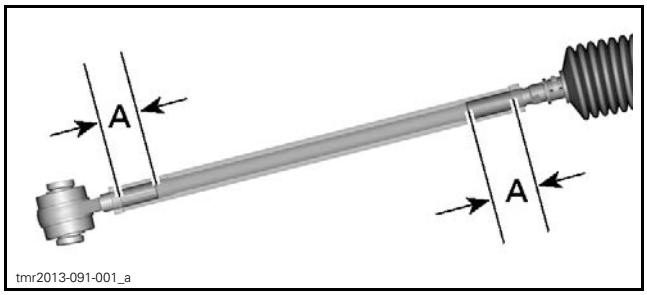

FRONT TIE ROD ASSEMBLY
A. Minimum engagement length

5. Tighten tie-rod adjustment sleeve locking nuts to specification.

TIGHTENING TORQUE	
Tie rod end locking nut	34 N•m ± 2 N•m (25 lbf•ft ± 1 lbf•ft)

6. Recheck that vehicle toe is within limits by repeating procedure.

MAINTENANCE

INSPECTING THE WHEEL BEARING

1. Safely lift and support the front of vehicle. Refer to *INTRODUCTION* subsection.
2. Hold wheel by the top and the bottom and move it. Check for any play.

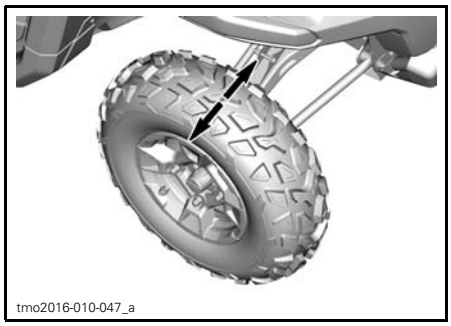

TYPICAL

3. If there is any loose, replace wheel bearing, refer to *STEERING SYSTEM* subsection.

NOTE: To properly locate play during this inspection, be sure to check other components for wear or loose (ball joints, suspension pivots, etc). If necessary repair or replace all defective parts before checking the wheel bearing condition. Be careful not to misjudge loose in the ball joint and loose in the wheel bearing.

INSPECTING THE STEERING SYSTEM

Steering Column

Turn and move steering column to detect any play.

Rack and Pinion

Check rack and pinion boots for:
– Damage
– Cracks.

Replace if necessary.

Tie-Rod End

Check tie-rod end ball joint for:
– Damage
– Pitting
– Play.

Replace if necessary.

TROUBLESHOOTING

UNEQUAL TURNING RADIUS

1. **Rack and pinion not centered during steering system parts installation.**
   - *Refer to ALIGNING THE WHEELS in this subsection.*

PROCEDURES

STEERING WHEEL

Removing the Steering Wheel

1. Remove steering wheel center cap and nut.

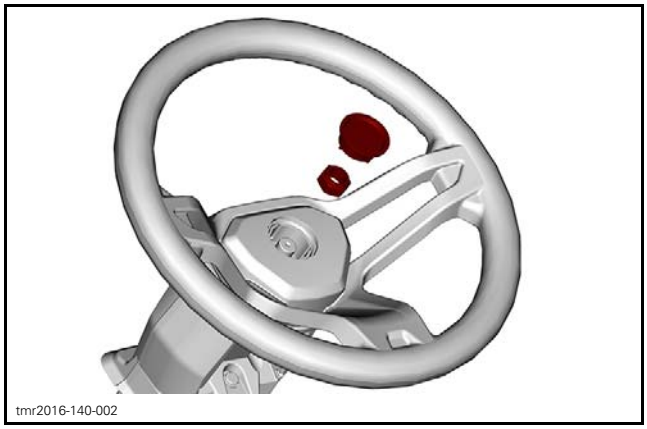

2. Remove the cover.

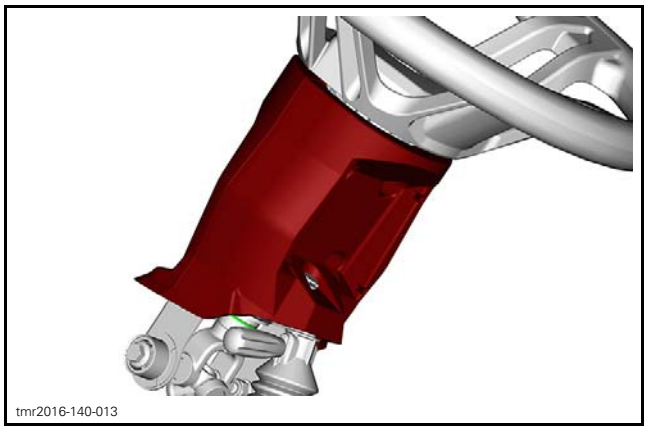

3. Use a suitable wheel extractor that sits on the steering wheel shoulder, around the pivot tube, to remove the steering wheel.

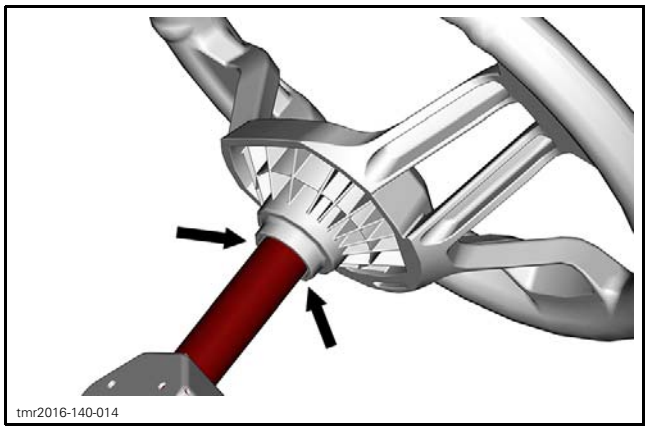
tmr2016-140-014

Installing the Steering Wheel

The installation is the reverse of the removal procedure. However, pay attention to the following.

Install a new nut and tighten to specification.

TIGHTENING TORQUE	
Steering wheel nut	60 N•m ± 5 N•m (44 lbf•ft ± 4 lbf•ft)

STEERING COLUMN

Removing the Steering Column

1. Position the front wheels parallel to the rear wheels.

Models without DPS

2. Remove both front wheels.

All Models

3. Remove the LH and RH lower dash boards. Refer to *BODY* subsection.
4. Remove bolt and nut securing lower U-joint to:
   – DPS unit input shaft, if equipped
   – Rack and pinion shaft (no DPS).

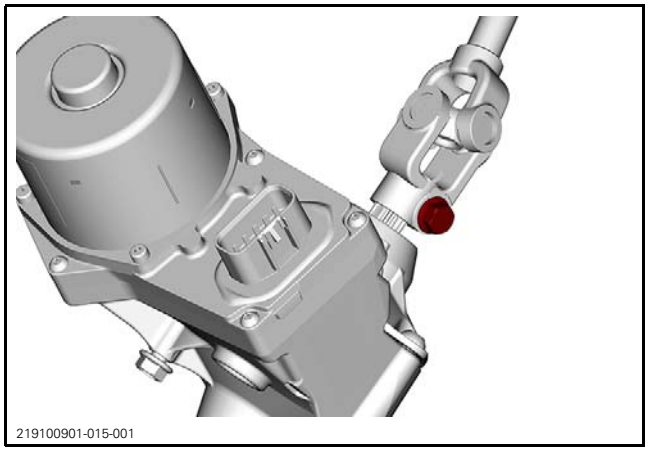
219100901-015-001

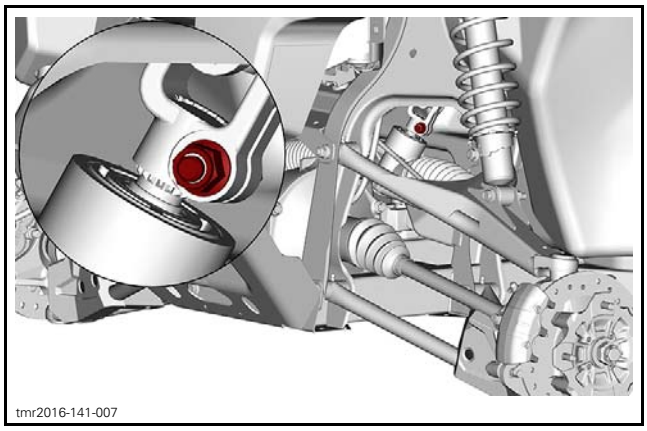
tmr2016-141-007

5. Remove screws on each side of the steering support.

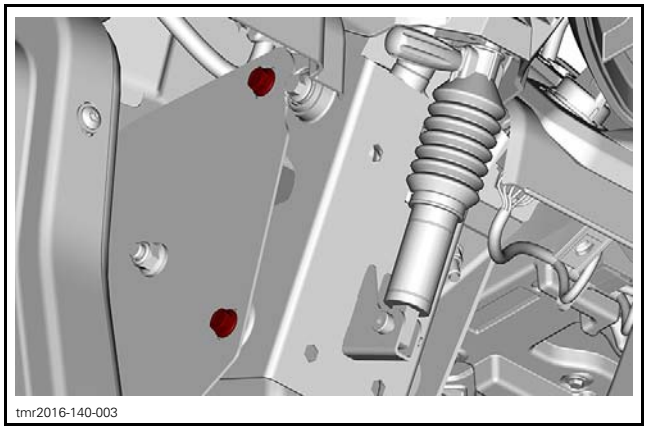
tmr2016-140-003

6. Remove steering column from vehicle.
7. Remove steering support and cover if required.

Inspecting the Steering Column

Check steering column for wear, cracks or bending.

Check steering shaft for wear, cracks or bending.

Ensure universal joints are not worn and move freely.

Ensure steering shaft O-rings are not worn, brittle, hard or otherwise damaged.

Replace if necessary.

Installing the Steering Column

The installation is the reverse of the removal procedure. However, pay attention to the following.

Prior to installing the steering column, position front wheels parallel with longitudinal axis of the vehicle.

Refer to exploded view for proper grease and antiseize application.

COUNTRY	GREASE REQUIRED
Scandinavia	SYNTHETIC GREASE (EUR) (P/N 779231)
All other countries	SYNTHETIC GREASE (P/N 779162)

SERVICE PRODUCT REQUIRED
LOCTITE 767 (ANTISEIZE LUBRICANT) (P/N 293 800 070)

Model with DPS

NOTE: Make sure to match blind spline between the DPS input shaft and the steering column lower U-joint.

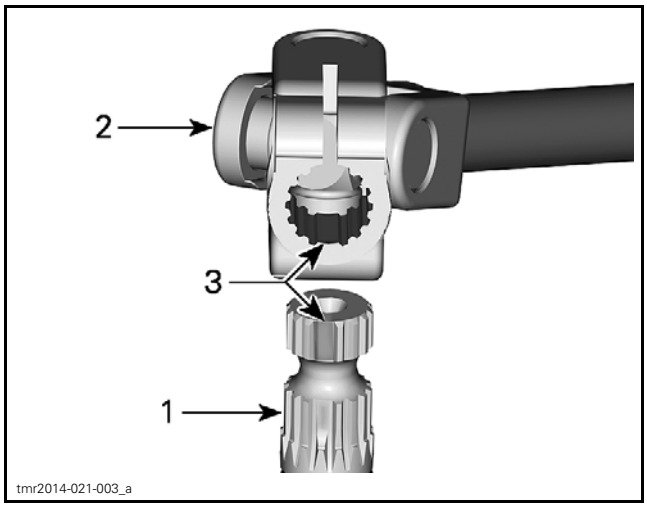

1. *DPS input shaft*
2. *Lower steering column U-joint*
3. *Blind splines (alignment keys)*

All Models

IMPORTANT: Make sure to engage bolt in the input shaft groove.

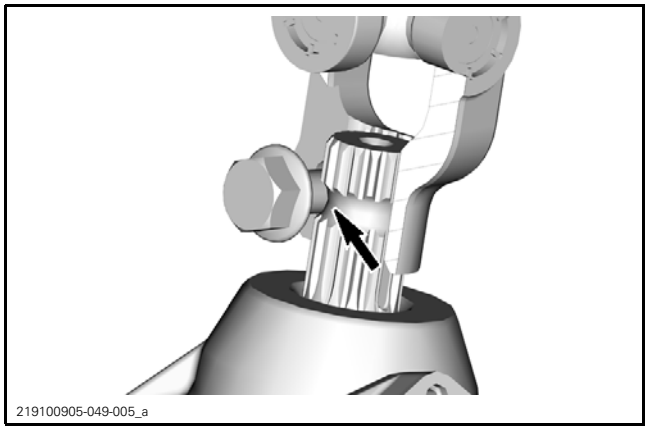

YOKE CROSSCUT - INPUT SHAFT GROOVE

NOTE: Tightening torque must be applied on the nut only.

TIGHTENING TORQUE	
Steering shaft yoke nut	40 N•m ± 5 N•m (30 lbf•ft ± 4 lbf•ft)

Check front wheel alignment. Refer to *ALIGNING THE WHEELS* in this subsection.

RACK AND PINION

Servicing the Rack and Pinion

The rack and pinion cannot be serviced except for replacement of the boots and tie rods.

Removing the Rack and Pinion

1. Remove both front wheels.
2. Detach tie-rod ends from knuckles. Refer to *REPLACING THE TIE ROD END* in this subsection.
3. Remove the lower yoke pinch bolt and nut.

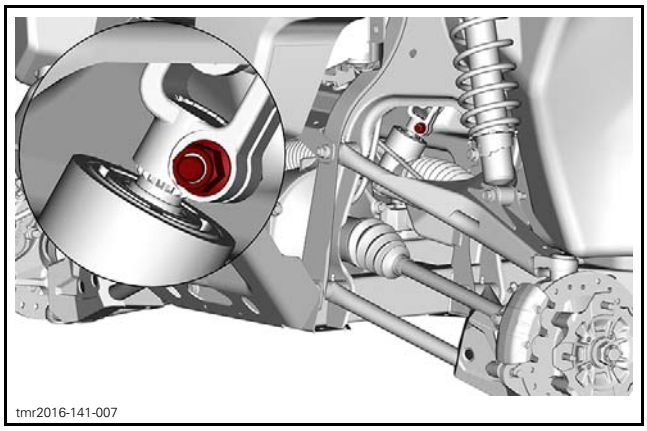

4. Remove the bolts and nuts securing rack and pinion to frame.
5. Disengage the rack and pinion shaft from the lower yoke.
6. From the LH side, remove rack and pinion from vehicle.

Installing the Rack and Pinion

The installation is the reverse of the removal procedure. However, pay attention to the following.

Find rack and pinion center as follows:

– Calculate the total pinion shaft rotations from side to side
– Position the pinion shaft at **half** the total rotations
– Using a paint marker, make an alignment mark on pinion and on the rack housing.

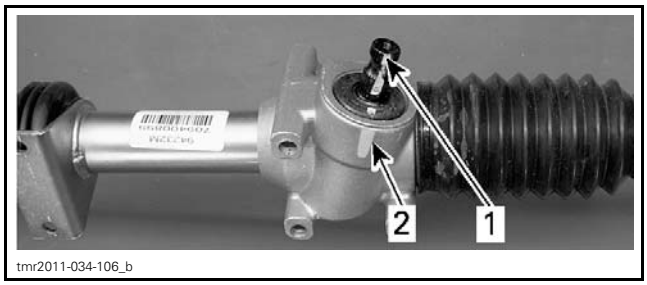

1. Alignment mark on pinion
2. Alignment mark on rack housing

Ensure steering wheel is centered (horizontal).

Apply antiseize on pinion shaft.

Position rack and pinion in frame and engage pinion in lower yoke. Make sure steering wheel remains centered.

Install rack and pinion retaining bolts and nuts.

Install lower yoke pinch bolt and nut.

Check steering alignment. Refer to *ALIGNING THE WHEELS* in this subsection.

TIE ROD ADJUSTMENT SLEEVE

Always perform a thorough inspection before replacing a tie rod adjustment sleeve. If any other components of the steering or suspension systems are damaged, replace the component(s).

Inspecting the Steering components

Before removing any components:

1. Raise front wheels off the ground.
2. Turn steering wheel from stop to stop.
3. Ensure steering wheel turns smoothly.

Before replacing the tie rod adjustment sleeve, inspect the following:

– Knuckle must not be cracked
– Tie rod end bolt must not be bent

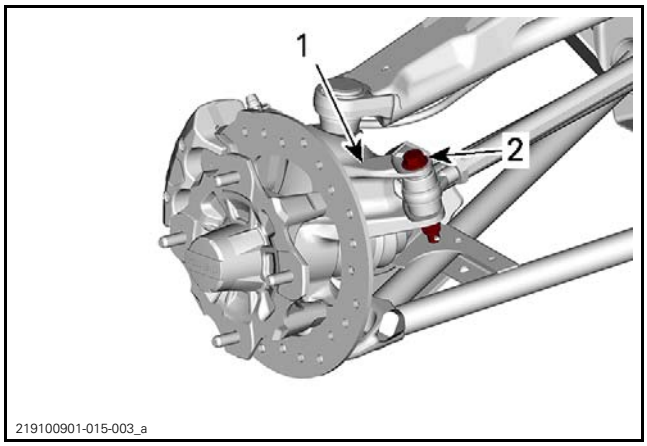

TYPICAL
1. Knuckle
2. Tie rod end bolt

– Rack and pinion shaft must not be loose
– Rack and pinion mounting bracket must not be cracked or deformed
– Rack and pinion steering support must not be cracked or deformed

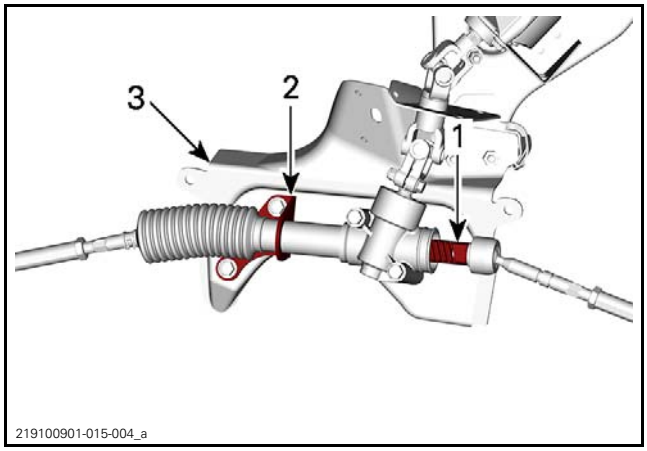

TYPICAL
1. Rack and pinion shaft
2. Rack and pinion mounting bracket
3. Rack and pinion steering support

Removing the Tie Rod

1. Loosen inner tie rod adjustment sleeve locking nut.

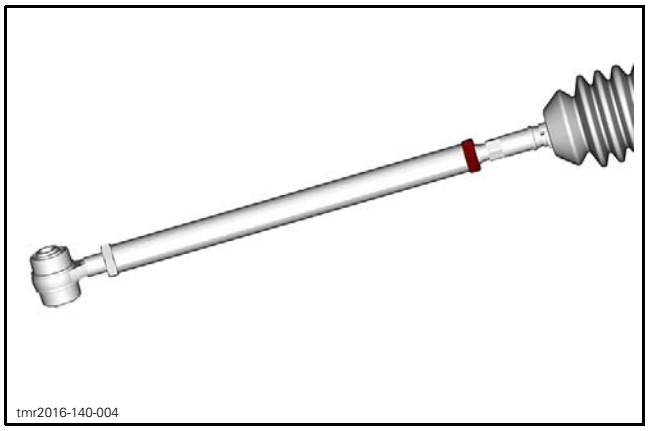

2. Remove tie rod end bolt.

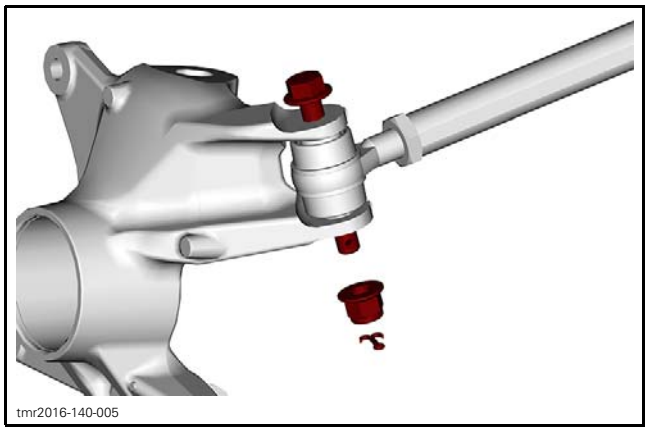

3. Hold inner tie rod and unscrew tie rod adjustment sleeve.

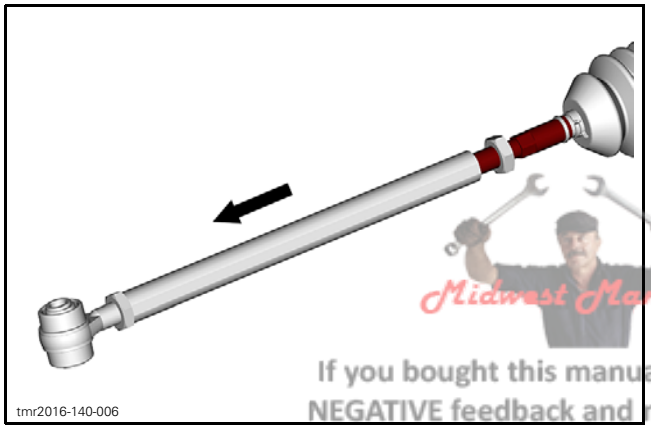

Installing the Tie Rod

The installation is the reverse of the removal procedure. However, pay attention to the following.

Adjust inner and outer tie rods to the nominal engagement length.

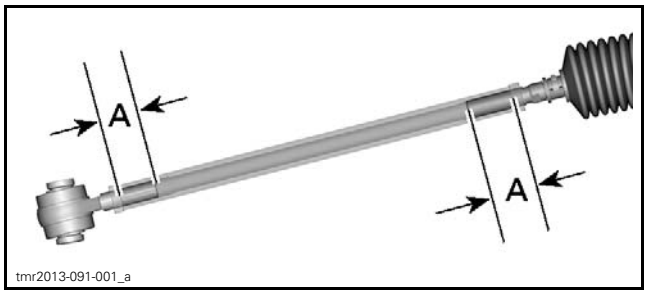

A. Tie rod engagement length

NOMINAL TIE ROD ENGAGEMENT LENGTH A
32 mm (1-1/4 in)

⚠ WARNING

The minimum tie-rod engagement length at both ends must be 25 mm (1 in).

1. Lock inner locking nut.

TIGHTENING TORQUE	
Tie rod locking nut	34 N•m ± 2 N•m (25 lbf•ft ± 1 lbf•ft)

Align vehicle. Refer to *ALIGNING THE WHEELS* in this subsection.

TIE-ROD ENDS

Replacing the Tie-Rod End

1. Remove front wheel.
2. Loosen tie rod locking nut.

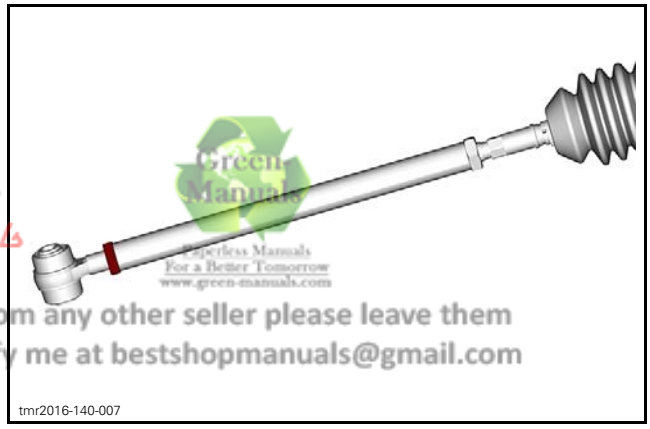

3. Detach tie-rod end.

Midwest Manuals
Green Manuals
Paperless Manuals For a Better Tomorrow www.green-manuals.com
If you bought this manual from any other seller please leave them NEGATIVE feedback and notify me at bestshopmanuals@gmail.com

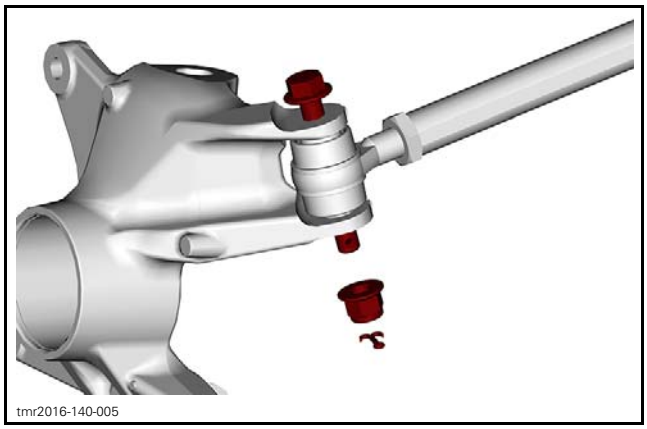

4. Install new tie-rod end.
5. Adjust tie-rod end to the nominal engagement length.

NOTE: The tie rod must be engaged the same amount at both ends for the tie-rod adjustment to be centered.

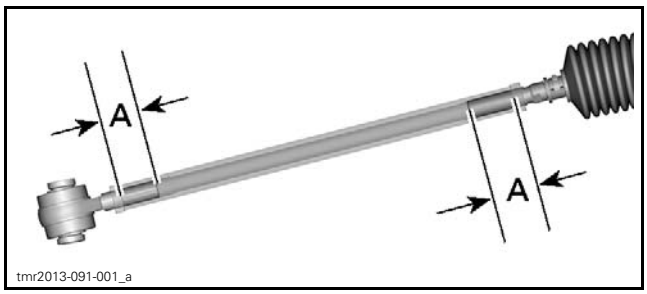

RH TIE ROD ASSEMBLY SHOWN
A. Nominal engagement length

TIE-ROD END NOMINAL ENGAGEMENT LENGTH A
32 mm (1-1/4 in)

⚠ WARNING

The minimum tie-rod engagement length at both ends must be 25 mm (1 in).

6. Tighten tie-rod end locking nut to specification.

TIGHTENING TORQUE	
Tie rod end locking nut	34 N•m ± 2 N•m (25 lbf•ft ± 1 lbf•ft)

7. Attach tie-rod end to steering knuckle.
8. Install a new tie-rod end retaining nut and tighten to specification.

TIGHTENING TORQUE	
Tie rod end retaining nut	48 N•m ± 6 N•m (35 lbf•ft ± 4 lbf•ft)

9. Install a new cotter pin. Both ends of cotter pins must be folded.
10. Install front wheel.
11. Check steering alignment, refer to *ALIGNING THE WHEELS* in this subsection.

KNUCKLES

Removing the Knuckle

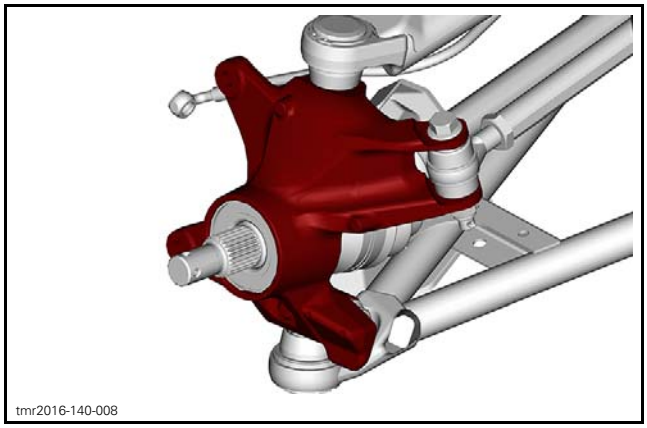

Remove front wheel.

1. Remove caliper, refer to *BRAKES* subsection.
2. Remove wheel hub, refer to *FRONT DRIVE* subsection.
3. Detach tie-rod end from knuckle (front knuckles). Refer to *TIE-ROD ENDS* in this subsection.
4. Detach upper and lower suspension arm from knuckle. Refer to *FRONT SUSPENSION* subsection.
5. Remove knuckle from vehicle.

Inspecting the Knuckle

Check knuckle for cracks or other damages.

Replace if necessary.

Installing the Knuckle

The installation is the reverse of the removal procedure.

WHEEL BEARINGS

Inspecting the Wheel Bearing (Maintenance)

Refer to *MAINTENANCE* in this subsection.

Inspecting the Wheel Bearing (During Component Removal)

Whenever the drive axle or knuckle is removed, check if wheel bearing turns freely and smoothly.

Replace if necessary.

Removing the Wheel Bearing

1. Remove knuckle from vehicle, refer to *REMOVING THE KNUCKLE* in this subsection.
2. Remove and discard circlip.

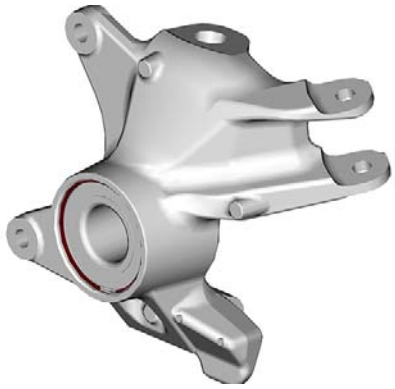

tmr2016-140-009

3. Install knuckle on a press.
4. Remove bearing from knuckle with an appropriate bearing remover.

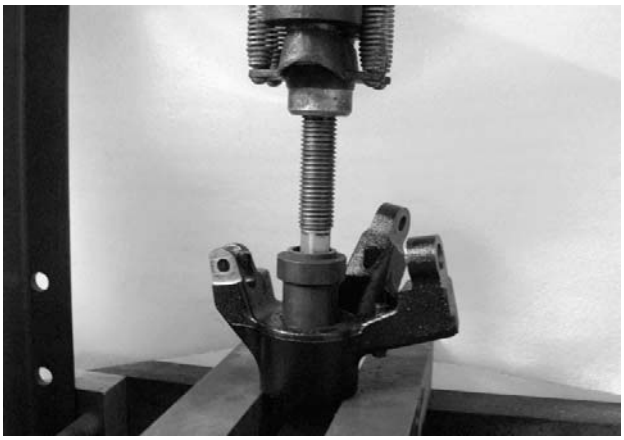

tmr2011-034-109

TYPICAL

NOTE: Heat the knuckle to ease bearing removal.

⚠ WARNING

Clean all grease, outside and inside, from knuckle before heating it.

Installing the Wheel Bearing

The installation is the reverse of the removal procedure. However, pay attention to the following.

To ease wheel bearing installation:

– Place bearing in a freezer for 10 minutes.
– Place knuckle in oven to 100°C (212°F) for 30 minutes maximum.

When knuckle is cooled down, install new circlip.

DYNAMIC POWER STEERING (DPS)

SERVICE TOOLS

Description	Part Number	Page
FLUKE 115 MULTIMETER	529 035 868	5

SERVICE PRODUCTS

Description	Part Number	Page
DIELECTRIC GREASE	293 550 004	12
LOCTITE 767 (ANTISEIZE LUBRICANT)	293 800 070	11

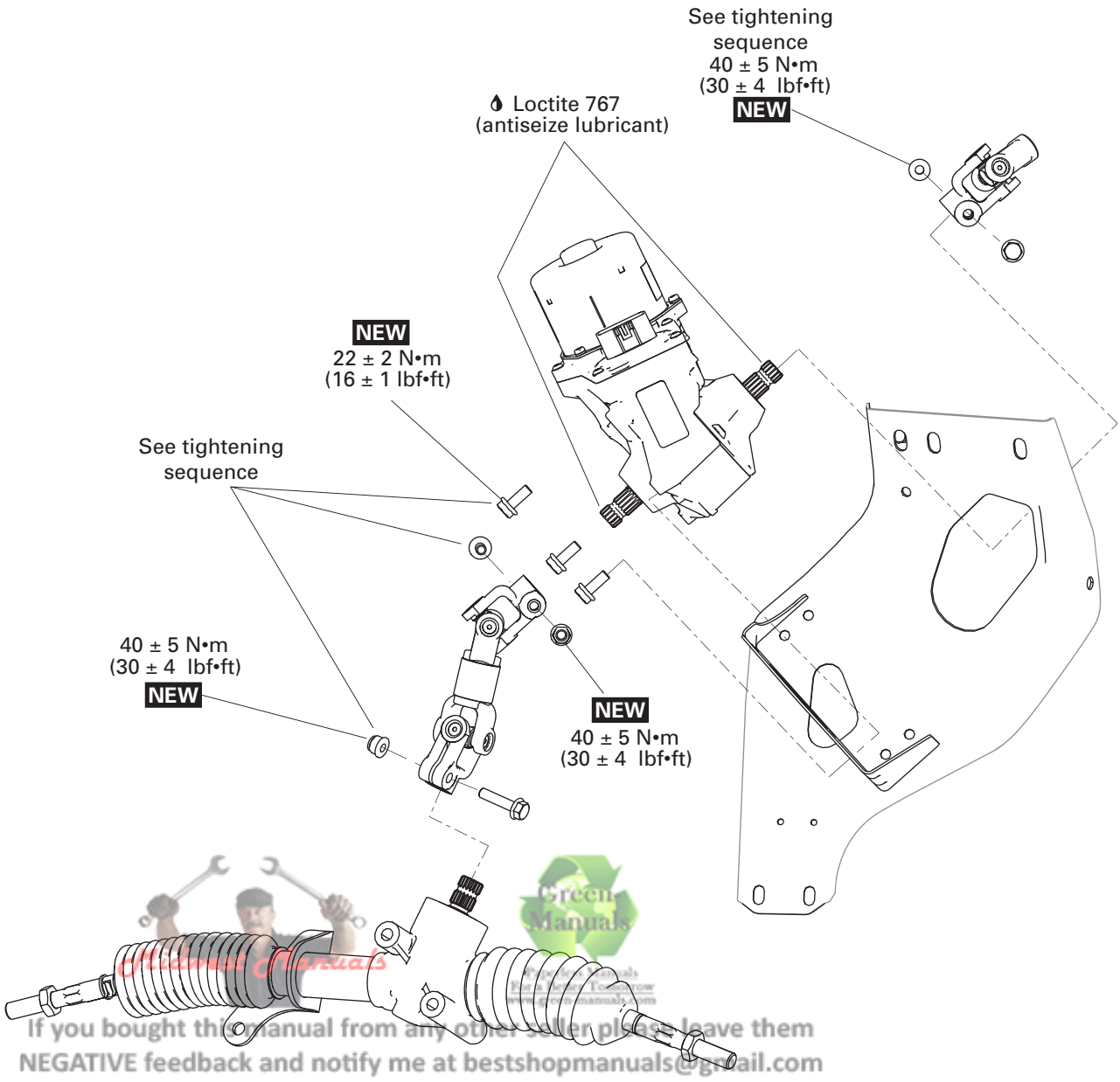

If you bought this manual from any other seller please leave them NEGATIVE feedback and notify me at bestshopmanuals@gmail.com

NEW = Component must be replaced when removed.

219100901-009-100

GENERAL

NOTICE Never perform arc welding in the DPS area. Otherwise, poor DPS operation might occur.

SYSTEM DESCRIPTION (FEATURES)

The Dynamic Power Steering (DPS) provides a computer controlled, variable power assist, achieved by an electric motor to optimize the amount of steering input required by the rider.

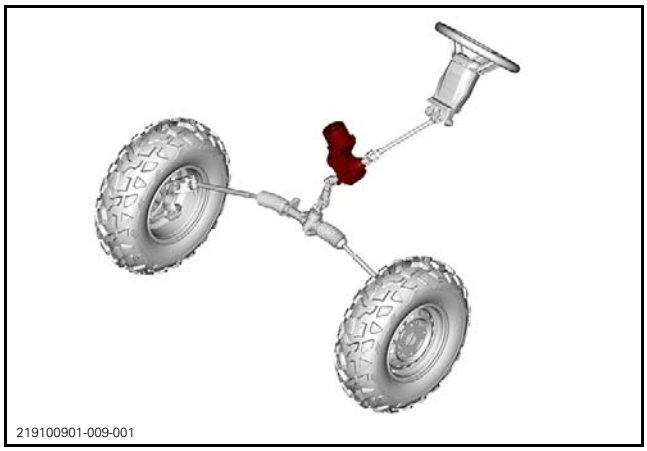

The DPS system uses the following parameters to determine how much steering assist it provides:

– Engine RPM
– Battery/electrical system voltage
– Vehicle speed
– DPS shaft torque sensor input.
– DPS internal temperature.

The amount of steering assist provided is dependent on the handlebar effort (steering torque), electrical power available, and vehicle speed.

The greater the handlebar effort (torque), the greater the assist will be.

The slower the vehicle speed, the greater the assist will be.

If the electrical system is activated but the engine is **not** running, DPS assist will be provided for approximately 30 seconds. DPS assist will resume once the engine is started.

After turning the ignition key OFF, DPS assist will be provided for approximately 20 seconds.

When the handlebar is in the straight ahead position, there is no steering assist.

Steering torque may also come from the wheels due to rough terrain. Steering kickback is reduced while providing feedback to the driver.

The greater the power steering assist, the greater the load on the electrical system.

When the electrical system is under high load (battery not at full charge, operating the vehicle for prolonged periods of time at slow speed and low RPM which, requires higher power steering assist), the battery power reserve will gradually decrease. This further increases the load on the charging system and the electrical system voltage will drop. As system voltage drops, so does power steering assist.

NOTE: It is important to maintain the battery at a full state of charge to ensure proper DPS operation.

DPS Derating Explanation

Derating is an internal protection system integrated in the DPS electronic module.

This system protects the electronic components when the DPS works too intensively and the internal temperature reaches a critical level, or when the battery voltage becomes too low.

The internal protection system decreases the assistance level available to protect its electronic board. The normal assistance level will return when riding conditions are back to normal and the internal temperature decreases, and/or when the battery voltage increases above a threshold voltage.

NOTE: This reaction is a normal protective behavior of the unit and does not necessarily raise a fault in the cluster. However, under extreme conditions, a scrolling DPS OVERHEAT message may appear in the cluster. When the DPS is allowed to cool down below the threshold recovery temperature, the DPS OVERHEAT message will cease.

DPS SYSTEM DESCRIPTION (COMPONENTS)

DPS Unit

The DPS unit is a self contained unit that includes the steering gear, the DPS module, the DPS motor, and the torque sensor.

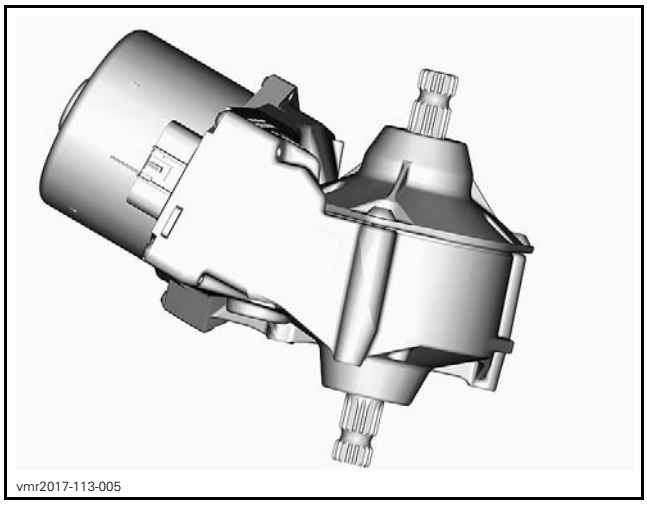
vmr2017-113-005

DPS UNIT

The DPS module provides DC power to the motor. The amount and duration of that DC power is determined by the inputs to the DPS module.

The DPS motor does not "spin", but rather turns in very small increments based on the amount, duration, and direction of DC power delivered by the DPS module.

NOTE: Should the DPS unit fail, the vehicle steering is still available with moderate increase in steering effort.

Steering Torque Sensor

The steering column is connected to the shaft on the DPS unit. A small area of the DPS shaft is magnetized. Inside the DPS unit, a torque sensor surrounds the magnetized area of the DPS shaft.

When the steering is turned, torque is applied to the shaft which tends to twist it slightly, deforming the magnetic field in the shaft. The sensor detects the torque by measuring the deviation of the magnetic field.

The torque sensor is very sensitive and can detect very small changes in the magnetic field. The harder the steering is turned, the greater the magnetic deviation, the greater the power steering assist.

NOTICE **The internal torque sensor is very sensitive to external magnetic source. All components touching the DPS unit** must be kept **in a non-magnetic area and avoid any contact with components. If a magnetic source or part is in contact with the DPS shaft, or touching components, it will affect the torque reading values and inadvertently affect the behavior of the DPS unit.**

ADJUSTMENT

RESETTING THE TORQUE OFFSET

When replacing the following parts or adjusting steering alignment, the sensor torque offset MUST be reset to zero for proper system operation.

PART ADJUSTED OR REPLACED	WHAT TO DO
– DPS unit – Steering column – Tie rod – Tie rod end – Knuckle – Wheel bearing – Ball joint – Front suspension arm (lower/upper) – Steering alignment	Reset Torque Offset in **Setting, DPS**

1. Position the steering wheel at the center position.
2. Connect vehicle to the BRP diagnostic software BUDS2. Refer to *COMMUNICATION TOOLS* subsection.
3. Check if a software update is available and warranted for the DPS. Select:
   – **Flash** page.
   – **DPS** or **Vehicle** button.
   – **Flash** tab.

If an update is available, install it before resetting the torque offset.

REQUIRED CONDITIONS TO ALLOW THE RESET PROCEDURE
DPS unit temperature above freezing point.
Steering wheel should be free and centered. There MUST NOT be any effort applied to the steering column.
Torque sensor value must be within offset threshold value of ± 10Nm.
Engine not running.

4. To reset the torque offset, select:
   – **Settings** page.
   – **DPS** or **Vehicle** button.
   – **Initialization** tab.
5. Select **Torque Sensor Offset**.

NOTE: Torque reading must be stable and not exceeding 2Nm during procedure. Torque sensor reset may not be possible if the torque value is over the 10Nm above the original setting.

With the steering wheel centered and no effort is applied, if the indicated **Torque Sensor** value is over the threshold value of 1.5Nm, a steering imbalance may be noticeable.

If all steering components are undamaged, in good working order, and the steering components were correctly aligned, repeated torque offset reset procedures will not solve the problem if the torque offset is greater than ±10Nm. DPS unit replacement may be required.

STEERING SYSTEM SELF TEST

This test verifies the DPS torque reading on the entire steering angle range. It will not test any internal function or any performance of the DPS itself and it will not verify the accuracy of the vehicle wheel alignment.

It is made to detect:

– Steering component misalignment
– Magnetized component in contact with DPS main shaft.

If the test fails, the BRP diagnostic software will provide a description of the failure and suggest a corrective action.

To initiate the test:

1. Connect the vehicle to the BRP diagnostic software (BUDS2). Refer to *COMMUNICATION TOOLS* subsection.
2. In BUDS2, go to:
   – **Functions** page.
   – **DPS** button.
   – **Routines** tab.
3. Follow the instructions on the screen.
4. Click on **Validate Steering Assembly**.

The test will run by itself, then the result will be displayed.

NOTICE **Ensure to perform corrective action as per the procedures outlined in this subsection.**

PROCEDURES

DPS UNIT

REQUIRED TOOL	
FLUKE 115 MULTIMETER (P/N 529 035 868)	

Testing the DPS Fuse

A 40 A fuse located in fuse box **no. 3** (PF3-F1) under the hood, provides power to the DPS motor.

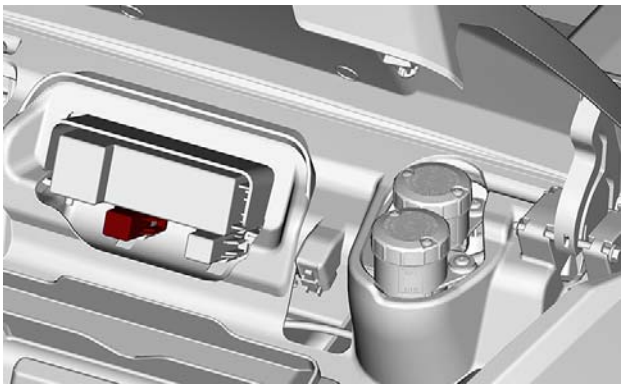

tmr2016-141-002

1. Remove the DPS fuse cap to expose the fuse contacts.
2. Set the multimeter to VDC and test for a voltage drop across the DPS fuse while the DPS is in operation.
3. If a voltage is measured, turn power off and remove fuse.
4. Check fuse continuity, fuse contacts and fuse box contact condition. Replace fuse as required.

DPS Wire Identification

For circuit details, refer to *WIRING DIAGRAM*.

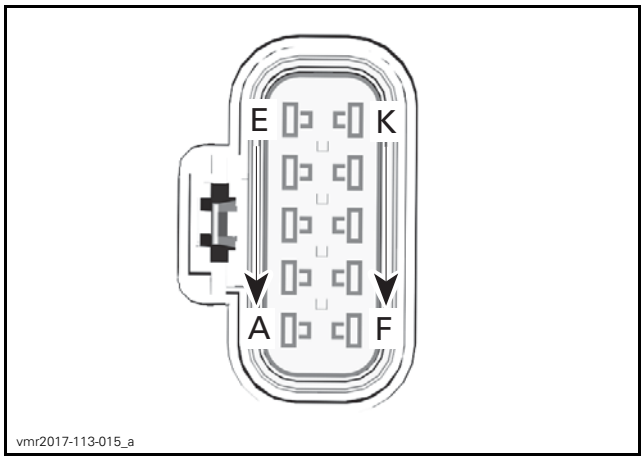

DPS CONNECTOR HARNESS SIDE

DPS CONNECTOR		
FUNCTION	PIN	COLOR
12 volt input (from fuse F1)	C	RD/PK
12 volt input (from fuse F1)	D	RD/PK
12 volt input (from fuse F1)	E	RD/PK
12 volt switched input (from fuse F4)	G	OR/GN
CAN HI	J	WH/BE
CAN LO	K	WH/BK
Ground	A	BK
Ground	B	BK
Ground	F	BK

Testing the DPS Input Voltage

1. Disconnect the DPS connector.

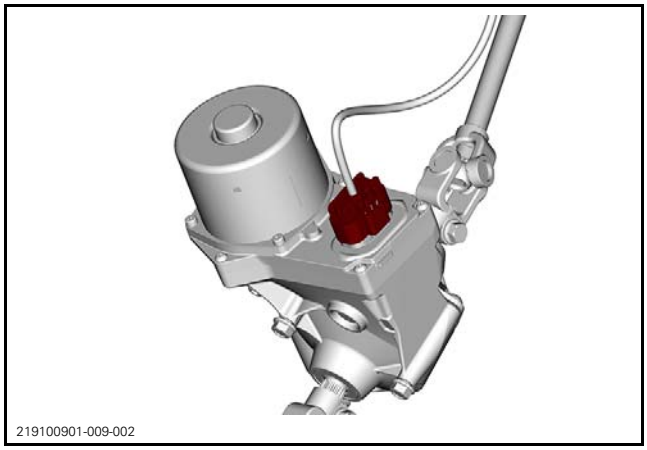

2. Test for 12 Vdc DPS motor power at DPS connector as per following table.

MULTIMETER PROBE POSITIONS		VOLTAGE
DPS connector pin C	Battery ground	Battery voltage
DPS connector pin D		
DPS connector pin E		

If NO voltage is measured, test the 40 A DPS fuse (F1). If good, check wires and connector pins. Replace or repair defective parts and reset fault codes.

If battery voltage is measured, test the DPS ignition signal voltage.

NOTE: This test may also be carried out by connecting a 12 Vdc test light between connector pins (C, D and E), and the battery (-) negative terminal. The test light must come on bright.

Testing the DPS Ignition Signal Voltage

1. Disconnect DPS connector.

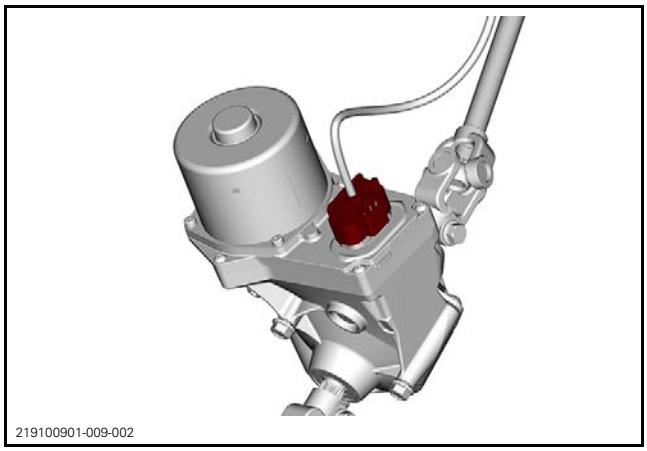

2. Set the ignition switch to ON.
3. Test for 12 Vdc power at the DPS connector as per following table.

MULTIMETER PROBE POSITIONS		VOLTAGE
DPS connector (harness side) pin G	Battery ground	Battery voltage

If NO voltage is measured, check wires and connector pins from the DPS unit to the fuse (F4) in the front fuse box (PF1-F4). Replace or repair defective parts and reset fault codes.

If battery voltage is measured, test the DPS ground circuit.

NOTE: This test may also be carried out by connecting a 12 Vdc test light between the DPS connector (pin G), and the battery (-) negative terminal. The test light must come on bright.

Testing the DPS Ground Circuit

1. Disconnect the DPS connector.

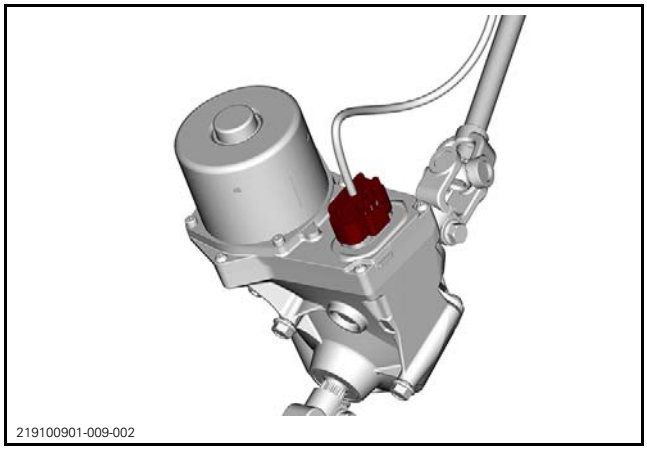

2. Test for continuity between DPS connector and battery ground.

MULTIMETER PROBE POSITIONS		READING
DPS connector (harness side) pin A	Battery ground	Continuity (close to 0 Ω)
DPS connector (harness side) pin B		
DPS connector (harness side) pin F		

If there is NO continuity or a high resistance is measured, check wires and connector pins from DPS unit to chassis ground post. Replace or repair defective parts and reset fault codes.

If there is good continuity, carry out: *TESTING THE DPS UNIT COMMUNICATION LINK (CAN) CONTINUITY*.

NOTE: This test may also be carried out by connecting a 12 Vdc test light between each GDN connector pin and the battery (+) positive terminal. The test light must come on bright.

Testing the DPS Communication Link (CAN) Continuity

NOTE: DPS unit must receive an RPM signal to provide power steering assist.

1. Disconnect the DPS connector and the diagnostic connector.
2. Test continuity of CAN Bus Wires as per following table.

MULTIMETER PROBE POSITIONS		RESISTANCE @ 20°C (68°F)
DPS CONNECTOR (HARNESS SIDE)	DIAGNOSTIC CONNECTOR	
Pin J	Pin 1	Less than 1 Ω
Pin K	Pin 2	

If resistance measured is out of specification, check wires and connector pins. Carry out repairs as required and reset fault codes using the applicable BRP diagnostic software version.

If resistance measured is good, replace the DPS unit and reset fault codes using the applicable BRP diagnostic software version.

Testing the DPS System Load

If the charging system cannot sustain normal voltage when the DPS is operating, DPS ASSIST may be greatly reduced or nonexistent. Carry out the following steps.

1. Measure the battery voltage.

NOTE: If battery voltage is low, recharge battery.

2. Ensure the vehicle transmission is set to PARK.
3. Start the engine.
4. Note the voltage on the multimeter with the engine running (charging system voltage).
5. Press the **RANGE** button repeatedly to select **Manual Range 6 0**.

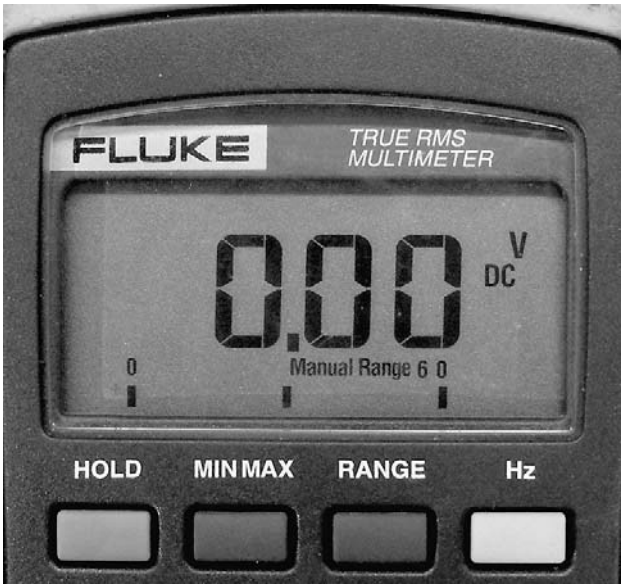

mmr2009-023-027_a

VDC SELECTED TO MANUAL RANGE 6 0

6. Press the **MIN MAX** button on the multimeter to engage the MIN function.

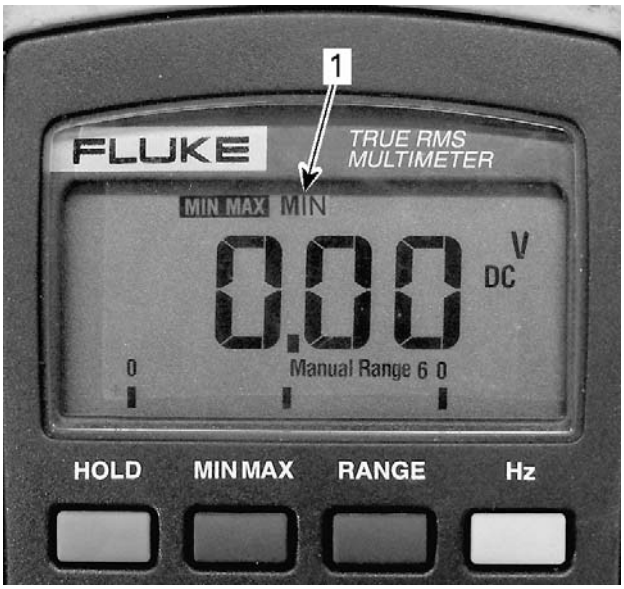

mmr2009-023-027_e

1. MIN function selected

7. Turn the steering **momentarily** against the frame stops to each side.

NOTE: Do not hold steering against frame stops for an extended period of time.

8. Read the MIN charging system voltage recorded while the steering was turned against each stop.

DPS SYSTEM LOAD TEST			
PROBE POSITIONS		STEERING POSITION	VOLTAGE READING
Battery (-) terminal	DPS fuse holder pin B	LH stop	At least 12 Vdc
		RH stop	

NOTE: Turning the steering momentarily against the frame stops generates maximum DPS load (maximum current draw on electrical system). Electrical system must sustain at least 12 Vdc for proper DPS operation.

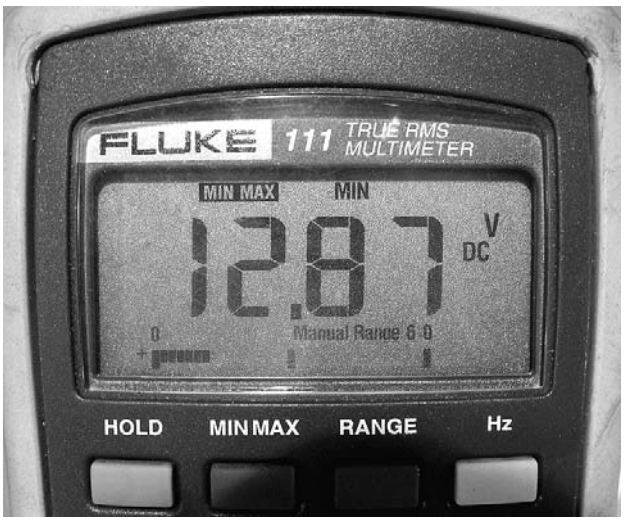

vmr2010-003-007

If the electrical system cannot sustain at least 12 Vdc, check the following:

– Battery
– Battery connections
– DPS unit power and ground connections
– Charging system
– Chassis and engine ground studs.

If the previously listed items are correct, , carry out: *TESTING THE DPS UNIT CURRENT.*

Testing the DPS Unit Current

1. Connect vehicle to the BRP diagnostic software BUDS2. Refer to *COMMUNICATION TOOLS* subsection.
2. Select:
   – **Measurements** page.
   – **DPS** button.
   – **Custom** tab.
3. With the vehicle engine running in PARK and without any steering effort, the reading should be as per following table.

TORQUE SENSOR	DPS CURRENT
0 N•m ± 1 N•m (0 lbf•**in** ± 9 lbf•**in**)	0 Amp

4. Turn the steering wheel side to side, momentarily against each steering hard stop and observe the DPS **Torque Sensor** value. The torque value should increase with steering effort applied to the steering wheel.

The **DPS Current** value should increase proportionately to the torque applied, and decrease with the torque as steering assist is provided.

NOTE: The increase and decrease in torque and current readings is very brief as steering assist is quickly provided. Current draw should remain within green scale but may momentarily peak to or exceed 60 amps, then drop off close to 0 amps as torque applied is nulled out by steering assist. If steering is held against hard stops the torque and current readings will remain high.

If current draw tends to remain high, carry out the following:

– *ALIGNING THE STEERING COMPONENTS*
– *RESETTING THE TORQUE OFFSET* (only if steering components alignment did not solve the problem)
– DPS unit replacement.

NOTE: The *ALIGNING THE STEERING COMPONENTS* procedure must always be carried out before even considering a torque offset reset.

5. Turn steering to LH stop and hold at least 8 Nm. Note DPS current value.
6. Turn steering to RH stop and hold at least 8 Nm. Note DPS current value.
7. Repeat previous two steps while holding at (+ or -) 5 Nm. Note DPS current value.

LH and RH DPS current readings should be the same for the same applied torque.

If the *ALIGNING THE STEERING COMPONENTS* and *RESETTING THE TORQUE OFFSET* procedures have been carried out, and the current or steering imbalance is too great, the DPS unit will require replacement to resolve the problem.

Removing the DPS Unit

NOTICE **Before proceeding with the DPS removal, remove the 40 Amp DPS fuse (F1) in the fuse box no. 3. Handle the DPS unit with extreme care as it is very sensitive to physical chock. Store unit in a secured area. If the DPS unit is dropped, it must be replaced even if only minimal damage is apparent.**

1. Position the front wheels parallel to the rear wheels.
2. Remove both front wheels.
3. Mark the alignment of the lower steering shaft with the input shaft and the rack and pinion housing.

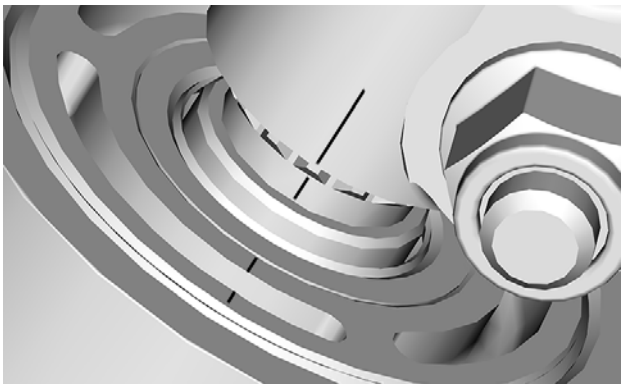
tmr2016-141-012

4. Remove access panel under LH front inner fender.

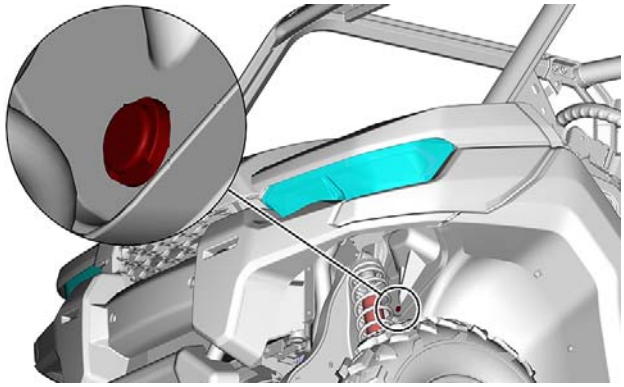
tmr2016-144-005

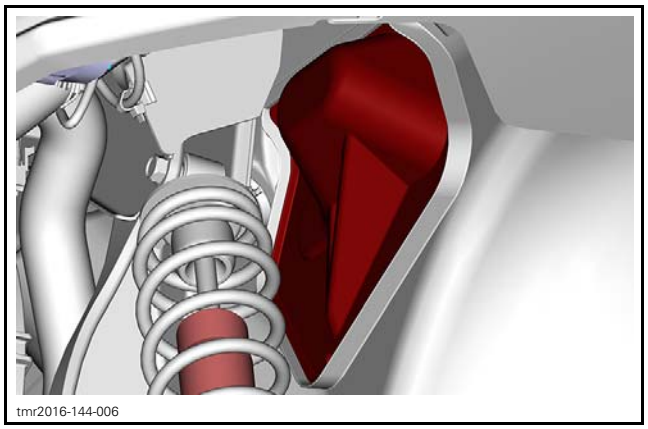
tmr2016-144-006

5. Disconnect the electrical connector from the DPS unit.

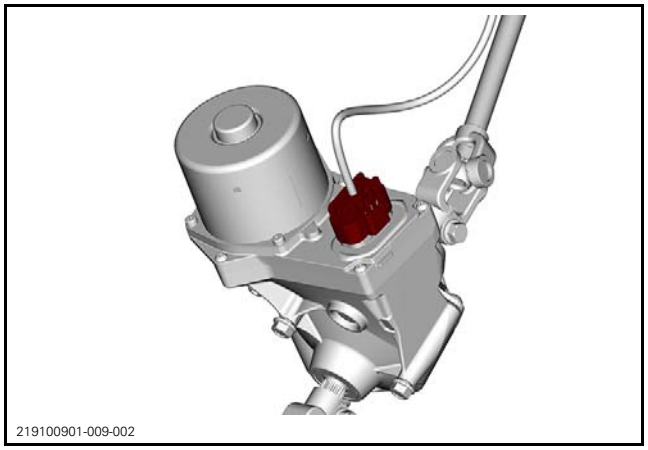
219100901-009-002

6. Remove steering column. Refer to *REMOVING THE STEERING COLUMN* subsection.
7. Remove the lower steering shaft pinch bolt and nut.

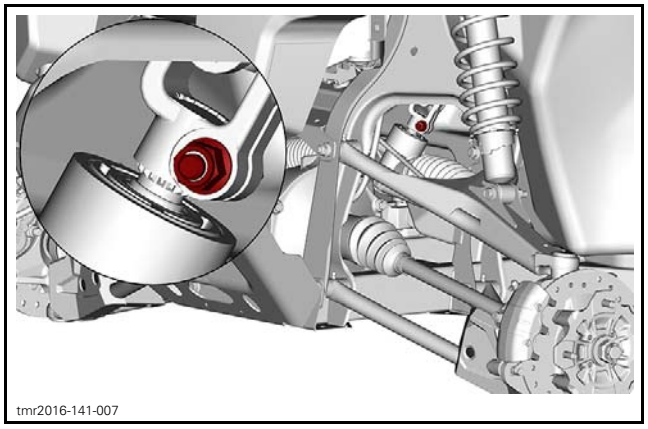
tmr2016-141-007

8. Remove the shifter module support retaining nuts and screw.

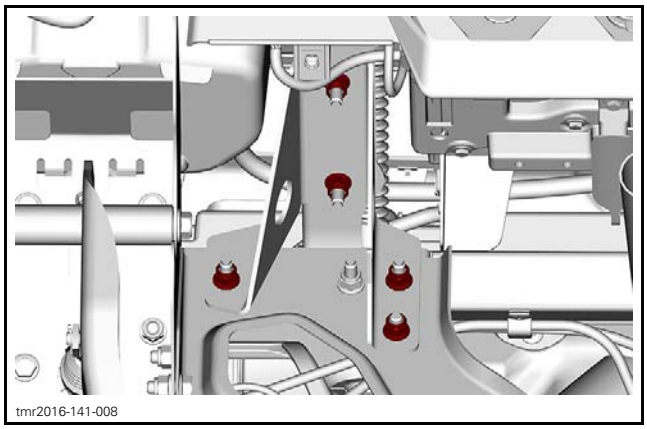
tmr2016-141-008

9. Slightly lift the dash board to remove the shifter support.

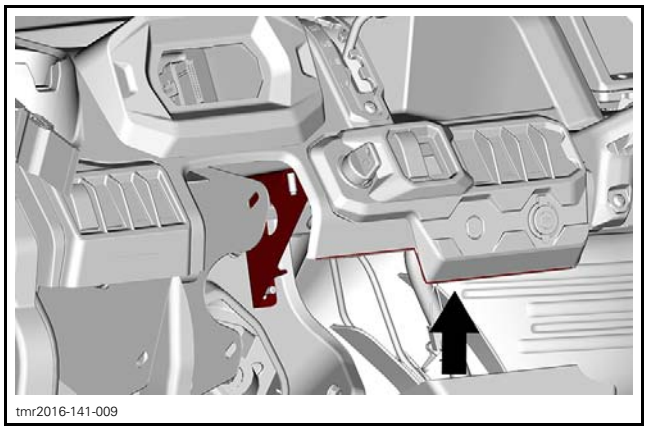
tmr2016-141-009

10. Remove all DPS unit support retaining screws.

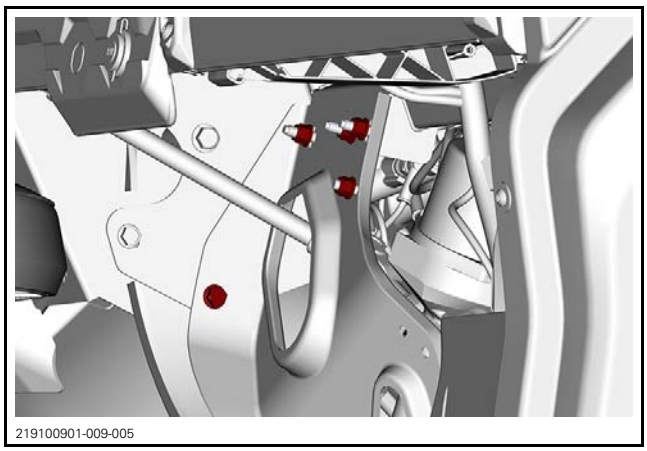
219100901-009-005

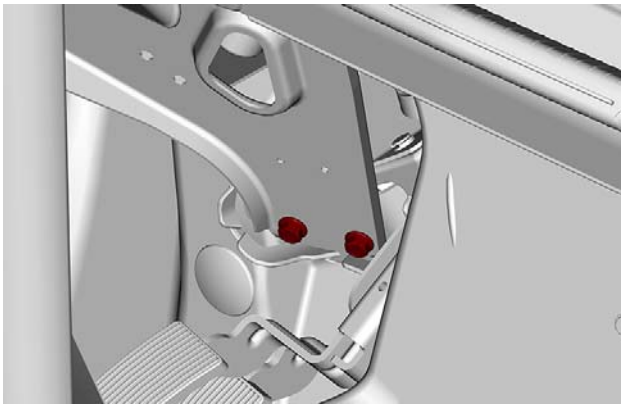
219100901-009-006

11. Pull up on DPS unit and support to disengage from the rack and pinion shaft and remove it from the vehicle.

NOTE: If replacing DPS unit, remove the DPS support and the lower steering shaft from the unit.

Installing the DPS Unit

If Replacing DPS Unit

1. Install the support on the new DPS unit.
2. Apply antiseize lubricant to DPS input and output shaft splines.

RECOMMENDED PRODUCTS
LOCTITE 767 (ANTISEIZE LUBRICANT) (P/N 293 800 070)

3. Install locking bolt and nut.

IMPORTANT: Make sure to engage bolt in the input shaft groove.

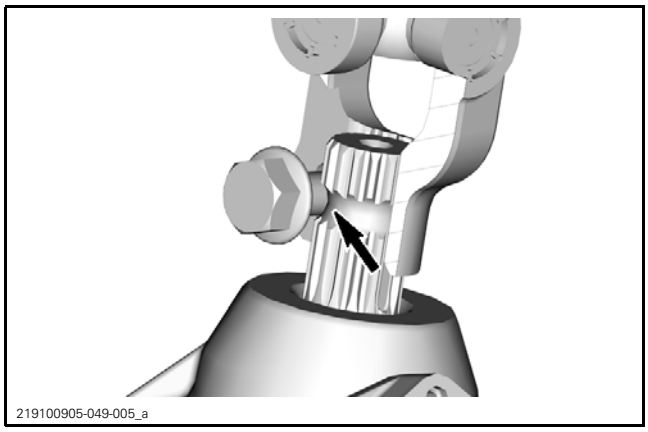
219100905-049-005_a

YOKE CROSSCUT - INPUT SHAFT GROOVE

Continue with *IF INSTALLING SAME DPS UNIT*.

If Installing Same DPS Unit

1. Apply antiseize lubricant to rack and pinion shaft splines.

RECOMMENDED PRODUCTS
LOCTITE 767 (ANTISEIZE LUBRICANT) (P/N 293 800 070)

2. While lowering the DPS unit with its support and the lower steering shaft in place, a second technician engage the lower yoke on the rack and pinion shaft.

Make sure to align marks previously made on lower yoke, rack and pinion input shaft and housing.

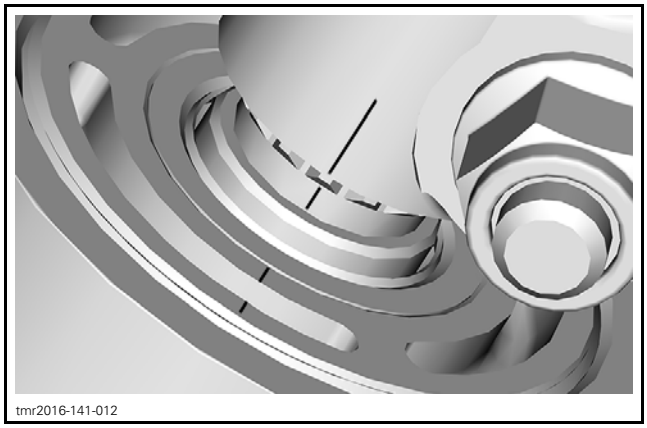
tmr2016-141-012

3. Install and tighten locking bolt and nut.

IMPORTANT: Make sure to engage bolt in the input shaft groove.

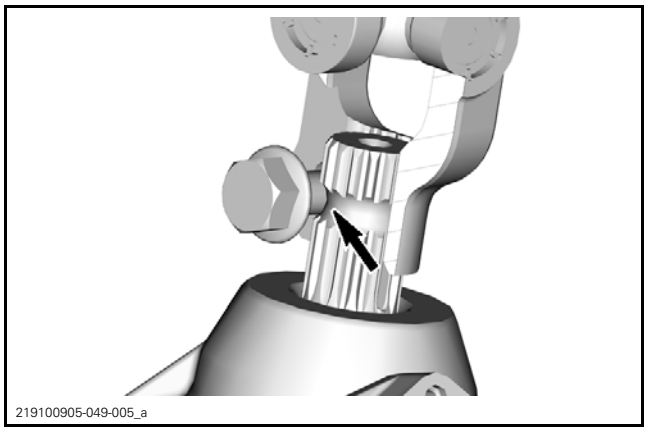
219100905-049-005_a

YOKE CROSSCUT - INPUT SHAFT GROOVE

4. Install shifter support.
5. Install fasteners, then tighten as per the following sequence.

NOTE: Ensure the shifter support makes good contact with the shifter module and the DPS support while tightening the nuts 3, 4, and 5.

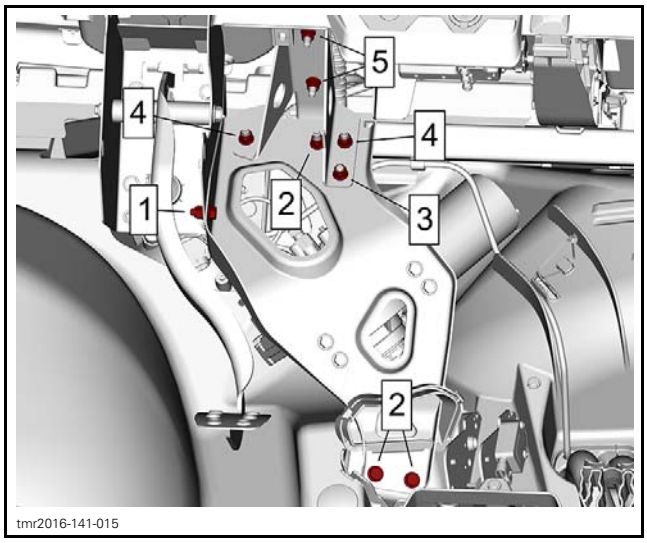

6. Install the steering column. Refer to *STEERING SYSTEM* subsection.
7. Apply grease on harness connector terminals.

RECOMMENDED PRODUCTS
DIELECTRIC GREASE (P/N 293 550 004)

8. Connect DPS connector to DPS unit.
9. If installing a replacement DPS unit, refer to *REPLACING THE DPS* in this subsection.
10. Align wheels. Refer to *STEERING SYSTEM* subsection.
11. Verify DPS system.

Replacing the DPS Unit

New DPS units **do not** come with the required software programmed into the unit. A DPS unit fault will be generated when the vehicle is powered up. The check engine light will come on and a CHECK DPS message will appear in the multi-function gauge.

The new DPS unit will require 2 mandatory updates. The first update is required for the DPS to recognize what type of vehicle it is installed in, the second to upload the software required for proper operation on that vehicle.

When DPS unit installation is complete, carry out the following steps.

1. Connect the vehicle to the BRP diagnostic software BUDS2. Refer to *COMMUNICATION TOOLS* subsection.
2. Select the **Flash** page.
3. A message window will appear asking you if you would like to update the DPS module; select **YES** and follow the instructions. When a second window appears asking you the same question, select **YES** again.
4. Once the correct DPS software file is installed, go to the **Faults** page and clear the fault codes.
5. Carry out: *RESETTING THE TORQUE OFFSET* (if required) as described in this subsection.
6. Test drive the vehicle to ensure proper DPS operation.

DPS System Final Verification

With the front wheels off the ground:

1. Enable DPS unit (turn ignition switch ON or start engine).

NOTE: Steering assist will be provided for 30 seconds with the ignition switch ON and engine not running.

2. Slowly turn steering wheel from one side to the other 3 times.

Make sure:

– Assistance and travel are equal when turning right or left
– Steering system operates smoothly through all its range.

3. Lower vehicle on the ground.
4. Repeat step 2.

RESULT	ACTION
Uneven/incorrect steering behavior	Troubleshoot steering problem

NOTE: A verification carried out with the engine not running and a weak battery may result in unsatisfactory DPS performance. In doubt, retest with the engine running.

5. Perform the *STEERING SYSTEM SELF TEST* procedure in this subsection.
6. Carry out a test ride of the vehicle to ensure proper operation of the DPS unit.

FRONT SUSPENSION

SERVICE PRODUCTS

Description	Part Number	Page
SYNTHETIC SUSPENSION GREASE (EUR)	779226	2–3
SYNTHETIC SUSPENSION GREASE	779163	2–3

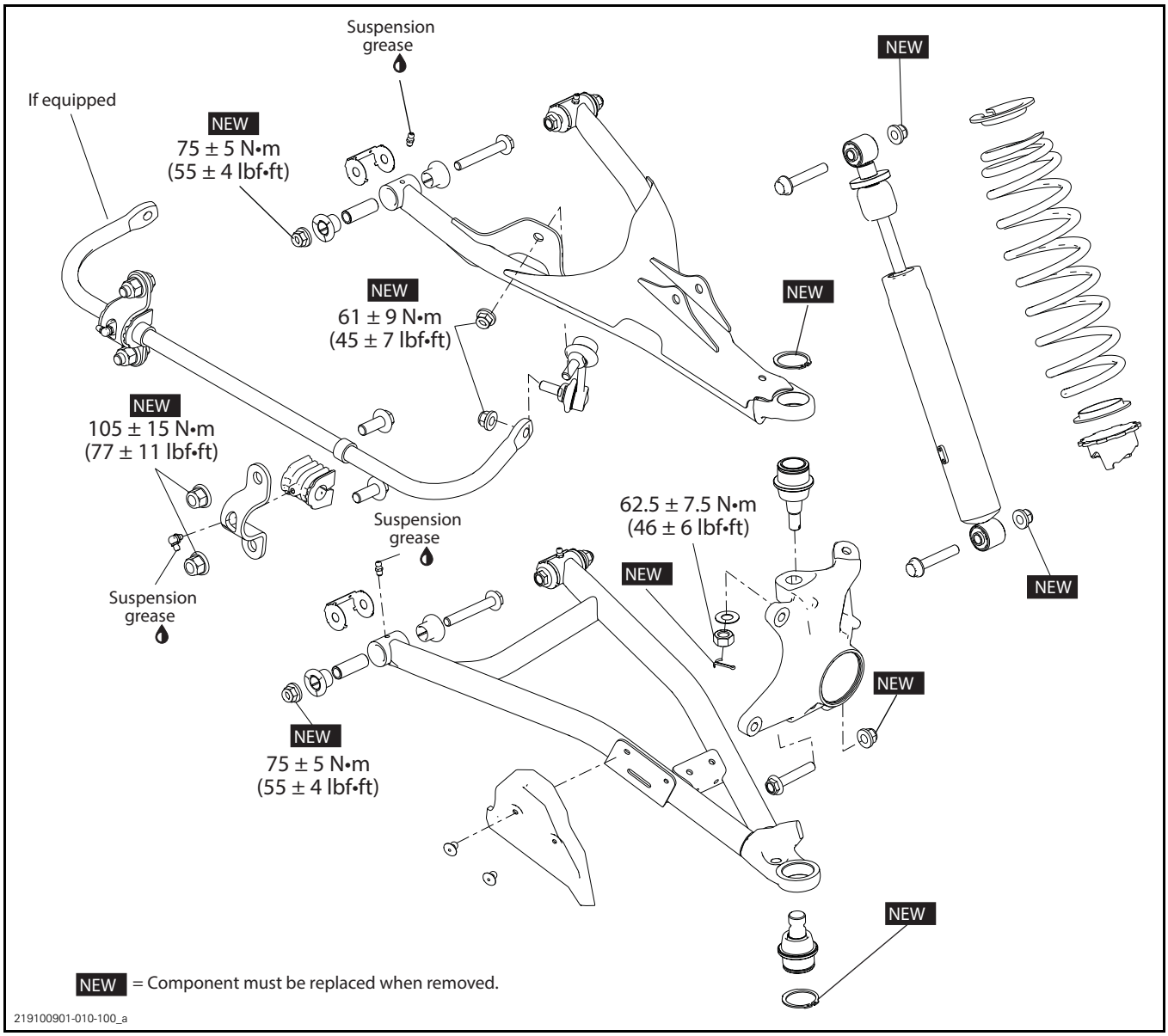

GENERAL

The procedure explained below is the same for the RH and LH sides unless otherwise noted.

MAINTENANCE

INSPECTING THE SHOCK ABSORBER

Check shock absorber for any leaks, replace if necessary.

LUBRICATING THE SUSPENSION ARM AND STABILIZER BAR BUSHINGS (IF EQUIPPED)

Lubricate suspension arm and stabilizer bar bushings (if equipped) at grease fittings.

SUSPENSION GREASE	
Scandinavia	SYNTHETIC SUSPENSION GREASE (EUR) (P/N 779226)
All other countries	SYNTHETIC SUSPENSION GREASE (P/N 779163)

LOWER SUSPENSION ARM

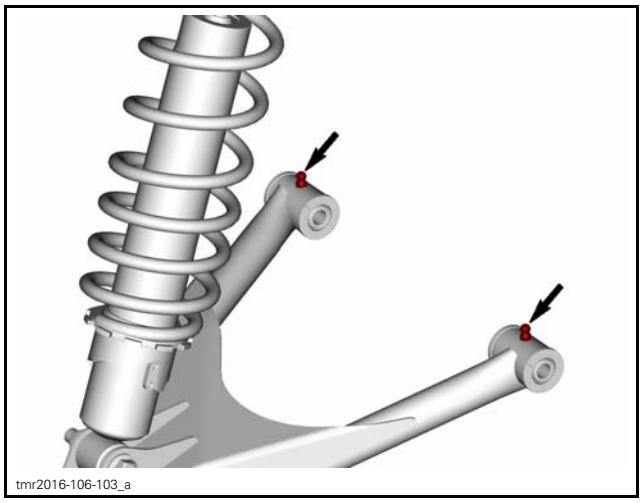

UPPER SUSPENSION ARM

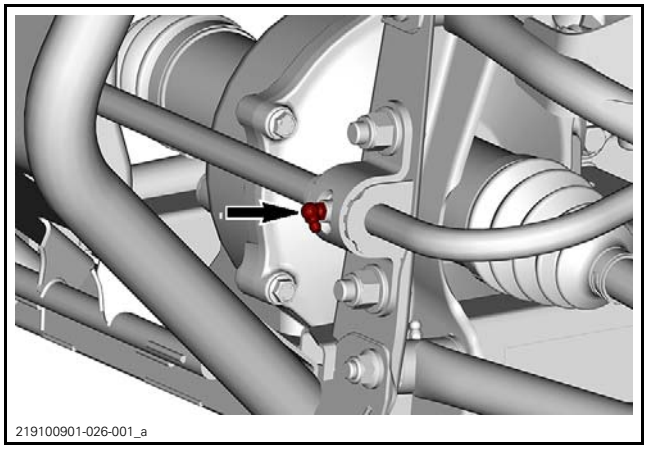

FRONT STABILIZER BAR BUSHINGS

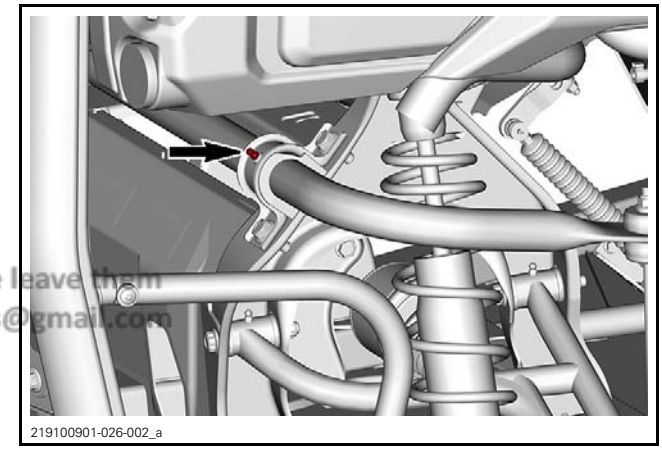

REAR STABILIZER BAR BUSHINGS

Oldest Manuals
Green Manuals
Paperless Manuals For a Better Tomorrow www.green-manuals.com
If you bought this manual from any other seller please leave them NEGATIVE feedback and notify me at bestshopmanuals@gmail.com

LUBRICATING THE REAR KNUCKLE

KNUCKLE LUBRICATION	
Scandinavia	SYNTHETIC SUSPENSION GREASE (EUR) (P/N 779226)
All other countries	SYNTHETIC SUSPENSION GREASE (P/N 779163)

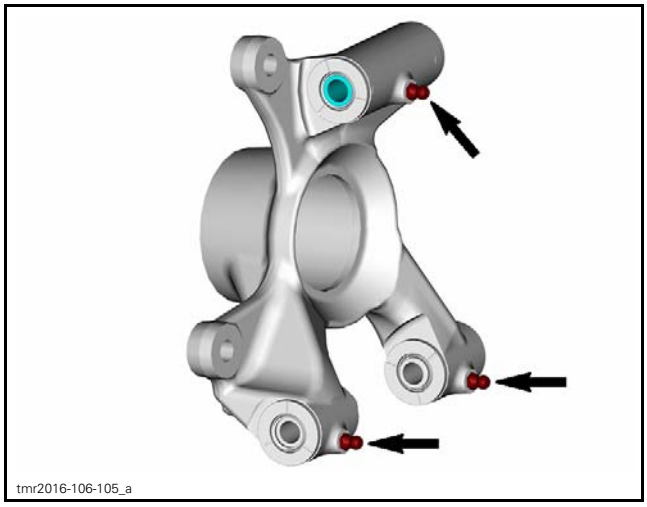
tmr2016-106-105_a

INSPECTING THE SUSPENSION ARM

Check suspension arm for:
- Cracks
- Pitting
- Bending
- Distortion.

Check suspension arm for abnormal play:
- Side to side
- Up and down.

If any play is detected, inspect:
- Bushings
- Cushions
- Wear plates.

Check ball joint for:
- Damage
- Pitting
- Play.

Check ball joint bellows for:
- Damage
- Cracks.

PROCEDURES

SHOCK ABSORBER

Removing the Shock Absorber

1. Safely lift and support the vehicle of the ground. Refer to *INTRODUCTION* subsection.
2. Remove bolts and nuts retaining shock absorber.

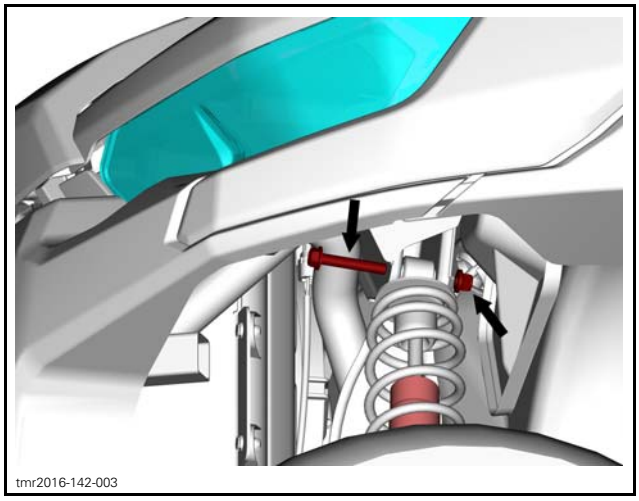
tmr2016-142-003

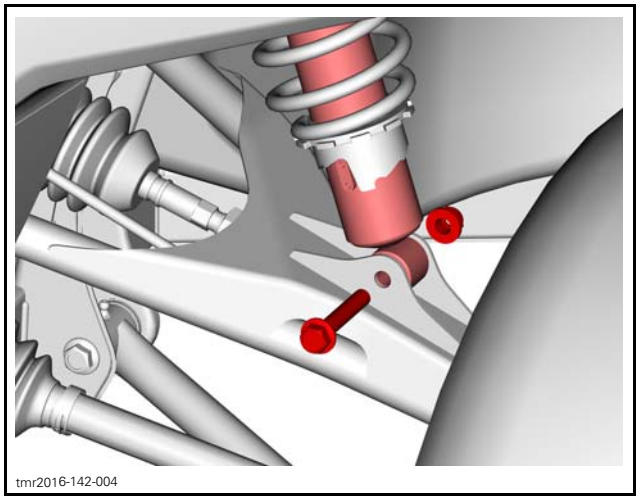
tmr2016-142-004

3. Remove shock absorber.

Inspecting the Shock Absorber

Remove spring from shock absorber. Refer to *SPRINGS* in this subsection.

Secure the end of shock body in a vise with its rod upward.

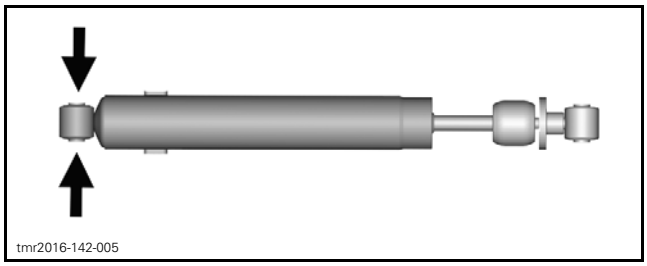

TYPICAL - VICE JAWS POSITION

NOTICE **Do not clamp directly on shock body.**

Extend and compress the piston several times over its entire stroke. Check that it moves smoothly and with uniform resistance with its rod upward.

Check the following conditions that will denote a defective shock:

- A skip or a hang back when reversing stroke at mid travel.
- Seizing or binding condition except at extreme end of either stroke.
- Oil leakage.
- A gurgling noise, after completing one full compression and extension stroke.

Replace if any faults are present.

Installing the Shock Absorber

The installation is the reverse of the removal procedure.

SHOCK ABSORBER SPRINGS

Refer to *SPRINGS* in *REAR SUSPENSION* subsection for complete procedures.

STABILIZER BAR (IF EQUIPPED)

Removing the Stabilizer Bar

1. Safely lift and support the vehicle off the ground. Refer to *INTRODUCTION* subsection.
2. Remove the stabilizer bar retaining screws and link lower nuts.

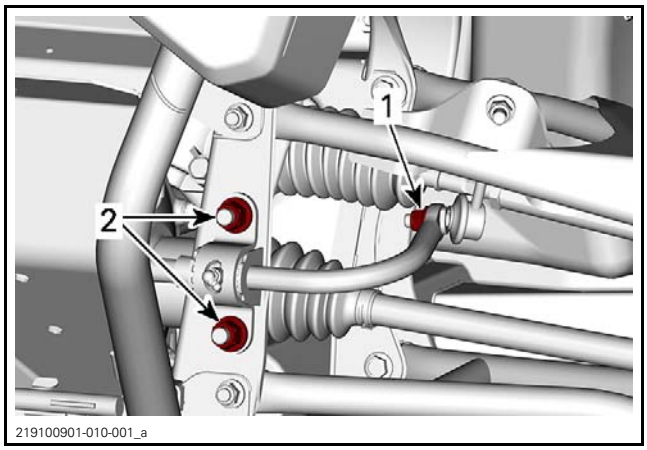

PARTS REMOVED FOR CLARITY
1. Stabilizer bar link lower nut
2. Stabilizer bar retaining screws

3. Remove stabilizer bar.

Inspecting the Stabilizer Bar

Check stabilizer bar for cracks, bending or other damages.

Replace if necessary.

Installing the Stabilizer Bar

The installation is the reverse of the removal procedure. However, pay attention to the following.

Install stabilizer link nuts and stabilizer bar screws loosely.

Using the following sequence, tighten fasteners as per the specification.

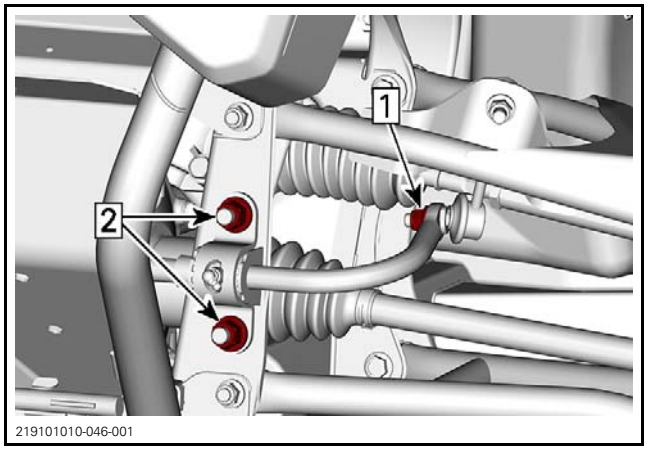

PARTS REMOVED FOR CLARITY
1. Stabilizer bar link lower nut
2. Stabilizer bar retaining screws

TIGHTENING TORQUE	
Stabilizer link nut	57.5 N•m ± 2.5 N•m (42 lbf•ft ± 2 lbf•ft)
Stabilizer bar screw	105 N•m ± 15 N•m (77 lbf•ft ± 11 lbf•ft)

LOWER SUSPENSION ARM

Removing the Lower Suspension Arm

1. Safely lift and support the vehicle off the ground. Refer to *INTRODUCTION* subsection.
2. Remove wheel, refer to *WHEELS AND TIRES* subsection.
3. Remove bolt and nut securing lower ball joint to knuckle.

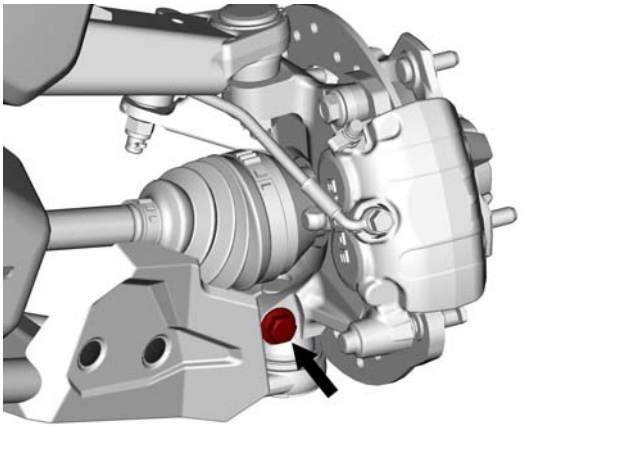
tmr2016-142-006

4. Remove bolts and nuts securing suspension arm to frame.

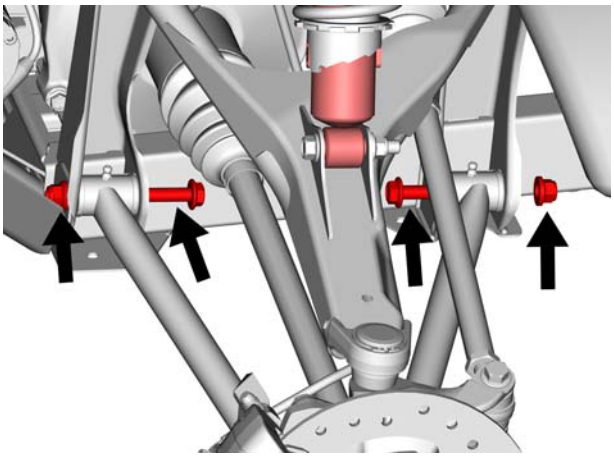
tmr2016-142-007

5. Remove suspension arm.

Installing the Lower Suspension Arm

The installation is the reverse of the removal procedure. However, pay attention to the following.

Lubricate suspension arm.

UPPER SUSPENSION ARM

Removing the Upper Suspension Arm

1. Safely lift and support the vehicle off the ground. Refer to *INTRODUCTION* subsection.
2. Remove wheel, refer to *WHEELS AND TIRES* subsection.
3. Remove the clamp retaining brake hose from the suspension arm.

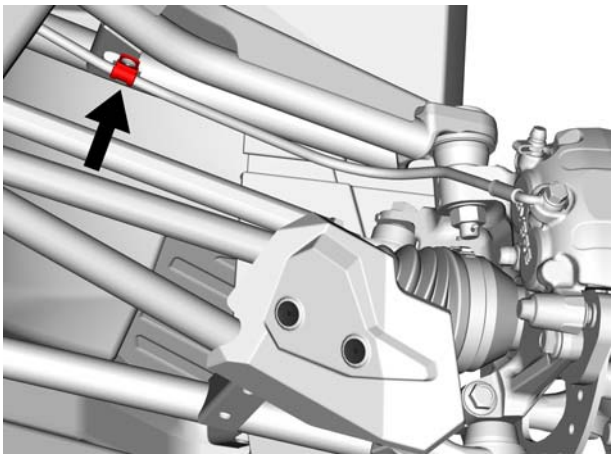
tmr2016-142-008

4. Remove and discard cotter pin retaining ball joint.

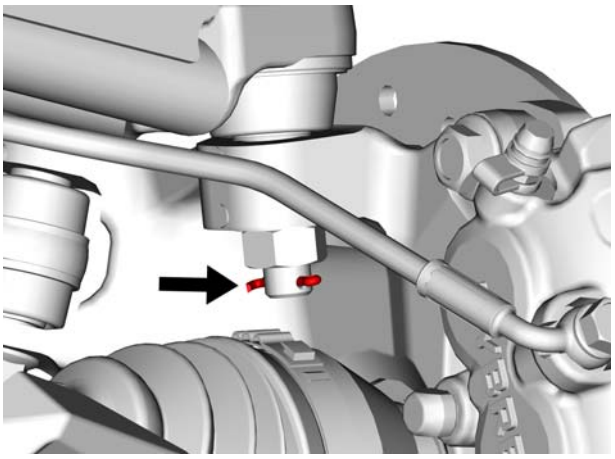
tmr2016-142-009

5. Remove ball joint nut and washer.

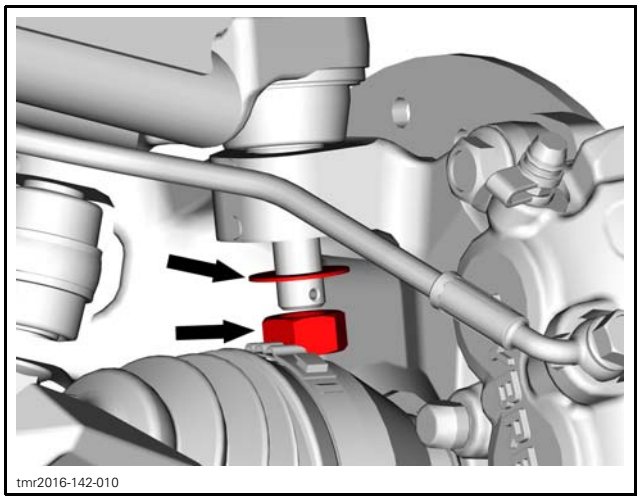
tmr2016-142-010

6. Using a plastic hammer, carefully hit on the knuckle side to separate ball joint from knuckle.

NOTE: A ball joint remover can be used if the ball joint is jammed into knuckle.

NOTICE **Never hit on suspension arm to avoid damaging it permanently.**

7. Remove the lower bolt securing the shock absorber.
8. If equipped, remove stabilizer bar link upper nut and move link away.

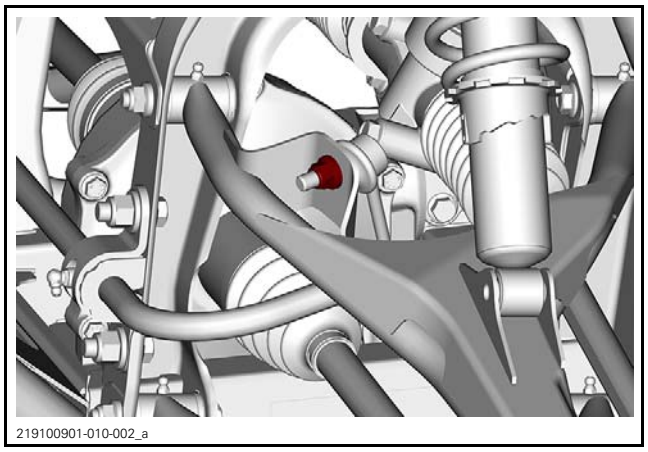
219100901-010-002_a

9. Remove fasteners securing suspension arm to frame.

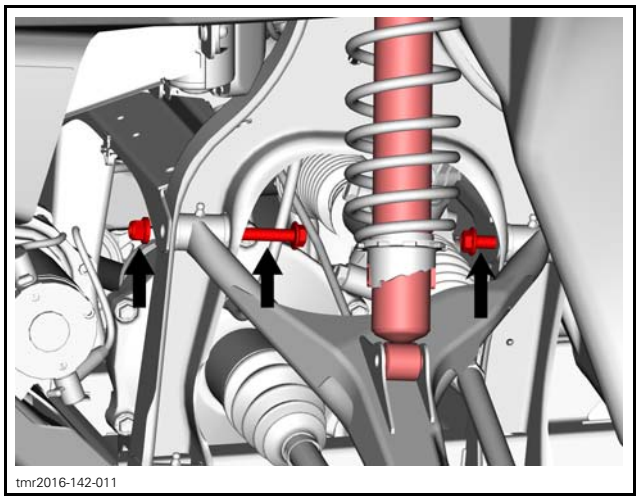
tmr2016-142-011

10. Remove suspension arm.

Installing the Upper Suspension Arm

The installation is the reverse of the removal procedure. However, pay attention to the following.

Lubricate suspension arm. Refer to *MAINTENANCE* in this subsection.

Install a NEW cotter pin to secure ball joint nut. Both end of cotter pin must be folded.

SUSPENSION ARM BUSHINGS

Removing the Suspension Arm Bushings

1. Remove wear plates, cushions and inner bushings from suspension arm.

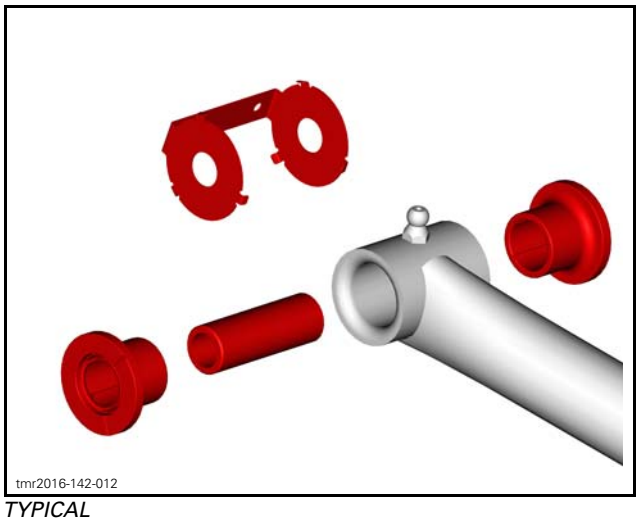
tmr2016-142-012

TYPICAL

Installing the Suspension Arm Bushings

The installation is the reverse of the removal procedure. However, pay attention to the following.

Lubricate suspension arm. Refer to *MAINTENANCE* in this subsection.

BALL JOINTS

Removing the Ball Joint

1. Remove suspension arm from vehicle. Refer to *REMOVING THE SUSPENSION ARM* in this subsection.
2. Remove and discard the circlip from ball joint.

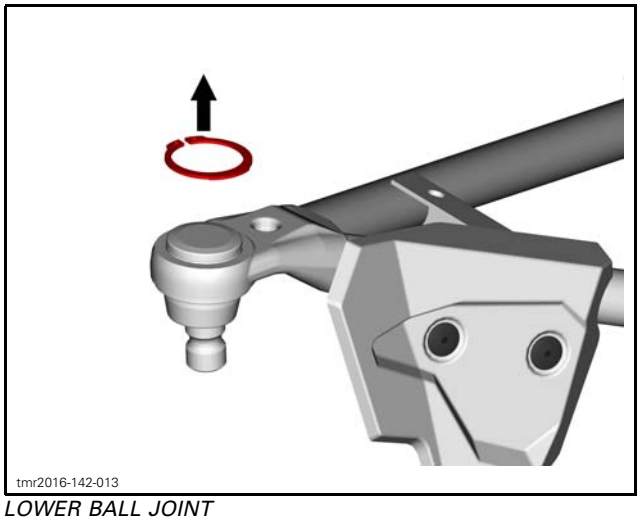

LOWER BALL JOINT

UPPER BALL JOINT

Midwest Manuals
Green Manuals
Paperless Manuals For a Better Tomorrow www.green-manuals.com
If you bought this manual from any other seller please leave them NEGATIVE feedback and notify me at bestshopmanuals@gmail.com

3. Install suspension arm on a press.
4. Use an appropriate ball joint remover.

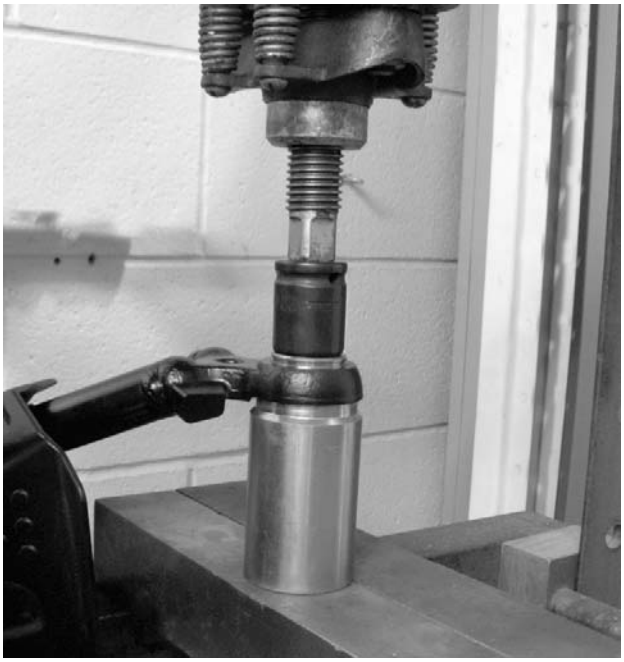

5. Remove ball joint from suspension arm.

NOTICE Make sure that suspension arm is properly supported on the press during ball joint removal.

Installing the Ball Joint

The installation is the reverse of the removal procedure. However, pay attention to the following.

Install a **NEW** circlip to secure ball joint.

REAR SUSPENSION

SERVICE TOOLS

Description	Part Number	Page
SPRING COMPRESSOR	529 036 184	3

SERVICE PRODUCTS

Description	Part Number	Page
SYNTHETIC SUSPENSION GREASE (EUR)	779226	2
SYNTHETIC SUSPENSION GREASE	779163	2

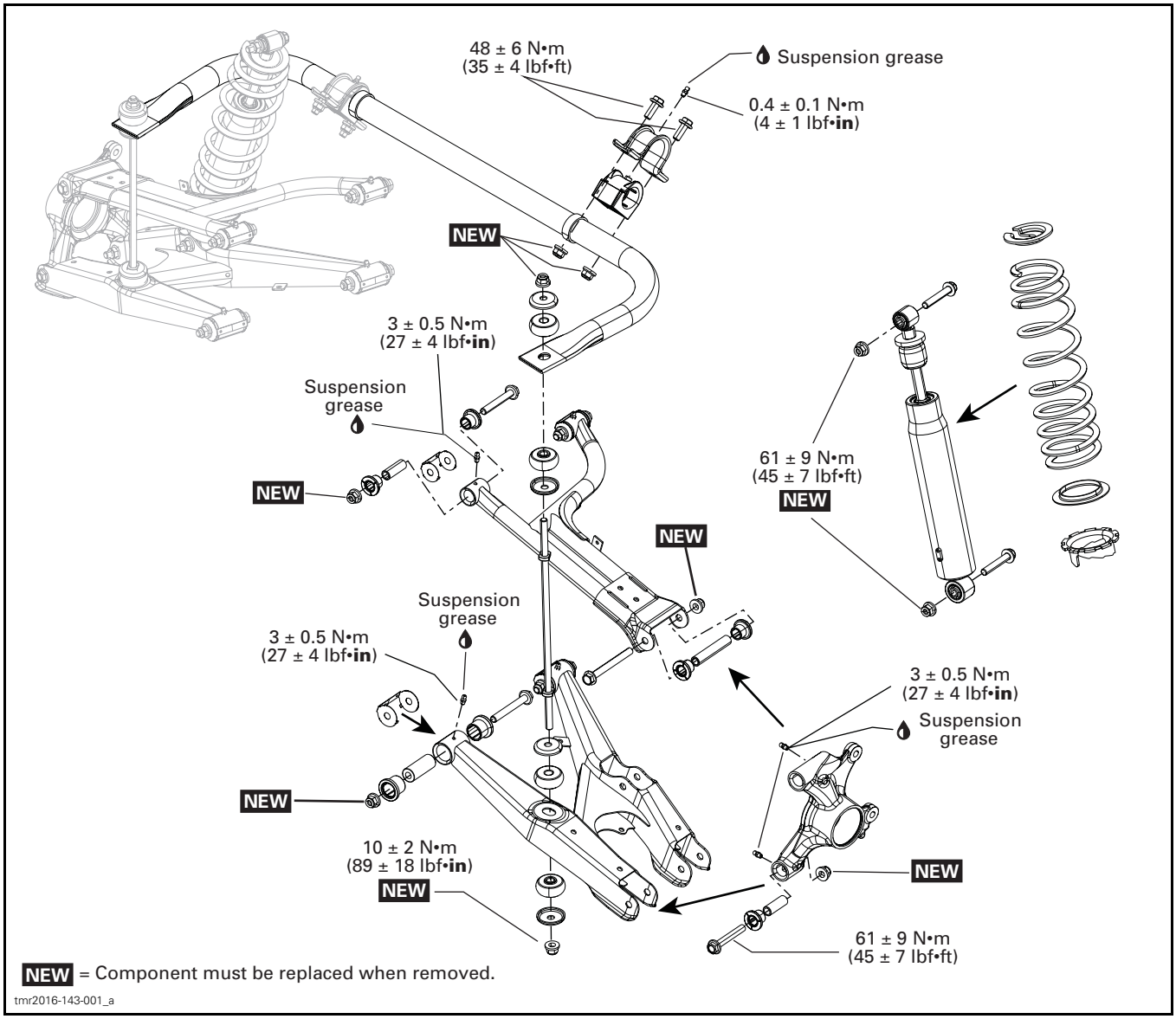

GENERAL

The procedure described below is the same for the RH and LH sides, unless otherwise instructed.

MAINTENANCE

INSPECTING THE SHOCK ABSORBER

Check shock absorber for any leaks, replace if necessary.

LUBRICATING THE SUSPENSION ARM AND STABILIZER BAR BUSHINGS (IF EQUIPPED)

Lubricate suspension arm and stabilizer bar bushings (if equipped) at grease fittings.

SUSPENSION GREASE	
Scandinavia	SYNTHETIC SUSPENSION GREASE (EUR) (P/N 779226)
All other countries	SYNTHETIC SUSPENSION GREASE (P/N 779163)

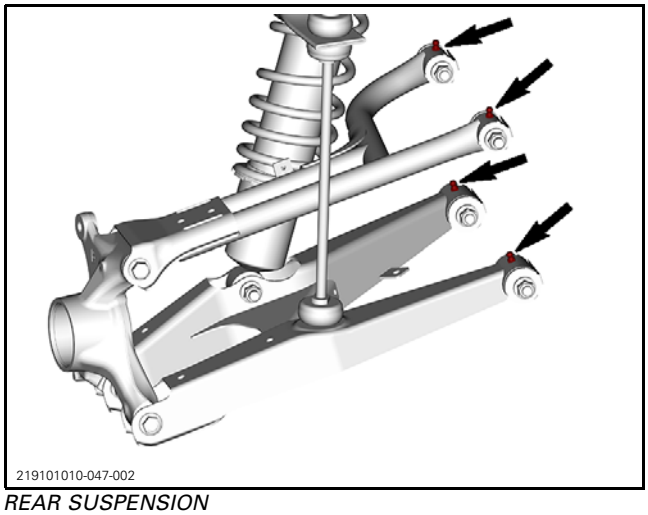

REAR SUSPENSION

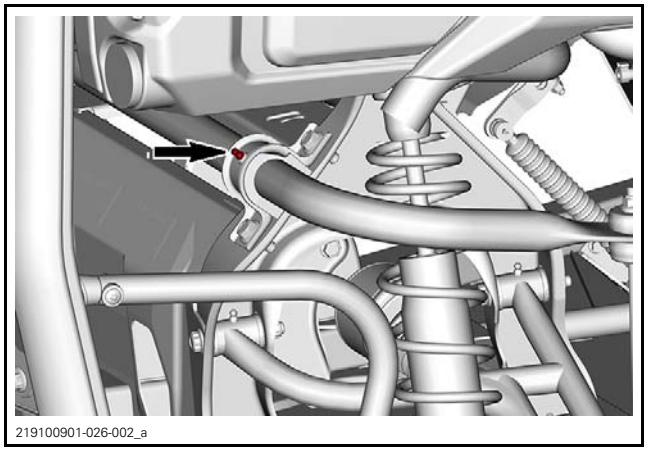

REAR STABILIZER BAR BUSHINGS

LUBRICATING THE REAR KNUCKLE

KNUCKLE LUBRICATION	
Scandinavia	SYNTHETIC SUSPENSION GREASE (EUR) (P/N 779226)
All other countries	SYNTHETIC SUSPENSION GREASE (P/N 779163)

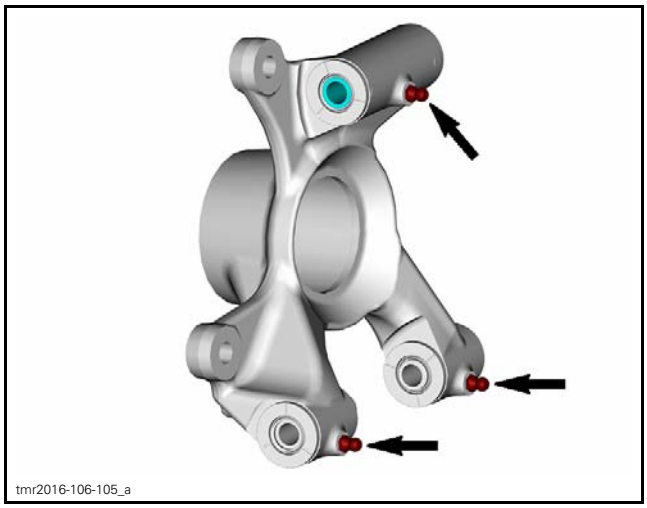

INSPECTING THE SUSPENSION ARM

Check suspension arm for:
- Cracks
- Pitting
- Bending
- Distortion.

Check suspension arm for abnormal play:
- Side to side
- Up and down.

If any play is detected, inspect:
– Bushings
– Cushions
– Wear plates.

Check ball joint for:
– Damage
– Pitting
– Play.

Check ball joint bellows for:
– Damage
– Cracks.

PROCEDURES

SHOCK ABSORBERS

Removing the Shock Absorber

1. Safely lift and support the vehicle off the ground. Refer to *INTRODUCTION* subsection.
2. Open cargo box.
3. Remove bolts and nuts retaining shock absorber.

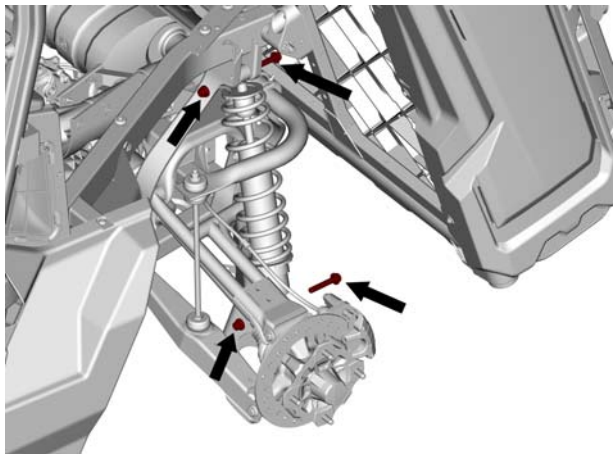
tmr2016-143-002

4. Remove shock absorber.

Inspecting the Shock Absorber

Remove spring from shock absorber. Refer to *SPRINGS* in this subsection.

Inspect bushings condition. Replace as required.

Secure the end of shock body in a vise with its rod upward.

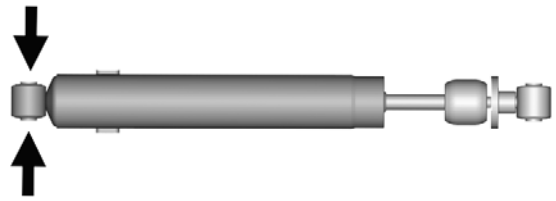
tmr2016-142-005

TYPICAL - VICE JAWS POSITION

NOTICE **Do not clamp directly on shock body.**

Extend and compress the piston several times over its entire stroke. Check that it moves smoothly and with uniform resistance with its rod upward.

Check the following conditions that will denote a defective shock:
– A skip or a hang back when reversing stroke at mid travel.
– Seizing or binding condition except at extreme end of either stroke.
– Oil leakage.
– A gurgling noise, after completing one full compression and extension stroke.

Replace if any faults are present.

Installing the Shock Absorber

The installation is the reverse of the removal procedure.

SPRINGS

Removing the Spring

All models except X mr

1. Remove shock absorber from vehicle. Refer to *SHOCK ABSORBERS* in this subsection.
2. Place the spring compressor in a vice.

REQUIRED TOOL	
SPRING COMPRESSOR (P/N 529 036 184)	

3. Position the shock absorber in the tool.
4. Install the spring compressor pins.
5. Tighten spring remover screw until the spring is sufficiently compressed to remove spring cap.
6. Remove spring cap from shock absorber.
7. Release spring remover screw.
8. Remove spring from shock absorber.

For X mr models

1. Remove shock absorber from vehicle. Refer to *SHOCK ABSORBERS* in this subsection.
2. Use an appropriate spring remover and follow the manufacturer's instructions to remove spring from shock absorber.

Inspecting the Spring

Inspect the spring for damage.

Replace if necessary.

Installing the Spring

The installation is the reverse of the removal procedure.

STABILIZER BAR

Removing the Stabilizer Bar

1. Safely lift and support the vehicle off the ground. Refer to *INTRODUCTION* subsection.
2. Remove the stabilizer link upper nuts, stabilizer link bushing plates and stabilizer link bushings.

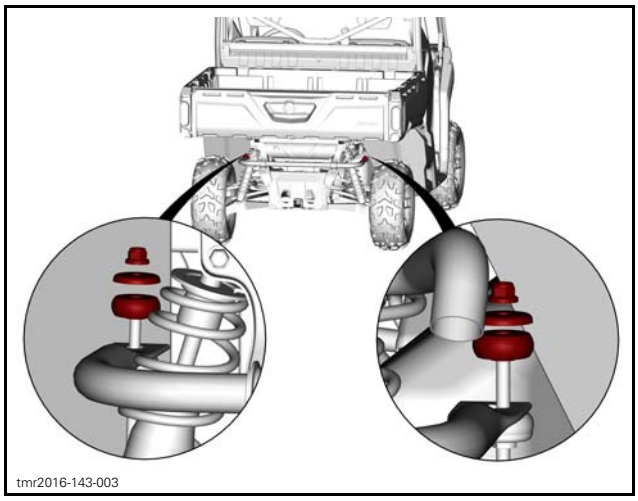

3. Remove stabilizer bar retaining screws.

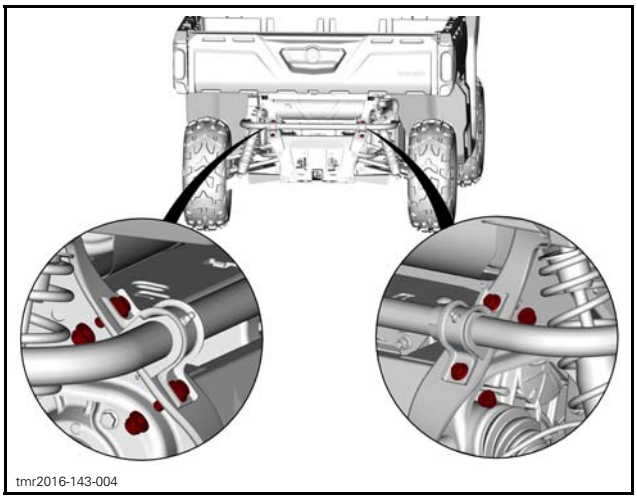

4. Remove stabilizer bar.

Inspecting the Stabilizer Bar

Check stabilizer bar for cracks, bending or other damages.

Replace if necessary.

Installing the Stabilizer Bar

The installation is the reverse of the removal procedure. However, pay attention to the following.

Install stabilizer link nuts and stabilizer bar screws loosely.

Using the following sequence, tighten fasteners as per specifications.

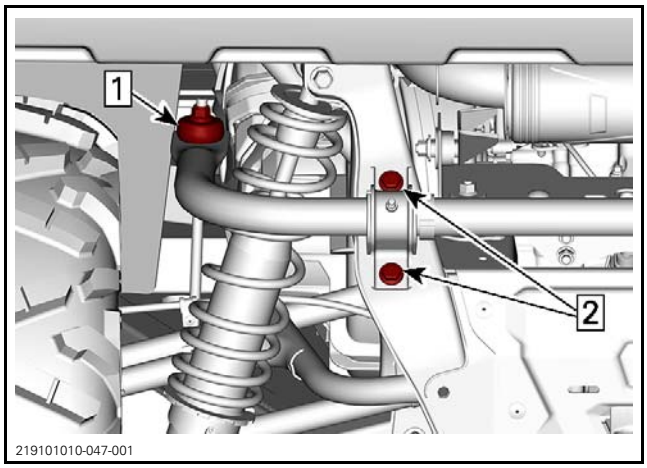

1. Stabilizer link nuts
2. Stabilizer bar screws

TIGHTENING TORQUE	
Stabilizer link nuts	10 N•m ± 2 N•m (89 lbf•**in** ± 18 lbf•**in**)
Stabilizer screws	48 N•m ± 6 N•m (35 lbf•ft ± 4 lbf•ft)

LOWER SUSPENSION ARM

Removing the Lower Suspension Arm

1. Safely lift and support the vehicle off the ground. Refer to *INTRODUCTION* subsection.
2. Remove wheel.
3. Detach the shock absorber from the lower suspension arm.

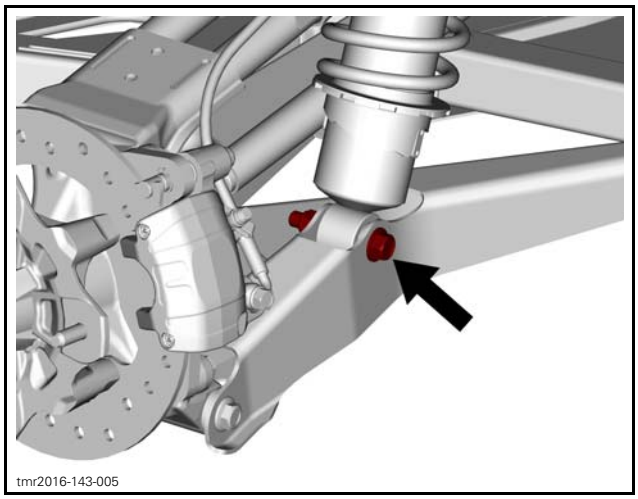
tmr2016-143-005

4. Remove bolts and nuts securing lower suspension arm to knuckle.

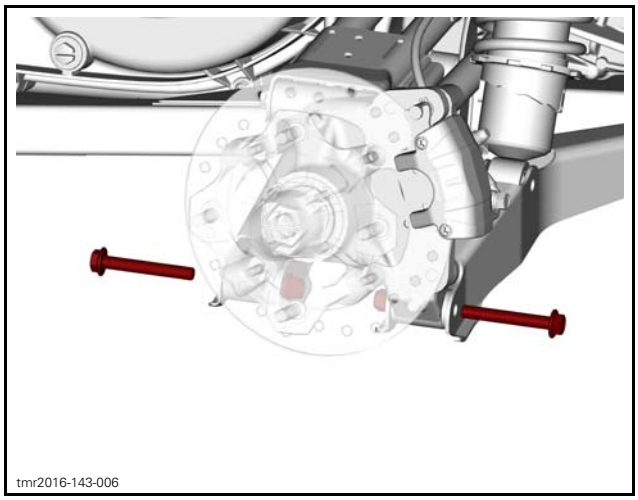
tmr2016-143-006

5. Detach the stabilizer link from the lower suspension arm.

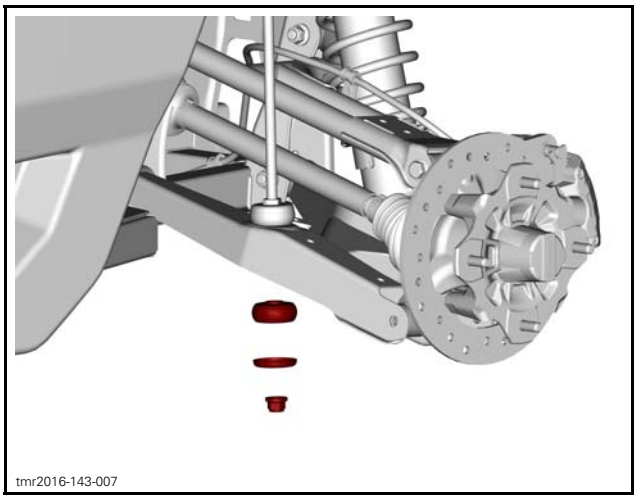
tmr2016-143-007

6. Remove bolts and nuts securing suspension arm to frame.

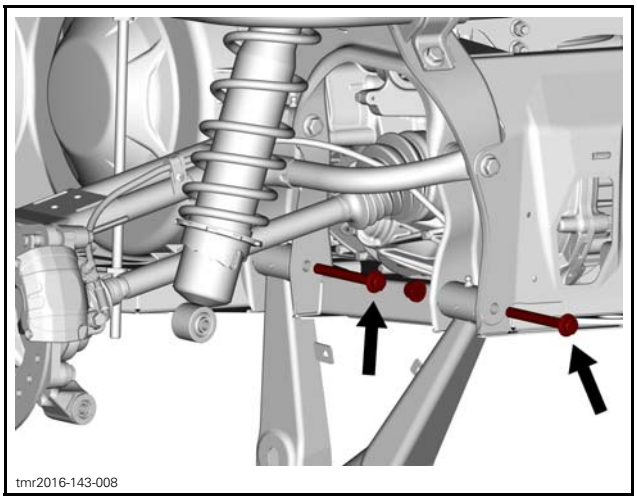
tmr2016-143-008

7. Remove suspension arm.

Installing the Lower Suspension Arm

The installation is the reverse of the removal procedure. However, pay attention to the following.

Lubricate suspension arm. Refer to *MAINTENANCE* in this subsection.

UPPER SUSPENSION ARM

Removing the Upper Suspension Arm

1. Safely lift and support the vehicle off the ground. Refer to *INTRODUCTION* subsection.
2. Remove wheel.
3. Detach the shock absorber from the lower suspension arm.

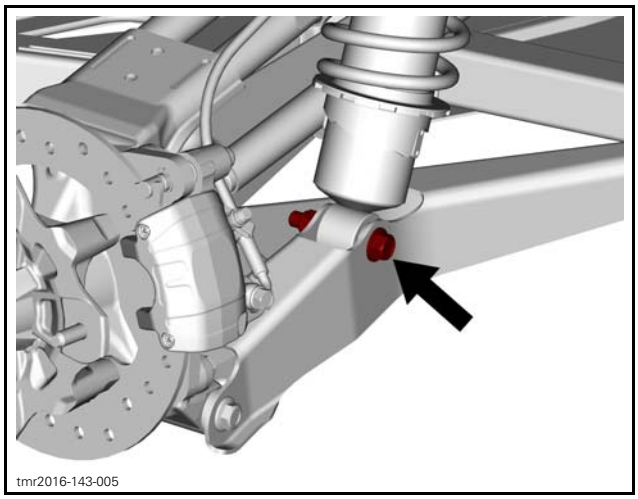
tmr2016-143-005

4. Remove the clamp retaining brake hose from the suspension arm.

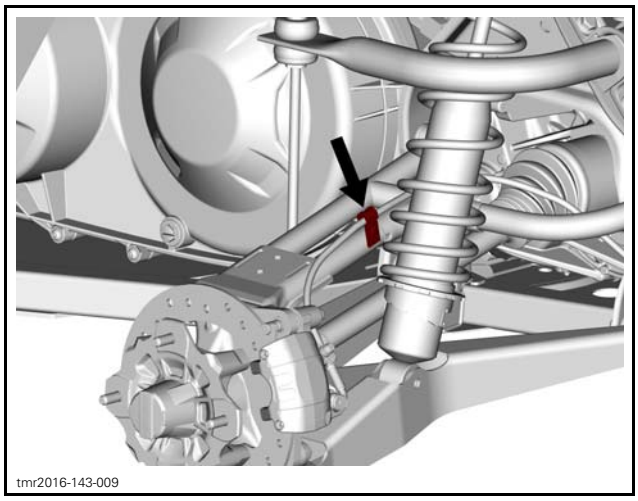
tmr2016-143-009

5. Separate the suspension arm from the knuckle.

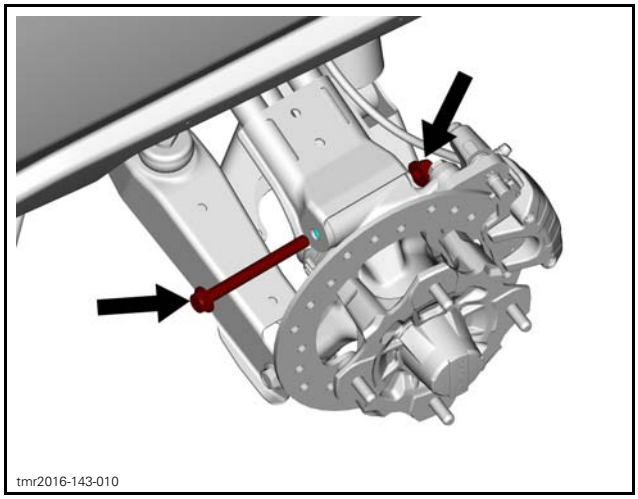
tmr2016-143-010

6. Remove fasteners securing suspension arm to frame.

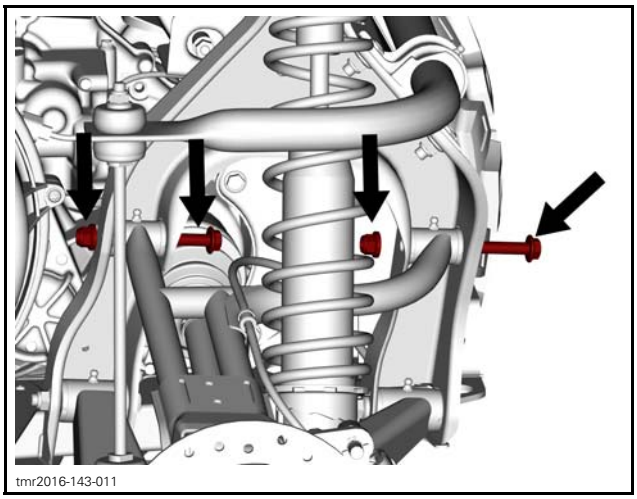
tmr2016-143-011

7. Remove suspension arm.

Installing the Upper Suspension Arm

The installation is the reverse of the removal procedure. However, pay attention to the following.

Lubricate suspension arm. Refer to *MAINTENANCE* in this subsection.

SUSPENSION ARM BUSHINGS

Removing the Suspension Arm Bushings

1. Remove wear plates, cushions and inner bushings from suspension arm.

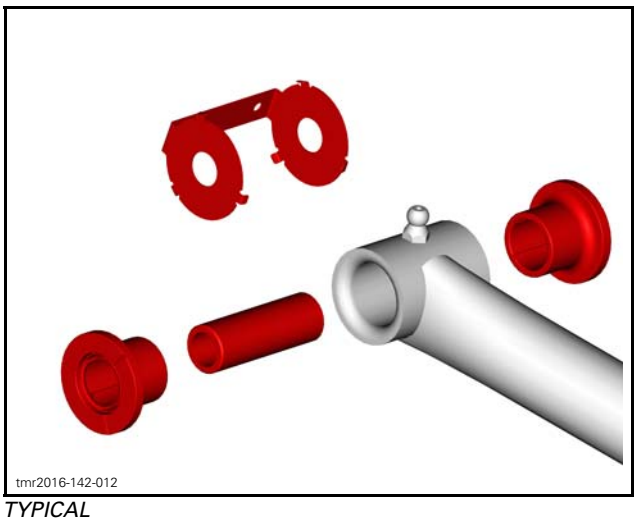
tmr2016-142-012

TYPICAL

Installing the Suspension Arm Bushings

The installation is the reverse of the removal procedure. However, pay attention to the following.

Lubricate suspension arm. Refer to *MAINTENANCE* in this subsection.

BRAKES

SERVICE TOOLS

Description	Part Number	Page
ECM ADAPTER TOOL	529 036 166	7
FLUKE 115 MULTIMETER	529 035 868	7
VACUUM/PRESSURE PUMP	529 021 800	5

SERVICE PRODUCTS

Description	Part Number	Page
BRAKE AND PARTS CLEANER PRO S2	779245	4
BRAKE FLUID DOT 4 (EUR)	779207	5
BRAKE FLUID DOT 4	779151	5
COSMO RUBBER GREASE	715 900 399	5, 9
SYNTHETIC GREASE (EUR)	779231	5
SYNTHETIC GREASE	779162	5
XPS BRAKES AND PARTS CLEANER (USA)	219 701 705	4, 10–11
XPS BRAKES AND PARTS CLEANER	219 701 776	10–11

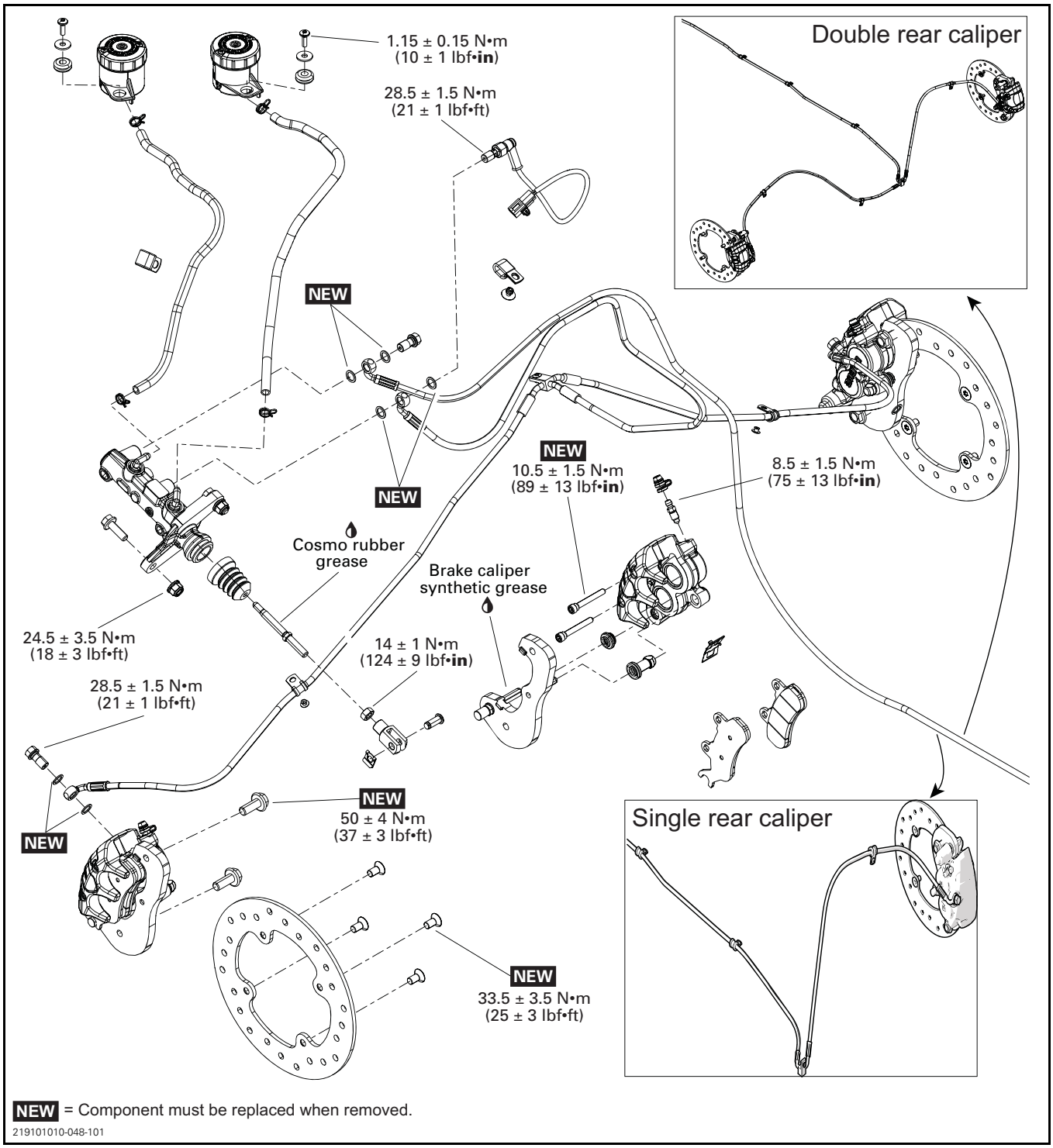
1.15 ± 0.15 N•m
(10 ± 1 lbf•in)
28.5 ± 1.5 N•m
(21 ± 1 lbf•ft)
Double rear caliper
NEW
NEW
NEW
10.5 ± 1.5 N•m
(89 ± 13 lbf•in)
8.5 ± 1.5 N•m
(75 ± 13 lbf•in)
Cosmo rubber grease
Brake caliper synthetic grease
24.5 ± 3.5 N•m
(18 ± 3 lbf•ft)
14 ± 1 N•m
(124 ± 9 lbf•in)
28.5 ± 1.5 N•m
(21 ± 1 lbf•ft)
NEW
NEW
50 ± 4 N•m
(37 ± 3 lbf•ft)
Single rear caliper
NEW
33.5 ± 3.5 N•m
(25 ± 3 lbf•ft)
NEW = Component must be replaced when removed.
219101010-048-101

BRAKE PEDAL AND BRAKE LOCKING MECHANISM

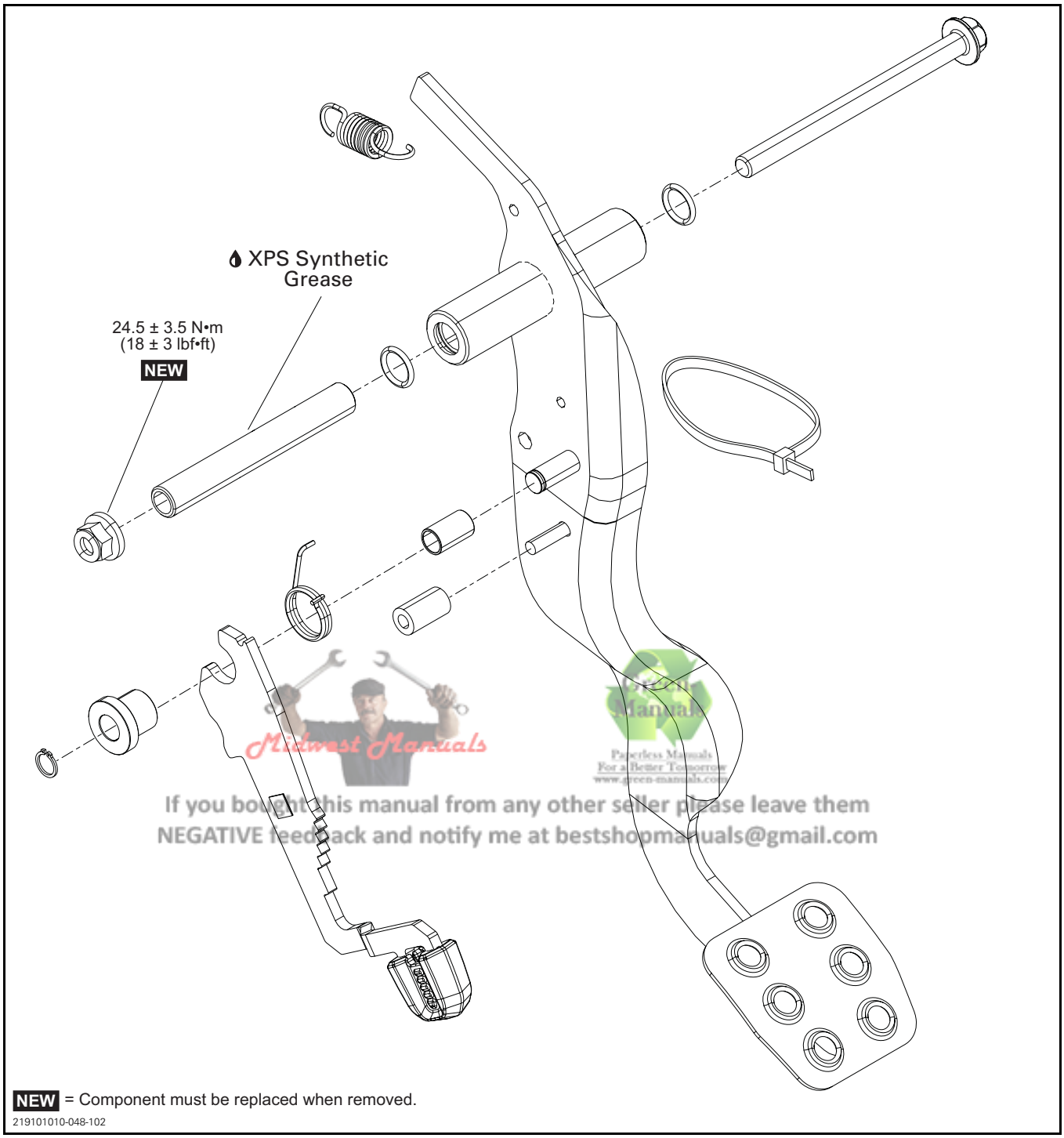

Midwest Manuals
Green Manuals
Paperless Manuals
For a Better Tomorrow
www.green-manuals.com
If you bought this manual from any other seller please leave them
NEGATIVE feedback and notify me at bestshopmanuals@gmail.com

NEW = Component must be replaced when removed.

219101010-048-102

GENERAL

⚠ WARNING

Always check brake system operation after removing or servicing a brake component. If brake pedal feels spongy, make sure all components are properly installed and system is properly bled.

NOTICE **Avoid spilling brake fluid on plastic, rubber or painted parts. Protect these parts with a rag when servicing brake system.**

Sealing washers must be discarded and replaced with new ones every time a Banjo fitting is unscrewed.

Always clean the area around a brake component before servicing.

MAINTENANCE

CLEANING AND INSPECTING THE BRAKE SYSTEM

NOTICE **Do not clean brake components in petroleum based solvent. Use brake system cleaner only. Soiled brake pads must be replaced with new ones.**

Brake Pads

1. Measure brake pad lining thickness. Refer to *TECHNICAL SPECIFICATIONS*.

NOTE: The brake pad grooves are wear indicators.

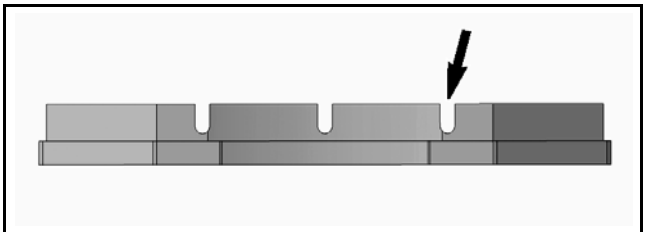

BRAKE PAD GROOVE

⚠ WARNING

Brake pads must always be replaced in pairs.

Brake Caliper

1. Remove calipers then check the following components:
   – Check brake pad pins
   – Check caliper boot for cracks
   – Check caliper movement on its support
   – Check pistons movement
   – Check pistons for scratches, rust or other damages.
2. Clean the following components using the recommended products :
   – Brake pads
   – Caliper support and slider
   – Caliper pistons, spring and pins.

SERVICE PRODUCT	
USA	XPS BRAKES AND PARTS CLEANER (USA) (P/N 219 701 705)
Other countries	BRAKE AND PARTS CLEANER PRO S2 (P/N 779245)

NOTE: Do not remove pistons from caliper for cleaning them.

3. Lubricate caliper sliders and pins using an appropriate brake caliper synthetic grease.

Brake Disc

1. Check brake disc as follows:
   – Check disc thickness
   – Check disc surfaces
   – Check disc warpage.

NOTE: Refer to *TECHNICAL SPECIFICATIONS* for details.

2. Clean brake disc using the recommended products.

SERVICE PRODUCT	
USA	XPS BRAKES AND PARTS CLEANER (USA) (P/N 219 701 705)
Other countries	BRAKE AND PARTS CLEANER PRO S2 (P/N 779245)

Master Cylinder

1. Check master cylinder as follows:
   – Check cleanliness of master cylinder rod and boot.
   – Check master cylinder boot for cracks or damage.
2. If required, clean then lubricate master cylinder rod and boot using rubber grease.

SERVICE PRODUCT
COSMO RUBBER GREASE (P/N 715 900 399)

Brake Pedal

1. Check brake pedal as follows:
   – Brake pedal pivot movement
   – Brake pedal pivot cleanliness.
2. If required, clean then lubricate brake pedal pivot using synthetic grease.

SERVICE PRODUCT	
Scandinavia	SYNTHETIC GREASE (EUR) (P/N 779231)
Other countries	SYNTHETIC GREASE (P/N 779162)

Brake Hoses

1. Check hoses for leaks, crushed, deformations, cracking or scrapes.

NOTE: Any deformation can restrict the proper flow of fluid and cause braking problems.

REPLACING THE BRAKE FLUID

Draining the Brake Fluid

1. Clean and remove reservoir cover with its diaphragm.
2. Connect a clear hose into caliper bleeder.

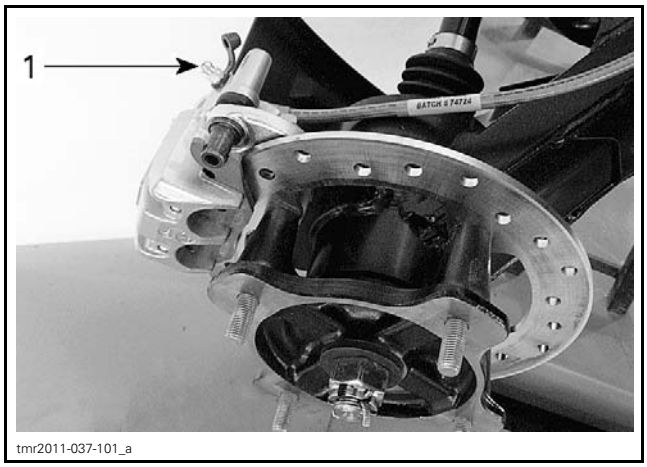

tmr2011-037-101_a

1. Caliper bleeder

3. Loosen caliper bleeder.
4. Pump brake pedal until no more fluid flows out.
5. Repeat draining procedure for the other caliper bleeders.

Filling the Brake Fluid

1. Add recommended brake fluid to MAX. mark. Do not overfill.

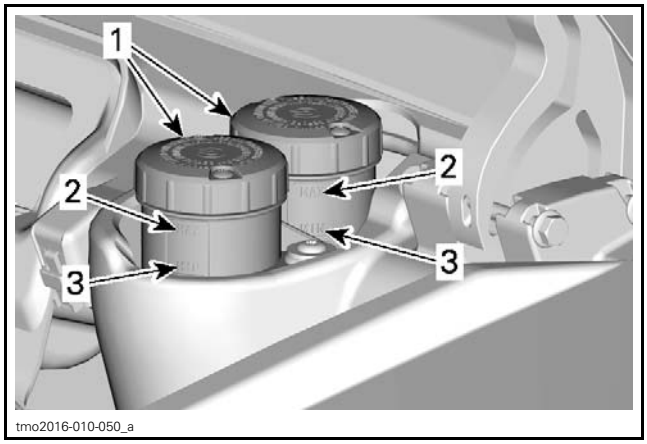

tmo2016-010-050_a

1. Brake fluid reservoirs
2. MAX
3. MIN

RECOMMENDED BRAKE FLUID	
Scandinavia	BRAKE FLUID DOT 4 (EUR) (P/N 779207)
All other countries	BRAKE FLUID DOT 4 (P/N 779151)

⚠ WARNING

– Use only DOT 4 brake fluid from a sealed container.
– Do not use brake fluid from an old or already opened container.

Bleeding the Brake System (Vacuum Pump)

NOTE: Brake fluid reservoir must be kept full to prevent air from being pumped into the system.

1. On each caliper, unscrew bleeder until brake fluid comes out then close it.
2. Install the vacuum pump onto caliper bleeder.

REQUIRED TOOL	
VACUUM/PRESSURE PUMP (P/N 529 021 800)	

3. Place pump to vacuum position.
4. Pump vacuum pump a few times.
5. Loosen bleeder.
6. Continue to pump until no more air bubbles appear in clear hose.
7. Close then tighten bleeder.

TIGHTENING TORQUE	
Bleeder	5.5 N•m ± 1.5 N•m (49 lbf•**in** ± 13 lbf•**in**)

8. Add recommended brake fluid to MAX. mark. Do not overfill.
9. Perform bleeding procedure for the other caliper bleeders.
10. Check brake pedal operation:
    – If brake pedal feels spongy, bleed system again then carry out the *BRAKE SYSTEM PRESSURE VALIDATION* as detailed in this subsection.

Bleeding the Brake System (Manual)

NOTE: Brake fluid reservoir must be kept full to prevent air from being pumped into the system.

1. Connect a clear hose onto caliper bleeder.
2. Pump up system pressure with brake pedal until pedal resistance is felt.
3. Depress and hold brake pedal.
4. Open bleeder and then close it.
5. Release brake pedal slowly.

NOTE: Do not release brake pedal until bleeder has been closed.

6. Repeat procedure until fluid flows out without any air bubbles.
7. Tighten bleeder.

TIGHTENING TORQUE	
Bleeder	5.5 N•m ± 1.5 N•m (49 lbf•**in** ± 13 lbf•**in**)

8. Perform bleeding procedure for the other caliper bleeders.
9. Check brake pedal operation:
    – If brake pedal feels spongy, bleed system again then carry out the *BRAKE SYSTEM PRESSURE VALIDATION* as detailed in this subsection.

INSPECTION

BRAKE SYSTEM PRESSURE VALIDATION

NOTICE **Do not pump up the brake pedal repeatedly before doing the validation.**

REQUIRED TOOLS	
Compression force gauge	
Ruler	

1. Position a ruler perpendicularly to brake pedal.

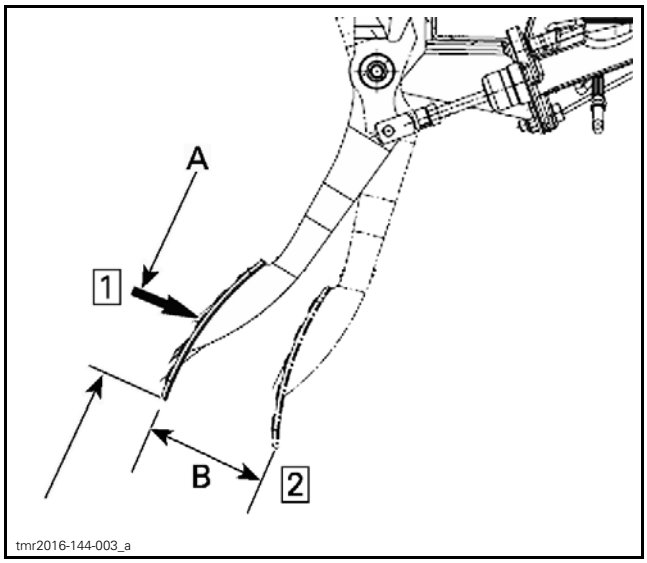

Step 1: Position compression force gauge at distance A
Step 2: Push brake pedal from distance B

A. 41 mm ± 5 mm (1.6 in ± .2 in)
B. 70 mm (2-3/4 in)

BRAKE PEDAL LOAD AT 70 MM
Minimum 200 N•m (148 lbf•ft)

2. If load reading is not in accordance with the specification:
    2.1 Clean and inspect the brake system.
    2.2 Bleed brake system.

NOTE: Refer to *MAINTENANCE* in this subsection.

PROCEDURES

BRAKE LIGHT SWITCH

Brake Light Switch Location

Brake light switch is located underneath LH front fender on master cylinder.

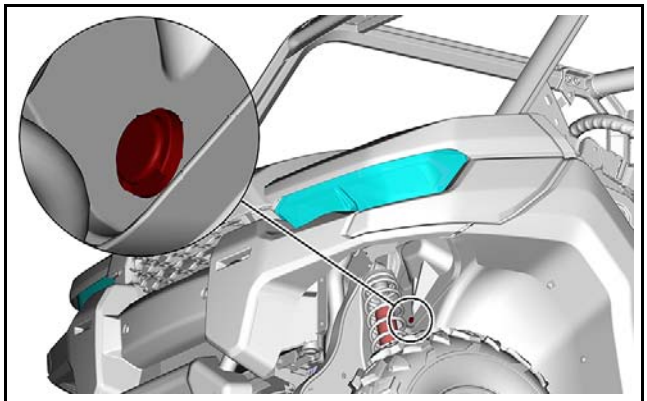

tmr2016-144-005

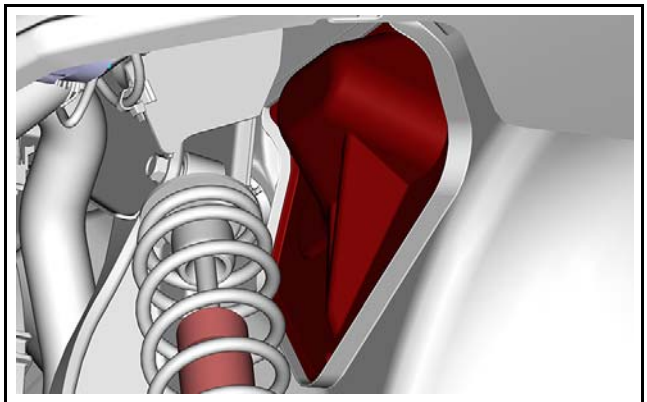

tmr2016-144-006

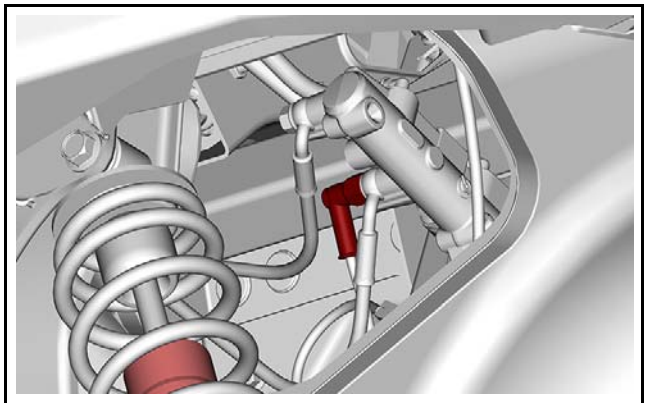

tmr2016-144-007

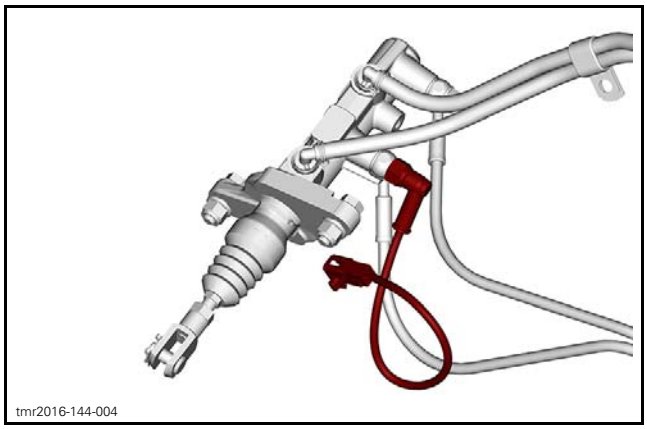

tmr2016-144-004

Testing the Brake Light Switch Resistance

REQUIRED TOOL	
FLUKE 115 MULTIMETER (P/N 529 035 868)	

1. Disconnect brake light switch connector.
2. Check switch operation as follows.

BRAKE LIGHT SWITCH POSITION	PIN		RESISTANCE
Firmly pushed	1	2	Close to 0 Ω
Released			Infinite (OL)

Replace switch as required.

If the switch tests good, verify wire continuity between harness connector and ECM-B connector.

REQUIRED TOOL	
ECM ADAPTER TOOL (P/N 529 036 166)	

ECM-B CONNECTOR PIN	HARNESS CONNECTOR WIRES	RESISTANCE
C-3	RED/ORANGE	Close to 0 Ω

NOTE: If only the LH taillight does not work, check brake relay (R8) in fuse box 1.

Replacing the Brake Light Switch

1. Disconnect brake light switch connector.
2. Drain front brake line.
3. Remove brake light switch from master cylinder.

NOTE: Use shop rags to catch any spilled brake fluid.

4. Install new sealing washers.
5. Install new brake light switch on master cylinder.

TIGHTENING TORQUE	
Brake light switch	28.5 N•m ± 1.5 N•m (21 lbf•ft ± 1 lbf•ft)

6. Connect brake light switch connector.
7. Refill and bleed brake system. Refer to *MAINTENANCE* in this subsection.

MASTER CYLINDER

Removing the Master Cylinder

1. Drain brake system, refer to *MAINTENANCE* in this subsection.
2. Remove master cylinder protective cover.

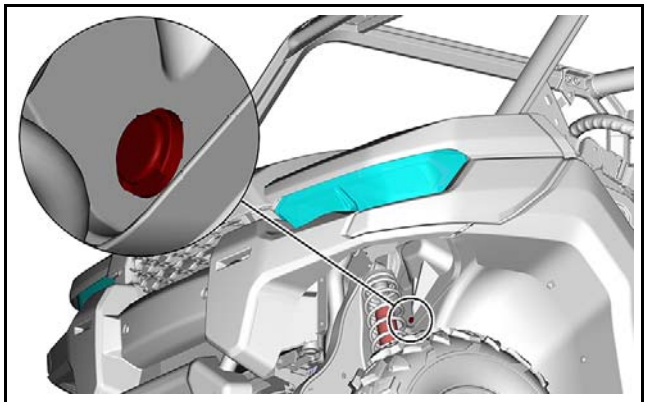
tmr2016-144-005

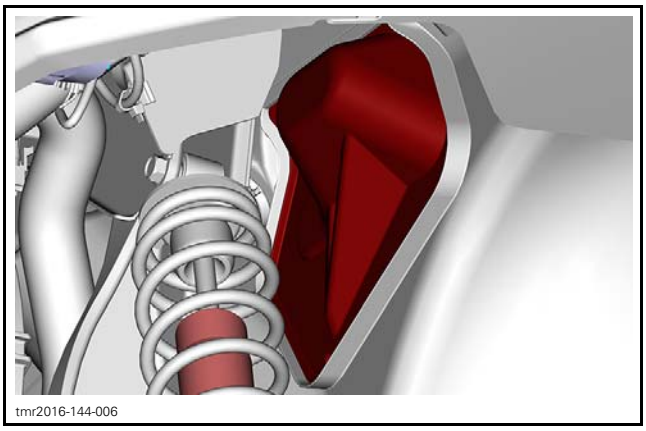
tmr2016-144-006

3. Remove / disconnect:
   1. Master cylinder push rod clip
   2. Brake light switch connector
   3. Brake light switch and rear brake hose banjo fitting screw.

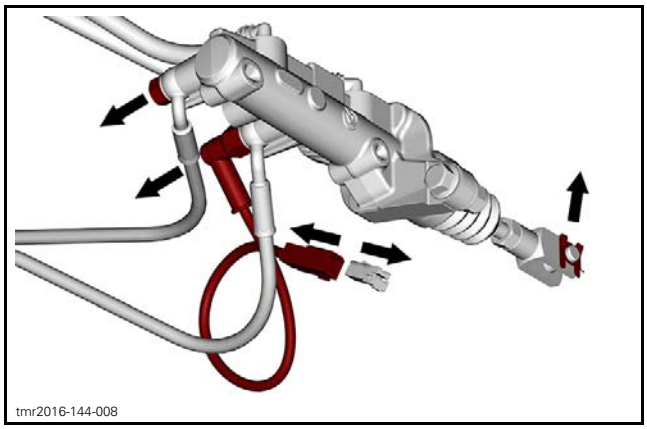
tmr2016-144-008

4. Remove / disconnect:
   1. Master cylinder push rod
   2. Brake oil reservoir hoses
   3. Master cylinder screws.

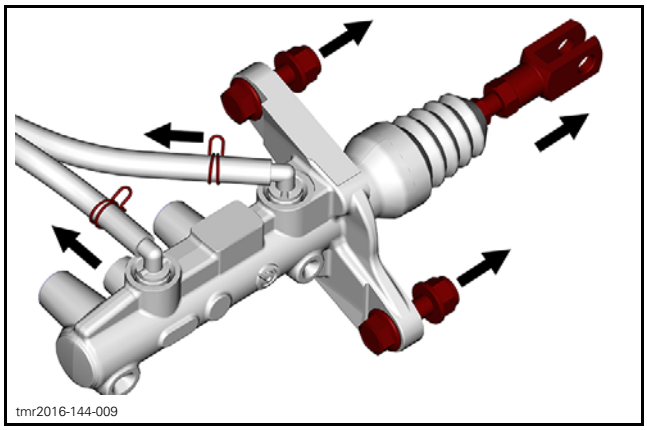
tmr2016-144-009

5. Remove master cylinder from vehicle.

Inspecting the Master Cylinder

Check boot for crack.

Check rod for wear and scratch.

Check master cylinder housing and reservoir for leaks or damage.

Installing the Master Cylinder

The installation is the reverse of the removal procedure. However, pay attention to the following.

Install new sealing washers.

TIGHTENING TORQUE	
Rear brake hose banjo fitting screw	28.5 N•m ± 1.5 N•m (21 lbf•ft ± 1 lbf•ft)
Brake light switch nut	

SERVICE PRODUCT	
Push rod end lubrication	COSMO RUBBER GREASE (P/N 715 900 399)
Master cylinder boot lubrication	

Refill and bleed brake system. Refer to *MAINTENANCE* in this subsection.

Adjust master cylinder rod. Refer to *ADJUSTING THE MASTER CYLINDER ROD* in this subsection.

Adjusting the Master Cylinder Rod

1. Loosen locking nut of master cylinder rod.

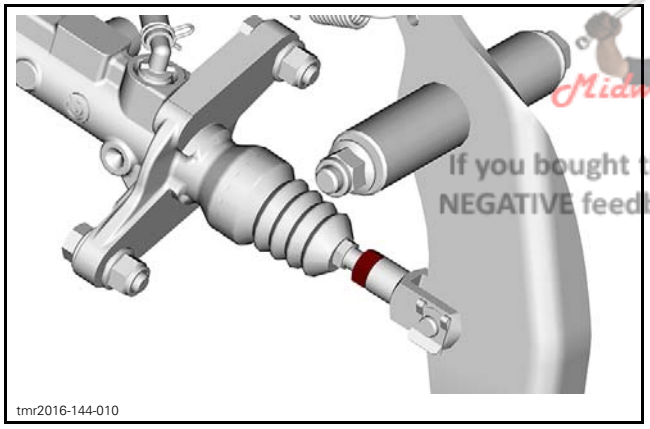
tmr2016-144-010

2. Move brake pedal up and down to check if there is a free play.

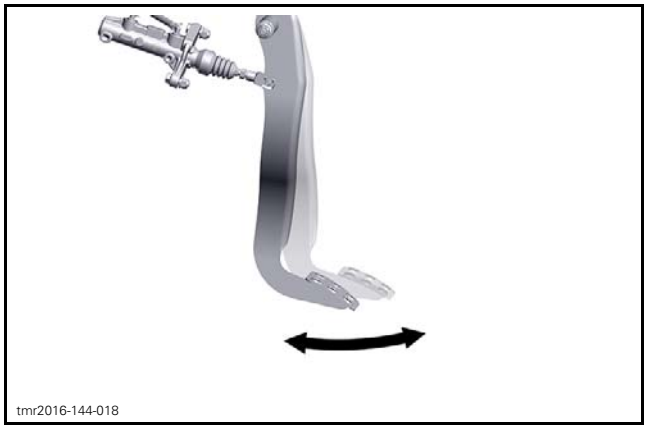
tmr2016-144-018

3. Rotate master cylinder rod to generate a free play according to specification.

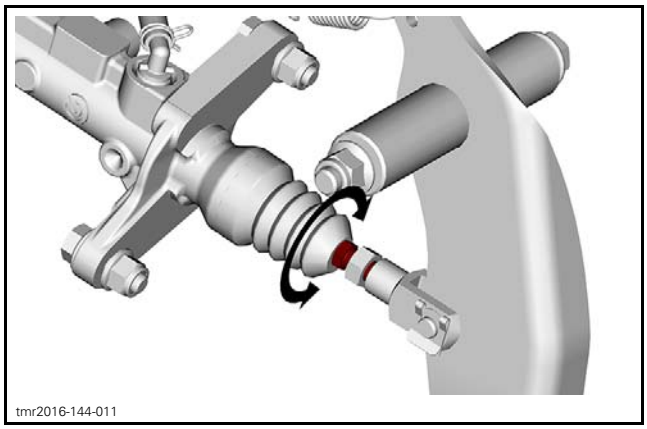
tmr2016-144-011

tmr2016-144-012

A. Free play

BRAKE PEDAL FREE PLAY
3.5 mm ± 1.5 mm (1/8 in ± 1/16 in)

4. Tighten locking nut of master cylinder rod to specification.

TIGHTENING TORQUE	
Rod locking nut	14 N•m ± 1 N•m (124 lbf•**in** ± 9 lbf•**in**)

CALIPER

Removing the Caliper

1. Remove wheel. Refer to *WHEELS AND TIRES* subsection.
2. If caliper is removed from vehicle for replacement, remove brake hose banjo fitting screw.

Midwest Manuals
Green Manuals
Paperless Manuals For a Better Tomorrow www.green-manuals.com
If you bought this manual from any other seller please leave them NEGATIVE feedback and notify me at bestshopmanuals@gmail.com

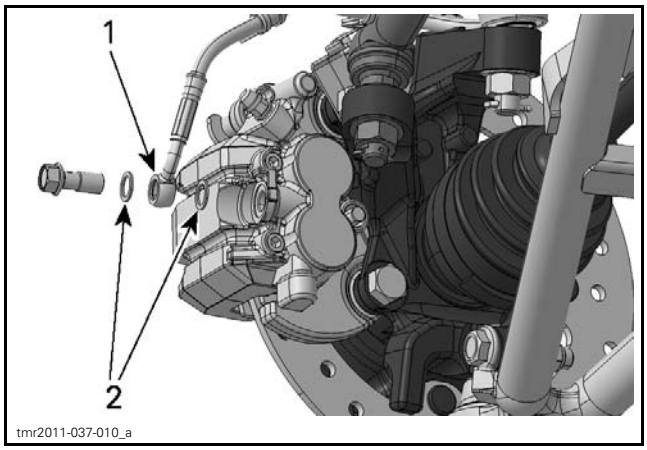

TYPICAL - FRONT CALIPER SHOWN
1. Brake hose
2. Sealing washers

3. Remove screws securing caliper support to knuckle.

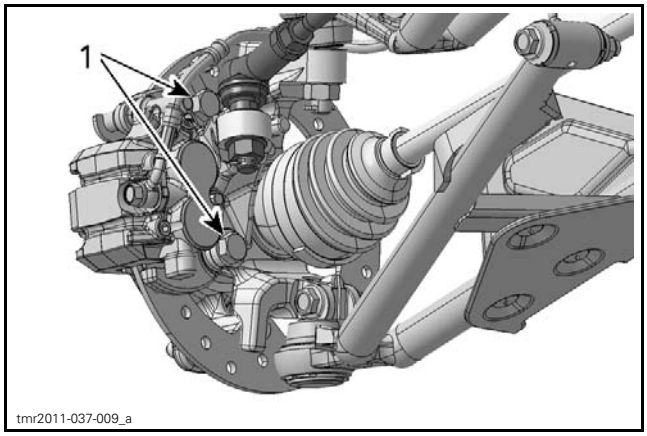

TYPICAL - FRONT CALIPER SHOWN
1. Caliper screws

4. Place caliper assembly onto a support.

NOTICE **Do not let caliper hangs by the hose and do not stretch or twist hose.**

Installing the Caliper

The installation is the reverse of the removal procedure. However, pay attention to the following.

If caliper was removed for replacement:

– Install new sealing washers.
– Refill and bleed brake system. Refer to *MAINTENANCE* in this subsection.

Install new caliper retaining screws

TIGHTENING TORQUE	
Brake hose banjo fitting screw	28.5 N•m ± 1.5 N•m (21 lbf•ft ± 1 lbf•ft)
Caliper retaining screw	50 N•m ± 4 N•m (37 lbf•ft ± 3 lbf•ft)

BRAKE PADS

Replacing the Brake Pads

1. Loosen brake pad pins.
2. Remove caliper from knuckle. Refer to *REMOVING THE CALIPER* in this subsection.
3. Remove and discard brake pad pins and pads.

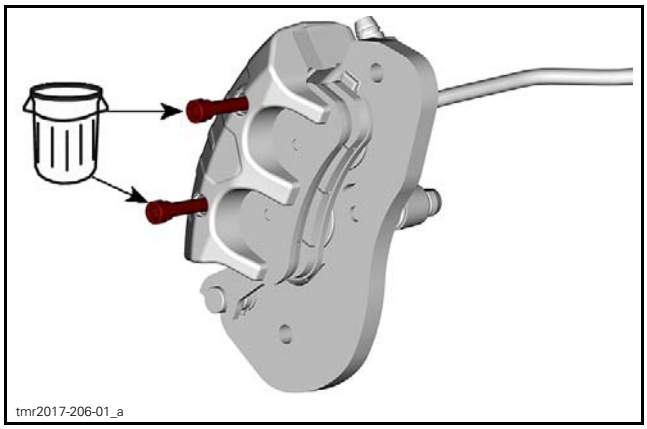

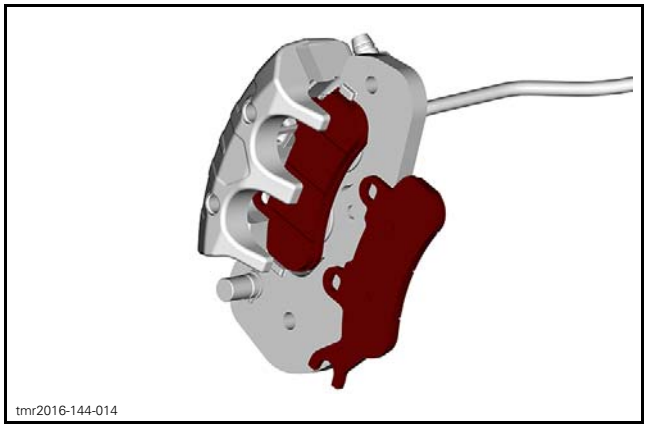

4. Use XPS brakes and parts cleaner to clean pistons end.

SERVICE PRODUCT	
USA	XPS BRAKES AND PARTS CLEANER (USA) (P/N 219 701 705)
Other countries	XPS BRAKES AND PARTS CLEANER (P/N 219 701 776)

5. Push caliper pistons inward.

NOTE: To avoid damaging pistons, use an old pad to push it into the caliper using a C-clamp.

6. Ensure brake pad spring is properly positioned onto caliper.

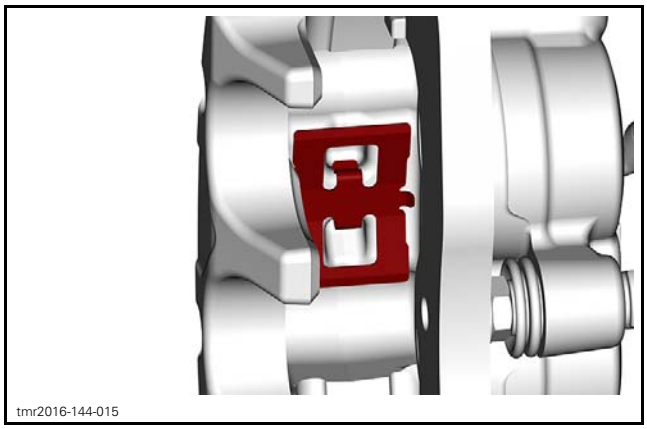
tmr2016-144-015

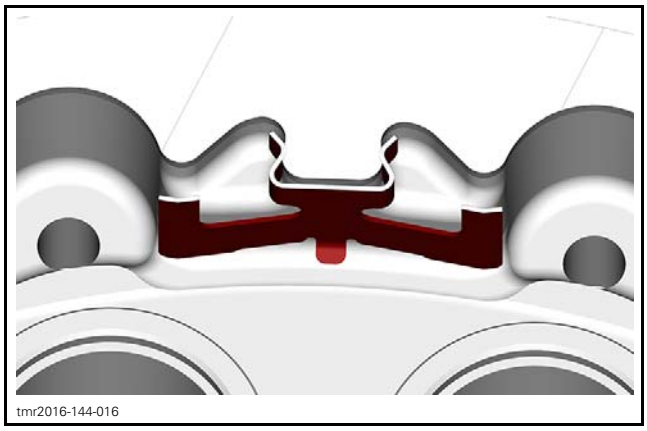
tmr2016-144-016

7. Install new brake pads.
8. Use XPS brakes and parts cleaner to clean brake pad pins.

SERVICE PRODUCT	
USA	XPS BRAKES AND PARTS CLEANER (USA) (P/N 219 701 705)
Other countries	XPS BRAKES AND PARTS CLEANER (P/N 219 701 776)

9. Install new brake pad pins.
10. Install caliper on knuckle, refer to *INSTALLING THE CALIPER* in this subsection.
11. Tighten brake pad pins to specification.

TIGHTENING TORQUE	
Brake pad pin	10 N•m ± 1.5 N•m (89 lbf•**in** ± 13 lbf•**in**)

BRAKE DISC

Inspecting the Brake Disc

Check disc surfaces for scratches or grooves on both sides.

Measure thickness and warpage of the disc. Ensure measures are as per specifications. Refer to *TECHNICAL SPECIFICATIONS*.

NOTICE **Do not machine Brake discs.**

Replacing the Brake Disc

1. Remove caliper from knuckle. Refer to *REMOVING THE CALIPER* in this subsection.
2. Remove wheel hub. Refer to *FRONT DRIVE* or *REAR DRIVE* subsection.
3. Remove brake disc screws.

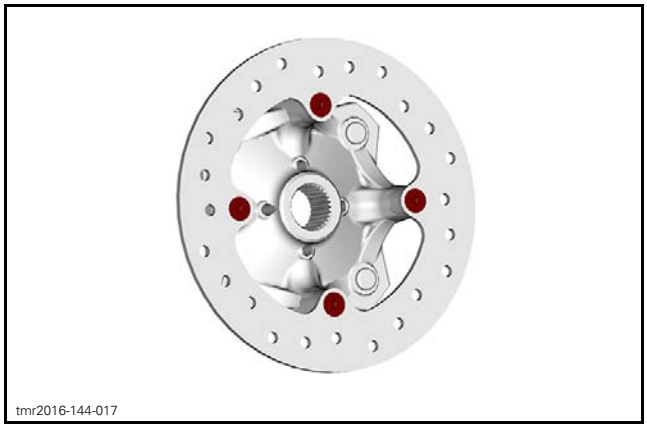
tmr2016-144-017

4. Replace brake disc.
5. Install new brake disc screws.
6. Tighten brake disc screws to specification.

TIGHTENING TORQUE	
Brake disc screw	33.5 N•m ± 3.5 N•m (25 lbf•ft ± 3 lbf•ft)

7. Install wheel hub, then caliper.
8. Install new cotter pin to secure wheel hub nut.

BODY (3-UP)

SERVICE PRODUCTS

Description	Part Number	Page
XPS ATV WASH	219 701 702	11

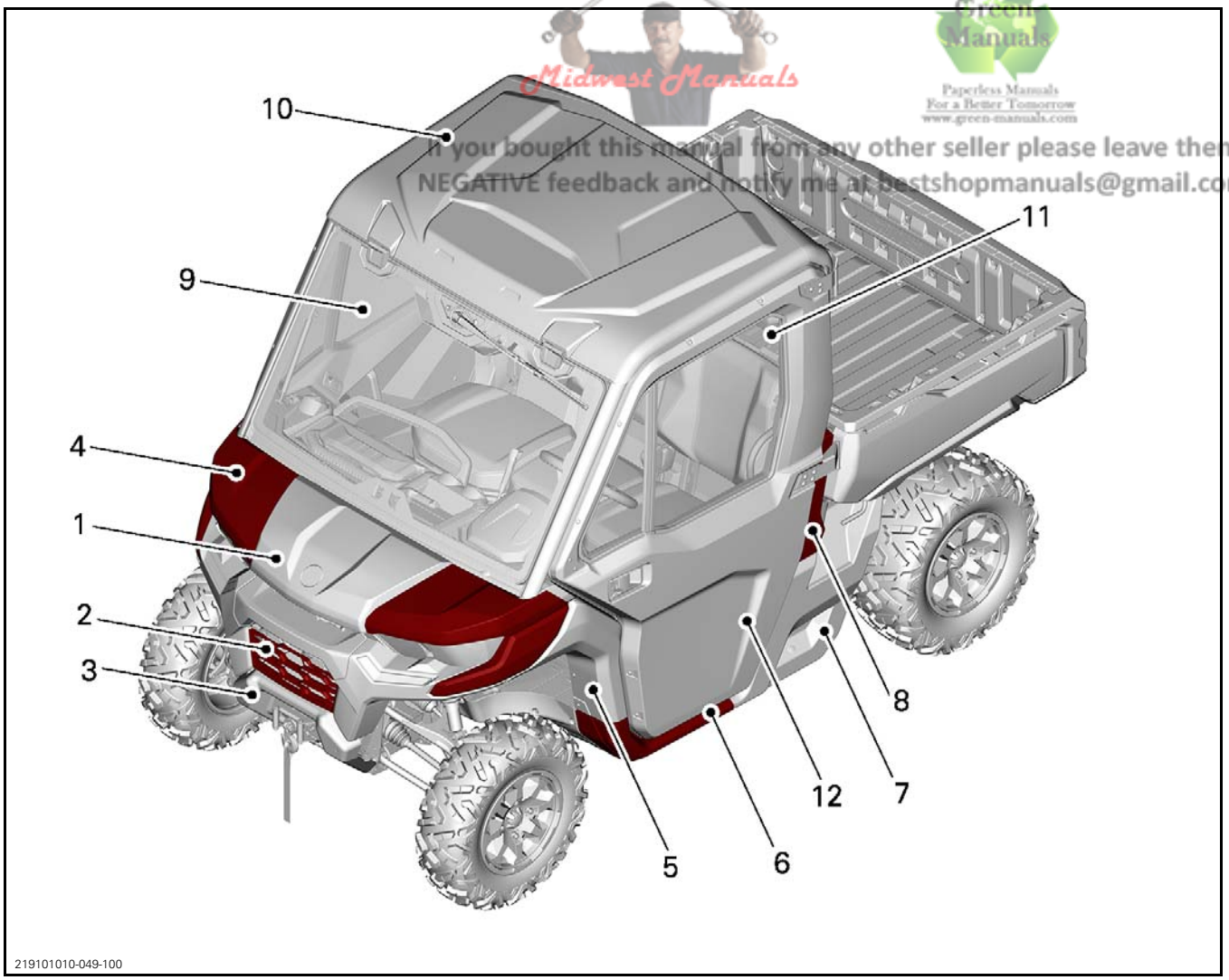

Midwest Manuals
Green Manuals
Paperless Manuals For a Better Tomorrow www.green-manuals.com
If you bought this manual from any other seller please leave them NEGATIVE feedback and notify me at bestshopmanuals@gmail.com

1. *Front service cover*
2. *Front grille*
3. *Front fascia*
4. *Front fender*
5. *Front lateral panel*
6. *Central lateral panel*
7. *Rear lateral panel*
8. *Upper lateral panel*
9. *Full windshield with wiper (CAB models only)*
10. *Roof (If equipped)*
11. *Rear window (CAB models only)*
12. *Full door (CAB models only)*

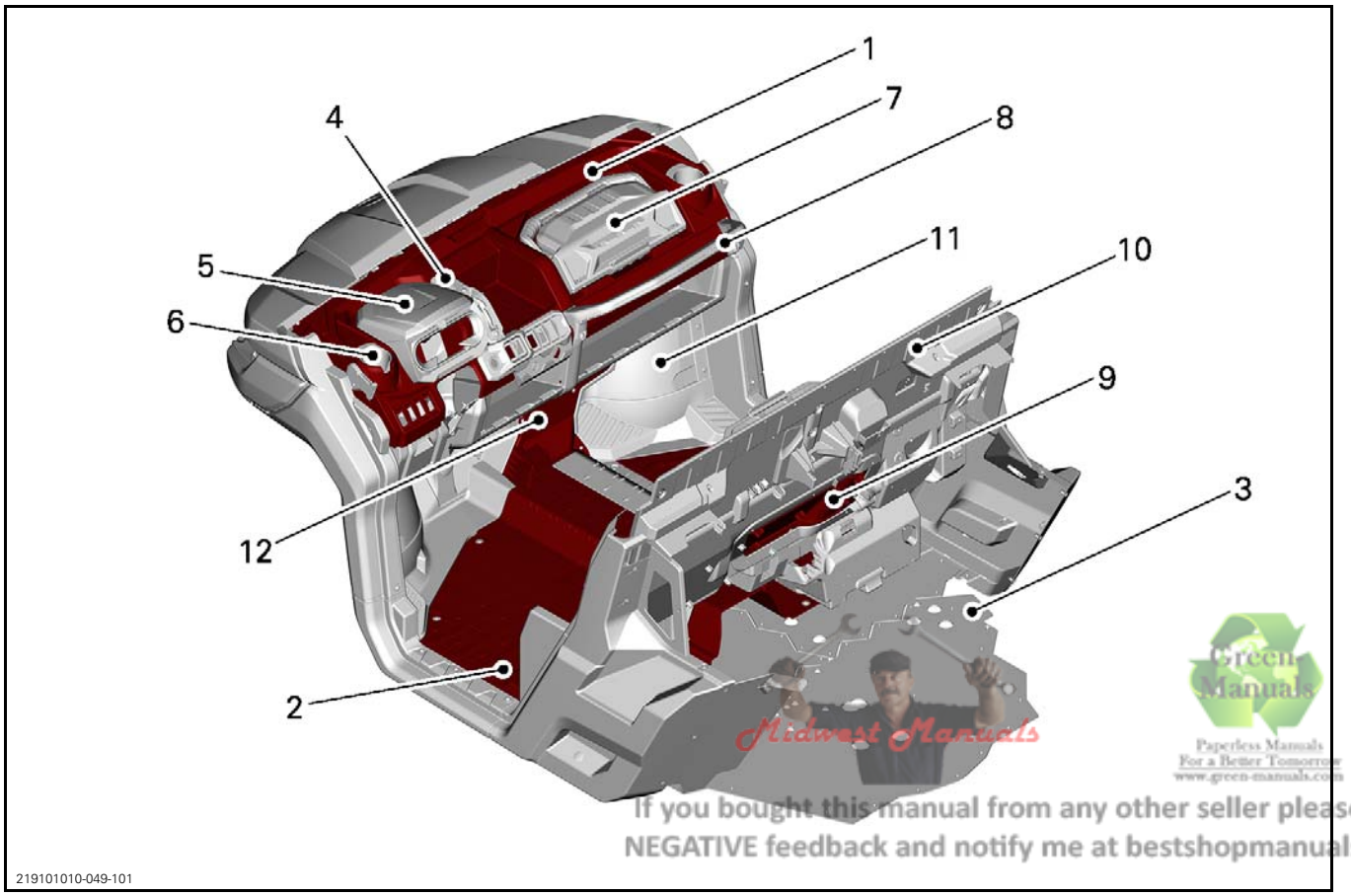

Midwest Manuals
Green Manuals
Paperless Manuals
For a Better Tomorrow
www.green-manuals.com
If you bought this manual from any other seller please leave them
NEGATIVE feedback and notify me at bestshopmanuals@gmail.com

1. *Upper dash*
2. *Floor cover*
3. *Skid plate*
4. *Shift indicator*
5. *Gauge support and storage compartment cover*
6. *Cup holder*
7. *Removable glove box*
8. *Passenger handhold*
9. *Rear service cover*
10. *Rear upper bulkhead*
11. *Front bulkhead*
12. *Front trim panel*

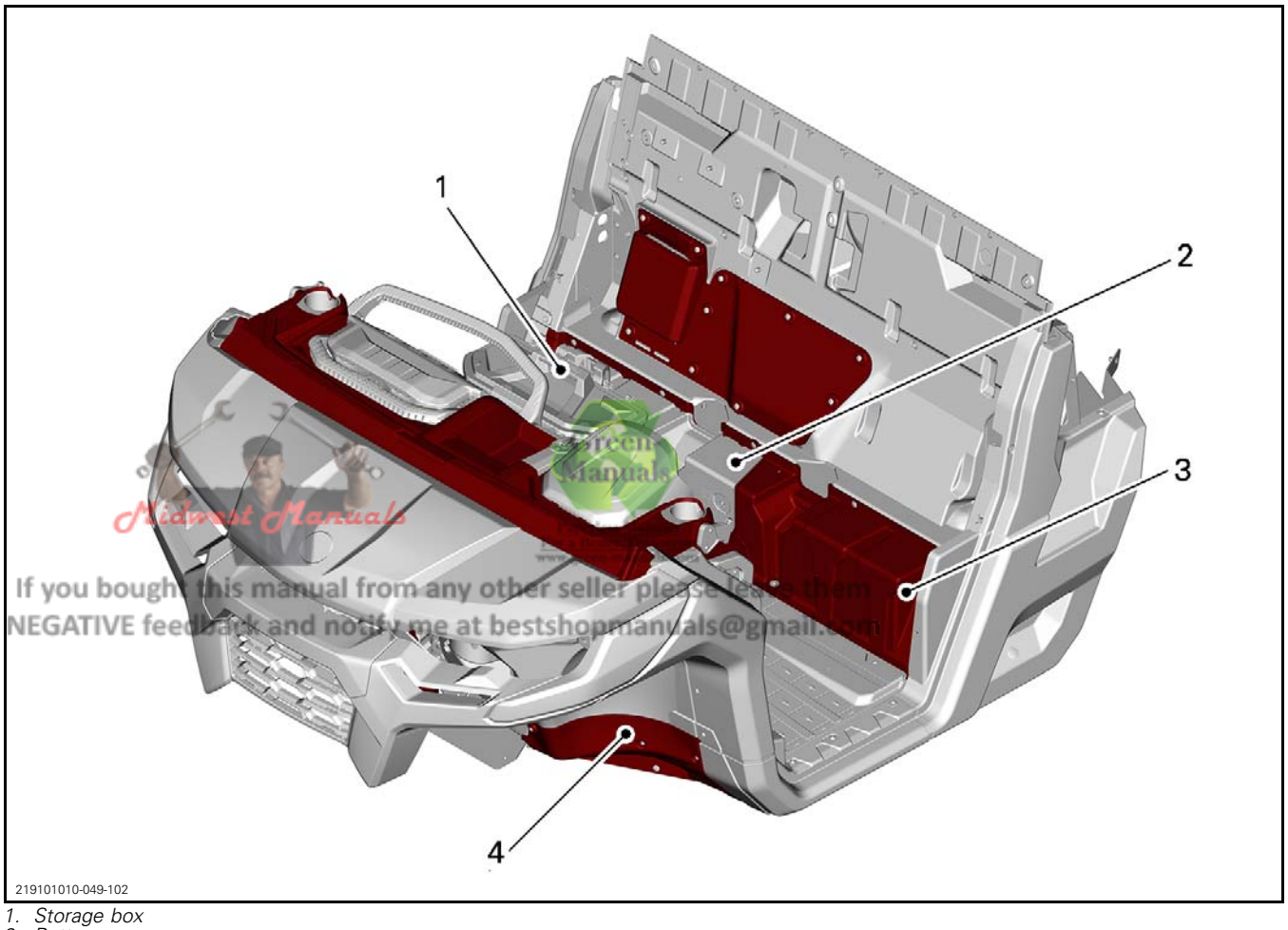

1. *Storage box*
2. *Battery cover*
3. *Rear lower bulkhead*
4. *Front deflector*

Midwest Manuals
If you bought this manual from any other seller please leave them NEGATIVE feedback and notify me at bestshopmanuals@gmail.com

FRONT AND SIDE

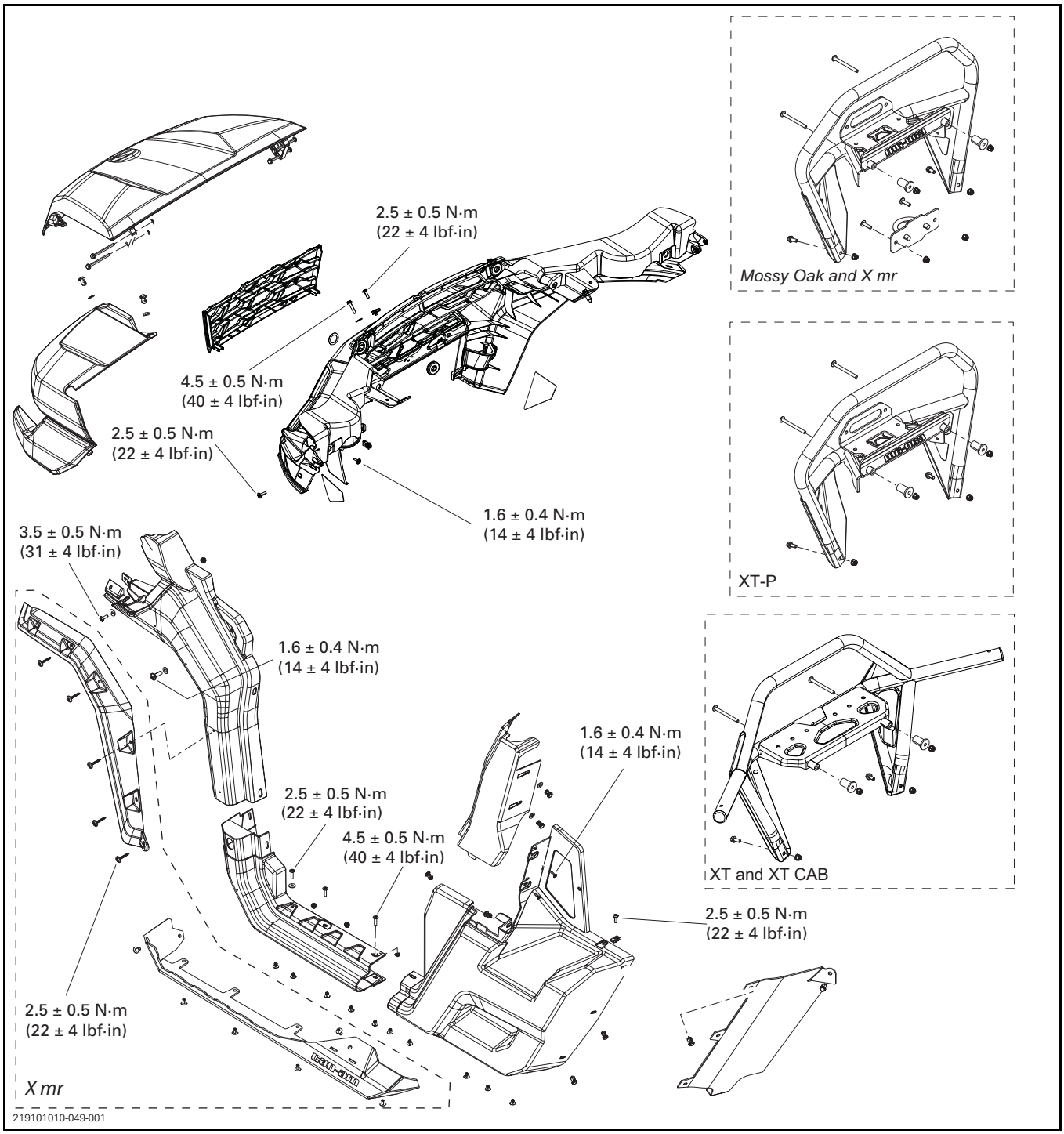

DASHBOARD

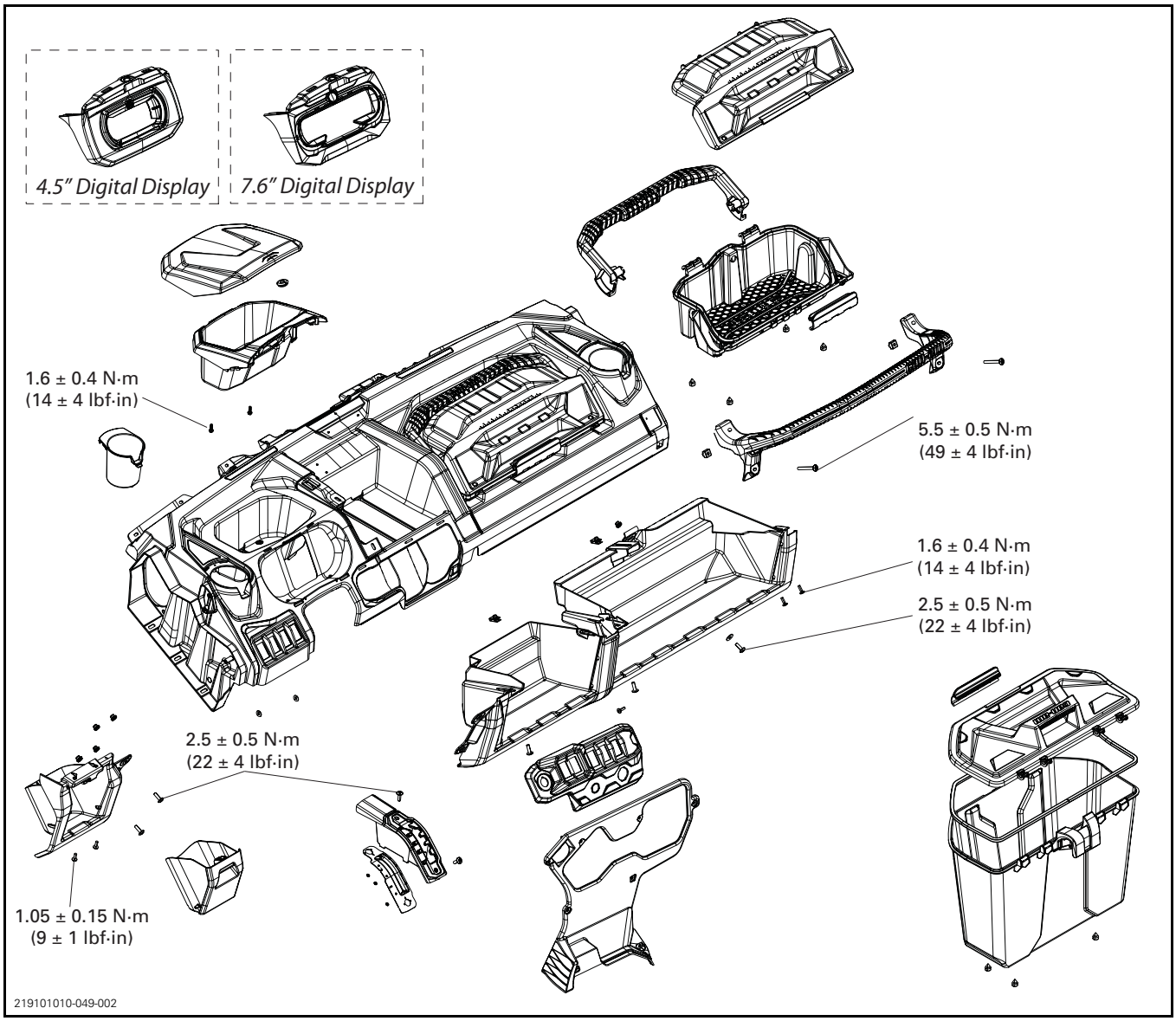
4.5" Digital Display
7.6" Digital Display
1.6 ± 0.4 N·m
(14 ± 4 lbf·in)
5.5 ± 0.5 N·m
(49 ± 4 lbf·in)
1.6 ± 0.4 N·m
(14 ± 4 lbf·in)
2.5 ± 0.5 N·m
(22 ± 4 lbf·in)
2.5 ± 0.5 N·m
(22 ± 4 lbf·in)
1.05 ± 0.15 N·m
(9 ± 1 lbf·in)
219101010-049-002

SKID PLATE

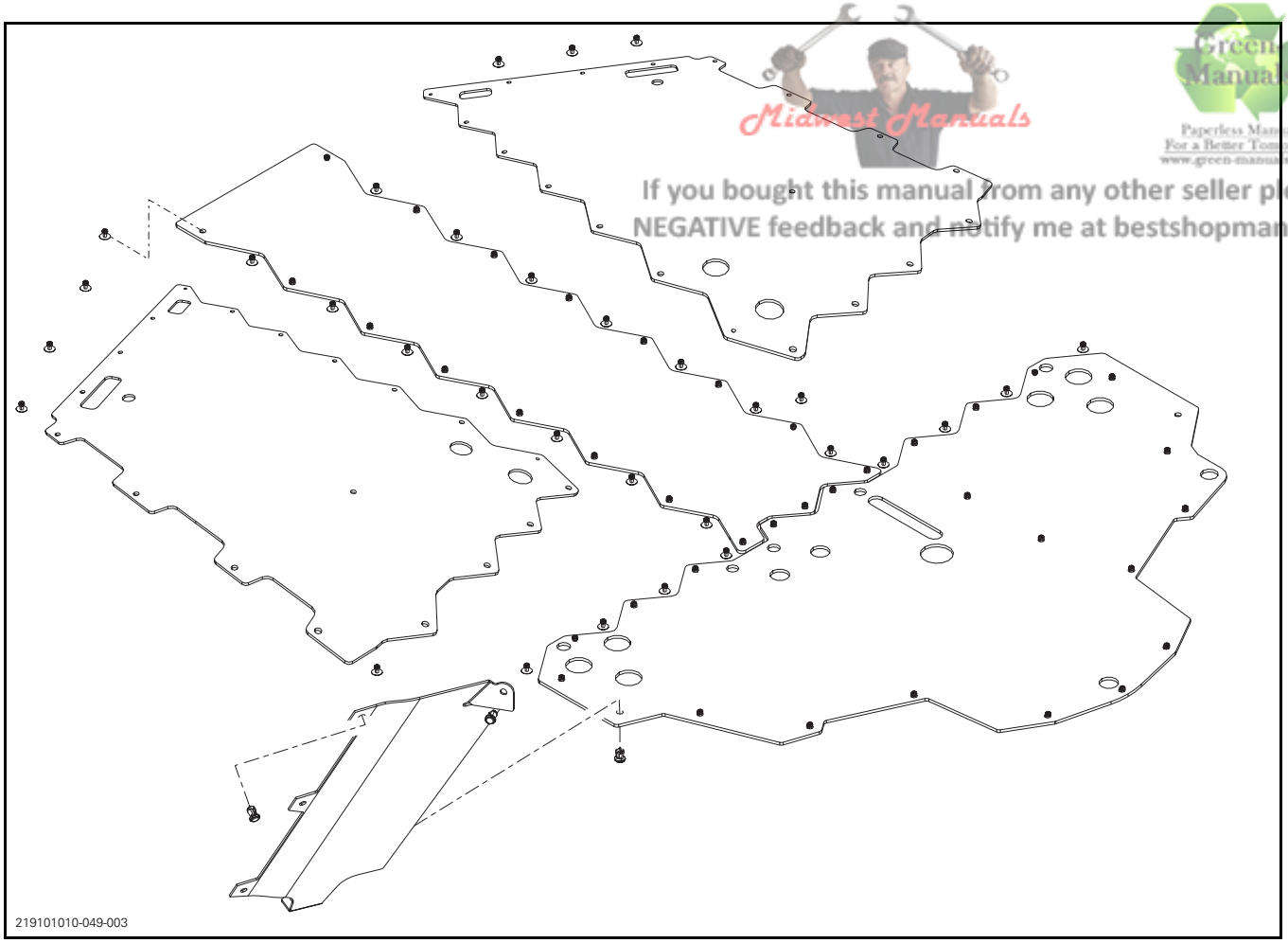

Midwest Manuals
Green Manuals
Paperless Manuals
For a Better Tomorrow
www.green-manuals.com
If you bought this manual from any other seller please leave them
NEGATIVE feedback and notify me at bestshopmanuals@gmail.com

FIREWALLS AND FLOOR

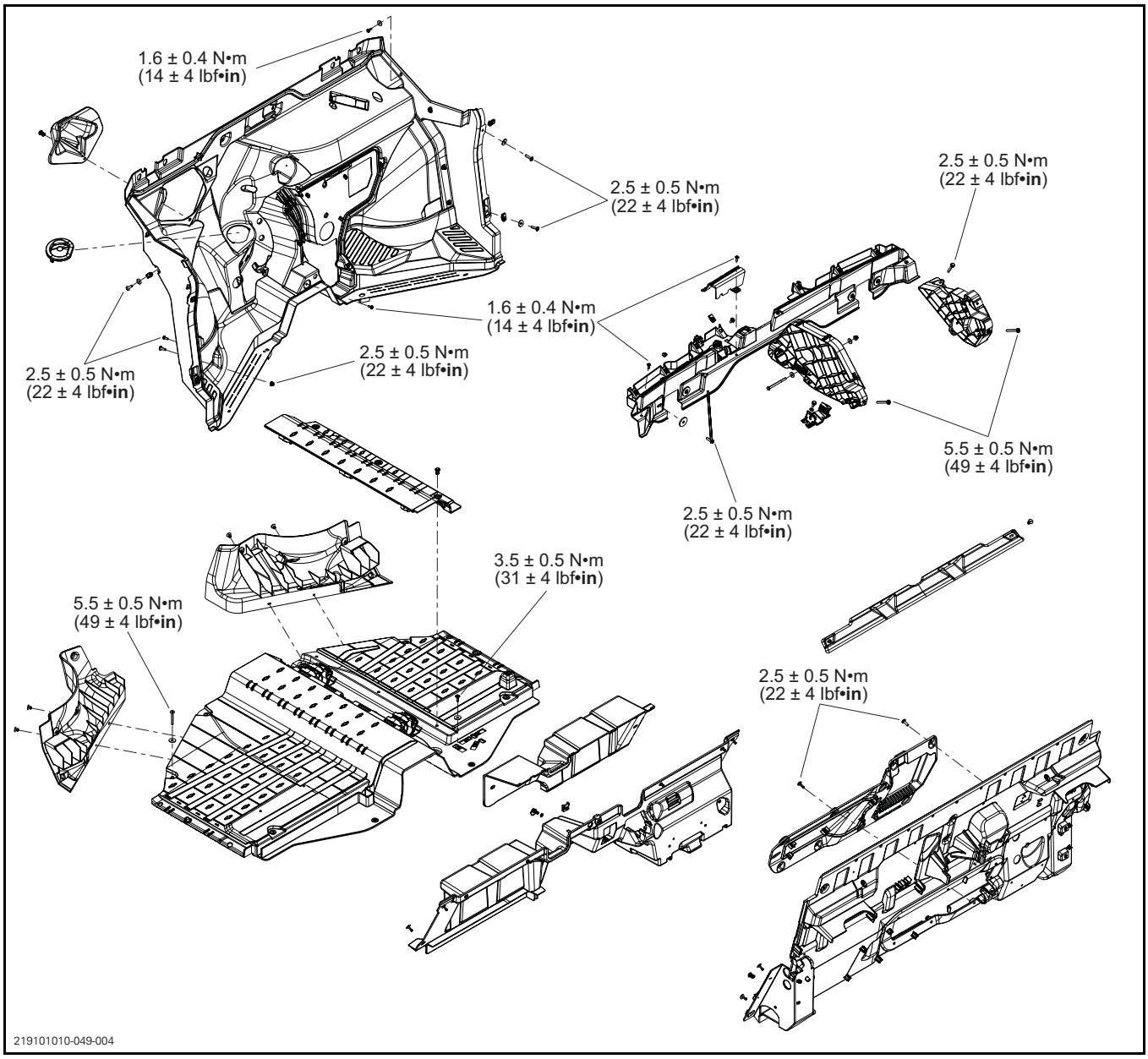

CAB ENCLOSURE WITH ROOF

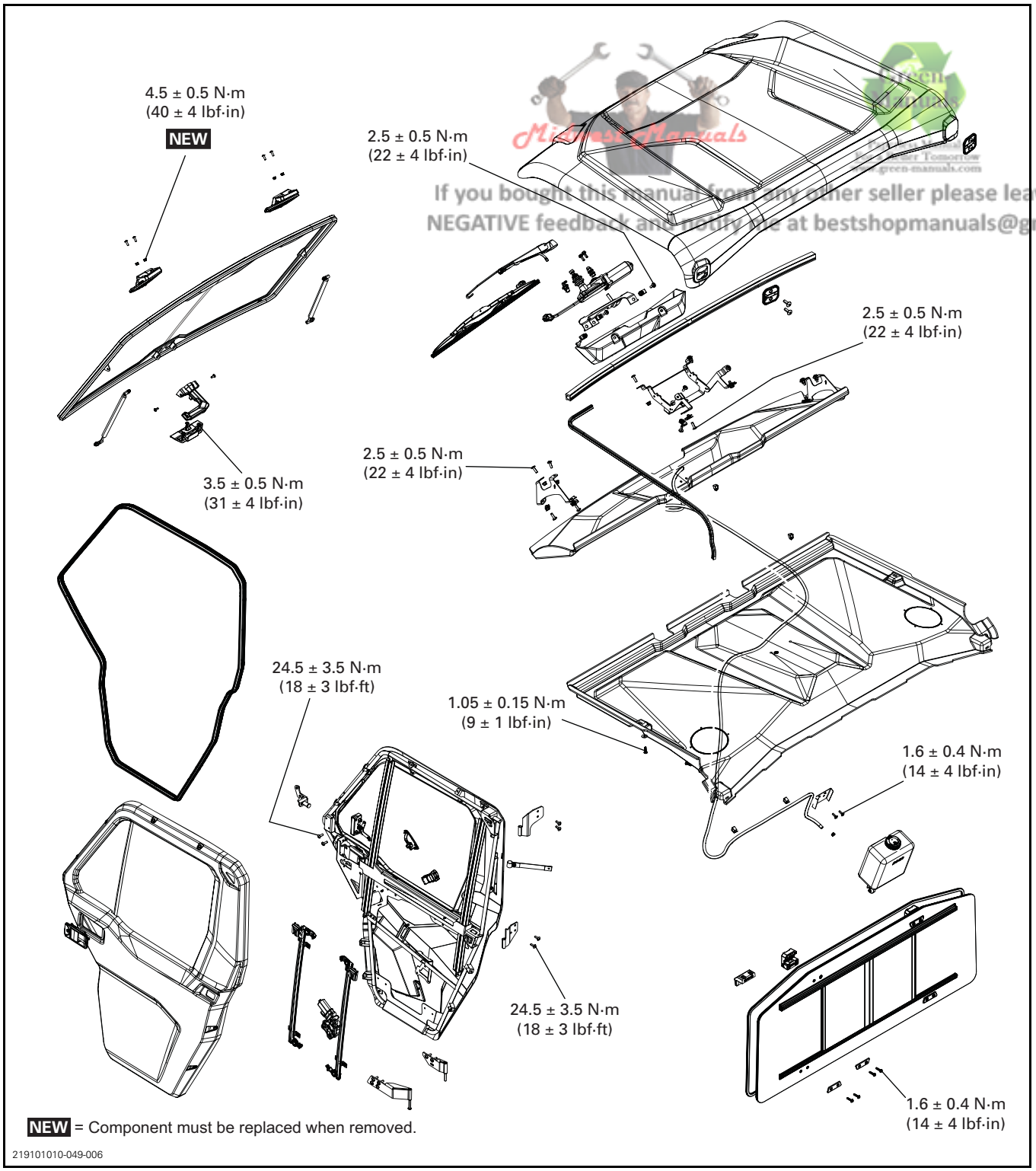

If you bought this manual from any other seller please leave them NEGATIVE feedback and notify me at bestshopmanuals@gmail.com

SEATS

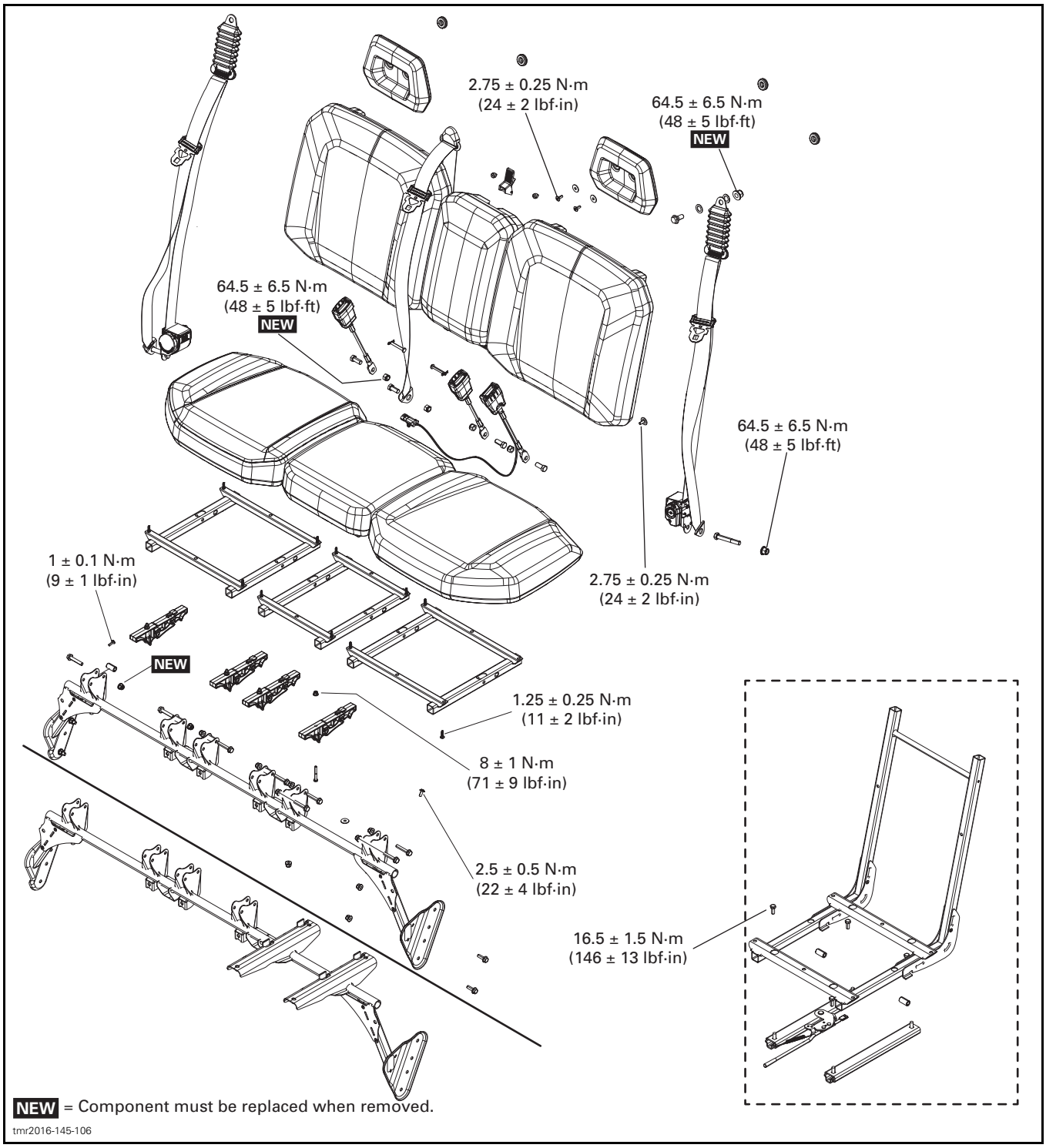
2.75 ± 0.25 N·m
(24 ± 2 lbf·in)
64.5 ± 6.5 N·m
(48 ± 5 lbf·ft)
NEW
64.5 ± 6.5 N·m
(48 ± 5 lbf·ft)
NEW
64.5 ± 6.5 N·m
(48 ± 5 lbf·ft)
1 ± 0.1 N·m
(9 ± 1 lbf·in)
2.75 ± 0.25 N·m
(24 ± 2 lbf·in)
NEW
1.25 ± 0.25 N·m
(11 ± 2 lbf·in)
8 ± 1 N·m
(71 ± 9 lbf·in)
2.5 ± 0.5 N·m
(22 ± 4 lbf·in)
16.5 ± 1.5 N·m
(146 ± 13 lbf·in)
NEW = Component must be replaced when removed.
tmr2016-145-106

SIDE NETS

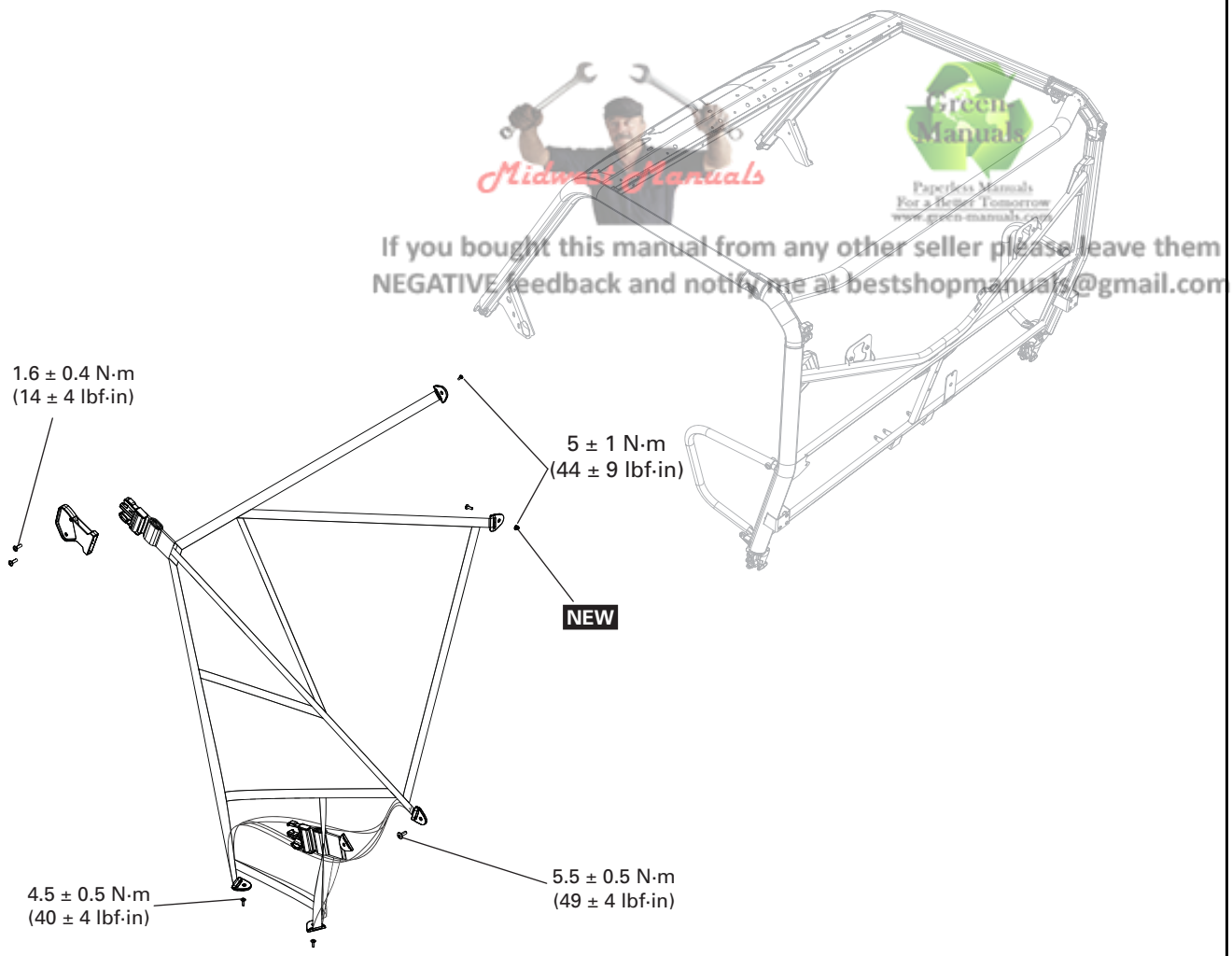

Midwest Manuals
Green Manuals
Paperless Manuals
For a Better Tomorrow
www.green-manuals.com
If you bought this manual from any other seller please leave them NEGATIVE feedback and notify me at bestshopmanuals@gmail.com

NEW = Component must be replaced when removed.

219101010-049-005

GENERAL

VEHICLE CARE

Cleaning the Vehicle

To clean the vehicle, **do not use high-pressure washers** (like the ones found in car washes) as they may damage certain parts of the vehicle.

To clean the vehicle:

1. Rinse the vehicle thoroughly with water to remove loose dirt.
2. Using a soft, clean cloth, wash the vehicle with water mixed with a mild detergent, such as soap specially formulated for motorcycles or automobiles.

Using warm water works well to remove bugs in the windshield and front panels.

NOTICE **Do not clean the windshield with alkaline or acid cleaner, gasoline or solvent to avoid windshield damage.**

For **Matte finishes**, hand-wash with a soft wash mitt and a mild cleaning product safe for matte paint. To remove foreign substances such as insects, use a soft applicator and a mild solvent. Saturate and soak area before cleaning. Rub lightly.

NOTICE **For Matte finishes, do not use wax, detail spray, or other products used on regular paint. Do not wash with abrasive materials. Do not use mechanical cleaners or polishers, and do not rub the surfaces vigorously.**

3. While washing the vehicle, check for grease or oil. You can use XPS ATV Wash or a mild automotive degreaser. Thoroughly follow the manufacturer's instructions.

SERVICE PRODUCT
XPS ATV WASH (P/N 219 701 702)

4. Dry the vehicle with a chamois or a soft towel.

Protecting the Vehicle

Apply non-abrasive wax to plastic parts.

NOTICE **Do not wax or polish matte surfaces.**

SURFACE	PRODUCT OR PRECAUTION
Glossy finishes	Apply only non-abrasive wax, safe for clear coat paints
Matte finishes	Do not apply wax

NOTICE **Do not polish windshield with any plastic cleaner or polisher.**

⚠ WARNING

Do not apply a vinyl or plastic protector on the seat as the surface will become slippery and the operator or the passenger may slip off the vehicle.

PROCEDURES

DECALS

Removing a Decal

Using a heat gun warm up one end of decal for a few seconds until decal can roll off when rubbing with your finger.

Pull decal slowly and when necessary apply more heat to ease removal on the area that has to be peeled off.

If decal tears while pulling off, it has to be heated for a few seconds longer. If decal tends to stretch while pulling off, stop heating and wait a few seconds to let it cool, then peel it off.

Installing a Decal

Using isopropyl alcohol, clean the surface and dry thoroughly.

Apply liquid soap to new decal and carefully position it. Using a sponge or a squeegee, remove the air bubbles and surplus water working from the center toward the edges. Allow to air dry.

NOTICE **Do not apply isopropyl alcohol or solvent directly on decals. Use these products in a well ventilated area.**

4.5" DIGITAL DISPLAY

Removing the Multifunction Gauge

Remove gauge support.

– Push in on each tab to disengage it.
– Lift up and pull forward to remove.

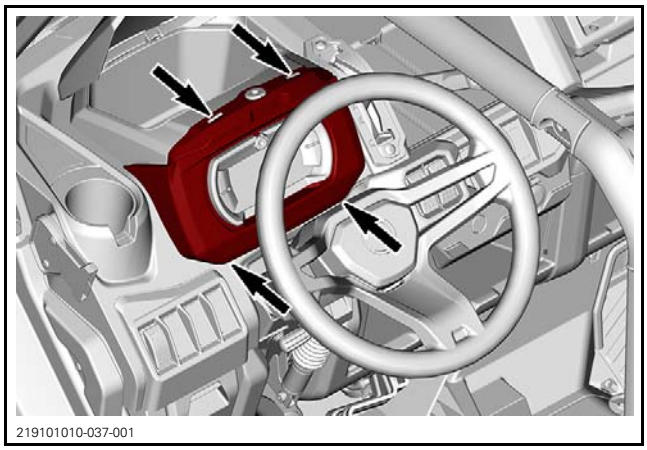
219101010-037-001

ALL MODELS EXCEPT BASE

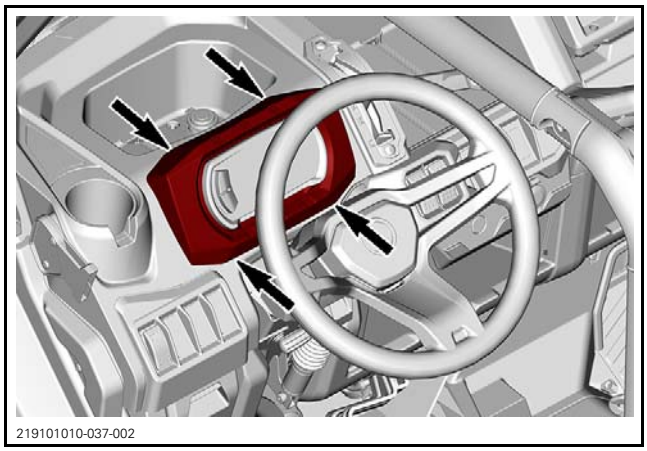
219101010-037-002

BASE MODELS

Disconnect the gauge connector and remove it.

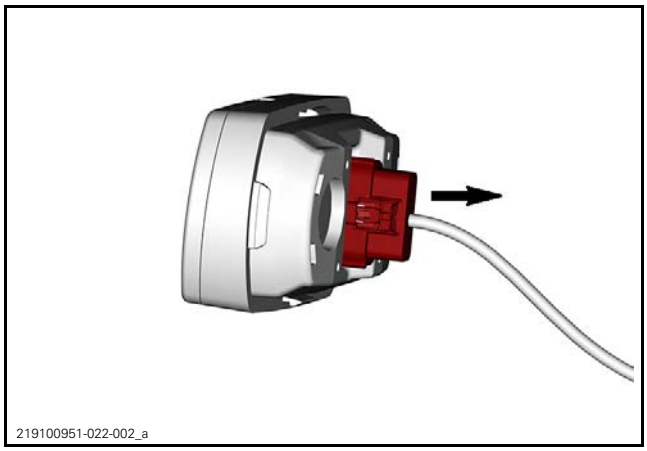
219100951-022-002_a

From the back of the gauge support, release the gauge retaining tabs and remove the gauge from its support.

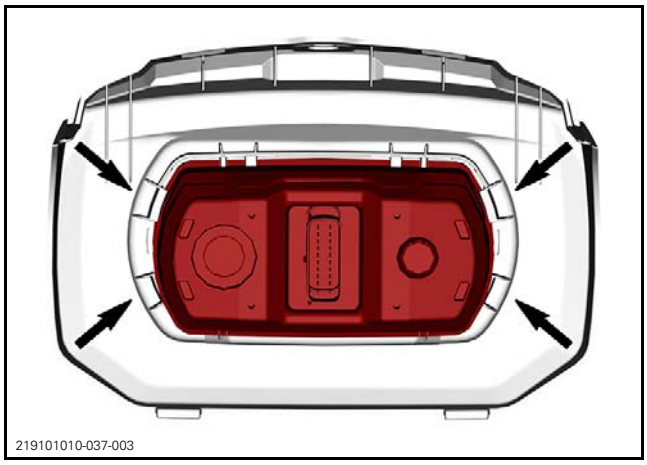
219101010-037-003

Installing the Multifunction Gauge

The installation is the reverse of the removal procedure. However, pay attention to the following.

Start vehicle engine and test gauge functions.

7.6" DIGITAL DISPLAY

Removing the Multifunction Gauge

Remove gauge support.

– Push in on each tab to disengage it.
– Lift up and pull forward to remove.

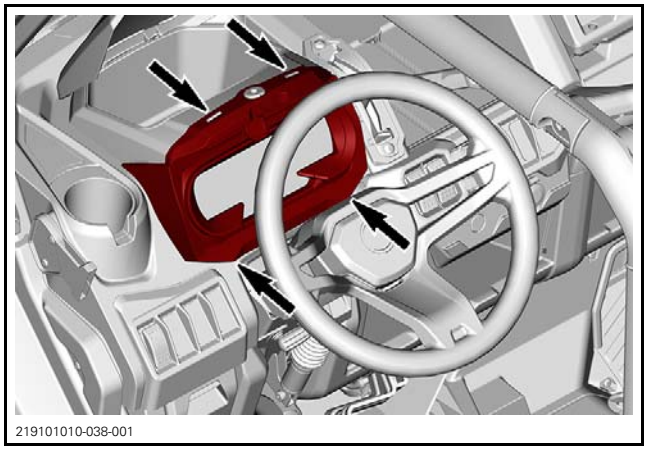
219101010-038-001

Disconnect the gauge connector.

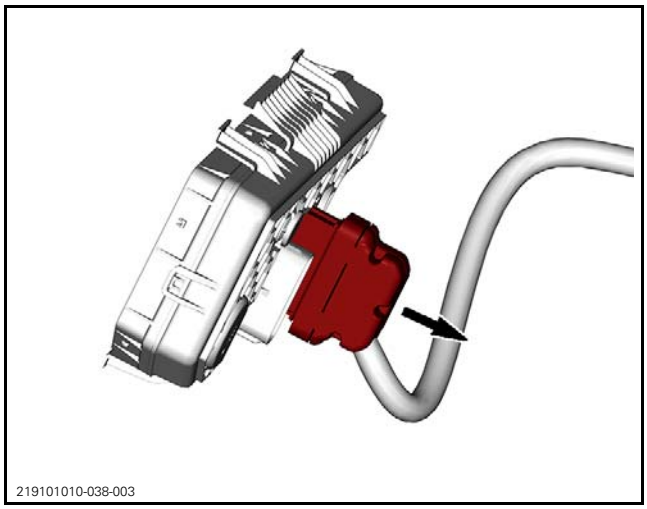

From the back of the gauge support, release the gauge retaining tabs and remove the gauge from its support.

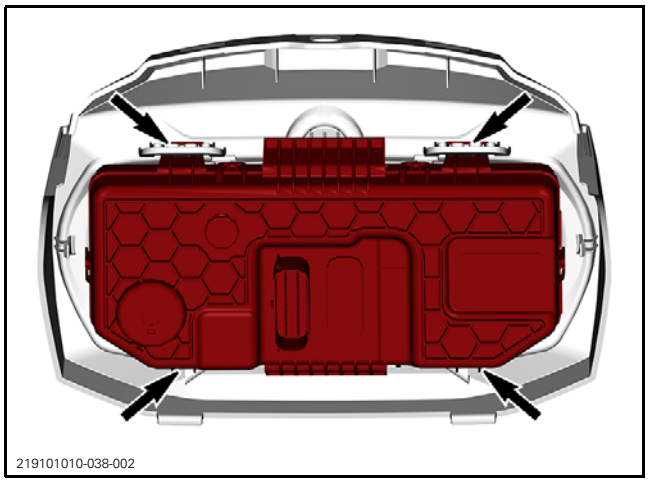

Installing the Multifunction Gauge

The installation is the reverse of the removal procedure. However, pay attention to the following.

Start vehicle engine and test gauge functions.

If the multifunction gauge was replaced, connect the vehicle to the BRP diagnostic software (BUDS2) and apply any available updates.

When updates are completed, change settings as per customer preferences (language and units) as described in *SETTING LANGUAGE AND UNITS OF MEASUREMENT* in this subsection.

Setting Language and Units of Measurement

1. Connect the vehicle to the BRP diagnostic software (BUDS2), refer to the *COMMUNICATION TOOLS* subsection.
2. Press the START/STOP button to energize the electrical system.
3. In BUDS2, go to:
   - SETTINGS page
   - CLUSTER button
   - SETTINGS tab
   - CONFIGURATION - Change Cluster Language and Units

BODY (MAX)

SERVICE PRODUCTS

Description	Part Number	Page
XPS ATV WASH	219 701 702	13

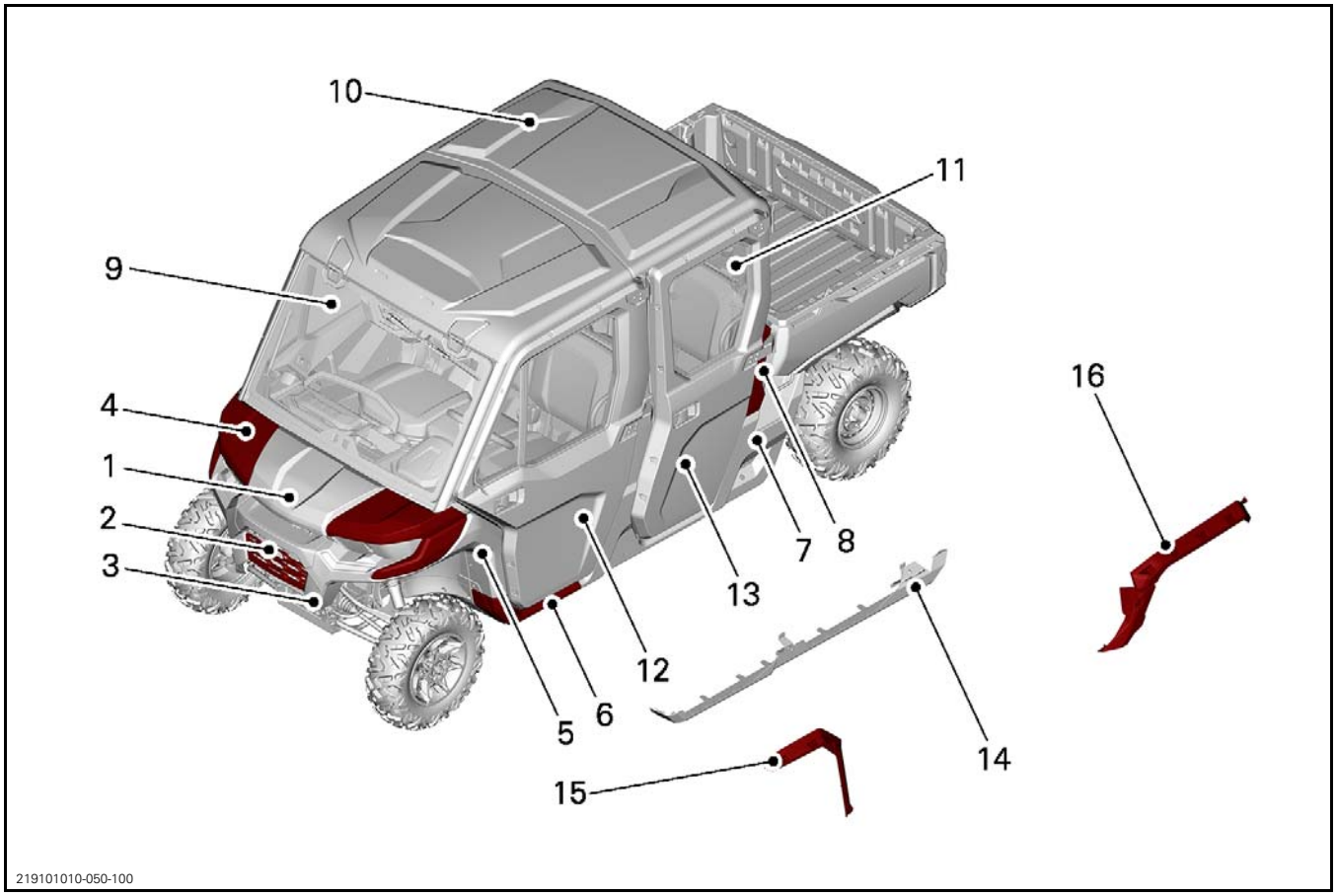

1. *Front service cover*
2. *Front grille*
3. *Front fascia*
4. *Front fender*
5. *Front lateral panel*
6. *Central lateral panel*
7. *Rear lateral panel*
8. *Rear upper lateral panel*
9. *Windshield with wiper (CAB models only)*
10. *Roof (If equipped)*
11. *Rear window (CAB models only)*
12. *Front door (CAB models only)*
13. *Rear door (CAB models only)*
14. *Rock Slider (if equipped)*
15. *Front mudguard (If equipped)*
16. *Rear mudguards (If equipped)*

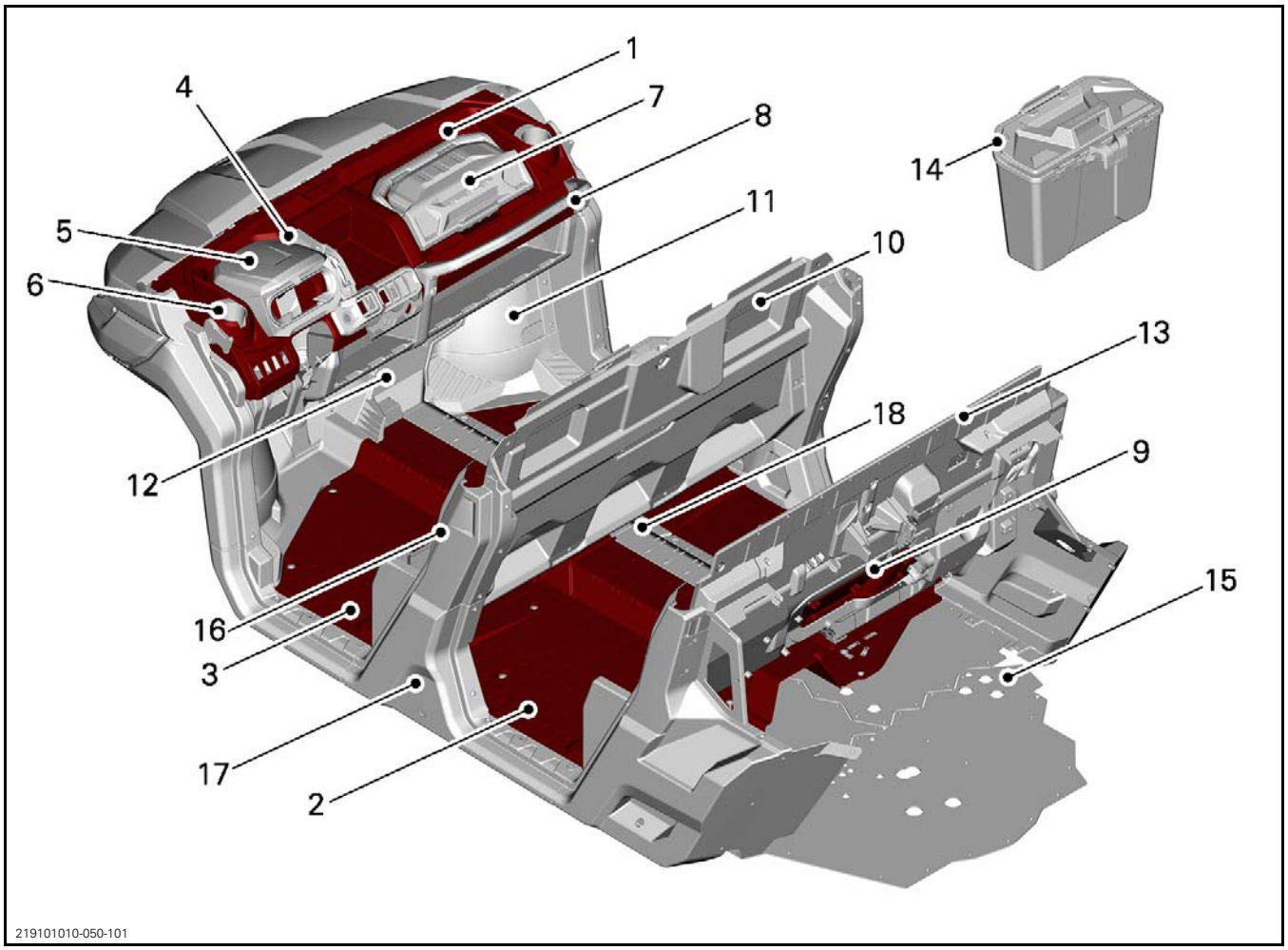

1. *Upper dash*
2. *Rear floor*
3. *Front floor*
4. *Shift indicator*
5. *Gauge support and storage compartment cover*
6. *Cup holder*
7. *Removable glove box*
8. *Passenger handhold*
9. *Rear service cover*
10. *Middle upper bulkhead*
11. *Front bulkhead*
12. *Front trim panel*
13. *Rear upper bulkhead*
14. *Storage box*
15. *Skid plate*
16. *Mid upper lateral panel*
17. *Mid lateral panel*
18. *Floor cover*

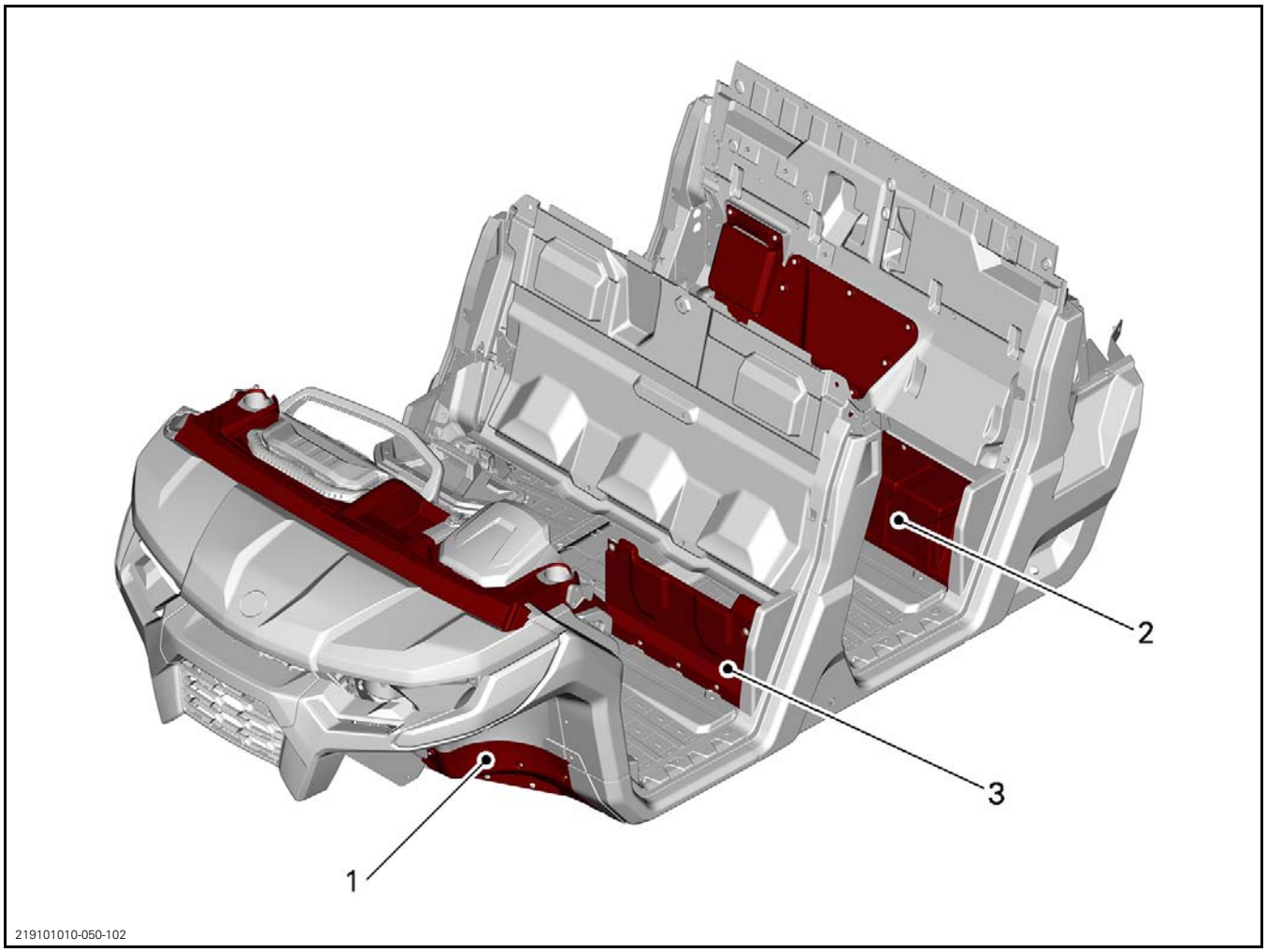

1. *Front deflector*
2. *Middle lower bulkhead*
3. *Rear lower bulkhead*

FRONT AND SIDE

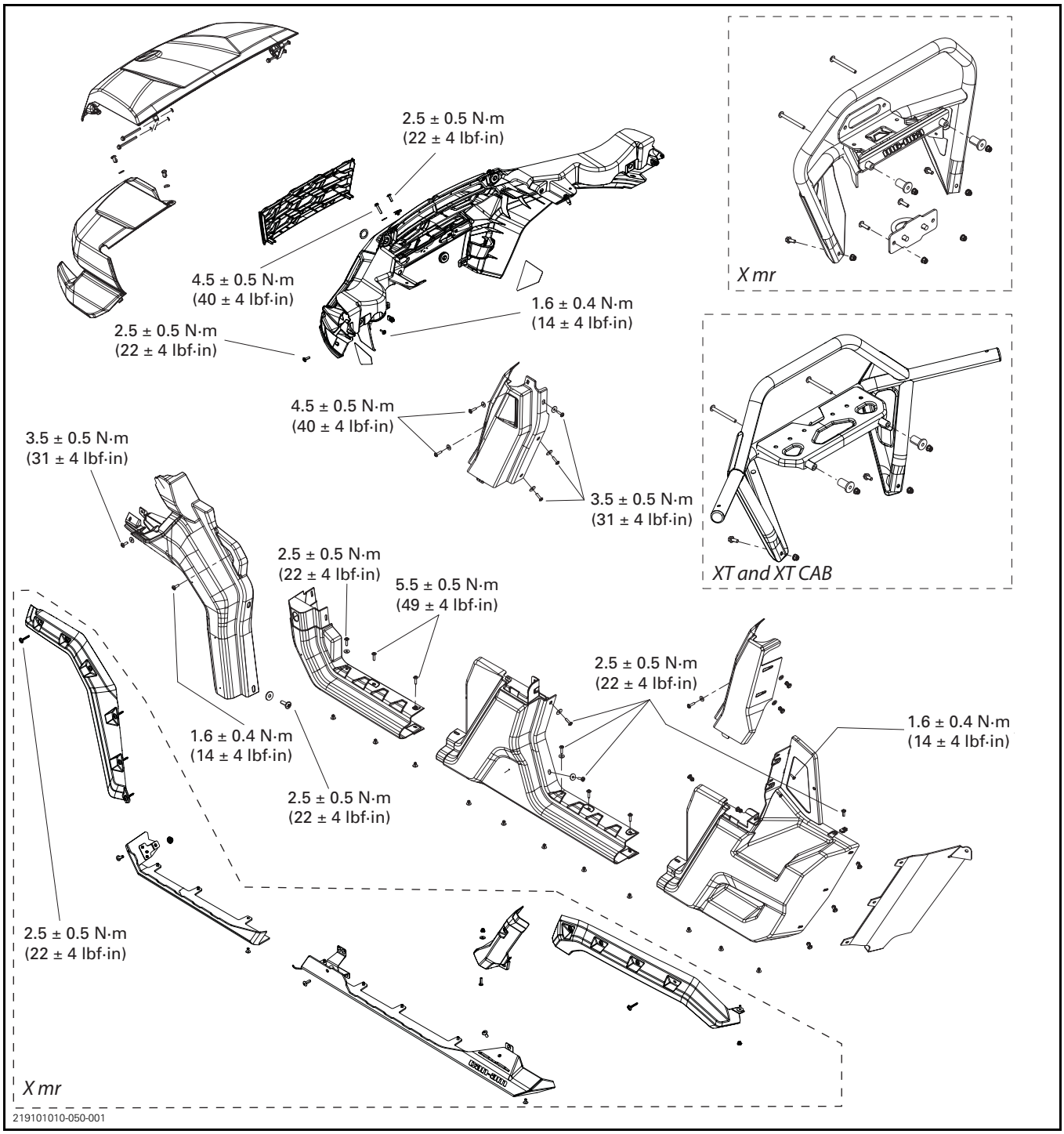

SKID PLATE

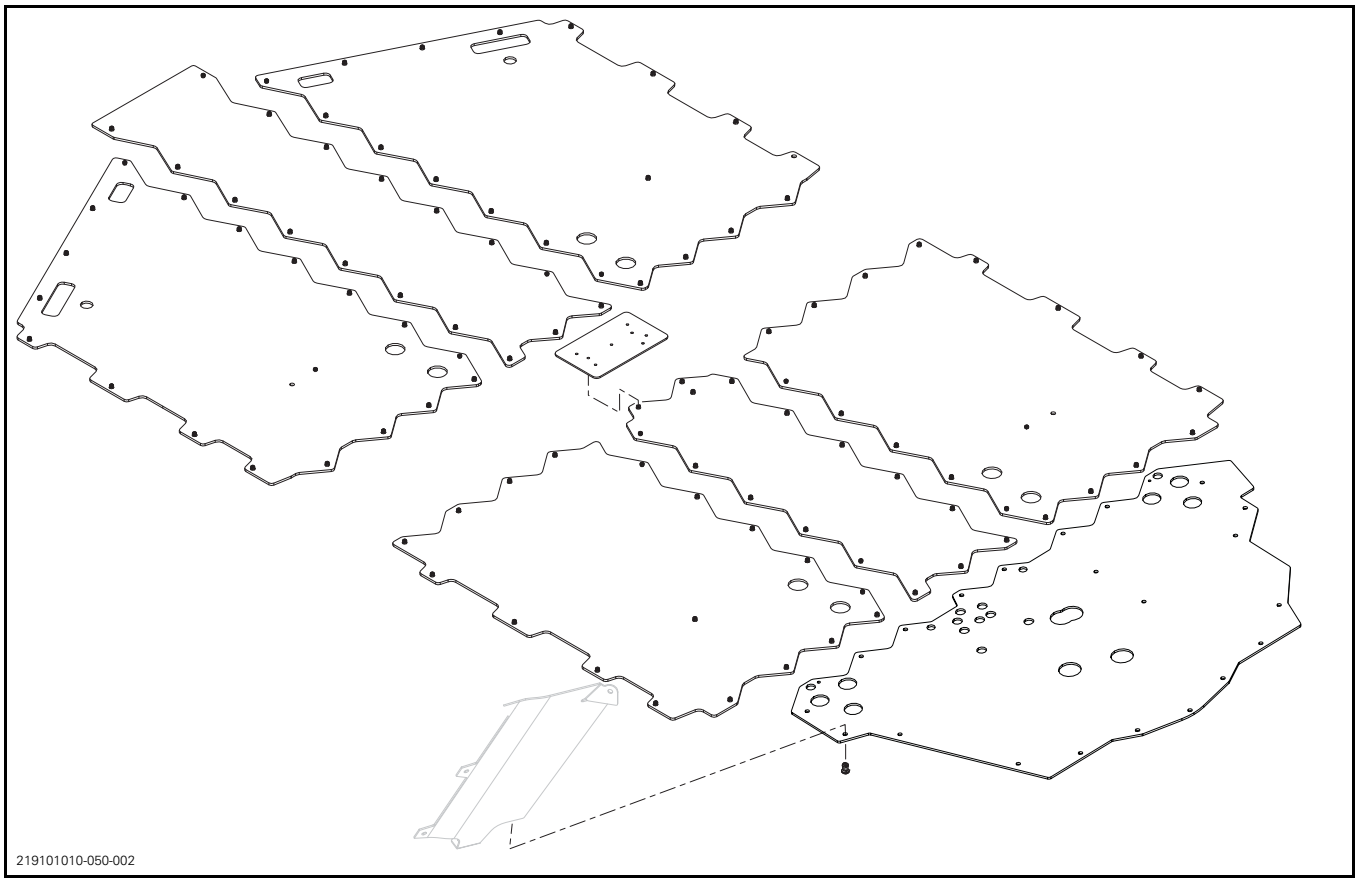

DASHBOARD

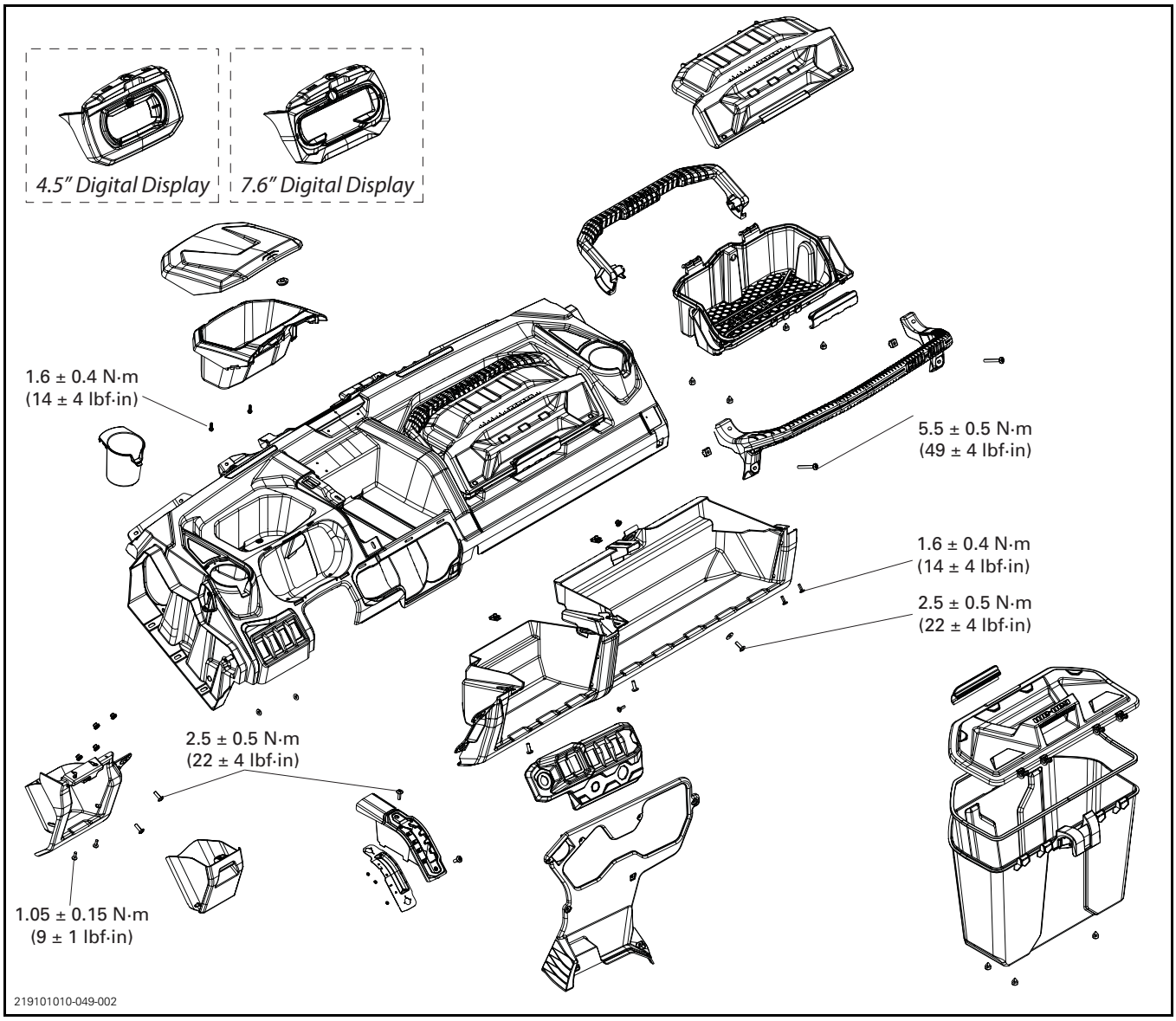
4.5" Digital Display
7.6" Digital Display
1.6 ± 0.4 N·m
(14 ± 4 lbf·in)
5.5 ± 0.5 N·m
(49 ± 4 lbf·in)
1.6 ± 0.4 N·m
(14 ± 4 lbf·in)
2.5 ± 0.5 N·m
(22 ± 4 lbf·in)
2.5 ± 0.5 N·m
(22 ± 4 lbf·in)
1.05 ± 0.15 N·m
(9 ± 1 lbf·in)
219101010-049-002

FRONT FIREWALLS AND FLOOR

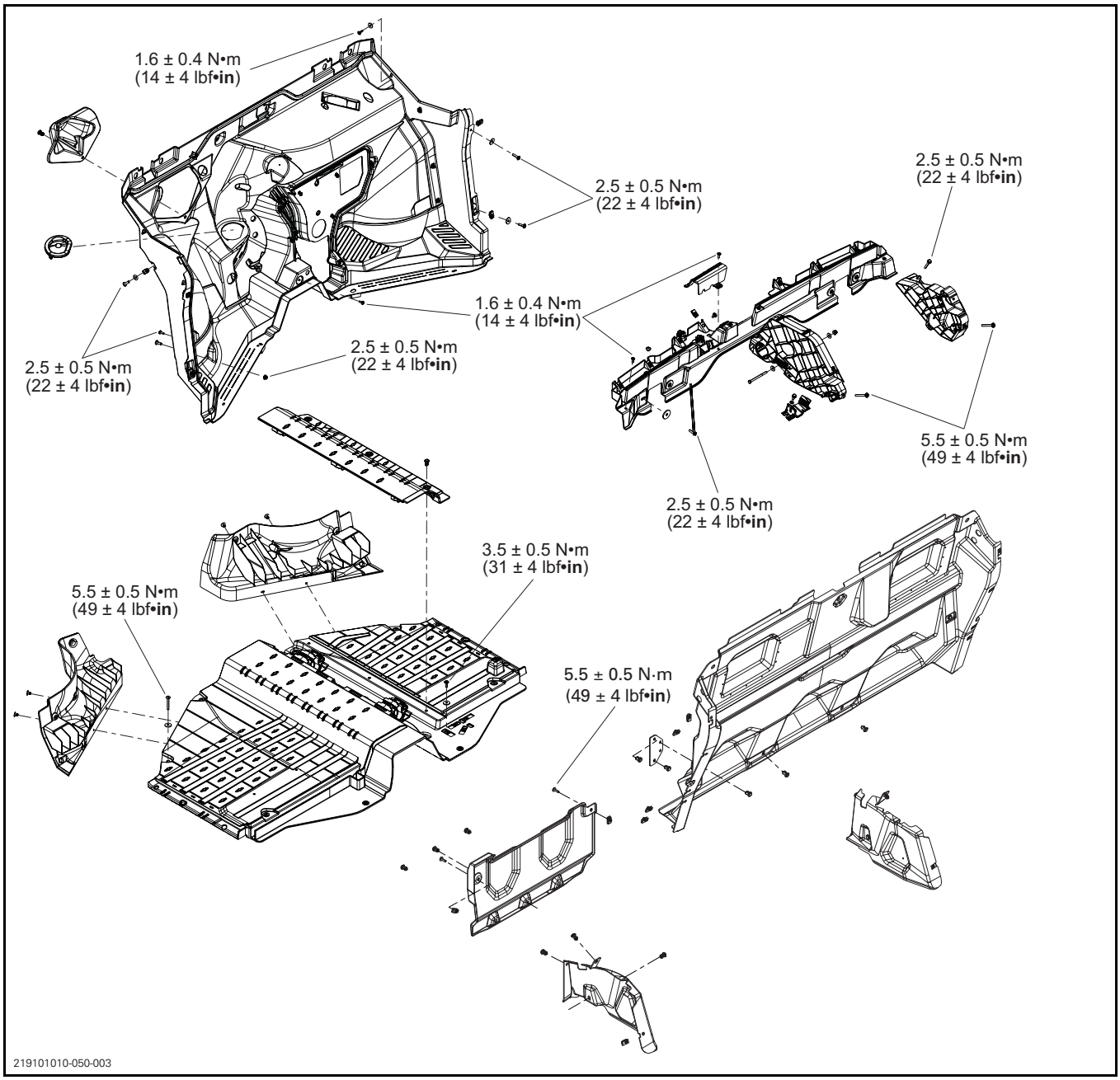

REAR FIREWALLS AND FLOOR

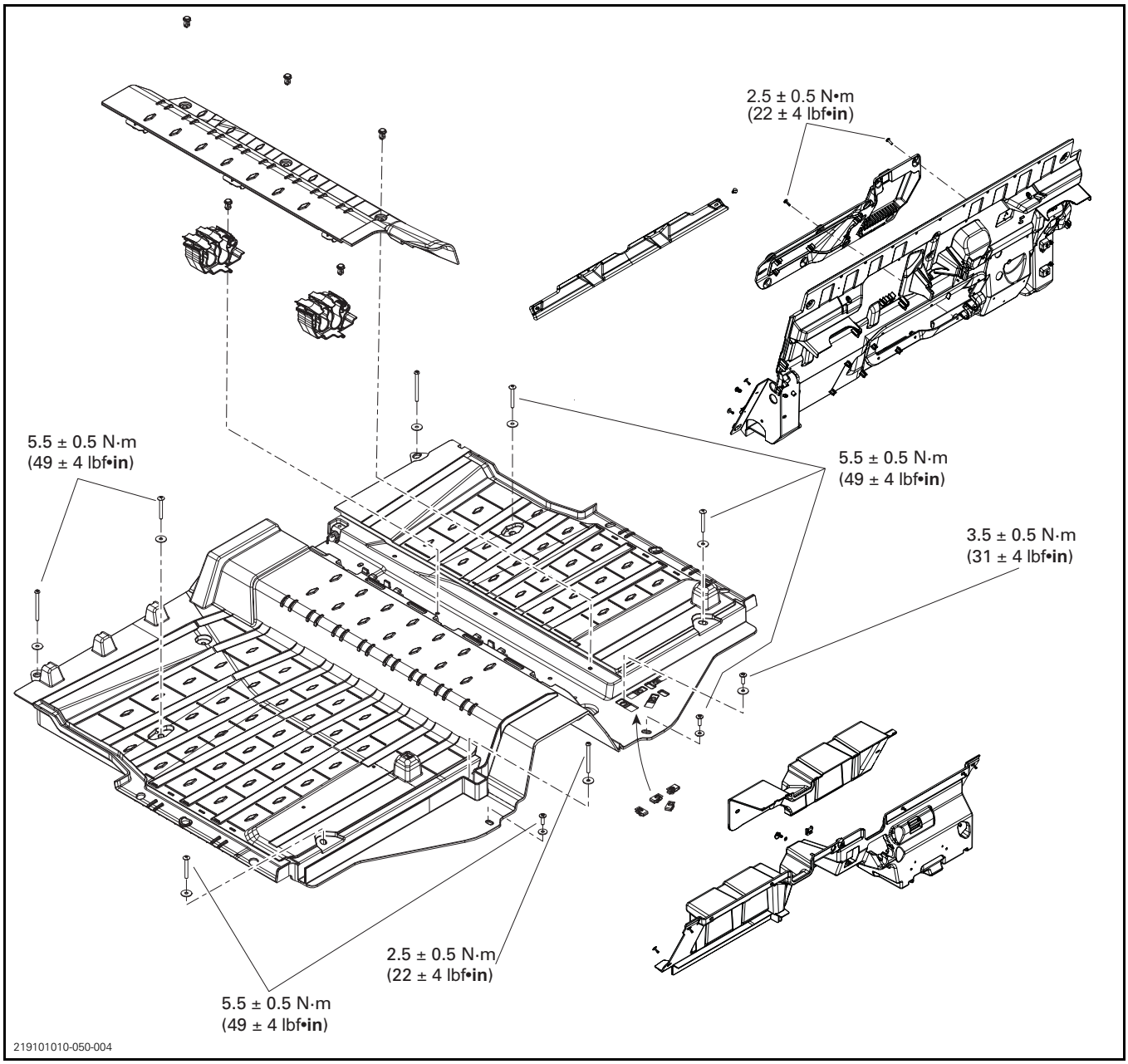

ROOF ASSEMBLY AND WINDSHIELD WITH WIPER

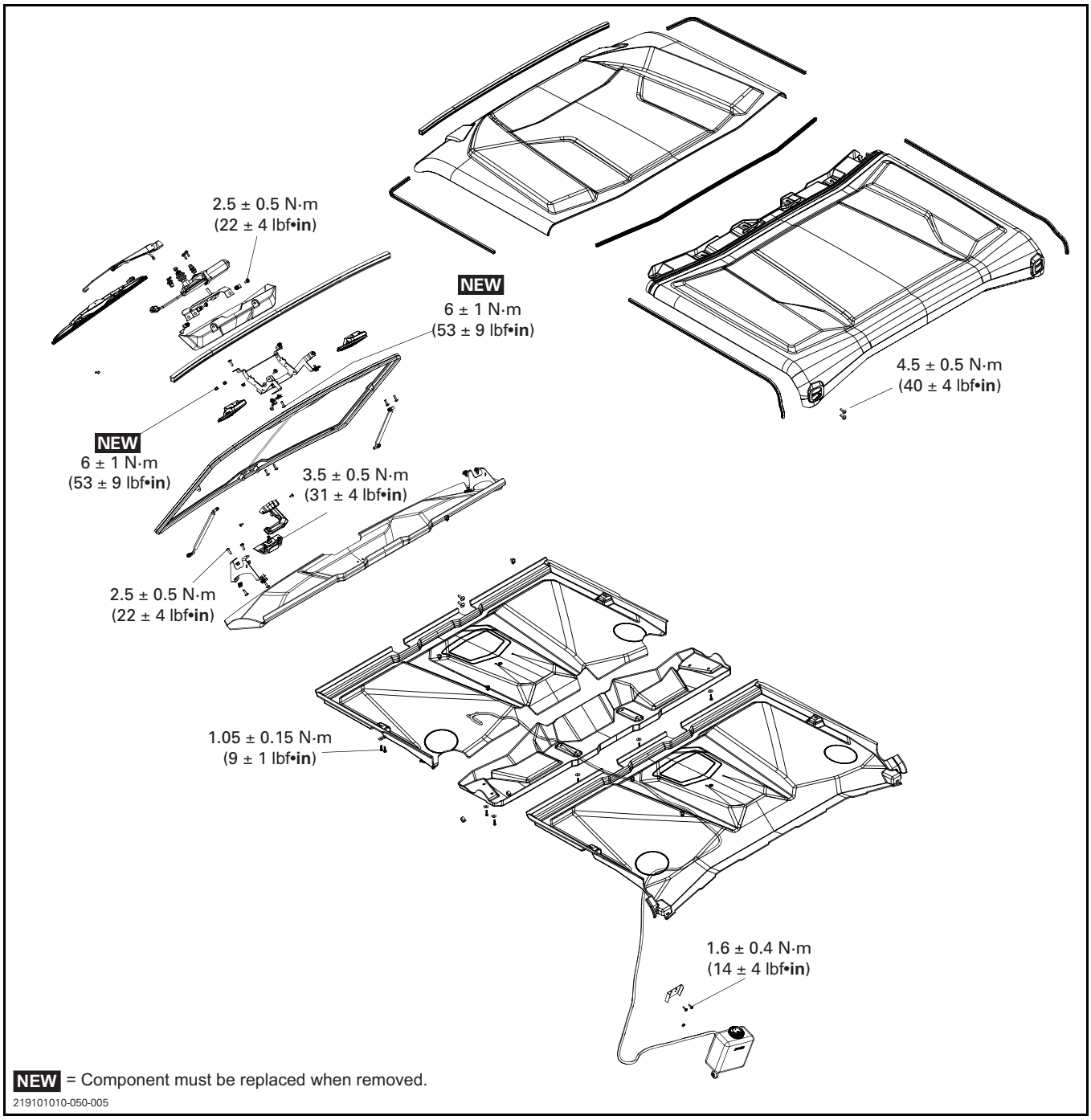

DOORS AND REAR WINDOW

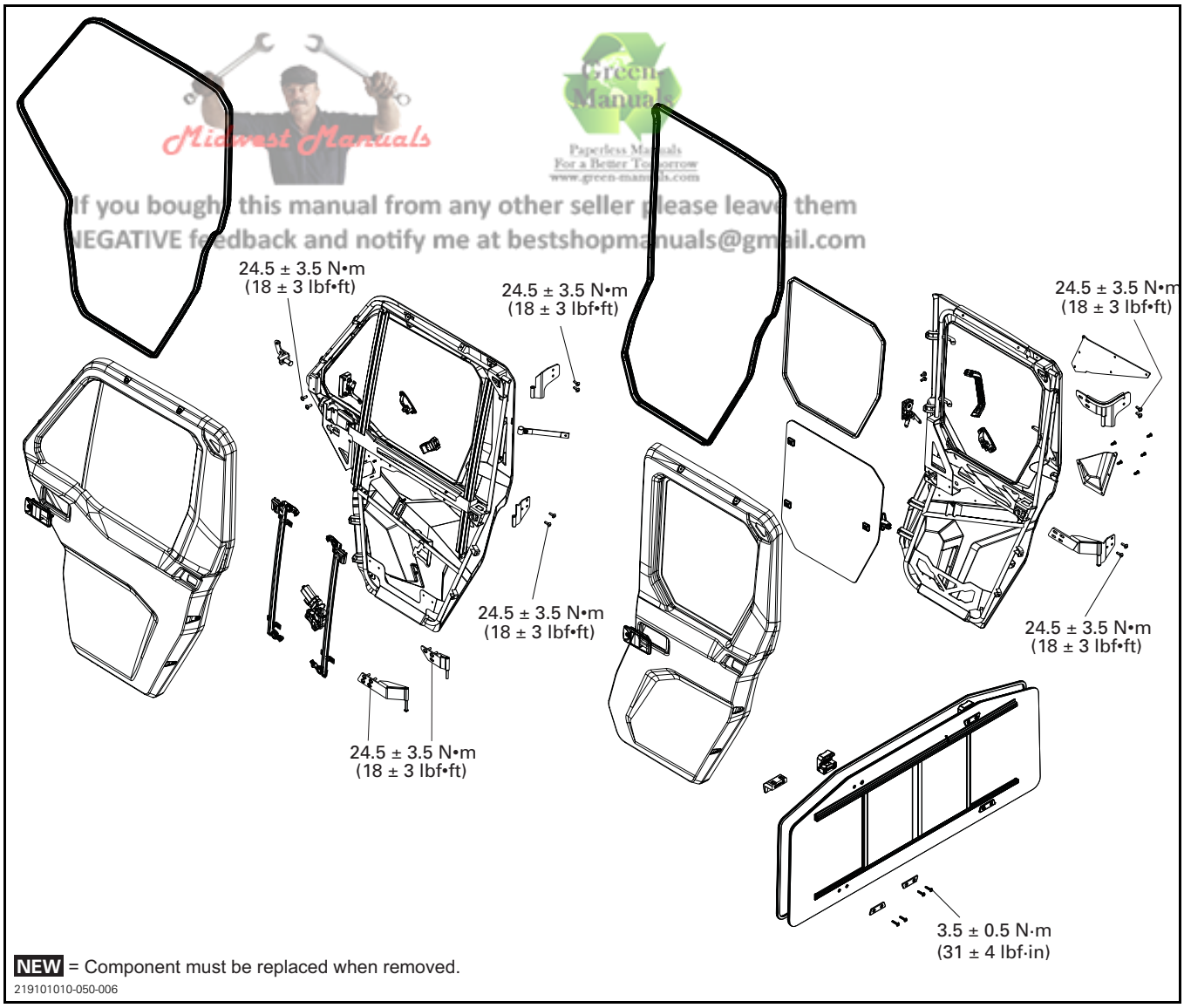

If you bought this manual from any other seller please leave them NEGATIVE feedback and notify me at bestshopmanuals@gmail.com

SEATS

Front and Rear seats have the same components

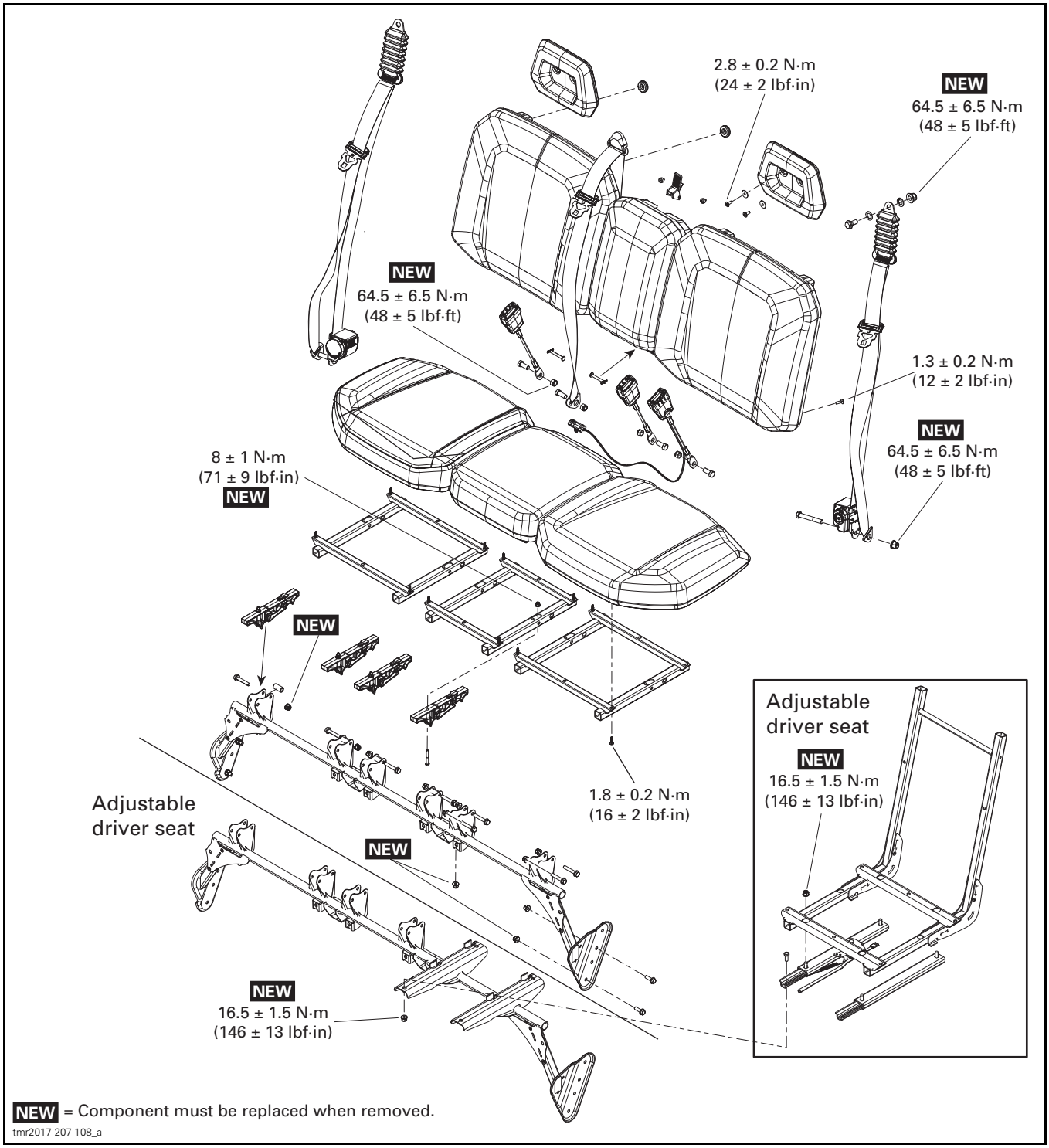

SIDE NETS

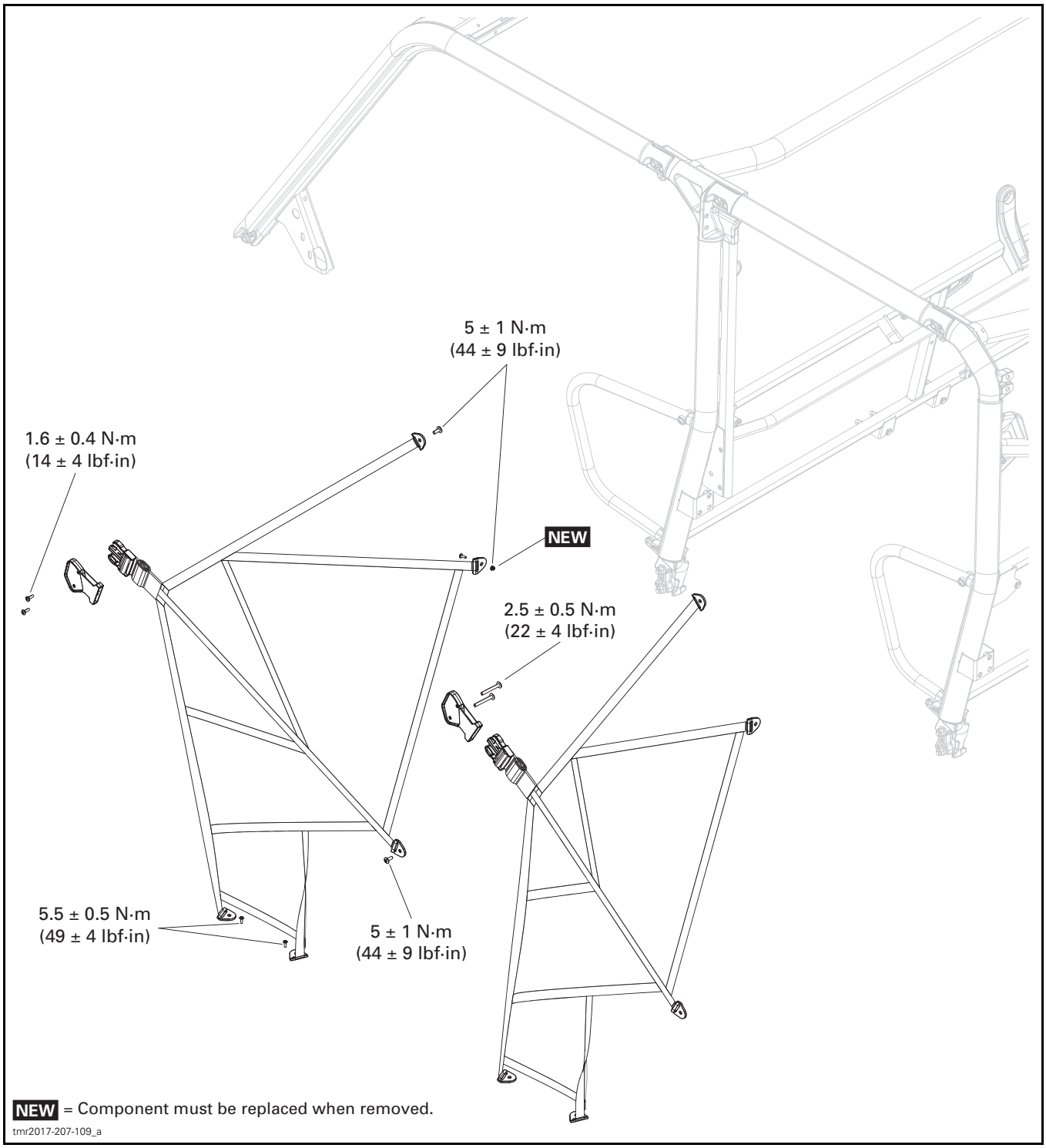
5 ± 1 N·m
(44 ± 9 lbf·in)
1.6 ± 0.4 N·m
(14 ± 4 lbf·in)
NEW
2.5 ± 0.5 N·m
(22 ± 4 lbf·in)
5.5 ± 0.5 N·m
(49 ± 4 lbf·in)
5 ± 1 N·m
(44 ± 9 lbf·in)
NEW = Component must be replaced when removed.
tmr2017-207-109_a

GENERAL

VEHICLE CARE

Cleaning the Vehicle

To clean the vehicle, **do not use high-pressure washers** (like the ones found in car washes) as they may damage certain parts of the vehicle.

To clean the vehicle:

1. Rinse the vehicle thoroughly with water to remove loose dirt.
2. Using a soft, clean cloth, wash the vehicle with water mixed with a mild detergent, such as soap specially formulated for motorcycles or automobiles.

Using warm water works well to remove bugs in the windshield and front panels.

NOTICE **Do not clean the windshield with alkaline or acid cleaner, gasoline or solvent to avoid windshield damage.**

For **Matte finishes**, hand-wash with a soft wash mitt and a mild cleaning product safe for matte paint. To remove foreign substances such as insects, use a soft applicator and a mild solvent. Saturate and soak area before cleaning. Rub lightly.

NOTICE **For Matte finishes, do not use wax, detail spray, or other products used on regular paint. Do not wash with abrasive materials. Do not use mechanical cleaners or polishers, and do not rub the surfaces vigorously.**

3. While washing the vehicle, check for grease or oil. You can use XPS ATV Wash or a mild automotive degreaser. Thoroughly follow the manufacturer's instructions.

SERVICE PRODUCT
XPS ATV WASH (P/N 219 701 702)

4. Dry the vehicle with a chamois or a soft towel.

Protecting the Vehicle

Apply non-abrasive wax to plastic parts.

NOTICE **Do not wax or polish matte surfaces.**

SURFACE	PRODUCT OR PRECAUTION
Glossy finishes	Apply only non-abrasive wax, safe for clear coat paints
Matte finishes	Do not apply wax

NOTICE **Do not polish windshield with any plastic cleaner or polisher.**

⚠ WARNING

Do not apply a vinyl or plastic protector on the seat as the surface will become slippery and the operator or the passenger may slip off the vehicle.

PROCEDURES

DECALS

Removing a Decal

Using a heat gun warm up one end of decal for a few seconds until decal can roll off when rubbing with your finger.

Pull decal slowly and when necessary apply more heat to ease removal on the area that has to be peeled off.

If decal tears while pulling off, it has to be heated for a few seconds longer. If decal tends to stretch while pulling off, stop heating and wait a few seconds to let it cool, then peel it off.

Installing a Decal

Using isopropyl alcohol, clean the surface and dry thoroughly.

Apply liquid soap to new decal and carefully position it. Using a sponge or a squeegee, remove the air bubbles and surplus water working from the center toward the edges. Allow to air dry.

NOTICE **Do not apply isopropyl alcohol or solvent directly on decals. Use these products in a well ventilated area.**

4.5" DIGITAL DISPLAY

Removing the Multifunction Gauge

Remove gauge support.

– Push in on each tab to disengage it.
– Lift up and pull forward to remove.

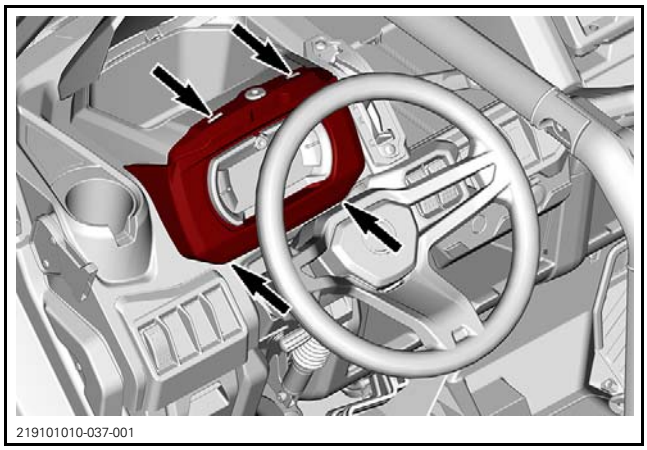
219101010-037-001

ALL MODELS EXCEPT BASE

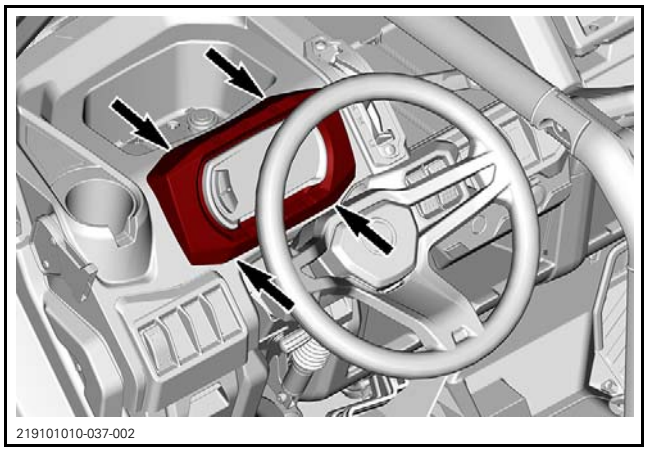
219101010-037-002

BASE MODELS

Disconnect the gauge connector and remove it.

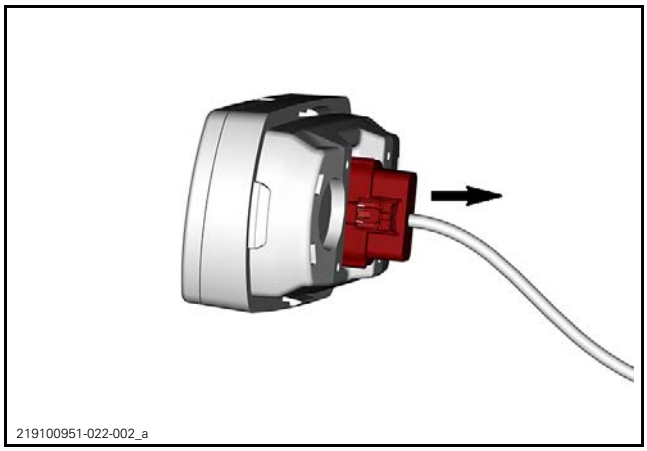
219100951-022-002_a

From the back of the gauge support, release the gauge retaining tabs and remove the gauge from its support.

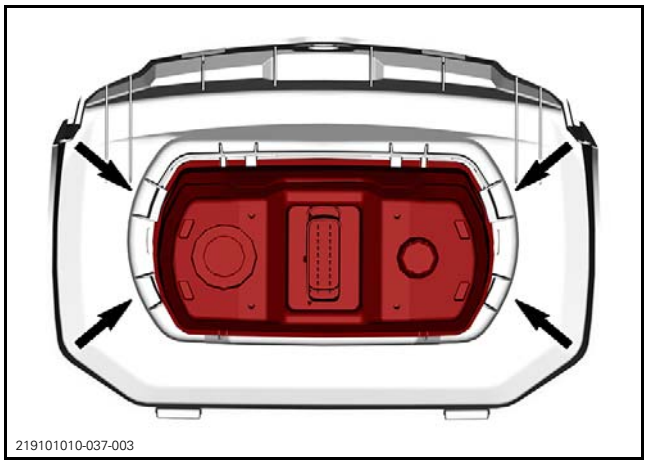
219101010-037-003

Installing the Multifunction Gauge

The installation is the reverse of the removal procedure. However, pay attention to the following.

Start vehicle engine and test gauge functions.

7.6" DIGITAL DISPLAY

Removing the Multifunction Gauge

Remove gauge support.

– Push in on each tab to disengage it.
– Lift up and pull forward to remove.

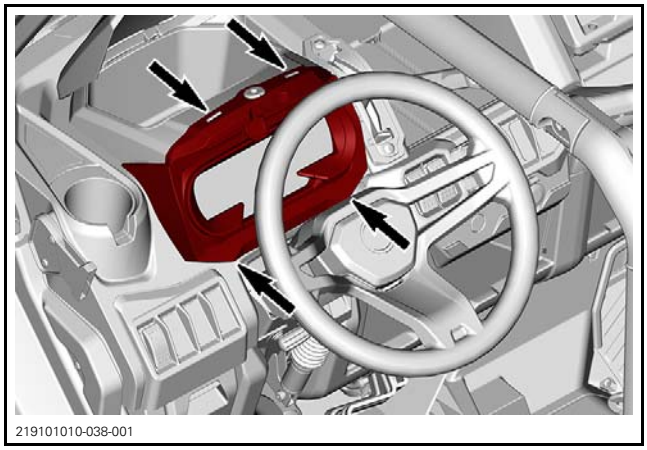
219101010-038-001

Disconnect the gauge connector.

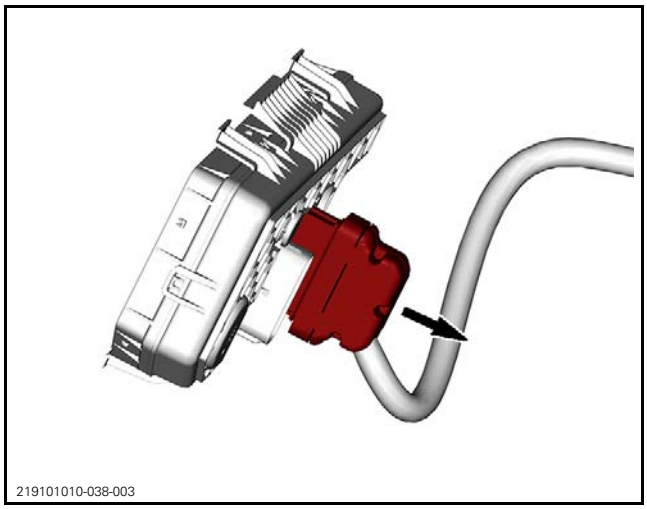

From the back of the gauge support, release the gauge retaining tabs and remove the gauge from its support.

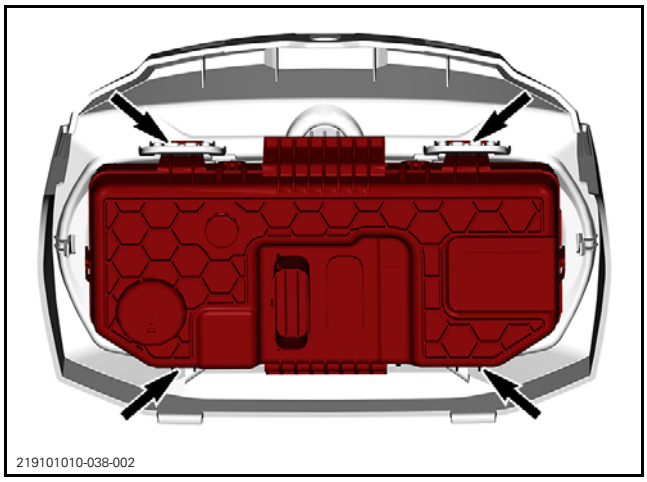

Installing the Multifunction Gauge

The installation is the reverse of the removal procedure. However, pay attention to the following.

Start vehicle engine and test gauge functions.

If the multifunction gauge was replaced, connect the vehicle to the BRP diagnostic software (BUDS2) and apply any available updates.

When updates are completed, change settings as per customer preferences (language and units) as described in *SETTING LANGUAGE AND UNITS OF MEASUREMENT* in this subsection.

Setting Language and Units of Measurement

1. Connect the vehicle to the BRP diagnostic software (BUDS2), refer to the *COMMUNICATION TOOLS* subsection.
2. Press the START/STOP button to energize the electrical system.
3. In BUDS2, go to:
   - SETTINGS page
   - CLUSTER button
   - SETTINGS tab
   - CONFIGURATION - Change Cluster Language and Units

CARGO BOX

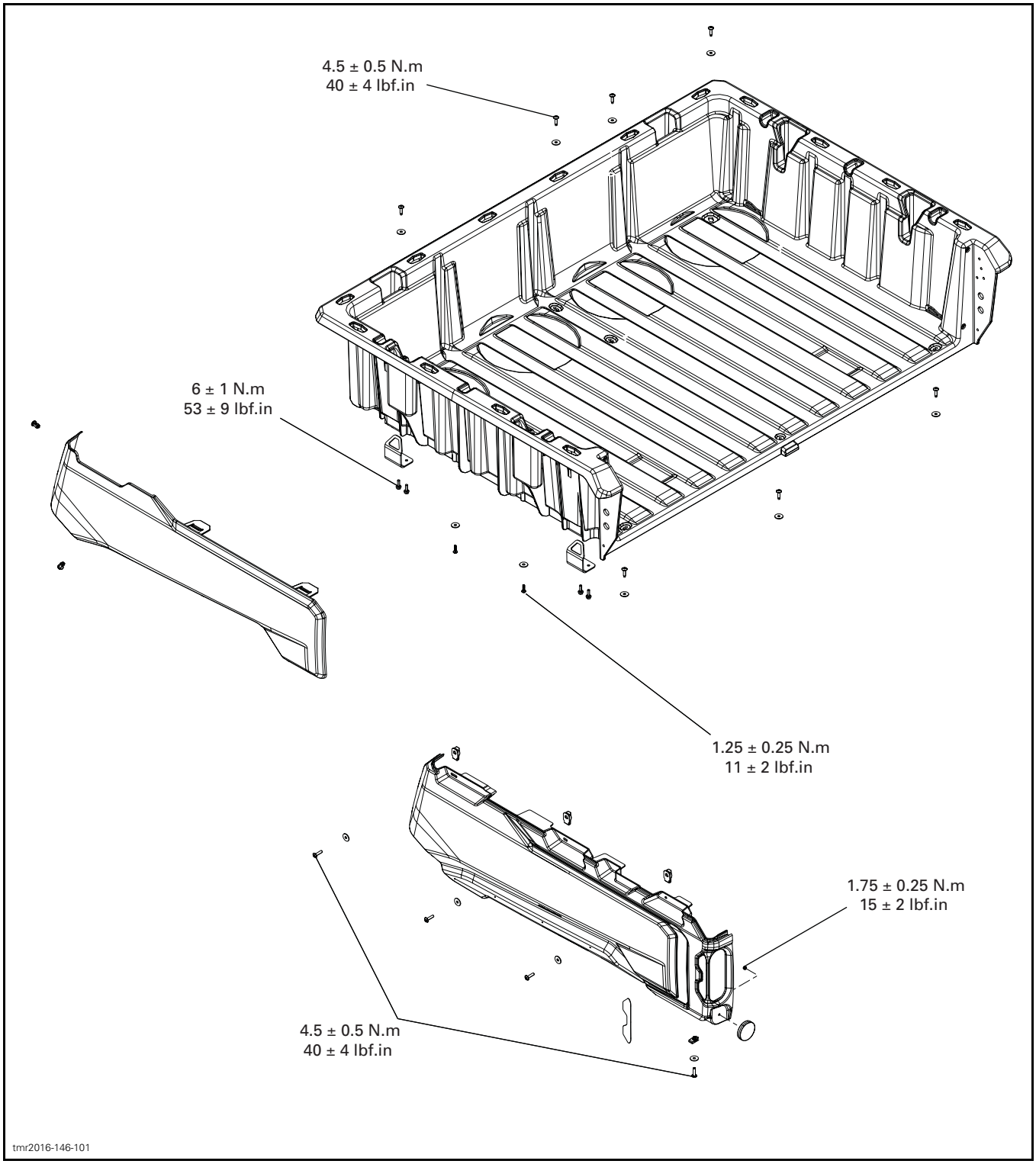
4.5 ± 0.5 N.m
40 ± 4 lbf.in
6 ± 1 N.m
53 ± 9 lbf.in
1.25 ± 0.25 N.m
11 ± 2 lbf.in
1.75 ± 0.25 N.m
15 ± 2 lbf.in
4.5 ± 0.5 N.m
40 ± 4 lbf.in
tmr2016-146-101

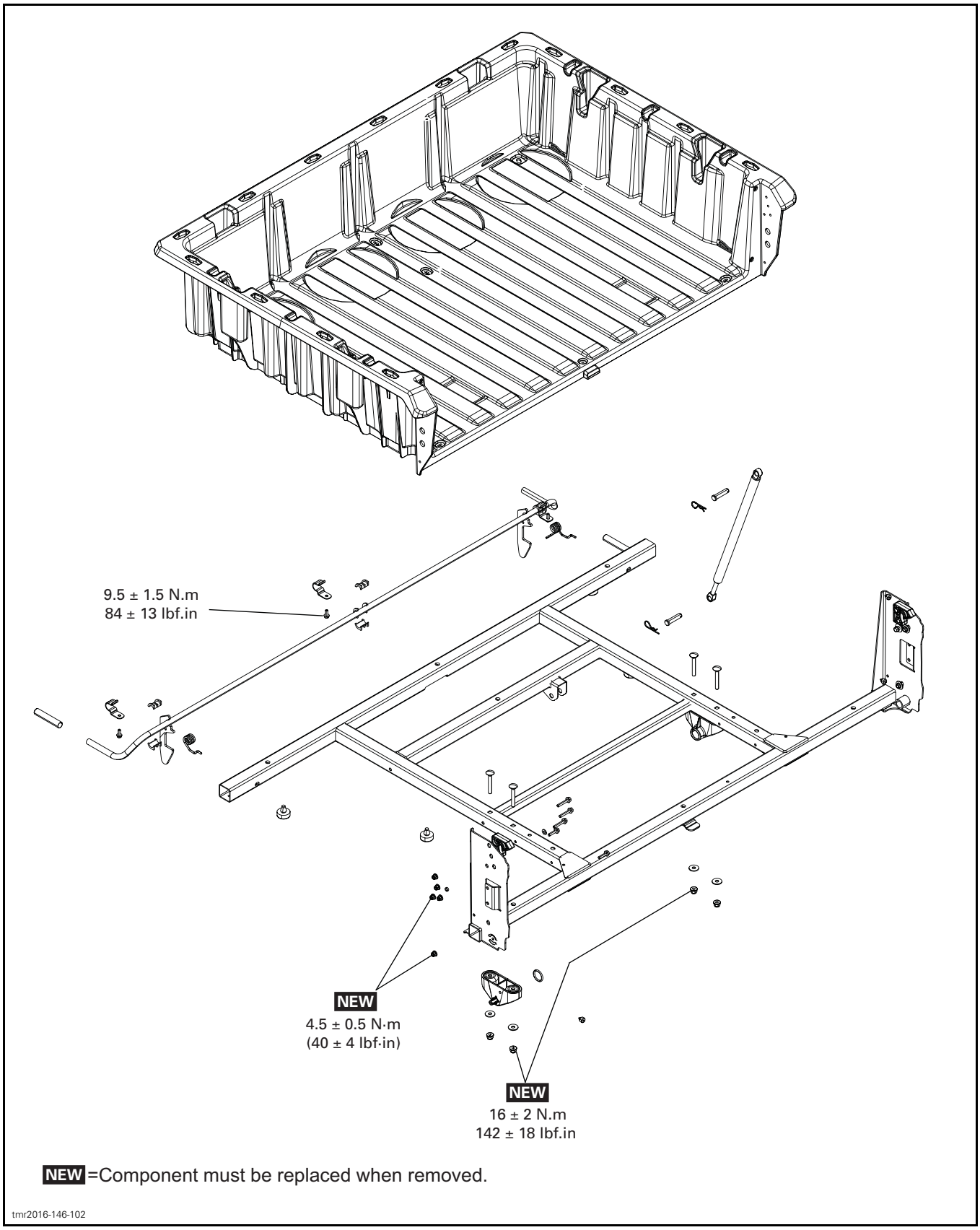

NEW =Component must be replaced when removed.

tmr2016-146-102

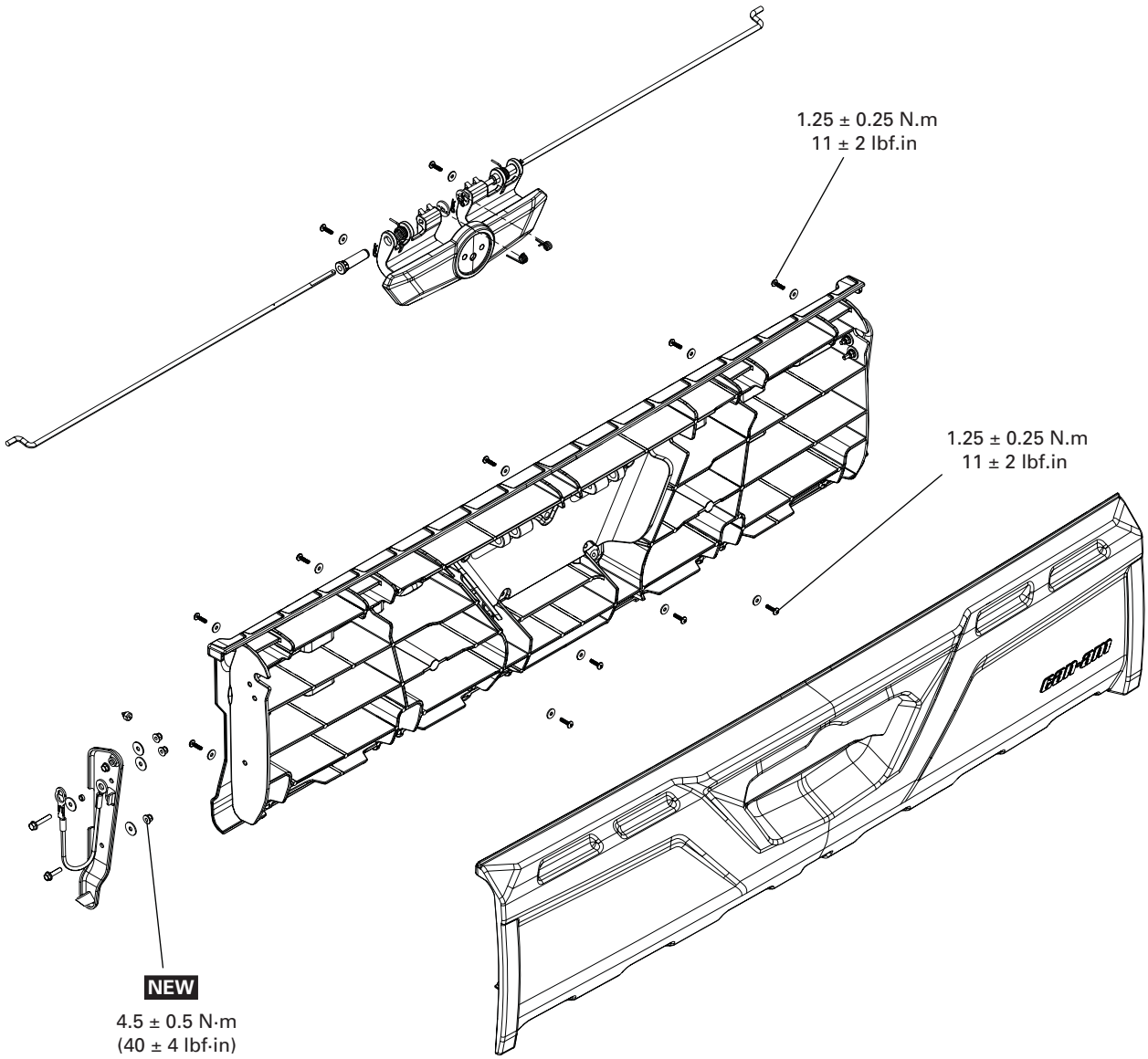

NEW =Component must be replaced when removed.

tmr2016-146-103

FRAME (3-UP)

SERVICE PRODUCTS

Description	Part Number	Page
LOCTITE 243 (BLUE)	293 800 060	2

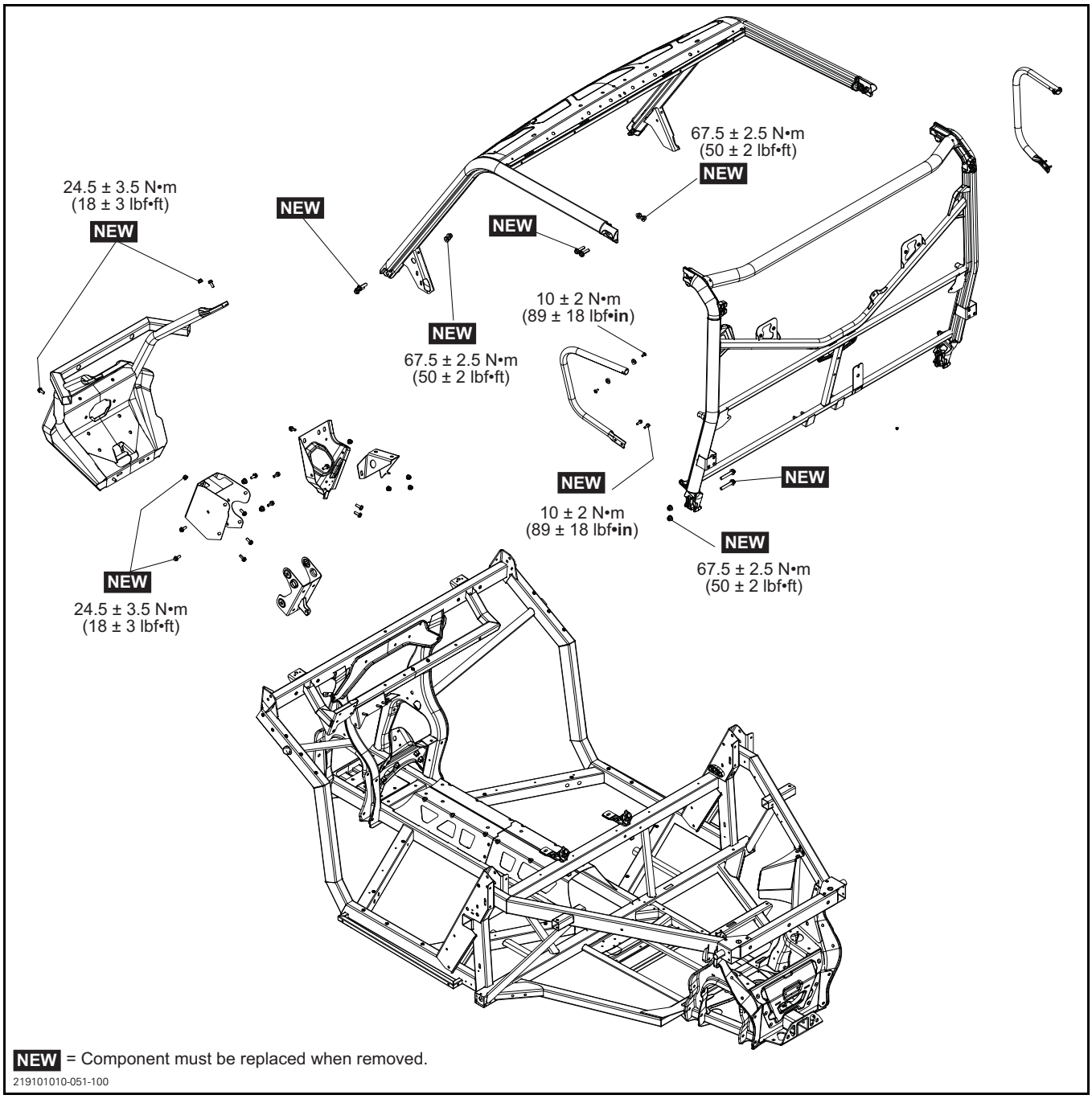

PROCEDURES

CAGE

⚠ WARNING

Never modify the mounting points of the shoulder nets and the seat belts. If they are found modified or damaged, contact a BRP service representative.

⚠ WARNING

Never drill holes, weld or modify the cage. Since this is an important protection component, any modification might compromise passenger safety.

Inspecting the Cage

Check cage for bending, cracks, weld damages or any other damage.

⚠ WARNING

Any damaged cage components must be replaced.

Installing the Cage

⚠ WARNING

When the cage mounting bolts are removed, they must be replaced with new ones or under exceptional conditions, have their threads cleaned then have blue loctite applied. Ensure to use only 10.9 grade fasteners.

RECOMMENDED PRODUCTS
LOCTITE 243 (BLUE) (P/N 293 800 060)

1. Assemble cage rear section onto vehicle. Do not tighten fasteners.
2. Assemble cage front section onto vehicle. Do not tighten fasteners.
3. Assemble both cage sections together. Do not tighten fasteners.
4. Make sure completed assembly is properly centered without any stressed components. Apply proper torque to all fasteners.

FRAME

Inspecting the Frame

Check frame for bending, cracks, weld damages or any other damage. Replace frame as necessary.

Welding the Frame

NOTICE **Welding on frame is not recommended. Components may be damaged.**

Replacing a Frame Insert

To install a new blind threaded insert, use a blind threaded insert installer available at any automotive parts retailer.

tmr2011-039-004

After insert installation, ensure insert can hold the torque applied to the screw it retains. Otherwise, install a new insert.

Replacing the Frame

NOTE: Blind threaded inserts are not installed on replacement frames. Make sure to order 14 inserts when replacing frame.

FRAME (MAX)

SERVICE PRODUCTS

Description	Part Number	Page
LOCTITE 243 (BLUE)	293 800 060	2

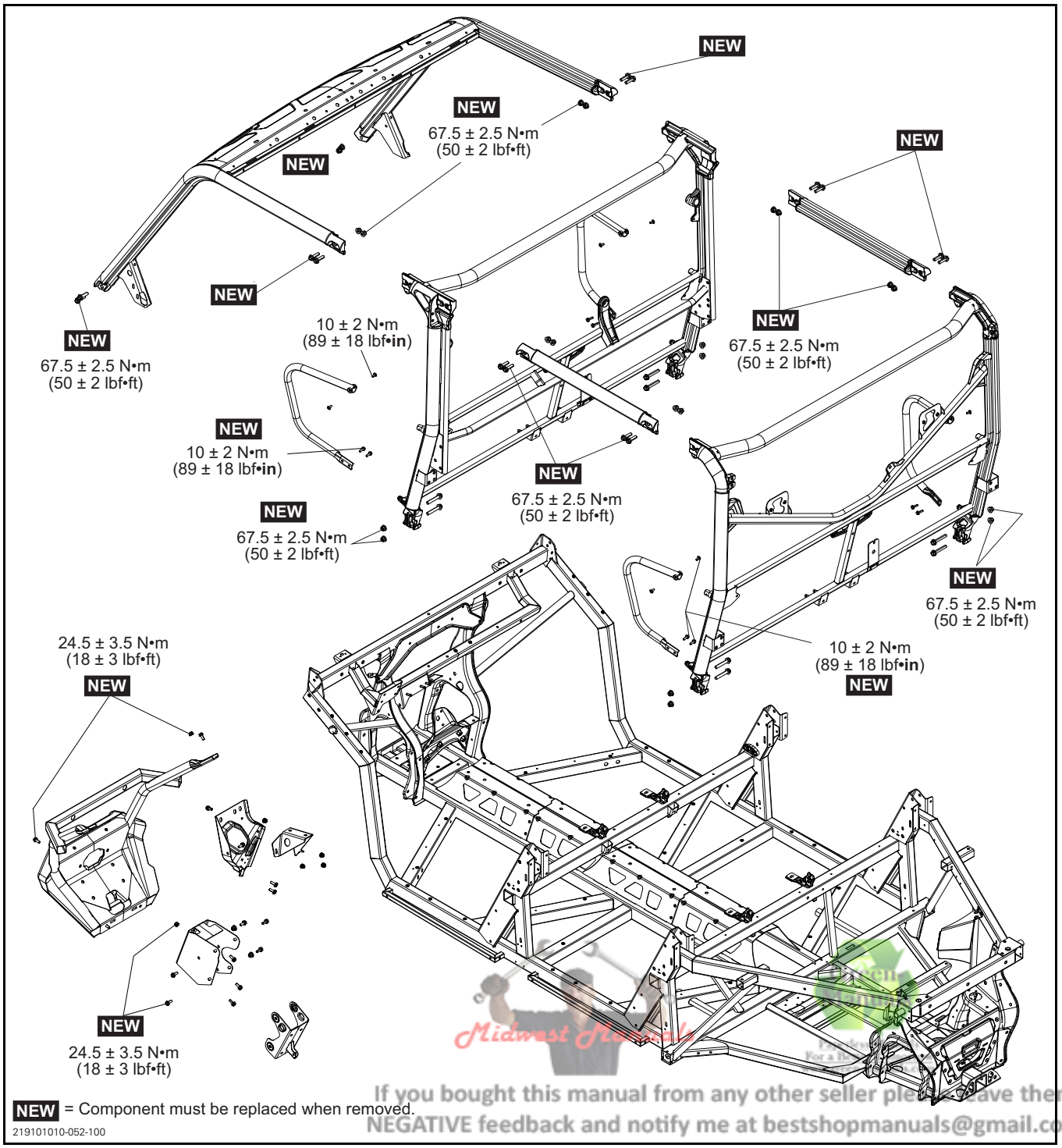

NEW = Component must be replaced when removed.

219101010-052-100

Midwest Manuals
If you bought this manual from any other seller please leave them
NEGATIVE feedback and notify me at bestshopmanuals@gmail.com

PROCEDURES

CAGE

⚠ WARNING

Never modify the mounting points of the shoulder nets and the seat belts. If they are found modified or damaged, contact a BRP service representative.

⚠ WARNING

Never drill holes, weld or modify the cage. Since this is an important protection component, any modification might compromise passenger safety.

Inspecting the Cage

Check cage for bending, cracks, weld damages or any other damage.

⚠ WARNING

Any damaged cage components must be replaced.

Installing the Cage

⚠ WARNING

When the cage mounting bolts are removed, they must be replaced with new ones or under exceptional conditions, have their threads cleaned then have blue loctite applied. Ensure to use only 10.9 grade fasteners.

RECOMMENDED PRODUCTS
LOCTITE 243 (BLUE) (P/N 293 800 060)

1. Assemble cage rear section onto vehicle. Do not tighten fasteners.
2. Assemble cage front section onto vehicle. Do not tighten fasteners.
3. Assemble both cage sections together. Do not tighten fasteners.
4. Make sure completed assembly is properly centered without any stressed components. Apply proper torque to all fasteners.

FRAME

Inspecting the Frame

Check frame for bending, cracks, weld damages or any other damage. Replace frame as necessary.

Welding the Frame

NOTICE **Welding on frame is not recommended. Components may be damaged.**

Replacing a Frame Insert

To install a new blind threaded insert, use a blind threaded insert installer available at any automotive parts retailer.

tmr2011-039-004

After insert installation, ensure insert can hold the torque applied to the screw it retains. Otherwise, install a new insert.

Replacing the Frame

NOTE: Blind threaded inserts are not installed on replacement frames. Make sure to order 14 inserts when replacing frame.

ENGINE (HD5)

ENGINE			
Engine type			ROTAX 450, 4-stroke, Single Over Head Camshaft (SOHC), liquid cooled
Number of cylinder			1
Number of valves			4 valves (mechanical adjustment)
Bore			94 mm (3.7 in)
Stroke			61.5 mm (2.42 in)
Displacement			426.8 cm³ (26.04 in³)
Compression ratio			10.3:1
Maximum HP RPM			7500
Intake valve opening			5° BTDC
Intake valve closing			45° ABDC
Exhaust valve opening			55° BBDC
Exhaust valve closing			5° ATDC
Valve clearance	Intake		0.06 mm to 0.14 mm (.0024 in to .0055 in)
	Exhaust		0.11 mm to 0.19 mm (.0043 in to .0075 in)
Valve stem diameter	Intake	New	5.472 mm to 5.486 mm (.2154 in to .216 in)
		Service limit	5.450 mm (.2146 in)
	Exhaust	New	5.461 mm to 5.476 mm (.215 in to .2156 in)
		Service limit	5.440 mm (.2142 in)
Valve out of round	Intake and Exhaust	New	0.005 mm (.0002 in)
		Service limit	0.060 mm (.0024 in)
Valve guide diameter	Intake and Exhaust	New	5.506 mm to 5.518 mm (.2168 in to .2172 in)
		Service limit	5.568 mm (.2192 in)
Valve spring free length		New	40.41 mm (1.591 in)
		Service limit	39.00 mm (1.535 in)
Valve seat contact width	Intake	New	1.05 mm to 1.35 mm (.041 in to .053 in)
		Service limit	1.80 mm (.071 in)
	Exhaust	New	1.25 mm to 1.55 mm (.049 in to .061 in)
		Service limit	2.00 mm (.079 in)
Piston measurement		New	93.950 mm to 93.966 mm (3.6988 in to 3.6994 in)
		Service limit	93.900 mm (3.6969 in)

Midwest Manuals
Green Manuals
Paperless Manuals For a Better Tomorrow
If you bought this manual from any other seller please leave them NEGATIVE feedback and notify me at bestshopmanuals@gmail.com

ENGINE			
Piston/cylinder clearance		New	0.027 mm to 0.057 mm (.0011 in to .0022 in)
		Service limit	0.100 mm (.0039 in)
Piston ring type		1st	Upper compression ring, rectangular
		2nd	Lower compression ring, taper-face
		3rd	Oil scraper ring, standard
Piston ring end gap	Upper compression ring	New	0.20 mm to 0.35 mm (.008 in to .014 in)
	Lower compression ring		0.35 mm to 0.55 mm (.014 in to .022 in)
	Oil scraper ring		0.20 mm to 0.70 mm (.008 in to .028 in)
	Upper compression ring	Service limit	0.60 mm (.024 in)
	Lower compression ring		0.85 mm (.033 in)
	Oil scraper ring		1.00 mm (.039 in)
Ring/piston groove clearance	Upper compression ring	New	0.03 mm to 0.07 mm (.0012 in to .0028 in)
	Lower compression ring		0.02 mm to 0.06 mm (.0008 in to .0024 in)
	Oil scraper ring		0.01 mm to 0.18 mm (.0004 in to .0071 in)
	Upper compression ring	Service limit	0.150 mm (.0059 in)
	Lower compression ring		0.150 mm (.0059 in)
	Oil scraper ring		0.250 mm (.0098 in)
Rocker arm bore diameter		New	12.036 mm to 12.050 mm (.4739 in to .4744 in)
		Service limit	12.060 mm (.4748 in)
Rocker arm shaft diameter		New	12.00 mm to 12.018 mm (.4724 in to .4731 in)
		Service limit	11.990 mm (.472 in)
Cylinder bore		Nominal new	93.993 mm to 94.007 mm (3.7005 in to 3.7011 in)
Cylinder taper		Maximum new	0.038 mm (.0015 in)
		Service limit	0.090 mm (.0035 in)

ENGINE			
Cylinder out of round		Maximum new	0.015 mm (.0006 in)
		Service limit	0.020 mm (.0008 in)
Camshaft main bearing journal	Spark plug side	New	21.959 mm to 21.980 mm (.8645 in to .8654 in)
		Service limit	21.950 mm (.8642 in)
	Timing chain side	New	34.959 mm to 34.975 mm (1.3763 in to 1.377 in)
		Service limit	34.950 mm (1.376 in)
Camshaft main bearing journal bore	Spark plug side	New	22.000 mm to 22.021 mm (.8661 in to .867 in)
		Service limit	22.040 mm (.8677 in)
	Timing chain side	New	35.000 mm to 35.025 mm (1.378 in to 1.3789 in)
		Service limit	35.040 mm (1.3795 in)
Camshaft lobe	Intake	New	32.890 mm to 33.090 mm (1.295 in to 1.303 in)
		Service limit	32.840 mm (1.293 in)
	Exhaust	New	32.950 mm to 33.150 mm (1.297 in to 1.305 in)
		Service limit	32.900 mm (1.295 in)
Crankshaft axial clearance		New	0.1 mm to 0.4 mm (.004 in to .016 in)
		Service limit	0.5 mm (.02 in)
Crankshaft deflection	MAG/PTO side	New	0.05 mm (.002 in)
Crankshaft pin diameter		New	40.001 mm to 40.025 mm (1.5748 in to 1.5758 in)
		Service limit	39.980 mm (1.574 in)
Crankshaft main journal diameter	MAG/PTO side	New	42.016 mm to 42.040 mm (1.6542 in to 1.6551 in)
		Service limit	42.000 mm (1.6535 in)
Crankcase plain bearing diameter	MAG/PTO side	Service limit	42.100 mm (1.6575 in)
Crankshaft radial play	MAG/PTO side	Service limit	0.07 mm (.0028 in)
Connecting rod big end diameter		Service limit	40.100 mm (1.579 in)
Connecting rod big end radial play		Service limit	0.09 mm (.0035 in)
Connecting rod big end axial play		New	0.100 mm to 0.452 mm (.004 in to .018 in)
		Service limit	0.500 mm (.02 in)
Connecting rod small end diameter		New	20.010 mm to 20.020 mm (.7878 in to .7882 in)
		Service limit	20.060 mm (.7898 in)

ENGINE		
Piston pin diameter	New	19.996 mm to 20.000 mm (.7872 in to .7874 in)
	Service limit	19.980 mm (.7866 in)
Connecting rod/piston pin clearance	Service limit	0.080 mm (.0031 in)

LUBRICATION SYSTEM			
Lubrication	Type		Wet sump with replaceable oil filter
	Oil filter		Replaceable cartridge
	Engine oil pressure	Minimum	350 kPa (51 PSI) at 6000 RPM
	Engine oil	Capacity (oil change with filter)	3 L (3.2 qt (U.S. liq.)) (engine/transmission)
		Recommended	4T 5W40 Synthetic blend oil or 4T 10W50 Synthetic oil or 4T 0W40 Synthetic oil If not available, use a 5W40 or 10W50 motor oil that meets the requirements for API service classification SJ, SL, SM or SN
Oil pressure regulator compression spring free length		New nominal	64 mm (2.52 in)
		Service limit	62 mm (2.441 in)
Oil pump inner and outer rotor clearance		Service limit	0.25 mm (.0098 in)
Oil pump axial clearance		Service limit	0.10 mm (.0039 in)

COOLING SYSTEM		
Coolant	Recommended	Extended life pre-mixed coolant
	If not available	Distilled water and antifreeze solution (50% distilled water, 50% antifreeze) or coolant specifically designed for aluminum engines

TRANSMISSION		
Type		CVT (Continuously Variable Transmission)
Engagement RPM		2000 ± 100 RPM
Drive belt width	Service limit	30.00 mm (1.181 in)
Governor cup roller outer diameter	New	13.80 mm to 14.00 mm (.543 in to .551 in)
	Service limit	13.20 mm (.52 in)
Governor cup roller inner diameter	New	8.025 mm to 8.175 mm (.316 in to .322 in)
	Service limit	9.00 mm (.354 in)
Centrifugal lever pivot bolt diameter	New	6.078 mm to 6.100 mm (.239 in to .24 in)
	Service limit	6.000 mm (.236 in)

TRANSMISSION		
Centrifugal lever bore diameter	New	6.035 mm to 6.078 mm (.238 in to .239 in)
	Service limit	6.200 mm (.244 in)
Centrifugal lever pivot bolt bore diameter	New	6.113 mm to 6.171 mm (.241 in to .243 in)
	Service limit	6.300 mm (.248 in)
Drive pulley sliding sheave large bushing	New	55.000 mm to 55.040 mm (2.165 in to 2.167 in)
	Service limit	55.200 mm (2.173 in)
Drive pulley sliding sheave small bushing	New	30.000 mm to 30.040 mm (1.181 in to 1.183 in)
	Service limit	30.200 mm (1.189 in)
Drive pulley spring free length	Service limit	75 mm (2.953 in)
Drive pulley spring squareness	Service limit	4 mm (.157 in)
Spring sleeve length	New	9.2 mm to 9.4 mm (.362 in to .37 in)
	Service limit	9.0 mm (.354 in)
Driven pulley sliding sheave bushing	New	30.060 mm to 30.100 mm (1.183 in to 1.185 in)
	Service limit	30.200 mm (1.189 in)
Driven pulley fixed sheave bushing	New	30.060 mm to 30.100 mm (1.183 in to 1.185 in)
	Service limit	30.200 mm (1.189 in)
Torque gear on driven pulley	Service limit	7.500 mm (.295 in)
Cam width on top surface	Service limit	6.000 mm (.236 in)
Driven pulley sliding sheave wear on contact surface	Service limit	2.000 mm (.079 in)
Driven pulley spring free length	Service limit	164 mm (6.457 in)
Driven pulley spring squareness	Service limit	3.8 mm (.15 in)

GEARBOX		
Type		Dual range (HI-LO) with park, neutral and reverse
Output shaft axial clearance	New	0.09 mm to 0.18 mm (.004 in to .007 in)
	Service limit	0.30 mm (.012 in)
Bevel gear axial clearance	New	0.02 mm to 0.11 mm (.0008 in to .0043 in)
	Service limit	0.15 mm (.006 in)
Gear groove width	New	5.00 mm to 5.10 mm (.197 in to .201 in)
	Service limit	5.20 mm (.205 in)

GEARBOX			
Counter shaft	MAG side	Service limit	17.990 mm (.708 in)
	PTO side		24.950 mm (.982 in)
Bevel gear shaft	PTO side	Service limit	24.990 mm (.984 in)
Shift fork claw thickness		New	4.800 mm to 4.860 mm (.189 in to .191 in)
		Service limit	4.750 mm (.187 in)
Rear final drive oil		Capacity	250 ml (8.45 U.S. oz)
		Recommended	75W90 Synthetic gear oil or a 75W 90 API GL-5
Overall gear ratio		High	4.070
		Low	6,769
		Reverse	7,608

ELECTRICAL SYSTEM		
Magneto generator output		500 W @ 6000 RPM
Ignition system type		IDI (Inductive Discharge Ignition)
Ignition timing		Not adjustable
Spark plug	Quantity	1
	Make and type	NGK LMAR8D-J
	Gap	0.7 mm to 0.9 mm (.028 in to .035 in)
Engine RPM limiter setting	Forward	8000 rpm
	Reverse	15 km/h (9 MPH) without Override)

FUEL SYSTEM			
Fuel delivery	Type		Electronic Fuel Injection (EFI), 46 mm throttle body, 1 injector per cylinder
Idle speed			1250 rpm ± 50 (not adjustable)
Fuel	Type		Regular unleaded gasoline
	Minimum octane rating	Inside North America	87 (R+M)/2 or higher
		Outside North America	92 RON or higher

ENGINE (HD8)

ENGINE			
Engine type			ROTAX® 810, 4-stroke, 2 cylinders (V-twin), liquid cooled
Valve train			4 valves/cylinder (mechanical adjustment), Single Over Head Camshaft (SOHC) with timing chain
Bore			91 mm (3.58 in)
Stroke			61.5 mm (2.42 in)
Displacement			800 cm³ (48.8 in³)
Compression ratio			10.3:1
Maximum HP RPM			7000 RPM
Air filter			Synthetic paper filter
Intake valve opening			5° BTDC
Intake valve closing			45° ABDC
Exhaust valve opening			55° BBDC
Exhaust valve closing			5° ATDC
Valve clearance		Intake	0.06 mm to 0.14 mm (.0024 in to .0055 in)
		Exhaust	0.11 mm to 0.19 mm (.0043 in to .0075 in)
Valve stem diameter	Intake	New	4.966 mm to 4.980 mm (.1955 in to .1961 in)
		Service limit	4.930 mm (.1941 in)
	Exhaust	New	4.956 mm to 4.970 mm (.1951 in to .1957 in)
		Service limit	4.930 mm (.1941 in)
Valve out of round		New	0.005 mm (.0002 in)
		Service limit	0.06 mm (.0024 in)
Valve guide diameter		New	4.998 mm to 5.018 mm (.1968 in to .1976 in)
		Service limit	5.050 mm (.1988 in)
Valve spring free length		New	40.81 mm (1.607 in)
		Service limit	39.00 mm (1.535 in)
Valve seat contact width	Intake	New	1.05 mm to 1.35 mm (.041 in to .053 in)
		Service limit	1.80 mm (.071 in)
	Exhaust	New	1.25 mm to 1.55 mm (.049 in to .061 in)
		Service limit	2.00 mm (.079 in)

Midwest Manuals
Green Manuals
Paperless Manuals For a Better Tomorrow www.green-manuals.com
If you bought this manual from any other seller please leave them NEGATIVE feedback and notify me at bestshopmanuals@gmail.com

ENGINE			
Rocker arm bore diameter		New	12.036 mm to 12.050 mm (.4739 in to .4744 in)
		Service limit	12.060 mm (.4748 in)
Rocker arm shaft diameter		New	12.000 mm to 12.018 mm (.4724 in to .4731 in)
		Service limit	11.990 mm (.472 in)
Piston diameter		New	90.950 mm to 90.966 mm (3.5807 in to 3.5813 in)
		Service limit	90.850 mm (3.5768 in)
Piston/cylinder clearance		New	0.027 mm to 0.057 mm (.0011 in to .0022 in)
		Service limit	0.100 mm (.0039 in)
Piston ring type		1st	Upper compression ring, rectangular
		2nd	Lower compression ring, tapered face
		3rd	Oil scraper ring
Ring end gap	Rectangular	New	0.20 mm to 0.40 mm (.008 in to .016 in)
	Tapered face		0.20 mm to 0.40 mm (.008 in to .016 in)
	Oil scraper ring		0.20 mm to 0.70 mm (.008 in to .028 in)
	Rectangular	Service limit	0.60 mm (.024 in)
	Tapered face		0.70 mm (.028 in)
	Oil scraper ring		1.00 mm (.039 in)
Ring/piston groove clearance	Rectangular	New	0.03 mm to 0.07 mm (.0012 in to .0028 in)
	Tapered face		0.02 mm to 0.06 mm (.0008 in to .0024 in)
	Oil scraper ring		0.01 mm to 0.18 mm (.0004 in to .0071 in)
	Rectangular	Service limit	0.15 mm (.0059 in)
	Tapered face		0.15 mm (.0059 in)
	Oil scraper ring		0.25 mm (.0098 in)
Cylinder bore		New	90.993 mm to 91.007 mm (3.5824 in to 3.583 in)
Cylinder taper		Maximum New	0.038 mm (.0015 in)
		Service limit	0.090 mm (.0035 in)
Cylinder out of round		Maximum New	0.015 mm (.0006 in)
		Service limit	0.020 mm (.0008 in)

ENGINE			
Camshaft main bearing journal	Timing chain side	New	34.959 mm to 34.975 mm (1.3763 in to 1.377 in)
		Service limit	34.950 mm (1.376 in)
	Spark plug side	New	21.959 mm to 21.980 mm (.8645 in to .8654 in)
		Service limit	21.950 mm (.8642 in)
Camshaft main bearing journal bore	Timing chain side	New	35.000 mm to 35.025 mm (1.378 in to 1.3789 in)
		Service limit	35.040 mm (1.3795 in)
	Spark plug side	New	22.000 mm to 22.021 mm (.8661 in to .867 in)
		Wear limit	22.040 mm (.8677 in)
Camshaft lobe	Intake valve	New	32.890 mm to 33.090 mm (1.2949 in to 1.3028 in)
		Service limit	32.870 mm (1.2941 in)
	Exhaust valve	New	31.730 mm to 31.930 mm (1.2492 in to 1.2571 in)
		Service limit	31.710 mm (1.2484 in)
Crankshaft main bearing journal diameter (MAG/PTO side)		New	42.016 mm to 42.040 mm (1.6542 in to 1.6551 in)
		Service limit	42.000 mm (1.6535 in)
Crankshaft radial play (MAG/PTO side)		Service limit	0.07 mm (.0028 in)
Crankshaft bearing journal diameter (in PTO cover)		New	34.004 mm to 34.020 mm (1.3387 in to 1.3394 in)
		Service limit	33.998 mm (1.3385 in)
Crankshaft radial play (PTO cover bearing)		Service limit	0.10 mm (.0039 in)
Crankshaft axial play		New	0.200 mm to 0.500 mm (.0079 in to .0197 in)
		Service limit	0.600 mm (.0236 in)
Crankshaft pin diameter		New	40.001 mm to 40.025 mm (1.5748 in to 1.5758 in)
		Service limit	39.990 mm (1.5744 in)
Crankshaft deflection	MAG/ PTO side	New	0.050 mm (.002 in)
Crankcase plain bearing	MAG/ PTO side	Service limit	42.100 mm (1.6575 in)
PTO cover plain bearing		Service limit	34.120 mm (1.3433 in)
Connecting rod big end diameter		Service limit	40.100 mm (1.5787 in)
Connecting rod big end radial play		Service limit	0.09 mm (.0035 in)
Connecting rod big end axial play		New	0.200 mm to 0.500 mm (.008 in to .02 in)
		Service limit	0.600 mm (.024 in)

ENGINE		
Connecting rod small end diameter	New	20.010 mm to 20.020 mm (.7878 in to .7882 in)
	Service limit	20.060 mm (.7898 in)
Piston pin diameter	New	19.996 mm to 20.000 mm (.7872 in to .7874 in)
	Service limit	19.980 mm (786.614 in)
Connecting rod/piston pin clearance (radial play)	Service limit	0.080 mm (.0031 in)

LUBRICATION SYSTEM		
Type		Wet sump. Replaceable cartridge oil filter
Oil filter		BRP Rotax paper type, replaceable
Engine oil pressure	Minimum	300 kPa (44 PSI) at 6000 RPM
Engine oil	Capacity (oil change with filter)	2 L (2.11 qt (U.S. liq.))
	Recommended	4T 10W50 Synthetic oil or 4T 5W40 Synthetic blend oil or 4T 0W40 Synthetic oil If not available, use a 5W40 or 10W50 motor oil that meets the requirements for API service classification SJ, SL, SM or SN
Oil pressure regulator spring free length	New	39 mm (1.535 in)
	Service limit	37 mm (1.457 in)
Clearance of inner and outer oil pump rotor	Service limit	0.25 mm (.0098 in)
Oil pump axial clearance	Service limit	0.20 mm (.0079 in)

COOLING SYSTEM		
Coolant	Type	Ethyl glycol/water mix (50%/50%). Extended life pre-mixed coolant or coolant specifically designed for aluminum engines
	Capacity 3-UP Models	6 L (1.59 U.S. gal.)
	Capacity MAX models without heating system	6.8 L (1.8 U.S. gal.)
	Capacity MAX models with heating system	7.62 L (2.01 U.S. gal.)
Thermostat	Starts to open	65°C (149°F)
	Fully open	75°C (167°F)
Radiator cap opening pressure		110 kPa (16 PSI)

TRANSMISSION		
Type		CVT (Continuously Variable Transmission)
Engagement RPM		1750 ± 100 RPM
Drive belt width	Service limit	36.7 mm (1.445 in)
Governor cup roller outer diameter	New	13.80 mm to 14.00 mm (.543 in to .551 in)
	Service limit	13.20 mm (.52 in)
Governor cup roller inner diameter	New	8.025 mm to 8.175 mm (.3159 in to .3219 in)
	Service limit	9.000 mm (.3543 in)
Centrifugal lever pivot bolt diameter	New	6.063 mm to 6.091 mm (.2387 in to .2398 in)
	Service limit	6.000 mm (.2362 in)
Centrifugal lever bore diameter	New	6.000 mm to 6.120 mm (.236 in to .241 in)
	Service limit	6.200 mm (.244 in)
Drive pulley sliding half centrifugal lever pivot bolt bore diameter	New	6.113 mm to 6.171 mm (.241 in to .243 in)
	Service limit	6.300 mm (.248 in)
Drive pulley sliding half large bushing	New	46.950 mm to 47.130 mm (1.848 in to 1.856 in)
	Service limit	47.160 mm (1.857 in)
Drive pulley sliding half small bushing	New	32.010 mm to 32.135 mm (1.26 in to 1.265 in)
	Service limit	32.200 mm (1.268 in)
Driven pulley inner half bushing	New	41.278 mm to 41.363 mm (1.625 in to 1.628 in)
	Service limit	41.420 mm (1.631 in)
Driven pulley cam	New	41.278 mm to 41.363 mm (1.625 in to 1.628 in)
	Service limit	41.420 mm (1.631 in)

GEARBOX		
Type		Dual range (HI-LO) with park, neutral and reverse
Gear ratios	Angle drive sub-transmission	37/15 = 2.467
	Intermediate	45/44 = 1.023
	High	36/27 = 1.333
	Low	44/19 = 2.316
	Reverse	34/12 =2.833

GEARBOX			
Overall gear ratios		High	3.364
		Low	5.842
		Reverse	7.148
Gearbox oil		Capacity	1.5 L (.396 U.S. gal.)
		Recommended	75W140 Synthetic gear oil (API GL-5)
Coupling sleeve groove width		New	5.25 mm to 5.35 mm (.207 in to .211 in)
		Service limit	5.50 mm (.217 in)
Coupling fork claw thickness		New	4.95 mm to 5.05 mm (.195 in to .199 in)
		Service limit	4.80 mm (.189 in)
Shift fork claw thickness (high, low and reverse gear shift fork)		New	5.10 mm to 5.20 mm (.201 in to .205 in)
		Service limit	5.00 mm (.197 in)
Width of shift fork engagement groove		New	5.30 mm to 5.40 mm (.209 in to .213 in)
		Service limit	5.50 mm (.217 in)
Intermediate gear shaft		New	24.987 mm to 25.000 mm (.9837 in to .9843 in)
		Service limit	24.977 mm (.983 in)
Countershaft	MAG side	New	19.977 mm to 19.990 mm (.7865 in to .787 in)
		Service limit	19.973 mm (.7863 in)
	CVT side	New	24.977 mm to 24.990 mm (.9833 in to .9839 in)
		Service limit	24.970 mm (.9831 in)
Main shaft	Bearing journal MAG/CVT side	New	16.980 mm to 16.991 mm (.6685 in to .6689 in)
		Service limit	16.976 mm (.6683 in)

ELECTRICAL SYSTEM	
Magneto generator output	650 W @ 6000 RPM
Stator resistance (20°C (68°F))	0.15 to 0.30 Ω
Ignition system type	IDI (Inductive Discharge Ignition)
Ignition timing	Not adjustable

ELECTRICAL SYSTEM		
Spark plug	Quantity	2
	Make and type	NGK DCPR8E
	Gap	0.7 mm to 0.8 mm (.028 in to .031 in)
Engine RPM limiter setting	Forward	8000 RPM
	Reverse	20 km/h to 25 km/h (12 MPH to 16 MPH) (8000 RPM with Override)

ENGINE HD10

ENGINE			
Engine type			ROTAX® 1010HO, 4-stroke, 2 cylinders (V-twin), liquid cooled
Valve train			4 valves/cylinder (mechanical adjustment), Single Over Head Camshaft (SOHC) with timing chain
Bore			91 mm (3.58 in)
Stroke			75 mm (2.95 in)
Displacement			976 cm³ (59.6 in³)
Compression ratio			11:1
Maximum HP RPM			6500 RPM
Air filter			Synthetic paper filter
Intake valve opening			5° BTDC
Intake valve closing			45° ABDC
Exhaust valve opening			50° BBDC
Exhaust valve closing			0° ATDC
Valve clearance		Intake	0.06 mm to 0.14 mm (.0024 in to .0055 in)
		Exhaust	0.11 mm to 0.19 mm (.0043 in to .0075 in)
Valve stem diameter	Intake	New	5.472 mm to 5.486 mm (.215 in to .216 in)
		Service limit	5.450 mm (.2146 in)
	Exhaust	New	5.461 mm to 5.476 mm (.215 in to .2156 in)
		Service limit	5.440 mm (.2142 in)
Valve out of round		New	0.005 mm (.0002 in)
		Service limit	0.060 mm (.0024 in)
Valve guide diameter		New	5.506 mm to 5.518 mm (.2168 in to .2172 in)
		Service limit	5.568 mm (.2192 in)
Valve spring free length		New	40.41 mm (1.591 in)
		Service limit	39.00 mm (1.535 in)
Valve seat contact width	Intake	New	1.05 mm to 1.35 mm (.041 in to .053 in)
		Service limit	2.20 mm (.087 in)
	Exhaust	New	1.25 mm to 1.55 mm (.049 in to .061 in)
		Service limit	2.50 mm (.098 in)

ENGINE			
Rocker arm bore diameter		New	12.036 mm to 12.050 mm (.4739 in to .4744 in)
		Service limit	12.060 mm (.4748 in)
Rocker arm shaft diameter		New	12.000 mm to 12.018 mm (.4724 in to .4731 in)
		Service limit	11.990 mm (.472 in)
Piston diameter		New	90.950 mm to 90.966 mm (3.5807 in to 3.5813 in)
		Service limit	90.850 mm (3.5768 in)
Piston/cylinder clearance		New	0.027 mm to 0.057 mm (.0011 in to .0022 in)
		Service limit	0.100 mm (.0039 in)
Piston ring type		1st	Upper compression ring, rectangular
		2nd	Lower compression ring, tapered face
		3rd	Oil scraper ring
Ring end gap	Rectangular	New	0.20 mm to 0.40 mm (.008 in to .016 in)
	Tapered face		0.20 mm to 0.40 mm (.008 in to .016 in)
	Oil scraper ring		0.20 mm to 0.70 mm (.008 in to .028 in)
	Rectangular	Service limit	0.60 mm (.024 in)
	Tapered face		0.70 mm (.028 in)
	Oil scraper ring		1.00 mm (.039 in)
Ring/piston groove clearance	Rectangular	New	0.03 mm to 0.07 mm (.0012 in to .0028 in)
	Tapered face		0.02 mm to 0.06 mm (.0008 in to .0024 in)
	Oil scraper ring		0.01 mm to 0.18 mm (.0004 in to .0071 in)
	Rectangular	Service limit	0.15 mm (.0059 in)
	Tapered face		0.15 mm (.0059 in)
	Oil scraper ring		0.25 mm (.0098 in)
Cylinder bore		New	90.993 mm to 91.007 mm (3.5824 in to 3.583 in)
Cylinder taper		Maximum New	0.038 mm (.0015 in)
		Service limit	0.090 mm (.0035 in)
Cylinder out of round		Maximum New	0.015 mm (.0006 in)
		Service limit	0.020 mm (.0008 in)

ENGINE			
Camshaft main bearing journal	Timing chain side	New	34.959 mm to 34.975 mm (1.3763 in to 1.377 in)
		Service limit	34.950 mm (1.376 in)
	Spark plug side	New	21.959 mm to 21.980 mm (.8645 in to .8654 in)
		Service limit	21.950 mm (.8642 in)
Camshaft main bearing journal bore	Timing chain side	New	35.000 mm to 35.025 mm (1.378 in to 1.3789 in)
		Service limit	35.040 mm (1.3795 in)
	Spark plug side	New	22.000 mm to 22.021 mm (.8661 in to .867 in)
		Wear limit	22.040 mm (.8677 in)
Camshaft lobe	Intake valve	New	32.890 mm to 33.090 mm (1.2949 in to 1.3028 in)
		Service limit	32.870 mm (1.2941 in)
	Exhaust valve	New	32.950 mm to 33.150 mm (1.2972 in to 1.3051 in)
		Service limit	32.930 mm (1.2965 in)
Crankshaft main bearing journal diameter (MAG/PTO side)		New	42.016 mm to 42.040 mm (1.6542 in to 1.6551 in)
		Service limit	42.000 mm (1.6535 in)
Crankshaft radial play (MAG/PTO side)		Service limit	0.07 mm (.0028 in)
Crankshaft bearing journal diameter (in PTO cover)		New	34.004 mm to 34.020 mm (1.3387 in to 1.3394 in)
		Service limit	33.998 mm (1.3385 in)
Crankshaft radial play (PTO cover bearing)		Service limit	0.10 mm (.0039 in)
Crankshaft axial play		New	0.200 mm to 0.500 mm (.0079 in to .0197 in)
		Service limit	0.600 mm (.0236 in)
Crankshaft pin diameter		New	41.986 mm to 42.010 mm (1.653 in to 1.6539 in)
		Service limit	41.967 mm (1.6522 in)
Crankshaft deflection	MAG/ PTO side	New	0.050 mm (.002 in)
Crankcase plain bearing	MAG/ PTO side	Service limit	42.100 mm (1.6575 in)
PTO cover plain bearing		Service limit	34.120 mm (1.3433 in)
Connecting rod big end diameter		Service limit	42.100 mm (1.6575 in)
Connecting rod big end radial play		Service limit	0.09 mm (.0035 in)
Connecting rod big end axial play		New	0.250 mm to 0.550 mm (.0098 in to .0217 in)
		Service limit	0.600 mm (.024 in)

ENGINE		
Connecting rod small end diameter	New	22.010 mm to 22.020 mm (.8665 in to .8669 in)
	Service limit	22.050 mm (.8681 in)
Piston pin diameter	New	21.996 mm to 22.000 mm (865.984 in to 866.142 in)
	Service limit	21.980 mm (.8654 in)
Connecting rod/piston pin clearance (radial play)	Service limit	0.080 mm (.0031 in)

LUBRICATION SYSTEM			
Type			Wet sump. Replaceable cartridge oil filter
Oil filter			BRP Rotax paper type, replaceable
Engine oil pressure (minimum)			300 kPa (44 PSI) at 6000 RPM
Engine oil	Capacity (oil change with filter)	All except HVAC	2 L (2.11 qt (U.S. liq.))
		HVAC	2.1 L (2.22 qt (U.S. liq.))
	XPS recommended oil	General purpose	4T 5W40 Synthetic blend oil
		Cold temperature	4T 0W40 Synthetic oil
		Warm temperature	4T 10W50 Synthetic oil
		If not available	Use a 4-stroke SAE engine oil meeting or exceeding the following lubricant industry specification:API service classification SJ, SL,SM or SN
Oil pressure regulator spring free length	New		39 mm (1.535 in)
	Service limit		37 mm (1.457 in)
Clearance of inner and outer oil pump rotor	Service limit		0.25 mm (.0098 in)
Oil pump axial clearance	Service limit		0.20 mm (.0079 in)

COOLING SYSTEM			
Coolant	Type		Ethyl glycol/water mix (50%/50%). Use premixed coolant sold by BRP LONG LIFE ANTIFREEZE or coolant specifically designed for aluminum engines
	Total system capacity	Limited XT Cab	6.9 L (1.82 U.S. gal.)
		All other models	6 L (1.59 U.S. gal.)

COOLING SYSTEM		
Thermostat	Starts to open	75°C (167°F)
	Fully open	90°C (194°F)
Radiator cap opening pressure		110 kPa (16 PSI)

TRANSMISSION			
Type			CVT (Continuously Variable Transmission)
Engagement RPM			1750 ± 100 RPM
Drive belt width	Service limit		34.8 mm (1.37 in)
Governor cup roller outer diameter	New	All except X mr	13.80 mm to 14.00 mm (.543 in to .551 in)
	Service limit		13.20 mm (.52 in)
Roller flat spot width	Service limit	X mr	8.50 mm (.335 in)
Governor cup roller inner diameter	New		8.025 mm to 8.175 mm (.3159 in to .3219 in)
	Service limit		9.000 mm (.3543 in)
Centrifugal lever pivot bolt diameter	New		6.063 mm to 6.091 mm (.2387 in to .2398 in)
	Service limit		6.000 mm (.2362 in)
Centrifugal lever bore diameter	New		6.000 mm to 6.120 mm (.236 in to .241 in)
	Service limit		6.200 mm (.244 in)
Drive pulley sliding half centrifugal lever pivot bolt bore diameter	New		6.113 mm to 6.171 mm (.241 in to .243 in)
	Service limit		6.300 mm (.248 in)
Drive pulley sliding half large bushing	New		46.950 mm to 47.130 mm (1.848 in to 1.856 in)
	Service limit		47.160 mm (1.857 in)
Drive pulley sliding half small bushing	New		32.010 mm to 32.135 mm (1.26 in to 1.265 in)
	Service limit		32.200 mm (1.268 in)
Driven pulley inner half bushing	New		41.278 mm to 41.363 mm (1.6251 in to 1.6285 in)
	Service limit		41.420 mm (1.6307 in)
Cam bushing inner diameter	New		41.278 mm to 41.363 mm (1.6251 in to 1.6285 in)
	Service limit		41.420 mm (1.6307 in)

TRANSMISSION			
Driven pulley roller	Inner diameter	New	8.20 mm to 8.35 mm (.323 in to .329 in)
		Service limit	8.50 mm (.335 in)
	Outer diameter	New	21.80 mm to 22.20 mm (.858 in to .874 in)
		Service limit	21.50 mm (.846 in)
	Thickness	New	15.10 mm to 15.50 mm (.594 in to .61 in)
		Service limit	14.75 mm (.581 in)

GEARBOX			
Type			Dual range (HI-LO) with park, neutral and reverse
Gear ratios	Angle drive sub-transmission		20/21 = 0.952
	Intermediate 1		48/27 = 1.778
	Intermediate 2	X mr	48/26 = 1.846
		All other	47/28 = 1.679
	High		45/43 = 1.047
	Low		65/25=2,6
	Reverse		49/21 = 2.333
	Rear differential	All except 6X6	48/14 = 3.429
	Fixed drive gear	6X6	48/14 = 3.429
	Rear angle drive	6X6	14/48 = 0.292
	Rear angle drive	6X6	20/21 = 0.952
Overall gear ratios	High	X mr	11.78
		All other	10.70
	Low	X mr	29.29
		All other	26.60
	Reverse	X mr	26.26
		All other	23,88
Gearbox oil	Capacity	6x6	2.30 L (77.77 U.S. oz)
		All other	1.25 L (42.27 U.S. oz)
	Recommended		XPS 75W140 synthetic gear oil or a 75W140 API GL-5 synthetic gearbox oil
Coupling sleeve groove width	New		5.25 mm to 5.35 mm (.207 in to .211 in)
	Service limit		5.50 mm (.217 in)

GEARBOX			
Coupling fork claw thickness		New	4.95 mm to 5.05 mm (.195 in to .199 in)
		Service limit	4.80 mm (.189 in)
Shift fork claw thickness (high, low and reverse gear shift fork)		New	5.92 mm to 6.00 mm (.233 in to .236 in)
		Service limit	5.80 mm (.228 in)
Width of shift fork engagement groove		New	6.10 mm to 6.25 mm (.24 in to .246 in)
		Service limit	6.30 mm (.248 in)
Countershaft	MAG side	New	19.977 mm to 19.990 mm (.7865 in to .787 in)
		Service limit	19.973 mm (.7863 in)
	CVT side	New	24.977 mm to 24.990 mm (.9833 in to .9839 in)
		Service limit	24.970 mm (.9831 in)
Main shaft	Bearing journal MAG/CVT side	New	16.980 mm to 16.991 mm (.6685 in to .6689 in)
		Service limit	16.976 mm (.6683 in)

ELECTRICAL SYSTEM		
Magneto generator output	All except HVAC	650 W @ 6000 RPM
	HVAC	850 W @ 6000 RPM
Ignition system type		IDI (Inductive Discharge Ignition)
Ignition timing		Not adjustable
Spark plug	Quantity	2
	Make and type	NGK LMAR8C-9
	Gap	0.8 mm to 0.9 mm (.031 in to .035 in)
Engine RPM limiter setting	Forward	8000 RPM
	Reverse	20 km/h to 25 km/h (12 MPH to 16 MPH) (8000 RPM with Override)

FUEL SYSTEM	
Fuel delivery	Electronic Fuel Injection (EFI) with iTC (Intelligent Throttle Control), 1 injector per cylinder
Throttle body	54 mm with ETA
Idle speed	1250 RPM ± 50 (not adjustable)
High idle	1500 ± 50 RPM (not adjustable)

AIR CONDITIONING		
Belt deflection @ 6.8 kgf (15 lbf)	Service limit	11 mm (.43 in)
Magnetic clutch friction plate air gap	New	0.4 mm to 0.8 mm (.016 in to .031 in)
	Service limit	1.3 mm (.051 in)

VEHICLES

EXHAUST SYSTEM	
Exhaust system	Spark arrester approved by USDA Forest Service Catalyst on NRMM[1] models
[1] For NRMM models identification, refer to *INTRODUCTION* section.	

ELECTRICAL SYSTEM			
Magneto generator output		HD5	500 W @ 6000 RPM
		Limited	850 W @ 6000 RPM
		All other models	650 W @ 6000 RPM
Ignition system type			Inductive Discharge Ignition (IDI)
Spark plug	Quantity	HD5	1
		HD8/HD10	2
	Make and type	HD5	NGK LMAR8D-J or equivalent
		HD8	NGK DCPR8E or equivalent
		HD10	NGK LMAR8C-9 or equivalent
	Gap	HD5	0.7 mm to 0.9 mm (.028 in to .035 in)
		HD8	0.7 mm to 0.8 mm (.028 in to .031 in)
		HD10	0.8 mm to 0.9 mm (.031 in to .035 in)
Battery	Type		SLA (Sealed Lead Acid)
	Voltage		12 volts
	Nominal rating	Base DPS Pro	18 A•h
		All other models	30 A•h
	Power starter output		0.7 KW
Headlights			4 x 35 H 8
Taillight			2.3/3.5 W
Fuses Master fuse box (Inside front storage center)	T vehicle	F10	10 A
	Headlamps	F11	20 A
	DC1/DC3/12V accessory outlet 1	F12	10 A
	12 V Accessory outlet 2	F14	10 A
	Tail lamps	F16	10 A

ELECTRICAL SYSTEM			
Fuses Secondary fuse box (under passenger seat)	Cluster/relays	F4	10 A
	Ignition/injection/fuel pump	F5	10 A
	Engine Control Module (ECM)	F6	10 A
	4WD actuator	F7	10 A
	Ignition switch Clock	F8	10 A
	Cooling fan	F9	25 A
	Oxygen sensor Emission control	F18	10 A
Fuses Fuse box #5 (Inside front storage center)	Fan speed relays	F1	20 A
	Air conditioning relay	F3	5 A
Fuse Links	Main	1	18 awg
	Accessory post	2	14 awg
Relays Master fuse box (Inside front storage center)	ECM/Accessory 12V	R3	-
	Brake lights	R8	-
	Accessory post 12V/outlet 2	R9	-
Relays Secondary fuse box (under passenger seat)	Cooling fan	R1	-
	Main	R2	-
	Air conditioning	R10	-
Relays Fuse box #5 (Inside front storage center)	Fan speed relay - low	RLS	-
	Fan speed relay - medium	RMS	-
	Fan speed relay - high	RHS	-

FUEL SYSTEM			
Fuel delivery	Type		Electronic fuel injection (EFI) with iTC
Throttle body		HD5	46 mm with ETA
		HD8/HD10	54 mm with ETA
Fuel pump	Type		Electric (in fuel tank)
Idle speed			1250 ± 100 RPM (not adjustable)
Fuel	Type		Regular unleaded gasoline - Refer to *FUEL REQUIREMENTS*
	Minimum octane		87 Pump Posted AKI I (R+M)/2) (92 RON)
Fuel tank capacity			40. L (10.6 U.S. gal.)
Fuel remaining when low fuel light turns ON			± 8.5 L (2.2 U.S. gal.)

DRIVE SYSTEM			
Drive system type			Selectable 2WD/4WD
Front differential oil	Capacity		400 ml (14 U.S. oz)
	Recommended		75W90 Synthetic gear oil
	Alternate if XPS products are not available		75W90 Synthetic gear oil (API GL-5)
Front drive		Base	Spiral bevel gear Visco-lok† auto-locking front differential
		Mossy Oak	Spiral bevel gear Smart-Lok electronic control locking front differential
		All other models	Spiral bevel gear Visco-lok† QE auto-locking front differential
Front drive ratio			3.6:1
Rear drive		Base DPS	Angle drive (spool gear)
		All other models	Lockable differential
Rear drive ratio		HD5	3.6:1
		HD8/HD10	3.43:1
CV joint grease			CV joint grease (P/N 293 550 062) or equivalent
Spline's propeller shaft grease (grease applied to spline connections)			Propeller shaft grease (P/N 293 550 063) or equivalent

STEERING			
Type			Rack and pinion
Assisted steering system		All models except Base	Dynamic Power Steering (DPS)
Steering wheel			Adjustable tilt steering
Turning radius		X mr (3-UP)	4.88 m (16.01 ft)
		All other 3-UP models	3.98 m (13.06 ft)
		X mr (MAX)	5.36 m (17.59 ft)
		All other MAX models	5.26 m (17.26 ft)
Total toe (vehicle on ground)			0° ± 0.2°
Camber angle (vehicle on ground)			0°
Tie-rod maximum length unengaged threads			32 mm (1.26 in)

FRONT SUSPENSION			
Suspension type		Limited Lone star Mossy Oak XT CAB	Double arched suspension arms with stabilizer bar
		HD5 All other HD8	Double suspension arms
		All other HD10	Double arched suspension arms
Spring preload	Type		Cam
	Adjustment position		5
	Factory setting		Position 1
Suspension travel		All HD10 except Limited, Mossy Oak and XT CAB	279 mm (11 in)
		All other models	254 mm (10 in)
Shock absorber	Qty		2
	Type		Gas charged / 5 spring preload settings

REAR SUSPENSION			
Suspension type		HD5 HD8 except XT CAB	Torsional Trailing arms (TTA) with stabilizer bar
		All other models	Arched Torsional Trailing arms (TTA) with stabilizer bar
Spring preload	Type		Cam
	Adjustment position		5
	Factory setting		Position 1
Suspension travel		All HD10 except Limited, Mossy Oak and XT CAB	279 mm (11 in)
		All other models	254 mm (10 in)
Shock absorber	Qty		2
	Type		Gas charged / 5 spring preload settings

BRAKES			
Front brake	Type		Dual 220 mm ventilated disc brakes with hydraulic twin-piston calipers
Rear brake	Type	HD5	Single 220 mm ventilated disc brake with hydraulic twin-piston caliper
		HD8/HD10	Dual 220 mm ventilated disc brake with hydraulic single-piston calipers
Brake fluid	Capacity		Approximately 310 ml (10.5 U.S. oz)
	Type		DOT 4
Caliper			Floating
Brake pad material	Front/rear		Metallic/Metallic
Minimum brake pad thickness			0.5 mm (.02 in)
Minimum brake disc thickness	Front/Rear		4 mm (.157 in)
Maximum brake disc warpage			0.2 mm (.01 in)

TIRES			
Pressure	Front		97 kPa (14 PSI)
	Rear	EN-16990 compliant models (unloaded)	124 kPa (18 PSI)
		EN-16990 compliant models (loaded)	228 kPa (33 PSI)
		All other models	124 kPa (18 PSI)
Minimum tire thread depth			3 mm (.118 in)
Tire size	Front	HD5	25 x 8 x 12 (in)
		Base HD8	27 x 9 x 12 (in)
		Lone star Mossy Oak	28 x 9 x 14 (in)
		X mr	30 x 9 x 14 (in)
		All other models	27 x 9 x 14 (in)
	Rear	HD5	25 x 10 x 12 (in)
		Base HD8	27 x 11 x 12 (in)
		Lone star Mossy Oak	28 x 11 x 14 (in)
		X mr	30 x 11x 14 (in)
		All other models	27 x 11 x 14 (in)

WHEELS			
Type		Base models	Steel
		All other models	Cast Aluminum
Rim size	Front	HD5 Base HD8	12 x 6 (in)
		All other models	14 x 7 (in)
	Rear	Base models	12 x 8 (in)
		DPS HD5	12 x 7.5 (in)
		All other models	14 x 8.5 (in)
Wheel lug nuts torque			100 N•m ± 10 N•m (74 lbf•ft ± 7 lbf•ft)

CHASSIS	
Cage type	Profiled tube section, high strength steel, ROPS-approved cage

DIMENSIONS (3-UP MODELS)		
Overall length	Base DPS Pro	307.1 cm (121 in)
	Limited	320 cm (126 in)
	Mossy Oak X mr	328.6 cm (129.4 in)
	XT	319.4 cm (125.7 in)
	XT CAB	310.5 cm (122.2 in)
	XT-P	319.5 cm (125.8 in)
Overall width	Base DPS HD5 DPS HD8 Pro XT HD8	157.5 cm (62 in)
	DPS HD10 XT HD10 XT-P	162.5 cm (64 in)
	Limited	170 cm (67 in)
	Mossy Oak XT CAB	165.1 cm (65 in)
	X mr	169.4 cm (66.7 in)

DIMENSIONS (3-UP MODELS)			
Overall height		Base DPS HD5 DPS HD8 Pro	193 cm (76 in)
		DPS HD10 XT HD8	198.1 cm (78 in)
		Limited XT CAB	200.6 cm (79 in)
		Mossy Oak XT-P	203.2 cm (80 in)
		X mr	208.3 cm (82 in)
Wheelbase			211.5 cm (83 in)
Wheel track	Front	HD5 HD8 except XT CAB	130 cm (51 in)
		Limited Mossy Oak XT CAB	147.3 cm (58 in)
		X mr	146.6 cm (57.7 in)
		All other models	136.3 cm (53.7 in)
	Rear	HD5 HD8 except XT CAB	126 cm (49.5 in)
		Limited Mossy Oak XT CAB	142.3 cm (56 in)
		X mr	141 cm (55.5 in)
		All other models	130.4 cm (51.3 in)
Ground clearance		HD5	26.7 cm (10.5 in)
		HD8 except XT CAB	28 cm (11 in)
		HD10 except Limited and XT CAB	33 cm (13 in)
		Limited XT CAB	30.5 cm (12 in)
		X mr	38.1 cm (15 in)

DIMENSIONS (MAX MODELS)			
Overall length		Lone star	403.6 cm (159 in)
		Limited XT XT CAB	402 cm (158 in)
		X mr	411.2 cm (161.9 in)
		All other	389.6 cm (153 in)
Overall width		All HD8	161.2 cm (63 in)
		DPS HD10 XT HD10 X mr	162.5 cm (64 in)
		Limited Lone star	170 cm (67 in)
		XT CAB	165.1 cm (65 in)
Overall height		All HD8	193 cm (76 in)
		DPS HD10	197 cm (78 in)
		Limited XT CAB	201 cm (79 in)
		Lone star	203 cm (80 in)
		Traxter T	193 cm (76 in)
		XT HD10	202 cm (80 in)
		X mr	208.3 cm (82 in)
Wheelbase			294 cm (116 in)
Wheel track	Front	HD8	138.3 cm (54.4 in)
		Limited Lone star XT CAB	147.3 cm (58 in)
		X mr	146.6 cm (57.7 in)
		All other HD10	137.4 cm (54 in)
	Rear	HD8	133.3 cm (52.5 in)
		Limited Lone star XT CAB	142.3 cm (56 in)
		X mr	141 cm (55.5 in)
		All other HD10	131.5 cm (52 in)
Ground clearance		HD8	28 cm (11 in)
		HD10 except Limited and XT CAB	33 cm (13 in)
		Limited XT CAB	30.5 cm (12 in)
		X mr	38.1 cm (15 in)

WEIGHT (3-UP MODELS)		
Dry weight	Base HD5	592 kg (1,305.1 lb)
	Base HD8	662 kg (1,459.5 lb)
	DPS HD5	600 kg (1,322.8 lb)
	DPS HD8	690 kg (1,521.2 lb)
	DPS HD10	697 kg (1,536.6 lb)
	Limited	874.5 kg (1,928 lb)
	Mossy Oak	747 kg (1,646.9 lb)
	Pro	717 kg (1,580 lb)
	Traxter T HD5	601 kg (1,325 lb)
	Traxter T HD8	671 kg (1,479 lb)
	Traxter T PRO	716 kg (1,578.5 lb)
	X mr	770 kg (1,697.6 lb)
	XT HD8	719 kg (1,585.1 lb)
	XT HD10	726 kg (1,600.6 lb)
	XT CAB HD8	845 kg (1,863 lb)
	XT CAB HD10	850 kg (1,874 lb)
	XT-P	732 kg (1,613.8 lb)
Weight distribution (front/rear)	HD5 Mossey Oak XT	44/56
	Base HD8 DPS HD8 DPS HD10 Pro	42/58
	X mr	45/55
	Limited XT CAB	47/53
	XT-P	43/57

WEIGHT (3-UP MODELS)		
Gross vehicle weight rating	Base HD5	1 170 kg (2,579.4 lb)
	Base HD8	1 375.6 kg (3,032.7 lb)
	DPS HD5	1 178.2 kg (2,597.5 lb)
	DPS HD8	1 403.4 kg (3,094 lb)
	DPS HD10	1 410.7 kg (3,110.1 lb)
	Mossy Oak	1 460.9 kg (3,220.7 lb)
	Pro	1 430.7 kg (3,154.2 lb)
	Traxter T HD5	1 179 kg (2,600 lb)
	Traxter T HD8	1 384.6 kg (3,053 lb)
	Traxter T Pro	1 430 kg (3,153 lb)
	X mr	1 483.8 kg (3,271 lb)
	XT HD8	1 433.2 kg (3,159.7 lb)
	XT HD10	1 440.4 kg (3,175.5 lb)
	XT CAB HD8	1 424 kg (3,139.4 lb)
	Limited XT CAB HD10	1 429 kg (3,150.4 lb)
	XT-P	1 446 kg (3,187.9 lb)

WEIGHT (MAX MODELS)		
Dry weight	Base	778 kg (1,715.2 lb)
	DPS HD8 XT HD8	794 kg (1,750.5 lb)
	DPS HD10	803.4 kg (1,771.2 lb)
	Limited	1 060 kg (2,337 lb)
	Lone star	875 kg (1,929 lb)
	X mr	919 kg (2,026 lb)
	XT HD10	863 kg (1,902.6 lb)
	XT CAB	1 044 kg (2,302 lb)
Weight distribution (front/rear)	Base DPS	41/59
	Lone star	44/56
	X mr	45/55
	All other models	43/57

WEIGHT (MAX MODELS)		
Gross vehicle weight rating	Base	1 607.4 kg (3,543.7 lb)
	DPS HD8	1 623.4 kg (3,579 lb)
	DPS HD10	1 632.5 kg (3,599 lb)
	Lone star	1 693.8 kg (3,734.2 lb)
	X mr	1 692.9 kg (3,732 lb)
	XT HD8	1 682.9 kg (3,710.2 lb)
	XT HD10	1 692 kg (3,730.2 lb)
	Limited XT CAB	1 668 kg (3,677.3 lb)

LOADING CAPACITY (3-UP MODELS)		
Cargo box capacity	HD5 All California models	272 kg (600 lb)
	All other models	454 kg (1,000 lb)
Total vehicle load allowed (including driver, passengers, all other loads and added accessories	HD5 Limited XT CAB All California models	545 kg (1,200 lb)
	All other models	680 kg (1,500 lb)
Towing capacity	HD5	680 kg (1,500 lb)
	HD8/HD10	1 134 kg (2,500 lb)
Tongue capacity	HD5	68 kg (150 lb)
	HD8/HD10	114 kg (250 lb)
Hitch type		50.8 mm (2 in) hitch receiver
Winch capacity		2 041.2 kg (4,500 lb)

LOADING CAPACITY (MAX MODELS)		
Cargo box capacity	California models	272 kg (600 lb)
	All other models	454 kg (1,000 lb)

LOADING CAPACITY (MAX MODELS)		
Total vehicle load allowed (including driver, passengers, all other loads and added accessories)	California models except XT CAB	612 kg (1,349 lb)
	XT CAB (California models)	590 kg (1,301 lb)
	EN-16990 compliant models	545 kg (1,200 lb)
	Lone star	785 kg (1,731 lb)
	All other models	794 kg (1,750 lb)
Towing capacity		1 134 kg (2,500 lb)
Tongue capacity		114 kg (250 lb)
Hitch type		50.8 mm (2 in) hitch receiver
Winch capacity		2 041.2 kg (4,500 lb)

EN-16990 Compliant Models (Outside Canada/USA)

Vehicles who comply with regulation EN-16990 are required to have side mirrors and horn installed. If the vehicle is equipped with side mirrors and horn, it is EN-16990 compliant.

NOISE EMISSION AND VIBRATION VALUES*			
Noise	Sound pressure level (L_{pA})	HD8	83 dB (A)
		HD10	82 dB (A)
	Sound power level (L_{WA})	HD8	97 dB (A)
		HD10	96 dB (A)
Vibration	Hand-arm system		Less than 2.5 m/s^2
	Whole body at seat		Less than 0.5 m/s^2
*: Noise emission and Vibration values are measured in accordance with Standard EN-16990 on a paved surface, at neutral or without belt.			

Traxter T Models (Europe only)

NOISE (ACCORDING TO REGULATION (EU) NO 1322/2014 ANNEX XII)		
Noise level perceived by driver	HD5	79 dB (A)
	HD8 / HD10	72 dB (A)

VIBRATION (ACCORDING TO REGULATION (EU) NO 1322/2014 ANNEX XIV)		
Vibration measured at driver seat	HD5	0.59 m/s^2
	HD8 / HD10	0.50 m/s^2

NOISE (ACCORDING TO REGULATION (EU) NO 2015/96 ANNEX III)		
Stationary	HD5	81 dB (A)
	HD8	78 dB (A)
	HD10	80 dB (A)
Moving	HD5	85 dB (A)
	HD8 / HD10	83 dB (A)

WIRING DIAGRAM INFORMATION

GENERAL

WIRING DIAGRAM LOCATION

Wiring diagrams are found in the *WIRING DIAGRAM BOOKLET*.

WIRING DIAGRAM WITH COLORED LINES

The wiring diagram on the *KNOWLEDGE CENTER* is in color.

WIRING DIAGRAM CODES

The wiring diagrams use the following codes.

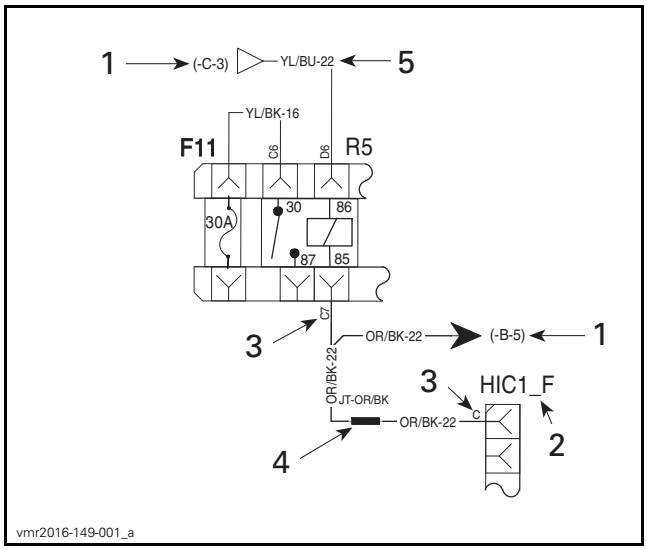

1. *Wiring diagram index*
2. *Connector code*
3. *Connector pin*
4. *Splice*
5. *Color and size*

Wiring Diagram Index

The wiring diagram is separated by rows (letters) and columns (numbers).

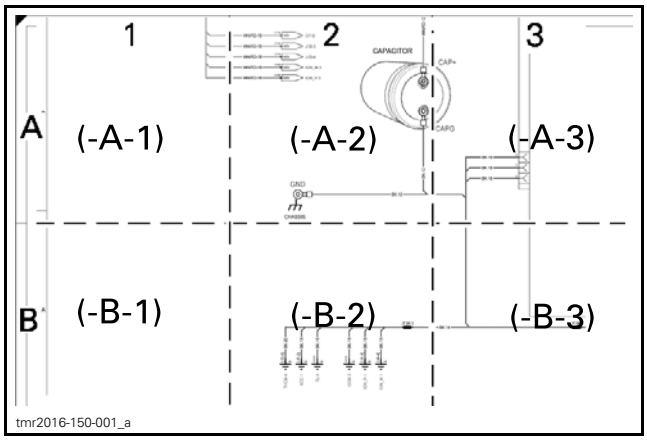

WIRING DIAGRAM INDEX

Connector Code

The wire connects to the indicated connector.

Connector Pin

The wire is the indicated pin in the connector.

NOTE: Could be identified by either a number or by a letter depending on the type of connector used.

FOLLOWING A CIRCUIT

To follow a circuit, search in the section of the wiring diagram shown in the wiring diagram index.

NOTE: The arrow indicates the direction of the power in the circuit.

In this example, the power comes **from** section (-B-4).

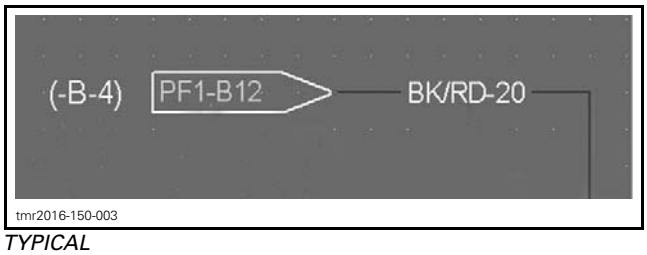

TYPICAL

In following example, the power goes **to** the section (-E-5).

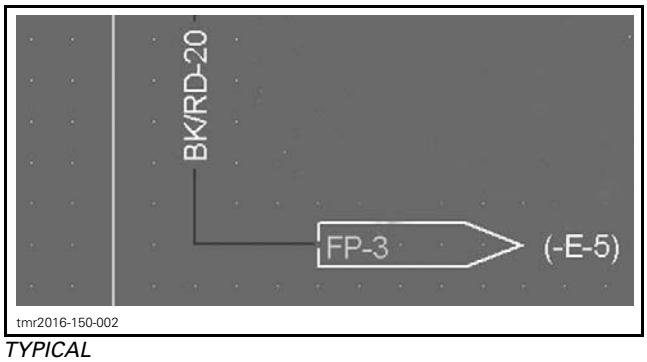

TYPICAL

WIRE COLORS AND SIZES

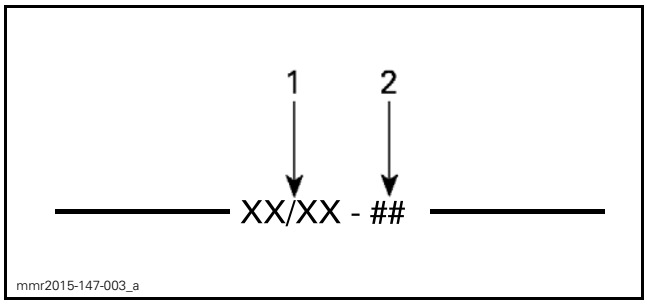

1. *Wire color*
2. *Wire gauge (AWG)*

The first color of a wire is the main color, second color is the stripe.

Example: YE/BK is a YELLOW wire with a BLACK stripe.

COLOR CODE					
BG	—	BEIGE	OG	—	ORANGE
BK	—	BLACK	RD	—	RED
BU	—	BLUE	VT	—	VIOLET
BN	—	BROWN	WH	—	WHITE
GN	—	GREEN	YE	—	YELLOW
GY	—	GRAY	PK	—	PINK
LT prefix means a "light" color. E.g: LT GN = Light green.					

SPLICES IN WIRING HARNESS

Splices in wiring harness are indicated on the wiring diagram as follows.

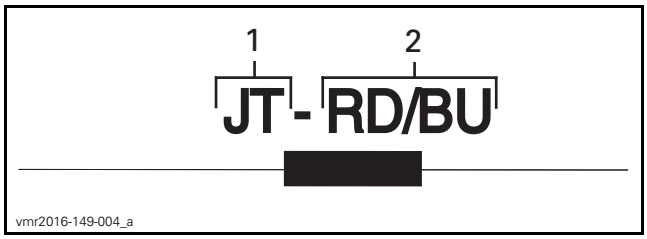

1. *JT: Splice indication*
2. *Spliced wire color*

PROCEDURES

This section gives the procedures in order to quickly repair electrical harness splices.

1. Make sure to perform the usual tests described in *ELECTRICAL SYSTEM* sections before investigating the harness splices.
2. If an electrical issue can not be found with the usual tests, locate the main harness splice that is involved in the faulty circuit and repair it as per the *SPLICES REPAIR PROCEDURE* in *WIRING HARNESS AND CONNECTORS* subsection.
3. To repair a splice, we recommend the use of a tin solder meeting the followings requirements or an equivalent.

TIN SOLDER REQUIREMENTS
SN 60
PB 40
DIA 0.062
FLUX RA 2%

2021 *Main Harness*

Defender and Traxter Series

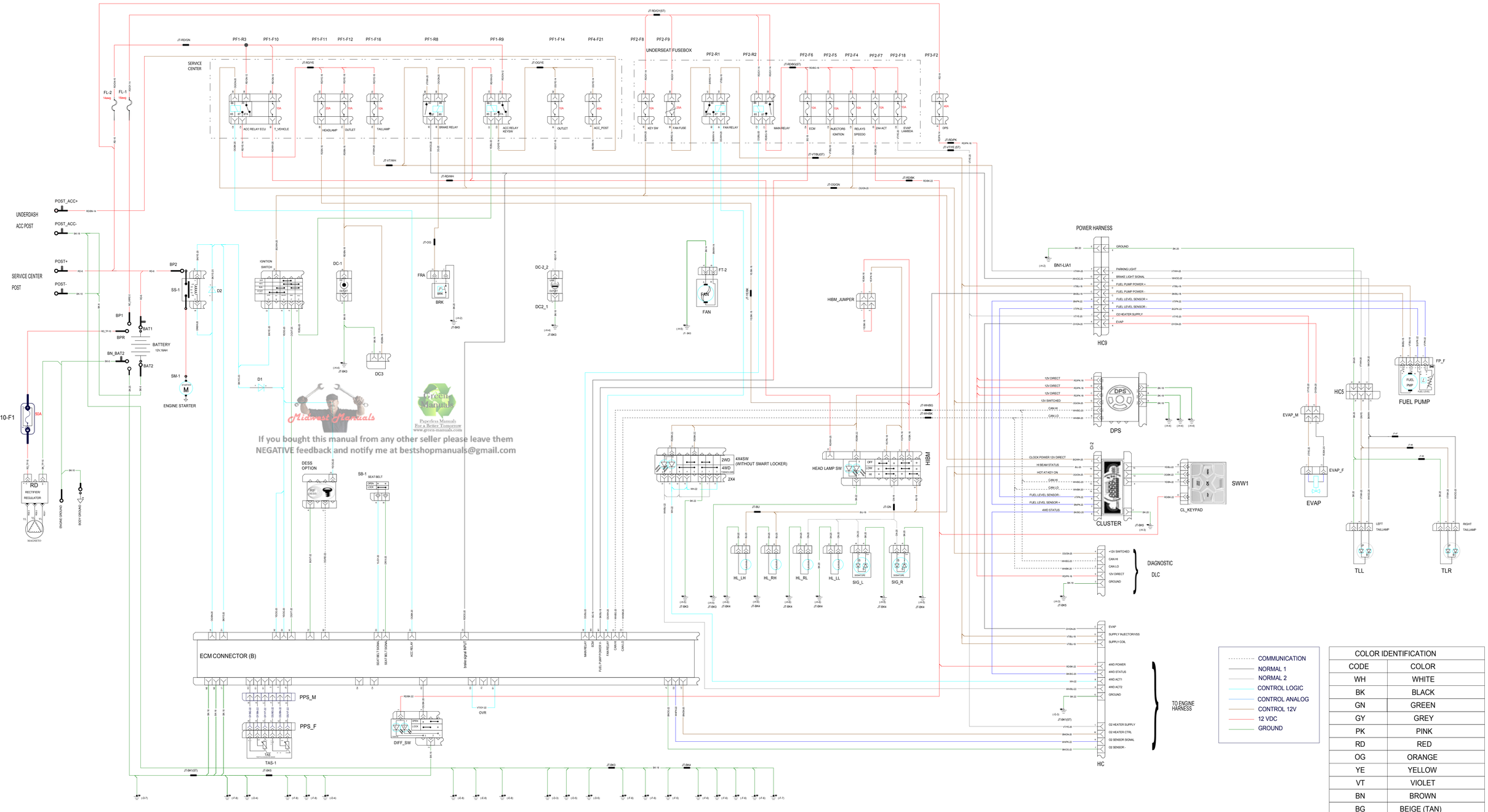

If you bought this manual from any other seller please leave them NEGATIVE feedback and notify me at bestshopmanuals@gmail.com

- COMMUNICATION
- NORMAL 1
- NORMAL 2
- CONTROL LOGIC
- CONTROL ANALOG
- CONTROL 12V
- 12 VDC
- GROUND

COLOR IDENTIFICATION	
CODE	COLOR
WH	WHITE
BK	BLACK
GN	GREEN
GY	GREY
PK	PINK
RD	RED
OG	ORANGE
YE	YELLOW
VT	VIOLET
BN	BROWN
BG	BEIGE (TAN)
BU	BLUE
LT GN	LIGHTGREEN
LT BU	LIGHT BLUE
N/A	NOT AVAILABLE

2021 *Options*

Defender and Traxter Series

If you bought this manual from any other seller please leave them NEGATIVE feedback and notify me at bestshopmanuals@gmail.com

SMART-LOK

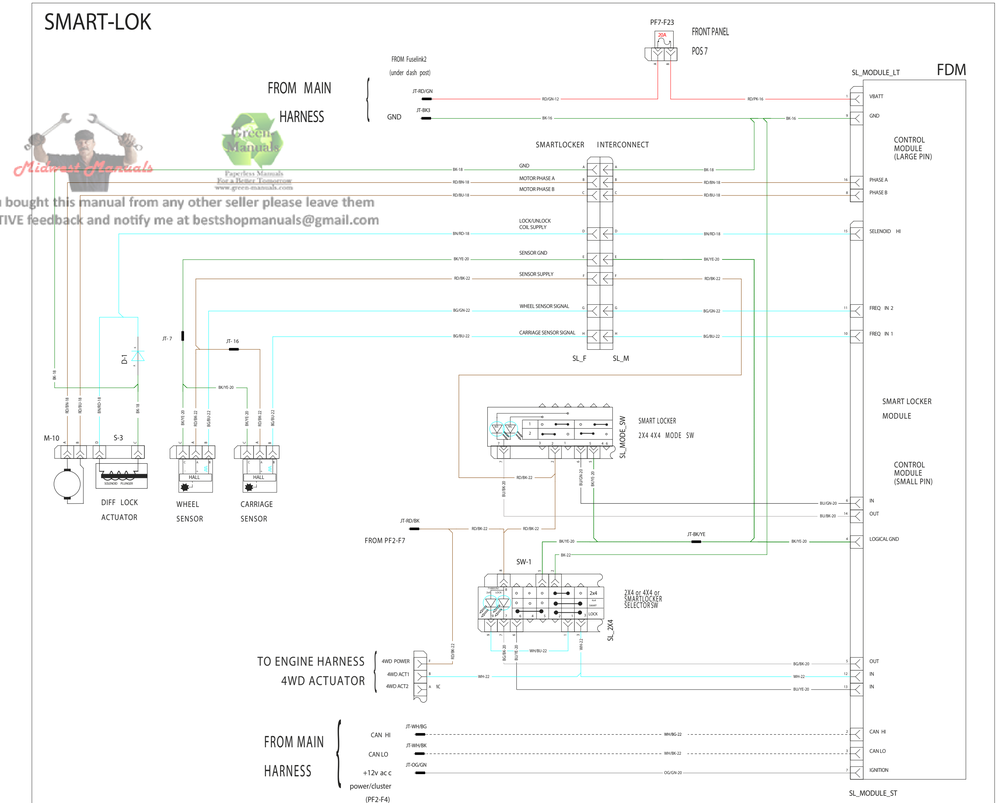

TILT BED

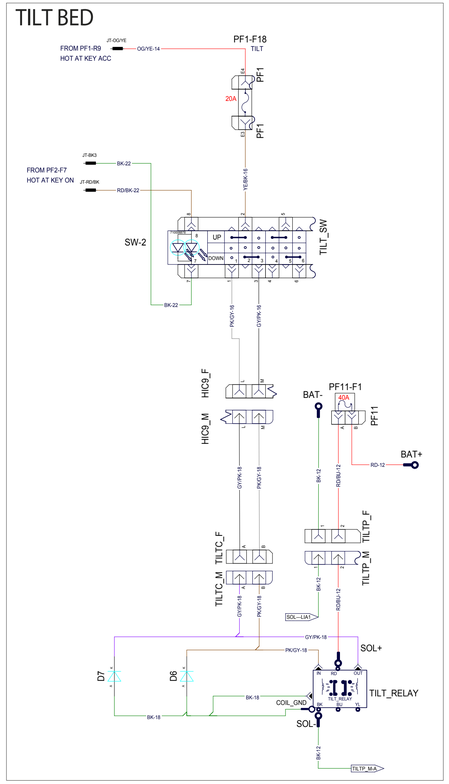

HORN EN16990 Only

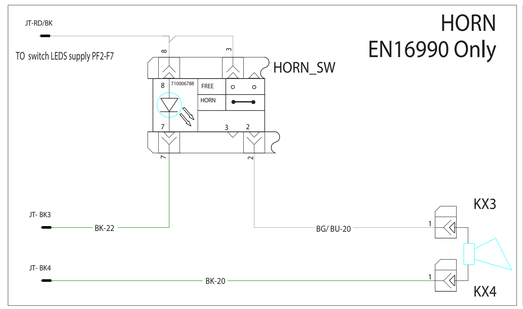

WIPER

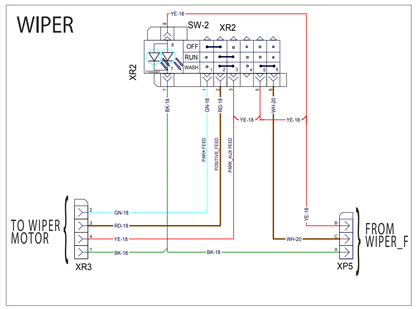

ROOF RADIO

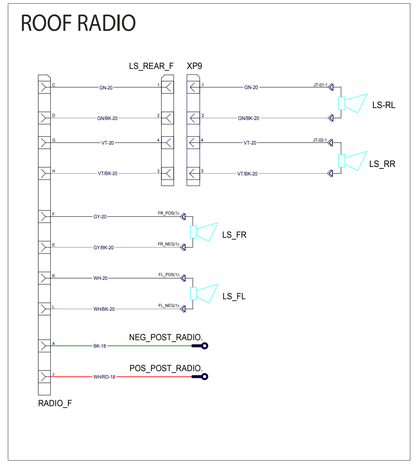

COMMUNICATION	
NORMAL 1	
NORMAL 2	
CONTROL LOGIC	
CONTROL ANALOG	
CONTROL 12V	
12 VDC	
GROUND	

COLOR IDENTIFICATION	
CODE	COLOR
WH	WHITE
BK	BLACK
GN	GREEN
GY	GREY
PK	PINK
RD	RED
OG	ORANGE
YE	YELLOW
VT	VIOLET
BN	BROWN
BG	BEIGE (TAN)
BU	BLUE
LT GN	LIGHTGREEN
LT BU	LIGHT BLUE
N/A	NOT AVAILABLE

POWER ROOF

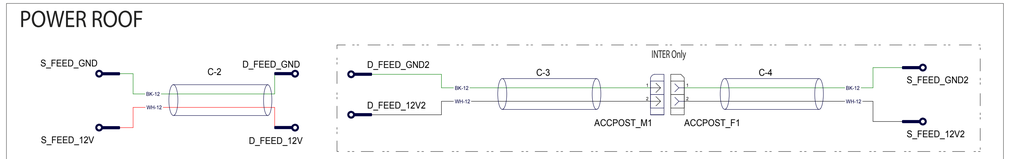

SEATBELT MAX Add-on

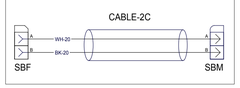

HEATING SYSTEM

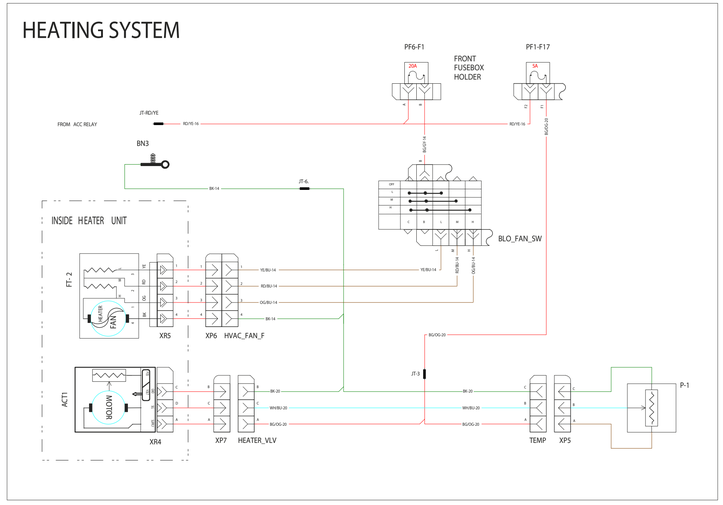

DOORS SWITCH

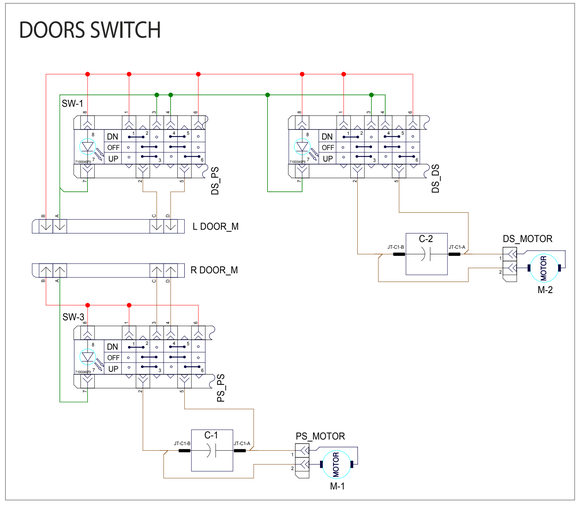

ROOF DOME

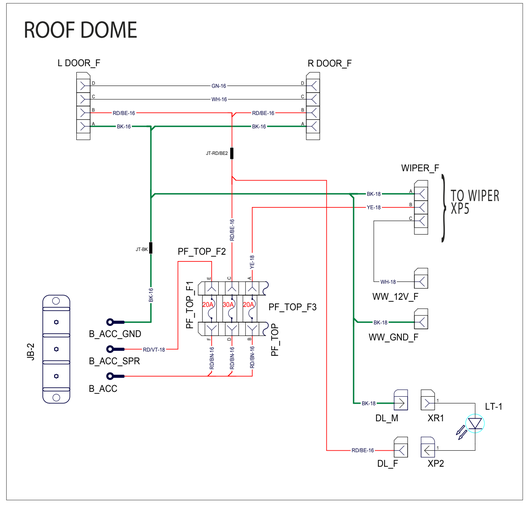

WINCH

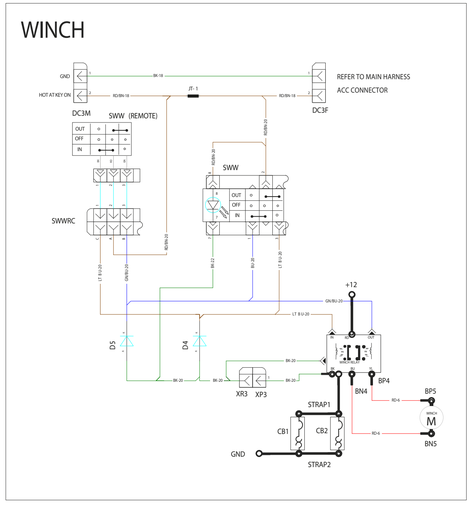

DEFENDER MY21
MAIN HARNESS
VARIANT HVAC

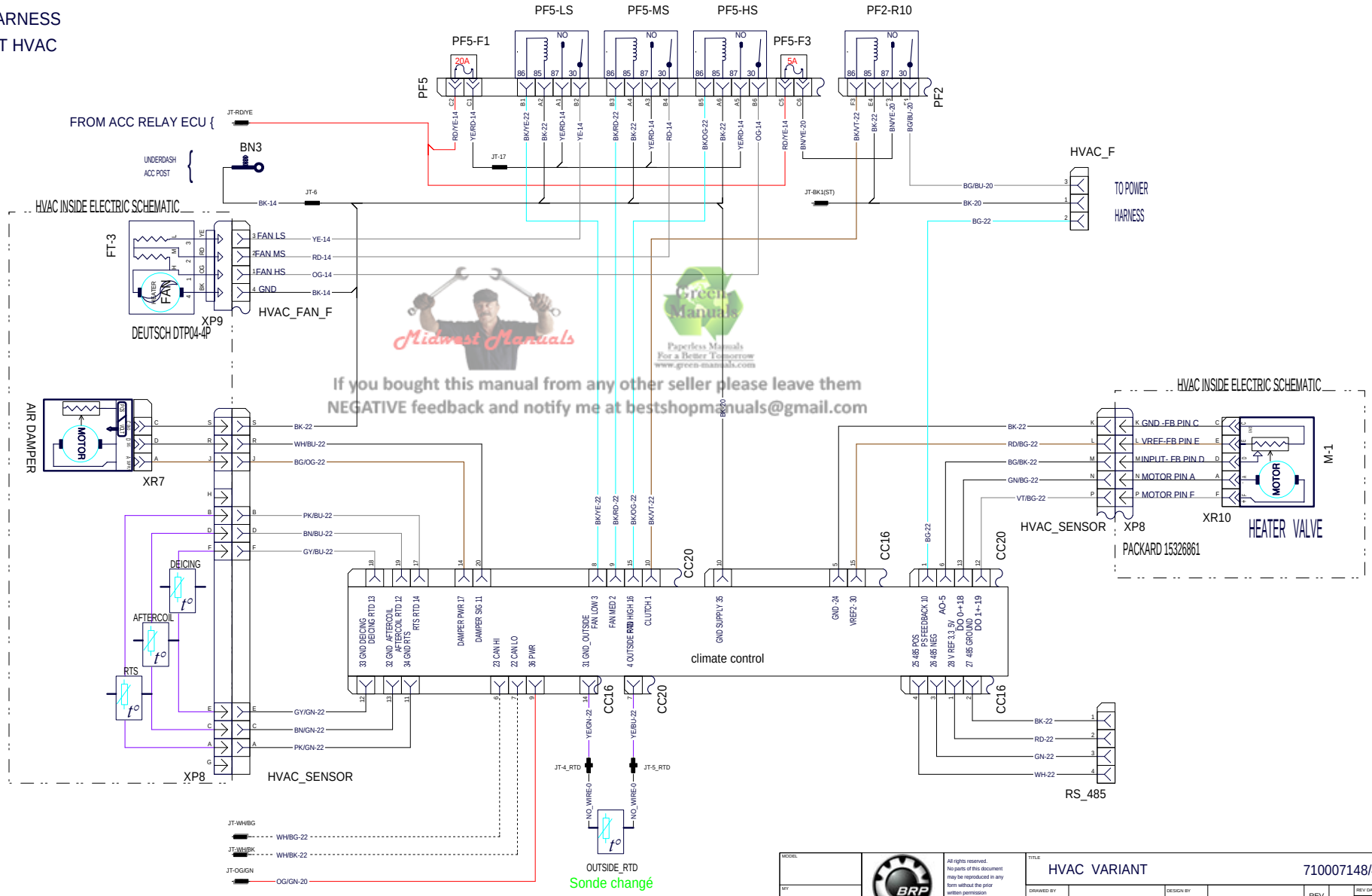

Midwest Manuals
Green Manuals
Paperless Manuals For a Better Tomorrow www.green-manuals.com
If you bought this manual from any other seller please leave them NEGATIVE feedback and notify me at bestshopmanuals@gmail.com

All rights reserved. No parts of this document may be reproduced in any form without the prior written permission of Bombardier Recreational Products Inc. (BRP).

MODEL		TITLE	HVAC VARIANT 710007148/49
MY		DRAWED BY	
		DATE	
		DESIGN BY	
		DATE	
		REV	
		REV DATE	
		P. SIZE	B
		PAGE	11

2021 T Models Harness

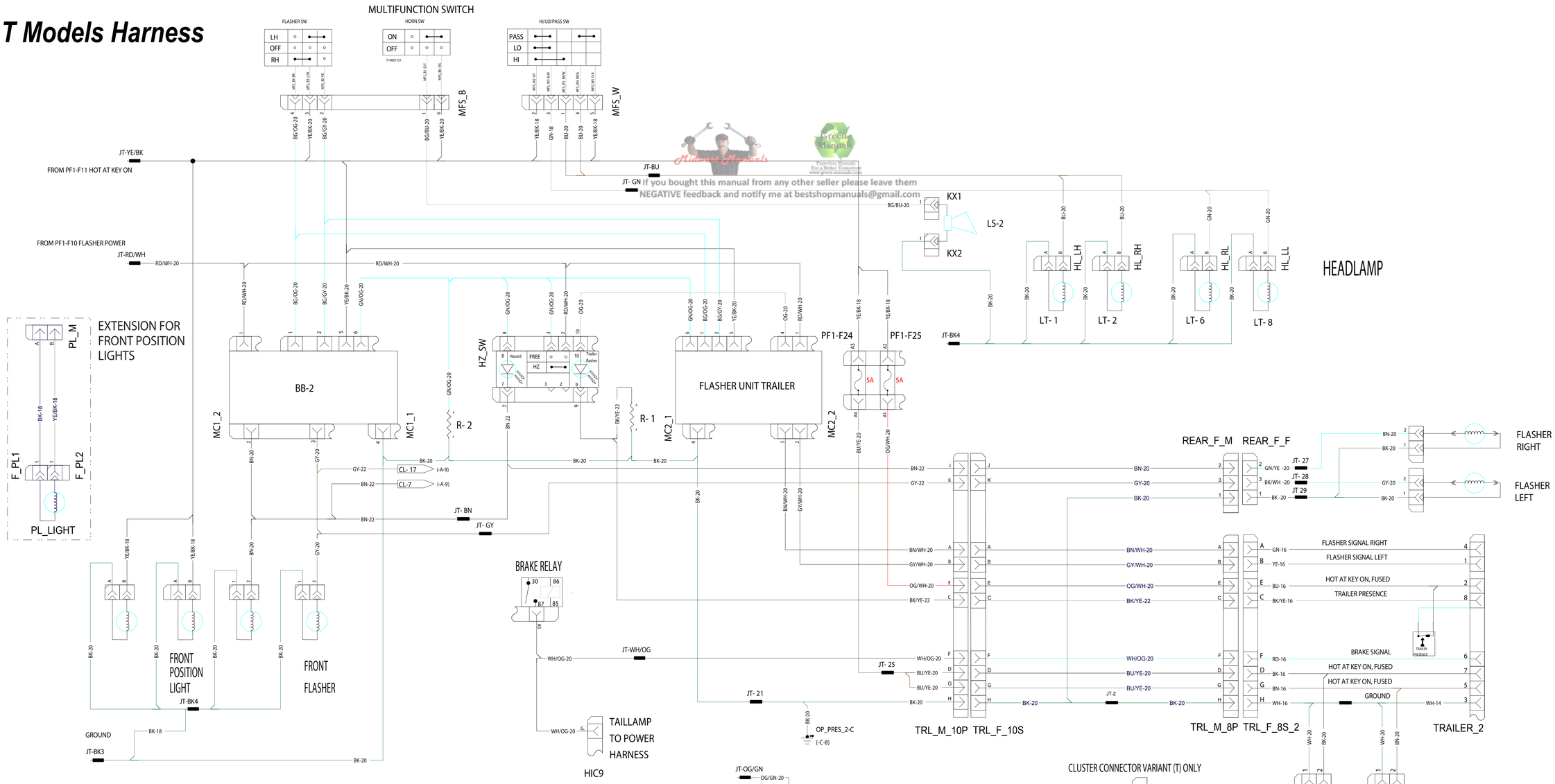

If you bought this manual from any other seller please leave them NEGATIVE feedback and notify me at bestshopmanuals@gmail.com

COLOR IDENTIFICATION	
CODE	COLOR
WH	WHITE
BK	BLACK
GN	GREEN
GY	GREY
PK	PINK
RD	RED
OG	ORANGE
YE	YELLOW
VT	VIOLET
BN	BROWN
BG	BEIGE (TAN)
BU	BLUE
LT GN	LIGHTGREEN
LT BU	LIGHT BLUE
N/A	NOT AVAILABLE

- COMMUNICATION
- NORMAL 1
- NORMAL 2
- CONTROL LOGIC
- CONTROL ANALOG
- CONTROL 12V
- 12 VDC
- GROUND

2021 ENGINE HARNESS

HD5 ENGINES

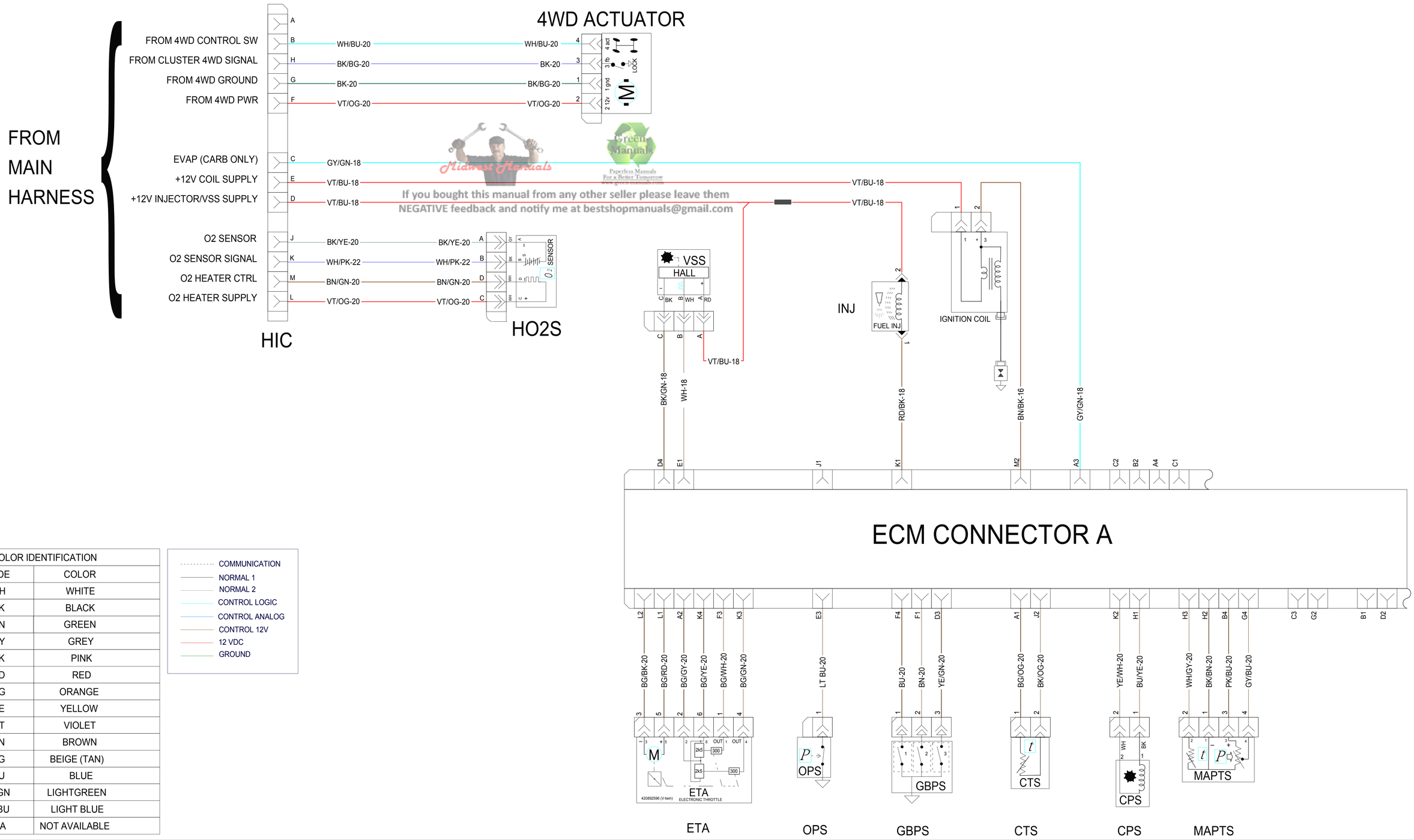

Midwest Manuals
Green Manuals
Paperless Manuals For a Better Tomorrow
If you bought this manual from any other seller please leave them
NEGATIVE feedback and notify me at bestshopmanuals@gmail.com

COLOR IDENTIFICATION	
CODE	COLOR
WH	WHITE
BK	BLACK
GN	GREEN
GY	GREY
PK	PINK
RD	RED
OG	ORANGE
YE	YELLOW
VT	VIOLET
BN	BROWN
BG	BEIGE (TAN)
BU	BLUE
LT GN	LIGHTGREEN
LT BU	LIGHT BLUE
N/A	NOT AVAILABLE

- COMMUNICATION
- NORMAL 1
- NORMAL 2
- CONTROL LOGIC
- CONTROL ANALOG
- CONTROL 12V
- 12 VDC
- GROUND

2021 ENGINE HARNESS

HD8/HD10 ENGINES

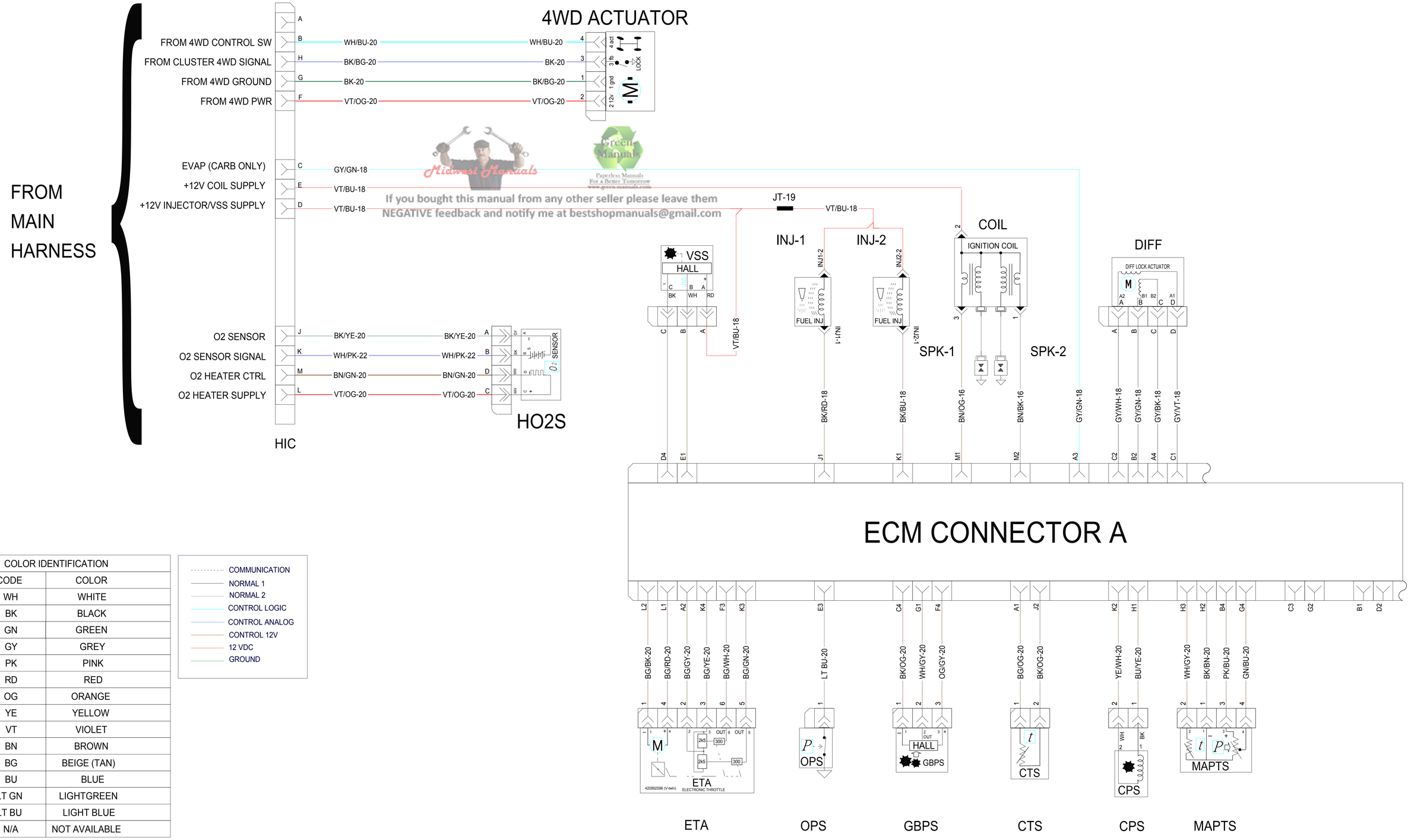

Midwest Manuals
Green Manuals
Paperless Manuals For a Better Tomorrow www.green-manuals.com
If you bought this manual from any other seller please leave them NEGATIVE feedback and notify me at bestshopmanuals@gmail.com

COLOR IDENTIFICATION	
CODE	COLOR
WH	WHITE
BK	BLACK
GN	GREEN
GY	GREY
PK	PINK
RD	RED
OG	ORANGE
YE	YELLOW
VT	VIOLET
BN	BROWN
BG	BEIGE (TAN)
BU	BLUE
LT GN	LIGHTGREEN
LT BU	LIGHT BLUE
N/A	NOT AVAILABLE

- COMMUNICATION
- NORMAL 1
- NORMAL 2
- CONTROL LOGIC
- CONTROL ANALOG
- CONTROL 12V
- 12 VDC
- GROUND

Flat rate times are what the manufacturer pays the authorized dealer for warranty work, the times listed are usually unrealistic for even the most experienced mechanic and will take longer to actually complete.

Because of this dealers will usually charge more than the times posted.

I cannot be held responsible for any errors BRP has made in these service flat rate or parts manuals.

If you bought this manual from any other seller, they could be reselling my work.

Please leave them negative feedback & email me at bestshopmanuals@gmail.com .

Our goal is to be one of the BEST sellers on the internet by providing you with the BEST customer service and the BEST manuals on the market.

Thank you for choosing us.

Green-Manuals

Paperless Manuals
For a Better Tomorrow

SEARCHABLE MANUAL

Midwest Manuals

INTRODUCTION

This publication governs all warranty labor allowances for 2021 BRP SSV

1. HOW DOES IT WORK

We follow the procedures detailed in the BRP *SSV Shop Manual*. The flat rate time is the maximum time allowed for a repair involving any given part. **FLAT RATE TIME IS NOT CUMULATIVE.** You must use the flat rate time given for the longest lasting operation.

NOTE: The *Flat Rate Time Schedule* was prepared by skilled mechanics using the hand tool usually found in workshops and all the special tools mentioned in the *Shop Manual*.

2. COMPILATION

The *Flat Rate Time Schedule* is compiled as follows:

The actual required time to perform the repair plus (+) 30% correction factor up to 3.0 hours or (+) 15% over 3.0 hours time to take into account, among others:

- Vehicle handling
- Obtaining the parts
- Diagnosis
- Cleaning
- Special compensation (rusted bolts).

3. HOW TO USE IT

Refer to the system you need, locate part of series of parts replaced. List JOB CODE in the appropriate column on claim.

SYSTEM		PAGE
01	ENGINE	04
02	CARBURETOR AND FUEL SYSTEM	30
03	IGNITION SYSTEM	34
04	STARTER	37
05	TRANSMISSION SYSTEM	38
06	BRAKE SYSTEM	51
07	STEERING SYSTEM AND FRONT SUSPENSION	53
08	REAR SUSPENSION SYSTEM AND TRACK	60
09	BODY	67
10	ELECTRICAL SYSTEM	83

NOTE: Unless otherwise specified, dismantling order is: top to bottom, exterior to interior, front to rear.

All fractions of hours are in tenths:

0.1 = 6 minutes
0.2 = 12 minutes, and so on

LEGEND:

* REQUIRES PRIOR AUTHORIZATION BY DISTRIBUTOR.
** INDICATE LABOUR TIME ON LINE "LABOUR ONLY" OF CLAIM.
*** INDICATE $$$ AMOUNT ON "SUB-CONTRACTED LABOUR" OF CLAIM.

IMPORTANT: Always use the longest flat rate time applicable to the repair performed.

4. JOB REQUIREMENTS

All the flat rate times mentioned in the following pages include the required operations such as: engine timing (rotary valve and ignition), connecting rod(s) alignment, cylinder head(s) torque or use of parallel bar, use of ignition tester, piston clearance/ring end gap measurement, crankshaft to crankcase measurement, cylinder honing, engine leak test.

5. ILLUSTRATIONS

The illustrations contained in this manual do not necessarily show every components of a given system as *Parts Catalog* do. Their purpose is to facilitate recognition of parts related to a flat rate time. **Item numbers on illustrations correspond to the four digit Job Code.**

6. FLAT RATE TIME SUGGESTION

SEND A WARRANTY CASE ON BOSSWeb INFO CENTER

In the case, you must provide the following information:

Section *Subject*:

- Flat rate time suggestion

Section *Your Question*:

- Model year;
- Model description;
- Description job code;
- Job code;
- Present flat rate;
- Suggested flat rate;
- Detailed repair procedure;

To ensure that your case will be promptly and efficiently processed please indicate the step by step repair procedure you performed.

INTRODUCTION

Cette publication détermine le temps de main-d'oeuvre couvert par la garantie pour les VCC BRP 2021.

1. UTILISATION DU MANUEL

En procédant de la façon indiquée dans le *Manuel de réparation VCC* BRP, chaque temps donné représente le maximum permis pour une réparation portant sur cette pièce. LES TEMPS NE SONT PAS CUMULATIFS. On doit inscrire le temps donné pour l'opération qui prend le plus de temps.

REMARQUE: Le *Barème de temps à taux fixe* a été préparé par des mécaniciens compétents utilisant les outils que l'on retrouve normalement dans les ateliers de réparation, en plus de tous les outils spéciaux mentionnés dans le *Manuel de réparation*.

2. COMPILATION

Le *Barème de temps à taux fixe* a été établi en compilant le temps nécessaire pour faire la réparation plus (+) un facteur de correction de 30% lorsqu'un travail dure 3.0 heures et moins, ou (+) 15% lorsqu'un travail dure plus de 3.0 heures. Cette compilation comprend, entre autres, les étapes suivantes:

- Manutention du véhicule
- Nettoyage
- Aller chercher les pièces, essais physiques
- Compensation spéciale (boulons rouillés)
- Diagnostic.

3. UTILISATION DU BARÈME

Se reporter à la section désirée, repérer la pièce ou l'ensemble de pièces remplacées et inscrire le CODE DE TRAVAIL dans la colonne appropriée sur la formule de réclamation.

SYSTÈME		PAGE
01	MOTEUR	04
02	CARBURATEUR ET SYSTÈME D'ALIMENTATION D'ESSENCE	30
03	SYSTÈME D'ALLUMAGE	34
04	DÉMARREUR	37
05	SYSTÈME DE TRANSMISSION	38
06	SYSTÈME DE FREIN	51
07	SYSTÈME DE DIRECTION ET SUSPENSION AVANT	53
08	SYSTÈME DE SUSPENSION ARRIÈRE ET CHENILLE	60
09	CARROSSERIE	67
54	SYSTÈME ÉLECTRIQUE	83

REMARQUE: Sauf indication contraire, le démontage doit s'effectuer de haut en bas, de l'extérieur vers l'intérieur, de l'avant vers l'arrière.

Toutes les fractions d'heures sont exprimées en dixièmes:

0.1 = 6 minutes
0.2 = 12 minutes, et ainsi de suite

LÉGENDE:

* AUTORISATION REQUISE AVANT LE REMPLACEMENT.
** INSCRIRE LE TEMPS À LA LIGNE «MAIN-D'OEUVRE SEULEMENT».
*** INSCRIRE LE MONTANT $$$ À LA LIGNE «OUVRAGE SOUS-CONTRACTÉ».

IMPORTANT: Toujours utiliser le temps donné à l'opération qui nécessite le plus de temps.

4. TRAVAUX REQUIS

Tous les temps mentionnés dans les pages suivantes incluent les opérations telles que: réglage du moteur (valve rotative et allumage), alignement de la ou des bielles, couple de serrage de la ou des culasses ou l'utilisation de barres parallèles, utilisation du vérificateur d'allumage, mesure du jet des pistons/jeu en bout des segments, mesure de l'écart entre le vilebrequin et le carter, rectification du cylindre, vérification de fuite du moteur.

5. ILLUSTRATIONS

Contrairement aux *Catalogues de pièces*, les illustrations de ce manuel ne montrent pas nécessairement chacune des pièces qu'elles représentent, leur raison d'être étant plutôt de faciliter la reconnaissance des pièces reliées à un barème de temps à taux fixe. **Les numéros d'items sur les illustrations correspondent aux quatre derniers chiffres du code de travail.**

6. SUGGESTION DE BARÈME DE TEMPS À TAUX FIXE

ENVOYEZ UNE REQUÊTE GARANTIE BOSSWeb DEPUIS LA SECTION INFO CENTRE

Dans cette requête, vous devez fournir les informations suivantes:

Section *Objet*:

- Suggestion de barème de temps à taux fixe

Section *Votre Question*:

- L'année modèle;
- Description du modèle;
- Description du code de travail;
- Code de travail;
- Temps actuel;
- Temps suggéré;
- Détails de la marche à suivre;

Pour s'assurer que votre demande sera traitée dans les plus brefs délais et efficacement, s.v.p. nous fournir toutes les étapes de réparation dans les détails de la marche à suivre.

2021

SSV/ VCC

TABLE	DESCRIPTION	MODEL/MODÈLE	ENGINE TYPE/ TYPE DE MOTEUR
17	DEFENDER HD5	6XMA/6XMB	427 CVT
	DEFENDER DPS HD5	8WMA/8WMB 8WMC/8WMD	
18	DEFENDER HD8	6WMA/6WMB/6WMC	800 CVT
	DEFENDER DPS HD8	8EMA/8EMB/8EMC 8EMD/8EME/8EMF 8EMG/8EMH	
	DEFENDER XT HD8	8FMA/8FMB/8FMC 8FMD/8FME/8FMF	
19	DEFENDER DPS HD10	8BMA/8BMB/8BMC 8MBD/8BME/8BMF	1000 CVT
	DEFENDER XT HD10	8CMA/8CMB/8CMC 8CMD/8CME/8CMF 8CMG/8CMH	
20	DENFEDER CAB HD8	8UMC	800 CVT
21A	DEFENDER LTDCAB XT HD10	8JMA/8JMB/8JMC 8JMD/8JME/8JMF	1000 CVT
22	DEFENDER MAX HD8	8ZMA/8ZMB/8ZMC	800 CVT
	DEFENDER MAX DPS HD8	8RMA/8RMB/8RMC 8RMD/8RME/8RMF 8RMG	
	DEFENDER MAX XT HD8	8SMA/8SMB/8SMC 8SMD/8SME/8SMF	
23	DEFENDER MAX DPS HD10	8LMA/8LMB	1000 CVT
	DEFENDER MAX LS HD10	6UMF	
	DEFENDER MAX XT HD10	8MMA/8MMC/8MMD 8MME/8MMF/8MMG 8MMH/8MMJ/8MMK 8MML	
24A	DEFENDER MAX LTDCAB XT HD10	6MMB/6MMD/6MME 6MMF/6MMG/6MMH	1000 CVT
25	DEFENDER XMR HD10	8YMA/8YMB/8YMC 8YMD/8YME	1000 CVT
26	DEFENDER MAX XMR HD10	8PMB/8PMC/8PMD	1000 CVT
27	DEFENDER 6X6 HD10	9VMA/9VMB/9VMC	1000 CVT
28	DEFENDER PRO HD10	6AMA/6AMB/6AMC 6AMD6AME	1000 CVT
	DEFENDER PRO XT HD10	6EMA/6EMB	

ENGINE SYSTEM
SYSTÈME MOTEUR

SYSTEM SYSTÈME	CODE	DESCRIPTION	DEFENDER HD5	DEFENDER HD8 / HD10	DEFENDER CAB	DEFENDER CAB LTD	DEFENDER MAX	DEFEBDER NAX CAB	DEFENDER XMR	DEFENDER MAX XMR	DEFENDER 6 X 6	DEFENDER PRO
			17	18/19	20	21	22/23	24	25	26	27	28
01	**00**	**NO LABOR INVOLVED** **AUCUNE MAIN D'OEUVRE**	**0**	**0**	**0**	**0**	**0**	**0**	**0**	**0**	**0**	**0**
01 *	01	REMOVE AND REPLACE ENGINE (ASS'Y) REMPLACEMENT DU MOTEUR (COMPLET)	4.0	4.5	4.5	4.8	4.5	4.8	4.5	4.5	4.8	4.5
01	03	OIL PRESSURE SWITCH INTERRUPTEUR DE PRESSION D'HUILE	0.3	0.3	0.3	0.3	0.3	0.3	0.3	0.3	0.3	0.3
01	08	FAN AND/OR FAN SUPPORT VENTILATEUR ET/OU SUPPORT DE VENTILATEUR	1.1	1.1	1.1	1.8	1.1	1.8	1.1	1.1	1.1	1.1
01	18	SENDER TEMPERATURE (ENGINE) CAPTEUR DE TEMPÉRATURE (MOTEUR)	0.4	0.4	0.4	0.4	0.4	0.4	0.4	0.4	0.4	0.4
01	19	THERMOSTAT THERMOSTAT	0.5	1.2	1.2	1.2	1.2	1.2	1.2	1.2	1.2	1.2
01	21	COOLANT HOSE T-FITTING (ONE OR TWO) BOYAU DE LIQUIDE DE REFROIDISSEMENT RACCORD EN T (1 OU 2)	0.7	0.7	0.7	0.7	0.7	0.7	0.7	0.7	0.7	0.7
01	37	RADIATOR INLET HOSE BOYAU D'ENTRÉE DU RADIATEUR	0.7	0.7	0.7	0.7	0.7	0.7	0.7	0.7	0.7	0.7
01	38	WATER PUMP SHAFT (ALL PARTS) ARBRE DE POMPE À L'EAU (TOUTES LES PIÈCES)	4.8	6.5	6.5	6.8	6.5	6.8	6.5	6.5	6.8	6.5
01	45	ENGINE DAMPERS (1 OR ALL) TAMPONS ANTI-VIBRATION (1 OU TOUS)	3.0	4.6	4.6	4.9	4.6	4.9	4.6	4.6	4.9	4.6
01	46	RADIATOR AND/OR GROMMMET RADIATEUR ET/OU PASSE-FILS	1.2	1.2	1.2	3.1	1.2	3.1	1.2	1.2	1.2	1.2
01	50	CRANKSHAFT AND/OR BEARINGS (FRONT/REAR) VILEBREQUIN ET/OU ROULEMENTS (AVANT/ARRIÈRE)		6.5	6.5	6.8	6.5	6.8	6.5	6.5	6.8	6.5
01	56	CRANKCASE COVER GASKET JOINT DE COUVERCLE DE CARTER		2.0	2.0	2.0	2.0	2.0	2.0	2.0	2.0	2.0
01	57	PTO CRANKCASE COVER COUVERCLE DE CARTER PDM		2.0	2.0	2.0	2.0	2.0	2.0	2.0	2.0	2.0
01	58	INTAKE OR EXHAUST VALVE GUIDE (1) GUIDE DE SOUPAPE ADMISSION OU ECHAPPEMENT (1)	2.3									
01	59	INTAKE OR EXHAUST VALVE GUIDES (2) GUIDES DE SOUPAPE ADMISSION OU ECHAPPEMENT(2)	2.4									
01	70	MUFFLER AND/OR EXHAUST GASKET AND/OR CLAMP SILENCIEUX D'ÉCHAPPEMENT ET/OU JOINT D'ÉCHAPPEMENT ET/OU BRIDE DE SERRAGE	0.7	1.0	1.0	1.0	1.0	1.0	1.0	1.0	1.0	1.0
01	73	EXHAUST MANIFOLD (REAR) CONNECTEUR D'ÉCHAPPEMENT (ARRIÈRE)		2.1	2.1	2.1	2.1	2.1	2.1	2.1	2.1	2.1

SYSTEM SYSTÈME	CODE	DESCRIPTION	DEFENDER HD5	DEFENDER HD8 / HD10	DEFENDER CAB	DEFENDER CAB LTD	DEFENDER MAX	DEFEBDER NAX CAB	DEFENDER XMR	DEFENDER MAX XMR	DEFENDER 6 X 6	DEFENDER PRO
			17	18/19	20	21	22/23	24	25	26	27	28
01	83	EXHAUST MANIFOLD (FRONT) CONNECTEUR D'ÉCHAPPEMENT (AVANT)	0.8	6.2	6.2	6.5	6.2	6.5	6.2	6.2	6.5	6.3
01	84	TUNE PIPE SHIELD (1) COQUILLE TUYAU D'ECHAPPEMENT (1)	0.3	0.3	0.3	0.3	0.3	0.3	0.3	0.3	0.3	0.3
01	85	TUNE PIPE SHIELD (2) COQUILLE TUYAU D'ÉCHAPPEMENT (2)	0.3	0.3	0.3	0.3	0.3	0.3	0.3	0.3	0.3	0.3
01	86	TUNE PIPE SHIELD (3) COQUILLE TUYAU D'ÉCHAPPEMENT (3)		0.3	0.3	0.3	0.3	0.3	0.3	0.3	0.3	0.3
01	87	MUFFLER SUPPORT SUPPORT DU SILENCIEUX	1.1	1.1	1.1	1.1	1.1	1.1	1.1	1.1	1.1	1.1
01	90	ENGINE OIL FILTER FILTRE À HUILE DU MOTEUR	0.4	0.4	0.4	0.4	0.4	0.4	0.4	0.4	0.4	0.4
01	96	OIL SIEVE AND/OR O-RING AND/OR COLLECTOR AND/OR RUBBER RING AND/OR COVER CRIBLE D'HUILE ET/OU JOINT TORIQUE ET/OU COLLECTEUR ET/OU ANNEAU DE CAOUTCHOUC ET/OU COUVERCLE	2.0	6.5	6.5	6.5	6.5	6.8	6.5	6.5	6.8	6.5
01	98	COOLING RESERVOIR RÉSERVOIR D'ANTIGEL	0.4	0.4	0.4	0.4	0.4	0.4	0.4	0.4	0.4	0.4
01	100	RADIATOR OUTLET HOSE BOYAU DE SORTIE DU RADIATEUR	0.7	0.7	0.7	0.7	0.7	0.7	0.7	0.7	0.7	0.7
01	101	PISTON,BEARING,PIN (1 PISTONS) PISTON,ROULEMENT,AXE (1 PISTONS)	3.0									
01	109	VALVE COVER AND/OR GASKET COUVERCLE DE SOUPAPE ET/OU JOINT D'ÉTANCHÉITÉ	0.3	0.3	0.3	0.3	0.3	0.3	0.3	0.3	0.3	0.3
01	111	TIMING GEAR PIGNON DE DISTRIBUTION	1.0	1.5	1.5	1.5	4.5	4.5	4.5	4.5	1.5	4.5
01	113	ROCKER ARM AND/OR PUSH ROD AND/OR ROCKER ARM SHAFT CULBUTEUR ET/OU TIGE POUSSOIR ET/OU ARBRE DE CULBUTEUR	1.1	1.6	1.6	1.6	1.6	1.6	1.6	1.6	1.6	1.6
01	114	CYLINDER HEAD A/O GASKET CULASSE E/O JOINT ÉTANCHE	3.5									
01	116	EXHAUST/INLET VALVE A/O SPRING A/O SEAL VALVE ADMISSION/ÉCHAPPEMENT E/O RESSORT E/O ANNEAU	2.7									
01	117	CYLINDER A/O GASKET CYLINDRE E/O JOINT ÉTANCHE	2.8									
01	119	WATER PUMP HOUSING AND/OR IMPELLER CARTER DE LA POMPE À EAU ET/OU ROUE À AILETTES	0.4	0.7	0.7	0.7	0.7	0.7	0.7	0.7	0.7	0.7
01	122	SHIFT SHAFT ASS'Y ARBRE D'EMBRAYAGE COMPLET	4.8									

ENGINE SYSTEM
SYSTÈME MOTEUR

SYSTEM SYSTÈME	CODE	DESCRIPTION	DEFENDER HD5	DEFENDER HD8 / HD10	DEFENDER CAB	DEFENDER CAB LTD	DEFENDER MAX	DEFEBDER MAX CAB	DEFENDER XMR	DEFENDER MAX XMR	DEFENDER 6 X 6	DEFENDER PRO
			17	18/19	20	21	22/23	24	25	26	27	28
01	132	OIL PUMP GEAR ENGRENAGE DE LA POMPE À L'HUILE	4.4	2.0	2.0	2.0	2.0	2.0	2.0	2.0	2.0	2.0
01	133	OIL PIPE TUYAU À L'HUILE		0.3	0.3	0.3	0.3	0.3	0.3	0.3	0.3	0.3
01	134	CAMSHAFT ARBRE À CAME	2.0	2.6	2.6	2.6	2.6	2.6	2.6	2.6	2.6	2.6
01	137	OIL PUMP COVER AND/OR SHAFT AND/OR ROTOR COUVERCLE DE LA POMPE À HUILE ET/OU ARBRE ET/OU ROTOR	4.5	2.1	2.1	2.1	2.1	2.1	2.1	2.1	2.1	2.1
01	138	CRANKCASE RESEAL OR GASKET RECELLEMENT DU CARTER ET/OU JOINT D'ÉTANCHÉITÉ	5.3	7.0	7.0	7.3	7.0	7.3	7.0	7.0	7.3	7.0
01	139	CRANKCASE REPLACEMENT REMPLACEMENT DU CARTER	5.9	7.5	7.5	7.8	7.5	7.8	7.5	7.5	7.8	7.5
01	140	CRANKSHAFT A/O BALANCE SHAFT VILEBREQUIN E/O ARBRE D'EQUILIBRAGE	5.6									
01	152	DRIVE SHAFT AND/OR BEARINGS AND/OR SEALS ARBRE D'ENTRAÎNEMENT ET/OU ROULEMENT À BILLES ET/OU ANNEAUX D'ÉTANCHÉITÉ	4.4	6.0	6.0	6.3	6.0	6.3	6.0	6.0	6.3	6.0
01	153	GEARS BOX ASS'Y / MAIN SHAFT BOITE D'ENGRENAGE COMPLET/ ARBRE PRINCIPAL	6.0									
01	154	TIMING CHAIN CHAÎNE D'ENGRENAGE	3.7	3.4	3.4	3.4	3.4	3.4	3.4	3.4	3.4	3.4
01	155	OUT PUT SHAFT ARBRE DE SORTIE	6.0									
01	172	SHIFT DRUM TAMBOUR D'EMBRAYAGE	6.0									
01	179	CHAIN GUIDE GUIDE DE CHAÎNE	1.0	1.4	1.4	1.4	1.4	1.4	1.4	1.4	1.4	1.4
01	182	OIL RADIATOR AND/OR O-RING RADIATEUR D'HUILE ET/OU JOINT D'ÉTANCHÉITÉ		2.5	2.5	2.5	2.5	2.5	2.5	2.5	2.5	2.5
01	191	CHAIN TENSION GUIDE GUIDE DE TENSION DE CHAÎNE	2.9	3.4	3.4	3.4	3.4	3.4	3.4	3.4	3.4	3.4
01	192	CHAIN TENSIONER (ASS'Y) TENDEUR DE CHAÎNE (COMPLET)	0.3	0.3	0.3	0.3	0.3	0.3	0.3	0.3	0.3	0.3
01	200	WATER PUMP GEAR ENGREANGE POMPE À EAU	4.3	6.5	6.5	6.5	6.5	6.8	6.5	6.5	6.8	6.8
01	201	PLUG, COMPRESSION SPRING, PRESSURE RETAINER AND BALL VIS, RESSORT DE COMPRESSION, SOUPAPE DE RETENUE ET BILLE		2.0	2.0	2.0	2.0	2.0	2.0	2.0	2.0	2.0

SYSTEM SYSTÈME	CODE	DESCRIPTION	DEFENDER HD5	DEFENDER HD8 / HD10	DEFENDER CAB	DEFENDER CAB LTD	DEFENDER MAX	DEFEBDER NAX CAB	DEFENDER XMR	DEFENDER MAX XMR	DEFENDER 6 X 6	DEFENDER PRO
			17	18/19	20	21	22/23	24	25	26	27	28
01	205	REAR OUTPUT SHAFT SEAL ANNEAU D'ÉTANCHÉITÉ DE L'ARBRE DE SORTIE ARRIÈRE	3.0	5.0	5.0	5.3	5.0	5.3	5.0	5.0	5.3	5.3
01	209	OUTPUT CRANKSHAFT SEAL (REWIND SIDE) ANN. ETANCH. SORTIE VILBR.(COTE DEMARR.)	0.8									
01	210	MAIN SHAFT SEAL JOINT D'ÉTANCHÉITÉ DE L'ARBRE PRINCIPAL	0.8									
01	215	OIL DIPSTICK JAUGE À HUILE	0.3	0.3	0.3	0.3	0.3	0.3	0.3	0.3	0.3	0.3
01	216	PRESSURE CAP BOUCHON À PRESSION	0.3	0.3	0.3	0.3	0.3	0.3	0.3	0.3	0.3	0.3
01	220	MAIN DRIVE GEAR AND/OR PIN ROUAGE D'ENTRAÎNEMENT PRINCIPALE ET/OU GOUPILLE	4.4	2.1	2.1	2.1	2.1	2.1	2.1	2.1	2.1	2.1
01	221	INTERMEDIATE GEAR AND/OR PIN AND/OR THRUST WASHER ROUAGE INTERMEDIAIRE ET/OU GOUPILLE ET/OU RONDELLE D'APPUI	4.4	2.1	2.1	2.1	2.1	2.1	2.1	2.1	2.1	2.1
01	223	FRONT OUTPUT SHAFT SEAL ANNEAU ÉTANCHÉITÉ ARBRE SORTIE AVANT		4.7	4.7	5.0	4.7	5.0	4.7	4.7	5.0	4.7
01	245	OUTPUT CRANKSHAFT SEAL (PTO SIDE) ANNEAU ÉTANCHÉITÉ SORTIE VILEBREQUIN (CÔTÉ PDM)	1.0	1.3	1.3	1.3	1.3	1.3	1.3	1.3	1.3	1.3
01	246	WATER PUMP GEAR AND/OR SEAL ARBRE POMPE À EAU ET/OU JOINT ÉTANCHÉITÉ	4.3	6.2	6.2	6.5	6.2	6.5	6.2	6.2	6.5	6.2
01	247	REED VALVE AND/OR STOPPER SOUPAPE À CLAPET ET/OU BUTOIR		2.1	2.1	2.1	2.1	2.1	2.1	2.1	2.1	2.1
01	248	BREATHER GEAR AND/OR V-RING RENIFLARD ET/OU ANNEAU ÉTANCHÉITÉ EN «V»		2.1	2.1	2.1	2.1	2.1	2.1	2.1	2.1	2.1
01	250	CRANKSHAFT POSITION SENSOR (CPS) CAPTEUR POSITION DU VILEBREQUIN (CPV)	0.3	0.3	0.3	0.3	0.3	0.3	0.3	0.3	0.3	0.3
01	255	EXHAUST/INLET VALVES A/O SPRINGS A/O SEALS (4) EXHAUST/INLET VALVES A/O SPRINGS A/O SEALS (4)	3.3									
01	256	EXHAUST AND/OR INLET VALVES AND/OR SPRINGS AND/OR SEALS (8) ÉCHAPPEMENT ET/OU VALVES ADMISSION ET/OU RESSORTS ET/OU ANNEAUX D'ÉTANCHÉITÉ (8)		5.2	5.2	5.5	5.2	5.5	5.2	5.2	5.5	5.2
01	261	TIMING CHAIN (MAG SIDE) CHAÎNE D'ENGRENAGE (CÔTÉ MAG)	2.6	3.2	3.2	3.6	3.2	3.6	3.2	3.2	3.2	3.2
01	264	LONG BLOCK ENSEMBLE CARTER - CYLINDRE - CULASSE	5.2	6.9	6.9	7.2	6.9	7.2	6.9	6.9	7.2	6.9

ENGINE SYSTEM
SYSTÈME MOTEUR

SYSTEM SYSTÈME	CODE	DESCRIPTION	DEFENDER HD5	DEFENDER HD8 / HD10	DEFENDER CAB	DEFENDER CAB LTD	DEFENDER MAX	DEFEBDER MAX CAB	DEFENDER XMR	DEFENDER MAX XMR	DEFENDER 6 X 6	DEFENDER PRO
			17	18/19	20	21	22/23	24	25	26	27	28
01	290	REAR ENGINE SUPPORT (PTO SIDE) SUPPORT MOTEUR ARRIERE (COTE PDM)	0.8									
01	292	REAR ENGINE SUPPORT (MAG SIDE) SUPPORT MOTEUR ARRIERE (COTE MAG)	0.5									
01	301	WATER PUMP DYNAMIC SEAL AND/OR OIL SEAL ANNEAU D'ÉTANCHÉITÉ DYNAMIQUE DE LA POMPE À EAU		2.5	2.5	2.5	2.5	2.5	2.5	2.5	2.5	2.5
01	303	TIMING CHAINS (ALL) CHAÎNES D'ENGRENAGE (TOUTES)		5.5	5.5	5.8	5.5	5.5	5.5	5.5	5.8	5.5
01	304	CHAINS TENSION GUIDE (ALL) GUIDE DE TENSION DE CHAÎNES (TOUS)		5.5	5.5	5.8	5.5	5.5	5.5	5.5	5.8	5.5
01	305	CHAINS GUIDE (ALL) GUIDE DE CHAÎNES (TOUS)		2.1	2.1	2.1	2.1	2.1	2.1	2.1	2.1	2.1
01	307	VALVE COVERS AND/OR GASKETS (2) COUVERCLES SOUPAPE ET/OU JOINTS D'ÉTANCHÉITÉ (2)		0.5	0.5	0.5	0.5	0.5	0.5	0.5	0.5	0.5
01	308	CYLINDER HEAD GASKET JOINT D'ETANCHEITE DE LA CULASSE	1.4									
01	316	MUFFLER END CAP EMBOUT DE SILENCIEUX	0.3	0.3	0.3	0.3	0.3	0.3	0.3	0.3	0.3	0.3
01	320	THROTTLE PEDAL PÉDALE D'ACCÉLÉRATEUR	0.4	0.4	0.4	0.4	0.4	0.4	0.4	0.4	0.4	0.4
01	329	INJECTOR (1) INJECTEUR (1)	0.4									
01	335	COOLANT HOSE (WATER PUMP) BOYAU DE REFROIDISSEMENT (POMPE À EAU)	0.7	0.7	0.7	0.7	0.7	0.7	0.7	0.7	0.7	0.7
01	337	RECIRCULATION HOSE BOYAU DE RECIRCULATION		0.7	0.7	0.7	0.7	0.7	0.7	0.7	0.7	0.7
01	338	INTERMEDIATE HOSE BOYAU INTERMÉDIAIRE	0.7	0.7	0.7	0.7	0.7	0.7	0.7	0.7	0.7	1.8
01	340	PLUG SCREW BOUCHON FILETÉ		0.7	0.7	0.7	0.7	0.7	0.7	0.7	0.7	0.7
01	347	FRONT ENGINE SUPPORT SUPPORT MOTEUR AVANT	3.0									
01	352	OXYGEN SENSOR CAPTEUR D'OXYGEN	0.3	0.3	0.3	0.3	0.3	0.3	0.3	0.3	0.3	0.3
01	353	INJECTORS (ALL) INJECTEURS (TOUS)		0.4	0.4	0.4	0.4	0.4	0.4	0.4	0.4	0.4
01	374	HEAT SHIELD SUPPORT SUPPORT DE DEFLECTEUR DE CHALEUR		0.3	0.3	0.3	0.3	0.3	0.3	0.3	0.3	0.3
01	375	FRONT HEAT SHIELD DEFLECTEUR DE CHALEUR AVANT	0.5	1.0	1.0	1.0	1.0	1.0	1.0	1.0	1.0	1.0

SYSTEM SYSTÈME	CODE	DESCRIPTION	DEFENDER HD5	DEFENDER HD8 / HD10	DEFENDER CAB	DEFENDER CAB LTD	DEFENDER MAX	DEFEBDER NAX CAB	DEFENDER XMR	DEFENDER MAX XMR	DEFENDER 6 X 6	DEFENDER PRO
			17	18/19	20	21	22/23	24	25	26	27	28
01	376	FRONT PIPE HEAT SHEILD (LEFT) DEFLECTEUR DE CHALEUR TUYAU AVANT (GAUCHE)		0.4	0.4	0.4	0.4	0.4	0.4	0.4	0.4	0.4
01	377	FRONT PIPE HEAT SHEILD (RIGHT) DEFLECTEUR DE CHALEUR TUYAU AVANT (DROIT)		6.2	6.2	6.5	6.2	6.5	6.2	6.2	6.5	6.5
01	378	FRONT PIPE HEAT SHEILD (MUFFLER) DEFLECTEUR DE CHALEUR TUYAU AVANT (SILENCIEUX)	0.3	0.3	0.3	0.3	0.3	0.3	0.3	0.3	0.3	0.3
01	379	REAR HEAT SHEILD (MUFFLER) DEFLECTEUR DE CHALEUR ARRIERE (SILENCIEUX)	0.3	0.6	0.6	0.6	0.6	0.6	0.6	0.6	0.6	0.6
01	380	INLET HOSE (HEATER UNIT) BOYAU D'ENTRE (UNITE CHAUFFAGE)			1.7	1.7		1.7				
01	381	OUTLET HOSE (HEATER UNIT) BOYAU DE SORTIE (UNITE CHAUFFAGE)			2.0	2.0		2.0				
01	382	THERMOSTAT HOSE BOYAU DU THERMOSTAT		0.7	0.7	0.7	0.7	0.7	0.7	0.7	0.7	0.7
01	383	BLEEDING HOSE BOYAU DE PURGE	1.0	1.0	1.0	1.0	1.0	1.0	1.0	1.0	1.0	1.5
01	384	FRONT CYLINDER HEAD AND/OR GASKET CULASSE AVANT ET/OU JOINT D'ÉTANCHEITE		6.3	6.3	6.6	6.3	6.6	6.3	6.3	6.6	6.3
01	385	REAR CYLINDER HEAD AND/OR GASKET CULASSE ARRIERE ET/OU JOINT D'ÉTANCHEITÉ		3.5	3.5	3.8	3.5	3.8	3.5	3.5	3.5	3.5
01	386	FRONT CYLINDER AND/OR GASKET CYLINDRE AVANT ET/OU JOINT D'ÉTANCHEITE		5.5	5.5	5.8	5.5	5.8	5.5	5.5	5.8	5.5
01	387	REAR CYLINDER AND/OR GASKET CYLINDRE ARRIERE ET/OU JOINT D'ÉTANCHÉITÉ		2.7	2.7	3.1	2.7	3.1	2.7	2.7	2.7	2.7
01	388	EXHAUST/INLET VALVE AND/OR SPRING AND/OR SEAL (FRONT CYLINDER HEAD) VALVE ADMISSION/ÉCHAPPEMENT ET/OU RESSORT ET/OU ANNEAU (CULASSE AVANT)		5.5	5.5	5.8	5.5	5.8	5.5	5.5	5.8	5.5
01	389	EXHAUST/INLET VALVE AND/OR SPRING AND/OR SEAL (REAR CYLINDER HEAD) VALVE ADMISSION/ÉCHAPPEMENT ET/OU RESSORT ET/OU ANNEAU (CULASSE ARRIÈRE)(TOUS)		2.7	2.7	2.7	2.7	2.7	2.7	2.7	2.7	2.7
01	390	EXHAUST/INLET VALVES AND/OR SPRINGS AND/OR SEALS (FRONT CYLINDER HEAD) (ALL) VALVES ADMISSION/ECHAPPEMENT ET/OU RESSORTS ET/OU ANNEAUX (CULASSE AVANT) (TOUS)		6.1	6.1	6.4	6.1	6.1	6.4	6.1	6.4	6.1

ENGINE SYSTEM
SYSTÈME MOTEUR

SYSTEM SYSTÈME	CODE	DESCRIPTION	DEFENDER HD5	DEFENDER HD8 / HD10	DEFENDER CAB	DEFENDER CAB LTD	DEFENDER MAX	DEFEBDER MAX CAB	DEFENDER XMR	DEFENDER MAX XMR	DEFENDER 6 X 6	DEFENDER PRO
			17	18/19	20	21	22/23	24	25	26	27	28
01	391	EXHAUST/INLET VALVES AND/OR SPRINGS AND/OR SEALS (REAR CYLINDER HEAD) (ALL) VALVES ADMISSION/ECHAPPEMENT ET/OU RESSORTS ET/OU ANNEAUX (CULASSE ARRIERE) (TOUS)		3.3	3.3	3.3	3.3	3.3	3.3	3.3	3.3	3.3
01	392	FRONT PISTON, PIN, CIRCLIP ET RINGS PISTON AVANT, GOUPILLE, CIRCLIP ET SEGMENTS		5.6	5.6	5.9	5.6	5.9	5.6	5.6	5.9	5.9
01	393	REAR PISTON, PIN, CIRCLIP ET RINGS PISTON ARRIÈRE, GOUPILLE, CIRCLIP ET SEGEMENTS		2.8	2.8	3.2	2.8	3.2	2.8	2.8	2.8	2.8
01	394	OIL SEAL ANNEAU D'ETANCHEITE D'HUILE	4.8									
01	404	REAR ENGINE SUPPORT (LEFT SIDE) SUPPORT MOTEUR ARRIÈRE (COTÉ GAUCHE)	2.0									
01	405	REAR ENGINE SUPPORT (RIGHT SIDE) SUPPORT MOTEUR ARRIÈRE (COTÉ DROIT)	2.0									
01	406	LINK BRACKET LIEN DE SUPPORT	1.2									
01	407	RUBBER MOUNT TAMPON D'ANCRAGE	0.5									
01	412	REAR ENGINE MOUNTS TAMPONS ANCRAGE MOTEUR ARRIÈRE	1.4	1.4	1.4	1.4	1.4	1.4	1.4	1.4	1.4	1.4
01	413	SHIFTING UNIT (ASS'Y) UNITÉ D'EMBRAYAGE (COMPLET)	3.0									
01	416	COMPRESSOR COMPRESSEUR				1.3		1.3				
01	417	BELT (COMPRESSOR) COURROIE (COMPRESSEUR)				0.5		0.5				
01	418	BELT COVER COUVERCLE DE COURROIE				0.3		0.3				
01	419	BELT COVER BRACKET SUPPORT DE COUVERCLE DE COURROIE				0.5		0.5				
01	420	MAGNET (COMPRESSOR) AIMANT (COMPRESSEUR)				0.6		0.6				
01	421	EVAPORATOR EVAPORATEUR				1.3		1.3				
01	422	EXPANSION VALVE DETENTEUR				1.3		1.3				
01	423	CONDENSER CONDENSEUR				3.5		3.5				
01	424	REAR COMPRESSOR HOSES BOYAUX CONDENSEUR ARRIERE				2.2		2.2				

SYSTEM SYSTÈME	CODE	DESCRIPTION	DEFENDER HD5	DEFENDER HD8 / HD10	DEFENDER CAB	DEFENDER CAB LTD	DEFENDER MAX	DEFEBDER NAX CAB	DEFENDER XMR	DEFENDER MAX XMR	DEFENDER 6 X 6	DEFENDER PRO
			17	18/19	20	21	22/23	24	25	26	27	28
01	425	FRONT COMPRESSOR HOSES BOYAUX CONDENSEUR AVANT				1.7		1.7				
01	426	MIDDLE COMPRESSOR HOSES BOYAUX COMPRESSEUR CENTRAL						1.8				
01	432	PRESSURE SWITCH INTERRUPTEUR DE PRESSION				0.9		0.9				
01	433	EVACUATE AND RECHARGE (HVAC SYSTEM) ÉVACUER ET RECHARGER (SYSTÈME HVAC)				0.6		0.6				

800/1000

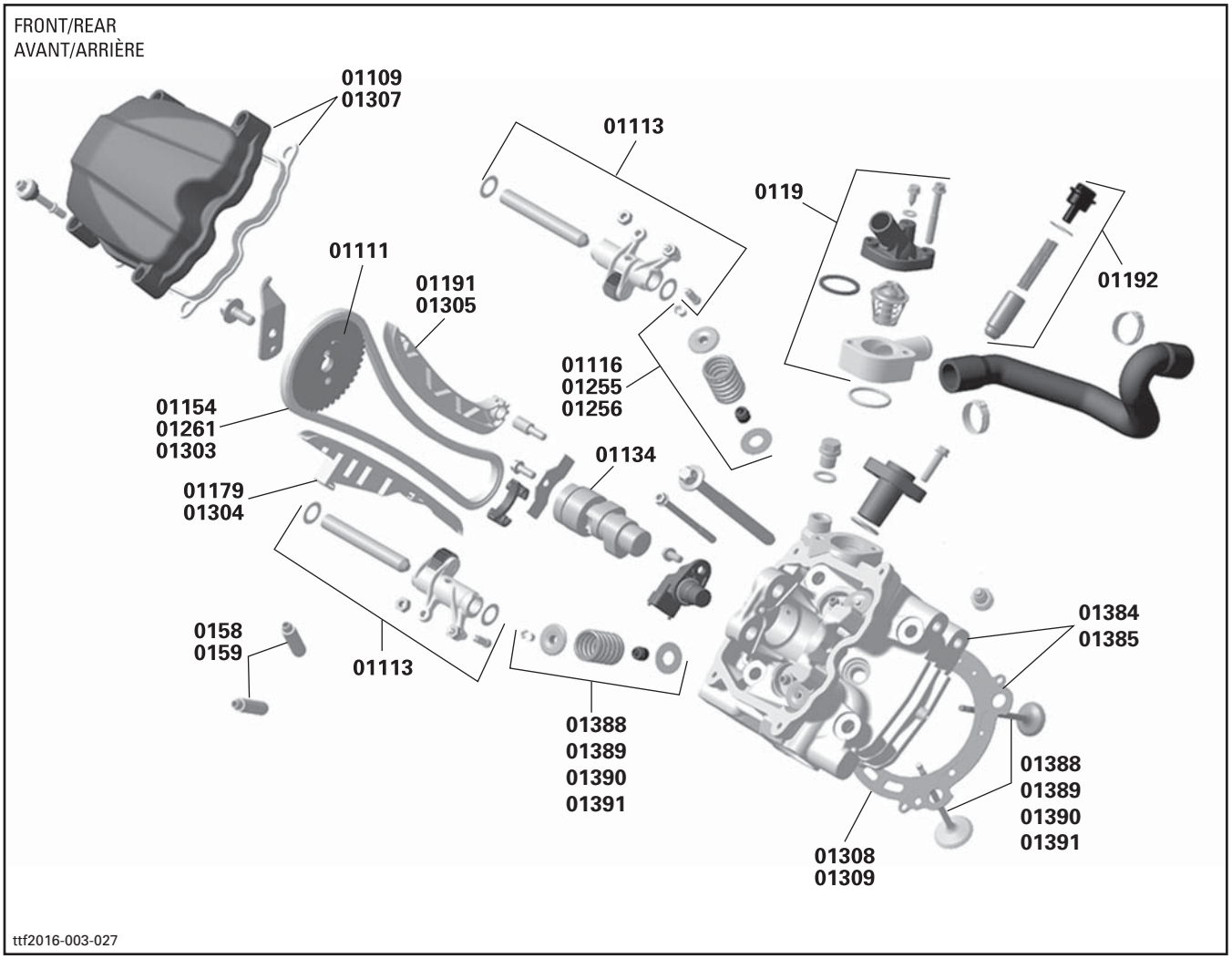
FRONT/REAR
AVANT/ARRIÈRE
01109
01307
01113
0119
01192
01111
01191
01305
01116
01255
01256
01154
01261
01303
01134
01179
01304
01384
01385
0158
0159
01113
01388
01389
01390
01391
01388
01389
01390
01391
01308
01309
ttf2016-003-027

800/1000

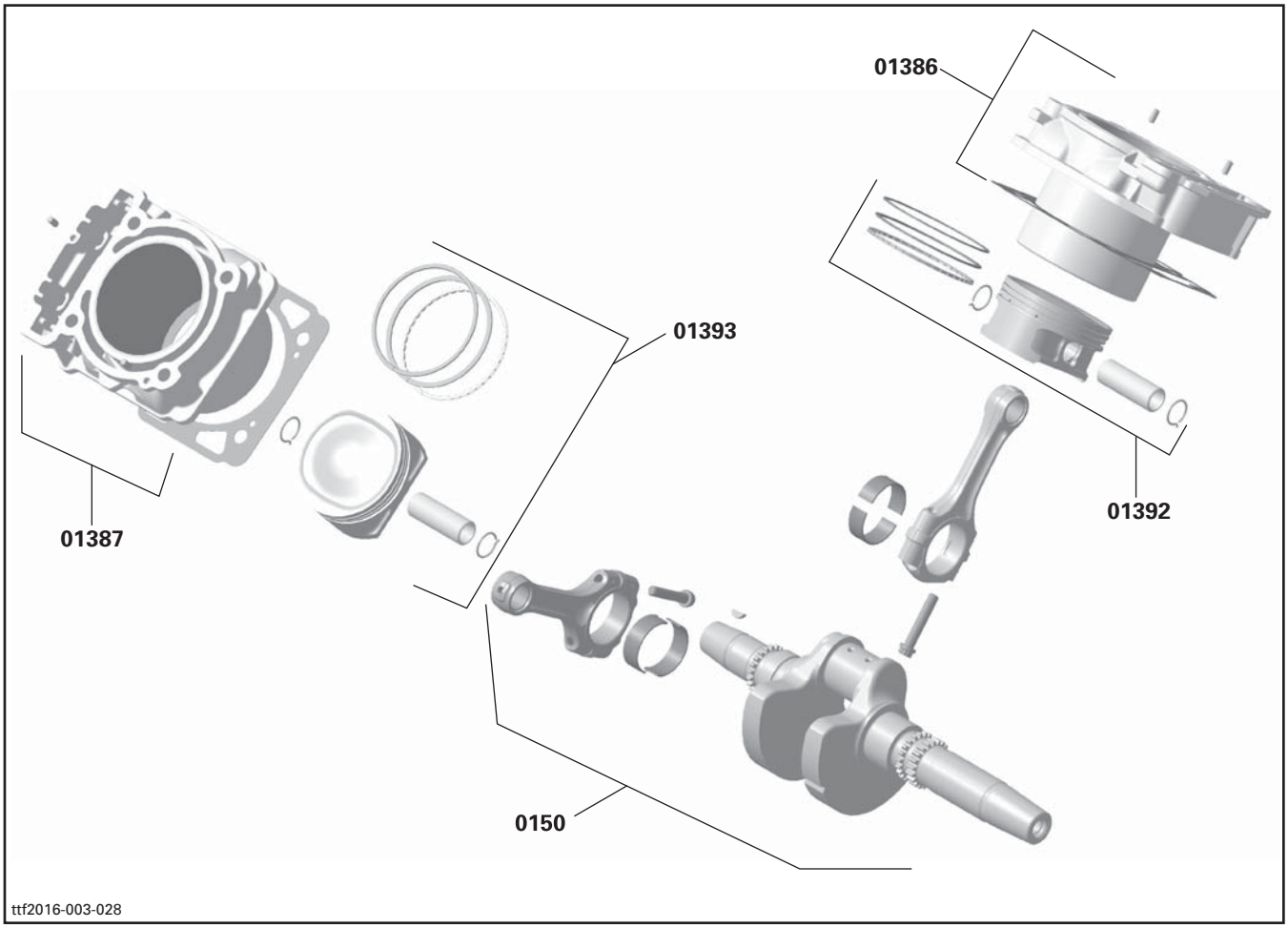

800/1000

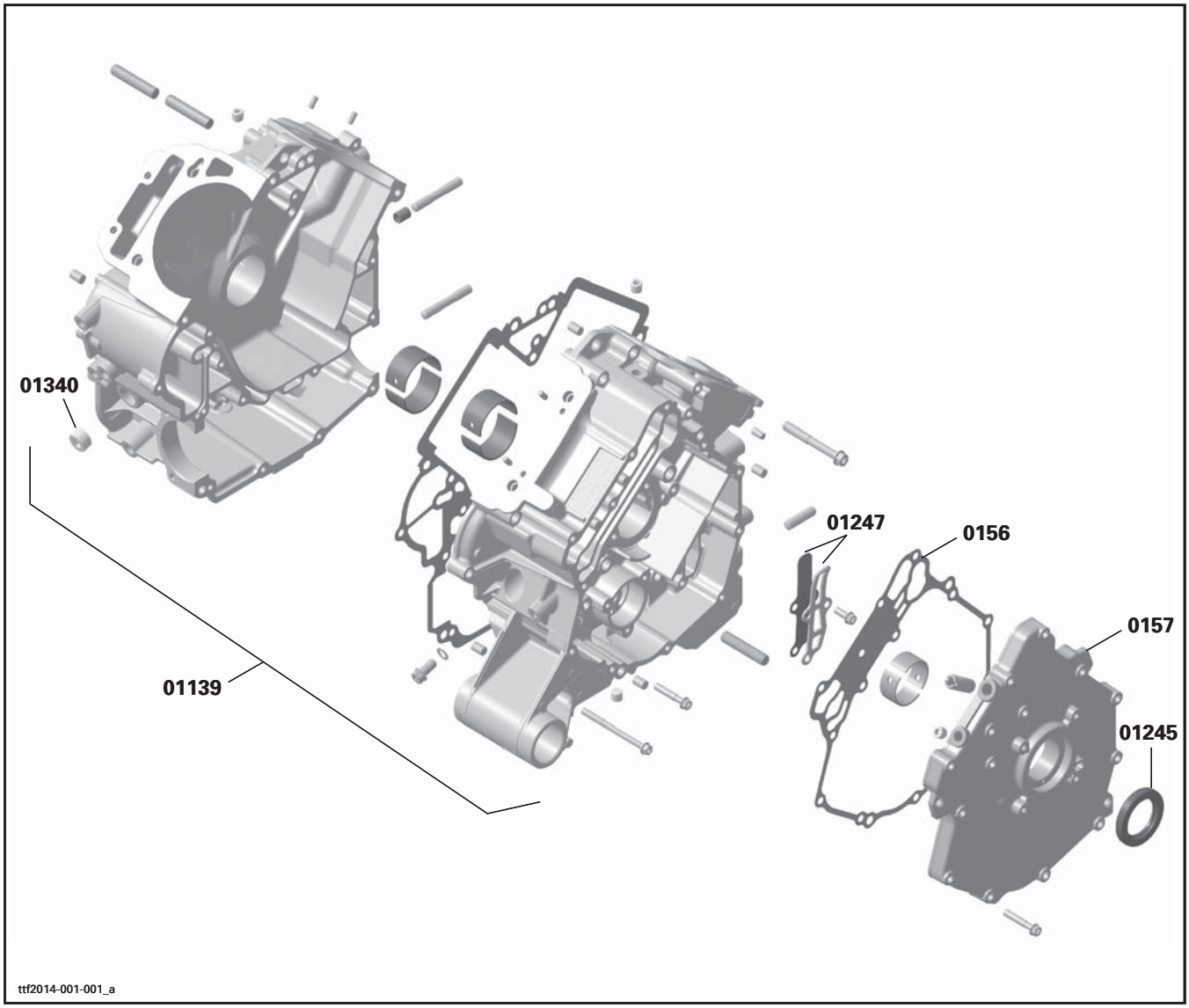

800

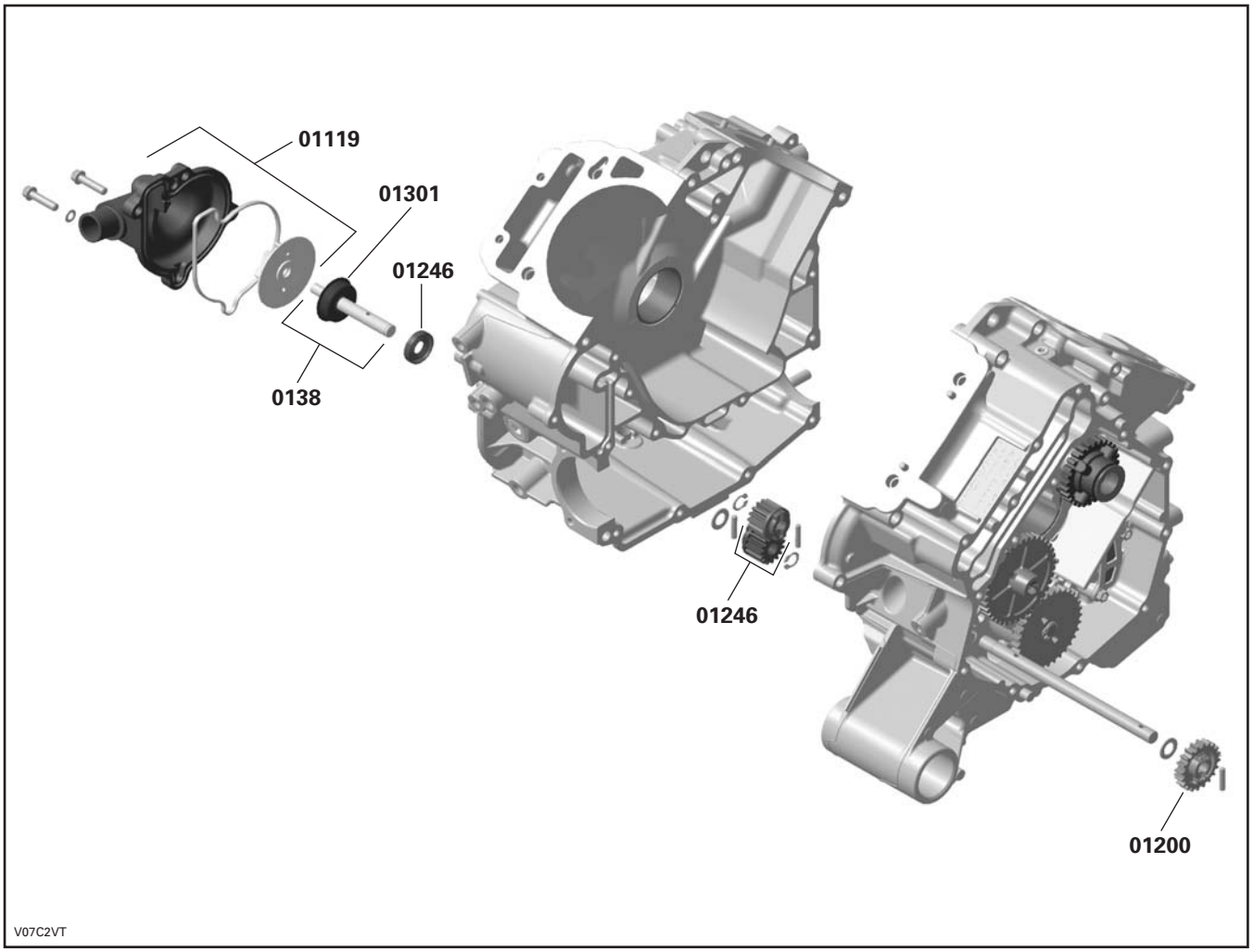

1000

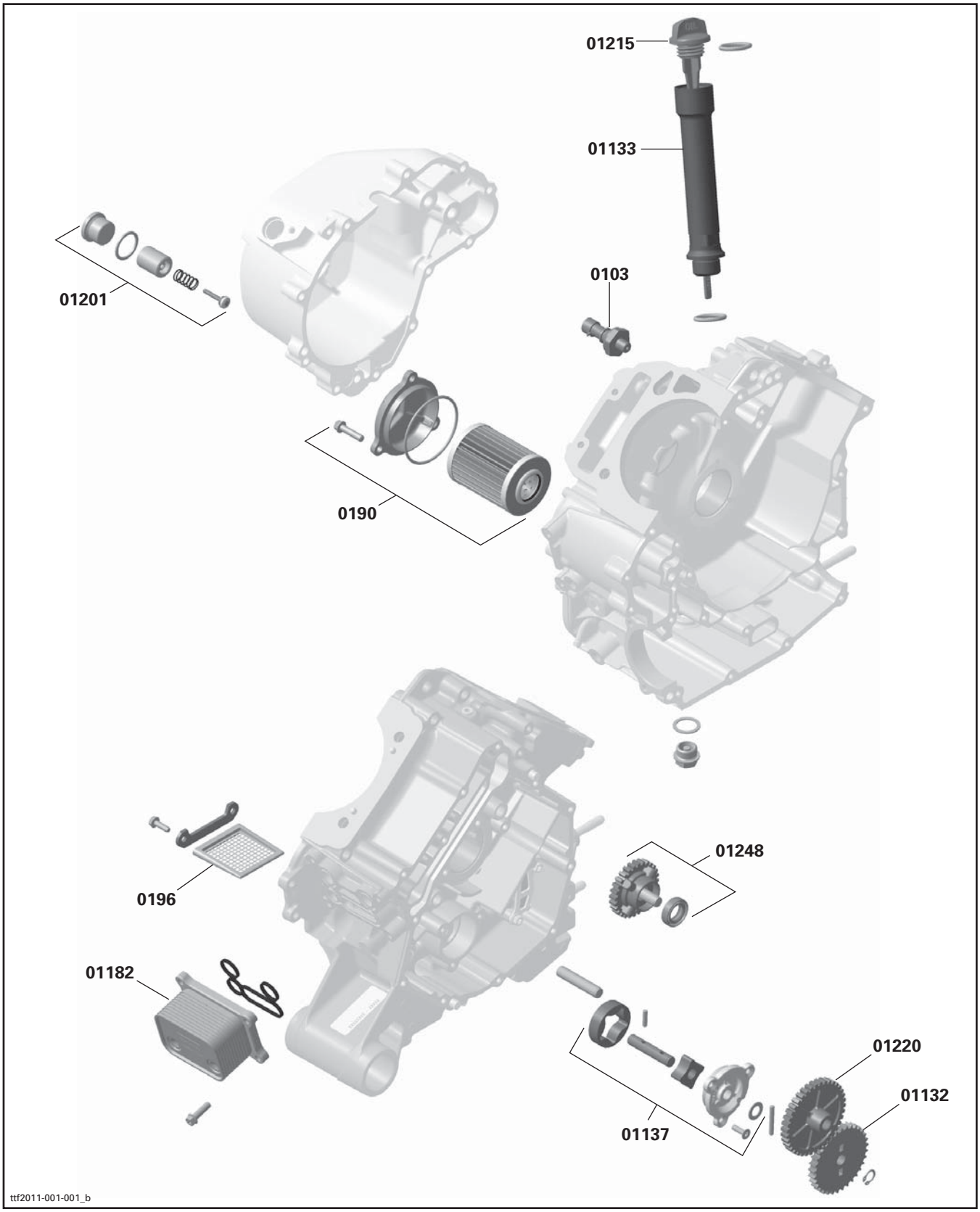
01215
01133
0103
01201
0190
01248
0196
01182
01220
01132
01137
ttf2011-001-001_b

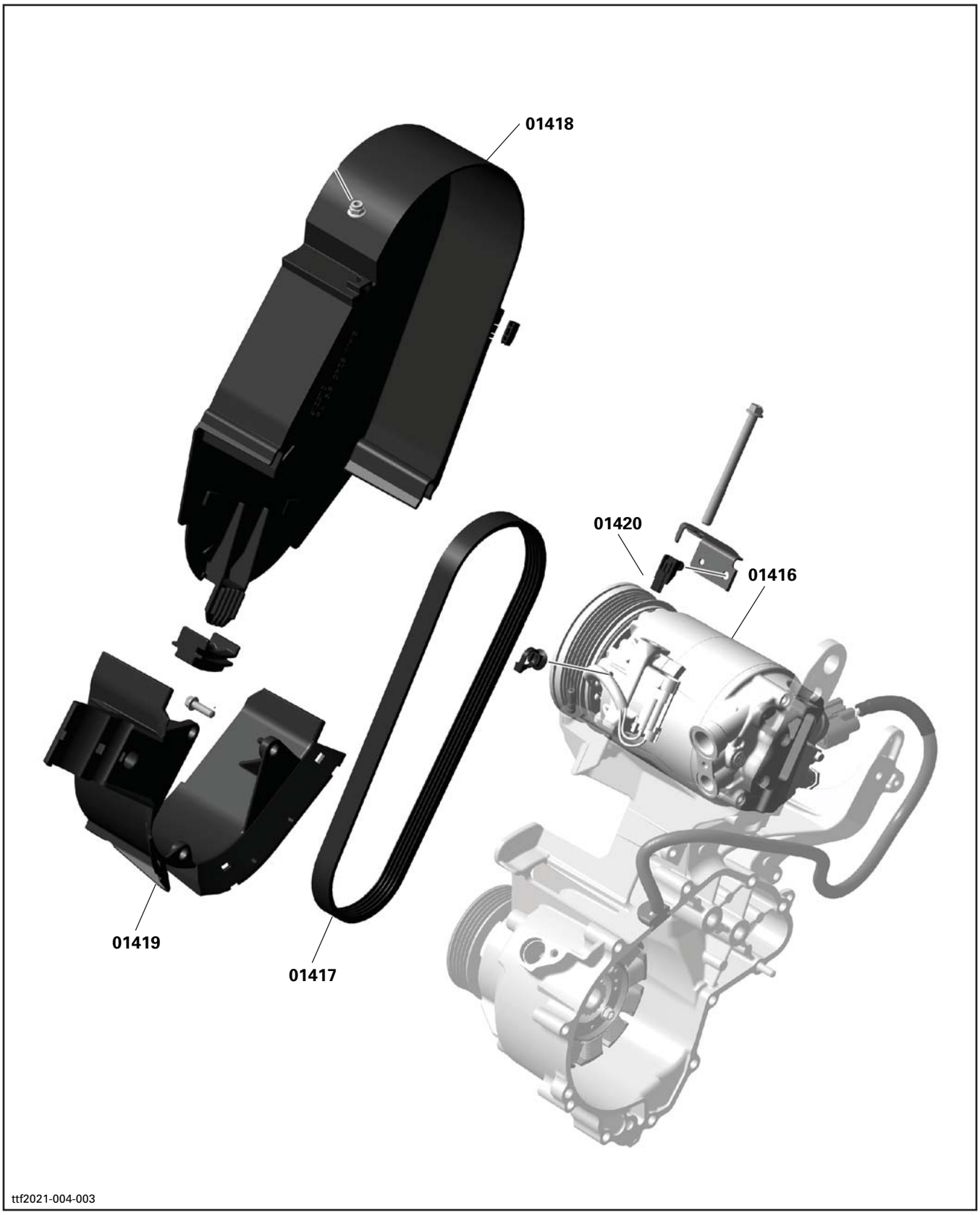
01418
01420
01416
01419
01417
ttf2021-004-003

ENGINE SYSTEM
SYSTÈME MOTEUR

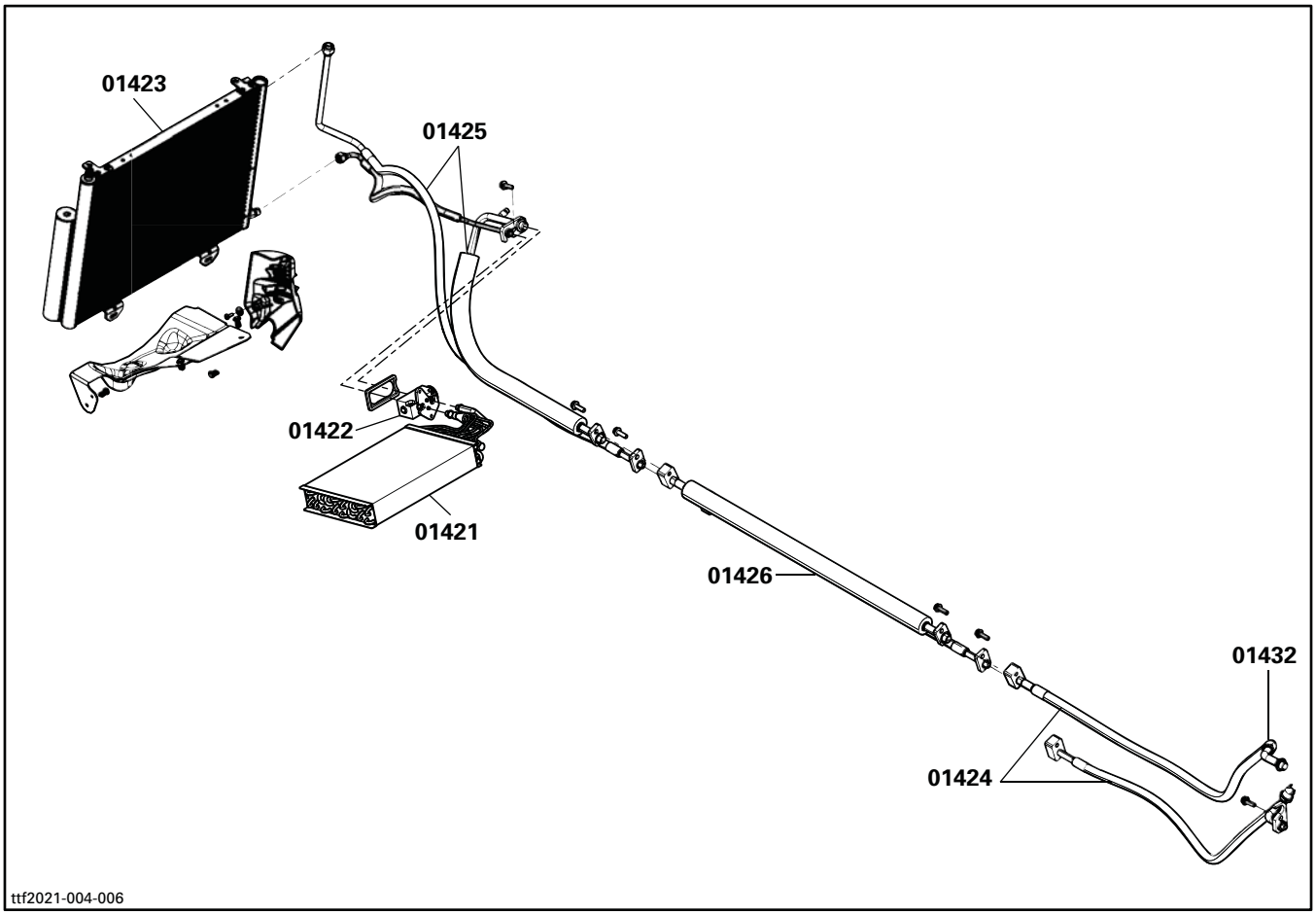

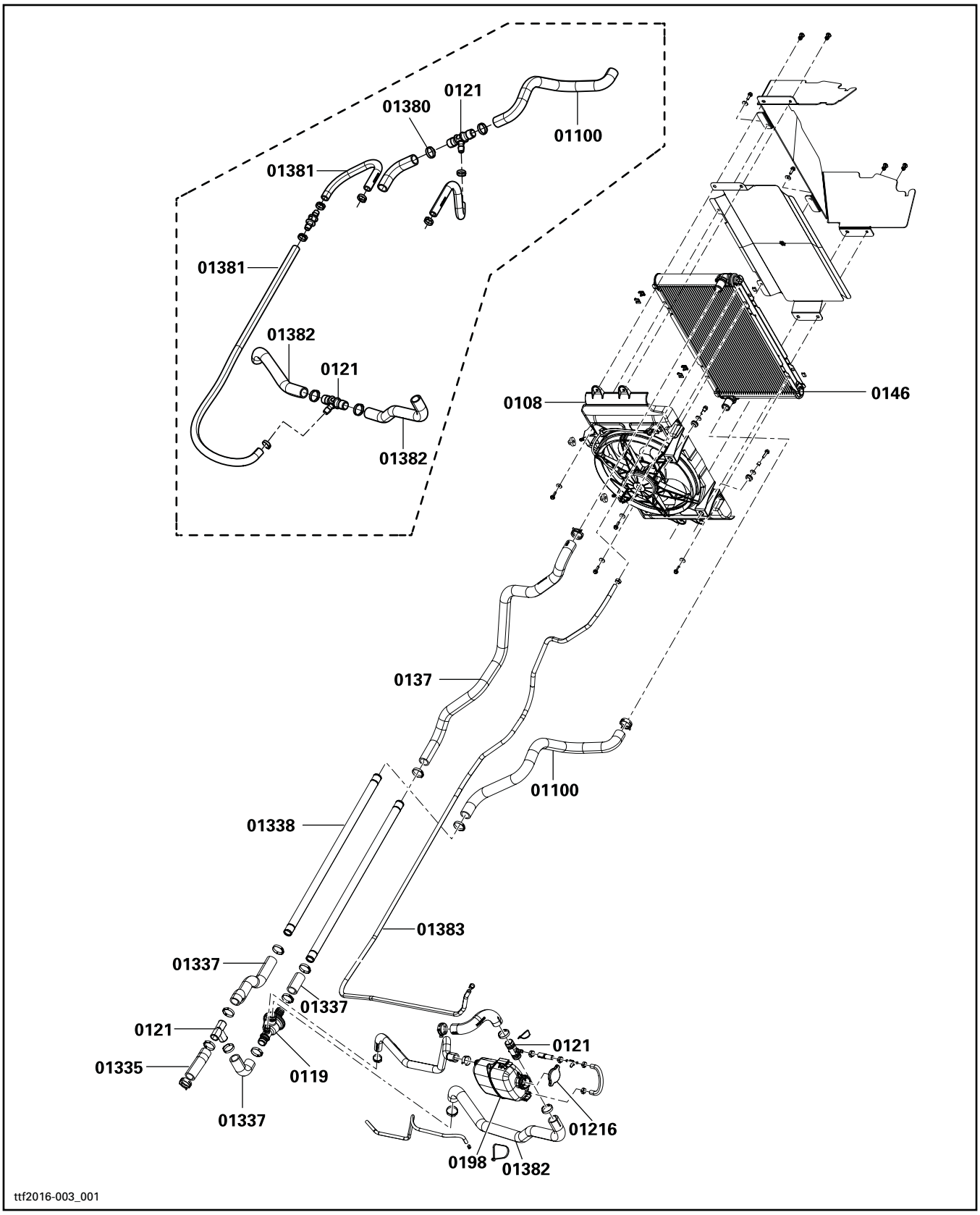
01380
0121
01100
01381
01381
01382
0121
01382
0108
0146
0137
01100
01338
01383
01337
01337
0121
01335
0119
01337
0121
01216
0198
01382
ttf2016-003_001

ENGINE SYSTEM
SYSTÈME MOTEUR

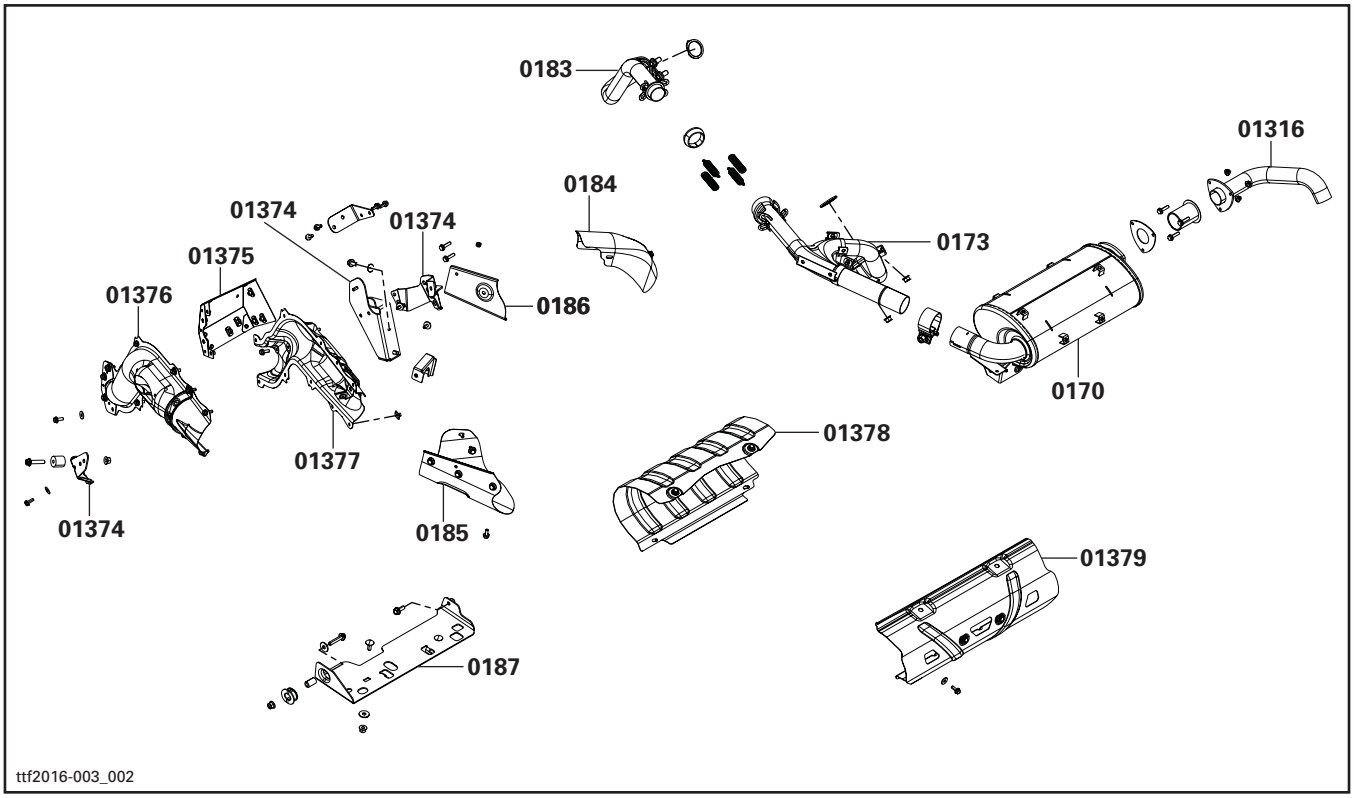

800/1000

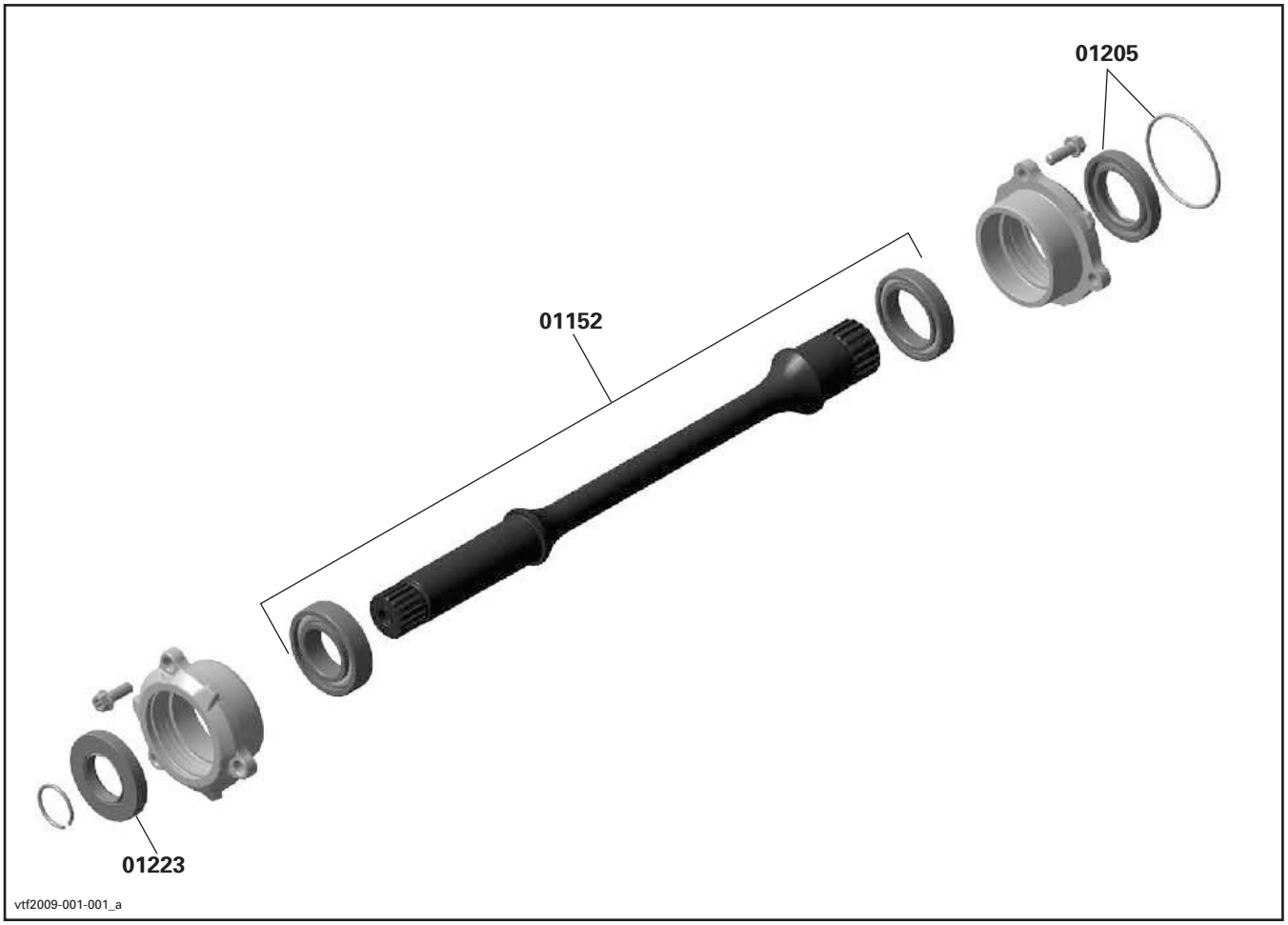

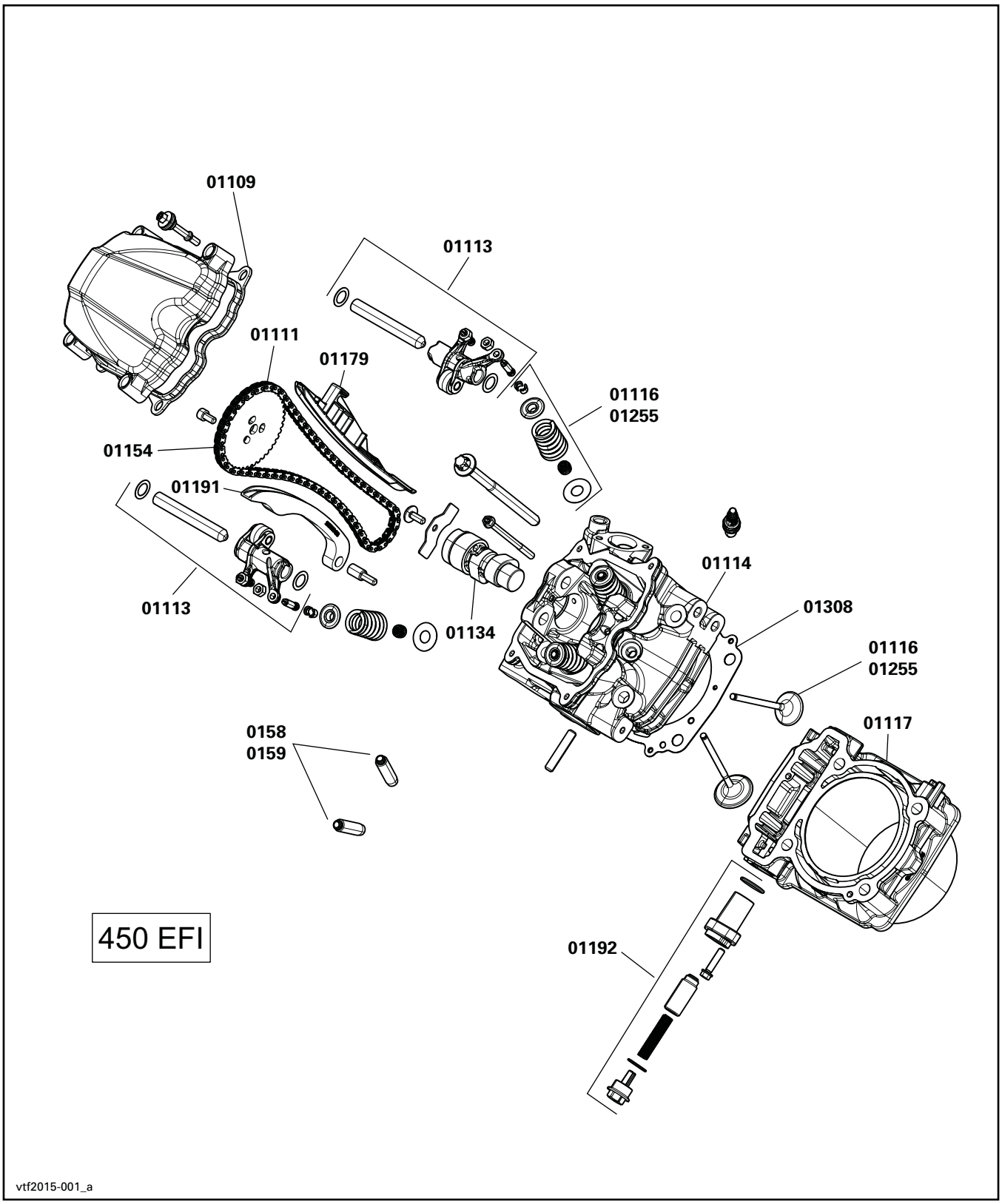
01109
01113
01111
01179
01116
01255
01154
01191
01114
01308
01113
01134
01116
01255
01117
0158
0159
450 EFI
01192
vtf2015-001_a

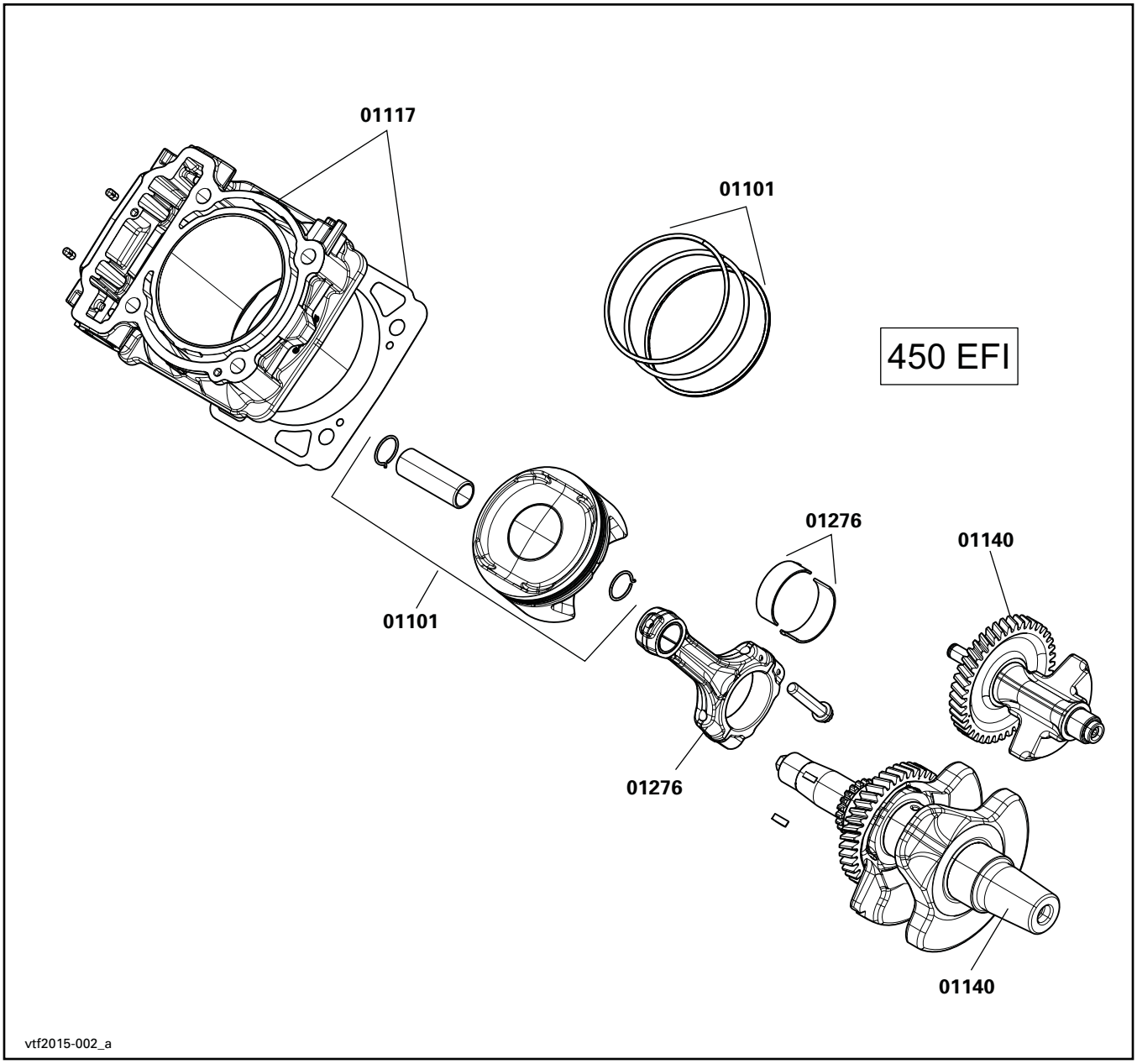
01117
01101
450 EFI
01276
01140
01101
01276
01140
vtf2015-002_a

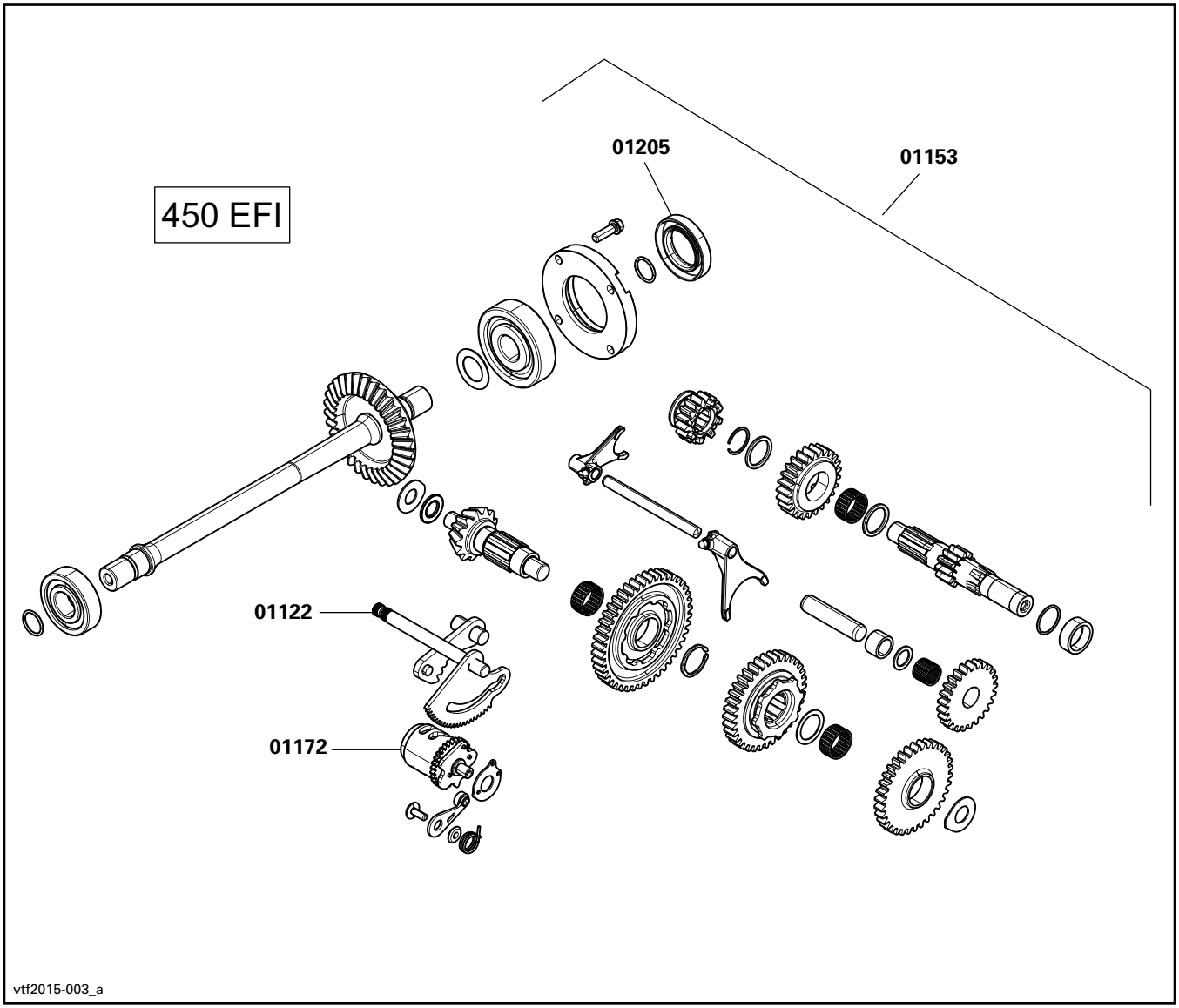
450 EFI
01205
01153
01122
01172
vtf2015-003_a

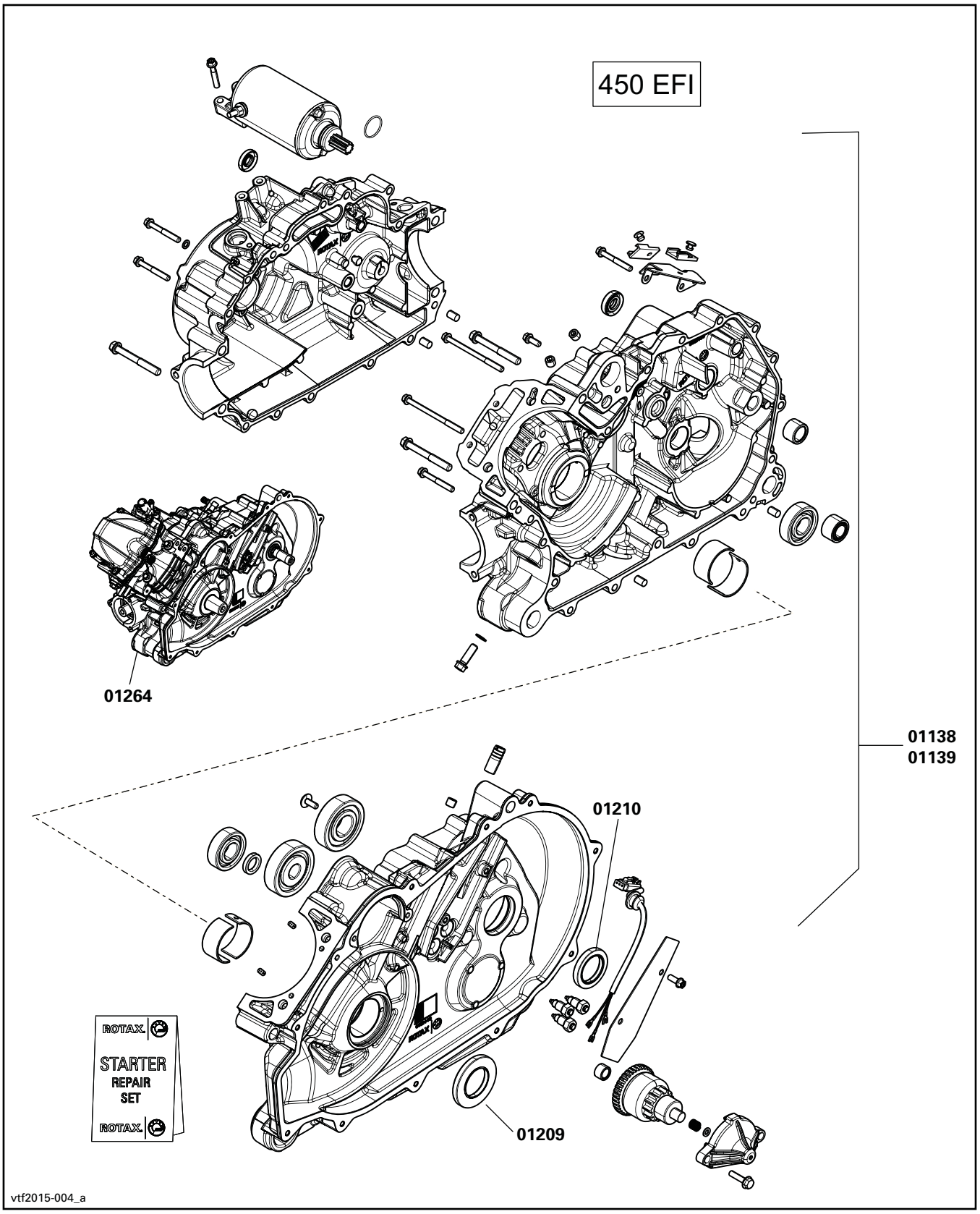
450 EFI
01264
01138
01139
01210
01209
ROTAX
STARTER
REPAIR
SET
ROTAX
vtf2015-004_a

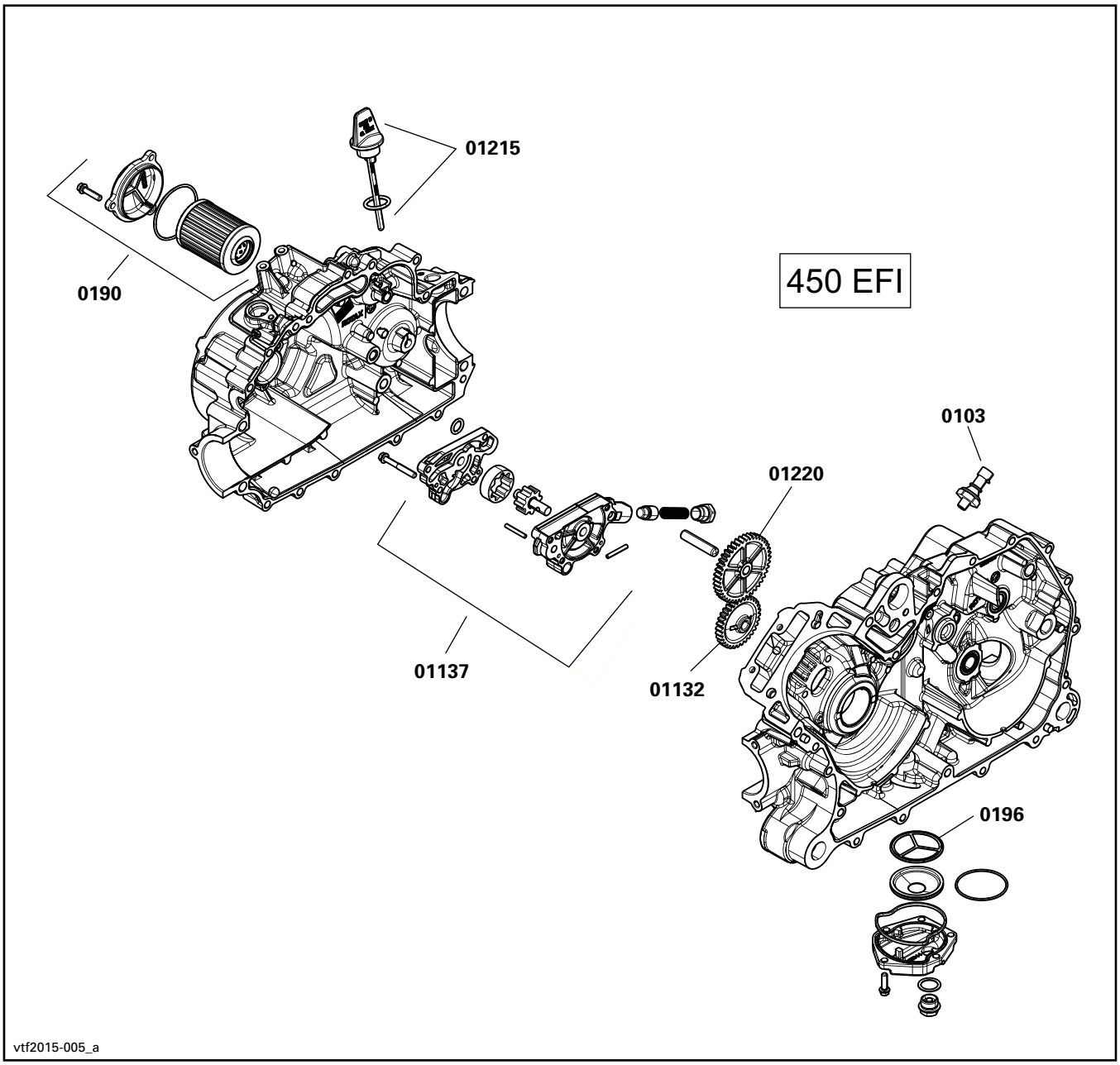
01215
0190
450 EFI
0103
01220
01137
01132
0196
vtf2015-005_a

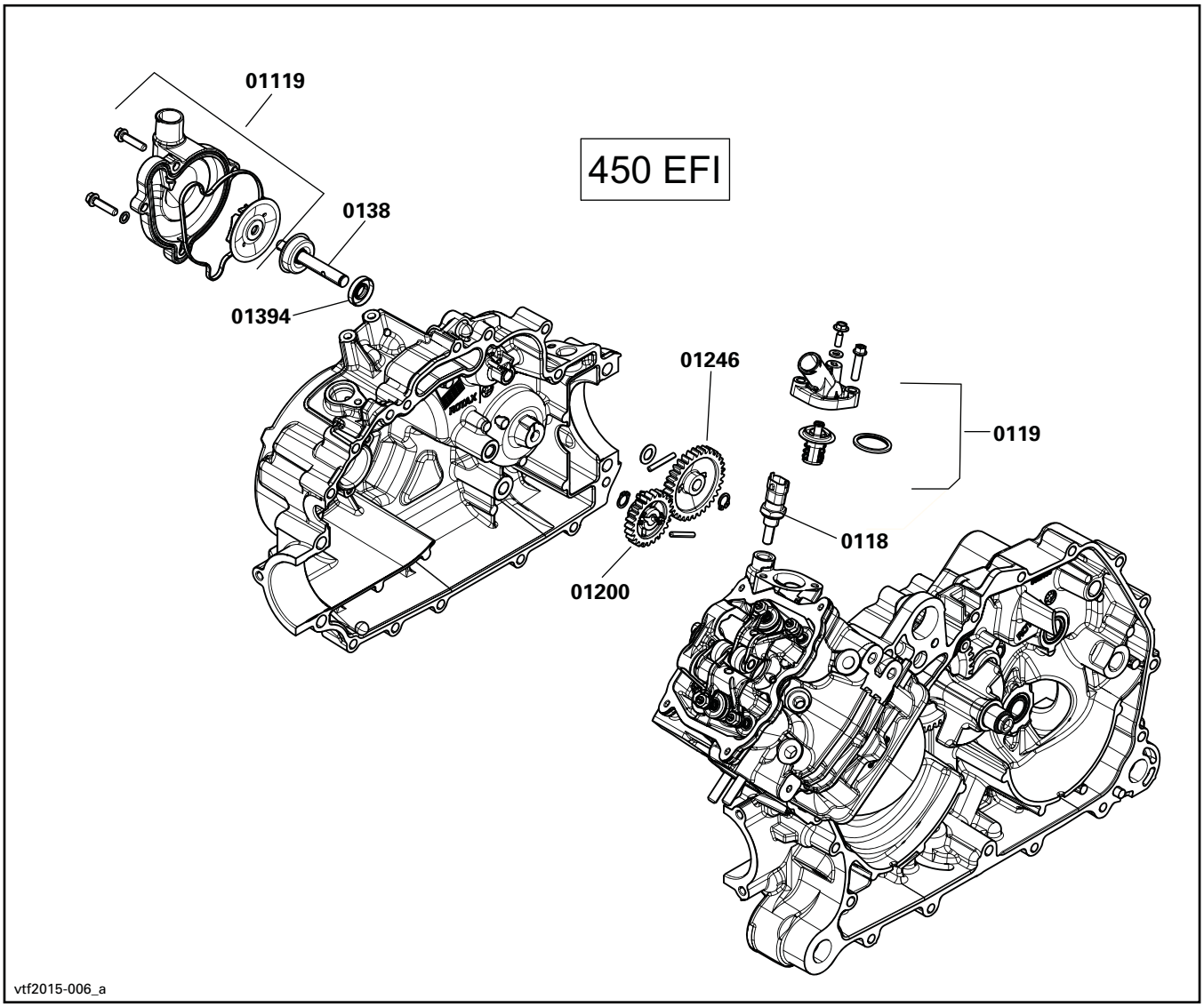
01119
450 EFI
0138
01394
01246
0119
0118
01200
vtf2015-006_a

ENGINE SYSTEM
SYSTÈME MOTEUR

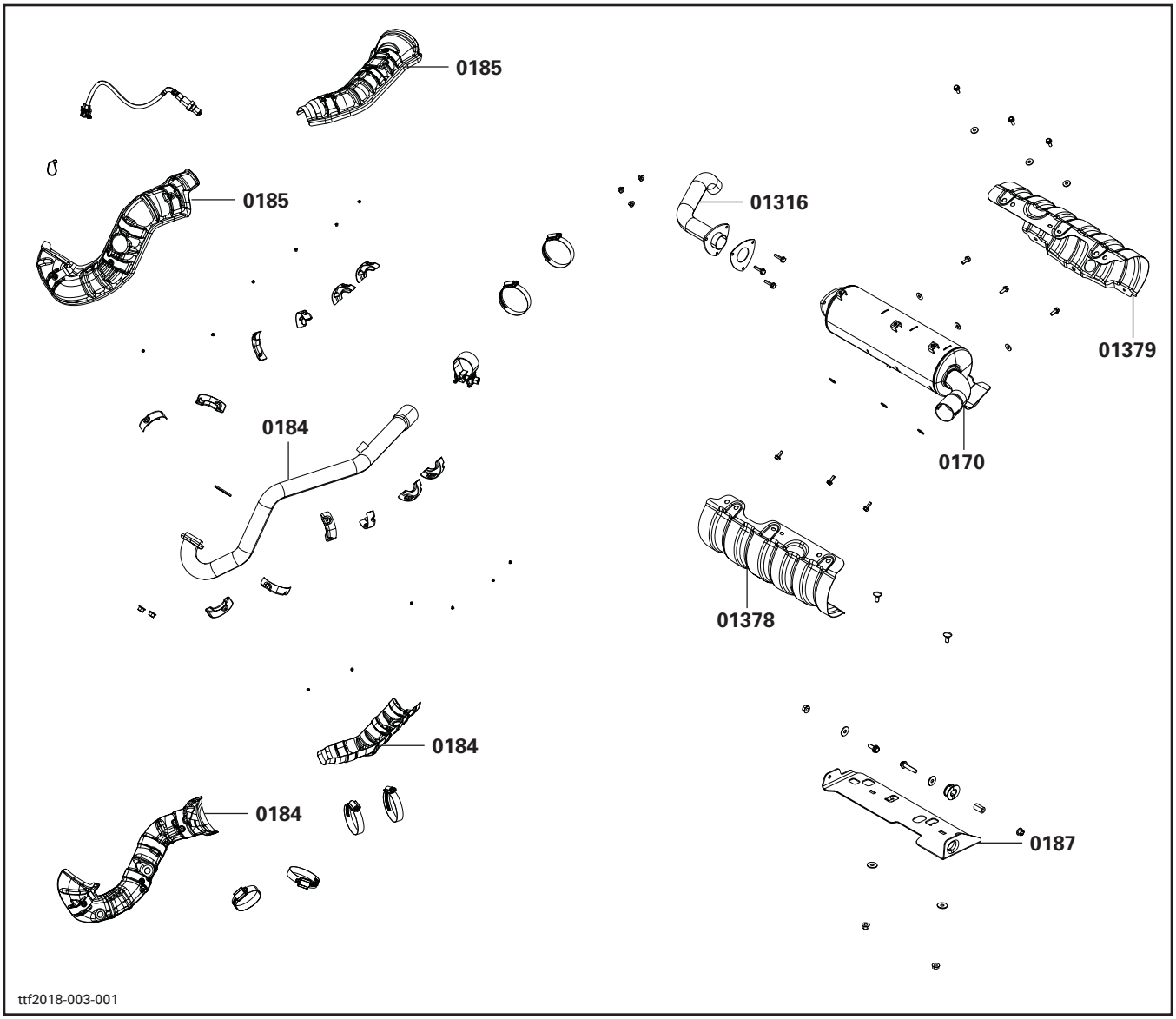

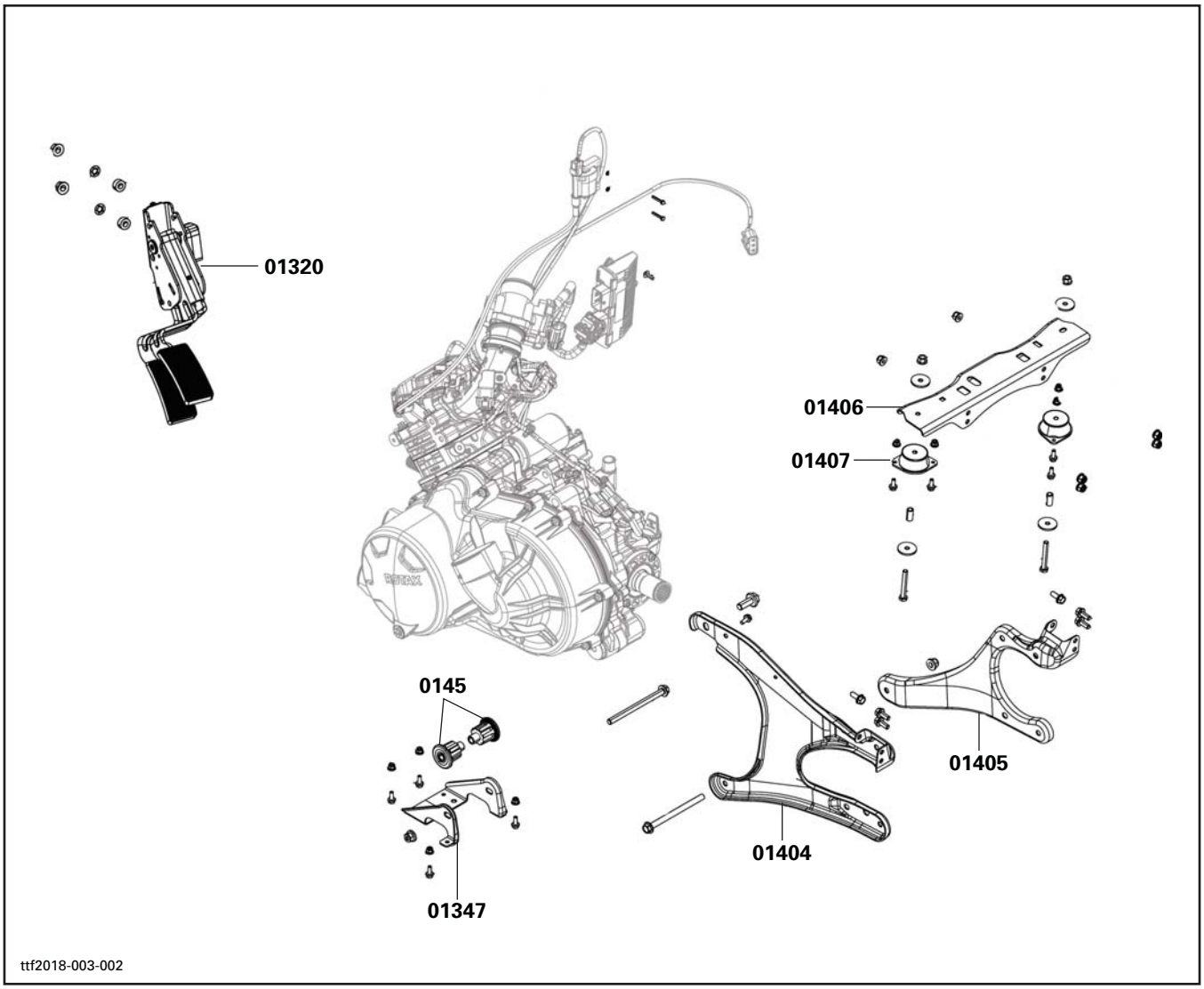
01320
01406
01407
0145
01405
01404
01347
ttf2018-003-002

INTAKE AND FUEL SYSTEM
ADMISSION ET SYSTÈME D'ALIMENTATION D'ESSENCE

SYSTEM SYSTÈME	CODE	DESCRIPTION	DEFENDER HD5	DEFENDER HD8 / HD10	DEFENDER CAB	DEFENDER CAB LTD	DEFENDER MAX	DEFEBDER NAX CAB	DEFENDER XMR	DEFENDER MAX XMR	DEFENDER 6 X 6	DEFENDER PRO
			17	18/19	20	21	22/23	24	25	26	27	28
02	**00**	**NO LABOR INVOLVED AUCUNE MAIN D'OEUVRE**	**0**	**0**	**0**	**0**	**0**	**0**	**0**	**0**	**0**	**0**
02	01	AIR INTAKE SILENCER (ASS'Y) SILENCIEUX D'ADMISSION D'AIR (COMPLET)	0.3	0.3	0.3	0.3	0.3	0.3	0.3	0.3	0.3	0.3
02	19	AIR INTAKE TUBE TUYAU D'ADMISSION D'AIR	0.3	0.3	0.3	0.3	0.3	0.3	0.3	0.3	0.3	0.3
02	23	REAR AIR INTAKE TUBE AND/OR SLEEVE TUYAU D'ADMISSION D'AIR ARRIÈRE ET/OU DOUILLE	0.3	0.3	0.3	0.3	0.3	0.3	0.3	0.3	0.3	0.3
02	46	AIR TEMPERATURE SENSOR CAPTEUR DE TEMPÉRATURE D'AIR	0.3	0.3	0.3	0.3	0.3	0.3	0.3	0.3	0.3	0.3
02	57	FUEL FILTER FILTRE À ESSENCE	0.3	0.3	0.3	0.3	0.3	0.3	0.3	0.3	0.3	0.3
02	58	FUEL TANK RÉSERVOIR D'ESSENCE	0.5	0.5	0.5	0.5	0.5	0.5	0.5	0.5	0.5	0.5
02	60	FUEL CAP BOUCHON DU RÉSERVOIR À ESSENCE	0.3	0.3	0.3	0.3	0.3	0.3	0.3	0.3	0.3	0.3
02	69	AIR FILTER FILTRE À AIR	0.3	0.3	0.3	0.3	0.3	0.3	0.3	0.3	0.3	0.3
02	72	INTAKE MANIFOLD CONNECTEUR D'ADMISSION	0.4	0.4	0.4	0.4	0.4	0.4	0.4	0.4	0.4	0.4
02	79	FUEL RAIL (1 OR 2) RAMPE D'ESSENCE (1 OU 2)	0.4	0.4	0.4	0.4	0.4	0.4	0.4	0.4	0.4	0.4
02	81	THROTTLE BODY (ASS'Y) CARTER ACCÉLÉRATEUR (COMPLET)	0.3	0.3	0.3	0.3	0.3	0.3	0.3	0.3	0.3	0.3
02	89	FUEL PUMP MODULE MODULE POMPE À ESSENCE	0.3	0.3	0.3	0.3	0.3	0.3	0.3	0.3	0.3	0.3
02	94	FEMALE QUICK FITTING CONNECTEUR RAPIDE FEMELLE	0.3	0.3	0.3	0.3	0.3	0.3	0.3	0.3	0.3	0.3
02	99	FUEL INJECTION HOSE (ASS'Y) BOYAU À INJECTION D'ESSENCE (COMPLET)	0.3	0.3	0.3	0.3	0.3	0.3	0.3	0.3	0.3	0.3
02	108	FUEL PUMP NUT AND/OR GASKET ECROU DE LA POMPE A ESSENCE ET/OU JOINT D'ÉTANCHÉITÉ	0.3	0.3	0.3	0.3	0.3	0.3	0.3	0.3	0.3	0.3
02	115	PLENUM CHAMBRE D'AIR	0.3	0.3	0.3	0.3	0.3	0.3	0.3	0.3	0.3	0.3
02	119	CHECK VALVE SOUPAPE DE RETENUE	0.3	0.3	0.3	0.3	0.3	0.3	0.3	0.3	0.3	0.3
02	128	FUEL TANK STRAP (ONE OR TWO) SANGLE DE RESERVOIR D'ESSENCE (UNE OU DEUX)	0.3	0.3	0.3	0.3	0.3	0.3	0.3	0.3	0.3	0.3
02	129	FILLER NECK GOULOT DE REMPLISSAGE	0.4	0.4	0.4	0.4	0.4	0.4	0.4	0.4	0.4	0.4
02	130	FILLER HOSE BOYAU DE REMPLISSAGE	0.3	0.3	0.3		0.3	0.3	0.3	0.3	0.3	0.3

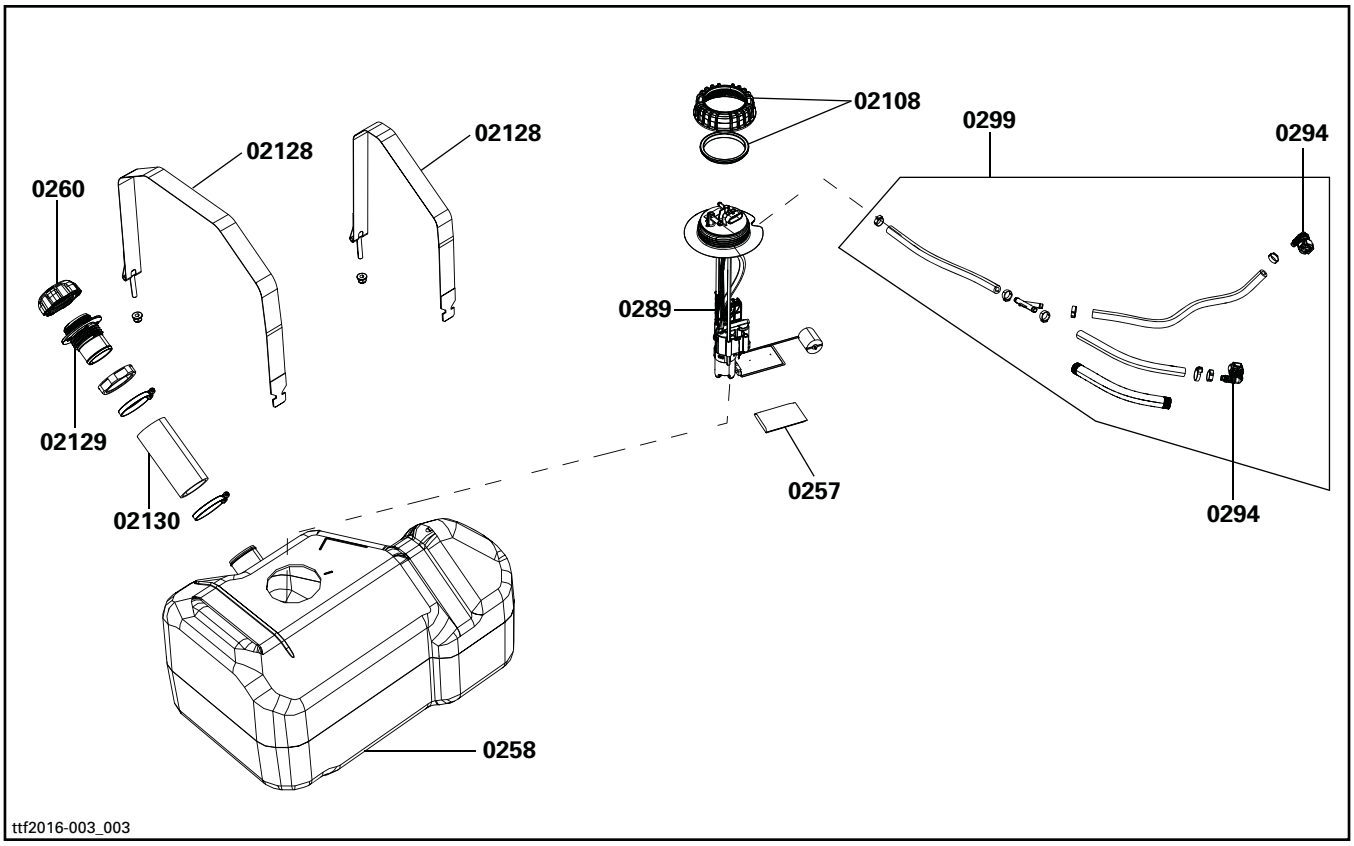
02108
0299
0294
02128
02128
0260
0289
02129
0257
02130
0294
0258
ttf2016-003_003

INTAKE AND FUEL SYSTEM
ADMISSION ET SYSTÈME D'ALIMENTATION D'ESSENCE

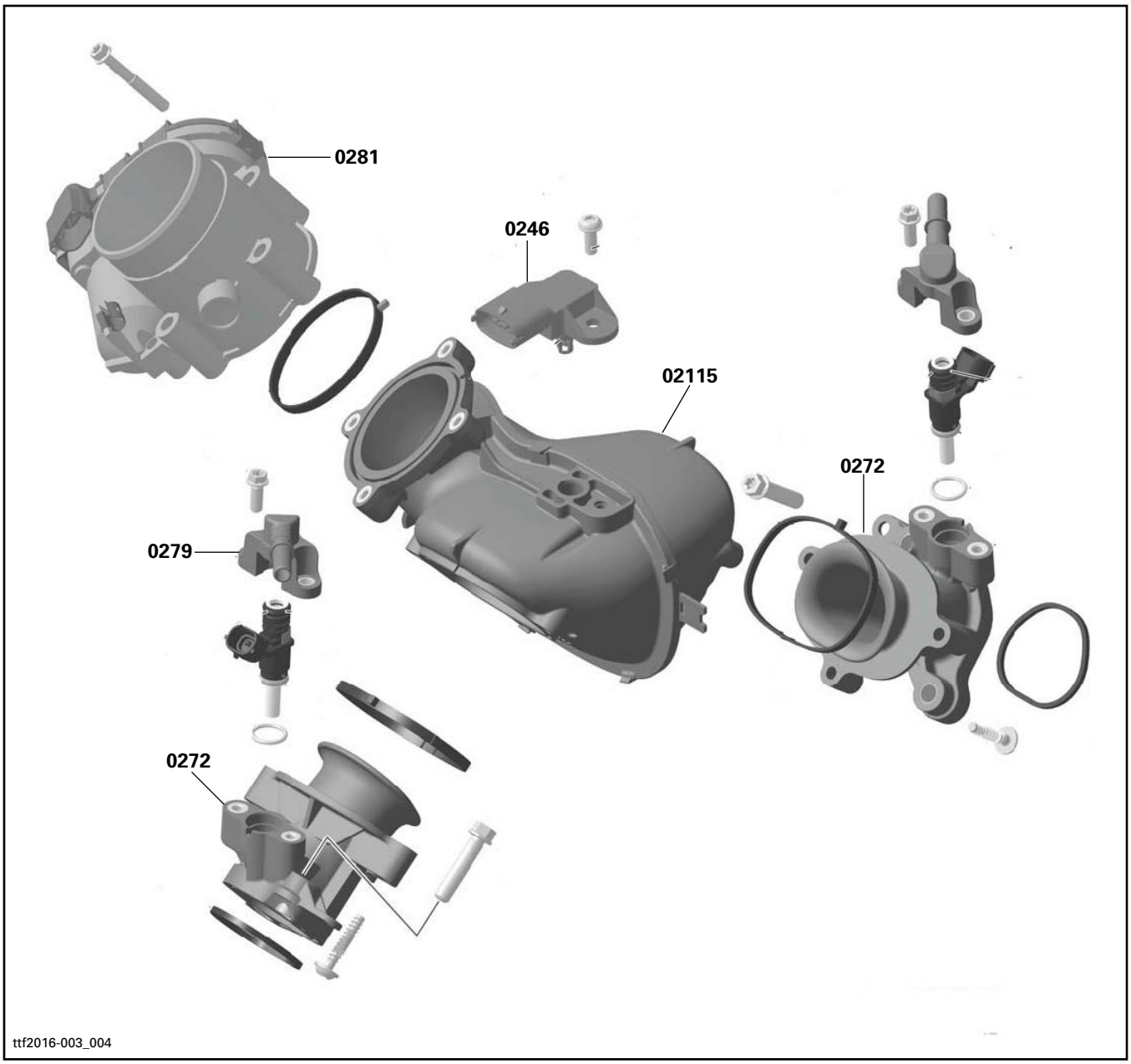

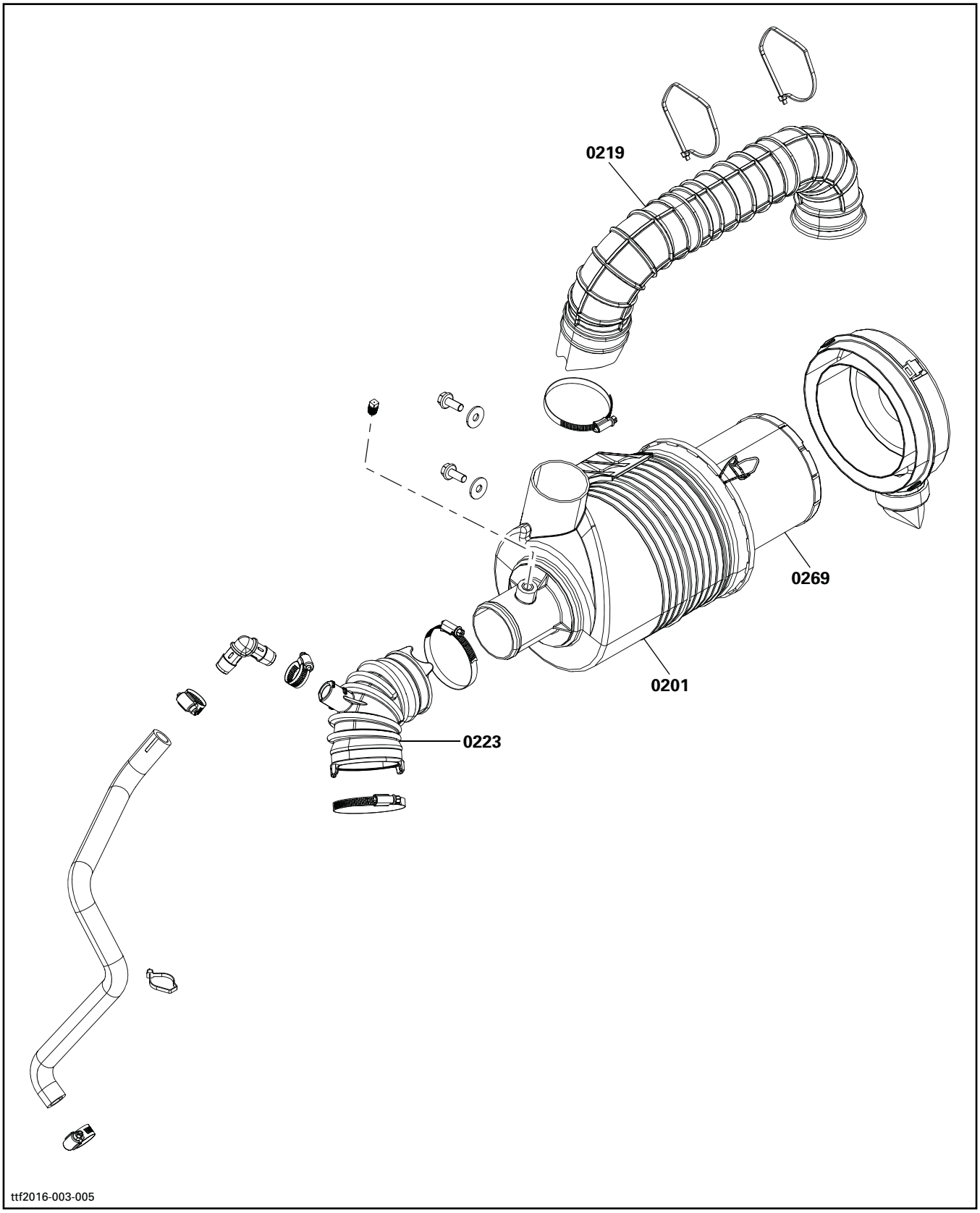
0219
0269
0201
0223
ttf2016-003-005

IGNITION SYSTEM
SYSTÈME D'ALLUMAGE

SYSTEM SYSTÈME	CODE	DESCRIPTION	DEFENDER HD5	DEFENDER HD8 / HD10	DEFENDER CAB	DEFENDER CAB LTD	DEFENDER MAX	DEFEBDER NAX CAB	DEFENDER XMR	DEFENDER MAX XMR	DEFENDER 6 X 6	DEFENDER PRO
			17	18/19	20	21	22/23	24	25	26	27	28
03	**00**	**NO LABOR INVOLVED AUCUNE MAIN D'OEUVRE**	**0**	**0**	**0**	**0**	**0**	**0**	**0**	**0**	**0**	**0**
03	02	MAGNETO (ASS'Y) MAGNÉTO (COMPLET)	3.9	2.3	2.3	4.0	2.3	4.0	2.3	2.3	2.3	2.3
03	08	IGNITION COIL (EACH) BOBINE D'ALLUMAGE (CHAQUE)	0.3	0.3	0.3	0.3	0.3	0.3	0.3	0.3	0.3	0.3
03	10	IGNITION CABLE CÂBLE D'ALLUMAGE	0.3	0.3	0.3	0.3	0.3	0.3	0.3	0.3	0.3	0.3
03	27	STATOR (ASS'Y) STATOR (COMPLET)	3.7	2.1	2.1	3.8	2.1	3.8	2.1	2.1	2.1	2.1
03	32	MAGNETO COVER COUVERCLE DE MAGNETO	3.7	2.1	2.1	3.8	2.1	3.8	2.1	2.1	2.1	2.1
03	33	MAGNETO GASKET COVER JOINT D'ÉTANCHÉITÉ DU COUVERCLE DE MAGNETO		2.0	2.0	3.7	2.0	3.7	2.0	2.0	2.0	2.0
03	40	BEARING AND SEAL ROULEMENT À BILLE ET JOINT D'ETANCHEITE				3.8		3.8				
03	41	PULLEY DRIVE (COMPRESSOR) POULIE MOTRICE (COMPRESSEUR)				0.7		0.7				
03	42	PULLEY DRIVE SEAL (COMPRESSOR) JOINT ETANCHE POULIE MOTRICE (COMPRESSEUR)				0.8		0.8				

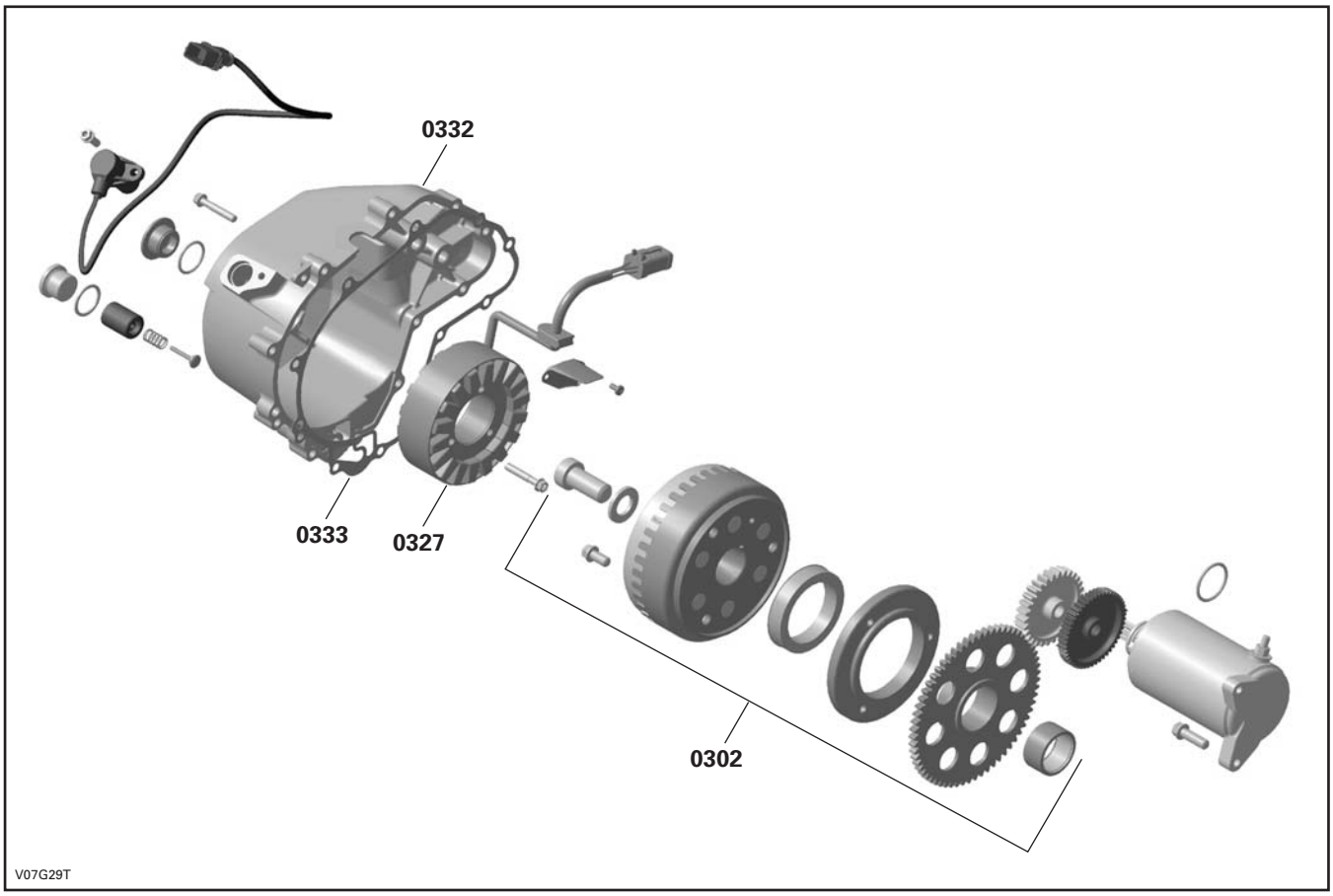
0332
0333
0327
0302
V07G29T

IGNITION SYSTEM
SYSTÈME D'ALLUMAGE

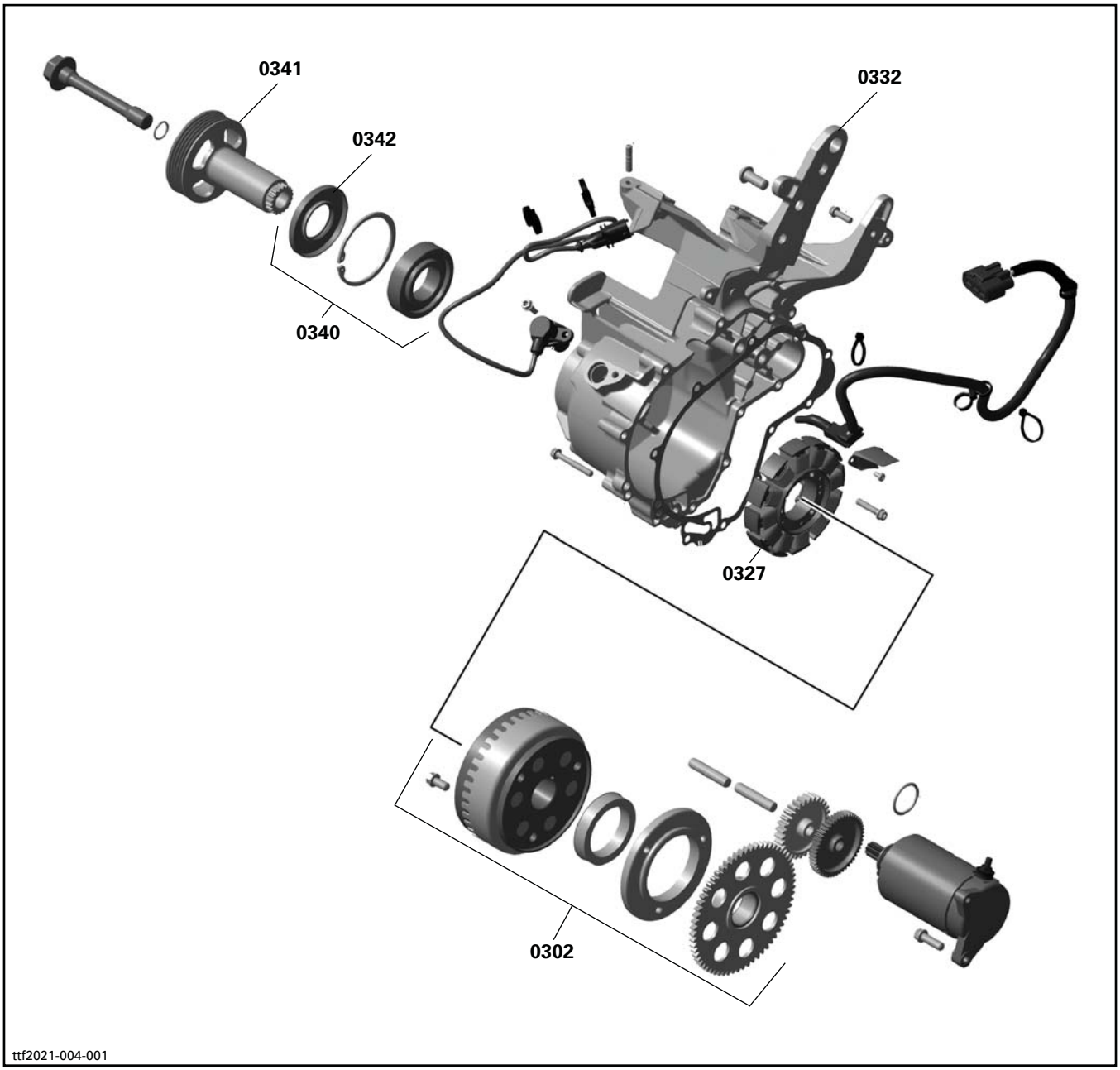

SYSTEM SYSTÈME	CODE	DESCRIPTION	DEFENDER HD5	DEFENDER HD8 / HD10	DEFENDER CAB	DEFENDER CAB LTD	DEFENDER MAX	DEFEBDER NAX CAB	DEFENDER XMR	DEFENDER MAX XMR	DEFENDER 6 X 6	DEFENDER PRO
			17	18/19	20	21	22/23	24	25	26	27	28
04	**00**	**NO LABOUR INVOLVED AUCUNE MAIN-D'OEUVRE**	**0**	**0**	**0**	**0**	**0**	**0**	**0**	**0**	**0**	**0**
04	02	ELECTRIC STARTER (ASS'Y) DÉMARREUR (COMPLET)	0.3	1.3	1.3	1.3	1.3	1.3	1.3	1.3	1.3	1.3
04	03	STARTER RELAY SOLÉNOÏDE DE DÉMARRAGE	0.3	0.3	0.3	0.3	0.3	0.3	0.3	0.3	0.3	0.3
04	19	STARTER DRIVE LANCEUR DÉMARREUR	0.7	2.3	2.3	4.0	2.3	4.0	2.3	2.3	2.3	2.3

TRANSMISSION AND LINKAGE SYSTEM
SYSTÈME DE TRANSMISSION ET DE TRINGLERIE

SYSTEM SYSTÈME	CODE	DESCRIPTION	DEFENDER HD5	DEFENDER HD8 / HD10	DEFENDER CAB	DEFENDER CAB LTD	DEFENDER MAX	DEFEBDER MAX CAB	DEFENDER XMR	DEFENDER MAX XMR	DEFENDER 6 X 6	DEFENDER PRO
			17	18/19	20	21	22/23	24	25	26	27	28
05	**00**	**NO LABOR INVOLVED AUCUNE MAIN-D'OEUVRE IMPLIQUÉE**	**0**	**0**	**0**	**0**	**0**	**0**	**0**	**0**	**0**	**0**
05	01	DRIVE PULLEY ASS'Y OR INNER HALF POULIE MOTRICE OU DEMIE-POULIE		0.6	0.6	0.6	0.6	0.6	0.6	0.6	0.6	0.6
05	06	GOVERNOR CUP AND/OR FIXED HALF CUVETTTE REGULATEUR ET/OU PARTIE FIXE POULIE		0.7	0.7	0.7	0.7	0.7	0.7	0.7	0.7	0.7
05	07	RAMPS AND/OR ADJUSTMENT SCREWS RAMPES ET/OU VIS DE REGLAGE DE POULIE		1.0	1.0	1.0	1.0	1.0	1.0	1.0	1.0	1.0
05	08	SPRING COVER AND/OR SPRING AND/OR BUSHING COUVERCLE ET/OU RESSORT ET/OU DOUILLE POULIE		0.7	0.7	0.7	0.7	0.7	0.7	0.7	0.7	0.7
05	10	SLIDING HALF, BUSHING AND/OR LEVER ROLLER DEMI-POULIE COULISSANTE,DOUILLE ET/OU ROULEMENT POULIE		1.0	1.0	1.0	1.0	1.0	1.0	1.0	1.0	1.0
05	11	DRIVEN PULLEY FIXED HALF DEMI-POULIE MENÉE FIXE	0.8	0.8	0.8	0.8	0.8	0.8	0.8	0.8	0.8	0.8
05	12	DRIVEN PULLEY SLIDING HALF DEMI-POULIE MENÉE COULISSANTE	0.5	0.7	0.7	0.7	0.7	0.7	0.7	0.7	0.7	0.7
05	13	DRIVEN PULLEY OUTER CAM AND/OR SPRIN CAME EXT. E/O RESSORT DE POULIE	0.7	0.7	0.7	0.7	0.7	0.7	0.7	0.7	0.7	0.7
05	19	BELT COURROIE	0.4	0.4	0.4	0.4	0.4	0.4	0.4	0.4	0.4	0.4
05	55	LEVER BUTTON BOUTON DE LEVIER	0.3	0.3	0.3	0.3	0.3	0.3	0.3	0.3	0.3	0.3
05	56	LEVER (ASS'Y) AND/OR LEVER SPRING LEVIER (COMPLET) ET/OU RESSORT DE LEVIER	0.5	0.5	0.5	0.5	0.5	0.5	0.5	0.5	0.5	0.5
05	59	SPEED SENSOR CAPTEUR DE VITESSE	0.3	0.3	0.3	0.3	0.3	0.3	0.3	0.3	0.3	0.3
05	63	SOLENOID VALVE (SHIFTING VALVE) SOUPAPE SOLENOÏDE (VALVE D'EMBRAYAGE)		0.3	0.3	0.3	0.3	0.3	0.3	0.3	0.3	0.3
05	66	GEARSHIFT LEVER LEVIER D'EMBRAYAGE	0.3	0.3	0.3	0.3	0.3	0.3	0.3	0.3	0.3	0.3
05	78	CVT COVER COUVERCLE CVC	0.3	0.3	0.3	0.3	0.3	0.3	0.3	0.3	0.3	0.3
05	79	GASKET JOINT D'ÉTANCHÉITÉ	0.3	0.3	0.3	0.3	0.3	0.3	0.3	0.3	0.3	0.3
05	80	GOVERNOR CUP COUPOLE RÉGULATEUR	0.7									
05	81	ONE WAY CLUTCH, FLANGE, RING, SPRING EMBRAYAGE À ROUE LIBRE, FLASQUE, ANNEAU, RESSORT	0.7									
05	83	DRIVE PULLEY FIXED HALF POULIE MOTRICE FIXE	0.6									

SYSTEM SYSTÈME	CODE	DESCRIPTION	DEFENDER HD5	DEFENDER HD8 / HD10	DEFENDER CAB	DEFENDER CAB LTD	DEFENDER MAX	DEFEBDER NAX CAB	DEFENDER XMR	DEFENDER MAX XMR	DEFENDER 6 X 6	DEFENDER PRO
			17	18/19	20	21	22/23	24	25	26	27	28
05	84	DRIVEN PULLEY OUTER CAM A/O SPRING CAME POULI MENEE EXT ET/OU RESSORT	0.5									
05	85	CENTRIFUGAL LEVER LEVIER CENTRIFUGE	1.0									
05	86	SLIDER SHOES GLISSIÈRES	0.7	0.7	0.7	0.7	0.7	0.7	0.7	0.7	0.7	0.7
05	89	REMOVE AND REPLACE TRANSMISSION ASS'Y REMPLACEMENT DE LA TRANSMISSION (COMPLET)		5.1	5.1	5.1	5.1	5.1	5.1	5.1	5.4	5.1
05	95	AIR INTAKE (CVT) ENTRÉE D'AIR (CVC)	0.3	0.3	0.3	0.3	0.3	0.3	0.3	0.3	0.3	0.3
05	96	AIR OUTLET (CVT) SORTIE D'AIR (CVC)	0.3	0.3	0.3	0.3	0.3	0.3	0.3	0.3	0.3	0.3
05	97	FLEXIBLE ADAPTOR ADAPTATEUR FLEXIBLE	0.3	0.3	0.3	0.3	0.3	0.3	0.3	0.3	0.3	0.3
05	98	CAM, PLATE, DRIVEN SHAFT, SPRING CAME, PLAQUE, ARBRE POULIE MENÉE, RESSORT	0.5									
05	99	OUTPUT SHAFT ARBRE DE SORTIE		5.9	5.9	5.9	5.9	5.9	5.9	5.9	6.2	5.9
05	100	REAR OUTPUT SHAFT SEALS ANNEAUX ÉTANCHÉITÉ DE L'ARBRE DE SORTIE ARRIÈRE		5.3	5.3	5.3	5.3	5.3	5.3	5.3	5.6	5.3
05	101	GEARS BOX (ASS'Y)/MAIN SHAFT BOÎTE D'ENGRENAGE (COMPLET)/ARBRE PRINCIPAL		6.0	6.0	6.0	6.0	6.0	6.0	6.0	6.5	6.0
05	102	SHIFT SHAFT (ASS'Y) ARBRE D'EMBRAYAGE (COMPLET)		6.0	6.0	6.0	6.0	6.0	6.0	6.0	6.5	6.0
05	103	SHIFT DRUM TAMBOUR D'EMBRAYAGE		6.0	6.0	6.0	6.0	6.0	6.0	6.0	6.5	6.0
05	104	INDEX LEVER (ASS'Y) LEVIER D'INDEXATION (COMPLET)		1.5	1.5	1.5	1.5	1.5	1.5	1.5	1.5	1.5
05	105	MAIN SHAFT SEAL JOINT D'ÉTANCHÉITÉ DE L'ARBRE PRINCIPAL		1.3	1.3	1.3	1.3	1.3	1.3	1.3	1.3	1.5
05	108	ACTUATOR AND/OR FORK AND/OR SEAL ACTUATEUR ET/OU FOURCHETTE ET/OU JOINT D'ÉTANCHÉITÉ	0.3	0.3	0.3	0.3	0.3	0.3	0.3	0.3	0.3	0.3
05	109	FORK AND/OR PIN FOURCHETTE ET/OU GOUPILLE	6.0	6.0	6.0	6.0	6.0	6.0	6.0	6.0	6.5	6.0
05	113	SHIFTING SWITCH INTERRUPTEUR D'EMBRAYAGE	0.3	0.3	0.3	0.3	0.3	0.3	0.3	0.3	0.3	0.3
05	114	SHIFT SHAFT SEAL ANNEAU ET ANCHE DE L'ARBRE D'EMBRAYAGE		0.4	0.4	0.4	0.4	0.4	0.4	0.4	0.4	0.4
05	115	CVT AIR GUIDE AND/OR O-RINGS GUIDE D'AÉRATION ET/OU JOINT D'ÉTANCHÉITÉ		1.1	1.1	1.1	1.1	1.1	1.1	1.1	1.1	1.1

TRANSMISSION AND LINKAGE SYSTEM
SYSTÈME DE TRANSMISSION ET DE TRINGLERIE

SYSTEM SYSTÈME	CODE	DESCRIPTION	DEFENDER HD5	DEFENDER HD8 / HD10	DEFENDER CAB	DEFENDER CAB LTD	DEFENDER MAX	DEFEBDER MAX CAB	DEFENDER XMR	DEFENDER MAX XMR	DEFENDER 6 X 6	DEFENDER PRO
			17	18/19	20	21	22/23	24	25	26	27	28
05	120	GEARBOX POSITION SENSOR CAPTEUR DE POSITION D'ENGRENAGE	0.3	0.3	0.3	0.3	0.3	0.3	0.3	0.3	0.3	0.3
05	133	STUDS AN/OR ROLLERS PIVOTS ET/OU ROULEAUX	0.8	0.8	0.8	0.8	0.8	0.8	0.8	0.8	0.8	0.8
05	159	PRIMARY INLET AND/OR ADAPTER ENTRÉE PRIMAIRE ET/OU ADAPTATEUR		0.3	0.3	0.3	0.3	0.3	0.3	0.3	0.3	0.3
05	160	FILTER FILTRE	0.3	0.3	0.3	0.3	0.3	0.3	0.3	0.3	0.3	0.3
05	161	SHIFTING CABLE CÂBLE D'EMBRAYAGE	1.0	1.0	1.0	1.0	1.0	1.0	1.0	1.0	1.0	1.0
05	165	DRAIN PLUG (CVT) BOUCHON DE VIDANGE (CVC)	0.3	0.3	0.3	0.3	0.3	0.3	0.3	0.3	0.3	0.3
05	179	OIL GUIDING PLATE DÉFLECTEUR D'HUILE									3.5	
05	188	GEAR HOUSING AND/OR BEARINGS BOITIER D'ENGRENAGE ET/OU ROULEMENTS À BILLES		6.5	6.5	6.5	6.5	6.5	6.5	6.5	7.0	6.5
05	189	GEARBOX COVER AND GASKET COUVERCLE DE LA TRANSMISSION ET JOINT ÉTANCHE		1.2	1.2	1.2	1.2	1.2	1.2	1.2	1.2	1.2
05	190	BEARING COVER COUVERCLE DE ROULEMENT À BILLE	2.2	2.2	2.2	2.2	2.2	2.2	2.2	2.2	2.2	2.2
05	191	DIFFERENTIAL SEAL (1) JOINT D'ÉTANCHÉITÉ DU DIFFERENTIEL (1)		0.5	0.5	0.5	0.5	0.5	0.5	0.5	0.5	0.5
05	192	DIFFERENTIAL SEALS (2) JOINTS D'ÉTANCHÉITÉ DU DIFFÉRENTIEL (2)		0.9	0.9	0.9	0.9	0.9	0.9	0.9	0.9	0.9
05	208	TOP AIR INTAKE (CVT) ENTRÉE D'AIR SUPERIEUR (CVT)							0.3	0.3		
05	209	TOP AIR OUTLET (CVT) SORTIE D'AIR SUPÉRIEUR (CVT)							0.3	0.3		
05	210	CAP ENJOLIVEUR							0.3	0.3		
05	211	PIPE VENT TUYAU DE VENTILATION							0.3	0.3		
05	220	BEVEL GEARS SET WITH CRANKCASE ENSEMBLE D'ENGRENAGES CONIQUE AVEC CARTER									3.5	
05	221	REAR BEARING COVER AND OIL SEAL COUVERCLE DE ROULEMENT À BILLE ARRIÈRE ET JOINT D'ÉTANCHÉITÉ									3.5	

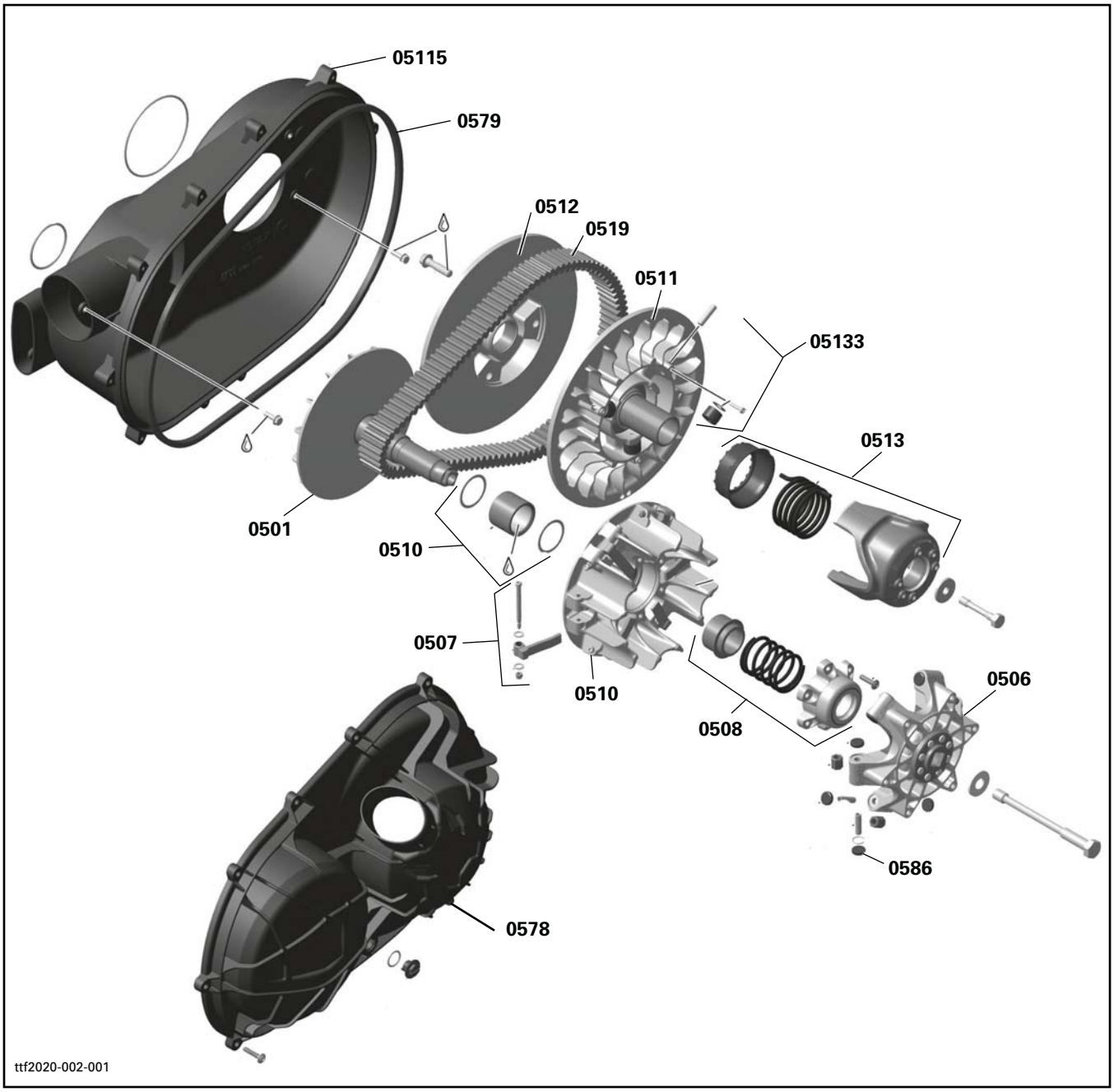
05115
0579
0512
0519
0511
05133
0513
0501
0510
0507
0510
0506
0508
0586
0578
ttf2020-002-001

TRANSMISSION AND LINKAGE SYSTEM
SYSTÈME DE TRANSMISSION ET DE TRINGLERIE

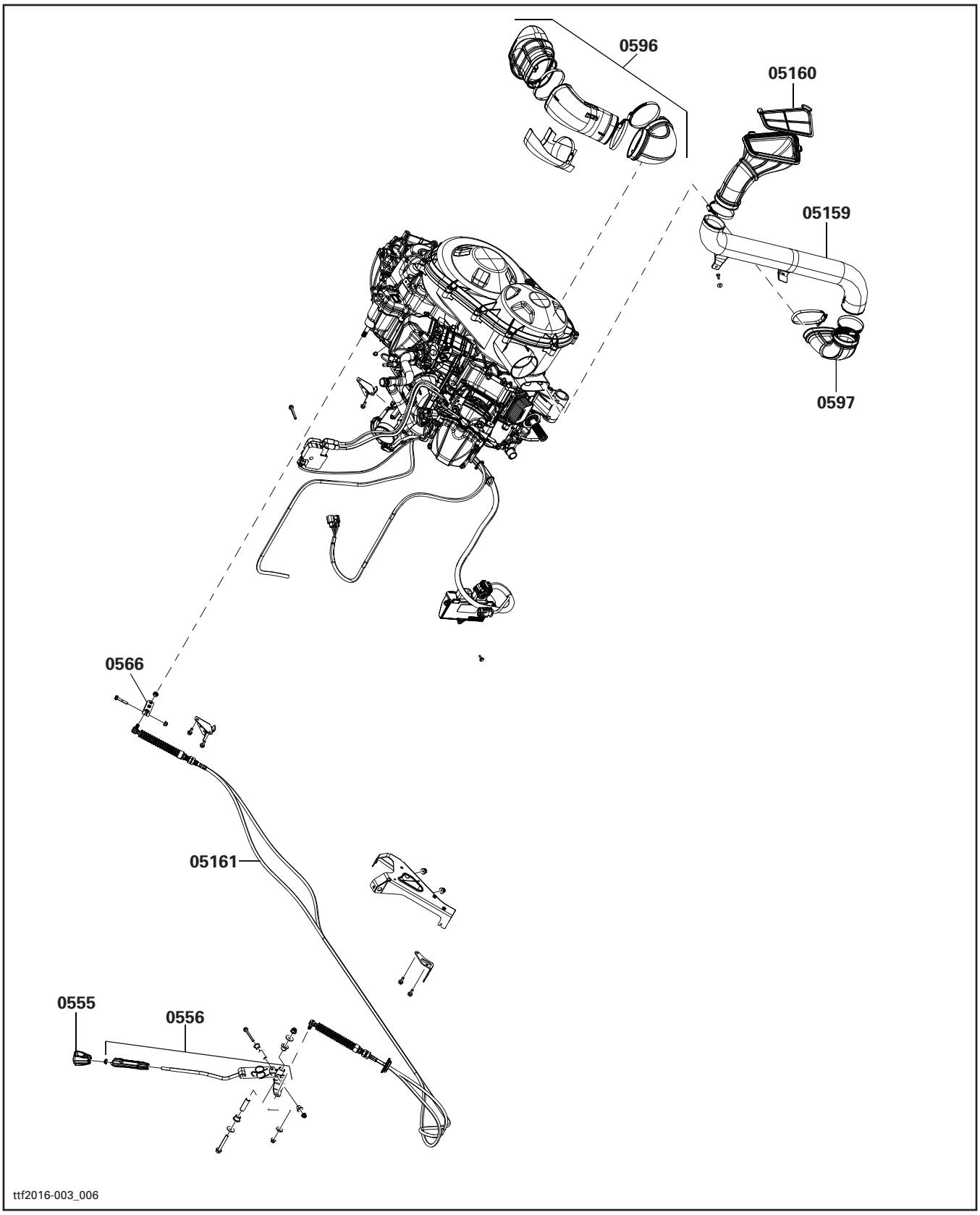

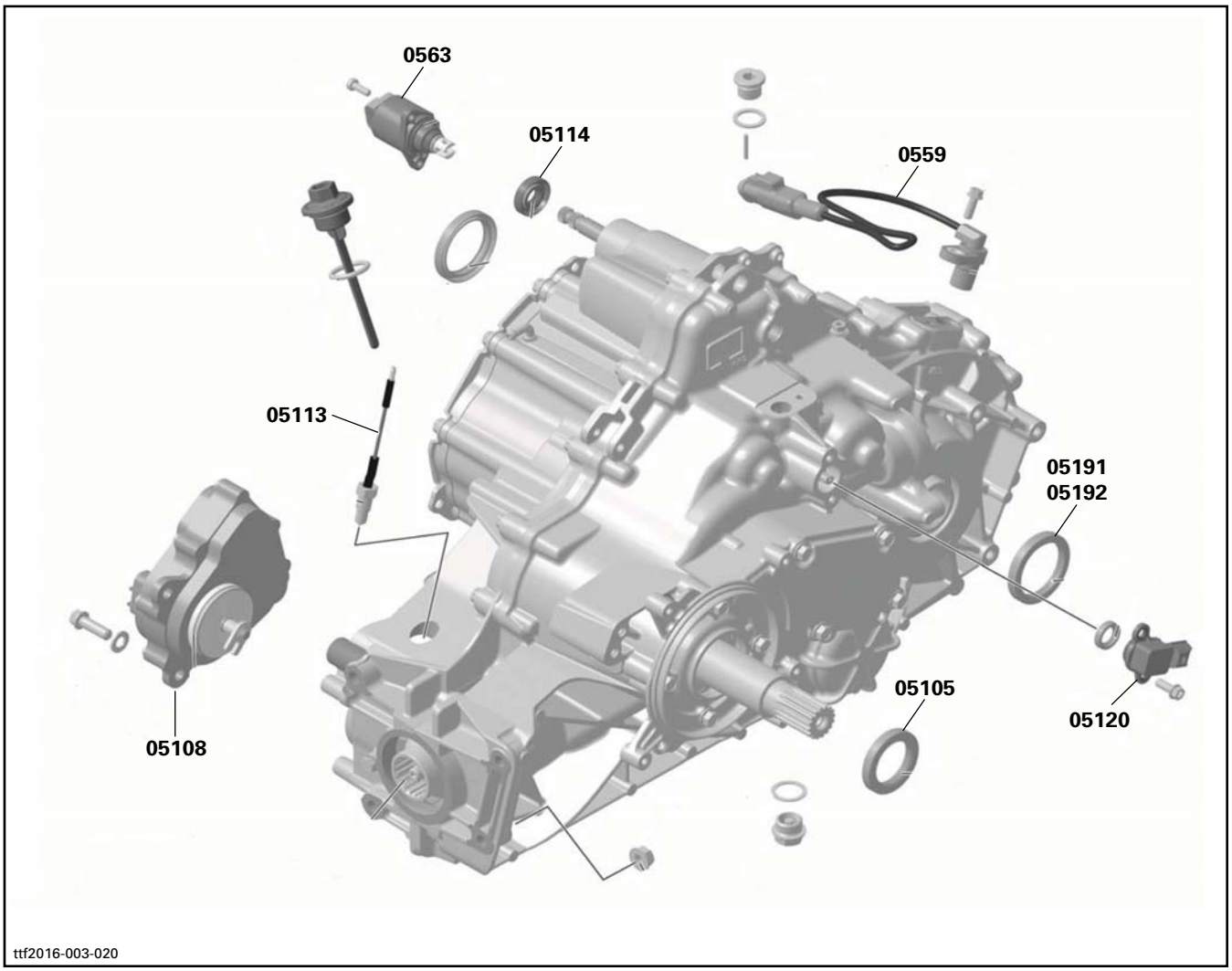
0563
05114
0559
05113
05191
05192
05105
05120
05108
ttf2016-003-020

TRANSMISSION AND LINKAGE SYSTEM
SYSTÈME DE TRANSMISSION ET DE TRINGLERIE

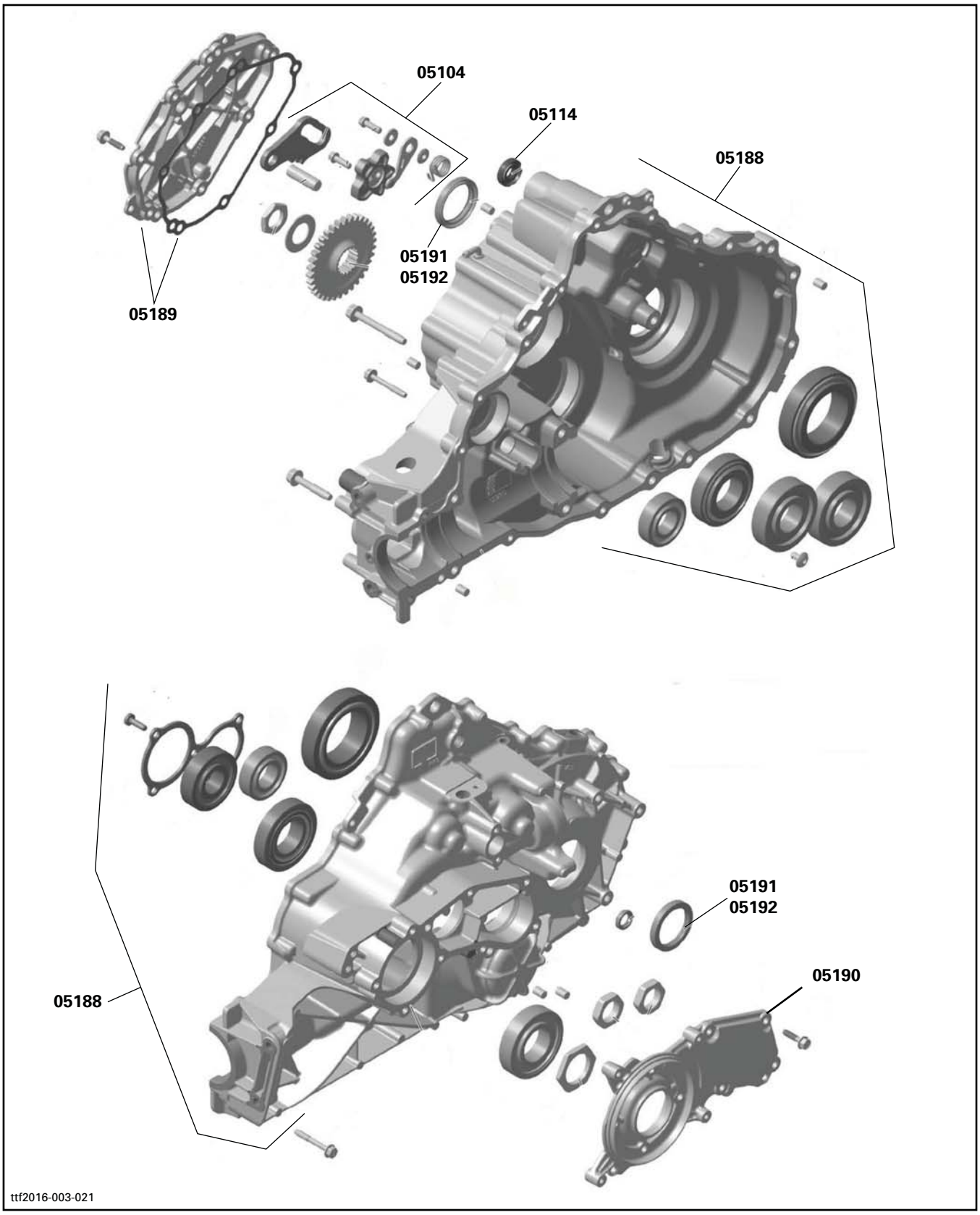

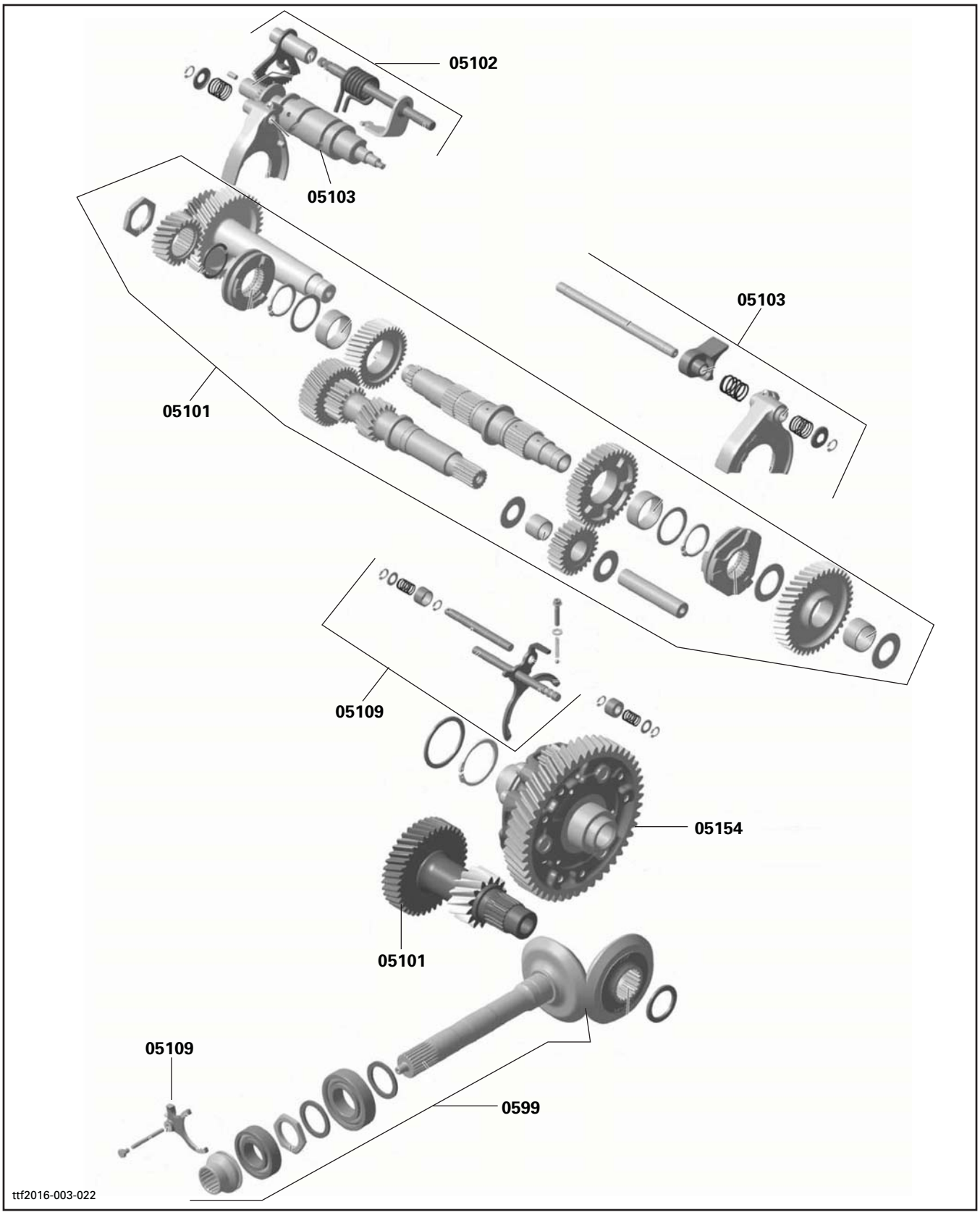
05102
05103
05103
05101
05109
05154
05101
05109
0599
ttf2016-003-022

TRANSMISSION AND LINKAGE SYSTEM
SYSTÈME DE TRANSMISSION ET DE TRINGLERIE

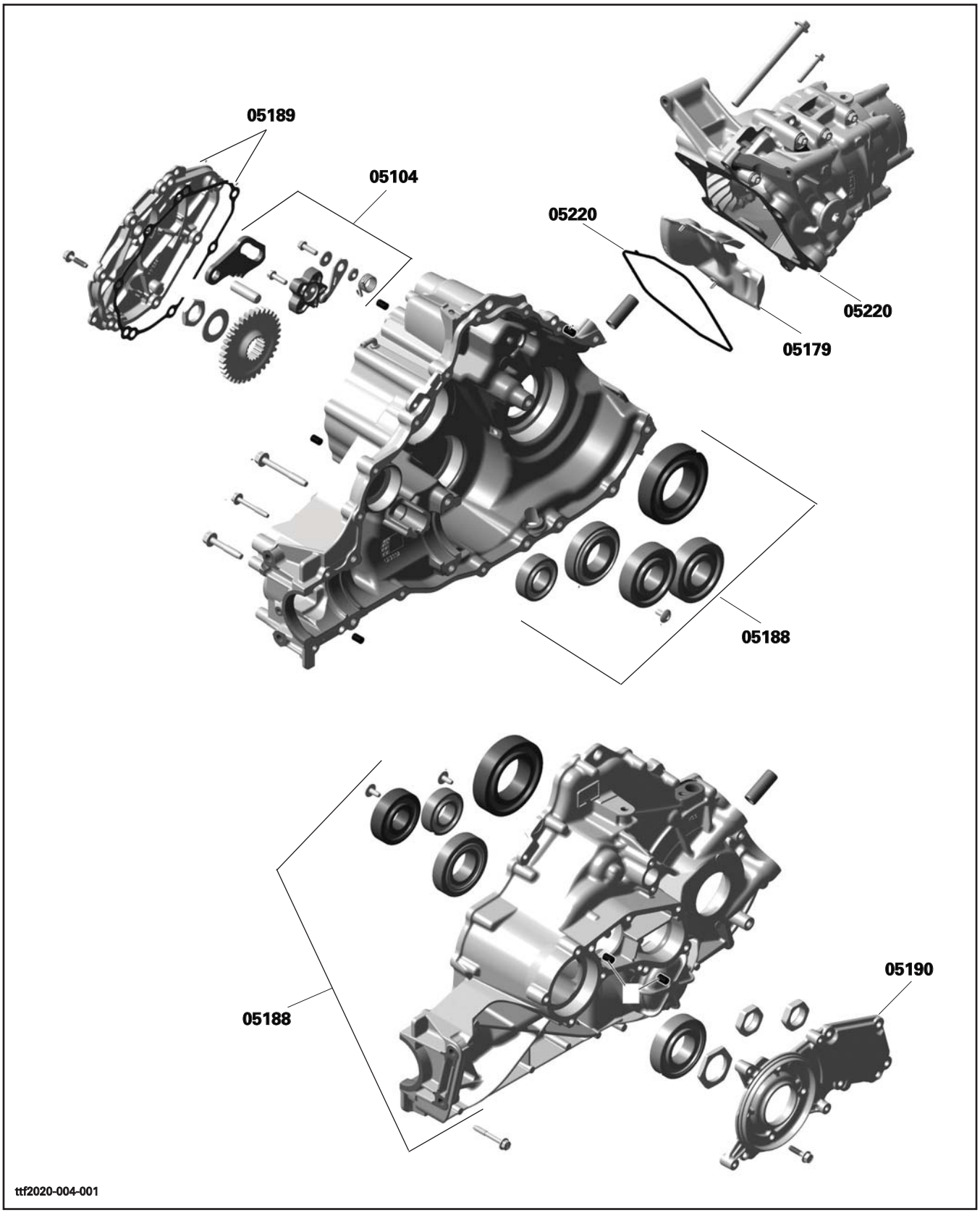

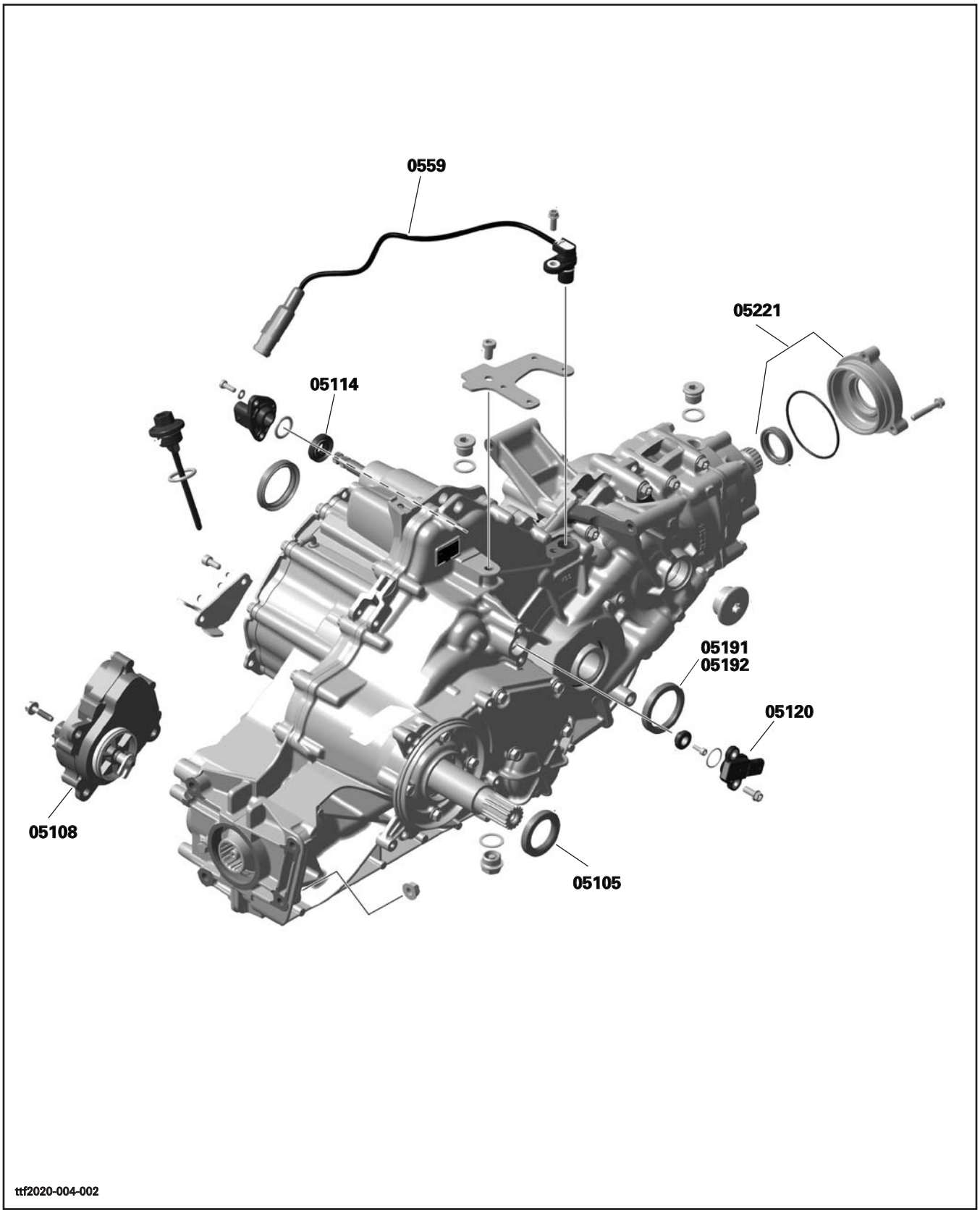
0559
05221
05114
05191
05192
05120
05108
05105
ttf2020-004-002

TRANSMISSION AND LINKAGE SYSTEM
SYSTÈME DE TRANSMISSION ET DE TRINGLERIE

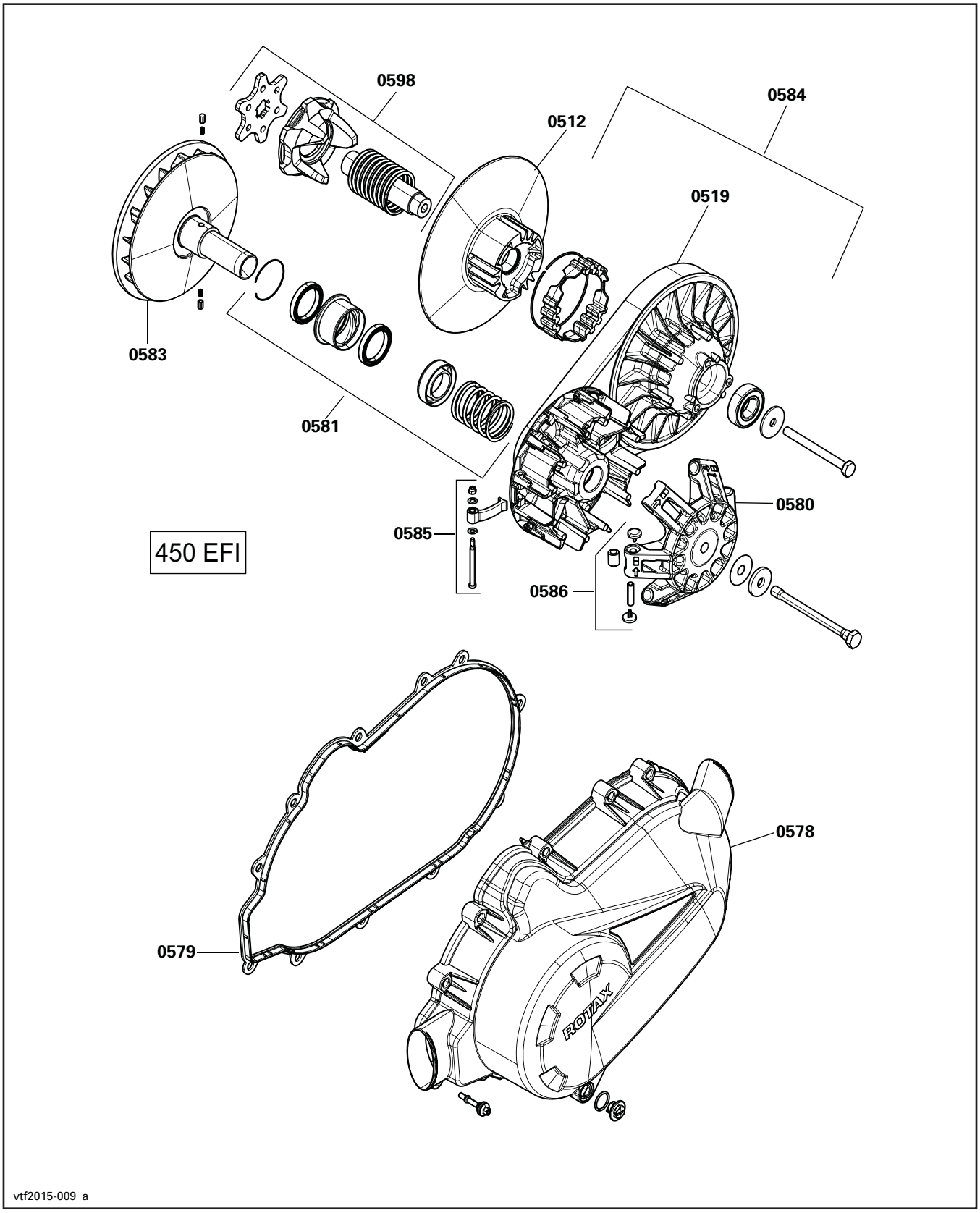

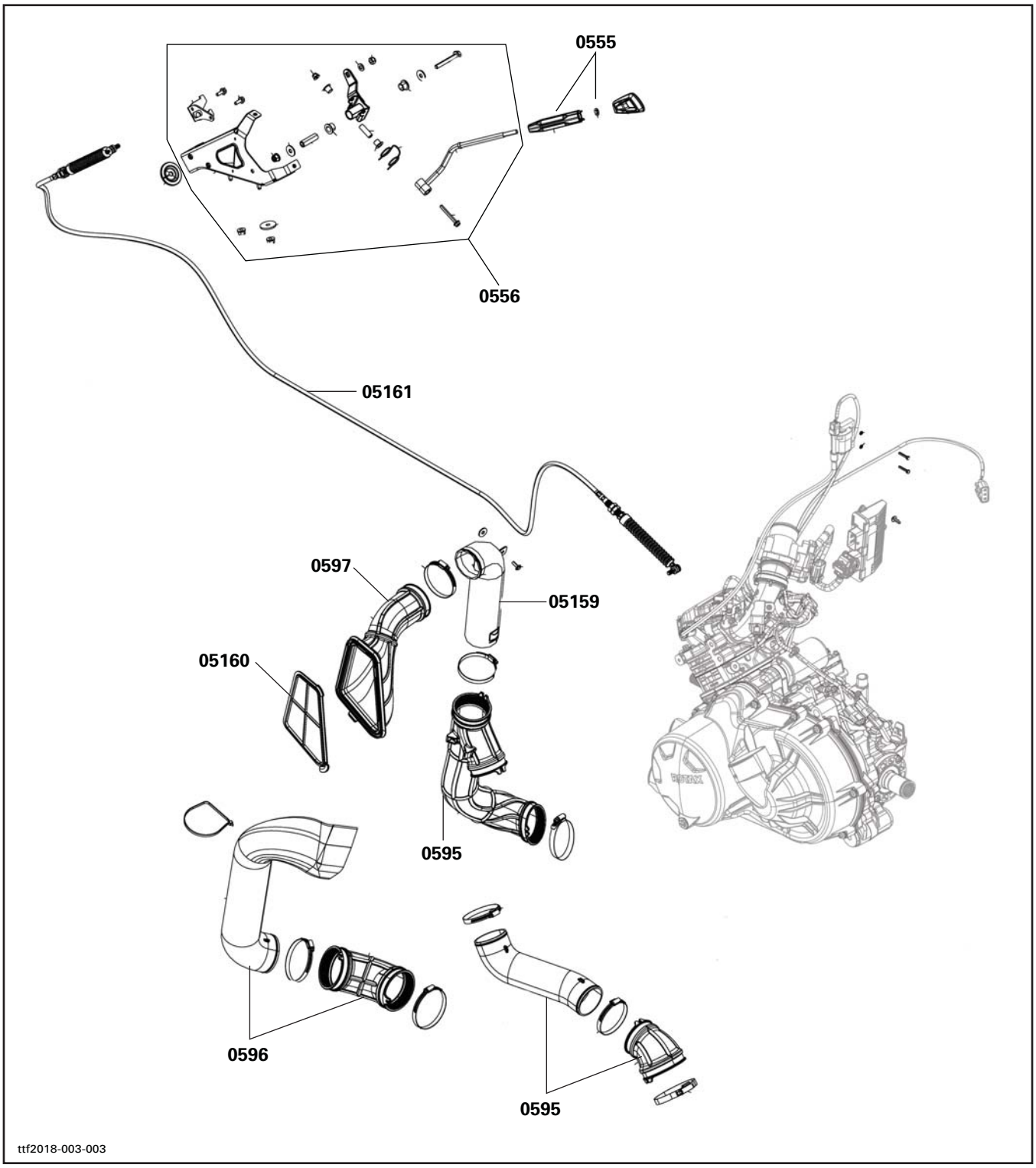
0555
0556
05161
0597
05159
05160
0595
0596
0595
ttf2018-003-003

TRANSMISSION AND LINKAGE SYSTEM
SYSTÈME DE TRANSMISSION ET DE TRINGLERIE

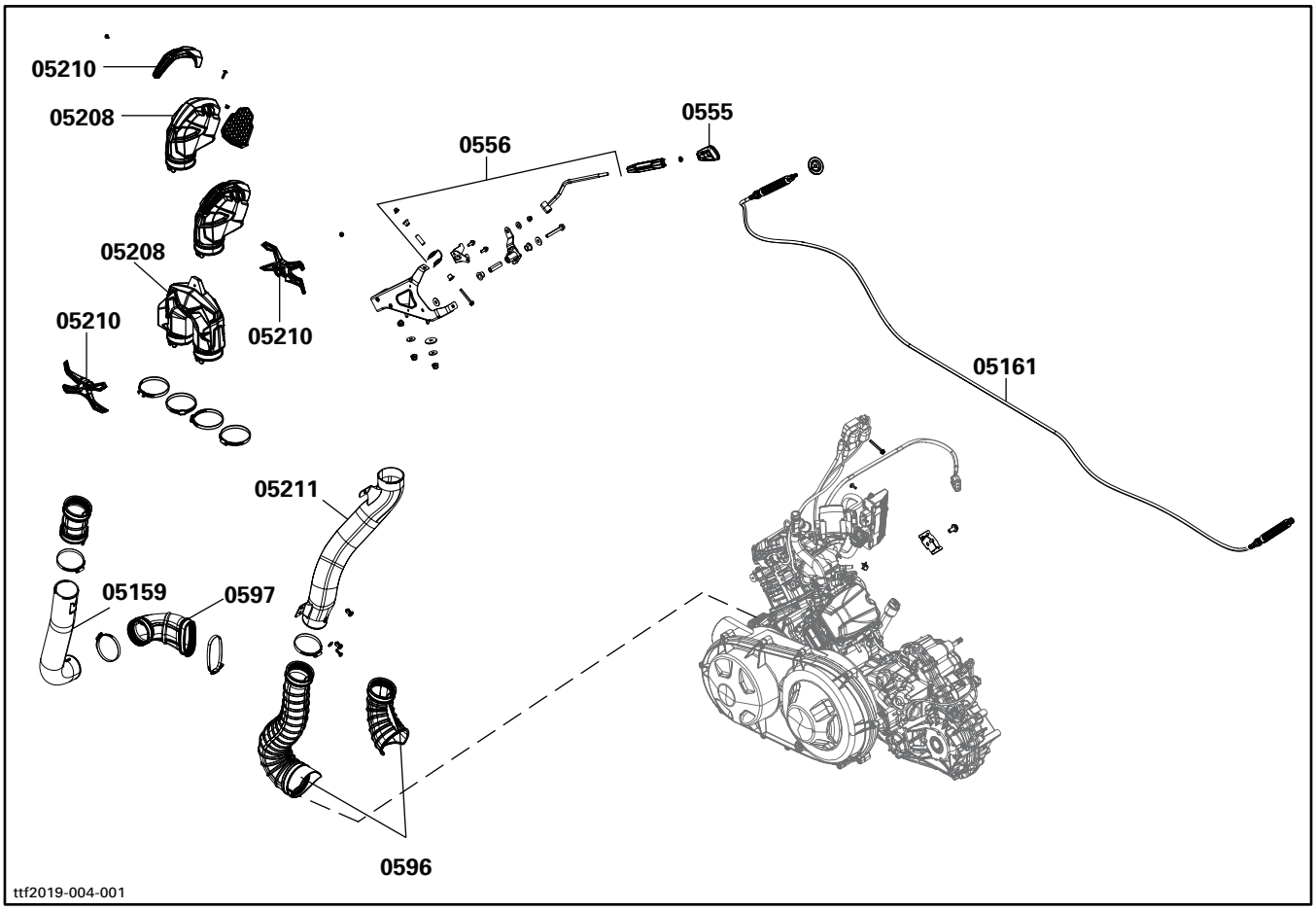

SYSTEM SYSTÈME	CODE	DESCRIPTION	DEFENDER HD5	DEFENDER HD8 / HD10	DEFENDER CAB	DEFENDER CAB LTD	DEFENDER MAX	DEFEBDER NAX CAB	DEFENDER XMR	DEFENDER MAX XMR	DEFENDER 6 X 6	DEFENDER PRO
			17	18/19	20	21	22/23	24	25	26	27	28
06	**00**	**NO LABOR INVOLVED AUCUNE MAIN-D'OEUVRE**	**0**	**0**	**0**	**0**	**0**	**0**	**0**	**0**	**0**	**0**
06	06	MASTER CYLINDER MAÎTRE-CYLINDRE	1.0	1.0	1.0	1.0	1.0	1.0	1.0	1.0	1.0	1.0
06	09	FRONT CALIPER (RH OR LH) ÉTRIER AVANT (DROIT OU GAUCHE)	0.5	0.5	0.5	0.5	0.5	0.5	0.5	0.5	0.5	0.5
06	10	FRONT BRAKE PAD (RH OR LH) PLAQUETTE DE FREIN AVANT (DROIT OU GAUCHE)	0.3	0.3	0.3	0.3	0.3	0.3	0.3	0.3	0.3	0.3
06	11	FRONT BRAKE DISC (RH OR LH) DISQUE DE FREIN AVANT (DROIT OU GAUCHE)	0.4	0.4	0.4	0.4	0.4	0.4	0.4	0.4	0.4	0.4
06	12	FRONT FLEXIBLE BRAKE HOSE BOYAU FLEXIBLE DE FREIN AVANT	1.0	1.0	1.0	1.0	1.0	1.0	1.0	1.0	1.0	1.0
06	19	BRAKE SWITCH INTERRUPTEUR DE FREIN	0.3	0.3	0.3	0.3	0.3	0.3	0.3	0.3	0.3	0.3
06	25	REAR BRAKE HOSE BOYAU DE FREIN ARRIÈRE	1.2	1.2	1.2	1.2	1.5	2.2	1.2	1.5	1.2	2.5
06	26	REAR CALIPER ÉTRIER ARRIÈRE	0.5	0.5	0.5	0.5	0.5	0.5	0.5	0.5	0.5	0.5
06	27	REAR BRAKE PAD PLAQUETTE DE FREIN ARRIÈRE	0.3	0.3	0.3	0.3	0.3	0.3	0.3	0.3	0.3	0.3
06	28	REAR BRAKE DISC DISQUE DE FREIN ARRIÈRE	0.4	0.4	0.4	0.4	0.4	0.4	0.4	0.4	0.4	0.4
06	34	MASTER CYLINDER RESERVOIR RÉSERVOIR DU MAÎTRE-CYLINDRE	0.5	0.5	0.5	0.5	0.5	0.5	0.5	0.5	0.5	0.5
06	35	BRAKE PEDAL PÉDALE DE FREIN	0.5	0.5	0.5	0.5	0.5	0.5	0.5	0.5	0.5	0.5
06	44	MASTER CYLINDER ROD TIGE DU MAÎTRE-CYLINDRE	0.4	0.4	0.4	0.4	0.4	0.4	0.4	0.4	0.4	0.4

BRAKE SYSTEM
SYSTÈME DE FREIN

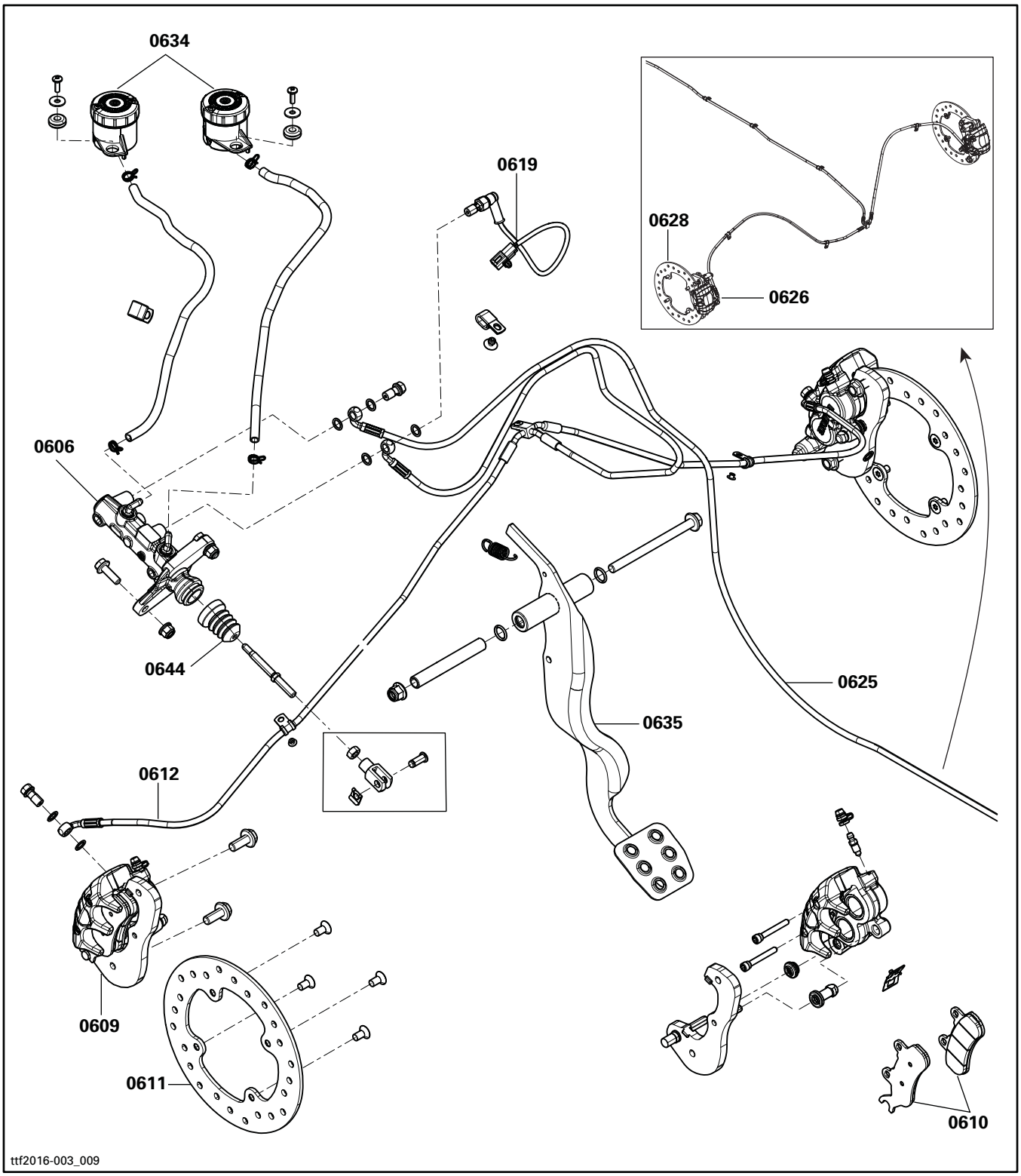

SYSTEM SYSTÈME	CODE	DESCRIPTION	DEFENDER HD5	DEFENDER HD8 / HD10	DEFENDER CAB	DEFENDER CAB LTD	DEFENDER MAX	DEFEBDER NAX CAB	DEFENDER XMR	DEFENDER MAX XMR	DEFENDER 6 X 6	DEFENDER PRO
			17	18/19	20	21	22/23	24	25	26	27	28
07	**00**	**NO LABOR INVOLVED** **AUCUNE MAIN-D'OEUVRE**	**0**	**0**	**0**	**0**	**0**	**0**	**0**	**0**	**0**	**0**
07	04	ARM PROTECTOR (RH OR LH) PROTECTEUR DE BRAS (DROIT OU GAUCHE)	0.3	0.3	0.3	0.3	0.3	0.3	0.3	0.3	0.3	0.3
07	13	EXTERNAL BALL JOINT (RH OR LH) JOINT À ROTULE EXTERNE (DROIT OU GAUCHE)	0.8	0.8	0.8	0.8	0.8	0.8	0.8	0.8	0.8	0.8
07	24	MAIN TUBE TUBE PRINCIPAL	1.0	1.0	1.0	1.0	1.0	1.0	1.0	1.0	1.0	1.0
07	27	STEERING COVER COUVRE-GUIDON	0.3	0.3	0.3	0.3	0.3	0.3	0.3	0.3	0.3	0.3
07	32	LOWER ARM AND/OR BALL JOINT (RH OR LH) BRAS INFÉRIEUR ET/OU JOINT À ROTULE (DROIT OU GAUCHE)	0.7	0.7	0.7	0.7	0.7	0.7	0.7	0.7	0.7	0.7
07	33	UPPER ARM (RH OR LH) BRAS DE SUSPENSION SUPÉRIEUR (DROIT OU GAUCHE)	0.7	0.7	0.7	0.7	0.7	0.7	0.7	0.7	0.7	0.7
07	37	FRONT SHOCK AND/OR SPRING AND/OR STOPPER AND/OR PROTECTOR AND/OR SEAT (RH OR LH) AMORTISSEUR AVANT ET/OU RESSORT ET/OU BUTÉE ET/OU SIÈGE ET/OU PROTECTEUR (DROIT OU GAUCHE)	0.4	0.4	0.4	0.4	0.4	0.4	0.4	0.4	0.4	0.4
07	40	FRONT DIFFERENTIEL (ASS'Y) DIFFÉRENTIEL AVANT (COMPLET)	2.4	2.4	2.4	2.4	2.4	2.4	2.4	2.4	2.4	2.4
07	42	FRONT PROPELLER SHAFT (ASS'Y) ARBRE DE PROPULSION AVANT (COMPLET)	2.0	2.0	2.0	2.0	2.0	2.0	2.0	2.0	2.0	2.0
07	45	CV JOINT (RH OR LH) JOINT HOMOCINÉTIQUE (DROIT OU GAUCHE)	0.7	0.7	0.7	0.7	0.7	0.7	0.7	0.7	0.7	0.7
07	46	FRONT WHEEL HUB MOYEU DE ROUE AVANT	0.3	0.3	0.3	0.3	0.3	0.3	0.3	0.3	0.3	0.3
07	47	KNUCKLE AND BEARING (RH OR LH) PORTE-FUSÉE ET ROULEMENT À BILLE (DROIT OU GAUCHE)	0.7	0.7	0.7	0.7	0.7	0.7	0.7	0.7	0.7	0.7
07	50	FRONT RIM AND/OR TIRE JANTE AVANT ET/OU PNEU	0.4	0.4	0.4	0.4	0.4	0.4	0.4	0.4	0.4	0.4
07	64	DOUBLE BALL JOINT JOINT À ROTULE DOUBLE		0.3	0.3	0.3	0.3	0.3	0.3	0.3	0.3	0.3
07	72	INTERNAL BUSHING AND/OR CUSHION (LOWER AND/OR UPPER ARM) (RH OR LH) DOUILLE INTERNE ET/OU COUSSIN (BRAS INFÉRIEUR ET/OU SUPÉRIEUR) (DROIT OU GAUCHE)	0.4	0.4	0.4	0.4	0.4	0.4	0.4	0.4	0.4	0.4
07	82	BALL BEARING ROULEMENT À BILLE					2.2	2.2	2.2	2.2		2.2

STEERING - FRONT DRIVE SYSTEM AND SUSPENSION
DIRECTION - SYSTÈME D'ENTRAÎNEMENT AVANT ET SUSPENSION

SYSTEM SYSTÈME	CODE	DESCRIPTION	DEFENDER HD5	DEFENDER HD8 / HD10	DEFENDER CAB	DEFENDER CAB LTD	DEFENDER MAX	DEFEBDER MAX CAB	DEFENDER XMR	DEFENDER MAX XMR	DEFENDER 6 X 6	DEFENDER PRO
			17	18/19	20	21	22/23	24	25	26	27	28
07	85	RING GEAR AND/OR CARRIER AND/OR SHIM COURONNE DE LANCEMENT ET/OU SUPPORT ET/OU CALE	2.9	2.9	2.9	2.9	2.9	2.9	2.9	2.9	2.9	2.9
07	87	ACTUATOR ACTUATEUR		0.3					0.3	0.3	0.3	
07	88	RING GEAR DRIVE GEAR AND/OR BEARING AND/OR SHIM PIGNON DE COMMANDE DE LA COURONNE ET/OU ROULEMENT À BILLE ET/OU CALE	2.9	2.9	2.9	2.9	2.9	2.9	2.9	2.9	2.9	2.9
07	89	COVER AND/OR PINION COVER AND/OR SEAL AND/OR BEARING COUVERCLE ET/OU COUVERCLE DE PIGNON ET/OU JOINT D'ÉTANCHÉITÉ ET/OU ROULEMENT À BILLE	3.2	3.2	3.2	3.2	3.2	3.2	3.2	3.2	3.2	3.2
07	90	BOOT WHEEL KIT AND/OR CV JOINT (RH OR LH) ENSEMBLE DE SOUFFLET DE ROUE ET/OU JOINT CV (DROIT OU GAUCHE)	0.8	0.8	0.8	0.8	0.8	0.8	0.8	0.8	0.8	0.8
07	91	BOOT DIFFERENTIAL KIT AND/OR PLUNGING JOINT (RH OR LH) ENSEMBLE DE SOUFFLET DE DIFFÉRENTIEL ET/OU JOINT PLONGEANT (DROIT OU GAUCHE)	0.8	0.8	0.8	0.8	0.8	0.8	0.8	0.8	0.8	0.8
07	94	UNIT PACK KIT ENSSEMBLE JOINT CARDAN	2.3	2.3	2.3	2.3	2.3	2.3	2.3	2.3	2.3	2.3
07	95	UNIT PACKS KIT (2) ENSSEMBLE JOINTS CARDANS (2)	2.5	2.5	2.5	2.5	2.5	2.5	2.5	2.5	2.5	2.5
07	99	POWER STEERING (DPS) SERVODIRECTION (DPS)	1.6	1.6	1.6	1.6	1.6	1.6	1.6	1.6	1.6	1.6
07	103	DIFFERENTIAL SEAL (1) JOINT D'ÉTANCHÉITÉ DU DIFFÉRENTIEL (1)	0.7	0.7	0.7	0.7	0.7	0.7	0.7	0.7	0.7	0.7
07	104	DIFFERENTIAL SEALS (2) JOINTS D'ÉTANCHÉITÉ DU DIFFÉRENTIEL (2)	1.4	1.4	1.4	1.4	1.4	1.4	1.4	1.4	1.4	1.4
07	106	STEERING COLUMN SUPPORT AND/OR BUSHINGS SUPPORT DE COLONNE DE DIRECTION ET/OU COUSSINETS	0.7	0.7	0.7	0.7	0.7	0.7	0.7	0.7	0.7	0.7
07	115	RACK AND PINION STEERING DIRECTION À CRÉMAILLÈRE	1.8	1.8	1.8	1.8	1.8	1.8	1.8	1.8	1.8	1.8
07	117	ADJUSTMENT CYLINDER CYLINDRE D'AJUSTEMENT	0.3	0.3	0.3	0.3	0.3	0.3	0.3	0.3	0.3	0.3
07	118	STEERING WHEEL VOLANT	0.3	0.3	0.3	0.3	0.3	0.3	0.3	0.3	0.3	0.3
07	120	DIFFERENTIAL OIL SEAL ANNEAU D'ÉTANCHÉITÉ DU DIFFÉRENTIEL	2.6	2.6	2.6	2.6	2.6	2.6	2.6	2.6	2.6	2.6
07	121	COUPLING MANCHON	1.6	1.6	1.6	1.6	1.6	1.6	1.6	1.6	1.6	1.6

SYSTEM SYSTÈME	CODE	DESCRIPTION	DEFENDER HD5	DEFENDER HD8 / HD10	DEFENDER CAB	DEFENDER CAB LTD	DEFENDER MAX	DEFEBDER MAX CAB	DEFENDER XMR	DEFENDER MAX XMR	DEFENDER 6 X 6	DEFENDER PRO
			17	18/19	20	21	22/23	24	25	26	27	28
07	122	HOSE (DIFFERENTIAL HOSE) BOYAU (BOYAU DU DIFFÉRENTIEL)	0.3	0.3	0.3	0.3	0.3	0.3	0.3	0.3	0.3	0.3
07	130	PROPELLER SHAFT EXTENSION (ASS'Y) EXTENTION D'ARBRE DE PROPULSION (COMPLET)					2.2	2.7	2.2	2.2	2.2	2.7
07	134	EXTERNAL BALL JOINTS (ALL) JOINTS A ROTULE EXTERNE (TOUS)	1.1	1.1	1.1	1.1	1.1	1.1	1.1	1.1	1.1	1.1
07	135	SPEED SENSOR CAPTEUR DE VITESSE		0.3					0.3	0.3	0.3	
07	136	CLUTCH PACK AND BALL RAMP EMBRAYAGE ET RAMPE A BILLES		3.0					3.0	3.0	3.0	
07	137	RING GEAR, SHIMS, SPIDER GEARS AND OUTPUT GEARS COURONNE, CALES, SATELITTES ET PIGNONS DE SORTIE		3.1					3.1	3.1	3.1	

STEERING - FRONT DRIVE SYSTEM AND SUSPENSION
DIRECTION - SYSTÈME D'ENTRAÎNEMENT AVANT ET SUSPENSION

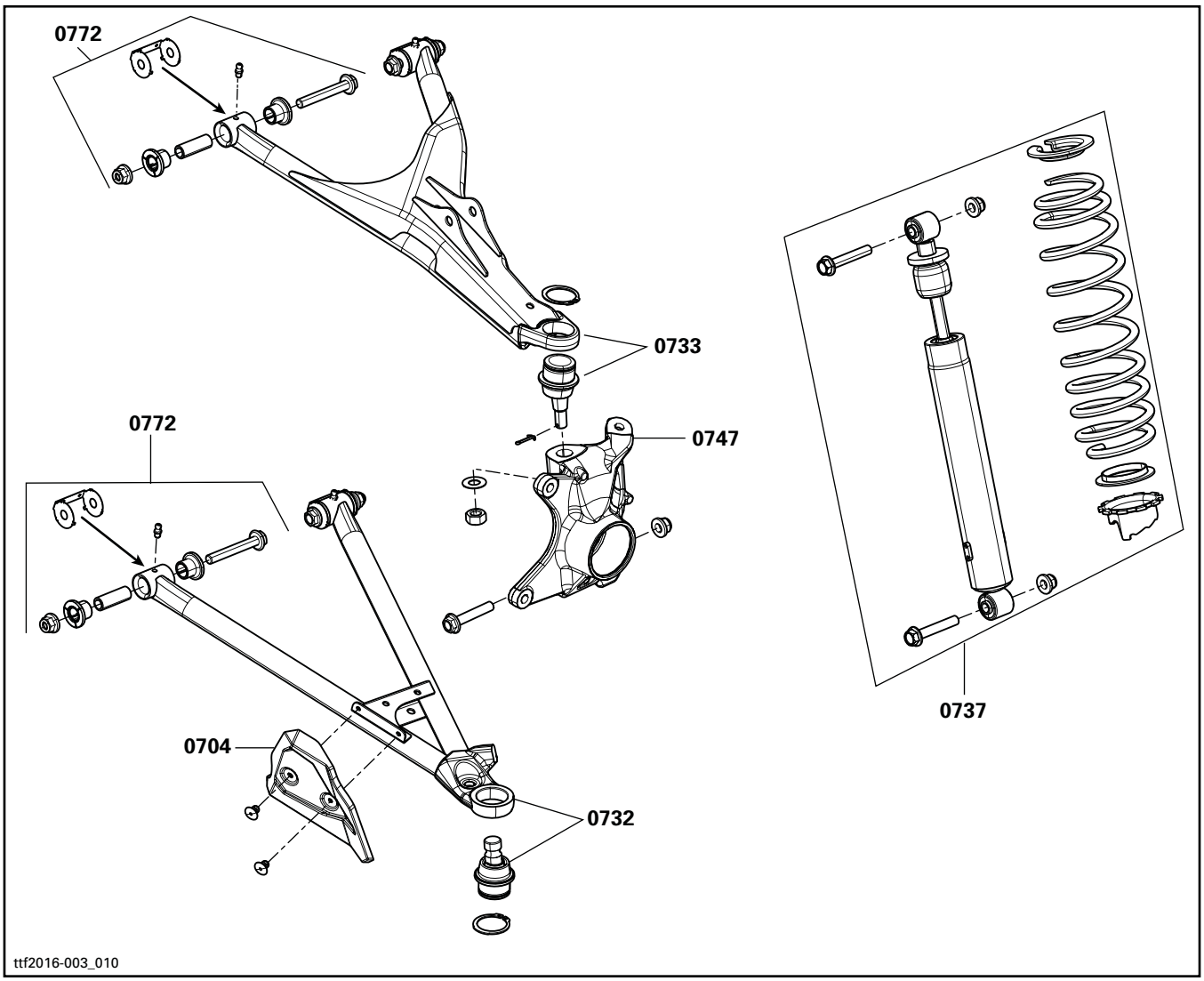

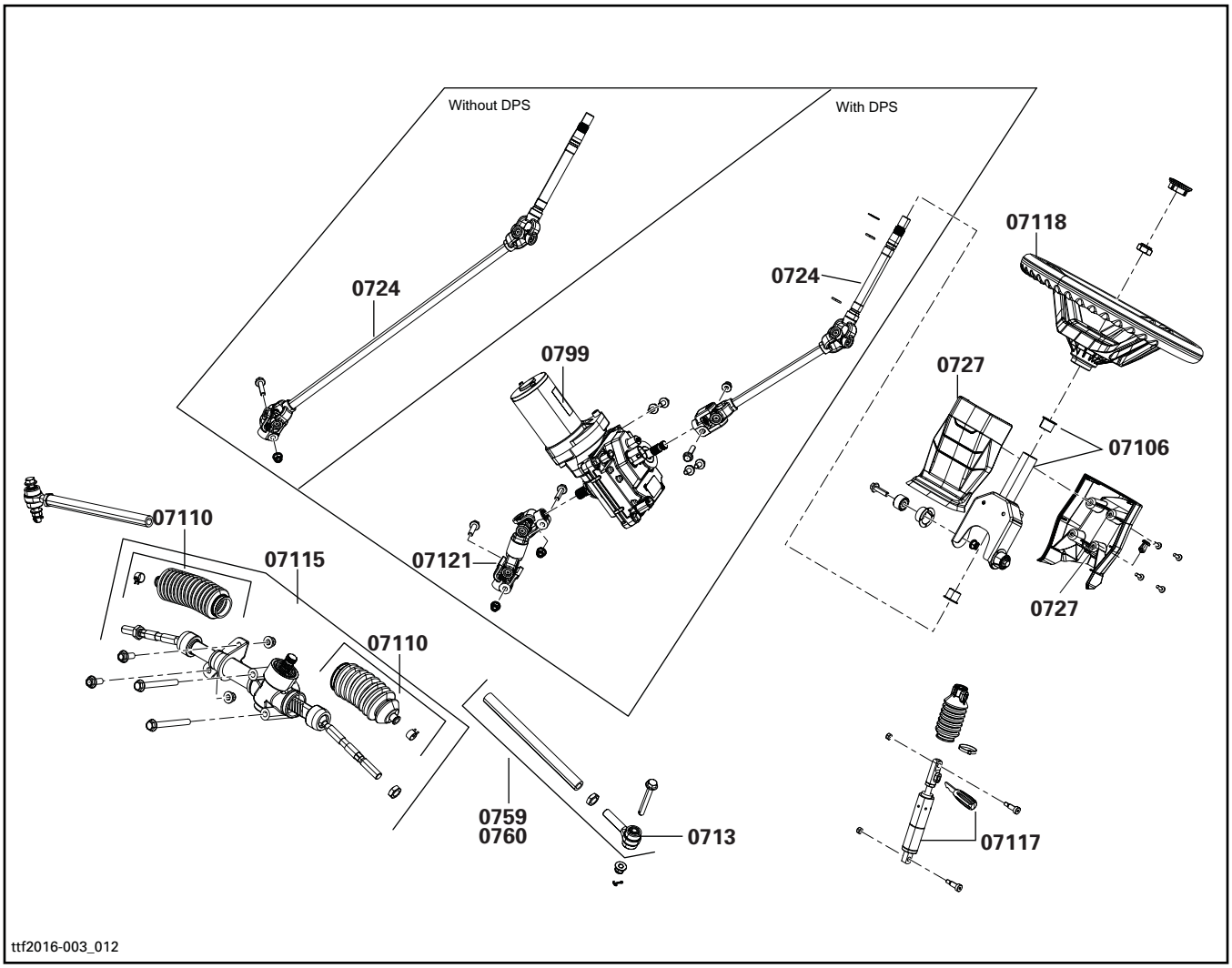
Without DPS
With DPS
0724
0724
0799
07118
0727
07106
07110
07115
07121
07110
0727
0759
0760
0713
07117
ttf2016-003_012

STEERING - FRONT DRIVE SYSTEM AND SUSPENSION
DIRECTION - SYSTÈME D'ENTRAÎNEMENT AVANT ET SUSPENSION

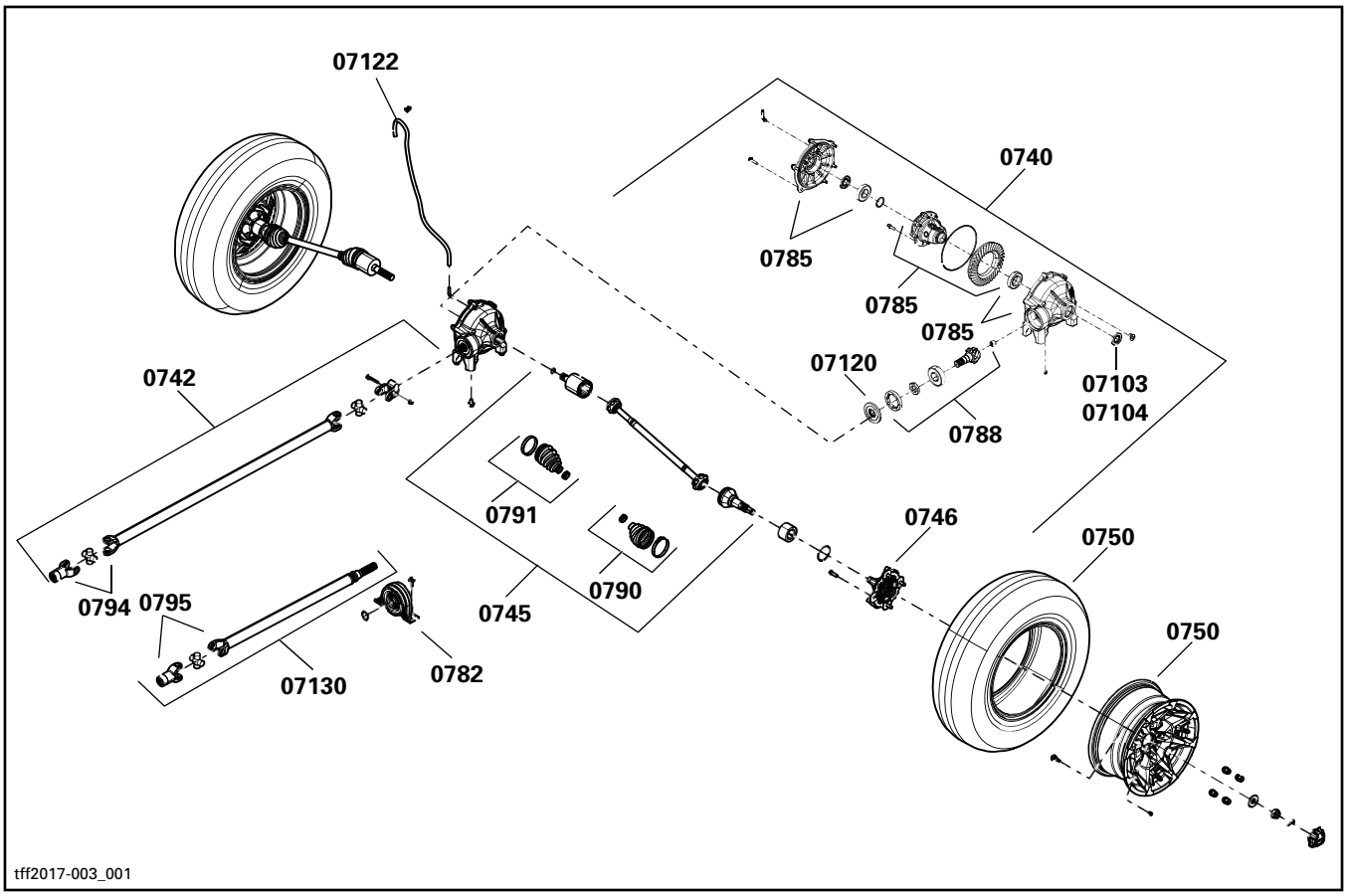

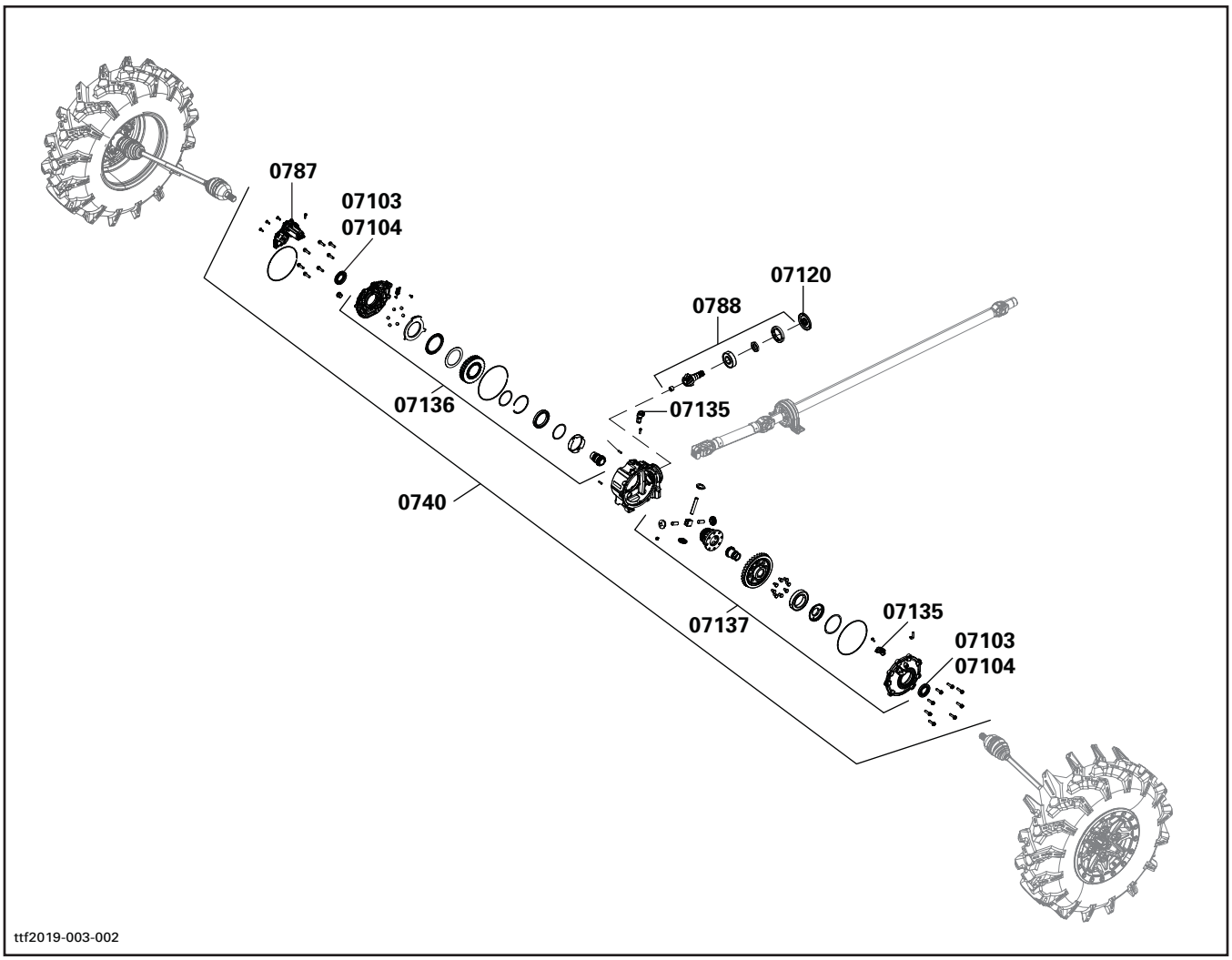
0787
07103
07104
07120
0788
07136
07135
0740
07137
07135
07103
07104
ttf2019-003-002

REAR DRIVE SYSTEM AND SUSPENSION
SYSTÈME D'ENTRAÎNEMENT ARRIÈRE ET SUSPENSION

SYSTEM SYSTÈME	CODE	DESCRIPTION	DEFENDER HD5	DEFENDER HD8 / HD10	DEFENDER CAB	DEFENDER CAB LTD	DEFENDER MAX	DEFEBDER NAX CAB	DEFENDER XMR	DEFENDER MAX XMR	DEFENDER 6 X 6	DEFENDER PRO
			17	18/19	20	21	22/23	24	25	26	27	28
08	**00**	**NO LABOR INVOLVED AUCUNE MAIN D'OEUVRE**	**0**	**0**	**0**	**0**	**0**	**0**	**0**	**0**	**0**	**0**
08	05	REAR WHEEL HUB (RH) MOYEU DE ROUE ARRIÈRE (DROIT)	0.3	0.3	0.3	0.3	0.3	0.3	0.3	0.3	0.3	0.3
08	07	REAR DIFFERENTIAL (ASS'Y) DIFFÉRENTIEL ARRIÈRE (COMPLET)									1.6	
08	26	REAR PROPELLER SHAFT (ASS'Y) ARBRE DE PROPULSION ARRIÈRE (COMPLET)									1.2	
08	107	DRIVE AXLE AND/OR HUB ARBRE ENTRAINEMENT ET/OU MOYEU	1.8									
08	109	REAR WHEEL HUB (LH) MOYEU DE ROUE ARRIÈRE (GAUCHE)	0.3	0.3	0.3	0.3	0.3	0.3	0.3	0.3	0.3	0.3
08	111	REAR SHOCK (RH OR LH) AMORTISSEUR ARRIÈRE (DROIT OU GAUCHE)	0.4	0.4	0.4	0.4	0.4	0.4	0.4	0.4	0.4	0.4
08	114	REAR RIM AND/OR TIRE JANTE ARRIÈRE ET/OU PNEU	0.4	0.4	0.4	0.4	0.4	0.4	0.4	0.4	0.4	0.4
08	120	CV JOINT (RH OR LH) JOINT HOMOCINÉTIQUE (DROIT OU GAUCHE)	0.7	0.7	0.7	0.7	0.7	0.7	0.7	0.7	0.7	0.7
08	121	STABILIZER BAR BARRE STABILISATRICE	0.4	0.4	0.4	0.4	0.4	0.4	0.4	0.4	0.4	0.4
08	122	RING GEAR AND/OR SHIM COURONNE LANCEMENT ET/OU CALE	2.8								2.8	
08	123	RING GEAR DRIVE AND/OR SHIM AND/OR SEAL AND/OR BEARING PIGNION ET/OU CALE ET/OU JOINT ET/OU ROULEMENT A BILLE	2.8								2.8	
08	124	COVER AND/OR PINION COVER AND/OR SEAL AND/OR BEAR COUVERCLE ET/OU COUVERCLE PIGNION ET/OU JOINT ET/OU ROULEMENT	2.9								2.9	
08	125	BOOT WHEEL KIT AND/OR CV JOINT (RH OR LH) ENSEMBLE DE SOUFFLET DE ROUE ET/OU JOINT CV (DROIT OU GAUCHE)	0.8	0.8	0.8	0.8	0.8	0.8	0.8	0.8	0.8	0.8
08	126	BOOT DIFFERENTIAL KIT AND/OR PLUNGING JOINT (RH OR LH) ENSEMBLE DE SOUFFLET DE DIFFÉRENTIEL ET/OU JOINT PLONGENT (DROIT OU GAUCHE)	0.8	0.8	0.8	0.8	0.8	0.8	0.8	0.8	0.8	0.8
08	127	RADIAL BALL BEARINGS ROULEMENTS À BILLE RADIALES	0.7	0.7	0.7	0.7	0.7	0.7	0.7	0.7	0.7	0.7
08	128	UNIT PACK KIT ENSSEMBLE JOINT CARDAN	1.8	1.8	1.8	1.8	1.8	1.8	1.8	1.8	1.8	1.8
08	129	UNIT PACKS KIT (2) ENSSEMBLE JOINTS CARDANS (2)	2.0	2.0	2.0	2.0	2.0	2.0	2.0	2.0	2.0	2.0
08	134	DIFFERENTIAL SEAL (ONE) JOINT ETANCHE DU DIFFERENTIEL (UN)	0.8								0.8	

SYSTEM SYSTÈME	CODE	DESCRIPTION	DEFENDER HD5	DEFENDER HD8 / HD10	DEFENDER CAB	DEFENDER CAB LTD	DEFENDER MAX	DEFEBDER MAX CAB	DEFENDER XMR	DEFENDER MAX XMR	DEFENDER 6 X 6	DEFENDER PRO
			17	18/19	20	21	22/23	24	25	26	27	28
08	135	DIFFERENTIAL SEALS (TWO) JOINT ETANCHE DU DIFFERENTIEL (DEUX)	1.4								1.4	
08	148	DIFFERENTIAL OIL SEAL ANNEAU D'ÉTANCHÉITÉ DU DIFFERENTIEL	2.5								2.5	
08	158	HOSE (DIFFERENTIAL VENT) BOYAU (VENTILATION DU DIFFÉRENTIEL)	0.3	0.3	0.3	0.3	0.3	0.3	0.3	0.3	0.3	0.3
08	168	REAR UPPER ARM AND/OR RADIAL JOINT BRAS SUPERIEUR ARRIERE ET/OU ROTULE RADIALE	0.7	0.7	0.7	0.7	0.7	0.7	0.7	0.7	0.7	0.7
08	169	REAR LOWER ARM AND/OR RADIAL JOINT BRAS INFERIEUR ARRIERE ET/OU ROTULE RADIALE	0.7	0.7	0.7	0.7	0.7	0.7	0.7	0.7	0.7	0.7
08	171	SWAY BAR LEVER LEVIER BARRE STABILISATRICE	0.4	0.4	0.4	0.4	0.4	0.4	0.4	0.4	0.4	0.4
08	172	KNUCKLE (RIGHT OR LEFT) PORTE FUSEE (DROIT OU GAUCHE)	0.7	0.7	0.7	0.7	0.7	0.7	0.7	0.7	0.7	0.7

REAR DRIVE SYSTEM AND SUSPENSION
SYSTÈME D'ENTRAÎNEMENT ARRIÈRE ET SUSPENSION

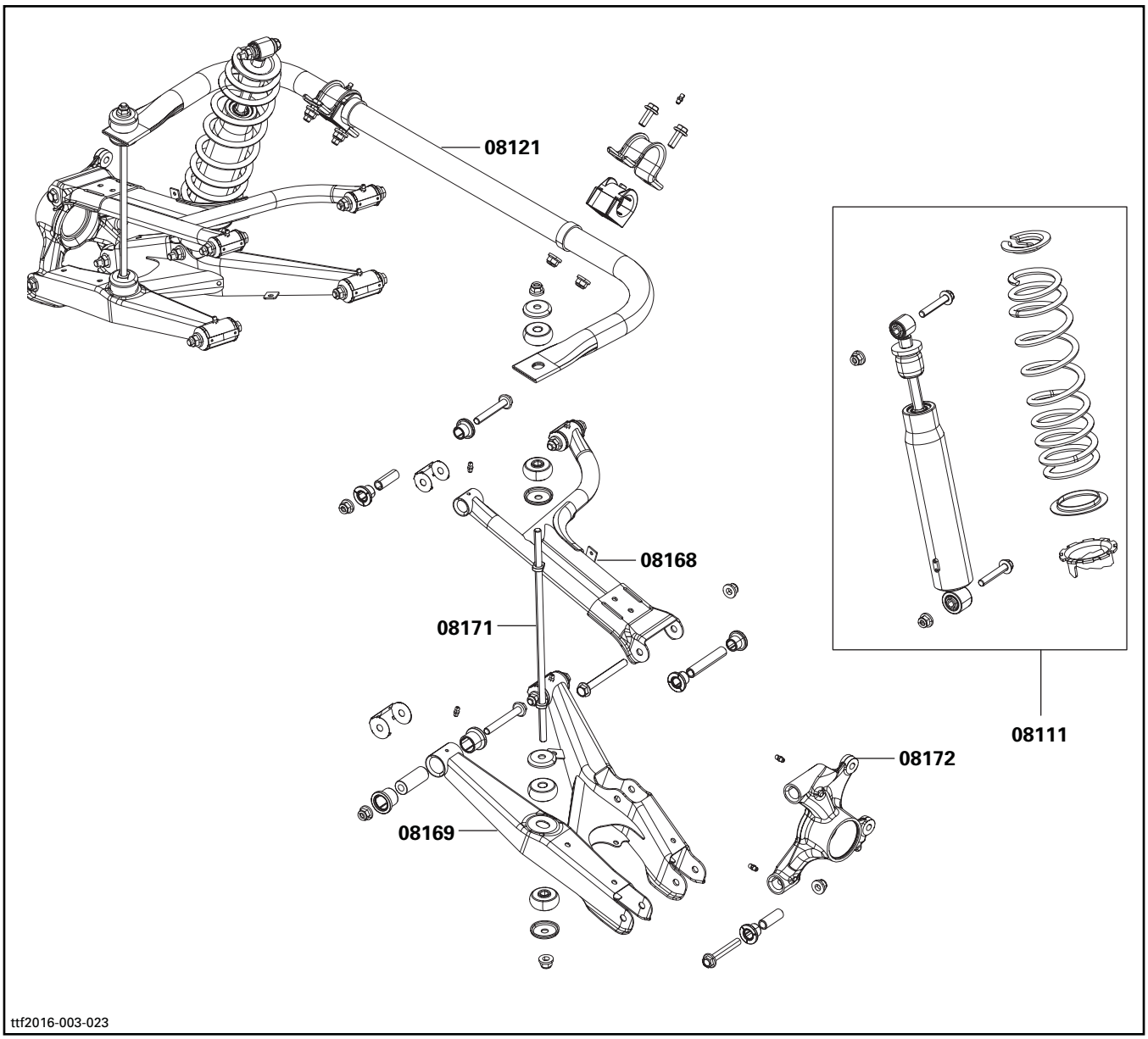

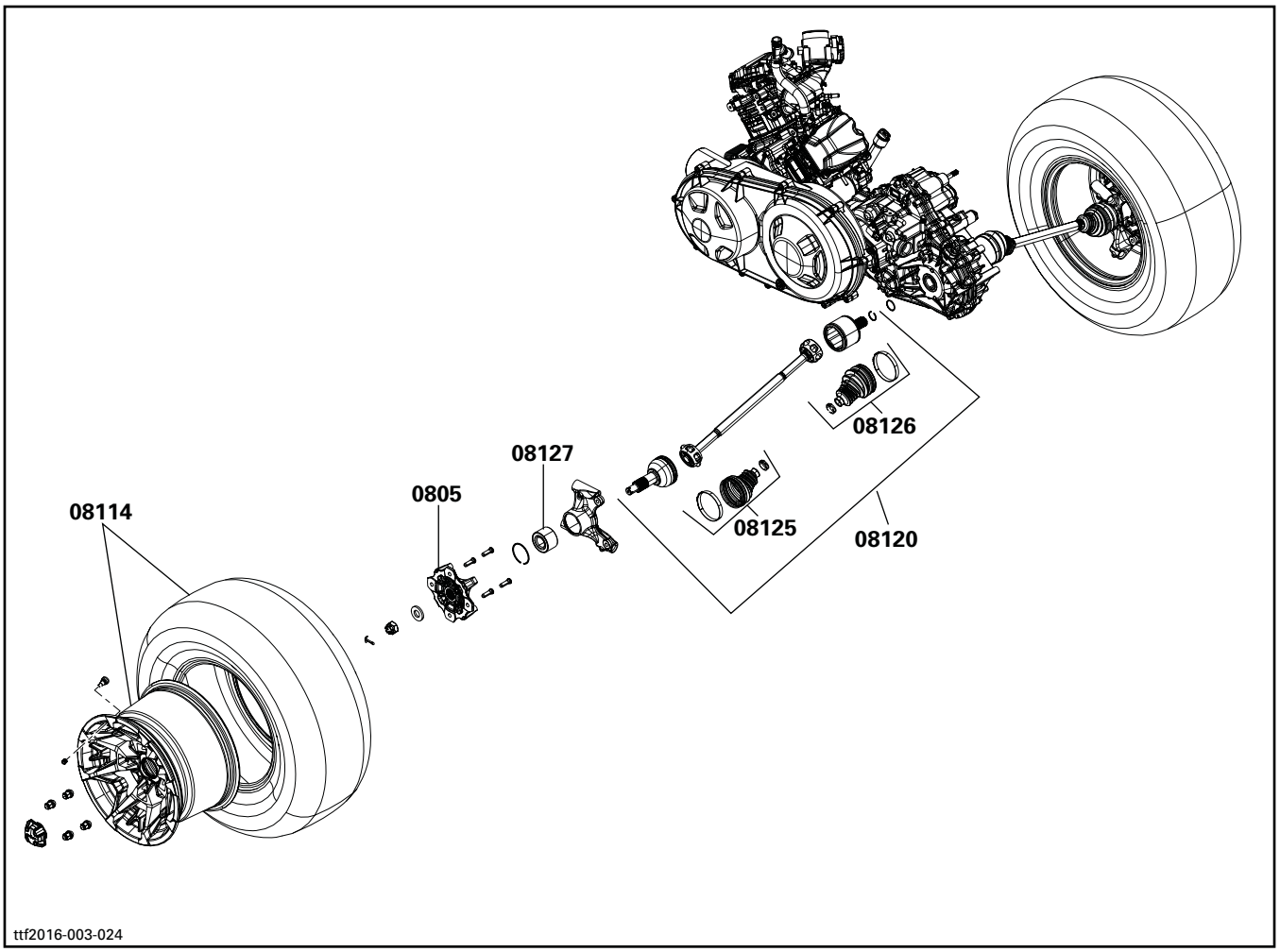
08126
08127
0805
08114
08125
08120
ttf2016-003-024

REAR DRIVE SYSTEM AND SUSPENSION
SYSTÈME D'ENTRAÎNEMENT ARRIÈRE ET SUSPENSION

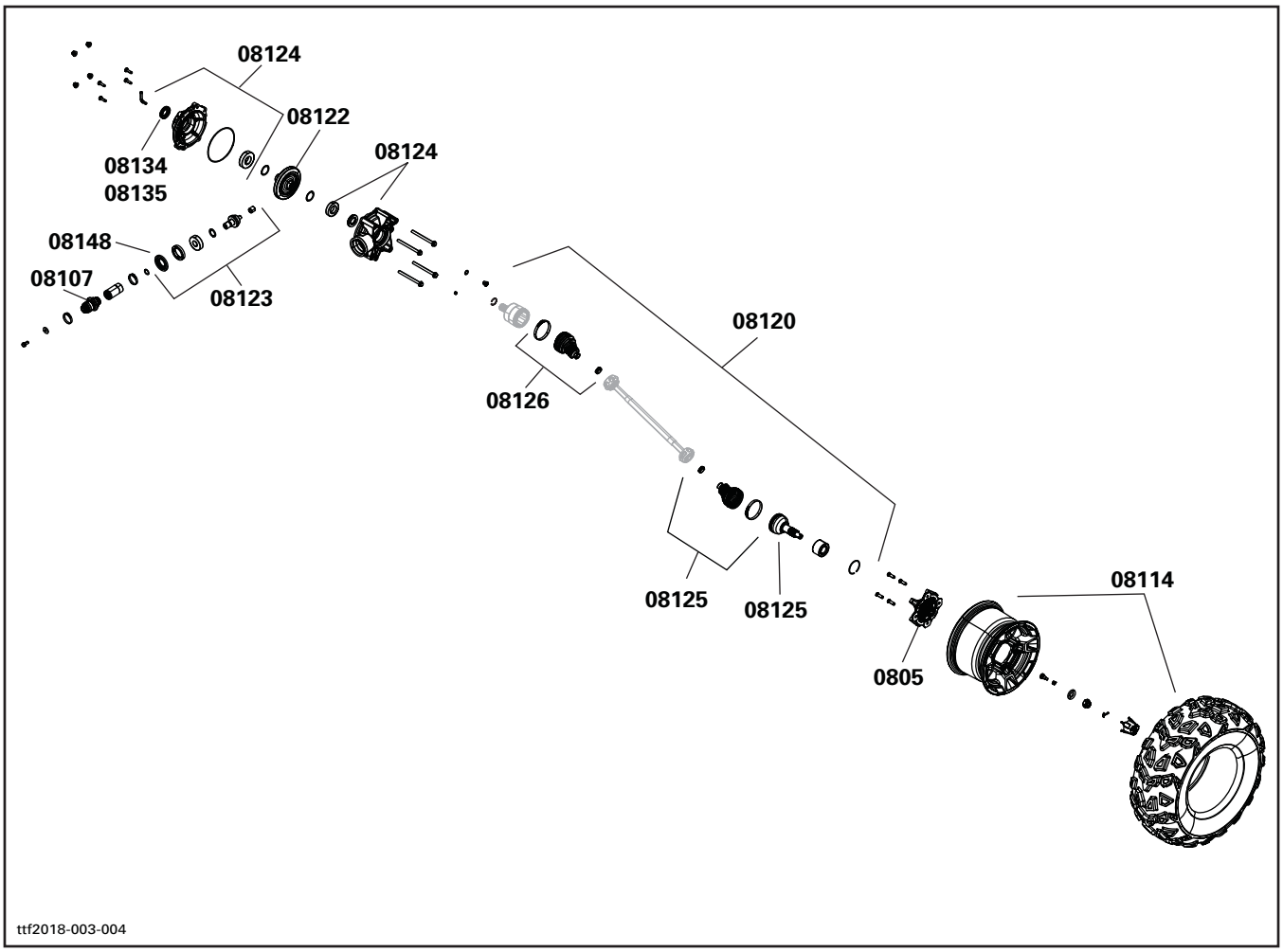

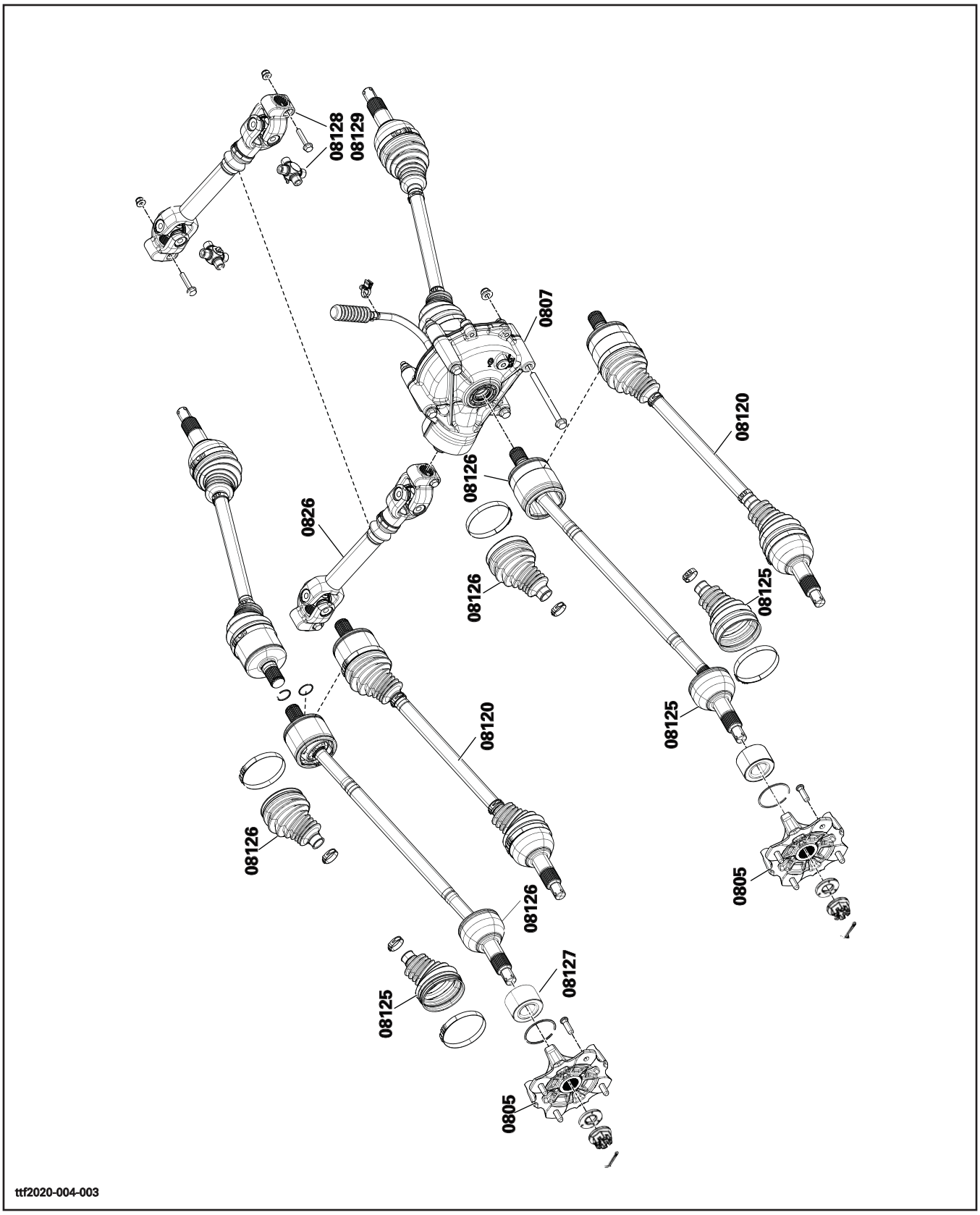
08128
08129
0807
08120
08126
0826
08126
08125
08125
08120
08126
0805
08126
08127
08125
0805
ttf2020-004-003

REAR DRIVE SYSTEM AND SUSPENSION
SYSTÈME D'ENTRAÎNEMENT ARRIÈRE ET SUSPENSION

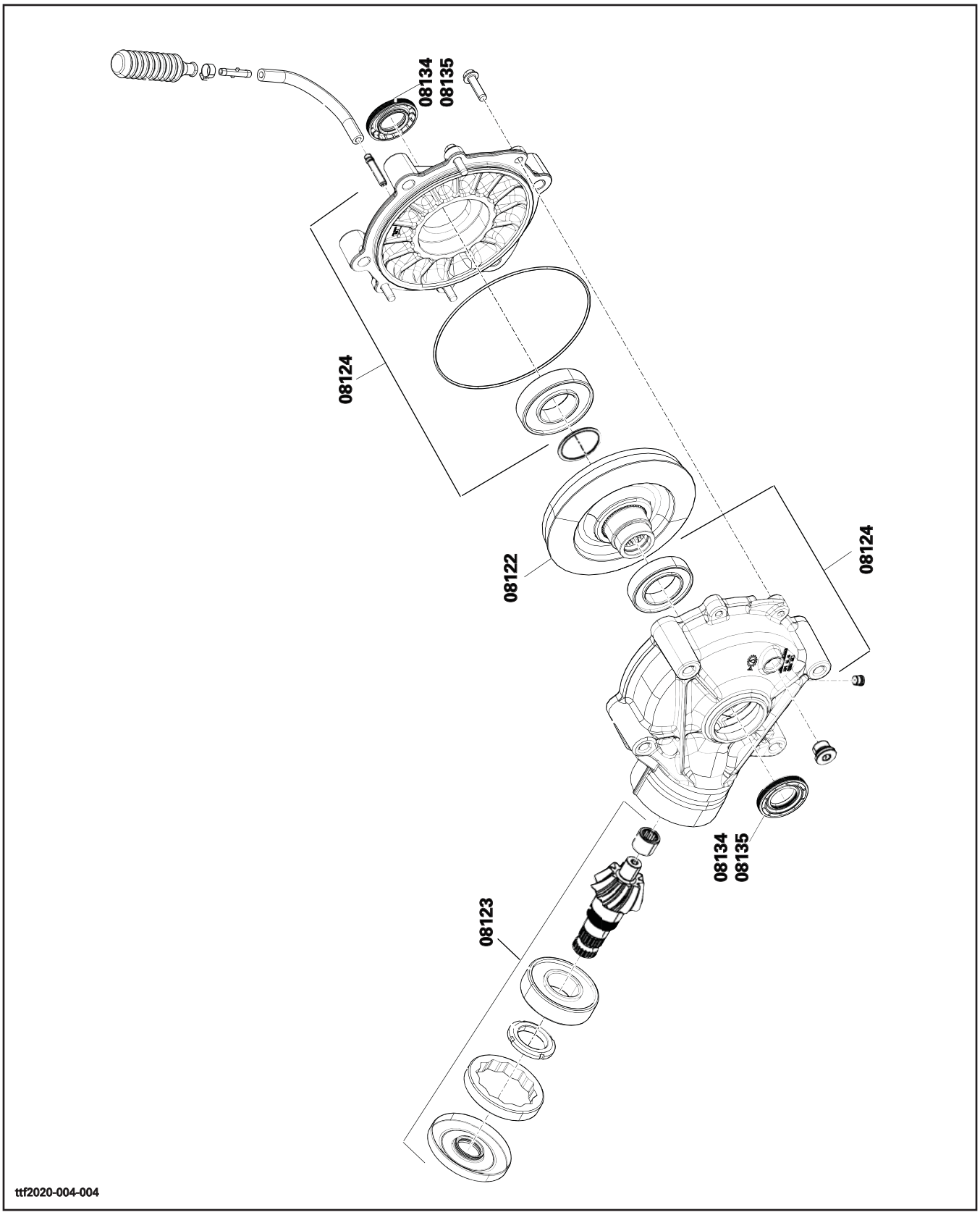

SYSTEM SYSTÈME	CODE	DESCRIPTION	DEFENDER HD5	DEFENDER HD8 / HD10	DEFENDER CAB	DEFENDER CAB LTD	DEFENDER MAX	DEFEBDER NAX CAB	DEFENDER XMR	DEFENDER MAX XMR	DEFENDER 6 X 6	DEFENDER PRO
			17	18/19	20	21	22/23	24	25	26	27	28
09	**00**	**NO LABOR INVOLVED AUCUNE MAIN D'OEUVRE IMPLIQUÉE**	**0**	**0**	**0**	**0**	**0**	**0**	**0**	**0**	**0**	**0**
09	09	WINDSHIELD PARE-BRISE			0.6	0.6		0.6				
09	26	FRONT BUMPER PARE-CHOCS AVANT	0.8	0.9	0.9	0.9	0.9	0.9	1.1	1.1	0.9	0.9
09	28	FRONT FASCIA FASCIA AVANT	0.5	0.5	0.5	0.5	0.5	0.5	0.5	0.5	0.5	0.5
09	49	FRAME CHÄSSIS	24.5	25.5	27.6	27.6	28.5	31	27	29.5	28.5	28.5
09	82	CABLE RETAINER CÂBLE DE RETENUE	0.3	0.3	0.3	0.3	0.3	0.3	0.3	0.3	0.3	0.3
09	93	PROTECTION PLATE PLAQUE DE PROTECTION	0.4	0.4	0.4	0.4	0.4	0.4	0.4	0.4	0.4	0.4
09	95	EACH DECAL (1) CHAQUE AUTOCOLLANT (1)	0.3	0.3	0.3	0.3	0.3	0.3	0.3	0.3	0.3	0.3
09	97	SHOCK GAZ (REAR CARGO BOX) AMORTISSEUR (BOÎTE DE RANGEMENT)	0.3	0.3	0.3	0.3	0.3	0.3	0.3	0.3	0.3	0.3
09	102	PIVOT SUPPORT SUPPORT DE PIVOT	0.3	0.3	0.3	0.3	0.3	0.3	0.3	0.3	0.3	0.3
09	106	WINDSCREEN HINGE CHARNIÈRE DE PARE-BRISE			0.3	0.3		0.3				
09	111	SEAT BASE ASS'Y (DRIVER OR CO-PILOT) BASE DE SIÈGE COMPLET (CONDUCTEUR OU COPILOTE)	0.3	0.3	0.3	0.3	0.3	0.3	0.3	0.3	0.3	0.3
09	134	CARGO BOX LEVER AND/OR RINGS AND/OR CLAMP LEVIER BENNE ET/OU BAGUES ET/OU BRIDE	0.3	0.3	0.3	0.3	0.3	0.3	0.3	0.3	0.3	0.3
09	136	BACKREST ASS'Y DOSSIER ASS.	0.3	0.3	0.3	0.3	0.3	0.3	0.3	0.3	0.3	0.3
09	162	FRONT BUMPER (XT,XMR OR XTP) PARE-CHOC AVANT (XT, XMR OU XTP)		0.3	0.3	0.3	0.3	0.3	0.3	0.3	0.3	0.3
09	168	FRONT GRILL GRILLE FRONTALE	0.3	0.3	0.3	0.3	0.3	0.3	0.3	0.3	0.3	0.3
09	193	CENTRAL SEAT SIÈGE CENTRAL	0.3	0.3	0.3	0.3	0.3	0.3	0.3	0.3	0.3	0.3
09	223	GAZ SHOCK AMORTISSEUR À GAZ			0.3	0.3		0.3				
09	226	LOWER CONSOLE CONSOLE INFÉRIEURE			0.3	0.3		0.3				
09	227	SERVICE COVER COUVERCLE DE SERVICE	0.3	0.3	0.3	0.3	0.3	0.3	0.3	0.3	0.3	0.3

SYSTEM SYSTÈME	CODE	DESCRIPTION	DEFENDER HD5	DEFENDER HD8 / HD10	DEFENDER CAB	DEFENDER CAB LTD	DEFENDER MAX	DEFEBDER NAX CAB	DEFENDER XMR	DEFENDER MAX XMR	DEFENDER 6 X 6	DEFENDER PRO
			17	18/19	20	21	22/23	24	25	26	27	28
09	231	REAR PANEL (LEFT OR RIGHT) PANNEAU ARRIÈRE (GAUCHE OU DROIT)	0.3	0.3	0.3	0.3	0.3	0.3	0.3	0.3	0.3	0.3
09	233	UPPER SIDE PANEL (RIGHT OR LEFT) PANNEAU LATERAL SUPERIEUR (DROIT OU GAUCHE)	0.3	0.3	0.3	0.3	0.3	0.3	0.3	0.3	0.3	0.3
09	239	MIDDLE SIDE PANEL (LEFT OR RIGHT) PANNEAU LATÉRAL CENTRAL (GAUCHE OU DROIT)	0.5	0.5	0.5	0.5	0.5	0.5	0.5	0.5	0.5	0.5
09	243	DELECTOR PANEL (RIGHT OR LEFT) PANNEAU DEFLECTEUR (DROIT OU GAUCHE)	0.3	0.3	0.3	0.3	0.3	0.3	0.3	0.3	0.3	0.3
09	246	CENTER PANEL PANNEAU CENTRAL					0.5	0.5		0.5		0.5
09	282	LATCH AND/OR BASE (RIGHT OR LEFT) LOQUET ET/OU BASE (DROIT OU GAUCHE)	0.3	0.3	0.3	0.3	0.3	0.3	0.3	0.3	0.3	0.3
09	284	BOX DOOR PORTE DE COFFRE										0.3
09	289	GLOVES BOX BOÎTE À GANTS	0.3	0.3	0.3	0.3	0.3	0.3	0.3	0.3	0.3	0.3
09	297	TOP STORAGE COMPARTMENT COMPARTIMENT DE RANGEMENT SUPÉRIEUR	0.3	0.3	0.3	0.3	0.3	0.3	0.3	0.3	0.3	0.3
09	306	REAR SIDE PANEL (RIGHT OR LEFT) PANNEAU LATÉRAL ARRIÈRE (DROIT OU GAUCHE)	0.3	0.3	0.3	0.3	0.3	0.3	0.3	0.3	0.3	0.3
09	307	SIDE PANEL SUPPORT (RH OR LH) SUPPORT PANNEAU LATÉRAL (DR OU GA)									0.3	
09	308	BOTTOM FRONT SIDE PANEL (RH OR LH) PANNEAU LATÉRAL AVANT BAS (DROIT OU GAUCHE)	0.5	0.5	0.5	0.5	0.5	0.5	0.5	0.5	0.5	0.5
09	314	FRAME EXTENSION EXTENSION DE CHASSIS									4.4	
09	336	CENTRAL SKID PLATE PLAQUE DE PROTECTION CENTRALE	0.6	0.6	0.6	0.6	0.6	0.6	0.6	0.6	0.6	0.6
09	337	REAR SKID PLATE PLAQUE DE PROTECTION ARRIÈRE	0.6	0.6	0.6	0.6	0.6	0.6	0.6	0.6	0.6	0.6
09	349	LEVER INDICATOR INDICATEUR DE VITESSE	0.3	0.3	0.3	0.3	0.3	0.3	0.3	0.3	0.3	0.3
09	358	CARGO BOX FRAME CHÂSSIS DE LA BENNE	1.4	1.4	1.4	1.4	1.4	1.4	1.4	1.4	1.4	1.4
09	360	UPPER TAIL GATE PANEL PANNEAU DU HAYON SUPÉRIEUR	0.3	0.3	0.3	0.3	0.3	0.3	0.3	0.3	0.5	0.3
09	363	LOWER TAIL GATE HAYON INFÉRIEUR	0.3	0.3	0.3	0.3	0.3	0.3	0.3	0.3	0.5	0.3
09	364	HEAD REST APPUI-TÊTE	0.3	0.3	0.3	0.3	0.3	0.3	0.3	0.3	0.3	0.3

SYSTEM SYSTÈME	CODE	DESCRIPTION	DEFENDER HD5	DEFENDER HD8 / HD10	DEFENDER CAB	DEFENDER CAB LTD	DEFENDER MAX	DEFEBDER MAX CAB	DEFENDER XMR	DEFENDER MAX XMR	DEFENDER 6 X 6	DEFENDER PRO
			17	18/19	20	21	22/23	24	25	26	27	28
09	365	SAFETY BELT CEINTURE DE SÉCURITÉ	0.3	0.3	0.3	0.3	0.3	0.3	0.3	0.3	0.3	0.3
09	366	BUCKLE BELT VERROU CEINTURE	0.3	0.3	0.3	0.3	0.3	0.3	0.3	0.3	0.3	0.3
09	367	LOCK VERROU	0.3	0.3	0.3	0.3	0.3	0.3	0.3	0.3	0.3	0.3
09	369	CAGE (FRONT) CAGE (AVANT)	0.4	0.4	0.8	0.8	0.4	3.0	0.4	0.4	0.4	0.4
09	370	CAGE (REAR) CAGE (ARRIERE)	0.6	0.7	1.2	1.2	0.7	3.4	0.8	0.8	0.7	0.7
09	371	ROCK SLIDER (LEFT OR RIGHT) GLISSIERE DE PROTECTION (GAUCHE OU DROITE)		0.6					0.6	0.8	0.6	
09	372	SHOULDER GUARD (LEFT AND/OR RIGHT) PROTECTEUR D'ÉPAULE (GAUCHE ET/OU DROIT)	0.3	0.3	0.3	0.3	0.3	0.3	0.3	0.3	0.3	0.3
09	374	LATERAL NET (LEFT OR RIGHT) FILET LATÉRAL (GAUCHE OU DROIT)	0.3	0.3	0.3	0.3	0.3	0.3	0.3	0.3	0.3	0.3
09	386	ROOF TOIT		0.3	0.6	0.6	0.6	0.6	0.6	0.6	0.3	0.3
09	388	REAR NET FILET ARRIERE					0.3	0.3		0.3		0.3
09	393	DELECTOR DÉFLECTEUR	0.3	0.3	0.3	0.3	0.3	0.3	0.3	0.3	0.3	0.3
09	424	SEAT SUPPORT SUPPORT DE SIEGE	2.0	2.0	2.0	2.0	2.0	2.0	2.0	2.0	2.0	2.0
09	427	BATTERY COVER COUVERCLE DE BATTERIE	0.3	0.3	0.3	0.3	0.3	0.3	0.3	0.3	0.3	0.3
09	434	CENTER CAGE KIT ENSEMBLE DE CAGE CENTRAL					0.8	3.4		0.8		0.8
09	438	FRONT FENDER AILE AVANT	0.3	0.3	0.3	0.3	0.3	0.3	0.3	0.3	0.3	0.3
09	444	CLUSTER BEZEL AND/OR HOLDER ENJOLIVEUR ET/OU BOITIER DU COMBINE D'INSTRUMENTATION	0.3	0.3	0.3	0.3	0.3	0.3	0.3	0.3	0.3	0.3
09	466	HANDLE POIGNÉE	0.3	0.3	0.3	0.3	0.3	0.3	0.3	0.3	0.3	0.3
09	470	REAR ROOF TOIT ARRIERE					0.4	0.4		0.4		0.4
09	480	FRONT LATERAL PANEL PANNEAU LATÉRAL AVANT	0.3	0.3	0.3	0.3	0.3	0.3	0.3	0.3	0.3	0.3
09	481	UPPER DASH TABLEAU DE BORD SUPÉRIEUR	2.0	2.0	2.5	2.5	2.5	2.5	2.5	2.5	2.0	2.5

SYSTEM SYSTÈME	CODE	DESCRIPTION	DEFENDER HD5	DEFENDER HD8 / HD10	DEFENDER CAB	DEFENDER CAB LTD	DEFENDER MAX	DEFEBDER NAX CAB	DEFENDER XMR	DEFENDER MAX XMR	DEFENDER 6 X 6	DEFENDER PRO
			17	18/19	20	21	22/23	24	25	26	27	28
09	482	SWITCHES PANEL PANNEAU D'INTÉRRUPTEURS	0.3	0.3	0.3	0.3	0.3	0.3	0.3	0.3	0.3	0.3
09	483	LOWER DASH (RIGHT) TABLEAU DE BORD INFERIEUR (DROIT)	0.3	0.3	0.3	0.3	0.3	0.3	0.3	0.3	0.3	0.3
09	484	LOWER DASH (LEFT) TABLEAU DE BORD INFERIEUR (GAUCHE)	0.3	0.3	0.3	0.3	0.3	0.3	0.3	0.3	0.3	0.3
09	485	FRONT BULKHEAD COVER COUVERCLE DE CLOISON AVANT	1.0	1.0	1.0	1.0	1.0	1.0	1.0	1.0	1.0	1.0
09	486	STORAGE BOX BOITE DE RANGEMENT		0.3	0.3	0.3	0.3	0.3	0.3	0.3	0.3	0.3
09	487	REAR LOWER BULKHEAD CLOISON INFÉRIEUR ARRIÈRE	2.2	2.2	2.8	2.8	2.8	2.8	2.8	2.8	2.2	2.8
09	488	REAR UPPER BULKHEAD CLOISON SUPÉRIEUR ARRIÈRE	1.6	1.6	1.6	1.6	1.6	1.6	1.6	1.6	1.6	1.6
09	489	ENGINE SERVICE COVER COUVERCLE D'ENTRETIEN DU MOTEUR	0.3	0.3	0.3	0.3	0.3	0.3	0.3	0.3	0.3	0.3
09	490	REAR SERVICE COVER COUVERCLE DE SERVICE ARRIÈRE	0.3	0.3	0.3	0.3	0.3	0.3	0.3	0.3	0.3	0.3
09	491	FLOOR COVER COUVERCLE DE PLANCHER	0.3	0.3	0.3	0.3	0.3	0.3	0.3	0.3	0.3	0.3
09	492	SHIFTING MODULE SUPPORT SUPPORT MODULE D'EMBRAYAGE	0.5	0.5	0.8	0.8	0.8				0.5	0.8
09	493	DPS MODULE SUPPORT SUPPORT MODULE DU DPS	0.5	0.5	0.5	0.5	0.5	0.5	0.5	0.5	0.5	0.5
09	494	BRAKE MODULE SUPPORT SUPPORT MODULE DE FREIN	1.3	1.3	1.3	1.3	1.3	1.3	1.3	1.3	1.3	1.3
09	495	FLOOR PLANCHER	4.0	4.0	4.0	4.0	4.0	4.0	4.0	4.0	4.0	4.0
09	496	UPPER FRONT DEFLECTOR DEFLECTEUR AVANT SUPÉRIEUR	0.3	0.3	0.3	0.3	0.3	0.3	0.3	0.3	0.3	0.3
09	497	FRONT BULKHEAD CLOISON AVANT	6.5	6.5	7.0	7.0	6.5	7.0	6.5	6.5	6.5	6.5
09	498	DRAWER TIROIR		0.3	0.3	0.3	0.3	0.3	0.3	0.3	0.3	0.3
09	499	SIDE SKID PLATE (RIGHT OR LEFT) PLAQUE DE PROTECTION LATÉRALE (DROITE OU GAUCHE)	0.5	0.5	0.5	0.5	0.5	0.5	0.5	0.5	0.5	0.5
09	500	SERVICE CENTER CENTRE DE SERVICE	0.3	0.3	0.3	0.3	0.3	0.3	0.3	0.3	0.3	0.3
09	501	ROOF LINER DOUBLURE DE TOIT			0.3	0.3		0.5				

SYSTEM SYSTÈME	CODE	DESCRIPTION	DEFENDER HD5	DEFENDER HD8 / HD10	DEFENDER CAB	DEFENDER CAB LTD	DEFENDER MAX	DEFEBDER MAX CAB	DEFENDER XMR	DEFENDER MAX XMR	DEFENDER 6 X 6	DEFENDER PRO
			17	18/19	20	21	22/23	24	25	26	27	28
09	502	ACCESSORIES COVER COUVERCLE D'ACCESSOIRES			0.3	0.3		0.3				
09	503	WIPER COVER COUVERCLE D'ESSUI-GLACE			0.4	0.4		0.4				
09	504	WINDSHIELD WASHER TANK RESERVOIR LAVE-GLACE			0.3	0.3		0.3				
09	505	WINDSHIELD HANDLE POIGNEE DE PARE-BRISE			0.3	0.3		0.3				
09	506	OUTSITE DOOR PANEL PANNEAU DE PORTE EXTERIEUR			0.8	0.8		0.8				
09	507	WINDOW VITRE			1.0	1.0		1.0				
09	508	FIX WINDOW VITRE FIXE			1.0	1.0		1.0				
09	509	DOOR HANDLE POIGNEE DE PORTE			0.8	0.8		0.8				
09	510	WINDOW ACTUATOR (ASS'Y) ACTUATEUR DE VITRE (COMPLET)			1.0	1.0		1.0				
09	511	DOOR FRAME (ASS'Y) CHASSIS DE PORTE (COMPLET)			1.4	1.4		1.4				
09	512	DOOR HINGE (ONE OR ALL) CHARNIÈRE DE PORTE (UNE OU TOUS)			0.3	0.3		0.3				
09	513	DOOR SEAL JOINT ÉTANCHE DE PORTE			0.3	0.3		0.3				
09	514	REAR WINDOW LUNETTE ARRIÈRE			0.3	0.3		0.3				
09	515	CARGO BOX BOITE DE CHARGEMENT	0.7	0.7	0.7	0.7	0.7	0.7	0.7	0.7	0.7	0.7
09	516	HEATING SYSTEM CONSOLE CONSOLE DU SYSTÈME DE CHAUFFAGE			0.3	0.3		0.3				
09	517	REAR CENTRAL SKID PLAT PLAQUE DE PROTECTION CENTRAL ARREIRE			0.6	0.6	0.6	0.6		0.6		0.6
09	518	REAR SIDE SKID PLATE (RIGHT OR LEFT) PLAQUE DE PROTECTION LATERALE ARRIERE (DROITE OU GAUCHE)					0.6	0.6		0.6		0.6
09	519	CAGE EXTENTION EXTENTION DE CAGE					0.3	0.3		0.3		0.3
09	564	OUTSIDE CARGO PANEL (RIGHT OR LEFT) PANNEAU EXTÉRIEUR DE LA BENNE (DROITE OU GAUCHE)									0.3	0.3
09	565	INSIDE CARGO PANEL (RIGHT OR LEFT) PANNEAU INTÉRIEUR DE LA BENNE (DROITE OU GAUCHE)									0.3	0.3

SYSTEM SYSTÈME	CODE	DESCRIPTION	DEFENDER HD5	DEFENDER HD8 / HD10	DEFENDER CAB	DEFENDER CAB LTD	DEFENDER MAX	DEFEBDER NAX CAB	DEFENDER XMR	DEFENDER MAX XMR	DEFENDER 6 X 6	DEFENDER PRO
			17	18/19	20	21	22/23	24	25	26	27	28
09	566	TAILLIGHT SUPPORT SUPPORT DE FEU ARRIÈRE									0.4	0.4
09	587	CENTRAL CHASSIS EXTENSION RALLONGE CHASSIS CENTRAL										0.6
09	588	ACTUATOR ACTUATEUR									0.3	

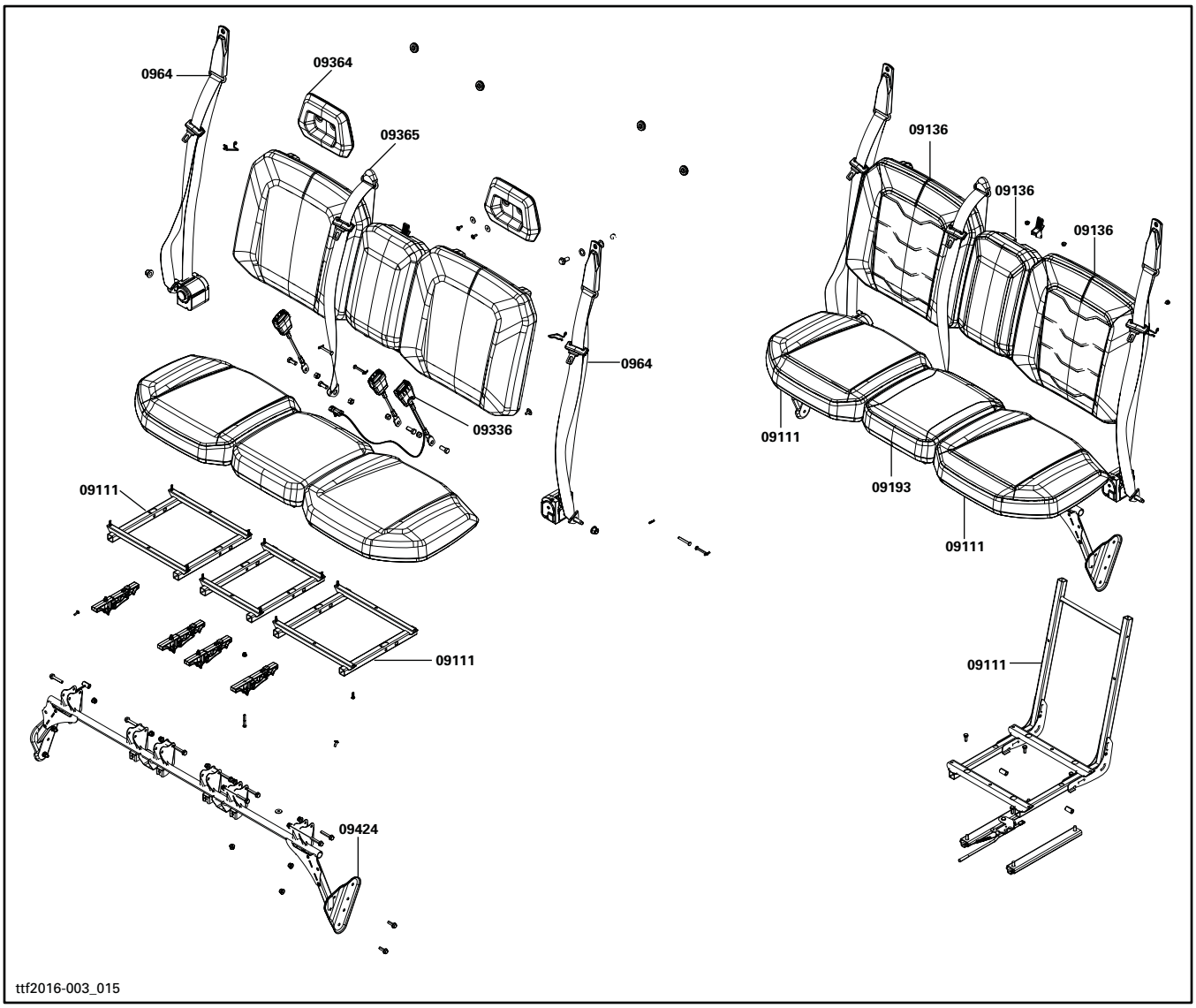
0964
09364
09365
09336
0964
09111
09111
09424
09136
09136
09136
09111
09193
09111
09111
ttf2016-003_015

BODY AND ACCESSORIES
CARROSSERIE ET ACCESSOIRES

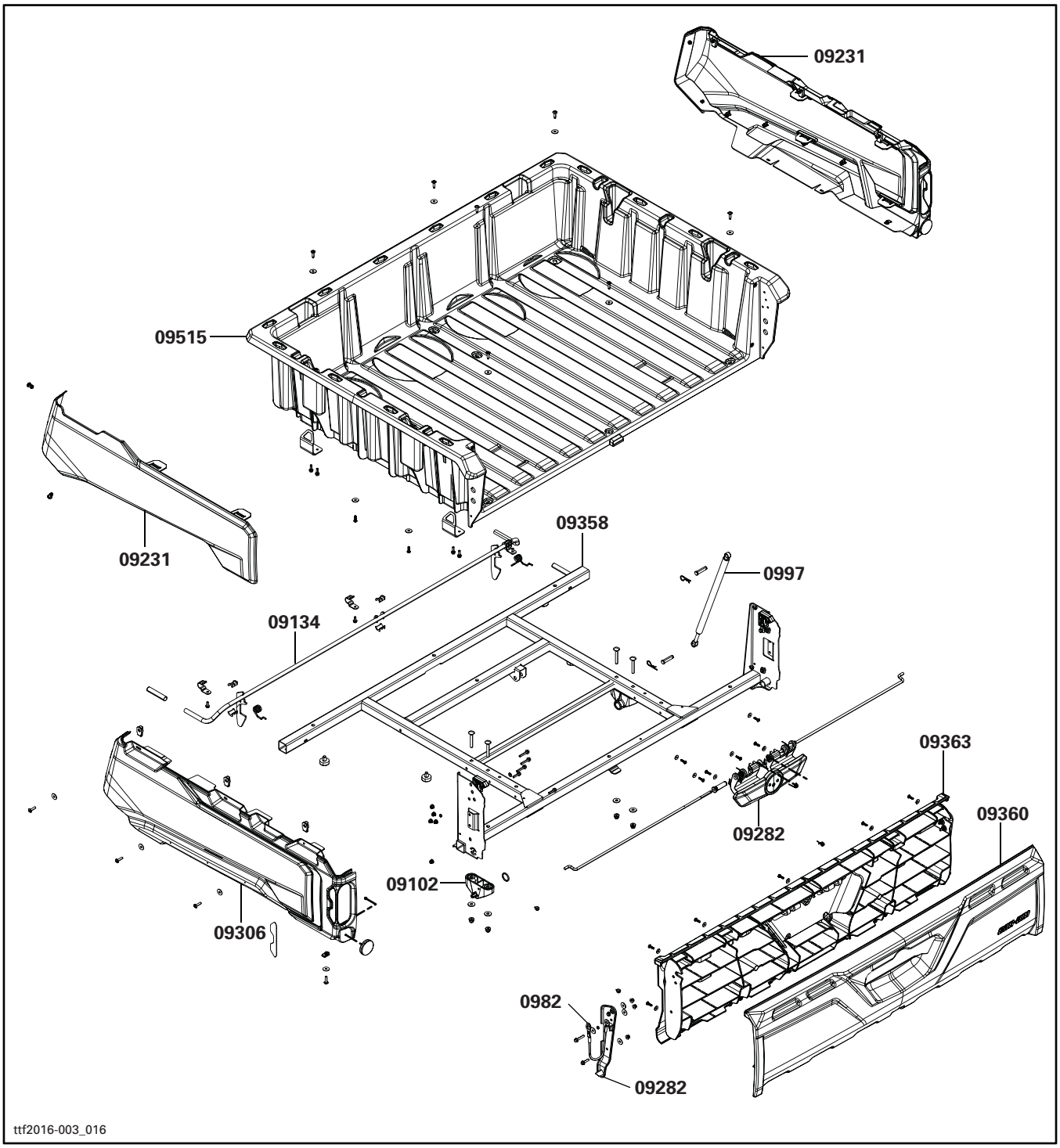

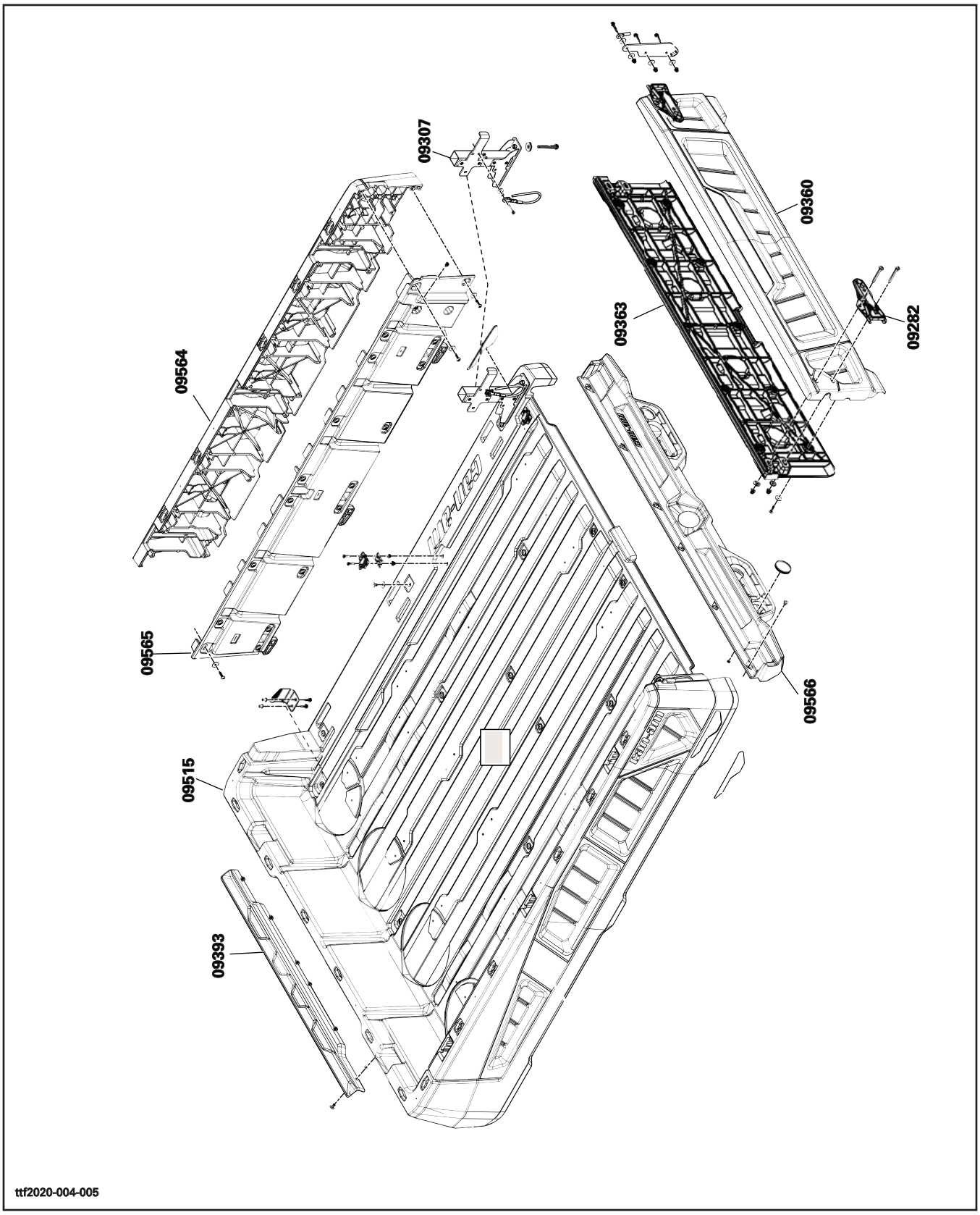
09307
09360
09363
09282
09564
09565
09566
09515
09393
ttf2020-004-005

BODY AND ACCESSORIES
CARROSSERIE ET ACCESSOIRES

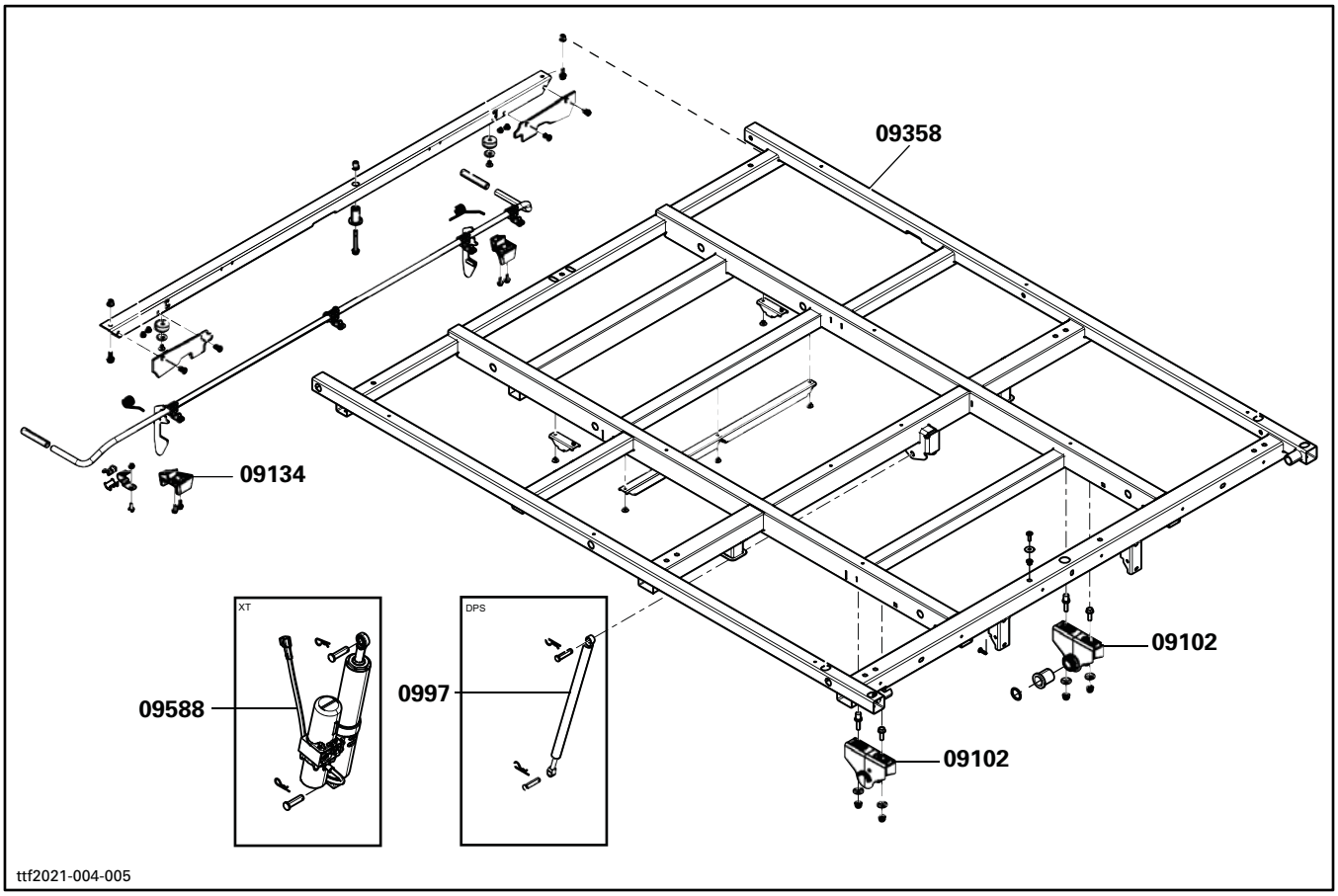

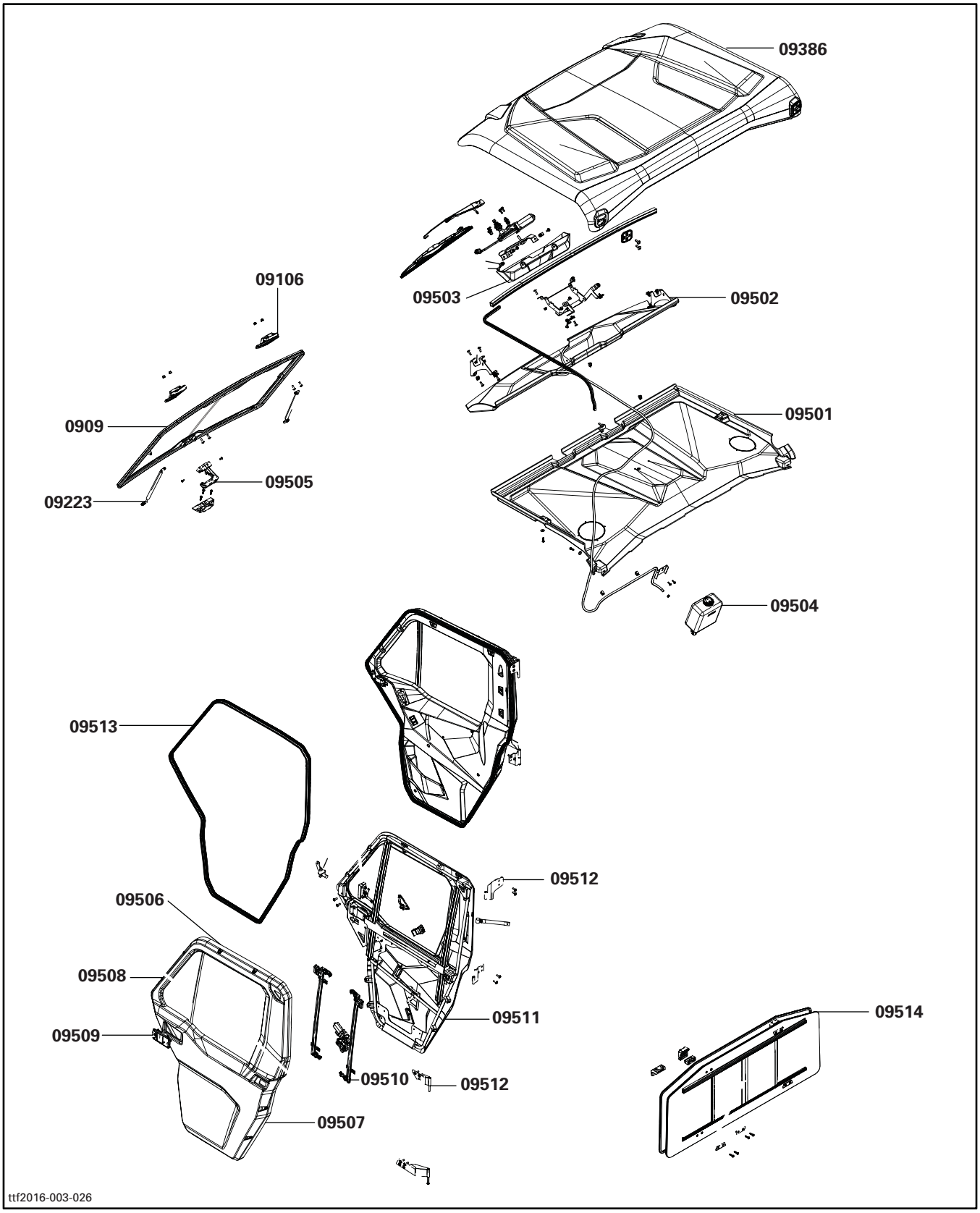
09386
09503
09502
09106
0909
09501
09505
09223
09504
09513
09512
09506
09508
09511
09514
09509
09510
09512
09507
ttf2016-003-026

BODY AND ACCESSORIES
CARROSSERIE ET ACCESSOIRES

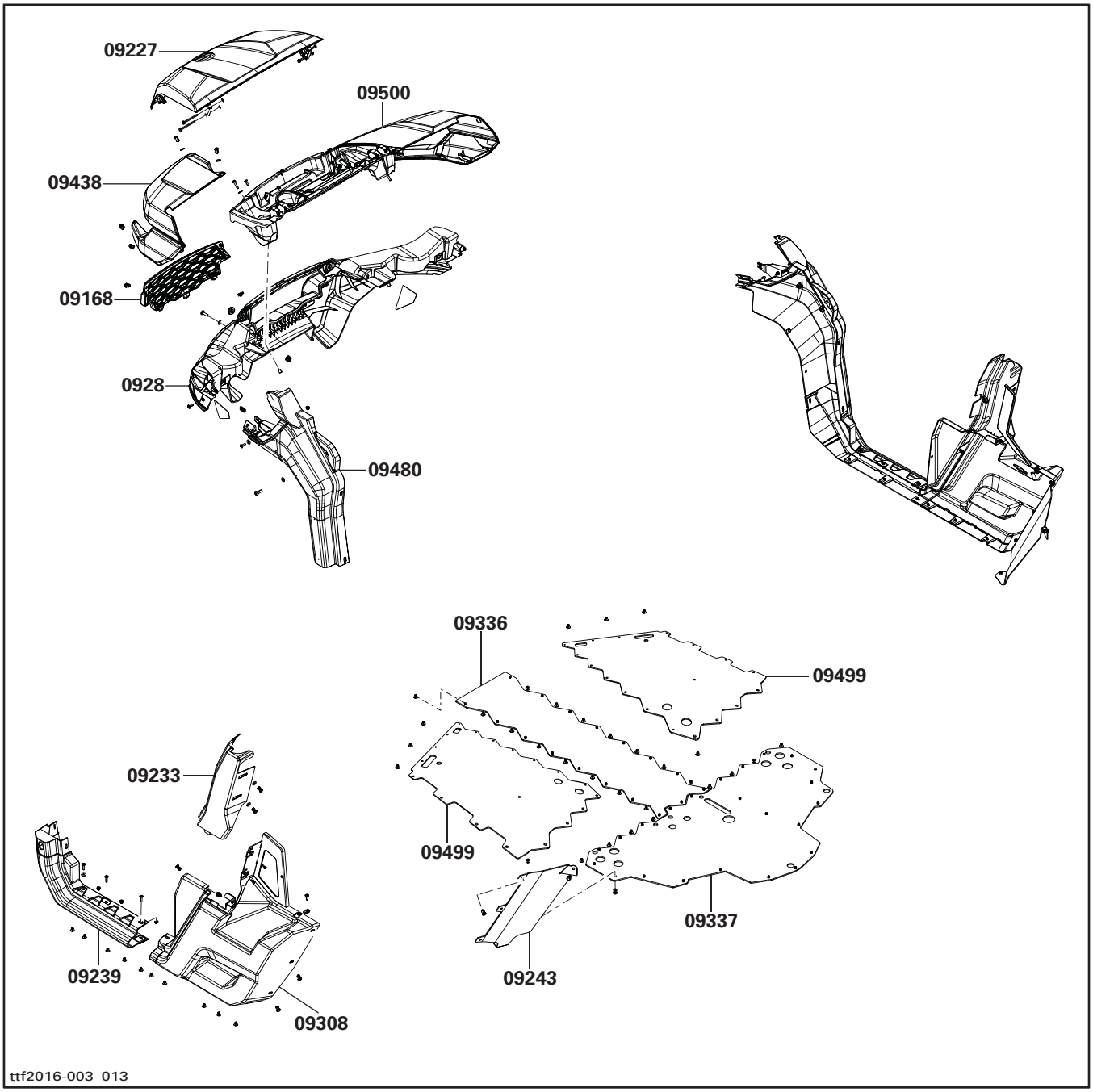

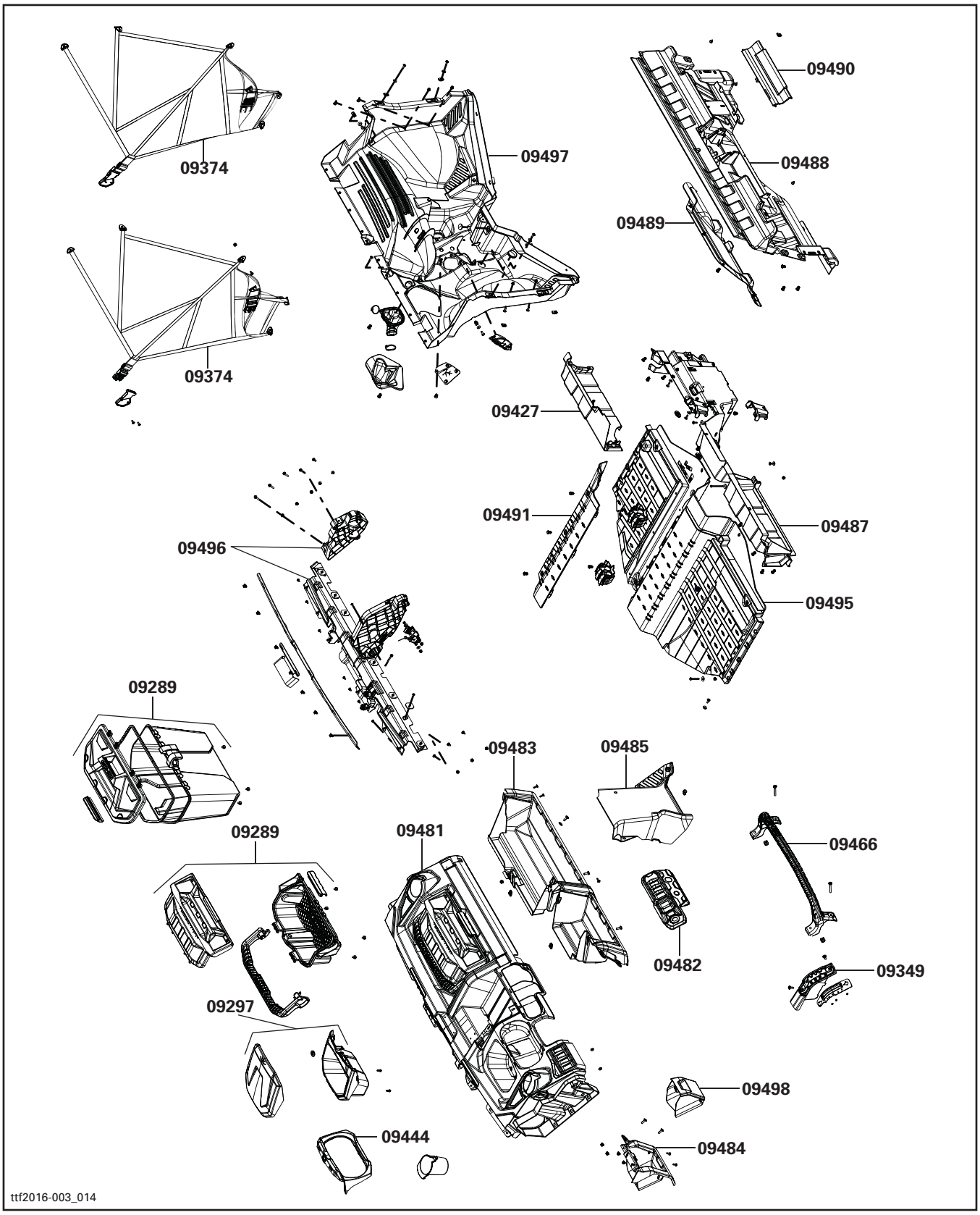
09374
09374
09497
09490
09488
09489
09427
09491
09487
09496
09495
09289
09483
09485
09289
09481
09466
09482
09349
09297
09498
09444
09484
ttf2016-003_014

BODY AND ACCESSORIES
CARROSSERIE ET ACCESSOIRES

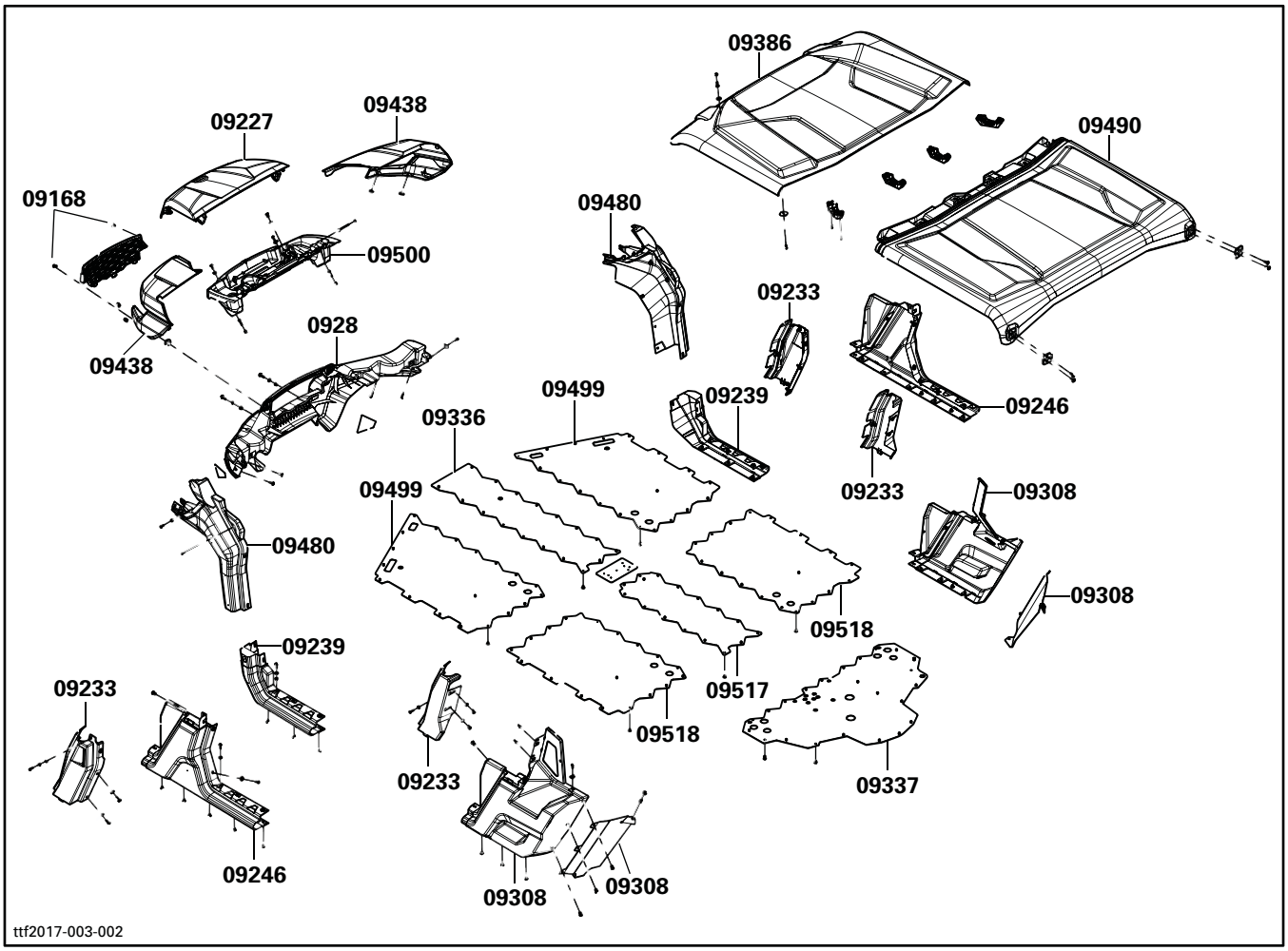

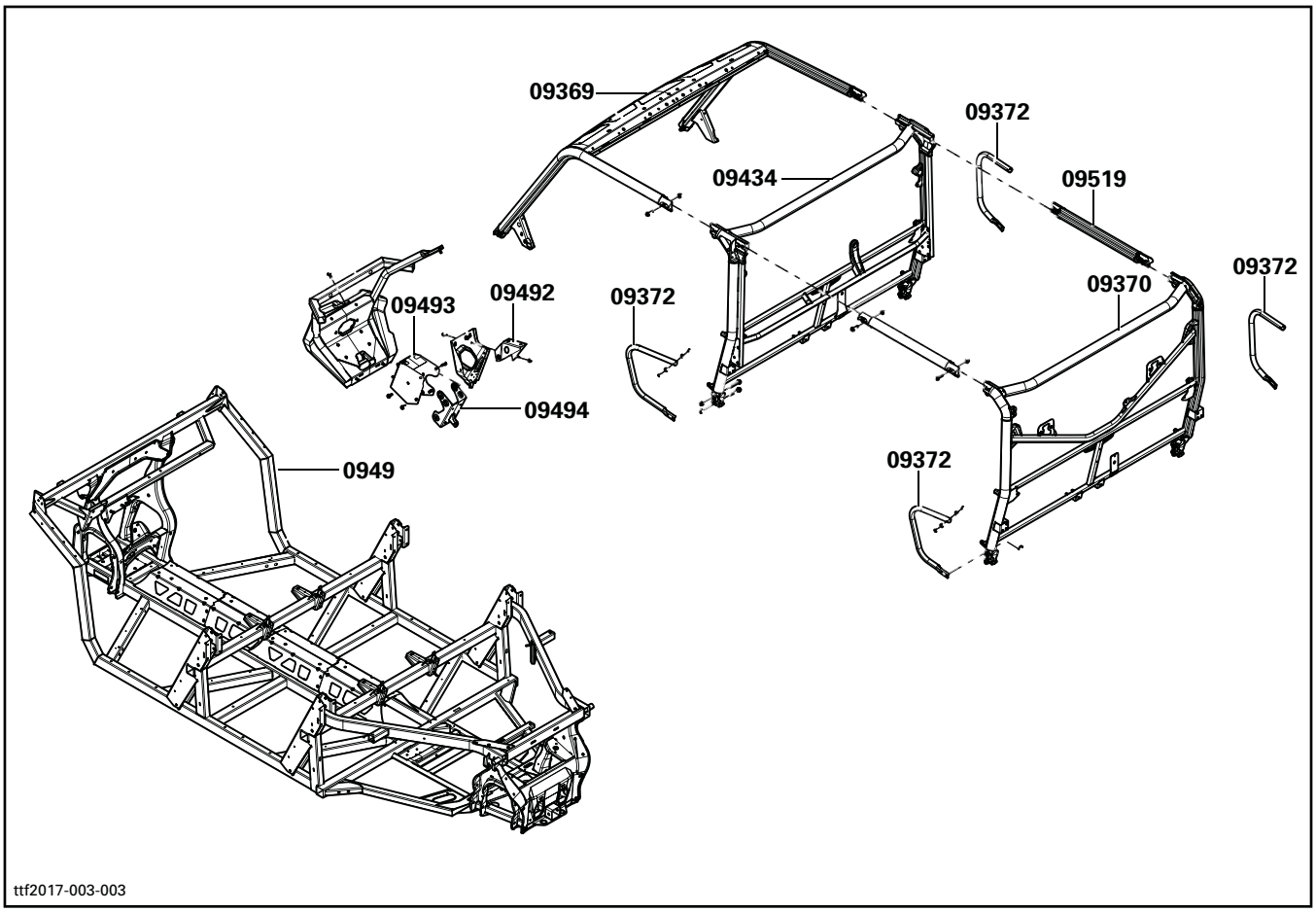
09369
09372
09434
09519
09372
09370
09493
09492
09372
09494
0949
09372
ttf2017-003-003

BODY AND ACCESSORIES
CARROSSERIE ET ACCESSOIRES

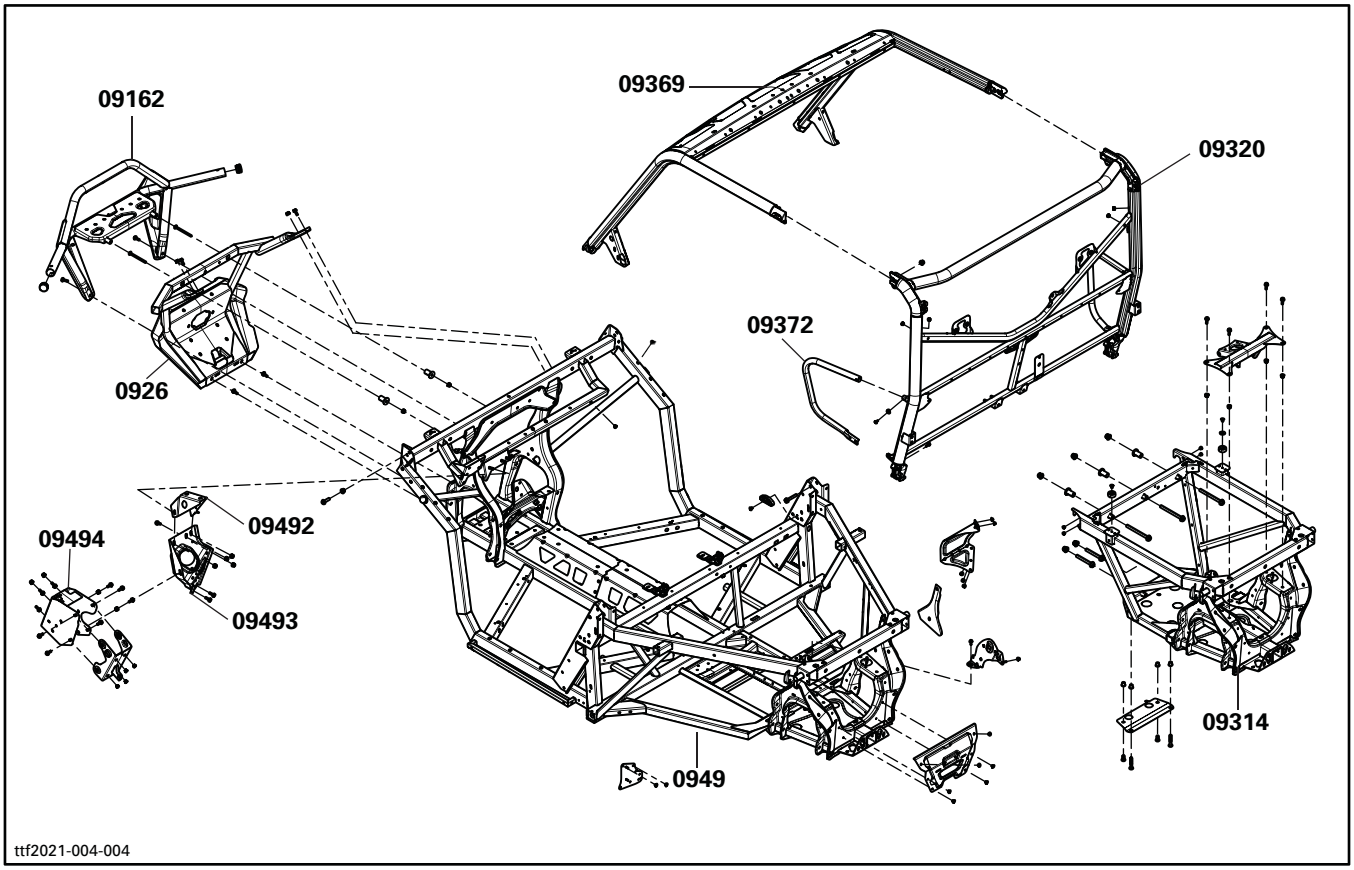

SYSTEM SYSTÈME	CODE	DESCRIPTION	DEFENDER HD5	DEFENDER HD8 / HD10	DEFENDER CAB	DEFENDER CAB LTD	DEFENDER MAX	DEFEBDER NAX CAB	DEFENDER XMR	DEFENDER MAX XMR	DEFENDER 6 X 6	DEFENDER PRO
			17	18/19	20	21	22/23	24	25	26	27	28
10	**00**	**NO LABOR INVOLVED AUCUNE MAIN-D'OEUVRE**	**0**	**0**	**0**	**0**	**0**	**0**	**0**	**0**	**0**	**0**
10	01	IGNITION SWITCH INTERRUPTEUR D'ALLUMAGE	0.3	0.3	0.3	0.3	0.3	0.3	0.3	0.3	0.3	0.3
10	04	HEADLIGHT SWITCH INTERRUPTEUR DE PHARE	0.3	0.3	0.3	0.3	0.3	0.3	0.3	0.3	0.3	0.3
10	09	HEADLAMP AND/OR HEADLAMP SUPPORT (ASS'Y) (RH OR LH) PHARE AVANT ET/OU SUPPORT (COMPLET) (DROIT OU GAUCHE)	0.5	0.5	0.5	0.5	0.5	0.5	0.5	0.5	0.5	0.5
10	10	VOLTAGE REGULATOR RÉGULATEUR DE TENSION	0.3	0.3	0.3	0.3	0.3	0.3	0.3	0.3	0.3	0.3
10	13	BATTERY BATTERIE	0.3	0.3	0.3	0.3	0.3	0.3	0.3	0.3	0.3	0.3
10	21	MULTI FONCTION SWITCH INTERRUPTEUR MULTI FONCTION		0.3	0.3	0.3	0.3	0.3	0.3	0.3	0.3	0.3
10	29	TAIL LAMP HOUSING (ASS'Y) BOÎTIER DE FEU ARRIÈRE (COMPLET)	0.3	0.3	0.3	0.3	0.3	0.3	0.3	0.3	0.3	0.3
10	31	DC OUTLET PLUG PRISE D'ACCESSOIRE DC	0.3	0.3	0.3	0.3	0.3	0.3	0.3	0.3	0.3	0.3
10	34	ELECTRONIC MODULE MODULE ÉLECTRONIQUE	0.3	0.3	0.3	0.3	0.3	0.3	0.3	0.3	0.3	0.3
10	41	ENGINE HARNESS CÂBLAGE MOTEUR	1.2	1.2	1.2	1.2	1.2	1.2	1.2	1.2	1.2	1.2
10	45	WINCH (ASS'Y) (XT) TREUIL (COMPLET) (XT)		0.3	0.3	0.3	0.3	0.3	0.3	0.3	0.3	0.3
10	46	WINCH SOLENOID (XT) SOLÉNOÏDE DE TREUIL (XT)		0.3	0.3	0.3	0.3	0.3	0.3	0.3	0.3	0.3
10	47	WINCH SWITCH (XT) INTERRUPTEUR DE TREUIL (XT)		0.3	0.3	0.3	0.3	0.3	0.3	0.3	0.3	0.3
10	49	MULTIFUNCTION GAUGE CADRAN MULTIFONCTION	0.3	0.3	0.3	0.3	0.3	0.3	0.3	0.3	0.3	0.3
10	51	MAIN WIRE HARNESS CÂBLAGE PRINCIPAL	2.5	2.5	2.5	2.5	3.0	3.0	3.0	3.0	2.5	3.0
10	52	STARTING RELAY RELAIS DE DÉMARRAGE	0.4	0.4	0.4	0.4	0.4	0.4	0.4	0.4	0.4	0.4
10	67	RELAY RELAIS	0.3	0.3	0.3	0.3	0.3	0.3	0.3	0.3	0.3	0.3
10	68	ANY BULBS TOUTES LES AMPOULES	0.4	0.4	0.4	0.4	0.4	0.4	0.4	0.4	0.4	0.4
10	71	LICENSE LIGHT (ASS'Y) LUMIÈRE D'IMMATRICULATION (COMPLET)	0.3	0.3	0.3	0.3	0.3	0.3	0.3	0.3	0.3	0.3

ELECTRICAL SYSTEM
SYSTÈME ÉLECTRIQUE

SYSTEM SYSTÈME	CODE	DESCRIPTION	DEFENDER HD5	DEFENDER HD8 / HD10	DEFENDER CAB	DEFENDER CAB LTD	DEFENDER MAX	DEFEBDER MAX CAB	DEFENDER XMR	DEFENDER MAX XMR	DEFENDER 6 X 6	DEFENDER PRO
			17	18/19	20	21	22/23	24	25	26	27	28
10	75	REAR HARNESS CÂBAGLE ARRIÈRE	0.5	0.5	0.5	0.5	0.5	0.5	0.5	0.5	0.5	0.5
10	83	SWITCH INTERRUPTEUR		0.3	0.3	0.3	0.3	0.3	0.3	0.3	0.3	0.3
10	113	REMOTE CONTROL COMMANDE À DISTANCE	0.3	0.3	0.3	0.3	0.3	0.3	0.3	0.3	0.3	0.3
10	114	WINCH CONNECTOR CONNECTEUR DE TREUIL		0.3	0.3	0.3	0.3	0.3	0.3	0.3	0.3	0.3
10	145	DIFFERENTIAL LOCK SWITCH INTERRUPTEUR DIFFERENTIEL		0.3	0.3	0.3	0.3	0.3	0.3	0.3	0.3	0.3
10	146	WINCH HARNESS HARNAIS DU TREUIL		0.4	0.4	0.4	0.4	0.4	0.4	0.4	0.4	0.4
10	147	ROOF HARNESS HARNAIS DU TOIT			0.6	0.6		0.6				
10	148	WIPER HARNESS HARNAIS D'ESSUI-GLACE			0.4	0.4		0.4				
10	149	WINDSHIELD WASHER HARNESS HARNAIS LAVE-GLACE			0.7	0.7		1.0				
10	150	ROOF ACCESSOIRIES HARNESS HARNAIS ACCESSOIRE DU TOIT			0.5	0.5		0.5				
10	151	HEATER RADIATOR RADIATEUR DE CHAUFFAGE			1.3	1.3		1.3				
10	152	FAN SWITCH INTERRUPTEUR DU VENTILATEUR			0.3	0.3		0.3				
10	154	FAN VENTILATEUR			0.7	0.7		0.7				
10	155	HEATER CONTROL VALVE ACTUATOR ACTUATEUR DE SOUPAPE DU CONTRÔLE DE CHAUFFAGE			0.4	0.4		0.4				
10	159	SIGNATURE BEAM (RH OR LH) PHARE SIGNATURE (DROIT OU GAUCHE)				0.4		0.4	0.4	0.4		
10	164	FRONT DIFFERENTIAL HARNESS HARNAIS DU DIFFERENTIEL AVANT		0.6					0.6	0.6	0.6	
10	165	FRONT DRIVE MODULE (FDM) MODULE ENTRAINEMENT AVANT (FDM)		0.3					0.3	0.3	0.3	
10	166	FDM SUPPORT SUPPORT FDM		0.3					0.3	0.3	0.3	
10	167	STARTER HARNESS HARNAIS DU DEMARREUR	0.8	0.8	0.8	0.8	0.8	0.8	0.8	0.8	0.8	0.8
10	168	ELECTRICAL SUPPORT SUPPORT ELECTRIQUE	2.0	2.0	2.0	2.0	2.0	2.0	2.0	2.0	2.0	2.0

SYSTEM SYSTÈME	CODE	DESCRIPTION	DEFENDER HD5	DEFENDER HD8 / HD10	DEFENDER CAB	DEFENDER CAB LTD	DEFENDER MAX	DEFEBDER NAX CAB	DEFENDER XMR	DEFENDER MAX XMR	DEFENDER 6 X 6	DEFENDER PRO
			17	18/19	20	21	22/23	24	25	26	27	28
10	170	USB OUTLET PRISE USB		0.3	0.3	0.3	0.3	0.3	0.3	0.3	0.3	0.3
10	171	THROTTLE PEDAL HARNESS HARNAIS DE LA PÉDALE ACCÉLÉRATEUR		1.0	1.0	1.0	1.0	1.0	1.0	1.0	1.0	1.0
10	181	CLIMATE CONTROL CONTRÔLE DE CLIMAT				0.3		0.3				
10	186	HVAC UNIT FRONT COVER COUVERCLE AVANT UNITE HVAC				0.3		0.3				
10	187	HVAC UNIT REARCOVER COUVERCLE ARRIERE UNITE HVAC				2.8		2.8				
10	188	HEATER VALVE SOUPAPE DE CHAUFFAGE				1.0		1.0				
10	189	DRAIN VALVE SOUPAPE DE DRAINAGE				0.5		0.5				
10	190	HVAC HARNESS HARNAIS HVAC				0.6		0.6				
10	191	DOOR VAN VOLET D'AIR				0.4		0.4				
10	192	JUNCTION BLOCK COVER COUVERCLE BORNIER	0.3	0.3	0.3	0.3	0.3	0.3	0.3	0.3	0.3	0.3

ELECTRICAL SYSTEM
SYSTÈME ÉLECTRIQUE

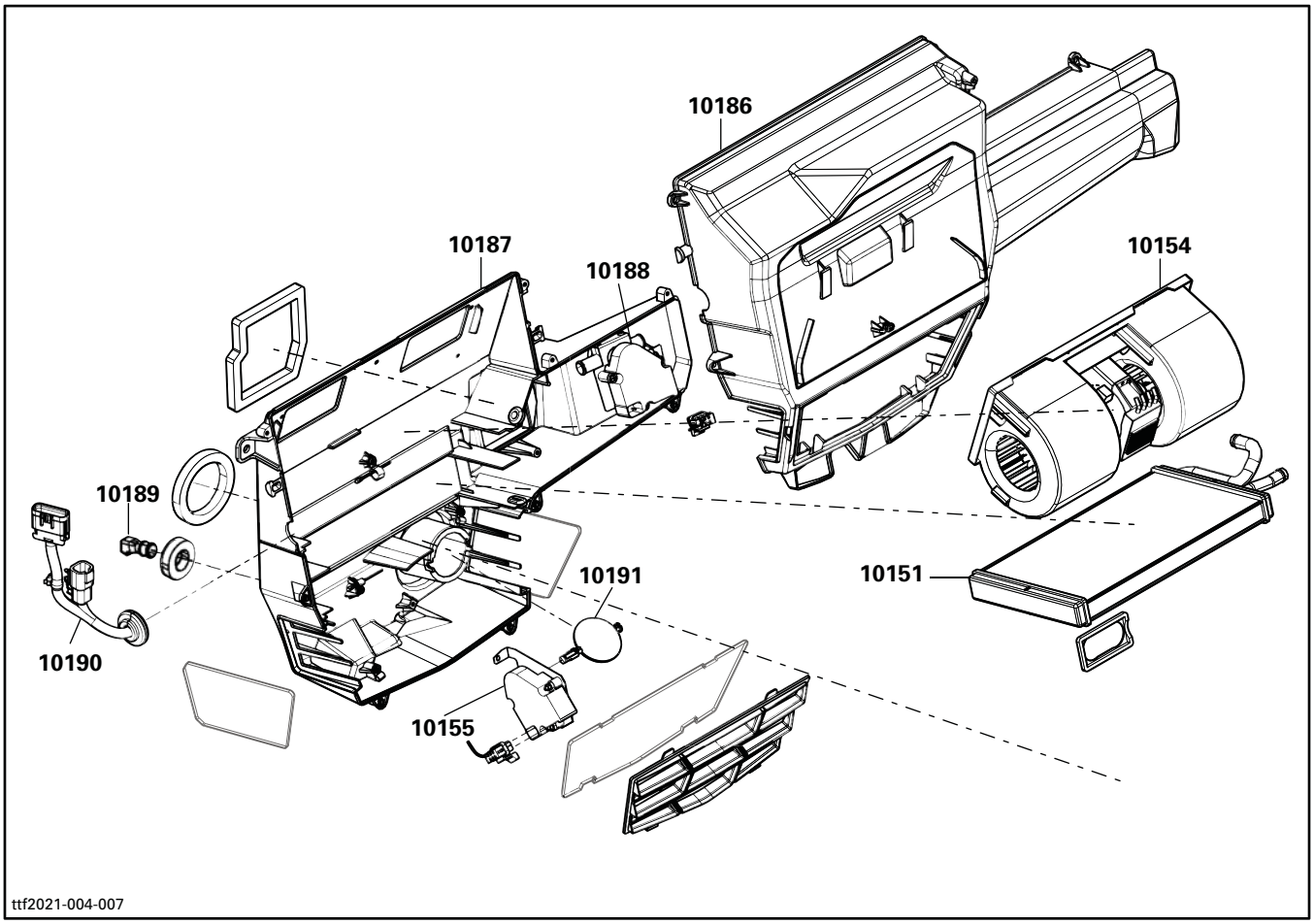

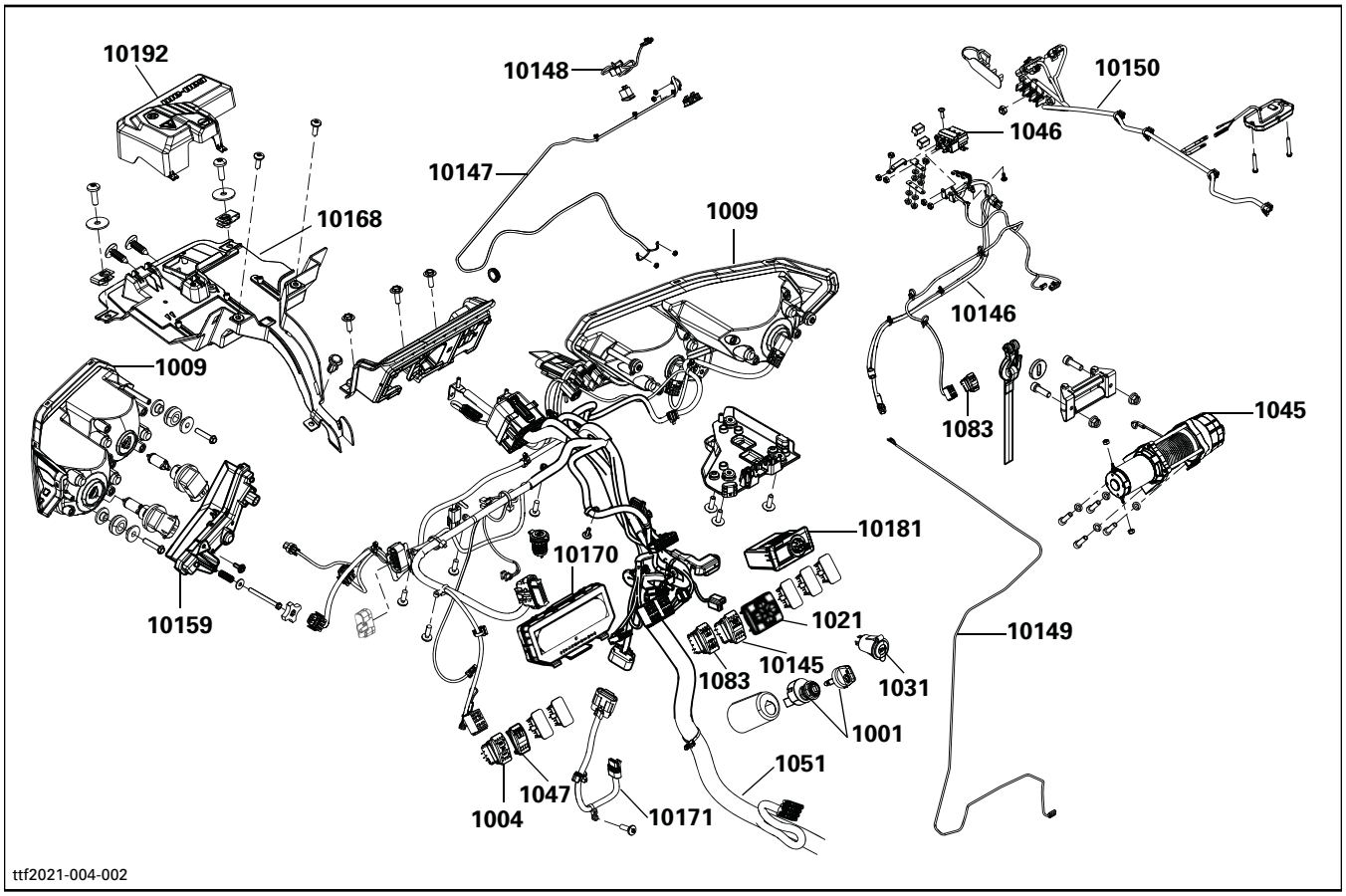
10192
10148
10150
1046
10147
10168
1009
10146
1009
1083
1045
10181
10170
10159
1021
10149
10145
1083
1031
1001
1051
1047
1004
10171
ttf2021-004-002

can-am

2021 Can-Am Side-By-Side Technical Presentation - June

BRP ADVENTURE BY DESIGN

Maverick Trail / Sport

Defender / Traxter

Maverick (X3)

Supplier and minor changes

Change	Description	Retrofit	Model Application
New Wheel Bearing Supplier	Same wheel bearing design, new part number, old part number can be used up	Yes	
New Caliper Bracket Supplier	Same caliper bracket, new part number, old part number can be used up	Yes	
New Steering Column Supplier	Same steering column design, new part number, old part number can be used up	Yes	
New Brake Disk Supplier	Same brake disk design, new part number, old part number can be used up	Yes	
Longer Threads on Front Differential	So differential uses same bolts as the brake calipers (M10x25 - 207502546)	Yes	

Common changes

Description	Retrofit	Model Application
Voltage Regulator Fuse 50A fuse to protect regulator from reversed connection to battery poles on 650Watt regulator	Yes on MY20	
New Actuator on Rear Differential Same function and supplier, new part number	No (Uses different calibration)	
Cluster keypad Improved membrane robustness	Yes	

Package name change as of MY21

- For European Community models

PRO becomes XU

New name for the PRO package

MAVERICK SPORT / TRAIL

Electrical System Changes

Description	Retrofit
Programmable RFID key and push start button on ABS and non-ABS models (**Europe T-Category models only**)	No
Signature lights now turn off with headlights	N/A

Engine System Changes

Description	Retrofit
Only on Maverick Sport / Trail 1000 & 1000R engines. Front PTO with double bearing to reduce harmonic vibrations	No

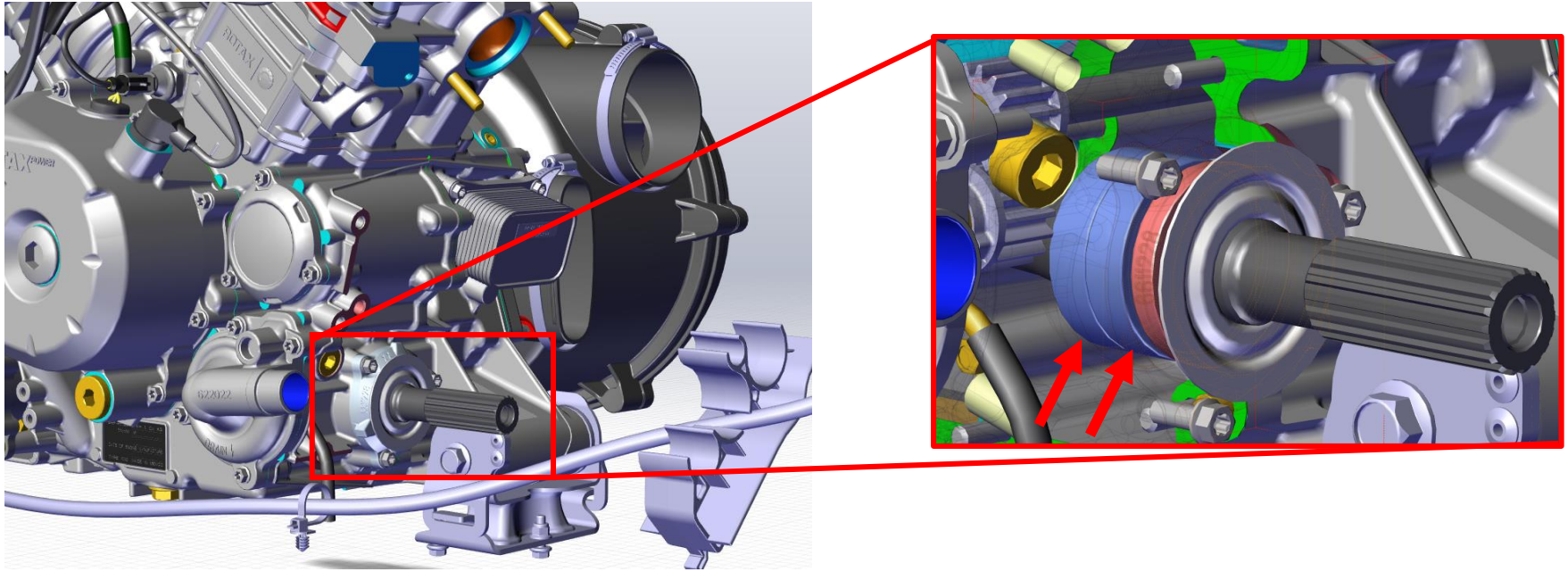

Cab Interior Changes

Description	Retrofit
New 7.6” Cluster bezel - Sleeker/more aesthetic design	Yes

Packages for MY21 (Same as MY20)

MAVERICK SPORT

X-RC 64	X-MR 64	X-XC 64	DPS	BASE
P CHALK GREY / CAN-AM RED / 21	P MINERAL GREY / MANTA GREEN / 20	P MACCHIATO SATIN / 21 / BLACK	P TIMELESS BLACK / 20	Ci CAN-AM RED / 21
			Ci GULFSTREAM BLUE / 21	

MAVERICK TRAIL

DPS	BASE
P TIMELESS BLACK / 20	Ci CAN-AM RED / 21
Ci GULFSTREAM BLUE / 21	
WD CAMO / 18-20	

Body Changes – New Coloration

Description
New Colors Trail DPS in Gulfstream Blue Sport X XC in Macchiato Satin Sport X RC in Chalk Metallic

DPS

X XC

X RC

Defender / Traxter

Electrical System Changes

Description	Retrofit
Cluster keypad on XT and XT CAB	Yes on MY20

Electrical System Changes

Description	Retrofit
Added LED signature light on XMR and Lonestar	Yes on MY20

Electrical System Changes

Description	Retrofit
HVAC control module temperature range selection increased. Tmin (13C / 56F) to Tmax (28C / 82F). New screen visual display. Increased tolerance to hot ambient temperatures	Yes on existing HVAC

Electrical System Changes

Description	Retrofit
New ECM calibration on HD8 and HD10 for new rear differential actuator	No

Electrical System Changes

Description	Retrofit
3 New Bezels for Clusters: • 7.6” Cluster on T-cat, LTD, and XMR. • 4.5” Cluster + Storage on XT. • 4.5” Cluster + Without Storage on DPS	No

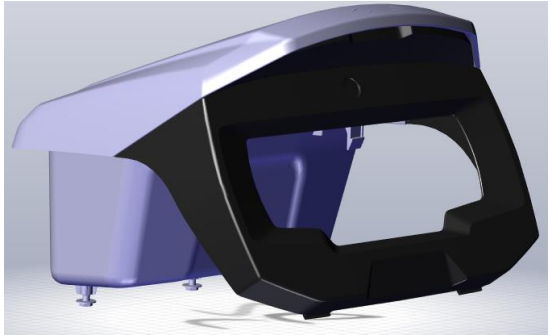

7.6” Cluster

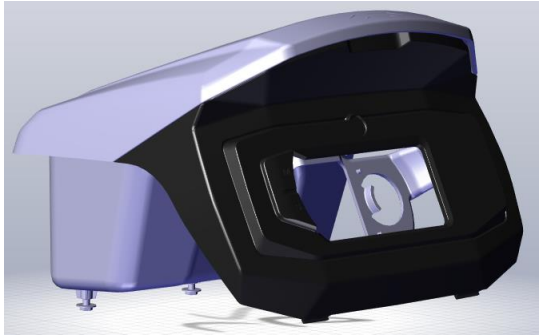

4.5” Cluster with storage

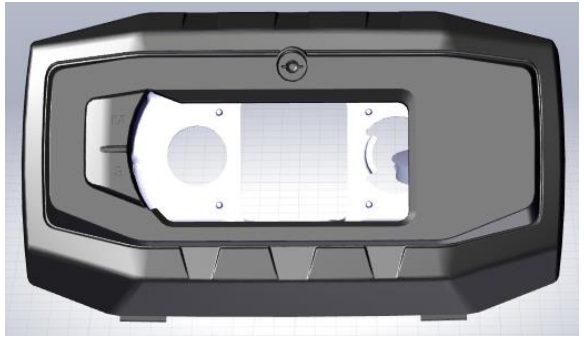

4.5” Cluster without storage

Electrical System Changes

Description	Retrofit
MY21 Defender Pro model will now come with EVAP components for California specific SKUs	Yes on MY20

Fuel System Changes

Description	Retrofit
EVAP Canister on California PRO Same canister design as other models, on PRO with extended hose routing. NOTE: There is no intake resonator on EVAP models.	N/A

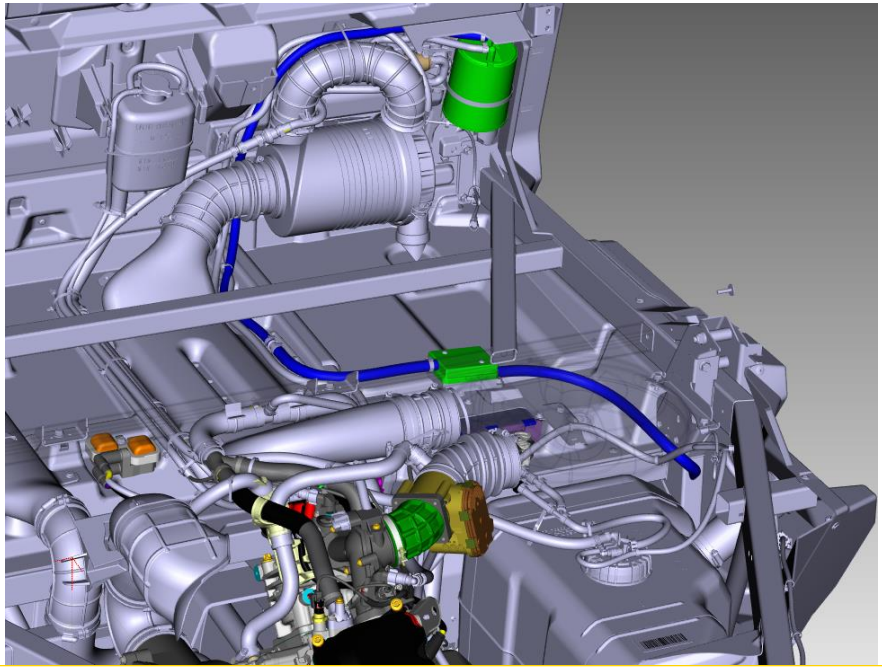

Engine System Changes

Description	Retrofit
Voltage regulator support - New part numbers 500W / 650W and 850W	Yes

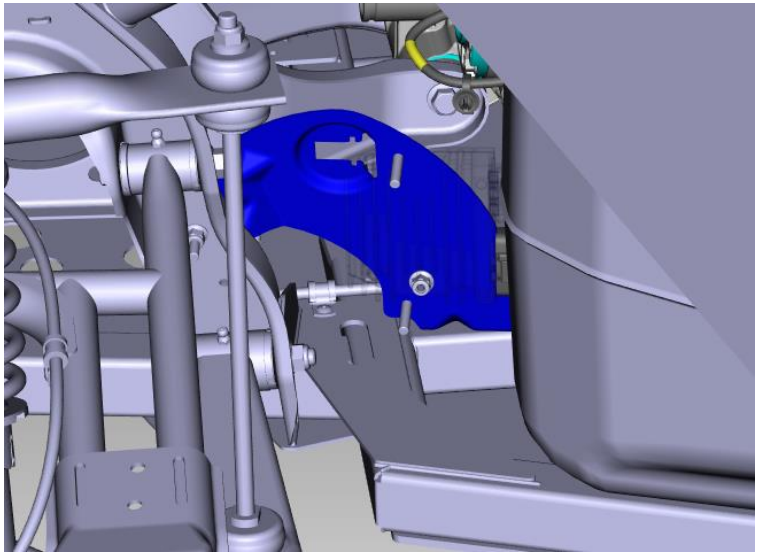

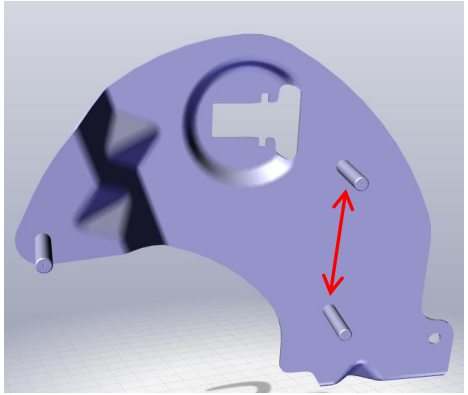

500W / 650W

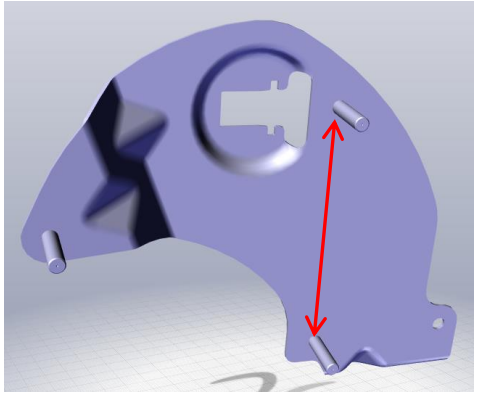

850W

Engine System Changes

Description	Retrofit
New spark plug DCPR8E with solid post and new spark plug cables. Only on HD8	Yes, using new cable assy and spark plug

Engine System Changes

Description	Retrofit
HD8 - New spark plug wire bracket to improve routing of spark plugs wires	Yes, using new cable assy

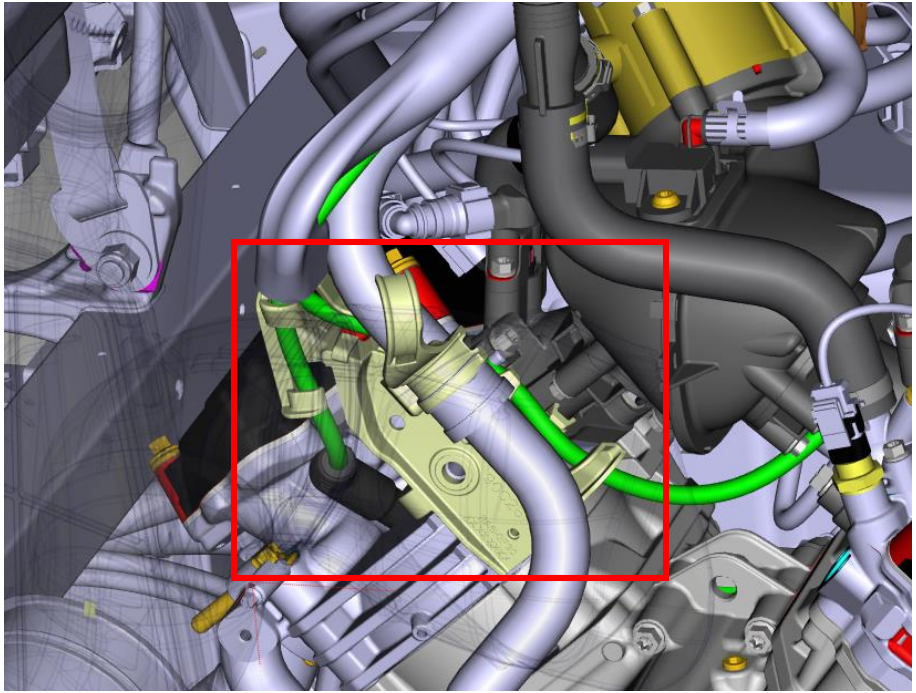

Engine System Changes

Description	Retrofit
New output shaft seals - Improved seal durability.	Yes

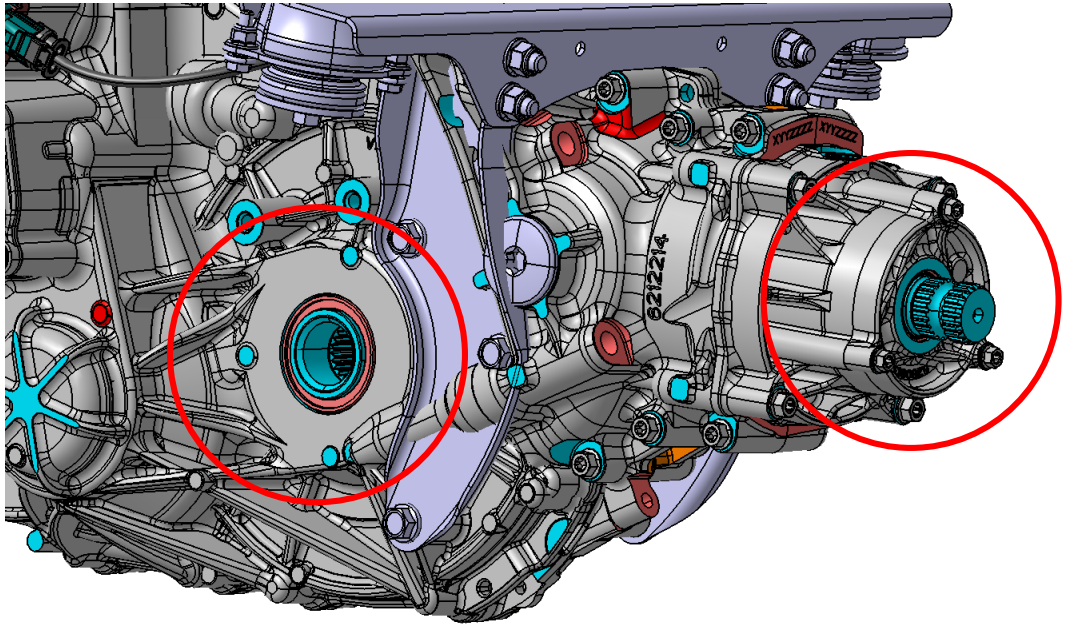

Cargo System Changes – **NEW** Power-Tilt Bed – 6X6 XT

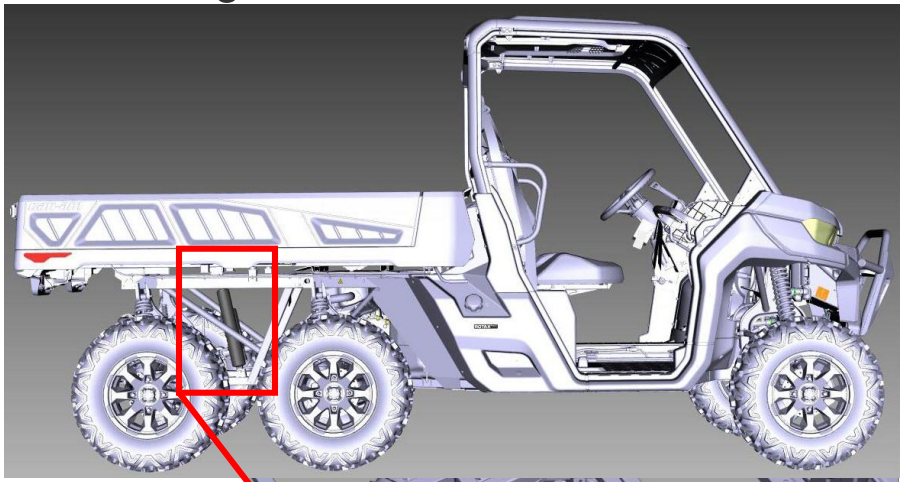

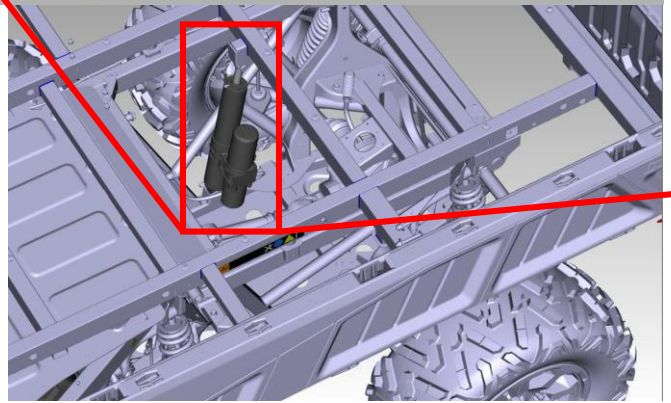

Cargo System Changes – **NEW** Power-Tilt Bed – Pro XT

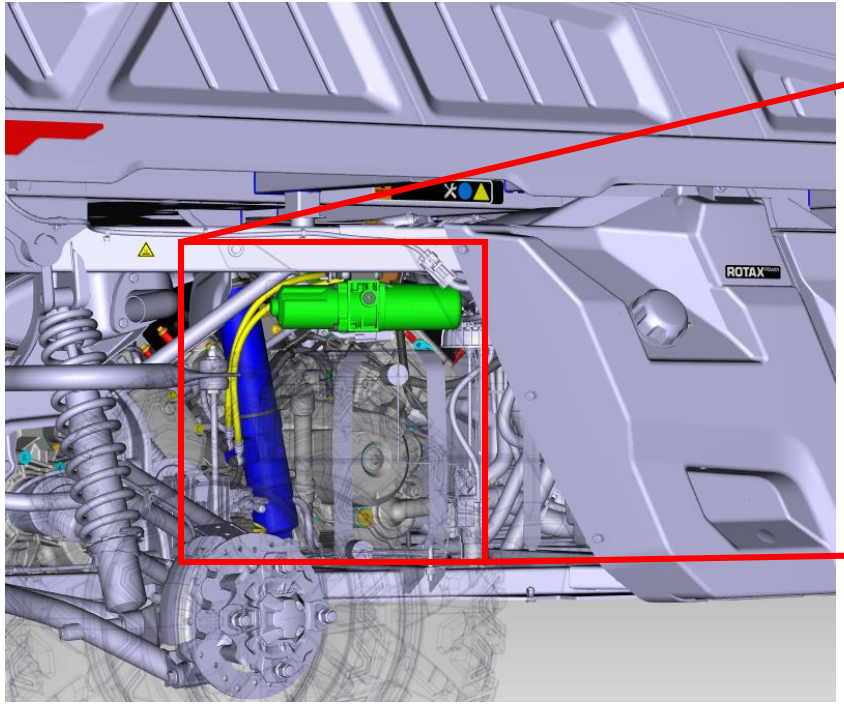

Cargo System Changes – **NEW** Power-Tilt Bed

Description	Retrofit
Power tilt bed – For effortless dump box usage Included on PRO XT and 6x6 XT	No

- Power-tilt activated by switch on dashboard
- Max lifting capacity = 1,000 lb (454 kg)
- Retrofits previous MY20 Pro and 6X6 models.
- When power-tilt reaches extension or retraction limits, internal hydraulic circuit uses bypass to protect system.
- Available in PAC for MY20 / 21 models
- Hydraulic portion of the kit is not serviceable, no spare parts for replacement.

Cab Interior Changes

Description	Retrofit
Bolstered Seat Cushions On XT, Lone Star, XMR and Limited models	Yes

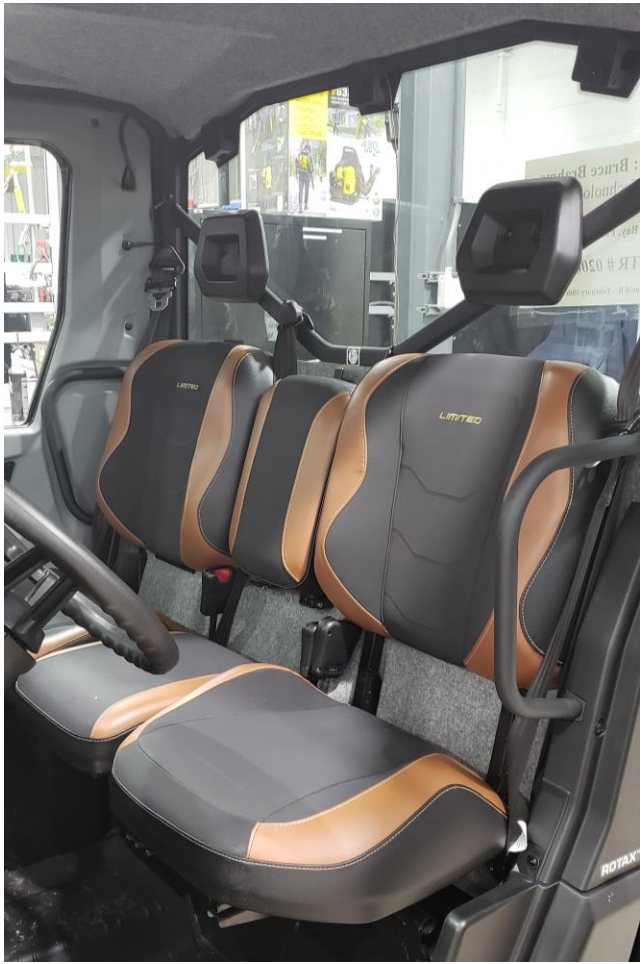

Exhaust System Changes

Description	Retrofit
Added Wool in HD10 Muffler Improve durability and reduce muffler temperature Also has improved internal air flow to prevent muffler expansion	Yes

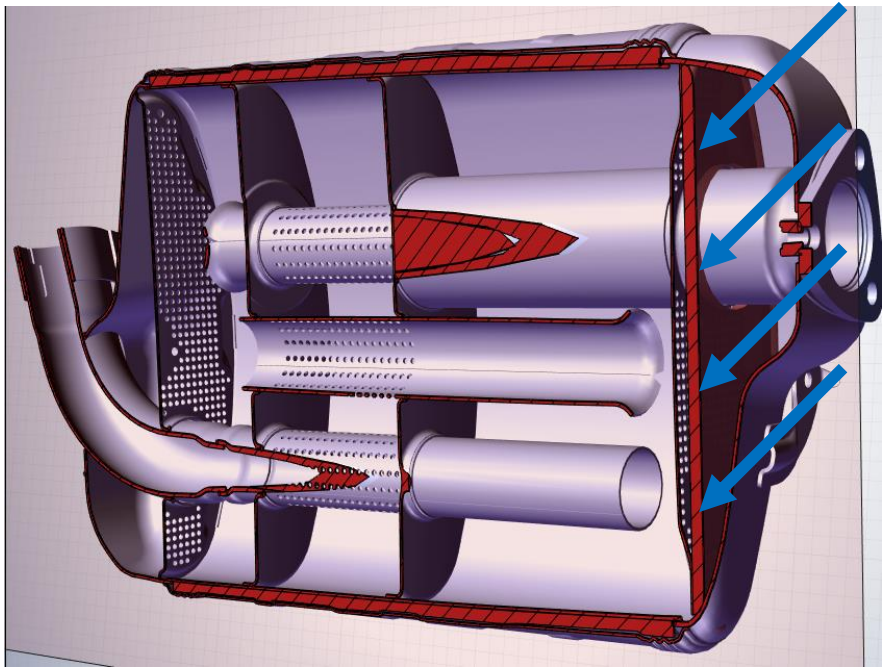

Exhaust System Changes

Description	Retrofit
New Heat Shield Better clearance with windshield washer tank, better clearance for CVT air inlet PAC kit. Accommodates new position of cargo shock and Power-Tilt Bed	No

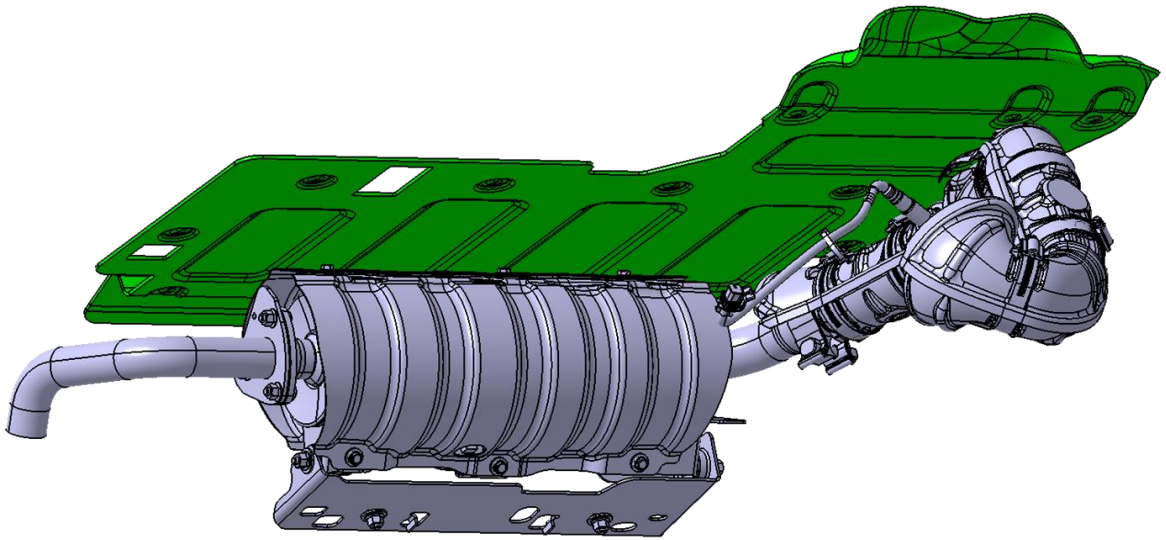

Cooling System Changes

Description	Retrofit
Standardized Thermostat Set-up Thermostat moved to front of vehicle (similar to HVAC model) All new hoses part numbers, not identical to AC because no heater coil. Note HD5 doesn't have thermostat	No
NEW Air deflector now made with injected plastic and the clips are integrated	No

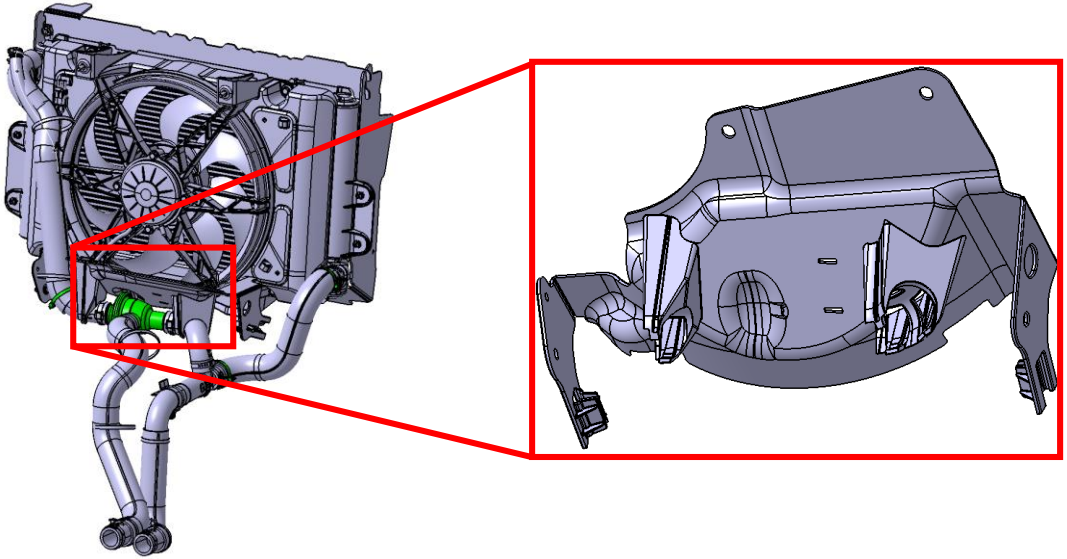

Body System Changes

Description	Retrofit
Traxter T-cat Fender flare to be installed at PDI for 64” XU (Pro) models (**Europe T-Category models only**) HD5 & HD8 models remain with 62in width	No

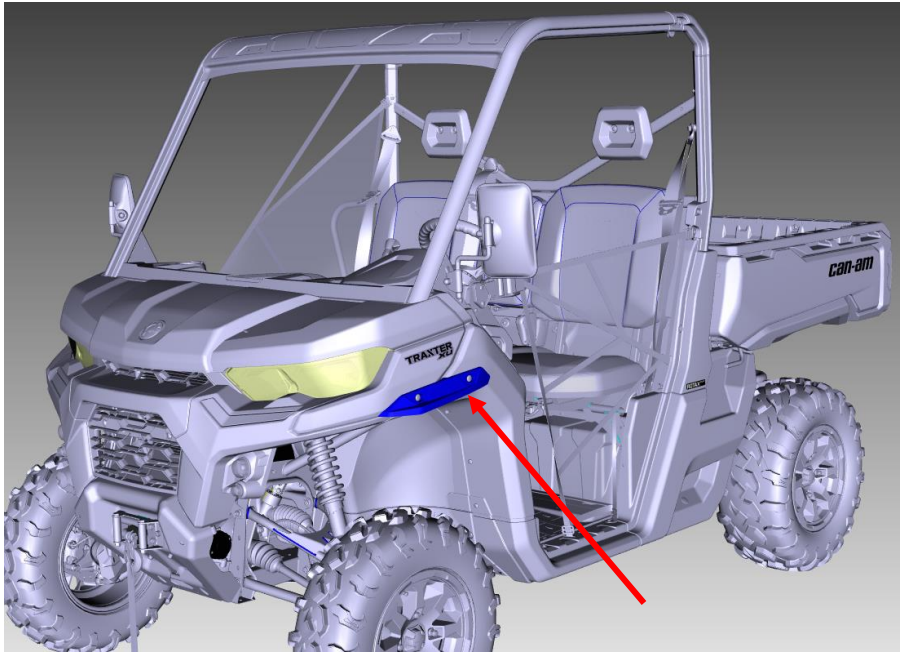

Front Suspension Changes

Description	Retrofit
Traxter HD10 T-cat with arched front lower A-arms with for 64” XU (Pro) models (**Europe T-Category models only**) HD5 & HD8 models remain with 62in width	No

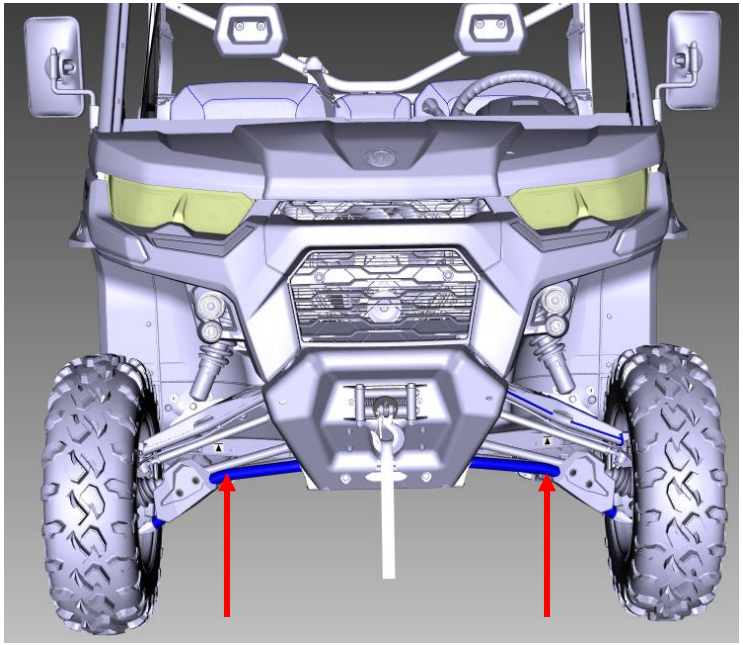

Body Changes – New Coloration

Description
New Colors PRO XT in Oxford Blue (painted), LTD MAX in Oxford Blue (painted), XT in Timeless Black (painted)

PRO XT

LTD MAX

XT

MY21 Can-Am Traxter Line-up

T-category line-up

BASE

HD5

HD8

XU

HD8

HD8

HD10

DPS

MAX HD10

NRMM line-up

DPS

HD8

HD10

HD8

X MR

HD10

MAVERICK X3

New Packages for MY21

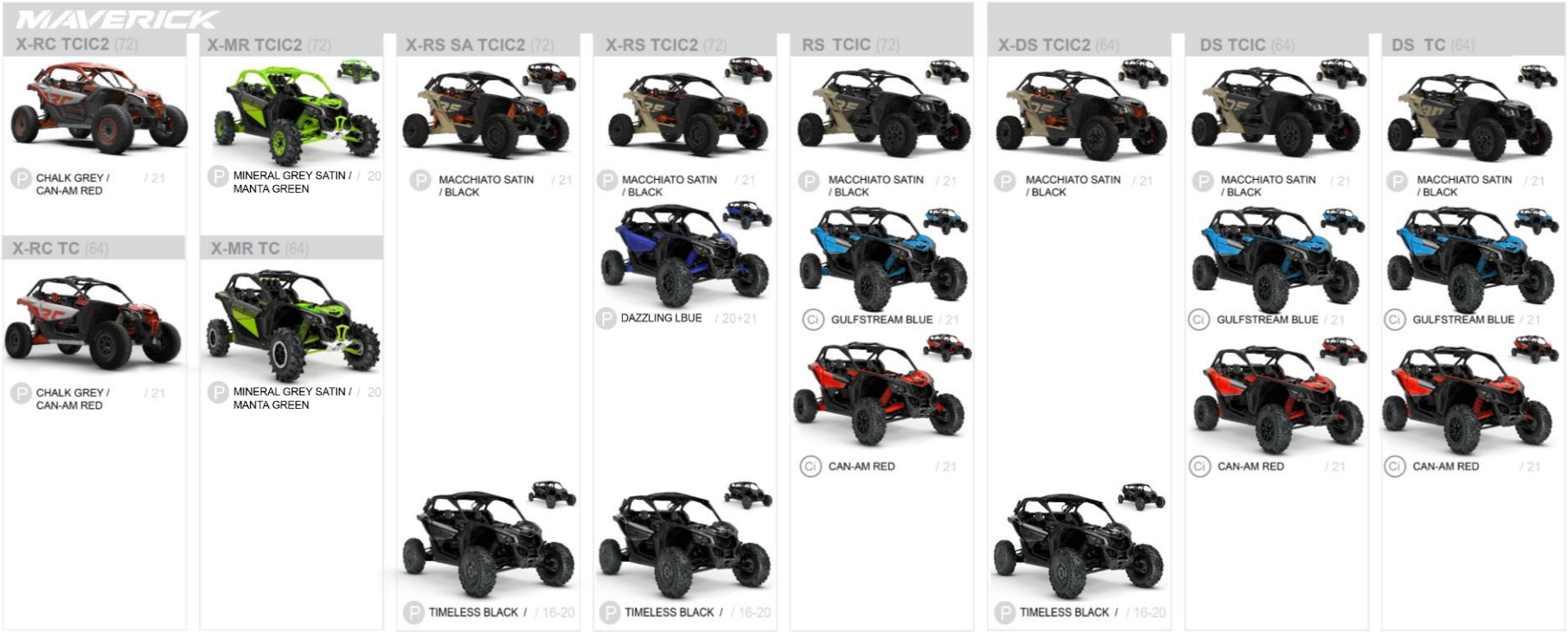

Engine System Changes

Description	Retrofit
New air inlet ducting on all models except X-MR to reduce noise to operator. PAC kit 70350111	Yes for all except X-MR

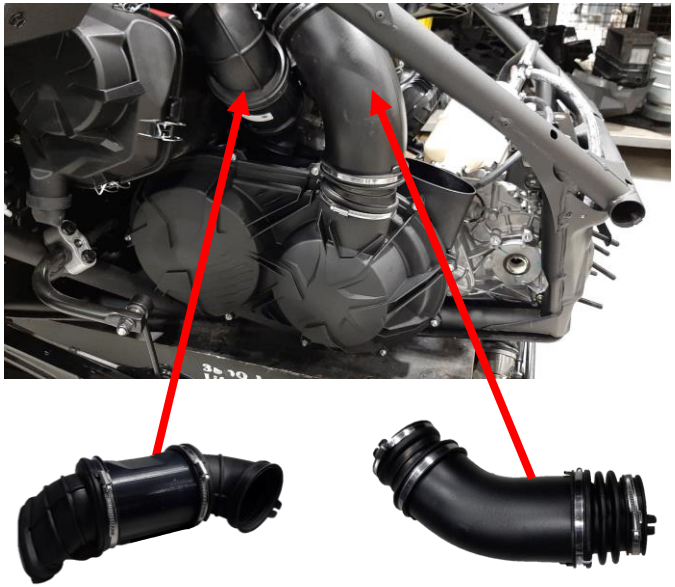

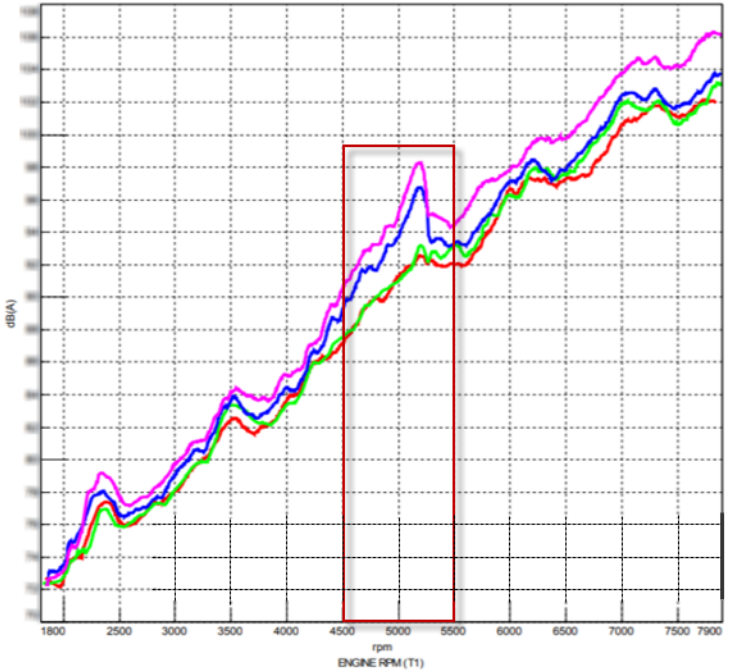

Non acoustic components
MY20 CVT cover + new ducts

Engine System Changes

Description	Retrofit
- Maverick Turbo RR models will a new Engine Control Module called XCU and updated fire wall. New firewall can accommodate both the XCU and the existing ECM. - New special tool – XCU pinout box – 529036513 - New main, junction, and engine wiring harnesses also	No

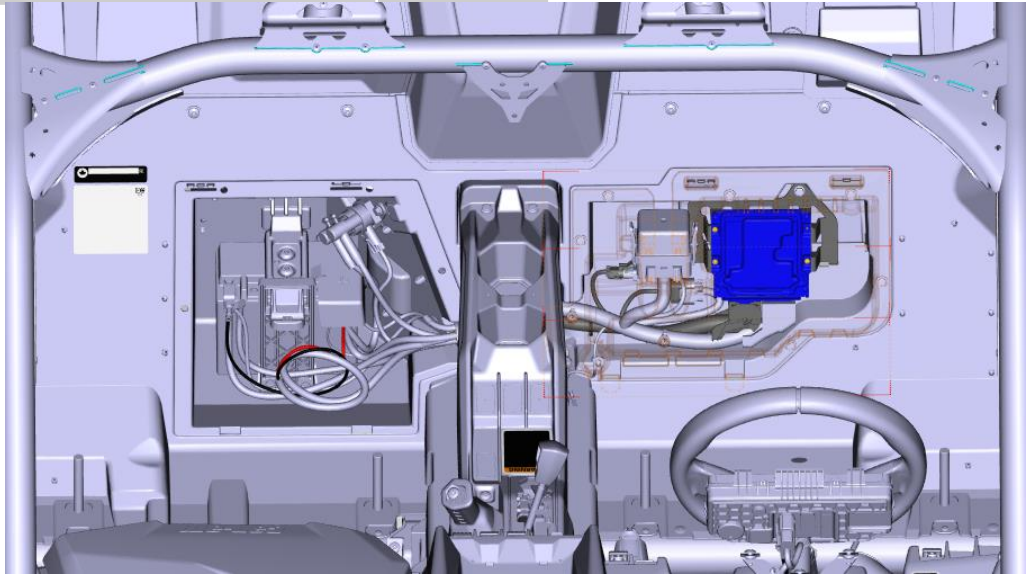

Engine System Changes

Description	Retrofit
Contactless Gear Box Position Sensor and connector. Standardization with MY20 Defender and Maverick Trail / Sport	No

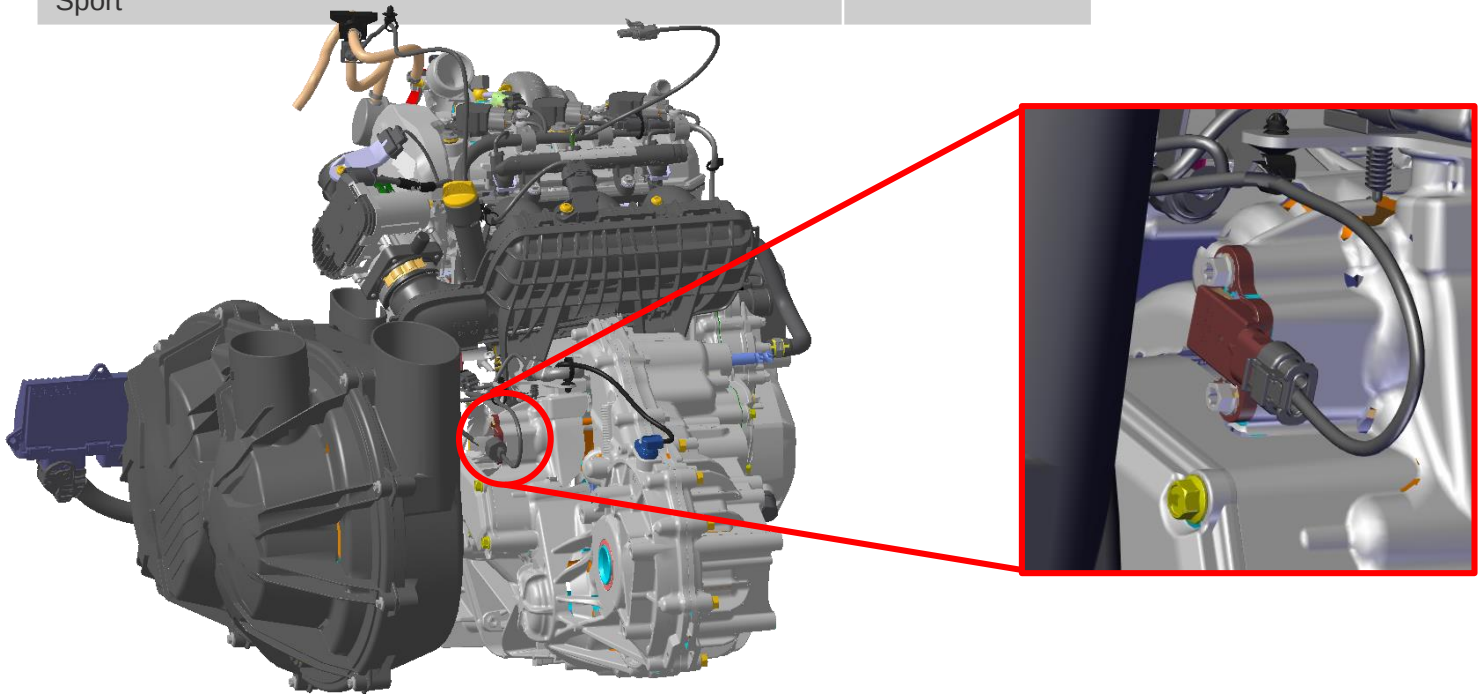

Exhaust System Changes

Description	Retrofit
Maverick Turbo RR only - New O2 sensor to read exhaust gases air fuel ratio	No

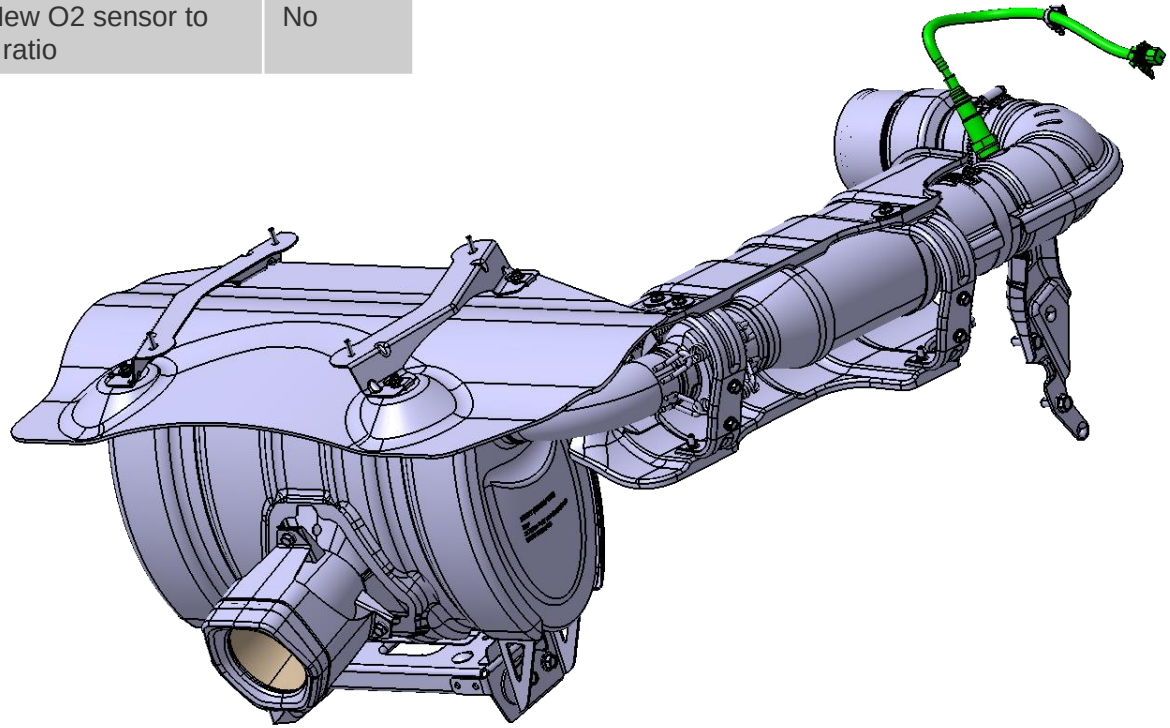

Electrical System Changes

Description	Retrofit
New key IMOB module communicates with CAN for D.E.S.S. functions. Only on Maverick Turbo RR models.	No

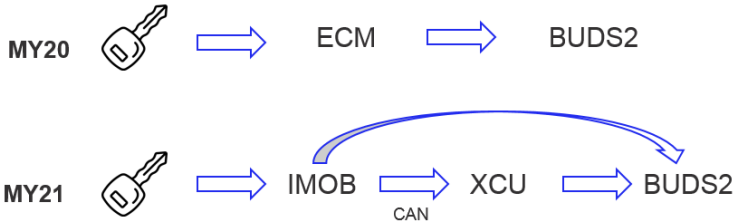

The IMOB module will communicate through CAN with BUDS2 for key programming.

IMOB module then communicates through CAN with the XCU for engine starting functions.

No fault codes are generated by this module.

Uses same key as previous MYs

Electrical System Changes

Description	Retrofit
New Headlight Switch Must hold switch for 2 seconds to turn off headlights	No
New Low Battery Logic Low battery voltage fault will stop accessory power and turn on headlights	N/A

Top position = High beam

Middle position = Low Beam

Press and hold 2 seconds
bottom position = Headlights off
(press and hold 2 seconds to turn them back on)

Electrical System Changes

Description	Retrofit
Maverick Turbo RR only – 850W stator for a more powerful battery charging system with built in protection.	Yes

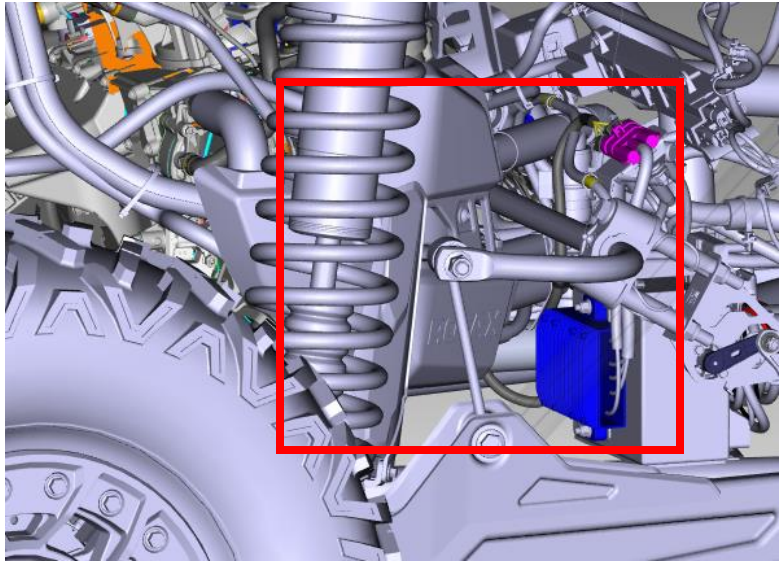

Suspension System Changes – SMART SHOX

- Introduced on Maverick Turbo RR Xrs
- Performance
  - Constant monitoring of wheel position and velocity – Improved shock absorption
  - Better tracking of the ground surface – Increased traction
  - Self adjustable suspension – Acting on both compression and rebound
  - Instant self adjustment – Up to 200 times per second
  - Industry fastest valve reaction – From full soft to full firm in 0.017 second (60 times / second)*
- Control / Comfort
  - Adjust to any type of terrain automatically using multi-modes – Comfort / Sport / Sport+
  - Detect vehicle speed – Reduces front and rear bouncing
  - Maintain flat cornering – Increased stability
  - Minimize vehicle body movement – Decrease vehicle dive when braking and accelerating
  - Bottom out and topping out protection

New SMART SHOX Technology

9 Sensors to Determine Optimal Suspension Damping / Rebound in Real-Time

Sensors
Inertial Measurement Unit (IMU)
4 Vertical Acceleration Sensors
4 Suspension Position Sensors

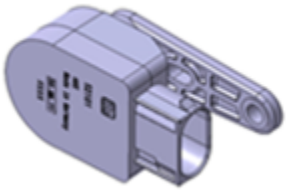

New SMART SHOX Technology

Inertial Measurement Unit (IMU)

Measures vertical, lateral, longitudinal accelerations and rotations around center of gravity

New SMART SHOX Technology

4 Vertical Acceleration Sensors

Measures vertical accelerations of frame corners

New SMART SHOX Technology

4 Suspension Position Sensors

Measures suspension arm position

New SMART SHOX Technology

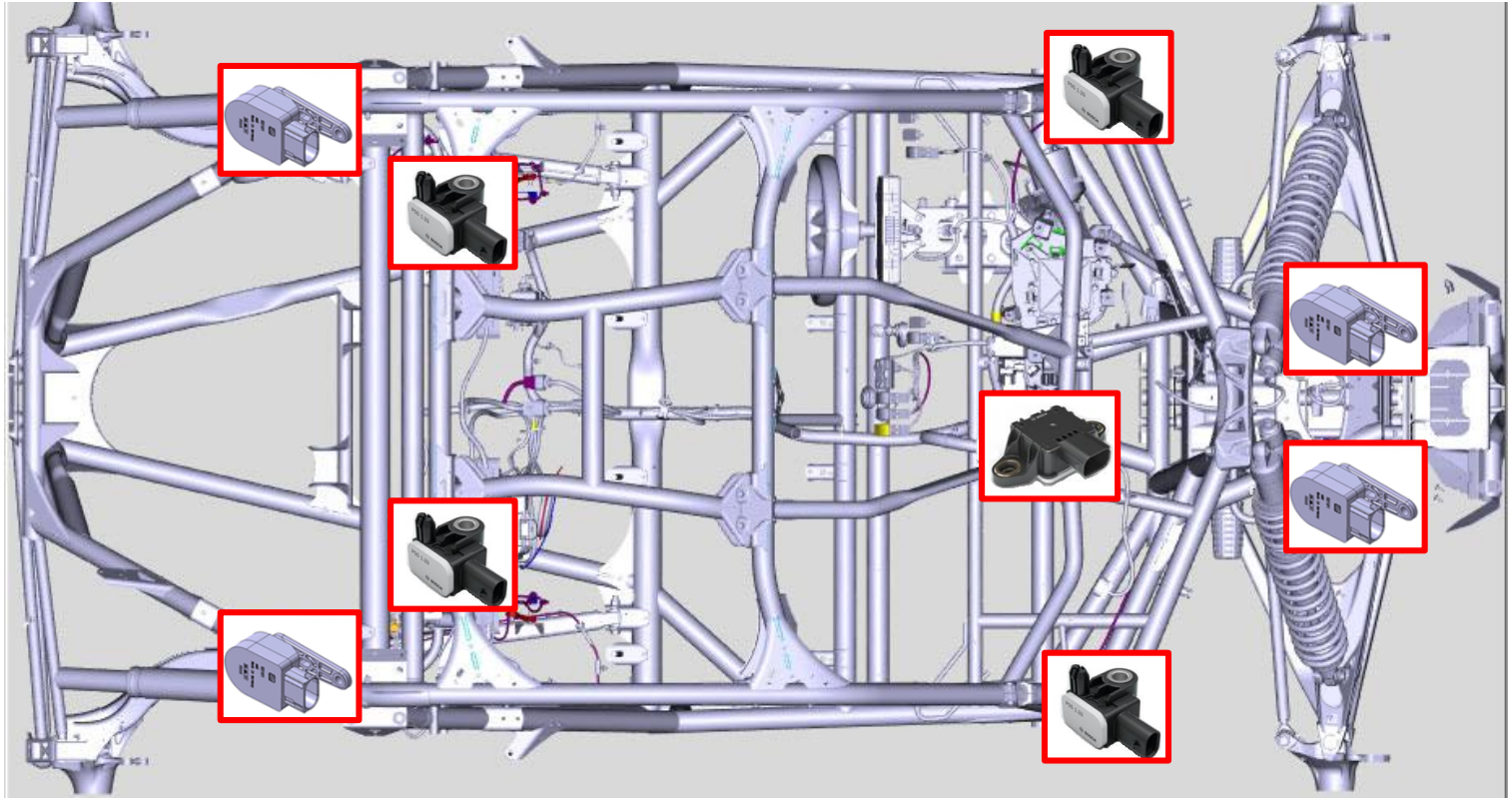

New SMART SHOX Technology

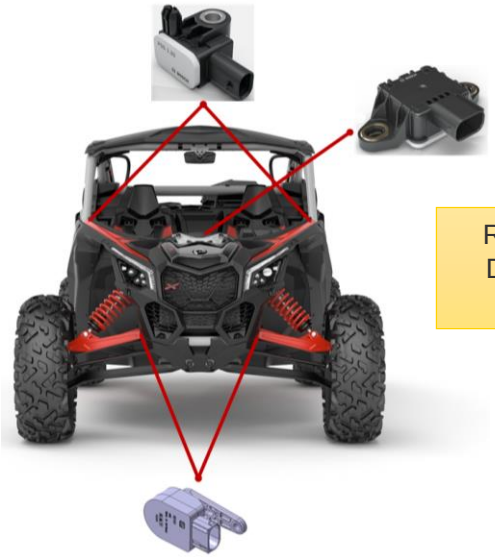

Real-Time Data from Sensors

Suspension **D**amping **C**ontrol **U**nit

Shock Adjustment

Modes Selection

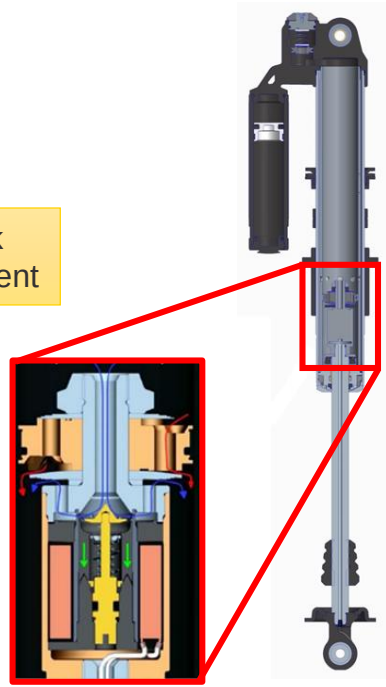

SMART SHOX Mode Selection

- Comfort:
  - This mode provides maximum comfort.
  - The suspension moves freely while controlling body movement to avoid bottoming out and enhance cornering, accelerating and braking performance.
- Sport:
  - This mode enhances handling and provides comfort in straight line.
  - The suspension minimizes body movement in cornering, accelerating and braking while offering optimal calibration to face obstacles of all kinds.
- Sport+:
  - This mode is all about performance.
  - In full stiffness all the time and ready to tackle the most extreme situations.

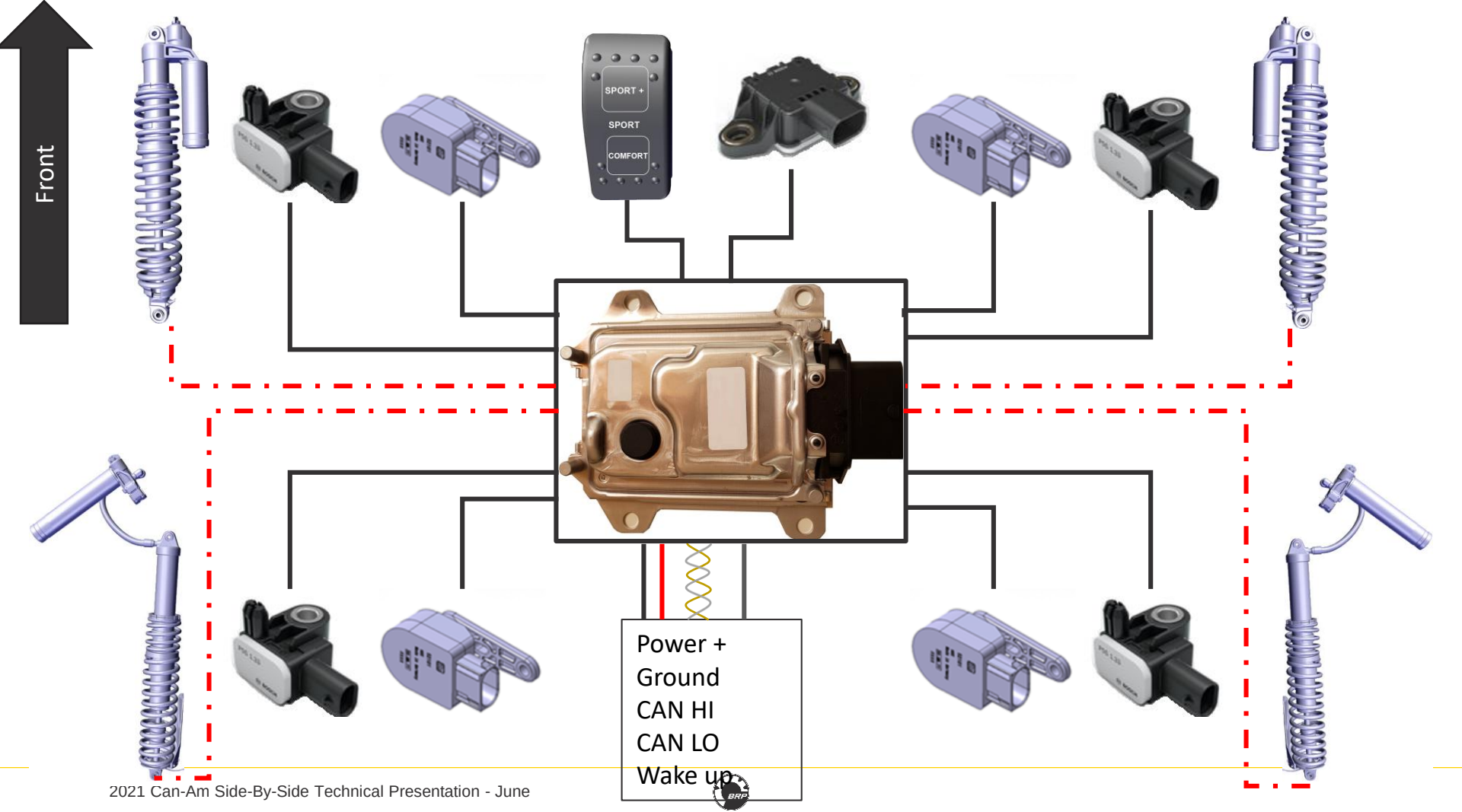
Front
SPORT +
SPORT
COMFORT
Power +
Ground
CAN HI
CAN LO
Wake up

Front Suspension Position Sensors

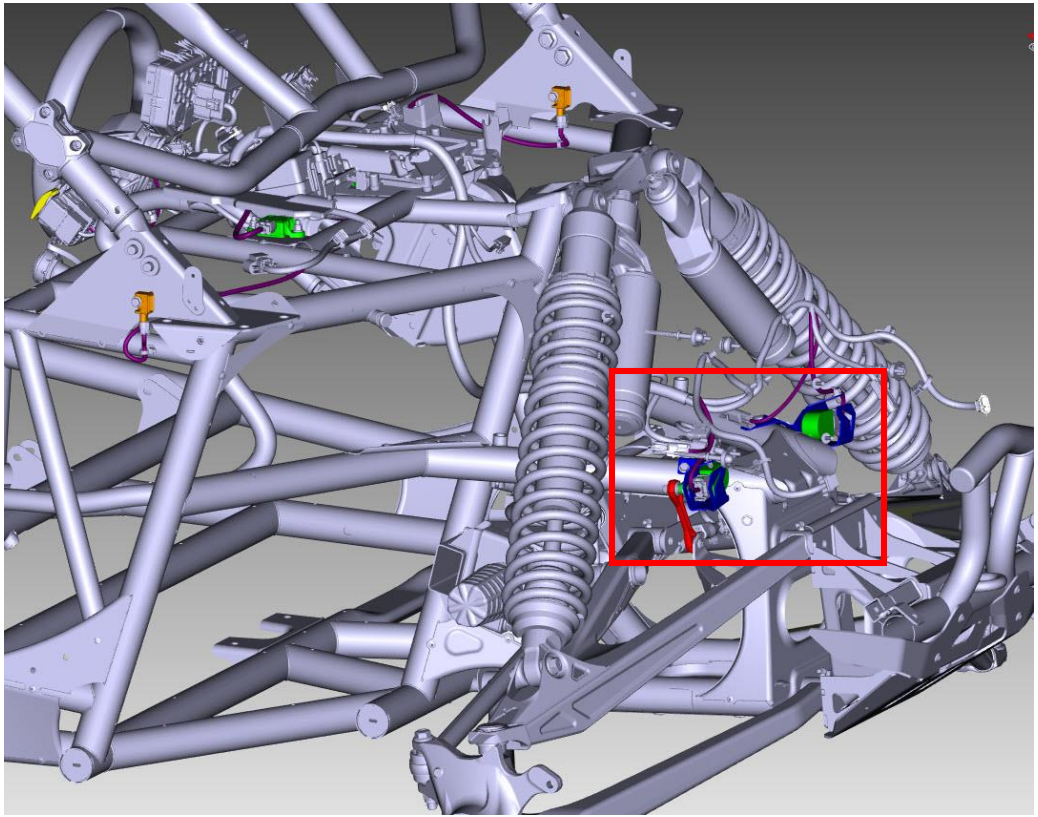

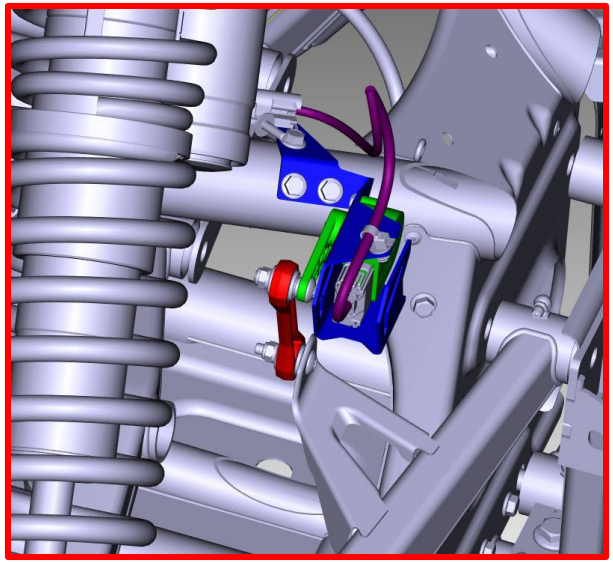

Rear Suspension Position Sensors

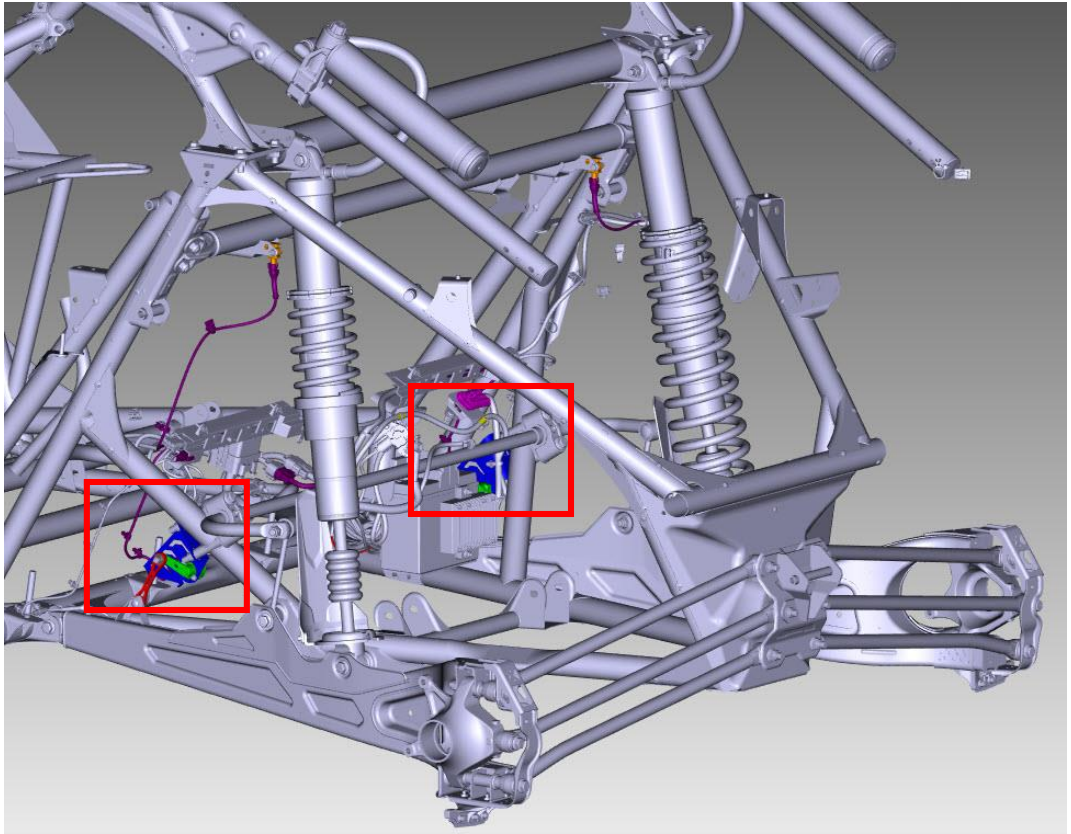

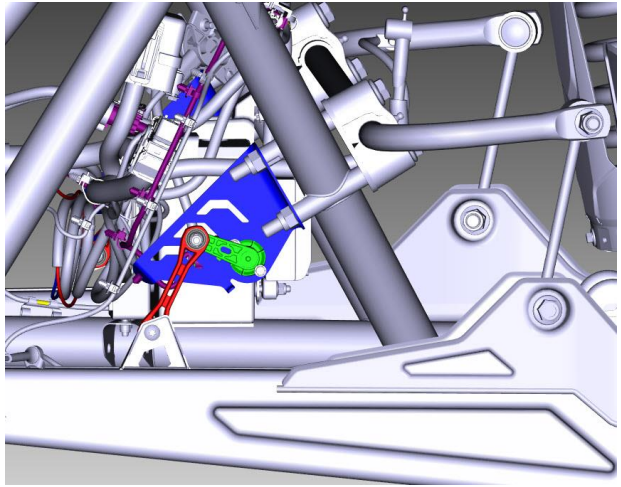

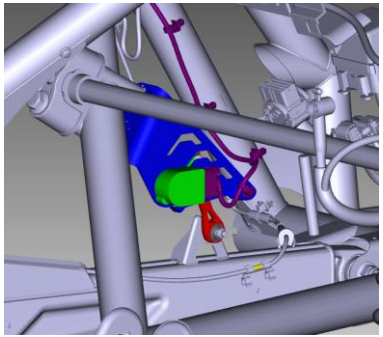

Wheel Position Sensor Calibration Procedure

1. Remove shock and disconnect torsion bar
2. Install the calibration bar (Special tool #529 036 495)
3. Connect vehicle to BUDS2
4. Open calibration assistant in Setting Menu
    1. Settings / Initialization - SDCU Calibration
5. Click on « learn » for the corresponding wheel
6. Repeat for each wheel position sensor

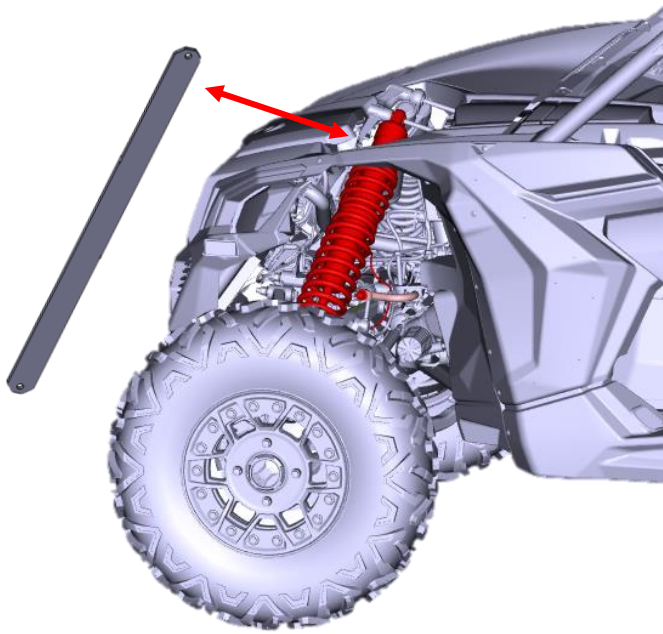

SMART SHOX

Additional information

- Key off – The shock valves are closed. The shocks are at their stiffest
- Sold in PAC? No because the main harness must be changed
- Training module and diagnostic charts will be available September 2020 in the Knowledge Center
- Valve inside the shocks are not sellable, shocks are servicable through FOX
- If you change one a part linked to the suspension position sensors (support bracket, sway bar, upper A-Arm, or the shocks), the wheel position sensor learning must be done
- SDCU will trigger fault codes related to the system. System will react to ensure the unit can continue to be driven until unit is serviced.

Front Suspension Changes

Description	Retrofit
18mm Front Sway Bar on 64’’ Standardization with 72’’ models, new part number. Note that the new sway bar is a stiffer ride	Yes

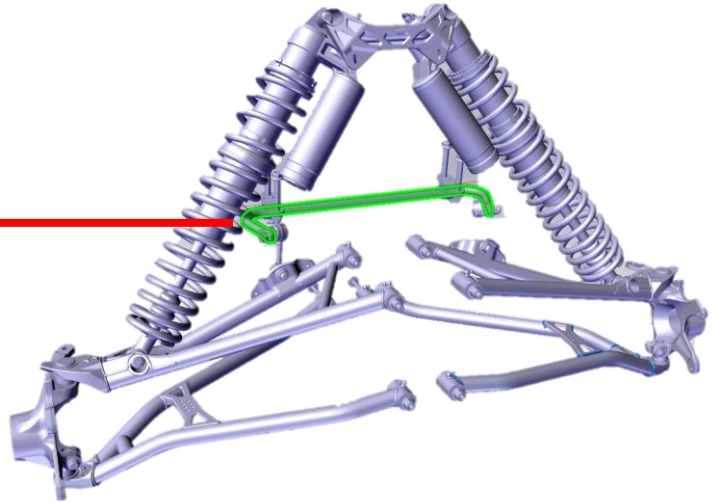

Body System Changes

Description	Retrofit
Seat Frame Color In Macchiato Satin theme for X-DS and X-RS and X-RC in CAN-AM Red, new part number	N/A

Body System Changes

Description
New Colors X RS – Macchiato Satin DS – Macchiato Satin, Gulfstream Blue, and Can-Am Red

X RS SA

DS

DS

DS

Body System Changes

Description
New Colors X RC – Chalk Metallic X RS – Dazzling Blue X MR – Manta Green

X RC

X RS

X MR

BRP

ski-doo LYNX SEA-DOO EVINRUDE ROTAX can-am

can-am

DEFENDER™ AND TRAXTER Series
(excluding European Union)

2021

OPERATOR'S GUIDE

Includes
Safety, Vehicle and
Maintenance Information

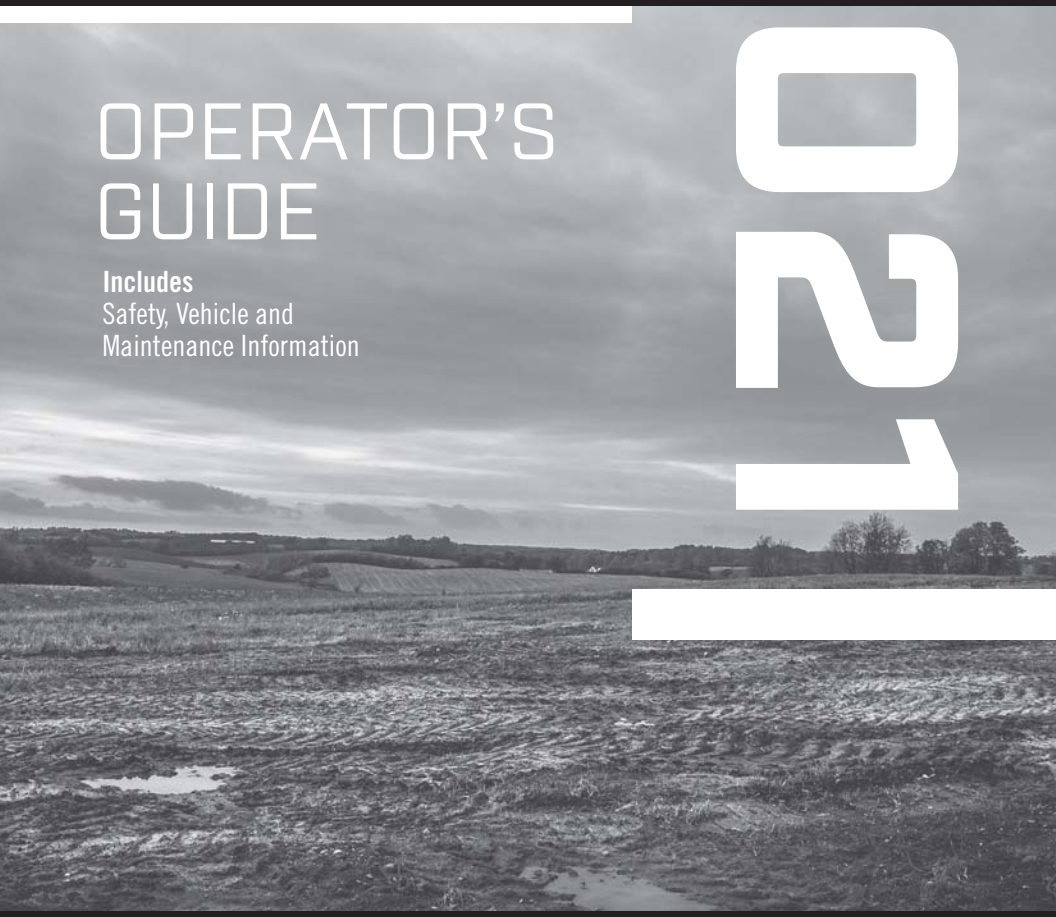

⚠ WARNING

Read this guide thoroughly. It contains important safety information.
Minimum age: Operator: 16 or older with a valid driver's license. Keep this Operator's Guide in the vehicle.
The removal or modification of evaporative emission-related parts on this OHRV is illegal.
Violators may be subject to civil and/or criminal penalties under California and federal law.

219 002 117

Original Instructions

⚠ WARNING

YOUR VEHICLE CAN BE HAZARDOUS TO OPERATE. A collision or rollover can occur quickly, if you fail to take proper precautions, even during routine maneuvers such as turning and driving on hills or over obstacles.
For your safety, understand and follow all the warnings contained in this Operator's Guide and on the labels on your vehicle. **Failure to follow these warnings can result in SEVERE INJURY OR DEATH!**
Keep this Operator's Guide with the vehicle at all times.

⚠ WARNING

Disregarding any of the safety precautions and instructions contained in this Operator's Guide, *SAFETY VIDEO* and on-product safety labels could result in severe injury including the possibility of death!

⚠ WARNING

This vehicle may exceed the performance of other vehicles you may have ridden in the past. Take time to familiarize yourself with your new vehicle.

CALIFORNIA PROPOSITION 65 WARNING

⚠ **WARNING:** Operating, servicing and maintaining a passenger vehicle can expose you to chemicals including engine exhaust, carbon monoxide, phthalates, and lead, which are known to the State of California to cause cancer and birth defects or other reproductive harm. To minimize exposure, avoid breathing exhaust, do not idle the engine except as necessary, service your vehicle in a well-ventilated area and wear gloves or wash your hands frequently when servicing your vehicle. For more information go to **www.p65warnings.ca.gov/products/passenger-vehicle**.

In Canada, products are distributed by Bombardier Recreational Products Inc. (BRP).

In USA, products are distributed by BRP US Inc.

The following trademarks are the property of Bombardier Recreational Products Inc.:

Can-Am®	DPS™	TTI™
DESS™	Rotax®	XPS™

This document contains the trademark of the following company:

– † Visco-Lok is a trademark of GKN Viscodrive GmbH.

219002117 en COJT
®™ and the BRP logo are trademarks of Bombardier Recreational Products Inc. or its affiliates.
©2020 Bombardier Recreational Products Inc. and BRP US Inc. All rights reserved.

FOREWORD

Deutsch	Dieses Handbuch ist möglicherweise in Ihrer Landessprache verfügbar. Bitte wenden Sie sich an Ihren Händler oder besuchen Sie: **www.operatorsguides.brp.com**
English	This guide may be available in your language. Check with your dealer or go to: **www.operatorsguides.brp.com**
Español	Es posible que este manual esté disponible en su idioma. Consulte a su distribuidor o visite: **www.operatorsguides.brp.com**
Français	Ce guide peut être disponible dans votre langue. Vérifier avec votre concessionnaire ou aller à: **www.operatorsguides.brp.com**
Italiano	Questa guida potrebbe essere disponibile nella propria lingua. Contattare il concessionario o consultare: **www.operatorsguides.brp.com**
中文	本手册可能有您的语种的翻译版本。请向经销商问询，或者登录 **www.operatorsguides.brp.com** 查询。
日本語	このガイドは、言語によって翻訳版が用意されています。. ディーラーに問い合わせるか、次のアドレスでご確認ください： **www.operatorsguides.brp.com**
Nederlands	Deze handleiding kan beschikbaar zijn in uw taal. Vraag het aan uw dealer of ga naar: **www.operatorsguides.brp.com**
Norsk	Denne boken kan finnes tilgjengelig på ditt eget språk. Kontakt din forhandler eller gå til: **www.operatorsguides.brp.com**
Português	Este manual pode estar disponível em seu idioma. Fale com sua concessionária ou visite o site: **www.operatorsguides.brp.com**
Русский	Воспользуйтесь руководством на вашем языке. Узнайте о его наличии у дилера или на странице по адресу **www.operatorsguides.brp.com**
Suomi	Käyttöohjekirja voi olla saatavissa omalla kielelläsi. Tarkista jälleenmyyjältä tai käy osoitteessa: **www.operatorsguides.brp.com**
Svenska	Denna bok kan finnas tillgänglig på ditt språk. Kontakta din återförsäljare eller gå till: **www.operatorsguides.brp.com**

Congratulations on your purchase of a new Can-Am® side-by-side vehicle. It's backed by the BRP limited warranty and a network of authorized Can-Am Off-Road dealers ready to provide the parts, accessories or service you may require.

At delivery, you were informed of the warranty coverage and signed the *PREDELIVERY CHECK LIST* to ensure your new vehicle was prepared to your entire satisfaction.

Your dealer is committed to your satisfaction. If you need more information, please ask your dealer.

Know Before you Go

To learn how to reduce the risk of accident for you or bystanders, read this Operator's Guide before you operate the vehicle.

Also, read all safety labels on your vehicle and watch the *SAFETY VIDEO* located at:
https://can-am.brp.com/offroad/safety
or use the following QR code.

Failure to follow the warnings contained in this Operator's Guide can result in SERIOUS INJURY or DEATH.

Safety Messages

The types of safety messages, what they look like and how they are used in this guide are explained as follows:

The safety alert symbol ⚠ indicates a potential injury hazard.

⚠ WARNING

Indicates a potential hazard which, if not avoided, could result in serious injury or death.

⚠ CAUTION Indicates a hazardous situation which, if not avoided, could result in minor or moderate injury.

NOTICE Indicates an instruction which, if not followed, could result in severely damaged vehicle components or other property.

About this Operator's Guide

This Operator's Guide has been prepared to acquaint the owner/operator of a new vehicle with the various vehicle controls, maintenance and safe operating instructions. It is indispensable for the proper use of the product.

Keep this Operator's Guide in the vehicle as you can refer to it for things such as maintenance, troubleshooting and instructing others.

Note that this guide is available in several languages. In the event of any discrepancy, the English version shall prevail.

If you want to view and/or print an extra copy of your Operator's Guide, simply visit the following website:

www.operatorsguides.brp.com

The information contained in this document is correct at the time of publication. BRP, however, maintains a policy of continuous improvement of its products without imposing upon itself any obligation to install them on products previously manufactured. Due to late changes, some differences between the manufactured product and the descriptions and/or specifications in this guide may occur. BRP reserves the right at any time to discontinue or change specifications, designs, features, models or equipment without incurring any obligation upon itself.

This Operator's Guide should remain with the vehicle when it is sold.

Covered Models

This operator's guide covers the following models:

MODEL	PACKAGE	ENGINE
Defender	Base	HD5, HD8
	DPS	HD5, HD8, HD10
	XT	HD8, HD10
	XU	HD8
	DPS CAB	HD8
	Limited	HD10
Traxter	DPS	HD8
	XT	HD10

TABLE OF CONTENTS

FOREWORD **1**
Know Before you Go 2
Safety Messages 2
About this Operator's Guide 2
Covered Models 3

SAFETY INFORMATION

GENERAL PRECAUTIONS **10**
Avoid Carbon Monoxide Poisoning 10
Avoid Gasoline Fires and Other Hazards 10
Avoid Burns from Hot Parts 10
Accessories and Modifications 10
SAFE OPERATION - RESPONSIBILITIES **11**
Owner - Be Responsible 11
Operator - Be Qualified and Responsible 11
Riding Carefully 12
Occupant Restraint System 12
Terrain Condition 12
PRE-RIDE INSPECTION **14**
Pre-Ride Inspection Check List 14
PREPARE TO RIDE **17**
Before you Ride 17
Riding Gear 17
AVOID ACCIDENTS **19**
Avoid Rollovers and Tipovers 19
Avoid Collisions 20
RIDING YOUR VEHICLE **21**
Practice Exercises 21
Off-Road Operation 22
General Riding Techniques 22
MOVING LOADS AND DOING WORK **27**
Working with your Vehicle 27
Carrying Loads 27
Hauling a Load 29
Pulling a Trailer 30
IMPORTANT ON-PRODUCT LABELS (CANADA/UNITED STATES) **31**
Hang Tag 31
Safety Labels 34
Technical Information Labels 45
Compliance Labels 46
IMPORTANT ON-PRODUCT LABELS (ALL COUNTRIES EXCEPT CANADA/UNITED STATES) **47**
Hang Tag 47
Safety Labels 49

IMPORTANT ON-PRODUCT LABELS (ALL COUNTRIES EXCEPT CANADA/UNITED STATES) (cont'd)
Technical Information Labels 64
Compliance Labels 65
REPORTING SAFETY DEFECTS 66

VEHICLE INFORMATION

PRIMARY CONTROLS 68
1) Steering Wheel 68
2) Accelerator Pedal 69
3) Brake Pedal 69
4) Shift Lever 69
SECONDARY CONTROLS 71
1) Ignition Switch and Keys 72
2) 2WD/4WD/Front Diff Lock Switch (If equipped) 73
3) Rear Differential Switch (If Equipped) 74
4) Keypad (If Equipped) 74
5) Climate Controls 74
6) Horn Switch (On applicable models) 75
7) Winch Switch (If Equipped) 75
8) Headlight Dimmer Switch 75
9) Power Window Switches 75
4.5" DIGITAL DISPLAY 77
Multifunction Display 77
Warning Lamps and Indicators 78
Settings 79
7.6" DIGITAL DISPLAY 81
Basic Functions 81
Settings 84
EQUIPMENT 86
1) Tilt Steering 88
2) Cup Holders 89
3) Passengers Handhold 89
4) Storage Compartments 90
5) Tool Kit 92
6) Footrests 92
7) Side Nets 92
8) Shoulder Guards 93
9) Seat Belts 93
10) Driver's Seat 94
11) Passenger Seats 94
12) Fuel Reservoir Cap 94
13) Winch (If Equipped) 95
14) Cargo Box 95
15) Cargo Box Tilt Release Handles 95

EQUIPMENT (cont'd)
16) Anchoring Hooks 96
17) Tailgate 96
18) Trailer Hitch 96
19) 12-Volt Power Outlets 96
20) USB Power Outlet (If Equipped) 97
21) Roof (If Equipped) 97
22) Rock Sliders (If Equipped) 97
23) Front Bumper (If Equipped) 97
24) Brake Holding Mechanism (If equipped) 97
25) Side Mirrors (On applicable models) 98
26) Full Doors With Electric Windows (Models with Cab) 98
27) Full Glass Windshield with Wiper (If equipped) 99
28) Climate Control System (CAB and Limited Models) 100
29) Rear Deflector (If Equipped) 104

TUNE YOUR RIDE 105
Suspension Adjustment Guidelines 105
Suspension Factory Settings 105
Suspension Adjustments 105
DPS Function 106

FUEL 107
Fuel Requirements 107
Vehicle Fueling Procedure 107
Fueling a Gasoline Container 108

BREAK-IN PERIOD 109
Operation During Break-In 109

BASIC PROCEDURES 110
Starting the Engine 110
Operating the Shift Lever 110
Choosing the Correct Range (Low or High) 110
Stopping the Engine and Parking the Vehicle 111
Tips for Maximizing Drive Belt Durability 111

SPECIAL PROCEDURES 112
What to do if Water is Suspected to be in the CVT 112
What to do if Battery is Drained out 112
What to do if Vehicle Rolled Over 112
What to do if Vehicle is Submerged 112

TRANSPORTING THE VEHICLE 113
Using vehicle power to climb onto trailering equipment 113
Using a winch to pull vehicle onto trailering equipment 114
Securing vehicle for transport 114
Getting vehicle out of trailer 115

LIFTING AND SUPPORTING THE VEHICLE 116
Front of Vehicle 116
Rear of Vehicle 116

MAINTENANCE

MAINTENANCE SCHEDULE 118
SEVERE DUSTY CONDITIONS 118
MAINTENANCE SCHEDULE LEGEND 119
MAINTENANCE SCHEDULE 119
MAINTENANCE PROCEDURES 122
Engine Air Filter 122
CVT Air Filter 123
Evaporative Emission System Pre-Filter (If Equipped) 124
Engine Oil 124
Oil Filter 126
Radiator 127
Engine Coolant 128
Heating/Air Conditioning Air Filter (if equipped) 130
Air Conditioning Compressor Belt 132
Muffler and Spark Arrester 132
Gearbox Oil (HD8 and HD10) 134
Rear Final Drive Oil (HD5) 135
Differential Oil 137
Spark Plugs 138
CVT Cover 139
CVT Cover Installation (All Models) 141
Drive Belt 142
Drive and Driven Pulleys 144
Battery 144
Fuses and Fusible Links 145
Lights 147
Drive Shaft Bellows and Protector 148
Propeller Shaft Bellows (HD5) 148
Wheel Bearing 149
Wheels and Tires 149
Suspensions 150
Brakes 151
Seat Belts 152
Cage 152
VEHICLE CARE 154
Post-Operation Care 154
Vehicle Cleaning and Protection 154
STORAGE AND PRESEASON PREPARATION 155

TECHNICAL INFORMATION

VEHICLE IDENTIFICATION 158
Vehicle Identification Number 158
Engine Identification Number 158

VEHICLE IDENTIFICATION (cont'd)
Compliance Label 159
EVAPORATIVE EMISSION CONTROL SYSTEM..... 160
NOISE EMISSION CONTROL SYSTEM REGULATION 161
EC-DECLARATION OF CONFORMITY 162
EAC DECLARATION OF CONFORMITY..... 163
SPECIFICATIONS 164

TROUBLESHOOTING

TROUBLESHOOTING GUIDELINES 178
MESSAGES IN MULTIFUNCTION GAUGE 182

WARRANTY

BRP LIMITED WARRANTY USA AND CANADA: 2021 CAN-AM® SSV.... 184
US EPA EMISSION-RELATED WARRANTY 188
CALIFORNIA EVAPORATIVE EMISSIONS CONTROL WARRANTY STATEMENT..... 190
BRP INTERNATIONAL LIMITED WARRANTY: 2021 CAN-AM® SSV 192
BRP LIMITED WARRANTY FOR THE EUROPEAN ECONOMIC AREA, THE COMMONWEALTH OF THE INDEPENDANT STATES AND TURKEY: 2021 CAN-AM® SSV 196
MAINTENANCE RECORDS 201

SAFETY INFORMATION

GENERAL PRECAUTIONS

Avoid Carbon Monoxide Poisoning

All engine exhaust contains carbon monoxide, a deadly gas. Breathing carbon monoxide can cause headaches, dizziness, drowsiness, nausea, confusion and eventually death.

Carbon monoxide is a colorless, odorless, tasteless gas that may be present even if you do not see or smell any engine exhaust. Deadly levels of carbon monoxide can collect rapidly, and you can quickly be overcome and unable to save yourself. Also, deadly levels of carbon monoxide can linger for hours or days in enclosed or poorly ventilated areas. If you experience any symptoms of carbon monoxide poisoning, leave the area immediately, get fresh air and seek medical treatment.

To prevent serious injury or death from carbon monoxide:

– Never run the vehicle in poorly ventilated or partially enclosed areas such as garages, carports or barns. Even if you try to ventilate engine exhaust with fans or open windows and doors, carbon monoxide can rapidly reach dangerous levels.
– Never run the vehicle outdoors where engine exhaust can be drawn into a building through openings such as windows and doors.

Avoid Gasoline Fires and Other Hazards

Gasoline is extremely flammable and highly explosive. Fuel vapors can spread and be ignited by a spark or flame many feet away from the engine. To reduce the risk of fire or explosion, follow these instructions:

– Use only an approved gasoline container to store fuel.
– Never fill the gasoline container in the vehicle cargo box or on the vehicle - an electrical static discharge may ignite the fuel.
– Strictly adhere to instructions in *VEHICLE FUELING PROCEDURE*.
– Never start or operate the engine if the fuel cap is not properly installed.

Gasoline is poisonous and can cause injury or death.

– Never siphon gasoline by mouth.
– If you swallow gasoline, get any in your eye(s), or inhale gasoline vapor, see a doctor immediately.

If gasoline spills on you, wash with soap and water and change your clothes.

Avoid Burns from Hot Parts

Certain components like brake rotors and exhaust components become hot during operation. Avoid contact with those parts during and shortly after operation to avoid burn wounds.

Accessories and Modifications

Any modifications or addition of accessories may affect the handling of your vehicle. It is important to take the time to get familiar with the vehicle once modifications are made to understand how to adapt your driving behavior accordingly.

Do not tamper with unauthorized modifications or install equipment not specifically certified by BRP for the vehicle. These modifications have not been tested by BRP and they may increase the risk of injury or loss of control, or render the vehicle illegal to ride. As an example, tampering with tire specifications may affect the behavior of the vehicle and increase the risk of a loss of control.

Ask your authorized BRP dealer for suitable available accessories for your vehicle.

SAFE OPERATION - RESPONSIBILITIES

This is a high performance off-road vehicle. Operators must be responsible and use care to avoid rollovers, tipovers, collisions, and other accidents. Even with vehicle safety features (such as protective structure, seat belts, side nets, doors) and protective gear (such as a helmet), there is always a risk of injury or death in these accidents. To reduce the risk of serious injury or death, follow the rules in this section.

Owner - Be Responsible

Read this Operator's Guide and watch the *SAFETY VIDEO*. Refer to the link at the beginning of the Operator's Guide.

Always inspect and confirm the safe operating condition of your vehicle prior to ride. Always follow the maintenance schedule described in this Operator's Guide.

Never allow anyone to operate your vehicle unless they are responsible and can be trusted with a high performance vehicle. Consider supervising new or young operators and setting rules and limits (e.g., whether they can carry passengers, what they may do with the vehicle, where they may ride, etc.) for anyone using your vehicle.

If equipped with optional D.E.S.S. keys, select the appropriate key (see *IGNITION SWITCH AND KEYS*) based on the operator's experience, vehicle use and environment.

Discuss the safety information with anyone who will be using the vehicle. Be sure that all operators and passengers meet the qualifications below and agree to follow the safety information. Help users become familiar with the vehicle.

We encourage you to have an Annual Safety Inspection of your vehicle. Please contact an authorized BRP dealer for further details. Though not required, it is recommended that an authorized BRP dealer performs the preseason preparation of your vehicle. Each visit to your authorized BRP dealer is a great opportunity for your dealer to verify if your vehicle is included in any safety campaign. We also urge you to visit your authorized BRP dealer in a timely manner if you become aware of any safety related campaigns.

See an authorized BRP dealer for available accessories you may require.

Operator - Be Qualified and Responsible

Read this Operator's Guide and watch the *SAFETY VIDEO*. Refer to the link at the beginning of the Operator's Guide.

Become completely familiar with the operational controls and the general operation of the vehicle.

Take a training course if available (contact an authorized Can-Am dealer to find out about training course availability as well as on the internet at http://www.rohva.org/), and perform the practice exercises in *PRACTICE EXERCISES* section. Practice driving in a suitable area free of hazards and feel the response of each control. Drive at low speeds. Higher speeds require greater experience, knowledge and suitable riding conditions.

Be at least 16 years of age.

Be tall enough to be properly seated: back against the backrest with the seat belt fastened, to hold the steering wheel with both hands and still be able to reach the full stroke of brake and accelerator pedals with the right foot and to firmly plant left foot on the footrest.

Have a proper driver's license in accordance with local laws.

Never use this vehicle with drugs or alcohol, or if tired or ill. These slow reaction time and impair judgment.

Carrying Passengers

Only carry a maximum of two passengers. The passengers must be properly seated in the cockpit.

The passengers must be tall enough to always be properly seated: back against the backrest with seat belt fastened, holding the handhold, and feet firmly planted - for the RH passenger, with right foot on the footrest and the left foot on the vehicle floor and for the central passenger, with both feet firmly planted on the floor.

Never carry passengers who have used drugs or alcohol, or are tired or ill. These slow reaction time and impair judgment.

Instruct the passengers to read the vehicle's safety labels.

Never carry passengers if you judge their ability or judgement insufficient to concentrate on the terrain conditions and adapt accordingly. More specifically for side-by-side vehicles, the passenger must also pay constant attention to the terrain ahead and be able to brace for bumps.

Riding Carefully

- This vehicle handles differently from other vehicles. A collision or rollover can occur quickly, during abrupt maneuvers such as doing sharp turns, acceleration or deceleration and driving on hills or over obstacles, if you fail to take proper precautions.
- Never operate at excessive speeds. Always go at a speed that is proper for the terrain, visibility, and operating conditions, and your experience.
- Never attempt jumps, side slides, donuts or any other stunts.
- Never attempt rapid acceleration or deceleration when performing a sharp turn. This may result in a roll over.
- Never attempt skidding or sliding. If vehicle starts to skid or slide, counter steer in the direction of skidding or sliding. On extremely slippery surfaces, such as ice, go slowly and be very cautious in order to reduce the chance of skidding out of control.
- Always be sure there are no obstacles or people behind the vehicle when you operate in reverse. Pay attention to blind spots. When it is safe to proceed in reverse, go slowly.
- Never exceed the stated load limits for this vehicle. Cargo must be properly secured. Reduce speed, allow for greater braking distance and follow other instructions in *MOVING LOADS AND DOING WORK*.
- Always remember that this vehicle is heavy! Its pure weight alone may entrap you should it tip or rollover.

Occupant Restraint System

- This vehicle is designed to carry one driver and up to two passengers, all wearing proper protective gears (refer to *RIDING GEAR* in this section).
- The driver and passengers must latch the doors or the side nets and wear the seat belts at all times when riding.

Terrain Condition

- This vehicle is not designed to ride on paved surfaces; if you must shortly use the vehicle on such surfaces, avoid abrupt inputs to steering wheel, accelerator and brake pedals.
- Always go slowly and be extra careful when operating on unfamiliar terrain. Always be alert to changing terrain conditions when operating this vehicle. Take the time to learn how the vehicle performs in different environments.

– Never operate on excessively rough, slippery or loose terrain until you have learned and practiced the skills necessary to control this vehicle on such terrain. Always be especially cautious on these kinds of terrain.
– Never operate this vehicle on hills too steep for the vehicle or your abilities. Practice on small inclines.
– Always follow proper procedures for climbing or going down hills as described in *RIDING YOUR VEHICLE*. Check the terrain carefully before you start up or down any hill. Never climb or descend hills with excessively slippery or loose surfaces. Never go over the top of any hill at high speed.
– Never attempt steep hills or side hilling when pulling a trailer.
– Always check for obstacles before operating in a new area. Always follow proper procedures when operating over obstacles as described in *RIDING YOUR VEHICLE*.
– Never operate this vehicle in fast flowing water or in water deeper than specified in *RIDING YOUR VEHICLE*. Remember that wet brakes may have reduced stopping ability. Test your brakes after leaving water. If necessary, apply them several times to let friction dry out the brakes.
– Always ensure to properly park the vehicle on the flattest terrain section available. Put shift lever in PARK, stop engine and remove key before leaving the vehicle.
– Never assume that the vehicle will go everywhere safely. Sudden changes in terrain caused by holes, depressions, banks, softer or harder "ground" or other irregularities may cause the vehicle to topple or become unstable. To avoid this, slow down and always observe the terrain ahead. If the vehicle does begin to topple or rollover, the best advice is to immediately steer in the direction of the rollover! Never attempt to prevent a rollover with your arms or legs. You should keep your limbs inside the cage or ROPS (rollover protective structure).

PRE-RIDE INSPECTION

Always inspect and confirm the safe operating condition of your vehicle prior to ride. Always follow the maintenance schedule described in this Operator's Guide.

⚠ WARNING

Perform a pre-ride inspection before each ride to detect any potential problem that could occur during operation. The pre-ride inspection can help you monitor component wear and deterioration before they become a problem. Correct any problem that you discover to reduce the risk of a breakdown or crash.

Before using this vehicle, the operator should always perform the following pre-ride inspection check list.

Refer to *MAINTENANCE PROCEDURES* for details.

Pre-Ride Inspection Check List

What to Do Before Starting the Engine (Key OFF)

ITEMS TO BE INSPECTED	INSPECTION TO PERFORM	✔
Tires	Check tire pressure and condition. Refer to *SPECIFICATIONS* and adjust according to load.	
Wheels	Check wheels for damage and for abnormal play. Make sure that lug nuts are tightened. Refer to *WHEELS AND TIRES* in *MAINTENANCE PROCEDURES* for torque specification.	
Radiator	Check cleanliness of the radiator.	
Front grill kit	Inspect front grill kit for cleanliness.	
Engine oil	Check engine oil level.	
Coolant	Check coolant level.	
Brake fluid	Check brake fluid level.	
Engine air filter	Inspect the engine air filter, clean or replace if needed (service more often when riding in dusty conditions).	
CVT air filter	Inspect and clean the CVT air filter (when riding in dusty conditions).	
Drive shaft bellows	Check drive shaft bellows and protectors condition.	

ITEMS TO BE INSPECTED	INSPECTION TO PERFORM	✔
Cargo and load	**Cargo Load:** If you transport a cargo, respect the maximum loading capacity. Refer to *LOADING THE CARGO BOX*. Ensure cargo is properly secured to the rear cargo box. **Vehicle Load:** Ensure that total load on the vehicle (including operator, passengers, cargo, tongue weight and added accessories) does not exceed specifications. Refer to *CARRYING LOADS*	
	If you are pulling a trailer or another equipment: – Check hitch and trailer ball condition. – Respect the tongue capacity and towing capacity as indicated on the label affixed to the hitch or refer to *SPECIFICATIONS*. – Ensure trailer is properly secured to hitch.	
Rear cargo box	Check if the cargo box is properly latched.	
	Check if tailgate is properly latched.	
Chassis and suspension	Check underneath vehicle for any debris on chassis or suspension and clean them properly.	
Brake Holding Mechanism (If equipped)	Apply brake holding mechanism and check if it operates properly.	
Heater air filters (if equipped)	Inspect heater air filters, clean if needed (service more often when riding in dusty conditions).	

What to Do Before Starting the Engine (Key ON)

ITEMS TO BE INSPECTED	INSPECTION TO PERFORM	✔
Gauge	Check operation of indicator lamps in gauge (during first few seconds of key ON).	
	Check for messages in gauge.	
Lights	Check operation and cleanliness of headlights and taillights.	
	Check operation of high and low beam.	
	Check operation of brake lights.	

ITEMS TO BE INSPECTED	INSPECTION TO PERFORM	✔
Seats, side nets and seat belts	Check if seats are properly latched.	
	Check side nets for any damage. Have the nets replaced if any damage is found. Fasten both side nets and confirm that they latch securely. Use the adjustment strap to tighten the net as required.	
	Check seat belts for any damage. Fasten seat belts and confirm that they latch securely.	
Accelerator pedal	Press on the accelerator pedal a few times to ensure it operates freely and it returns to the rest position when released.	
Brake pedal	Press down on the brake pedal and make sure you feel firm resistance and that it fully returns to position when released.	
Fuel level	Check the fuel level.	
Mirror(s)	Adjust mirror(s) to your preferences.	
Heater fan (if equipped)	Check operation of heater fan. Check air flows out of every louver (dash-mounted and heater-mounted).	

What to Do After the Engine is Started

ITEMS TO BE INSPECTED	INSPECTION TO PERFORM	✔
Steering	Check if steering wheel operates freely by completely turning it from side to side.	
Ignition switch	Turn the ignition switch to OFF to verify if engine will shut down. Restart engine.	
Shift lever	Check operation of shift lever (P, R, N, H and L).	
2WD/4WD selector	Check operation of 2WD/4WD selector.	
Brakes	Drive forward slowly a few feet and apply brakes. The brake pedal must feel firm when applied. The pedal must return to rest position when released. The brakes must respond adequately to the driver's input.	
Winch (if equipped)	Check operation of winch.	

Before you Ride

Perform pre-ride inspection to confirm the safe operating condition of your vehicle. Refer to *PRE-RIDE INSPECTION*.

Driver and passengers must:

– Be properly seated.
– Latch both side nets and fasten seat belt.
– Wear appropriate riding gear. (Refer to *RIDING GEAR*).

Riding Gear

It is important that the operator and passengers always wears appropriate protective clothing and apparel, including:

– An approved helmet
– Eye protection
– Boots
– Gloves
– A long sleeved shirt or jacket
– Long pants.

Depending on conditions, anti-fogging goggles may be required.

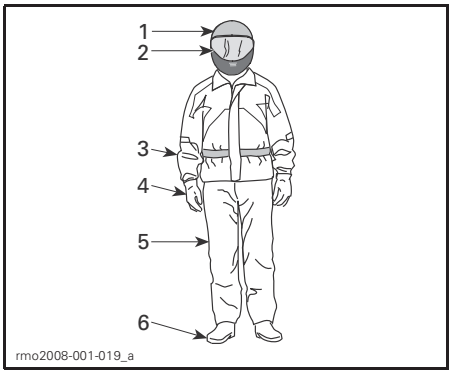

RIDING GEAR
1. *Approved helmet*
2. *Eye and face protection*
3. *Long sleeves shirt or jacket*
4. *Gloves*
5. *Long pants*
6. *Boots (over-the-ankle footwear)*

Weather conditions should help you decide how to dress. To maximize comfort and avoid frostbites in winter, dress for the coldest weather expected. Thermal underwear next to the skin also provides good insulation.

Never wear any loose clothing that may get entangled in the vehicle or on tree branches and shrubs.

Helmets and Eye Protection

Helmets protect the head and brain from injury. Even with the vehicle's cage and side nets, objects can enter the cockpit and strike the head, or the head can strike the cage itself or objects outside the vehicle. Even the best helmet is no guarantee against injury, but statistics indicate that helmet use significantly reduces the risk of brain injury. So, be safe and always wear a helmet while riding.

Choosing a Helmet

Helmets should be manufactured to meet the appropriate standard in your state, province or country and should fit properly.

A helmet with face protection is a better choice as it protects also against frontal impacts. It can also protect against debris, stones, insects, the elements, etc.

An open-face helmet does not offer the same protection for the face and chin. If you wear an open-face helmet, you should use a snap-on face shield and/or a pair of goggles. Ordinary glasses or sunglasses are not sufficient eye protection for riders. They can shatter or fly off, and they allow wind and airborne objects to reach the eyes.

For winter riding conditions, a stocking type cap, balaclava and face mask should always be carried or worn.

Use tinted face shields or goggles in the daytime only; do not use them at night or in poor illumination. Do not use them if they impair your ability to discern color.

Other Riding Gear

Footwear

Always wear closed toe footwear. Sturdy over-the-ankle boots with non-slip soles offer more protection and allow you to plant your foot properly on footrest.

Avoid long shoelaces that can be tangled in the accelerator or brake pedals.

For winter riding conditions, rubber soled boots with either a nylon or leather uppers, with removable felt liners are best suited.

Avoid rubber boots. Rubber boots may get trapped behind or between pedals, impairing the proper operation of brake and accelerator pedals.

Gloves

Full-fingered gloves protect hands from the wind, sun, heat, cold and flying objects. Gloves that fit snugly will improve grip on the steering wheel and help reduce hand fatigue. Sturdy, reinforced motorcycle or ATV gloves help protect hands better in the event of an accident or a rollover. If gloves are too bulky, it may be difficult to operate the controls.

For winter riding conditions, hands should be protected by a pair of snowmobile gloves which have sufficient insulation and allow use of thumbs and fingers for operation of controls.

Jackets, Pants and Riding Suits

Wear a jacket or a long sleeved shirt and long pants, or a full riding suit. Quality ATV-type protective gear will provide comfort, and it can help you avoid being distracted by adverse environmental elements. In case of a crash, good quality protective gear made of sturdy material may prevent or reduce injury.

In cool-weather riding, protect yourself against hypothermia. Hypothermia, a condition of low body temperature, can cause loss of concentration, slowed reactions and loss of smooth, precise muscle movement. In cool conditions, proper protective gear like a windproof jacket and insulated layers of clothing are essential. Even while riding at moderate temperatures, you can feel very cold due to the wind.

Protective gear that is appropriate for cold-weather riding may be too hot when stopped. Dress in layers so that clothing can be removed as desired. Topping the protective gear with a windproof outer layer can prevent cold air from reaching the skin.

Rain Gear

If you must ride in wet weather, a rain suit or a waterproof riding suit is recommended. On long rides, it is a good idea to carry rain gear. A dry rider will be much more comfortable and alert.

Hearing Protection

Long-term exposure to wind and engine noise when riding can cause permanent hearing loss. Properly worn hearing protective devices such as earplugs can help prevent hearing loss. Check local laws before using any hearing protective devices.

Avoid Rollovers and Tipovers

Side-by-side vehicles handle differently from other vehicles. Side-by-side vehicles are designed to handle off-road terrain (for example, their wheel base and track width, ground clearance, suspension, drivetrain, tires, etc.), and, as a result, can overturn in situations where vehicles designed for use primarily on paved or smooth terrain may not.

A rollover or other accident can occur quickly during abrupt maneuvers such as sharp turns or hard acceleration or deceleration when turning, or when driving on hills or over obstacles. Abrupt maneuvers or aggressive driving can cause rollovers or loss of control even in flat open areas. If the vehicle rolls over, any part of your body (such as arms, legs, or head) outside of the cockpit can be crushed and trapped by the cage or ROPS or other parts of the vehicle. You can also be injured by impact with the ground, cockpit or other objects.

To reduce the risk of rollovers:

– Use care when turning.
  - Do not turn the steering wheel too far or too fast for your speed and environment. Adjust steering inputs according to your speed and environment.
  - Slow down before entering a turn. Avoid hard braking during a turn.
  - Avoid sudden or hard acceleration when turning, even from a stop or low speed.
– Never attempt donuts, skids, slides, fishtails, jumps, or other stunts. If vehicle starts to skid or slide, steer in the direction of the skid or slide. Never slam the brakes and lock the wheels.
– Avoid paved surfaces. This vehicle is not designed to operate on paved surfaces and is more likely to roll over. If you must drive on pavement, turn gradually, go slowly, and avoid abrupt acceleration and braking.

This vehicle can roll over sideways or tip over forward or backwards on slopes or uneven terrain.

– Avoid side hilling (driving along the slope rather than up or down a hill). When possible, drive straight up and down inclines rather than across them. If you must side hill, use extreme caution and avoid slippery surfaces, objects, or depressions. If you feel the vehicle start to rollover or slide sideways, steer downhill if possible.
– Avoid steep hills and follow procedures in this guide for climbing and descending hills.
– Sudden changes in terrain such as holes, depressions, banks, softer or harder ground or other irregularities may cause the vehicle to tip or become unstable. Observe the terrain ahead and slow down in areas of uneven terrain.

This vehicle will handle differently when carrying or pulling a load.

– Reduce speed and follow instructions in this manual for carrying cargo or pulling a trailer.
– Avoid hills and rough terrain.
– Allow more distance to stop.

Be Prepared in Case of Rollover

– Fasten side nets and fasten seat belt to help you avoid sticking out arms or legs.

– Never grab the cage or ROPS while riding. Hands can be crushed between the cage or ROPS and the ground in a rollover. Keep hands on the steering wheel or handholds.
– Never try to stop a rollover using your arms or legs. If you think that the vehicle may tip or roll, the driver should keep both hands on the steering wheel and the left foot firmly planted on the footrest. The passengers should keep both hands on the handhold and both feet firmly planted on the floor.

Avoid Collisions

This vehicle can reach high speeds. At higher speeds, there is an increased risk of losing control, particularly in challenging off-road conditions, and the risk of injury in a collision is greater. Never operate at excessive speeds. Always go at a speed that is proper for the terrain, visibility, and operating conditions, and your experience. Consider reserving use of the performance key for situations in which full speed and acceleration capability are appropriate.

Never operate this vehicle on any public street, road or highway, even dirt or gravel ones. Riding your vehicle on roads or highways could result in a collision with another vehicle. This vehicle is not designed for operation on roads. For example, it does not meet motor vehicle safety standards that apply to automobiles. In many jurisdictions it is not legal to operate this vehicle on public roads.

This vehicle does not have the same kind of protection for collisions as a car; for example, there are no air bags, the cockpit is not fully enclosed, and it is not designed for collisions with other vehicles. Therefore, it is particularly important to fasten seat belts and side nets and wear an approved helmet.

Practice Exercises

Before you go out for a ride, it is very important to familiarize yourself with the handling of your vehicle by practicing in a controlled environment. If possible, it is also a very good idea to take a more formal training course to sharpen your skills and increase your knowledge of the vehicle.

Find a suitable area to practice and perform the following exercises. It should be at least 45 m (150 ft) by 45 m (150 ft) free of obstacles like trees and rocks. Once you've selected a suitable permitted location, proceed with the following exercises.

Turning Exercises

Turning is one of the most frequent causes of accidents. It is easier for the vehicle to lose traction or rollover if you turn too sharply, or go too fast. Slow down when you approach a turn.

- First learn how to perform slight right turns at very low speeds. Release the throttle before turning and slowly reapply the throttle when turning.
- Repeat turning exercise but this time maintain the throttle at the level while turning.
- Finally, repeat turning exercise while accelerating slowly.
- Practice exercises turning on the other side.

Note how your vehicle reacts in these different exercises. We recommend releasing the throttle before entering a turn to help initiate directional change. You will feel the lateral force increasing with the speed and with your steering input. The lateral force should be maintained as low as possible to make sure it does not cause the vehicle to roll over.

U Turn Exercises

Practice doing U turns.

- Accelerate slowly and while remaining at low speed, then gradually turn the steering wheel to the right until you have completed the U turn.
- Repeat U turn exercise with different steering inputs and always at a very low speed.
- Repeat U turn exercise on the other side.

As mentioned before in this guide, do not ride on paved surfaces as the vehicle behavior will not be the same, increasing the risk of rollover.

Braking Exercises

Practice braking to get familiar with the brake response.

- Do it at low speed first, then increase the speed.
- Practice braking in straight line at different speeds and different braking force.
- Practice emergency braking; optimal braking is obtained in straight line, with high force applied, without locking the wheels.

Remember, braking distance depends on vehicle speed, load and the type of surface. Also, the tires and brakes conditions play a major role.

Reverse Exercises

The next step involves using the reverse.

- Install 1 cone marker on both sides of the vehicle beside each rear wheel. Move the vehicle forward until you can see the cone markers, then stop the vehicle. Acknowledge the distance required to see obstacles behind you.
- Learn how the vehicle handles itself in reverse and reacts with steering inputs.
- Always perform this reverse exercise at slow speeds.

Emergency Engine Stopping Exercise

Learn how to stop your engine quickly in an emergency situation.

– While running at low speed, simply turn the key to the off position.

This is to familiarize you with the vehicle's reaction when the engine is turned off while driving and to develop this reflex.

It is also important to be able to stop and exit the vehicle quickly.

– Immobilize the vehicle.
– Detach the seat belt and the net to exit the vehicle.

Off-Road Operation

The very nature of off-road operation is dangerous. Any terrain, which has not been specially prepared to carry vehicles, presents an inherent danger where terrain substance, shape and steepness are unpredictable. The terrain itself presents a continual element of danger, which must be knowingly accepted by anyone venturing over it.

An operator who takes a vehicle off-road should always exercise the utmost care in selecting the safest path and keeping close watch on the terrain ahead of him. The vehicle should never be operated by anyone who is not completely familiar with the driving instructions applicable to the vehicle, nor should it be operated on steep or treacherous terrain.

General Riding Techniques

General Driving Tips

Care, caution, experience and driving skill are the best precautions against the hazards of vehicle operation.

Whenever there is the slightest doubt that the vehicle can safely negotiate an obstacle or a particular piece of terrain, always choose an alternate route.

In off-road operation, power and traction, not speed, are important. Never drive faster than visibility and your own ability to select a safe route permit. Always go slowly and be extra careful when operating on unfamiliar terrain. Always be alert to changing terrain conditions when operating this vehicle. Be especially cautious on excessively rough, slippery, icy or loose terrain.

Constantly watch the terrain ahead for sudden changes in slopes or obstacles, such as rocks or stumps, that may cause loss of stability, resulting in tip over or rollover.

Never operate the vehicle if the controls do not function normally. See an authorized Can-Am dealer.

To maintain proper control it is strongly advised that you keep your hands on the steering wheel and within easy reach of all controls. The same holds true for your feet. To minimize the possibility of any leg or foot injury, keep your left foot on the footrest and right foot on the floor at all times. Staying completely within the cockpit will also help keep you from striking objects outside the vehicle.

Watch for and avoid branches and other objects that could enter the passenger compartment and strike you or your passengers.

Operating in Reverse

When operating in reverse, check that the path behind the vehicle is free of people or obstacles. Pay attention to blind spots. When it is safe to proceed in reverse, go slowly and avoid sharp turns.

⚠ WARNING

Steering inputs in reverse operation increase the risk of rollover.

NOTE: In reverse operation, the engine RPM is limited thus limiting the vehicle reverse speed.

⚠ WARNING

When driving downhill in reverse, gravity can increase the vehicle speed above safe reverse speed.

Crossing Roads

If you have to cross a road, ensure to have complete visibility on both sides for incoming traffic and decide on exit point on other side of road. Drive in a straight line toward that point. Do not make sharp direction changes or abrupt accelerations as it may result in a rollover situation. Do not travel on sidewalks or bicycle trails as they are designated specifically for those uses.

Riding on Paved Surfaces

Avoid paved surfaces. This vehicle is not designed to operate on paved surfaces and is more likely to roll over. If you must drive on pavement, turn gradually, go slowly, and avoid abrupt acceleration and braking.

Shallow Water Crossing

Water can be a unique hazard. If it is too deep the vehicle may “float” and topple. Check the water depth and current before you attempt to cross any water. Water depth should not exceed 30 cm (12 in) for vehicle to safely cross the obstacle. Beware of slippery surfaces such as rocks, grass, logs, etc., both in the water and on its banks. A loss of traction may occur. Do not attempt to enter the water at high speed.

Water will affect the braking ability of your vehicle. Make sure you dry the brakes by applying them several times after the vehicle leaves the water.

Mud or marsh lands may be encountered near water. Be prepared for sudden “holes” or changes in depth. Similarly so, be watchful of hazards such as rocks, logs, etc., partially covered by vegetation.

Riding on Snow or Ice

When performing pre-ride inspection, pay special attention to locations on the vehicle where snow and/or ice accumulations may obstruct visibility of the tail lamp, clog ventilation openings, block the radiator and fan, and interfere with the movement of controls. Before starting with your vehicle, check the steering, accelerator and brake pedals for interference free operation.

Whenever this vehicle is ridden on a snow covered drive path, the tire grip is generally reduced causing the vehicle to react differently to control inputs from the operator. On low grip surfaces, the steering responses are not as crisp and precise, stopping distances are lengthened and acceleration is also affected. Slow down and do not "gun" the accelerator. This will only result in spinning of the tires and possibly in an over steering slide of the vehicle. Avoid hard braking. This will possibly result in a straight line slide of the vehicle. Again, the best advice is to safely reduce speed in anticipation of a maneuver to give yourself time and distance in order to keep control of the vehicle.

As you drive your vehicle over a loose snow covered surface, snow dust will be picked up in the wake turbulence of the moving vehicle and transported to contact and accumulate or melt on some exposed components including rotating parts like brake discs. Water, snow or ice may affect the response time of the brake system of your vehicle. Even when not required to reduce vehicle speed apply brakes frequently to prevent ice or snow accumulation and to dry brake pads and discs. While doing so in low risk driving situations you will test for grip level and keep yourself alerted to how the vehicle reacts to your control inputs. Always keep brake and accelerator pedals and floor boards free of snow and ice. Frequently wipe snow off seat, steering wheel, headlights and tail lamps.

The depth of the snow cover may hide rocks, tree stumps or other objects and if it is wet may totally impede the drivability as the vehicle becomes bogged down or completely looses traction in slushy snow. Look far ahead and always be watchful of any visible clues that might indicate the presence of such obstacles. In doubt steer clear. Avoid driving on any frozen waterways before checking that the ice will safely support the vehicle, its riders and its load of cargo.

At the end of each ride it is a good practice to clean the vehicle and all moving components (brakes, steering components, drivelines, controls, radiator fan etc.) from any snow or ice accumulations. Wet snow will turn to ice during the shut down period and become more difficult to remove at the next pre-ride inspection.

Riding on Sand

Sand and riding on sand dunes is another unique experience but there are some basic precautions that should be observed. Wet, deep or fine sand may create a loss of traction and cause the vehicle to slide, drop off or become "bogged" down. If this occurs look for a firmer base. Again, the best advice is to slow down and be watchful of the conditions.

When riding in sand dunes it is advisable to equip the vehicle with an antenna type safety flag. This will help make your location more visible to others over the next sand dune. Proceed carefully should you see another safety flag ahead.

Riding on Gravel, Loose Stones or Other Slippery Surfaces

Riding on loose stones or gravel is very similar to riding on ice. They will affect the steering of vehicle, possibly causing it to slide and tip over especially at high speeds. In addition, braking distance may be affected. Remember that "gunning" the throttle or sliding may cause loose stones to be ejected rearwards into the path of another rider's way. Never do it deliberately.

If you do get into a slide or skid, it may help to turn the steering wheel into the direction of the skid until you regain control. Never jam the brakes and lock the wheels.

Crossing Obstacles

Use the low range (L) for crossing obstacles.

Obstacles on the "trail" should be traversed with caution. This includes rocks, fallen trees, and depressions. You should avoid them whenever possible. Remember that some obstacles are too large or dangerous to cross and should be avoided. As a guideline, never attempt to cross an obstacle higher than the ground clearance of the vehicle. Small rocks or small fallen trees may be safely crossed - approach obstacle at low speed and as much as possible at a right angle. Adjust speed without losing momentum and do not accelerate abruptly. Passengers must grasp handhold firmly and brace feet on the floor. Hold steering firmly without closing your fists around it and proceed. Be aware that the obstacle may be slippery or may move while crossing.

Hill Driving Conditions

When driving on hills or slopes, two things are highly important: be prepared for slippery surfaces or terrain variations and obstacles and brace yourself properly inside vehicle. If you climb or descend a hill that is too slippery or has too loose a surface, you can lose control. If you go over the top of a hill at high speed, you may not have time to prepare for the terrain on the other side. Avoid parking on a slope. Always put the shift lever in PARK when stopped or parked, especially on an incline, to avoid rolling. If you must park on a steep incline, block the wheels using rocks or bricks.

Uphill Driving

Use the low range (L) for uphill driving.

Due to its configuration, this vehicle has very good traction even while climbing, so much so that tip over is possible before traction is lost. For example, it is common to encounter terrain situations where the top of the hill has eroded to a point that the hill peak rises very sharply. This vehicle is not designed to negotiate such a condition. Take an alternate route.

It is also wise to know the terrain condition on the other side of the hill or bank. All too often there exists a sharp drop-off that is impossible to negotiate or descend.

If you feel that the slope is getting too steep to climb, apply brakes to immobilize vehicle. Put shift lever in reverse (R), and back down the hill, barely releasing brakes to remain at low speed. Do not attempt to turn around. Never coast down hill while vehicle is in neutral. Do not perform hard braking as it increases the risk of tipover.

Downhill Driving

This vehicle can climb steeper slopes than it can descend safely. Therefore, it is essential to assure that a safe route exists to descend a slope before you climb it.

Decelerating while negotiating a slippery downhill slope could "toboggan" the vehicle, causing it to slide. Maintain steady speed and/or accelerate slightly to regain control. Never slam brakes and lock the wheels.

Side Hilling

Whenever possible, side hilling (driving across a slope rather than up or down it) should be avoided. If necessary, do so with extreme caution. Side hilling on steep inclines could result in rollover. In addition, slippery or unfirm surfaces could result in uncontrollable side sliding. Avoid all objects or depressions that will intensify the raising of one side of the vehicle higher than the other, thus causing rollover. If you feel the vehicle start to rollover or slide sideways, steer downhill if possible.

⚠ WARNING

Be careful when loading and transporting liquid reservoirs. They can affect vehicle stability when side hilling by pulling downhill and increasing the risk of a roll over.

Drop-Offs

This vehicle is not designed to negotiate drop-offs. It will "bottom-out" and usually stop if either the front or rear wheels are driven over a drop-off. If the drop is sharp or deep, the vehicle will nose dive and tip over.

Avoid negotiating drop-offs. Reverse and select an alternate route.

Recreational, Group and Distance Riding

Respect the rights and limitations of others. Stay away from areas designated for other types of off road use. This includes snowmobile trails, equestrian trails, cross country ski trails, mountain bike trails, etc. Never assume there are no other users on the trail. Always stay to the right of the trail and do not zig zag to one side of the trail then the other. Be prepared to stop or pull off to the side if another trail user appears in front of you.

Join a local side-by-side vehicle club. It will provide you with a map and advice or inform you where you can ride. If a club does not exist in your area, help to start one. Group riding and club activities provide a pleasurable, social experience. Never use this vehicle with drugs or alcohol, or tired or ill.

Always keep a safe distance from other riders. Your judgment of speed, terrain conditions, weather, mechanical condition of your vehicle and the "trust in judgment" you have in others

around you will help you make a better choice of appropriate safe distance. This vehicle, like any other motorized vehicle, cannot stop "on a dime".

Before you ride, tell someone where you are planning to travel and your expected time of return.

Depending on the length of your ride, carry additional tools or emergency equipment. Find out where you can get additional gasoline. Be prepared for the possible conditions you may encounter. An emergency first aid kit should always be a consideration.

Environment

One of the benefits of this vehicle is that it can take you off the beaten path away from most communities. However, you should always respect nature and the rights of others to enjoy it. Do not ride in environmentally sensitive areas. Do not drive over forest crops or shrubs, nor cut down trees or take down fencing, nor spin your wheels and destroy the terrain. "Tread Lightly".

This vehicle can cause OHV wildfires if debris builds up near the exhaust or other engine hot spots and ignites then falls off into dry grass. Avoid riding in wet areas, through muskeg or tall grass, where debris can build up. Should you ride in those areas, inspect and remove all debris from your engine and hot spots. Refer to *VEHICLE CARE* for details.

Chasing wildlife is in many areas illegal. Wildlife can die of exhaustion after being chased by a motorized vehicle. If you encounter animals on the trail, stop and observe quietly and with caution. It will be one of the better memories of your life.

Observe the rule "what you take in, carry out". Do not litter. Do not start campfires unless you have permission to do so, and then only away from dry areas. The hazards you may create on the trail may cause injury to others or yourself, even at a later date.

Respect farm lands. Always obtain the permission of the landowner before riding on private land. Respect crops, farm animals and property lines.

Finally, do not pollute streams, lakes or rivers and do not modify the engine or exhaust system, or remove any of its components as it will alter the vehicle emissions.

MOVING LOADS AND DOING WORK

Working with your Vehicle

Your vehicle can help you perform a number of different LIGHT tasks ranging from snow removal to pulling wood or carrying cargo. A variety of accessories are available from your authorized Can-Am dealer. To prevent possible injury, follow the instructions and warnings that accompany the accessory. Always respect the load limits of the vehicle. Overloading the vehicle can overstress the components and cause failure. Avoid overexerting yourself if you lift or pull heavy loads or manually push the vehicle.

Carrying Loads

Any load carried on the vehicle will affect the handling, stability and braking distance of the vehicle. Do not exceed the load limits of the vehicle, including the weight of operator, passengers, cargo, accessories and trailer tongue weight.

Always be aware that the "load" may slide or fall off and cause an accident.

Must use low gear if total payload is greater than 227 kg (500 lb).

LOAD LIMIT OF THE VEHICLE		
HD8 and HD10 Without cab except California models	**680 kg (1,500 lb)**	Includes occupants, cargo, tongue weight and added accessories
All other models	545 kg (1,200 lb)	

The following is an example of suitable total vehicle load distribution:

EXAMPLE OF SUITABLE LOADS MODELS WITH A 680 kg (1,500 lb) LOAD LIMIT, ADJUST ACCORDING TO YOUR MODEL LOAD LIMIT.				
OPERATOR AND PASSENGERS	CARGO BOX LOAD	ACCESSORIES	TONGUE WEIGHT	TOTAL VEHICLE LOAD
226 kg (500 lb)	346 kg (762 lb)	40 kg (88 lb)	68 kg (150 lb)	680 kg (1,500 lb)

To reduce the risk to lose control or the load carried, follow these recommendations.

Vehicle Settings When Carrying Load

When carrying heavy loads or passengers, readjust suspension accordingly.

When carrying heavy loads in cargo box or pulling a loaded trailer, operate with the shift lever in L (low range).

⚠ WARNING

Must use LOW GEAR if total payload is greater than 226 kg (500 lb).

Loading the Cargo Box

NOTICE **When loading or unloading, do not exceed the maximum cargo capacity on tailgate. Always close tailgate before operating to reduce the risk of loss of load.**

Load cargo as low as possible – a higher load can raise the vehicle's center of gravity, which can reduce stability. Position cargo toward the front and center of the cargo box and as evenly distributed as possible.

Secure the load to the tie down hooks inside cargo box. Use only the tie down hooks on the bottom of the cargo box; do not secure cargo to the cage or other part of the vehicle. If it is not properly secured, a load may slide or fall off, possibly striking occupants or bystanders; or it may shift during riding, affecting the handling of the vehicle.

Objects that are higher than the walls of the cargo bed may affect visibility for the driver and may act as projectiles in case of an accident. Loads that protrude sideways can get snagged or caught in bush, branches or other obstacles. Avoid covering and obstructing the brake lights with the cargo. Ensure no cargo protrudes outside the box and that cargo will not interfere with your visibility or control of the vehicle.

Do not overload cargo box.

Close tailgate before operating.

⚠ WARNING

Never operate the vehicle with an open tailgate.

MODEL	MAXIMUM CARGO BOX LOADS		
HD8 AND HD10 (except California models)	CARGO BOX	454 kg (1,000 lb)	Evenly distributed and safely secured. Loaded as low as possible to reduce height of center of gravity.
All other models		272 kg (600 lb)	
All models	TAILGATE	113 kg (250 lb)	Only while loading cargo into cargo box. Never operate with tailgate open.

Operating While Carrying a Loads

Reduce your speed when carrying cargo and turn gradually. Avoid hills and rough terrain. Allow more distance for braking. This vehicle may require additional stopping distance if carrying heavy loads, especially on inclined surfaces.

Tilting the Cargo Box

The cargo box can be tilted to ease unloading. Use release handles on either side of cargo box.

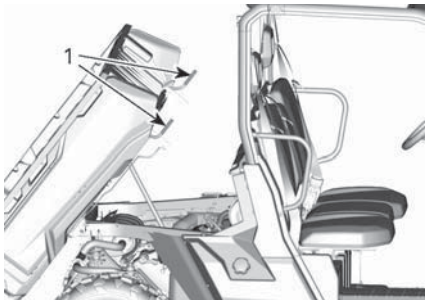

VIEWED FROM RH SIDE OF VEHICLE
1. Release handles

NOTICE Always turn off engine when tilting the cargo box.

⚠ WARNING

- Always ensure no one is standing behind the cargo box before you actuate the release handle.
- The load weight may affect the operation of the cargo box tilting feature (tilting or lowering).

Be very careful with the operation of the tailgate and the cargo box as the load may have moved during transport.

To lower the cargo box, simply push it down into place.

⚠ WARNING

- Keep yourself and others clear of the cargo box and vehicle frame junction when lowering cargo box.
- Ensure to properly latch the cargo box and the tailgate before riding.
- Make sure you do not leave objects between lifted cargo box and vehicle frame to ensure proper latching of the cargo box when lowered.

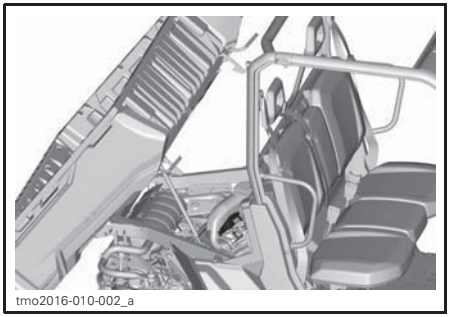

FRONT SECTION OF INCLINED CARGO BOX FREE OF ANY OBJECTS

Hauling a Load

Never pull a load by attaching it to the cage or other accessories; this can cause the vehicle to tip over. Use only the trailer hitch or winch (if installed) to pull a load.

When pulling loads with a chain or cable, ensure that there is no slack before starting and maintain tension while pulling.

When pulling loads with a chain or cable, be sure to brake progressively. The inertia of the load could lead to an impact.

When hauling a load, respect the maximum hauling capacity. Refer to *PULLING A TRAILER*.

⚠ WARNING

A slack can cause the chain or cable to break and snap back.

When pulling another vehicle, be sure that someone is controlling the pulled vehicle. They must brake and steer to prevent the vehicle from going out of control.

Before pulling loads with a winch, refer to the winch manufacturer's instructions.

Reduce your speed when hauling a load and turn gradually. Avoid hills and rough terrain. Never attempt steep hills. Allow more distance for brak-

ing, especially on inclined surfaces and when passengers are on board. Be careful not to skid or slide.

Pulling a Trailer

Riding this vehicle with a trailer substantially increases the risk of toppling, especially on inclined slopes. If a trailer is used behind the vehicle make sure that its hitch is compatible with the one on the vehicle. Make sure the trailer is horizontal with the vehicle. (In some instances a special extension may have to be installed on the vehicle hitch). Use security chains or cables to secure the trailer to the vehicle.

Reduce your speed when pulling a trailer and turn gradually. Avoid hills and rough terrain. Never attempt steep hills. Allow more distance for braking, especially on inclined surfaces and when passengers are on board. Be careful not to skid or slide.

Improperly loading a trailer may cause loss of control.

Always make sure load is evenly distributed and safely secured on the trailer; an evenly balanced trailer is easier to control.

Always put the shift lever to L (low range) for hauling a trailer – in addition to providing more torque, operating in low range helps account for the increased load on the rear tires.

When stopped or parked, block the vehicle and trailer wheels from possible movement.

Use caution when disconnecting a loaded trailer; it or its load may topple on you or others.

When hauling a trailer, respect the maximum tongue weight and towing capacity indicated on the label affixed to the hitch.

Make sure there is at least some weight on the tongue.

IMPORTANT ON-PRODUCT LABELS (CANADA/UNITED STATES)

Hang Tag

This vehicle comes with a hang tag and labels containing important safety information.

Any person who rides this vehicle should read and understand this information before riding.

Digitally Encoded Security System (D.E.S.S.™) Keys also available from your dealer

- Top-security anti-theft protection for your vehicle
- Encrypted code-on-chip technology restricts access to your vehicle's electronic ignition system.
- One vehicle / one code
- Comes with 3 programmable keys with a vibration / shock-resistant ball-and-socket design that ensures a reliable connection

- Work key, limits vehicle speed to 40 km/h.
- Normal key, limits vehicle speed to 70 km/h.
- Performance key, no limitation. (exactly as non D.E.S.S.™ keys)

704905721

THIS HANG TAG IS NOT BE REMOVED BEFORE SALE.

Vous pouvez aussi vous procurer des clés D.E.S.S.MC (système de sécurité à encodage numérique) auprès de votre concessionnaire

- Protection antivol à sécurité maximale pour votre véhicule
- Le code crypté intégré à la puce restreint l'accès au système d'allumage électronique de votre véhicule.
- Un véhicule / un code.
- Offert avec 3 clés programmables; design à rotule résistant aux vibrations et aux chocs qui assure une connexion fiable.

- Clé de travail: limite la vitesse du véhicule à 40 km/h.
- Clé normale: limite la vitesse du véhicule à 70 km/h.
- Clé de performance: aucune limite. (exactement comme des clés non D.E.S.S.MC)

Ne pas retirer cette étiquette avant la vente.

EN-FR-704905721-DEC

TYPICAL - D.E.S.S. KEY OPTIONAL: NO D.E.S.S. KEY DELIVERED WITH THE VEHICLE

⚠ WARNING

THIS VEHICLE IS INTENDED FOR RECREATIONAL USE AND SECONDARY GENERAL UTILITY APPLICATIONS
NO OPERATOR UNDER AGE 16

TRAINING COURSES TO TEACH ROV DRIVING ARE AVAILABLE. FOR INFORMATION CONTACT YOUR DEALER.
Read the Operator's Guide and Safety Labels and Watch the Safety Video.
Follow All Instructions and Warnings.

CHECK WITH YOUR DEALER TO FIND OUT ABOUT STATE OR LOCAL LAWS REGARDING ROV OPERATION.

Improper Use of Off-Highway Vehicles Can Cause Severe Injury or Death

Be Prepared
- Fasten seat belts and make sure nets or doors are securely latched in place.
- Wear an approved helmet and protective gear.
- Each rider must be able to sit with back against seat, foot flat on the floor or on footrest, and hands on steering wheel or handholds. Stay completely inside the vehicle.

Drive Responsibly
Avoid loss of control and rollovers:
- Avoid abrupt maneuvers, sideways sliding, skidding or fishtailing, and never do donuts.
- Avoid hard acceleration when turning, even from a stop.
- Slow down before entering a turn.
- Plan for hills, rough terrain, ruts, and other changes in traction and terrain. Avoid paved surfaces.
- Avoid side hilling (riding across slopes).

Rollovers have caused severe injuries and death, even on flat, open areas.

Be Sure Riders Pay Attention and Plan Ahead
If you think or feel the vehicle may tip or roll, reduce your risk of injury :
- Keep a firm grip on the steering wheel or handholds and brace yourself.
- Do not put any part of your body outside of the vehicle for any reason.

DRIVER UNDER 16

Require Proper Use of Your Vehicle
– Do your part to prevent injuries:
- Do not allow careless or reckless driving.
- Make sure operators are 16 or older with a valid driver's license.
- Do not let people drive or ride after using alcohol or drugs.
- Do not allow operation on public roads (unless designated for off-highway vehicle access) – collisions with cars and trucks can occur.
- Do not exceed seating capacity: see information on back side of this card

THIS HANG TAG CAN'T BE REMOVED BEFORE SALE.

Tilt Table Test Result

Bombardier Recreational Products inc.
Vehicle Model: XXXX

XX.X

Measurement of lateral stability, in degrees, of a sample, standard condition vehicle (with an operator and a passenger load - 430 pounds) as measured by the manufacturer in accordance with the tilt table lateral stability test in the ANSI/ROHVA standard for Recreational Off-Highway Vehicles. Vehicle modification, accessories, and loading can affect lateral stability.

Training courses to teach ROV driving are available. For information contact your dealer and/or rohva.org.

Check with your dealer to find out about state or local laws regarding ROV operation.

THIS HANG TAG IS NOT TO BE REMOVED BEFORE SALE.

VEHICLE ENGINE DESCRIPTION:
XXXXXX

EPA CERTIFIED

NER (NORMALIZED EMISSION RATE) = XX
ON A 0 TO 10 SCALE, 0 BEING THE CLEANEST

Vehicle seating capacity: ☐ **Occupants**

EN-704906754A-DEC

⚠ **WARNING**. Operating, servicing and maintaining an off-road vehicle can expose you to chemicals including engine exhaust, carbon monoxide, phthalates, and lead, which are known to the State of California to cause cancer and birth defects or other reproductive harm.
To minimize exposure, avoid breathing exhaust, do not idle the engine except as necessary, service your vehicle in a well-ventilated area and wear gloves or wash your hands frequently when servicing your vehicle.

For more information go to www.P65Warnings.ca.gov/products/passenger-vehicle

704906872

EN-704906872-DEC

TYPICAL: APPLICABLE FOR ALL MODELS IN CANADA AND UNITED STATES, APPLICABLE FOR MODELS EVERYWHERE EXCEPT CANADA AND UNITED STATES WHEN EQUIVALENT TO A MODEL CERTIFIED TO US. EPA STANDARDS

NOTICE

Remember to always return your key to OFF position for a complete electrical shutdown.

Leaving the key in ACC position will drain the battery and the vehicle may not restart.

THIS HANG TAG CANNOT BE REMOVED BEFORE SALE.

AVIS

Ne pas oublier de toujours remettre votre clé en position OFF afin d'assurer un arrêt complet du système électrique.

Laisser la clé en position ACC peut décharger la batterie et empêcher le véhicule de démarrer.

Ne pas retirer cette étiquette avant la vente.

EN-FR-704907637-DEC

TYPICAL - DO NOT LEAVE KEY IN ACC POSITION

Safety Labels

Read and understand all the safety labels on your vehicle.

These labels are affixed to the vehicle for the safety of the operator, passengers or bystanders.

The following labels are on your vehicle, and they should be considered permanent parts of the vehicle. They need to be clean and visible at all times. If missing or damaged, they need to be replaced. Safety labels are free of charge. See an authorized Can-Am dealer.

Upon replacement of parts that have warnings on them, make sure to order (free of charge) the applicable safety warnings if not already installed on the replacement part.

NOTE: In the event of any discrepancy between this guide and the vehicle, the safety labels on the vehicle have precedence over the labels in this guide.

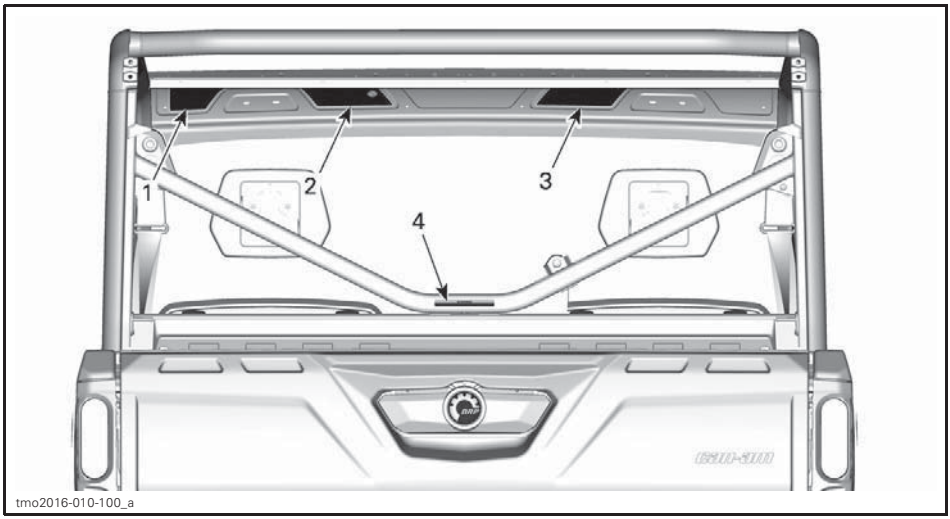

TYPICAL

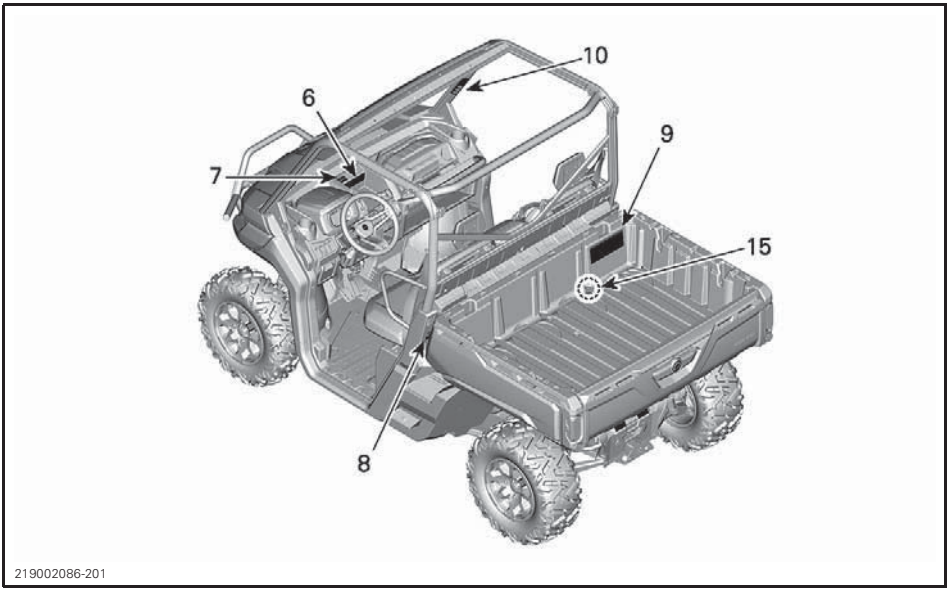

TYPICAL

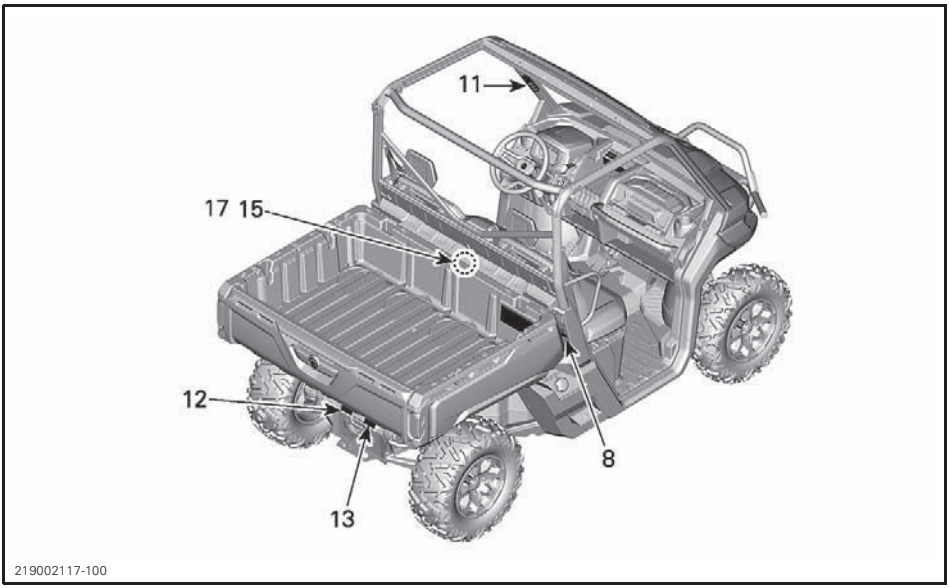

TYPICAL

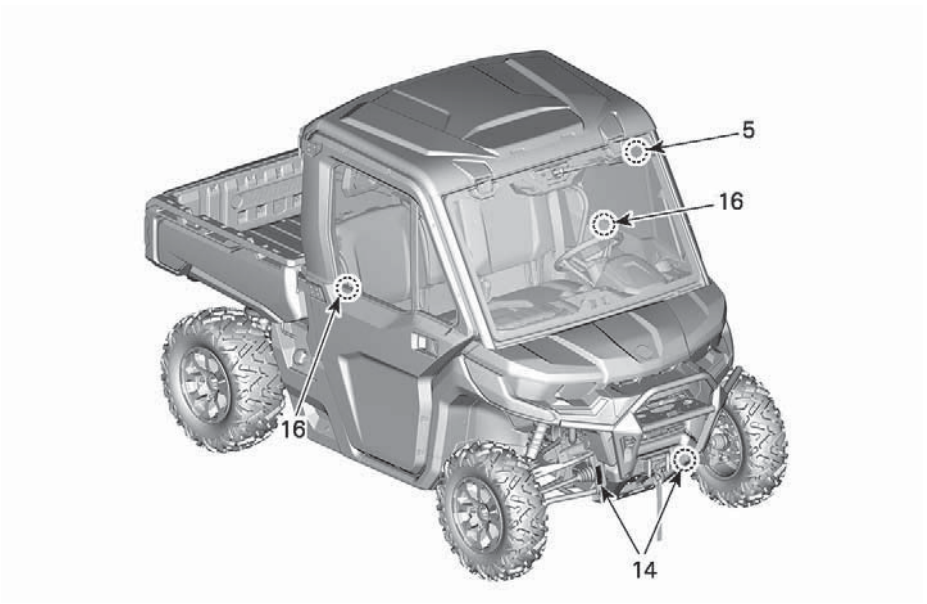

219002086-202

TYPICAL

⚠ WARNING

Improper Use of Off-Highway Vehicles Can Cause Severe Injury or Death

704905476

Be Prepared

- Fasten seat belts and make sure nets or doors are securely latched in place.
- Wear an approved helmet and protective gear.
- Each rider must be able to sit with back against seat, foot flat on the floor or on footrest, and hands on steering wheel or handholds. Stay completely inside the vehicle.

Drive Responsibly

Avoid loss of control and rollovers:

- Avoid abrupt maneuvers, sideways sliding, skidding or fishtailing, and never do donuts.
- Avoid hard acceleration when turning, even from a stop.
- Slow down before entering a turn.
- Plan for hills, rough terrain, ruts, and other changes in traction and terrain.
  Avoid paved surfaces.
- Avoid side hilling (riding across slopes).

EN-704905476D-Dec

LABEL 1 - MODELS WITHOUT CAB

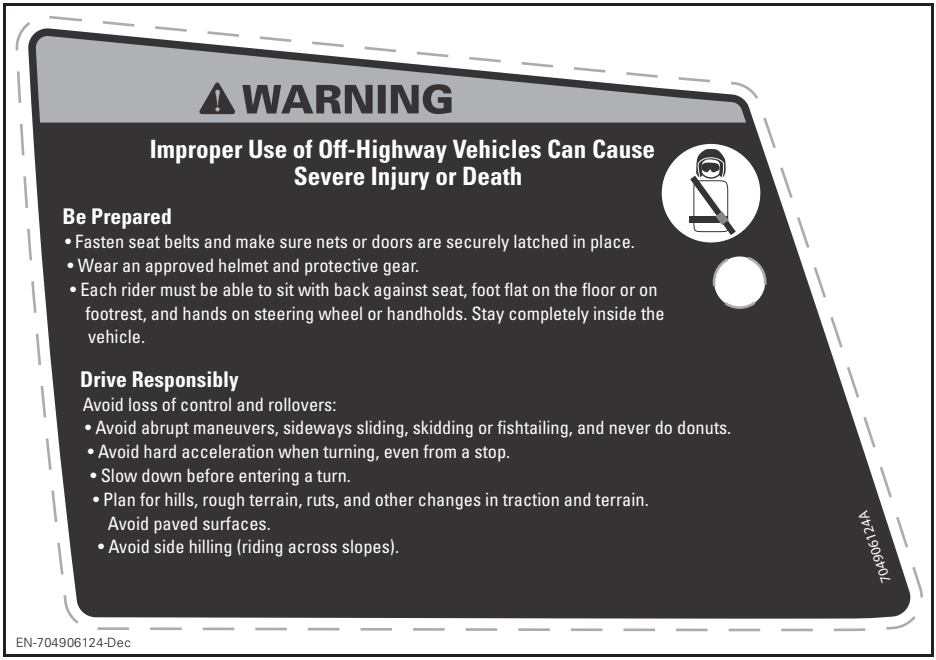

LABEL 1- MODELS WITH CAB

LABEL 2 - MODELS WITHOUT CAB

LABEL 2 - MODELS WITH CAB

LABEL 3- MODELS WITHOUT CAB

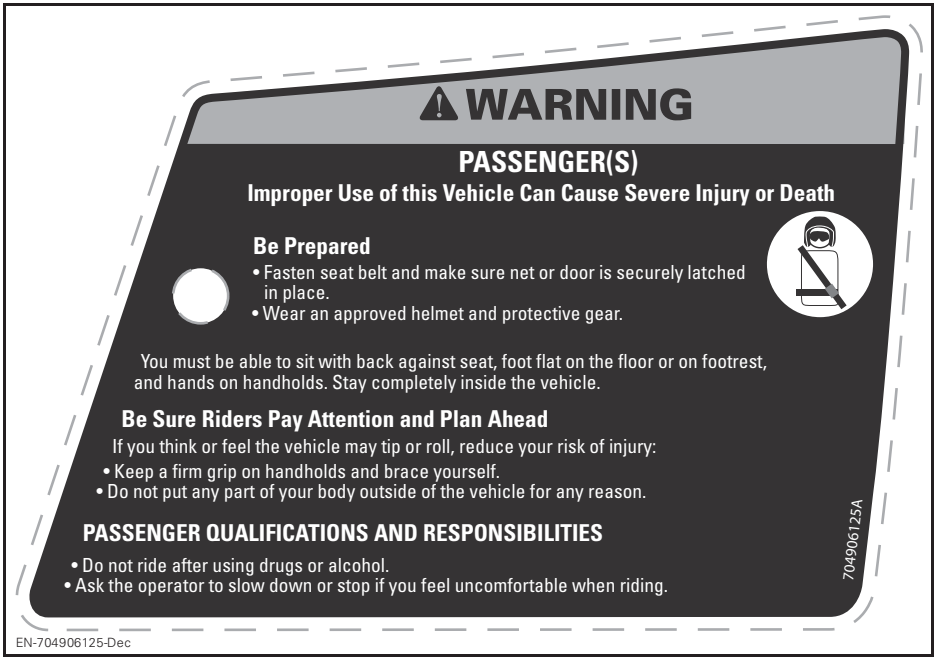

LABEL 3 - MODELS WITH CAB

LABEL 4

LABEL 5 - MODELS WITH WINDSHIELD

LABEL 6 - MODELS WITH VISCO-LOK FRONT DIFFERENTIAL

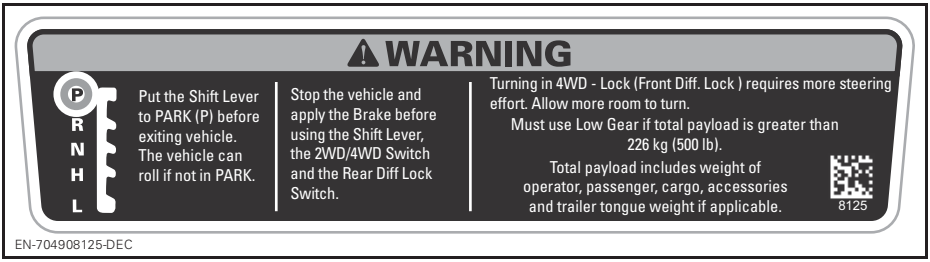

LABEL 6 - MODELS WITH SMART-LOK FRONT DIFFERENTIAL

LABEL 7

LABEL 8

⚠WARNING

NEVER **carry passenger in cargo box or on gate.**

NEVER place gasoline container inside cargo box when filling it. This can lead to an explosion.

NEVER exceed the vehicle load capacity (see table), including weight of operator, passenger, cargo, accessories and trailer tongue weight if applicable.

NEVER exceed REAR LOAD CAPACITY (Refer to label below), evenly distributed (includes trailer tongue weight if applicable).

ALWAYS secure the load.

Improper tire pressure or overloading can cause loss of control. Loss of control can result in severe injury or death.

- An underinflated tire can come off the rim.

To reduce the risk of loss of control or loss of load:

When loading cargo:

- Position cargo towards front and center and as low as possible.
- Latch tail gate.

When carrying a load:

- Reduce your speed and turn gradually.
- Avoid hills and rough terrain.
- Allow more distance to stop.

		3 OCCUPANTS				6 OCCUPANTS			
	ENGINE	HD5	HD8 / HD10			HD8 / HD10			
	DOORS	NO	NO		YES	NO			YES
	PACKAGE	ALL	XMR	OTHERS	ALL	LONESTAR	XMR	OTHERS	ALL
	COLD TIRE PRESSURE FRONT: kPa (psi)	97 (14)	97 (14)	97 (14)	124 (18)	152 (22)	152 (22)	152 (22)	179 (26)
	COLD TIRE PRESSURE REAR: kPa (psi)	124 (18)	179 (26)	124 (18)	124 (18)	165 (24)	165 (24)	165 (24)	193 (28)
CALIFORNIA	MAX LOAD CAPACITY: kg (lb)	545 (1200)				-	612 (1350)	612 (1350)	590 (1300)
CALIFORNIA	MAXIMUM CARGO LOAD: kg (lb)	272 (600)				-	272 (600)		
OTHERS	MAX LOAD CAPACITY: kg (lb)	545 (1200)	680 (1500)	680 (1500)	545 (1200)	785(1730)	739 (1630)	794 (1750)	590 (1300)
OTHERS	MAXIMUM CARGO LOAD: kg (lb)	272 (600)	454 (1000)			454 (1000)			

82 42

Refer to your Operator's Guide for more information about cargo box use.

EN-704908242-DEC

LABEL 9

LABEL 10

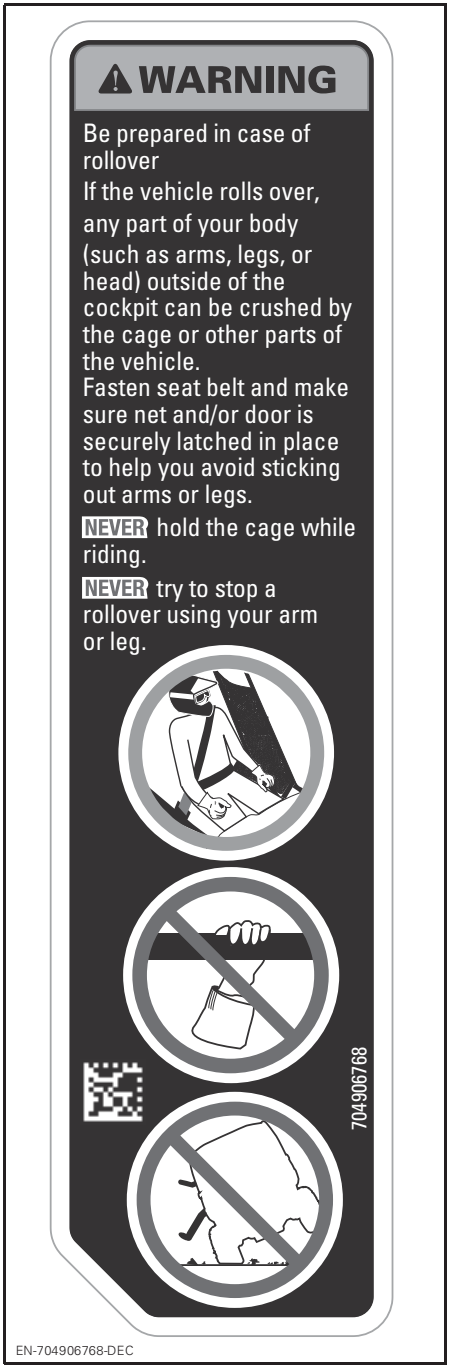

LABEL 11

WARNING

When pulling a trailer:
- Set the shift lever to low gear range (L).
- Reduce your speed and turn gradually.
- Avoid hills and rough terrain.
- Allow more distance to stop.

8689

EN-704908689-DEC

LABEL 12

WARNING

Improperly loading a trailer may cause loss of control. Evenly balance the load.

MAXIMUM TOWING WEIGHT:	1134 kg	2500 lb
MAXIMUM TONGUE WEIGHT:	114 kg	250 lb

704907560

EN-704907560-DEC

LABEL 13 - HD5

WARNING

Always use the battery post to ground the winch. Doing otherwise may induce an undesired power steering signal resulting in an unintended steering input. In certain circumstances, some unintended steering input could lead to a loss of vehicle control increasing the risk of a crash.

8273

EN-704908273-DEC

LABEL 14

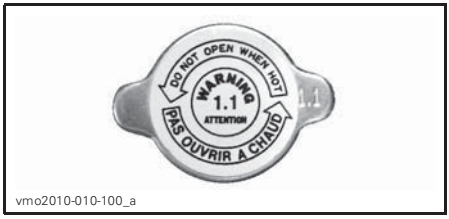

vmo2010-010-100_a

LABEL 15

WARNING

To reduce the risk of severe injuries or death, read the safety labels and follow these rules. Door is not intended to retain and/or protect occupants.

ALWAYS :
- Fasten your seat belt.
- Keep your entire body inside the cockpit.
- Latch the door before riding.
- Fasten lateral net when door is removed from vehicule.

NEVER :
- Put your elbow on the door while riding.

8691

EN-704908691-DEC

LABEL 16

LABEL 17

Molded Safety Pictogram

⚠ WARNING

Never carry passengers in cargo box or on tailgate. Max weight on tailgate during loading is 113 kg (250 lb)

Technical Information Labels

AIR FILTER MAINTENANCE
MAINTENANCE MUST BE PERFOMED AS SPECIFIED IN THE OPERATOR'S GUIDE. AIR FILTER MAINTENANCE SHOULD INCREASE IN FREQUENCY IN MORE SEVERE (DUSTY) CONDITIONS.

ENTRETIEN DU FILTRE À AIR
L'ENTRETIEN DOIT ÊTRE EFFECTUÉ TEL QUE SPÉCIFIÉ DANS LE GUIDE DU CONDUCTEUR.ENTRETENIR LE FILTRE À AIR PLUS SOUVENT DANS DES CONDITIONS PLUS EXTRÊMES (MILIEUX POUSSIÉREUX). 707800373

707800373

ON AIR FILTER HOUSING

EN-704908238-DEC

PUSH TAB TO LOWER MIDDLE SEAT

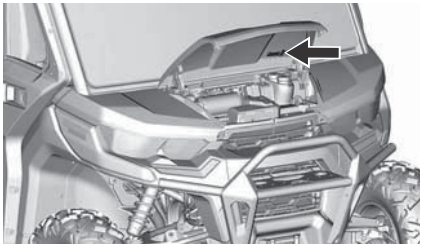

219002059-050

A/C SYSTEM INFORMATION LABEL LOCATION

READ THE REPAIR MANUAL
BEFORE SERVICING

Type of refrigerant: R-134A
Refrigerant filling capacity: 520 g (18 oz)
Oil type: PAG
Safety Standards for Motor
Vehicle Refrigerant Vapor
Compressions Systems: SAE J639

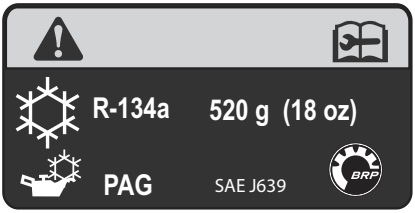

EN-704908394-DEC

Compliance Labels

These labels indicate vehicle's compliance.

219002067-012

TYPICAL - E PA LABEL LOCATION

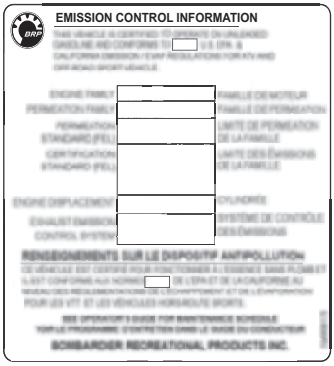

EN-EPA-DEC

TYPICAL - EPA LABEL

EN-FR-704906981-DEC

LOCATED ON TOP LH BAR OF CAGE FACING THE INSIDE OF VEHICLE

IMPORTANT ON-PRODUCT LABELS (ALL COUNTRIES EXCEPT CANADA/UNITED STATES)

Hang Tag

This vehicle comes with a hang tag and labels containing important safety information.

Any person who rides this vehicle should read and understand this information before riding.

Digitally Encoded Security System (D.E.S.S.™) Keys also available from your dealer

- Top-security anti-theft protection for your vehicle
- Encrypted code-on-chip technology restricts access to your vehicle's electronic ignition system.
- One vehicle / one code
- Comes with 3 programmable keys with a vibration / shock-resistant ball-and-socket design that ensures a reliable connection

- Work key, limits vehicle speed to 40 km/h.
- Normal key, limits vehicle speed to 70 km/h.
- Performance key, no limitation. (exactly as non D.E.S.S.™ keys)

704905721

THIS HANG TAG IS NOT BE REMOVED BEFORE SALE.

Vous pouvez aussi vous procurer des clés D.E.S.S.MC (système de sécurité à encodage numérique) auprès de votre concessionnaire

- Protection antivol à sécurité maximale pour votre véhicule
- Le code crypté intégré à la puce restreint l'accès au système d'allumage électronique de votre véhicule.
- Un véhicule / un code.
- Offert avec 3 clés programmables; design à rotule résistant aux vibrations et aux chocs qui assure une connexion fiable.

- Clé de travail: limite la vitesse du véhicule à 40 km/h.
- Clé normale: limite la vitesse du véhicule à 70 km/h.
- Clé de performance: aucune limite. (exactement comme des clés non D.E.S.S.MC)

Ne pas retirer cette étiquette avant la vente.

EN-FR-704905721-DEC

TYPICAL - D.E.S.S. KEY OPTIONAL: NO D.E.S.S. KEY DELIVERED WITH THE VEHICLE

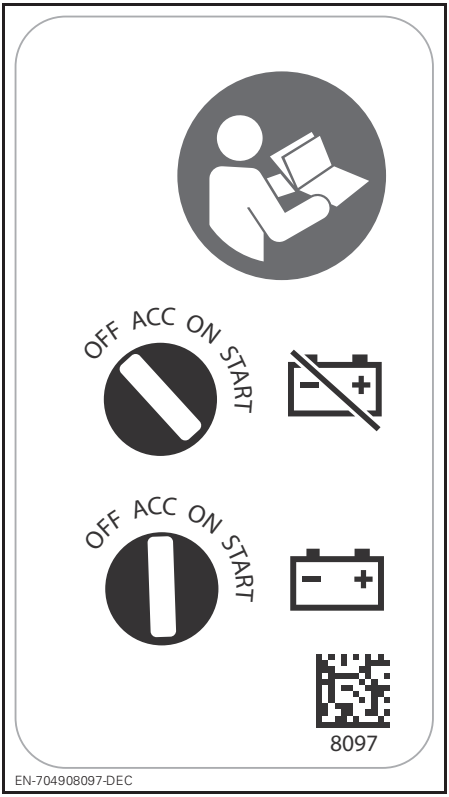

TYPICAL - DO NOT LEAVE KEY IN ACC POSITION

Safety Labels

Read and understand all the safety labels on your vehicle.

These labels are affixed to the vehicle for the safety of the operator, passengers or bystanders.

The following labels are on your vehicle, and they should be considered permanent parts of the vehicle. They need to be clean and visible at all times. If missing or damaged, they need to be replaced. Safety labels are free of charge. See an authorized Can-Am dealer.

Upon replacement of parts that have warnings on them, make sure to order (free of charge) the applicable safety warnings if not already installed on the replacement part.

NOTE: In the event of any discrepancy between this guide and the vehicle, the safety labels on the vehicle have precedence over the labels in this guide.

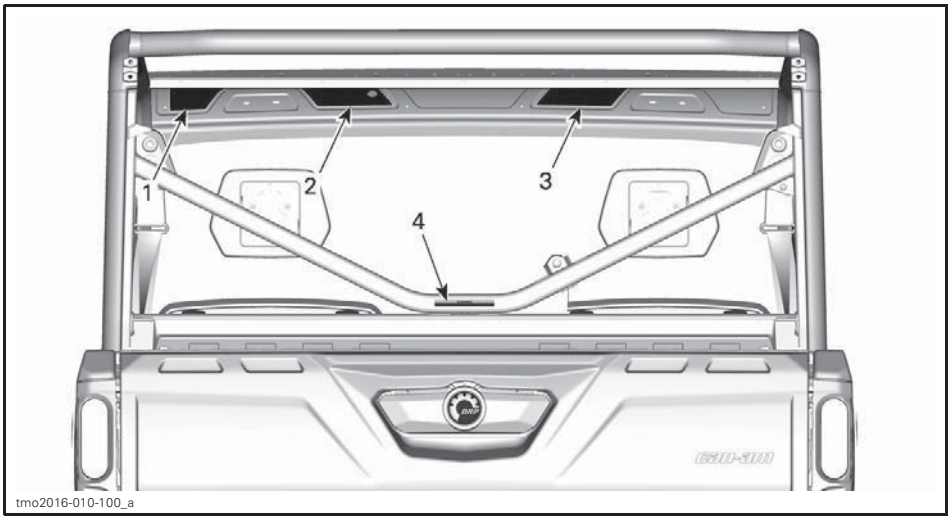

TYPICAL

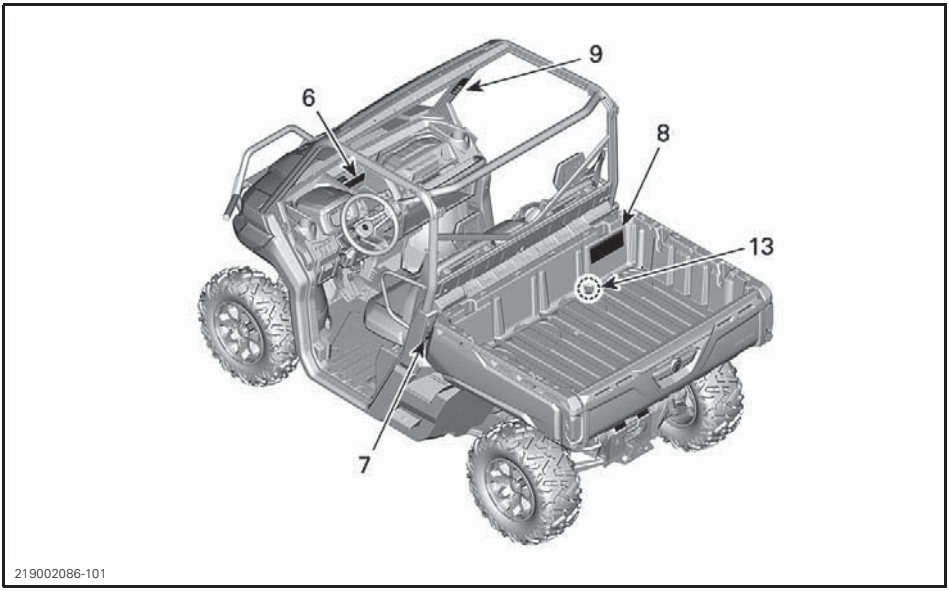

TYPICAL

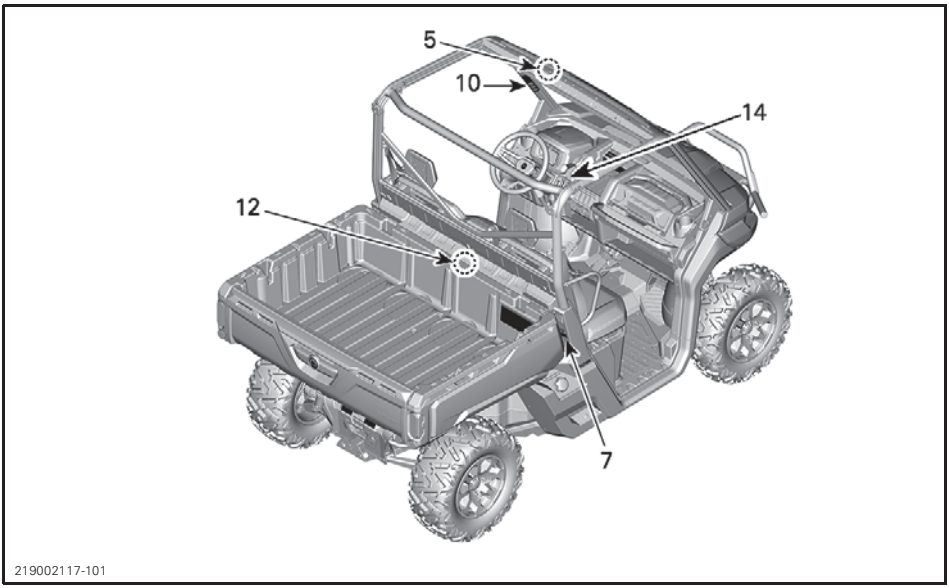

TYPICAL

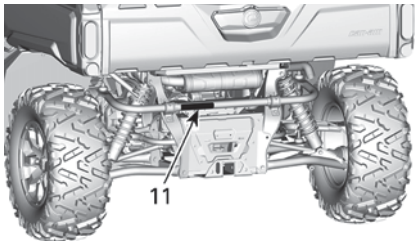

219002086-102

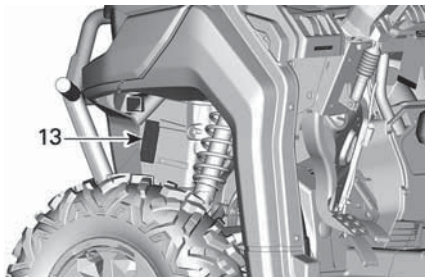

219002086-103

Label 1

⚠ WARNING

- Read and understand all safety labels, locate and read operator's guide.
- Always wear an approved helmet and protective gear.
- Fasten seat belts and make sure net or door is securely latched in place.
- Always wear ear protection.
- Each rider must be able to sit with back against seat, feet flat on the floor or on footrest, and hands on steering wheel or handholds.
- If you think or feel the vehicle may tip or roll, reduce your risk of injury : Keep a firm grip on the steering wheel or handholds and brace yourself. Do not put any part of your body outside of the vehicle for any reason.
- Always stay completely inside the vehicle.

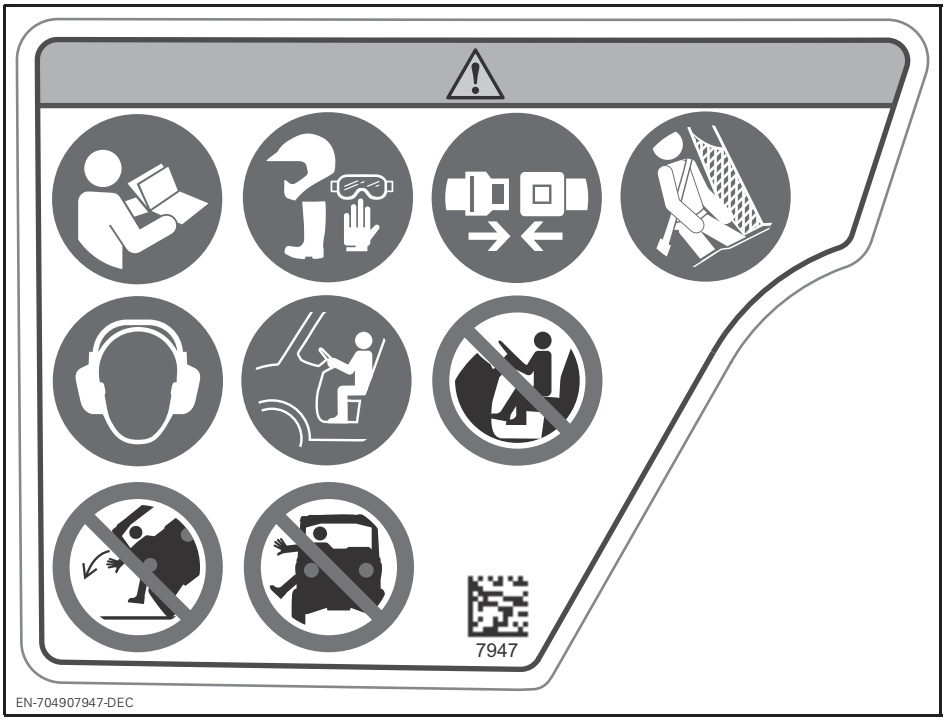

LABEL 1

LABEL 1 - XU MODELS

Label 2

⚠ WARNING

- Make sure operators are 16 or older with a valid driver's license.
- Do not exceed seating capacity: 3 occupants.
- Do not let people drive or ride after using alcohol or drugs.
- Avoid loss of control and rollovers:
  Avoid abrupt maneuvers, sideways sliding, skidding or fishtailling and never do donuts.
  Avoid hard acceleration when turning, even from a stop.
  Slow down before entering a turn.
  Plan for hills, rough terrain, ruts and other changes in terrain condition.
  Avoid side hilling (riding across slopes)
- Rollovers have caused severe injuries and death, even on flat, open areas
- Do not allow operation on public roads (unless designated for off-highway vehicle access) – collisions with cars and trucks can occur.
- Watch the safety video using the QR code link or visit Can-am web site before operation.

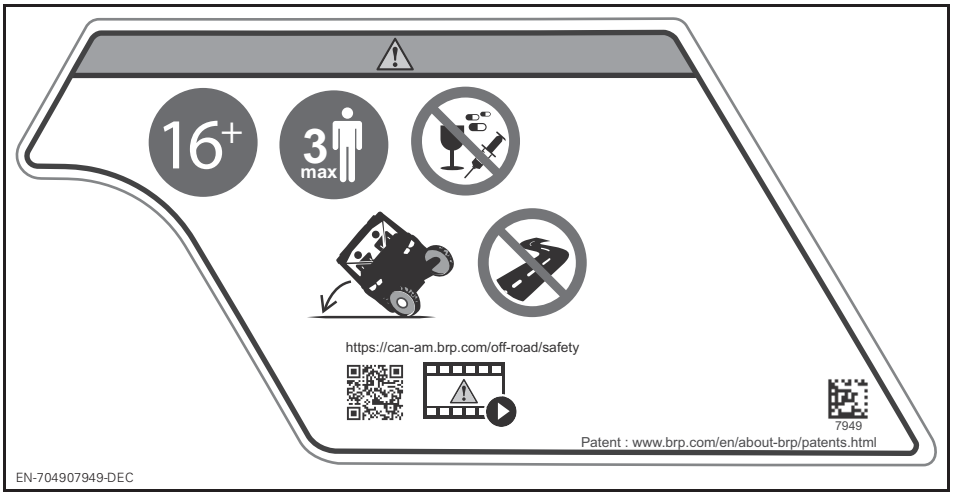

LABEL 2

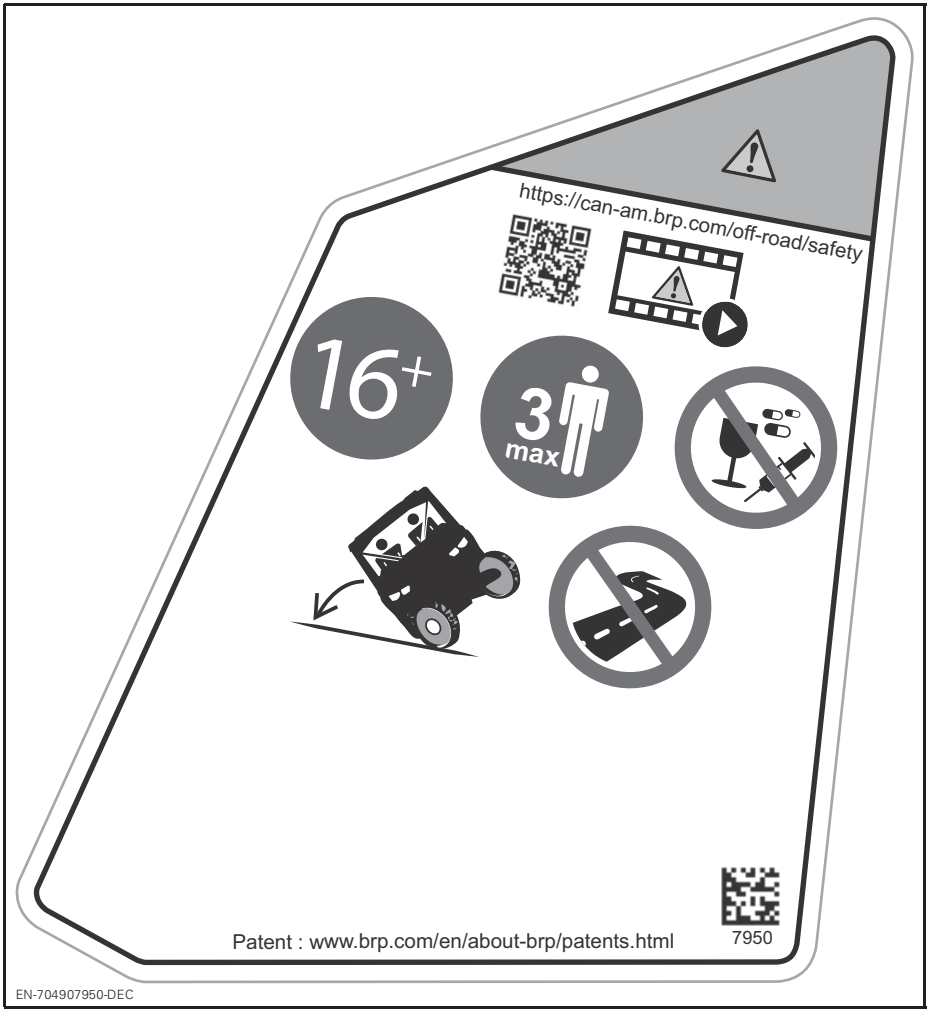

LABEL 2 - XU MODELS

Label 3

⚠ WARNING

- Always wear an approved helmet and protective gear.
- Always wear ear protection.
- Fasten seat belts.
- Rollovers have caused severe injuries and death, even on flat, open areas
- Do not exceed seating capacity: 3 occupants.
- Each rider must be able to sit with back against seat, feet flat on the floor or on footrest, and hands on handholds.
- If you think or feel the vehicle may tip or roll, reduce your risk of injury : Keep a firm grip on the steering wheel or handholds and brace yourself. Do not put any part of your body outside of the vehicle for any reason.
- Always stay completely inside the vehicle.
- Do not let people drive or ride after using alcohol or drugs.

LABEL 3

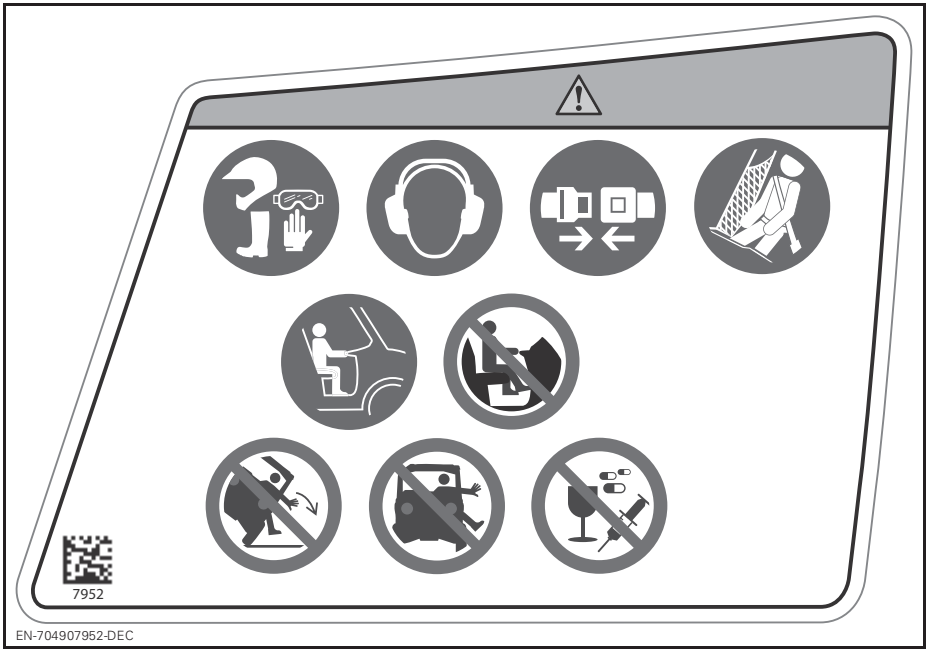

LABEL 3 - XU MODELS

Label 4

⚠ WARNING

NEVER attach to the cage to pull a load. This can cause the vehicle to tip over. Use only the trailer hitch or recovery hook to pull a load.

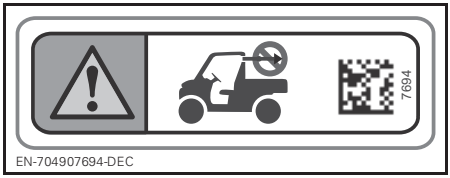

LABEL 4

Label 5

⚠ WARNING

- Never tow this vehicle backwards with a windshield in place. Windshield could break away.
- Tow this vehicle facing forward

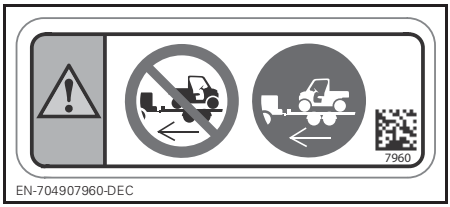

LABEL 5 - MODELS WITH WINDSHIELD

Label 6

⚠ WARNING

- Stop the vehicle and apply the brake before using the shift lever and the 2WD/4WD switch.
- When the weight of occupant(s), cargo and tongue is above 225 kg (500 lb), set the shift lever to low gear range (L).
- Put the shift lever to PARK (P) before exiting vehicle. The vehicle can roll if not in PARK.

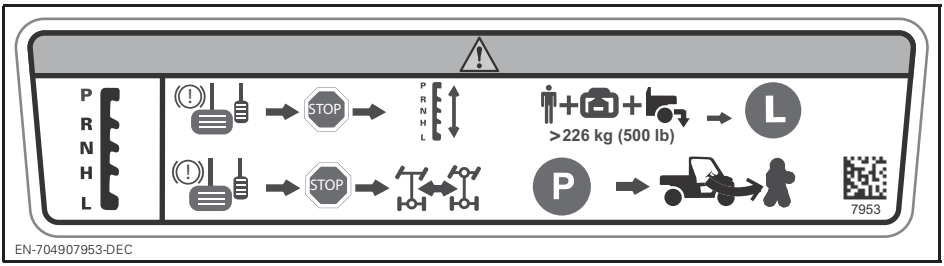

LABEL 6

Label 7

⚠ WARNING

Pinch point. Keep clear when lowering cargo box.

LABEL 7

Label 8

⚠ WARNING

- Locate and read operator's guide. Improper tire pressure or overloading can cause loss of control, resulting in SEVERE INJURY or DEATH.
- Always maintain proper tire pressure as shown.
- NEVER exceed the vehicle load capacity, including weight of operator, passenger, cargo, accessories and trailer tongue weight if applicable.
- Do not overload cargo box.
- NEVER place gasoline container inside cargo box when filling it. This can lead to an explosion.
- NEVER carry passenger in cargo box or on tailgate.

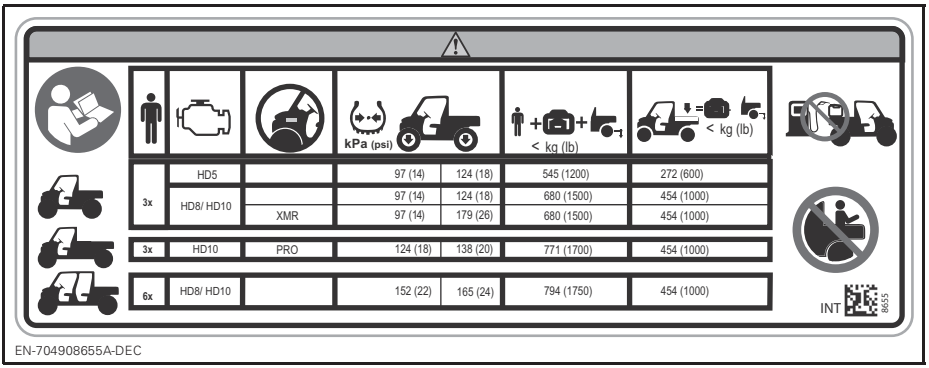

3x	HD5		97 (14)	124 (18)	545 (1200)	272 (600)
3x	HD8/ HD10		97 (14)	124 (18)	680 (1500)	454 (1000)
3x	HD8/ HD10	XMR	97 (14)	179 (26)	680 (1500)	454 (1000)
3x	HD10	PRO	124 (18)	138 (20)	771 (1700)	454 (1000)
6x	HD8/ HD10		152 (22)	165 (24)	794 (1750)	454 (1000)

LABEL 8

Label 8 - Machinery Directive 2006/42/EC Compliant Models

⚠ WARNING

- Locate and read operator's guide. Improper tire pressure or overloading can cause loss of control, resulting in SEVERE INJURY or DEATH.
- Always maintain proper tire pressure as shown.
- NEVER exceed the vehicle load capacity, including weight of operator, passenger, cargo, accessories and trailer tongue weight if applicable.
- Do not overload cargo box.
- NEVER place gasoline container inside cargo box when filling it. This can lead to an explosion.
- NEVER carry passenger in cargo box or on tailgate.

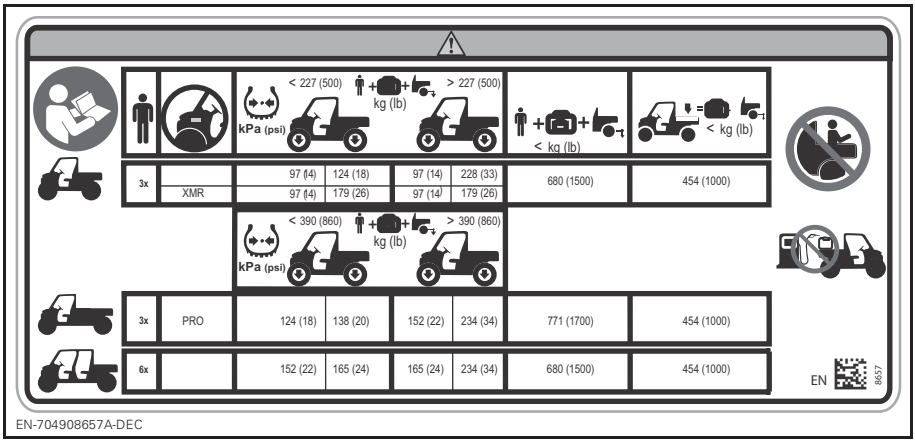

LABEL 8 - MACHINERY DIRECTIVE 2006/42/EC COMPLIANT MODELS

Label 9

⚠ WARNING

- Never try to stop a rollover using your arm or leg.
- Never hold the cage while riding.
- Fasten seat belts and make sure net or door is securely latched in place.

LABEL 9

Label 10

⚠ WARNING

- Never try to stop a rollover using your arm or leg.
- Never hold the cage while riding.
- Fasten seat belts and make sure net or door is securely latched in place.

LABEL 10

Label 11

⚠ WARNING

- MAXIMUM towing capacity: 680 kg (1,500 lb)
- MAXIMUM tongue weight: 68 kg (150 lb)
- When pulling a trailer, set the shift lever to low gear range (L)
- Reduce your speed and turn gradually.
- Avoid hills and rough terrain.
- Allow more distance to stop.

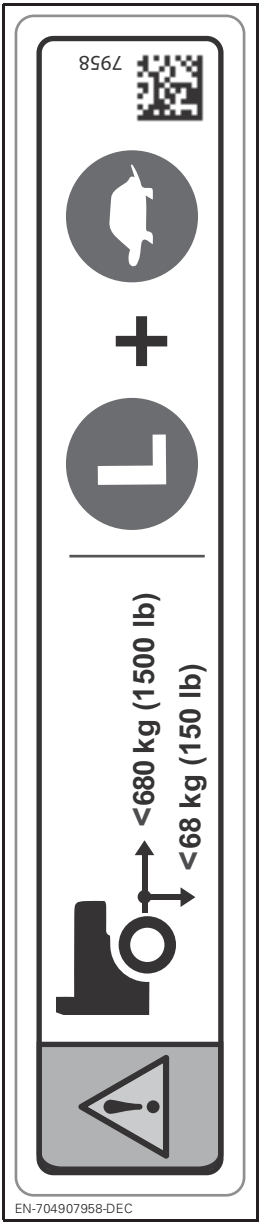

LABEL 11 - HD5

Label 11

⚠ WARNING

- MAXIMUM towing capacity: 1 134 kg (2,500 lb)
- MAXIMUM tongue weight: 114 kg (250 lb)
- When pulling a trailer, set the shift lever to low gear range (L)
- Reduce your speed and turn gradually.
- Avoid hills and rough terrain.
- Allow more distance to stop.

LABEL 11 - HD8 AND HD10

vmo2010-010-100_a

LABEL 12

Label 13

⚠ WARNING

Never use the frame near this location to ground any electrical component such as a winch. When in use, the electrical component may induce an undesired power steering signal resulting in an unintended steering input. In certain circumstances, some unintended steering input could lead to a loss of vehicle control increasing the risk of serious INJURY or DEATH.

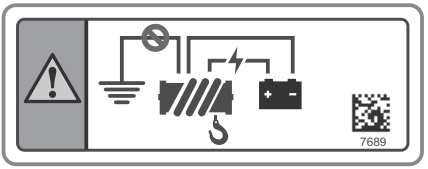

EN-704907689-DEC

LABEL 13

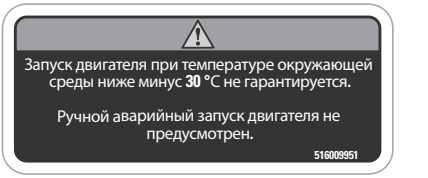

EN-516009951-DEC

LABEL 14 - IN EURASIAN UNION ONLY

Molded Safety Pictogram

⚠ WARNING

Never carry passengers in cargo box or on tailgate. Max weight on tailgate during loading is 113 kg (250 lb)

219001807-009

Technical Information Labels

NOTICE Refer to the operator's guide for air filter maintenance procedure.

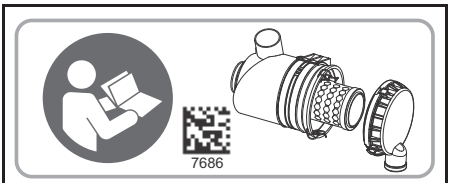

EN-704907686-DEC

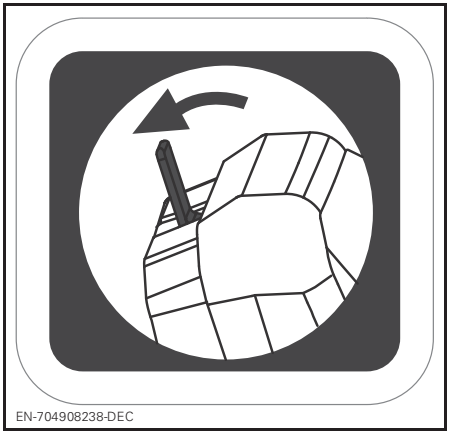

PUSH TAB TO LOWER MIDDLE SEAT

Compliance Labels

These labels indicate vehicle's compliance.

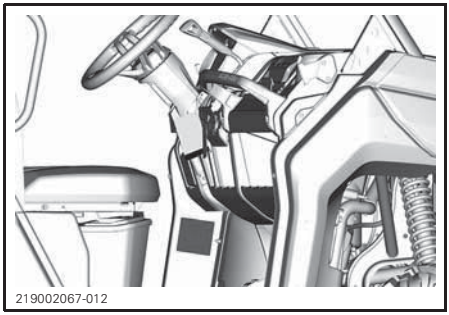

TYPICAL - EPA LABEL LOCATION

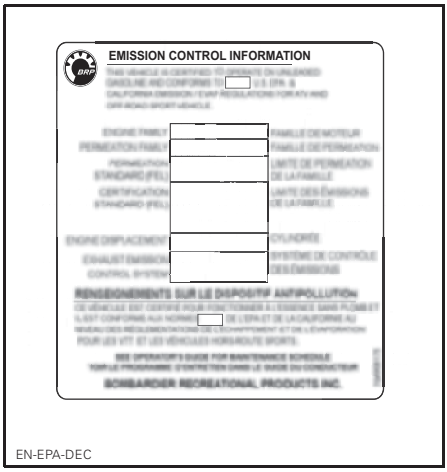

TYPICAL - WHEN APPLICABLE - EPA LABEL

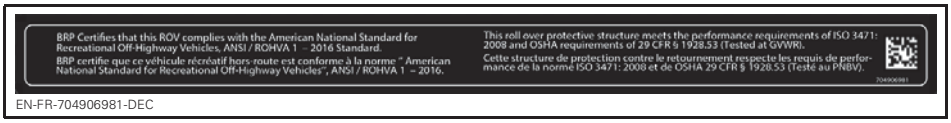

LOCATED ON TOP LH BAR OF CAGE FACING THE INSIDE OF VEHICLE

LOCATED NEAR GAS CAP

REPORTING SAFETY DEFECTS

In Canada, if you believe that your vehicle has a defect which could cause a crash or could cause injury or death, you should immediately inform Transport Canada in addition to notifying Bombardier Recreational Products Inc.

If Transport Canada receives similar complaints, it may open an investigation, and if it finds that a safety defect exists in a group of vehicles, it may order a recall and remedy campaign. However, Transport Canada cannot become involved in any individual problems between you, your dealer or Bombardier Recreational Products Inc.

TO CONTACT TRANSPORT CANADA:

819-994-3328 (Gatineau-Ottawa area or internationally)
Toll free : 1 800-333-0510 (in Canada)

Transport Canada - ASFAD
330 Sparks Street
Ottawa, ON
K1A 0N5

https://www.tc.gc.ca/recalls

VEHICLE INFORMATION

PRIMARY CONTROLS

It is important to know the location and operation of all controls, and to develop and practice smooth and coordinated use of them.

NOTE: Some vehicle safety labels are not shown on illustrations. For information on vehicle safety labels, refer to *IMPORTANT ON-PRODUCT LABELS*.

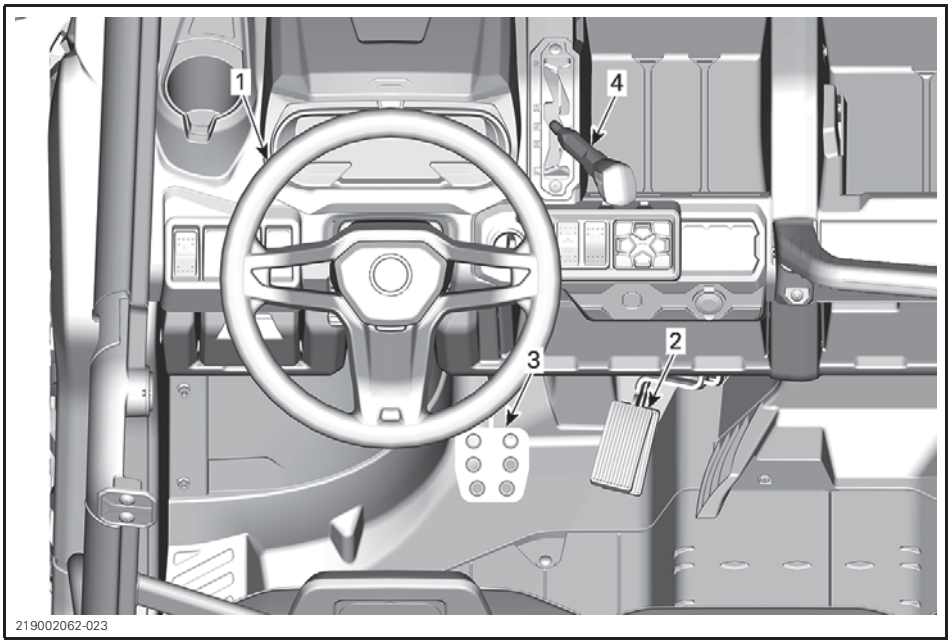

TYPICAL - PRIMARY CONTROLS

1) Steering Wheel

The steering wheel is located in front of the driver's seat.

The steering wheel steers the vehicle to the left or right.

Turn the steering wheel in the direction you want to go.

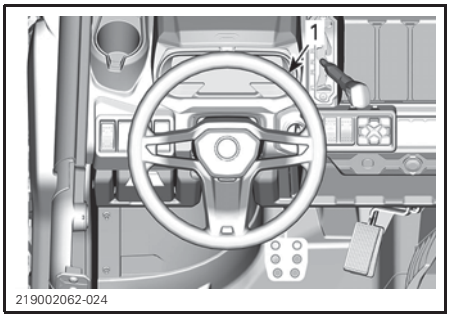

TYPICAL
1. Steering wheel

Grip the steering wheel with both hands, without having thumbs rolled around the steering wheel.

CAUTION Under rough trail conditions or when crossing an obstacle, the steering wheel could suddenly jerk on one side, causing hand or wrist injuries if the thumbs are rolled around the steering wheel.

Models with DPS

The DPS (Dynamic Power Steering) reduces the effort to turn the steering wheel.

2) Accelerator Pedal

The accelerator pedal is located on the right side of the brake pedal.

The accelerator pedal controls the engine speed.

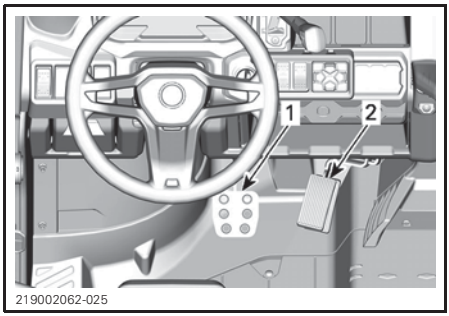

1. *Brake pedal*
2. *Accelerator pedal*

To increase or maintain vehicle speed, press on the accelerator pedal with your right foot.

To decrease vehicle speed, release the accelerator pedal.

The accelerator pedal is spring loaded and should return to rest position (idle) when not pressed.

NOTE: The accelerator pedal should never be disassembled.

3) Brake Pedal

The brake pedal is located on the left side of the accelerator pedal.

The brake pedal function is to slow down or stop the vehicle.

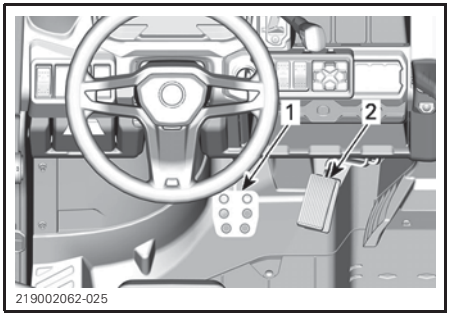

1. *Brake pedal*
2. *Accelerator pedal*

To decrease vehicle speed or to stop vehicle, press down the brake pedal with your right foot.

The brake pedal is spring loaded and should return to rest position when not pressed.

4) Shift Lever

The shift lever is located on the upper console to the right of steering wheel.

The shift lever is used to change the gearbox position.

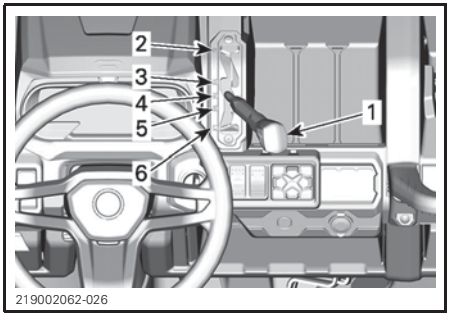

TYPICAL

1. *Shift lever*
2. *Park*
3. *Reverse*
4. *Neutral*
5. *High range (forward)*
6. *Low range (forward)*

The vehicle must be stopped and brakes applied prior to selecting any gear.

⚠ WARNING

This gearbox is not designed to shift while vehicle is moving.

Park

The park position locks the gearbox to help prevent vehicle movement.

⚠ WARNING

Always use the PARK (P) position when the vehicle is not in operation. The vehicle can roll if the shift lever is not set to P (PARK).

Reverse

The reverse position allows the vehicle to go backwards.

NOTE: In reverse operation, the engine's RPM is limited, thus limiting the vehicle reverse speed.

⚠ WARNING

When driving downhill in reverse, gravity can increase the vehicle speed above the set limited reverse speed.

Neutral

The neutral position disengages the gearbox.

High Range (Forward)

This position selects the high speed range of the gearbox. It is the normal driving speed range. It allows the vehicle to reach its maximum speed.

Low Range (Forward)

This position selects the low speed range of the gearbox. It allows the vehicle to move slowly with maximum torque at the wheels.

NOTICE **Use the low speed range to pull a trailer, carry heavy cargo, go over obstacles or drive uphill and downhill.**

SECONDARY CONTROLS

Some vehicle safety labels are not shown on illustrations. For information on vehicle safety labels, refer to *IMPORTANT ON-PRODUCT LABELS*.

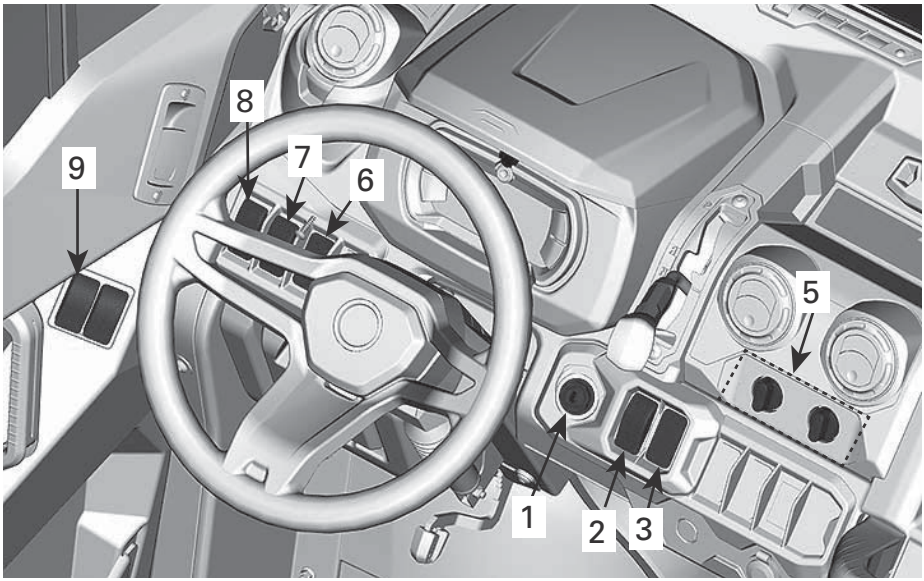

219002059-302

TYPICAL - CAB MODEL WITH HEATING SYSTEM SHOWN

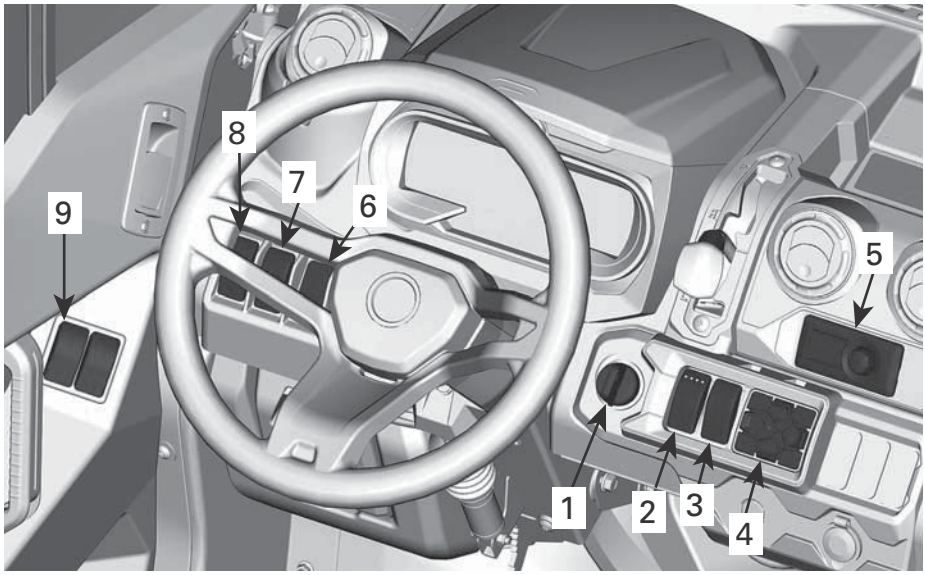

219002059-051

TYPICAL - CAB MODEL WITH HEATING AND A/C SHOWN

1) Ignition Switch and Keys

Ignition Switch

The ignition switch is located on the upper console area.

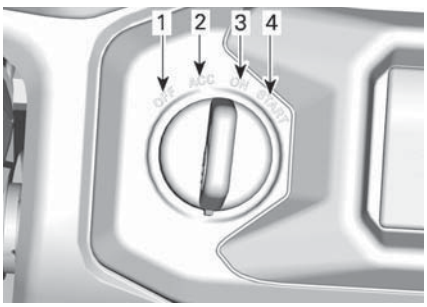

tmo2016-010-067_a

IGNITION SWITCH POSITION
1. OFF
2. ACC
3. ON
4. START

OFF

The key can be inserted or removed in this position only.

In OFF position, the electrical system of the vehicle is disabled.

The engine is shut down by turning the ignition switch to OFF position.

ACC

Only accessories such as the heater, wiper or radio are powered up.

NOTE: The ACC position also shuts down the engine

NOTICE **Remember to always return your key to the OFF position for a complete electrical shutdown. Leaving the key in ACC will drain the battery and the vehicle may not restart.**

ON

When the key is turned in this position, the electrical system of the vehicle is activated.

The gauge should wake-up.

The vehicle lights are turned on.

The engine can be started.

START

This position starts the engine.

NOTE: If the ignition switch is left ON for more than 30 minutes, engine will not start unless ignition switch is turned OFF, then ON again.

Keys

Basic Key

The vehicle is delivered with 2 basic key. one with a rubber protection and one without.

D.E.S.S. Key (Available as an option)

For all D.E.S.S. related option, see an authorized Can-Am dealer for information.

Digitally Encoded Security System (D.E.S.S.)

The ignition keys contain an electronic circuit that gives it a unique electronic serial number.

The D.E.S.S. system reads the key code and allows engine starting for keys it recognizes.

This vehicle can be operated using 3 different types of key programming:

– Work
– Normal
– Performance

Refer to your dealer for complete information.

NOTE: Additional keys are available from your dealer as an accessory.

⚠ WARNING

Rollovers, tipovers, collisions and loss of control resulting in serious injury or death are possible with the performance or normal key. Using the normal key is not a substitute for the operator being prepared, qualified, and operating with care.

Performance Key

The performance key allows the user to access the full torque of the engine as well as the top speed of the vehicle.

This may be useful for riders who prefer crisper throttle response, and for environments where higher speeds and greater acceleration are appropriate. For example, in wide-open straight trails, operators may prefer the performance key.

Normal Key

The normal key limits the vehicle speed to 70 km/h (43 MPH) and 10% torque reduction.

Work key

The work key allows for usage of 100% of maximum engine torque but limits vehicle speed to 40 km/h (25 MPH).

⚠ WARNING

On steep downhills, the engine speed limiter may not prevent the vehicle from accelerating beyond this speed.

This key may be useful for riders who prefer more gradual acceleration, or for riding in environments where full speed and high acceleration are not desirable. For example, in narrow, winding trails, operators may prefer a normal key.

D.E.S.S. Flexibility

The D.E.S.S. of your vehicle can be programmed by your authorized Can-Am dealer to accept up to 8 different keys.

If you have more than one D.E.S.S. equipped Can-Am vehicle, each can be programmed by your authorized Can-Am dealer to accept the other vehicle D.E.S.S. keys.

2) 2WD/4WD/Front Diff Lock Switch (If equipped)

The 2WD/4WD/Front Diff Lock (If equipped) switch is located on the upper console.

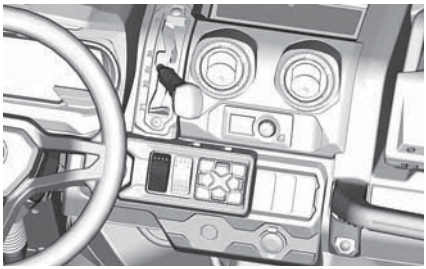

219002059-053

This switch selects 2 wheel drive or 4 wheel drive mode when the vehicle is stopped and the engine is running.

The front diff. lock can be activated on the fly, no need to stop the vehicle to engage. To deactivate, push again on the switch. When the vehicle is turned off, the front diff lock will be deactivated.

NOTICE **The vehicle must be stopped to engage or disengage the 2WD/4WD switch. Mechanical damage may occur if switch is engaged or disengaged while driving. Always unlock the front diff. before disengaging 4WD.**

The front differential is fully locked when the switch is pushed upward. It's a momentary position. When the front diff is locked, the switch light

will illuminate and a message will appear in the cluster for 2 seconds to say "DIFFLOCK". The light will turn off when the differential is unlocked and a message in the cluster will appear and show "SMARTLOK", meaning that you are back in the automatic mode.

When the front differential is locked, the effort to turn the steering wheel might be higher and the response might be slower.

⚠ WARNING

Abruptly changing direction can cause loss of control or injury. Never engage Front Diff Lock before entering a turn or when turning.

The 4WD mode is engaged when the switch is in the middle position.

The 2WD mode is engaged when the switch is pushed downwards. The vehicle is then rear wheel drive only.

3) Rear Differential Switch (If Equipped)

The rear differential switch is located on the console.

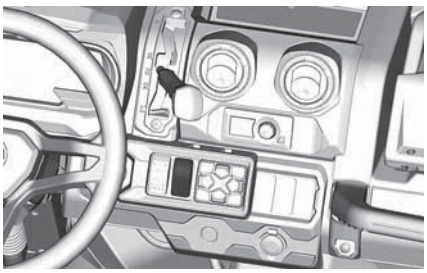

219002059-054

The differential switch enables locking of rear differential.

NOTICE **The vehicle must be stopped to engage or disengage the differential switch. Mechanical damage may occur if switch is engaged or disengaged while driving.**

The rear differential is locked when the switch is pushed upwards. The rear differential is unlocked when the switch is pushed downwards.

4) Keypad (If Equipped)

The keypad is located on the upper console.

It is used to select one of the various driving modes as well as adjusting the Settings Refer to *7.6 DIGITAL DISPLAY* for complete instructions.

NOTE: The cluster will show the selected driving mode.

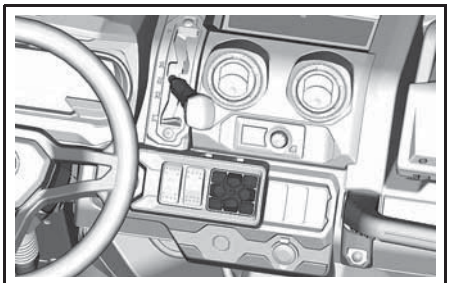

219002059-056

5) Climate Controls

CAB Models Only

The climate controls unit are located in center of the upper console.

They control the flow and the temperature of the air circulated in the vehicle.

Refer to *CLIMATE CONTROL SYSTEM* in *EQUIPMENT* for operation instructions.

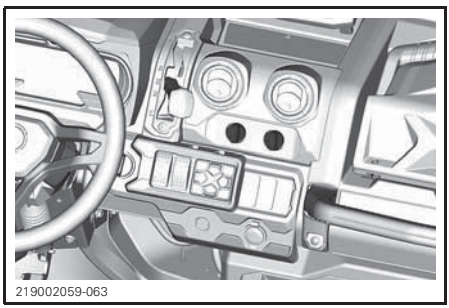

219002059-063

MODELS WITHOUT A/C

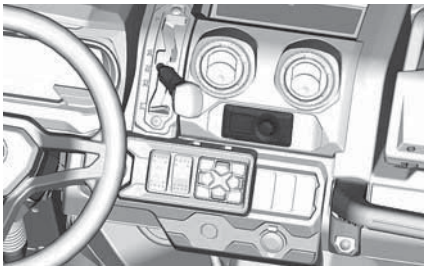
219002059-057

A/C EQUIPPED MODELS

NOTICE The climate control module installed in the Limited models is not waterproof nor water resistant.

6) Horn Switch (On applicable models)

To activate the horn, push on the switch.

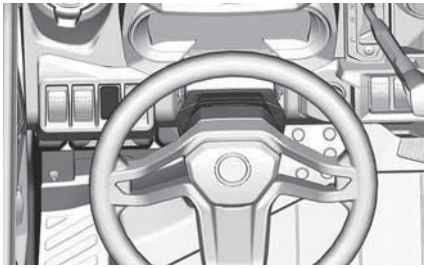
219002059-062

7) Winch Switch (If Equipped)

The winch can be controlled from inside and outside the vehicle with the winch control switch located in the upper console.

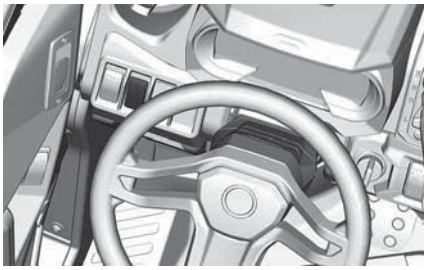
219002059-055

Refer to your winch *GUIDE* included with your vehicle for proper winch operation.

8) Headlight Dimmer Switch

The headlight dimmer switch is located on the upper console.

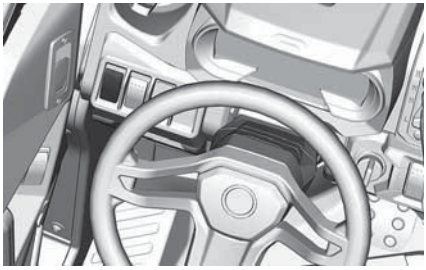
219002059-052

This switch is used to select either the headlights OFF position, low or high beams.

9) Power Window Switches

The power window switches are located on the door panel. Two switches on the driver side and one on the passenger side.

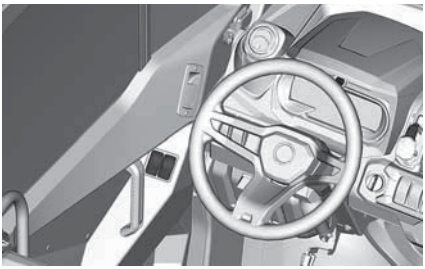

219002059-058

DRIVER'S SIDE

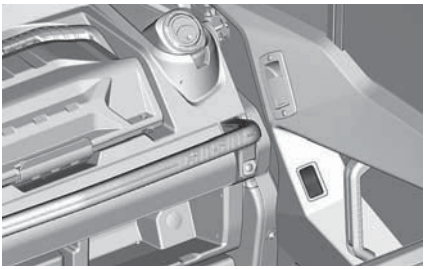

219002059-060

PASSENGER'S SIDE

1. Press the switch to open the window.
2. Lift the switch to close the window.

4.5" DIGITAL DISPLAY

Multifunction Display

General View

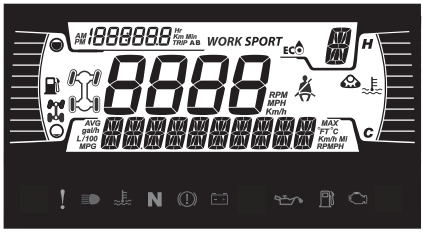

219002064-307

Lower Display

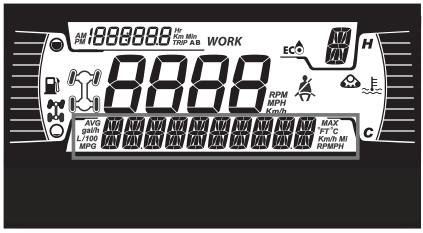

219002064-300

May display the following:
- RPM
- Speed statistics
- Engine Temperature
- Battery Voltage
- Settings
- Messages

Use LOWER button to change the displayed information.

Left Lateral Display

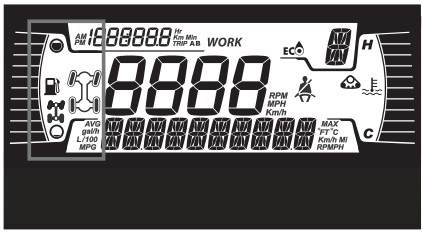

219002064-301

The left lateral display includes:
- Fuel level indicator
- 2X4 / 4X4 telltale
- Rear diff lock

ICON	COUNTRY
	For European community countries
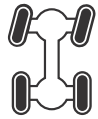	For all other countries

Right Lateral Display

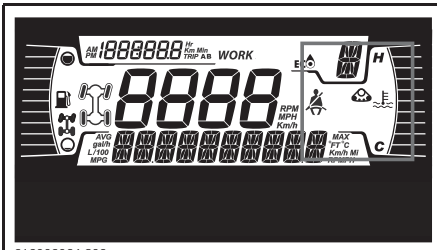

219002064-302

The right lateral display includes:
- Engine Temperature
- Track Kit Telltale
- Seat belt reminder

When a track kit is installed, a message will scroll in the lower display.

Central Display

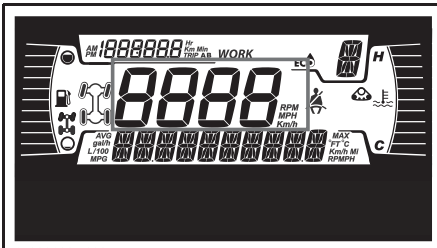

219002064-303

Display the vehicle speed in Km/h or MPH.

Transmission Position Display

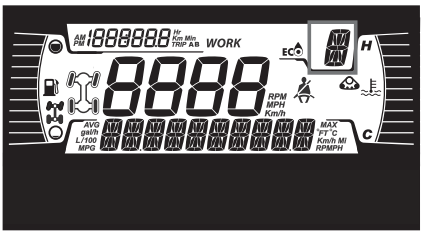

219002064-304

This display shows gear position of gearbox:

– P (Park)
– R (reverse)
– N (neutral)
– H (High Range)
– L (Low Range)
– – (Invalid Range)

MODE Display

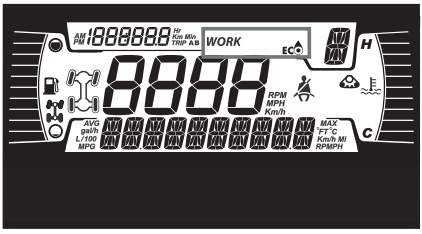

219002064-305

The MODE display indicates the selected mode of operation:

– ECO
– ECO OFF
– WORK

To change between modes, hold LOWER button and short press LOWER button to cycle through available modes.

DRIVE MODE	MESSAGE AT ACTIVATION
Work	WORK MODE
ECO	ECO MODE
ECO OFF	ECO OFF

Trip Display

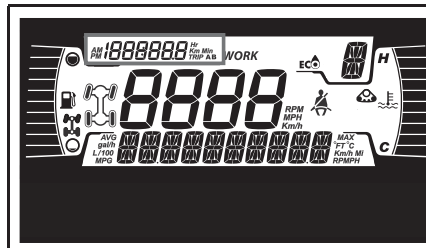

219002064-306

This display shows trip informations:

– Cumulative distance odometer
– Trip A
– Trip B
– Vehicle hour meter
– Clock

Use UPPER button to change the displayed information.

Hold UPPER button to reset Trip A/B meters.

Warning Lamps and Indicators

The following indicator lamps will alert you to a vehicle condition that may become serious. Some lamps will illuminate when starting the vehicle to make sure they work. If any lamps remain on after starting the vehicle, refer to the respective system warning lamp for further information.

NOTE: Some warning indicators appear in the display of the multifunction gauge and function the same as an indicator lamp but do not display when starting the vehicle.

Telltale Lights - Lower Bar

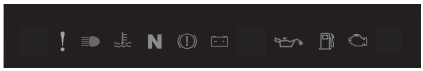

219002040-307

LIGHTS	DESCRIPTION
!	ORANGE - Vehicle malfunction
	BLUE - The high beam are selected
	RED - The engine temperature is too high.
N	GREEN - Neutral is selected
	RED **Turn on**: (Steady ON) Low Brake Fluid (Traxter) **Blink**: Accelerator pedal and the brake are activated simultaneously for a certain time - Torque limitation is activated
– +	RED - If illuminate while driving, it indicates a malfunction. Turn off all unnecessary electrical equipment and have the electrical and charging systems checked.
	RED - If illuminate while the engine running or while driving, this indicates a malfunction. Stop the vehicle as soon as it is safe to do so and turn the engine off. Check the engine oil level. Have the lubrication system checked a soon as possible, even if the level being correct.
	ORANGE - Illuminate when the fuel level is low or when the fuel tank is near empty. Refuel as soon as possible.
	ORANGE **Turn on**: Malfunction of the vehicle emissions control system **Blink**: Engine limitation, the limp home mode is activated. Have the vehicle serviced immediately.

Icons and Indicators - Multifunction Display

ICONS AND INDICATORS	
ECO	Denotes ECO mode is selected.
WORK	Denotes Work mode is selected
	When lit, seat belt not buckled with vehicle immobilized. Flashing when vehicle is moving.
	Track kit active (If equipped)

Settings

The buttons to navigate through menus are located on the left side of the LCD display.

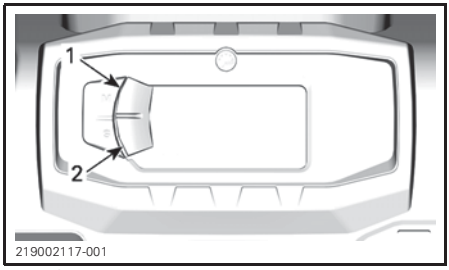

TYPICAL
1. *Upper button*
2. *Lower button*

Setup

Using LOWER button, Select SETTINGS and hold to enter setting menu.

Maintenance Reset

NOTE: Only when the maintenance is due.

Using LOWER button, Select RES MAINT and hold to reset maintenance.

Fault Codes

NOTE: Only when codes are actives.

Using LOWER button, Select CODES and hold to see actives fault codes. Fault codes will be scrolled on the Lower Display.

Reset Stats

Using LOWER button, select RESET STAT and hold to reset.

Unit Selection

This multifunction gauge is factory preset in Imperial units but it is possible to change it to Metric units.

Using LOWER button, Select UNITS and hold button to change units.

Setting Clock

Using LOWER button, Select CLOCK and hold to adjust clock.

1. Press LOWER button to select clock display.
2. Push and hold LOWER button for 1 second.
3. Press LOWER button to select 12:00 AM PM or 24:00 time base.
4. Push and hold LOWER button to acknowledge selection.
5. Press LOWER button to change hours (hours flash).
6. Push and hold LOWER button to acknowledge hour selection.
7. Press LOWER button to switch to minutes (minutes flash).
8. Push and hold LOWER button to acknowledge minutes selection.

Setting Language

The gauge display language can be changed. Refer to an authorized Can-Am dealer for language availability and to setup the gauge to your preference.

Setting Brightness

The brightness of the LCD display can be adjusted.

Using LOWER button, select BRIGHTNESS and hold button to change brightness.

Using LOWER button, adjust brightness then push and hold LOWER button to acknowledge selection.

7.6" DIGITAL DISPLAY

Basic Functions

Multifunction Gauge Description

⚠ WARNING

Do not adjust the display while riding, you could lose control.

General View

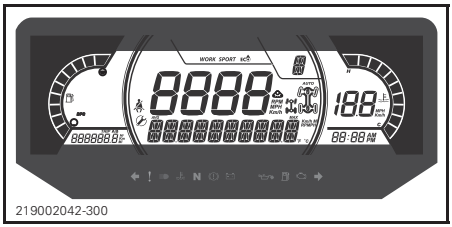

Lower Display

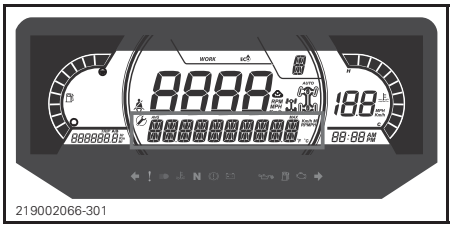

May display the following:

- RPM
- Speed statistics
- Engine Temperature
- Battery Voltage
- Settings
- Messages

The SPEED STAT display shows the maximum and the average speed. Hold MENU or OK button for 1 second to reset.

Left Lateral Display

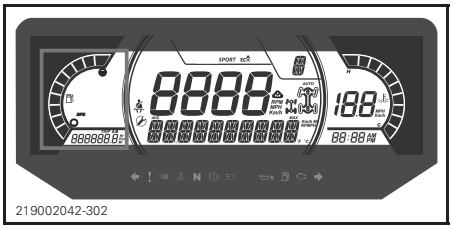

The left lateral display includes:

- Fuel level indicator
- Tripmeter (A - B)
- Odometer
- Vehicle Hour meter

Right Lateral Display

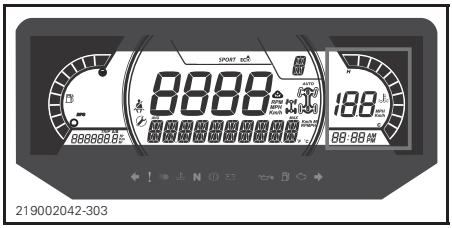

The right lateral display includes:

- Engine Temperature
- Clock
- Speed indicator

The speed indicator in this display is activated when the central display shows informations other than the speed. Otherwise it is blank.

Central Display

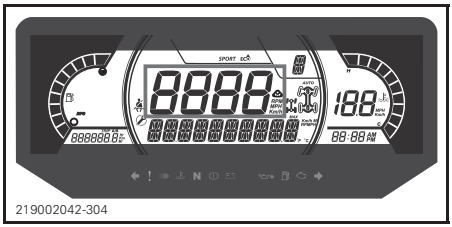

May display the following:
- RPM
- Vehicle speed

Transmission Position Display

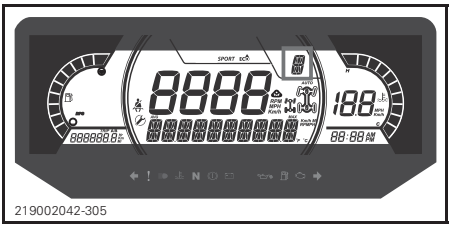

This display shows gears position of gearbox:
- P (Park)
- R (Reverse)
- N (Neutral)
- H (High range)
- L (Low range)
- – (Invalid gear)

MODE Display

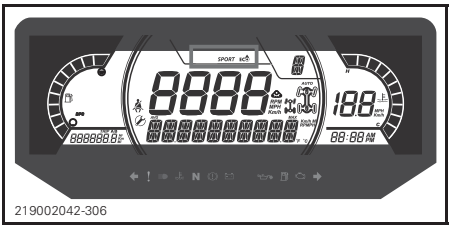

The MODE display indicates the selected mode of operation:
- ECO
- ECO OFF
- WORK

The ECO (fuel economy mode) setting reduces fuel consumption by limiting throttle response and maximum throttle opening to maintain an optimal cruising setting.

NOTE: Use ECO mode on bumpy trails to provide smoother ride conditions.

The ECO OFF mode offers no engine torque reduction as well as a sportier driving experience.

The WORK mode is optimized to be able to work with high loads in a smooth way but still with the full engine torque available. This mode is also effective for getting over obstacles and rough terrain.

To change between modes, press DRIVE MODE button on keypad to cycle through available modes.

A message of the selected mode will be displayed on the lower display at activation and deactivation as follow:

DRIVE MODE	MESSAGE AT ACTIVATION
Work	WORK MODE
ECO	ECO MODE
ECO OFF	ECO OFF

Middle Right Display

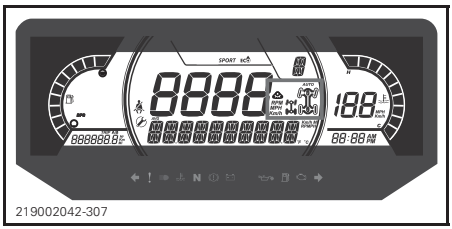

The middle right display indicates the selected mode of operation:
- 2X4
- 4X4
- Rear diff lock
- Active tracks (if equipped)

ICON	COUNTRY
	For European community countries
	For all other countries

Middle Left Display

The middle left lateral display includes:

– Seat belt reminder
– Maintenance reminder

Indicator Lamps

Warning and Telltale Lights

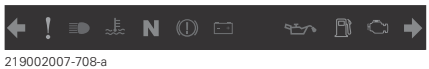

LIGHTS	DESCRIPTION
	GREEN - Left or right turn signal is turned on.
	Hazard Warning Flasher (if equipped) - All front and rear turn signals will flash
	ORANGE - Vehicle malfunction
	BLUE - The high beam are selected
	RED - The engine temperature is too high.

LIGHTS	DESCRIPTION
N	GREEN - Neutral is selected
	RED **Turn on**: Low Brake Fluid (Traxter) **Blink**: Accelerator pedal and the brake are activated simultaneously for a certain time - Torque limitation is activated
	RED - If illuminate while driving, it indicates a malfunction. Turn off all unnecessary electrical equipment and have the electrical and charging systems checked.
	RED - If illuminate while the engine running or while driving, this indicates a malfunction. Stop the vehicle as soon as it is safe to do so and turn the engine off. Check the engine oil level. Have the lubrication system checked a soon as possible, even if the level being correct.
	ORANGE - Illuminate when the fuel level is low or when the fuel tank is near empty. Refuel as soon as possible.
	ORANGE **Turn on**: Malfunction of the vehicle emissions control system **Blink**: Engine limitation, the limp home mode is activated. Have the vehicle serviced immediately.

Icons and Indicators

ICONS AND INDICATORS	
ECO	Denotes ECO mode is selected.
WORK	Denotes Work mode is selected
	When lit, seat belt not buckled with vehicle immobilized. Flashing when vehicle is moving.
	When lit, indicates that a maintenance is required. See your authorized Can-Am dealer or person of your own choosing for the maintenance.
	Track kit active (If equipped)

Settings

Setup

Using MENU button, select SETTINGS and hold to enter setting menu.

OK button can be pressed instead of holding MENU button.

219002049-302

1. *DRIVE MODE button*
2. *MENU button*
3. *OK button*
4. *TRIP button*

Maintenance Reset

NOTE: Only when the maintenance icon is displayed.

Using MENU button, select RES MAINT and hold to reset maintenance.

Fault Codes

NOTE: Only when fault codes are actives.

Using MENU button, select CODES and hold to see active fault codes. Fault codes will be scrolled on the Lower Display.

Reset Stats

Using MENU button, select RESET STAT and hold to reset.

Unit Selection

This multifunction gauge is factory preset in Imperial units but it is possible to change it to Metric units.

Using MENU button, select UNITS and hold button to change units.

Speed/RPM

The speed and RPM display can be swapped.

Using MENU button, select SPEED/RPM and hold button to invert speed and RPM display.

Setting Clock

Using MENU button, Select CLOCK and hold to change time.

1. Press MENU button to select clock display.
2. Push and hold MENU button for 1 second.
3. Press MENU button to select 12:00 AM PM or 24:00 time base.
4. Push and hold MENU button or OK button to acknowledge selection.
5. Press MENU button to change hours (hours flash).

6. Push and hold MENU button or OK button to acknowledge hour selection
7. Push MENU button to switch to minutes (minutes flash).
8. Push and hold LOWER button to acknowledge minutes selection.

Setting Brightness

The brightness of the LCD display can be adjusted.

Using MENU button, select BRIGHTNESS and hold MENU button to select the brightness setting.

Using MENU button, adjust brightness then push and hold MENU button to acknowledge selection.

Setting Language

The gauge display language can be changed. Refer to an authorized Can-Am dealer for language availability and to setup the gauge to your preference.

NOTE: Some vehicle safety labels are not shown on illustrations. For information on vehicle safety labels, refer to *IMPORTANT ON-PRODUCT LABELS*.

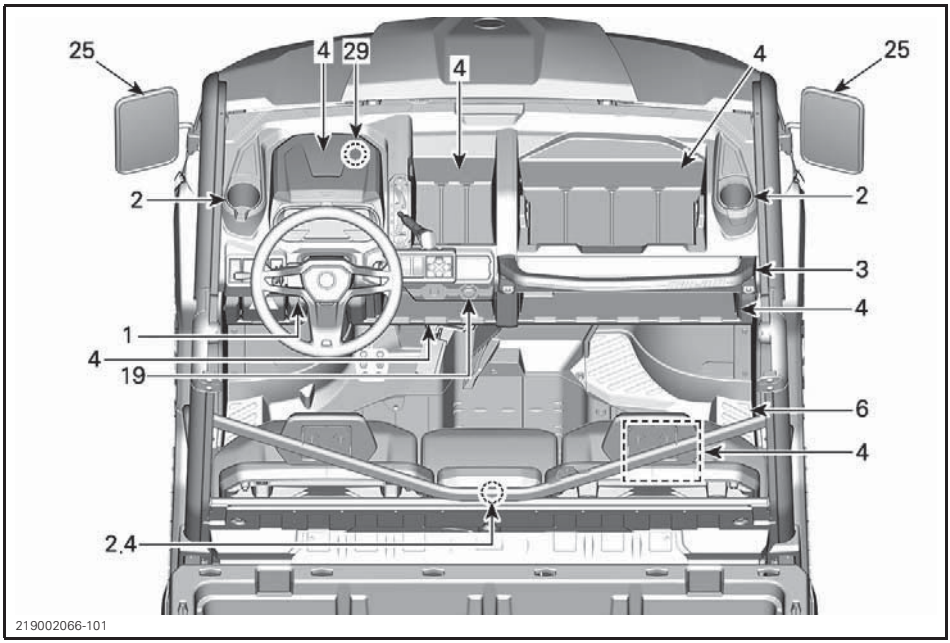

TYPICAL

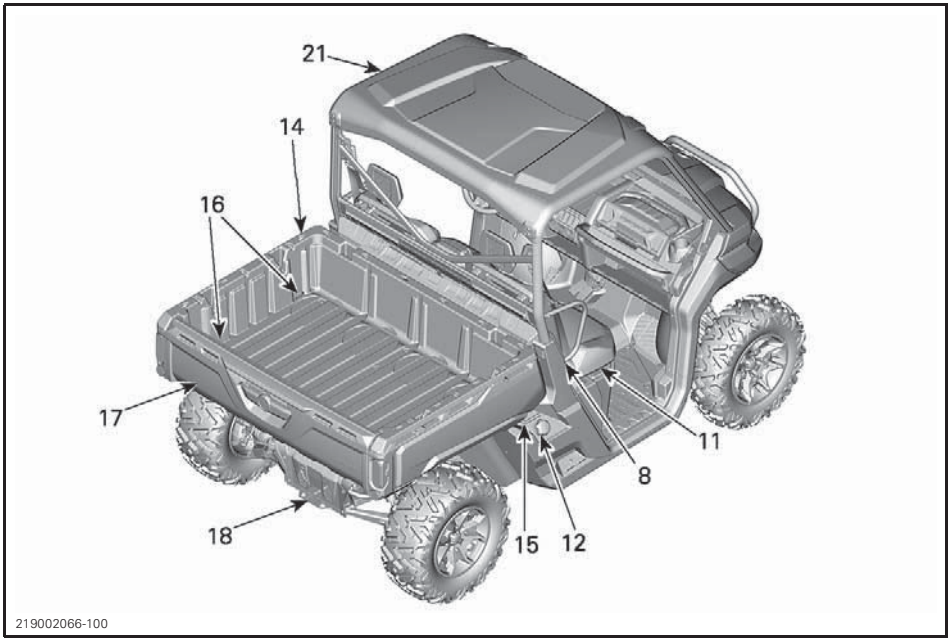

TYPICAL

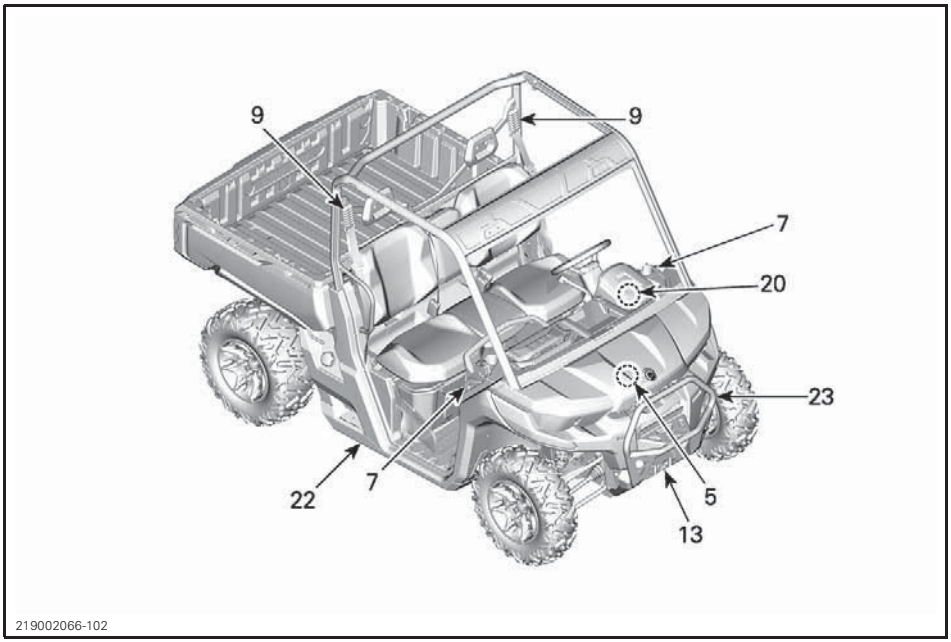

TYPICAL

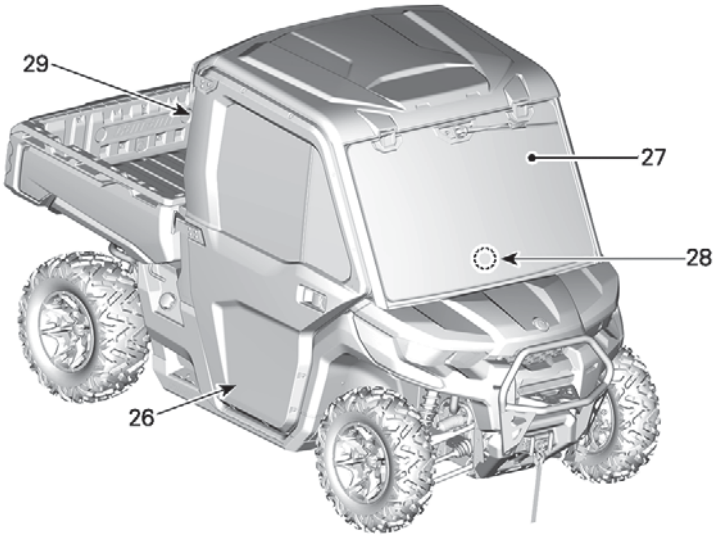

219002086-001

TYPICAL

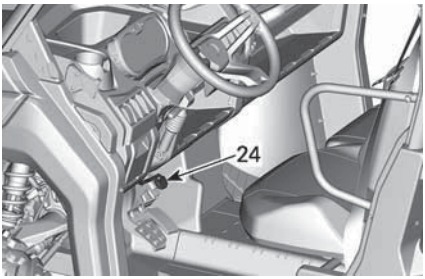

219002066-103

TYPICAL - IF EQUIPPED

1) Tilt Steering

The steering wheel height is adjustable.

Adjust the steering wheel height to face your chest, not your head.

To adjust steering wheel height:

1. Unlock steering by pulling the tilt lever toward you.
2. Move steering wheel to the desired position.
3. Release tilt lever to lock steering wheel in position.

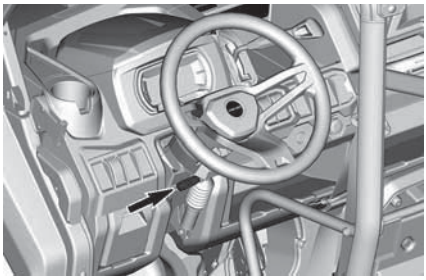

219002066-008

⚠ WARNING

Never adjust the steering wheel height while riding. You may lose control.

2) Cup Holders

CAB models

Two cup holders are located on the center console.

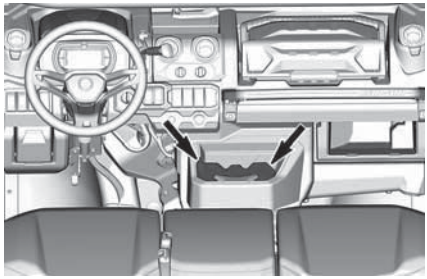

219002086-004

All except CAB models

Two cup holders are located on each side of the vehicle near the side nets attachment points.

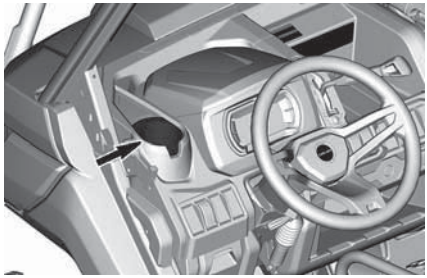

219002066-009

All models

Two additional cup holders are available on the back of the central passengers seat.

To access it, press the clip locking mechanism and pull seat backrest forward.

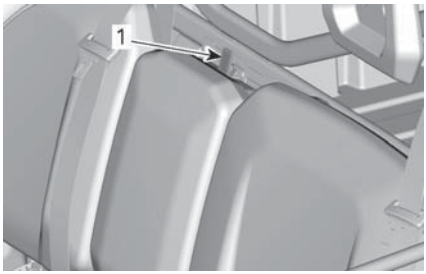

tmo2016-010-015_a

TYPICAL
1. *Backrest clip locking mechanism*

tmo2016-010-058_a

TYPICAL
1. *Central passenger backrest cup holder*

NOTE: Do not use cup holders while riding in rough conditions.

3) Passengers Handhold

The passengers have access to a front handhold located on the console below the removable tool box.

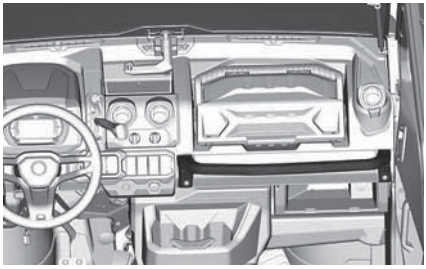

219002059-304

Adjust the seat position in order to get a solid and comfortable grip on the handholds. Refer to *PASSENGER SEATS* for adjustment procedure.

Holding the handhold helps the passengers brace against the movement of the vehicle and helps keep hands and body inside the cockpit in the event of a rollover.

⚠ WARNING

Never use any part of vehicle cage as handholds. Hands can be struck by objects outside the cockpit or crushed in a rollover.

4) Storage Compartments

The vehicle is equipped with storage compartments designed to carry light objects.

Multifunction Gauge Storage Compartment (If Equipped)

A storage compartment is available above the multifunction gauge.

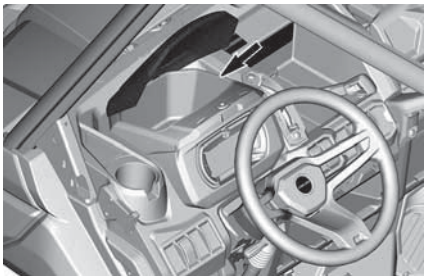

219002066-010

Driver Storage compartment (If Equipped)

A small storage compartment is available on the driver side.

Pull on handle to rotate it open.

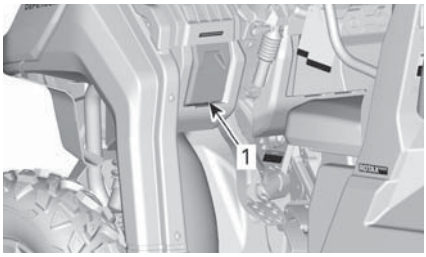

tmo2016-010-086_a

TYPICAL
1. Driver storage compartment

Removable Tool Box (If Equipped)

A removable tool box is located on the upper console.

tmo2016-010-071_a

To open tool box, unlock panel and lift lid.

tmo2016-010-072_a

UNLOCKING LID

⚠ WARNING

Before riding, always make sure tool box is secured to vehicle and lid is locked.

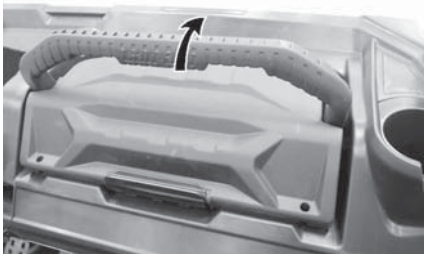
tmo2016-010-073_a

SECURING TOOL BOX IN PLACE

Removing Tool Box

To remove tool box, unlock it by lifting handle.

tmo2016-010-071_b

UNLOCKING REMOVABLE TOOL BOX

⚠ WARNING

Before riding, always make sure tool box is secured to vehicle and lid is locked.

Under seat Storage Box (If Equipped)

A convenient removable under seat storage box is available.

tmo2016-010-074_b

TYPICAL
1. Under seat storage box

To remove under seat storage box, lift RH passenger seat and remove under seat storage box by pulling it upwards.

tmo2016-010-074_a

TYPICAL

NOTE: When reinstalling under seat storage box, make sure to align it properly with seat tubes and floor emboss so it fits properly under the seat.

Open Storage Compartments

Multiple open storage compartments are available in the console.

⚠ WARNING

When riding vehicle, make sure no object stored in open storage compartments could cause harm in the event of a roll over.

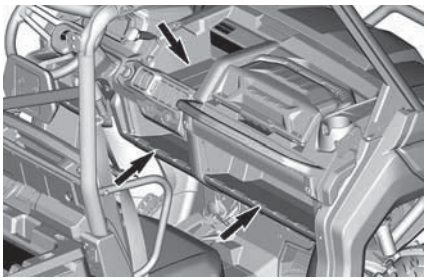

ALL EXCEPT BASE

Central Passenger Backrest Storage Area

When central passenger seat backrest is pulled down a storage area is available.

NOTE: Always empty storage area before putting central passenger backrest up.

TYPICAL
1. Central passenger backrest storage area

5) Tool Kit

A tool kit with basic tools is provided. It is located in the front service center.

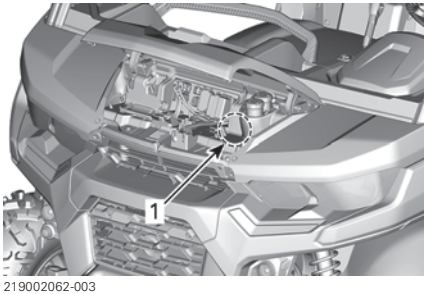

1. Tool kit

6) Footrests

The vehicle is equipped with driver and RH passenger footrests to allow firmly planting feet on vehicle floor, which helps to maintain proper body position while riding.

The footrests help minimize the risk of leg or foot injury.

Always wear appropriate footwear. See *RIDING GEAR*.

7) Side Nets

A side net is provided on each side of the cockpit to help arms, legs or shoulders stay inside the vehicle, thus reducing the risk of injuries. Side Nets may also keep bushes or debris out of cockpit.

⚠ WARNING

Never operate the vehicle unless both side nets are in place and buckled.

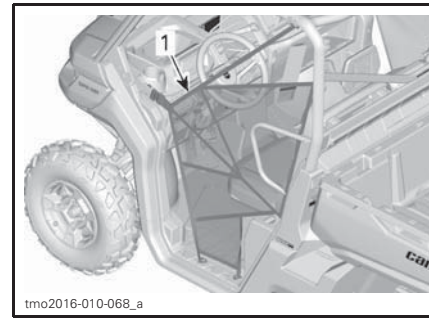

1. Side net

Side nets are adjustable and must be kept as tight as possible. To adjust side nets proceed as follows:

1. Secure side net with buckle.
2. Pull on four adjustment straps to tighten.

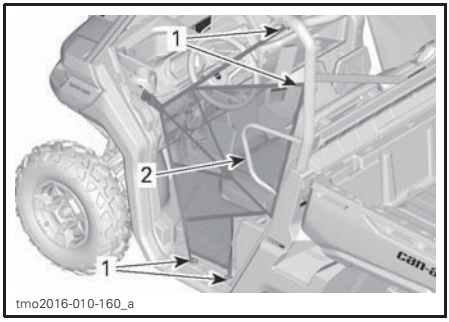

1. *Side net adjustment locations*
2. *Shoulder guard*

8) Shoulder Guards

The vehicle is equipped with shoulder guards to help restrain the entire body of driver and passengers inside vehicle.

9) Seat Belts

This vehicle is equipped with 3 points seat belts to help protect driver and passengers in the event of a collision, rollover, or tipover. The seat belts can help keep occupants stay in the passenger compartment.

⚠ WARNING

Wear seat belts properly at all times. Seat belts reduce the risk of injury in a crash and help keep limbs inside the cockpit in a rollover or any accidents.

If driver's seat belt is not fastened when:

– The ignition is turn ON, the seat belt indicator lamp will flash.
– The engine is started and shift lever is moved out of PARK, vehicle speed will be limited to a maximum of approximately 20 km/h (12 MPH) on flat ground.

⚠ WARNING

The vehicle may reach higher or lower speed depending on inclines.

To remind you to fasten the seat belt, the multifunction gauge will display the following message: ENGINE LIMITATION ENGAGED FASTEN SEAT BELT.

⚠ WARNING

There is no indicator light or message for the passengers seat belts. The driver is responsible for the passengers safety and should ensure the passengers buckles their seat belts.

Fastening and Adjusting the Seat Belt

The seat belt is equipped with a semi-cinching tab that lock the lap belt when the webbing is under tension.

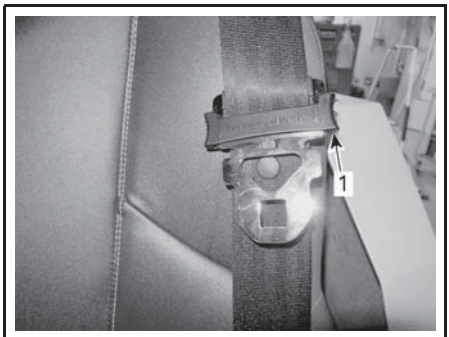

TYPICAL
1. *Semi-cinching tab*

To fasten the seat belt, insert the latch plate into the buckle, then pull the belt to ensure it is properly fastened.

Adjust the seat belt tightly against your body by pulling the shoulder belt upwards.

TYPICAL

⚠ WARNING

Wear seat belt properly. Make sure it remains securely fastened and tightened against the body. Make sure it is not twisted or defective.

To release the seat belt, push on the red button on the seat belt buckle.

10) Driver's Seat

On applicable models, the driver's seat can be adjusted forward and backward.

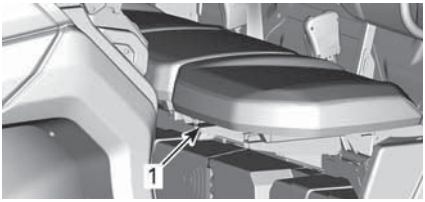

TYPICAL
1. Adjustment lever

To adjust seat, move the seat lever to unlock the seat. Release the lever to lock the seat into desired position.

⚠ WARNING

Never adjust the seat position while driving.

11) Passenger Seats

The passenger seats are not adjustable.

The central passenger seat backrest can be tilted forward for access to cup holders by releasing the latch located on top of the backrest.

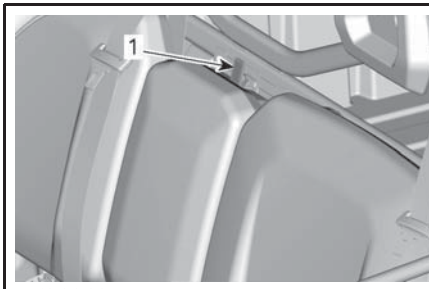

TYPICAL
1. Backrest clip locking mechanism

On applicable models, the seats can be lifted to allow access to removable under seat storage compartment (if equipped).

To lift seat, pull on front of seat to unclip it and lift until it "clips" in the upper position.

12) Fuel Reservoir Cap

The fuel reservoir cap is located on the right hand side of the vehicle cargo box release handle.

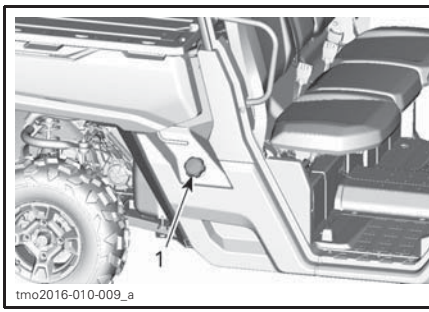

TYPICAL
1. Fuel reservoir cap

Refer to *FUEL* for information on fueling procedure and fuel requirements.

13) Winch (If Equipped)

The winch can be actuated inside the vehicle using the winch control switch on the upper console.

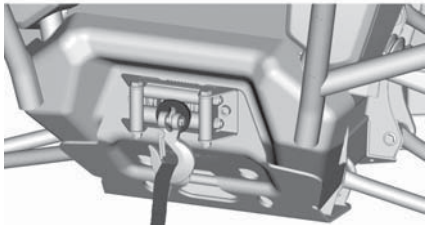
219001745-017_a

NOTE: Using the winch intensively over a long period of time may discharge the battery.

The following tips will help to reduce the risk of discharging the battery:

Always unreel manually: Unlock the cable using the handle then pull on the hook strap to unreel.

It is recommended to let the vehicle run while winching. Do not stop vehicle immediately after winching to let battery recharge.

Also, when winching for more than 30 seconds, it is recommended to increase engine RPM in the range of 3000 RPM to increase charging power to the battery.

NOTE: Make sure vehicle is in NEUTRAL (N) before increasing engine RPM.

Refer to your winch *GUIDE* included with your vehicle for proper winch operation.

Intensive use of the winch may cause the built-in circuit breakers to momentarily turn OFF. In such a case, wait a moment, then continue winching. the breakers automatically turn ON once they cooled down.

14) Cargo Box

The vehicle is equipped with a an inclinable cargo box. The cargo box may be used for various types of cargo.

⚠ WARNING

To reduce the risk of loss of control or loss of load, use the cargo box only in accordance with *CARRYING LOADS* in the *SAFETY INFORMATION* section.

Cargo Box Separations

Cargo box can be easily separated into smaller storage compartments to prevent cargo loads from mixing.

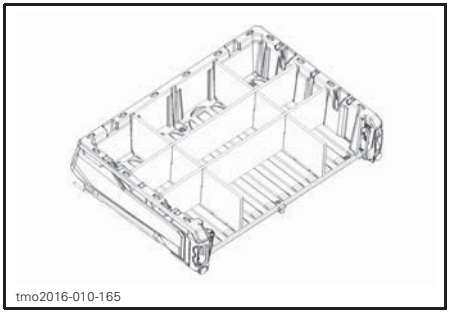
tmo2016-010-165

EXAMPLE OF CARGO BOX SEPARATIONS

15) Cargo Box Tilt Release Handles

The latching mechanism of the cargo box can be actuated from either side of the vehicle through a release handle.

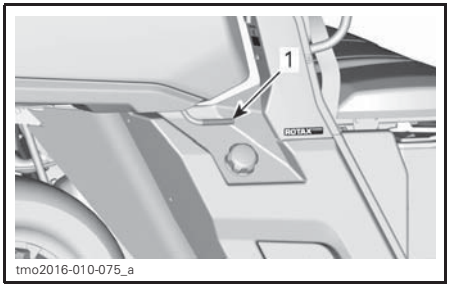

tmo2016-010-075_a

1. Cargo box release handle

Refer to *CARRYING LOADS*.

16) Anchoring Hooks

To provide anchoring point in order to secure cargo inside the cargo box, 4 anchoring hooks are located inside the cargo area.

NOTICE Never lift vehicle using anchoring hooks.

17) Tailgate

The cargo box can be closed with a tailgate.

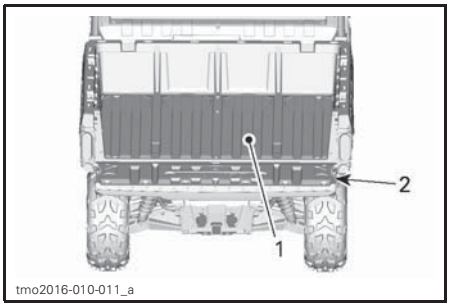

1. *Cargo box*
2. *Tailgate*

NOTICE Do not exceed 113.4 kg (250 lb) of weight on the tailgate during loading or unloading. Always close tailgate before operating to reduce the risk of loss of load.

Tailgate Removal

Open tailgate and remove retaining cables.

Position tailgate so as to remove it from pivot points.

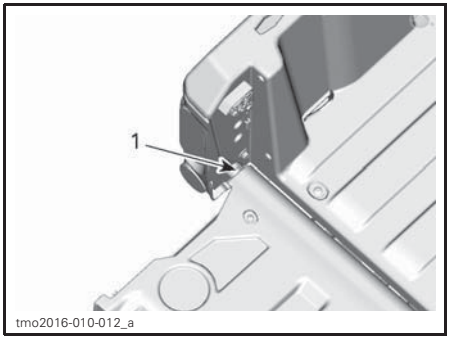

1. *Tailgate pivot point*

18) Trailer Hitch

The vehicle comes equipped with a 50.8 mm (2 in) x 50.8 mm (2 in) box size standard receiver hitch.

For the proper usage of the hitch support, refer to *MOVING LOADS AND DOING WORK*.

⚠ WARNING

To reduce the risk of loss of control or loss of load, always respect the maximum hauling capacity.

19) 12-Volt Power Outlets

Convenient for handheld spotlight or other portable equipment.

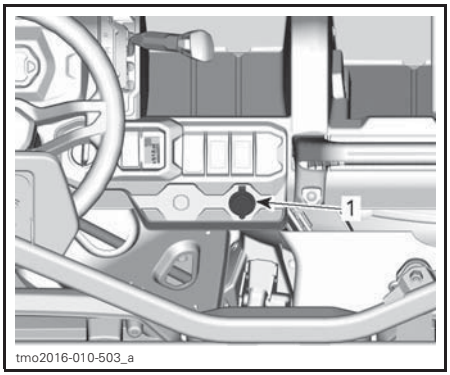

ALL MODELS

1. *12 V power outlets*

Remove protective cap to use. Always reinstall it after use to protect against weather.

20) USB Power Outlet (If Equipped)

Some models are equipped with a USB port used for charging.

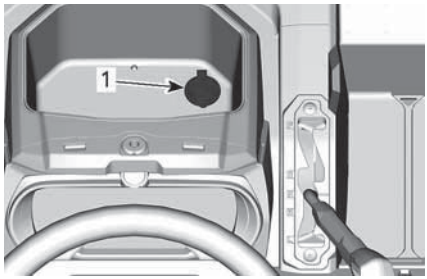

219002062-046

1. *USB charging port*

21) Roof (If Equipped)

For installation and removal instructions, see an authorized Can-Am dealer.

22) Rock Sliders (If Equipped)

Aluminium rock sliders for additional lower body protection.

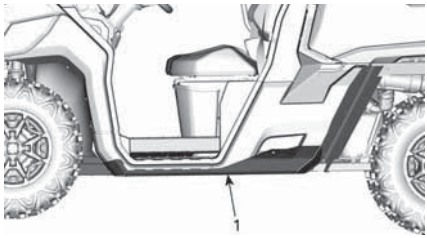

219001918-002_a

1. *Rock slider*

23) Front Bumper (If Equipped)

Steel bumper for additional front body protection.

219002066-014

24) Brake Holding Mechanism (If equipped)

The brake holding mechanism lever is located on the LH side of the steering wheel, above the brake pedal.

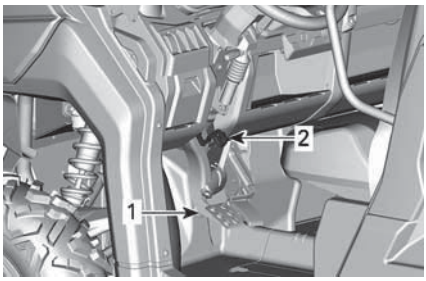

219001955-003_a

1. *Brake pedal*
2. *Brake holding mechanism lever*

The brake holding mechanism function is to maintain brakes to all wheels while shift lever is set to Park.

To engage the brake holding mechanism, proceed as follow:

1. Immobilize vehicle,
2. Apply and hold the brakes,
3. Put shift lever in **Park**,
4. While holding the brakes, lift lever toward the steering wheel,
5. Release the brakes, the pedal should stay lowered.

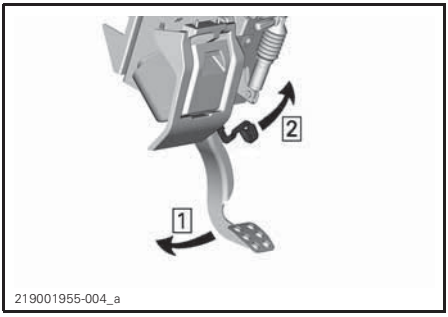

Step 1: Apply and hold brake pedal
Step 2: Lift lever

NOTE: The brake holding mechanism lever can be set to several positions.

⚠ WARNING

When the brake holding mechanism is applied, make sure the vehicle stays securely in place. Always put the shift lever in Park when using the brake holding mechanism.

To release the brake holding mechanism, simply apply and hold the brake pedal, put shift lever in gear then release brake pedal. When released it should return to the rest position.

Safe usage of the brake holding mechanism requires the shift lever to be set to the Park position. It is not recommended to use the brake holding mechanism on its own.

⚠ WARNING

Make sure brake holding mechanism is released before operating the vehicle. If the brake holding mechanism is left ON while riding, it may cause damage to the brake system and lead to loss of braking capacity and/or fire.

25) Side Mirrors (On applicable models)

This vehicle may be equipped with side mirrors.

The mirrors can be adjusted to suit driver preferences.

⚠ WARNING

Do not adjust mirrors while riding. You could lose control.

26) Full Doors With Electric Windows (Models with Cab)

This vehicle comes equipped with full doors and electric windows.

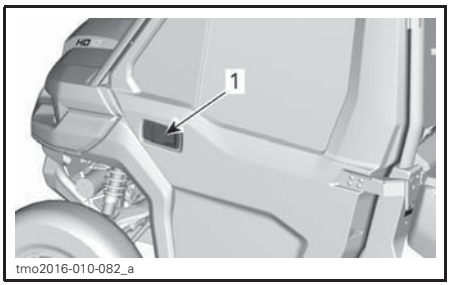

1. Outer door handle

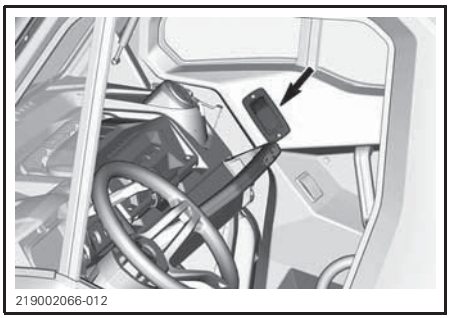

1. Inner door handle

Doors can be removed from vehicle. See an authorized Can-Am dealer for information.

⚠ WARNING

Always install safety nets whenever removing full doors from vehicle. See an authorized Can-Am dealer for installation instructions.

27) Full Glass Windshield with Wiper (If equipped)

Some vehicles are equipped with a full glass windshield and wiper.

To activate wiper, press activation switch. The switch is located on the central panel at the top of the windshield.

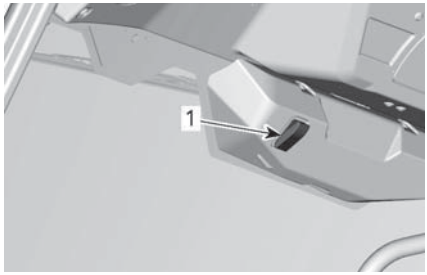

tmo2016-010-076_a

1. Wiper activation switch

To activate windshield washer, hold activation switch up.

Full glass windshield with wiper can be removed from vehicle. See an authorized Can-Am dealer for information.

Windshield Position

Windshield can be set to 3 different positions.

- Closed
- Partially opened (second position on the handle)
- Fully opened (handle is released)

NOTE: When riding the vehicle with the windshield in one of the open position, adjust your speed to the terrain. The glass windshield is not as strong when not seated in its closed position.

To close windshield, pull on handle until it closes.

Filling up Windshield Washer

Open cargo box.

Lift service cover and remove windshield washer bottle cap.

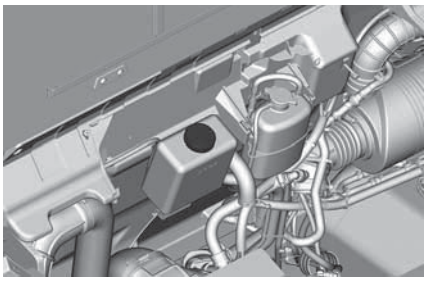

219001807-010

Fill windshield washer bottle.

28) Climate Control System (CAB and Limited Models)

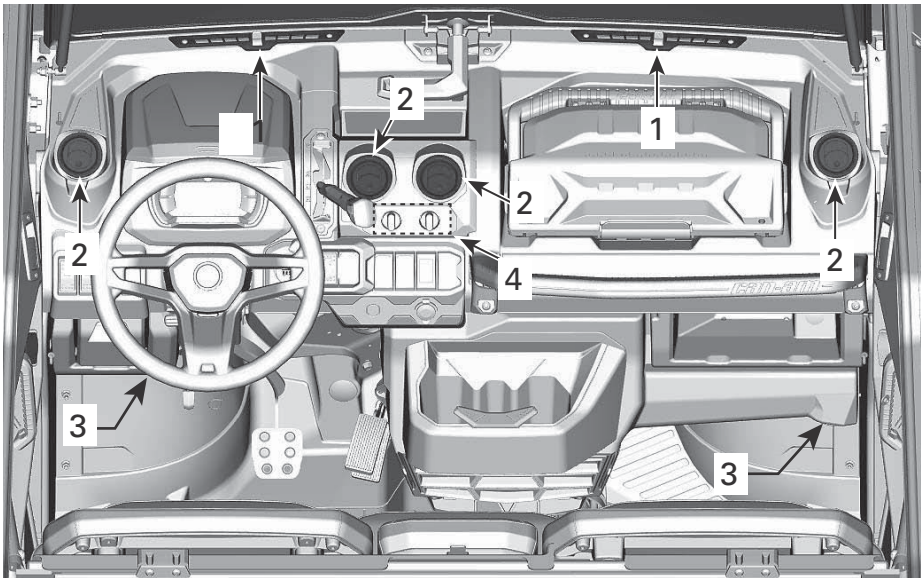

219002059-301

MODELS WITHOUT A/C

1. *Windshield air vents*
2. *Central air vents*
3. *Footwell air vents*
4. *Climate control*

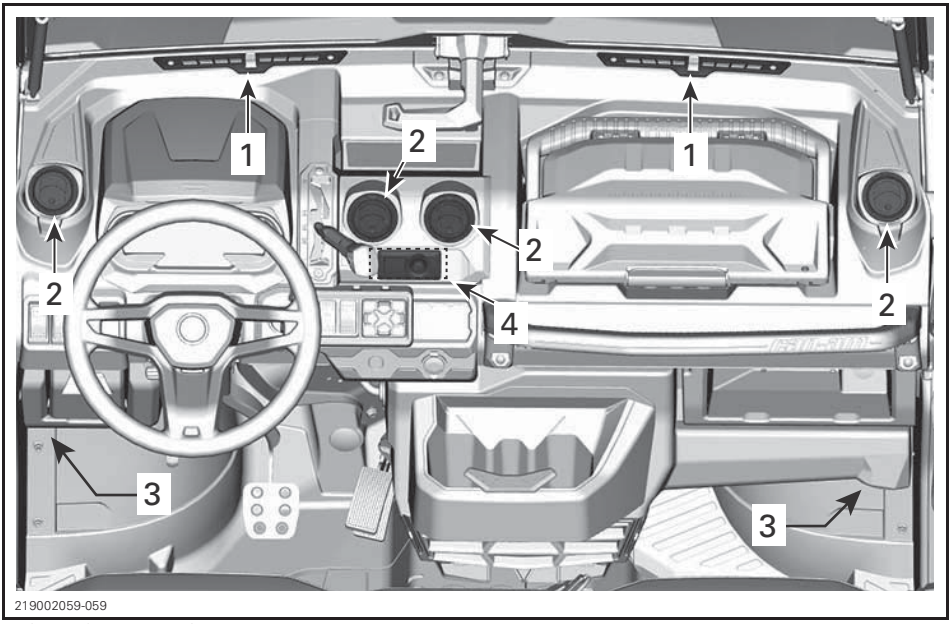

MODELS WITH A/C
1. *Windshield air vents*
2. *Central air vents*
3. *Footwell air vents*
4. *Climate control*

Windshield Air Vents

Located on the top of the dash, they allow distribute the air flow on the windshield.

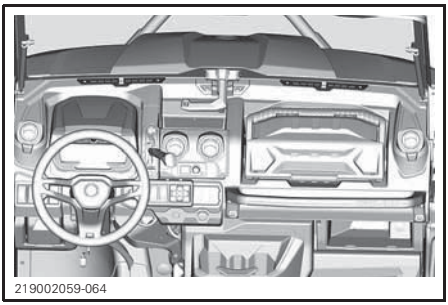

The air flow may be adjusted using the central knob.

– Push the knob toward the windshield to close the vent.
– Pull it to open the vent.

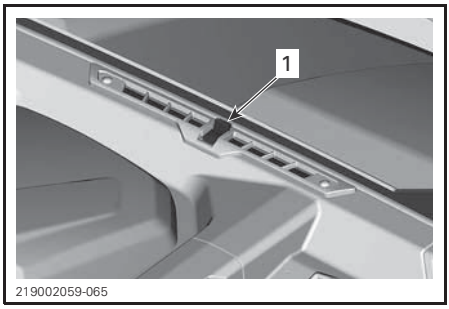

CLOSED POSITION SHOWN
1. *Central knob*

Console Air Vents

Located on the center of the console, they allow distribute the air flow inside the cockpit.

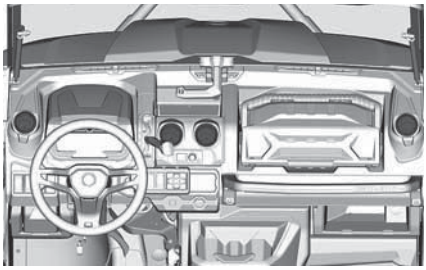
219002059-066

Push on the molded dot to open the vent.

Push on vent tabs to close.

Rotate the external ring of the vent to orient the air flow in the cockpit.

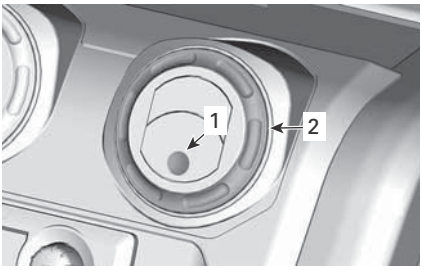

219002059-067

1. *Molded dot*
2. *External ring*

Footwell Air Vents

Located underneath the dash, each side of the vehicle, they allow distribute the air flow at the bottom of the cockpit.

Push on the molded dot to open the vent.

Push on vent tabs to close.

Climate Control - Without A/C

This vehicle is equipped with an heating system.

This system is controlled by two knobs.

– Fan speed control
– Temperature control

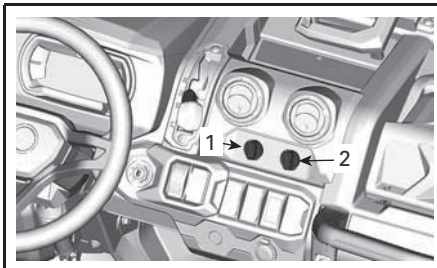

219002059-300

1. *Fan speed control*
2. *Temperature control*

Fan Speed Control

Controls the flow of air circulated in the vehicle.

Turn to select the desired fan speed or to switch it off.

NOTE: If the fan is switched off, the windshield may fog up.

Temperature Control

Controls the temperature of the air circulated in the vehicle.

Turn to select the desired temperature.

Climate Control - With A/C

This vehicle is equipped with an heating/air conditioning system.

This system is controlled by a multifunction module. This module gives access to the following functions:

– Temperature
– Temperature mode
– Fan speed
– Settings

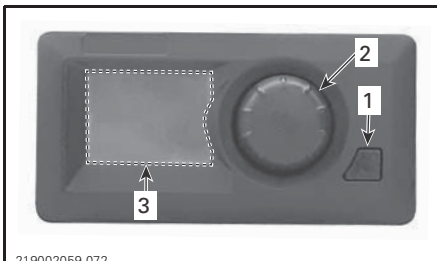

219002059-072

1. *Power switch*
2. *Selector knob*
3. *Display*

For an optimal efficiency of the system, the supply control of the outside air is determine automatically by the climate control module. No operator's action is required.

Temperature

To adjust the temperature, turn the selector knob to select the desired temperature.

The temperature can be set between 13°C and 28°C (56°F and 82°F) in 1 degree increments.

In position T° MIN, the system switches to continuous cooling.

219002059-070

In T° MAX, the system switches to continuous heating.

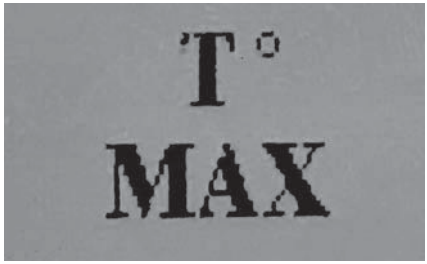

219002059-071

NOTE: In either T° MIN or T° MAX position, the system can not regulate a stable temperature.

Temperature Mode

1. To select the temperature mode, press the selector knob until one of the following icon appear.

2. Turn the selector knob to change the mode.

NOTE: After 5 seconds, the module saves your selection and returns automatically to the temperature display.

In AUTO mode, the system automatically adjusts to heat or cool the cockpit to obtain the selected temperature as quickly as possible by adjusting the fan speed automatically.

If an other fan speed is selected while in AUTO mode, the system will fall in cool or heat mode depending the ambient conditions.

Fan Speed

To adjust the fan speed, press the selector knob until the fan icon appears then turn the knob to select the desired speed.

3 settings are available for fan speed:
- LOW
- MED
- HIGH

NOTE: After 5 seconds, the module saves your selection and returns automatically to the temperature display.

Setting

The following settings can be modified by the operator.
- Contrast (0% to 100%)
- Brightness (0% to 100%)
- Unit (C° or F°)

To modify a setting, press the selector knob 2 time to reach the Fan Speed page.

NOTE: Each next action must be performed within 10 seconds, otherwise the module will come back to the temperature display.

Press and hold the power button while turning the selector knob clockwise for at least 3 clicks.

To change the CONTRAST: turn the selector knob until the desired level is reached.

To change the BRIGHTNESS: press the selector knob 1 time, then turn the knob until the desired level is reached.

To select C° or F°: press the selector knob 2 times, and turn the knob to change the unit.

29) Rear Deflector (If Equipped)

Clear rear deflector to protect from back draft of dust or rain in harsh environments. Sliding quick mount for easy installation.

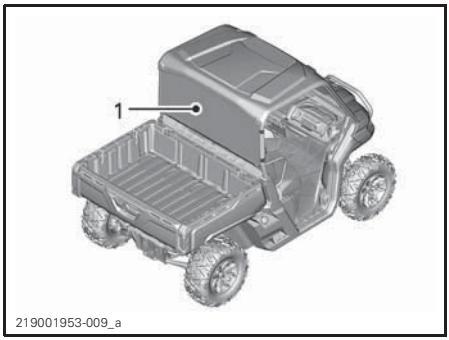

1. Rear deflector

Removing the Rear Defector

To remove the rear deflector, slide clamp toward the unlock icon.

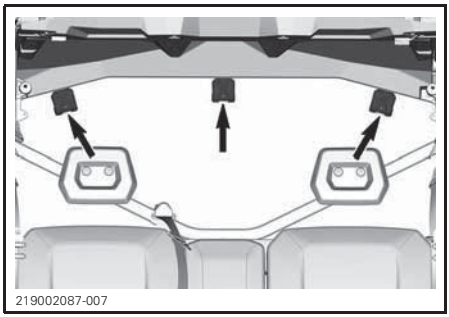

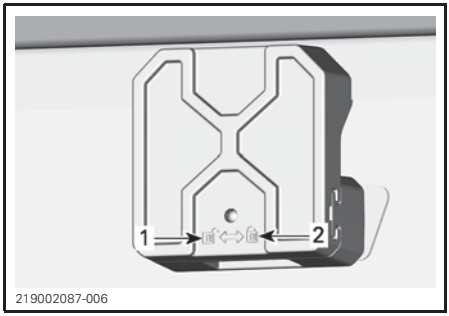

CLAMP
1. Unlock icon
2. Lock icon

Tilt toward the rear and lift.

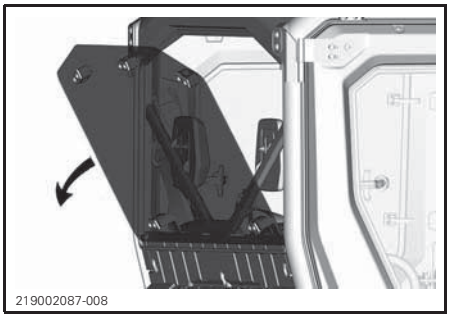

Suspension Adjustment Guidelines

Your vehicle handling and comfort depend upon suspension adjustments.

⚠ WARNING

Suspension adjustment could affect vehicle handling. Always take time to familiarize yourself with the vehicle's behavior after any suspension adjustment has been made.

Choice of suspension adjustments vary with vehicle load, personal preference, riding speed and terrain condition.

The best way to set up the suspension, is to start from factory settings, then customize each adjustment one at a time.

Front and rear adjustments are interrelated. It may be necessary to readjust the rear shock absorbers after adjusting front shock absorbers for instance.

Test run the vehicle under the same conditions; trail, speed, load, etc. Change one adjustment and retest. Proceed methodically until you are satisfied.

Following are guidelines to fine-tune suspension. Use suspension adjustment tool provided in the tool kit.

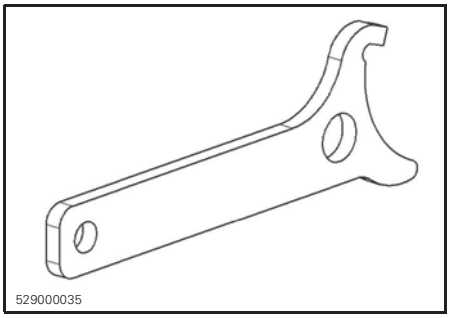

SUSPENSION ADJUSTMENT TOOL

Suspension Factory Settings

FRONT SUSPENSION FACTORY SETTINGS	
ADJUSTMENT	FACTORY SETTING
Spring preload	Cam position 1 (soft)

REAR SUSPENSION FACTORY SETTINGS	
ADJUSTMENT	FACTORY SETTING
Spring preload	Cam position 1 (soft)

Suspension Adjustments

Spring Preload Adjustment

Shorten the spring for a firmer ride and rough riding condition or when pulling a trailer.

Lengthen the spring for a softer ride and smooth riding condition.

⚠ WARNING

The left and right shock adjustment on front or rear suspension must always be set to the same position. Never adjust one shock only. Uneven adjustment can cause poor handling and loss of stability, which could lead to an accident.

Lift the vehicle. Spring length should be equal on both sides.

NOTE: Spring preload affects ground clearance.

Adjust by turning adjusting cam.

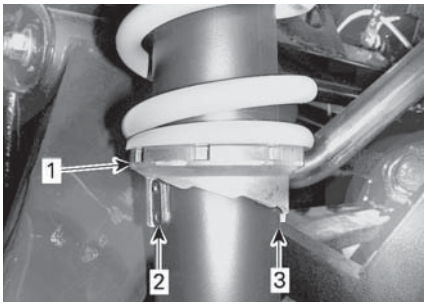

tmo2011-001-065_a

TYPICAL
1. *Turn adjusting cams*
2. *Soft adjustment*
3. *Hard adjustment*

DPS Function

The Dynamic Power Steering (DPS) provides a computer controlled, variable power assist, achieved by an electric motor to optimize the amount of steering input required by the rider.

Fuel Requirements

NOTICE **Always use fresh gasoline. Gasoline will oxidize; the result is loss of octane, volatile compounds, and the production of gum and varnish deposits which can damage the fuel system.**

Alcohol fuel blending varies by country and region. Your vehicle has been designed to operate using the recommended fuels, however, be aware of the following:

- Use of fuel containing alcohol above the percentage specified by government regulations is not recommended and can result in the following problems in the fuel system components:
  - Starting and operating difficulties.
  - Deterioration of rubber or plastic parts.
  - Corrosion of metal parts.
  - Damage to internal engine parts.
- Inspect frequently for the presence of fuel leaks or other fuel system abnormalities if you suspect the presence of alcohol in gasoline exceeds the current government regulations.
- Alcohol blended fuels attract and hold moisture which may lead to fuel phase separation and can result in engine performance problems or engine damage.

Recommended Fuel

Use unleaded gasoline containing MAXIMUM 10% ethanol. The gasoline must have the following minimum octane requirements:

MINIMUM OCTANE RATING
AKI (R+M)/2 octane rating of 87, or a RON octane rating of 92

E10

NOTICE **Never experiment with other fuels. Engine or fuel system damages may occur with the use of an inadequate fuel.**

NOTICE **Do NOT use fuel from fuel pumps labeled E85.**

Use of fuel labeled E15 is prohibited by U.S. EPA Regulations.

Vehicle Fueling Procedure

WARNING

- **Fuel is flammable and explosive under certain conditions.**
- **Never use an open flame to check fuel level.**
- **Never smoke or allow flame or spark in vicinity.**
- **Always work in a well-ventilated area.**

1. Stop engine.

WARNING

Always stop engine before refueling.

2. Have driver and passengers get out of vehicle.

WARNING

Do not allow anyone to remain in the vehicle while fueling. If there is a fire or explosion during fueling, a vehicle occupant could be unable to quickly leave the area.

3. Unscrew slowly the fuel reservoir cap counterclockwise to remove it.

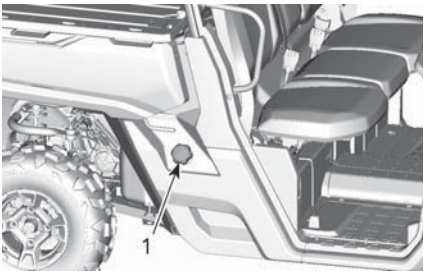

TYPICAL
1. Fuel reservoir cap

WARNING

If a differential pressure condition is noticed (whistling sound heard when loosening fuel reservoir cap) have vehicle inspected and/or repaired before further operation.

4. Insert the spout into the filler neck.
5. Pour fuel slowly so that air can escape from the tank and prevent fuel flow back. Be careful not to spill fuel.
6. Stop filling when the fuel reaches the bottom of filler neck. **Do not overfill.**

WARNING

Never top up the fuel tank before placing the vehicle in a warm area. As temperature increases, fuel expands and may overflow.

7. Fully tighten fuel reservoir cap clockwise until ratchet noise is heard.

WARNING

Always wipe off any fuel spillage from the vehicle.

Fueling a Gasoline Container

WARNING

- Use only an approved gasoline container to store fuel.
- Never fill the gasoline container in the vehicle cargo box or on-the vehicle - an electrical static discharge may ignite the fuel.

Operation During Break-In

A break-in period of 10 operating hours or 300 km (200 mi) is required for the vehicle.

Engine

During the break-in period:

- Avoid full throttle operation.
- Avoid pressing accelerator pedal more than 3/4 of the stroke.
- Avoid sustained accelerations.
- Avoid prolonged cruising speeds.

However, brief accelerations and speed variations contribute to a good break-in.

Brakes

⚠ WARNING

New brakes will not operate at their maximum efficiency until their break-in is completed. Braking performance may be reduced, so use extra caution.

Belt

A new belt requires a break in period of 50 km (30 mi).

During the break-in period:

- Avoid strong acceleration and deceleration.
- Avoid pulling a load.
- Avoid high speed cruising.

Starting the Engine

Insert key in ignition switch and turn to the ON position.

Press the brake pedal.

NOTE: If shift lever is not set to PARK (P) or (N) NEUTRAL, the brake pedal must be pressed to allow engine starting.

Turn the key to the start position and hold until the engine starts.

NOTE: Do not press the accelerator pedal. If the accelerator pedal is pressed at least 50%, the engine will not start.

Release the engine start position immediately when the engine has started.

NOTICE **If engine does not start after a few seconds, do not hold the start position more than 10 seconds.** Refer to *TROUBLESHOOTING*.

Operating the Shift Lever

Apply brakes and select the desired shift lever position.

Release brakes.

NOTICE **When changing gear selection, always completely stop the vehicle and apply the brakes prior to shifting. Damage to the gearbox may occur.**

Choosing the Correct Range (Low or High)

It is important to limit situations known to make the drive belt slip excessively. The main reason the drive belt will slip is if the gearbox is in high range when it should be in low range.

Pay attention to the following:

Low range

Low range should be used whenever:

- Pulling
- Pushing
- Hauling a load
- 4x4 applications
- Mud holes
- Water holes
- Crossing obstacles
- Climbing onto trailer
- Hill climbing

It is also recommended to use low range if driving for prolonged periods at speeds under 24 km/h (15 MPH)

Please refer to *BREAK-IN PERIOD* for drive belt break-in information.

High range

High is the default riding range.

Electronic Drive Belt Protection (if available and activated on your model)

Some vehicles have the electronic drive belt protection function activated.

Refer to your authorized Can-Am dealer for availability and possible activation.

This function is activated when riding at too slow speed for the **high range**, such as in the following situations:

- Pulling
- Pushing
- Hauling a load
- 4x4 applications
- Mud holes
- Water holes
- Crossing obstacles
- Climbing onto trailer
- Hill climbing

In the above mentioned situations the electronic drive belt protection will help protect the CVT drive belt from being damaged by activating the engine torque limiter. The gauge will also scroll a *LOW GEAR* message, suggesting the operator to immobilize the vehicle and set to LOW GEAR.

Whenever the electronic drive belt protection is activated, you MUST shift in LOW range. Refer to *OPERATING THE SHIFT LEVER*.

⚠ WARNING

Apply brakes to immobilize vehicle. Put shift lever in reverse (R), and back down the hill, barely releasing brakes to remain at low speed. Do not attempt to turn around. Never coast down hill while vehicle is in neutral. Do not perform hard braking as it increases the risk of tipover.

Stopping the Engine and Parking the Vehicle

⚠ WARNING

Avoid parking on steep slope as the vehicle may roll away.

⚠ WARNING

Always put the vehicle in PARK when stopped or parked to prevent rolling.

⚠ WARNING

Avoid parking in places where hot parts can start a fire.

When stopped or parked always bring shift lever to park position. This is especially important when parking on a slope. On very steep inclines or if the vehicle is carrying a cargo, the wheels should be blocked using rocks or bricks.

Select the flattest terrain available for parking.

Release accelerator pedal and use brakes to completely stop the vehicle.

Set shift lever in PARK position.

Turn key in ignition switch to OFF position.

Remove key from ignition switch.

If you must park on a steep incline or if the vehicle is carrying cargo, block the wheels using rocks or bricks.

Tips for Maximizing Drive Belt Durability

Riding style and conditions have a direct impact on drive belt durability. Your vehicle features a CVT system design that is optimized to offer the best performance. The CVT and drive belt have successfully endured thousands of miles of durability tests. However, to maximize drive belt durability and to prevent premature failures, it is important that the operator understands the limits of a belt driven CVT system and adapts their riding style and speed accordingly.

If riding in any of the conditions listed below, BRP highly recommends not to constantly hold the throttle wide open (WOT) for more than five (5) minutes.

- High ambient temperatures (above 30°C (86°F)
- Heavy loads: Passengers / Heavy cargo
- Heavy drag: Soft sand / Hill climbing / Mud / Using a track kit.

After a few minutes at WOT, partially release the accelerator and allow the CVT to cool down.

For more tips for maximizing the drive belt durability, refer to *CHOOSING THE CORRECT RANGE (LOW OR HIGH)*.

What to do if Water is Suspected to be in the CVT

If water is present in the CVT, the engine will accelerate but the vehicle will remain still.

NOTICE Stop the engine and drain the water to avoid damage to the CVT.

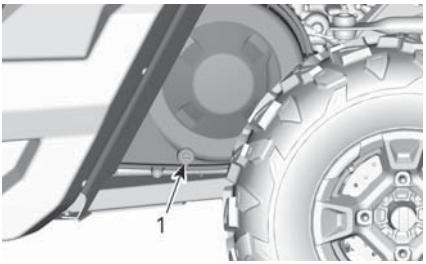

TYPICAL - LEFT SIDE OF VEHICLE UNDER CARGO BOX
1. CVT drain

See an authorized Can-Am dealer , a repair shop or person of your choosing to have the CVT inspected and cleaned.

What to do if Battery is Drained out

The vehicle can be jump started by using the red (+) cable to the battery positive pole and the black (-) cable to the vehicle chassis.

NOTICE Do not connect any electrical source to the steering column or components which are in contact with DPS.

What to do if Vehicle Rolled Over

Abrupt maneuvers, sharp turns, side hilling or accident may cause vehicle to rollover.

Should the vehicle be rolled over, it will be necessary to have it transported to an authorized Can-Am dealer for inspection as soon as possible. NEVER START THE ENGINE!

What to do if Vehicle is Submerged

Should the vehicle become immersed, it will be necessary to have it transported to an authorized Can-Am dealer as soon as possible.

NOTICE Never start the engine as immersion of the vehicle can cause serious damage to the engine if the correct restart procedure is not followed.

When contacting a towing or transporting service, be sure to ask if they have a flatbed trailer, loading ramp or power ramp to safely lift the vehicle and tie-down straps. Ensure the vehicle is properly transported as specified in this section.

NOTICE **Do not tow this vehicle — towing can seriously damage the vehicle's drive system.**

NOTICE **Avoid using chains to tie the vehicle — they may damage the surface finish or plastic components.**

⚠ WARNING

Make sure no loose objects are present inside vehicle during vehicle transportation.

⚠ WARNING

Always transport the vehicle facing forward to avoid damaging the windshield or other components. Parts may detach during transport.

⚠ WARNING

Before attempting to mount vehicle onto a platform or a trailer, make sure to respect the following safety precautions.

SAFETY PRECAUTIONS	
Carrying equipment	The carrying item (platform or trailer or flat bed) must be of appropriate dimensions and capacity to safely support and transport the vehicle.
Hauling vehicle	Do not exceed vehicle hauling capacity and specifications. Ensure the trailer or platform is properly secured to the hauling vehicle hitch.
Visibility	Ensure you have a good visibility during the entire maneuver.
Terrain	The hauling vehicle and trailer must be on a leveled surface. Use wheel chocks on trailer and hauling vehicle to avoid any movement.
Ramps	Use ramps with proper rating and secure ramps to the trailer or platform. Avoid steep ramps.
Bystanders	Always make sure bystanders are not close to the vehicle or the trailering equipment while climbing up.

Using vehicle power to climb onto trailering equipment

When vehicle can climb on its own power, proceed as follows;

Wear protective gear.

Fasten seat belt.

Use low gear only (if equipped).

If vehicle has 4wd option, use it.

When driving remain seated at all times.

Ensure proper alignment on rails or platform.

1. Start from a sufficient distance from the trailer to align the vehicle in a straight line with the ramps. Never attempt to turn while getting closer to the ramp. Rear wheels might not be aligned once you get to the ramp and vehicle may fall off.
2. Slowly climb the front wheels onto the ramp to verify alignment.

3. Back off the vehicle, verify ramps are still secure, then proceed at proper speed.
4. Carefully drive vehicle onto platform or trailer. Use sufficient speed to climb without spinning or abruptly accelerating. Avoid acceleration while on ramps to prevent ramps movement.
5. If trailer is inclined towards front, simply let vehicle roll in without acceleration.
6. Once vehicle is climbed, put shift lever to Park. Apply brake locking mechanism (if equipped).

When vehicle cannot move on its own power, or in case overshooting is a risk or if any dangerous condition prevents for embarking on its own power, proceed using a winch;

Using a winch to pull vehicle onto trailering equipment

When vehicle cannot climb on its own power, proceed as follows;

⚠ WARNING

Have the help of an assistant. One person should be in vehicle to have access to vehicle steering, brakes and winch switch, while the other person controls the environment and safety of the maneuver.

⚠ WARNING

Ensure the winch hook can be safely attached to a proper anchoring point. Use proper rigging.

NOTE: If vehicle can be started safely, let engine idle during winching to avoid draining the battery.

1. Place shift lever to NEUTRAL (N).
2. If the vehicle is equipped with a winch, use the winch to roll the vehicle on the platform.
3. If the vehicle is not equipped with a winch, proceed as follows:
   - 3.1 Attach strap to lower front bumper anchor.
   - 3.2 Attach the strap to the winch cable of the towing vehicle.
   - 3.3 Pull the vehicle on the flatbed trailer with the winch.
4. Put shift lever to Park. Apply brake locking mechanism (if equipped).

Securing vehicle for transport

⚠ WARNING

Never use the winch to secure the vehicle during transport.

1. Remove the key.
2. At rear, secure the vehicle on both sides using a strap around the suspension arm as close to the wheel as possible.
3. At front, secure the vehicle on both sides using a strap around the upper suspension arm as close to the wheel as possible and away from the brake hose.

219002061-104

TYPICAL
1. Front upper suspension arm

⚠ WARNING

Ensure the brake hose is away from the strap. A pinched brake hose may reduce the braking performance of the vehicle.

4. Strap the rear tires by using tire towing straps.
5. Firmly attach the rear suspension tie-down straps to both sides of the rear of the trailer with ratchets.
6. Ensure that both the front and rear wheels are firmly attached to the trailer.

Getting vehicle out of trailer

⚠ WARNING

Vehicle may have moved during transport. Ensure vehicle is properly aligned with ramps before proceeding.

⚠ WARNING

Visibility will be greatly reduced when backing off from the trailer. Have the help of an assistant to ensure proper alignment and safe environment.

Front of Vehicle

Place vehicle on a flat non slippery ground.

Ensure vehicle shift lever is set to PARK.

Install an hydraulic jack under front skid plate.

Lift front of vehicle and install a jack stand on each side under frame section.

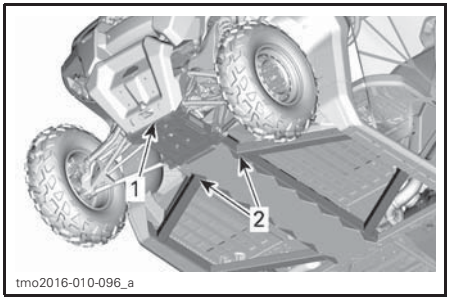

1. *Front of vehicle*
2. *Frame section*

Lower hydraulic lift and ensure vehicle is supported safely onto both jack stands.

Rear of Vehicle

Place vehicle on a flat non slippery ground.

Activate 4WD mode.

Ensure vehicle shift lever is set to PARK.

Install an hydraulic jack under the trailer hitch.

Lift rear of vehicle and install a jack stand on each side under frame section in front of rear wheel.

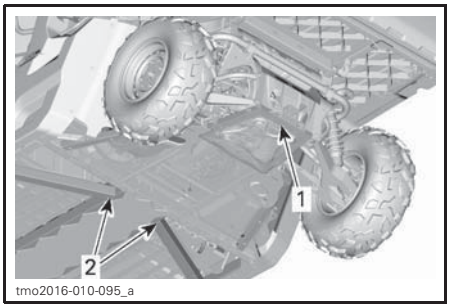

1. *Lifting location under trailer hitch*
2. *Frame section to install jacks under.*

Lower hydraulic lift and ensure vehicle is supported safely onto both jack stands.

MAINTENANCE

MAINTENANCE SCHEDULE

Maintenance is very important for keeping your vehicle in safe operating condition. The vehicle should be serviced as per the maintenance schedule.

Proper maintenance is the owner's responsibility. A warranty claim may be denied if, among other things, the owner or operator caused the problem through improper maintenance or use.

Perform periodic checks and follow the maintenance schedule. **The maintenance schedule does not exempt the pre-ride inspection**.

Verifying fault codes, as first maintenance step, is a good practice and is highly recommended.

⚠ WARNING

Failure to properly maintain the vehicle according to the maintenance schedule and procedures can make it unsafe to operate.

EPA Regulation - Canadian and USA Vehicles

A repair shop or person of the owner's choosing may maintain, replace, or repair emission control devices and systems. These instructions do not require components or service by BRP or authorized Can-Am Off-Road dealers.

Although an authorized Can-Am Off-Road dealer has an in-depth technical knowledge and tools to service your vehicle, the emission-related warranty is not conditioned on the use of an authorized Can-Am Off-Road dealer or any other establishment with which BRP has a commercial relationship.

Proper maintenance is the owner's responsibility. A warranty claim may be denied if, among other things, the owner or operator caused the problem through improper maintenance or use.

For emission-related warranty claims, BRP is limiting the diagnosis and repair of emission-related parts to the authorized Can-Am Off-Road dealers. For more information, please refer to the *US EPA EMISSION-RELATED WARRANTY* contained in the *WARRANTY* section.

You must follow the instructions for fuel requirements in the fueling section of this manual. Even if gasoline containing greater than ten volume percent ethanol is readily available, the US EPA issued a prohibition against the use of gasoline containing greater than 10 vol% ethanol that applies to this vehicle. The use of gasoline containing greater than 10 vol% ethanol with this engine may harm the emission control system.

The following message appears in the gauge after every 200 hours of operation, to remind you of maintenance requirements: MAINTENANCE REQUIRED. To erase the message, refer to the appropriate *MULTIFUNCTION GAUGE* section.

SEVERE DUSTY CONDITIONS

Air Filter Maintenance Guideline

Air filter maintenance should be adjusted according to riding conditions.

Air filter maintenance must be increased in frequency in the following dusty conditions:

– Riding on dry sand

– Riding on dry dirt covered surfaces
– Riding on dry gravel roads or similar conditions.

NOTE: Riding in a group in these conditions would increase even more the air filter maintenance.

MAINTENANCE SCHEDULE LEGEND

Operation in trail riding conditions
Operation in severe riding conditions (dusty or muddy) or carrying heavy loads condition

MAINTENANCE SCHEDULE

Make sure to perform proper maintenance at recommended intervals as indicated in the tables. Some items of the maintenance schedule must be performed in function of the calendar, regardless of the distance or time of operation.

EVERY YEAR OR EVERY 3 000 KM (2,000 MI) OR 200 HOURS (whichever comes first)
EVERY YEAR OR EVERY 1 500 KM (1,000 MI) OR 100 HOURS (whichever comes first)
Check fault codes
Perform all items indicated in the pre-ride inspection.
Replace engine oil and filter
Inspect gearbox oil level (HD8 and HD10 models) and look for contamination (every 3000 km)
Replace gearbox oil (HD8 and HD10 models) (Perform at the first 3000 km)
Inspect and clean engine air filter. Replace if needed
Inspect steering system for abnormal play and damages (column, rack and pinion, bellows)
Inspect the tie rod ends and ball joints for play and inspect bellows condition
Inspect wheel bearings for abnormal play
Inspect shock absorber bushings, suspension arm bushings and wear plates. Replace if needed.
Inspect CV joints and rubber bellows condition (check for abnormal play in the joints and for cuts in the rubber bellows)
Lubricate suspension arms and stabilizer bar bushings
Inspect and clean the brake system (fluid level, pads, discs, lines, calipers)
Check front differential oil level and look for contamination and overall condition (vents, mount bolt torque, seals)

EVERY YEAR OR EVERY 3 000 KM (2,000 MI) OR 200 HOURS (whichever comes first)
EVERY YEAR OR EVERY 1 500 KM (1,000 MI) OR 100 HOURS (whichever comes first)
Inspect rear final drive oil level (HD5 models) and look for contamination and overall condition (vents, mount bolt torque, seals)
Inspect battery condition and connections
Inspect propeller shaft U-joints for abnormal play. On HD5, inspect rubber bellows condition
Clean exhaust pipes and muffler area
Clean muffler spark arrester
Adjust valve clearance
Replace fuel vent breather filter
Inspect CVT drive belt
Clean CVT pulleys
Inspect centrifugal levers, rollers, O-rings and slider shoes of drive pulley
Inspect, clean and lubricate drive pulley bearing (HD5)
Inspect and lubricate drive pulley hub needle bearing (HD8/HD10)
Inspect input and output shaft seals (engine, gearbox (HD8 and HD10 models), rear final drive (HD5 models), front differential)
Tighten cage fasteners
Tighten suspension fasteners
Inspect and clean seat belts retractors and buckles
Verify coolant level and adjust if needed
Lubricate door latches (Cab models)
Tighten windshield hinge screws (Cab models)
Inspect, clean or replace air filters of the heating/air conditioning system (Cab and Limited models)
Inspect and clean the inside of the A/C unit. (Limited models)
Inspect all refrigerant hose connections for signs of leaking (oily residue). Oily residue indicates a refrigerant leak and requires further investigation by certified technician. (Limited models)

EVERY TWO YEAR OR EVERY 6 000 KM (4,000 MI) OR 400 HOURS (whichever comes first)
EVERY TWO YEAR OR EVERY 3 000 KM (2,000 MI) OR 200 HOURS (whichever comes first)
Replace front differential oil
Replace gearbox oil (HD8 and HD10 models)
Replace rear final drive oil (HD5 models)
Replace brake fluid (must be performed every 2 years)
Verify cooling system
Test engine coolant strength and level
Verify fuel system for leaks (including evaporative emission system components if equipped)
Verify fuel pump pressure (idle and WOT)
Replace spark plugs
Clean vehicle speed sensor
Replace canister vent pre-filter (evaporative emission system) if equipped
Visually inspect the compressor belt, replace the belt if necessary (Limited models)
Verify the compressor belt tension and replace the belt if necessary (Limited models)

EVERY 5 YEARS OR EVERY 12 000 KM (8,000 MI) (whichever comes first)
EVERY 5 YEARS OR EVERY 6 000 KM (4,000 MI) (whichever comes first)
Replace engine coolant

This section includes instructions for basic maintenance procedures.

Due to the complexity of some of the maintenance procedures, good mechanical skills are required. If you are not comfortable with these procedures, do not hesitate to contact an authorized Can-Am off-road dealer, repair shop or person of your own choosing.

⚠ WARNING

Unless otherwise indicated, always turn ignition switch to the OFF position before performing any maintenance and remove key.

⚠ WARNING

Should removal of a locking device be required (e.g. lock tab, self-locking fastener, etc.) , always replace it with a new one.

Engine Air Filter

NOTICE **Never modify the air intake system. Otherwise, engine performance degradation or damage can occur. The engine is calibrated to operate specifically with these components.**

Engine Air Filter Replacement Guideline

Engine Air filter inspection and replacement frequency should be adjusted according to riding conditions as it is critical to ensure proper engine performance and life span.

Engine Air filter inspection and replacement frequency must be increased for the following severe riding conditions:

- Riding on dry sand.
- Riding on dry dirt covered surfaces.
- Riding on dry gravel trails or similar conditions.
- Riding in areas with high concentration of seeds or crop husks.
- Riding in severe snow conditions.

NOTICE **When riding in dusty conditions or sand, the air box needs to be cleaned before every ride.**

NOTE: Riding in a group under these conditions would increase even more the air filter replacement frequency.

Engine Air Filter Removal

Open cargo box.

Unlatch air filter cover and remove air filter.

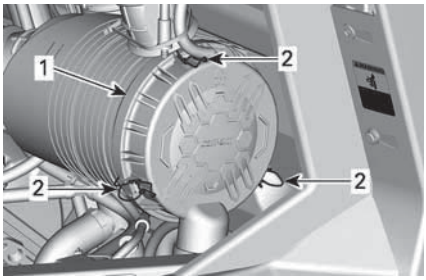

219002066-017

RH SIDE OF VEHICLE, UNDER CARGO BOX
1. Air filter cover
2. Latches

The filter fits tightly over the outlet tube and there will be some initial resistance. Gently move the end of the filter back and forth to break the seal, then rotate while pulling straight out. Avoid knocking the filter against the housing.

Engine Air Filter Cleaning

Inspect the filter for any signs of leaks. A streak of dust on the clean side of the filter is a telltale sign. Replace filter if there is any damages. Eliminate any source of air leaks before installing a new filter.

Clean engine air filter by tapping out heavy dust from paper element, this will allow dirt and dust to get out of the paper filter.

NOTICE **It is not recommended to blow compressed air on the paper element; this could damage the paper fibers and reduce its filtration ability when used in dusty environments. If engine air filter is too dirty and cannot be cleaned following the recommended procedure, it should be replaced.**

Use a clean damp cloth to wipe both the filter sealing surface and the inside of the outlet tube. Ensure that the outlet tube sealing area is undamaged.

Inspect air filter housing for cleanliness.

Duckbill Valve Cleaning

Visually check and physically squeeze the duckbill valve. Make sure the valve is flexible and not inverted, damaged or plugged.

Engine Air Filter Installation

Insert the filter carefully. Seat the filter by hand, making certain it is inserted completely into the air cleaner housing. Apply pressure by hand at the outer rim of the filter, not the flexible center.

Secure air filter cover with latches.

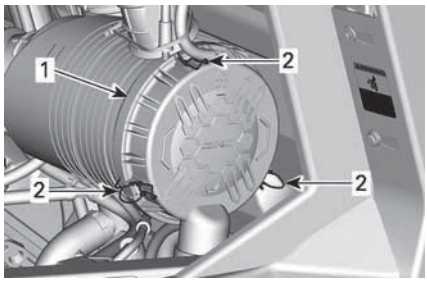

RH SIDE OF VEHICLE, UNDER CARGO BOX
1. Air filter cover
2. Latches

CVT Air Filter

CVT air filter inspection and cleaning frequency should be adjusted according to riding conditions as it is critical to ensure proper engine performance and life span.

CVT Air filter inspection and cleaning frequency must be increased for the following severe riding conditions:

- Riding on dry sand.
- Riding on dry dirt covered surfaces.
- Riding on dry gravel trails or similar conditions.
- Riding in areas with high concentration of seeds or crop husks.
- Riding in severe snow conditions.

NOTE: Riding in a group in these conditions would increase even more the air filter replacement requirement.

CVT Air Filter Removal

1. Tilt cargo box.
2. Press the filter tabs to release it.

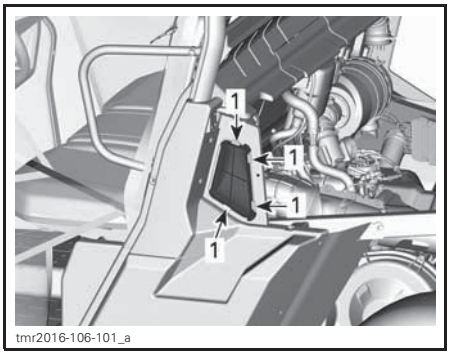

1. Press here

CVT Air Filter Inspection and Cleaning

1. Inspect filter and replace if damaged.
2. Clean filter, using a solution of soft soap and water, then rinse it.
3. Gently shake off excess water and allow filter to dry at room temperature.

4. Clean inside the CVT air inlet with a vacuum cleaner.

CVT Air Filter Installation

Reinstall CVT air filter and lower cargo box.

NOTE: Maintaining a clean CVT air filter will maximize air flow for an optimum CVT components lifespan.

Evaporative Emission System Pre-Filter (If Equipped)

Evaporative Emission System Pre-Filter Replacement

1. Tilt cargo box, refer to *CARGO BOX TILT RELEASE HANDLE*.
2. Remove the hose clamps.
3. Remove the retaining screws.
4. Remove the pre-filter assembly.

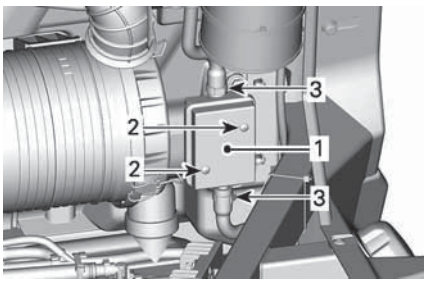

219001807-003_a

1. *Pre-Filter*
2. *Retaining screw*
3. *Clamps*

5. Install a new pre-filter assembly.

TIGHTENING TORQUE	
Pre-filter retaining screw	2.5 N•m ± 0.5 N•m (22 lbf•**in** ± 4 lbf•**in**)

6. Secure hoses with clamps.

Engine Oil

Engine Oil Level Verification

NOTICE **Operating the engine with an improper level may severely damage engine.**

NOTE: Check oil level when engine is cold.

1. Place vehicle on a level surface.
2. Open cargo box.
3. Unscrew dipstick then remove it and wipe clean.

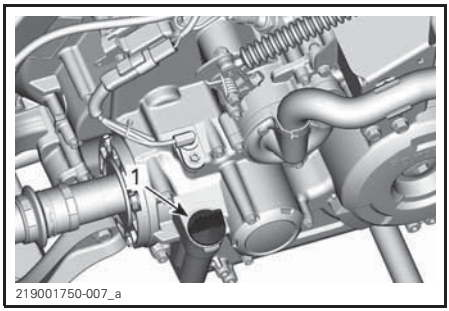

219001750-007_a

HD5
1. *Engine oil dipstick*

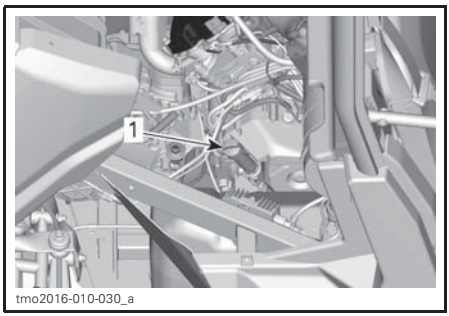

tmo2016-010-030_a

HD8 AND HD10
1. *Engine oil dipstick*

4. Reinstall dipstick, screw in it completely.
5. Remove dipstick and check oil level. It should be near or equal to the upper mark.

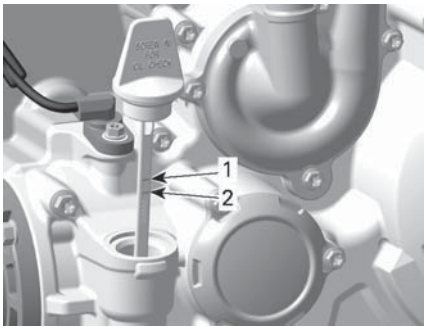

vmr2015-008-001_a

1. *Full*
2. *Add*

To add oil, remove the dipstick. Place a funnel into the dipstick hole.

Add a small amount of recommended oil and recheck oil level.

Repeat the above procedures until oil level reaches the dipstick's upper mark.

NOTE: Do not overfill. Wipe off any spillage.

Properly tighten dipstick.

Recommended Engine Oil

Rotax® engines were developed and validated using the XPS™ oil. BRP recommends the use of its XPS engine oil or an equivalent at all time. Damages caused by the use of an oil not suitable for the engine may not be covered by the BRP Limited Warranty.

XPS RECOMMENDED ENGINE OIL	
General purpose	**Scandinavia:** 4T 5W40 SYNTHETIC BLEND OIL (EUR) (P/N 779290) **Other Countries:** 4T 5W40 SYNTHETIC BLEND OIL (P/N 779133)
Cold temperature	**Scandinavia:** 4T 0W40 SYNTHETIC OIL (EUR) (P/N 779286) **Other Countries:** 4T 0W40 SYNTHETIC OIL (P/N 779139)
Warm temperature	**Scandinavia:** 4T 10W50 SYNTHETIC OIL (EUR) (P/N 779240) **Other Countries:** 4T 10W50 SYNTHETIC OIL (P/N 779234)
IF THE RECOMMENDED XPS ENGINE OIL IS NOT AVAILABLE	
Use a 4-stroke SAE engine oil meeting or exceeding the following lubricant industry specifications. Always check the API service label certification on the oil container, it must contain at least one of the indicated standards. – **API service classification SJ, SL, SM or SN**	

Engine Oil Change

CAUTION **The engine oil can be very hot. Wait until engine oil is warm.**

NOTICE **Engine oil and oil filter must be replaced at the same time.**

Bring engine to its normal operating temperature.

Place vehicle on a level surface.

Place a drain pan under the engine drain plug area.

Open cargo box.

Clean the drain plug area.

Unscrew drain plug and discard the gasket ring.

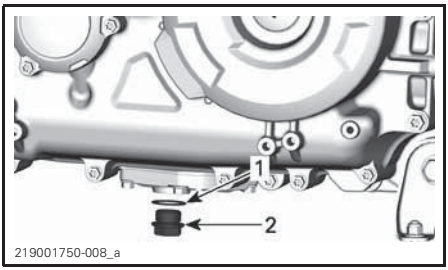

HD5
1. *Gasket ring*
2. *Drain plug*

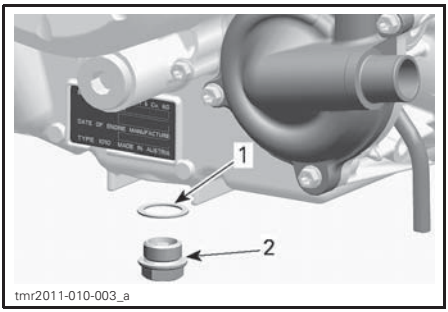

HD8 AND HD10
1. *Gasket ring*
2. *Drain plug*

Remove the dipstick.

Allow oil to drain completely from the crankcase.

Clean the magnetic drain plug from metal shavings and residue. Presence of debris gives an indication of internal engine damage.

Install a NEW gasket ring on the drain plug.

NOTICE **Never use the gasket ring a second time. Always replace by a new one.**

Install and tighten drain plug to the recommended specification.

TIGHTENING TORQUE	
Drain plug	30 N•m ± 2 N•m (22 lbf•ft ± 1 lbf•ft)

Replace oil filter. Refer to *OIL FILTER*.

Refill engine with recommended engine oil.

For engine oil capacity, refer to *SPECIFICATIONS*.

Oil Filter

Oil Filter Access

Open cargo box.

Remove passenger seats and engine service cover if needed.

Oil Filter Removal

Clean oil filter area.

Remove oil filter cover.

Remove oil filter.

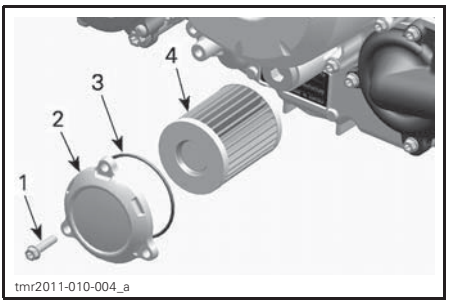

TYPICAL
1. *Oil filter screw*
2. *Oil filter cover*
3. *O-ring*
4. *Oil filter*

Oil Filter Installation

Check and clean the oil filter inlet and outlet area for dirt and other contaminations.

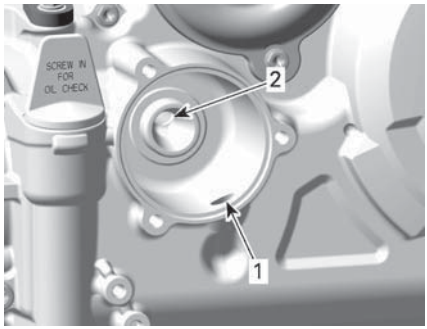

vmr2015-008-003_a

1. *Inlet bore from the oil pump to the oil filter*
2. *Outlet bore to the engine oil providing system*

Install a NEW O-ring on oil filter cover.

Install the new filter into the cover.

Apply engine oil on O-ring and grease on the end of filter.

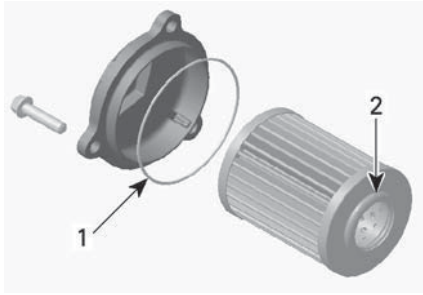

vmr2006-008-001_a

1. *Slightly oil*
2. *Slightly oil*

NOTICE **Pay attention to avoid pinching the O-ring during filter and cover installation.**

Install the cover on the engine.

Tighten oil filter cover screws to recommended specification.

TIGHTENING TORQUE	
Oil filter cover screws	10 N•m ± 1 N•m (89 lbf•**in** ± 9 lbf•**in**)

Wipe off any oil spillage on engine.

Radiator

Radiator Inspection and Cleaning

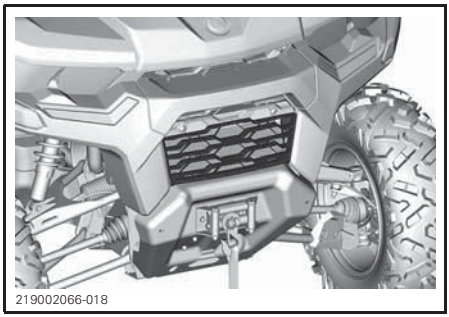
219002066-018

Periodically check the radiator area for cleanliness.

To access radiator, pull lower part of front grille and slide it down.

To install, insert upper tabs first and push lower part.

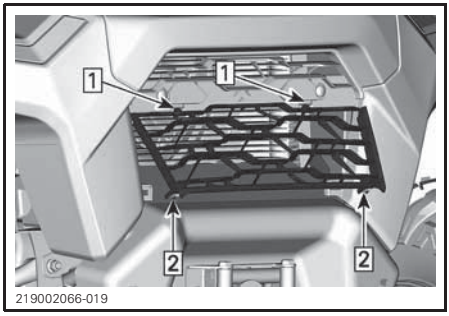

219002066-019

1. *Insert upper tabs*
2. *Push lower part.*

Inspect radiator and hoses for leaks or any damage.

Inspect radiating fins. They must be clean, free of mud, dirt, leaves and any other deposit that would prevent the radiator to cool properly.

If available, use a garden hose to rinse the radiating fins.

CAUTION Never clean radiator with your hands when it is hot. Let the radiator cool down before cleaning.

NOTICE Be careful not to damage the radiating fins when cleaning. Do not use any object/tool that could damage the fins. When hosing, use low pressure only. Never use a HIGH PRESSURE washer.

Engine Coolant

Engine Coolant Level Verification

WARNING

Check coolant level with engine cold.

1. Place vehicle on a level surface.
2. Open cargo box.

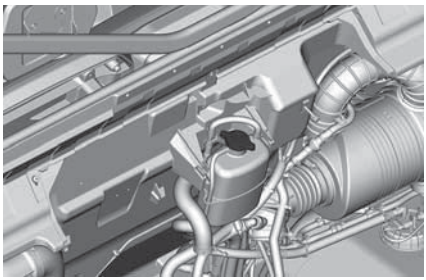

219001807-008

3. Remove the pressure cap.

WARNING

In order to avoid potential burns, do not remove the pressure cap if the engine is hot.

4. Ensure cooling system is full up to the Max line.

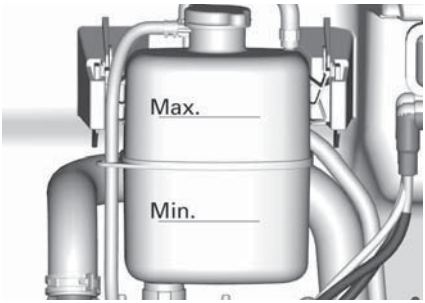

tmo2016-010-004_a

5. Add coolant in system as necessary. Use a funnel to avoid spillage. Do not overfill.
6. Properly reinstall pressure cap on cooling tank.
7. Close service cover and lower cargo box.

NOTE: A cooling system that frequently requires addition of coolant is an indication of leaks or engine problems.

Recommended Engine Coolant

XPS RECOMMENDED COOLANT	
Scandinavia:	EXTENDED LIFE PRE-MIXED COOLANT (EUR) (P/N 779223)
Other Countries	EXTENDED LIFE PRE-MIXED COOLANT (P/N 779150)
IF THE RECOMMENDED XPS COOLANT IS NOT AVAILABLE	
Distilled water and antifreeze solution (50% distilled water, 50% antifreeze)	

NOTICE Always use ethylene-glycol antifreeze containing corrosion inhibitors specifically for internal combustion aluminum engines.

Engine Coolant Replacement

Cooling System Draining

⚠ WARNING

In order to avoid potential burns, do not remove the pressure cap or loosen the coolant drain plug if the engine is hot.

1. Open cargo box.
2. Remove the cooling system pressure cap.

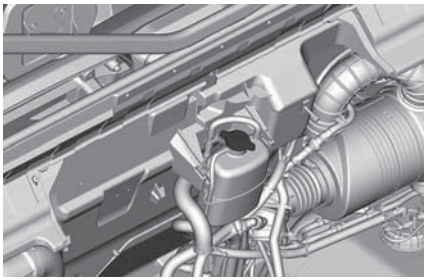

219001807-008

3. Unscrew coolant drain plug and drain the coolant into a suitable container.

NOTE: Do not unscrew the coolant drain plug completely.

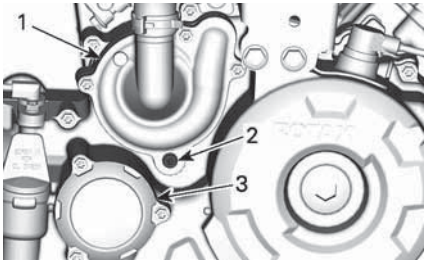

219001750-009_a

HD5
1. *Water pump cover*
2. *Coolant drain plug*
3. *Oil filter cover*

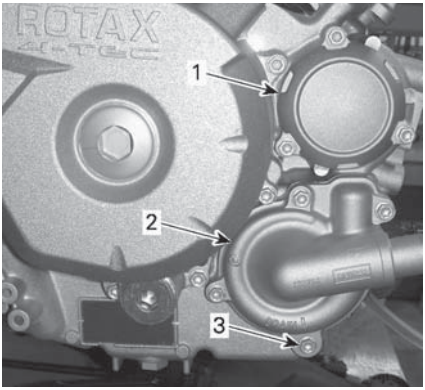

tmo2011-001-120_a

HD8 AND HD10
1. *Oil filter cover*
2. *Water pump cover*
3. *Coolant drain plug*

4. Disconnect the lower radiator hose and drain the remaining coolant into a suitable container.

NOTE: Take note of the position of the hose clamp on the lower radiator hose at the radiator.

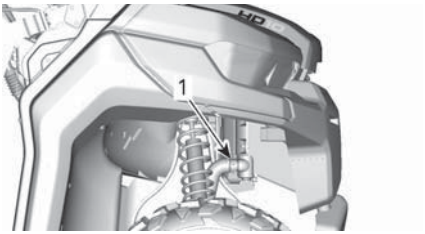

tmo2016-010-090_a

1. *Lower radiator hose to disconnect*

5. Drain cooling system completely.
6. Reinstall cooling system drain plug and tighten to specification.

TIGHTENING TORQUE	
Coolant drain plug	10 N•m ± 1 N•m (89 lbf•**in** ± 9 lbf•**in**)

7. Reinstall radiator hose as noted prior to removal.
8. Fill cooling system with coolant, refer to *COOLING SYSTEM BLEEDING* procedure.

Cooling System Bleeding

Models with a Heating/Air Conditioning System

1. Put the fan speed to MAX.
2. Raise the temperature control to the maximum.

All Models

3. Remove the pressure cap.
4. Fill coolant system until it is full up to the Max line on the coolant bottle.

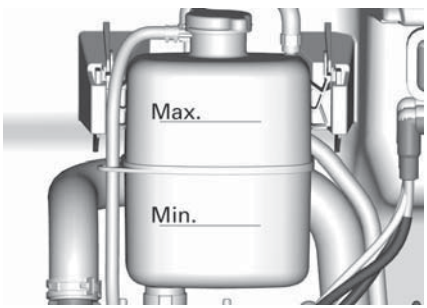

tmo2016-010-004_a

5. Install pressure cap.
6. Run engine at idle with the pressure cap ON until the cooling fan cycles on for a second time.
7. Stop the engine and let it cool down.

⚠ WARNING

In order to avoid potential burns, do not remove the pressure cap if the engine is hot.

8. When the engine is cool, remove pressure cap and add coolant if required.
9. Install pressure cap.
10. After the next ride following this procedure, check coolant level. Add coolant as required. Refer to *ENGINE COOLANT LEVEL VERIFICATION* in this section.

Heating/Air Conditioning Air Filter (if equipped)

NOTICE **The cleaning of the filters must be performed more often than recommended when riding in dusty conditions or sand.**

Fresh Air Filter

Open hood to access fresh air filter.

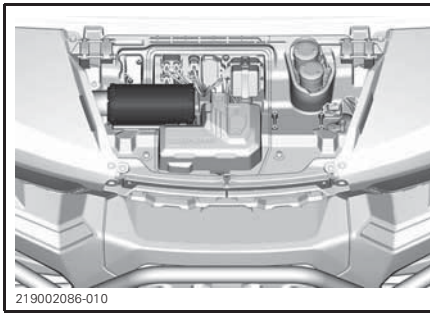
219002086-010

Lift and slide filter to remove.

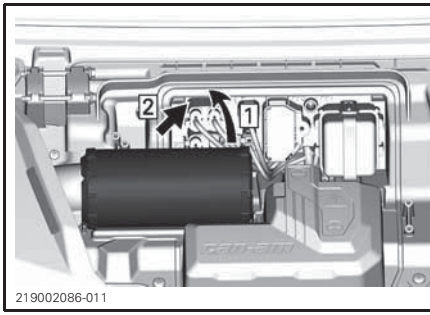

219002086-011

Step 1: Lift
Step 2: Slide

Inspect the filter for any signs of leaks. A streak of dust on the clean side of the filter is a telltale sign. Replace filter if there is any damages. Eliminate any source of air leaks before installing a new filter.

Clean air filter by tapping out heavy dust from paper element, this will allow dirt and dust to get out of the paper filter.

NOTICE **It is not recommended to blow compressed air on the paper element; this could damage the paper fibers and reduce its filtration ability when used in dusty environments. If air filter is too dirty and cannot be cleaned following the recommended procedure, it should be replaced.**

Use a clean damp cloth to wipe both the filter sealing surface and the inside of the outlet tube. Ensure that the outlet tube sealing area is undamaged.

The installation is the reverse of the removal procedure.

Cockpit Air filters

Cockpit air filters are located at the bottom of the center console. There are 3 filters:

– One at the front of the unit
– One on each side of the unit.

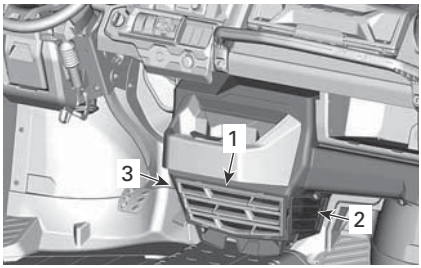

219002059-075

1. Front cockpit air filter
2. Lateral cockpit air filter - passenger side
3. Lateral cockpit air filter - driver side

Front Cockpit Air Filter

To remove this filter, lift the grille tabs and pull up.

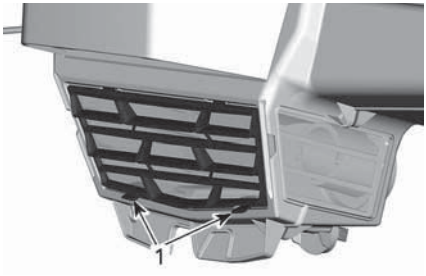

219002086-013

219002086-014

Clean air filter by washing it in lukewarm water with mild soap. Remove excess water and air dry before installation.

Before installing the filter, clean the inside of the heating/air conditioning unit and the evaporator coil using vacuum and a soft brush.

NOTICE **Be careful when brushing to avoid damaging the evaporator coil fins.**

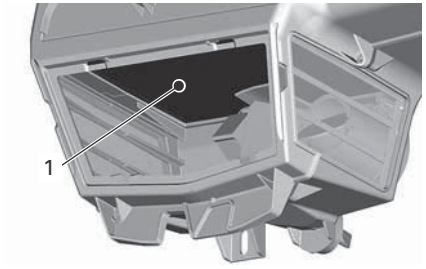

219002059-303

1. Evaporator

The installation is the reverse of the removal procedure.

Lateral Cockpit Air Filters

To remove these filters, grab the grille tab and pull.

1. Grille tab

Clean air filters by washing them in lukewarm water with mild soap. Remove excess water and air dry before installation.

The installation is the reverse of the removal procedure.

Air Conditioning Compressor Belt

Visually inspect the compressor belt for wear.

Hairline cracks do not require the replacement of the belt, but must be monitored closely. Damage to the center of the belt will eventually require belt replacement, but when cracks extend to the edge of the belt, the belt failure is imminent.

The compressor belt tension verification and belt replacement should be performed by an authorized Can-Am Off-Road dealer according to the *MAINTENANCE SCHEDULE*.

Muffler and Spark Arrester

Muffler Cleaning (HD5)

Purge the muffler from accumulated carbon as follows.

Place the vehicle in a well ventilated area.

Stop engine and let muffler cool down.

⚠ WARNING

Never run engine in an enclosed area. Never perform this operation immediately after the engine has been running because exhaust system is very hot. Make sure that there are no combustible materials in the area. Wear eye protection and gloves. Never stand behind the vehicle while purging exhaust system. Respect all applicable laws and regulations.

Remove the muffler cleanout plug.

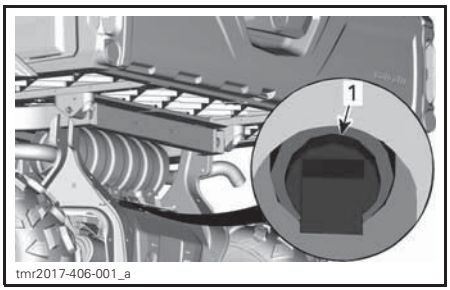

UNDERNEATH THE MUFFLER
1. Muffler cleanout plug

Start engine (shift lever in Park).

Block the end of the mufflers with a shop rag.

Quickly increase throttle several times.

Stop engine and let muffler cool down.

Reinstall the cleanout plug.

Muffler Spark Arrester Cleaning and Inspection (HD8)

⚠ CAUTION **Never perform this operation immediately after the engine has been running as exhaust system is very hot.**

Remove and discard the tail pipe retaining bolts and nuts.

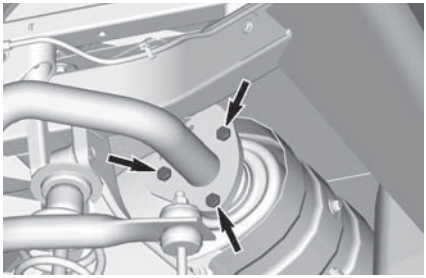

TAIL PIPE RETAINING BOLTS AND NUTS

Remove exhaust tail pipe, gasket (discard) and spark arrester.

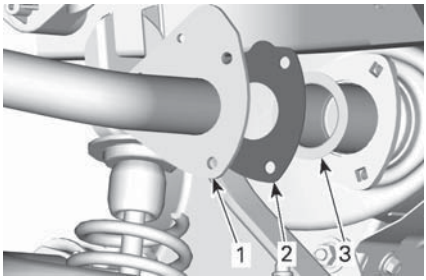

1. *Tailpipe*
2. *Gasket*
3. *Spark arrester*

Remove carbon deposits from the spark arrester using a brush.

NOTICE **Use a metallic soft brush and be careful to avoid damaging spark arrester mesh.**

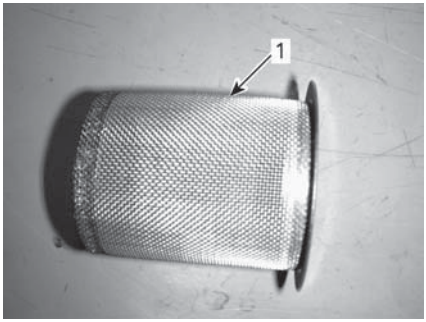

1. *Clean spark arrester*

Inspect mesh of spark arrester for any damage. Replace as required.

Inspect spark arrester chamber in muffler. Remove any debris as required.

Reinstall the muffler spark arrester in the reverse of the removal procedure. However pay attention to the following.

Install new gasket and fasteners. Tighten to specification.

TIGHTENING TORQUE	
Tailpipe retaining screws	31.5 N•m ± 3.5 N•m (23 lbf•ft ± 3 lbf•ft)

Muffler Spark Arrester Cleaning and Inspection (HD10)

⚠ CAUTION **Never perform this operation immediately after the engine has been running as exhaust system is very hot.**

Remove and discard the tail pipe retaining screws.

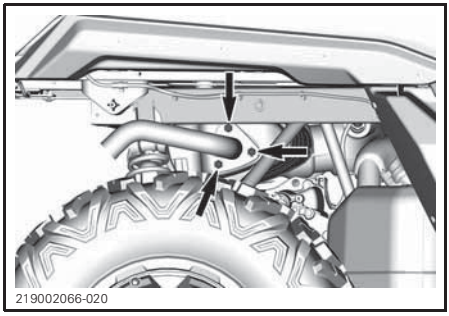

TAIL PIPE RETAINING SCREWS

Remove exhaust tail pipe, gasket (discard) and spark arrester.

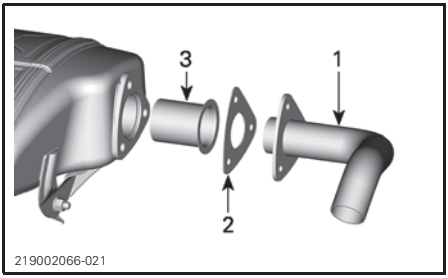

1. *Tailpipe*
2. *Gasket*
3. *Spark arrester*

Remove carbon deposits from the spark arrester using a brush.

NOTICE **Use a metallic soft brush and be careful to avoid damaging spark arrester mesh.**

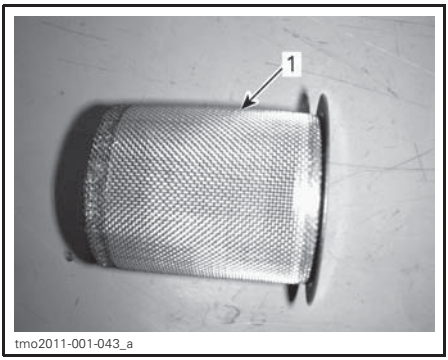

1. *Clean spark arrester*

Inspect mesh of spark arrester for any damage. Replace as required.

Inspect spark arrester chamber in muffler. Remove any debris as required.

Reinstall the muffler spark arrester in the reverse of the removal procedure. However pay attention to the following.

Install new gasket and fasteners. Tighten to specification.

TIGHTENING TORQUE	
Tailpipe retaining screw	31.5 N•m ± 3.5 N•m (23 lbf•ft ± 3 lbf•ft)

Gearbox Oil (HD8 and HD10)

Gearbox Oil Level Verification

Place the vehicle on a level surface. Select PARK position.

Check the gearbox oil level by removing the gearbox oil dipstick.

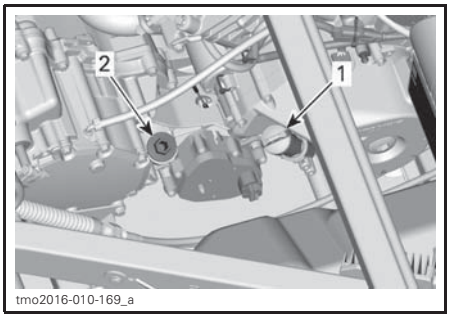

1. *Engine oil dipstick*
2. *Gearbox oil level plug*

Remove dipstick again and check oil level. It should be near or equal to the upper mark.

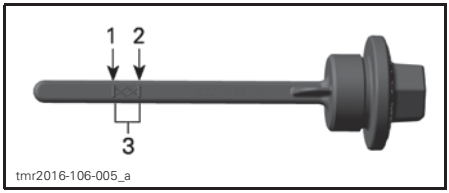

1. *MIN.*
2. *MAX.*
3. *Operating range*

To add oil, place a funnel into the dipstick hole.

Add a small amount of recommended oil and recheck oil level.

Repeat the above procedures until oil level reaches the dipstick's upper mark.

NOTICE **Operating the gearbox with an improper oil level may severely damage gearbox.**

NOTE: Do not overfill. Wipe off any spillage.

Properly tighten oil dipstick.

Recommended Gearbox Oil

The XPS oil is specially formulated to meet the lubrication requirements of this gearbox. BRP strongly recommends the use of its XPS oil

XPS RECOMMENDED GEARBOX OIL	
Scandinavia:	75W140 SYNTHETIC GEAR OIL (EUR) (P/N 779215)
Other Countries	75W140 SYNTHETIC GEAR OIL (P/N 779160)
IF THE RECOMMENDED XPS GEARBOX OIL IS NOT AVAILABLE	
Use a gearbox oil meeting or exceeding the following lubricant industry specifications. – 75W 140 API GL-5 synthetic gear oil	

NOTICE Do not use another type of oil when servicing.

Gearbox Oil Change

NOTE: When replacing the gearbox oil, it is recommended to clean the vehicle speed sensor (VSS) at the same time.

Place the vehicle on a level surface.

Clean drain plug area.

Clean the oil level plug area.

Under the vehicle, place a drain pan underneath the oil drain plug area.

Remove the oil level plug.

Remove the gearbox drain plug.

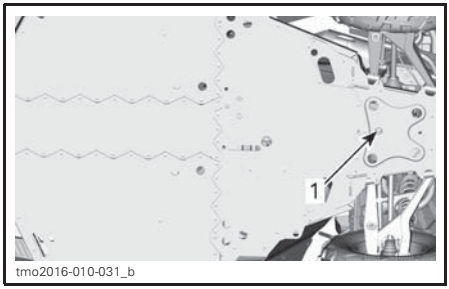

1. Oil drain plug

Let oil completely drain from gearbox.

Install the drain plug.

NOTE: Clean drain plug from any metallic particles prior to installation.

Refill gearbox.

NOTICE Use ONLY the recommended type of oil.

The oil should be level with the bottom of the oil level orifice.

NOTICE Do not overfill.

Reinstall oil level plug.

TIGHTENING TORQUE	
Gearbox drain plug	30 N•m ± 3 N•m (22 lbf•ft ± 2 lbf•ft)

Wipe off any spillage.

Rear Final Drive Oil (HD5)

Rear Final Drive Oil Level Verification

Place the vehicle on a level surface. Select PARK position.

Check the oil level by removing the filler plug.

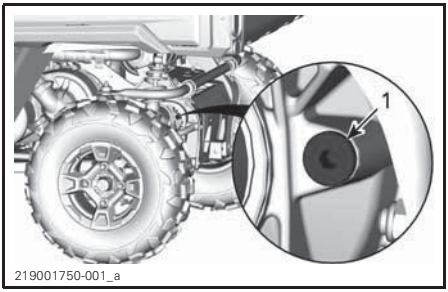

LH REAR SIDE OF VEHICLE
1. Filler plug

Insert a wire in the oil filler hole.

The oil level must be within the following specification.

OIL LEVEL
20 mm ± 5 mm (9/16 in ± 3/16 in) below the oil filler plug hole bottom edge

Reinstall filler plug with a NEW sealing ring.

TIGHTENING TORQUE	
Filler plug	22.5 N•m ± 2.5 N•m (17 lbf•ft ± 2 lbf•ft)

NOTICE **Operating the vehicle with an improper oil level may severely damage the rear final drive.**

Recommended Rear Final Drive Oil

The XPS oil is specially formulated to meet the lubrication requirements of this gearbox. BRP strongly recommends the use of its XPS oil.

XPS RECOMMENDED GEARBOX OIL	
Scandinavia:	75W90 SYNTHETIC GEAR OIL (EUR) (P/N 779212)
Other Countries	75W90 SYNTHETIC GEAR OIL (P/N 779158)

IF THE RECOMMENDED XPS GEARBOX OIL IS NOT AVAILABLE
Use a gearbox oil meeting or exceeding the following lubricant industry specifications. – **75W 90 API GL-5 synthetic gear oil**

NOTICE **Do not use another type of oil when servicing.**

Rear Final Drive Oil Change

Place the vehicle on a level surface.

Clean drain plug area.

Clean the filler plug area.

Under the vehicle, place a drain pan underneath the oil drain plug area.

Remove the filler plug.

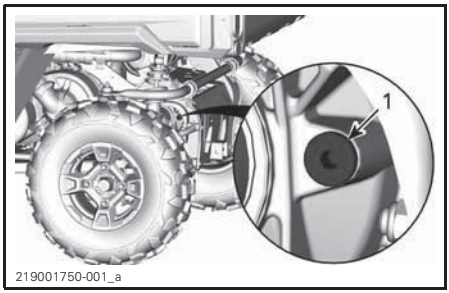

LH REAR SIDE OF VEHICLE
1. Filler plug

Remove the drain plug.

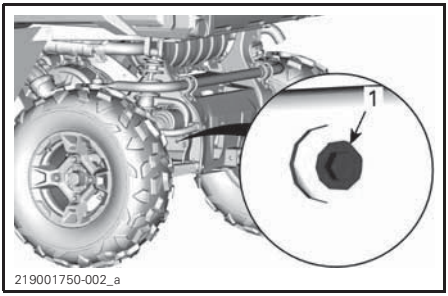

LH REAR SIDE OF VEHICLE
1. Drain plug

Allow oil to drain completely

Clean the drain plug.

Install the drain plug.

TIGHTENING TORQUE	
Drain plug	7.5 N•m ± 0.5 N•m (66 lbf•**in** ± 4 lbf•**in**)

Fill the final drive unit to the proper level, refer to *REAR FINAL DRIVE OIL LEVEL VERIFICATION*.

For the final drive oil capacity, refer to *SPECIFICATIONS*.

NOTICE Use ONLY the recommended type of oil.

NOTICE Do not overfill.

Reinstall the filler plug with a NEW sealing ring.

TIGHTENING TORQUE	
Filler plug	7.5 N•m ± 0.5 N•m (66 lbf•**in** ± 4 lbf•**in**)

Wipe off any spillage.

Differential Oil

Front Differential Oil Level Verification

Clean filler plug prior to checking oil level.

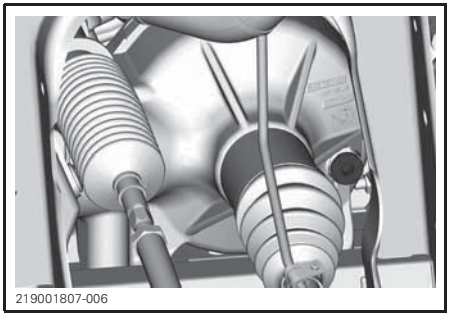

TYPICAL VISCO-LOC- FRONT RIGHT SIDE OF VEHICLE

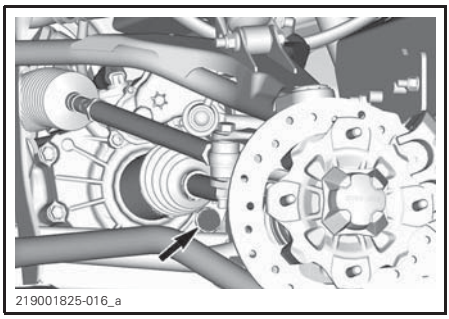

TYPICAL SMART-LOC- FRONT RIGHT SIDE OF VEHICLE

With vehicle on a level surface, check oil level by removing filler plug. Oil level must reach the lower edge.

Reinstall filler plug.

TIGHTENING TORQUE	
Filler plug	16.5 N•m ± 2.5 N•m (146 lbf•**in** ± 22 lbf•**in**)

Recommended Differential Oil

The XPS oil is specially formulated to meet the lubrication requirements of this gearbox. BRP strongly recommends the use of its XPS oil. However, if the XPS synthetic gear oil is not available, use the following lubricant:

XPS RECOMMENDED GEARBOX OIL	
Scandinavia:	75W90 SYNTHETIC GEAR OIL (EUR) (P/N 779212)
Other Countries	75W90 SYNTHETIC GEAR OIL (P/N 779158)
IF THE RECOMMENDED XPS GEARBOX OIL IS NOT AVAILABLE	
Use a gearbox oil meeting or exceeding the following lubricant industry specifications. – 75W 90 API GL-5 synthetic gear oil	

NOTICE Do not use another type of oil when servicing.

Differential Oil Change

Place vehicle on a level surface. Set gearbox in park position.

From underneath the vehicle, clean the drain plug area.

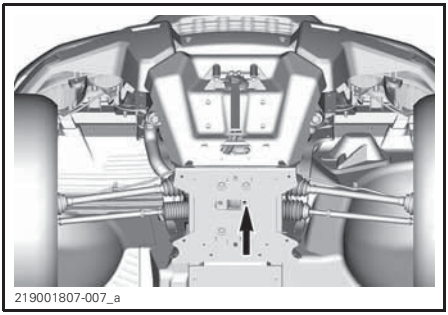

TYPICAL
1. Drain plug access hole

Place a drain pan under the front differential.

Remove drain plug.

Unscrew filler plug.

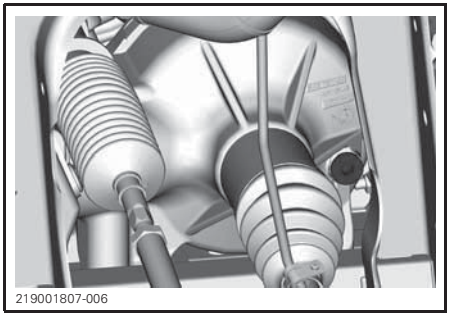

TYPICAL VISCO-LOC- FRONT RIGHT SIDE OF VEHICLE

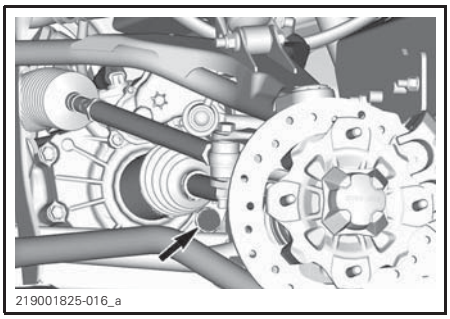

TYPICAL SMART-LOC- FRONT RIGHT SIDE OF VEHICLE

Install drain plug.

TIGHTENING TORQUE	
Drain plug	2.7 N•m ± 0.3 N•m (24 lbf•**in** ± 3 lbf•**in**)

Refill front differential with recommended oil.

For the differential oil capacity, refer to *SPECIFICATIONS*.

Reinstall filler plug.

TIGHTENING TORQUE	
Filler plug	16.5 N•m ± 2.5 N•m (146 lbf•**in** ± 22 lbf•**in**)

Spark Plugs

Spark Plug Removal

Open the cargo box.

Unplug spark plug cable.

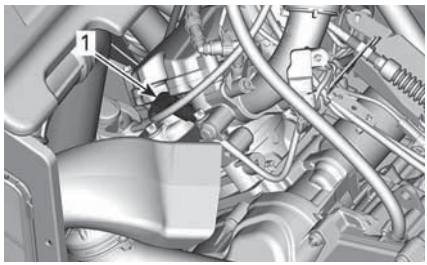

219001750-003_a

HD5
1. *Spark plug*

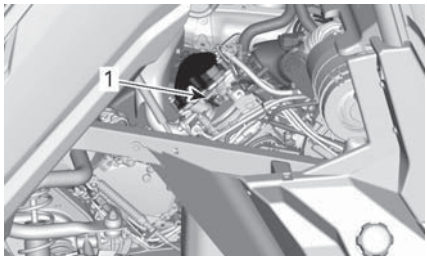

tmo2016-010-032_a

HD8 AND HD10 — REAR CYLINDER (ON THE RH SIDE)
1. *Spark plug*

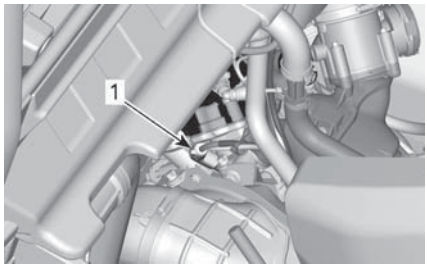

tmo2016-010-033_a

HD8 AND HD10 — FRONT CYLINDER (ON THE LH SIDE)
1. *Spark plug*

Clean spark plug and cylinder head with pressurized air.

⚠ CAUTION Always wear safety goggles when using pressurized air.

Unscrew spark plug completely using a spark plug socket, then remove it.

Spark Plug Installation

Prior to installation make sure that contact surface of cylinder head and spark plug is free of grime.

Using a feeler gauge, set the spark plug gap.

SPARK PLUG GAP	
HD5 HD8	0.7 mm - 0.9 mm (.028 in - .035 in)
HD10	0.8 mm - 0.9 mm (.031 in - .035 in)

Apply a small amount of copper-based anti-seize lubricant over spark plug threads.

Screw spark plug into cylinder heads by hand and tighten with a torque wrench and a proper socket.

⚠ CAUTION Do not overtighten spark plugs, engine damage can occur.

TIGHTENING TORQUE	
Spark plug (HD8)	20 N•m ± 2.4 N•m (15 lbf•ft ± 2 lbf•ft)
Spark plug (HD5 and HD10)	11 N•m ± 1 N•m (97 lbf•**in** ± 9 lbf•**in**)

CVT Cover

NOTE: For a better understanding, some illustrations are taken with engine out of vehicle. To perform the following instructions, it is not necessary to remove engine.

This CVT is lubrication free. Never lubricate any components except drive pulley bearing.

⚠ WARNING

Never touch CVT while engine is running. Never drive vehicle when CVT cover is removed.

⚠ WARNING

Engine must be cool before cover is removed. Always wear protective gloves when removing cover.

Place the vehicle on a level surface. Select PARK position.

CVT Cover Access (All Models)

Tilt cargo box.

Remove LH rear deflector by removing the plastic rivets.

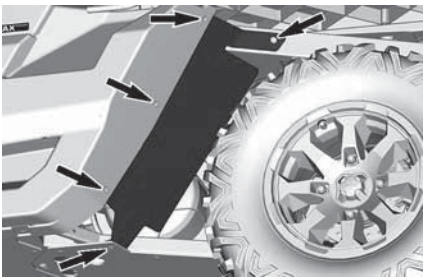

219002066-022

CVT Cover Removal

HD8 and HD10 Models

Remove all CVT cover retaining screws.

NOTE: Remove the center top screw last to support the cover during removal.

NOTE: Do not use an impact tool to remove CVT cover screws.

Remove the CVT cover and its gasket.

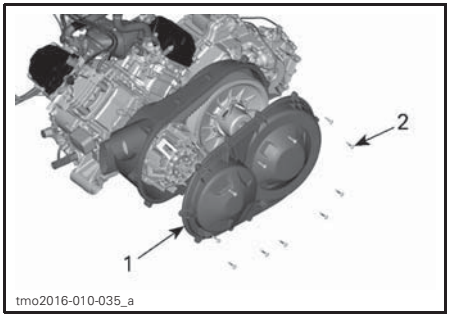

tmo2016-010-035_a

HD8
1. *CVT cover*
2. *CVT cover screws*

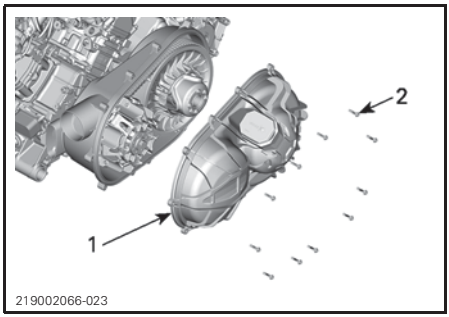

219002066-023

HD10
1. *CVT cover*
2. *CVT cover screws*

HD5 Models

Disconnect CVT cooling ducts.

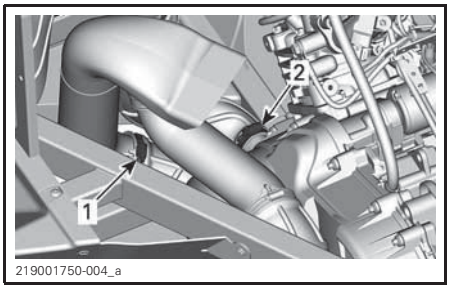

219001750-004_a

1. *Outlet duct clamp*
2. *Front inlet duct clamp*

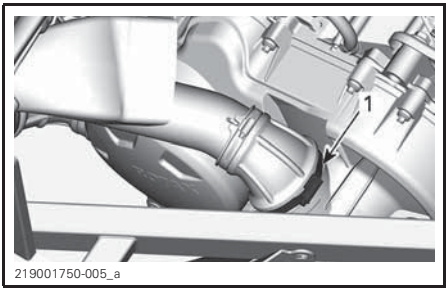

1. Rear inlet duct clamp

Remove all CVT cover retaining screws.

NOTE: Remove the center top screw last to support the cover during removal.

NOTE: Do not use and impact tool to remove CVT cover screws.

Remove the CVT cover and its gasket.

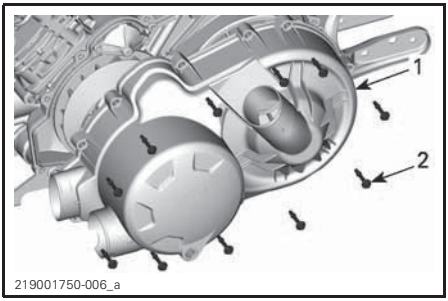

1. CVT cover
2. CVT cover

CVT Cover Installation (All Models)

Install the center top screw of first.

Tighten the CVT cover screws as per following sequence.

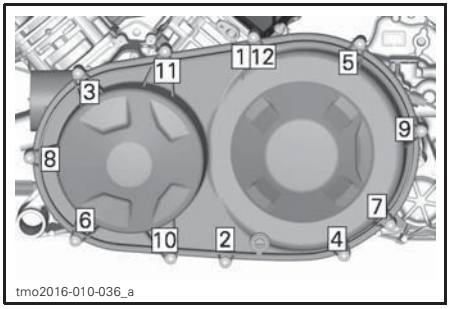

HD8 CVT COVER TIGHTENING SEQUENCE

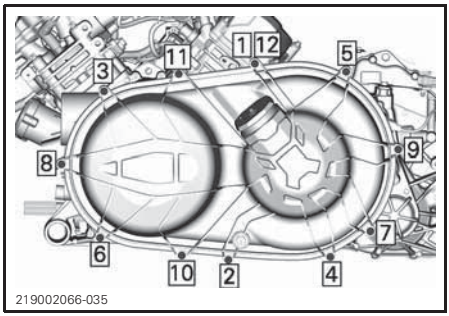

HD10 CVT COVER TIGHTENING SEQUENCE

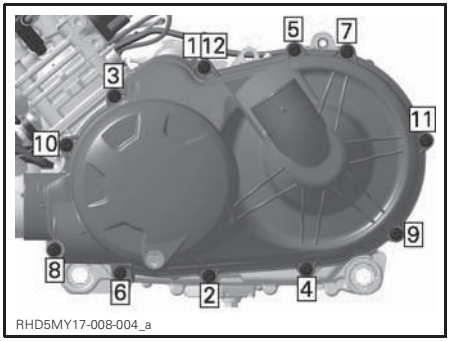

HD5 - CVT COVER TIGHTENING SEQUENCE

TIGHTENING TORQUE	
CVT cover screws	7 N•m ± 0.8 N•m (62 lbf•**in** ± 7 lbf•**in**)

On HD5 models, reinstall the CVT cooling ducts.

Drive Belt

Drive Belt Removal (HD8 and HD10)

NOTICE **In case of a drive belt failure, the CVT, cover and air outlet must be cleaned.**

Please refer to *TIPS FOR MAXIMIZING DRIVE BELT DURABILITY* in *BASIC PROCEDURES* section for some IMPORTANT information.

Remove *CVT COVER*.

Open driven pulley.

REQUIRED TOOLS	
PULLER/LOCKING TOOL (P/N 529 000 088)	
DRIVEN PULLEY ADAPTER (P/N 708 200 720)	

Insert adaptor in threaded hole of driven pulley then screw tool in the threaded hole of adaptor and tighten to open the pulley.

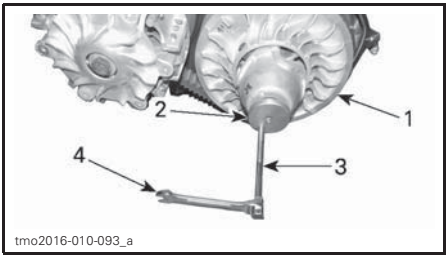

TYPICAL
1. *Fixed sheave of driven pulley*
2. *Adaptor*
3. *Driven pulley extractor*
4. *Wrench*

To remove belt, slip the belt over the top edge of fixed sheave, as shown.

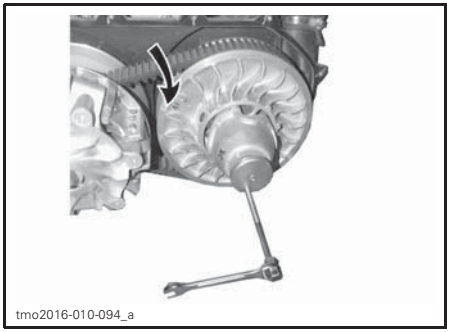

TYPICAL

Drive Belt Removal (HD5)

NOTICE **In case of a drive belt failure, the CVT, cover and air outlet must be cleaned.**

Please refer to *TIPS FOR MAXIMIZING DRIVE BELT DURABILITY* in *BASIC PROCEDURES* section for some IMPORTANT information.

Remove *CVT COVER*.

Open driven pulley.

REQUIRED TOOL	
PULLER/LOCKING TOOL (P/N 529 036 098)	

Screw tool in the threaded hole of driven pulley and tighten to open the pulley.

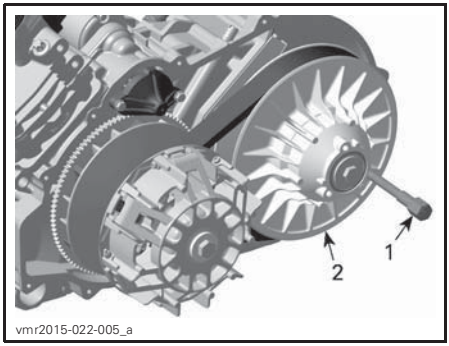

1. *Puller/locking tool*
2. *Fixed sheave of driven pulley*

To remove belt, slip the belt over the top edge of fixed sheave, as shown.

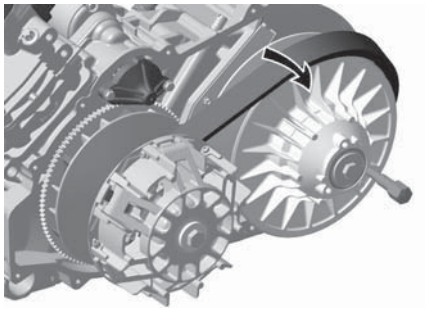

vmr2015-022-006_a

Drive Belt Installation (HD8 and HD10)

For installation, reverse the removal procedure. Pay attention to following details.

The maximum drive belt life span is obtained when the drive belt has the proper rotation direction. Install it so that the arrow printed on belt is pointing towards front of the vehicle, viewed from top.

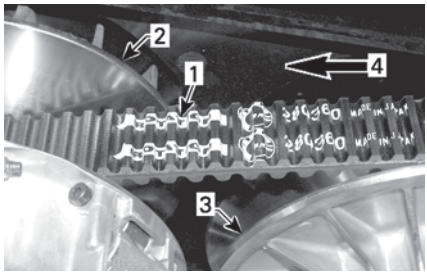

vmr2007-051-006_a

1. *Arrow printed on belt*
2. *Drive pulley (front)*
3. *Driven pulley (rear)*
4. *Rotation direction*

NOTE: Turn the driven pulley until the lowest portion of the cogs on the external surface of drive belt is even with the driven pulley edge.

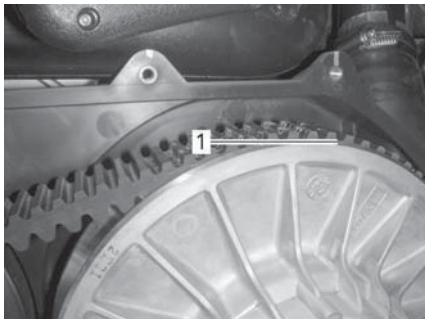

tmo2013-003-060_a

1. *Lowest portion of cogs even with external surface of drive belt*

Drive Belt Installation (HD5)

For installation, reverse the removal procedure. Pay attention to following details.

The maximum drive belt life span is obtained when the drive belt has the proper rotation direction. Install it so that the arrow printed on belt is pointing towards the back of the vehicle, viewed from top.

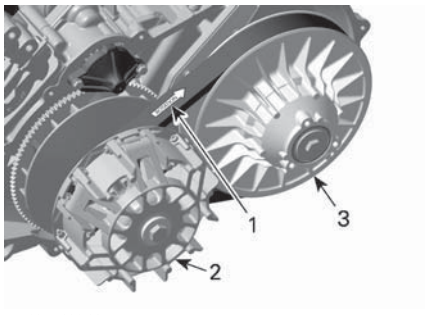

vmr2015-022-007_a

1. *Arrow towards the back of the vehicle*
2. *Drive pulley (front)*
3. *Driven pulley (rear)*

NOTE: Turn the driven pulley until the external surface of drive belt is even with the driven pulley edge.

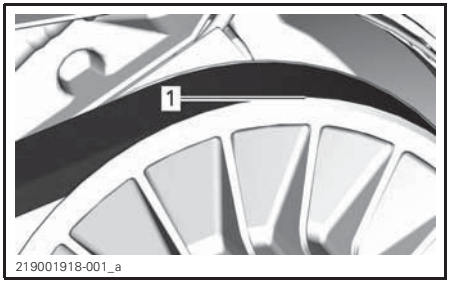

1. *External surface of drive belt*

Drive and Driven Pulleys

Drive and Driven Pulleys Inspection

This inspection must be performed by an authorized Can-Am dealer, repair shop, or person of your own choosing for maintenance, repair, or replacement.

Drive Pulley

Inspect the bushings of the sliding sheave of the drive pulley, replace worn parts.

Driven Pulley

Inspect the bushings of the cam and of the sliding sheave of the driven pulley, replace worn parts.

Battery

Battery Maintenance

NOTICE **Never charge a battery while installed in vehicle.**

These vehicles are equipped with a VRLA battery (Valve Regulated Lead Acid). It is a maintenance-free type battery, there is no need to add water to adjust electrolyte level.

NOTICE **Never remove the battery sealing cap.**

Battery Removal

Remove under seat storage compartment if equipped.

Remove battery cover by unscrewing the two 1/4 turn fasteners.

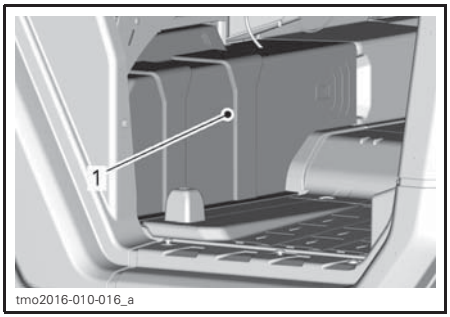

1. *Battery cover*

Disconnect BLACK (-) cable first then RED (+) cable.

NOTICE **Always respect this order for disassembly; disconnect BLACK (-) cable first.**

Remove battery holder retaining screw(s).

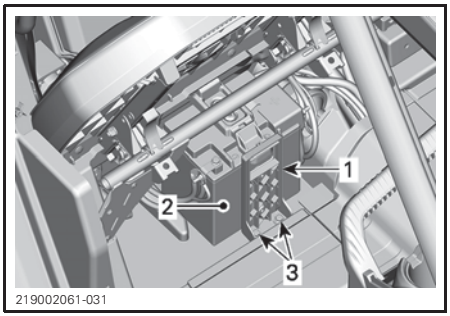

1. *Battery holder*
2. *Battery*
3. *Battery holder retaining screw(s)*

Remove battery holder.

Remove battery.

Battery Cleaning

Clean battery, battery casing and battery posts using a solution of baking soda and water.

Remove corrosion from battery cable terminals and battery posts using a firm wire brush. Battery casing should be cleaned by soft brush and baking soda solution.

Battery Installation

Battery installation is the reverse of the removal procedure.

NOTICE **Improper orientation of the battery cables (reverse polarity) will result in damage to the voltage regulator.**

CAUTION **Always connect RED (+) cable first then BLACK (-) cable.**

Fuses and Fusible Links

Fuse Replacement

If a fuse is burnt, replace it by one of the same rating.

NOTICE **Do not use a higher rated fuse as this can cause severe damage.**

Fuse Box Location

The vehicle is equipped with multiple fuse boxes. Several are located inside the front service center and another one under the right passenger seat, near the battery.

Two fuse links inside the electric harness complete the system protection.

An additional 50A fuse to protect the voltage regulator is located near the battery.

To open front service cover, pull on front edges of service cover to unlock mechanism

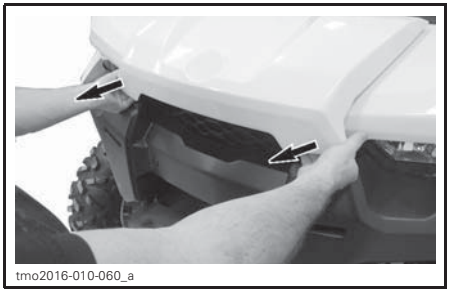

PULLING ON FRONT SERVICE COVER EDGE.

Lift service cover.

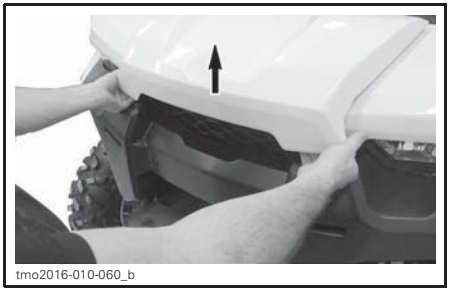

LIFTING FRONT SERVICE COVER EDGE.

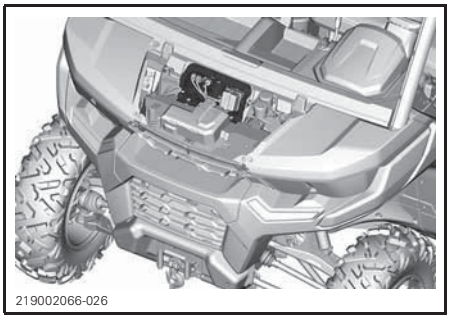

FUSE BOX SUPPORT

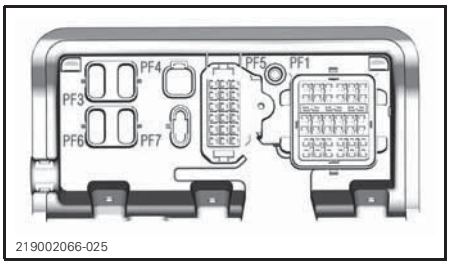

FUSE BOX SUPPORT

Remove the battery cover to access the rear secondary fuse box.

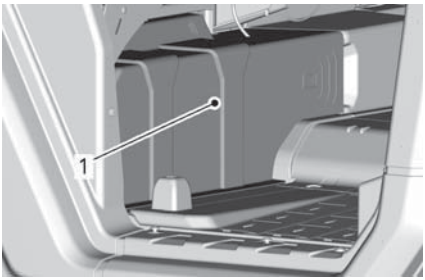

tmo2016-010-016_a

1. Battery cover

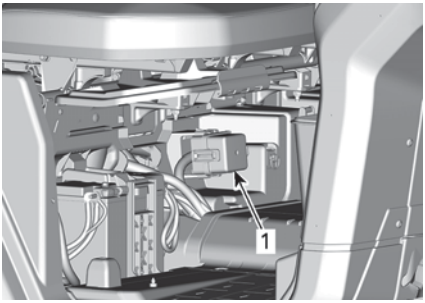

219002062-016

1. Rear secondary fuse box

Fuse Box Description

Fuses are identified inside each fuse box cover.

Inside the front storage center, the fuse box number is molded in the support.

INSIDE FRONT SERVICE CENTER		
NO	DESCRIPTION	RATING
PF1	Master fuse box	-
PF3	DPS	40 A
PF4	Accessories	40 A
PF5	Air Conditioning (if equipped)	-
PF7	Smart-Lok™ (if equipped)	20 A

MASTER FUSE BOX (INSIDE FRONT STORAGE CENTER)		
NO	DESCRIPTION	RATING
F10	T vehicle	10 A
F11	Headlamps	20 A
F12	DC1/DC3/12V accessory outlet 1	10 A
F14	12 V Accessory outlet 2	10 A
F16	Tail lamps	10 A
R3	ECM/Accessory 12V	-
R8	Brake lights	-
R9	Accessory post 12V/outlet 2	-
Spare 1	Spare	20 A

SECONDARY FUSE BOX (UNDER PASSENGER SEAT)		
NO	DESCRIPTION	RATING
F4	Cluster/relays	10 A
F5	Ignition/injection/fuel pump	10 A
F6	Engine Control Module (ECM)	10 A
F7	4WD actuator	10 A
F8	Ignition switch Clock	10 A
F9	Cooling fan	25 A
F18	Oxygen sensor Emission control	10 A
R1	Cooling fan	-
R2	Main	-
R10	Air conditioning	-

SECONDARY FUSE BOX (UNDER PASSENGER SEAT)		
NO	DESCRIPTION	RATING
Spare 1	Spare	10 A
Spare 2	Spare	10 A
Spare 3	Spare	10 A

FUSE BOX #5 (INSIDE FRONT STORAGE CENTER)		
NO	DESCRIPTION	RATING
F1	Fan speed relays	20 A
F3	Air conditioning relay	5 A
RLS	Fan speed relay - low	-
RMS	Fan speed relay - medium	-
RHS	Fan speed relay - high	-

FUSE LINKS		
FUSE LINK	DESCRIPTION	RATING
1	Main	18 awg
2	Accessory post	14 awg

REGULATOR FUSE		
NO	DESCRIPTION	RATING
-	Regulator	50 A

Lights

Headlight Bulb Replacement

NOTICE Never touch glass portion of a halogen bulb with bare fingers, it shortens its operating life. If glass is touched, clean it with isopropyl alcohol which will not leave a film on the bulb.

Unplug connector from bulb.

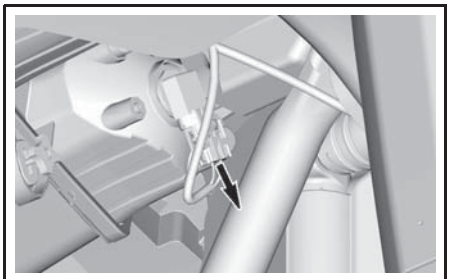
tmo2016-010-041_a

TYPICAL

Rotate bulb.

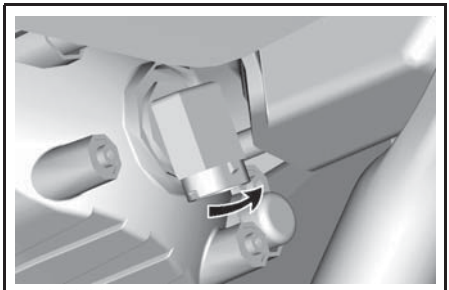
tmo2016-010-042_a

TYPICAL

Pull out bulb.

Properly reinstall removed parts in the reverse order of their removal.

Validate headlights operation.

Headlight Beam Aiming

Turn adjustment screw to adjust beam height to your convenience.

NOTE: Adjust headlights evenly.

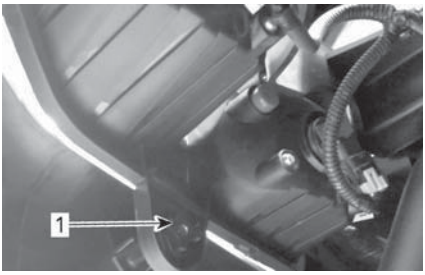

1. Adjustment screw

Taillight Bulbs Replacement

The taillights are built with LEDs (light emitting diode) and this technology proved to be reliable. In the unlikely event they do not work, have them checked by an authorized Can-Am dealer, a repair shop or person of your choosing.

Drive Shaft Bellows and Protector

Drive Shaft Bellows and Protector Inspection

Visually inspect drive shaft protectors and bellows condition.

Check protectors for damage or rubbing against shafts.

Check bellows for cracks, tears, leaking grease, etc.

Repair or replace damaged parts as necessary.

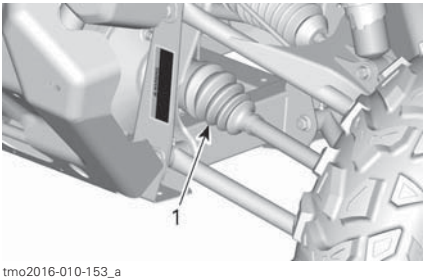

FRONT OF VEHICLE
1. Inner drive shaft bellows

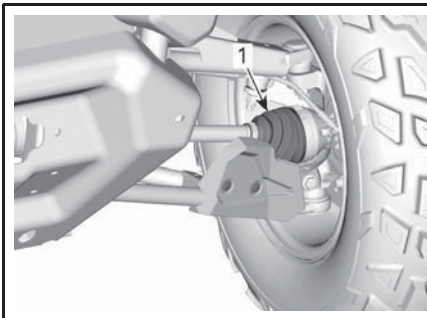

FRONT OF VEHICLE
1. Outer drive shaft bellows

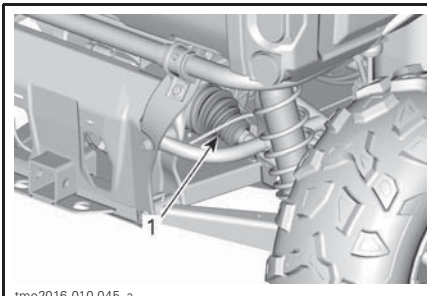

REAR OF VEHICLE
1. Inner drive shaft bellows

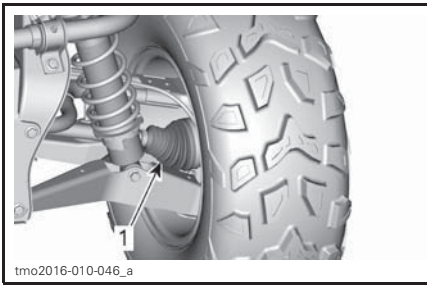

REAR OF VEHICLE
1. Outer drive shaft bellows

Propeller Shaft Bellows (HD5)

Visually inspect the propeller shaft bellows for cracks, tears, leaking grease, etc.

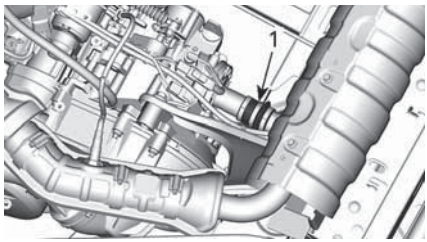

1. Propeller shaft bellows

Replace if damaged.

Wheel Bearing

Wheel Bearing Inspection

Lift and support vehicle. Refer to *LIFTING AND SUPPORTING THE VEHICLE*.

Push and pull the wheels from the upper edge to feel the play.

See an authorized Can-Am dealer, a repair shop or person of your choosing if there is an excessive play.

TYPICAL

Wheels and Tires

Wheel Removal

Loosen nuts then lift and support vehicle. Refer to *LIFTING AND SUPPORTING VEHICLE*.

Remove nuts then remove wheel.

Wheel Installation

Inspect studs and nuts. Replace if needed.

The tires are unidirectional and their rotation must be kept in a specific direction for proper operation.

Tighten wheel lug nuts in accordance with the following illustration.

TIGHTENING TORQUE	
Wheel lug nuts	100 N•m ± 10 N•m (74 lbf•ft ± 7 lbf•ft)

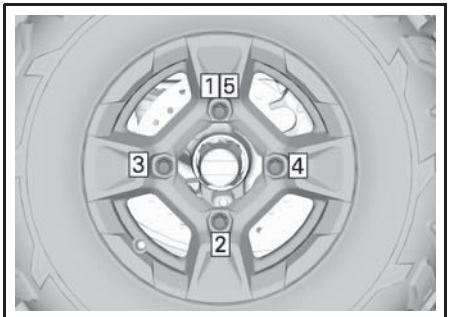

TIGHTENING SEQUENCE

NOTICE Always use the recommended wheel nuts for the type of wheel. Using a different nut could cause damages to the rim or studs.

Tire Pressure

⚠ WARNING

Tire pressure greatly affects vehicle handling and stability. Insufficient pressure may cause tire to deflate and rotate on wheel. Overpressure may burst the tire. Always follow recommended pressure. NEVER set tire pressure below minimum. It could cause the tire to dislodge from the rim.

Check pressure when tires are **cold** before using the vehicle. Tire pressure changes with temperature and altitude. Recheck pressure if one of these conditions has changed.

Refer to *SPECIFICATIONS* for proper tire pressure.

NOTE: Although the tires are specifically designed for off-road use, a flat may still occur. Therefore, it is recommended to carry a tire gauge, tire pump and a repair kit.

Tire Inspection

Check tire for damage and wear. Replace if necessary.

⚠ WARNING

Do not rotate tires. The front and rear tires have a different size. The left and right tires have different unidirectional tread patterns.

Tire Replacement

Tires replacement should be performed by an authorized Can-Am dealer, a repair shop or person of your choosing.

⚠ WARNING

- **Replace tires only with the same type and size as original tires.**
- **For unidirectional tread pattern, ensure that the tires are installed in the correct direction of rotation.**
- **Tires should be replaced, by an experienced person, in accordance with tire industry standards and tools.**

Suspensions

Front Suspension Lubrication

SUSPENSION GREASE	
Scandinavia	SYNTHETIC SUSPENSION GREASE (EUR) (P/N 779226)
All other countries	SYNTHETIC SUSPENSION GREASE (P/N 779163)

Lubricate front arms and stabilizer bar bushings (if equipped).

There are two grease fittings on each arm oriented upwards.

There is one grease fitting on each stabilizer bar pivot bushing.

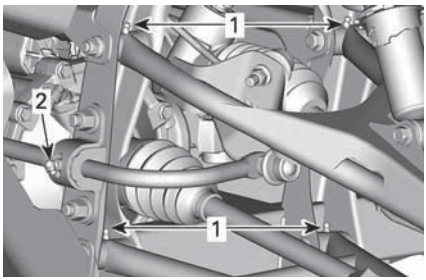

TYPICAL - FRONT SUSPENSION
1. *A-arm grease fittings*
2. *Stabilizer bar bushings grease fittings (if equipped)*

Rear Suspension Lubrication

SUSPENSION GREASE	
Scandinavia	SYNTHETIC SUSPENSION GREASE (EUR) (P/N 779226)
All other countries	SYNTHETIC SUSPENSION GREASE (P/N 779163)

Lubricate rear suspension arms (two grease fittings on each arm), rear knuckles (three grease fittings) and rear stabilizer bar bushing.

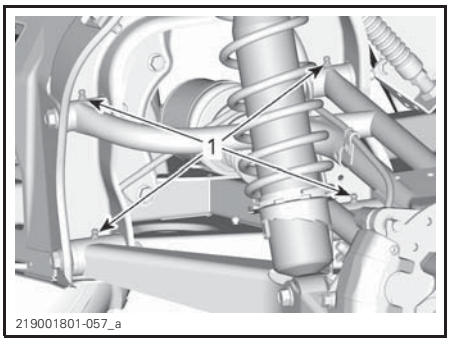

TYPICAL
1. *Rear suspension arm grease fittings*

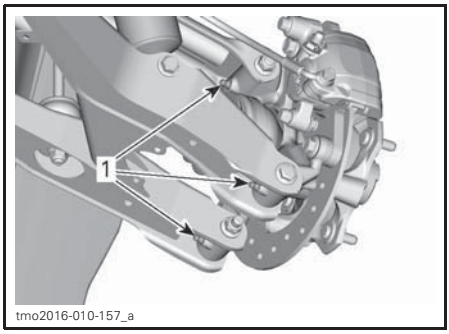

TYPICAL
1. *Rear knuckle grease fittings*

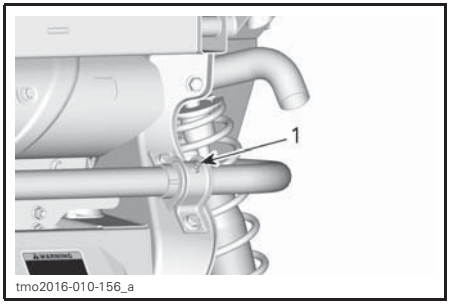

TYPICAL
1. *Rear stabilizer bar bushing grease fitting*

Suspension Inspection

See an authorized Can-Am dealer, a repair shop or person of your choosing if any problem is detected.

Shock Absorbers

Inspect shock absorber for leaks, bump stop wear out or other damages. Verify fasteners are still well tightened.

Front Suspension Arms

Check suspension arms for cracks, bending or other damages.

Rear Suspension Arms

Check suspension arms for distortion, cracks or bending.

Brakes

Brake Fluid Reservoir Level Verification

With vehicle on a level surface, check brake fluid in reservoir for proper level. Brake fluid level should be between MIN. and MAX. marks.

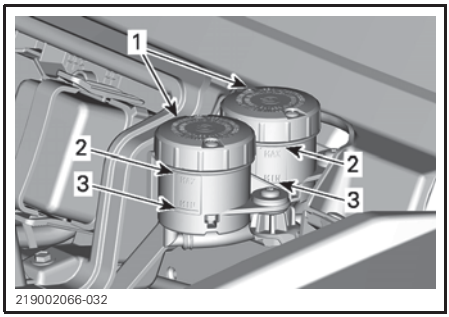

1. *Brake fluid reservoirs*
2. *MAX*
3. *MIN*

NOTE: A low level may indicate leaks or worn brake pads.

Adding Brake Fluid

Clean filler cap before removing.

Add fluid as required. **Do not overfill.**

NOTE: Ensure filler cap diaphragm is pushed inside the cap before closing the brake fluid reservoir.

Recommended Brake Fluid

Always use brake fluid meeting the specification DOT 4 only.

⚠ WARNING

To avoid serious damage to the braking system, do not use fluids other than the recommended one, nor mix different fluids for topping up.

Brake Inspection

The brake inspection, maintenance and repair should be performed by an authorized Can-Am dealer, a repair shop or person of your choosing.

However, verify the following between visits to your dealer:

- Brake fluid level
- Brake system for fluid leaks
- Brake pad wear
- Brake cleanliness.

⚠ WARNING

The brake fluid replacement or brake system maintenance and repairs should be performed by an authorized Can-Am dealer.

Seat Belts

Seat Belt Cleaning

To clean dirt and debris from the seat belts, sponge the straps with mild soap and water. Do not use bleach, dye, or household detergents.

⚠ WARNING

Do not use pressure washer to clean seat belt components. Use of pressure washer can permanently damage seat belt components.

Cage

Cage Fasteners

Tighten cage fasteners to specification periodically.

Remove trim to get access to the fasteners.

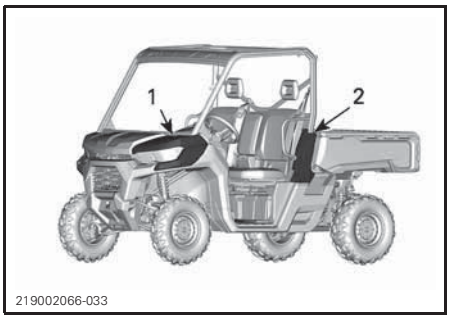

TYPICAL
1. *Front fender*
2. *Side cage cover*

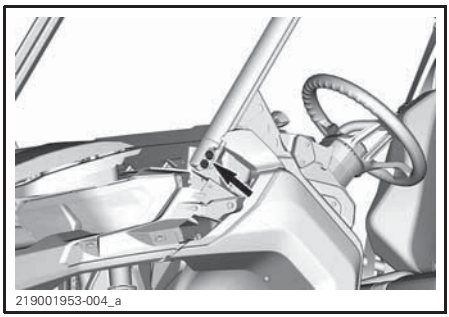

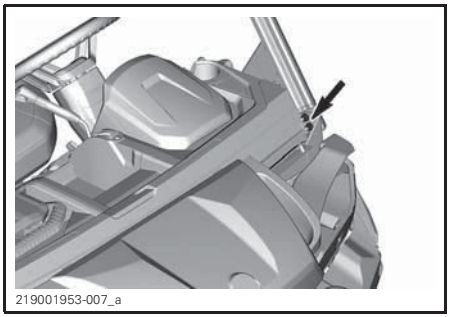

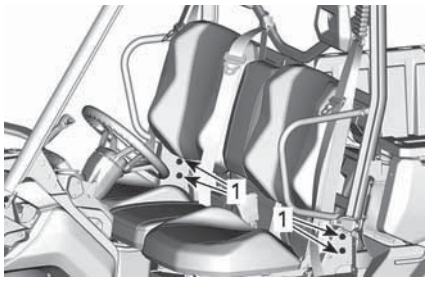

219001953-005_a

1. *Lower cage fasteners*

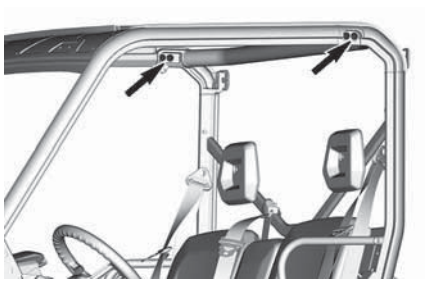
219002066-028

TIGHTENING TORQUE	
Cage fasteners	67.5 N•m ± 2.5 N•m (50 lbf•ft ± 2 lbf•ft)

Post-Operation Care

When vehicle is used in salt-water environment rinsing the vehicle with fresh water is necessary to preserve vehicle and its components. Metallic parts lubrication is highly recommended. Use lub. and anti-corrosive or an equivalent. This must be performed at the end of each operating day.

SERVICE PRODUCT
LUBRICANT AND ANTI-CORROSIVE (P/N 779168)

When vehicle is operated in muddy conditions, rinsing the vehicle is recommended to preserve vehicle and its components.

Vehicle Cleaning and Protection

NOTICE **Pay attention when cleaning the inside of the vehicle, the climate control module installed in the Limited models is not waterproof nor water resistant.**

Never use a high pressure washer to clean the vehicle. **USE LOW PRESSURE ONLY (like a garden hose).** High pressure can cause damage to electrical or mechanical components.

Pay attention to certain areas where mud or debris can accumulate and potentially cause wear, interferences or promote corrosion. The list includes but is not limited to:

- Around exhaust system and between muffler and muffler cover
- Under and around the fuel tank
- Radiator
- Shock absorbers
- Around front and rear differentials
- Around and underneath engine and gearbox
- Inside wheels
- On top of skid plates.

Painted parts which are damaged should be properly repainted to prevent rust.

When required, wash the body with warm water and soap (only use mild detergent). Apply non-abrasive wax.

NOTICE **Never clean plastic parts with strong detergent, degreasing agent, paint thinner, acetone, etc.**

STORAGE AND PRESEASON PREPARATION

When a vehicle is not in use for more than 4 months, proper storage is a necessity.

If the vehicle is to be dormant for more than 21 days, disconnect the BLACK (-) cable of the battery.

Using electrical accessories increases the risk of discharging the battery. Using a low amperage trickle charger is advised when low engine speeds and/or high electrical demand accessories are installed on a vehicle.

When using your vehicle after storage, a preparation is required.

See an authorized Can-Am dealer, repair shop, or person of your own choosing to have your vehicle prepared for either storage or the preseason.

This page is intentionally blank

TECHNICAL INFORMATION

VEHICLE IDENTIFICATION

The main components of your vehicle (engine and frame) are identified by different serial numbers. It may sometimes become necessary to locate these numbers for warranty purposes or to trace your vehicle in the event of loss. These numbers are required by the authorized Can-Am dealer to complete warranty claims properly. We strongly recommend that you take note of all the serial numbers on your vehicle and supply them to your insurance company.

Vehicle Identification Number

EN-704908165-DEC

TYPICAL - VIN LABEL

219002067-013

TYPICAL - VIN LABEL LOCATION

Engine Identification Number

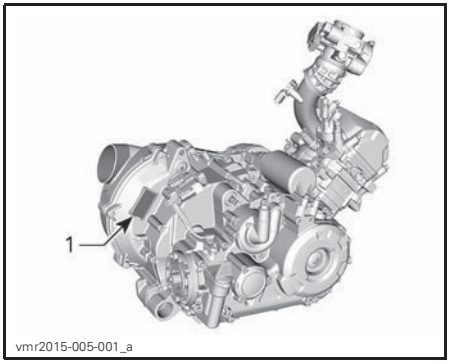

vmr2015-005-001_a

TYPICAL HD5 — ENGINE SERIAL NUMBER LABEL

1. *EIN (Engine Identification Number)*

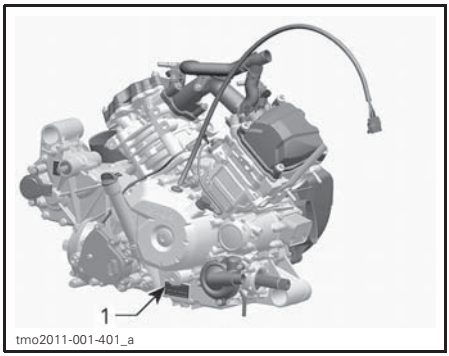

tmo2011-001-401_a

TYPICAL HD8 AND HD10 — ENGINE SERIAL NUMBER LABEL

1. *EIN (Engine Identification Number)*

Compliance Label

Regulation (EU) 2016/1628 applicable for Non-Road Mobile Machineries

Vehicles who comply to Regulation (EU) 2016/1628 (NRMM) are identified on the engine valve cover as well as on the vehicle, near the VIN label.

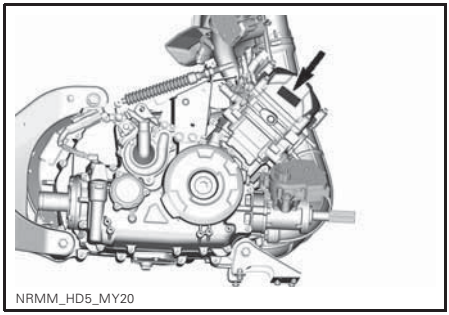

TYPICAL - HD5

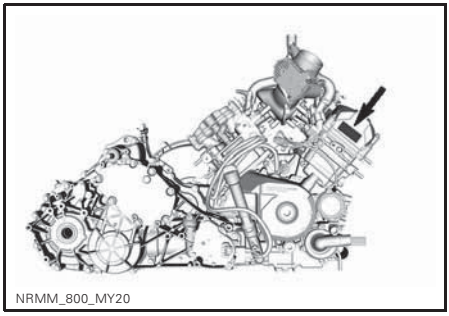

TYPICAL - HD8 AND HD10

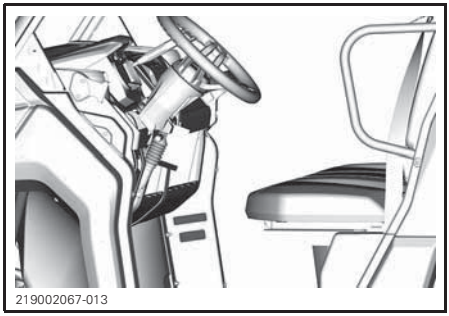

TYPICAL - NRMM LABEL NEAR VIN

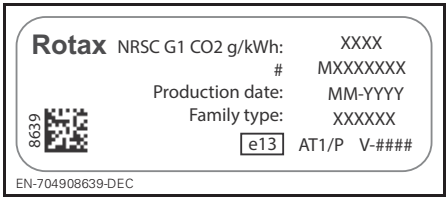

TYPICAL - NRMM IDENTIFICATION LABEL

NOTE: Tampering with the engine or its components voids the EU type-approval of that particular engine.

EVAPORATIVE EMISSION CONTROL SYSTEM

California Models with Evaporative Emission Control System

Beginning with the 2018 model-year vehicles, some California models are certified to meet the CARB (California Air Resources Board) TP-933. These models are equipped with an evaporative emission control system consisting of a low permeation fuel tank (LPFT), low permeation fuel lines (LPFL) and an actively purged carbon canister.

The following statement is required by the CCR (California Code of Regulation): An add-on or modified part must be compliant with applicable ARB evaporative emission control standards. A violation of this requirement is punishable by civil and/or criminal punishment.

NOISE EMISSION CONTROL SYSTEM REGULATION

USA and Canada Only

Tampering with Noise Control System Is Prohibited!

U.S. Federal law and Canadian provincial laws may prohibit the following acts or the causing there of:

1. The removal or rendering inoperative by any person other than for purposes of maintenance, repair or replacement of any device or element of design incorporated into any new vehicle for the purpose of noise control prior to its sale or delivery to the ultimate purchaser or while it is in use or
2. The use of the vehicle after such device or element of design has been removed or rendered inoperative by any person.

Among those Acts Presumed to Constitute Tampering Are the Acts Listed Below:

1. Removal or alteration or the puncturing of the muffler or any engine component which conducts removal of engine exhaust gases.
2. Removal or alteration or the puncturing of any part of the intake system.
3. Replacing any moving parts of the vehicle or parts of the exhaust or intake system, with parts other than those specified by the manufacturer.
4. Lack of proper maintenance.

565 de la Montagne Street
Valcourt (Québec) J0E 2L0
Canada

www.brp.com

BRP ADVENTURE BY DESIGN

EU Declaration of Conformity

Authorized Representative: BRP Europe N.V., Skaldenstraat 125, Gent, Belgium, 9042

This declaration of conformity is issued under the sole responsibility of the manufacturer.

The undersigned, representing the manufacturer, hereby declares that model year **2021 Side by Side Vehicles** marked with the CE mark and a 17-character vehicle identification number (VIN) structured as **3JBxxxxxxMxxxxxxx** under commercial names **Can-Am Traxter**, **Can-Am Maverick Sport** and **Can-Am Maverick** comply with all the relevant provisions of the following Directives and Regulations:

Machinery Directive 2006/42/EC as amended up to and including Reg. 2019/1243/EU	ISO 12100:2010 & EN 16990:2020
Non-Road Mobile Machinery (NRMM) Regulation (EU) 2016/1628 on gaseous pollutants	Category ATS, Stage V emission limits
Electromagnetic Compatibility (EMC) Directive 2014/30/EU as amended up to and including Reg. (EU) 2018/1139	CISPR 12:2007/A1:2009 & IEC 61000-6-1:2005 or UN R10.04 or later version
Battery Directive 2006/66/EC as amended up to and including Dir. (EU) 2018/849	
Radio Equipment (RED) Directive 2014/53/EU as amended up to and including Reg. 2018/1139 (If fitted with radio frequency (RF) D.E.S.S. key)	EN 300 330-2 & EN 60950-1

2020/03/19

Luc Bouchard, Eng.
Director, Product Development, Can-Am SSV
Bombardier Recreational Products Inc.

Valcourt, QC, Canada

March 19th, 2020

ski-doo LYNX SEA-DOO EVINRUDE ROTAX can-am

DOC_SSV_MY21-EN 16990

EAC DECLARATION OF CONFORMITY

Left blank for Eurasian Conformity mark where applicable

SPECIFICATIONS

ENGINE		
Engine type	HD5	ROTAX® 450, 4-stroke, Single Over Head Camshaft (SOHC), liquid cooled
	HD8	ROTAX 810, 4-stroke, 2 cylinders (V-twin), liquid cooled
	HD10	ROTAX 1010, 4-stroke, 2 cylinders (V-twin), liquid cooled
Number of cylinders	HD5	1
	HD8/HD10	2
Number of valves	HD5	4 valves (mechanical adjustment)
	HD8/HD10	8 valves (mechanical adjustment)
Valve clearance	Intake	0.06 mm to 0.14 mm (.0024 in to .0055 in)
	Exhaust	0.11 mm to 0.19 mm (.0043 in to .0075 in)
Bore	HD5	94 mm (3.7 in)
	HD8/HD10	91 mm (3.58 in)
Stroke	HD5/HD8	61.5 mm (2.42 in)
	HD10	75 mm (2.95 in)
Displacement	HD5	426.8 cm^3 (26.04 in^3)
	HD8	800 cm^3 (48.82 in^3)
	HD10	976 cm^3 (59.56 in^3)
Exhaust system		Spark arrester approved by USDA Forest Service Catalyst on HD10 and NRMM models
Engine air filter		Synthetic paper filter

LUBRICATION SYSTEM	
Type	Wet sump. Replaceable oil filter
Oil filter	BRP Rotax paper type, replaceable

LUBRICATION SYSTEM			
Engine oil	Capacity (oil change with filter)	HD5	3 L (3. qt (U.S. liq.)) (engine/gearbox)
		HD8/HD10	2 L (2.1 qt (U.S. liq.))
	Recommended		4T 10W50 synthetic oil, or 4T 5W40 synthetic blend oil, or 4T 0W40 synthetic oil
	Alternate oil if XPS products are not available		5W40 or 10W50 motor oil that meets the requirements for API service classification SJ, SL, SM or SN

COOLING SYSTEM			
Coolant	Recommended		XPS extended life pre-mixed coolant
	Alternate coolant if XPS products are not available		Coolant specifically designed for aluminum engines, or Ethyl glycol/water mix (50% coolant, 50% water)
	Capacity	HD5	5.5 L (1.5 U.S. gal.)
		Limited DPS CAB	6.9 L (1.82 U.S. gal.)
		All other models	6 L (1.59 U.S. gal.)

TRANSMISSION		
Type		CVT (Continuously Variable Transmission)
Engagement	HD5	1850 RPM
	HD8/HD10	2000 RPM

GEARBOX			
Type			Dual range (HI-LO) with PARK, neutral and reverse
Gearbox oil	Capacity	HD8/HD10	1.5 L (.396 U.S. gal.)
	Recommended		XPS 75W140 Synthetic gear oil
	Alternate gearbox oil if XPS products are not available		75W140 Synthetic gear oil (API GL-5)

REAR FINAL DRIVE			
Type		HD5	Straight bevel gear Shaft driven final drive
Rear final drive oil	Capacity		250 ml (8.45 U.S. oz)
	Recommended		75W90 Synthetic gear oil
	Alternate gearbox oil if XPS products are not available		75W90 Synthetic gear oil (API GL-5)

ELECTRICAL SYSTEM			
Magneto generator output		HD5	500 W @ 6000 RPM
		Limited	850 W @ 6000 RPM
		All other models	650 W @ 6000 RPM
Ignition system type			Inductive Discharge Ignition (IDI)
Spark plug	Quantity	HD5	1
		HD8/HD10	2
	Make and type	HD5	NGK LMAR8D-J or equivalent
		HD8	NGK DCPR8E or equivalent
		HD10	NGK LMAR8C-9 or equivalent
	Gap	HD5 HD8	0.7 mm to 0.9 mm (.028 in to .035 in)
		HD10	0.8 mm to 0.9 mm (.031 in to .035 in)

ELECTRICAL SYSTEM			
Battery	Type		SLA (Sealed Lead Acid)
	Voltage		12 volts
	Nominal rating	Base DPS	18 A•h
		All other models	30 A•h
	Power starter output		0.7 KW
Headlights			4 x 35 H 8
Taillight			2.3/3.5 W
Fuses			Refer to *FUSES AND FUSIBLE LINKS* in *MAINTENANCE*

FUEL SYSTEM			
Fuel delivery	Type		Electronic fuel injection (EFI) with iTC
Throttle body		HD5	46 mm with ETA
		HD8/HD10	54 mm with ETA
Fuel pump	Type		Electric (in fuel tank)
Idle speed			1250 ± 100 RPM (not adjustable)
Fuel	Type		Regular unleaded gasoline - Refer to *FUEL REQUIREMENTS*
	Minimum octane		87 Pump Posted AKI I (R+M)/2) (92 RON)
Fuel tank capacity			40. L (10.6 U.S. gal.)
Fuel remaining when low fuel light turns ON			± 8.5 L (2.2 U.S. gal.)

DRIVE SYSTEM		
Drive system type		Selectable 2WD/4WD
Front differential oil	Capacity	400 ml (14 U.S. oz)
	Recommended	75W90 Synthetic gear oil
	Alternate if XPS products are not available	75W90 Synthetic gear oil (API GL-5)

DRIVE SYSTEM		
Front drive	Base	Spiral bevel gear Visco-lok† auto-locking front differential
	All other models	Spiral bevel gear Visco-lok† QE auto-locking front differential
Front drive ratio		3.6:1
Rear drive	Base HD5	Angle drive (spool gear)
	All other models	Lockable differential
Rear drive ratio	HD5	3.6:1
	HD8/HD10	3.43:1
CV joint grease		CV JOINT GREASE (P/N 293 550 062) or equivalent
Spline's propeller shaft grease (grease applied to spline connections)		PROPELLER SHAFT GREASE (P/N 293 550 063) or equivalent

STEERING	
Steering wheel	Adjustable tilt steering

FRONT SUSPENSION		
Suspension type	Limited DPS CAB	Double arched suspension arms with stabilizer bar
	HD5 All other HD8	Double suspension arms
	All other HD10	Double arched suspension arms
Preload adjustment type		5 positions cam

FRONT SUSPENSION			
Suspension travel		All HD10 except CAB models	279 mm (11 in)
		All other models	254 mm (10 in)
Shock absorber	Qty		2
	Type		Gas charged/5 spring preload settings

REAR SUSPENSION			
Suspension type		HD5 HD8 except DPS CAB	Torsional Trailing arms (TTA) with stabilizer bar
		All other models	Arched Torsional Trailing arms (TTA) with stabilizer bar
Preload adjustment type			5 positions cam
Suspension travel		All HD10 except Limited	279 mm (11 in)
		All other models	254 mm (10 in)
Shock absorber	Qty		2
	Type		Gas charged/5 spring preload settings

BRAKES			
Front brake	Type		Dual 220 mm ventilated disc brakes with hydraulic twin-piston calipers
Rear brake	Type	HD5	Single 220 mm ventilated disc brake with hydraulic twin-piston caliper
		HD8/HD10	Dual 220 mm ventilated disc brake with hydraulic single-piston calipers
Brake fluid	Capacity		Approximately 310 ml (10.5 U.S. oz)
	Type		DOT 4

BRAKES		
Caliper		Floating
Brake pad material	Front/rear	Metallic/Metallic
Minimum brake pad thickness		0.5 mm (.02 in)
Minimum brake disc thickness	Front/Rear	4 mm (.157 in)
Maximum brake disc warpage		0.2 mm (.01 in)

TIRES			
Pressure	Front	CAB models	124 kPa (18 PSI)
		All other models	97 kPa (14 PSI)
	Rear	Machinery Directive 2006/42/EC compliant models (unloaded)	124 kPa (18 PSI)
		Machinery Directive 2006/42/EC compliant models (loaded)	228 kPa (33 PSI)
		CAB models	124 kPa (18 PSI)
		All other models	124 kPa (18 PSI)
Minimum tire thread depth			3 mm (.118 in)
Tire size	Front	HD5	25x8-12 (in) (205/80-12)
		Base HD8	27x9R12 (in) (230/85R12)
		All other models	27x9R14 (240/70R14)
	Rear	HD5	25x10-12 (in) (255/65-12)
		Base HD8	27x11R12 (in) (280/70R12)
		All other models	27x11R14 (280/60R14)

WHEELS			
Type		Base models	Steel
		All other models	Cast Aluminum
Rim size	Front	HD5 Base HD8	12 x 6 (in)
		All other models	14 x 7 (in)
	Rear	Base models	12 x 8 (in)
		HD5 DPS	12 x 7.5 (in)
		All other models	14 x 8.5 (in)
Wheel offset	Front		41.2 mm (1.6 in)
	Rear		51 mm (2 in)
Wheel lug nuts torque			100 N•m ± 10 N•m (74 lbf•ft ± 7 lbf•ft)

CHASSIS	
Cage type	Profiled tube section, high strength steel, ROPS-approved cage

DIMENSIONS		
Overall length	Base DPS DPS CAB XU	307.1 cm (121 in)
	Limited	320 cm (126 in)
	XT	319.4 cm (125.7 in)

DIMENSIONS			
Overall width		Base DPS HD5 DPS HD8 XU XT HD8	157.5 cm (62 in)
		DPS HD10 XT HD10	162.5 cm (64 in)
		DPS CAB Limited	165.1 cm (65 in)
Overall height		Base DPS HD5 DPS HD8 XU	193 cm (76 in)
		DPS HD10 XT HD8	198.1 cm (78 in)
		Limited DPS CAB	200.6 cm (79 in)
		XT HD10	203.2 cm (80 in)
Wheelbase			211.5 cm (83 in)
Wheel track	Front	HD5 HD8 except DPS CAB	130 cm (51 in)
		Limited DPS CAB	147.3 cm (58 in)
		All other models	136.3 cm (53.7 in)
	Rear	HD5 HD8 except DPS CAB	126 cm (49.5 in)
		Limited DPS CAB	142.3 cm (56 in)
		All other models	130.4 cm (51.3 in)

DIMENSIONS		
Ground clearance	HD5	26.7 cm (10.5 in)
	HD8 except DPS CAB	28 cm (11 in)
	HD10 except Limited	33 cm (13 in)
	Limited DPS CAB	30.5 cm (12 in)

WEIGHT		
Dry weight	Base HD5	592 kg (1,305.1 lb)
	Base HD8	662 kg (1,459.5 lb)
	DPS HD5	600 kg (1,322.8 lb)
	DPS HD8	690 kg (1,521.2 lb)
	DPS HD10	697 kg (1,536.6 lb)
	Limited	874.5 kg (1,928 lb)
	XU	717 kg (1,580 lb)
	XT HD8	719 kg (1,585.1 lb)
	XT HD10	726 kg (1,600.6 lb)
	DPS CAB HD8	816 kg (1,799 lb)
Weight distribution (front/rear)	HD5 XT	44/56
	Base HD8 DPS HD8 DPS HD10	42/58
	Limited	47/53

WEIGHT		
Gross vehicle weight rating	Base HD5	1 170 kg (2,579.4 lb)
	Base HD8	1 375.6 kg (3,032.7 lb)
	DPS HD5	1 178.2 kg (2,597.5 lb)
	DPS HD8	1 403.4 kg (3,094 lb)
	DPS HD10	1 410.7 kg (3,110.1 lb)
	XU	1 430.7 kg (3,154.2 lb)
	XT HD8	1 433.2 kg (3,159.7 lb)
	XT HD10	1 440.4 kg (3,175.5 lb)
	DPS CAB HD8	1 424 kg (3,139.4 lb)
	Limited	1 429 kg (3,150.4 lb)

LOADING CAPACITY		
Cargo box capacity	California models	272 kg (600 lb)
	HD5 except California	272 kg (600 lb)
	HD8/HD10 except California	454 kg (1,000 lb)
Total vehicle load allowed (including driver, passengers, all other loads and added accessories)	California models	545 kg (1,200 lb)
	HD5 Limited DPS CAB (except California)	545 kg (1,200 lb)
	All other models HD8/HD10 (except California)	680 kg (1,500 lb)
Towing capacity	HD5	680 kg (1,500 lb)
	HD8/HD10	1 134 kg (2,500 lb)

LOADING CAPACITY		
Tongue capacity	HD5	68 kg (150 lb)
	HD8/HD10	114 kg (250 lb)
Hitch type		50.8 mm (2 in) hitch receiver
Winch capacity		2 041.2 kg (4,500 lb)

Machinery Directive 2006/42/EC Compliant Models

MODEL		HD8	HD10
NOISE EMISSION AND VIBRATION VALUES[1]			
Noise	Sound pressure level (L_{pA})	83 dB (A) (Uncertainty (K_{pa}) 3 dB)	82 dB (A) (Uncertainty (K_{pa}) 3 dB)
	Sound power level (L_{WA})	97 dB (A) (Uncertainty (K_{wa}) 3 dB)	96 dB (A) (Uncertainty (K_{wa}) 3 dB)
Vibration	Hand-arm system	Less than 2.5 m/s^2	Less than 2.5 m/s^2
	Whole body at seat	Less than 0.5 m/s^2	Less than 0.5 m/s^2

[1]: Noise emission and Vibration values are measured in accordance with Machinery Directive 2006/42/EC on a paved surface, at neutral or without belt.

This page is intentionally blank

TROUBLESHOOTING

TROUBLESHOOTING GUIDELINES

CVT BELT IS SLIPPING

1. Water has entered in the CVT.
   – *Refer to SPECIAL PROCEDURES.*

"--" IS DISPLAYED ON GEARBOX POSITION DISPLAY (MULTIFUNCTION GAUGE)

1. Shift lever is between 2 positions.
   – *Properly position the shift lever in the desired position.*
2. Shift lever is not properly adjusted.
   – *Contact an authorized Can-Am dealer.*
3. Electrical communication error.
   – *Contact an authorized Can-Am dealer.*

ENGINE DOES NOT TURN

1. Ignition switch is in the OFF position.
   – *Place switch to ON position.*
2. Shift lever is not set on PARK or NEUTRAL.
   – *Set shift lever to either in PARK or in NEUTRAL or press the brake pedal.*
3. Burnt fuse.
   – *Check fuses.*
4. Weak battery or loose connections.
   – *Check charging system fuse.*
   – *Check fault message in cluster.*
   – *Check battery connections and terminals condition.*
   – *Have the battery checked by an authorized Can-Am dealer.*
5. Defective starter solenoid.
   – *Contact an authorized Can-Am dealer.*

ENGINE TURNS OVER BUT FAILS TO START

1. **Flooded engine (spark plug wet when removed).**
   – *(If the engine does not start and it is fuel-flooded, the drowned mode can be activated to prevent fuel injection and to cut ignition while cranking. Proceed as follows:*
   • Insert key in ignition switch and turn to ON position.
   • Press completely and HOLD accelerator pedal.
   • Turn key to START position.
   The engine should be cranked for 10 seconds. Release engine START position.
   Release accelerator pedal and start/crank engine again to allow starting.
   If it does not work:
   • Remove the spark plugs. Refer to SPARK PLUGS in the MAINTENANCE PROCEDURES section.
   • Crank engine several times.
   • Install new spark plugs if possible or clean and dry spark plugs.
   • If engine does not start, seek service from an authorized Can-Am dealer, repair shop, or person of your own choosing for maintenance, repair, or replacement. Please refer to the US EPA EMISSION-RELATED WARRANTY contained herein for information about warranty claims.

2. **No fuel to the engine (spark plug dry when removed).**
   – *Check fuel tank level.*
   – *Check fuel pump fuse.*
   – *Obstructed fuel pump pre-filter or fuel pump failure. Seek service from an authorized Can-Am dealer, repair shop, or person of your own choosing for maintenance, repair, or replacement. Please refer to the US EPA EMISSION-RELATED WARRANTY contained herein for information about warranty claims.*

3. **Spark plug/ignition (no spark).**
   – *Check ignition fuse.*
   – *Remove spark plug then reconnect to ignition coil.*
   – *Start engine with spark plug grounded to the engine away from spark plug hole. If no spark appears, replace spark plug.*
   – *If trouble persists, seek service from an authorized Can-Am dealer, repair shop, or person of your own choosing for maintenance, repair, or replacement. Please refer to the US EPA EMISSION-RELATED WARRANTY contained herein for information about warranty claims.*

ENGINE LACKS ACCELERATION OR POWER

1. **Seat belt not buckled properly. Check cluster message.**
   – *Buckle up seat belt.*

2. **Fouled or damaged spark plug.**
   – *Replace spark plugs.*

3. **Engine air filter plugged or dirty.**
   – *Check air filter and replace if necessary.*
   – *Check deposits in engine air filter housing.*

ENGINE LACKS ACCELERATION OR POWER (cont'd)

4. Water in CVT
   – *Drain water from CVT. Refer to SPECIAL PROCEDURES.*
5. CVT dirty or worn-out.
   – *Contact an authorized Can-Am dealer.*
6. Lack of fuel
   – *Dirty or clogged fuel pump pre-filter. Seek service from an authorized Can-Am dealer, repair shop, or person of your own choosing for maintenance, repair, or replacement. Please refer to the US EPA EMISSION-RELATED WARRANTY contained herein for information about warranty claims.*
7. Engine is in limp home mode.
   – *Check multifunction gauge display for messages.*
   – *Multifunction gauge CHECK ENGINE indicator lamp is on and display shows LIMP HOME, seek service from an authorized Can-Am dealer, repair shop, or person of your own choosing for maintenance, repair, or replacement. Please refer to the US EPA EMISSION-RELATED WARRANTY contained herein for information about warranty claims.*

ENGINE OVERHEATS

1. Low coolant level in cooling system.
   – *Check coolant level and refill. See MAINTENANCE PROCEDURES. Seek service from an authorized Can-Am dealer, repair shop, or person of your own choosing for maintenance, repair, or replacement. Please refer to the US EPA EMISSION-RELATED WARRANTY contained herein for information about warranty claims*
2. Cooling fan is not working.
   – *Ensure cooling fan is not jammed and working properly.*
   – *Check fan fuse. See FUSES AND FUSIBLE LINKS in MAINTENANCE PROCEDURES.*
3. Dirty radiators fins.
   – *Check and clean radiator fins. See MAINTENANCE PROCEDURES.*

ENGINE MISFIRE

1. Fouled/damaged/worn spark plug.
   – *Replace spark plugs as required.*
2. Water in fuel.
   – *Drain fuel system and refill with fresh fuel.*

THE RPM INCREASES BUT THE VEHICLE DOES NOT MOVE

1. Water in the CVT.
   – *Drain water from CVT. See SPECIAL PROCEDURES.*
2. CVT dirty or worn-out or belt failure.
   – *Contact an authorized Can-Am dealer.*

PARTIAL OR NO RESPONSE FROM THE ACCELERATOR PEDAL INPUTS (CHECK ENGINE IS ON AND PPS FAULT MESSAGE IS DISPLAYED)

1. Partial failure of the accelerator pedal sensors (PPS).
   – *Contact an authorized Can-Am dealer.*
2. Total failure of the accelerator pedal sensors (PPS).
   – *Contact an authorized Can-Am dealer.*

MESSAGES IN MULTIFUNCTION GAUGE

If an abnormal engine condition occurs, the following messages can be combined with a pilot lamp.

MESSAGE	DESCRIPTION
D.E.S.S. KEY NOT RECOGNIZED	**Optional D.E.S.S. key installed**: D.E.S.S. key requires cleaning.
BAD KEY	**Optional D.E.S.S. key installed**:Wrong key used in the ignition switch. Use the right key for the vehicle.
CHECK ENGINE	All active or previously activated faults that require attention. No engine limitation engaged.
LIMP HOME	Critical faults requiring diagnostic as soon as possible. An engine limitation is engaged and/or the engine behavior is modified.
ECM CRC ERROR	Error message from ECM.
TPS FAULT	Throttle body fault, generally followed by a Limp Home message.
BRAKE SWITCH FAULT	Brake signal fault.
ECM NOT RECOGNIZED	Message displayed when the gauge is unable to identify the ECM.
CHECK DPS (models with DPS)	Check engine pilot light on. Indicates that the DPS (Dynamic Power Steering) does not work properly. See an authorized Can-Am dealer.
PPS FAULT	Faulty Pedal Position Sensor(s) (PPS). Refer to *OVERRIDE SWITCH* in *SECONDARY CONTROLS* to drive the vehicle in the limp home mode.
MANUAL LIMP HOME	Confirms the Manual Limp Home is engaged using the Override Switch in case of a PPS fault.
FUEL SENDER RANGE PERFORMANCE	When the fuel sender resistor value is out of range the multifunction gauge (analog/digital) will detect it and display the message.

WARRANTY

BRP LIMITED WARRANTY USA AND CANADA: 2021 CAN-AM® SSV

1) SCOPE OF THE LIMITED WARRANTY

Bombardier Recreational Products Inc. (“BRP”)* warrants its 2021 Can-Am side-by-side vehicles (“SSV”) sold by authorized Can-Am SSV dealers (as hereinafter defined) in the United States of America (“USA”) and in Canada from defects in material or workmanship for the period and under the conditions described below. This limited warranty will become null and void if: (1) the SSV was used for racing or any other competitive activity, at any point, even by a previous owner; or (2) the SSV has been altered or modified in such a way so as to adversely affect its operation, performance or durability, or has been altered or modified to change its intended use.

Non-factory installed parts and accessories are not covered under this limited warranty. Please refer to the applicable parts and accessories limited warranty text.

2) LIMITATIONS OF LIABILITY

THIS WARRANTY IS EXPRESSLY GIVEN AND ACCEPTED IN LIEU OF ANY AND ALL OTHER WARRANTIES, EXPRESSED OR IMPLIED, INCLUDING WITHOUT LIMITATION ANY WARRANTY OF MERCHANTABILITY OR FITNESS FOR A PARTICULAR PURPOSE. TO THE EXTENT THAT THEY CANNOT BE DISCLAIMED, THE IMPLIED WARRANTIES ARE LIMITED IN DURATION TO THE LIFE OF THE EXPRESS WARRANTY. INCIDENTAL AND CONSEQUENTIAL DAMAGES ARE EXCLUDED FROM COVERAGE UNDER THIS WARRANTY. SOME STATES/ PROVINCES DO NOT ALLOW FOR THE DISCLAIMERS, LIMITATIONS AND EXCLUSIONS IDENTIFIED ABOVE, AS A RESULT, THEY MAY NOT APPLY TO YOU. THIS WARRANTY GIVES YOU SPECIFIC RIGHTS, AND YOU MAY ALSO HAVE OTHER LEGAL RIGHTS WHICH MAY VARY FROM STATE TO STATE, OR PROVINCE TO PROVINCE.

Neither the distributor, any BRP dealer nor any other person has been authorized to make any affirmation, representation or warranty regarding the product, other than those contained in this limited warranty, and if made, shall not be enforceable against BRP. BRP reserves the right to modify this limited warranty at any time, being understood that such modification will not alter the warranty conditions applicable to the products sold while this warranty is in effect.

3) EXCLUSIONS – ARE NOT WARRANTED

The following are not warranted under any circumstances:

- Normal wear and tear;
- Routine maintenance items, tune ups, adjustments;
- Damage caused by failure to provide proper maintenance and/or storage, as described in the Operator's Guide;
- Damage resulting from removal of parts, improper repairs, service, maintenance, modifications or use of parts not manufactured or approved by BRP or resulting from repairs done by a person that is not an authorized servicing Can-Am SSV dealer;
- Damage caused by abuse, abnormal use, neglect or operation of the product in a manner inconsistent with the recommended operation described in the Can-Am SSV Operator’s Guide;

– Damage resulting from accident, submersion, fire, theft, vandalism or any act of God;
– Operation with fuels, oils or lubricants which are not suitable for use with the product (see the Operator's Guide);
– Damages from rust, corrosion or exposure to the elements;
– Damage resulting from water or snow ingestion;
– Incidental or consequential damages, or damages of any kind including without limitation towing, storage, telephone, rental, taxi, inconvenience, insurance coverage, loan payments, loss of time, loss of income.

4) WARRANTY COVERAGE PERIOD

This limited warranty will be in effect from (1) the date of delivery to the first retail consumer or (2) the date the product is first put into use, whichever occurs first and for the following period:
– TWELVE (12) CONSECUTIVE MONTHS, for private use, commercial use or governmental use owners.
– For emission-related components; please also refer to the *US EPA EMISSION-RELATED WARRANTY* contained herein
– For evaporative emission-related components of California models equipped with evaporative emission control system produced by BRP for sale in the State of California that are originally sold to a resident or subsequently warranty registered to a resident in the State of California, please also refer to the *CALIFORNIA EVAPORATIVE EMISSIONS CONTROL WARRANTY STATEMENT* contained herein.

The repair or replacement of parts or the performance of service under this warranty does not extend the life of this warranty beyond its original expiration date.

5) CONDITIONS TO HAVE WARRANTY COVERAGE

This warranty coverage is available **only** if **each** of the following conditions has been fulfilled:
– The 2021 Can-Am SSV must be purchased as new and unused by its first owner from a Can-Am SSV dealer authorized to distribute Can-Am SSV's in the country in which the sale occurred ("Can-Am SSV dealer");
– The BRP specified pre-delivery inspection process must be completed and documented and signed by the purchaser;
– The 2021 Can-Am SSV must have undergone proper registration by an authorized Can-Am SSV dealer;
– The 2021 Can-Am SSV must be purchased in the country in which the purchaser resides;
– Routine maintenance outlined in the Operator's Guide must be timely performed in order to maintain warranty coverage. BRP reserves the right to make warranty coverage contingent upon proof of proper maintenance.

BRP will not honor this limited warranty to any private use owner or commercial use owner if one of the preceding conditions has not been met. Such limitations are necessary in order to allow BRP to preserve both the safety of its products, and also that of its consumers and the general public.

6) WHAT TO DO TO OBTAIN WARRANTY COVERAGE

The customer must cease using the SSV upon the appearance of an anomaly. The customer must notify a servicing BRP dealer within three (3) days of the appearance of a defect, and provide it with reasonable access to the product and reasonable opportunity to repair it. The customer must also present to the authorized BRP dealer, proof of purchase of the product and must sign the repair/work order prior to starting the repair in order to validate the warranty repair. All parts replaced under this limited warranty become the property of BRP.

7) WHAT BRP WILL DO

BRP’s obligations under this warranty are limited to, at its sole discretion, repairing parts found defective under normal use, maintenance and service, or replacing such parts with new genuine Can-Am SSV parts without charge for parts and labor, at any authorized BRP dealer during the warranty coverage period under the conditions described herein. BRP's responsibility is limited to making the required repairs or replacements of parts. No claim of breach of warranty shall be cause for cancellation or rescission of the sale of the SSV to the owner.

In the event that service is required outside of the country of original sale, the owner will bear responsibility for any additional charges due to local practices and conditions, such as, but not limited to, freight, insurance, taxes, license fees, import duties, and any and all other financial charges, including those levied by governments, states, territories and their respective agencies.

BRP reserves the right to improve or modify products from time to time without assuming any obligation to modify products previously manufactured.

8) ADDITIONAL SUPPLIER WARRANTIES

A GPS receiver may be supplied by BRP as standard equipment on certain 2021 Can-Am SSV. The GPS receiver is covered under BRP’s limited warranty policy. Additional warranty coverage if offered by the GPS receiver “supplier” that is longer than BRP's limited warranty is to be dealt by the dealer or consumer directly with the GPS receiver “supplier”.

9) TRANSFER

If the ownership of a product is transferred during the warranty coverage period, this limited warranty, subject to its terms and conditions, shall also be transferred and be valid for the remaining coverage period provided BRP or an authorized Can-Am SSV Distributor/Dealer receives a proof that the former owner agreed to the transfer of ownership, in addition to the co-ordinates of the new owner.

10) CONSUMER ASSISTANCE

In the event of a controversy or a dispute in connection with this limited warranty, BRP suggests that you try to resolve the issue at the dealership level. We recommend discussing the issue with the authorized dealer's service manager or owner.

If the matter still remains unresolved, contact BRP by filling out the customer contact form at www.brp.com or contact BRP by mail at one of the addresses listed under the *CONTACT US* in *CUSTOMER INFORMATION*.

* In the USA, products are distributed and serviced by BRP US Inc.
© 2020 Bombardier Recreational Products Inc. All rights reserved.
® Trademark of Bombardier Recreational Products Inc. or its affiliates.

US EPA EMISSION-RELATED WARRANTY

BRP warrants to the ultimate purchaser and each subsequent purchaser that this new vehicle, including all parts of its exhaust emission control system and its evaporative emission control system, meets two conditions:

1. It is designed, built, and equipped so it conforms at the time of sale to the ultimate purchaser with the requirements of 40 CFR 1051 and 40 CFR 1060.
2. It is free from defects in materials and workmanship that may keep it from meeting the requirements of 40 CFR 1051 and 40 CFR 1060.

Where a warrantable condition exists, BRP will repair or replace, as it elects, any part or component with a defect in materials or workmanship that would increase the engine's emissions of any regulated pollutant within the stated warranty period at no cost to the owner, including expenses related to diagnosing and repairing or replacing emission-related parts. All defective parts replaced under this warranty become the property of BRP.

For all emission-related warranty claims, BRP is limiting the diagnosis and repair of emission-related parts to the authorized Can-Am dealers, unless for emergency repairs as required by item 2 of the following list.

As a certifying manufacturer, BRP will not deny emission-related warranty claims based on any of the following:

1. Maintenance or other service BRP or BRP's authorized facilities performed.
2. Engine/equipment repair work that an operator performed to correct an unsafe, emergency condition attributable to BRP as long as the operator tries to restore the engine/equipment to its proper configuration as soon as possible.
3. Any action or inaction by the operator unrelated to the warranty claim.
4. Maintenance that was performed more frequently than BRP specify.
5. Anything that is BRP fault or responsibility.
6. The use of any fuel that is commonly available where the equipment operates unless BRP written maintenance instructions state that this fuel would harm the equipment's emission control system and operators can readily find the proper fuel. See maintenance information section and fuel requirements of fueling section.

Emission-Related Warranty Period

The emission-related warranty is valid for the following period whichever comes first:

	HOURS	MONTHS	KILOMETERS
Exhaust emission-related components	500	30	5000
Evaporative emission-related components	N/A	24	N/A

Components Covered

The emission-related warranty covers all components whose failure would increase an engine's emissions of any regulated pollutant, including the following listed components:

1. For exhaust emissions, emission-related components include any engine parts related to the following systems:
   – Air-induction system

- Fuel system
- Ignition system
- Exhaust gas recirculation systems

2. The following parts are also considered emission-related components for exhaust emissions:
   - Aftertreatment devices
   - Crankcase ventilation valves
   - Sensors
   - Electronic control units
3. The following parts are considered emission-related components for evaporative emissions:
   - Fuel tank
   - Fuel cap
   - Fuel line
   - Fuel line fittings
   - Clamps*
   - Pressure relief valves*
   - Control valves*
   - Control solenoids*
   - Electronic controls*
   - Vacuum control diaphragms*
   - Control cables*
   - Control linkages*
   - Purge valves
   - Vapor hoses
   - Liquid/vapor separator
   - Carbon canister
   - Canister mounting brackets
   - Carburetor purge port connector
4. Emission-related components also include any other part whose only purpose is to reduce emissions or whose failure will increase emissions without significantly degrading engine/equipment performance.

Limited Applicability

As a certifying manufacturer, BRP may deny emission-related warranty claims for failures that have been caused by the owner's or operator's improper maintenance or use, by accidents for which the manufacturer has no responsibility, or by acts of God. For example, an emission-related warranty claim need not be honored for failures that have been directly caused by the operator's abuse of the engine/equipment or the operator's use of the engine/equipment in a manner for which it was not designed and are not attributable to the manufacturer in any way.

If you have any question regarding your warranty rights and responsibility, you should contact Bombardier Recreational Products at 1-888-272-9222.

*As related to the evaporative emission control system

CALIFORNIA EVAPORATIVE EMISSIONS CONTROL WARRANTY STATEMENT

YOUR WARRANTY RIGHTS AND OBLIGATIONS

The California Air Resources Board is pleased to explain the evaporative emissions control system warranty on your 2021 Off-Road Sport Vehicle. In California, new off-highway recreational vehicles must be designed, built, and equipped to meet the State's stringent anti-smog standards. BRP must warrant the evaporative emissions control system on your Off-Road Sport Vehicle for the periods of time listed below provided there has been no abuse, neglect, improper maintenance, or unapproved modification of your Off-Road Sport Vehicle.

Your evaporative emissions control system may include parts such as the carburetor or fuel-injection system, fuel tank, fuel hoses, carbon canister, and engine computer. Also included may be hoses, belts, connectors and other evaporative emissions-related assemblies. Where a warrantable condition exists, Bombardier Recreational Products Inc. will repair your Off-Road Sport Vehicle at no cost to you including diagnosis, parts and labor.

OHRV MANUFACTURER'S WARRANTY COVERAGE

The warranty period for this OHRV is 60 months, or 5000 miles, or 500 hours, whichever comes first.

Parts covered:

- Canister Mounting Bracket(s)
- Carbon Canister
- Purge Port Connector
- Clamp(s)*
- Electronic Control*
- Fuel Cap
- Filler Neck
- Filler Neck Hose
- Fuel Line(s)
- Fuel Line Fitting(s)
- Fuel Tank
- Pressure Relief Valve(s)*
- Purge Valve(s)
- Check Valve(s)*
- Vapor Hose(s)
- Flow Reducer
- Filter(s)*
- All other parts not listed that may affect the evaporative emissions control system

If any evaporative emissions-related part on your Off-Road Sport Vehicle is defective the part will be repaired or replaced by Bombardier Recreational Products Inc.

OWNER'S WARRANTY RESPONSIBILITIES

As the Off-Road Sport Vehicle owner you are responsible for the performance of the required maintenance listed in your owner's manual. Bombardier Recreational Products Inc. recommends that you retain all receipts covering maintenance on your Off-Road Sport Vehicle, but Bombardier Recreational Products Inc. cannot deny warranty solely for the lack of receipts or for failure to ensure the performance of a scheduled maintenance.

As an owner you are responsible for presenting your Off-Road Sport Vehicle to a Bombardier Recreational Products Inc. dealer as soon as a problem exists. The warranty repairs should be completed in a reasonable time, not to exceed 30 days.

As an Off-Road Sport Vehicle owner, you should also be aware that Bombardier Recreational Products Inc. may deny you warranty coverage if your Off-Road Sport Vehicle or a part has failed due to abuse, neglect, improper maintenance or unapproved modifications.

If you have any questions regarding your warranty rights and responsibilities, you should contact Bombardier Recreational Products Inc. at 1-888-272-9222 or the California Air Resources Board at 9528 Telstar Avenue, El Monte, CA 91731.

*As related to the evaporative emission control system

BRP INTERNATIONAL LIMITED WARRANTY: 2021 CAN-AM® SSV

1) SCOPE OF THE LIMITED WARRANTY

Bombardier Recreational Products Inc. (“BRP”)* warrants its 2021 Can-Am SSV sold by Can-Am SSV distributors or dealers authorized by BRP to distribute Can-Am SSVs ("Can-Am SSV Distributor/Dealer") outside of the fifty United States, Canada, member states of the European Economic Area (which is comprised of the member states of the European Union plus the United Kingdom, Norway, Iceland and Liechtenstein) (“EEA”), member states of the Commonwealth of the Independent States (including Ukraine and Turkmenistan) (“CIS”) and Turkey, from defects in material or workmanship for the period and under the conditions described below.

Non-factory installed parts and accessories are not covered under this limited warranty. Please refer to the applicable parts and accessories limited warranty text.

This limited warranty will become null and void if: (1) The SSV was used for racing or any other competitive activity, at any point, even by a previous owner; or (2) the SSV has been altered or modified in such a way so as to adversely affect its operation, performance or durability, or has been altered or modified to change its intended use.

2) LIMITATIONS OF LIABILITY

TO THE EXTENT PERMITTED BY LAW, THIS WARRANTY IS EXPRESSLY GIVEN AND ACCEPTED IN LIEU OF ANY AND ALL OTHER WARRANTIES, EXPRESSED OR IMPLIED, INCLUDING WITHOUT LIMITATION ANY WARRANTY OF MERCHANTABILITY OR FITNESS FOR A PARTICULAR PURPOSE. TO THE EXTENT THAT THEY CANNOT BE DISCLAIMED, THE IMPLIED WARRANTIES ARE LIMITED IN DURATION TO THE LIFE OF THE EXPRESS WARRANTY. INCIDENTAL AND CONSEQUENTIAL DAMAGES ARE EXCLUDED FROM COVERAGE UNDER THIS WARRANTY. SOME JURISDICTIONS DO NOT ALLOW FOR THE DISCLAIMERS, LIMITATIONS AND EXCLUSIONS IDENTIFIED ABOVE, AS A RESULT, THEY MAY NOT APPLY TO YOU. THIS WARRANTY GIVES YOU SPECIFIC RIGHTS, AND YOU MAY ALSO HAVE OTHER LEGAL RIGHTS WHICH MAY VARY FROM COUNTRY TO COUNTRY. (FOR PRODUCTS PURCHASED IN AUSTRALIA SEE CLAUSE 4 BELOW).

Neither the Can-Am SSV Distributor/Dealer nor any other person has been authorized to make any affirmation, representation or warranty regarding the product, other than those contained in this limited warranty, and if made, shall not be enforceable against BRP.

BRP reserves the right to modify this warranty at any time, being understood that such modification will not alter the warranty conditions applicable to the products sold while this warranty is in effect.

3) EXCLUSIONS ARE NOT WARRANTED

The following are not warranted under this limited warranty under any circumstances:

- Normal wear and tear;
- Routine maintenance items, tune ups, adjustments (parts and labor);
- Damage caused by negligence or failure to provide proper maintenance and/or storage, as described in the Operator's Guide;

– Damage resulting from removal of parts, improper repairs, service, maintenance, modifications or use of parts not manufactured or approved by BRP or resulting from repairs done by a person that is not an authorized servicing Can-Am SSV Distributor/Dealer;
– Damage caused by abuse, abnormal use, neglect or operation of the product in a manner inconsistent with the recommended operation described in the Operator's Guide;
– Damage resulting from accident, submersion, fire, theft, vandalism or any act of God;
– Operation with fuels, oils or lubricants which are not suitable for use with the product (see the Operator's Guide);
– Damage resulting from rust, corrosion or exposure to the elements;
– Damage resulting from water or snow ingestion;
– Incidental or consequential damages, or damages of any kind including without limitation towing, transportation expenses, storage, telephone, rental, taxi, inconvenience, insurance coverage, loan payments, loss of time, loss of income or time missed for downtime experience due to service work.

The following list includes, without limitation, items that are considered wear items and that are not covered under BRP's limited warranty unless failure is a direct result of a defect in material or workmanship:
– Batteries
– Brake pads
– Brake disks and drums
– Clutch plates / pads
– Clutch sliders
– Clutch springs
– Clutch replaceable bushings
– Drive belts
– Filters
– Finished and unfinished surfaces
– Fuses
– Light bulbs / sealed
– Lubricants
– Spark plugs
– Suspension bushings
– Suspension slider shoes
– Suspension springs
– Tires

4) WARRANTY COVERAGE PERIOD

This warranty will be in effect from (1) the date of delivery to the first retail consumer or (2) the date the product is first put into use, whichever occurs first and for a period of:
– SIX (6) CONSECUTIVE MONTHS for private use or commercial use.

In AUSTRALIA and NEW-ZEALAND only, this warranty will be in effect from (1) the date of delivery to the first retail consumer or (2) the date the product is first put into use, whichever occurs first, and for a period of (1) TWENTY-FOUR (24) CONSECUTIVE MONTHS or (2) a total use of FIFTEEN THOUSAND (15 000) kilometers, whichever occurs first, for private use or commercial use.

The repair or replacement of parts or the performance of service under this warranty does not extend the life of this warranty beyond its original expiration date.

FOR PRODUCTS SOLD IN AUSTRALIA ONLY

Nothing in these Warranty terms and conditions should be taken to exclude, restrict or modify the application of any condition, warranty, guarantee, right or remedy conferred or implied under the Competition and Consumer Act 2010 (Cth), including the Australian Consumer Law or any other law, where to do so would contravene that law, or cause any part of these terms and conditions to be void. The benefits given to you under this limited warranty hereto are in addition to other rights and remedies that you have under Australian law.

Our goods come with guarantees that cannot be excluded under the Australian Consumer Law. You are entitled to a replacement or refund for a major failure and for compensation for any other reasonably foreseeable loss or damage. You are also entitled to have the goods repaired or replaced if the goods fail to be of acceptable quality and the failure does not amount to a major failure.

5) CONDITIONS TO HAVE WARRANTY COVERAGE

This warranty coverage is available **only** if **each** of the following conditions has been fulfilled:

- The 2021 Can-Am SSV must be purchased as new and unused by its first owner from a Can-Am SSV Distributor/Dealer authorized to distribute Can-Am SSVs in the country in which the sale occurred;
- The BRP specified pre-delivery inspection process must be completed and documented;
- The product must have undergone proper registration by an authorized Can-Am SSV Distributor/Dealer;
- The 2021 Can-Am SSV must be purchased in the country or union of countries in which the purchaser resides; and
- Routine maintenance outlined in the Operator's Guide must be timely performed in order to maintain warranty coverage. BRP reserves the right to make warranty coverage contingent upon proof of proper maintenance.

BRP will not honor this limited warranty to any private use owner or commercial use owner if one of the preceding conditions has not been met. Such limitations are necessary in order to allow BRP to preserve both the safety of its products, and also that of its consumers and the general public.

6) WHAT TO DO TO OBTAIN WARRANTY COVERAGE

The customer must cease using the SSV upon the appearance of an anomaly. The customer must notify a servicing Can-Am SSV Distributor/Dealer within two (2) days of the appearance of a defect, and provide it with reasonable access to the product and reasonable opportunity to repair it. The customer must also present to the authorized Can-Am SSV Distributor/Dealer proof of purchase of the product

and must sign the repair/work order prior to starting the repair in order to validate the warranty repair. All parts replaced under this limited warranty become the property of BRP.

Note that the notification period is subject to the applicable national or local legislation in customer's country.

7) WHAT BRP WILL DO

To the extent permitted by law, BRP's obligations under this warranty are limited to, at its sole discretion, repairing parts found defective under normal use, maintenance and service; or replacing such parts with new genuine Can-Am SSV parts without charge for parts and labour, at any authorized Can-Am SSV Distributor/Dealer during the warranty coverage period under the conditions described herein. BRP's responsibility is limited to making the required repairs or replacements of parts. No claim of breach of warranty shall be cause for cancellation or rescission of the sale of the Can-Am SSV to the owner. You may have other legal rights which may vary from country to country.

In the event that service is required outside of the country of original sale, the owner will bear responsibility for any additional charges due to local practices and conditions, such as, but not limited to, freight, insurance, taxes, license fees, import duties, and any and all other financial charges, including those levied by governments, states, territories and their respective agencies.

BRP reserves the right to improve or modify products from time to time without assuming any obligation to modify products previously manufactured.

8) TRANSFER

If the ownership of a product is transferred during the warranty coverage period, this limited warranty, subject to its terms and conditions, shall also be transferred and be valid for the remaining coverage period provided BRP or an authorized Can-Am SSV Distributor/Dealer receives a proof that the former owner agreed to the transfer of ownership, in addition to the coordinates of the new owner.

9) CONSUMER ASSISTANCE

In the event of a controversy or a dispute in connection with this limited warranty, BRP suggests that you try to resolve the issue at the Can-Am SSV Distributor/Dealer level. We recommend discussing the issue with the authorized Can-Am SSV Distributor/Dealer's service manager or owner.

If the matter still remains unresolved, contact BRP by filling out the customer contact form at www.brp.com or contact BRP by mail at one of the addresses listed under the *CONTACT US* section of this guide.

* For the territory covered by this limited warranty, products are distributed and serviced by Bombardier Recreational Products Inc. or its affiliates.

© 2020 Bombardier Recreational Products Inc. All rights reserved.
® Trademark of Bombardier Recreational Products Inc. or its affiliates.

BRP LIMITED WARRANTY FOR THE EUROPEAN ECONOMIC AREA, THE COMMONWEALTH OF THE INDEPENDANT STATES AND TURKEY: 2021 CAN-AM® SSV

1) SCOPE OF THE LIMITED WARRANTY

Bombardier Recreational Products Inc. ("BRP")* warrants its 2021 Can-Am SSVs sold by Can-Am SSV distributors or dealers authorized by BRP to distribute Can-Am SSVs ("Can-Am SSV Distributor/Dealer") in member states of the European Economic Area (which is comprised of the member states of the European Union plus the United Kingdom, Norway, Iceland and Liechtenstein) ("EEA"), in member states of the Commonwealth of the Independent States (including Ukraine and Turkmenistan) ("CIS") and Turkey from defects in material or workmanship for the period and under the conditions described below.

Non-factory installed parts and accessories are not covered under this limited warranty. Please refer to the applicable parts and accessories limited warranty text.

This limited warranty will become null and void if: (1) The SSV was used for racing or any other competitive activity, at any point, even by a previous owner; or (2) the SSV has been altered or modified in such a way so as to adversely affect its operation, performance or durability, or has been altered or modified to change its intended use.

2) LIMITATIONS OF LIABILITY

TO THE EXTENT PERMITTED BY LAW, THIS WARRANTY IS EXPRESSLY GIVEN AND ACCEPTED IN LIEU OF ANY AND ALL OTHER WARRANTIES, EXPRESSED OR IMPLIED, INCLUDING WITHOUT LIMITATION ANY WARRANTY OF MERCHANTABILITY OR FITNESS FOR A PARTICULAR PURPOSE. TO THE EXTENT THAT THEY CANNOT BE DISCLAIMED, THE IMPLIED WARRANTIES ARE LIMITED IN DURATION TO THE LIFE OF THE EXPRESS WARRANTY. INCIDENTAL AND CONSEQUENTIAL DAMAGES ARE EXCLUDED FROM COVERAGE UNDER THIS WARRANTY. SOME JURISDICTIONS DO NOT ALLOW FOR THE DISCLAIMERS, LIMITATIONS AND EXCLUSIONS IDENTIFIED ABOVE, AS A RESULT, THEY MAY NOT APPLY TO YOU. THIS WARRANTY GIVES YOU SPECIFIC RIGHTS, AND YOU MAY ALSO HAVE OTHER LEGAL RIGHTS WHICH MAY VARY FROM COUNTRY TO COUNTRY.

Neither the Can-Am SSV Distributor/Dealer nor any other person has been authorized to make any affirmation, representation or warranty regarding the product, other than those contained in this limited warranty, and if made, shall not be enforceable against BRP.

BRP reserves the right to modify this warranty at any time, being understood that such modification will not alter the warranty conditions applicable to the products sold while this warranty is in effect.

3) EXCLUSIONS – ARE NOT WARRANTED

The following are not warranted under this limited warranty under any circumstances:

– Normal wear and tear;
– Routine maintenance items, tune ups, adjustments (parts and labor);

– Damage caused by negligence or failure to provide proper maintenance and/or storage, as described in the Operator's Guide;
– Damage resulting from removal of parts, improper repairs, service, maintenance, modifications or use of parts not manufactured or approved by BRP or resulting from repairs done by a person that is not an authorized servicing Can-Am SSV Distributor/Dealer;
– Damage caused by abuse, abnormal use, neglect or operation of the product in a manner inconsistent with the recommended operation described in the Operator’s Guide;
– Damage resulting from accident, submersion, fire, snow or water ingestion, theft, vandalism or any act of God;
– Operation with fuels, oils or lubricants which are not suitable for use with the product (see the Operator’s Guide);
– Damage resulting from rust, corrosion or exposure to the elements;
– Incidental or consequential damages, or damages of any kind including without limitation towing, transportation expenses, storage, telephone, rental, taxi, inconvenience, insurance coverage, loan payments, loss of time, loss of income or time missed for downtime experience due to service work.

The following list includes, without limitation, items that are considered wear items and that are not covered under BRP's limited warranty unless failure is a direct result of a defect in material or workmanship:
– Batteries
– Brake pads
– Brake disks and drums
– Clutch plates / pads
– Clutch sliders
– Clutch springs
– Clutch replaceable bushings
– Drive belts
– Filters
– Finished and unfinished surfaces
– Fuses
– Light bulbs / sealed
– Lubricants
– Spark plugs
– Suspension bushings
– Suspension slider shoes
– Suspension springs
– Tires

4) WARRANTY COVERAGE PERIOD

This warranty will be in effect from (1) the date of delivery to the first retail consumer or (2) the date the product is first put into use, whichever occurs first and for a period of:
– TWENTY-FOUR (24) CONSECUTIVE MONTHS for private use.
– SIX (6) CONSECUTIVE MONTHS for commercial use or rental use.

The product is used commercially when it is used in connection with any work or employment that generates income during any part of the warranty period. The product is also used commercially when, at any point during the warranty period, it is licensed for commercial use.

The repair or replacement of parts or the performance of service under this warranty does not extend the life of this warranty beyond its original expiration date.

Note that the duration and any other modalities of the warranty coverage are subject to the applicable national or local legislation in your country.

5) CONDITIONS TO HAVE WARRANTY COVERAGE

This warranty coverage is available **only** if **each** of the following conditions has been fulfilled:

- The 2021 Can-Am SSV must be purchased as new and unused by its first owner from a Can-Am SSV Distributor/Dealer authorized to distribute Can-Am SSVs in the country in which the sale occurred;
- The BRP specified pre-delivery inspection process must be completed and documented;
- The product must have undergone proper registration by an authorized Can-Am SSV Distributor/Dealer;
- The 2021 Can-Am SSV must be purchased in the country or union of countries in which the purchaser resides; and
- Routine maintenance outlined in the Operator's Guide must be timely performed in order to maintain warranty coverage. BRP reserves the right to make warranty coverage contingent upon proof of proper maintenance.

BRP will not honor this limited warranty to any private use owner or commercial use owner if one of the preceding conditions has not been met. Such limitations are necessary in order to allow BRP to preserve both the safety of its products, and also that of its consumers and the general public.

6) WHAT TO DO TO OBTAIN WARRANTY COVERAGE

The customer must cease using the SSV upon the appearance of an anomaly. The customer must notify a servicing Can-Am SSV Distributor/Dealer within two (2) months of the appearance of a defect and provide it with reasonable access to the product and reasonable opportunity to repair it. The customer must also present to the authorized Can-Am SSV Distributor/Dealer, proof of purchase of the product and must sign the repair/work order prior to starting the repair in order to validate the warranty repair. All parts replaced under this limited warranty become the property of BRP.

Note that the notification period is subject to the applicable national or local legislation in your country.

7) WHAT BRP WILL DO

To the extent permitted by law, BRP's obligations under this warranty are limited to, at its sole discretion, repairing parts found defective under normal use, maintenance and service, or replacing such parts with new genuine Can-Am SSV parts without charge for parts and labor, at any authorized Can-Am SSV Distributor/Dealer during the warranty coverage period under the conditions described herein. BRP's responsibility is limited to making the required repairs or replacements of

parts. No claim of breach of warranty shall be cause for cancellation or rescission of the sale of the Can-Am SSV to the owner. You may have other legal rights which may vary from country to country.

In the event that service is required outside of the EEA, the owner will bear responsibility for any additional charges due to local practices and conditions, such as, but not limited to, freight, insurance, taxes, license fees, import duties, and any and all other financial charges, including those levied by governments, states, territories and their respective agencies.

BRP reserves the right to improve or modify products from time to time without assuming any obligation to modify products previously manufactured.

8) TRANSFER

If the ownership of a product is transferred during the warranty coverage period, this warranty shall also be transferred and be valid for the remaining coverage period provided BRP or an authorized Can-Am SSV Distributor/Dealer receives a proof that the former owner agreed to the transfer of ownership, in addition to the co-ordinates of the new owner.

9) CONSUMER ASSISTANCE

In the event of a controversy or a dispute in connection with this limited warranty, BRP suggests that you try to resolve the issue at the Can-Am SSV Distributor/Dealer level. We recommend discussing the issue with the authorized Can-Am SSV Distributor/Dealer's service manager or owner.

If the matter still remains unresolved, contact BRP by filling out the customer contact form at www.brp.com or contact BRP by mail at one of the addresses listed under the *CONTACT US* section of this guide.

* In the EEA, products are distributed and serviced by BRP European Distribution S.A. and other affiliates or subsidiaries of BRP.

© 2020 Bombardier Recreational Products Inc. All rights reserved.
® Trademark of Bombardier Recreational Products Inc. or its affiliated.

ADDITIONAL TERMS AND CONDITIONS FOR FRANCE ONLY

The following terms and conditions are applicable to products sold in France only:

The seller shall deliver goods that are complying with the contract and shall be responsible for defects existing upon delivery. The seller shall also be responsible for defects resulting from packaging, assembling instructions or the installation when it is its responsibility per the contract or if accomplished under its responsibility. To be compliant with the contract, the good shall:

1. Be fit for normal use for goods similar thereto and, if applicable:
   - Correspond to the description provided by the seller and have the qualities presented to the buyer though sample or model;
   - Have the qualities that a buyer may legitimately expect considering the public declarations of the seller, the manufacturer of its representative, including in advertising or labeling; or
2. Have the characteristics mutually agreed upon as between the parties or be fit for the specific use intended by the buyer and brought to the attention of the seller and which accepted.

The action for failure to comply is prescribed after two years after delivery of the goods. The seller is responsible for the warranty for hidden defects of the goods sold if such hidden defects are rendering the good unfit for the intended use, or if they diminish its use in such a way that the buyer would not have acquired the good or would have given a lesser price, had he known. The action for such hidden defects shall be taken by the buyer within 2 years of the discovery of the defect.

MAINTENANCE RECORDS

Send photocopy of maintenance record to BRP if needed.

PREDELIVERY	
Serial number: _____ Mileage / km: _____ Hours: _____ Date: _____ Dealer no: _____ Notes: _____	Signature/Print:
Refer to vehicle Pre-Delivery Bulletin for detailed installation procedures	

FIRST INSPECTION	
Mileage / km: _____ Hours: _____ Date: _____ Dealer no: _____ Notes: _____	Signature/Print:
For maintenance schedule refer to Maintenance Information section of this operator's guide	

SERVICE	
Mileage / km: _____ Hours: _____ Date: _____ Dealer no: _____ Notes: _____	Signature/Print:
For maintenance schedule refer to Maintenance Information section of this operator's guide	

SERVICE	
Mileage / km: _____ Hours: _____ Date: _____ Dealer no: _____ Notes: _____	Signature/Print:
For maintenance schedule refer to Maintenance Information section of this operator's guide	

SERVICE	
Mileage / km: _____ Hours: _____ Date: _____ Dealer no: _____ Notes: _____	Signature/Print:
For maintenance schedule refer to Maintenance Information section of this operator's guide	

SERVICE	
Mileage / km: _____ Hours: _____ Date: _____ Dealer no: _____ Notes: _____	Signature/Print:
For maintenance schedule refer to Maintenance Information section of this operator's guide	

SERVICE	
Mileage / km:	Signature/Print:
Hours:	
Date:	
Dealer no:	
Notes:	
For maintenance schedule refer to Maintenance Information section of this operator's guide	

SERVICE	
Mileage / km:	Signature/Print:
Hours:	
Date:	
Dealer no:	
Notes:	
For maintenance schedule refer to Maintenance Information section of this operator's guide	

SERVICE	
Mileage / km:	Signature/Print:
Hours:	
Date:	
Dealer no:	
Notes:	
For maintenance schedule refer to Maintenance Information section of this operator's guide	

This page is intentionally blank

CUSTOMER INFORMATION

PRIVACY INFORMATION

BRP wishes to inform you that your coordinates will be used for safety and warranty related purposes. Furthermore, BRP and its affiliates may use its customer list to distribute marketing and promotional information about BRP and related products.

To exercise your right to consult or correct your data, or to be removed from the addressee-list for direct marketing, please contact BRP.

CHANGE OF ADDRESS/OWNERSHIP

If your address has changed or if you are the new owner of the vehicle, be sure to notify BRP.

CHANGE OF ADDRESS ☐ CHANGE OF OWNERSHIP ☐

VEHICLE IDENTIFICATION NUMBER

Model Number Vehicle Identification Number (V.I.N.)

OLD ADDRESS OR PREVIOUS OWNER:

NAME

NO. STREET APT

CITY STATE/PROVINCE ZIP/POSTAL CODE

COUNTRY TELEPHONE

NEW ADDRESS OR NEW OWNER:

NAME

NO. STREET APT

CITY STATE/PROVINCE ZIP/POSTAL CODE

COUNTRY TELEPHONE

V00A2F

E-MAIL ADDRESS

CHANGE OF ADDRESS ☐ CHANGE OF OWNERSHIP ☐

VEHICLE IDENTIFICATION NUMBER

Model Number Vehicle Identification Number (V.I.N.)

OLD ADDRESS OR PREVIOUS OWNER:

NAME

NO. STREET APT

CITY STATE/PROVINCE ZIP/POSTAL CODE

COUNTRY TELEPHONE

NEW ADDRESS OR NEW OWNER:

NAME

NO. STREET APT

CITY STATE/PROVINCE ZIP/POSTAL CODE

COUNTRY TELEPHONE

V00A2F

E-MAIL ADDRESS

This page is intentionally blank

CHANGE OF ADDRESS ☐ CHANGE OF OWNERSHIP ☐

VEHICLE IDENTIFICATION NUMBER

Model Number Vehicle Identification Number (V.I.N.)

OLD ADDRESS OR PREVIOUS OWNER:

NAME

NO. STREET APT

CITY STATE/PROVINCE ZIP/POSTAL CODE

COUNTRY TELEPHONE

NEW ADDRESS OR NEW OWNER:

NAME

NO. STREET APT

CITY STATE/PROVINCE ZIP/POSTAL CODE

COUNTRY TELEPHONE

V00A2F

E-MAIL ADDRESS

CHANGE OF ADDRESS ☐ CHANGE OF OWNERSHIP ☐

VEHICLE IDENTIFICATION NUMBER

Model Number Vehicle Identification Number (V.I.N.)

OLD ADDRESS OR PREVIOUS OWNER:

NAME

NO. STREET APT

CITY STATE/PROVINCE ZIP/POSTAL CODE

COUNTRY TELEPHONE

NEW ADDRESS OR NEW OWNER:

NAME

NO. STREET APT

CITY STATE/PROVINCE ZIP/POSTAL CODE

COUNTRY TELEPHONE

V00A2F

E-MAIL ADDRESS

This page is intentionally blank

NOTES

NOTES

NOTES

NOTES

⚠ WARNING

TO REDUCE RISK OF SERIOUS INJURY OR DEATH,
read this Operator's Guide and safety labels, watch the safety video and:

BE PREPARED
- Fasten seat belts and make sure nets and/or doors are securely latched in place.
- Wear an approved helmet and protective gear.
- Each rider must be able to sit with back against seat, foot flat on the floor or on footrest, and hands on steering wheel or handholds. Stay completely inside the vehicle.

DRIVE RESPONSIBLY
- Avoid loss of control and rollovers.
- Avoid abrupt maneuvers, sideways sliding, skidding or fishtailing and never do donuts.
- Avoid hard acceleration when turning, even from a stop.
- Slow down before entering a turn.
- Plan for hills, rough terrain, ruts and other changes in traction and terrain.
- Avoid paved surfaces.
- Avoid side hilling (riding across slopes).

BE QUALIFIED AND RESPONSIBLE
- Do not allow careless or reckless driving.
- Driver must be at least 16 years old with a valid driver's license.
- Do not operate after using drugs or alcohol.
- Do not allow operation on public roads (unless designated for off-highway vehicle access) – collisions with cars and trucks can occur.
- Do not exceed vehicle seating capacity.

can-am

DEFENDER™ MAX™ Series
(excluding European Union)
TRAXTER MAX™ Series

2021

OPERATOR'S GUIDE

Includes
Safety, Vehicle and
Maintenance Information

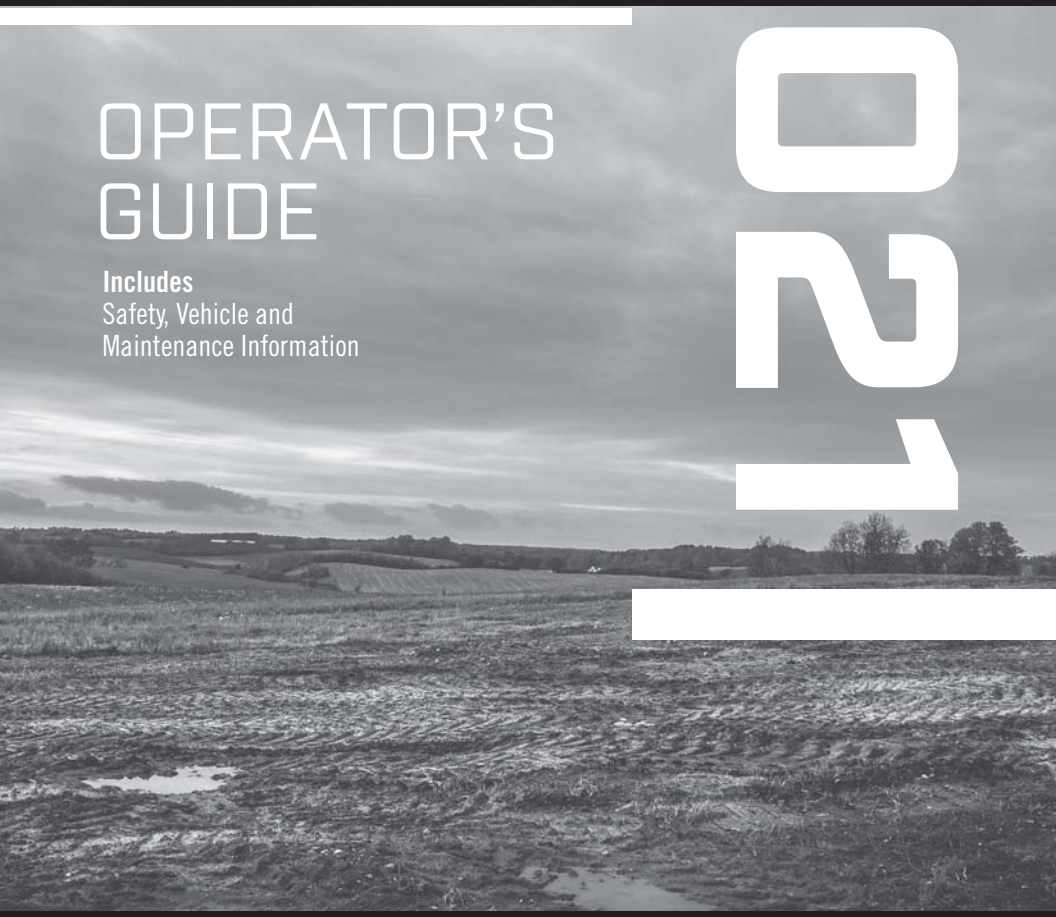

⚠ WARNING

Read this guide thoroughly. It contains important safety information.
Minimum age: Operator: 16 or older with a valid driver's license. Keep this Operator's Guide in the vehicle.
The removal or modification of evaporative emission-related parts on this OHRV is illegal.
Violators may be subject to civil and/or criminal penalties under California and federal law.

219 002 120

Original Instructions

⚠ WARNING

YOUR VEHICLE CAN BE HAZARDOUS TO OPERATE. A collision or rollover can occur quickly, if you fail to take proper precautions, even during routine maneuvers such as turning and driving on hills or over obstacles.
For your safety, understand and follow all the warnings contained in this Operator's Guide and on the labels on your vehicle. **Failure to follow these warnings can result in SEVERE INJURY OR DEATH!**
Keep this Operator's Guide with the vehicle at all times.

⚠ WARNING

Disregarding any of the safety precautions and instructions contained in this Operator's Guide, *SAFETY VIDEO* and on-product safety labels could result in severe injury including the possibility of death!

⚠ WARNING

This vehicle may exceed the performance of other vehicles you may have ridden in the past. Take time to familiarize yourself with your new vehicle.

CALIFORNIA PROPOSITION 65 WARNING

⚠ **WARNING:** Operating, servicing and maintaining a passenger vehicle can expose you to chemicals including engine exhaust, carbon monoxide, phthalates, and lead, which are known to the State of California to cause cancer and birth defects or other reproductive harm. To minimize exposure, avoid breathing exhaust, do not idle the engine except as necessary, service your vehicle in a well-ventilated area and wear gloves or wash your hands frequently when servicing your vehicle. For more information go to **www.p65warnings.ca.gov/products/passenger-vehicle**.

In Canada, products are distributed by Bombardier Recreational Products Inc. (BRP).

In USA, products are distributed by BRP US Inc.

The following trademarks are the property of Bombardier Recreational Products Inc.:

Can-Am®	DPS™	TTI™
DESS™	Rotax®	XPS™

This document contains the trademark of the following company:

– † Visco-Lok is a trademark of GKN Viscodrive GmbH.

FOREWORD

Deutsch	Dieses Handbuch ist möglicherweise in Ihrer Landessprache verfügbar. Bitte wenden Sie sich an Ihren Händler oder besuchen Sie: **www.operatorsguides.brp.com**
English	This guide may be available in your language. Check with your dealer or go to: **www.operatorsguides.brp.com**
Español	Es posible que este manual esté disponible en su idioma. Consulte a su distribuidor o visite: **www.operatorsguides.brp.com**
Français	Ce guide peut être disponible dans votre langue. Vérifier avec votre concessionnaire ou aller à: **www.operatorsguides.brp.com**
Italiano	Questa guida potrebbe essere disponibile nella propria lingua. Contattare il concessionario o consultare: **www.operatorsguides.brp.com**
中文	本手册可能有您的语种的翻译版本。请向经销商问询，或者登录 **www.operatorsguides.brp.com** 查询。
日本語	このガイドは、言語によって翻訳版が用意されています。. ディーラーに問い合わせるか、次のアドレスでご確認ください： **www.operatorsguides.brp.com**
Nederlands	Deze handleiding kan beschikbaar zijn in uw taal. Vraag het aan uw dealer of ga naar: **www.operatorsguides.brp.com**
Norsk	Denne boken kan finnes tilgjengelig på ditt eget språk. Kontakt din forhandler eller gå til: **www.operatorsguides.brp.com**
Português	Este manual pode estar disponível em seu idioma. Fale com sua concessionária ou visite o site: **www.operatorsguides.brp.com**
Русский	Воспользуйтесь руководством на вашем языке. Узнайте о его наличии у дилера или на странице по адресу **www.operatorsguides.brp.com**
Suomi	Käyttöohjekirja voi olla saatavissa omalla kielelläsi. Tarkista jälleenmyyjältä tai käy osoitteessa: **www.operatorsguides.brp.com**
Svenska	Denna bok kan finnas tillgänglig på ditt språk. Kontakta din återförsäljare eller gå till: **www.operatorsguides.brp.com**

Congratulations on your purchase of a new Can-Am® side-by-side vehicle. It's backed by the BRP limited warranty and a network of authorized Can-Am Off-Road dealers ready to provide the parts, accessories or service you may require.

At delivery, you were informed of the warranty coverage and signed the *PREDELIVERY CHECK LIST* to ensure your new vehicle was prepared to your entire satisfaction.

Your dealer is committed to your satisfaction. If you need more information, please ask your dealer.

Know Before you Go

To learn how to reduce the risk of accident for you or bystanders, read this Operator's Guide before you operate the vehicle.

Also, read all safety labels on your vehicle and watch the *SAFETY VIDEO* located at:
https://can-am.brp.com/offroad/safety
or use the following QR code.

Failure to follow the warnings contained in this Operator's Guide can result in SERIOUS INJURY or DEATH.

Safety Messages

The types of safety messages, what they look like and how they are used in this guide are explained as follows:

The safety alert symbol ⚠ indicates a potential injury hazard.

⚠ WARNING

Indicates a potential hazard which, if not avoided, could result in serious injury or death.

⚠ CAUTION **Indicates a hazardous situation which, if not avoided, could result in minor or moderate injury.**

NOTICE **Indicates an instruction which, if not followed, could result in severely damaged vehicle components or other property.**

About this Operator's Guide

This Operator's Guide has been prepared to acquaint the owner/operator of a new vehicle with the various vehicle controls, maintenance and safe operating instructions. It is indispensable for the proper use of the product.

Keep this Operator's Guide in the vehicle as you can refer to it for things such as maintenance, troubleshooting and instructing others.

Note that this guide is available in several languages. In the event of any discrepancy, the English version shall prevail.

If you want to view and/or print an extra copy of your Operator's Guide, simply visit the following website:

www.operatorsguides.brp.com

The information contained in this document is correct at the time of publication. BRP, however, maintains a policy of continuous improvement of its products without imposing upon itself any obligation to install them on products previously manufactured. Due to late changes, some differences between the manufactured product and the descriptions and/or specifications in this guide may occur. BRP reserves the right at any time to discontinue or change specifications, designs, features, models or equipment without incurring any obligation upon itself.

This Operator's Guide should remain with the vehicle when it is sold.

Covered Models

This operator's guide covers the following models:

MODEL	PACKAGE	ENGINE
Defender MAX	Base	HD8
	DPS	HD8, HD10
	Limited	HD10
	Lone Star	HD10
	XT	HD8, HD10
Traxter MAX	DPS	HD8

TABLE OF CONTENTS

FOREWORD **1**
Know Before you Go 2
Safety Messages 2
About this Operator's Guide 2
Covered Models 3

SAFETY INFORMATION

GENERAL PRECAUTIONS **10**
Avoid Carbon Monoxide Poisoning 10
Avoid Gasoline Fires and Other Hazards 10
Avoid Burns from Hot Parts 10
Accessories and Modifications 10
SAFE OPERATION - RESPONSIBILITIES **11**
Owner - Be Responsible 11
Operator - Be Qualified and Responsible 11
Riding Carefully 12
Occupant Restraint System 12
Terrain Condition 12
PRE-RIDE INSPECTION **14**
Pre-Ride Inspection Check List 14
PREPARE TO RIDE **17**
Before you Ride 17
Riding Gear 17
AVOID ACCIDENTS **19**
Avoid Rollovers and Tipovers 19
Avoid Collisions 20
RIDING YOUR VEHICLE **21**
Practice Exercises 21
Off-Road Operation 22
General Riding Techniques 22
MOVING LOADS AND DOING WORK **27**
Working with your Vehicle 27
Carrying Loads 27
Hauling a Load 29
Pulling a Trailer 30
IMPORTANT ON-PRODUCT LABELS (CANADA/UNITED STATES) **31**
Hang Tag 31
Safety Labels 34
Technical Information Labels 46
Compliance Labels 47
IMPORTANT ON-PRODUCT LABELS (ALL COUNTRIES EXCEPT CANADA/UNITED STATES) **48**
Hang Tag 48
Safety Labels 50

IMPORTANT ON-PRODUCT LABELS (ALL COUNTRIES EXCEPT CANADA/UNITED STATES) (cont'd)
Technical Information Labels 64
Compliance Labels 65
REPORTING SAFETY DEFECTS 66

VEHICLE INFORMATION

PRIMARY CONTROLS 68
1) Steering Wheel 68
2) Accelerator Pedal 69
3) Brake Pedal 69
4) Shift Lever 69
SECONDARY CONTROLS 71
1) Ignition Switch and Keys 72
2) 2WD/4WD Switch 73
3) Rear Differential Switch (If Equipped) 74
4) Keypad (If Equipped) 74
5) Climate Controls 74
6) Horn Switch (On applicable models) 74
7) Winch Switch (If Equipped) 75
8) Headlight Dimmer Switch 75
9) Power Window Switches 75
4.5" DIGITAL DISPLAY 76
Multifunction Display 76
Warning Lamps and Indicators 77
Settings 78
7.6" DIGITAL DISPLAY 80
Basic Functions 80
Settings 83
EQUIPMENT 85
1) Tilt Steering 87
2) Cup Holders 88
3) Passengers Handhold 88
4) Storage Compartments 89
5) Tool Kit 91
6) Footrests 91
7) Side Nets 91
8) Shoulder Guards 92
9) Seat Belts 92
10) Driver's Seat 93
11) Passenger Seats 93
12) Fuel Reservoir Cap 93
13) Winch (If Equipped) 94
14) Cargo Box 94
15) Cargo Box Tilt Release Handles 94

EQUIPMENT (cont'd)
16) Anchoring Hooks 95
17) Tailgate 95
18) Trailer Hitch 95
19) 12-Volt Power Outlets 95
20) USB Power Outlet (If Equipped) 96
21) Roof (If Equipped) 96
22) Rock Sliders (If Equipped) 96
23) Front Bumper (If Equipped) 96
24) Brake Holding Mechanism (If equipped) 96
25) Side Mirrors (On applicable models) 97
26) Full Doors With Electric Windows (Limited Models) 97
27) Full Glass Windshield with Wiper (If equipped) 98
28) Climate Control System (Limited Models) 99
29) Rear Deflector (If Equipped) 101

TUNE YOUR RIDE 103
Suspension Adjustment Guidelines 103
Suspension Factory Settings 103
Suspension Adjustments 103
DPS Function 104

FUEL 105
Fuel Requirements 105
Vehicle Fueling Procedure 105
Fueling a Gasoline Container 106

BREAK-IN PERIOD 107
Operation During Break-In 107

BASIC PROCEDURES 108
Starting the Engine 108
Operating the Shift Lever 108
Choosing the Correct Range (Low or High) 108
Stopping the Engine and Parking the Vehicle 109
Tips for Maximizing Drive Belt Durability 109

SPECIAL PROCEDURES 110
What to do if Water is Suspected to be in the CVT 110
What to do if Battery is Drained out 110
What to do if Vehicle Rolled Over 110
What to do if Vehicle is Submerged 110

TRANSPORTING THE VEHICLE 111
Using vehicle power to climb onto trailering equipment 111
Using a winch to pull vehicle onto trailering equipment 112
Securing vehicle for transport 112
Getting vehicle out of trailer 113

LIFTING AND SUPPORTING THE VEHICLE 114
Front of Vehicle 114
Rear of Vehicle 114

MAINTENANCE

MAINTENANCE SCHEDULE **116**
SEVERE DUSTY CONDITIONS 116
MAINTENANCE SCHEDULE LEGEND 117
MAINTENANCE SCHEDULE 117
MAINTENANCE PROCEDURES **120**
Engine Air Filter 120
CVT Air Filter 121
Evaporative Emission System Pre-Filter (If Equipped) 122
Engine Oil 122
Oil Filter 124
Radiator 125
Engine Coolant 126
Heating/Air Conditioning Air Filter (if equipped) 128
Muffler and Spark Arrester 130
Gearbox Oil 131
Differential Oil 133
Spark Plugs 134
CVT Cover 135
CVT Cover Installation 136
Drive Belt 136
Drive and Driven Pulleys 137
Battery 137
Fuses and Fusible Links 138
Lights 140
Drive Shaft Bellows and Protector 141
Wheel Bearing 142
Wheels and Tires 142
Suspensions 143
Brakes 145
Seat Belts 145
Cage 145
VEHICLE CARE **147**
Post-Operation Care 147
Vehicle Cleaning and Protection 147
STORAGE AND PRESEASON PREPARATION **148**

TECHNICAL INFORMATION

VEHICLE IDENTIFICATION **150**
Vehicle Identification Number 150
Engine Identification Number 150
Compliance Label 151
EVAPORATIVE EMISSION CONTROL SYSTEM **152**

NOISE EMISSION CONTROL SYSTEM REGULATION 153
EC-DECLARATION OF CONFORMITY 154
EAC DECLARATION OF CONFORMITY 155
SPECIFICATIONS 156

TROUBLESHOOTING

TROUBLESHOOTING GUIDELINES 168
MESSAGES IN MULTIFUNCTION GAUGE 172

WARRANTY

BRP LIMITED WARRANTY USA AND CANADA: 2021 CAN-AM® SSV.... 174
US EPA EMISSION-RELATED WARRANTY 178
CALIFORNIA EVAPORATIVE EMISSIONS CONTROL WARRANTY STATEMENT..... 180
BRP INTERNATIONAL LIMITED WARRANTY: 2021 CAN-AM® SSV 182
BRP LIMITED WARRANTY FOR THE EUROPEAN ECONOMIC AREA, THE COMMONWEALTH OF THE INDEPENDENT STATES AND TURKEY: 2021 CAN-AM® SSV 186
MAINTENANCE RECORDS 191

SAFETY INFORMATION

GENERAL PRECAUTIONS

Avoid Carbon Monoxide Poisoning

All engine exhaust contains carbon monoxide, a deadly gas. Breathing carbon monoxide can cause headaches, dizziness, drowsiness, nausea, confusion and eventually death.

Carbon monoxide is a colorless, odorless, tasteless gas that may be present even if you do not see or smell any engine exhaust. Deadly levels of carbon monoxide can collect rapidly, and you can quickly be overcome and unable to save yourself. Also, deadly levels of carbon monoxide can linger for hours or days in enclosed or poorly ventilated areas. If you experience any symptoms of carbon monoxide poisoning, leave the area immediately, get fresh air and seek medical treatment.

To prevent serious injury or death from carbon monoxide:

– Never run the vehicle in poorly ventilated or partially enclosed areas such as garages, carports or barns. Even if you try to ventilate engine exhaust with fans or open windows and doors, carbon monoxide can rapidly reach dangerous levels.
– Never run the vehicle outdoors where engine exhaust can be drawn into a building through openings such as windows and doors.

Avoid Gasoline Fires and Other Hazards

Gasoline is extremely flammable and highly explosive. Fuel vapors can spread and be ignited by a spark or flame many feet away from the engine. To reduce the risk of fire or explosion, follow these instructions:

– Use only an approved gasoline container to store fuel.
– Never fill the gasoline container in the vehicle cargo box or on the vehicle - an electrical static discharge may ignite the fuel.
– Strictly adhere to instructions in *FUELING PROCEDURE*.
– Never start or operate the engine if the fuel cap is not properly installed.

Gasoline is poisonous and can cause injury or death.

– Never siphon gasoline by mouth.
– If you swallow gasoline, get any in your eye(s), or inhale gasoline vapor, see a doctor immediately.

If gasoline spills on you, wash with soap and water and change your clothes.

Avoid Burns from Hot Parts

Certain components like brake rotors and exhaust components become hot during operation. Avoid contact with those parts during and shortly after operation to avoid burn wounds.

Accessories and Modifications

Any modifications or addition of accessories may affect the handling of your vehicle. It is important to take the time to get familiar with the vehicle once modifications are made to understand how to adapt your driving behavior accordingly.

Do not tamper with unauthorized modifications or install equipment not specifically certified by BRP for the vehicle. These modifications have not been tested by BRP and they may increase the risk of injury or loss of control, or render the vehicle illegal to ride. As an example, tampering with tire specifications may affect the behavior of the vehicle and increase the risk of a loss of control.

Ask your authorized BRP dealer for suitable available accessories for your vehicle.

SAFE OPERATION - RESPONSIBILITIES

This is a high performance off-road vehicle. Operators must be responsible and use care to avoid rollovers, tipovers, collisions, and other accidents. Even with vehicle safety features (such as protective structure, seat belts, side nets) and protective gear (such as a helmet), there is always a risk of injury or death in these accidents. To reduce the risk of serious injury or death, follow the rules in this section.

Owner - Be Responsible

Read this Operator's Guide and watch the *SAFETY VIDEO*. Refer to the link at the beginning of the Operator's Guide.

Always inspect and confirm the safe operating condition of your vehicle prior to ride. Always follow the maintenance schedule described in this Operator's Guide.

Never allow anyone to operate your vehicle unless they are responsible and can be trusted with a high performance vehicle. Consider supervising new or young operators and setting rules and limits (e.g., whether they can carry passengers, what they may do with the vehicle, where they may ride, etc.) for anyone using your vehicle.

If equipped with optional D.E.S.S. keys, select the appropriate key (see *IGNITION SWITCH AND KEYS*) based on the operator's experience, vehicle use and environment.

Discuss the safety information with anyone who will be using the vehicle. Be sure that all operators and passengers meet the qualifications below and agree to follow the safety information. Help users become familiar with the vehicle.

We encourage you to have an Annual Safety Inspection of your vehicle. Please contact an authorized BRP dealer for further details. Though not required, it is recommended that an authorized BRP dealer performs the preseason preparation of your vehicle. Each visit to your authorized BRP dealer is a great opportunity for your dealer to verify if your vehicle is included in any safety campaign. We also urge you to visit your authorized BRP dealer in a timely manner if you become aware of any safety related campaigns.

See an authorized BRP dealer for available accessories you may require.

Operator - Be Qualified and Responsible

Read this Operator's Guide and watch the *SAFETY VIDEO*. Refer to the link at the beginning of the Operator's Guide.

Become completely familiar with the operational controls and the general operation of the vehicle.

Take a training course if available (contact an authorized Can-Am dealer to find out about training course availability as well as on the internet at http://www.rohva.org/), and perform the practice exercises in *PRACTICE EXERCISES* section. Practice driving in a suitable area free of hazards and feel the response of each control. Drive at low speeds. Higher speeds require greater experience, knowledge and suitable riding conditions.

Be at least 16 years of age.

Be tall enough to be properly seated: back against the backrest with the seat belt fastened, to hold the steering wheel with both hands and still be able to reach the full stroke of brake and accelerator pedals with the right foot and to firmly plant left foot on the footrest.

Have a proper driver's license in accordance with local laws.

Never use this vehicle with drugs or alcohol, or if tired or ill. These slow reaction time and impair judgment.

Carrying Passengers

Only carry a maximum of five passengers. The passengers must be properly seated in the cockpit.

The passengers must be tall enough to always be properly seated: back against the backrest with seat belt fastened, holding the handhold, and feet firmly planted - for the front RH passenger, with right foot on the footrest and the left foot on the vehicle floor, for the central passenger and the three rear passengers, with both feet firmly planted on the floor.

Never carry passengers who have used drugs or alcohol, or are tired or ill. These slow reaction time and impair judgment.

Instruct the passengers to read the vehicle's safety labels.

Never carry passengers if you judge their ability or judgement insufficient to concentrate on the terrain conditions and adapt accordingly. More specifically for side-by-side vehicles, the passenger must also pay constant attention to the terrain ahead and be able to brace for bumps.

Riding Carefully

- This vehicle handles differently from other vehicles. A collision or rollover can occur quickly, during abrupt maneuvers such as doing sharp turns, acceleration or deceleration and driving on hills or over obstacles, if you fail to take proper precautions.
- Never operate at excessive speeds. Always go at a speed that is proper for the terrain, visibility, and operating conditions, and your experience.
- Never attempt jumps, side slides, donuts or any other stunts.
- Never attempt rapid acceleration or deceleration when performing a sharp turn. This may result in a roll over.
- Never attempt skidding or sliding. If vehicle starts to skid or slide, counter steer in the direction of skidding or sliding. On extremely slippery surfaces, such as ice, go slowly and be very cautious in order to reduce the chance of skidding out of control.
- Always be sure there are no obstacles or people behind the vehicle when you operate in reverse. Pay attention to blind spots. When it is safe to proceed in reverse, go slowly.
- Never exceed the stated load limits for this vehicle. Cargo must be properly secured. Reduce speed, allow for greater braking distance and follow other instructions in *MOVING LOADS AND DOING WORK*.
- Always remember that this vehicle is heavy! Its pure weight alone may entrap you should it tip or rollover.

Occupant Restraint System

- This vehicle is designed to carry one driver and up to five passengers, all wearing proper protective gears (refer to *RIDING GEAR* in this section).
- The driver and passengers must latch the doors or the side nets and wear the seat belts at all times when riding.

Terrain Condition

- This vehicle is not designed to ride on paved surfaces; if you must shortly use the vehicle on such surfaces, avoid abrupt inputs to steering wheel, accelerator and brake pedals.
- Always go slowly and be extra careful when operating on unfamiliar terrain. Always be alert to changing terrain conditions when operating this vehicle. Take the time to learn how the vehicle performs in different environments.

– Never operate on excessively rough, slippery or loose terrain until you have learned and practiced the skills necessary to control this vehicle on such terrain. Always be especially cautious on these kinds of terrain.
– Never operate this vehicle on hills too steep for the vehicle or your abilities. Practice on small inclines.
– Always follow proper procedures for climbing or going down hills as described in *RIDING YOUR VEHICLE*. Check the terrain carefully before you start up or down any hill. Never climb or descend hills with excessively slippery or loose surfaces. Never go over the top of any hill at high speed.
– Never attempt steep hills or side hilling when pulling a trailer.
– Always check for obstacles before operating in a new area. Always follow proper procedures when operating over obstacles as described in *RIDING YOUR VEHICLE*.
– Never operate this vehicle in fast flowing water or in water deeper than specified in *RIDING YOUR VEHICLE*. Remember that wet brakes may have reduced stopping ability. Test your brakes after leaving water. If necessary, apply them several times to let friction dry out the brakes.
– Always ensure to properly park the vehicle on the flattest terrain section available. Put shift lever in PARK, stop engine and remove key before leaving the vehicle.
– Never assume that the vehicle will go everywhere safely. Sudden changes in terrain caused by holes, depressions, banks, softer or harder "ground" or other irregularities may cause the vehicle to topple or become unstable. To avoid this, slow down and always observe the terrain ahead. If the vehicle does begin to topple or rollover, the best advice is to immediately steer in the direction of the rollover! Never attempt to prevent a rollover with your arms or legs. You should keep your limbs inside the cage or ROPS (rollover protective structure).

PRE-RIDE INSPECTION

Always inspect and confirm the safe operating condition of your vehicle prior to ride. Always follow the maintenance schedule described in this Operator's Guide.

⚠ WARNING

Perform a pre-ride inspection before each ride to detect any potential problem that could occur during operation. The pre-ride inspection can help you monitor component wear and deterioration before they become a problem. Correct any problem that you discover to reduce the risk of a breakdown or crash.

Before using this vehicle, the operator should always perform the following pre-ride inspection check list.

Refer to *MAINTENANCE PROCEDURES* for details.

Pre-Ride Inspection Check List

What to Do Before Starting the Engine (Key OFF)

ITEMS TO BE INSPECTED	INSPECTION TO PERFORM	✔
Tires	Check tire pressure and condition. Refer to *SPECIFICATIONS* and adjust according to load.	
Wheels	Check wheels for damage and for abnormal play, Make sure that lug nuts are tightened. Refer to *WHEELS AND TIRES* in *MAINTENANCE PROCEDURES* for torque specification.	
Radiator	Check cleanliness of the radiator.	
Front grill kit	Inspect front grill kit for cleanliness.	
Engine oil	Check engine oil level.	
Coolant	Check coolant level.	
Brake fluid	Check brake fluid level.	
Engine air filter	Inspect the engine air filter, clean or replace if needed (service more often when riding in dusty conditions).	
CVT air filter	Inspect and clean the CVT air filter (when riding in dusty conditions).	
Drive shaft bellows	Check drive shaft bellows and protectors condition.	

ITEMS TO BE INSPECTED	INSPECTION TO PERFORM	✔
Cargo and load	**Cargo Load:** If you transport a cargo, respect the maximum loading capacity. Refer to *SPECIFICATIONS* **Vehicle Load:** Ensure that total load on the vehicle (including operator, passengers, cargo, tongue weight and added accessories) does not exceed the specifications. Refer to *CARRYING LOADS*.	
	If you are pulling a trailer or another equipment: – Check hitch and trailer ball condition. – Respect the tongue capacity and towing capacity as indicated on the label affixed to the hitch or refer to *SPECIFICATIONS*. – Ensure trailer is properly secured to hitch.	
Rear cargo box	Check if the cargo box is properly latched.	
	Check if tail gate is properly latched.	
Chassis and suspension	Check underneath vehicle for any debris on chassis or suspension and clean them properly.	
Brake Holding Mechanism (If equipped)	Apply brake holding mechanism and check if it operates properly.	
Heater air filters (if equipped)	Inspect heater air filters, clean if needed (service more often when riding in dusty conditions).	

What to Do Before Starting the Engine (Key ON)

ITEMS TO BE INSPECTED	INSPECTION TO PERFORM	✔
Gauge	Check operation of indicator lamps in gauge (during first few seconds of key ON).	
	Check for messages in gauge.	
Lights	Check operation and cleanliness of headlights and taillights.	
	Check operation of high and low beam.	
	Check operation of brake lights.	

ITEMS TO BE INSPECTED	INSPECTION TO PERFORM	✔
Seats, side nets and seat belts	Check if seats are properly latched.	
	Check side nets for any damage. Have the nets replaced if any damage is found. Fasten both side nets and confirm that they latch securely. Use the adjustment strap to tighten the net as required.	
	Check seat belts for any damage. Fasten seat belts and confirm that they latch securely.	
Accelerator pedal	Press on the accelerator pedal a few times to ensure it operates freely and it returns to the rest position when released.	
Brake pedal	Press down on the brake pedal and make sure you feel firm resistance and that it fully returns to position when released.	
Fuel level	Check the fuel level.	
Heater fan (if equipped)	Check operation of heater fan. Check air flows out of every louver (dash-mounted and heater-mounted).	

What to Do After the Engine is Started

ITEMS TO BE INSPECTED	INSPECTION TO PERFORM	✔
Steering	Check if steering operates freely by completely turning it from side to side.	
Ignition switch	Turn the ignition switch to OFF to verify if engine will shut down. Restart engine.	
Shift lever	Check operation of shift lever (P, R, N, H and L).	
2WD/4WD selector	Check operation of 2WD/4WD selector.	
Brakes	Drive forward slowly a few feet and apply brakes. The brake pedal must feel firm when applied. The pedal must return to rest position when released. The brakes must respond adequately to the driver's input.	
Winch (if equipped)	Check operation of winch.	

Before you Ride

Perform pre-ride inspection to confirm the safe operating condition of your vehicle. Refer to *PRE-RIDE INSPECTION*.

Driver and passengers must:

– Be properly seated.
– Latch side nets and fasten seat belts.
– Wear appropriate riding gear. (Refer to *RIDING GEAR*.)

Riding Gear

It is important that the operator and passengers always wears appropriate protective clothing and apparel, including:

– An approved helmet
– Eye protection
– Boots
– Gloves
– A long sleeved shirt or jacket
– Long pants.

Depending on conditions, anti-fogging goggles may be required.

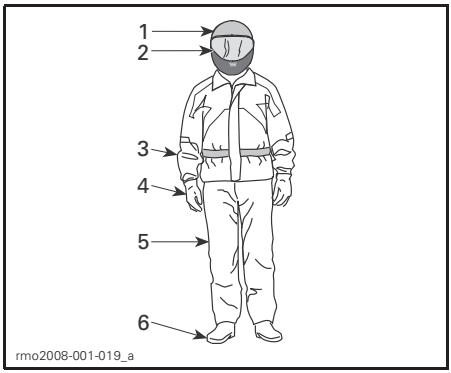

RIDING GEAR
1. *Approved helmet*
2. *Eye and face protection*
3. *Long sleeves shirt or jacket*
4. *Gloves*
5. *Long pants*
6. *Boots (over-the-ankle footwear)*

Weather conditions should help you decide how to dress. To maximize comfort and avoid frostbites in winter, dress for the coldest weather expected. Thermal underwear next to the skin also provides good insulation.

Never wear any loose clothing that may get entangled in the vehicle or on tree branches and shrubs.

Helmets and Eye Protection

Helmets protect the head and brain from injury. Even with the vehicle's cage and side nets, objects can enter the cockpit and strike the head, or the head can strike the cage itself or objects outside the vehicle. Even the best helmet is no guarantee against injury, but statistics indicate that helmet use significantly reduces the risk of brain injury. So, be safe and always wear a helmet while riding.

Choosing a Helmet

Helmets should be manufactured to meet the appropriate standard in your state, province or country and should fit properly.

A helmet with face protection is a better choice as it protects also against frontal impacts. It can also protect against debris, stones, insects, the elements, etc.

An open-face helmet does not offer the same protection for the face and chin. If you wear an open-face helmet, you should use a snap-on face shield and/or a pair of goggles. Ordinary glasses or sunglasses are not sufficient eye protection for riders. They can shatter or fly off, and they allow wind and airborne objects to reach the eyes.

For winter riding conditions, a stocking type cap, balaclava and face mask should always be carried or worn.

Use tinted face shields or goggles in the daytime only; do not use them at night or in poor illumination. Do not use them if they impair your ability to discern color.

Other Riding Gear

Footwear

Always wear closed toe footwear. Sturdy over-the-ankle boots with non-slip soles offer more protection and allow you to plant your foot properly on footrest.

Avoid long shoelaces that can be tangled in the accelerator or brake pedals.

For winter riding conditions, rubber soled boots with either a nylon or leather uppers, with removable felt liners are best suited.

Avoid rubber boots. Rubber boots may get trapped behind or between pedals, impairing the proper operation of brake and accelerator pedals.

Gloves

Full-fingered gloves protect hands from the wind, sun, heat, cold and flying objects. Gloves that fit snugly will improve grip on the steering wheel and help reduce hand fatigue. Sturdy, reinforced motorcycle or ATV gloves help protect hands better in the event of an accident or a rollover. If gloves are too bulky, it may be difficult to operate the controls.

For winter riding conditions, hands should be protected by a pair of snowmobile gloves which have sufficient insulation and allow use of thumbs and fingers for operation of controls.

Jackets, Pants and Riding Suits

Wear a jacket or a long sleeved shirt and long pants, or a full riding suit. Quality ATV-type protective gear will provide comfort, and it can help you avoid being distracted by adverse environmental elements. In case of a crash, good quality protective gear made of sturdy material may prevent or reduce injury.

In cool-weather riding, protect yourself against hypothermia. Hypothermia, a condition of low body temperature, can cause loss of concentration, slowed reactions and loss of smooth, precise muscle movement. In cool conditions, proper protective gear like a windproof jacket and insulated layers of clothing are essential. Even while riding at moderate temperatures, you can feel very cold due to the wind.

Protective gear that is appropriate for cold-weather riding may be too hot when stopped. Dress in layers so that clothing can be removed as desired. Topping the protective gear with a windproof outer layer can prevent cold air from reaching the skin.

Rain Gear

If you must ride in wet weather, a rain suit or a waterproof riding suit is recommended. On long rides, it is a good idea to carry rain gear. A dry rider will be much more comfortable and alert.

Hearing Protection

Long-term exposure to wind and engine noise when riding can cause permanent hearing loss. Properly worn hearing protective devices such as earplugs can help prevent hearing loss. Check local laws before using any hearing protective devices.

Avoid Rollovers and Tipovers

Side-by-side vehicles handle differently from other vehicles. Side-by-side vehicles are designed to handle off-road terrain (for example, their wheel base and track width, ground clearance, suspension, drivetrain, tires, etc.), and, as a result, can overturn in situations where vehicles designed for use primarily on paved or smooth terrain may not.

A rollover or other accident can occur quickly during abrupt maneuvers such as sharp turns or hard acceleration or deceleration when turning, or when driving on hills or over obstacles. Abrupt maneuvers or aggressive driving can cause rollovers or loss of control even in flat open areas. If the vehicle rolls over, any part of your body (such as arms, legs, or head) outside of the cockpit can be crushed and trapped by the cage or ROPS or other parts of the vehicle. You can also be injured by impact with the ground, cockpit or other objects.

To reduce the risk of rollovers:

– Use care when turning.
  - Do not turn the steering wheel too far or too fast for your speed and environment. Adjust steering inputs according to your speed and environment.
  - Slow down before entering a turn. Avoid hard braking during a turn.
  - Avoid sudden or hard acceleration when turning, even from a stop or low speed.
– Never attempt donuts, skids, slides, fishtails, jumps, or other stunts. If vehicle starts to skid or slide, steer in the direction of the skid or slide. Never slam the brakes and lock the wheels.
– Avoid paved surfaces. This vehicle is not designed to operate on paved surfaces and is more likely to roll over. If you must drive on pavement, turn gradually, go slowly, and avoid abrupt acceleration and braking.

This vehicle can roll over sideways or tip over forward or backwards on slopes or uneven terrain.

– Avoid side hilling (driving along the slope rather than up or down a hill). When possible, drive straight up and down inclines rather than across them. If you must side hill, use extreme caution and avoid slippery surfaces, objects, or depressions. If you feel the vehicle start to rollover or slide sideways, steer downhill if possible.
– Avoid steep hills and follow procedures in this guide for climbing and descending hills.
– Sudden changes in terrain such as holes, depressions, banks, softer or harder ground or other irregularities may cause the vehicle to tip or become unstable. Observe the terrain ahead and slow down in areas of uneven terrain.

This vehicle will handle differently when carrying or pulling a load.

– Reduce speed and follow instructions in this manual for carrying cargo or pulling a trailer.
– Avoid hills and rough terrain.
– Allow more distance to stop.

Be Prepared in Case of Rollover

– Fasten side nets and fasten seat belt to help you avoid sticking out arms or legs.

– Never grab the cage or ROPS while riding. Hands can be crushed between the cage or ROPS and the ground in a rollover. Keep hands on the steering wheel or handholds.
– Never try to stop a rollover using your arms or legs. If you think that the vehicle may tip or roll, the driver should keep both hands on the steering wheel and the left foot firmly planted on the footrest. The passengers should keep both hands on the handhold and both feet firmly planted on the floor.

Avoid Collisions

This vehicle can reach high speeds. At higher speeds, there is an increased risk of losing control, particularly in challenging off-road conditions, and the risk of injury in a collision is greater. Never operate at excessive speeds. Always go at a speed that is proper for the terrain, visibility, and operating conditions, and your experience. Consider reserving use of the performance key for situations in which full speed and acceleration capability are appropriate.

Never operate this vehicle on any public street, road or highway, even dirt or gravel ones. Riding your vehicle on roads or highways could result in a collision with another vehicle. This vehicle is not designed for operation on roads. For example, it does not meet motor vehicle safety standards that apply to automobiles. In many jurisdictions it is not legal to operate this vehicle on public roads.

This vehicle does not have the same kind of protection for collisions as a car; for example, there are no air bags, the cockpit is not fully enclosed, and it is not designed for collisions with other vehicles. Therefore, it is particularly important to fasten seat belts and side nets and wear an approved helmet.

Practice Exercises

Before you go out for a ride, it is very important to familiarize yourself with the handling of your vehicle by practicing in a controlled environment. If possible, it is also a very good idea to take a more formal training course to sharpen your skills and increase your knowledge of the vehicle.

Find a suitable area to practice and perform the following exercises. It should be at least 45 m (150 ft) by 45 m (150 ft) free of obstacles like trees and rocks. Once you've selected a suitable permitted location, proceed with the following exercises.

Turning Exercises

Turning is one of the most frequent causes of accidents. It is easier for the vehicle to lose traction or rollover if you turn too sharply, or go too fast. Slow down when you approach a turn.

- First learn how to perform slight right turns at very low speeds. Release the throttle before turning and slowly reapply the throttle when turning.
- Repeat turning exercise but this time maintain the throttle at the level while turning.
- Finally, repeat turning exercise while accelerating slowly.
- Practice exercises turning on the other side.

Note how your vehicle reacts in these different exercises. We recommend releasing the throttle before entering a turn to help initiate directional change. You will feel the lateral force increasing with the speed and with your steering input. The lateral force should be maintained as low as possible to make sure it does not cause the vehicle to roll over.

U Turn Exercises

Practice doing U turns.

- Accelerate slowly and while remaining at low speed, then gradually turn the steering wheel to the right until you have completed the U turn.
- Repeat U turn exercise with different steering inputs and always at a very low speed.
- Repeat U turn exercise on the other side.

As mentioned before in this guide, do not ride on paved surfaces as the vehicle behavior will not be the same, increasing the risk of rollover.

Braking Exercises

Practice braking to get familiar with the brake response.

- Do it at low speed first, then increase the speed.
- Practice braking in straight line at different speeds and different braking force.
- Practice emergency braking; optimal braking is obtained in straight line, with high force applied, without locking the wheels.

Remember, braking distance depends on vehicle speed, load and the type of surface. Also, the tires and brakes conditions play a major role.

Reverse Exercises

The next step involves using the reverse.

- Install 1 cone marker on both sides of the vehicle beside each rear wheel. Move the vehicle forward until you can see the cone markers, then stop the vehicle. Acknowledge the distance required to see obstacles behind you.
- Learn how the vehicle handles itself in reverse and reacts with steering inputs.
- Always perform this reverse exercise at slow speeds.

Emergency Engine Stopping Exercise

Learn how to stop your engine quickly in an emergency situation.

– While running at low speed, simply turn the key to the off position.

This is to familiarize you with the vehicle's reaction when the engine is turned off while driving and to develop this reflex.

Off-Road Operation

The very nature of off-road operation is dangerous. Any terrain, which has not been specially prepared to carry vehicles, presents an inherent danger where terrain substance, shape and steepness are unpredictable. The terrain itself presents a continual element of danger, which must be knowingly accepted by anyone venturing over it.

An operator who takes a vehicle off-road should always exercise the utmost care in selecting the safest path and keeping close watch on the terrain ahead of him. The vehicle should never be operated by anyone who is not completely familiar with the driving instructions applicable to the vehicle, nor should it be operated on steep or treacherous terrain.

General Riding Techniques

General Driving Tips

Care, caution, experience and driving skill are the best precautions against the hazards of vehicle operation.

Whenever there is the slightest doubt that the vehicle can safely negotiate an obstacle or a particular piece of terrain, always choose an alternate route.

In off-road operation, power and traction, not speed, are important. Never drive faster than visibility and your own ability to select a safe route permit. Always go slowly and be extra careful when operating on unfamiliar terrain. Always be alert to changing terrain conditions when operating this vehicle. Be especially cautious on excessively rough, slippery, icy or loose terrain.

Constantly watch the terrain ahead for sudden changes in slopes or obstacles, such as rocks or stumps, that may cause loss of stability, resulting in tip over or rollover.

Never operate the vehicle if the controls do not function normally. See an authorized Can-Am dealer.

To maintain proper control it is strongly advised that you keep your hands on the steering wheel and within easy reach of all controls. The same holds true for your feet. To minimize the possibility of any leg or foot injury, keep your left foot on the footrest and right foot on the floor at all times. Staying completely within the cockpit will also help keep you from striking objects outside the vehicle.

Watch for and avoid branches and other foreign objects that could enter the passenger compartment and strike you or your passengers.

Operating in Reverse

When operating in reverse, check that the path behind the vehicle is free of people or obstacles. Pay attention to blind spots. When it is safe to proceed in reverse, go slowly and avoid sharp turns.

⚠ WARNING

Steering inputs in reverse operation increase the risk of rollover.

NOTE: In reverse operation, the engine RPM is limited thus limiting the vehicle reverse speed.

⚠ WARNING

When driving downhill in reverse, gravity can increase the vehicle speed above safe reverse speed.

Crossing Roads

If you have to cross a road, ensure to have complete visibility on both sides for incoming traffic and decide on exit point on other side of road. Drive in a straight line toward that point. Do not make sharp direction changes or abrupt accelerations as it may result in a rollover situation. Do not travel on sidewalks or bicycle trails as they are designated specifically for those uses.

Riding on Paved Surfaces

Avoid paved surfaces. This vehicle is not designed to operate on paved surfaces and is more likely to roll over. If you must drive on pavement, turn gradually, go slowly, and avoid abrupt acceleration and braking.

Shallow Water Crossing

Water can be a unique hazard. If it is too deep the vehicle may “float” and topple. Check the water depth and current before you attempt to cross any water. Water depth should not exceed 30 cm (12 in) for vehicle to safely cross the obstacle. Beware of slippery surfaces such as rocks, grass, logs, etc., both in the water and on its banks. A loss of traction may occur. Do not attempt to enter the water at high speed.

Water will affect the braking ability of your vehicle. Make sure you dry the brakes by applying them several times after the vehicle leaves the water.

Mud or marsh lands may be encountered near water. Be prepared for sudden “holes” or changes in depth. Similarly so, be watchful of hazards such as rocks, logs, etc., partially covered by vegetation.

Riding on Snow or Ice

When performing pre-ride inspection, pay special attention to locations on the vehicle where snow and/or ice accumulations may obstruct visibility of the tail lamp, clog ventilation openings, block the radiator and fan, and interfere with the movement of controls. Before starting with your vehicle, check the steering, accelerator and brake pedals for interference free operation.

Whenever this vehicle is ridden on a snow covered drive path, the tire grip is generally reduced causing the vehicle to react differently to control inputs from the operator. On low grip surfaces, the steering responses are not as crisp and precise, stopping distances are lengthened and acceleration is also affected. Slow down and do not "gun" the accelerator. This will only result in spinning of the tires and possibly in an over steering slide of the vehicle. Avoid hard braking. This will possibly result in a straight line slide of the vehicle. Again, the best advice is to safely reduce speed in anticipation of a maneuver to give yourself time and distance in order to keep control of the vehicle.

As you drive your vehicle over a loose snow covered surface, snow dust will be picked up in the wake turbulence of the moving vehicle and transported to contact and accumulate or melt on some exposed components including rotating parts like brake discs. Water, snow or ice may affect the response time of the brake system of your vehicle. Even when not required to reduce vehicle speed apply brakes frequently to prevent ice or snow accumulation and to dry brake pads and discs. While doing so in low risk driving situations you will test for grip level and keep yourself alerted to how the vehicle reacts to your control inputs. Always keep brake and accelerator pedals and floor boards free of snow and ice. Frequently wipe snow off seat, steering wheel, headlights and tail lamps.

The depth of the snow cover may hide rocks, tree stumps or other objects and if it is wet may totally impede the drivability as the vehicle becomes bogged down or completely looses traction in slushy snow. Look far ahead and always be watchful of any visible clues

that might indicate the presence of such obstacles. In doubt steer clear. Avoid driving on any frozen waterways before checking that the ice will safely support the vehicle, its riders and its load of cargo.

At the end of each ride it is a good practice to clean the vehicle and all moving components (brakes, steering components, drivelines, controls, radiator fan etc.) from any snow or ice accumulations. Wet snow will turn to ice during the shut down period and become more difficult to remove at the next pre-ride inspection.

Riding on Sand

Sand and riding on sand dunes is another unique experience but there are some basic precautions that should be observed. Wet, deep or fine sand may create a loss of traction and cause the vehicle to slide, drop off or become "bogged" down. If this occurs look for a firmer base. Again, the best advice is to slow down and be watchful of the conditions.

When riding in sand dunes it is advisable to equip the vehicle with an antenna type safety flag. This will help make your location more visible to others over the next sand dune. Proceed carefully should you see another safety flag ahead.

Riding on Gravel, Loose Stones or Other Slippery Surfaces

Riding on loose stones or gravel is very similar to riding on ice. They will affect the steering of vehicle, possibly causing it to slide and tip over especially at high speeds. In addition, braking distance may be affected. Remember that "gunning" the throttle or sliding may cause loose stones to be ejected rearwards into the path of another rider's way. Never do it deliberately.

If you do get into a slide or skid, it may help to turn the steering wheel into the direction of the skid until you regain control. Never jam the brakes and lock the wheels.

Crossing Obstacles

Use the low range (L) for crossing obstacles.

Obstacles on the "trail" should be traversed with caution. This includes rocks, fallen trees, and depressions. You should avoid them whenever possible. Remember that some obstacles are too large or dangerous to cross and should be avoided. As a guideline, never attempt to cross an obstacle higher than the ground clearance of the vehicle. Small rocks or small fallen trees may be safely crossed - approach obstacle at low speed and as much as possible at a right angle. Adjust speed without losing momentum and do not accelerate abruptly. Passengers must grasp handhold firmly and brace feet on the floor. Hold steering firmly without closing your fists around it and proceed. Be aware that the obstacle may be slippery or may move while crossing.

Hill Driving Conditions

When driving on hills or slopes, two things are highly important: be prepared for slippery surfaces or terrain variations and obstacles and brace yourself properly inside vehicle. If you climb or descend a hill that is too slippery or has too loose a surface, you can lose control. If you go over the top of a hill at high speed, you may not have time to prepare for the terrain on the other side. Avoid parking on a slope. Always put the shift lever in PARK when stopped or parked, especially on an incline, to avoid rolling. If you must park on a steep incline, block the wheels using rocks or bricks.

Uphill Driving

Use the low range (L) for uphill driving.

Due to its configuration, this vehicle has very good traction even while climbing, so much so that tip over is possible before traction is lost. For example, it is common to encounter terrain situations where the top of the hill has eroded to a point that the hill peak rises very sharply. This vehicle is not designed to negotiate such a condition. Take an alternate route.

It is also wise to know the terrain condition on the other side of the hill or bank. All too often there exists a sharp drop-off that is impossible to negotiate or descend.

If you feel that the slope is getting too steep to climb, apply brakes to immobilize vehicle. Put shift lever in reverse (R), and back down the hill, barely releasing brakes to remain at low speed. Do not attempt to turn around. Never coast down hill while vehicle is in neutral. Do not perform hard braking as it increases the risk of tipover.

Downhill Driving

This vehicle can climb steeper slopes than it can descend safely. Therefore, it is essential to assure that a safe route exists to descend a slope before you climb it.

Decelerating while negotiating a slippery downhill slope could "toboggan" the vehicle, causing it to slide. Maintain steady speed and/or accelerate slightly to regain control. Never slam brakes and lock the wheels.

Side Hilling

Whenever possible, side hilling (driving across a slope rather than up or down it) should be avoided. If necessary, do so with extreme caution. Side hilling on steep inclines could result in rollover. In addition, slippery or unfirm surfaces could result in uncontrollable side sliding. Avoid all objects or depressions that will intensify the raising of one side of the vehicle higher than the other, thus causing rollover. If you feel the vehicle start to rollover or slide sideways, steer downhill if possible.

⚠ WARNING

Be careful when loading and transporting liquid reservoirs. They can affect vehicle stability when side hilling by pulling downhill and increasing the risk of a roll over.

Drop-Offs

This vehicle is not designed to negotiate drop-offs. It will "bottom-out" and usually stop if either the front or rear wheels are driven over a drop-off. If the drop is sharp or deep, the vehicle will nose dive and tip over.

Avoid negotiating drop-offs. Reverse and select an alternate route.

Recreational, Group and Distance Riding

Respect the rights and limitations of others. Stay away from areas designated for other types of off road use. This includes snowmobile trails, equestrian trails, cross country ski trails, mountain bike trails, etc. Never assume there are no other users on the trail. Always stay to the right of the trail and do not zig zag to one side of the trail then the other. Be prepared to stop or pull off to the side if another trail user appears in front of you.

Join a local side-by-side vehicle club. It will provide you with a map and advice or inform you where you can ride. If a club does not exist in your area, help to start one. Group riding and club activities provide a pleasurable, social experience. Never use this vehicle with drugs or alcohol, or tired or ill.

Always keep a safe distance from other riders. Your judgment of speed, terrain conditions, weather, mechanical condition of your vehicle and the "trust in judgment" you have in others around you will help you make a better

choice of appropriate safe distance. This vehicle, like any other motorized vehicle, cannot stop "on a dime".

Before you ride, tell someone where you are planning to travel and your expected time of return.

Depending on the length of your ride, carry additional tools or emergency equipment. Find out where you can get additional gasoline. Be prepared for the possible conditions you may encounter. An emergency first aid kit should always be a consideration.

Environment

One of the benefits of this vehicle is that it can take you off the beaten path away from most communities. However, you should always respect nature and the rights of others to enjoy it. Do not ride in environmentally sensitive areas. Do not drive over forest crops or shrubs, nor cut down trees or take down fencing, nor spin your wheels and destroy the terrain. "Tread Lightly".

This vehicle can cause OHV wildfires if debris builds up near the exhaust or other engine hot spots and ignites then falls off into dry grass. Avoid riding in wet areas, through muskeg or tall grass, where debris can build up. Should you ride in those areas, inspect and remove all debris from your engine and hot spots. Refer to *VEHICLE CARE* for details.

Chasing wildlife is in many areas illegal. Wildlife can die of exhaustion after being chased by a motorized vehicle. If you encounter animals on the trail, stop and observe quietly and with caution. It will be one of the better memories of your life.

Observe the rule "what you take in, carry out". Do not litter. Do not start campfires unless you have permission to do so, and then only away from dry areas. The hazards you may create on the trail may cause injury to others or yourself, even at a later date.

Respect farm lands. Always obtain the permission of the landowner before riding on private land. Respect crops, farm animals and property lines.

Finally, do not pollute streams, lakes or rivers and do not modify the engine or exhaust system, or remove any of its components as it will alter the vehicle emissions.

MOVING LOADS AND DOING WORK

Working with your Vehicle

Your vehicle can help you perform a number of different LIGHT tasks ranging from snow removal to pulling wood or carrying cargo. A variety of accessories are available from your authorized Can-Am dealer. To prevent possible injury, follow the instructions and warnings that accompany the accessory. Always respect the load limits of the vehicle. Overloading the vehicle can overstress the components and cause failure. Avoid overexerting yourself if you lift or pull heavy loads or manually push the vehicle.

Carrying Loads

Any load carried on the vehicle will affect the handling, stability and braking distance of the vehicle. Do not exceed the load limits of the vehicle, including the weight of operator, passengers, cargo, accessories and trailer tongue weight.

Always be aware that the "load" may slide or fall off and cause an accident.

Must use low gear if total payload is greater than 390 kg (860 lb).

LOAD LIMIT OF THE VEHICLE		
HD10 With Cab HD8 and HD10 California models	590 kg (1,300 lb)	Includes occupants, cargo, tongue weight and added accessories
Lone Star models	785 kg (1,730 lb)	
HD8 and HD10 Without Cab	794 kg (1,750 lb)	

The following is an example of suitable total vehicle load distribution:

EXAMPLE OF SUITABLE VEHICLE TOTAL LOADS (MODELS WITH A 794 kg (1,750 lb) LOAD LIMIT, ADJUST ACCORDING TO YOUR MODEL LOAD LIMIT.)				
OPERATOR AND PASSENGERS	CARGO BOX LOAD	ACCESSORIES	TONGUE WEIGHT	TOTAL VEHICLE LOAD
340 kg (750 lb)	346 kg (762 lb)	40 kg (88 lb)	68 kg (150 lb)	794 kg (1,750 lb)

To reduce the risk to lose control or the load carried, follow these recommendations.

Vehicle Settings When Carrying Load

When carrying heavy loads or passengers readjust suspension accordingly.

When carrying heavy loads in cargo box or pulling a trailer operate with the shift lever in L (low range).

⚠ WARNING

Must use LOW GEAR if total payload is greater than 390 kg (860 lb).

Loading the Cargo Box

NOTICE When loading or unloading, do not exceed the maximum cargo capacity on tailgate. Always close tailgate before operating to reduce the risk of loss of load.

⚠ WARNING

Load cargo as low as possible – a higher load can raise the vehicle's center of gravity, which can reduce stability. Position cargo toward the front and center of the cargo box and as evenly distributed as possible.

Secure the load to the tie down hooks inside cargo box. Use only the tie down hooks on the bottom of the cargo box; do not secure cargo to the cage or other part of the vehicle. If it is not properly secured, a load may slide or fall off, possibly striking occupants or bystanders; or it may shift during riding, affecting the handling of the vehicle.

Objects that are higher than the walls of the cargo bed may affect visibility for the driver and may act as projectiles in case of an accident. Loads that protrude sideways can get snagged or caught in bush, branches or other obstacles. Avoid covering and obstructing the brake lights with the cargo. Ensure no cargo protrudes outside the box and that cargo will not interfere with your visibility or control of the vehicle.

Do not overload cargo box.

Close tailgate before operating.

⚠ WARNING

Never operate the vehicle with an open tailgate.

MODEL	MAXIMUM CARGO BOX LOADS		
California models	Cargo box	272 kg (600 lb)	Evenly distributed and safely secured. Loaded as low as possible to reduce height of center of gravity.
All other models		454 kg (1,000 lb)	
All models	Tail gate	113.4 kg (250 lb)	Only while loading cargo into cargo box. Never operate with tail gate open.

Operating While Carrying a Load

Reduce your speed when carrying cargo and turn gradually. Avoid hills and rough terrain. Allow more distance for braking. This vehicle may require additional stopping distance if carrying heavy loads, especially on inclined surfaces.

Tilting the Cargo Box

The cargo box can be tilted to ease unloading. Use release handles on either side of cargo box.

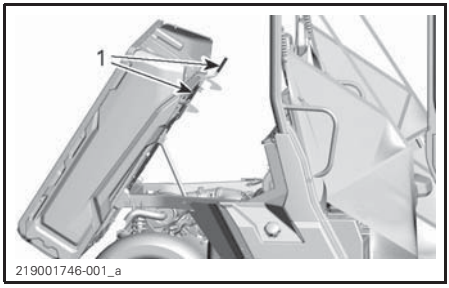

VIEWED FROM RH SIDE OF VEHICLE
1. Release handles

NOTICE Always turn off engine when tilting the cargo box.

⚠ WARNING

- Always ensure no one is standing behind the cargo box before you actuate the release handle.
- The load weight may affect the operation of the cargo box tilting feature (tilting or lowering).

Be very careful with the operation of the tail gate and the cargo box as the load may have moved during transport.

To lower the cargo box, simply push it down into place.

⚠ WARNING

- Keep yourself and others clear of the cargo box and vehicle frame junction when lowering cargo box.
- Ensure to properly latch the cargo box and the tailgate before riding.
- Make sure you do not leave objects between lifted cargo box and vehicle frame to ensure proper latching of the cargo box when lowered.

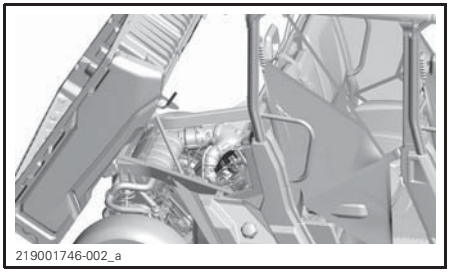

FRONT SECTION OF INCLINED CARGO BOX FREE OF ANY OBJECTS

Hauling a Load

NOTICE A BRP approved rear hitch must be properly installed on the vehicle for hauling trailers.

Never pull a load by attaching it to the cage or other accessories; this can cause the vehicle to tip over. Use only the trailer hitch or winch (if installed) to pull a load.

When pulling loads with a chain or cable, ensure that there is no slack before starting and maintain tension while pulling.

When pulling loads with a chain or cable, be sure to brake progressively. The inertia of the load could lead to an impact.

When hauling a load, respect the maximum hauling capacity. See *PULLING A TRAILER*.

⚠ WARNING

Slack can cause the chain or cable to break and snap back.

When pulling another vehicle, be sure that someone is controlling the pulled vehicle. They must brake and steer to prevent the vehicle from going out of control.

Before pulling loads with a winch, refer to the winch manufacturer's instructions.

Reduce your speed when hauling a load and turn gradually. Avoid hills and rough terrain. Never attempt steep hills. Allow more distance for braking, especially on inclined surfaces and when passengers are on board. Be careful not to skid or slide.

Pulling a Trailer

NOTICE **A BRP approved rear hitch plate must be properly installed on the vehicle for hauling trailers.**

Riding this vehicle with a trailer substantially increases the risk of toppling, especially on inclined slopes. If a trailer is used behind the vehicle make sure that its hitch is compatible with the one on the vehicle. Make sure the trailer is horizontal with the vehicle. (In some instances a special extension may have to be installed on the vehicle hitch). Use security chains or cables to secure the trailer with the vehicle.

Reduce your speed when pulling a trailer and turn gradually. Avoid hills and rough terrain. Never attempt steep hills. Allow more distance for braking, especially on inclined surfaces and when passengers are on board. Be careful not to skid or slide.

Improperly loading a trailer may cause loss of control.

Always make sure load is evenly distributed and safely secured on the trailer; an evenly balanced trailer is easier to control.

Always put the shift lever to L (low range) for hauling a trailer – in addition to providing more torque, operating in low range helps account for the increased load on the rear tires.

When stopped or parked, block the vehicle and trailer wheels from possible movement.

Use caution when disconnecting a loaded trailer; it or its load may topple on you or others.

When hauling a trailer, respect the following maximum tongue weight and towing capacity indicated on the label affixed to the hitch.

Make sure there is at least some weight on the tongue.

IMPORTANT ON-PRODUCT LABELS (CANADA/UNITED STATES)

Hang Tag

This vehicle comes with a hang tag and labels containing important safety information.

Any person who rides this vehicle should read and understand this information before riding.

Digitally Encoded Security System (D.E.S.S.™) Keys also available from your dealer

- Top-security anti-theft protection for your vehicle
- Encrypted code-on-chip technology restricts access to your vehicle's electronic ignition system.
- One vehicle / one code
- Comes with 3 programmable keys with a vibration / shock-resistant ball-and-socket design that ensures a reliable connection

- Work key, limits vehicle speed to 40 km/h.
- Normal key, limits vehicle speed to 70 km/h.
- Performance key, no limitation. (exactly as non D.E.S.S.™ keys)

704905721

THIS HANG TAG IS NOT BE REMOVED BEFORE SALE.

Vous pouvez aussi vous procurer des clés D.E.S.S.MC (système de sécurité à encodage numérique) auprès de votre concessionnaire

- Protection antivol à sécurité maximale pour votre véhicule
- Le code crypté intégré à la puce restreint l'accès au système d'allumage électronique de votre véhicule.
- Un véhicule / un code.
- Offert avec 3 clés programmables; design à rotule résistant aux vibrations et aux chocs qui assure une connexion fiable.

- Clé de travail: limite la vitesse du véhicule à 40 km/h.
- Clé normale: limite la vitesse du véhicule à 70 km/h.
- Clé de performance: aucune limite. (exactement comme des clés non D.E.S.S.MC)

Ne pas retirer cette étiquette avant la vente.

EN-FR-704905721-DEC

TYPICAL - D.E.S.S. KEY OPTIONAL: NO D.E.S.S. KEY DELIVERED WITH THE VEHICLE

⚠ WARNING

THIS VEHICLE IS INTENDED FOR RECREATIONAL USE AND SECONDARY GENERAL UTILITY APPLICATIONS
NO OPERATOR UNDER AGE 16

TRAINING COURSES TO TEACH ROV DRIVING ARE AVAILABLE. FOR INFORMATION CONTACT YOUR DEALER.
Read the Operator's Guide and Safety Labels and Watch the Safety Video.
Follow All Instructions and Warnings.

CHECK WITH YOUR DEALER TO FIND OUT ABOUT STATE OR LOCAL LAWS REGARDING ROV OPERATION.

Improper Use of Off-Highway Vehicles Can Cause Severe Injury or Death

Be Prepared
- Fasten seat belts and make sure nets or doors are securely latched in place.
- Wear an approved helmet and protective gear.
- Each rider must be able to sit with back against seat, foot flat on the floor or on footrest, and hands on steering wheel or handholds. Stay completely inside the vehicle.

Drive Responsibly
Avoid loss of control and rollovers:
- Avoid abrupt maneuvers, sideways sliding, skidding or fishtailing, and never do donuts.
- Avoid hard acceleration when turning, even from a stop.
- Slow down before entering a turn.
- Plan for hills, rough terrain, ruts, and other changes in traction and terrain. Avoid paved surfaces.
- Avoid side hilling (riding across slopes).

Rollovers have caused severe injuries and death, even on flat, open areas.

Be Sure Riders Pay Attention and Plan Ahead
If you think or feel the vehicle may tip or roll, reduce your risk of injury :
- Keep a firm grip on the steering wheel or handholds and brace yourself.
- Do not put any part of your body outside of the vehicle for any reason.

DRIVER UNDER 16

Require Proper Use of Your Vehicle
– Do your part to prevent injuries:
- Do not allow careless or reckless driving.
- Make sure operators are 16 or older with a valid driver's license.
- Do not let people drive or ride after using alcohol or drugs.
- Do not allow operation on public roads (unless designated for off-highway vehicle access) – collisions with cars and trucks can occur.
- Do not exceed seating capacity: see information on back side of this card

THIS HANG TAG CAN'T BE REMOVED BEFORE SALE.

Tilt Table Test Result

Bombardier Recreational Products inc.
Vehicle Model: XXXX

XX.X

Measurement of lateral stability, in degrees, of a sample, standard condition vehicle (with an operator and a passenger load - 430 pounds) as measured by the manufacturer in accordance with the tilt table lateral stability test in the ANSI/ROHVA standard for Recreational Off-Highway Vehicles. Vehicle modification, accessories, and loading can affect lateral stability.

Training courses to teach ROV driving are available. For information contact your dealer and/or rohva.org.

Check with your dealer to find out about state or local laws regarding ROV operation.

THIS HANG TAG IS NOT TO BE REMOVED BEFORE SALE.

VEHICLE ENGINE DESCRIPTION:
XXXXXX

EPA CERTIFIED

NER (NORMALIZED EMISSION RATE) = XX
ON A 0 TO 10 SCALE, 0 BEING THE CLEANEST

Vehicle seating capacity: ☐ **Occupants**

EN-704906754A-DEC

⚠ **WARNING**. Operating, servicing and maintaining an off-road vehicle can expose you to chemicals including engine exhaust, carbon monoxide, phthalates, and lead, which are known to the State of California to cause cancer and birth defects or other reproductive harm.
To minimize exposure, avoid breathing exhaust, do not idle the engine except as necessary, service your vehicle in a well-ventilated area and wear gloves or wash your hands frequently when servicing your vehicle.

For more information go to www.P65Warnings.ca.gov/products/passenger-vehicle

704906872

EN-704906872-DEC

TYPICAL: APPLICABLE FOR ALL MODELS IN CANADA AND UNITED STATES, APPLICABLE FOR MODELS EVERYWHERE EXCEPT CANADA AND UNITED STATES WHEN EQUIVALENT TO A MODEL CERTIFIED TO US. EPA STANDARDS

NOTICE

Remember to always return your key to OFF position for a complete electrical shutdown.

Leaving the key in ACC position will drain the battery and the vehicle may not restart.

THIS HANG TAG CANNOT BE REMOVED BEFORE SALE.

AVIS

Ne pas oublier de toujours remettre votre clé en position OFF afin d'assurer un arrêt complet du système électrique.

Laisser la clé en position ACC peut décharger la batterie et empêcher le véhicule de démarrer.

Ne pas retirer cette étiquette avant la vente.

EN-FR-704907637-DEC

TYPICAL - DO NOT LEAVE KEY IN ACC POSITION

Safety Labels

Read and understand all the safety labels on your vehicle.

These labels are affixed to the vehicle for the safety of the operator, passengers or bystanders.

The following labels are on your vehicle, and they should be considered permanent parts of the vehicle. If missing or damaged, they can be replaced free of charge. See an authorized Can-Am dealer.

NOTE: In the event of any discrepancy between this guide and the vehicle, the safety labels on the vehicle have precedence over the labels in this guide.

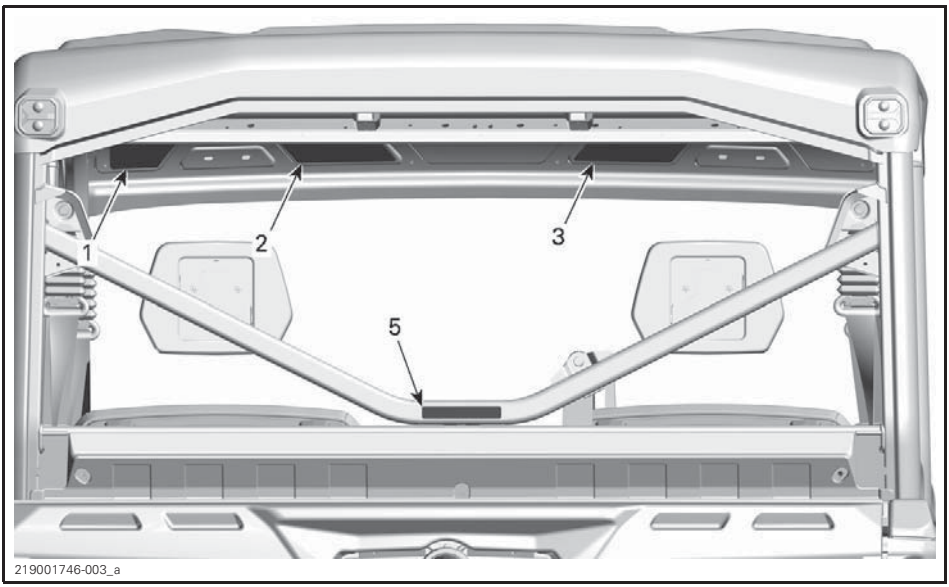

TYPICAL

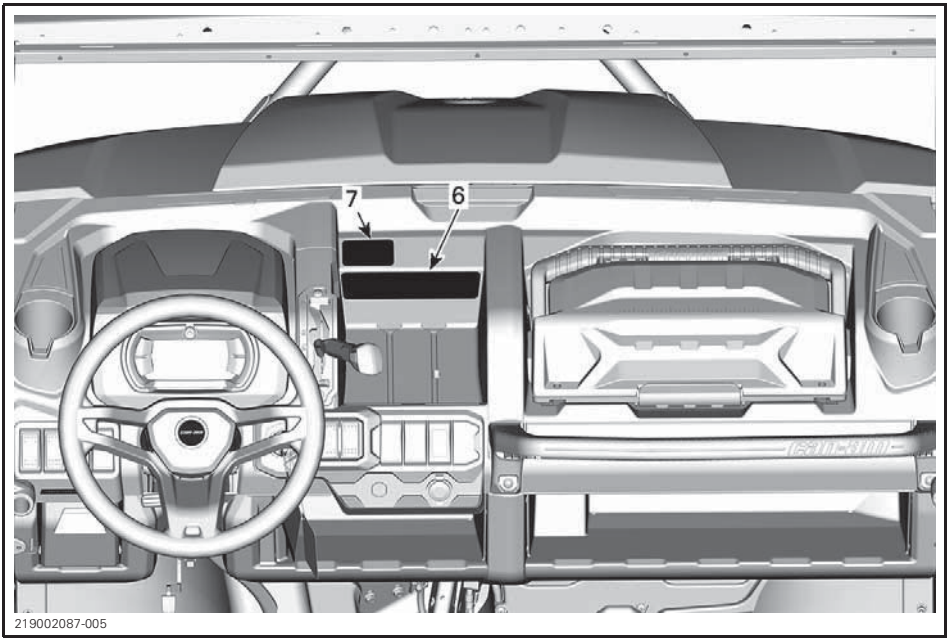

TYPICAL

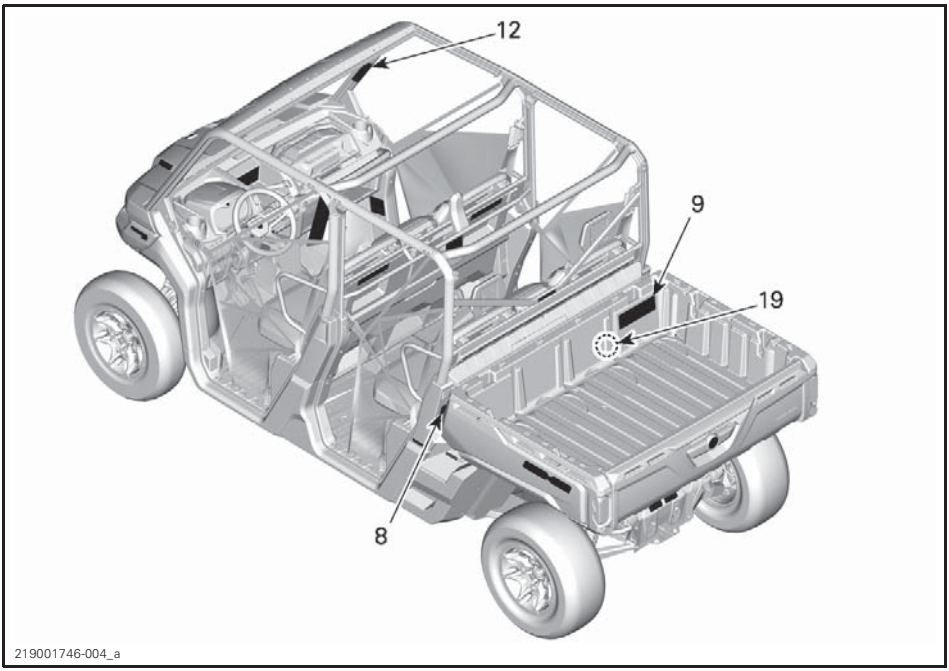

TYPICAL

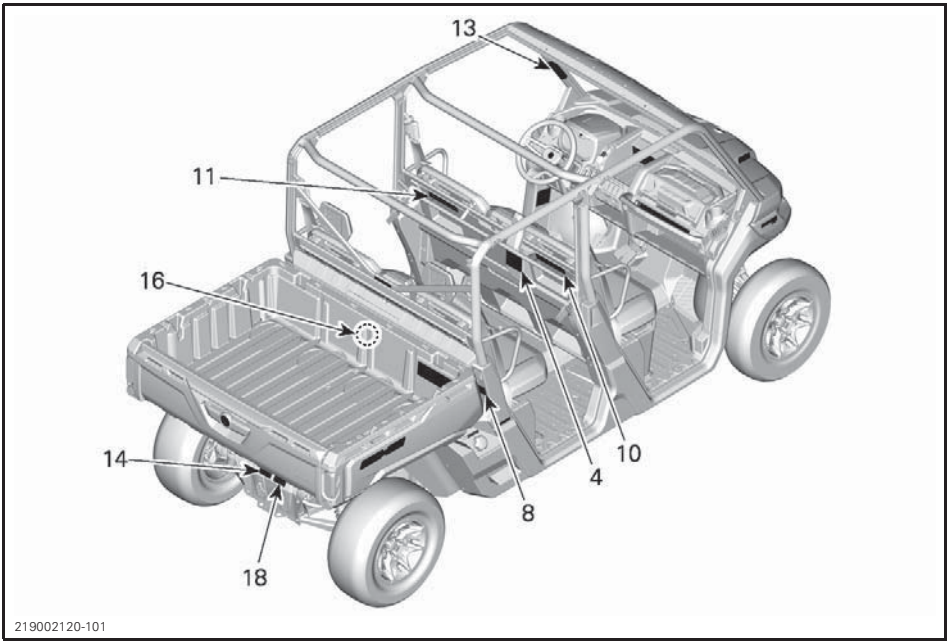

TYPICAL

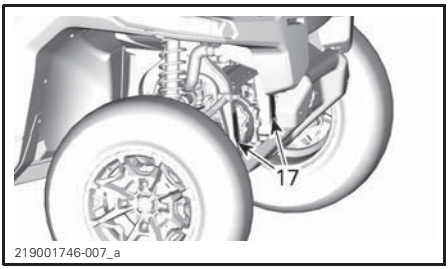

TYPICAL

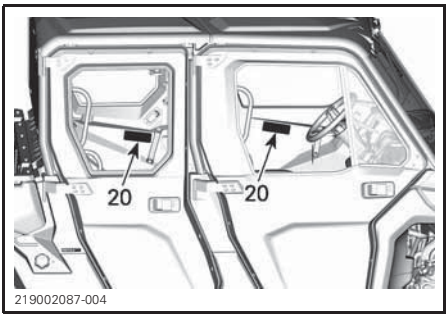

CAB MODELS

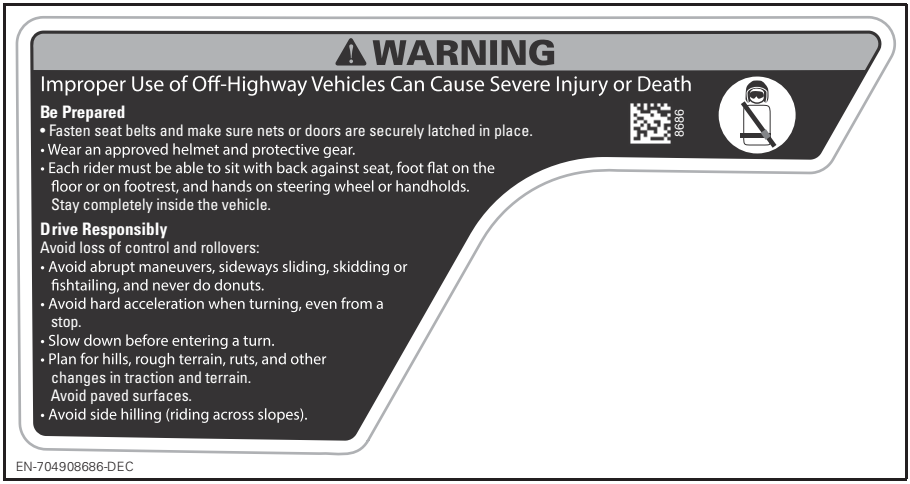

LABEL 1 - MODELS WITHOUT CAB

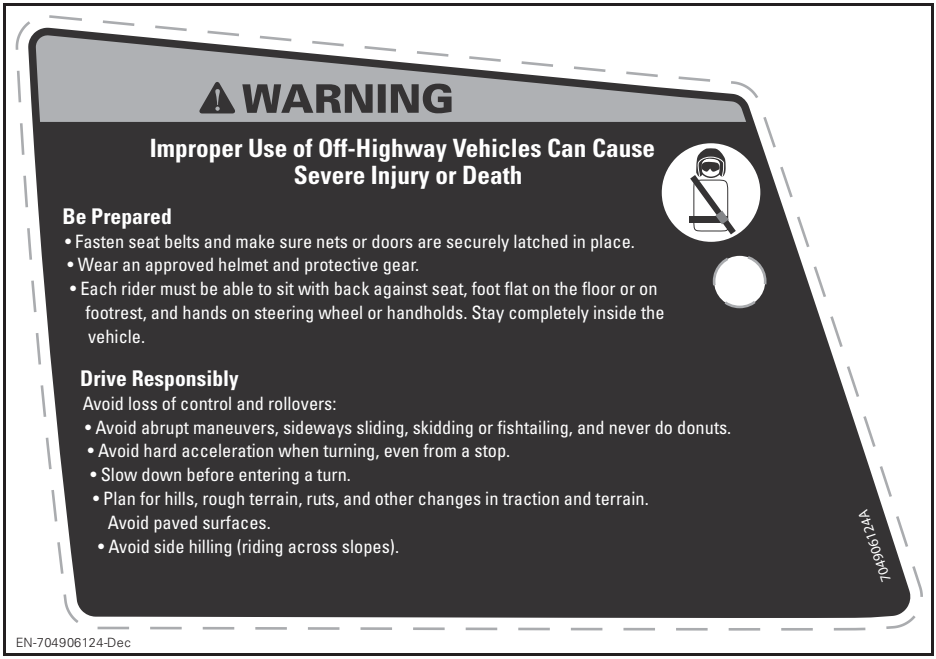

LABEL 1- MODELS WITH CAB

LABEL 2 - MODELS WITHOUT CAB

LABEL 2 - MODELS WITH CAB

LABEL 3- MODELS WITHOUT CAB

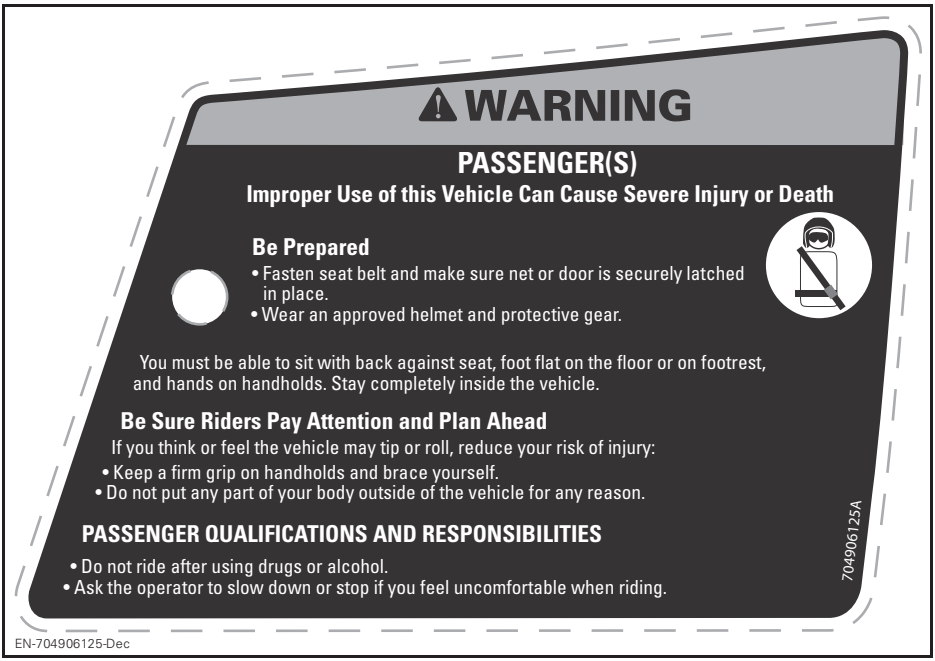

LABEL 3 - MODELS WITH CAB

⚠ WARNING

PASSENGER(S)

Improper Use of this Vehicle Can Cause Severe Injury or Death.

Be prepared

- Fasten seat belt and make sure net and/or door is securely latched in place.
- Wear an approved helmet and protective gear.

You must be able to sit with back against seat, foot flat on the floor or on footrest, and hands on handholds. Stay completely inside the vehicle.

Be sure riders pay attention and plan ahead

If you think or feel the vehicle may tip or roll, reduce your risk of injury:

- Keep a firm grip on handholds and brace yourself.
- Do not put any part of your body outside of the vehicle for any reason.

PASSENGER QUALIFICATIONS AND RESPONSIBILITIES

- Do not ride after using drugs or alcohol.
- Ask the operator to slow down or stop if you feel uncomfortable when riding.

8557

EN-704908557-DEC

LABEL 4

⚠ WARNING

NEVER attach to the cage to pull a load.This can cause the vehicle to tip over. Use only the trailer hitch to pull a load.

8188

EN-704908188-DEC

LABEL 5

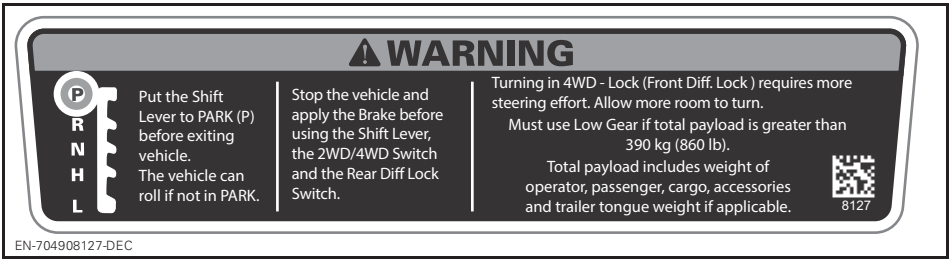

LABEL 6 - MODELS WITH VISCO-LOC

LABEL 7

LABEL 8

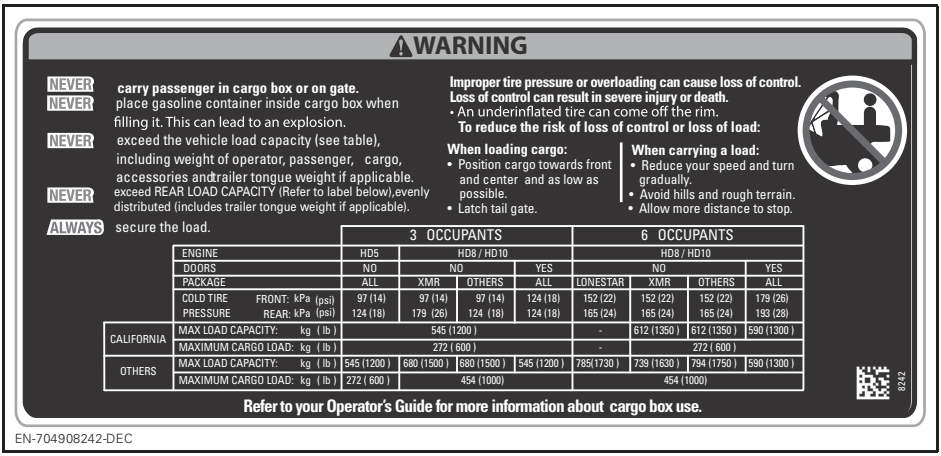

		3 OCCUPANTS				6 OCCUPANTS			
	ENGINE	HD5	HD8 / HD10			HD8 / HD10			
	DOORS	NO	NO		YES	NO			YES
	PACKAGE	ALL	XMR	OTHERS	ALL	LONESTAR	XMR	OTHERS	ALL
	COLD TIRE PRESSURE FRONT: kPa (psi)	97 (14)	97 (14)	97 (14)	124 (18)	152 (22)	152 (22)	152 (22)	179 (26)
	COLD TIRE PRESSURE REAR: kPa (psi)	124 (18)	179 (26)	124 (18)	124 (18)	165 (24)	165 (24)	165 (24)	193 (28)
CALIFORNIA	MAX LOAD CAPACITY: kg (lb)	545 (1200)				-	612 (1350)	612 (1350)	590 (1300)
CALIFORNIA	MAXIMUM CARGO LOAD: kg (lb)	272 (600)				-	272 (600)		
OTHERS	MAX LOAD CAPACITY: kg (lb)	545 (1200)	680 (1500)	680 (1500)	545 (1200)	785(1730)	739 (1630)	794 (1750)	590 (1300)
OTHERS	MAXIMUM CARGO LOAD: kg (lb)	272 (600)	454 (1000)			454 (1000)			

LABEL 9

LABEL 10

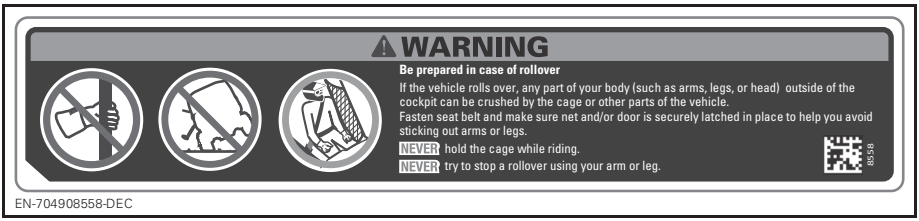

LABEL 11

LABEL 12

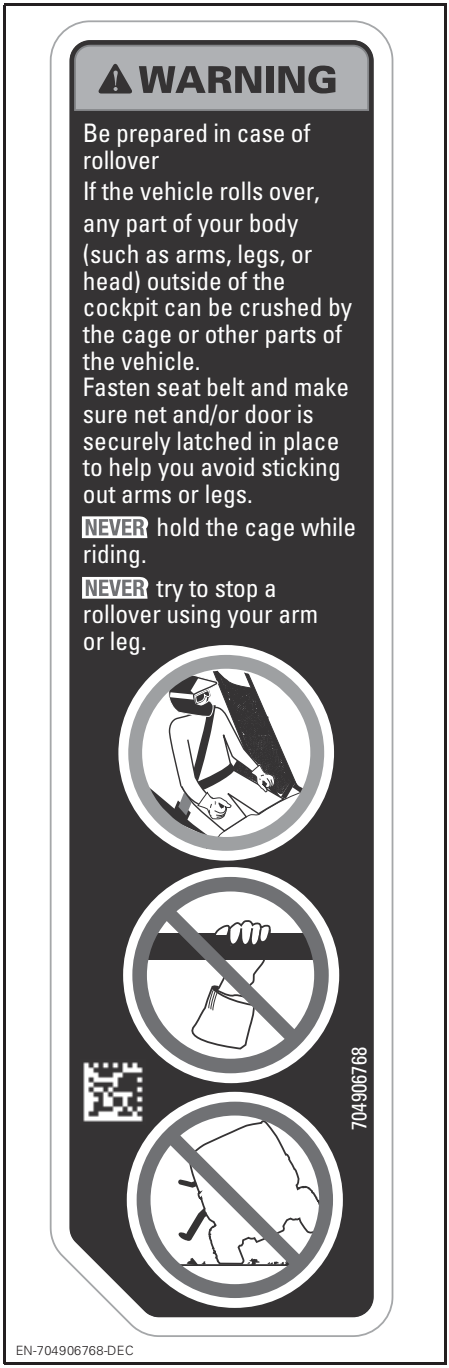

LABEL 13

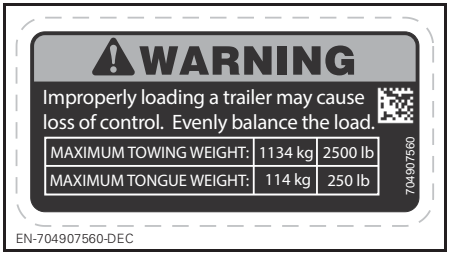

LABEL 14

LABEL 15

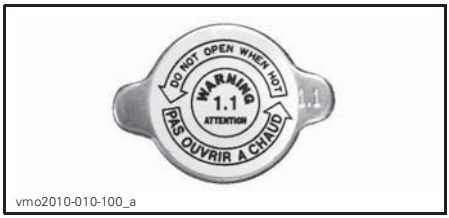

LABEL 16

LABEL 17

LABEL 18

LABEL 19- MODELS WITH WINDSHIELD

LABEL 20- MODELS WITH CAB

Molded Safety Pictogram

⚠ WARNING

Never carry passengers in cargo box or on tailgate. Max weight on tailgate during loading is 113 kg (250 lb)

Technical Information Labels

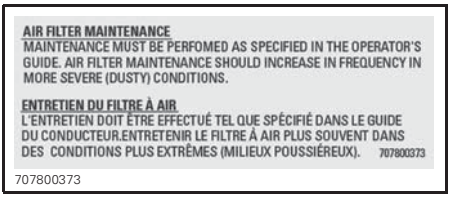

ON AIR FILTER HOUSING

PUSH TAB TO LOWER MIDDLE SEAT

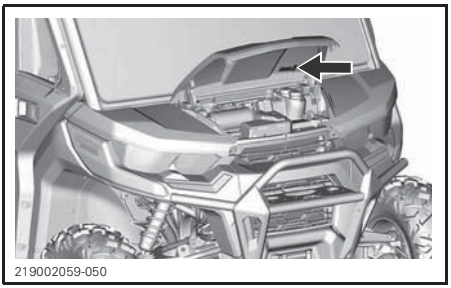

A/C SYSTEM INFORMATION LABEL LOCATION

READ THE REPAIR MANUAL
BEFORE SERVICING

Type of refrigerant: R-134A
Refrigerant filling capacity: 520 g (18 oz)
Oil type: PAG
Safety Standards for Motor
Vehicle Refrigerant Vapor
Compressions Systems: SAE J639

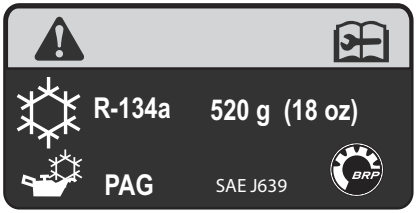

EN-704908394-DEC

EN-704907613-DEC

HOT SURFACE - NEAR REAR SUSPENSION

Compliance Labels

These labels indicate vehicle's compliance.

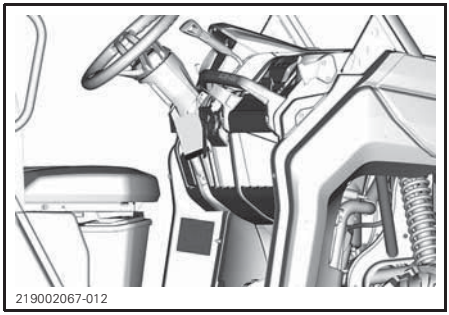

219002067-012

TYPICAL - EPA LABEL LOCATION

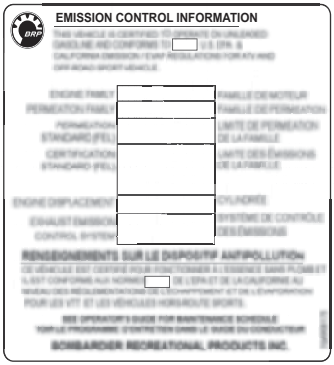

EN-EPA-DEC

TYPICAL - EPA LABEL

EN-FR-704906981-DEC

LOCATED ON TOP LH BAR OF CAGE FACING THE INSIDE OF VEHICLE

IMPORTANT ON-PRODUCT LABELS (ALL COUNTRIES EXCEPT CANADA/UNITED STATES)

Hang Tag

This vehicle comes with a hang tag and labels containing important safety information.

Any person who rides this vehicle should read and understand this information before riding.

Digitally Encoded Security System (D.E.S.S.™) Keys also available from your dealer

- Top-security anti-theft protection for your vehicle
- Encrypted code-on-chip technology restricts access to your vehicle's electronic ignition system.
- One vehicle / one code
- Comes with 3 programmable keys with a vibration / shock-resistant ball-and-socket design that ensures a reliable connection

- Work key, limits vehicle speed to 40 km/h.
- Normal key, limits vehicle speed to 70 km/h.
- Performance key, no limitation. (exactly as non D.E.S.S.™ keys)

THIS HANG TAG IS NOT BE REMOVED BEFORE SALE.

704905721

Vous pouvez aussi vous procurer des clés D.E.S.S.MC (système de sécurité à encodage numérique) auprès de votre concessionnaire

- Protection antivol à sécurité maximale pour votre véhicule
- Le code crypté intégré à la puce restreint l'accès au système d'allumage électronique de votre véhicule.
- Un véhicule / un code.
- Offert avec 3 clés programmables; design à rotule résistant aux vibrations et aux chocs qui assure une connexion fiable.

- Clé de travail: limite la vitesse du véhicule à 40 km/h.
- Clé normale: limite la vitesse du véhicule à 70 km/h.
- Clé de performance: aucune limite. (exactement comme des clés non D.E.S.S.MC)

Ne pas retirer cette étiquette avant la vente.

EN-FR-704905721-DEC

TYPICAL - D.E.S.S. KEY OPTIONAL: NO D.E.S.S. KEY DELIVERED WITH THE VEHICLE

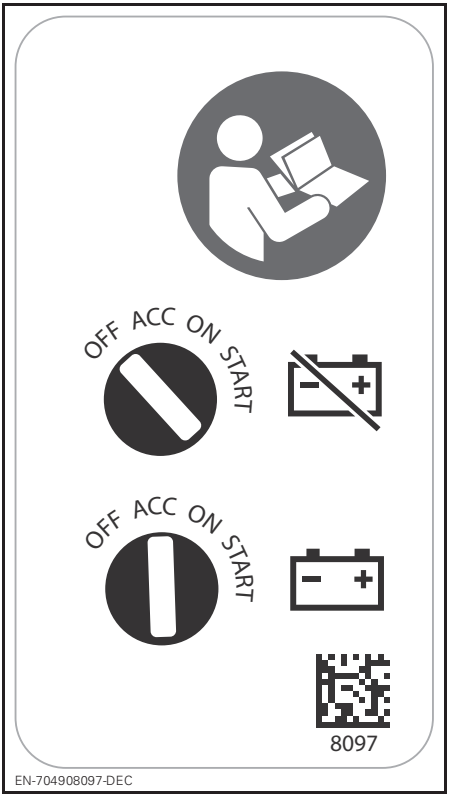

TYPICAL - DO NOT LEAVE KEY IN ACC POSITION

Safety Labels

Read and understand all the safety labels on your vehicle.

These labels are affixed to the vehicle for the safety of the operator, passengers or bystanders.

The following labels are on your vehicle, and they should be considered permanent parts of the vehicle. They need to be clean and visible at all times. If missing or damaged, they need to be replaced. Safety labels are free of charge. See an authorized Can-Am dealer.

Upon replacement of parts that have warnings on them, make sure to order (free of charge) the applicable safety warnings if not already installed on the replacement part.

NOTE: In the event of any discrepancy between this guide and the vehicle, the safety labels on the vehicle have precedence over the labels in this guide.

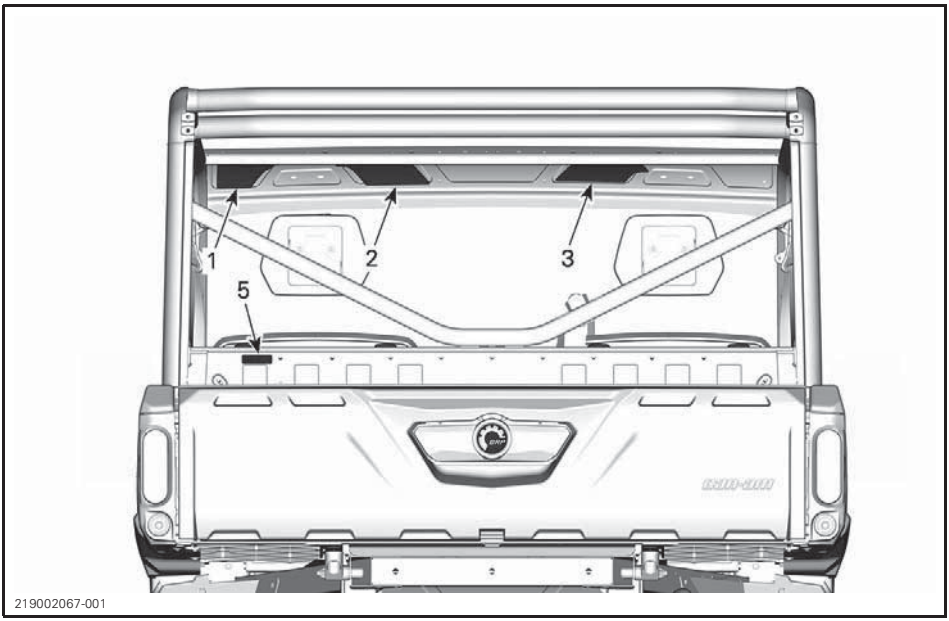

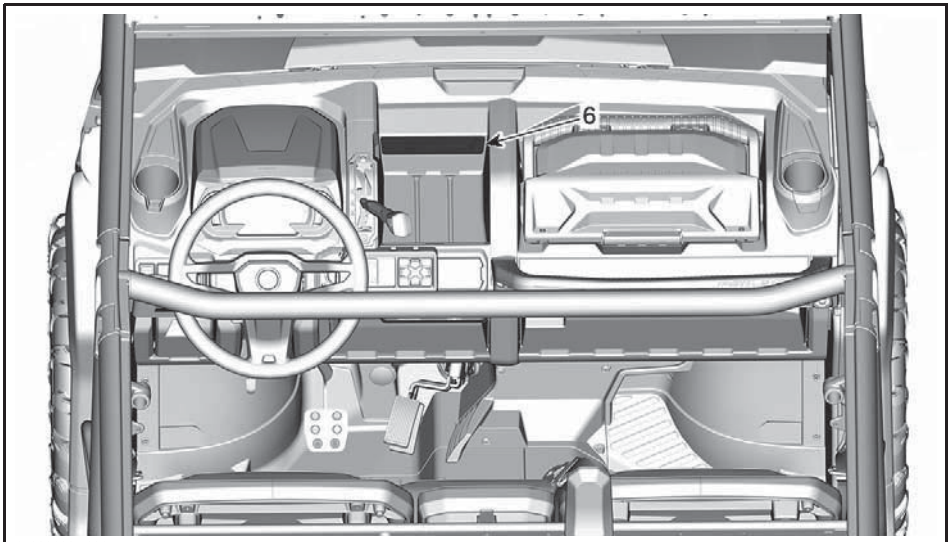

219002067-002

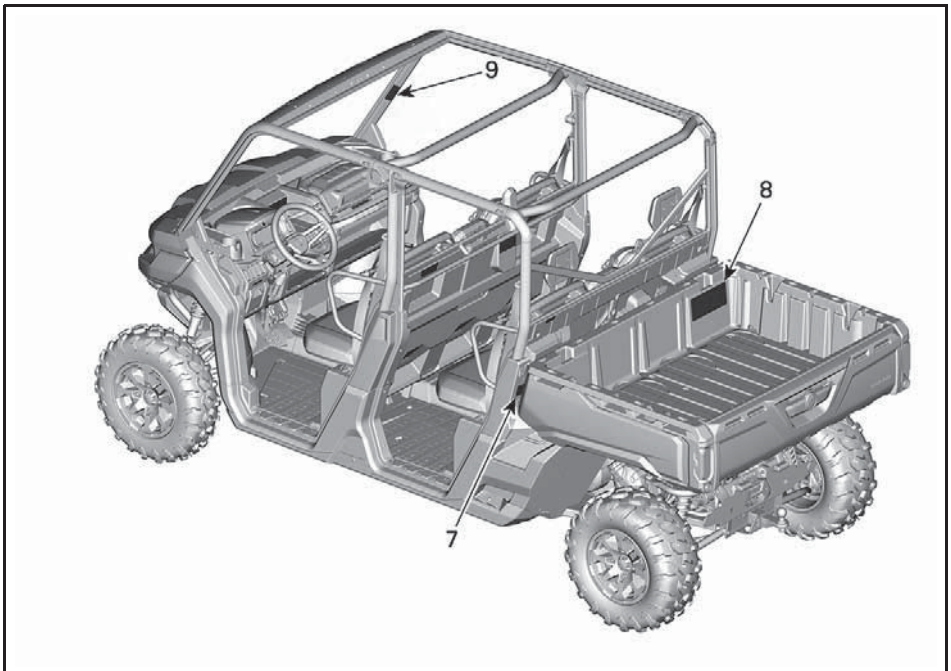

219002067-003

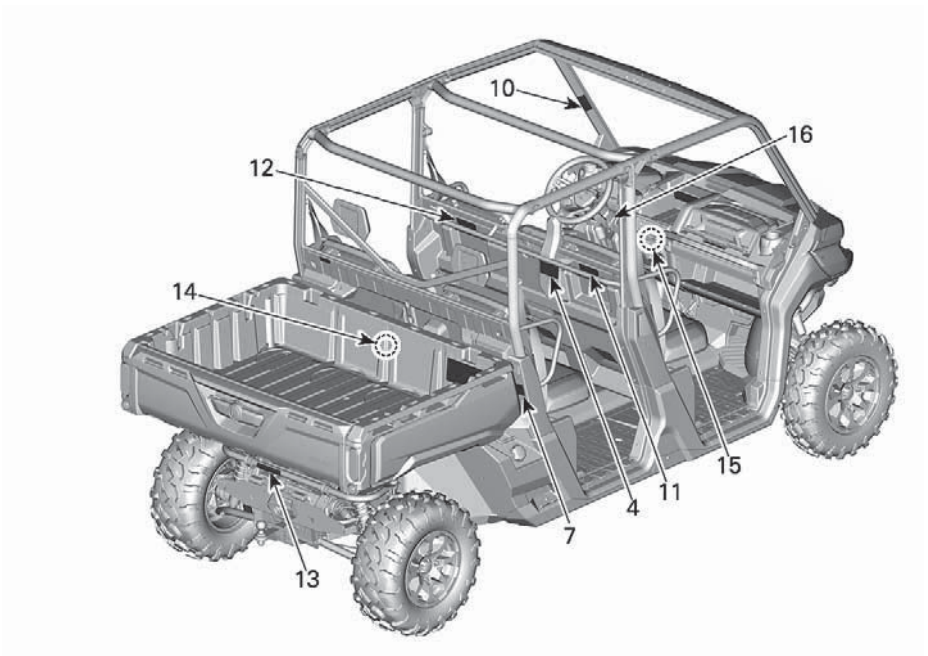

219002120-100

Label 1

⚠ WARNING

- Read and understand all safety labels, locate and read operator's guide.
- Always wear an approved helmet and protective gear.
- Fasten seat belts and make sure net or door is securely latched in place.
- Always wear ear protection.
- Each rider must be able to sit with back against seat, feet flat on the floor or on footrest, and hands on steering wheel or handholds.
- If you think or feel the vehicle may tip or roll, reduce your risk of injury : Keep a firm grip on the steering wheel or handholds and brace yourself. Do not put any part of your body outside of the vehicle for any reason.
- Always stay completely inside the vehicle.

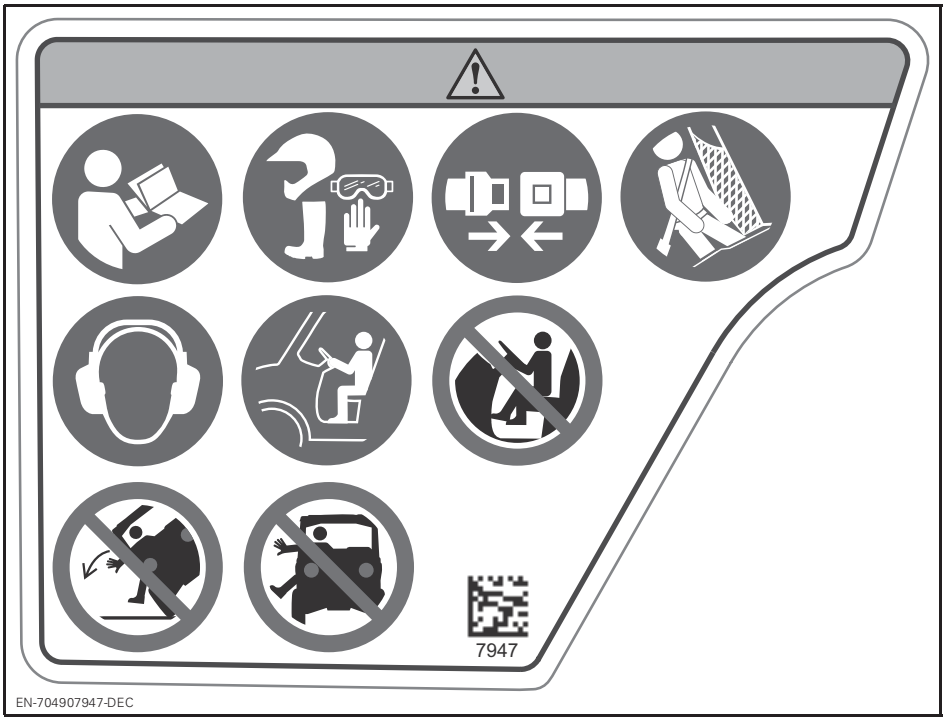

LABEL 1

Label 2

⚠ WARNING

- Make sure operators are 16 or older with a valid driver's license.
- Do not exceed seating capacity: 6 occupants.
- Do not let people drive or ride after using alcohol or drugs.
- Avoid loss of control and rollovers:
  Avoid abrupt maneuvers, sideways sliding, skidding or fishtailling and never do donuts.
  Avoid hard acceleration when turning, even from a stop.
  Slow down before entering a turn.
  Plan for hills, rough terrain, ruts and other changes in terrain condition.
  Avoid side hilling (riding across slopes).
- Rollovers have caused severe injuries and death, even on flat, open areas
- Do not allow operation on public roads (unless designated for off-highway vehicle access) – collisions with cars and trucks can occur.
- Read and understand all safety labels, locate and read operator's guide. Watch the safety video using the QR code link or visit Can-am web site before operation.

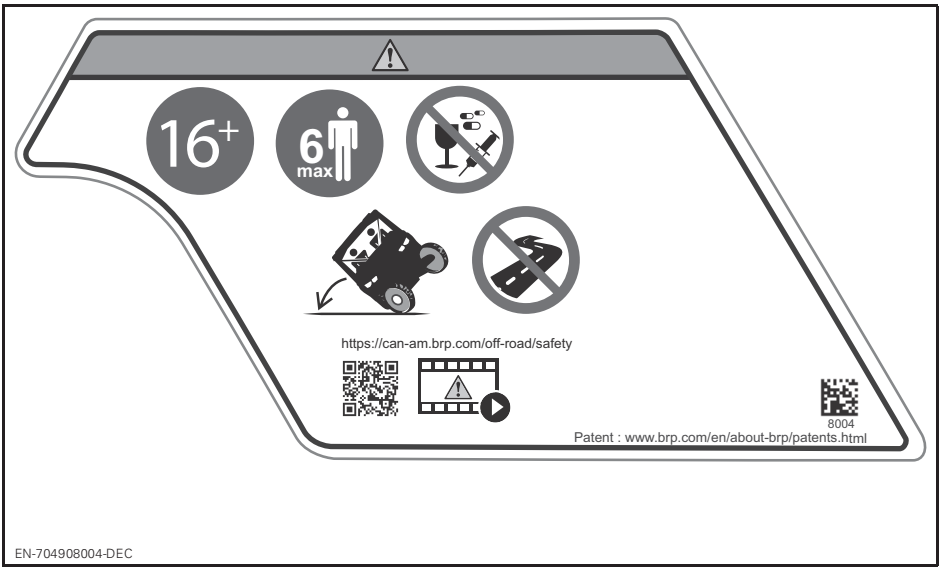

LABEL 2

Label 3

⚠ WARNING

- Always wear an approved helmet and protective gear.
- Always wear ear protection.
- Fasten seat belts.
- Each rider must be able to sit with back against seat, feet flat on the floor or on footrest, and hands on steering wheel or handholds.
- If you think or feel the vehicle may tip or roll, reduce your risk of injury : Keep a firm grip on the steering wheel or handholds and brace yourself. Do not put any part of your body outside of the vehicle for any reason.
- Always stay completely inside the vehicle.
- Do not let people drive or ride after using alcohol or drugs.

LABEL 3

Label 4

⚠ WARNING

- Always wear an approved helmet and protective gear.
- Always wear ear protection.
- Fasten seat belts and nets.
- Each rider must be able to sit with back against seat, feet flat on the floor or on footrest, and hands on handholds.
- If you think or feel the vehicle may tip or roll, reduce your risk of injury : Keep a firm grip on the handholds and brace yourself. Do not put any part of your body outside of the vehicle for any reason.
- Always stay completely inside the vehicle.
- Do not let people drive or ride after using alcohol or drugs.

LABEL 4

Label 5

⚠ WARNING

NEVER attach to the cage to pull a load. This can cause the vehicle to tip over. Use only the trailer hitch or recovery hook to pull a load.

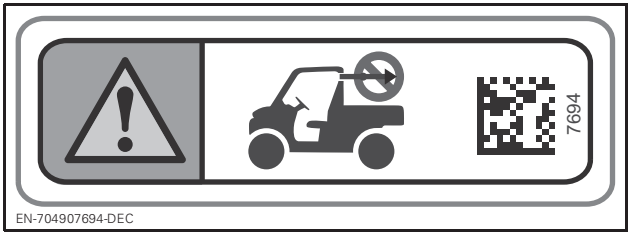

LABEL 5

Label 6

⚠ WARNING

- Stop the vehicle and apply the brake before using the shift lever and the 2WD/4WD switch.
- When the weight of occupant(s), cargo and tongue is above 390 kg (860 lb), set the shift lever to low gear range (L).
- Put the shift lever to PARK (P) before exiting vehicle. The vehicle can roll if not in PARK.

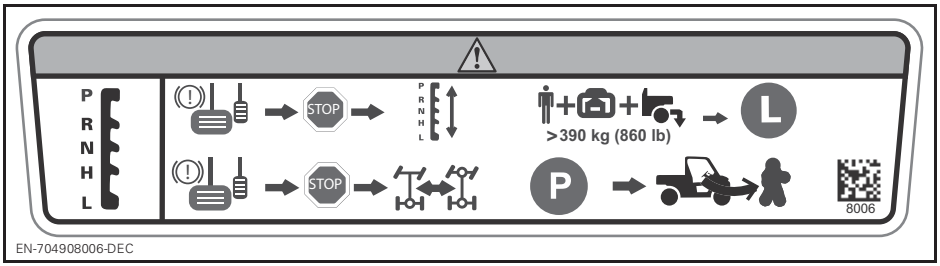

LABEL 6

Label 7

⚠ WARNING

Pinch point. Keep clear when lowering cargo box.

LABEL 7

Label 8

⚠ WARNING

- Locate and read operator's guide. Improper tire pressure or overloading can cause loss of control, resulting in SEVERE INJURY or DEATH.
- Always maintain proper tire pressure as shown.
- NEVER exceed the vehicle load capacity, including weight of operator, passenger, cargo, accessories and trailer tongue weight if applicable.
- Do not overload cargo box.
- NEVER place gasoline container inside cargo box when filling it. This can lead to an explosion.
- NEVER carry passenger in cargo box or on tailgate.

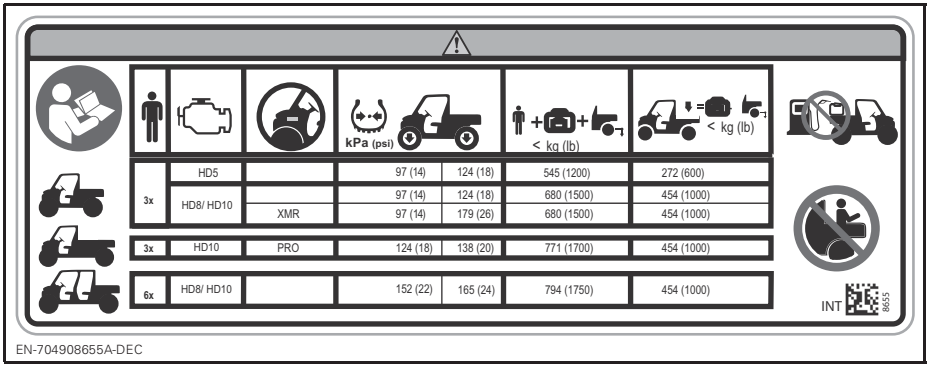

3x	HD5		97 (14)	124 (18)	545 (1200)	272 (600)
	HD8/ HD10		97 (14)	124 (18)	680 (1500)	454 (1000)
		XMR	97 (14)	179 (26)	680 (1500)	454 (1000)
3x	HD10	PRO	124 (18)	138 (20)	771 (1700)	454 (1000)
6x	HD8/ HD10		152 (22)	165 (24)	794 (1750)	454 (1000)

LABEL 8

⚠ WARNING

- Locate and read operator's guide. Improper tire pressure or overloading can cause loss of control, resulting in SEVERE INJURY or DEATH.
- Always maintain proper tire pressure as shown.
- NEVER exceed the vehicle load capacity, including weight of operator, passenger, cargo, accessories and trailer tongue weight if applicable.
- Do not overload cargo box.
- NEVER place gasoline container inside cargo box when filling it. This can lead to an explosion.
- NEVER carry passenger in cargo box or on tailgate.

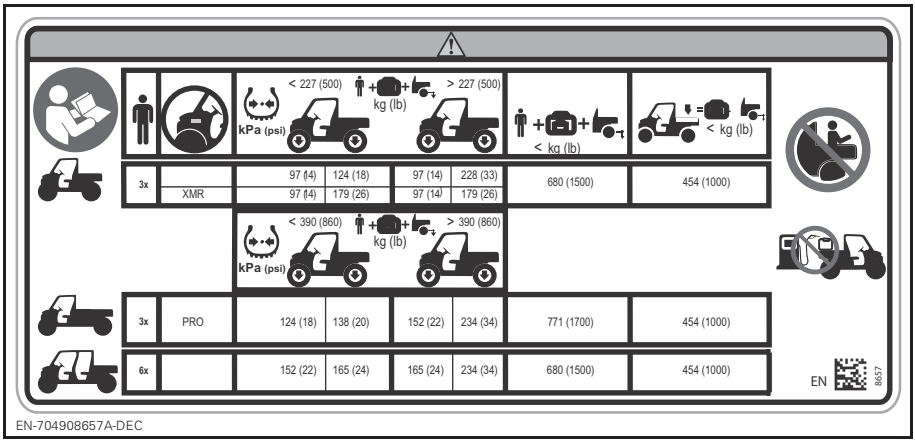

3x		97 (14)	124 (18)	97 (14)	228 (33)	680 (1500)	454 (1000)
	XMR	97 (14)	179 (26)	97 (14)	179 (26)		
3x	PRO	124 (18)	138 (20)	152 (22)	234 (34)	771 (1700)	454 (1000)
6x		152 (22)	165 (24)	165 (24)	234 (34)	680 (1500)	454 (1000)

LABEL 8 - MACHINERY DIRECTIVE 2006/42/EC COMPLIANT MODELS

Label 9

⚠ WARNING

- Never try to stop a rollover using your arm or leg.
- Never hold the cage while riding.
- Fasten seat belts and make sure net or door is securely latched in place.

Label 10

⚠ WARNING

- Never try to stop a rollover using your arm or leg.
- Never hold the cage while riding.
- Fasten seat belts and make sure net or door is securely latched in place.

LABEL 9

LABEL 10

Label 11

⚠ WARNING

- Never try to stop a rollover using your arm or leg.
- Never hold the cage while riding.
- Fasten seat belts and make sure net or door is securely latched in place.

LABEL 11

Label 12

⚠ WARNING

- Never try to stop a rollover using your arm or leg.
- Never hold the cage while riding.
- Fasten seat belts and make sure net or door is securely latched in place.

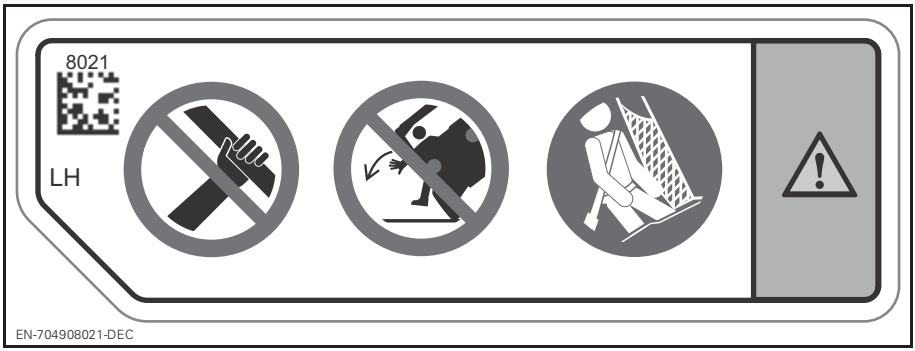

LABEL 12

Label 13

⚠ WARNING

- MAXIMUM towing weight: 1 134 kg (2,500 lb)
- MAXIMUM tongue weight: 114 kg (250 lb)
- When pulling a trailer, set the shift lever to low gear range (L)
- Reduce your speed and turn gradually.
- Avoid hills and rough terrain.
- Allow more distance to stop.

LABEL 13

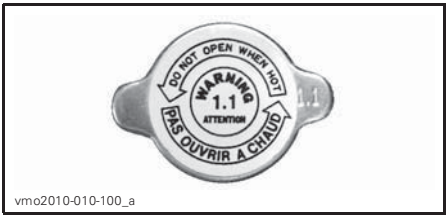

LABEL 14

Label 15

⚠ WARNING

Always use the battery post to ground the winch. Doing otherwise may induce an undesired power steering signal resulting in an unintended steering input. In certain circumstances, some unintended steering input could lead to a loss of vehicle control increasing the risk of a crash.

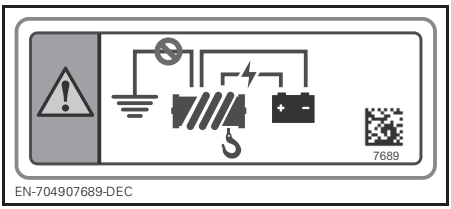

LABEL 15

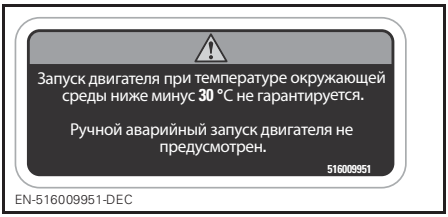

LABEL 16- IN EURASIAN UNION ONLY

Technical Information Labels

NOTICE Refer to the operator's guide for air filter maintenance procedure.

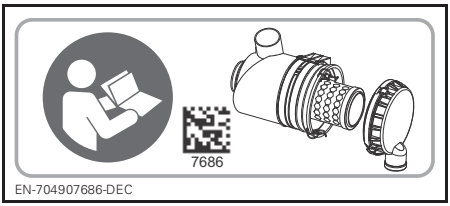

ON AIR FILTER HOUSING

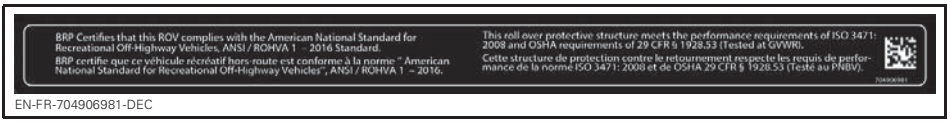

LOCATED ON TOP LH BAR OF CAGE FACING THE INSIDE OF VEHICLE

HOT SURFACE - NEAR REAR SUSPENSION

Compliance Labels

These labels indicate vehicle's compliance.

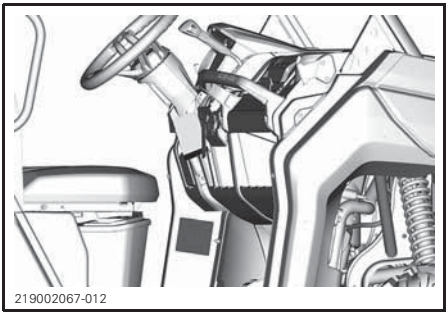

TYPICAL - EPA LABEL LOCATION

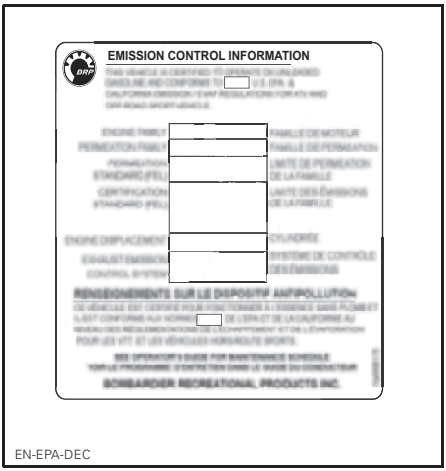

TYPICAL - WHEN APPLICABLE - EPA LABEL

LOCATED NEAR GAS CAP

REPORTING SAFETY DEFECTS

In Canada, if you believe that your vehicle has a defect which could cause a crash or could cause injury or death, you should immediately inform Transport Canada in addition to notifying Bombardier Recreational Products Inc.

If Transport Canada receives similar complaints, it may open an investigation, and if it finds that a safety defect exists in a group of vehicles, it may order a recall and remedy campaign. However, Transport Canada cannot become involved in any individual problems between you, your dealer or Bombardier Recreational Products Inc.

TO CONTACT TRANSPORT CANADA:

819-994-3328 (Gatineau-Ottawa area or internationally)
Toll free : 1 800-333-0510 (in Canada)

Transport Canada - ASFAD
330 Sparks Street
Ottawa, ON
K1A 0N5

https://www.tc.gc.ca/recalls

VEHICLE INFORMATION

PRIMARY CONTROLS

It is important to know the location and operation of all controls, and to develop and practice smooth and coordinated use of them.

NOTE: Some vehicle safety labels are not shown on illustrations. For information on vehicle safety labels, refer to *IMPORTANT ON-PRODUCT LABELS*.

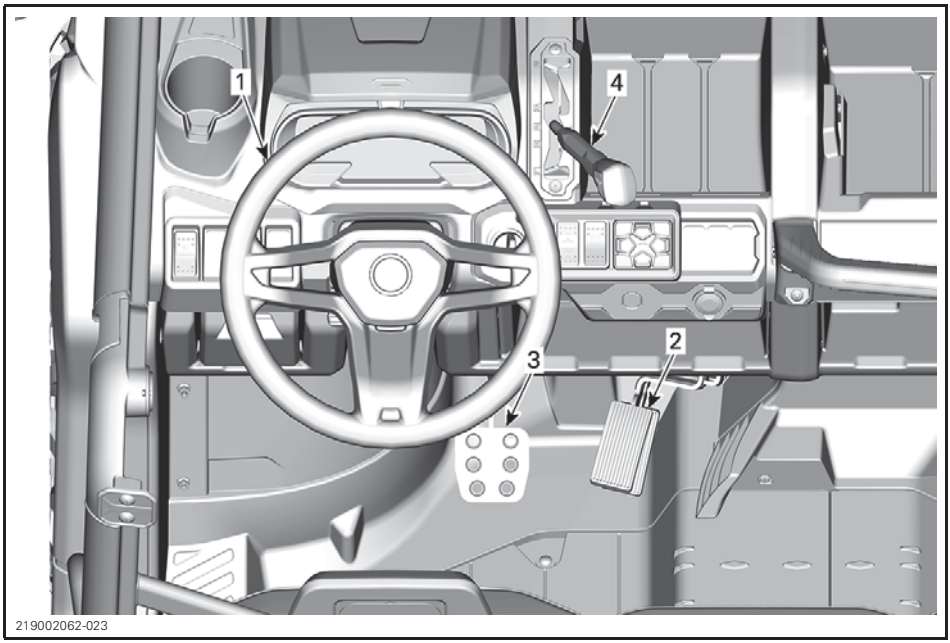

TYPICAL - PRIMARY CONTROLS

1) Steering Wheel

The steering wheel is located in front of the driver's seat.

The steering wheel steers the vehicle to the left or right.

Turn the steering wheel in the direction you want to go.

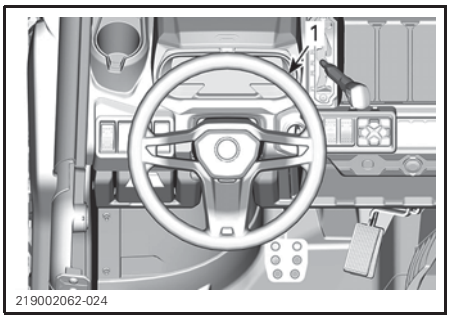

TYPICAL
1. Steering wheel

Grip the steering wheel with both hands, without having thumbs rolled around the steering wheel.

CAUTION Under rough trail conditions or when crossing an obstacle, the steering wheel could suddenly jerk on one side, causing hand or wrist injuries if the thumbs are rolled around the steering wheel.

Models with DPS

The DPS (Dynamic Power Steering) reduces the effort to turn the steering wheel.

2) Accelerator Pedal

The accelerator pedal is located on the right side of the brake pedal.

The accelerator pedal controls the engine speed.

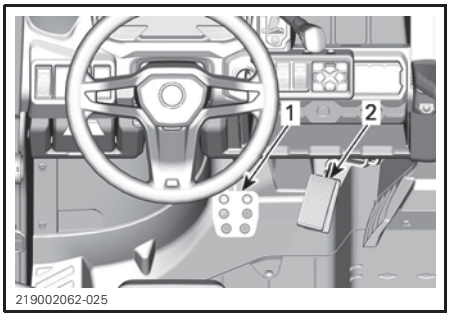

1. *Brake pedal*
2. *Accelerator pedal*

To increase or maintain vehicle speed, press on the accelerator pedal with your right foot.

To decrease vehicle speed, release the accelerator pedal.

The accelerator pedal is spring loaded and should return to rest position (idle) when not pressed.

NOTE: The accelerator pedal should never be disassembled.

3) Brake Pedal

The brake pedal is located on the left side of the accelerator pedal.

The brake pedal function is to slow down or stop the vehicle.

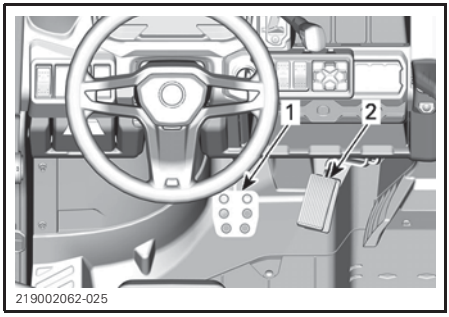

1. *Brake pedal*
2. *Accelerator pedal*

To decrease vehicle speed or to stop vehicle, press down the brake pedal with your right foot.

The brake pedal is spring loaded and should return to rest position when not pressed.

4) Shift Lever

The shift lever is located on the upper console to the right of steering wheel.

The shift lever is used to change the gearbox position.

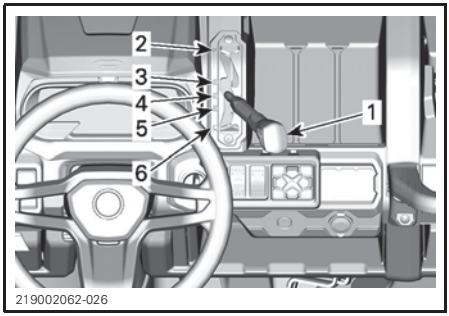

TYPICAL

1. *Shift lever*
2. *Park*
3. *Reverse*
4. *Neutral*
5. *High range (forward)*
6. *Low range (forward)*

The vehicle must be stopped and brakes applied prior to selecting any gear.

⚠ WARNING

This gearbox is not designed to shift while vehicle is moving.

Park

The park position locks the gearbox to help prevent vehicle movement.

⚠ WARNING

Always use the PARK (P) position when the vehicle is not in operation. The vehicle can roll if the shift lever is not set to P (PARK).

Reverse

The reverse position allows the vehicle to go backwards.

NOTE: In reverse operation, the engine's RPM is limited, thus limiting the vehicle reverse speed.

⚠ WARNING

When driving downhill in reverse, gravity can increase the vehicle speed above the set limited reverse speed.

Neutral

The neutral position disengages the gearbox.

High Range (Forward)

This position selects the high speed range of the gearbox. It is the normal driving speed range. It allows the vehicle to reach its maximum speed.

Low Range (Forward)

This position selects the low speed range of the gearbox. It allows the vehicle to move slowly with maximum torque at the wheels.

NOTICE **Use the low speed range to pull a trailer, carry heavy cargo, go over obstacles or drive uphill and downhill.**

SECONDARY CONTROLS

Some vehicle safety labels are not shown on illustrations. For information on vehicle safety labels, refer to *IMPORTANT ON-PRODUCT LABELS*.

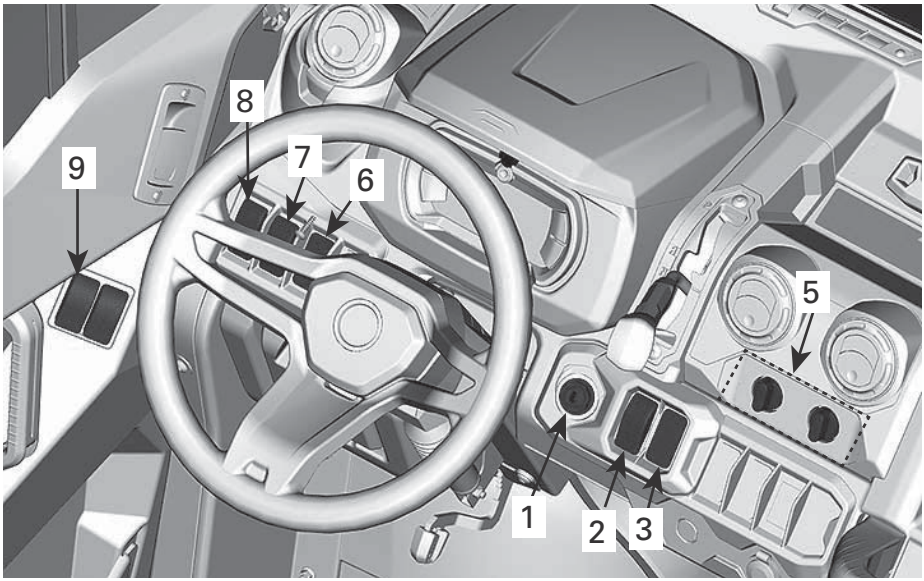

219002059-302

TYPICAL - CAB MODEL WITH HEATING SYSTEM SHOWN

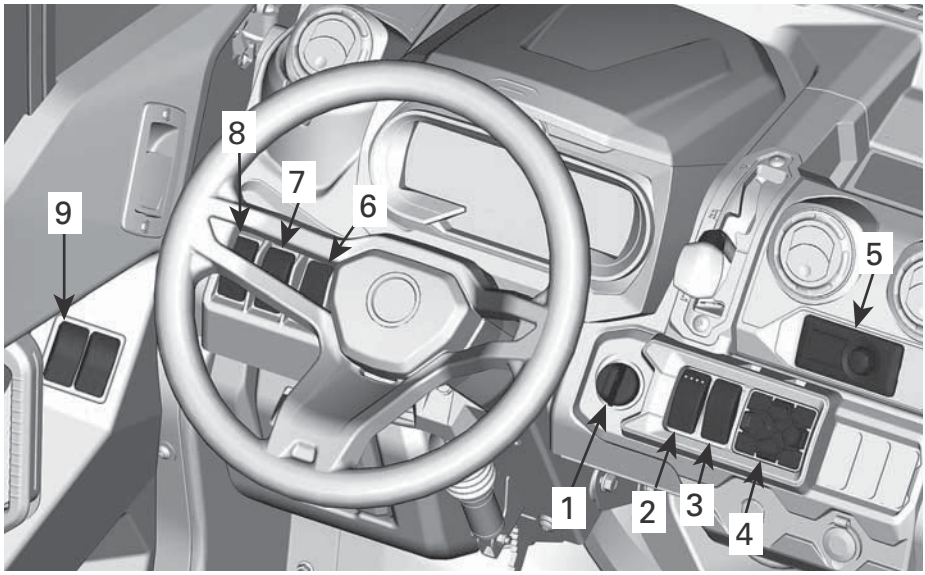

219002059-051

TYPICAL - CAB MODEL WITH HEATING AND A/C SHOWN

1) Ignition Switch and Keys

Ignition Switch

The ignition switch is located on the upper console area.

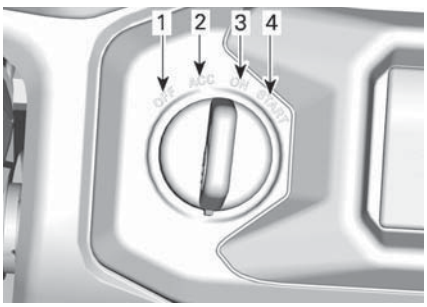

tmo2016-010-067_a

IGNITION SWITCH POSITION
1. *OFF*
2. *ACC*
3. *ON*
4. *START*

OFF

The key can be inserted or removed in this position only.

In OFF position, the electrical system of the vehicle is disabled.

The engine is shut down by turning the ignition switch to OFF position.

ACC

Only accessories such as the heater, wiper or radio are powered up.

NOTE: The ACC position also shuts down the engine

NOTICE **Remember to always return your key to the OFF position for a complete electrical shutdown. Leaving the key in ACC will drain the battery and the vehicle may not restart.**

ON

When the key is turned in this position, the electrical system of the vehicle is activated.

The gauge should wake-up.

The vehicle lights are turned on.

The engine can be started.

START

This position starts the engine.

NOTE: If the ignition switch is left ON for more than 30 minutes, engine will not start unless ignition switch is turned OFF, then ON again.

Keys

Basic Key

The vehicle is delivered with 2 basic key. one with a rubber protection and one without.

D.E.S.S. Key

For all D.E.S.S. related option, see an authorized Can-Am dealer for information.

Digitally Encoded Security System (D.E.S.S.)

The ignition keys contain an electronic circuit that gives it a unique electronic serial number.

The D.E.S.S. system reads the key code and allows engine starting for keys it recognizes.

This vehicle can be operated using 3 different types of key programming:

– Work
– Normal
– Performance

Refer to your dealer for complete information.

NOTE: Additional keys are available from your dealer as an accessory.

⚠ WARNING

Rollovers, tipovers, collisions and loss of control resulting in serious injury or death are possible with the performance or normal key. Using the normal key is not a substitute for the operator being prepared, qualified, and operating with care.

Performance Key

The performance key allows the user to access the full torque of the engine as well as the top speed of the vehicle.

This may be useful for riders who prefer crisper throttle response, and for environments where higher speeds and greater acceleration are appropriate. For example, in wide-open straight trails, operators may prefer the performance key.

Normal Key

The normal key limits the vehicle rate of acceleration and/or the vehicle speed to 70 km/h (43 MPH).

Work key

The work key allows for usage of 100% of maximum engine torque but limits vehicle speed to 40 km/h (25 MPH).

⚠ WARNING

On steep downhills, the engine speed limiter may not prevent the vehicle from accelerating beyond this speed.

This key may be useful for riders who prefer more gradual acceleration, or for riding in environments where full speed and high acceleration are not desirable. For example, in narrow, winding trails, operators may prefer a normal key.

D.E.S.S. Flexibility

The D.E.S.S. of your vehicle can be programmed by your authorized Can-Am dealer to accept up to 8 different keys.

If you have more than one D.E.S.S. equipped Can-Am vehicle, each can be programmed by your authorized Can-Am dealer to accept the other vehicle D.E.S.S. keys.

2) 2WD/4WD Switch

The 2WD/4WD switch is located on the upper console.

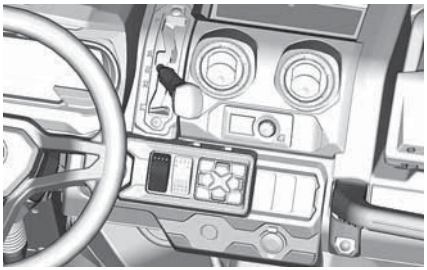

219002059-053

This switch selects 2 wheel drive or 4 wheel drive mode when the vehicle is stopped and the engine is running.

NOTICE **The vehicle must be stopped to engage or disengage the 2WD/4WD switch. Mechanical damage may occur if switch is engaged or disengaged while driving. Always unlock the front diff. before disengaging 4WD.**

⚠ WARNING

Abruptly changing direction can cause loss of control or injury. Never engage Front Diff Lock before entering a turn or when turning.

The 4WD mode is engaged when the switch is in the middle position.

The 2WD mode is engaged when the switch is pushed downwards. The vehicle is then rear wheel drive only.

3) Rear Differential Switch (If Equipped)

The rear differential switch is located on the console.

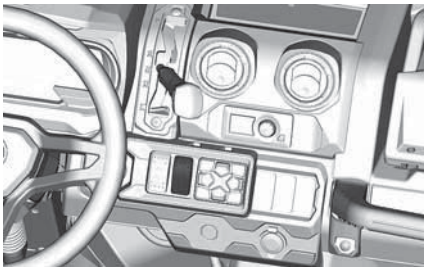
219002059-054

The differential switch enables locking of rear differential.

NOTICE **The vehicle must be stopped to engage or disengage the differential switch. Mechanical damage may occur if switch is engaged or disengaged while driving.**

The rear differential is locked when the switch is pushed upwards. The rear differential is unlocked when the switch is pushed downwards.

4) Keypad (If Equipped)

The Keypad is located on the upper console.

It is used to select one of the various driving modes as well as adjusting the Settings Refer to *7.6 DIGITAL DISPLAY* for complete instructions.

NOTE: The cluster will show the selected driving mode.

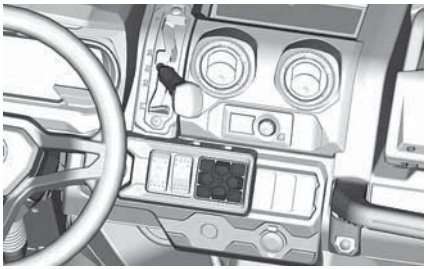
219002059-056

5) Climate Controls

Limited Models Only

The climate controls unit are located in center of the upper console.

They control the flow and the temperature of the air circulated in the vehicle.

Refer to *CLIMATE CONTROL SYSTEM* in *EQUIPMENT* for operation instructions.

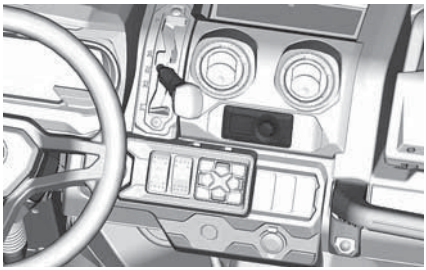
219002059-057

TYPICAL

NOTICE **The climate control module installed in the Limited models is not waterproof nor water resistant.**

6) Horn Switch (On applicable models)

To activate the horn, push on the switch.

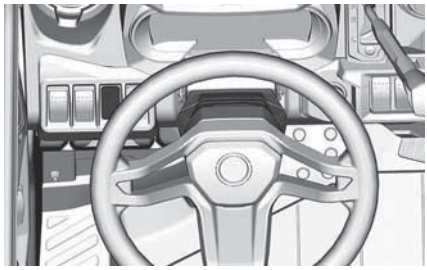
219002059-062

7) Winch Switch (If Equipped)

The winch can be controlled from inside and outside the vehicle with the winch control switch located in the upper console.

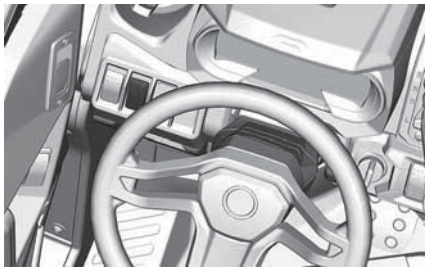
219002059-055

Refer to your winch *GUIDE* included with your vehicle for proper winch operation.

8) Headlight Dimmer Switch

The headlight dimmer switch is located on the upper console.

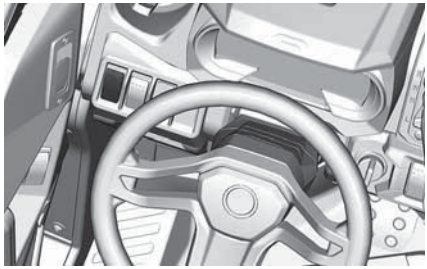
219002059-052

This switch is used to select either the headlights OFF position, low or high beams.

9) Power Window Switches

The power window switches are located on the door panel. Two switches on the driver side and one on the passenger side.

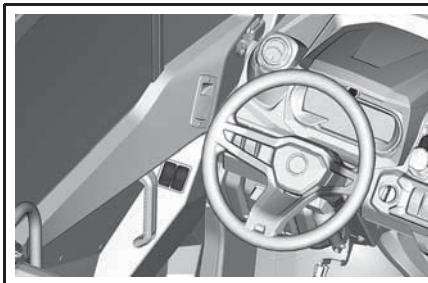
219002059-058

DRIVER'S SIDE

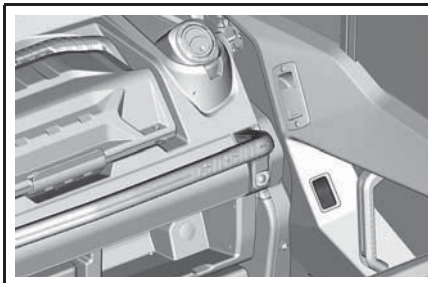
219002059-060

PASSENGER'S SIDE

1. Press the switch to open the window.
2. Lift the switch to close the window.

4.5" DIGITAL DISPLAY

Multifunction Display

General View

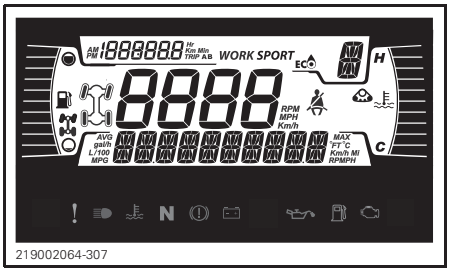

219002064-307

Lower Display

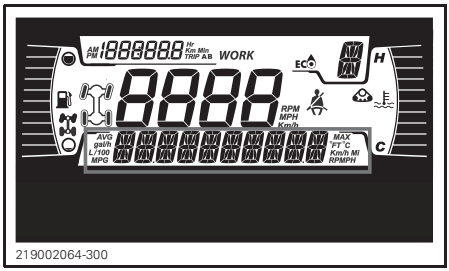

219002064-300

May display the following:
- RPM
- Speed statistics
- Engine Temperature
- Battery Voltage
- Settings
- Messages

Use LOWER button to change the displayed information.

Left Lateral Display

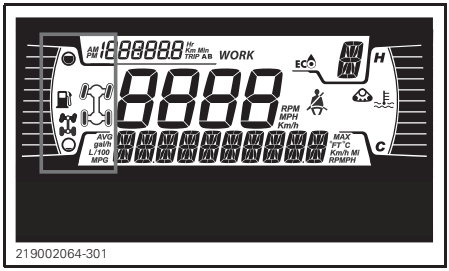

219002064-301

The left lateral display includes:
- Fuel level indicator
- 2X4 / 4X4 telltale
- Rear diff lock

ICON	COUNTRY
	For European community countries
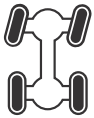	For all other countries

Right Lateral Display

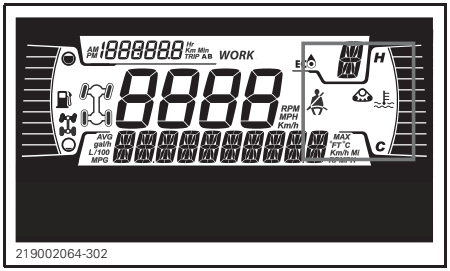

219002064-302

The right lateral display includes:
- Engine Temperature
- Track Kit Telltale
- Seat belt reminder

When a track kit is installed, a message will scroll in the lower display.

Central Display

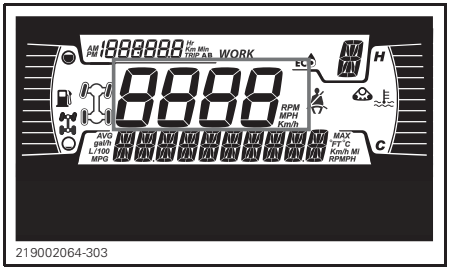

219002064-303

Display the vehicle speed in Km/h or MPH.

Transmission Position Display

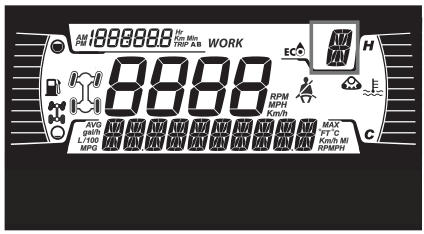

219002064-304

This display shows gear position of gearbox:

– P (Park)
– R (reverse)
– N (neutral)
– H (High Range)
– L (Low Range)
– – (Invalid Range)

MODE Display

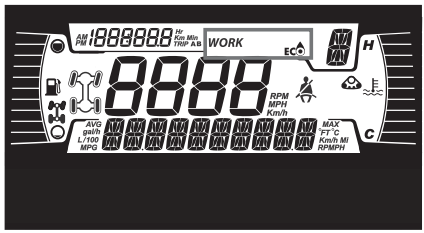

219002064-305

The MODE display indicates the selected mode of operation:

– ECO
– ECO OFF
– WORK

To change between modes, hold LOWER button and short press LOWER button to cycle through available modes.

DRIVE MODE	MESSAGE AT ACTIVATION
Work	WORK MODE
ECO	ECO MODE
ECO OFF	ECO OFF

Trip Display

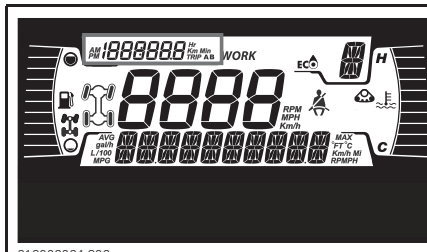

219002064-306

This display shows trip informations:

– Cumulative distance odometer
– Trip A
– Trip B
– Vehicle hour meter
– Clock

Use UPPER button to change the displayed information.

Hold UPPER button to reset Trip A/B meters.

Warning Lamps and Indicators

The following indicator lamps will alert you to a vehicle condition that may become serious. Some lamps will illuminate when starting the vehicle to make sure they work. If any lamps remain on after starting the vehicle, refer to the respective system warning lamp for further information.

NOTE: Some warning indicators appear in the display of the multifunction gauge and function the same as an indicator lamp but do not display when starting the vehicle.

Telltale Lights - Lower Bar

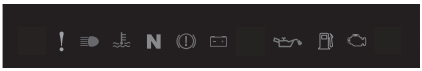

219002040-307

LIGHTS	DESCRIPTION
!	ORANGE - Vehicle malfunction
	BLUE - The high beam are selected
	RED - The engine temperature is too high.
N	GREEN - Neutral is selected
	RED **Turn on**: (Steady ON) Low Brake Fluid (Traxter) **Blink**: Accelerator pedal and the brake are activated simultaneously for a certain time - Torque limitation is activated
− +	RED - If illuminate while driving, it indicates a malfunction. Turn off all unnecessary electrical equipment and have the electrical and charging systems checked.

LIGHTS	DESCRIPTION
	RED - If illuminate while the engine running or while driving, this indicates a malfunction. Stop the vehicle as soon as it is safe to do so and turn the engine off. Check the engine oil level. Have the lubrication system checked a soon as possible, even if the level being correct.
	ORANGE - Illuminate when the fuel level is low or when the fuel tank is near empty. Refuel as soon as possible.
	ORANGE **Turn on**: Malfunction of the vehicle emissions control system **Blink**: Engine limitation, the limp home mode is activated. Have the vehicle serviced immediately.

Icons and Indicators - Multifunction Display

ICONS AND INDICATORS	
ECO	Denotes ECO mode is selected.
WORK	Denotes Work mode is selected
	When lit, seat belt not buckled with vehicle immobilized. Flashing when vehicle is moving.
	Track kit active (If equipped)

Settings

The buttons to navigate through menus are located on the left side of the LCD display.

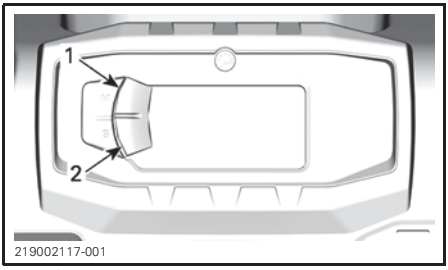

TYPICAL
1. *Upper button*
2. *Lower button*

Setup

Using LOWER button, Select SETTINGS and hold to enter setting menu.

Maintenance Reset

NOTE: Only when the maintenance is due.

Using LOWER button, Select RES MAINT and hold to reset maintenance.

Fault Codes

NOTE: Only when codes are actives.

Using LOWER button, Select CODES and hold to see actives fault codes. Fault codes will be scrolled on the Lower Display.

Reset Stats

Using LOWER button, select RESET STAT and hold to reset.

Unit Selection

This multifunction gauge is factory preset in Metric units but it is possible to change it to Imperial units.

Using LOWER button, Select UNITS and hold button to change units.

Setting Clock

Using LOWER button, Select CLOCK and hold to adjust clock.

1. Press LOWER button to select clock display.
2. Push and hold LOWER button for 1 second.
3. Press LOWER button to select 12:00 AM PM or 24:00 time base.
4. Push and hold LOWER button to acknowledge selection.
5. Press LOWER button to change hours (hours flash).
6. Push and hold LOWER button to acknowledge hour selection.
7. Press LOWER button to switch to minutes (minutes flash).
8. Push and hold LOWER button to acknowledge minutes selection.

Setting Language

The gauge display language can be changed. Refer to an authorized Can-Am dealer for language availability and to setup the gauge to your preference.

Setting Brightness

The brightness of the LCD display can be adjusted.

Using LOWER button, select BRIGHTNESS and hold button to change brightness.

Using LOWER button, adjust brightness then push and hold LOWER button to acknowledge selection.

7.6" DIGITAL DISPLAY

Basic Functions

Multifunction Gauge Description

⚠ WARNING

Do not adjust the display while riding, you could lose control.

General View

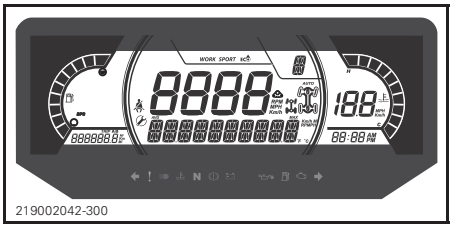

Lower Display

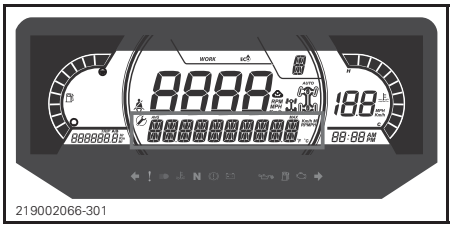

May display the following:
- RPM
- Speed statistics
- Engine Temperature
- Battery Voltage
- Settings
- Messages

The SPEED STAT display shows the maximum and the average speed. Hold MENU or OK button for 1 second to reset.

Left Lateral Display

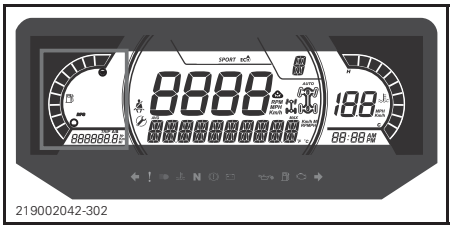

The left lateral display includes:
- Fuel level indicator
- Tripmeter (A - B)
- Odometer
- Vehicle Hour meter

Right Lateral Display

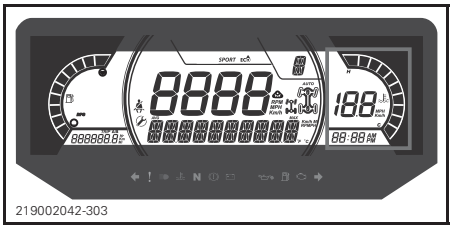

The right lateral display includes:
- Engine Temperature
- Clock
- Speed indicator

The speed indicator in this display is activated when the central display shows informations other than the speed. Otherwise it is blank.

Central Display

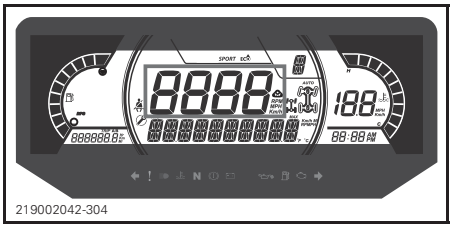

May display the following:
- RPM
- Vehicle speed

Transmission Position Display

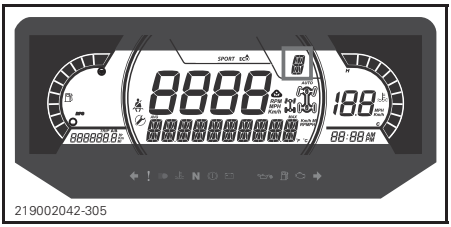
219002042-305

This display shows gears position of gearbox:
- P (Park)
- R (Reverse)
- N (Neutral)
- H (High range)
- L (Low range)
- – (Invalid gear)

MODE Display

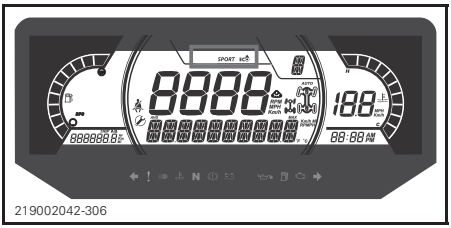
219002042-306

The MODE display indicates the selected mode of operation:
- ECO
- ECO OFF
- WORK

The ECO (fuel economy mode) setting reduces fuel consumption by limiting throttle response and maximum throttle opening to maintain an optimal cruising setting.

NOTE: Use ECO mode on bumpy trails to provide smoother ride conditions.

The ECO OFF mode offers no engine torque reduction as well as a sportier driving experience.

The WORK mode is optimized to be able to work with high loads in a smooth way but still with the full engine torque available. This mode is also effective for getting over obstacles and rough terrain.

To change between modes, press DRIVE MODE button on keypad to cycle through available modes.

A message of the selected mode will be displayed on the lower display at activation and deactivation as follow:

DRIVE MODE	MESSAGE AT ACTIVATION
Work	WORK MODE
ECO	ECO MODE
ECO OFF	ECO OFF

Middle Right Display

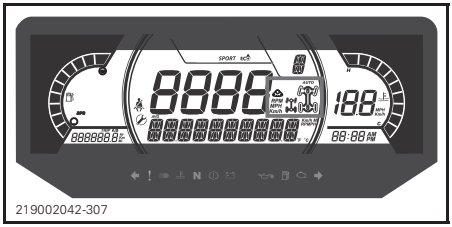
219002042-307

The middle right display indicates the selected mode of operation:
- 2X4
- 4X4
- Rear diff lock
- Active tracks (if equipped)

ICON	COUNTRY
	For European community countries
	For all other countries

Middle Left Display

The middle left lateral display includes:
- Seat belt reminder
- Maintenance reminder

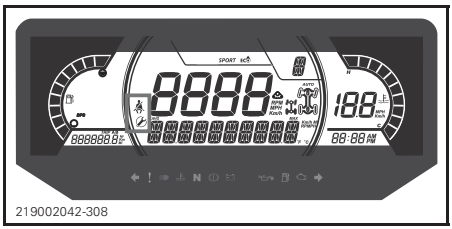

Indicator Lamps

Warning and Telltale Lights

LIGHTS	DESCRIPTION
	GREEN - Left or right turn signal is turned on.
	Hazard Warning Flasher (if equipped) - All front and rear turn signals will flash
	ORANGE - Vehicle malfunction
	BLUE - The high beam are selected
	RED - The engine temperature is too high.

LIGHTS	DESCRIPTION
N	GREEN - Neutral is selected
	RED **Turn on**: Low Brake Fluid (Traxter) **Blink**: Accelerator pedal and the brake are activated simultaneously for a certain time - Torque limitation is activated
	RED - If illuminate while driving, it indicates a malfunction. Turn off all unnecessary electrical equipment and have the electrical and charging systems checked.
	RED - If illuminate while the engine running or while driving, this indicates a malfunction. Stop the vehicle as soon as it is safe to do so and turn the engine off. Check the engine oil level. Have the lubrication system checked a soon as possible, even if the level being correct.
	ORANGE - Illuminate when the fuel level is low or when the fuel tank is near empty. Refuel as soon as possible.
	ORANGE **Turn on**: Malfunction of the vehicle emissions control system **Blink**: Engine limitation, the limp home mode is activated. Have the vehicle serviced immediately.

Icons and Indicators

ICONS AND INDICATORS	
ECO	Denotes ECO mode is selected.
WORK	Denotes Work mode is selected
	When lit, seat belt not buckled with vehicle immobilized. Flashing when vehicle is moving.
	When lit, indicates that a maintenance is required. See your authorized Can-Am dealer or person of your own choosing for the maintenance.
	Track kit active (If equipped)

Settings

Setup

Using MENU button, select SETTINGS and hold to enter setting menu.

OK button can be pressed instead of holding MENU button.

219002049-302

1. *DRIVE MODE button*
2. *MENU button*
3. *OK button*
4. *TRIP button*

Maintenance Reset

NOTE: Only when the maintenance icon is displayed.

Using MENU button, select RES MAINT and hold to reset maintenance.

Fault Codes

NOTE: Only when fault codes are actives.

Using MENU button, select CODES and hold to see active fault codes. Fault codes will be scrolled on the Lower Display.

Reset Stats

Using MENU button, select RESET STAT and hold to reset.

Unit Selection

This multifunction gauge is factory preset in Imperial units but it is possible to change it to Metric units.

Using MENU button, select UNITS and hold button to change units.

Speed/RPM

The speed and RPM display can be swapped.

Using MENU button, select SPEED/RPM and hold button to invert speed and RPM display.

Setting Clock

Using MENU button, Select CLOCK and hold to change time.

1. Press MENU button to select clock display.
2. Push and hold MENU button for 1 second.
3. Press MENU button to select 12:00 AM PM or 24:00 time base.
4. Push and hold MENU button or OK button to acknowledge selection.
5. Press MENU button to change hours (hours flash).

6. Push and hold MENU button or OK button to acknowledge hour selection
7. Push MENU button to switch to minutes (minutes flash).
8. Push and hold LOWER button to acknowledge minutes selection.

Setting Brightness

The brightness of the LCD display can be adjusted.

Using MENU button, select BRIGHTNESS and hold MENU button to select the brightness setting.

Using MENU button, adjust brightness then push and hold MENU button to acknowledge selection.

Setting Language

The gauge display language can be changed. Refer to an authorized Can-Am dealer for language availability and to setup the gauge to your preference.

NOTE: Some vehicle safety labels are not shown on illustrations. For information on vehicle safety labels, refer to *IMPORTANT ON-PRODUCT LABELS*.

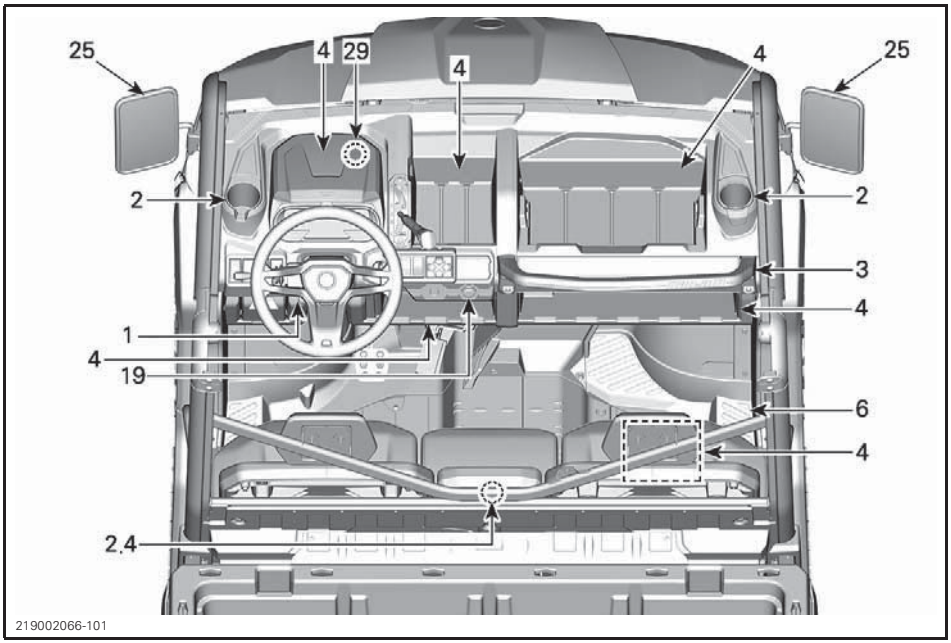

TYPICAL

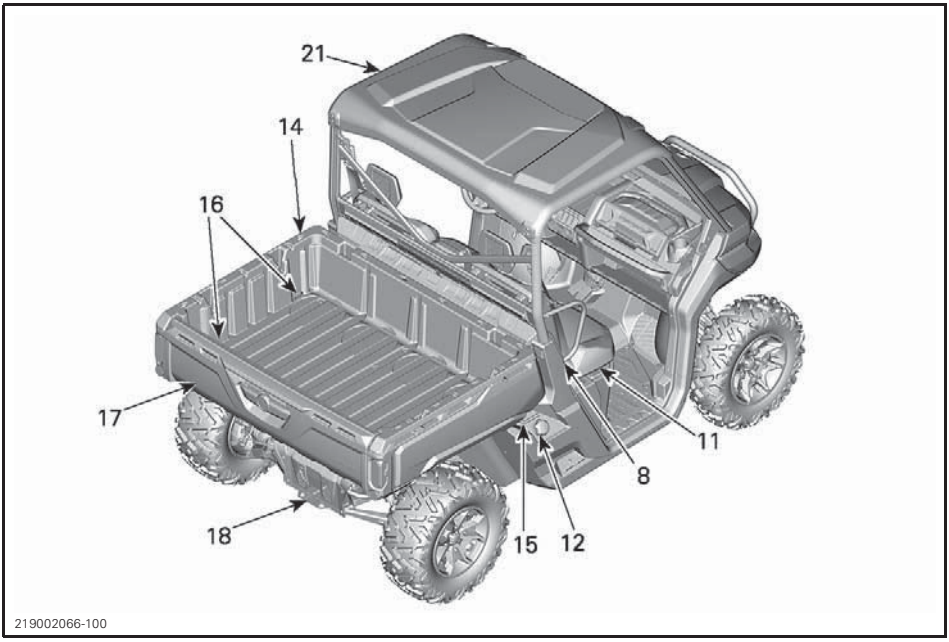

TYPICAL

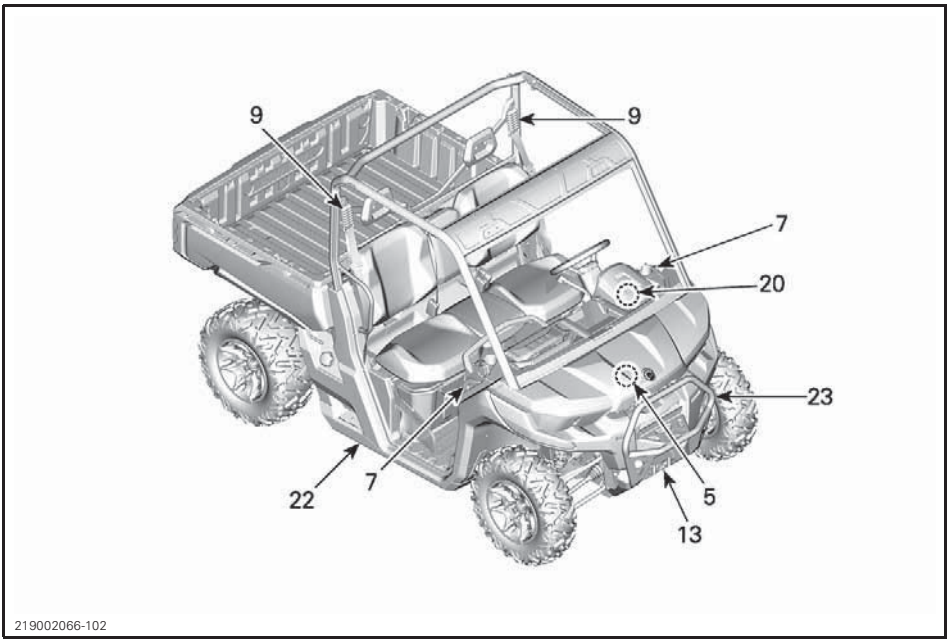

TYPICAL

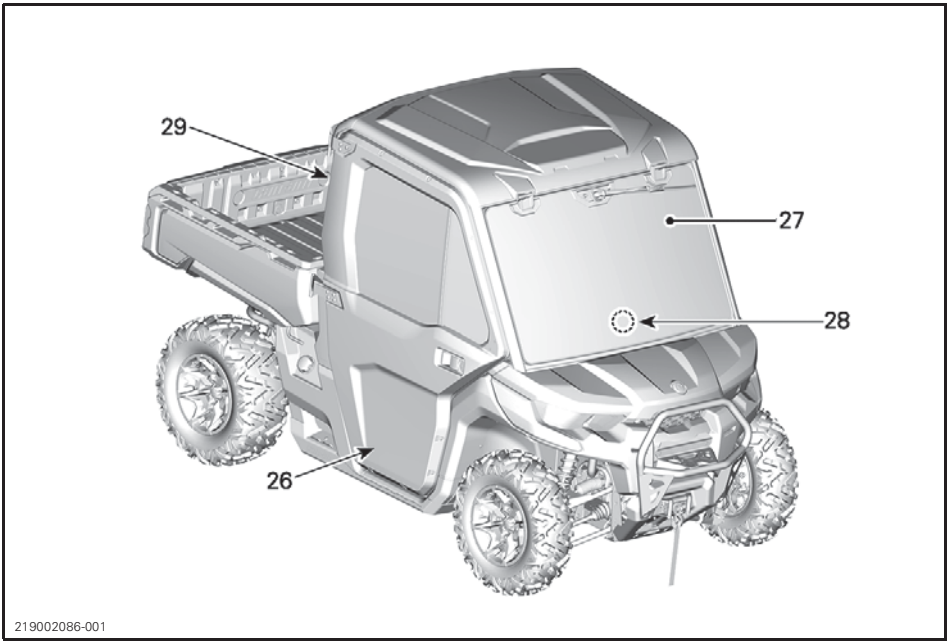

TYPICAL

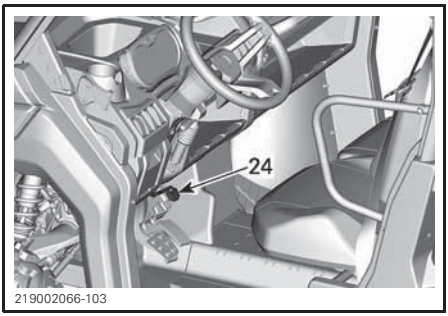

TYPICAL - IF EQUIPPED

1) Tilt Steering

The steering wheel height is adjustable.

Adjust the steering wheel height to face your chest, not your head.

To adjust steering wheel height:

1. Unlock steering by pulling the tilt lever toward you.
2. Move steering wheel to the desired position.
3. Release tilt lever to lock steering wheel in position.

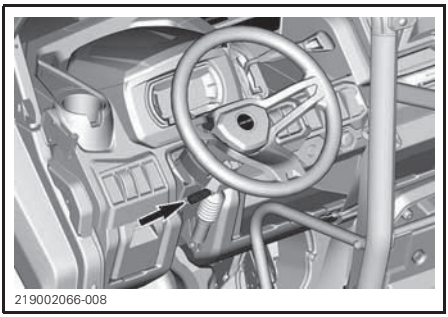

⚠ WARNING

Never adjust the steering wheel height while riding. You may lose control.

2) Cup Holders

CAB models

Two cup holders are located on the center console.

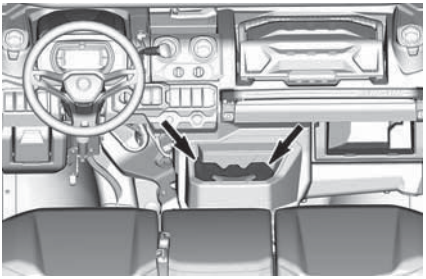
219002086-004

All except CAB models

Two cup holders are located on each side of the vehicle near the side nets attachment points.

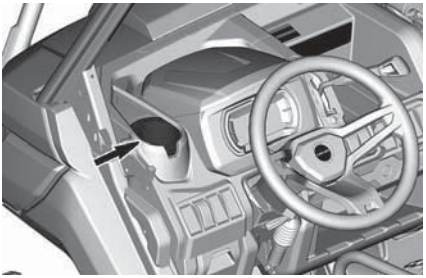
219002066-009

All models

Two additional cup holders are available on the back of the central passengers seat.

To access it, press the clip locking mechanism and pull seat backrest forward.

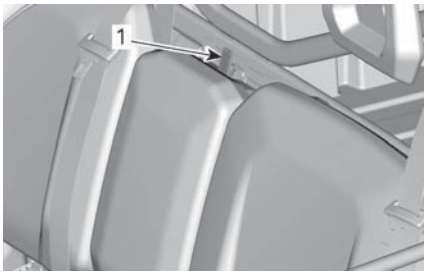

tmo2016-010-015_a

TYPICAL
1. *Backrest clip locking mechanism*

tmo2016-010-058_a

TYPICAL
1. *Central passenger backrest cup holder*

NOTE: Do not use cup holders while riding in rough conditions.

3) Passengers Handhold

The passengers have access to a front handhold located on the console below the removable tool box.

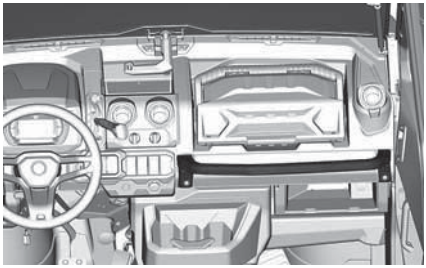
219002059-304

Adjust the seat position in order to get a solid and comfortable grip on the handholds. Refer to *PASSENGER SEATS* for adjustment procedure.

Holding the handhold helps the passengers brace against the movement of the vehicle and helps keep hands and body inside the cockpit in the event of a rollover.

⚠ WARNING

Never use any part of vehicle cage as handholds. Hands can be struck by objects outside the cockpit or crushed in a rollover.

4) Storage Compartments

The vehicle is equipped with storage compartments designed to carry light objects.

Multifunction Gauge Storage Compartment (If Equipped)

A storage compartment is available above the multifunction gauge.

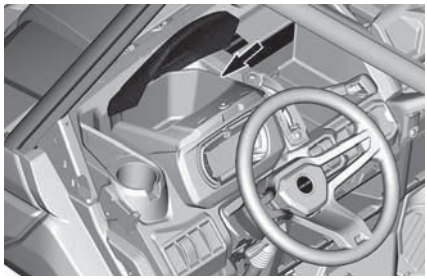

219002066-010

Driver Storage compartment (If Equipped)

A small storage compartment is available on the driver side.

Pull on handle to rotate it open.

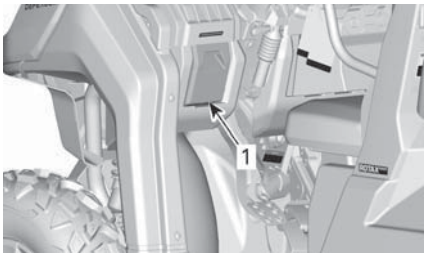

tmo2016-010-086_a

TYPICAL
1. Driver storage compartment

Removable Tool Box (If Equipped)

A removable tool box is located on the upper console.

tmo2016-010-071_a

To open tool box, unlock panel and lift lid.

tmo2016-010-072_a

UNLOCKING LID

⚠ WARNING

Before riding, always make sure tool box is secured to vehicle and lid is locked.

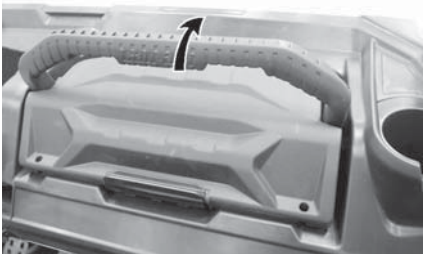

SECURING TOOL BOX IN PLACE

Removing Tool Box

To remove tool box, unlock it by lifting handle.

UNLOCKING REMOVABLE TOOL BOX

⚠ WARNING

Before riding, always make sure tool box is secured to vehicle and lid is locked.

Under seat Storage Box (If Equipped)

A convenient removable under seat storage box is available.

TYPICAL
1. Under seat storage box

To remove under seat storage box, lift RH passenger seat and remove under seat storage box by pulling it upwards.

TYPICAL

NOTE: When reinstalling under seat storage box, make sure to align it properly with seat tubes and floor emboss so it fits properly under the seat.

Open Storage Compartments

Multiple open storage compartments are available in the console.

⚠ WARNING

When riding vehicle, make sure no object stored in open storage compartments could cause harm in the event of a roll over.

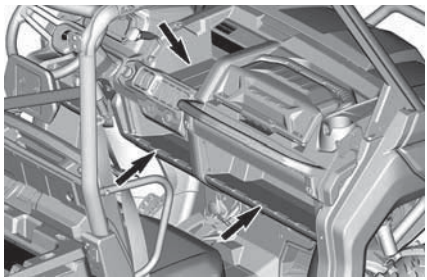

ALL EXCEPT BASE

Central Passenger Backrest Storage Area

When central passenger seat backrest is pulled down a storage area is available.

NOTE: Always empty storage area before putting central passenger backrest up.

TYPICAL
1. *Central passenger backrest storage area*

5) Tool Kit

A tool kit with basic tools is provided. It is located in the front service center.

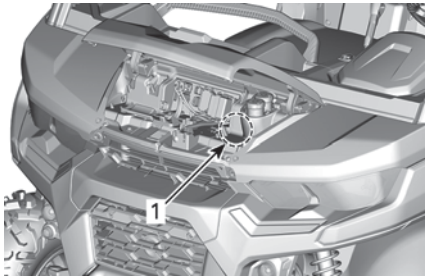

1. *Tool kit*

6) Footrests

The vehicle is equipped with driver and RH passenger footrests to allow firmly planting feet on vehicle floor, which helps to maintain proper body position while riding.

The footrests help minimize the risk of leg or foot injury.

Always wear appropriate footwear. See *RIDING GEAR*.

7) Side Nets

A side net is provided on each side of the cockpit to help arms, legs or shoulders stay inside the vehicle, thus reducing the risk of injuries. Side Nets may also keep bushes or debris out of cockpit.

⚠ WARNING

Never operate the vehicle unless both side nets are in place and buckled.

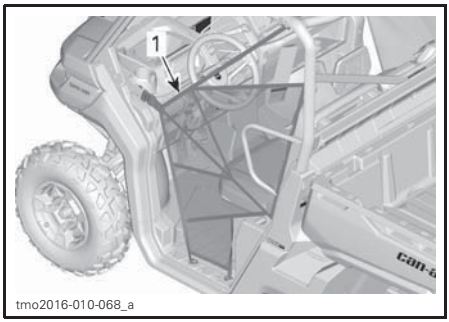

1. *Side net*

Side nets are adjustable and must be kept as tight as possible. To adjust side nets proceed as follows:

1. Secure side net with buckle.
2. Pull on four adjustment straps to tighten.

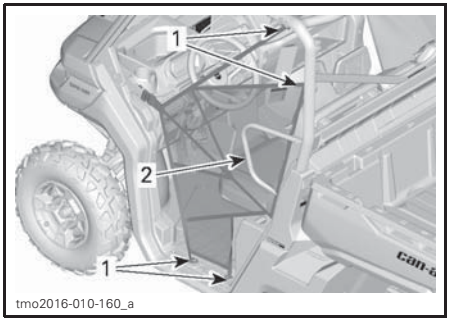

1. Side net adjustment locations
2. Shoulder guard

8) Shoulder Guards

The vehicle is equipped with shoulder guards to help restrain the entire body of driver and passengers inside vehicle.

9) Seat Belts

This vehicle is equipped with 3 points seat belts to help protect driver and passengers in the event of a collision, rollover, or tipover. The seat belts can help keep occupants stay in the passenger compartment.

⚠ WARNING

Wear seat belts properly at all times. Seat belts reduce the risk of injury in a crash and help keep limbs inside the cockpit in a rollover or any accidents.

If driver's seat belt is not fastened when:

– The ignition is turn ON, the seat belt indicator lamp will flash.
– The engine is started and shift lever is moved out of PARK, vehicle speed will be limited to a maximum of approximately 20 km/h (12 MPH) on flat ground.

⚠ WARNING

The vehicle may reach higher or lower speed depending on inclines.

To remind you to fasten the seat belt, the multifunction gauge will display the following message: ENGINE LIMITATION ENGAGED FASTEN SEAT BELT.

⚠ WARNING

There is no indicator light or message for the passengers seat belts. The driver is responsible for the passengers safety and should ensure the passengers buckles their seat belts.

Fastening and Adjusting the Seat Belt

The seat belt is equipped with a semi-cinching tab that lock the lap belt when the webbing is under tension.

TYPICAL
1. Semi-cinching tab

To fasten the seat belt, insert the latch plate into the buckle, then pull the belt to ensure it is properly fastened.

Adjust the seat belt tightly against your body by pulling the shoulder belt upwards.

219001761-210_a

TYPICAL

⚠ WARNING

Wear seat belt properly. Make sure it remains securely fastened and tightened against the body. Make sure it is not twisted or defective.

To release the seat belt, push on the red button on the seat belt buckle.

10) Driver's Seat

On applicable models, The driver's seat can be adjusted forward and backward.

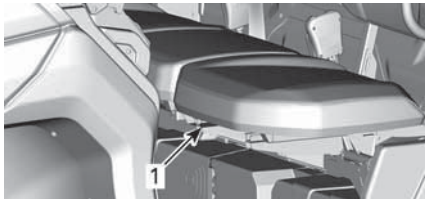

219001808-001_a

TYPICAL
1. *Adjustment lever*

To adjust seat, move the seat lever to unlock the seat. Release the lever to lock the seat into desired position.

⚠ WARNING

Never adjust the seat position while driving.

11) Passenger Seats

The passenger seats are not adjustable.

The central passenger seat backrest can be tilted forward for access to cup holders by releasing the latch located on top of the backrest.

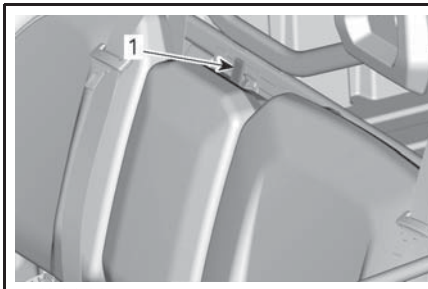

tmo2016-010-015_a

TYPICAL
1. *Backrest clip locking mechanism*

On applicable models, the seats can be lifted to allow access to removable under seat storage compartment (if equipped).

To lift seat, pull on front of seat to unclip it and lift until it "clips" in the upper position.

12) Fuel Reservoir Cap

The fuel reservoir cap is located on the right hand side of the vehicle cargo box release handle.

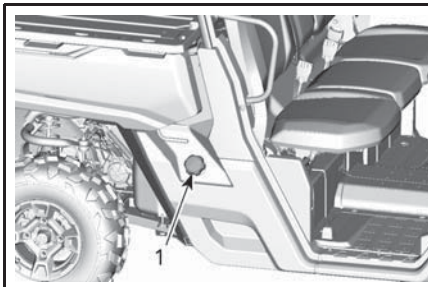

tmo2016-010-009_a

TYPICAL
1. *Fuel reservoir cap*

Refer to *FUEL* for information on fueling procedure and fuel requirements.

13) Winch (If Equipped)

The winch can be actuated inside the vehicle using the winch control switch on the upper console.

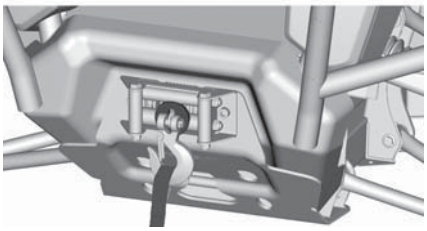

NOTE: Using the winch intensively over a long period of time may discharge the battery.

The following tips will help to reduce the risk of discharging the battery:

Always unreel manually: Unlock the cable using the handle then pull on the hook strap to unreel.

It is recommended to let the vehicle run while winching. Do not stop vehicle immediately after winching to let battery recharge.

Also, when winching for more than 30 seconds, it is recommended to increase engine RPM in the range of 3000 RPM to increase charging power to the battery.

NOTE: Make sure vehicle is in NEUTRAL (N) before increasing engine RPM.

Refer to your winch *GUIDE* included with your vehicle for proper winch operation.

Intensive use of the winch may cause the built-in circuit breakers to momentarily turn OFF. In such a case, wait a moment, then continue winching. the breakers automatically turn ON once they cooled down.

14) Cargo Box

The vehicle is equipped with a an inclinable cargo box. The cargo box may be used for various types of cargo.

⚠ WARNING

To reduce the risk of loss of control or loss of load, use the cargo box only in accordance with *CARRYING LOADS* in the *SAFETY INFORMATION* section.

Cargo Box Separations

Cargo box can be easily separated into smaller storage compartments to prevent cargo loads from mixing.

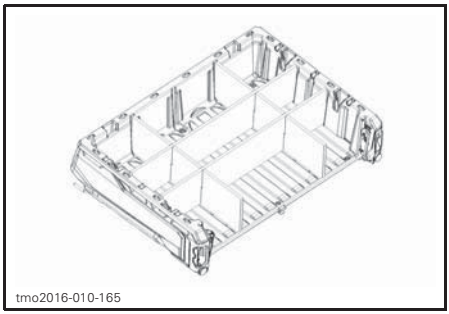

EXAMPLE OF CARGO BOX SEPARATIONS

15) Cargo Box Tilt Release Handles

The latching mechanism of the cargo box can be actuated from either side of the vehicle through a release handle.

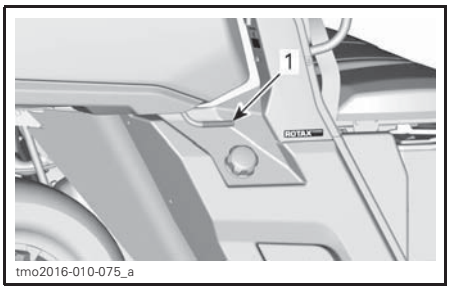

1. *Cargo box release handle*

Refer to *CARRYING LOADS*.

16) Anchoring Hooks

To provide anchoring point in order to secure cargo inside the cargo box, 4 anchoring hooks are located inside the cargo area.

NOTICE Never lift vehicle using anchoring hooks.

17) Tailgate

The cargo box can be closed with a tailgate.

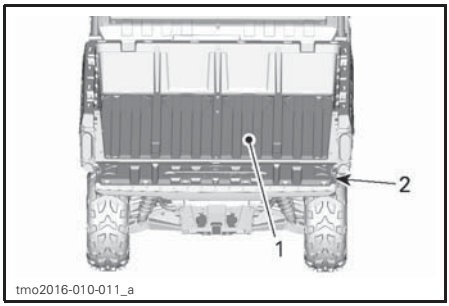

1. *Cargo box*
2. *Tailgate*

NOTICE Do not exceed 113.4 kg (250 lb) of weight on the tailgate during loading or unloading. Always close tailgate before operating to reduce the risk of loss of load.

Tailgate Removal

Open tailgate and remove retaining cables.

Position tailgate so as to remove it from pivot points.

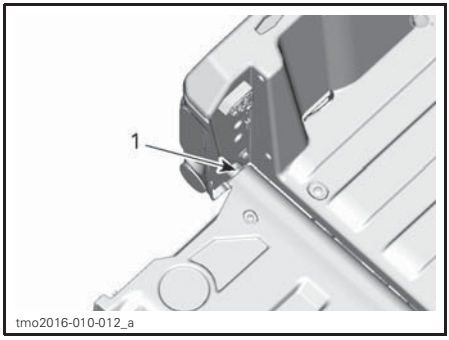

1. *Tailgate pivot point*

18) Trailer Hitch

The vehicle comes equipped with a 50.8 mm (2 in) x 50.8 mm (2 in) box size standard receiver hitch.

For the proper usage of the hitch support, refer to *MOVING LOADS AND DOING WORK*.

⚠ WARNING

To reduce the risk of loss of control or loss of load, always respect the maximum hauling capacity.

19) 12-Volt Power Outlets

Convenient for handheld spotlight or other portable equipment.

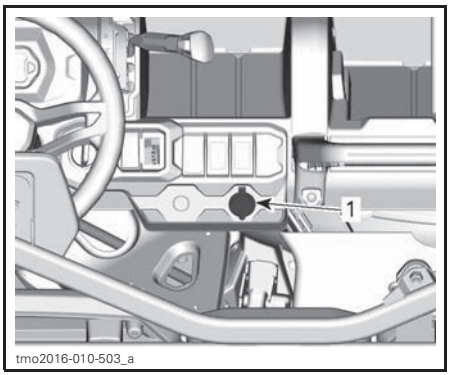

ALL MODELS

1. *12 V power outlets*

Remove protective cap to use. Always reinstall it after use to protect against weather.

20) USB Power Outlet (If Equipped)

Some models are equipped with a USB port used for charging.

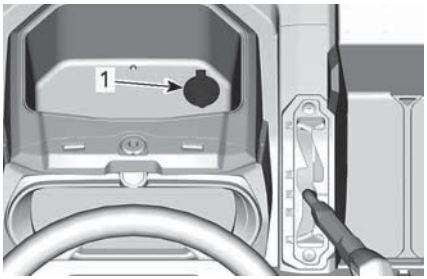

1. USB charging port

21) Roof (If Equipped)

For installation and removal instructions, see an authorized Can-Amdealer.

22) Rock Sliders (If Equipped)

Aluminium rock sliders for additional lower body protection.

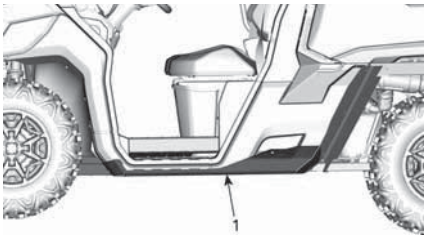

1. Rock slider

23) Front Bumper (If Equipped)

Steel bumper for additional front body protection.

24) Brake Holding Mechanism (If equipped)

The brake holding mechanism lever is located on the LH side of the steering wheel, above the brake pedal.

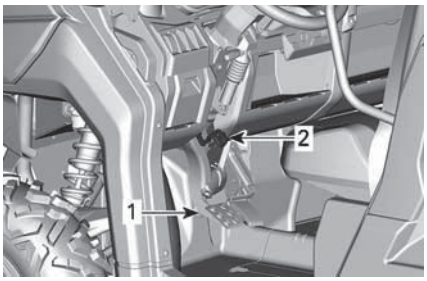

1. Brake pedal
2. Brake holding mechanism lever

The brake holding mechanism function is to maintain brakes to all wheels while shift lever is set to Park.

To engage the brake holding mechanism, proceed as follow:

1. Immobilize vehicle,
2. Apply and hold the brakes,
3. Put shift lever in **Park**,
4. While holding the brakes, lift lever toward the steering wheel,
5. Release the brakes, the pedal should stay lowered.

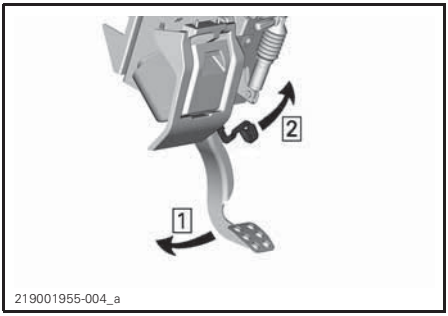

Step 1: Apply and hold brake pedal
Step 2: Lift lever

NOTE: The brake holding mechanism lever can be set to several positions.

WARNING

When the brake holding mechanism is applied, make sure the vehicle stays securely in place. Always put the shift lever in Park when using the brake holding mechanism.

To release the brake holding mechanism, simply apply and hold the brake pedal, put shift lever in gear then release brake pedal. When released it should return to the rest position.

Safe usage of the brake holding mechanism requires the shift lever to be set to the Park position. It is not recommended to use the brake holding mechanism on its own.

WARNING

Make sure brake holding mechanism is released before operating the vehicle. If the brake holding mechanism is left ON while riding, it may cause damage to the brake system and lead to loss of braking capacity and/or fire.

25) Side Mirrors (On applicable models)

This vehicle may be equipped with side mirrors.

The mirrors can be adjusted to suit driver preferences.

WARNING

Do not adjust mirrors while riding. You could lose control.

26) Full Doors With Electric Windows (Limited Models)

This vehicle comes equipped with full doors and electric windows.

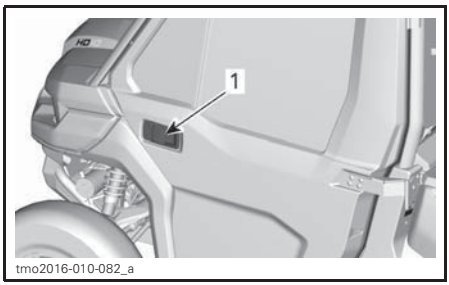

1. Outer door handle

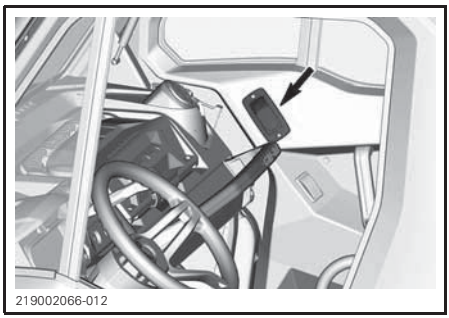

1. Inner door handle

Doors can be removed from vehicle. See an authorized Can-Am dealer for information.

WARNING

Always install safety nets whenever removing full doors from vehicle. See an authorized Can-Am dealer for installation instructions.

27) Full Glass Windshield with Wiper (If equipped)

Some vehicles are equipped with a full glass windshield and wiper.

To activate wiper, press activation switch. The switch is located on the central panel at the top of the windshield.

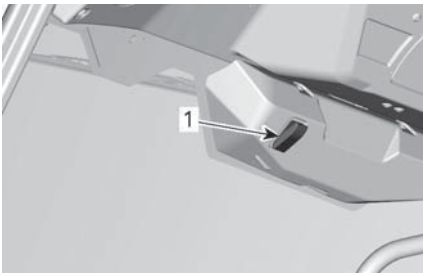

tmo2016-010-076_a

1. Wiper activation switch

To activate windshield washer, hold activation switch up.

Full glass windshield with wiper can be removed from vehicle. See an authorized Can-Am dealer for information.

Windshield Position

Windshield can be set to 3 different positions.

- Closed
- Partially opened (second position on the handle)
- Fully opened (handle is released)

NOTE: When riding the vehicle with the windshield in one of the open position, adjust your speed to the terrain. The glass windshield is not as strong when not seated in its closed position.

To close windshield, pull on handle until it closes.

Filling up Windshield Washer

Open cargo box.

Lift service cover and remove windshield washer bottle cap.

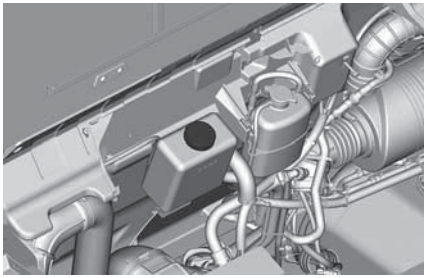

219001807-010

Fill windshield washer bottle.

28) Climate Control System (Limited Models)

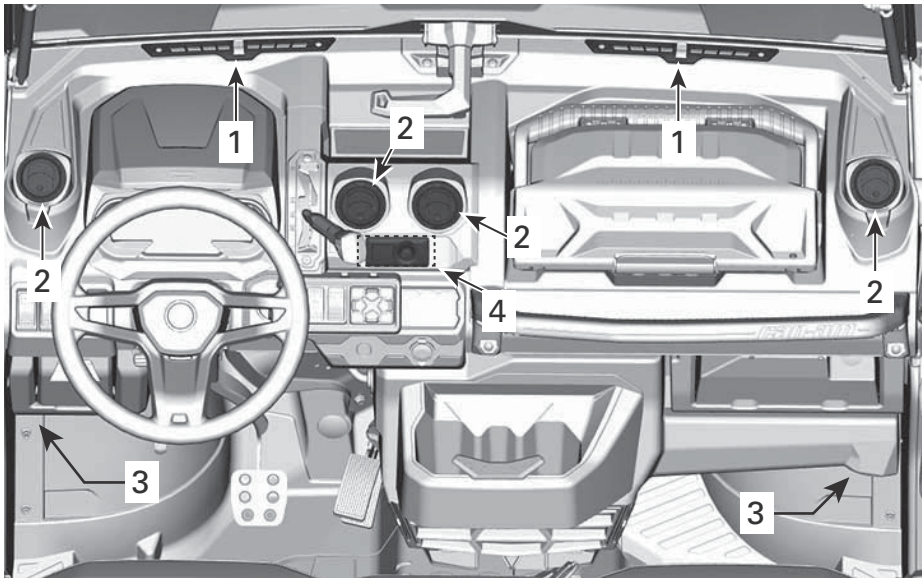

219002059-059

1. *Windshield air vents*
2. *Central air vents*
3. *Footwell air vents*
4. *Climate control*

Windshield Air Vents

Located on the top of the dash, they allow distribute the air flow on the windshield.

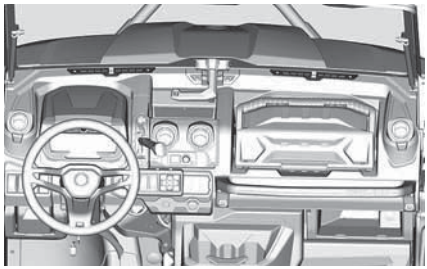

219002059-064

The air flow may be adjusted using the central knob.

– Push the knob toward the windshield to close the vent.
– Pull it to open the vent.

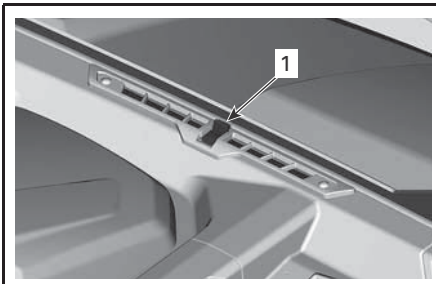

219002059-065

CLOSED POSITION SHOWN
1. *Central knob*

Console Air Vents

Located on the center of the console, they allow distribute the air flow inside the cockpit.

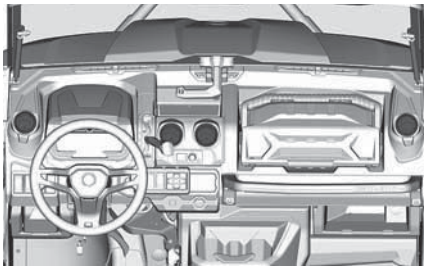

219002059-066

Push on the molded dot to open the vent.

Push on vent tabs to close.

Rotate the external ring of the vent to orient the air flow in the cockpit.

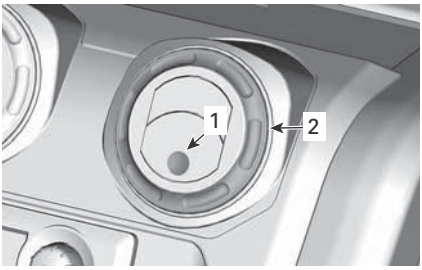

219002059-067

1. *Molded dot*
2. *External ring*

Footwell Air Vents

Located underneath the dash, each side of the vehicle, they allow distribute the air flow at the bottom of the cockpit.

Push on the molded dot to open the vent.

Push on vent tabs to close.

Climate Control - With A/C

This vehicle is equipped with an heating/air conditioning system.

This system is controlled by a multifunction module. This module gives access to the following functions:

– Temperature
– Temperature mode
– Fan speed
– Settings

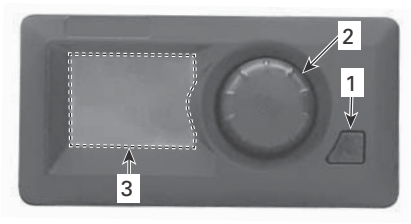

219002059-072

1. *Power switch*
2. *Selector knob*
3. *Display*

For an optimal efficiency of the system, the supply control of the outside air is determine automatically by the climate control module. No operator's action is required.

Temperature

To adjust the temperature, turn the selector knob to select the desired temperature.

The temperature can be set between 13°C and 28°C (56°F and 82°F) in 1 degree increments.

In position T° MIN, the system switches to continuous cooling.

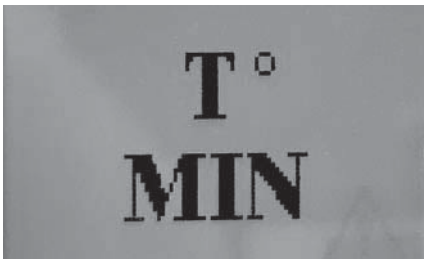

219002059-070

In T° MAX, the system switches to continuous heating.

219002059-071

NOTE: In either T° MIN or T° MAX position, the system can not regulate a stable temperature.

Temperature Mode

1. To select the temperature mode, press the selector knob until one of the following icon appear.

2. Turn the selector knob to change the mode.

NOTE: After 5 seconds, the module saves your selection and returns automatically to the temperature display.

In AUTO mode, the system automatically adjusts to heat or cool the cockpit to obtain the selected temperature as quickly as possible by adjusting the fan speed automatically.

If an other fan speed is selected while in AUTO mode, the system will fall in cool or heat mode depending the ambient conditions.

Fan Speed

To adjust the fan speed, press the selector knob until the fan icon appears then turn the knob to select the desired speed.

3 settings are available for fan speed:
- LOW
- MED
- HIGH

NOTE: After 5 seconds, the module saves your selection and returns automatically to the temperature display.

Setting

The following settings can be modified by the operator.
- Contrast (0% to 100%)
- Brightness (0% to 100%)
- Unit (C° or F°)

To modify a setting, press the selector knob 2 time to reach the Fan Speed page.

NOTE: Each next action must be performed within 10 seconds, otherwise the module will come back to the temperature display.

Press and hold the power button while turning the selector knob clockwise for at least 3 clicks.

To change the CONTRAST: turn the selector knob until the desired level is reached.

To change the BRIGHTNESS: press the selector knob 1 time, then turn the knob until the desired level is reached.

To select C° or F°: press the selector knob 2 times, and turn the knob to change the unit.

29) Rear Deflector (If Equipped)

Clear rear deflector to protect from back draft of dust or rain in harsh environments. Sliding quick mount for easy installation.

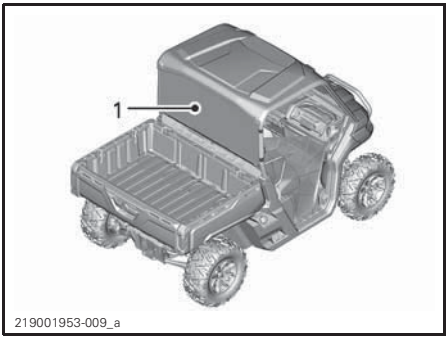

1. Rear deflector

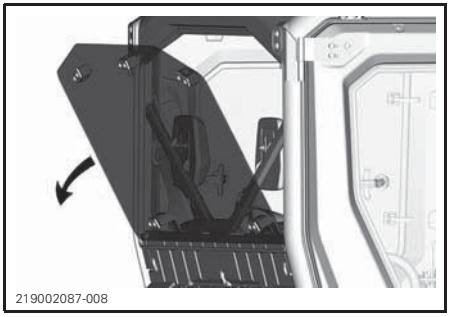

Removing the Rear Defector

To remove the rear deflector, slide clamp toward the unlock icon.

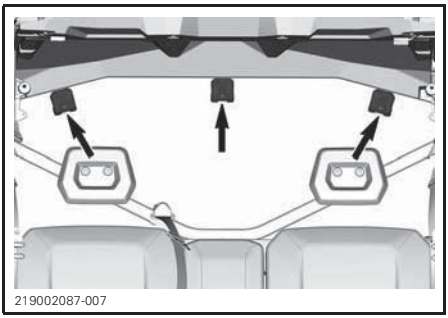

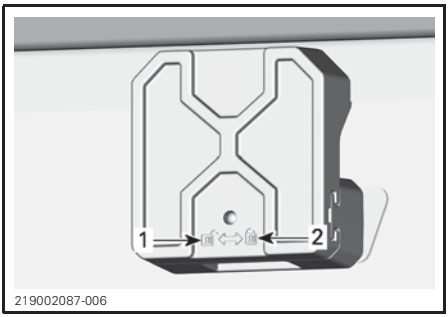

CLAMP
1. Unlock icon
2. Lock icon

Tilt toward the rear and lift.

Suspension Adjustment Guidelines

Your vehicle handling and comfort depend upon suspension adjustments.

⚠ WARNING

Suspension adjustment could affect vehicle handling. Always take time to familiarize yourself with the vehicle's behavior after any suspension adjustment has been made.

Choice of suspension adjustments vary with vehicle load, personal preference, riding speed and terrain condition.

The best way to set up the suspension, is to start from factory settings, then customize each adjustment one at a time.

Front and rear adjustments are interrelated. It may be necessary to readjust the rear shock absorbers after adjusting front shock absorbers for instance.

Test run the vehicle under the same conditions; trail, speed, load, etc. Change one adjustment and retest. Proceed methodically until you are satisfied.

Following are guidelines to fine-tune suspension. Use suspension adjustment tool provided in the tool kit.

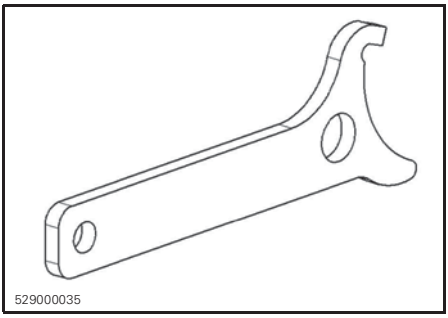

SUSPENSION ADJUSTMENT TOOL

Suspension Factory Settings

FRONT SUSPENSION FACTORY SETTINGS	
ADJUSTMENT	FACTORY SETTING
Spring preload	Cam position 1 (soft)

REAR SUSPENSION FACTORY SETTINGS	
ADJUSTMENT	FACTORY SETTING
Spring preload	Cam position 1 (soft)

Suspension Adjustments

Spring Preload Adjustment

Shorten the spring for a firmer ride and rough riding condition or when pulling a trailer.

Lengthen the spring for a softer ride and smooth riding condition.

⚠ WARNING

The left and right shock adjustment on front or rear suspension must always be set to the same position. Never adjust one shock only. Uneven adjustment can cause poor handling and loss of stability, which could lead to an accident.

Lift the vehicle. Spring length should be equal on both sides.

NOTE: Spring preload affects ground clearance.

Adjust by turning adjusting cam.

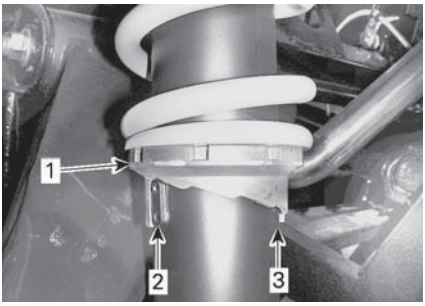

tmo2011-001-065_a

TYPICAL
1. *Turn adjusting cams*
2. *Soft adjustment*
3. *Hard adjustment*

DPS Function

The Dynamic Power Steering (DPS) provides a computer controlled, variable power assist, achieved by an electric motor to optimize the amount of steering input required by the rider.

Fuel Requirements

NOTICE **Always use fresh gasoline. Gasoline will oxidize; the result is loss of octane, volatile compounds, and the production of gum and varnish deposits which can damage the fuel system.**

Alcohol fuel blending varies by country and region. Your vehicle has been designed to operate using the recommended fuels, however, be aware of the following:

- Use of fuel containing alcohol above the percentage specified by government regulations is not recommended and can result in the following problems in the fuel system components:
  - Starting and operating difficulties.
  - Deterioration of rubber or plastic parts.
  - Corrosion of metal parts.
  - Damage to internal engine parts.
- Inspect frequently for the presence of fuel leaks or other fuel system abnormalities if you suspect the presence of alcohol in gasoline exceeds the current government regulations.
- Alcohol blended fuels attract and hold moisture which may lead to fuel phase separation and can result in engine performance problems or engine damage.

Recommended Fuel

Use unleaded gasoline containing MAXIMUM 10% ethanol. The gasoline must have the following minimum octane requirements:

MINIMUM OCTANE RATING
AKI (R+M)/2 octane rating of 87, or a RON octane rating of 92

E10

NOTICE **Never experiment with other fuels. Engine or fuel system damages may occur with the use of an inadequate fuel.**

NOTICE **Do NOT use fuel from fuel pumps labeled E85.**

Use of fuel labeled E15 is prohibited by U.S. EPA Regulations.

Vehicle Fueling Procedure

WARNING

- **Fuel is flammable and explosive under certain conditions.**
- **Never use an open flame to check fuel level.**
- **Never smoke or allow flame or spark in vicinity.**
- **Always work in a well-ventilated area.**

1. Stop engine.

WARNING

Always stop engine before refueling.

2. Have driver and passengers get out of vehicle.

WARNING

Do not allow anyone to remain in the vehicle while fueling. If there is a fire or explosion during fueling, a vehicle occupant could be unable to quickly leave the area.

3. Unscrew slowly the fuel reservoir cap counterclockwise to remove it.

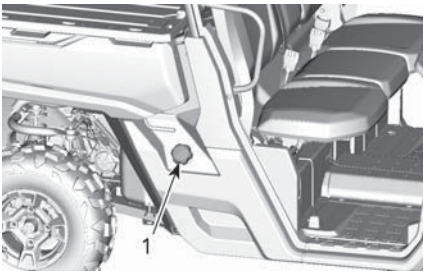

TYPICAL
1. *Fuel reservoir cap*

WARNING

If a differential pressure condition is noticed (whistling sound heard when loosening fuel reservoir cap) have vehicle inspected and/or repaired before further operation.

4. Insert the spout into the filler neck.
5. Pour fuel slowly so that air can escape from the tank and prevent fuel flow back. Be careful not to spill fuel.
6. Stop filling when the fuel reaches the bottom of filler neck. **Do not overfill.**

WARNING

Never top up the fuel tank before placing the vehicle in a warm area. As temperature increases, fuel expands and may overflow.

7. Fully tighten fuel reservoir cap clockwise until ratchet noise is heard.

WARNING

Always wipe off any fuel spillage from the vehicle.

Fueling a Gasoline Container

WARNING

- Use only an approved gasoline container to store fuel.
- Never fill the gasoline container in the vehicle cargo box or on-the vehicle - an electrical static discharge may ignite the fuel.

Operation During Break-In

A break-in period of 10 operating hours or 300 km (200 mi) is required for the vehicle.

Engine

During the break-in period:

- Avoid full throttle operation.
- Avoid pressing accelerator pedal more than 3/4 of the stroke.
- Avoid sustained accelerations.
- Avoid prolonged cruising speeds.

However, brief accelerations and speed variations contribute to a good break-in.

Brakes

⚠ WARNING

New brakes will not operate at their maximum efficiency until their break-in is completed. Braking performance may be reduced, so use extra caution.

Belt

A new belt requires a break in period of 50 km (30 mi).

During the break-in period:

- Avoid strong acceleration and deceleration.
- Avoid pulling a load.
- Avoid high speed cruising.

Starting the Engine

Insert key in ignition switch and turn to the ON position.

Press the brake pedal.

NOTE: If shift lever is not set to PARK (P) or (N) NEUTRAL, the brake pedal must be pressed to allow engine starting.

Turn the key to the start position and hold until the engine starts.

NOTE: Do not press the accelerator pedal. If the accelerator pedal is pressed at least 50%, the engine will not start.

Release the engine start position immediately when the engine has started.

NOTICE **If engine does not start after a few seconds, do not hold the start position more than 10 seconds.** Refer to *TROUBLESHOOTING*.

Operating the Shift Lever

Apply brakes and select the desired shift lever position.

Release brakes.

NOTICE **When changing gear selection, always completely stop the vehicle and apply the brakes prior to shifting. Damage to the gearbox may occur.**

Choosing the Correct Range (Low or High)

It is important to limit situations known to make the drive belt slip excessively. The main reason the drive belt will slip is if the gearbox is in high range when it should be in low range.

Pay attention to the following:

Low range

Low range should be used whenever:

- Pulling
- Pushing
- Hauling a load
- 4x4 applications
- Mud holes
- Water holes
- Crossing obstacles
- Climbing onto trailer
- Hill climbing

It is also recommended to use low range if driving for prolonged periods at speeds under 24 km/h (15 MPH)

Please refer to *BREAK-IN PERIOD* for drive belt break-in information.

High range

High is the default riding range.

Electronic Drive Belt Protection (if available and activated on your model)

Some vehicles have the electronic drive belt protection function activated.

Refer to your authorized Can-Am dealer for availability and possible activation.

This function is activated when riding at too slow speed for the **high range**, such as in the following situations:

- Pulling
- Pushing
- Hauling a load
- 4x4 applications
- Mud holes
- Water holes
- Crossing obstacles
- Climbing onto trailer
- Hill climbing

In the above mentioned situations the electronic drive belt protection will help protect the CVT drive belt from being damaged by activating the engine torque limiter. The gauge will also scroll a *LOW GEAR* message, suggesting the operator to immobilize the vehicle and set to LOW GEAR.

Whenever the electronic drive belt protection is activated, you MUST shift in LOW range. Refer to *OPERATING THE SHIFT LEVER*.

⚠ WARNING

Apply brakes to immobilize vehicle. Put shift lever in reverse (R), and back down the hill, barely releasing brakes to remain at low speed. Do not attempt to turn around. Never coast down hill while vehicle is in neutral. Do not perform hard braking as it increases the risk of tipover.

Stopping the Engine and Parking the Vehicle

⚠ WARNING

Avoid parking on steep slope as the vehicle may roll away.

⚠ WARNING

Always put the vehicle in PARK when stopped or parked to prevent rolling.

⚠ WARNING

Avoid parking in places where hot parts can start a fire.

When stopped or parked always bring shift lever to park position. This is especially important when parking on a slope. On very steep inclines or if the vehicle is carrying a cargo, the wheels should be blocked using rocks or bricks.

Select the flattest terrain available for parking.

Release accelerator pedal and use brakes to completely stop the vehicle.

Set shift lever in PARK position.

Turn key in ignition switch to OFF position.

Remove key from ignition switch.

If you must park on a steep incline or if the vehicle is carrying cargo, block the wheels using rocks or bricks.

Tips for Maximizing Drive Belt Durability

Riding style and conditions have a direct impact on drive belt durability. Your vehicle features a CVT system design that is optimized to offer the best performance. The CVT and drive belt have successfully endured thousands of miles of durability tests. However, to maximize drive belt durability and to prevent premature failures, it is important that the operator understands the limits of a belt driven CVT system and adapts their riding style and speed accordingly.

If riding in any of the conditions listed below, BRP highly recommends not to constantly hold the throttle wide open (WOT) for more than five (5) minutes.

- High ambient temperatures (above 30°C (86°F)
- Heavy loads: Passengers / Heavy cargo
- Heavy drag: Soft sand / Hill climbing / Mud / Using a track kit.

After a few minutes at WOT, partially release the accelerator and allow the CVT to cool down.

For more tips for maximizing the drive belt durability, refer to *CHOOSING THE CORRECT RANGE (LOW OR HIGH)*.

What to do if Water is Suspected to be in the CVT

If water is present in the CVT, the engine will accelerate but the vehicle will remain still.

NOTICE Stop the engine and drain the water to avoid damage to the CVT.

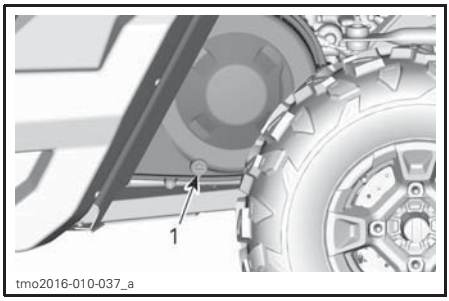

TYPICAL - LEFT SIDE OF VEHICLE UNDER CARGO BOX
1. CVT drain

See an authorized Can-Am dealer , a repair shop or person of your choosing to have the CVT inspected and cleaned.

What to do if Battery is Drained out

The vehicle can be jump started by using the red (+) cable to the battery positive pole and the black (-) cable to the vehicle chassis.

NOTICE Do not connect any electrical source to the steering column or components which are in contact with DPS.

What to do if Vehicle Rolled Over

Abrupt maneuvers, sharp turns, side hilling or accident may cause vehicle to rollover.

Should the vehicle be rolled over, it will be necessary to have it transported to an authorized Can-Am dealer for inspection as soon as possible. NEVER START THE ENGINE!

What to do if Vehicle is Submerged

Should the vehicle become immersed, it will be necessary to have it transported to an authorized Can-Am dealer as soon as possible.

NOTICE Never start the engine as immersion of the vehicle can cause serious damage to the engine if the correct restart procedure is not followed.

TRANSPORTING THE VEHICLE

When contacting a towing or transporting service, be sure to ask if they have a flatbed trailer, loading ramp or power ramp to safely lift the vehicle and tie-down straps. Ensure the vehicle is properly transported as specified in this section.

NOTICE **Do not tow this vehicle — towing can seriously damage the vehicle's drive system.**

NOTICE **Avoid using chains to tie the vehicle — they may damage the surface finish or plastic components.**

⚠ WARNING

Make sure no loose objects are present inside vehicle during vehicle transportation.

⚠ WARNING

Always transport the vehicle facing forward to avoid damaging the windshield or other components. Parts may detach during transport.

⚠ WARNING

Before attempting to mount vehicle onto a platform or a trailer, make sure to respect the following safety precautions.

SAFETY PRECAUTIONS	
Carrying equipment	The carrying item (platform or trailer or flat bed) must be of appropriate dimensions and capacity to safely support and transport the vehicle.
Hauling vehicle	Do not exceed vehicle hauling capacity and specifications. Ensure the trailer or platform is properly secured to the hauling vehicle hitch.
Visibility	Ensure you have a good visibility during the entire maneuver.
Terrain	The hauling vehicle and trailer must be on a leveled surface. Use wheel chocks on trailer and hauling vehicle to avoid any movement.
Ramps	Use ramps with proper rating and secure ramps to the trailer or platform. Avoid steep ramps.
Bystanders	Always make sure bystanders are not close to the vehicle or the trailering equipment while climbing up.

Using vehicle power to climb onto trailering equipment

When vehicle can climb on its own power, proceed as follows;

Wear protective gear.

Fasten seat belt.

Use low gear only (if equipped).

If vehicle has 4wd option, use it.

When driving remain seated at all times.

Ensure proper alignment on rails or platform.

1. Start from a sufficient distance from the trailer to align the vehicle in a straight line with the ramps. Never attempt to turn while getting closer to the ramp. Rear wheels might not be aligned once you get to the ramp and vehicle may fall off.
2. Slowly climb the front wheels onto the ramp to verify alignment.

3. Back off the vehicle, verify ramps are still secure, then proceed at proper speed.
4. Carefully drive vehicle onto platform or trailer. Use sufficient speed to climb without spinning or abruptly accelerating. Avoid acceleration while on ramps to prevent ramps movement.
5. If trailer is inclined towards front, simply let vehicle roll in without acceleration.
6. Once vehicle is climbed, put shift lever to Park. Apply brake locking mechanism (if equipped).

When vehicle cannot move on its own power, or in case overshooting is a risk or if any dangerous condition prevents for embarking on its own power, proceed using a winch;

Using a winch to pull vehicle onto trailering equipment

When vehicle cannot climb on its own power, proceed as follows;

⚠ WARNING

Have the help of an assistant. One person should be in vehicle to have access to vehicle steering, brakes and winch switch, while the other person controls the environment and safety of the maneuver.

⚠ WARNING

Ensure the winch hook can be safely attached to a proper anchoring point. Use proper rigging.

NOTE: If vehicle can be started safely, let engine idle during winching to avoid draining the battery.

1. Place shift lever to NEUTRAL (N).
2. If the vehicle is equipped with a winch, use the winch to roll the vehicle on the platform.
3. If the vehicle is not equipped with a winch, proceed as follows:
   - 3.1 Attach strap to lower front bumper anchor.
   - 3.2 Attach the strap to the winch cable of the towing vehicle.
   - 3.3 Pull the vehicle on the flatbed trailer with the winch.
4. Put shift lever to Park. Apply brake locking mechanism (if equipped).

Securing vehicle for transport

⚠ WARNING

Never use the winch to secure the vehicle during transport.

1. Remove the key.
2. At rear, secure the vehicle on both sides using a strap around the suspension arm as close to the wheel as possible.
3. At front, secure the vehicle on both sides using a strap around the upper suspension arm as close to the wheel as possible and away from the brake hose.

219002061-104

TYPICAL
1. Front upper suspension arm

⚠ WARNING

Ensure the brake hose is away from the strap. A pinched brake hose may reduce the braking performance of the vehicle.

4. Strap the rear tires by using tire towing straps.
5. Firmly attach the rear suspension tie-down straps to both sides of the rear of the trailer with ratchets.
6. Ensure that both the front and rear wheels are firmly attached to the trailer.

Getting vehicle out of trailer

⚠ WARNING

Vehicle may have moved during transport. Ensure vehicle is properly aligned with ramps before proceeding.

⚠ WARNING

Visibility will be greatly reduced when backing off from the trailer. Have the help of an assistant to ensure proper alignment and safe environment.

Front of Vehicle

Place vehicle on a flat non slippery ground.

Ensure vehicle shift lever is set to PARK.

Install an hydraulic jack under front skid plate.

Lift front of vehicle and install a jack stand on each side under frame section.

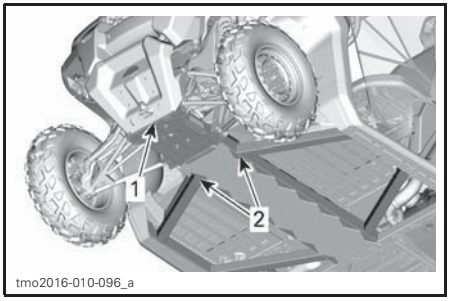

1. *Front of vehicle*
2. *Frame section*

Lower hydraulic lift and ensure vehicle is supported safely onto both jack stands.

Rear of Vehicle

Place vehicle on a flat non slippery ground.

Activate 4WD mode.

Ensure vehicle shift lever is set to PARK.

Install an hydraulic jack under the trailer hitch.

Lift rear of vehicle and install a jack stand on each side under frame section in front of rear wheel.

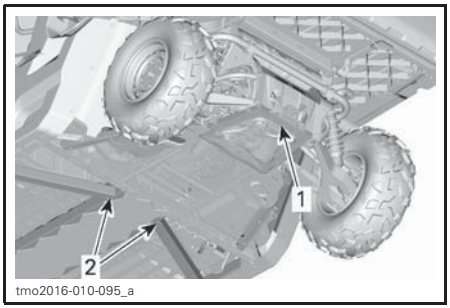

1. *Lifting location under trailer hitch*
2. *Frame section to install jacks under.*

Lower hydraulic lift and ensure vehicle is supported safely onto both jack stands.

MAINTENANCE

MAINTENANCE SCHEDULE

Maintenance is very important for keeping your vehicle in safe operating condition. The vehicle should be serviced as per the maintenance schedule.

Proper maintenance is the owner's responsibility. A warranty claim may be denied if, among other things, the owner or operator caused the problem through improper maintenance or use.

Perform periodic checks and follow the maintenance schedule. **The maintenance schedule does not exempt the pre-ride inspection**.

Verifying fault codes, as first maintenance step, is a good practice and is highly recommended.

⚠ WARNING

Failure to properly maintain the vehicle according to the maintenance schedule and procedures can make it unsafe to operate.

EPA Regulation - Canadian and USA Vehicles

A repair shop or person of the owner's choosing may maintain, replace, or repair emission control devices and systems. These instructions do not require components or service by BRP or authorized Can-Am Off-Road dealers.

Although an authorized Can-Am Off-Road dealer has an in-depth technical knowledge and tools to service your vehicle, the emission-related warranty is not conditioned on the use of an authorized Can-Am Off-Road dealer or any other establishment with which BRP has a commercial relationship.

Proper maintenance is the owner's responsibility. A warranty claim may be denied if, among other things, the owner or operator caused the problem through improper maintenance or use.

For emission-related warranty claims, BRP is limiting the diagnosis and repair of emission-related parts to the authorized Can-Am Off-Road dealers. For more information, please refer to the *US EPA EMISSION-RELATED WARRANTY* contained in the *WARRANTY* section.

You must follow the instructions for fuel requirements in the fueling section of this manual. Even if gasoline containing greater than ten volume percent ethanol is readily available, the US EPA issued a prohibition against the use of gasoline containing greater than 10 vol% ethanol that applies to this vehicle. The use of gasoline containing greater than 10 vol% ethanol with this engine may harm the emission control system.

The following message appears in the gauge after every 200 hours of operation, to remind you of maintenance requirements: MAINTENANCE REQUIRED. To erase the message, refer to the appropriate *MULTIFUNCTION GAUGE* section.

SEVERE DUSTY CONDITIONS

Air Filter Maintenance Guideline

Air filter maintenance should be adjusted according to riding conditions.

Air filter maintenance must be increased in frequency in the following dusty conditions:

– Riding on dry sand

– Riding on dry dirt covered surfaces
– Riding on dry gravel roads or similar conditions.

NOTE: Riding in a group in these conditions would increase even more the air filter maintenance.

MAINTENANCE SCHEDULE LEGEND

Operation in trail riding conditions
Operation in severe riding conditions (dusty or muddy) or carrying heavy loads condition

MAINTENANCE SCHEDULE

Make sure to perform proper maintenance at recommended intervals as indicated in the tables. Some items of the maintenance schedule must be performed in function of the calendar, regardless of the distance or time of operation.

EVERY YEAR OR EVERY 3 000 KM (2,000 MI) OR 200 HOURS (whichever comes first)
EVERY YEAR OR EVERY 1 500 KM (1,000 MI) OR 100 HOURS (whichever comes first)
Check fault codes
Perform all items indicated in the pre-ride inspection.
Replace engine oil and filter
Inspect gearbox oil level and look for contamination (every 3000 km)
Replace gearbox oil (Perform at the first 3000 km)
Inspect and clean engine air filter. Replace if needed
Inspect steering system for abnormal play and damages (column, rack and pinion, bellows)
Inspect the tie rod ends and ball joints for play and inspect bellows condition
Inspect wheel bearings for abnormal play
Inspect shock absorber bushings, suspension arm bushings and wear plates. Replace if needed.
Inspect CV joints and rubber bellows condition (check for abnormal play in the joints and for cuts in the rubber bellows)
Lubricate suspension arms and stabilizer bar bushings
Inspect and clean the brake system (fluid level, pads, discs, lines, calipers)
Check front differential oil level and look for contamination and overall condition (vents, mount bolt torque, seals)
Inspect battery condition and connections
Inspect propeller shaft U-joints for abnormal play.

EVERY YEAR OR EVERY 3 000 KM (2,000 MI) OR 200 HOURS (whichever comes first)
EVERY YEAR OR EVERY 1 500 KM (1,000 MI) OR 100 HOURS (whichever comes first)
Clean exhaust pipes and muffler area
Clean muffler spark arrester
Adjust valve clearance
Replace fuel vent breather filter
Inspect CVT drive belt
Clean CVT pulleys
Inspect centrifugal levers, rollers, O-rings and slider shoes of drive pulley
Inspect and lubricate drive pulley hub needle bearing
Inspect input and output shaft seals (engine, gearboxand front differential)
Tighten cage fasteners
Tighten suspension fasteners
Inspect and clean seat belts retractors and buckles
Verify coolant level and adjust if needed
Lubricate door latches (Limited models)
Tighten windshield hinge screws (Limited models)
Inspect, clean or replace air filters of the heating/air conditioning system (Limited models)
Inspect and clean the inside of the A/C unit. (Limited models)
Inspect all refrigerant hose connections for signs of leaking (oily residue). Oily residue indicates a refrigerant leak and requires further investigation by certified technician. (Limited models)

EVERY TWO YEAR OR EVERY 6 000 KM (4,000 MI) OR 400 HOURS (whichever comes first)
EVERY TWO YEAR OR EVERY 3 000 KM (2,000 MI) OR 200 HOURS (whichever comes first)
Replace front differential oil
Replace gearbox oil
Replace brake fluid (must be performed every 2 years)
Verify cooling system
Test engine coolant strength and level

EVERY TWO YEAR OR EVERY 6 000 KM (4,000 MI) OR 400 HOURS (whichever comes first)
EVERY TWO YEAR OR EVERY 3 000 KM (2,000 MI) OR 200 HOURS (whichever comes first)
Verify fuel system for leaks (including evaporative emission system components if equipped)
Verify fuel pump pressure (idle and WOT)
Replace spark plugs
Clean vehicle speed sensor
Replace canister vent pre-filter (evaporative emission system) if equipped
Visually inspect the compressor belt, replace the belt if necessary (Limited models)
Verify the compressor belt tension and replace the belt if necessary (Limited models)

EVERY 5 YEARS OR EVERY 12 000 KM (8,000 MI) (whichever comes first)
EVERY 5 YEARS OR EVERY 6 000 KM (4,000 MI) (whichever comes first)
Replace engine coolant

This section includes instructions for basic maintenance procedures.

Due to the complexity of some of the maintenance procedures, good mechanical skills are required. If you are not comfortable with these procedures, do not hesitate to contact an authorized Can-Am off-road dealer, repair shop or person of your own choosing.

⚠ WARNING

Unless otherwise indicated, always turn ignition switch to the OFF position before performing any maintenance and remove key.

⚠ WARNING

Should removal of a locking device be required (e.g. lock tab, self-locking fastener, etc.) , always replace it with a new one.

Engine Air Filter

NOTICE **Never modify the air intake system. Otherwise, engine performance degradation or damage can occur. The engine is calibrated to operate specifically with these components.**

Engine Air Filter Replacement Guideline

Engine Air filter inspection and replacement frequency should be adjusted according to riding conditions as it is critical to ensure proper engine performance and life span.

Engine Air filter inspection and replacement frequency must be increased for the following severe riding conditions:

- Riding on dry sand.
- Riding on dry dirt covered surfaces.
- Riding on dry gravel trails or similar conditions.
- Riding in areas with high concentration of seeds or crop husks.
- Riding in severe snow conditions.

NOTICE **When riding in dusty conditions or sand, the air box needs to be cleaned before every ride.**

NOTE: Riding in a group under these conditions would increase even more the air filter replacement frequency.

Engine Air Filter Removal

Open cargo box.

Unlatch air filter cover and remove air filter.

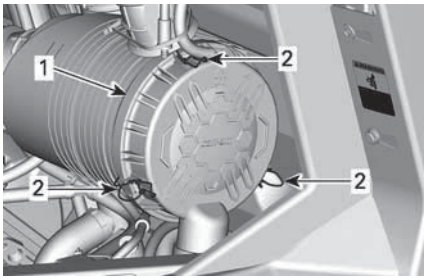

219002066-017

RH SIDE OF VEHICLE, UNDER CARGO BOX
1. Air filter cover
2. Latches

The filter fits tightly over the outlet tube and there will be some initial resistance. Gently move the end of the filter back and forth to break the seal, then rotate while pulling straight out. Avoid knocking the filter against the housing.

Engine Air Filter Cleaning

Inspect the filter for any signs of leaks. A streak of dust on the clean side of the filter is a telltale sign. Replace filter if there is any damages. Eliminate any source of air leaks before installing a new filter.

Clean engine air filter by tapping out heavy dust from paper element, this will allow dirt and dust to get out of the paper filter.

NOTICE **It is not recommended to blow compressed air on the paper element; this could damage the paper fibers and reduce its filtration ability when used in dusty environments. If engine air filter is too dirty and cannot be cleaned following the recommended procedure, it should be replaced.**

Use a clean damp cloth to wipe both the filter sealing surface and the inside of the outlet tube. Ensure that the outlet tube sealing area is undamaged.

Inspect air filter housing for cleanliness.

Duckbill Valve Cleaning

Visually check and physically squeeze the duckbill valve. Make sure the valve is flexible and not inverted, damaged or plugged.

Engine Air Filter Installation

Insert the filter carefully. Seat the filter by hand, making certain it is inserted completely into the air cleaner housing. Apply pressure by hand at the outer rim of the filter, not the flexible center.

Secure air filter cover with latches.

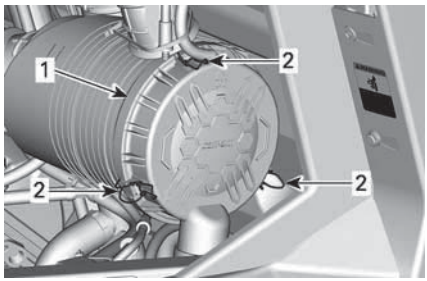

219002066-017

RH SIDE OF VEHICLE, UNDER CARGO BOX
1. Air filter cover
2. Latches

CVT Air Filter

CVT air filter inspection and cleaning frequency should be adjusted according to riding conditions as it is critical to ensure proper engine performance and life span.

CVT Air filter inspection and cleaning frequency must be increased for the following severe riding conditions:

- Riding on dry sand.
- Riding on dry dirt covered surfaces.
- Riding on dry gravel trails or similar conditions.
- Riding in areas with high concentration of seeds or crop husks.
- Riding in severe snow conditions.

NOTE: Riding in a group in these conditions would increase even more the air filter replacement requirement.

CVT Air Filter Removal

1. Tilt cargo box.
2. Press the filter tabs to release it.

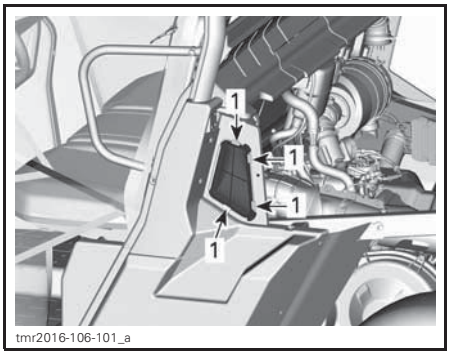

tmr2016-106-101_a

1. Press here

CVT Air Filter Inspection and Cleaning

1. Inspect filter and replace if damaged.
2. Clean filter, using a solution of soft soap and water, then rinse it.
3. Gently shake off excess water and allow filter to dry at room temperature.

4. Clean inside the CVT air inlet with a vacuum cleaner.

CVT Air Filter Installation

Reinstall CVT air filter and lower cargo box.

NOTE: Maintaining a clean CVT air filter will maximize air flow for an optimum CVT components lifespan.

Evaporative Emission System Pre-Filter (If Equipped)

Evaporative Emission System Pre-Filter Replacement

1. Tilt cargo box, refer to *CARGO BOX TILT RELEASE HANDLE*.
2. Remove the hose clamps.
3. Remove the retaining screws.
4. Remove the pre-filter assembly.

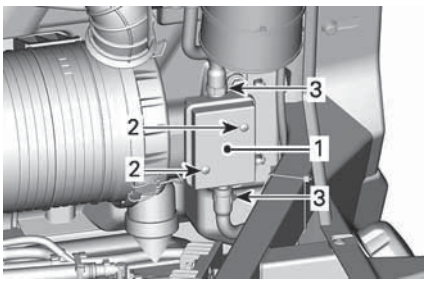

219001807-003_a

1. *Pre-Filter*
2. *Retaining screw*
3. *Clamps*

5. Install a new pre-filter assembly.

TIGHTENING TORQUE	
Pre-filter retaining screw	2.5 N•m ± 0.5 N•m (22 lbf•**in** ± 4 lbf•**in**)

6. Secure hoses with clamps.

Engine Oil

Engine Oil Level Verification

NOTICE **Operating the engine with an improper level may severely damage engine.**

NOTE: Check oil level when engine is cold.

1. Place vehicle on a level surface.
2. Open cargo box.
3. Unscrew dipstick then remove it and wipe clean.

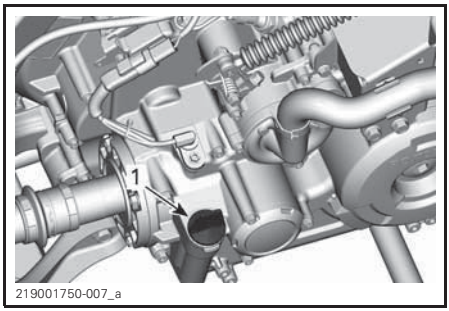

219001750-007_a

HD5
1. *Engine oil dipstick*

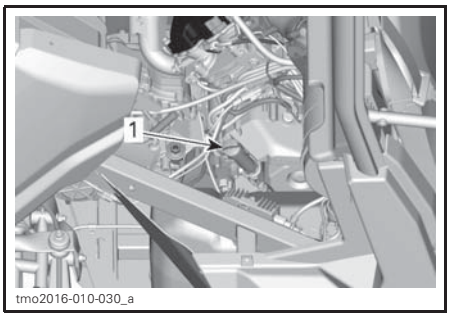

tmo2016-010-030_a

HD8 AND HD10
1. *Engine oil dipstick*

4. Reinstall dipstick, screw in it completely.
5. Remove dipstick and check oil level. It should be near or equal to the upper mark.

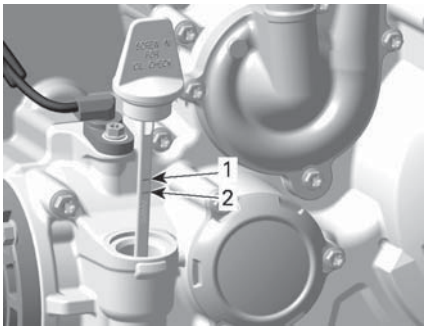

vmr2015-008-001_a

1. *Full*
2. *Add*

To add oil, remove the dipstick. Place a funnel into the dipstick hole.

Add a small amount of recommended oil and recheck oil level.

Repeat the above procedures until oil level reaches the dipstick's upper mark.

NOTE: Do not overfill. Wipe off any spillage.

Properly tighten dipstick.

Recommended Engine Oil

Rotax® engines were developed and validated using the XPS™ oil. BRP recommends the use of its XPS engine oil or an equivalent at all time. Damages caused by the use of an oil not suitable for the engine may not be covered by the BRP Limited Warranty.

XPS RECOMMENDED ENGINE OIL	
General purpose	**Scandinavia:** 4T 5W40 SYNTHETIC BLEND OIL (EUR) (P/N 779290) **Other Countries:** 4T 5W40 SYNTHETIC BLEND OIL (P/N 779133)
Cold temperature	**Scandinavia:** 4T 0W40 SYNTHETIC OIL (EUR) (P/N 779286) **Other Countries:** 4T 0W40 SYNTHETIC OIL (P/N 779139)
Warm temperature	**Scandinavia:** 4T 10W50 SYNTHETIC OIL (EUR) (P/N 779240) **Other Countries:** 4T 10W50 SYNTHETIC OIL (P/N 779234)
IF THE RECOMMENDED XPS ENGINE OIL IS NOT AVAILABLE	
Use a 4-stroke SAE engine oil meeting or exceeding the following lubricant industry specifications. Always check the API service label certification on the oil container, it must contain at least one of the indicated standards. – **API service classification SJ, SL, SM or SN**	

Engine Oil Change

CAUTION **The engine oil can be very hot. Wait until engine oil is warm.**

NOTICE **Engine oil and oil filter must be replaced at the same time.**

Bring engine to its normal operating temperature.

Place vehicle on a level surface.

Place a drain pan under the engine drain plug area.

Open cargo box.

Clean the drain plug area.

Unscrew drain plug and discard the gasket ring.

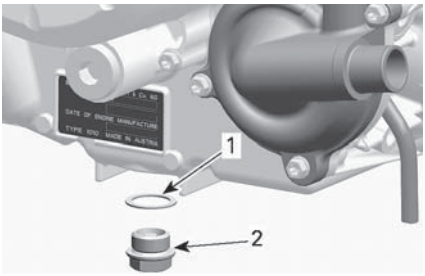

tmr2011-010-003_a

1. *Gasket ring*
2. *Drain plug*

Remove the dipstick.

Allow oil to drain completely from the crankcase.

Clean the magnetic drain plug from metal shavings and residue. Presence of debris gives an indication of internal engine damage.

Install a NEW gasket ring on the drain plug.

NOTICE **Never use the gasket ring a second time. Always replace by a new one.**

Install and tighten drain plug to the recommended specification.

TIGHTENING TORQUE	
Drain plug	30 N•m ± 2 N•m (22 lbf•ft ± 1 lbf•ft)

Replace oil filter. Refer to *OIL FILTER*.

Refill engine with recommended engine oil.

For engine oil capacity, refer to *SPECIFICATIONS*.

Oil Filter

Oil Filter Access

Open cargo box.

Remove passenger seats and engine service cover if needed.

Oil Filter Removal

Clean oil filter area.

Remove oil filter cover.

Remove oil filter.

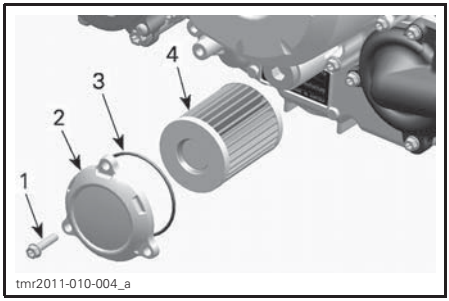

tmr2011-010-004_a

TYPICAL
1. *Oil filter screw*
2. *Oil filter cover*
3. *O-ring*
4. *Oil filter*

Oil Filter Installation

Check and clean the oil filter inlet and outlet area for dirt and other contaminations.

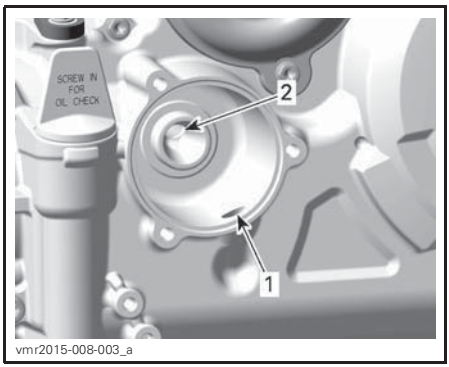

vmr2015-008-003_a

1. *Inlet bore from the oil pump to the oil filter*
2. *Outlet bore to the engine oil providing system*

Install a NEW O-ring on oil filter cover.

Install the new filter into the cover.

Apply engine oil on O-ring and grease on the end of filter.

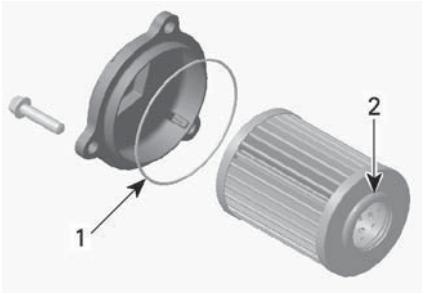

vmr2006-008-001_a

1. *Slightly oil*
2. *Slightly oil*

NOTICE **Pay attention to avoid pinching the O-ring during filter and cover installation.**

Install the cover on the engine.

Tighten oil filter cover screws to recommended specification.

TIGHTENING TORQUE	
Oil filter cover screws	10 N•m ± 1 N•m (89 lbf•**in** ± 9 lbf•**in**)

Wipe off any oil spillage on engine.

Radiator

Radiator Inspection and Cleaning

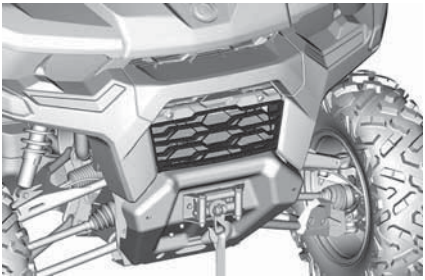

219002066-018

Periodically check the radiator area for cleanliness.

To access radiator, pull lower part of front grille and slide it down.

To install, insert upper tabs first and push lower part.

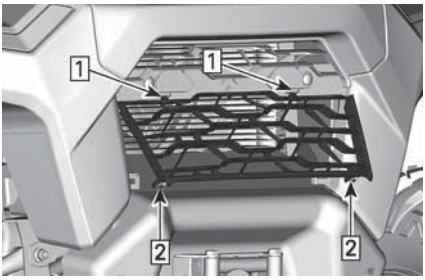

219002066-019

1. *Insert upper tabs*
2. *Push lower part.*

Inspect radiator and hoses for leaks or any damage.

Inspect radiating fins. They must be clean, free of mud, dirt, leaves and any other deposit that would prevent the radiator to cool properly.

If available, use a garden hose to rinse the radiating fins.

CAUTION **Never clean radiator with your hands when it is hot. Let the radiator cool down before cleaning.**

NOTICE **Be careful not to damage the radiating fins when cleaning. Do not use any object/tool that could damage the fins. When hosing, use low pressure only. Never use a HIGH PRESSURE washer.**

Engine Coolant

Engine Coolant Level Verification

⚠ WARNING

Check coolant level with engine cold.

1. Place vehicle on a level surface.
2. Open cargo box.

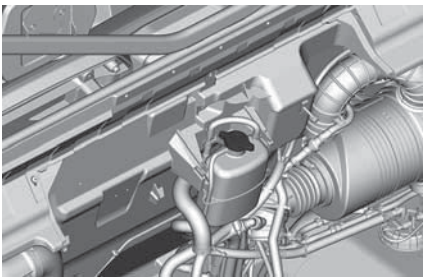

219001807-008

3. Remove the pressure cap.

⚠ WARNING

In order to avoid potential burns, do not remove the pressure cap if the engine is hot.

4. Ensure cooling system is full up to the Max line.

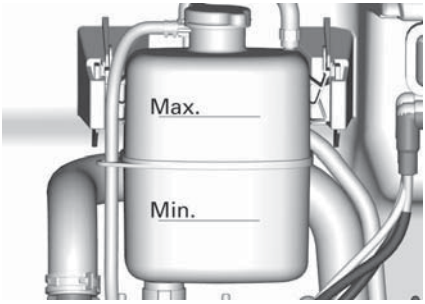

tmo2016-010-004_a

5. Add coolant in system as necessary. Use a funnel to avoid spillage. **Do not overfill**.
6. Properly reinstall pressure cap on cooling tank.
7. Close service cover and lower cargo box.

NOTE: A cooling system that frequently requires addition of coolant is an indication of leaks or engine problems.

Recommended Engine Coolant

XPS RECOMMENDED COOLANT	
Scandinavia:	EXTENDED LIFE PRE-MIXED COOLANT (EUR) (P/N 779223)
Other Countries	EXTENDED LIFE PRE-MIXED COOLANT (P/N 779150)
IF THE RECOMMENDED XPS COOLANT IS NOT AVAILABLE	
Distilled water and antifreeze solution (50% distilled water, 50% antifreeze)	

NOTICE **Always use ethylene-glycol antifreeze containing corrosion inhibitors specifically for internal combustion aluminum engines.**

Engine Coolant Replacement

Cooling System Draining

⚠ WARNING

In order to avoid potential burns, do not remove the pressure cap or loosen the coolant drain plug if the engine is hot.

1. Open cargo box.
2. Remove the cooling system pressure cap.

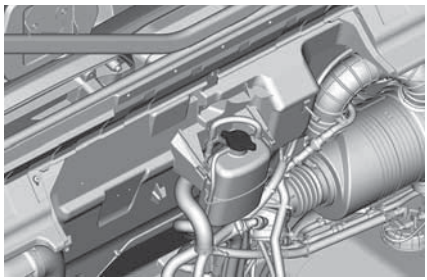

219001807-008

3. Unscrew coolant drain plug and drain the coolant into a suitable container.

NOTE: Do not unscrew the coolant drain plug completely.

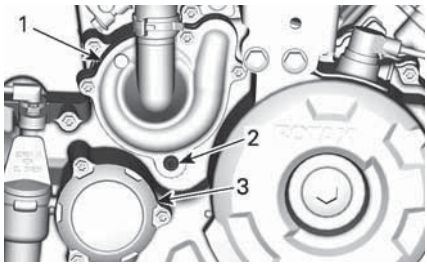

219001750-009_a

HD5
1. *Water pump cover*
2. *Coolant drain plug*
3. *Oil filter cover*

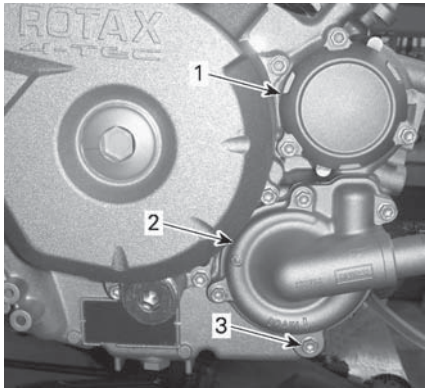

tmo2011-001-120_a

HD8 AND HD10
1. *Oil filter cover*
2. *Water pump cover*
3. *Coolant drain plug*

4. Disconnect the lower radiator hose and drain the remaining coolant into a suitable container.

NOTE: Take note of the position of the hose clamp on the lower radiator hose at the radiator.

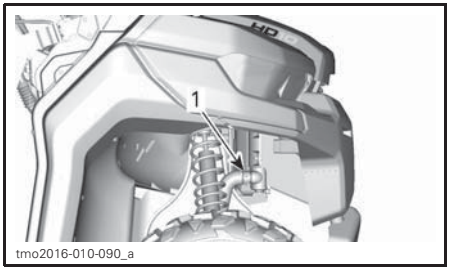

tmo2016-010-090_a

1. *Lower radiator hose to disconnect*

5. Drain cooling system completely.
6. Reinstall cooling system drain plug and tighten to specification.

TIGHTENING TORQUE	
Coolant drain plug	10 N•m ± 1 N•m (89 lbf•**in** ± 9 lbf•**in**)

7. Reinstall radiator hose as noted prior to removal.
8. Fill cooling system with coolant, refer to *COOLING SYSTEM BLEEDING* procedure.

Cooling System Bleeding

Models with a Heating/Air Conditioning System

1. Put the fan speed to MAX.
2. Raise the temperature control to the maximum.

All Models

3. Remove the pressure cap.
4. Fill coolant system until it is full up to the Max line on the coolant bottle.

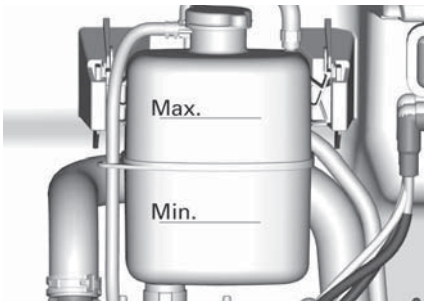

tmo2016-010-004_a

5. Install pressure cap.
6. Run engine at idle with the pressure cap ON until the cooling fan cycles on for a second time.
7. Stop the engine and let it cool down.

WARNING

In order to avoid potential burns, do not remove the pressure cap if the engine is hot.

8. When the engine is cool, remove pressure cap and add coolant if required.
9. Install pressure cap.
10. After the next ride following this procedure, check coolant level. Add coolant as required. Refer to *ENGINE COOLANT LEVEL VERIFICATION* in this section.

Heating/Air Conditioning Air Filter (if equipped)

NOTICE **The cleaning of the filters must be performed more often than recommended when riding in dusty conditions or sand.**

Fresh Air Filter

Open hood to access fresh air filter.

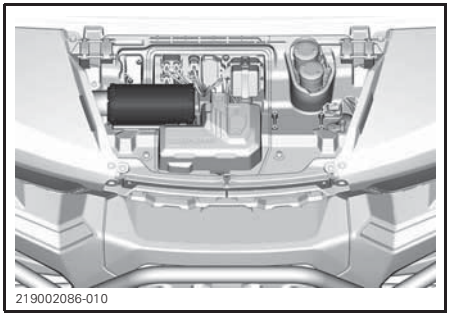
219002086-010

Lift and slide filter to remove.

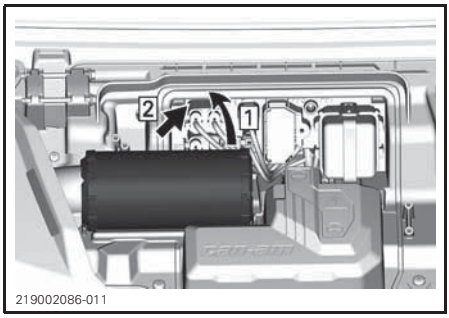

219002086-011

Step 1: Lift
Step 2: Slide

Inspect the filter for any signs of leaks. A streak of dust on the clean side of the filter is a telltale sign. Replace filter if there is any damages. Eliminate any source of air leaks before installing a new filter.

Clean air filter by tapping out heavy dust from paper element, this will allow dirt and dust to get out of the paper filter.

NOTICE **It is not recommended to blow compressed air on the paper element; this could damage the paper fibers and reduce its filtration ability when used in dusty environments. If air filter is too dirty and cannot be cleaned following the recommended procedure, it should be replaced.**

Use a clean damp cloth to wipe both the filter sealing surface and the inside of the outlet tube. Ensure that the outlet tube sealing area is undamaged.

The installation is the reverse of the removal procedure.

Cockpit Air filters

Cockpit air filters are located at the bottom of the center console. There are 3 filters.

- One at the front of the unit
- One on each side of the unit.

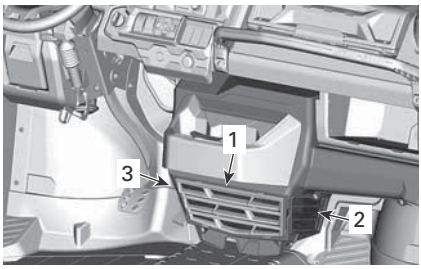

219002059-075

1. *Front cockpit air filter*
2. *Lateral cockpit air filter - passenger side*
3. *Lateral cockpit air filter - driver side*

Front Cockpit Air Filter

To remove this filter, lift the grille tabs and pull up.

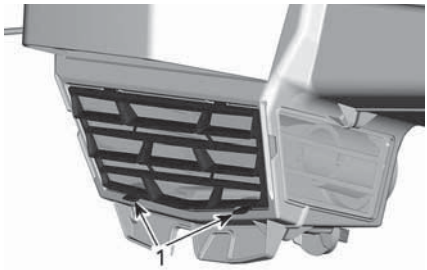

219002086-013

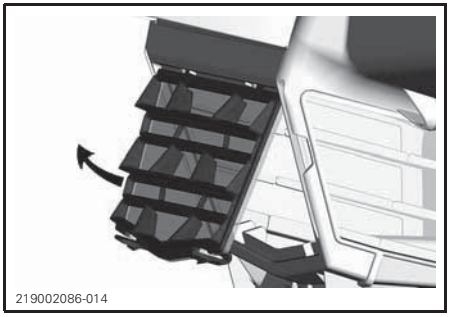
219002086-014

Clean air filter by washing it in lukewarm water with mild soap. Remove excess water and air dry before installation.

Before installing the filter, clean the inside of the heating/air conditioning unit and the evaporator coil using vacuum and a soft brush.

NOTICE **Be careful when brushing to avoid damaging the evaporator coil fins.**

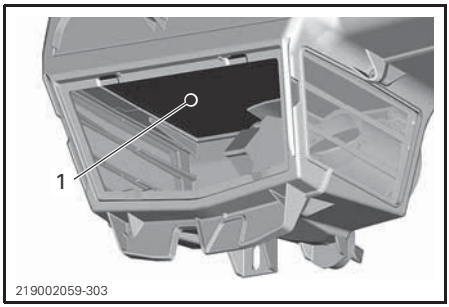

219002059-303

1. *Evaporator*

The installation is the reverse of the removal procedure.

Lateral Cockpit Air Filters

To remove these filters, grab the grille tab and pull.

219002086-012

1. *Grille tab*

Clean air filters by washing them in lukewarm water with mild soap. Remove excess water and air dry before installation.

The installation is the reverse of the removal procedure.

Muffler and Spark Arrester

Muffler Spark Arrester Cleaning and Inspection (HD8)

⚠ CAUTION Never perform this operation immediately after the engine has been running as exhaust system is very hot.

Remove and discard the tail pipe retaining bolts and nuts.

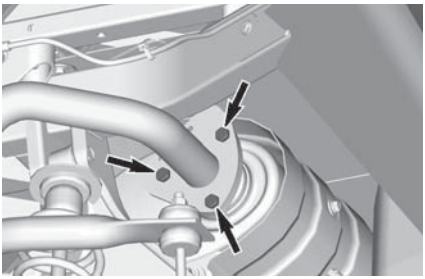
219001920-001_a

TAIL PIPE RETAINING BOLTS AND NUTS

Remove exhaust tail pipe, gasket (discard) and spark arrester.

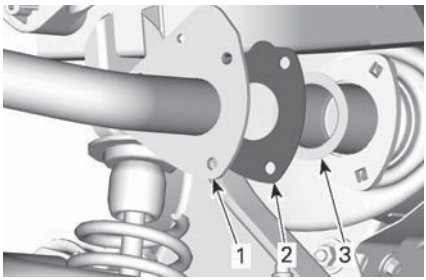

219001920-002_a

1. *Tailpipe*
2. *Gasket*
3. *Spark arrester*

Remove carbon deposits from the spark arrester using a brush.

NOTICE **Use a metallic soft brush and be careful to avoid damaging spark arrester mesh.**

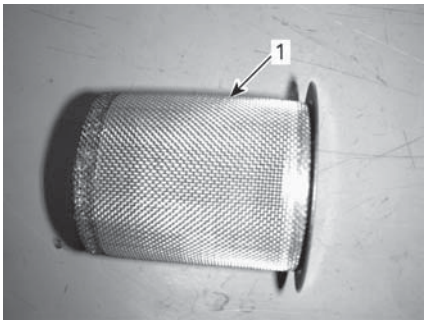

tmo2011-001-043_a

1. *Clean spark arrester*

Inspect mesh of spark arrester for any damage. Replace as required.

Inspect spark arrester chamber in muffler. Remove any debris as required.

Reinstall the muffler spark arrester in the reverse of the removal procedure. However pay attention to the following.

Install new gasket and fasteners. Tighten to specification.

TIGHTENING TORQUE	
Tailpipe retaining screws	31.5 N•m ± 3.5 N•m (23 lbf•ft ± 3 lbf•ft)

Muffler Spark Arrester Cleaning and Inspection (HD10)

CAUTION Never perform this operation immediately after the engine has been running as exhaust system is very hot.

Remove and discard the tail pipe retaining screws.

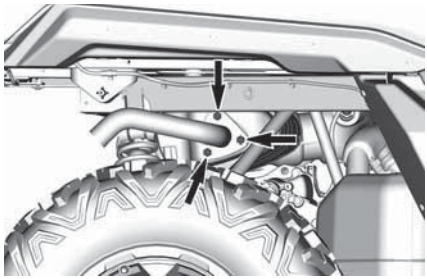

TAIL PIPE RETAINING SCREWS

Remove exhaust tail pipe, gasket (discard) and spark arrester.

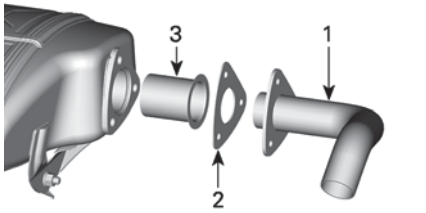

1. *Tailpipe*
2. *Gasket*
3. *Spark arrester*

Remove carbon deposits from the spark arrester using a brush.

NOTICE Use a metallic soft brush and be careful to avoid damaging spark arrester mesh.

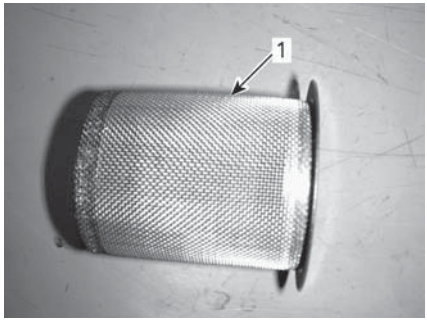

1. *Clean spark arrester*

Inspect mesh of spark arrester for any damage. Replace as required.

Inspect spark arrester chamber in muffler. Remove any debris as required.

Reinstall the muffler spark arrester in the reverse of the removal procedure. However pay attention to the following.

Install new gasket and fasteners. Tighten to specification.

TIGHTENING TORQUE	
Tailpipe retaining screw	31.5 N•m ± 3.5 N•m (23 lbf•ft ± 3 lbf•ft)

Gearbox Oil

Gearbox Oil Level Verification

Place the vehicle on a level surface. Select PARK position.

Check the gearbox oil level by removing the gearbox oil dipstick.

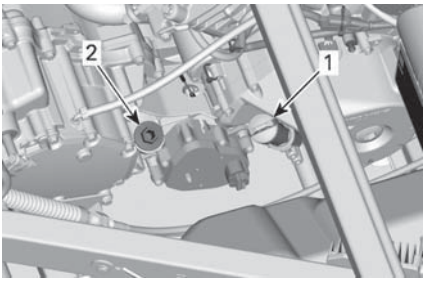

1. *Engine oil dipstick*
2. *Gearbox oil level plug*

Remove dipstick again and check oil level. It should be near or equal to the upper mark.

1. *MIN.*
2. *MAX.*
3. *Operating range*

To add oil, place a funnel into the dipstick hole.

Add a small amount of recommended oil and recheck oil level.

Repeat the above procedures until oil level reaches the dipstick's upper mark.

NOTICE **Operating the gearbox with an improper oil level may severely damage gearbox.**

NOTE: Do not overfill. Wipe off any spillage.

Properly tighten oil dipstick.

Recommended Gearbox Oil

The XPS oil is specially formulated to meet the lubrication requirements of this gearbox. BRP strongly recommends the use of its XPS oil

XPS RECOMMENDED GEARBOX OIL	
Scandinavia:	75W140 SYNTHETIC GEAR OIL (EUR) (P/N 779215)
Other Countries	75W140 SYNTHETIC GEAR OIL (P/N 779160)
IF THE RECOMMENDED XPS GEARBOX OIL IS NOT AVAILABLE	
Use a gearbox oil meeting or exceeding the following lubricant industry specifications. – **75W 140 API GL-5 synthetic gear oil**	

NOTICE **Do not use another type of oil when servicing.**

Gearbox Oil Change

NOTE: When replacing the gearbox oil, it is recommended to clean the vehicle speed sensor (VSS) at the same time.

Place the vehicle on a level surface.

Clean drain plug area.

Clean the oil level plug area.

Under the vehicle, place a drain pan underneath the oil drain plug area.

Remove the oil level plug.

Remove the gearbox drain plug.

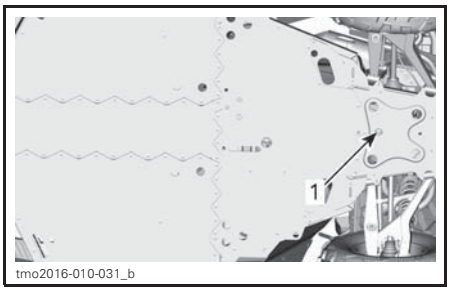

1. *Oil drain plug*

Let oil completely drain from gearbox.

Install the drain plug.

NOTE: Clean drain plug from any metallic particles prior to installation.

Refill gearbox.

NOTICE **Use ONLY the recommended type of oil.**

The oil should be level with the bottom of the oil level orifice.

NOTICE **Do not overfill.**

Reinstall oil level plug.

TIGHTENING TORQUE	
Gearbox drain plug	30 N•m ± 3 N•m (22 lbf•ft ± 2 lbf•ft)

Wipe off any spillage.

Differential Oil

Front Differential Oil Level Verification

Clean filler plug prior to checking oil level.

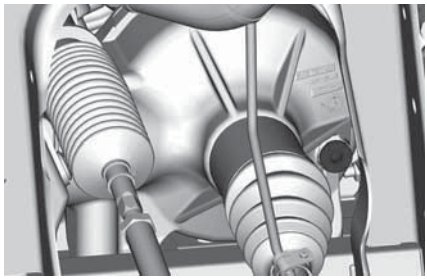

219001807-006

TYPICAL VISCO-LOC- FRONT RIGHT SIDE OF VEHICLE

With vehicle on a level surface, check oil level by removing filler plug. Oil level must reach the lower edge.

Reinstall filler plug.

TIGHTENING TORQUE	
Filler plug	16.5 N•m ± 2.5 N•m (146 lbf•**in** ± 22 lbf•**in**)

Recommended Differential Oil

The XPS oil is specially formulated to meet the lubrication requirements of this gearbox. BRP strongly recommends the use of its XPS oil.

XPS RECOMMENDED GEARBOX OIL	
Scandinavia:	75W90 SYNTHETIC GEAR OIL (EUR) (P/N 779212)
Other Countries	75W90 SYNTHETIC GEAR OIL (P/N 779158)
IF THE RECOMMENDED XPS GEARBOX OIL IS NOT AVAILABLE	
Use a gearbox oil meeting or exceeding the following lubricant industry specifications. – **75W 90 API GL-5 synthetic gear oil**	

NOTICE **Do not use another type of oil when servicing.**

Differential Oil Change

Place vehicle on a level surface. Set gearbox in park position.

From underneath the vehicle, clean the drain plug area.

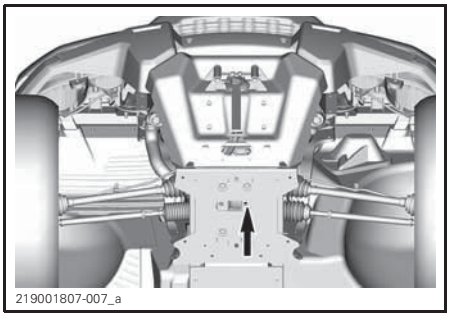

219001807-007_a

TYPICAL

1. Drain plug access hole

Place a drain pan under the front differential.

Remove drain plug.

Unscrew filler plug.

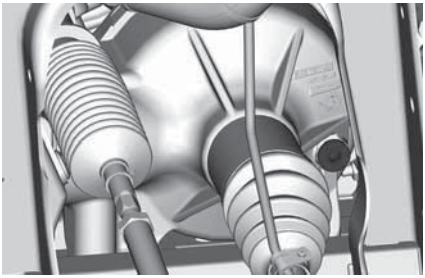

TYPICAL VISCO-LOC- FRONT RIGHT SIDE OF VEHICLE

Install drain plug.

TIGHTENING TORQUE	
Drain plug	2.7 N•m ± 0.3 N•m (24 lbf•**in** ± 3 lbf•**in**)

Refill front differential with recommended oil.

For the differential oil capacity, refer to *SPECIFICATIONS*.

Reinstall filler plug.

TIGHTENING TORQUE	
Filler plug	16.5 N•m ± 2.5 N•m (146 lbf•**in** ± 22 lbf•**in**)

Spark Plugs

Access to Spark Plugs

Open cargo box.

Spark Plug Removal

Open the cargo box.

Unplug spark plug cable.

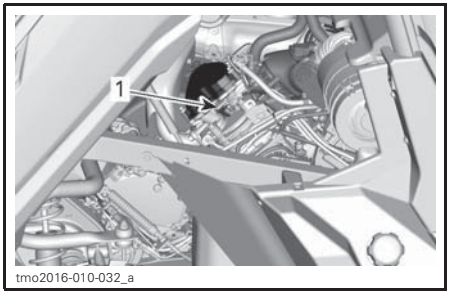

REAR CYLINDER (ON THE RH SIDE)
1. Spark plug

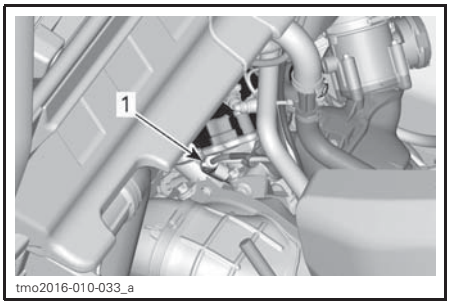

FRONT CYLINDER (ON THE LH SIDE)
1. Spark plug

Clean spark plug and cylinder head with pressurized air.

⚠ CAUTION Always wear safety goggles when using pressurized air.

Unscrew spark plug completely using a spark plug socket, then remove it.

Spark Plug Installation

Prior to installation make sure that contact surface of cylinder head and spark plug is free of grime.

Using a feeler gauge, set the spark plug gap.

SPARK PLUG GAP	
HD8	0.7 mm to 0.9 mm (.028 in to .035 in)
HD10	0.8 mm - 0.9 mm (.031 in - .035 in)

Apply a small amount of copper-based anti-seize lubricant over spark plug threads.

Screw spark plug into cylinder heads by hand and tighten with a torque wrench and a proper socket.

CAUTION Do not overtighten spark plugs, engine damage can occur.

TIGHTENING TORQUE	
HD8 Spark plug	20 N•m ± 2.4 N•m (15 lbf•ft ± 2 lbf•ft)
HD10 Spark plug	11 N•m ± 1 N•m (97 lbf•**in** ± 9 lbf•**in**)

CVT Cover

NOTE: For a better understanding, some illustrations are taken with engine out of vehicle. To perform the following instructions, it is not necessary to remove engine.

This CVT is lubrication free. Never lubricate any components except drive pulley bearing.

WARNING

Never touch CVT while engine is running. Never drive vehicle when CVT cover is removed.

WARNING

Engine must be cool before cover is removed. Always wear protective gloves when removing cover.

Place the vehicle on a level surface. Select PARK position.

CVT Cover Access

Tilt cargo box.

Remove LH rear deflector by removing the plastic rivets.

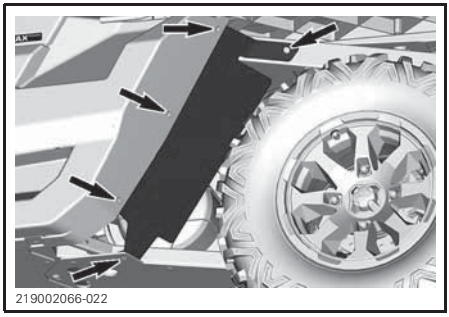

CVT Cover Removal

Remove all CVT cover retaining screws.

NOTE: Remove the center top screw last to support the cover during removal.

NOTE: Do not use an impact tool to remove CVT cover screws.

Remove the CVT cover and its gasket.

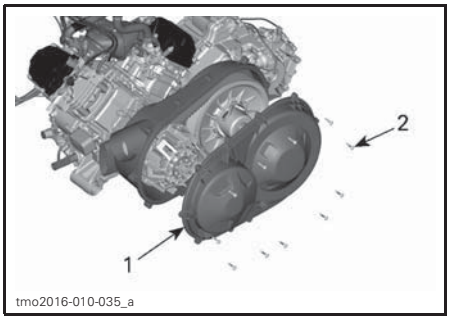

HD8
1. *CVT cover*
2. *CVT cover screws*

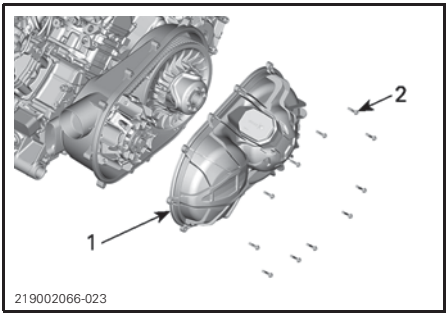

HD10
1. *CVT cover*
2. *CVT cover screws*

CVT Cover Installation

Install the center top screw of first.

Tighten the CVT cover screws as per following sequence.

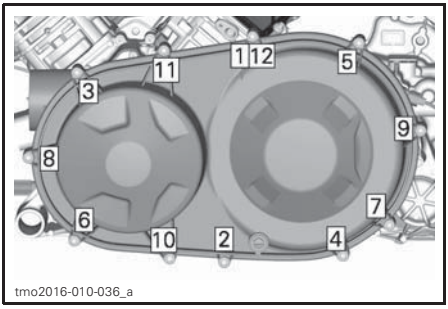

HD8 CVT COVER TIGHTENING SEQUENCE

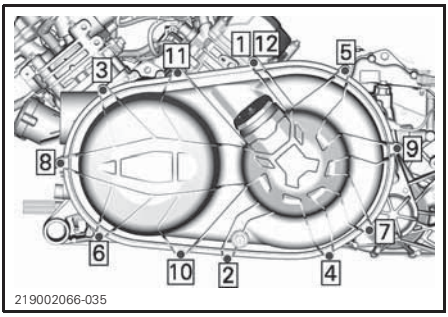

HD10 CVT COVER TIGHTENING SEQUENCE

TIGHTENING TORQUE	
CVT cover screws	7 N•m ± 0.8 N•m (62 lbf•**in** ± 7 lbf•**in**)

Drive Belt

Drive Belt Removal

NOTICE **In case of a drive belt failure, the CVT, cover and air outlet must be cleaned.**

Please refer to *TIPS FOR MAXIMIZING DRIVE BELT DURABILITY* in *BASIC PROCEDURES* section for some IMPORTANT information.

Remove *CVT COVER*.

Open driven pulley.

REQUIRED TOOLS	
PULLER/LOCKING TOOL (P/N 529 000 088)	
DRIVEN PULLEY ADAPTER (P/N 708 200 720)	

Insert adaptor in threaded hole of driven pulley then screw tool in the threaded hole of adaptor and tighten to open the pulley.

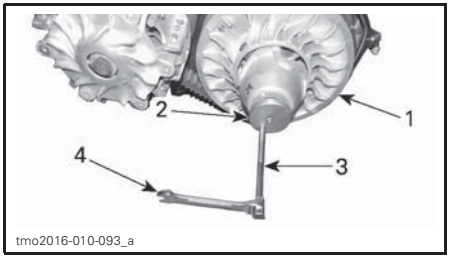

TYPICAL
1. *Fixed sheave of driven pulley*
2. *Adaptor*
3. *Driven pulley extractor*
4. *Wrench*

To remove belt, slip the belt over the top edge of fixed sheave, as shown.

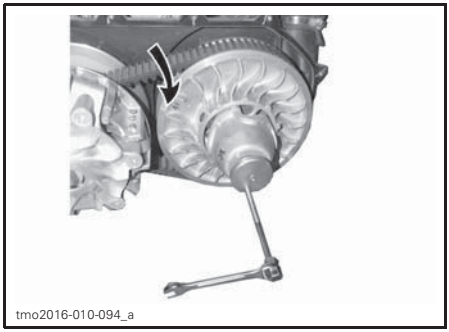
tmo2016-010-094_a

TYPICAL

Drive Belt Installation

For installation, reverse the removal procedure. Pay attention to following details.

The maximum drive belt life span is obtained when the drive belt has the proper rotation direction. Install it so that the arrow printed on belt is pointing towards front of the vehicle, viewed from top.

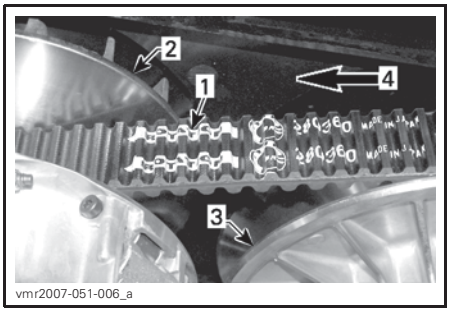

vmr2007-051-006_a

1. *Arrow printed on belt*
2. *Drive pulley (front)*
3. *Driven pulley (rear)*
4. *Rotation direction*

NOTE: Turn the driven pulley until the lowest portion of the cogs on the external surface of drive belt is even with the driven pulley edge.

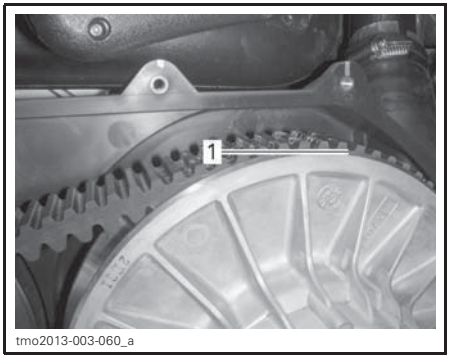

tmo2013-003-060_a

1. *Lowest portion of cogs even with external surface of drive belt*

Drive and Driven Pulleys

Drive and Driven Pulleys Inspection

This inspection must be performed by an authorized Can-Am dealer, repair shop, or person of your own choosing for maintenance, repair, or replacement.

Drive Pulley

Inspect the bushings of the sliding sheave of the drive pulley, replace worn parts.

Driven Pulley

Inspect the bushings of the cam and of the sliding sheave of the driven pulley, replace worn parts.

Battery

Battery Maintenance

NOTICE **Never charge a battery while installed in vehicle.**

These vehicles are equipped with a VRLA battery (Valve Regulated Lead Acid). It is a maintenance-free type battery, there is no need to add water to adjust electrolyte level.

NOTICE **Never remove the battery sealing cap.**

Battery Removal

Remove under seat storage compartment if equipped.

Remove battery cover by unscrewing the two 1/4 turn fasteners.

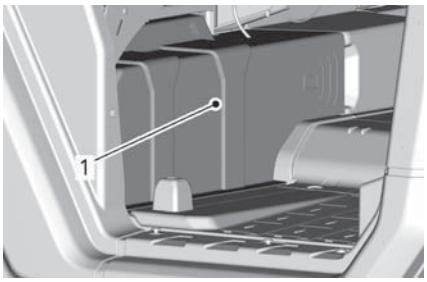

tmo2016-010-016_a

1. *Battery cover*

Disconnect BLACK (-) cable first then RED (+) cable.

NOTICE **Always respect this order for disassembly; disconnect BLACK (-) cable first.**

Remove battery holder retaining screw(s).

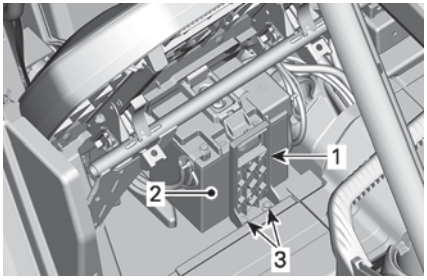

219002061-031

1. *Battery holder*
2. *Battery*
3. *Battery holder retaining screw(s)*

Remove battery holder.

Remove battery.

Battery Cleaning

Clean battery, battery casing and battery posts using a solution of baking soda and water.

Remove corrosion from battery cable terminals and battery posts using a firm wire brush. Battery casing should be cleaned by soft brush and baking soda solution.

Battery Installation

Battery installation is the reverse of the removal procedure.

NOTICE **Improper orientation of the battery cables (reverse polarity) will result in damage to the voltage regulator.**

CAUTION **Always connect RED (+) cable first then BLACK (-) cable.**

Fuses and Fusible Links

Fuse Replacement

If a fuse is burnt, replace it by one of the same rating.

NOTICE **Do not use a higher rated fuse as this can cause severe damage.**

Fuse Box Location

The vehicle is equipped with multiple fuse boxes. Several are located inside the front service center and another one under the right passenger seat, near the battery.

Two fuse links inside the electric harness complete the system protection.

An additional 50A fuse to protect the voltage regulator is located near the battery.

To open front service cover, pull on front edges of service cover to unlock mechanism

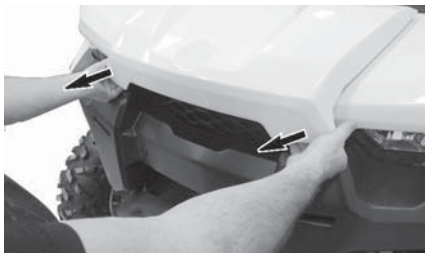
tmo2016-010-060_a

PULLING ON FRONT SERVICE COVER EDGE.

Lift service cover.

tmo2016-010-060_b

LIFTING FRONT SERVICE COVER EDGE.

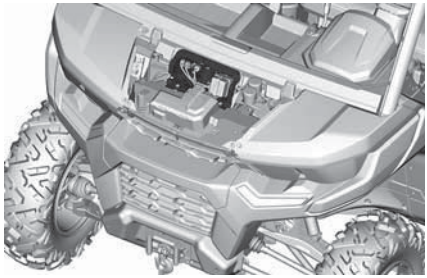
219002066-026

FUSE BOX SUPPORT

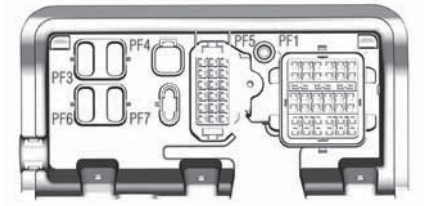

219002066-025

FUSE BOX SUPPORT

Remove the battery cover to access the rear fuse box.

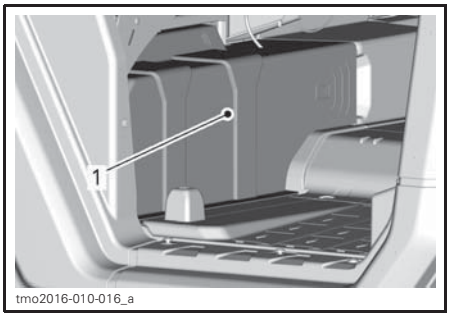

tmo2016-010-016_a

1. Battery cover

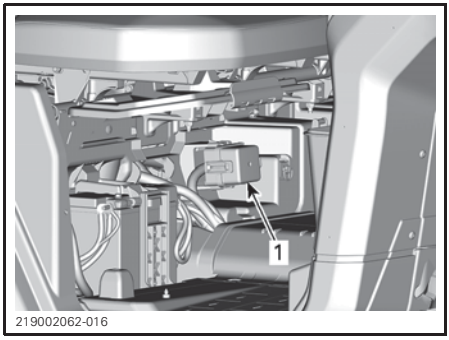

219002062-016

1. Rear fuse box

Fuse Box Description

Fuses are identified inside each fuse box cover.

Inside the front storage center, the fuse box number is molded in the support.

INSIDE FRONT SERVICE CENTER		
NO	DESCRIPTION	RATING
PF1	Master fuse box	-
PF3	DPS	40 A
PF4	Accessories	40 A
PF5	Air Conditioning (if equipped)	-

MASTER FUSE BOX (INSIDE FRONT STORAGE CENTER)		
NO	DESCRIPTION	RATING
F10	T vehicle	10 A
F11	Headlamps	20 A
F12	DC1/DC3/12V accessory outlet 1	10 A
F14	12 V Accessory outlet 2	10 A
F16	Tail lamps	10 A
R3	ECM/Accessory 12V	-
R8	Brake lights	-
R9	Accessory post 12V/outlet 2	-
Spare 1	Spare	20 A

SECONDARY FUSE BOX (UNDER PASSENGER SEAT)		
NO	DESCRIPTION	RATING
F4	Cluster/relays	10 A
F5	Ignition/injection/fuel pump	10 A
F6	Engine Control Module (ECM)	10 A
F7	4WD actuator	10 A
F8	Ignition switch Clock	10 A
F9	Cooling fan	25 A
F18	Oxygen sensor Emission control	10 A
R1	Cooling fan	-
R2	Main	-
R10	Air conditioning	-

SECONDARY FUSE BOX (UNDER PASSENGER SEAT)		
NO	DESCRIPTION	RATING
Spare 1	Spare	10 A
Spare 2	Spare	10 A
Spare 3	Spare	10 A

FUSE BOX #5 (INSIDE FRONT STORAGE CENTER)		
NO	DESCRIPTION	RATING
F1	Fan speed relays	20 A
F3	Air conditioning relay	5 A
RLS	Fan speed relay - low	-
RMS	Fan speed relay - medium	-
RHS	Fan speed relay - high	-

FUSE LINKS		
FUSE LINK	DESCRIPTION	RATING
1	Main	18 awg
2	Accessory post	14 awg

REGULATOR FUSE HOLDER		
NO	DESCRIPTION	RATING
-	Regulator	50 A

Lights

Headlight Bulb Replacement

NOTICE Never touch glass portion of a halogen bulb with bare fingers, it shortens its operating life. If glass is touched, clean it with isopropyl alcohol which will not leave a film on the bulb.

Unplug connector from bulb.

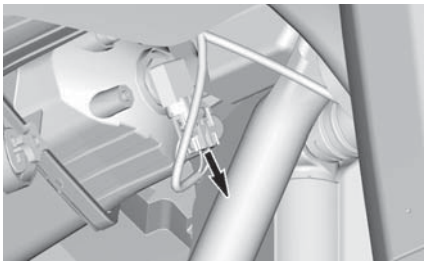

TYPICAL

Rotate bulb.

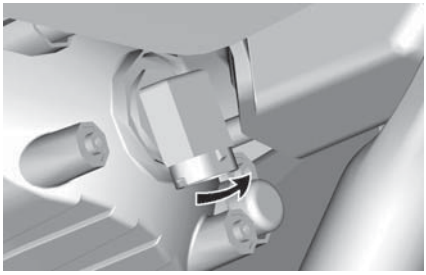

TYPICAL

Pull out bulb.

Properly reinstall removed parts in the reverse order of their removal.

Validate headlights operation.

Headlight Beam Aiming

Turn adjustment screw to adjust beam height to your convenience.

NOTE: Adjust headlights evenly.

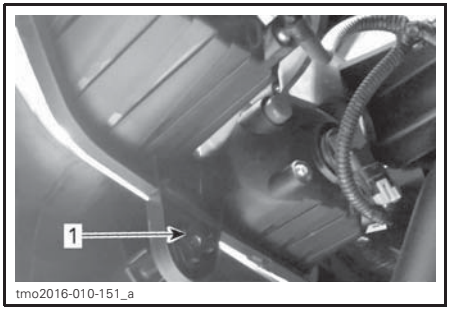

1. Adjustment screw

Taillight Bulbs Replacement

The taillights are built with LEDs (light emitting diode) and this technology proved to be reliable. In the unlikely event they do not work, have them checked by an authorized Can-Am dealer, a repair shop or person of your choosing.

Drive Shaft Bellows and Protector

Drive Shaft Bellows and Protector Inspection

Visually inspect drive shaft protectors and bellows condition.

Check protectors for damage or rubbing against shafts.

Check bellows for cracks, tears, leaking grease, etc.

Repair or replace damaged parts as necessary.

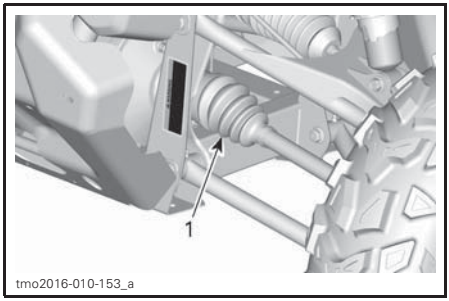

FRONT OF VEHICLE
1. Inner drive shaft bellows

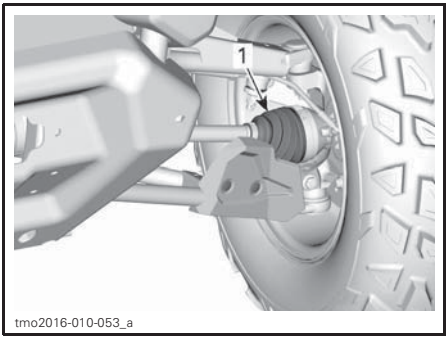

FRONT OF VEHICLE
1. Outer drive shaft bellows

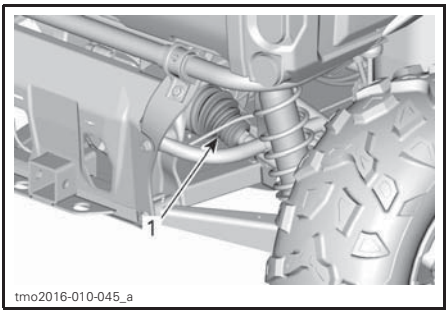

REAR OF VEHICLE
1. Inner drive shaft bellows

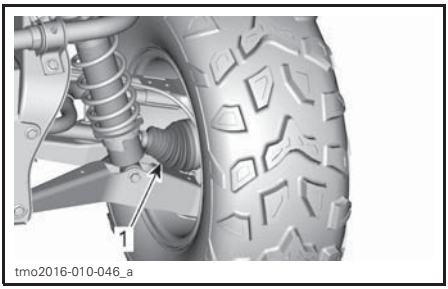

REAR OF VEHICLE
1. Outer drive shaft bellows

Wheel Bearing

Wheel Bearing Inspection

Lift and support vehicle. Refer to *LIFTING AND SUPPORTING THE VEHICLE*.

Push and pull the wheels from the upper edge to feel the play.

See an authorized Can-Am dealer, a repair shop or person of your choosing if there is an excessive play.

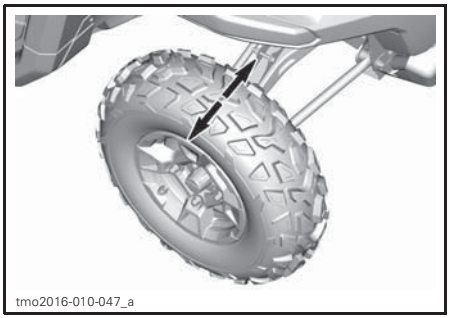

TYPICAL

Wheels and Tires

Wheel Removal

Loosen nuts then lift and support vehicle. Refer to *LIFTING AND SUPPORTING VEHICLE*.

Remove nuts then remove wheel.

Wheel Installation

Inspect studs and nuts. Replace if needed.

The tires are unidirectional and their rotation must be kept in a specific direction for proper operation.

Tighten wheel lug nuts in accordance with the following illustration.

TIGHTENING TORQUE	
Wheel lug nuts	100 N•m ± 10 N•m (74 lbf•ft ± 7 lbf•ft)

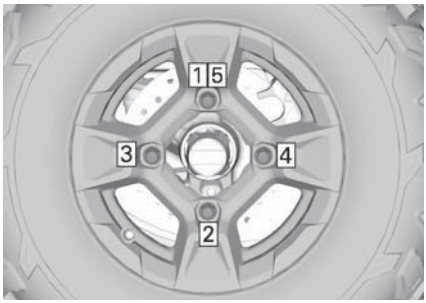

tmo2016-010-048_a

TIGHTENING SEQUENCE

NOTICE Always use the recommended wheel nuts for the type of wheel. Using a different nut could cause damages to the rim or studs.

Tire Pressure

⚠ WARNING

Tire pressure greatly affects vehicle handling and stability. Insufficient pressure may cause tire to deflate and rotate on wheel. Overpressure may burst the tire. Always follow recommended pressure. NEVER set tire pressure below minimum. It could cause the tire to dislodge from the rim.

Check pressure when tires are **cold** before using the vehicle. Tire pressure changes with temperature and altitude. Recheck pressure if one of these conditions has changed.

Refer to *SPECIFICATIONS* for proper tire pressure.

NOTE: Although the tires are specifically designed for off-road use, a flat may still occur. Therefore, it is recommended to carry a tire gauge, tire pump and a repair kit.

Tire Inspection

Check tire for damage and wear. Replace if necessary.

⚠ WARNING

Do not rotate tires. The front and rear tires have a different size. The left and right tires have different unidirectional tread patterns.

Tire Replacement

Tires replacement should be performed by an authorized Can-Am dealer, a repair shop or person of your choosing.

⚠ WARNING

- Replace tires only with the same type and size as original tires.
- For unidirectional tread pattern, ensure that the tires are installed in the correct direction of rotation.
- Tires should be replaced, by an experienced person, in accordance with tire industry standards and tools.

Suspensions

Front Suspension Lubrication

SUSPENSION GREASE	
Scandinavia	SYNTHETIC SUSPENSION GREASE (EUR) (P/N 779226)
All other countries	SYNTHETIC SUSPENSION GREASE (P/N 779163)

Lubricate front arms and stabilizer bar bushings (if equipped).

There are two grease fittings on each arm oriented upwards.

There is one grease fitting on each stabilizer bar pivot bushing.

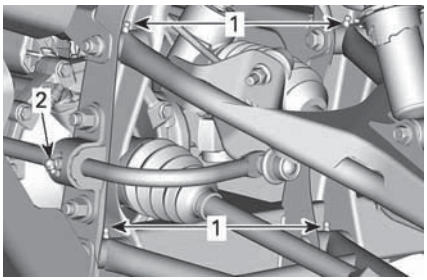

TYPICAL - FRONT SUSPENSION
1. *A-arm grease fittings*
2. *Stabilizer bar bushings grease fittings (if equipped)*

Rear Suspension Lubrication

SUSPENSION GREASE	
Scandinavia	SYNTHETIC SUSPENSION GREASE (EUR) (P/N 779226)
All other countries	SYNTHETIC SUSPENSION GREASE (P/N 779163)

Lubricate rear suspension arms (two grease fittings on each arm), rear knuckles (three grease fittings) and rear stabilizer bar bushing.

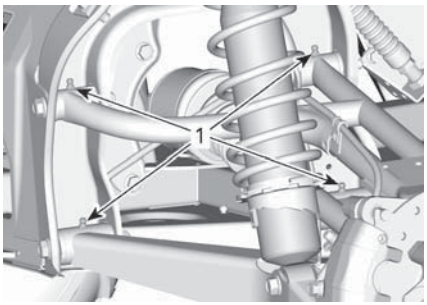

TYPICAL
1. *Rear suspension arm grease fittings*

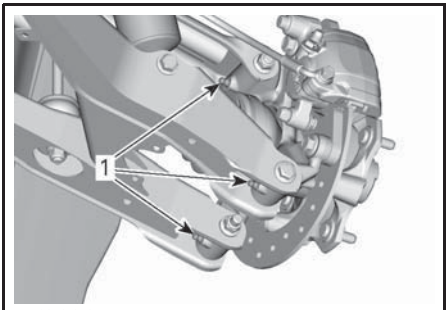

TYPICAL
1. *Rear knuckle grease fittings*

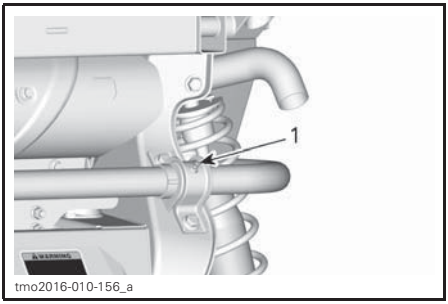

TYPICAL
1. *Rear stabilizer bar bushing grease fitting*

Suspension Inspection

See an authorized Can-Am dealer, a repair shop or person of your choosing if any problem is detected.

Shock Absorbers

Inspect shock absorber for leaks, bump stop wear out or other damages. Verify fasteners are still well tightened.

Front Suspension Arms

Check suspension arms for cracks, bending or other damages.

Rear Suspension Arms

Check suspension arms for distortion, cracks or bending.

Brakes

Brake Fluid Reservoir Level Verification

With vehicle on a level surface, check brake fluid in reservoir for proper level. Brake fluid level should be between MIN. and MAX. marks.

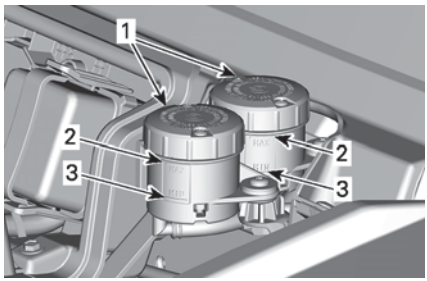

219002066-032

1. *Brake fluid reservoirs*
2. *MAX*
3. *MIN*

NOTE: A low level may indicate leaks or worn brake pads.

Adding Brake Fluid

Clean filler cap before removing.

Add fluid as required. **Do not overfill.**

NOTE: Ensure filler cap diaphragm is pushed inside the cap before closing the brake fluid reservoir.

Recommended Brake Fluid

Always use brake fluid meeting the specification DOT 4 only.

WARNING

To avoid serious damage to the braking system, do not use fluids other than the recommended one, nor mix different fluids for topping up.

Brake Inspection

The brake inspection, maintenance and repair should be performed by an authorized Can-Am dealer, a repair shop or person of your choosing.

However, verify the following between visits to your dealer:

- Brake fluid level
- Brake system for fluid leaks
- Brake pad wear
- Brake cleanliness.

WARNING

The brake fluid replacement or brake system maintenance and repairs should be performed by an authorized Can-Am dealer.

Seat Belts

Seat Belt Cleaning

To clean dirt and debris from the seat belts, sponge the straps with mild soap and water. Do not use bleach, dye, or household detergents.

WARNING

Do not use pressure washer to clean seat belt components. Use of pressure washer can permanently damage seat belt components.

Cage

Cage Fasteners

Tighten cage fasteners to specification periodically.

Remove trim to get access to the fasteners.

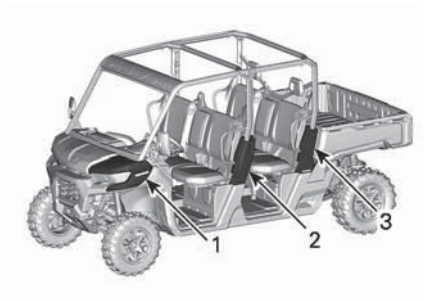

219002063-017

TYPICAL
1. *Front fender*
2. *Middle cage trim*
3. *Side cage cover*

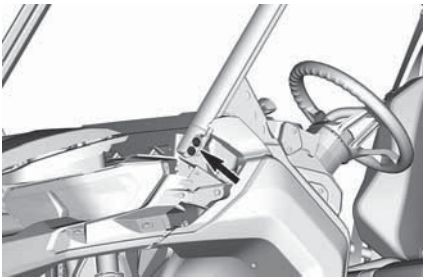

219001953-004_a

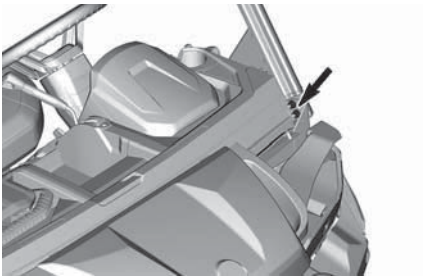

219001953-007_a

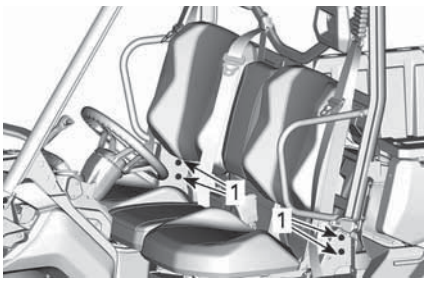

219001953-005_a

1. *Lower cage fasteners*

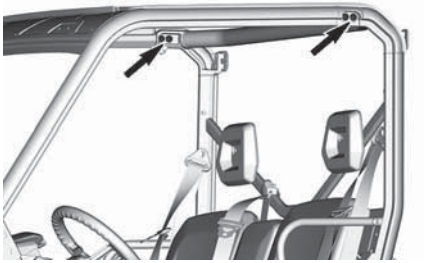

219002066-028

TIGHTENING TORQUE	
Cage fasteners	67.5 N•m ± 2.5 N•m (50 lbf•ft ± 2 lbf•ft)

Post-Operation Care

NOTICE **Pay attention when cleaning the inside of the vehicle, the climate control module installed in the Limited models is not waterproof nor water resistant.**

When vehicle is used in salt-water environment rinsing the vehicle with fresh water is necessary to preserve vehicle and its components. Metallic parts lubrication is highly recommended. Use lub. and anti-corrosive or an equivalent. This must be performed at the end of each operating day.

SERVICE PRODUCT
LUBRICANT AND ANTI-CORROSIVE (P/N 779168)

When vehicle is operated in muddy conditions, rinsing the vehicle is recommended to preserve vehicle and its components.

Vehicle Cleaning and Protection

Never use a high pressure washer to clean the vehicle. **USE LOW PRESSURE ONLY (like a garden hose).** High pressure can cause damage to electrical or mechanical components.

Pay attention to certain areas where mud or debris can accumulate and potentially cause wear, interferences or promote corrosion. The list includes but is not limited to:

- Around exhaust system and between muffler and muffler cover
- Under and around the fuel tank
- Radiator
- Shock absorbers
- Around front and rear differentials
- Around and underneath engine and gearbox
- Inside wheels
- On top of skid plates.

Painted parts which are damaged should be properly repainted to prevent rust.

When required, wash the body with warm water and soap (only use mild detergent). Apply non-abrasive wax.

NOTICE **Never clean plastic parts with strong detergent, degreasing agent, paint thinner, acetone, etc.**

STORAGE AND PRESEASON PREPARATION

When a vehicle is not in use for more than 4 months, proper storage is a necessity.

If the vehicle is to be dormant for more than 21 days, disconnect the BLACK (-) cable of the battery.

Using electrical accessories increases the risk of discharging the battery. Using a low amperage trickle charger is advised when low engine speeds and/or high electrical demand accessories are installed on a vehicle.

When using your vehicle after storage, a preparation is required.

See an authorized Can-Am dealer, repair shop, or person of your own choosing to have your vehicle prepared for either storage or the preseason.

TECHNICAL INFORMATION

VEHICLE IDENTIFICATION

The main components of your vehicle (engine and frame) are identified by different serial numbers. It may sometimes become necessary to locate these numbers for warranty purposes or to trace your vehicle in the event of loss. These numbers are required by the authorized Can-Am dealer to complete warranty claims properly. We strongly recommend that you take note of all the serial numbers on your vehicle and supply them to your insurance company.

Vehicle Identification Number

EN-704908165-DEC

TYPICAL - VIN LABEL

219002067-013

TYPICAL - VIN LABEL LOCATION

Engine Identification Number

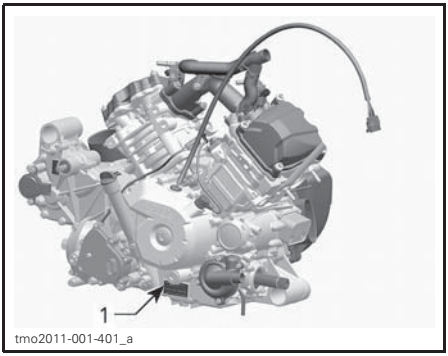

tmo2011-001-401_a

1. EIN (Engine Identification Number)

Compliance Label

Regulation (EU) 2016/1628 applicable for Non-Road Mobile Machineries

Vehicles who comply to Regulation (EU) 2016/1628 (NRMM) are identified on the engine valve cover as well as on the vehicle, near the VIN label.

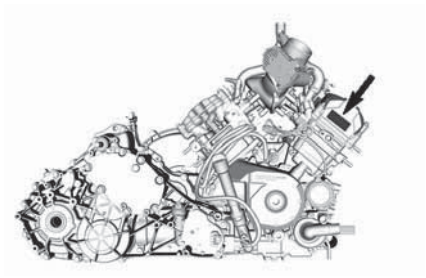

NRMM_800_MY20

219002067-013

TYPICAL - NRMM LABEL NEAR VIN

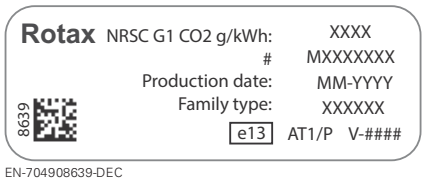

EN-704908639-DEC

TYPICAL - NRMM IDENTIFICATION LABEL

NOTE: Tampering with the engine or its components voids the EU type-approval of that particular engine.

EVAPORATIVE EMISSION CONTROL SYSTEM

California Models with Evaporative Emission Control System

Beginning with the 2018 model-year vehicles, some California models are certified to meet the CARB (California Air Resources Board) TP-933. These models are equipped with an evaporative emission control system consisting of a low permeation fuel tank (LPFT), low permeation fuel lines (LPFL) and an actively purged carbon canister.

The following statement is required by the CCR (California Code of Regulation): An add-on or modified part must be compliant with applicable ARB evaporative emission control standards. A violation of this requirement is punishable by civil and/or criminal punishment.

NOISE EMISSION CONTROL SYSTEM REGULATION

USA and Canada Only

Tampering with Noise Control System Is Prohibited!

U.S. Federal law and Canadian provincial laws may prohibit the following acts or the causing there of:

1. The removal or rendering inoperative by any person other than for purposes of maintenance, repair or replacement of any device or element of design incorporated into any new vehicle for the purpose of noise control prior to its sale or delivery to the ultimate purchaser or while it is in use or
2. The use of the vehicle after such device or element of design has been removed or rendered inoperative by any person.

Among those Acts Presumed to Constitute Tampering Are the Acts Listed Below:

1. Removal or alteration or the puncturing of the muffler or any engine component which conducts removal of engine exhaust gases.
2. Removal or alteration or the puncturing of any part of the intake system.
3. Replacing any moving parts of the vehicle or parts of the exhaust or intake system, with parts other than those specified by the manufacturer.
4. Lack of proper maintenance.

EC-DECLARATION OF CONFORMITY

565 de la Montagne Street
Valcourt (Québec) J0E 2L0
Canada

www.brp.com

BRP ADVENTURE BY DESIGN

EU Declaration of Conformity

Authorized Representative: BRP Europe N.V., Skaldenstraat 125, Gent, Belgium, 9042

This declaration of conformity is issued under the sole responsibility of the manufacturer.

The undersigned, representing the manufacturer, hereby declares that model year **2021 Side by Side Vehicles** marked with the CE mark and a 17-character vehicle identification number (VIN) structured as **3JBxxxxxxMxxxxxxx** under commercial names **Can-Am Traxter**, **Can-Am Maverick Sport** and **Can-Am Maverick** comply with all the relevant provisions of the following Directives and Regulations:

Machinery Directive 2006/42/EC as amended up to and including Reg. 2019/1243/EU	ISO 12100:2010 & EN 16990:2020
Non-Road Mobile Machinery (NRMM) Regulation (EU) 2016/1628 on gaseous pollutants	Category ATS, Stage V emission limits
Electromagnetic Compatibility (EMC) Directive 2014/30/EU as amended up to and including Reg. (EU) 2018/1139	CISPR 12:2007/A1:2009 & IEC 61000-6-1:2005 or UN R10.04 or later version
Battery Directive 2006/66/EC as amended up to and including Dir. (EU) 2018/849	
Radio Equipment (RED) Directive 2014/53/EU as amended up to and including Reg. 2018/1139 (If fitted with radio frequency (RF) D.E.S.S. key)	EN 300 330-2 & EN 60950-1

2020/03/19

Luc Bouchard, Eng.
Director, Product Development, Can-Am SSV
Bombardier Recreational Products Inc.

Valcourt, QC, Canada

March 19th, 2020

ski-doo LYNX SEA-DOO EVINRUDE ROTAX can-am

DOC_SSV_MY21-EN 16990

EAC DECLARATION OF CONFORMITY

Left blank for Eurasian Conformity mark where applicable

SPECIFICATIONS

ENGINE		
Engine type	HD8	ROTAX 810, 4-stroke, 2 cylinders (V-twin), liquid cooled
	HD10	ROTAX 1010, 4-stroke, 2 cylinders (V-twin), liquid cooled
Number of cylinders		2
Number of valves		8 valves (mechanical adjustment)
Valve clearance	Intake	0.06 mm to 0.14 mm (.0024 in to .0055 in)
	Exhaust	0.11 mm to 0.19 mm (.0043 in to .0075 in)
Bore		91 mm (3.58 in)
Stroke	HD8	61.5 mm (2.42 in)
	HD10	75 mm (2.95 in)
Displacement	HD8	800 cm^3 (48.82 in^3)
	HD10	976 cm^3 (59.56 in^3)
Exhaust system		Spark arrester approved by USDA Forest Service Catalyst on HD10 and NRMM models
Engine air filter		Synthetic paper filter

LUBRICATION SYSTEM	
Type	Wet sump. Replaceable oil filter
Oil filter	BRP Rotax paper type, replaceable

LUBRICATION SYSTEM		
Engine oil	Capacity (oil change with filter)	2 L (2.1 qt (U.S. liq.))
	Recommended	4T 10W50 synthetic oil, or 4T 5W40 synthetic blend oil, or 4T 0W40 synthetic oil
	Alternate oil if XPS products are not available	5W40 or 10W50 motor oil that meets the requirements for API service classification SJ, SL, SM or SN

COOLING SYSTEM			
Coolant	Recommended		XPS extended life pre-mixed coolant
	Alternate coolant if XPS products are not available		Coolant specifically designed for aluminum engines, or Ethyl glycol/water mix (50% coolant, 50% water)
	Capacity	Limited	6.9 L (1.82 U.S. gal.)
		All other models	6 L (1.59 U.S. gal.)

TRANSMISSION	
Type	CVT (Continuously Variable Transmission)
Engagement	2000 RPM

GEARBOX		
Type		Dual range (HI-LO) with PARK, neutral and reverse
Gearbox oil	Capacity	1.5 L (.396 U.S. gal.)
	Recommended	XPS 75W140 Synthetic gear oil
	Alternate gearbox oil if XPS products are not available	75W140 Synthetic gear oil (API GL-5)

ELECTRICAL SYSTEM			
Magneto generator output		Limited	850 W @ 6000 RPM
		All other models	650 W @ 6000 RPM
Ignition system type			Inductive Discharge Ignition (IDI)
Spark plug	Quantity		21
	Make and type	HD8	NGK DCPR8E or equivalent
		HD10	NGK LMAR8C-9 or equivalent
	Gap	HD8	0.7 mm to 0.9 mm (.028 in to .035 in)
		HD10	0.8 mm to 0.9 mm (.031 in to .035 in)
Battery	Type		SLA (Sealed Lead Acid)
	Voltage		12 volts
	Nominal rating	Base DPS	18 A•h
		All other models	30 A•h
	Power starter output		0.7 KW
Headlights			4 x 35 H 8
Taillight			2.3/3.5 W
Fuses			Refer to *FUSES AND FUSIBLE LINKS* in *MAINTENANCE*

FUEL SYSTEM		
Fuel delivery	Type	Electronic fuel injection (EFI) with iTC
Throttle body		54 mm with ETA
Fuel pump	Type	Electric (in fuel tank)
Idle speed		1250 ± 100 RPM (not adjustable)

FUEL SYSTEM		
Fuel	Type	Regular unleaded gasoline - Refer to *FUEL REQUIREMENTS*
	Minimum octane	87 Pump Posted AKI I (R+M)/2) (92 RON)
Fuel tank capacity		40. L (10.6 U.S. gal.)
Fuel remaining when low fuel light turns ON		± 8.5 L (2.2 U.S. gal.)

DRIVE SYSTEM		
Drive system type		Selectable 2WD/4WD
Front differential oil	Capacity	400 ml (14 U.S. oz)
	Recommended	75W90 Synthetic gear oil
	Alternate if XPS products are not available	75W90 Synthetic gear oil (API GL-5)
Front drive	Base	Spiral bevel gear Visco-lok† auto-locking front differential
	All other models	Spiral bevel gear Visco-lok† QE auto-locking front differential
Front drive ratio		3.6:1
Rear drive	Base DPS	Angle drive (spool gear)
	All other models	Lockable differential
Rear drive ratio		3.43:1
CV joint grease		CV JOINT GREASE (P/N 293 550 062) or equivalent
Spline's propeller shaft grease (grease applied to spline connections)		PROPELLER SHAFT GREASE (P/N 293 550 063) or equivalent

STEERING	
Steering wheel	Adjustable tilt steering

FRONT SUSPENSION			
Suspension type		All HD8	Double suspension arms
		DPS HD10 XT HD10	Double arched suspension arms
		Limited Lone star	Double arched suspension arms with stabilizer bar
Preload adjustment type			5 positions cam
Suspension travel		DPS HD10 XT HD10	279 mm (11 in)
		All other models	254 mm (10 in)
Shock absorber	Qty		2
	Type		Gas charged/5 spring preload settings

REAR SUSPENSION			
Suspension type		HD8	Torsional Trailing Arms (TTA) with stabilizer bar
		HD10	Arched Torsional Trailing Arms (TTA) with stabilizer bar
Preload adjustment type			5 positions cam
Suspension travel		DPS HD10 XT HD10	279 mm (11 in)
		All other models	254 mm (10 in)
Shock absorber	Qty		2
	Type		Gas charged/5 spring preload settings

BRAKES		
Front brake	Type	Dual 220 mm ventilated disc brakes with hydraulic twin-piston calipers
Rear brake	Type	Dual 220 mm ventilated disc brake with hydraulic single-piston calipers

BRAKES		
Brake fluid	Capacity	Approximately 310 ml (10.5 U.S. oz)
	Type	DOT 4
Caliper		Floating
Brake pad material	Front/rear	Metallic/Metallic
Minimum brake pad thickness		0.5 mm (.02 in)
Minimum brake disc thickness	Front/Rear	4 mm (.157 in)
Maximum brake disc warpage		0.2 mm (.01 in)

TIRES			
Pressure	Front	Machinery Directive 2006/42/EC compliant models (unloaded)	165 kPa (24 PSI)
		CAB models	179 kPa (26 PSI)
		All other models	152 kPa (22 PSI)
	Rear	Machinery Directive 2006/42/EC compliant models (unloaded)	165 kPa (24 PSI)
		Machinery Directive 2006/42/EC compliant models (loaded)	234 kPa (34 PSI)
		CAB models	193 kPa (28 PSI)
		All other models	165 kPa (24 PSI)
Minimum tire thread depth			3 mm (.118 in)

TIRES			
Tire size	Front	Lone star	28x9R14 (225/75R14)
		All other	27x9R14 (240/70R14)
	Rear	Lone star	28x11R14 (275/60R14)
		All other	27x11R14 (280/60R14)

WHEELS			
Type			Cast Aluminum
Rim size	Front		14 x 7 (in)
	Rear		14 x 8.5 (in)
Wheel offset	Front	HD8	10 mm (.4 in)
		HD10	41.2 mm (1.6 in)
	Rear	HD8	22.6 mm (.9 in)
		HD10	51 mm (2 in)
Wheel lug nuts torque			100 N•m ± 10 N•m (74 lbf•ft ± 7 lbf•ft)

CHASSIS	
Cage type	Profiled tube section, high strength steel, ROPS-approved cage

DIMENSIONS		
Overall length	Base DPS	389.6 cm (153 in)
	Limited XT	402 cm (158 in)
	Lone star	403.6 cm (159 in)
Overall width	All HD8	161.2 cm (63.5 in)
	DPS HD10 XT HD10	162.5 cm (64 in)
	Limited Lone star	165.1 cm (65 in)

DIMENSIONS			
Overall height		All HD8	193 cm (76 in)
		DPS HD10	197 cm (78 in)
		Limited	201 cm (79 in)
		XT HD10	202 cm (79.5 in)
		Lone star	203 cm (80 in)
Wheelbase			294 cm (116 in)
Wheel track	Front	HD8	138.3 cm (54.4 in)
		HD10 except Lone star	137.4 cm (54 in)
		Limited Lone star	147.3 cm (58 in)
	Rear	HD8	133.3 cm (52.5 in)
		HD10 except Lone star	131.5 cm (52 in)
		Limited Lone star	142.3 cm (56 in)
Ground clearance		All HD8	28 cm (11 in)
		Lone Star	33 cm (13 in)
		XT HD10 DPS HD10	31.8 cm (12.5 in)
		Limited	30.5 cm (12 in)

WEIGHT		
Dry weight	Base	778 kg (1,715.2 lb)
	DPS HD8	794 kg (1,750.5 lb)
	DPS HD10	803.4 kg (1,771.2 lb)
	Limited	1 060 kg (2,337 lb)
	Lone star	875 kg (1,929 lb)
	XT HD8	854 kg (1,882.7 lb)
	XT HD10	863 kg (1,902.6 lb)

WEIGHT		
Weight distribution (front/rear)	Base DPS	41/59
	Lone star	44/56
	All other models	43/57
Gross vehicle weight rating	Base	1 607.4 kg (3,543.7 lb)
	DPS HD8	1 623.4 kg (3,579 lb)
	DPS HD10	1 632.5 kg (3,599 lb)
	Lone star	1 693.8 kg (3,734.2 lb)
	XT HD8	1 682.9 kg (3,710.2 lb)
	XT HD10	1 692 kg (3,730.2 lb)
	Limited	1 684 kg (3,713 lb)

LOADING CAPACITY		
Cargo box capacity	California models	272 kg (600 lb)
	All other models	454 kg (1,000 lb)
Total vehicle load allowed (including driver, passengers, all other loads and added accessories)	Limited	590 kg (1,301 lb)
	Machinery Directive 2006/42/EC compliant models	680.4 kg (1,500 lb)
	Lone star	785 kg (1,731 lb)
	All other models	794 kg (1,750 lb)
Towing capacity		1 134 kg (2,500 lb)
Tongue capacity		114 kg (250 lb)
Hitch type		50.8 mm (2 in) hitch receiver
Winch capacity		2 041.2 kg (4,500 lb)

Machinery Directive 2006/42/EC Compliant Models

MODEL		HD8	HD8
NOISE EMISSION AND VIBRATION VALUES[1]			
Noise	Sound pressure level (L_{pA})	83 dB (A) (Uncertainty (K_{pa}) 3 dB)	82 dB (A) (Uncertainty (K_{pa}) 3 dB)
	Sound power level (L_{WA})	97 dB (A) (Uncertainty (K_{wa}) 3 dB)	96 dB (A) (Uncertainty (K_{wa}) 3 dB)
Vibration	Hand-arm system	Less than 2.5 m/s^2	Less than 2.5 m/s^2
	Whole body at seat	Less than 0.5 m/s^2	Less than 0.5 m/s^2

[1]: Noise emission and Vibration values are measured in accordance with Machinery Directive 2006/42/EC on a paved surface, at neutral or without belt.

This page is intentionally blank

TROUBLESHOOTING

TROUBLESHOOTING GUIDELINES

CVT BELT IS SLIPPING

1. Water has entered in the CVT.
   – *Refer to SPECIAL PROCEDURES.*

"--" IS DISPLAYED ON GEARBOX POSITION DISPLAY (MULTIFUNCTION GAUGE)

1. Shift lever is between 2 positions.
   – *Properly position the shift lever in the desired position.*
2. Shift lever is not properly adjusted.
   – *Contact an authorized Can-Am dealer.*
3. Electrical communication error.
   – *Contact an authorized Can-Am dealer.*

ENGINE DOES NOT TURN

1. Ignition switch is in the OFF position.
   – *Place switch to ON position.*
2. Shift lever is not set on PARK or NEUTRAL.
   – *Set shift lever to either in PARK or in NEUTRAL or press the brake pedal.*
3. Burnt fuse.
   – *Check fuses.*
4. Weak battery or loose connections.
   – *Check charging system fuse.*
   – *Check fault message in cluster.*
   – *Check battery connections and terminals condition.*
   – *Have the battery checked by an authorized Can-Am dealer.*
5. Defective starter solenoid.
   – *Contact an authorized Can-Am dealer.*

ENGINE TURNS OVER BUT FAILS TO START

1. **Flooded engine (spark plug wet when removed).**
   – *(If the engine does not start and it is fuel-flooded, the drowned mode can be activated to prevent fuel injection and to cut ignition while cranking. Proceed as follows:*
   • Insert key in ignition switch and turn to ON position.
   • Press completely and HOLD accelerator pedal.
   • Turn key to START position.
   The engine should be cranked for 10 seconds. Release engine START position.
   Release accelerator pedal and start/crank engine again to allow starting.
   If it does not work:
   • Remove the spark plugs. Refer to SPARK PLUGS in the MAINTENANCE PROCEDURES section.
   • Crank engine several times.
   • Install new spark plugs if possible or clean and dry spark plugs.
   • If engine does not start, seek service from an authorized Can-Am dealer, repair shop, or person of your own choosing for maintenance, repair, or replacement. Please refer to the US EPA EMISSION-RELATED WARRANTY contained herein for information about warranty claims.

2. **No fuel to the engine (spark plug dry when removed).**
   – *Check fuel tank level.*
   – *Check fuel pump fuse.*
   – *Obstructed fuel pump pre-filter or fuel pump failure. Seek service from an authorized Can-Am dealer, repair shop, or person of your own choosing for maintenance, repair, or replacement. Please refer to the US EPA EMISSION-RELATED WARRANTY contained herein for information about warranty claims.*

3. **Spark plug/ignition (no spark).**
   – *Check ignition fuse.*
   – *Remove spark plug then reconnect to ignition coil.*
   – *Start engine with spark plug grounded to the engine away from spark plug hole. If no spark appears, replace spark plug.*
   – *If trouble persists, seek service from an authorized Can-Am dealer, repair shop, or person of your own choosing for maintenance, repair, or replacement. Please refer to the US EPA EMISSION-RELATED WARRANTY contained herein for information about warranty claims.*

ENGINE LACKS ACCELERATION OR POWER

1. **Seat belt not buckled properly. Check cluster message.**
   – *Buckle up seat belt.*

2. **Fouled or damaged spark plug.**
   – *Replace spark plugs.*

3. **Engine air filter plugged or dirty.**
   – *Check air filter and replace if necessary.*
   – *Check deposits in engine air filter housing.*

ENGINE LACKS ACCELERATION OR POWER (cont'd)

4. Water in CVT
   – *Drain water from CVT. Refer to SPECIAL PROCEDURES.*
5. CVT dirty or worn-out.
   – *Contact an authorized Can-Am dealer.*
6. Lack of fuel
   – *Dirty or clogged fuel pump pre-filter. Seek service from an authorized Can-Am dealer, repair shop, or person of your own choosing for maintenance, repair, or replacement. Please refer to the US EPA EMISSION-RELATED WARRANTY contained herein for information about warranty claims.*
7. Engine is in limp home mode.
   – *Check multifunction gauge display for messages.*
   – *Multifunction gauge CHECK ENGINE indicator lamp is on and display shows LIMP HOME, seek service from an authorized Can-Am dealer, repair shop, or person of your own choosing for maintenance, repair, or replacement. Please refer to the US EPA EMISSION-RELATED WARRANTY contained herein for information about warranty claims.*

ENGINE OVERHEATS

1. Low coolant level in cooling system.
   – *Check coolant level and refill. See MAINTENANCE PROCEDURES. Seek service from an authorized Can-Am dealer, repair shop, or person of your own choosing for maintenance, repair, or replacement. Please refer to the US EPA EMISSION-RELATED WARRANTY contained herein for information about warranty claims*
2. Cooling fan is not working.
   – *Ensure cooling fan is not jammed and working properly.*
   – *Check fan fuse. See FUSES AND FUSIBLE LINKS in MAINTENANCE PROCEDURES.*
3. Dirty radiators fins.
   – *Check and clean radiator fins. See MAINTENANCE PROCEDURES.*

ENGINE MISFIRE

1. Fouled/damaged/worn spark plug.
   – *Replace spark plugs as required.*
2. Water in fuel.
   – *Drain fuel system and refill with fresh fuel.*

THE RPM INCREASES BUT THE VEHICLE DOES NOT MOVE

1. Water in the CVT.
   – *Drain water from CVT. See SPECIAL PROCEDURES.*
2. CVT dirty or worn-out or belt failure.
   – *Contact an authorized Can-Am dealer.*

PARTIAL OR NO RESPONSE FROM THE ACCELERATOR PEDAL INPUTS (CHECK ENGINE IS ON AND PPS FAULT MESSAGE IS DISPLAYED)

1. Partial failure of the accelerator pedal sensors (PPS).
   – *Contact an authorized Can-Am dealer.*
2. Total failure of the accelerator pedal sensors (PPS).
   – *Contact an authorized Can-Am dealer.*

MESSAGES IN MULTIFUNCTION GAUGE

If an abnormal engine condition occurs, the following messages can be combined with a pilot lamp.

MESSAGE	DESCRIPTION
D.E.S.S. KEY NOT RECOGNIZED	**Optional D.E.S.S. key installed**: D.E.S.S. key requires cleaning.
BAD KEY	**Optional D.E.S.S. key installed**:Wrong key used in the ignition switch. Use the right key for the vehicle.
CHECK ENGINE	All active or previously activated faults that require attention. No engine limitation engaged.
LIMP HOME	Critical faults requiring diagnostic as soon as possible. An engine limitation is engaged and/or the engine behavior is modified.
ECM CRC ERROR	Error message from ECM.
TPS FAULT	Throttle body fault, generally followed by a Limp Home message.
BRAKE SWITCH FAULT	Brake signal fault.
ECM NOT RECOGNIZED	Message displayed when the gauge is unable to identify the ECM.
CHECK DPS (models with DPS)	Check engine pilot light on. Indicates that the DPS (Dynamic Power Steering) does not work properly. See an authorized Can-Am dealer.
PPS FAULT	Faulty Pedal Position Sensor(s) (PPS). Refer to *OVERRIDE SWITCH* in *SECONDARY CONTROLS* to drive the vehicle in the limp home mode.
MANUAL LIMP HOME	Confirms the Manual Limp Home is engaged using the Override Switch in case of a PPS fault.
FUEL SENDER RANGE PERFORMANCE	When the fuel sender resistor value is out of range the multifunction gauge (analog/digital) will detect it and display the message.

WARRANTY

BRP LIMITED WARRANTY USA AND CANADA: 2021 CAN-AM® SSV

1) SCOPE OF THE LIMITED WARRANTY

Bombardier Recreational Products Inc. ("BRP")* warrants its 2021 Can-Am side-by-side vehicles ("SSV") sold by authorized Can-Am SSV dealers (as hereinafter defined) in the United States of America ("USA") and in Canada from defects in material or workmanship for the period and under the conditions described below. This limited warranty will become null and void if: (1) the SSV was used for racing or any other competitive activity, at any point, even by a previous owner; or (2) the SSV has been altered or modified in such a way so as to adversely affect its operation, performance or durability, or has been altered or modified to change its intended use.

Non-factory installed parts and accessories are not covered under this limited warranty. Please refer to the applicable parts and accessories limited warranty text.

2) LIMITATIONS OF LIABILITY

THIS WARRANTY IS EXPRESSLY GIVEN AND ACCEPTED IN LIEU OF ANY AND ALL OTHER WARRANTIES, EXPRESSED OR IMPLIED, INCLUDING WITHOUT LIMITATION ANY WARRANTY OF MERCHANTABILITY OR FITNESS FOR A PARTICULAR PURPOSE. TO THE EXTENT THAT THEY CANNOT BE DISCLAIMED, THE IMPLIED WARRANTIES ARE LIMITED IN DURATION TO THE LIFE OF THE EXPRESS WARRANTY. INCIDENTAL AND CONSEQUENTIAL DAMAGES ARE EXCLUDED FROM COVERAGE UNDER THIS WARRANTY. SOME STATES/ PROVINCES DO NOT ALLOW FOR THE DISCLAIMERS, LIMITATIONS AND EXCLUSIONS IDENTIFIED ABOVE, AS A RESULT, THEY MAY NOT APPLY TO YOU. THIS WARRANTY GIVES YOU SPECIFIC RIGHTS, AND YOU MAY ALSO HAVE OTHER LEGAL RIGHTS WHICH MAY VARY FROM STATE TO STATE, OR PROVINCE TO PROVINCE.

Neither the distributor, any BRP dealer nor any other person has been authorized to make any affirmation, representation or warranty regarding the product, other than those contained in this limited warranty, and if made, shall not be enforceable against BRP. BRP reserves the right to modify this limited warranty at any time, being understood that such modification will not alter the warranty conditions applicable to the products sold while this warranty is in effect.

3) EXCLUSIONS – ARE NOT WARRANTED

The following are not warranted under any circumstances:

- Normal wear and tear;
- Routine maintenance items, tune ups, adjustments;
- Damage caused by failure to provide proper maintenance and/or storage, as described in the Operator's Guide;
- Damage resulting from removal of parts, improper repairs, service, maintenance, modifications or use of parts not manufactured or approved by BRP or resulting from repairs done by a person that is not an authorized servicing Can-Am SSV dealer;
- Damage caused by abuse, abnormal use, neglect or operation of the product in a manner inconsistent with the recommended operation described in the Can-Am SSV Operator's Guide;

– Damage resulting from accident, submersion, fire, theft, vandalism or any act of God;
– Operation with fuels, oils or lubricants which are not suitable for use with the product (see the Operator's Guide);
– Damages from rust, corrosion or exposure to the elements;
– Damage resulting from water or snow ingestion;
– Incidental or consequential damages, or damages of any kind including without limitation towing, storage, telephone, rental, taxi, inconvenience, insurance coverage, loan payments, loss of time, loss of income.

4) WARRANTY COVERAGE PERIOD

This limited warranty will be in effect from (1) the date of delivery to the first retail consumer or (2) the date the product is first put into use, whichever occurs first and for the following period:
– TWELVE (12) CONSECUTIVE MONTHS, for private use, commercial use or governmental use owners.
– For emission-related components; please also refer to the *US EPA EMISSION-RELATED WARRANTY* contained herein
– For evaporative emission-related components of California models equipped with evaporative emission control system produced by BRP for sale in the State of California that are originally sold to a resident or subsequently warranty registered to a resident in the State of California, please also refer to the *CALIFORNIA EVAPORATIVE EMISSIONS CONTROL WARRANTY STATEMENT* contained herein.

The repair or replacement of parts or the performance of service under this warranty does not extend the life of this warranty beyond its original expiration date.

5) CONDITIONS TO HAVE WARRANTY COVERAGE

This warranty coverage is available **only** if **each** of the following conditions has been fulfilled:
– The 2021 Can-Am SSV must be purchased as new and unused by its first owner from a Can-Am SSV dealer authorized to distribute Can-Am SSV's in the country in which the sale occurred ("Can-Am SSV dealer");
– The BRP specified pre-delivery inspection process must be completed and documented and signed by the purchaser;
– The 2021 Can-Am SSV must have undergone proper registration by an authorized Can-Am SSV dealer;
– The 2021 Can-Am SSV must be purchased in the country in which the purchaser resides;
– Routine maintenance outlined in the Operator's Guide must be timely performed in order to maintain warranty coverage. BRP reserves the right to make warranty coverage contingent upon proof of proper maintenance.

BRP will not honor this limited warranty to any private use owner or commercial use owner if one of the preceding conditions has not been met. Such limitations are necessary in order to allow BRP to preserve both the safety of its products, and also that of its consumers and the general public.

6) WHAT TO DO TO OBTAIN WARRANTY COVERAGE

The customer must cease using the SSV upon the appearance of an anomaly. The customer must notify a servicing BRP dealer within three (3) days of the appearance of a defect, and provide it with reasonable access to the product and reasonable opportunity to repair it. The customer must also present to the authorized BRP dealer, proof of purchase of the product and must sign the repair/work order prior to starting the repair in order to validate the warranty repair. All parts replaced under this limited warranty become the property of BRP.

7) WHAT BRP WILL DO

BRP’s obligations under this warranty are limited to, at its sole discretion, repairing parts found defective under normal use, maintenance and service, or replacing such parts with new genuine Can-Am SSV parts without charge for parts and labor, at any authorized BRP dealer during the warranty coverage period under the conditions described herein. BRP's responsibility is limited to making the required repairs or replacements of parts. No claim of breach of warranty shall be cause for cancellation or rescission of the sale of the SSV to the owner.

In the event that service is required outside of the country of original sale, the owner will bear responsibility for any additional charges due to local practices and conditions, such as, but not limited to, freight, insurance, taxes, license fees, import duties, and any and all other financial charges, including those levied by governments, states, territories and their respective agencies.

BRP reserves the right to improve or modify products from time to time without assuming any obligation to modify products previously manufactured.

8) ADDITIONAL SUPPLIER WARRANTIES

A GPS receiver may be supplied by BRP as standard equipment on certain 2021 Can-Am SSV. The GPS receiver is covered under BRP’s limited warranty policy. Additional warranty coverage if offered by the GPS receiver “supplier” that is longer than BRP's limited warranty is to be dealt by the dealer or consumer directly with the GPS receiver “supplier”.

9) TRANSFER

If the ownership of a product is transferred during the warranty coverage period, this limited warranty, subject to its terms and conditions, shall also be transferred and be valid for the remaining coverage period provided BRP or an authorized Can-Am SSV Distributor/Dealer receives a proof that the former owner agreed to the transfer of ownership, in addition to the co-ordinates of the new owner.

10) CONSUMER ASSISTANCE

In the event of a controversy or a dispute in connection with this limited warranty, BRP suggests that you try to resolve the issue at the dealership level. We recommend discussing the issue with the authorized dealer's service manager or owner.

If the matter still remains unresolved, contact BRP by filling out the customer contact form at www.brp.com or contact BRP by mail at one of the addresses listed under the *CONTACT US* in *CUSTOMER INFORMATION*.

* In the USA, products are distributed and serviced by BRP US Inc.

© 2020 Bombardier Recreational Products Inc. All rights reserved.
® Trademark of Bombardier Recreational Products Inc. or its affiliates.

US EPA EMISSION-RELATED WARRANTY

BRP warrants to the ultimate purchaser and each subsequent purchaser that this new vehicle, including all parts of its exhaust emission control system and its evaporative emission control system, meets two conditions:

1. It is designed, built, and equipped so it conforms at the time of sale to the ultimate purchaser with the requirements of 40 CFR 1051 and 40 CFR 1060.
2. It is free from defects in materials and workmanship that may keep it from meeting the requirements of 40 CFR 1051 and 40 CFR 1060.

Where a warrantable condition exists, BRP will repair or replace, as it elects, any part or component with a defect in materials or workmanship that would increase the engine's emissions of any regulated pollutant within the stated warranty period at no cost to the owner, including expenses related to diagnosing and repairing or replacing emission-related parts. All defective parts replaced under this warranty become the property of BRP.

For all emission-related warranty claims, BRP is limiting the diagnosis and repair of emission-related parts to the authorized Can-Am dealers, unless for emergency repairs as required by item 2 of the following list.

As a certifying manufacturer, BRP will not deny emission-related warranty claims based on any of the following:

1. Maintenance or other service BRP or BRP's authorized facilities performed.
2. Engine/equipment repair work that an operator performed to correct an unsafe, emergency condition attributable to BRP as long as the operator tries to restore the engine/equipment to its proper configuration as soon as possible.
3. Any action or inaction by the operator unrelated to the warranty claim.
4. Maintenance that was performed more frequently than BRP specify.
5. Anything that is BRP fault or responsibility.
6. The use of any fuel that is commonly available where the equipment operates unless BRP written maintenance instructions state that this fuel would harm the equipment's emission control system and operators can readily find the proper fuel. See maintenance information section and fuel requirements of fueling section.

Emission-Related Warranty Period

The emission-related warranty is valid for the following period whichever comes first:

	HOURS	MONTHS	KILOMETERS
Exhaust emission-related components	500	30	5000
Evaporative emission-related components	N/A	24	N/A

Components Covered

The emission-related warranty covers all components whose failure would increase an engine's emissions of any regulated pollutant, including the following listed components:

1. For exhaust emissions, emission-related components include any engine parts related to the following systems:
   – Air-induction system

- Fuel system
- Ignition system
- Exhaust gas recirculation systems

2. The following parts are also considered emission-related components for exhaust emissions:
   - Aftertreatment devices
   - Crankcase ventilation valves
   - Sensors
   - Electronic control units
3. The following parts are considered emission-related components for evaporative emissions:
   - Fuel tank
   - Fuel cap
   - Fuel line
   - Fuel line fittings
   - Clamps*
   - Pressure relief valves*
   - Control valves*
   - Control solenoids*
   - Electronic controls*
   - Vacuum control diaphragms*
   - Control cables*
   - Control linkages*
   - Purge valves
   - Vapor hoses
   - Liquid/vapor separator
   - Carbon canister
   - Canister mounting brackets
   - Carburetor purge port connector
4. Emission-related components also include any other part whose only purpose is to reduce emissions or whose failure will increase emissions without significantly degrading engine/equipment performance.

Limited Applicability

As a certifying manufacturer, BRP may deny emission-related warranty claims for failures that have been caused by the owner's or operator's improper maintenance or use, by accidents for which the manufacturer has no responsibility, or by acts of God. For example, an emission-related warranty claim need not be honored for failures that have been directly caused by the operator's abuse of the engine/equipment or the operator's use of the engine/equipment in a manner for which it was not designed and are not attributable to the manufacturer in any way.

If you have any question regarding your warranty rights and responsibility, you should contact Bombardier Recreational Products at 1-888-272-9222.

*As related to the evaporative emission control system

CALIFORNIA EVAPORATIVE EMISSIONS CONTROL WARRANTY STATEMENT

YOUR WARRANTY RIGHTS AND OBLIGATIONS

The California Air Resources Board is pleased to explain the evaporative emissions control system warranty on your 2021 Off-Road Sport Vehicle. In California, new off-highway recreational vehicles must be designed, built, and equipped to meet the State's stringent anti-smog standards. BRP must warrant the evaporative emissions control system on your Off-Road Sport Vehicle for the periods of time listed below provided there has been no abuse, neglect, improper maintenance, or unapproved modification of your Off-Road Sport Vehicle.

Your evaporative emissions control system may include parts such as the carburetor or fuel-injection system, fuel tank, fuel hoses, carbon canister, and engine computer. Also included may be hoses, belts, connectors and other evaporative emissions-related assemblies. Where a warrantable condition exists, Bombardier Recreational Products Inc. will repair your Off-Road Sport Vehicle at no cost to you including diagnosis, parts and labor.

OHRV MANUFACTURER'S WARRANTY COVERAGE

The warranty period for this OHRV is 60 months, or 5000 miles, or 500 hours, whichever comes first.

Parts covered:

- Canister Mounting Bracket(s)
- Carbon Canister
- Purge Port Connector
- Clamp(s)*
- Electronic Control*
- Fuel Cap
- Filler Neck
- Filler Neck Hose
- Fuel Line(s)
- Fuel Line Fitting(s)
- Fuel Tank
- Pressure Relief Valve(s)*
- Purge Valve(s)
- Check Valve(s)*
- Vapor Hose(s)
- Flow Reducer
- Filter(s)*
- All other parts not listed that may affect the evaporative emissions control system

If any evaporative emissions-related part on your Off-Road Sport Vehicle is defective the part will be repaired or replaced by Bombardier Recreational Products Inc.

OWNER'S WARRANTY RESPONSIBILITIES

As the Off-Road Sport Vehicle owner you are responsible for the performance of the required maintenance listed in your owner's manual. Bombardier Recreational Products Inc. recommends that you retain all receipts covering maintenance on your Off-Road Sport Vehicle, but Bombardier Recreational Products Inc. cannot deny warranty solely for the lack of receipts or for failure to ensure the performance of a scheduled maintenance.

As an owner you are responsible for presenting your Off-Road Sport Vehicle to a Bombardier Recreational Products Inc. dealer as soon as a problem exists. The warranty repairs should be completed in a reasonable time, not to exceed 30 days.

As an Off-Road Sport Vehicle owner, you should also be aware that Bombardier Recreational Products Inc. may deny you warranty coverage if your Off-Road Sport Vehicle or a part has failed due to abuse, neglect, improper maintenance or unapproved modifications.

If you have any questions regarding your warranty rights and responsibilities, you should contact Bombardier Recreational Products Inc. at 1-888-272-9222 or the California Air Resources Board at 9528 Telstar Avenue, El Monte, CA 91731.

*As related to the evaporative emission control system

BRP INTERNATIONAL LIMITED WARRANTY: 2021 CAN-AM® SSV

1) SCOPE OF THE LIMITED WARRANTY

Bombardier Recreational Products Inc. (“BRP”)* warrants its 2021 Can-Am SSV sold by Can-Am SSV distributors or dealers authorized by BRP to distribute Can-Am SSVs ("Can-Am SSV Distributor/Dealer") outside of the fifty United States, Canada, member states of the European Economic Area (which is comprised of the member states of the European Union plus the United Kingdom, Norway, Iceland and Liechtenstein) (“EEA”), member states of the Commonwealth of the Independent States (including Ukraine and Turkmenistan) (“CIS”) and Turkey, from defects in material or workmanship for the period and under the conditions described below.

Non-factory installed parts and accessories are not covered under this limited warranty. Please refer to the applicable parts and accessories limited warranty text.

This limited warranty will become null and void if: (1) The SSV was used for racing or any other competitive activity, at any point, even by a previous owner; or (2) the SSV has been altered or modified in such a way so as to adversely affect its operation, performance or durability, or has been altered or modified to change its intended use.

2) LIMITATIONS OF LIABILITY

TO THE EXTENT PERMITTED BY LAW, THIS WARRANTY IS EXPRESSLY GIVEN AND ACCEPTED IN LIEU OF ANY AND ALL OTHER WARRANTIES, EXPRESSED OR IMPLIED, INCLUDING WITHOUT LIMITATION ANY WARRANTY OF MERCHANTABILITY OR FITNESS FOR A PARTICULAR PURPOSE. TO THE EXTENT THAT THEY CANNOT BE DISCLAIMED, THE IMPLIED WARRANTIES ARE LIMITED IN DURATION TO THE LIFE OF THE EXPRESS WARRANTY. INCIDENTAL AND CONSEQUENTIAL DAMAGES ARE EXCLUDED FROM COVERAGE UNDER THIS WARRANTY. SOME JURISDICTIONS DO NOT ALLOW FOR THE DISCLAIMERS, LIMITATIONS AND EXCLUSIONS IDENTIFIED ABOVE, AS A RESULT, THEY MAY NOT APPLY TO YOU. THIS WARRANTY GIVES YOU SPECIFIC RIGHTS, AND YOU MAY ALSO HAVE OTHER LEGAL RIGHTS WHICH MAY VARY FROM COUNTRY TO COUNTRY. (FOR PRODUCTS PURCHASED IN AUSTRALIA SEE CLAUSE 4 BELOW).

Neither the Can-Am SSV Distributor/Dealer nor any other person has been authorized to make any affirmation, representation or warranty regarding the product, other than those contained in this limited warranty, and if made, shall not be enforceable against BRP.

BRP reserves the right to modify this warranty at any time, being understood that such modification will not alter the warranty conditions applicable to the products sold while this warranty is in effect.

3) EXCLUSIONS ARE NOT WARRANTED

The following are not warranted under this limited warranty under any circumstances:

- Normal wear and tear;
- Routine maintenance items, tune ups, adjustments (parts and labor);
- Damage caused by negligence or failure to provide proper maintenance and/or storage, as described in the Operator's Guide;

– Damage resulting from removal of parts, improper repairs, service, maintenance, modifications or use of parts not manufactured or approved by BRP or resulting from repairs done by a person that is not an authorized servicing Can-Am SSV Distributor/Dealer;
– Damage caused by abuse, abnormal use, neglect or operation of the product in a manner inconsistent with the recommended operation described in the Operator's Guide;
– Damage resulting from accident, submersion, fire, theft, vandalism or any act of God;
– Operation with fuels, oils or lubricants which are not suitable for use with the product (see the Operator's Guide);
– Damage resulting from rust, corrosion or exposure to the elements;
– Damage resulting from water or snow ingestion;
– Incidental or consequential damages, or damages of any kind including without limitation towing, transportation expenses, storage, telephone, rental, taxi, inconvenience, insurance coverage, loan payments, loss of time, loss of income or time missed for downtime experience due to service work.

The following list includes, without limitation, items that are considered wear items and that are not covered under BRP's limited warranty unless failure is a direct result of a defect in material or workmanship:
– Batteries
– Brake pads
– Brake disks and drums
– Clutch plates / pads
– Clutch sliders
– Clutch springs
– Clutch replaceable bushings
– Drive belts
– Filters
– Finished and unfinished surfaces
– Fuses
– Light bulbs / sealed
– Lubricants
– Spark plugs
– Suspension bushings
– Suspension slider shoes
– Suspension springs
– Tires

4) WARRANTY COVERAGE PERIOD

This warranty will be in effect from (1) the date of delivery to the first retail consumer or (2) the date the product is first put into use, whichever occurs first and for a period of:
– SIX (6) CONSECUTIVE MONTHS for private use or commercial use.

In AUSTRALIA and NEW-ZEALAND only, this warranty will be in effect from (1) the date of delivery to the first retail consumer or (2) the date the product is first put into use, whichever occurs first, and for a period of (1) TWENTY-FOUR (24) CONSECUTIVE MONTHS or (2) a total use of FIFTEEN THOUSAND (15 000) kilometers, whichever occurs first, for private use or commercial use.

The repair or replacement of parts or the performance of service under this warranty does not extend the life of this warranty beyond its original expiration date.

FOR PRODUCTS SOLD IN AUSTRALIA ONLY

Nothing in these Warranty terms and conditions should be taken to exclude, restrict or modify the application of any condition, warranty, guarantee, right or remedy conferred or implied under the Competition and Consumer Act 2010 (Cth), including the Australian Consumer Law or any other law, where to do so would contravene that law, or cause any part of these terms and conditions to be void. The benefits given to you under this limited warranty hereto are in addition to other rights and remedies that you have under Australian law.

Our goods come with guarantees that cannot be excluded under the Australian Consumer Law. You are entitled to a replacement or refund for a major failure and for compensation for any other reasonably foreseeable loss or damage. You are also entitled to have the goods repaired or replaced if the goods fail to be of acceptable quality and the failure does not amount to a major failure.

5) CONDITIONS TO HAVE WARRANTY COVERAGE

This warranty coverage is available **only** if **each** of the following conditions has been fulfilled:

- The 2021 Can-Am SSV must be purchased as new and unused by its first owner from a Can-Am SSV Distributor/Dealer authorized to distribute Can-Am SSVs in the country in which the sale occurred;
- The BRP specified pre-delivery inspection process must be completed and documented;
- The product must have undergone proper registration by an authorized Can-Am SSV Distributor/Dealer;
- The 2021 Can-Am SSV must be purchased in the country or union of countries in which the purchaser resides; and
- Routine maintenance outlined in the Operator's Guide must be timely performed in order to maintain warranty coverage. BRP reserves the right to make warranty coverage contingent upon proof of proper maintenance.

BRP will not honor this limited warranty to any private use owner or commercial use owner if one of the preceding conditions has not been met. Such limitations are necessary in order to allow BRP to preserve both the safety of its products, and also that of its consumers and the general public.

6) WHAT TO DO TO OBTAIN WARRANTY COVERAGE

The customer must cease using the SSV upon the appearance of an anomaly. The customer must notify a servicing Can-Am SSV Distributor/Dealer within two (2) days of the appearance of a defect, and provide it with reasonable access to the product and reasonable opportunity to repair it. The customer must also present to the authorized Can-Am SSV Distributor/Dealer proof of purchase of the product

and must sign the repair/work order prior to starting the repair in order to validate the warranty repair. All parts replaced under this limited warranty become the property of BRP.

Note that the notification period is subject to the applicable national or local legislation in customer's country.

7) WHAT BRP WILL DO

To the extent permitted by law, BRP's obligations under this warranty are limited to, at its sole discretion, repairing parts found defective under normal use, maintenance and service; or replacing such parts with new genuine Can-Am SSV parts without charge for parts and labour, at any authorized Can-Am SSV Distributor/Dealer during the warranty coverage period under the conditions described herein. BRP's responsibility is limited to making the required repairs or replacements of parts. No claim of breach of warranty shall be cause for cancellation or rescission of the sale of the Can-Am SSV to the owner. You may have other legal rights which may vary from country to country.

In the event that service is required outside of the country of original sale, the owner will bear responsibility for any additional charges due to local practices and conditions, such as, but not limited to, freight, insurance, taxes, license fees, import duties, and any and all other financial charges, including those levied by governments, states, territories and their respective agencies.

BRP reserves the right to improve or modify products from time to time without assuming any obligation to modify products previously manufactured.

8) TRANSFER

If the ownership of a product is transferred during the warranty coverage period, this limited warranty, subject to its terms and conditions, shall also be transferred and be valid for the remaining coverage period provided BRP or an authorized Can-Am SSV Distributor/Dealer receives a proof that the former owner agreed to the transfer of ownership, in addition to the coordinates of the new owner.

9) CONSUMER ASSISTANCE

In the event of a controversy or a dispute in connection with this limited warranty, BRP suggests that you try to resolve the issue at the Can-Am SSV Distributor/Dealer level. We recommend discussing the issue with the authorized Can-Am SSV Distributor/Dealer's service manager or owner.

If the matter still remains unresolved, contact BRP by filling out the customer contact form at www.brp.com or contact BRP by mail at one of the addresses listed under the *CONTACT US* section of this guide.

* For the territory covered by this limited warranty, products are distributed and serviced by Bombardier Recreational Products Inc. or its affiliates.

© 2020 Bombardier Recreational Products Inc. All rights reserved.
® Trademark of Bombardier Recreational Products Inc. or its affiliates.

BRP LIMITED WARRANTY FOR THE EUROPEAN ECONOMIC AREA, THE COMMONWEALTH OF THE INDEPENDENT STATES AND TURKEY: 2021 CAN-AM® SSV

1) SCOPE OF THE LIMITED WARRANTY

Bombardier Recreational Products Inc. ("BRP")* warrants its 2021 Can-Am SSVs sold by Can-Am SSV distributors or dealers authorized by BRP to distribute Can-Am SSVs ("Can-Am SSV Distributor/Dealer") in member states of the European Economic Area (which is comprised of the member states of the European Union plus the United Kingdom, Norway, Iceland and Liechtenstein) ("EEA"), in member states of the Commonwealth of the Independent States (including Ukraine and Turkmenistan) ("CIS") and Turkey from defects in material or workmanship for the period and under the conditions described below.

Non-factory installed parts and accessories are not covered under this limited warranty. Please refer to the applicable parts and accessories limited warranty text.

This limited warranty will become null and void if: (1) The SSV was used for racing or any other competitive activity, at any point, even by a previous owner; or (2) the SSV has been altered or modified in such a way so as to adversely affect its operation, performance or durability, or has been altered or modified to change its intended use.

2) LIMITATIONS OF LIABILITY

TO THE EXTENT PERMITTED BY LAW, THIS WARRANTY IS EXPRESSLY GIVEN AND ACCEPTED IN LIEU OF ANY AND ALL OTHER WARRANTIES, EXPRESSED OR IMPLIED, INCLUDING WITHOUT LIMITATION ANY WARRANTY OF MERCHANTABILITY OR FITNESS FOR A PARTICULAR PURPOSE. TO THE EXTENT THAT THEY CANNOT BE DISCLAIMED, THE IMPLIED WARRANTIES ARE LIMITED IN DURATION TO THE LIFE OF THE EXPRESS WARRANTY. INCIDENTAL AND CONSEQUENTIAL DAMAGES ARE EXCLUDED FROM COVERAGE UNDER THIS WARRANTY. SOME JURISDICTIONS DO NOT ALLOW FOR THE DISCLAIMERS, LIMITATIONS AND EXCLUSIONS IDENTIFIED ABOVE, AS A RESULT, THEY MAY NOT APPLY TO YOU. THIS WARRANTY GIVES YOU SPECIFIC RIGHTS, AND YOU MAY ALSO HAVE OTHER LEGAL RIGHTS WHICH MAY VARY FROM COUNTRY TO COUNTRY.

Neither the Can-Am SSV Distributor/Dealer nor any other person has been authorized to make any affirmation, representation or warranty regarding the product, other than those contained in this limited warranty, and if made, shall not be enforceable against BRP.

BRP reserves the right to modify this warranty at any time, being understood that such modification will not alter the warranty conditions applicable to the products sold while this warranty is in effect.

3) EXCLUSIONS – ARE NOT WARRANTED

The following are not warranted under this limited warranty under any circumstances:

– Normal wear and tear;
– Routine maintenance items, tune ups, adjustments (parts and labor);

– Damage caused by negligence or failure to provide proper maintenance and/or storage, as described in the Operator's Guide;
– Damage resulting from removal of parts, improper repairs, service, maintenance, modifications or use of parts not manufactured or approved by BRP or resulting from repairs done by a person that is not an authorized servicing Can-Am SSV Distributor/Dealer;
– Damage caused by abuse, abnormal use, neglect or operation of the product in a manner inconsistent with the recommended operation described in the Operator’s Guide;
– Damage resulting from accident, submersion, fire, snow or water ingestion, theft, vandalism or any act of God;
– Operation with fuels, oils or lubricants which are not suitable for use with the product (see the Operator’s Guide);
– Damage resulting from rust, corrosion or exposure to the elements;
– Incidental or consequential damages, or damages of any kind including without limitation towing, transportation expenses, storage, telephone, rental, taxi, inconvenience, insurance coverage, loan payments, loss of time, loss of income or time missed for downtime experience due to service work.

The following list includes, without limitation, items that are considered wear items and that are not covered under BRP's limited warranty unless failure is a direct result of a defect in material or workmanship:
– Batteries
– Brake pads
– Brake disks and drums
– Clutch plates / pads
– Clutch sliders
– Clutch springs
– Clutch replaceable bushings
– Drive belts
– Filters
– Finished and unfinished surfaces
– Fuses
– Light bulbs / sealed
– Lubricants
– Spark plugs
– Suspension bushings
– Suspension slider shoes
– Suspension springs
– Tires

4) WARRANTY COVERAGE PERIOD

This warranty will be in effect from (1) the date of delivery to the first retail consumer or (2) the date the product is first put into use, whichever occurs first and for a period of:
– TWENTY-FOUR (24) CONSECUTIVE MONTHS for private use.
– SIX (6) CONSECUTIVE MONTHS for commercial use or rental use.

The product is used commercially when it is used in connection with any work or employment that generates income during any part of the warranty period. The product is also used commercially when, at any point during the warranty period, it is licensed for commercial use.

The repair or replacement of parts or the performance of service under this warranty does not extend the life of this warranty beyond its original expiration date.

Note that the duration and any other modalities of the warranty coverage are subject to the applicable national or local legislation in your country.

5) CONDITIONS TO HAVE WARRANTY COVERAGE

This warranty coverage is available **only** if **each** of the following conditions has been fulfilled:

- The 2021 Can-Am SSV must be purchased as new and unused by its first owner from a Can-Am SSV Distributor/Dealer authorized to distribute Can-Am SSVs in the country in which the sale occurred;
- The BRP specified pre-delivery inspection process must be completed and documented;
- The product must have undergone proper registration by an authorized Can-Am SSV Distributor/Dealer;
- The 2021 Can-Am SSV must be purchased in the country or union of countries in which the purchaser resides; and
- Routine maintenance outlined in the Operator's Guide must be timely performed in order to maintain warranty coverage. BRP reserves the right to make warranty coverage contingent upon proof of proper maintenance.

BRP will not honor this limited warranty to any private use owner or commercial use owner if one of the preceding conditions has not been met. Such limitations are necessary in order to allow BRP to preserve both the safety of its products, and also that of its consumers and the general public.

6) WHAT TO DO TO OBTAIN WARRANTY COVERAGE

The customer must cease using the SSV upon the appearance of an anomaly. The customer must notify a servicing Can-Am SSV Distributor/Dealer within two (2) months of the appearance of a defect and provide it with reasonable access to the product and reasonable opportunity to repair it. The customer must also present to the authorized Can-Am SSV Distributor/Dealer, proof of purchase of the product and must sign the repair/work order prior to starting the repair in order to validate the warranty repair. All parts replaced under this limited warranty become the property of BRP.

Note that the notification period is subject to the applicable national or local legislation in your country.

7) WHAT BRP WILL DO

To the extent permitted by law, BRP's obligations under this warranty are limited to, at its sole discretion, repairing parts found defective under normal use, maintenance and service, or replacing such parts with new genuine Can-Am SSV parts without charge for parts and labor, at any authorized Can-Am SSV Distributor/Dealer during the warranty coverage period under the conditions described herein. BRP's responsibility is limited to making the required repairs or replacements of

parts. No claim of breach of warranty shall be cause for cancellation or rescission of the sale of the Can-Am SSV to the owner. You may have other legal rights which may vary from country to country.

In the event that service is required outside of the EEA, the owner will bear responsibility for any additional charges due to local practices and conditions, such as, but not limited to, freight, insurance, taxes, license fees, import duties, and any and all other financial charges, including those levied by governments, states, territories and their respective agencies.

BRP reserves the right to improve or modify products from time to time without assuming any obligation to modify products previously manufactured.

8) TRANSFER

If the ownership of a product is transferred during the warranty coverage period, this warranty shall also be transferred and be valid for the remaining coverage period provided BRP or an authorized Can-Am SSV Distributor/Dealer receives a proof that the former owner agreed to the transfer of ownership, in addition to the co-ordinates of the new owner.

9) CONSUMER ASSISTANCE

In the event of a controversy or a dispute in connection with this limited warranty, BRP suggests that you try to resolve the issue at the Can-Am SSV Distributor/Dealer level. We recommend discussing the issue with the authorized Can-Am SSV Distributor/Dealer's service manager or owner.

If the matter still remains unresolved, contact BRP by filling out the customer contact form at www.brp.com or contact BRP by mail at one of the addresses listed under the *CONTACT US* section of this guide.

* In the EEA, products are distributed and serviced by BRP European Distribution S.A. and other affiliates or subsidiaries of BRP.

© 2020 Bombardier Recreational Products Inc. All rights reserved.
® Trademark of Bombardier Recreational Products Inc. or its affiliated.

ADDITIONAL TERMS AND CONDITIONS FOR FRANCE ONLY

The following terms and conditions are applicable to products sold in France only:

The seller shall deliver goods that are complying with the contract and shall be responsible for defects existing upon delivery. The seller shall also be responsible for defects resulting from packaging, assembling instructions or the installation when it is its responsibility per the contract or if accomplished under its responsibility. To be compliant with the contract, the good shall:

1. Be fit for normal use for goods similar thereto and, if applicable:
   - Correspond to the description provided by the seller and have the qualities presented to the buyer though sample or model;
   - Have the qualities that a buyer may legitimately expect considering the public declarations of the seller, the manufacturer of its representative, including in advertising or labeling; or
2. Have the characteristics mutually agreed upon as between the parties or be fit for the specific use intended by the buyer and brought to the attention of the seller and which accepted.

The action for failure to comply is prescribed after two years after delivery of the goods. The seller is responsible for the warranty for hidden defects of the goods sold if such hidden defects are rendering the good unfit for the intended use, or if they diminish its use in such a way that the buyer would not have acquired the good or would have given a lesser price, had he known. The action for such hidden defects shall be taken by the buyer within 2 years of the discovery of the defect.

MAINTENANCE RECORDS

Send photocopy of maintenance record to BRP if needed.

PREDELIVERY	
Serial number:	Signature/Print:
Mileage / km:	
Hours:	
Date:	
Dealer no:	
Notes:	
Refer to vehicle Pre-Delivery Bulletin for detailed installation procedures	

FIRST INSPECTION	
Mileage / km:	Signature/Print:
Hours:	
Date:	
Dealer no:	
Notes:	
For maintenance schedule refer to Maintenance Information section of this operator's guide	

SERVICE	
Mileage / km:	Signature/Print:
Hours:	
Date:	
Dealer no:	
Notes:	
For maintenance schedule refer to Maintenance Information section of this operator's guide	

SERVICE	
Mileage / km: _____ Hours: _____ Date: _____ Dealer no: _____ Notes: _____	Signature/Print:
For maintenance schedule refer to Maintenance Information section of this operator's guide	

SERVICE	
Mileage / km: _____ Hours: _____ Date: _____ Dealer no: _____ Notes: _____	Signature/Print:
For maintenance schedule refer to Maintenance Information section of this operator's guide	

SERVICE	
Mileage / km: _____ Hours: _____ Date: _____ Dealer no: _____ Notes: _____	Signature/Print:
For maintenance schedule refer to Maintenance Information section of this operator's guide	

SERVICE	
Mileage / km:	Signature/Print:
Hours:	
Date:	
Dealer no:	
Notes:	
For maintenance schedule refer to Maintenance Information section of this operator's guide	

SERVICE	
Mileage / km:	Signature/Print:
Hours:	
Date:	
Dealer no:	
Notes:	
For maintenance schedule refer to Maintenance Information section of this operator's guide	

SERVICE	
Mileage / km:	Signature/Print:
Hours:	
Date:	
Dealer no:	
Notes:	
For maintenance schedule refer to Maintenance Information section of this operator's guide	

This page is intentionally blank

CUSTOMER INFORMATION

PRIVACY INFORMATION

BRP wishes to inform you that your coordinates will be used for safety and warranty related purposes. Furthermore, BRP and its affiliates may use its customer list to distribute marketing and promotional information about BRP and related products.

To exercise your right to consult or correct your data, or to be removed from the addressee-list for direct marketing, please contact BRP.

CHANGE OF ADDRESS/OWNERSHIP

If your address has changed or if you are the new owner of the vehicle, be sure to notify BRP.

CHANGE OF ADDRESS ☐ CHANGE OF OWNERSHIP ☐

VEHICLE IDENTIFICATION NUMBER

Model Number Vehicle Identification Number (V.I.N.)

OLD ADDRESS OR PREVIOUS OWNER:

NAME

NO. STREET APT

CITY STATE/PROVINCE ZIP/POSTAL CODE

COUNTRY TELEPHONE

NEW ADDRESS OR NEW OWNER:

NAME

NO. STREET APT

CITY STATE/PROVINCE ZIP/POSTAL CODE

COUNTRY TELEPHONE

V00A2F

E-MAIL ADDRESS

CHANGE OF ADDRESS ☐ CHANGE OF OWNERSHIP ☐

VEHICLE IDENTIFICATION NUMBER

Model Number Vehicle Identification Number (V.I.N.)

OLD ADDRESS OR PREVIOUS OWNER:

NAME

NO. STREET APT

CITY STATE/PROVINCE ZIP/POSTAL CODE

COUNTRY TELEPHONE

NEW ADDRESS OR NEW OWNER:

NAME

NO. STREET APT

CITY STATE/PROVINCE ZIP/POSTAL CODE

COUNTRY TELEPHONE

V00A2F

E-MAIL ADDRESS

This page is intentionally blank

CHANGE OF ADDRESS ☐ CHANGE OF OWNERSHIP ☐

VEHICLE IDENTIFICATION NUMBER

Model Number Vehicle Identification Number (V.I.N.)

OLD ADDRESS OR PREVIOUS OWNER:

NAME

NO. STREET APT

CITY STATE/PROVINCE ZIP/POSTAL CODE

COUNTRY TELEPHONE

NEW ADDRESS OR NEW OWNER:

NAME

NO. STREET APT

CITY STATE/PROVINCE ZIP/POSTAL CODE

COUNTRY TELEPHONE

V00A2F

E-MAIL ADDRESS

CHANGE OF ADDRESS ☐ CHANGE OF OWNERSHIP ☐

VEHICLE IDENTIFICATION NUMBER

Model Number Vehicle Identification Number (V.I.N.)

OLD ADDRESS OR PREVIOUS OWNER:

NAME

NO. STREET APT

CITY STATE/PROVINCE ZIP/POSTAL CODE

COUNTRY TELEPHONE

NEW ADDRESS OR NEW OWNER:

NAME

NO. STREET APT

CITY STATE/PROVINCE ZIP/POSTAL CODE

COUNTRY TELEPHONE

V00A2F

E-MAIL ADDRESS

This page is intentionally blank

NOTES

NOTES

NOTES

NOTES

NOTES

NOTES

⚠ WARNING

TO REDUCE RISK OF SERIOUS INJURY OR DEATH,
read this Operator's Guide and safety labels, watch the safety video and:

BE PREPARED
- Fasten seat belts and make sure nets and/or doors are securely latched in place.
- Wear an approved helmet and protective gear.
- Each rider must be able to sit with back against seat, foot flat on the floor or on footrest, and hands on steering wheel or handholds. Stay completely inside the vehicle.

DRIVE RESPONSIBLY
- Avoid loss of control and rollovers.
- Avoid abrupt maneuvers, sideways sliding, skidding or fishtailing and never do donuts.
- Avoid hard acceleration when turning, even from a stop.
- Slow down before entering a turn.
- Plan for hills, rough terrain, ruts and other changes in traction and terrain.
- Avoid paved surfaces.
- Avoid side hilling (riding across slopes).

BE QUALIFIED AND RESPONSIBLE
- Do not allow careless or reckless driving.
- Driver must be at least 16 years old with a valid driver's license.
- Do not operate after using drugs or alcohol.
- Do not allow operation on public roads (unless designated for off-highway vehicle access) – collisions with cars and trucks can occur.
- Do not exceed vehicle seating capacity.