2022 Can-Am HD7 & HD9 Defender Series

If you're on a computer and don't see the clickable index on the left, please see the directions that were sent in the email with the download link, please check your junk mail if you don't see it.

This manual is made up of the vehicle & engine manual with all needed supplements organized into one easy to use manual.

They will NEVER be sold on eBay, forums or on Facebook!

If you bought this manual from any other seller, they are reselling our work. Please leave them negative feedback & email me at bestshopmanuals@gmail.com.

Our goal is to be one of the BEST sellers on the internet by providing you with the BEST customer service and the BEST manuals on the market.

Thank you for choosing us.

Green-Manuals

Paperless Manuals
For a Better Tomorrow

Hi-Definition Manual

Midwest Manuals

2022
Shop Manual

Use the bookmark feature in your PDF reader to access the engine manuals.

(Refer to the directions we emailed when you purchased for help)

Defender / Traxter Series
Defender MAX / Traxter MAX Series

can-am

Click here for the HD7 engine manual

Click here for the HD9 engine manual

TABLE OF CONTENTS

Click here for online parts manual

SAFETY NOTICE X
IMPORTANT SAFETY PRECAUTIONS X

INTRODUCTION XII
VEHICLE INFORMATION XII
ENGINE EMISSIONS INFORMATION XVI
MANUAL INFORMATION XVII
FASTENER INFORMATION XXI

01 MAINTENANCE
01 – PERIODIC MAINTENANCE SCHEDULE 3
02 – STORAGE PROCEDURE 7
GENERAL 7
PROCEDURES 7
FUEL SYSTEM 7
ENGINE 7
ELECTRICAL SYSTEM 8
CHASSIS 8
03 – PRESEASON PREPARATION 9
04 – SPECIAL PROCEDURES 11
GENERAL 11
ROLLED OVER VEHICLE 11
SUBMERGED VEHICLE 11

02 ENGINE, CVT AND GEARBOX Only covers the vehicle engine parts, see the engine manuals for the rest.
01 – ENGINE REMOVAL AND INSTALLATION (HD7) 13
PROCEDURES 14
REMOVING THE ENGINE 14
INSTALLING THE ENGINE 15
ENGINE MOUNTS 16
02 – ENGINE REMOVAL AND INSTALLATION (HD9 / HD10) 17
PROCEDURES 18
ENGINE REMOVAL 18
ENGINE INSTALLATION 19
ENGINE MOUNTS 20
03 – AIR INTAKE SYSTEM (HD7) 21
GENERAL 22
PROCEDURES 22
AIR INTAKE SYSTEM 22
AIR FILTER HOUSING 22
04 – AIR INTAKE SYSTEM (HD9 / HD10) 25
GENERAL 26
PROCEDURES 26
AIR INTAKE SYSTEM 26
AIR FILTER HOUSING 26
05 – EXHAUST SYSTEM (HD7) 29
GENERAL 31
PROCEDURES 31
MUFFLER 31
HEAD PIPE 32
06 – EXHAUST SYSTEM (HD9 / HD10) 35
GENERAL 38
PROCEDURES 38
SPARK ARRESTER 38
MUFFLER 38

TABLE OF CONTENTS

02 ENGINE, CVT AND GEARBOX (cont'd)

06 – EXHAUST SYSTEM (HD9 / HD10) (cont'd)

PROCEDURES (cont'd)

HEAD PIPE (FRONT CYLINDER) 39

HEAD PIPE (REAR CYLINDER) 41

07 – COOLING SYSTEM - VEHICLE COMPONENTS (HD7) 43

GENERAL 45

MAINTENANCE 45

RECOMMENDED ENGINE COOLANT 45

VERIFYING THE ENGINE COOLANT LEVEL 45

CHECKING THE ENGINE COOLANT SPECIFIC GRAVITY 45

REPLACING THE ENGINE COOLANT 46

INSPECTING THE COOLING SYSTEM 47

PERFORMING A COOLING SYSTEM LEAK TEST 47

TESTING THE PRESSURE CAP 47

PROCEDURES 47

RADIATOR 47

RADIATOR COOLING FAN RELAY (R1) 48

RADIATOR COOLING FAN 48

08 – COOLING SYSTEM - VEHICLE COMPONENTS (HD9 / HD10) 51

GENERAL 57

MAINTENANCE 57

RECOMMENDED ENGINE COOLANT 57

VERIFYING THE ENGINE COOLANT LEVEL 57

CHECKING THE ENGINE COOLANT SPECIFIC GRAVITY 57

REPLACING THE ENGINE COOLANT 58

INSPECTING THE COOLING SYSTEM 59

PERFORMING A COOLING SYSTEM LEAK TEST 59

TESTING THE PRESSURE CAP 59

PROCEDURES 59

THERMOSTAT 59

RADIATOR 60

RADIATOR COOLING FAN 61

09 – HEATING SYSTEM 63

MAINTENANCE 65

INSPECTING AND REPLACING THE A/C AIR FILTERS 65

TROUBLESHOOTING 67

BLOWER MOTOR DOES NOT OPERATE 67

BLOWER MOTOR OPERATES NORMALLY, BUT AIR FLOW IS INSUFFICIENT 67

PROCEDURES 67

AIR VENTS 67

AIR DUCTS 67

HEATING UNIT 67

BLOWER 69

HEATER VALVE 71

TEMPERATURE CONTROL 72

HEATER CORE 73

10 – SHIFTER (HD7) 75

PROCEDURES 76

SHIFT LEVER 76

SHIFTER CABLE 77

SHIFT PLATE 77

11 – SHIFTER (HD9 / HD10) 81

PROCEDURES 82

SHIFT LEVER 82

02 ENGINE, CVT AND GEARBOX (cont'd)
11 – SHIFTER (HD9 / HD10) (cont'd)
PROCEDURES (cont'd)
SHIFTER CABLE 83
SHIFT PLATE 83

03 AIR CONDITIONING
01 – AIR CONDITIONING - VEHICLE COMPONENTS 85
GENERAL 86
SYSTEM COMPONENTS 86
MAINTENANCE 89
INSPECTING AND REPLACING THE A/C AIR FILTERS 89
INSPECTING THE COMPRESSOR DRIVE BELT 90
CLEANING THE CONDENSER 90
TROUBLESHOOTING 91
BLOWER MOTOR DOES NOT OPERATE 91
BLOWER MOTOR OPERATES NORMALLY, BUT AIR FLOW IS INSUFFICIENT 91
A/C UNIT NOT COOLING SUFFICIENTLY 91
PRESSURE GAUGE - RELATED TROUBLESHOOTING 91
PROCEDURES 93
TESTING THE AIR CONDITIONING SYSTEM EFFICIENCY 93
OPERATING PRESSURES DIAGNOSIS 95
SLOW LEAK DIAGNOSIS 96
COMPRESSOR AND DRIVE BELT 96
AIR VENTS 96
AIR DUCTS 97
HVAC UNIT 97
BLOWER 99
HEATER VALVE 100
HEATER CORE 101
EVAPORATOR 102
EXPANSION VALVE 102
CLIMATE CONTROL MODULE 103
CONDENSER 103
DESICCANT CARTRIDGE 104

04 ELECTRONIC MANAGEMENT SYSTEM
01 – ENGINE MANAGEMENT SYSTEM (EMS) 107
GENERAL 109
SYSTEM DESCRIPTION 109
02 – CONTROLLER AREA NETWORK (CAN) 111
GENERAL 111
SYSTEM DESCRIPTION 111
03 – COMMUNICATION TOOLS 113
GENERAL 113
REQUIRED TOOLS 113
DIAGNOSTIC CONNECTOR LOCATION 113
TROUBLESHOOTING 114
DIAGNOSTIC TIPS 114
04 – DIAGNOSTIC AND FAULT CODES 115
GENERAL 115
MONITORING SYSTEM 115
FAULT CODES 116

Expanded Diagnostic & Fault Codes (Dealer Only)

TABLE OF CONTENTS

05 FUEL SYSTEM

01 – INTELLIGENT THROTTLE CONTROL (iTC) 119
GENERAL 119
SYSTEM DESCRIPTION 119
SYSTEM MAIN FEATURES 119
SYSTEM OTHER FEATURES 119
PROCEDURES 120
ECO/ECO OFF/WORK MODE SWITCH 120
SEAT BELT SWITCH 120
THROTTLE ACCELERATOR SENSOR (TAS) 120

02 – FUEL TANK AND FUEL PUMP (HD7) 123
GENERAL 125
SYSTEM DESCRIPTION 125
INSPECTION 126
TESTING FOR A FUEL TANK LEAK 126
TESTING THE FUEL PRESSURE 127
TROUBLESHOOTING 129
FUEL SYSTEM DIAGNOSTIC FLOW CHART 129
PROCEDURES 130
FUEL HOSE AND OETIKER CLAMPS 130
FUEL TANK 130
FUEL PUMP 132
FUEL PUMP PRE-FILTER (STRAINER) 134
FUEL LEVEL SENDER 135
FUEL TANK VENT VALVES 136

03 – FUEL TANK AND FUEL PUMP (HD9 / HD10) 139
GENERAL 141
SYSTEM DESCRIPTION 141
INSPECTION 142
TESTING FOR A FUEL TANK LEAK 142
TESTING THE FUEL PRESSURE 143
TROUBLESHOOTING 145
FUEL SYSTEM DIAGNOSTIC FLOW CHART 145
PROCEDURES 146
FUEL HOSE AND OETIKER CLAMPS 146
FUEL TANK 146
FUEL PUMP 147
FUEL PUMP PRE-FILTER (STRAINER) 149
FUEL LEVEL SENDER 151
FUEL TANK VENT VALVES 152

04 – EVAPORATIVE EMISSION CONTROL SYSTEM (EVAP) 155
GENERAL 155
TYPICAL PARTS IDENTIFICATION 156
SYSTEM SCHEMATIC 158
MAINTENANCE 159
REPLACING THE CANISTER VENT PRE-FILTER 159
INSPECTION 159
INSPECTING THE EVAP COMPONENTS 159
TESTING THE FUEL SYSTEM FOR LEAKS 159
PROCEDURES 160
TESTING THE PURGE SOLENOID VALVE 160
REPLACING PARTS 161

06 ELECTRICAL SYSTEM

01 – POWER DISTRIBUTION AND GROUNDS 163
GENERAL 163
OVERVIEW 163
FUSE HOLDERS PF3 - PF4 - PF7 163
FRONT FUSE BOX (PF1) 163
REAR FUSE BOX (PF2) 163
FUSIBLE LINKS 164
GROUND LOCATIONS 164
02 – WIRING HARNESS AND CONNECTORS 167
GENERAL 173
CONNECTOR ABBREVIATION DESCRIPTION 173
PROCEDURES 174
DEUTSCH CONNECTORS 174
FURUKAWA CONNECTOR 175
MOLEX CONNECTOR (ECM) 176
MOLEX CONNECTORS (EXCEPT ECM) 179
DELPHI/PACKARD CONNECTORS 180
DELPHI CONNECTORS 180
BATTERY AND STARTER CABLE TERMINALS 181
SPLICES REPAIR PROCEDURE 182
03 – IGNITION SYSTEM 185
GENERAL 185
SYSTEM DESCRIPTION 185
MAINTENANCE 185
REPLACING THE SPARK PLUG 185
TROUBLESHOOTING 185
DIAGNOSTIC GUIDELINES 185
PROCEDURES 186
SAFETY PRECAUTIONS 186
IGNITION SWITCH 186
IGNITION COIL 186
SPARK PLUG 188
04 – CHARGING SYSTEM 191
GENERAL 191
SYSTEM DESCRIPTION 191
INSPECTION 191
CHARGING SYSTEM OUTPUT 191
TROUBLESHOOTING 192
PROCEDURES 192
BATTERY LOAD TEST 192
CHARGING SYSTEM LOAD TEST 192
VOLTAGE REGULATOR (RD) 193
BATTERY 194
05 – STARTING SYSTEM 197
GENERAL 197
SYSTEM DESCRIPTION 197
TROUBLESHOOTING 197
DIAGNOSTIC GUIDELINES 197
PROCEDURES 197
STARTER SOLENOID 197
D2 DIODE (STARTER SOLENOID) 199
06 – LIGHTS 201
GENERAL 201

TABLE OF CONTENTS

06 ELECTRICAL SYSTEM (cont'd)

06 – LIGHTS (cont'd)
- TROUBLESHOOTING 201
  - DIAGNOSTIC TIPS 201
- PROCEDURES 201
  - HEADLIGHTS 201
  - TAILLIGHTS/BRAKE LIGHTS 203

07 – GAUGE 4.5" DIGITAL DISPLAY 205
- GENERAL 205
  - INDICATOR LAMPS DESCRIPTION 205
- TROUBLESHOOTING 206
  - DIAGNOSTIC TIPS 206
  - MULTIFUNCTION GAUGE TROUBLESHOOTING 207
- PROCEDURES 207
  - MULTIFUNCTION GAUGE 207

08 – GAUGE 7.6" DIGITAL DISPLAY 211
- GENERAL 211
  - INDICATOR LAMPS DESCRIPTION 211
- TROUBLESHOOTING 212
  - DIAGNOSTIC TIPS 212
  - MULTIFUNCTION GAUGE TROUBLESHOOTING 212
- PROCEDURES 213
  - MULTIFUNCTION GAUGE 213

09 – ACCESSORIES 217
- GENERAL 217
- TROUBLESHOOTING 217
  - DIAGNOSTIC TIPS 217
- PROCEDURES 217
  - CONSOLE SWITCHES 217
  - 12 VOLT POWER OUTLET 218
  - USB CONNECTOR 218
  - WINCH 218

07 DRIVE SYSTEM

01 – WHEELS AND TIRES 221
- PROCEDURES 221
  - TIRES 221
  - WHEELS 221

02 – FRONT DRIVE 223
- GENERAL 226
  - SYSTEM DESCRIPTION 226
- MAINTENANCE 226
  - VERIFYING THE FRONT DIFFERENTIAL OIL LEVEL 226
  - REPLACING THE FRONT DIFFERENTIAL OIL 226
  - INSPECTING THE DRIVE SHAFT BOOT AND PROTECTOR 227
  - INSPECTING THE DRIVE SHAFT JOINT 227
  - INSPECTING THE PROPELLER SHAFT U-JOINT 227
- PROCEDURES 227
  - WHEEL HUB 227
  - FRONT DRIVE SHAFT 228
  - DRIVE SHAFT BOOT 228
  - FRONT PROPELLER SHAFT 229
  - PROPELLER SHAFT U-JOINTS 230
  - FRONT DIFFERENTIAL 232

07 DRIVE SYSTEM (cont'd)

03 – SMART-LOK DIFFERENTIAL 237
GENERAL 240
LOCKING SEQUENCE 242
DIFFERENTIAL 242
ACTUATOR MOTOR ASSEMBLY 243
SWITCHES 243
FRONT DIFFERENTIAL MODULE (FDM) 243
ADJUSTMENT 244
PRELOAD 244
BACKLASH 244
CLUTCH PACK 246
FLUID LEVEL 246
TROUBLESHOOTING 246
PROCEDURES 247
TESTING BALL RAMP RETURN SPRING 247
TESTING A SPEED SENSOR 247
TESTING THE FDM 248
TESTING THE ACTUATOR 248
REPLACING THE ACTUATOR 248
REPLACING THE CLUTCH PACK 249
DISASSEMBLING THE DIFFERENTIAL 251
ASSEMBLING THE DIFFERENTIAL 254
REPLACING THE PINION 255
04 – REAR DRIVE (HD7) 257
PROCEDURES 260
WHEEL HUB 260
DRIVE SHAFT 260
DRIVE SHAFT BELLOWS 261
FINAL DRIVE UNIT 261
PROPELLER SHAFT 266
COUPLING SLEEVES 267
05 – REAR DRIVE (HD9 / HD10) 269
PROCEDURES 270
WHEEL HUB 270
DRIVE SHAFT 270
DRIVE SHAFT BELLOWS 271

08 CHASSIS

01 – STEERING SYSTEM 273
GENERAL 275
ADJUSTMENT 275
ALIGNING THE WHEELS 275
MAINTENANCE 277
INSPECTING THE WHEEL BEARING 277
INSPECTING THE STEERING SYSTEM 277
TROUBLESHOOTING 277
PROCEDURES 277
STEERING WHEEL 277
STEERING COLUMN 278
RACK AND PINION 279
TIE ROD ADJUSTMENT SLEEVE 280
TIE-ROD ENDS 281
KNUCKLES 282
WHEEL BEARINGS 282

TABLE OF CONTENTS

08 CHASSIS (cont'd)

02 – DYNAMIC POWER STEERING (DPS) 285
GENERAL 287
SYSTEM DESCRIPTION (FEATURES) 287
DPS SYSTEM DESCRIPTION (COMPONENTS) 287
ADJUSTMENT 288
RESETTING THE TORQUE OFFSET 288
STEERING SYSTEM SELF TEST 289
PROCEDURES 289
DPS UNIT 289
03 – FRONT SUSPENSION 297
GENERAL 298
MAINTENANCE 298
INSPECTING THE SHOCK ABSORBER 298
LUBRICATING THE SUSPENSION ARM AND STABILIZER BAR BUSHINGS (IF EQUIPPED) 298
LUBRICATING THE REAR KNUCKLE 299
INSPECTING THE SUSPENSION ARM 299
PROCEDURES 299
SHOCK ABSORBER 299
SHOCK ABSORBER SPRINGS 300
STABILIZER BAR (IF EQUIPPED) 300
LOWER SUSPENSION ARM 301
UPPER SUSPENSION ARM 301
SUSPENSION ARM BUSHINGS 302
BALL JOINTS 303
04 – REAR SUSPENSION 305
GENERAL 306
MAINTENANCE 306
INSPECTING THE SHOCK ABSORBER 306
LUBRICATING THE SUSPENSION ARM AND STABILIZER BAR BUSHINGS (IF EQUIPPED) 306
LUBRICATING THE REAR KNUCKLE 306
INSPECTING THE SUSPENSION ARM 306
PROCEDURES 307
SHOCK ABSORBERS 307
SPRINGS 307
STABILIZER BAR 308
LOWER SUSPENSION ARM 309
UPPER SUSPENSION ARM 309
SUSPENSION ARM BUSHINGS 310
05 – BRAKES 311
GENERAL 314
MAINTENANCE 314
CLEANING AND INSPECTING THE BRAKE SYSTEM 314
REPLACING THE BRAKE FLUID 315
INSPECTION 316
BRAKE SYSTEM PRESSURE VALIDATION 316
PROCEDURES 317
BRAKE LIGHT SWITCH 317
MASTER CYLINDER 318
CALIPER 320
BRAKE PADS 320
BRAKE DISC 321
06 – BODY (3-UP) 323
GENERAL 333
VEHICLE CARE 333

08 CHASSIS (cont'd)
06 – BODY (3-UP) (cont'd)
PROCEDURES 333
DECALS 333
07 – BODY (MAX) 335
GENERAL 347
VEHICLE CARE 347
PROCEDURES 347
DECALS 347
08 – CARGO BOX 349
09 – FRAME (3-UP) 353
PROCEDURES 354
CAGE 354
10 – FRAME (MAX) 355
PROCEDURES 356
CAGE 356

09 TECHNICAL SPECIFICATIONS
01 – VEHICLE 357

10 WIRING DIAGRAM
01 – WIRING DIAGRAM INFORMATION 371
GENERAL 371
WIRING DIAGRAM LOCATION 371
WIRING DIAGRAM WITH COLORED LINES 371
WIRING DIAGRAM CODES 371
FOLLOWING A CIRCUIT 371
WIRE COLORS AND SIZES 372
SPLICES IN WIRING HARNESS 372
PROCEDURES 372

SAFETY NOTICE

This manual has been prepared as a guide to correctly service and repair the Can-Am® DEFENDER Series (excluding European Union) and TRAXTER Series.

This edition was primarily published to be used by mechanical technicians who are already familiar with all service procedures relating to BRP products. Mechanical technicians should attend training courses given by BRPTI.

Please note that the instructions in this manual will apply only if proper hand tools and special service tools are used.

The contents of this manual depicts parts and/or procedures applicable to a particular product at the time of writing. Service and warranty bulletins may be published to update the content of this manual. Dealer modifications that were carried out after manufacturing of the product, whether or not authorized by BRP, are not included.

In addition, the sole purpose of the illustrations throughout the manual, is to assist identification of the general configuration of the parts. They are not to be interpreted as technical drawings or exact replicas of the parts.

The use of BRP parts is most strongly recommended when considering replacement of any component. Dealer and/or distributor assistance should be sought in case of doubt.

The engines and the corresponding components identified in this document should not be utilized on product(s) other than those mentioned in this document.

It is understood that certain modifications may render use of the vehicle illegal under existing federal, provincial and state regulations.

This manual emphasizes particular information which, is denoted by the following wording and symbols:

⚠ WARNING

Indicates a potential hazard that, if not avoided, could result in serious injury or death.

⚠ CAUTION Indicates a hazardous situation which, if not avoided, could result in minor or moderate injury.

NOTICE **Indicates an instruction which, if not followed, could result in severe damage to vehicle components or other property.**

NOTE: Indicates supplementary information required to fully complete an instruction.

Although the mere reading of such information does not eliminate the hazard, your understanding of the information provided will promote its correct use.

Always observe common shop safety practice.

Unless otherwise noted, the engine must be stopped and the tether cord must be removed prior to perform any services.

Torque wrench tightening specifications must be strictly adhered to. Use the torque values and service products as in the exploded views or in the procedures when noted.

Locking devices when removed must be replaced (e.g.: locking tabs, elastic stop nuts, self-locking fasteners, cotter pins, etc.).

Hoses, cables and locking ties removed during a procedure must be reinstalled as per factory standards.

When ordering parts always refer to the specific model *PARTS CATALOGS*.

We strongly recommend that any services be carried out and/or verified by a highly skilled professional mechanic.

It is understood that this manual may be translated into another language. In the event of any discrepancy, the English version shall prevail.

BRP disclaims liability for all damages and/or injuries resulting from the improper use of the contents of this publication.

IMPORTANT SAFETY PRECAUTIONS

We do not provide warnings about many basic shop safety practices (e.g.: Use Grinding Wheel – wear safety glasses). If you have not received shop safety training or do not feel confident about your knowledge of safe servicing practices, we recommend that you do not attempt to perform the procedures described in BRP shop manuals.

You should have a clear understanding of all basic shop safety practices. You should be wearing the appropriate clothing, using appropriate safety

equipment and taking all necessary safety precautions. Please be especially careful of the following:

- Read and understand all instructions before you begin a procedure or repair.
- Ensure you have the proper tools, any necessary replacement parts and the skills to perform the tasks safely and completely.
- Protect your eyes by using approved and properly fitted safety glasses.
- Use other protective wear when necessary, for example safety shoes and gloves.
- Unless the service procedure requires that the engine remain running, make sure the engine is off **before** beginning service.
- Be sure there is adequate ventilation whenever you run the engine, to avoid the risk of Carbon Monoxide poisoning.
- To avoid injury from moving parts, make sure your hands, fingers and clothing are out of the way when the engine is running.
- Gasoline vapors and hydrogen gases from batteries are explosive. Keep all cigarettes, sparks and flames away from the battery, fuel-related components and other enclosed compartments.
- Never use gasoline to clean parts, always use an approved non-flammable solvent.
- Never drain or store gasoline in an open container.

⚠ WARNING

The foregoing list represents general safety practices. For details on workplace health and safety requirements in your area, consult your local workplace health and safety agency or association.

We have provided you with some of the most important general service safety precautions, above. We cannot, however, warn you of every conceivable hazard that can arise in performing the service and repair procedures depicted in BRP manuals. Only you can decide whether or not you should perform a given task.

INTRODUCTION

The information and component/system descriptions contained in this manual are correct at time of writing. BRP however, maintains a policy of continuous improvement of its products without imposing upon itself any obligation to install them on products previously manufactured.

Due to late changes, there may be some differences between the manufactured product and the description and/or specifications in this document.

BRP reserves the right at any time to discontinue or change specifications, designs, features, models or equipment without incurring obligation.

VEHICLE INFORMATION

VEHICLE IDENTIFICATION NUMBER (VIN)

The VIN (Vehicle Identification Number) decal is located under the glove box on the passenger side.

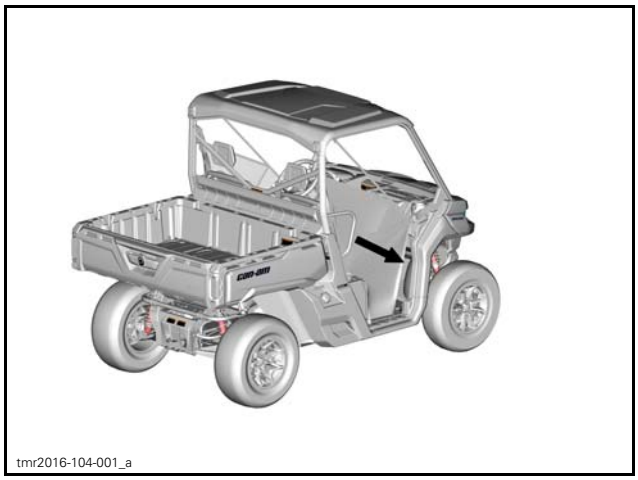

TYPICAL - VIN (VEHICLE IDENTIFICATION NUMBER) LOCATION

VIN Decal Description

TYPICAL — VEHICLE IDENTIFICATION NUMBER LABEL
1. *VIN (Vehicle Identification Number)*
2. *Model number*
3. *Manufacturing date*

ENGINE IDENTIFICATION NUMBER (EIN)

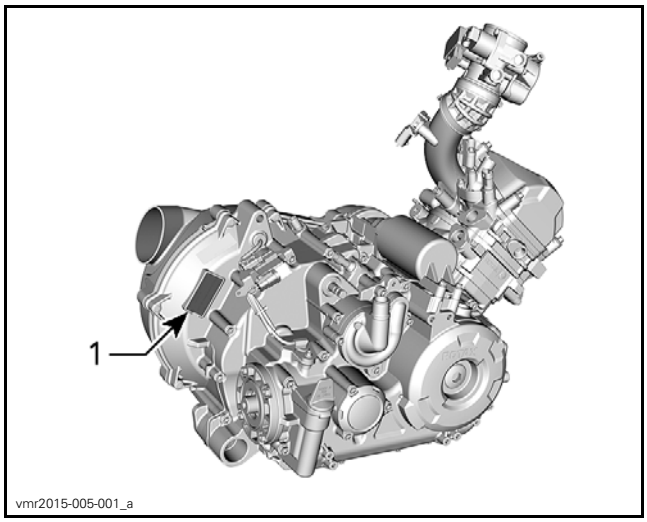

TYPICAL HD7 — ENGINE SERIAL NUMBER LABEL
1. *EIN (Engine Identification Number)*

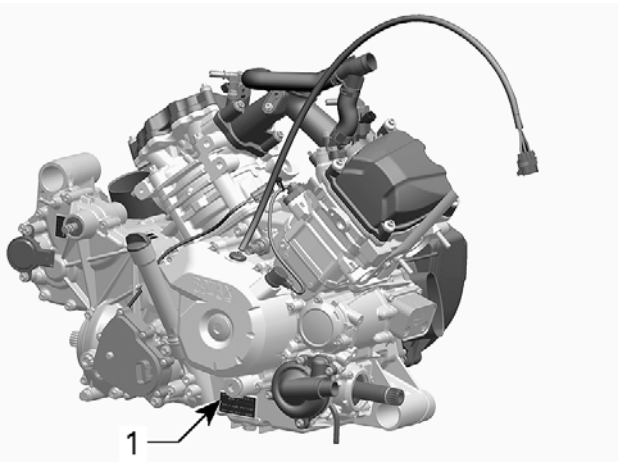

TYPICAL HD9 AND HD10 — ENGINE SERIAL NUMBER LABEL 1. EIN (Engine Identification Number)

COMPLIANCE LABEL

Regulation (EU) 2016/1628 applicable for Non-Road Mobile Machineries

Vehicles who comply to Regulation (EU) 2016/1628 (NRMM) are identified on the engine valve cover.

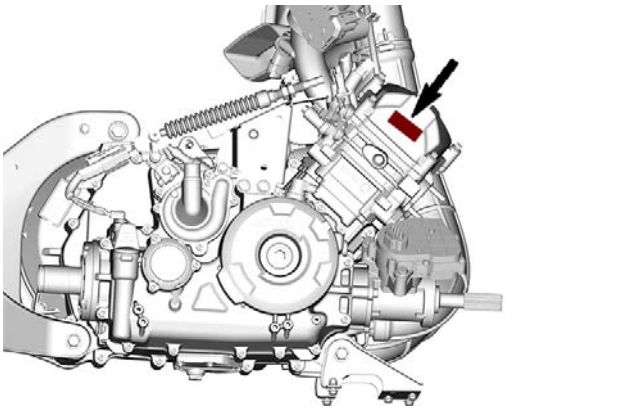

TYPICAL HD7

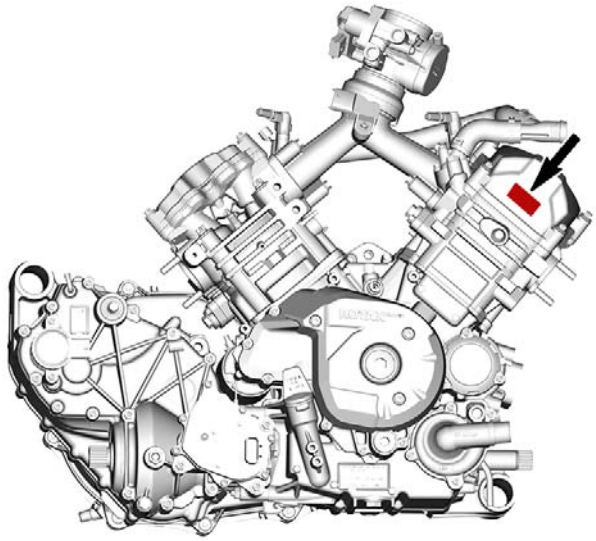

TYPICAL HD9 AND HD10

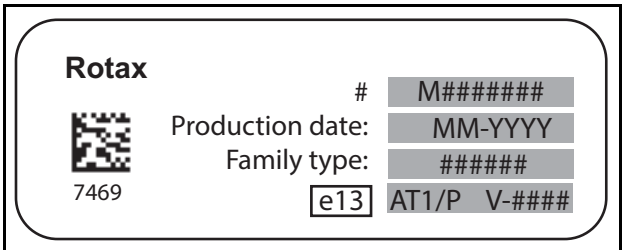

TYPICAL NRMM IDENTIFICATION

NOTE: Any tampering with the engine or its components will void the EU type-approval of the vehicle.

SECURING THE RAISED LONG CARGO BOX

⚠ WARNING

When working on a vehicle equipped with a long cargo box, always secure the cargo box with a long box retainer tool before working under the cargo box.

How Installing the Long Cargo Box Tool

SERVICE TOOL	
LONG BOX RETAINER (P/N 529 036 494)	

1. If installed, remove the draw bar.
2. Install one of the clevis pin of the tool into the rear hole of the cargo box frame.

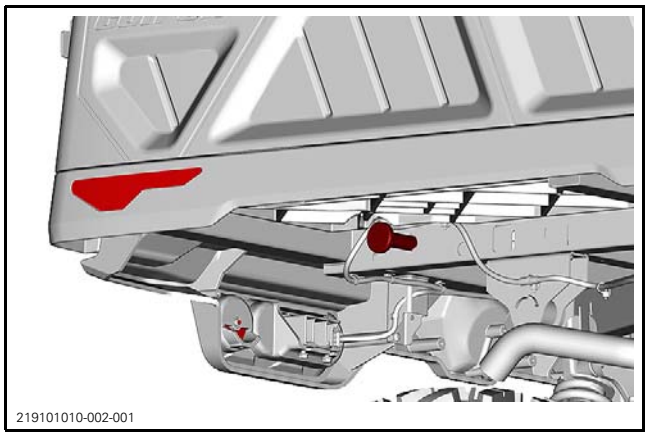
219101010-002-001

3. Install a S-hook into the clevis pin hole.

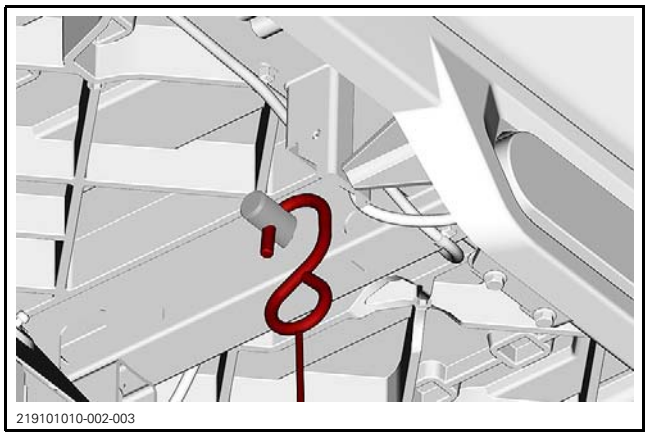
219101010-002-003

4. Repeat steps 2 and 3 on the other side of the cargo box.
5. With the help of another person, raise the cargo box.
6. While your helper hold the cargo box in this position, install the U-bracket over the vehicle hitch receiver and lock it in place using the provided lock pin.

⚠ WARNING

To avoid severe injury, never try to raise, hold and secure the cargo box when you are alone.

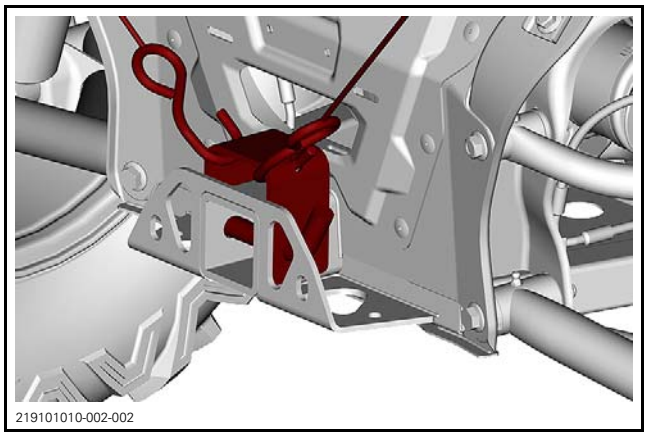
219101010-002-002

LIFTING AND SUPPORTING THE VEHICLE

Front of Vehicle

Place vehicle on a flat non slippery ground.

Ensure vehicle shift lever is set to PARK.

Install an hydraulic jack under front skid plate.

Lift front of vehicle and install a jack stand on each side under frame section.

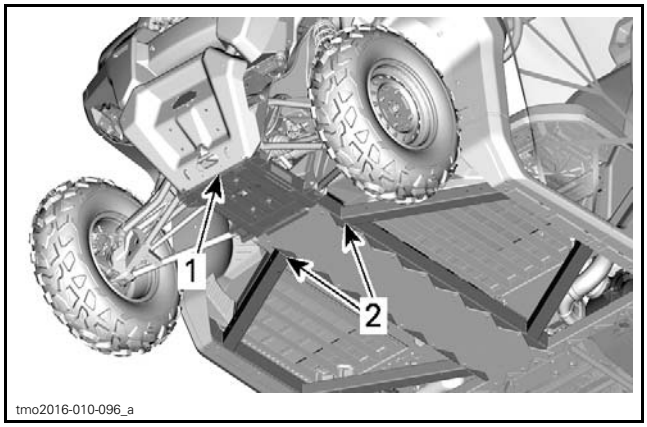

tmo2016-010-096_a

TYPICAL
1. Front of vehicle
2. Frame section

Lower hydraulic lift and ensure vehicle is supported safely onto both jack stands.

Rear of Vehicle

Place vehicle on a flat non slippery ground.

Activate 4WD mode.

Ensure vehicle shift lever is set to PARK.

Install an hydraulic jack under the trailer hitch.

Lift rear of vehicle and install a jack stand on each side under frame section in front of rear wheel.

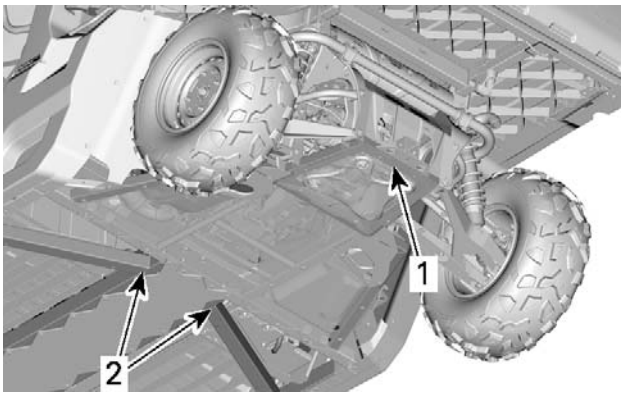

TYPICAL
1. *Lifting location under trailer hitch*
2. *Frame section to install jacks under.*

Lower hydraulic lift and ensure vehicle is supported safely onto both jack stands.

LIFTING THE VEHICLE WITH A LIFTING TABLE

Roll vehicle above lifting table.

Install two 4 x 4 horizontally across vehicle as close as possible to lifting points.

NOTICE **Ensure 4 x 4 are as close to lifting points as possible.**

Lift vehicle using table.

NOTE: If repositioning of vehicle is needed, lift either front or rear of vehicle using the lower portion of applicable bumper.

⚠ WARNING

Do not allow anyone in the vehicle while it is being lifted.

HOISTING THE VEHICLE

NOTICE **To avoid cab damages, never try to hoist by the cage a vehicle with a cab.**

The vehicle may be lifted off the ground by the cage using a hoist and a lifting strap.

Remove the roof if equipped.

NOTICE **Lifting the vehicle with the roof in place may cause irreversible damage to the roof.**

Place the strap as per the following illustrations.

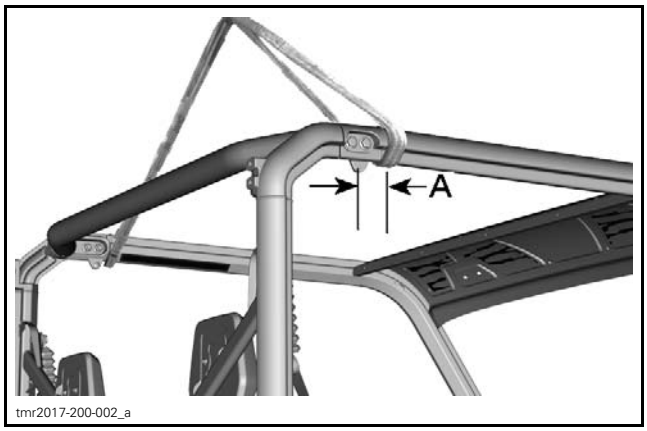

3-UP MODELS
A. 25 mm to 50 mm (1 in to 2 in) from the protection net anchor.

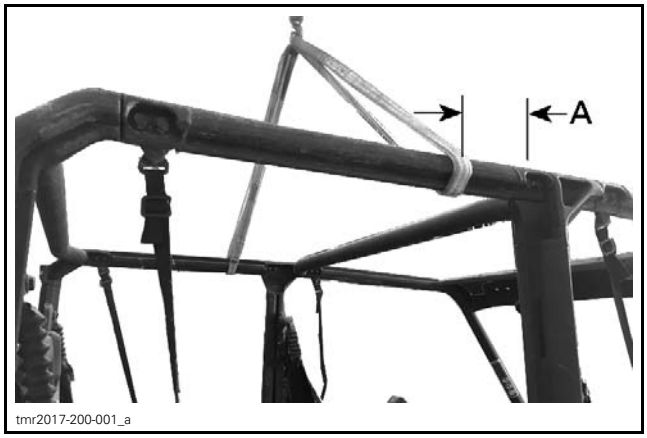

MAX MODELS
A. 125 mm to 175 mm (5 in to 7 in) from the first screw of mid pillar.

⚠ WARNING

- **Ensure hoist and lifting strap are rated for lifting the total vehicle weight. Refer to applicable manufactures instructions.**
- **Ensure lifting strap is in good condition before lifting vehicle.**
- **Do not allow anyone in the vehicle or under any portion of the vehicle while it is suspended by a hoist.**
- **Do not perform any work on the vehicle while it is suspended by a hoist.**

TRANSPORTING THE VEHICLE

If the vehicle needs to be transported, it should be properly secured on a flatbed trailer of the appropriate size and capacity.

NOTICE **Do not tow this vehicle — towing can seriously damage the vehicle's drive system.**

NOTICE **Avoid using chains to tie the vehicle — they may damage the surface finish or plastic components.**

NOTICE **If the vehicle is equipped with a windshield, transport it facing forward to avoid damaging the windshield.**

To load the vehicle on a platform for transport, proceed as follow:

1. Shift the vehicle into NEUTRAL (N).
2. If the vehicle is equipped with a winch, use the winch to roll the vehicle on the platform.
3. If the vehicle is not equipped with a winch, proceed as follows:
   - 3.1 Put a strap around the lower arm of each front suspension.
   - 3.2 Attach the straps to the winch cable of the towing vehicle.
   - 3.3 Pull the vehicle on the flatbed trailer with the winch.
4. Shift the vehicle into PARK (P).
5. Remove the key from the ignition switch.
6. Strap the front tires by using tire towing straps.
7. Pass a tie-down strap inside each rear wheel.
8. Firmly attach the rear wheels tie-down straps to both sides of the rear of the trailer with ratchets.
9. Ensure that both the front and rear wheels are firmly attached to the trailer.

⚠ WARNING

Make sure no loose objects are present inside vehicle during vehicle transportation.

ENGINE EMISSIONS INFORMATION

MANUFACTURER'S RESPONSIBILITY

Manufacturers of engines must determine the exhaust emission levels for each engine horsepower family and certify these engines with the United States of America Environmental Protection Agency (EPA). An emissions control information label, showing emission levels and engine specifications, must be placed on each vehicle at the time of manufacture.

DEALER RESPONSIBILITY

When servicing any vehicle that carry an emissions control information label, adjustments must be kept within published factory specifications.

Replacement or repair of any emission related component must be executed in a manner that maintains emission levels within the prescribed certification standards.

Dealers are not to modify the engine in any manner that would alter the horsepower or allow emission levels to exceed their predetermined factory specifications.

Exceptions include manufacturer's prescribed changes.

OWNER RESPONSIBILITY

The owner/operator is required to have engine maintenance performed to maintain emission levels within prescribed certification standards.

The owner/operator is not to, and should not allow anyone else to modify the engine in any manner that would alter the horsepower or allow emissions levels to exceed their predetermined factory specifications.

EMISSION REGULATIONS

The vehicle you are servicing may have been certified to applicable emission regulations in your country or state. Not as an exhaustive list; this may include standards for engine exhaust emissions, crankcase emissions, permeation emissions and evaporative emissions. Servicing procedures in this manual must be strictly followed in order to keep the vehicle within the factory specifications. Failure to follow servicing procedures in this manual may lead a vehicle to be out of compliance with applicable emission regulations.

When servicing any vehicle; adjustments must be kept within published factory specifications. Replacement or repair of any emission related component must be executed in a manner that maintains emission levels within the applicable certification standards. Nobody is allowed to modify the engine in any manner that would alter the horsepower or allow emission levels to exceed their predetermined factory specifications. Exceptions include manufacturer’s prescribed changes.

The owner/operator is required to have engine maintenance performed to maintain emission levels within the prescribed certification standards.

The owner/operator is allowed and should not allow anyone else to modify the engine in any manner that would alter the horsepower or allow emissions levels to exceed their predetermined factory specifications.

MANUAL INFORMATION

MANUAL PROCEDURES

Many of the procedures in this manual are interrelated. Before undertaking any task, you should read and thoroughly understand the entire section or subsection in which the procedure is contained.

⚠ WARNING

Unless otherwise specified, the engine should be turned OFF and cold for all maintenance and repair procedures.

A number of procedures throughout the book require the use of special tools. Before starting any procedure, be sure that you have on hand all required tools, or their approved equivalents.

The use of RIGHT and LEFT indications in the text are always referenced to the driving position (sitting on the vehicle).

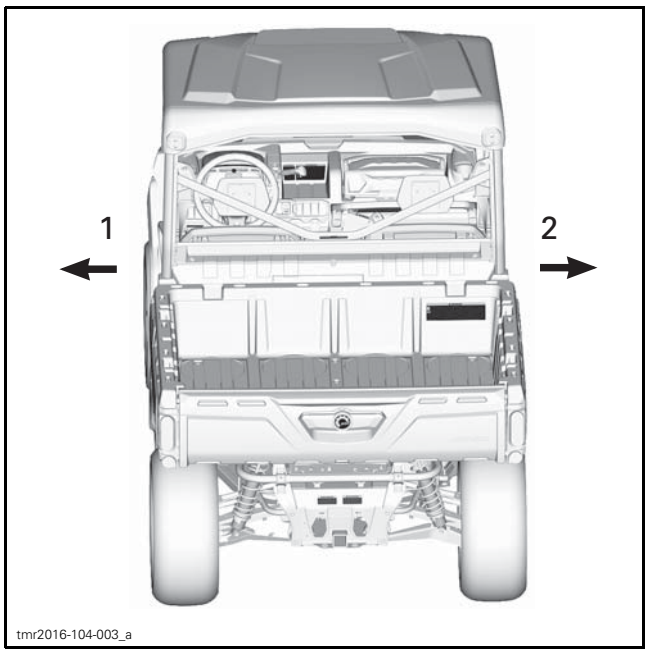

TYPICAL
1. Left
2. Right

This manual uses technical terms which may be different from the ones of the *PARTS CATALOGS*.

When ordering parts always refer to the specific model *PARTS CATALOGS*.

NOTICE **Most fasteners are metric, and most components are built with parts dimensioned using the metric system. Consult the appropriate *PARTS CATALOG* to obtain and use the correct parts and fasteners. Mismatched or incorrect fasteners could cause damage to the vehicle.**

MANUAL LAYOUT

This manual is divided into many major sections as can be seen in the main table of contents at the beginning of the manual.

Each section is divided into various subsections, and again, each subsection has one or more divisions.

Illustrations and photos show the typical construction of various assemblies and, in all cases, may not reproduce the full detail or exact shape of the parts used in a particular model vehicle. However, they represent parts which have the same or a similar function.

TYPICAL PAGE

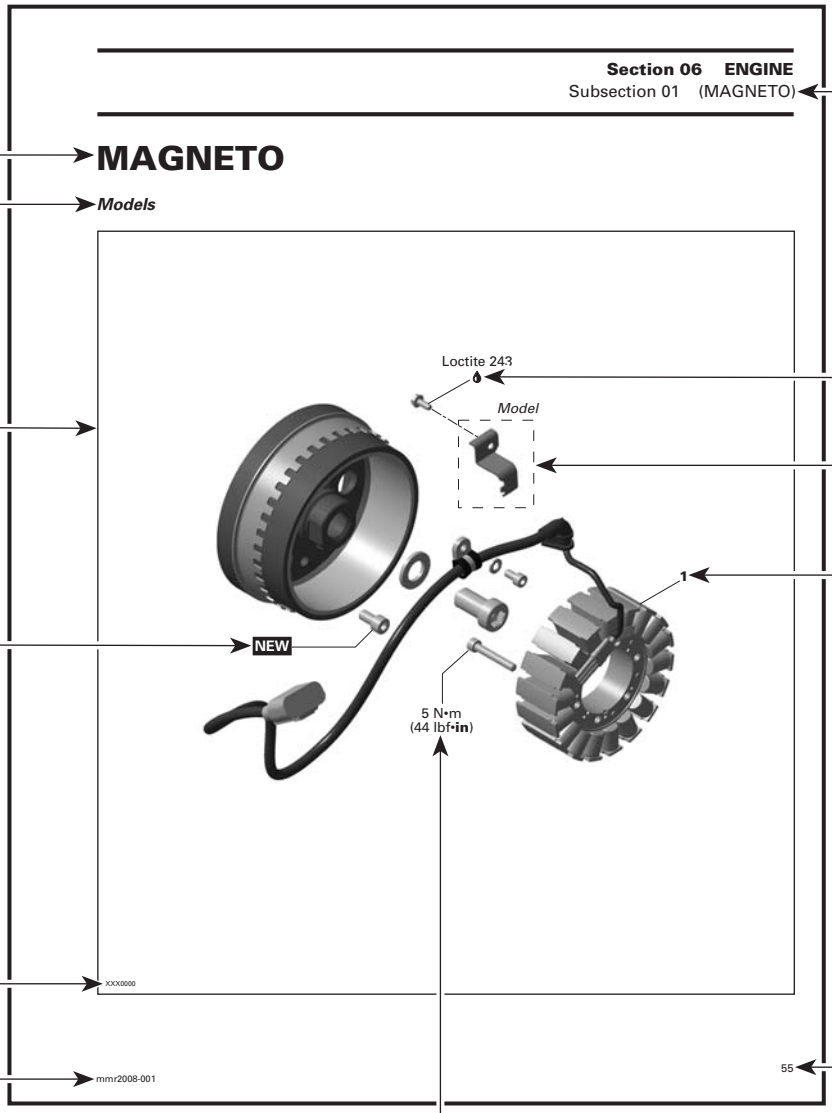

Page heading indicates section and subsection.

Subsection title

Indicates applicable models.

Drop represents a service product to be applied.

Exploded view assists you in identifying parts and their related positions.

Dotted box contains parts applicable to a specific model.

Bold face number is used to identify a part referred to the text.

NEW indicates that the part must be replaced with a new one.

Illustration number for publishing process.

Document number for publishing process.

Page number

Specific torque applicable to this installation.

NOTICE Pay attention to torque specifications.
Some of these are in lbf•**in** instead of lbf•ft.
Use appropriate torque wrench.

Typical_iso_2008_en

TYPICAL PAGE

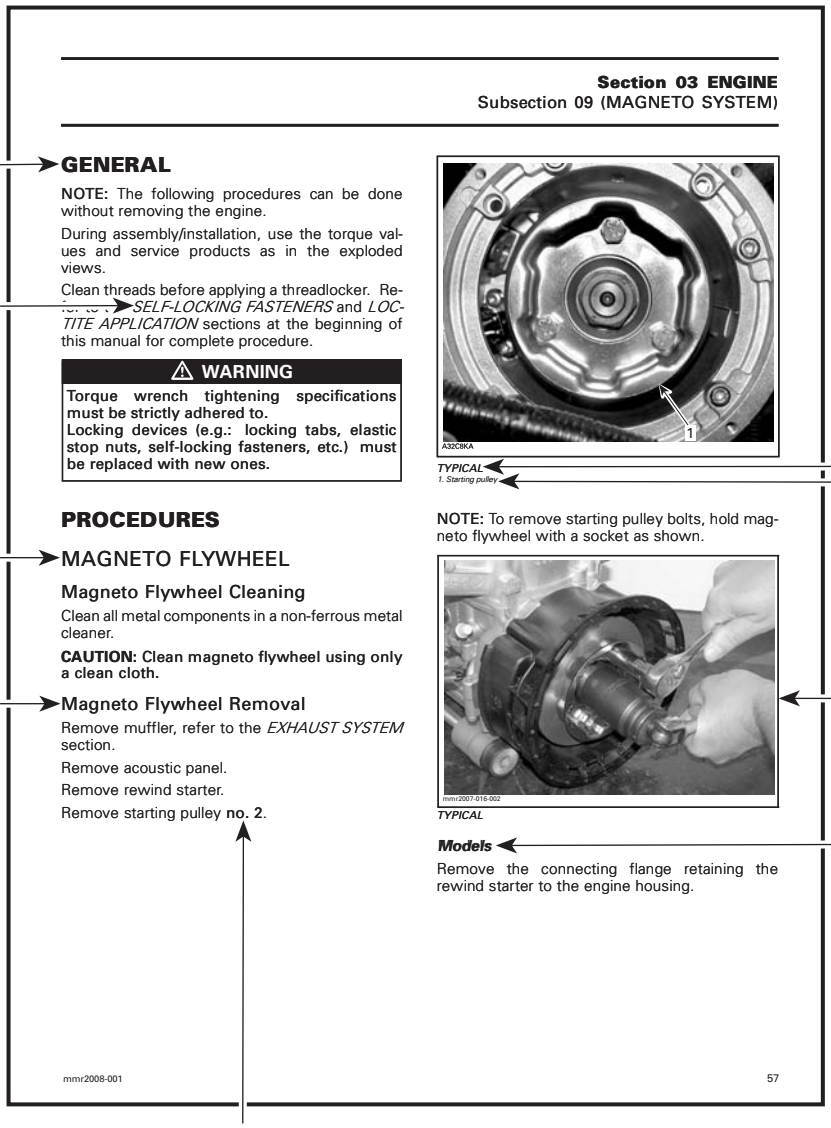

Section 03 ENGINE
Subsection 09 (MAGNETO SYSTEM)

GENERAL

NOTE: The following procedures can be done without removing the engine.

During assembly/installation, use the torque values and service products as in the exploded views.

Clean threads before applying a threadlocker. Refer to the *SELF-LOCKING FASTENERS* and *LOCTITE APPLICATION* sections at the beginning of this manual for complete procedure.

⚠ WARNING

Torque wrench tightening specifications must be strictly adhered to.
Locking devices (e.g.: locking tabs, elastic stop nuts, self-locking fasteners, etc.) must be replaced with new ones.

PROCEDURES

MAGNETO FLYWHEEL

Magneto Flywheel Cleaning

Clean all metal components in a non-ferrous metal cleaner.

CAUTION: Clean magneto flywheel using only a clean cloth.

Magneto Flywheel Removal

Remove muffler, refer to the *EXHAUST SYSTEM* section.

Remove acoustic panel.

Remove rewind starter.

Remove starting pulley **no. 2**.

A32CBKA

TYPICAL
1. Starting pulley

NOTE: To remove starting pulley bolts, hold magneto flywheel with a socket as shown.

mmr2007-016-002

TYPICAL

Models

Remove the connecting flange retaining the rewind starter to the engine housing.

mmr2008-001 57

Tittle in bold indicates category of information to be carried out.

Reference to a specific section or subsection.

Indicates component procedures apply to.

Indicates specific procedure to be carried out.

"TYPICAL" indicates a general view which may not represent exact details.

Call-outs pertaining to above illustration.

Illustration always follows text to which it applies.

Italic bold face typesetting indicates a procedure applicable to a specific model(s).

Bold face number following part name refers to exploded view at beginning of subsection.

typical_txt_2008_en

TIGHTENING TORQUE

Tighten fasteners to the torque specified in the exploded view(s) and/or in the written procedure. When a torque is not specified, refer to the following table.

⚠ WARNING

Torque wrench tightening specifications must be strictly adhered to.
Locking devices when removed (e.g.: locking tabs, elastic stop nuts, self-locking fasteners, cotter pins, etc.) must be replaced.

In order to avoid a poor assembly, tighten screws, bolts, or nuts in accordance with the following procedure:

1. Manually screw all screws, bolts and/or nuts.
2. Apply half the recommended torque value.
3. Tighten fastener to the recommended torque value.

NOTICE **Be sure to use the recommended tightening torque for the specified fastener used.**

NOTE: When possible, always apply torque on the nut.

NOTE: Always torque screws, bolts and/or nuts using a crisscross pattern when multiple fasteners are used to secure a part (eg. a cylinder head). Some parts must be torqued according to a specific sequence and torque pattern as detailed in the installation procedure.

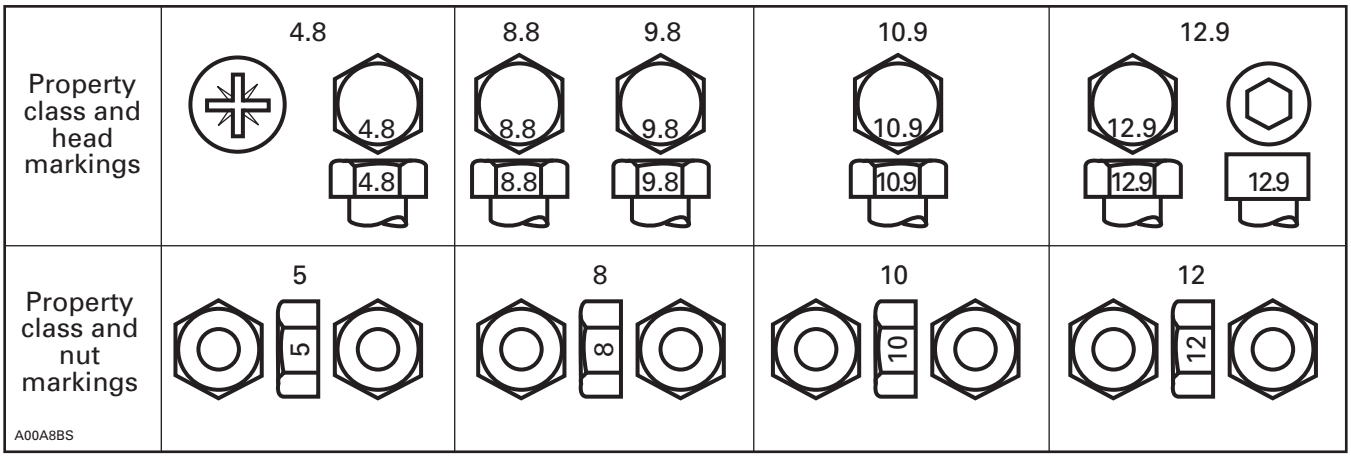

FASTENER SIZE	FASTENER GRADE/TORQUE			
	5.8 Grade	8.8 Grade	10.9 Grade	12.9 Grade
M4	1.5 – 2 N•m (13 – 18 lbf•**in**)	2.5 – 3 N•m (22 – 27 lbf•**in**)	3.5 N•m - 4 N•m (31 lbf•**in** - 35 lbf•**in**)	4 N•m - 5 N•m (35 lbf•**in** - 44 lbf•**in**)
M5	3 N•m - 3.5 N•m (27 lbf•**in** - 31 lbf•**in**)	4.5 N•m - 5.5 N•m (40 lbf•**in** - 49 lbf•**in**)	7 N•m - 8.5 N•m (62 lbf•**in** - 75 lbf•**in**)	8 N•m - 10 N•m (71 lbf•**in** - 89 lbf•**in**)
M6	6.5 N•m - 8.5 N•m (58 lbf•**in** - 75 lbf•**in**)	8 N•m - 12 N•m (71 lbf•**in** - 106 lbf•**in**)	10.5 – 15 N•m (93 – 133 lbf•**in**)	16 N•m (142 lbf•**in**)
M8	15 N•m (133 lbf•**in**)	25 N•m (18 lbf•ft)	32 N•m (24 lbf•ft)	40 N•m (30 lbf•ft)
M10	29 N•m (21 lbf•ft)	48 N•m (35 lbf•ft)	61 N•m (45 lbf•ft)	73 N•m (54 lbf•ft)
M12	52 N•m (38 lbf•ft)	85 N•m (63 lbf•ft)	105 N•m (77 lbf•ft)	128 N•m (94 lbf•ft)
M14	85 N•m (63 lbf•ft)	135 N•m (100 lbf•ft)	170 N•m (125 lbf•ft)	200 N•m (148 lbf•ft)

FASTENER INFORMATION

NOTICE Most components in the vehicles are built with parts dimensioned in the metric system. Most fasteners are metric and must not be replaced by customary fasteners or vice-versa. Mismatched or incorrect fasteners could cause damage to the vehicle or possible personal injury.

SELF-LOCKING FASTENERS PROCEDURE

TYPICAL — SELF-LOCKING FASTENER

The following describes common procedures used when working with self-locking fasteners.

Use a metal brush or a tap to properly clean a threaded hole, then use a solvent. Allow the solvent time to act, approximately 30 minutes, then wipe off. Solvent utilization is to ensure proper adhesion of the product used for locking the fastener.

LOCTITE® APPLICATION PROCEDURE

The following describes common procedures used when working with Loctite products.

NOTE: Always use proper strength Loctite product as recommended in this Shop Manual.

Threadlocker Application for Uncovered Holes (Bolts and Nuts)

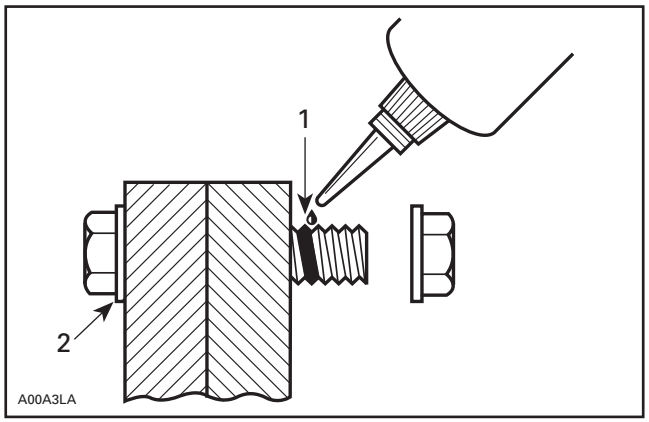

1. Apply here
2. Do not apply

1. Clean threads (bolt and nut) with solvent.
2. Apply *LOCTITE 7649 (PRIMER)* on threads and allow to dry.
3. Choose proper strength Loctite threadlocker.
4. Fit bolt in the hole.
5. Apply a few drops of threadlocker at proposed tightened nut engagement area.
6. Position nut and tighten as required.

Threadlocker Application for Blind Holes

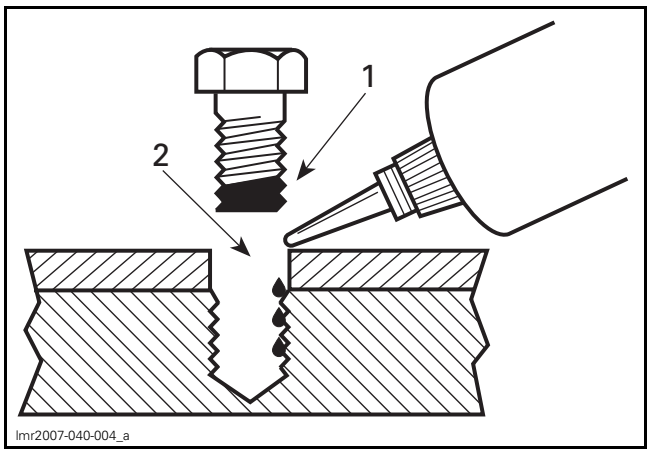

1. On fastener threads
2. On threads and at the bottom of hole

1. Clean threads (bolt and hole) with solvent.
2. Apply *LOCTITE 7649 (PRIMER)* on threads (bolt and nut) and allow to dry for 30 seconds.
3. Choose proper strength Loctite threadlocker.
4. Apply several drops along the threaded hole and at the bottom of the hole.

5. Apply several drops on bolt threads.
6. Tighten as required.

Threadlocker Application for Stud Installation in Blind Holes

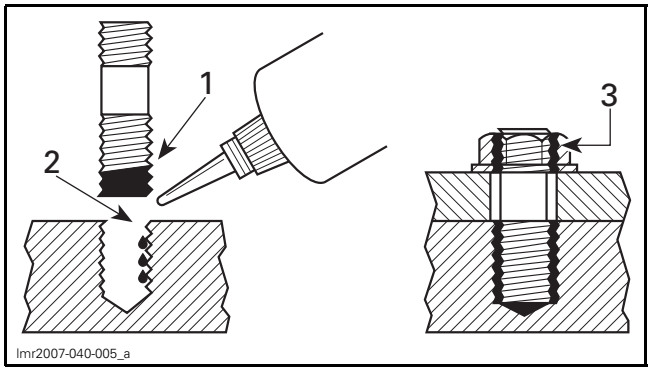

1. On stud threads
2. On threads and in the hole
3. On retaining nut threads

1. Clean threads (stud and hole) with solvent.
2. Apply *LOCTITE 7649 (PRIMER)* on threads and allow to dry.
3. Put 2 or 3 drops of proper strength Loctite threadlocker on female threads and in hole.

NOTE: To avoid a hydro lock situation, do not apply too much Loctite.

4. Apply several drops of proper strength Loctite on stud threads.
5. Install stud.
6. Install cover, part, etc.
7. Apply a few drops of proper strength Loctite on uncovered stud threads.
8. Install and tighten retaining nut(s) as required.

Threadlocker Application for Pre-Assembled Parts

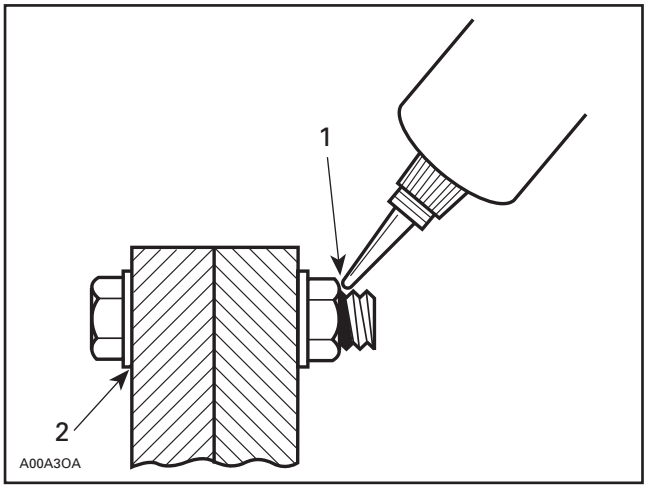

1. Apply here
2. Do not apply

1. Clean bolts and nuts with solvent.
2. Assemble components.
3. Tighten nuts.
4. Apply a few drops of proper strength Loctite on bolt/nut contact surfaces.
5. Avoid touching metal with tip of flask.

NOTE: For preventive maintenance on existing equipment, retighten nuts and apply proper strength Loctite on bolt/nut contact surfaces.

Threadlocker Application for an Adjustment Screw

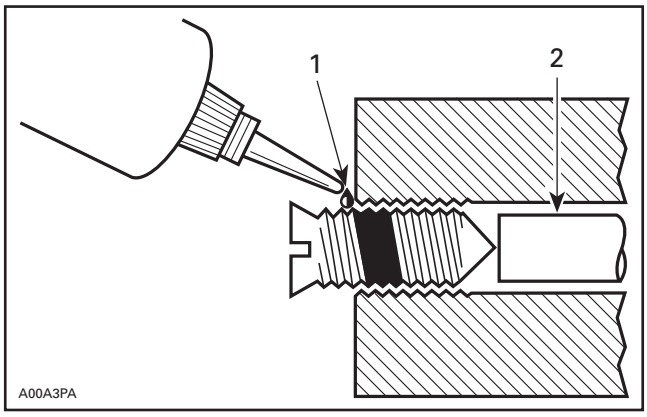

1. Apply here
2. Plunger

1. Adjust screw to proper setting.
2. Apply a few drops of proper strength Loctite threadlocker on screw/body contact surfaces.
3. Avoid touching metal with tip of flask.

NOTE: If it is difficult to readjust, heat screw with a soldering iron (232°C (450°F)).

Application for Stripped Thread Repair

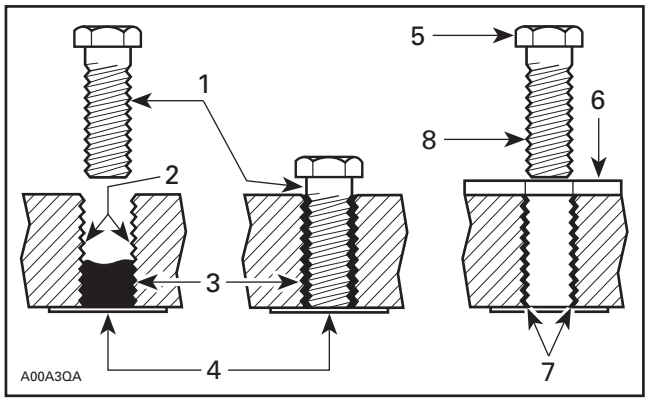

1. *Release agent*
2. *Stripped threads*
3. *Form-A-Thread*
4. *Tapes*
5. *Cleaned bolt*
6. *Plate*
7. *New threads*
8. *Threadlocker*

Standard Thread Repair

Follow instructions on Loctite FORM-A-THREAD 81668 package.

If a plate is used to align bolt:

1. Apply release agent on mating surfaces.
2. Put waxed paper or similar film on the surfaces.
3. Twist bolt when inserting it to improve thread conformation.

NOTE: NOT intended for engine stud repairs.

Repair of Small Holes/Fine Threads

Option 1: Enlarge damaged hole, then follow *STANDARD THREAD REPAIR* procedure.

Option 2: Apply FORM-A-THREAD on the screw and insert in damaged hole.

Permanent Stud Installation (Light Duty)

1. Use a stud of the desired thread length.
2. DO NOT apply release agent on stud.
3. Follow Standard Thread Repair procedure.
4. Allow 30 minutes for Loctite FORM-A-THREAD to cure.
5. Complete part assembly.

Gasket Compound Application

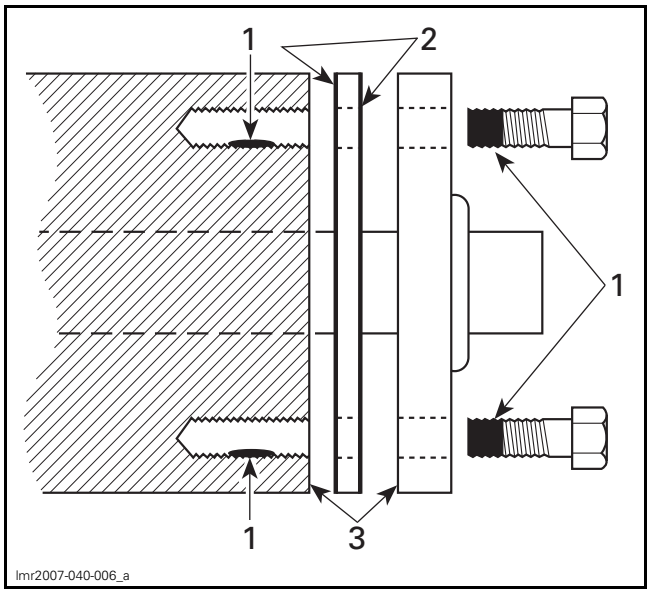

1. *Proper strength Loctite*
2. *Loctite Primer N and Gasket Eliminator 518 on both sides of gasket*
3. *Loctite Primer N only*

1. Remove old gasket and other contaminants using *LOCTITE CHISEL (GASKET REMOVER)*. Use a mechanical means only if necessary.

NOTE: Avoid grinding.

2. Clean both mating surfaces with solvent.
3. Spray Loctite Primer N on both mating surfaces and on both sides of gasket and allow to dry 1 or 2 minutes.
4. Apply *LOCTITE 518* on both sides of gasket, using a clean applicator.
5. Place gasket on mating surfaces and assemble parts immediately.

NOTE: If the cover is bolted to blind holes, apply proper strength Loctite in the hole and on threads. Tighten fastener.

If holes are sunken, apply proper strength Loctite on bolt threads.

6. Tighten as usual.

Threadlocker Application for Mounting on a Shaft

Mounting with a Press

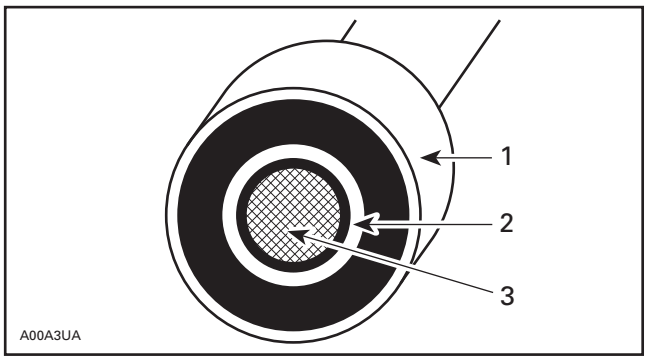

1. Bearing
2. Proper strength Loctite
3. Shaft

1. Clean shaft external contact surface.
2. Clean internal contact surface of part to be installed on shaft.
3. Apply a strip of proper strength Loctite on circumference of shaft contact surface at insertion or engagement point.

NOTE: Retaining compound is always forced out when applied on shaft.

4. DO NOT use antiseize Loctite or any similar product.
5. No curing period is required.

Mounting in Tandem

1. Apply retaining compound on internal contact surface (bore) of parts to be installed.
2. Continue parts assembly as per previous illustration.

Threadlocker Application for Case-In Components (Metallic Gaskets)

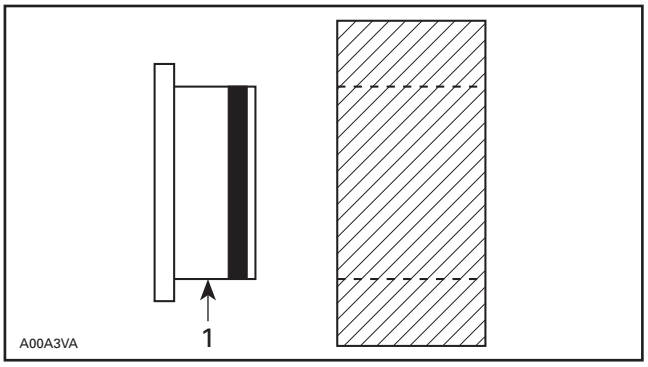

1. Proper strength Loctite

1. Clean inner housing diameter and outer gasket diameter.
2. Spray housing and gasket with *LOCTITE 7649 (PRIMER)*.
3. Apply a strip of proper strength Loctite on leading edge of outer metallic gasket diameter.

NOTE: Any Loctite product can be used here. A low strength liquid is recommended as normal strength and gap are required.

4. Install according to standard procedure.
5. Wipe off excess product.
6. Allow 30 minutes for product to cure.

NOTE: Normally used on worn-out housings to prevent leaking or sliding.

It is generally not necessary to remove gasket compound applied on outer gasket diameter.

12 V BATTERY SUPPLY CABLE
(P/N 529 035 997)

Page: 113

BACKLASH MEASUREMENT TOOL
(P/N 529 035 665)

Page: 263

BACKLASH MEASUREMENT TOOL
(P/N 529 036 387)

Page: 232, 244

BELLOWS CLAMP PLIERS
(P/N 529 036 120)

Page: 228, 261, 271

CV JOINT EXTRACTOR
(P/N 529 036 005)

Page: 229, 261, 271

DIAGNOSTIC CABLE
(P/N 710 000 851)

Page: 113

ECM ADAPTER TOOL
(P/N 529 036 166)

Page: 177, 188, 318

ECM TERMINAL REMOVER 2.25
(P/N 529 036 175)

Page: 178

ECM TERMINAL REMOVER 3.36
(P/N 529 036 174)

Page: 178

FLUKE 115 MULTIMETER
(P/N 529 035 868)

Page: 132, 147, 187, 205, 211, 289, 318

FUEL HOSE ADAPTER
(P/N 529 036 396)

Page: 127, 143

FUEL PUMP NUT TOOL
(P/N 529 035 899)

Page: 133, 148

LARGE HOSE PINCHER
(P/N 529 032 500)

Page: 47, 60

MPI-2 INTERFACE CARD
(P/N 529 036 018)

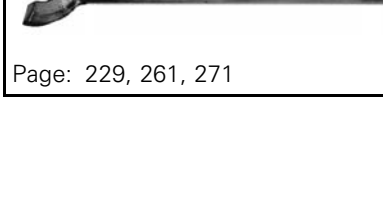

Page: 113

SERVICE TOOLS INDEX

MPI-3 INTERFACE CARD
(P/N 529 036 353)

Page: 113

MULTIFUNCTION DIFFERENTIAL TOOL
(P/N 529 036 385)

Page: 234, 255

OETIKER PLIER
(P/N 295 000 070)

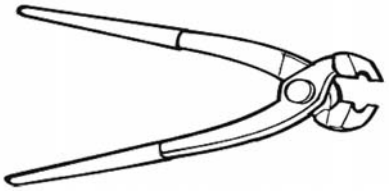

Page: 130, 146

PRESSURE GAUGE
(P/N 529 036 395)

Page: 127, 143

SMALL HOSE PINCHER
(P/N 295 000 076)

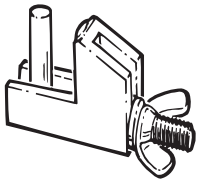

Page: 126, 136, 152

SPANNER SOCKET
(P/N 529 035 649)

Page: 265

SPLINE DRIVER
(P/N 529 036 386)

Page: 233–234, 244, 255

SPRING COMPRESSOR
(P/N 529 036 184)

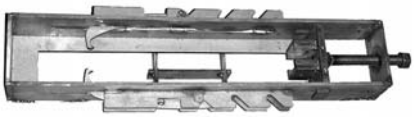

Page: 307

TEST CAP
(P/N 529 035 991)

Page: 47, 59

VACUUM/PRESSURE PUMP
(P/N 529 021 800)

Page: 47, 59, 126, 137, 143, 152, 160, 315

PERIODIC MAINTENANCE SCHEDULE

Maintenance is very important for keeping your vehicle in safe operating condition. Proper maintenance is the owner's responsibility. The vehicle should be serviced as per the maintenance schedule.

The following message appears in the gauge after every 200 hours of operation, to remind you of maintenance requirements: MAINTENANCE REQUIRED. To erase message, use the BRP diagnostic software (BUDS2).

⚠ WARNING

Failure to properly maintain the vehicle according to the maintenance schedule and procedures can make it unsafe to operate.

EPA Regulation - Canadian and USA Vehicles

A repair shop or person of the owner's choosing may maintain, replace, or repair emission control devices and systems. These instructions do not require components or service by BRP or authorized Can-Am Off-Road dealers.

Although an authorized Can-Am Off-Road dealer has an in-depth technical knowledge and tools to service your vehicle, the emission-related warranty is not conditioned on the use of an authorized Can-Am Off-Road dealer or any other establishment with which BRP has a commercial relationship.

Proper maintenance is the owner’s responsibility. A warranty claim may be denied if, among other things, the owner or operator caused the problem through improper maintenance or use.

You must follow the instructions for fuel requirements in the fueling section of this manual. Even if gasoline containing greater than ten volume percent ethanol is readily available, the US EPA issued a prohibition against the use of gasoline containing greater than 10 vol% ethanol that applies to this vehicle. The use of gasoline containing greater than 10 vol% ethanol with this engine may harm the emission control system.

Operation in trail riding conditions
Operation in severe riding conditions (dusty or muddy) or carrying heavy loads condition

EVERY YEAR OR EVERY 3 000 KM (2,000 MI) OR 200 HOURS (whichever comes first)
EVERY YEAR OR EVERY 1 500 KM (1,000 MI) OR 100 HOURS (whichever comes first)
Check fault codes
Perform all items indicated in the pre-ride inspection.
Replace engine oil and filter
Inspect gearbox oil level (HD9 and HD10 models) and look for contamination (every 3000 km)
Replace gearbox oil (HD9 and HD10 models) (Perform at the first 3000 km)
Inspect and clean engine air filter. Replace if needed
Inspect steering system for abnormal play and damages (column, rack and pinion, bellows)
Inspect the tie rod ends and ball joints for play and inspect boots condition
Inspect wheel bearings for abnormal play
Inspect shock absorber bushings, suspension arm bushing and wear plates. Replace if needed.
Inspect CV joints and rubber boots condition (check for abnormal play in the joints and for cuts in the rubber boots)
Lubricate suspension arms and stabilizer bar bushings
Inspect and clean the brake system (fluid level, pads, discs, lines, calipers)
Check front differential oil level and look for contamination and overall condition (vents, mount bolt torque, seals)

EVERY YEAR OR EVERY 3 000 KM (2,000 MI) OR 200 HOURS (whichever comes first)
EVERY YEAR OR EVERY 1 500 KM (1,000 MI) OR 100 HOURS (whichever comes first)
Inspect rear final drive oil level (HD7 models) and look for contamination and overall condition (vents, mount bolt torque, seals)
Inspect battery condition and connections
Inspect propeller shaft U-joints for abnormal play. On HD7, inspect rubber boot condition
Clean exhaust pipes and muffler area
Clean muffler spark arrester
Adjust valve clearance
Replace fuel vent breather filter
Inspect CVT drive belt
Clean CVT pulleys
Inspect centrifugal levers, rollers, of drive pulley
Inspect, clean and lubricate drive pulley bearing (HD7)
Inspect drive pulley hub needle bearing (HD9/HD10)
Inspect input and output shaft seals (engine, gearbox (HD9 and HD10 models), rear final drive (HD7 models), front differential)
Tighten cage fasteners
Tighten suspension fasteners
Inspect and clean seat belts retractors and buckles
Verify coolant level and adjust if needed
Lubricate door latches (On Cab models)

EVERY TWO YEAR OR EVERY 6 000 KM (4,000 MI) OR 400 HOURS (whichever comes first)
EVERY TWO YEAR OR EVERY 3 000 KM (2,000 MI) OR 200 HOURS (whichever comes first)
Check fault codes
Perform all items indicated in the pre-ride inspection.
Replace front differential oil
Replace gearbox oil (HD9 and HD10 models)
Replace rear final drive oil (HD7 models)
Replace brake fluid (must be performed every 2 years)
Verify cooling system
Test engine coolant strength + level
Verify fuel system for leaks (including evaporative emission system components if equipped)
Verify fuel pump pressure (idle and WOT)
Replace spark plugs
Clean vehicle speed sensor
Replace canister vent pre-filter (evaporative emission system) if equipped

EVERY 5 YEARS OR EVERY 12 000 KM (8,000 MI) (whichever comes first)
EVERY 5 YEARS OR EVERY 6 000 KM (4,000 MI) (whichever comes first)
Replace engine coolant

STORAGE PROCEDURE

SERVICE PRODUCTS

Description	Part Number	Page
BRP HEAVY DUTY CLEANER	293 110 001	8
CLEANER AND DEGREASER PRO C1	779262	8
FUEL STABILIZER (EUR)	779183	7
FUEL STABILIZER	779171	7
LUBRICANT AND ANTI-CORROSIVE (EUR)	779224	8
LUBRICANT AND ANTI-CORROSIVE	779168	8
OIL STORAGE (USA)	779182	7
OIL STORAGE	779173	7

GENERAL

If the vehicle is not used or is to be stored for an extended period of time, more than 4 months, be sure to perform the storage procedures described below.

Where applicable, refer to the appropriate subsections in this manual for the required tasks outlined in these procedures.

PROCEDURES

To facilitate the inspection and ensure adequate lubrication of components, it is recommended to clean the entire vehicle. Refer to *CLEANING THE VEHICLE* in this subsection.

FUEL SYSTEM

Protecting the Fuel System

With the new fuel additives, it is critical to use fuel stabilizer or an equivalent to prevent fuel deterioration and fuel system gumming. Follow the manufacturer's instructions for proper use.

SERVICE PRODUCT	
Scandinavia	FUEL STABILIZER (EUR) (P/N 779183)
All other countries	FUEL STABILIZER (P/N 779171)

NOTICE **Fuel stabilizer should be added prior to engine lubrication to ensure fuel system components protection against varnish deposits.**

Pour fuel stabilizer in fuel tank. Fill up fuel tank.

ENGINE

Lubricating the Engine Internal Parts

Engine internal parts must be lubricated to protect them from rust formation during the storage period.

Proceed as follows:

1. Remove spark plug(s).
2. Spray storage oil into cylinder(s).

SERVICE PRODUCT	
Except USA	OIL STORAGE (P/N 779173)
USA	OIL STORAGE (USA) (P/N 779182)

3. Crank the engine over, 1 or 2 seconds maximum, to lubricate cylinders.
4. Reinstall the spark plugs.

NOTE: Do not run engine during storage period.

5. Block muffler outlet, engine air inlet and CVT outlet with a rags.

NOTICE **To avoid causing damage to vehicle, use memory aid to make sure rags are removed from their installed location.**

Protecting the CVT

Remove drive belt. Refer to the appropriate *CONTINUOUSLY VARIABLE TRANSMISSION (CVT)* subsection.

Close CVT cover.

Block CVT outlet with a rag.

NOTE: To reach the CVT outlet, detach it from exhaust heat shield.

ELECTRICAL SYSTEM

Removing the Battery

Remove the battery.

Charge and store battery.

CHASSIS

Lubrication

Lubricate front and rear suspension and rear sway bar.

Tire Pressure

Inflate tires to the recommended pressure.

Cleaning the Vehicle

Wash and dry the vehicle.

NOTICE **Never use a high pressure washer to clean the vehicle. USE LOW PRESSURE ONLY (like a garden hose). The high pressure can cause electrical or mechanical damages.**

Remove any dirt or rust.

To clean the vinyl or plastic parts, use only flannel clothes with following recommended service product.

SERVICE PRODUCT
CLEANER AND DEGREASER PRO C1 (P/N 779262)

NOTICE **It is necessary to use flannel cloths on plastic parts to avoid damaging surfaces. Never clean plastic parts with strong detergent, degreasing agent, paint thinner, acetone, products containing chlorine, etc.**

To clean the entire vehicle, including metallic parts use following recommended service product.

SERVICE PRODUCT
BRP HEAVY DUTY CLEANER (P/N 293 110 001)

Inspect the vehicle and repair any damage. Touch up all metal spots where paint has been scratched off. Spray all metal parts with following recommended service product.

SERVICE PRODUCT	
Scandinavia	LUBRICANT AND ANTI-CORROSIVE (EUR) (P/N 779224)
All other countries	LUBRICANT AND ANTI-CORROSIVE (P/N 779168)

Protecting the Vehicle

Protect the vehicle with a cover to prevent dust accumulation during storage.

NOTICE **The vehicle has to be stored in a cool and dry place and covered with an opaque tarpaulin. This will prevent sun rays and grime from affecting plastic components and vehicle finish.**

PRESEASON PREPARATION

Proper vehicle preparation is required after a storage period.

Any worn, broken or damaged parts found must be replaced.

Remove rags that were installed for storage: engine air inlet hose, CVT outlet hose and muffler.

Clean drive and driven pulleys to remove storage protective lubricant, then reinstall drive belt. Refer to *CONTINUOUSLY VARIABLE TRANSMISSION (CVT)*.

Remove parts required to allow inspection of entire engine air inlet system. Check for animal nests and other foreign material. Reinstall removed parts.

Drain fuel tank and fill with fresh fuel if a fuel stabilizer was not used for storage.

Reinstall battery. Refer to *CHARGING SYSTEM* subsection.

Inflate tires to the recommended pressure.

NOTE: Perform any due maintenance items as per the *MAINTENANCE SCHEDULE*.

Test drive vehicle.

SPECIAL PROCEDURES

SERVICE PRODUCTS

Description	Part Number	Page
LUBRICANT AND ANTI-CORROSIVE	779168	12

GENERAL

Component failures resulting from these events are not warrantable.

Refer to the appropriate subsections in this manual for the required tasks outlined in these procedures.

ROLLED OVER VEHICLE

In the event the vehicle was rolled over, check the following.

Inspect suspension components and steering system components.

Inspect body and chassis for damage (welded joints, bent or cracked parts).

Pay particular attention to the cage, shoulder protector, side nets, seat belts and their mechanisms.

⚠ WARNING

Do not use vehicle if any of the safety devices are damaged or inoperative.

Check all fluids level before restarting engine.

NOTICE **Check for oil accumulation in the air intake system. Check air filter.**

After restarting engine, check multifunction gauge if any malfunction is detected.

Troubleshoot and repair as required before using vehicle.

SUBMERGED VEHICLE

In the event the vehicle was submerged, proceed with the following.

NOTICE **A submerged vehicle may cause several damages (short and long term) if not serviced adequately or soon enough. Do not crank or start engine.**

Drain the entire air intake system. Inspect the throttle body. Remove parts as required.

Replace the air filter.

Drain, inspect and clean the CVT.

Empty muffler (removal required).

Unplug ECM, multifunction gauge and DPS connectors, and open fuse boxes. Check for presence of water. Dry as necessary.

Inspect all lights for water intrusion. Dry as required.

Replace the engine oil (without starting the engine).

Remove spark plugs. Crank engine in drowned mode to expel any water.

⚠ **CAUTION Keep away from spark plug holes to avoid to be splashed when cranking engine.**

Add a small quantity of engine oil in cylinders (approximately 2 teaspoonfuls).

Install spark plugs (replace if required).

Look for water in fuel tank, in doubt, flush fuel tank and refill with new gas.

Look for water in brake system. Replace brake fluid as required.

NOTICE **Before starting engine, use the BRP diagnostic software and check for fault codes.**

Start the engine and allow it to run at idle speed until the engine reaches its operating temperature.

Stop the engine.

Change engine oil and filter.

NOTE: Change oil as many times as necessary, until there is no whitish appearance in engine oil.

Check gearbox oil (HD9 and HD10). Replace oil if contaminated with water.

Replace oil of front differential.

Replace oil of final drive (HD7).

Check vent tubes. Clean if required.

Lubricate front and rear suspensions and propeller shaft joints. Refer to *FRONT SUSPENSION* and *REAR SUSPENSION* subsections.

Spray all metal parts with lubricant and anti-corrosive.

SERVICE PRODUCT
LUBRICANT AND ANTI-CORROSIVE (P/N 779168)

Test drive to confirm proper operation.

ENGINE REMOVAL AND INSTALLATION (HD7)

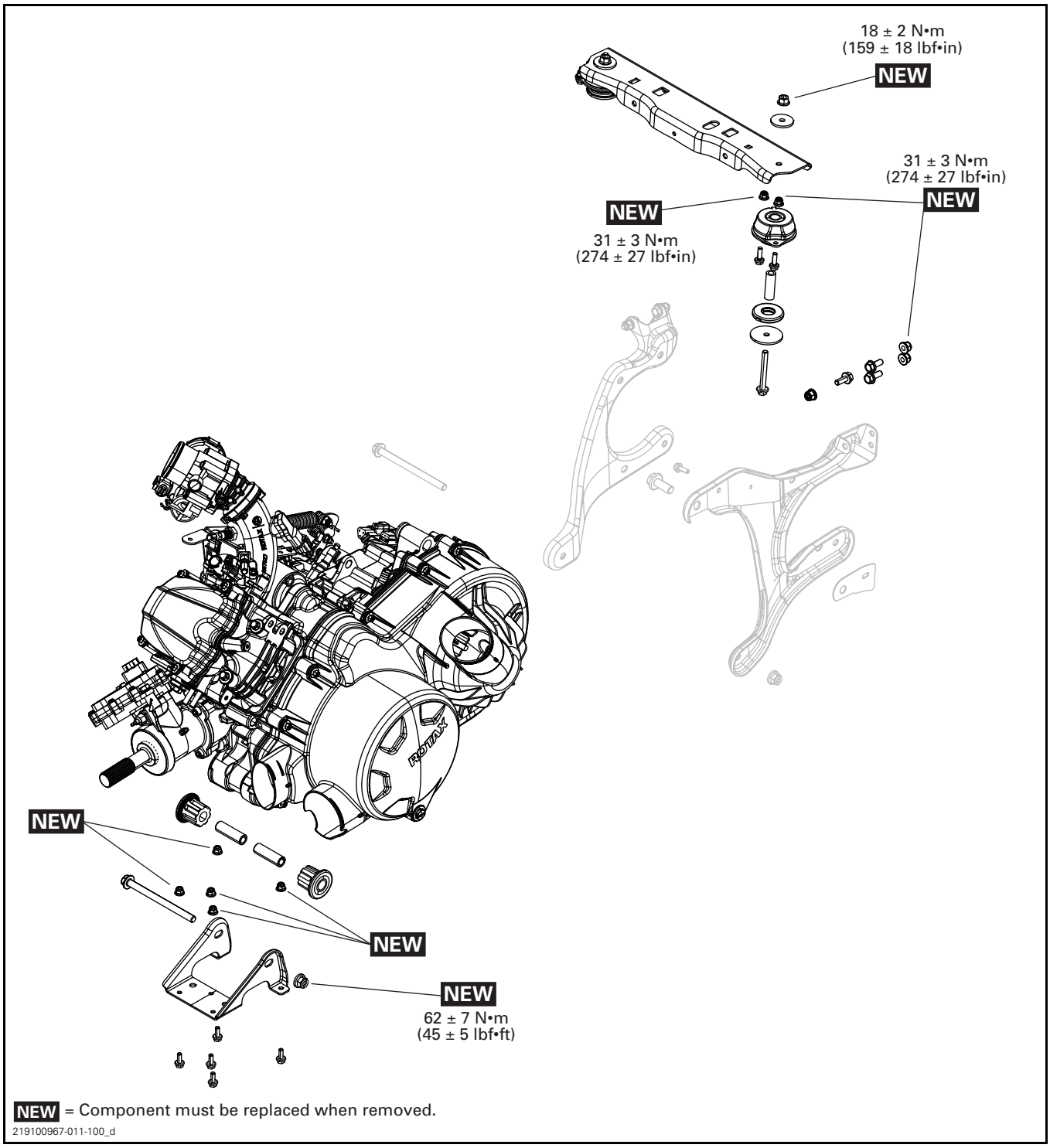

PROCEDURES

REMOVING THE ENGINE

Preparing the Vehicle and Engine

1. Place vehicle on a workstation that will have access to an engine-lifting hoist.
2. Safely lift and support the vehicle. Refer to *INTRODUCTION* subsection.
3. Disconnect the battery.

NOTICE **Always disconnect the battery cables exactly in the specified order, the BLACK (-) cable first.**

4. Remove rear drive shafts. Refer to *REAR DRIVE* subsection.
5. Remove cargo box.
6. Remove the muffler tail pipe.
7. Remove the bolts retaining the rear engine support to the chassis.

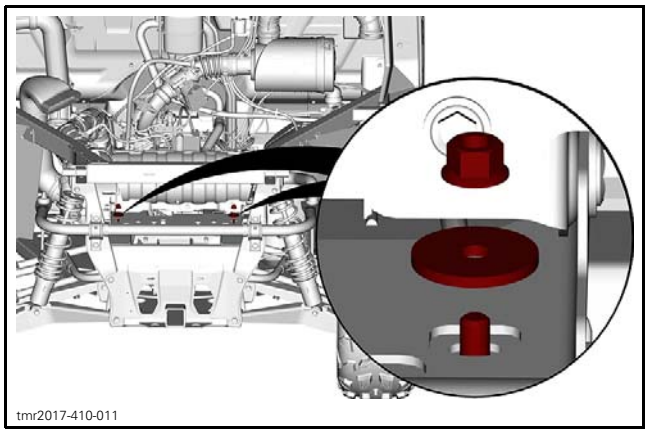

TYPICAL

8. Drain engine oil. Refer to *LUBRICATION SYSTEM* subsection.

NOTE: Drain engine oil only if engine overhaul is necessary.

9. Drain the engine coolant.
   9.1 Pinch the coolant hoses near the engine using a large hose pincher.

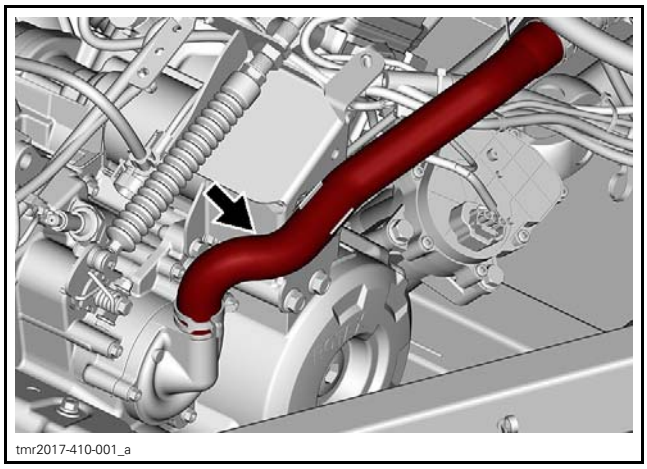

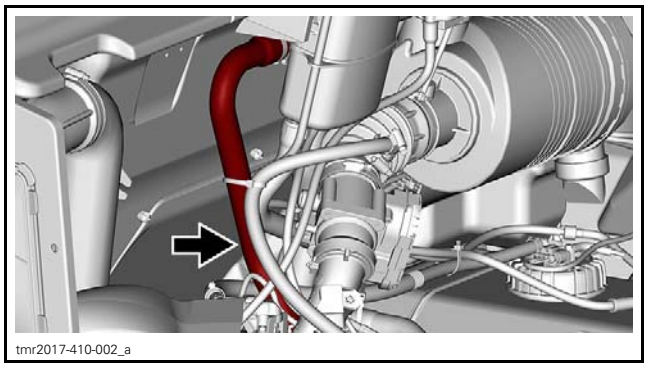

   9.2 Open coolant drain plug and drain coolant.

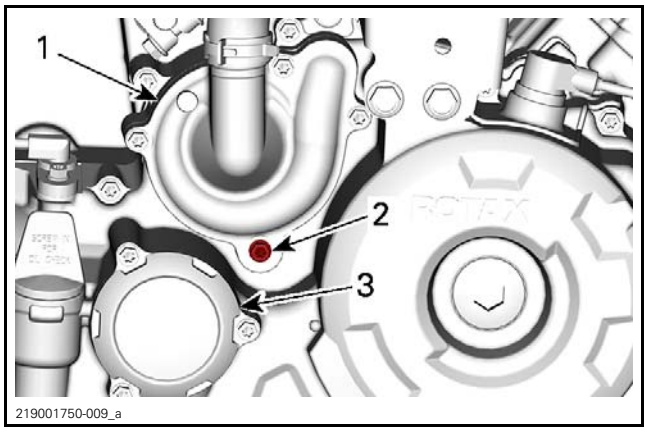

1. Water pump cover
2. Coolant drain plug
3. Oil filter cover

10. Disconnect engine coolant hoses from the engine.
11. Disconnect the crankcase vent from the air intake bellows.

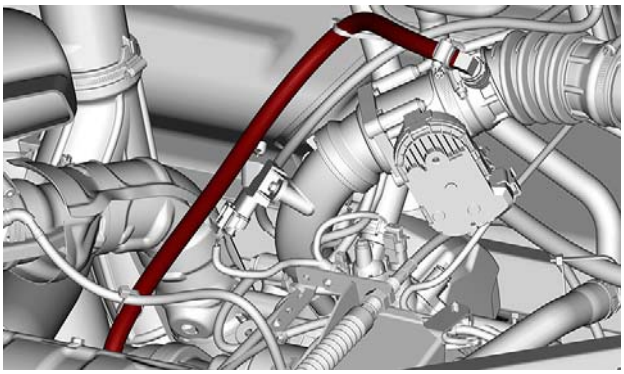
tmr2017-410-003

12. Disconnect the air intake bellows from the air filter housing.
13. Remove the CVT ducts.
14. Detach the shifter cable from its bracket and remove it.

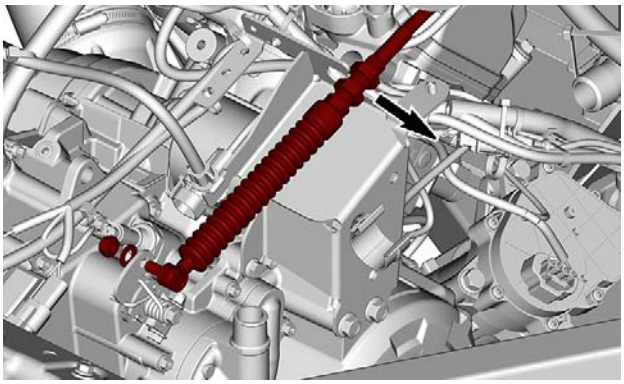
tmr2017-410-004_a

15. Remove the front engine support **nut**.
16. Remove the 4X4 coupling unit. Refer to the *GEARBOX AND 4X4 COUPLING UNIT* subsection.
17. Disconnect voltage regulator.

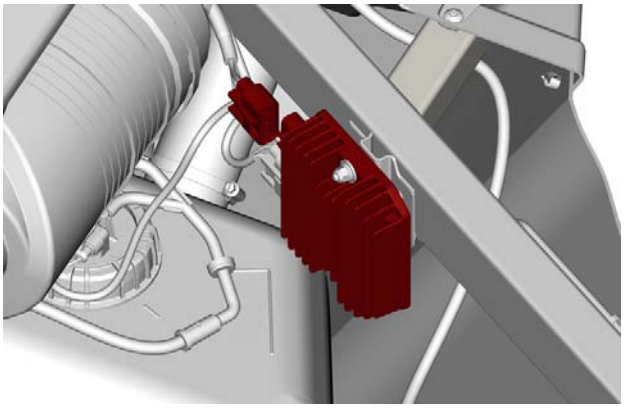
tmr2016-110-105

18. Disconnect the following connectors and cables from engine. Note the locking ties location for reinstallation.
    - HIC (Engine Harness Connector)
    - HO2S (Oxygen Sensor)
    - OPS (Oil Pressure Sensor)
    - VSS (Vehicle Speed Sensor)
    - GBPS (Gearbox Position Sensor)
    - CPS (Crankshaft Position Sensor)
    - Engine ground cable
    - Spark plug
    - Fuel injector
    - MAPTS (Manifold Absolute Pressure and Temperature Sensor)
    - Throttle body
    - CTS (Coolant Temperature Sensor)
    - Starter cable (retaining nut on starter motor)
    - Magneto
    - Ignition coil.

Lifting the Engine

1. Install a hook and strap through the rear engine lifting hole.

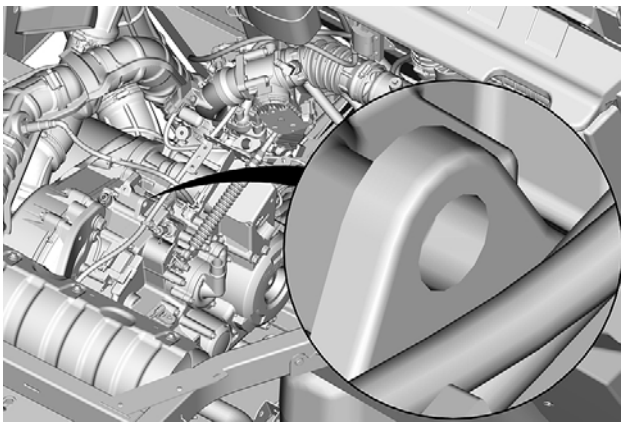
tmr2017-410-005

2. Slightly lift engine to ease removal of front engine support bolt.
3. Remove the front engine support bolt.
4. Remove engine from vehicle.
5. Remove the final drive unit from the engine, refer to the *REAR FINAL DRIVE* subsection.

INSTALLING THE ENGINE

The installation is the reverse of the removal procedure. However, pay attention to the following.

Prior to install engine, inspect condition of engine mounts.

Install all engine supports bolts, then tighten bolts.

Final Assembly Procedure

1. Fill engine with the recommended oil and quantity. Refer to *LUBRICATION SYSTEM* subsection.
2. Fill and bleed cooling system. Refer to *COOLING SYSTEM* subsection.
3. Check for any leaks.
4. Test drive vehicle to confirm proper operation.

ENGINE MOUNTS

Removing the Engine Mount

Insert a punch into engine mount bushing and push the opposite engine mount out.

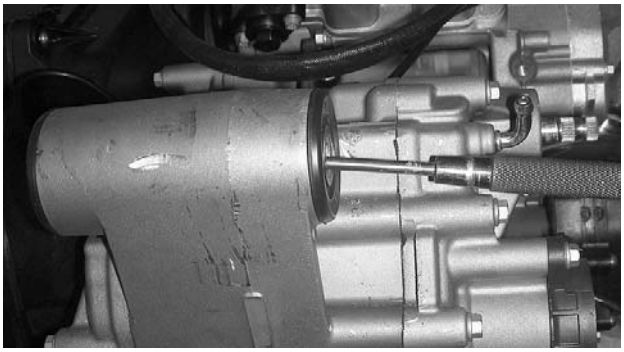

tmr2011-007-011

TYPICAL

Installing the Engine Mount

The installation is the reverse of the removal procedure.

ENGINE REMOVAL AND INSTALLATION (HD9 / HD10)

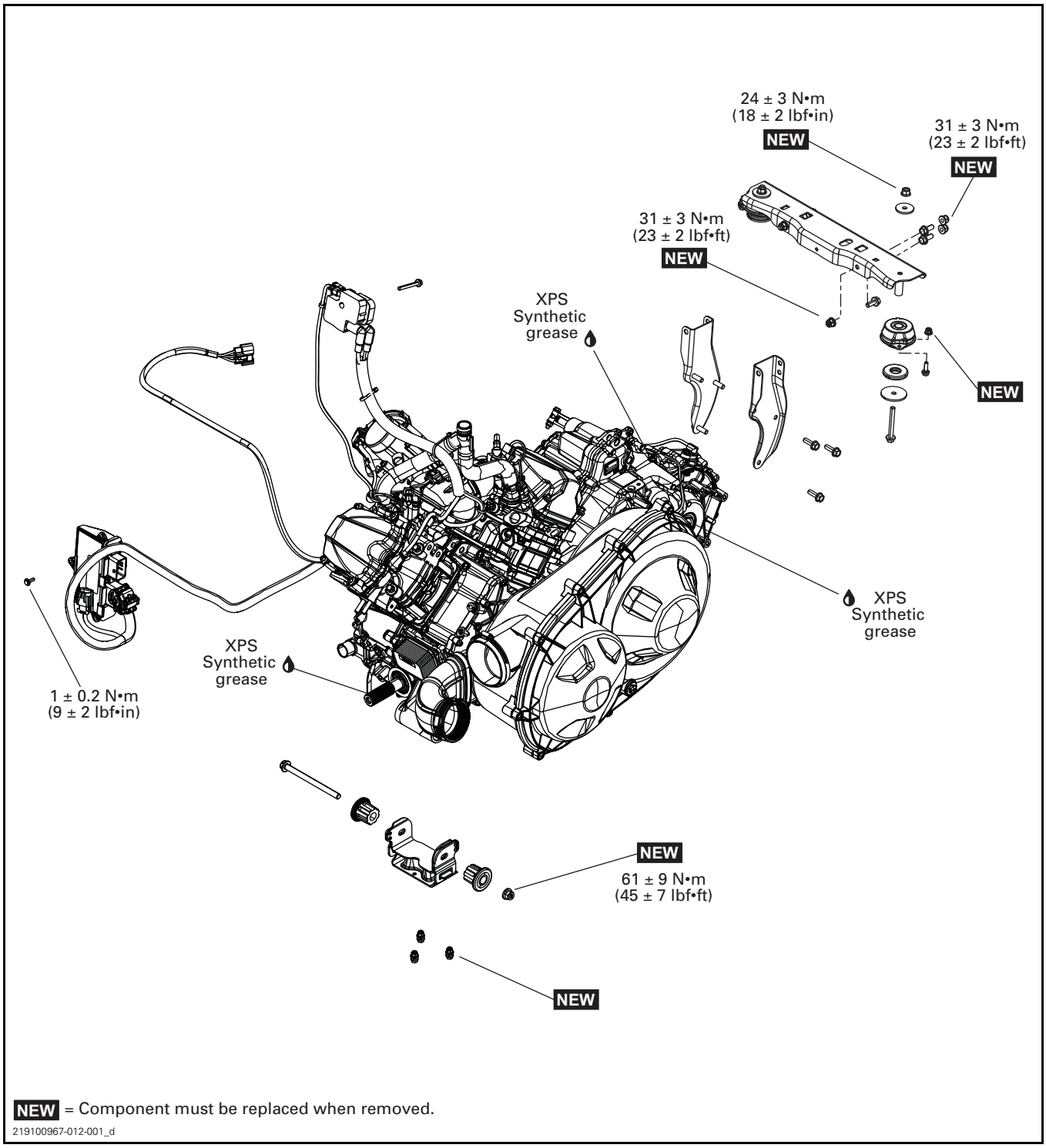

NEW = Component must be replaced when removed.

219100967-012-001_d

PROCEDURES

ENGINE REMOVAL

Preparing the Vehicle and Engine

1. Place vehicle on a workstation that will have access to an engine-lifting hoist.
2. Safely lift and support the vehicle. Refer to *INTRODUCTION* subsection.
3. Disconnect the battery.

NOTICE **Always disconnect the battery cables exactly in the specified order, the BLACK (-) cable first.**

4. Remove rear drive shafts. Refer to *REAR DRIVE* subsection.
5. Remove cargo box.
6. Remove exhaust. Refer to *EXHAUST SYSTEM* subsection.

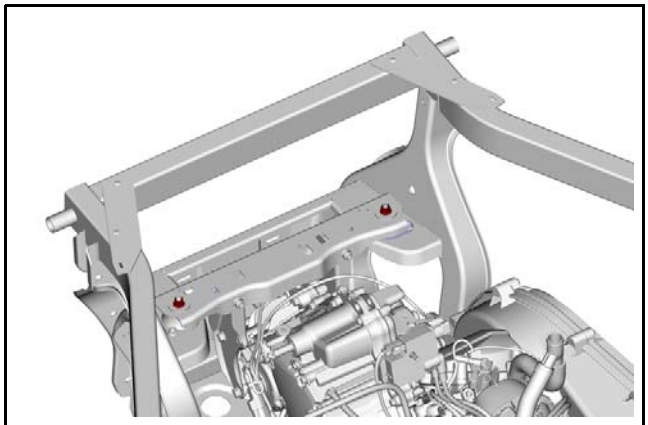
tmr2016-110-107

NOTE: Remove screws securing exhaust support bracket to frame. Leave muffler support bracket attached to rear engine support brackets.

7. Remove rear engine support bolts.
8. Drain engine oil. Refer to *LUBRICATION SYSTEM* subsection.

NOTE: Drain engine oil only if engine overhaul is necessary.

9. Drain the engine coolant.
   9.1 Pinch coolant hose near water pump.

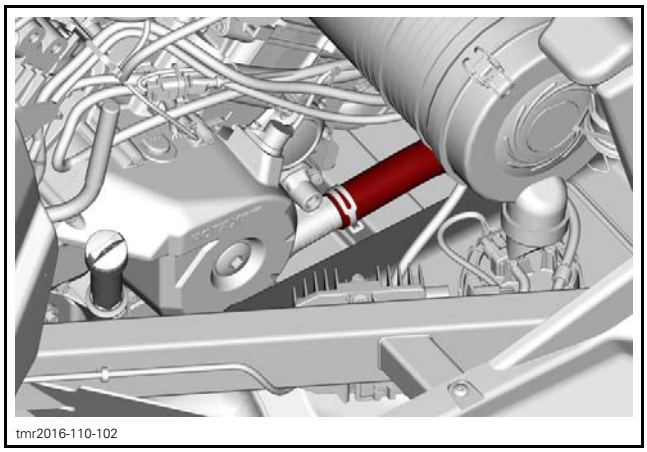
tmr2016-110-102

   9.2 Pinch coolant hose near coolant bottle above Y fitting.

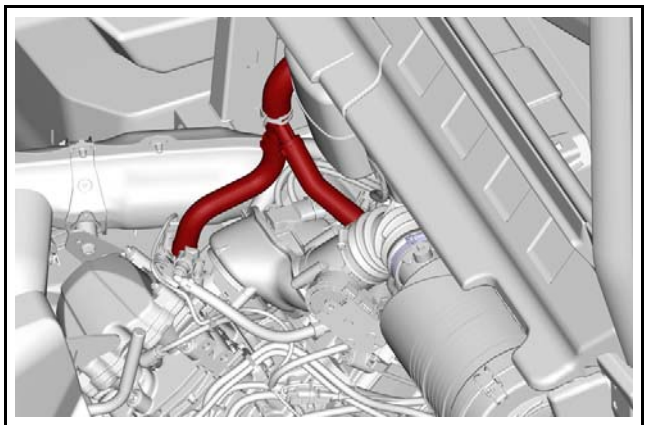
tmr2016-110-101

   9.3 Open coolant drain plug.

NOTE: Completely drain engine coolant only if engine overhaul is necessary. Refer to *COOLING SYSTEM* subsection.

10. Remove fuel tank. Refer to *FUEL TANK AND FUEL PUMP* subsection.
11. Disconnect engine coolant hose above the Y fitting connecting to both cylinder heads.
12. Remove the air intake bellow.

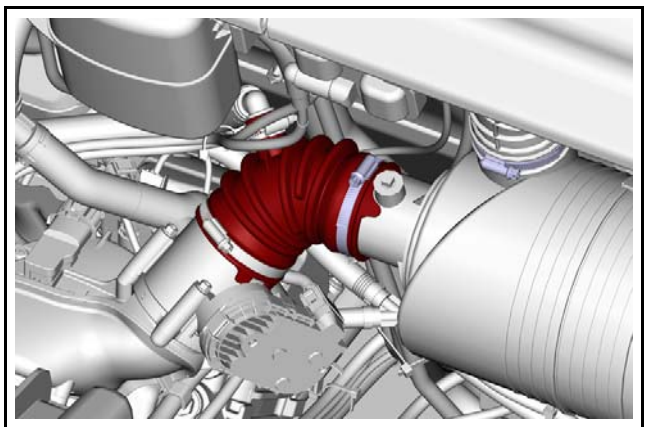
tmr2016-110-106

NOTE: DO NOT Remove the front and rear head pipes from engine.

13. Disconnect the coolant hose at water pump.
14. Disconnect the gearbox vent hose.

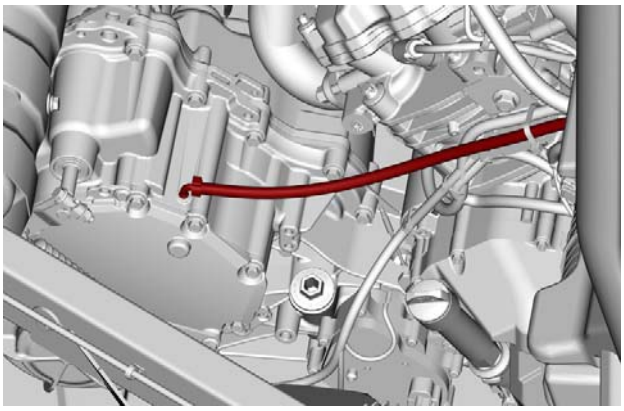
tmr2016-110-103

15. Remove the CVT outlet duct.
16. Remove the CVT inlet duct.
17. Unplug and remove the CTS (coolant temperature sensor).
18. Detach the shifter cable from its bracket and remove it.

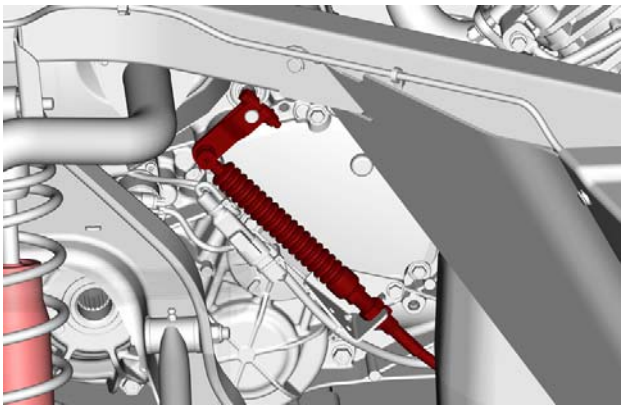
tmr2016-110-104

19. Remove the front engine support nut.
20. Disconnect the crankcase vent hose.
21. Disconnect voltage regulator.

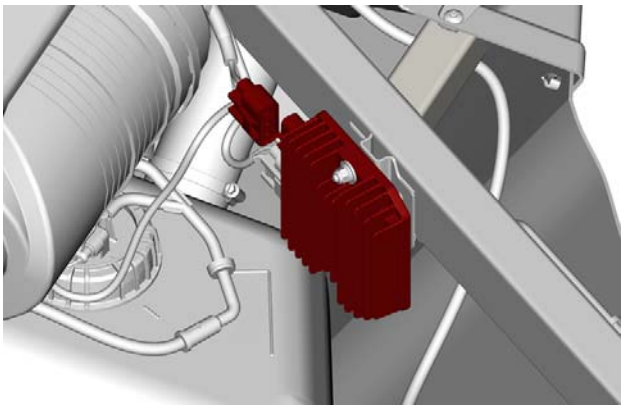
tmr2016-110-105

22. Unplug all remaining connectors and remove required cables from engine. Cut all necessary locking ties.
    - Starter cable (retaining nut on starter body)
    - GBPS (Gear Box Position Sensor)
    - Vehicle speed sensor
    - Actuator connector
    - Neutral switch
    - 2WD/4WD and differential lock actuator
    - OPS (Oil Pressure Sensor)
    - CPS (Crankshaft Position Sensor)
    - Engine ground cable
    - Magneto.

Lifting Engine

1. Install a hook and strap through the rear engine lifting holes and route a second lifting strap under the front cilynder.
2. Remove retaining screws on front and rear propeller shafts.
3. Slightly lift engine to ease removal of front engine support bolt.
4. Remove the front engine support bolt.
5. Raise the front of engine to separate front propeller shaft from engine.

NOTE: If the propeller shaft cannot be removed easily, remove bolts retaining the front differential to create more space. Refer to *FRONT DRIVE* subsection.

6. Remove engine from vehicle.

ENGINE INSTALLATION

The installation is the reverse of the removal procedure. However, pay attention to the following.

Prior to install engine, inspect condition of engine mounts.

Connect the front propeller shaft to engine output shaft while lowering engine.

Install rear and front engine mounting bolts then torque all mounting bolts.

Install air intake bellow. Ensure alignment marks are properly positioned and torque to specification. Refer to *AIR INTAKE SYSTEM*.

Install exhaust. Refer to *EXHAUST SYSTEM*.

Final Assembly Procedure

1. Fill engine with the recommended oil and quantity. Refer to *LUBRICATION SYSTEM* subsection.
2. Fill and bleed cooling system. Refer to *COOLING SYSTEM* subsection.
3. Check for any leaks.
4. Test drive vehicle to confirm proper operation.

ENGINE MOUNTS

Removing the Front Engine Mount

Insert a punch into front engine mount bushing and push the opposite engine mount out.

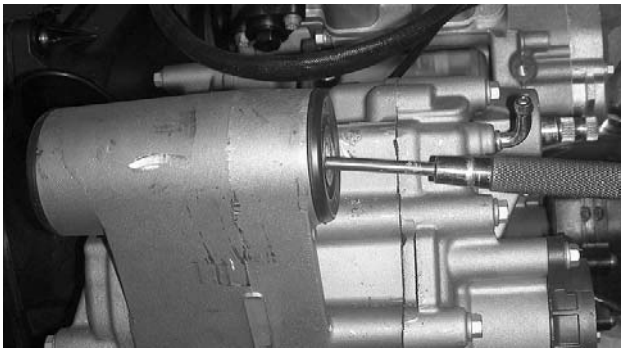

tmr2011-007-011

TYPICAL

Installing the Engine Mount

The installation is the reverse of the removal procedure.

AIR INTAKE SYSTEM (HD7)

AIR FILTER HOUSING

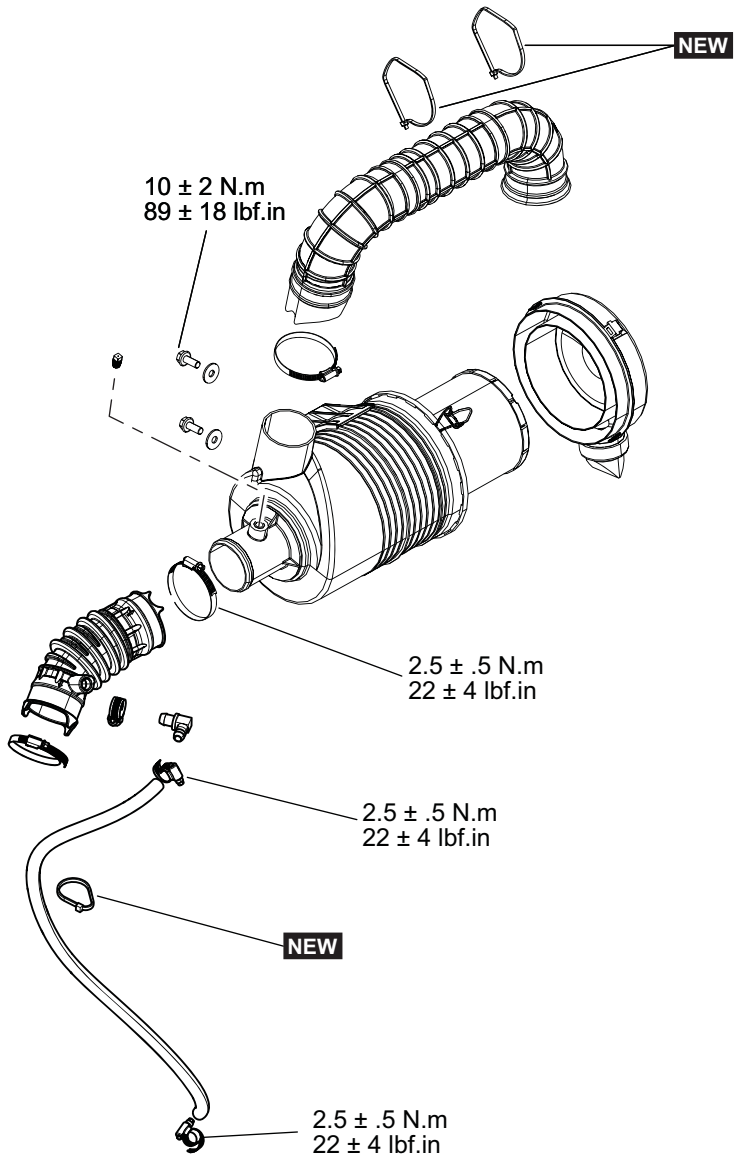

NEW = Component must be replaced when removed.

tmr2107-411-101

GENERAL

NOTICE **Never modify the air intake system. Otherwise, engine performance degradation or damage can occur. The engine is calibrated to operate specifically with these components.**

PROCEDURES

AIR INTAKE SYSTEM

Replacing the Air Filter

NOTICE **Never modify the air intake system. Otherwise, engine performance degradation or damage can occur. The engine is calibrated to operate specifically with these components.**

Air Filter Replacement Guideline

Air filter replacement should be adjusted according to riding conditions as it is critical to ensure proper engine performance and life span.

Air filter replacement frequency must be increased for the following dusty conditions:

- Riding on dry sand
- Riding on dry dirt covered surfaces
- Riding on dry gravel roads or similar conditions.
- Riding in areas with high concentration of seeds or crop husks.
- Riding in severe snow conditions.

NOTICE **When riding in dusty conditions or sand, the air box needs to be cleaned before every ride.**

NOTE: Riding in a group in these conditions would increase even more the air filter replacement requirement.

Removing the Air Filter

Tilt cargo box.

Unlatch air filter cover and remove air filter.

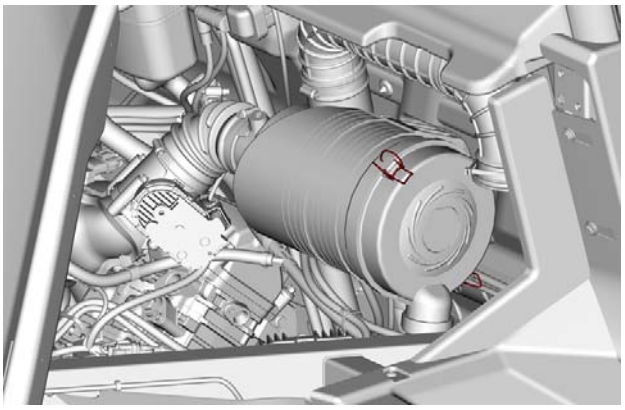

The filter fits tightly over the outlet tube and there will be some initial resistance. Gently move the end of the filter back and forth to break the seal, then rotate while pulling straight out. Avoid knocking the filter against the housing.

Replace air filter if clogged. Always use the recommended air filter or an equivalent.

Cleaning the Duckbill Valve

Visually check and physically squeeze the duckbill valve. Make sure the valve is flexible and not inverted, damaged or plugged.

Installing the Air Filter

Insert the filter carefully. Seat the filter by hand, making certain it is inserted completely into the air cleaner housing. Apply pressure by hand at the outer rim of the filter, not the flexible center.

Secure air filter cover with latches.

AIR FILTER HOUSING

Removing Air Filter Housing

Release clamps and remove air filter cover and filter.

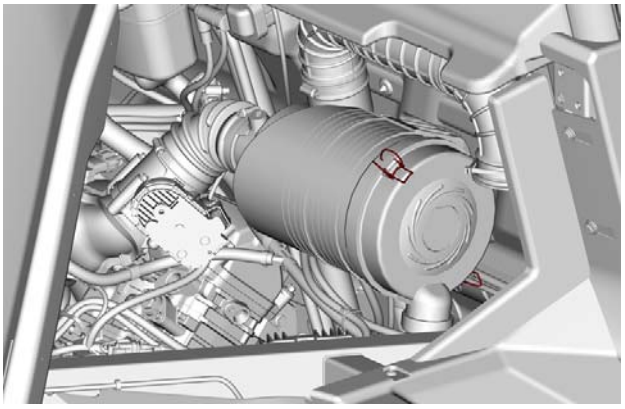

TYPICAL

Remove fasteners behind passenger seat.

tmr2016-111-002

Installing Air Filter Housing

For installation, reverse the removal procedure but pay attention to the following.

Align installation marks on throttle body, air box and housing vent hose and make sure bellow is not crushed.

Do not overtighten.

TIGHTENING TORQUE	
Air filter housing screws	10 N•m ± 2 N•m (89 lbf•**in** ± 18 lbf•**in**)

AIR INTAKE SYSTEM (HD9 / HD10)

AIR FILTER HOUSING

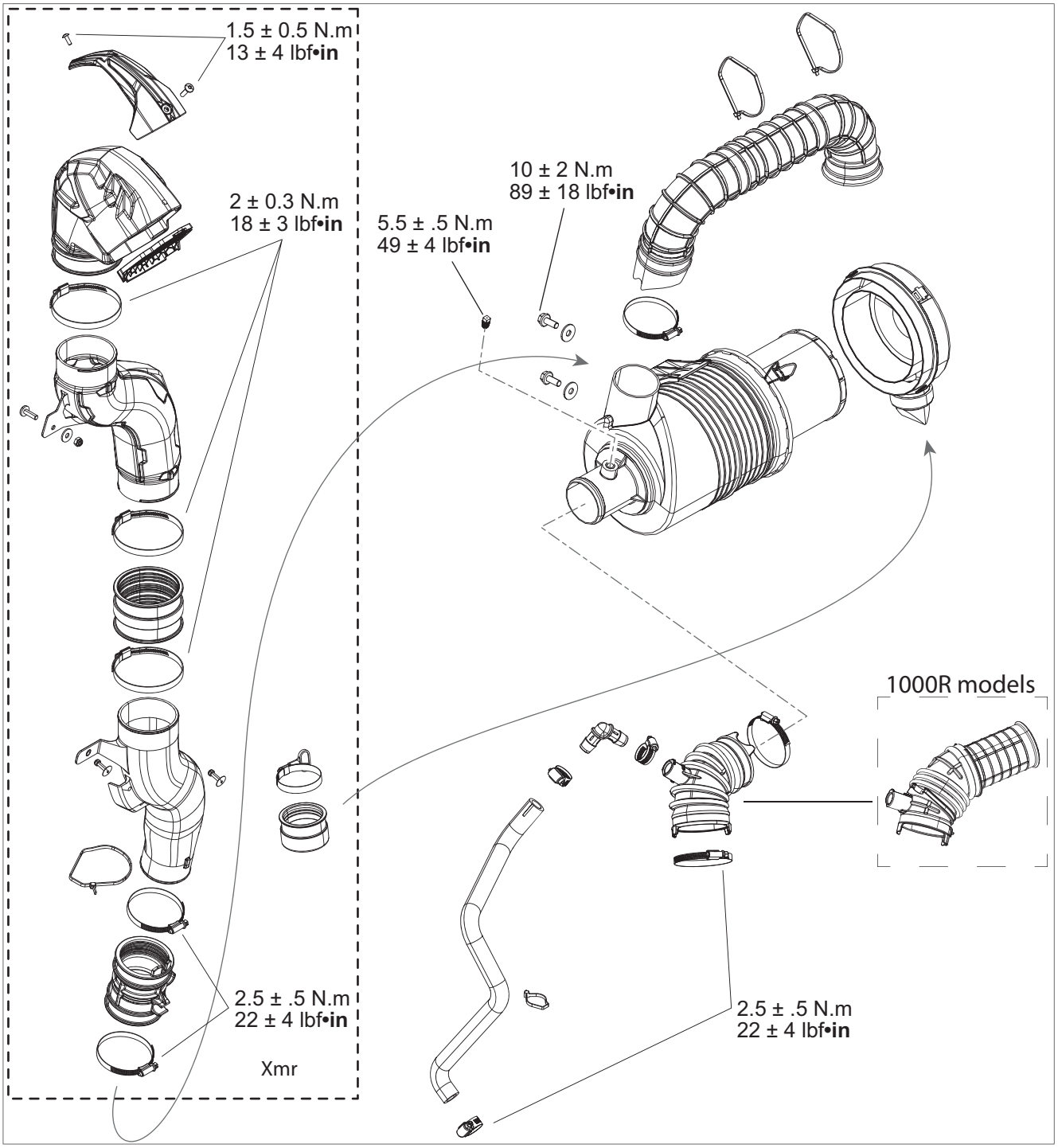

219101010-009-001

GENERAL

NOTICE Never modify the air intake system. Otherwise, engine performance degradation or damage can occur. The engine is calibrated to operate specifically with these components.

PROCEDURES

AIR INTAKE SYSTEM

Replacing the Air Filter

NOTICE Never modify the air intake system. Otherwise, engine performance degradation or damage can occur. The engine is calibrated to operate specifically with these components.

Air Filter Replacement Guideline

Air filter replacement should be adjusted according to riding conditions as it is critical to ensure proper engine performance and life span.

Air filter replacement frequency must be increased for the following dusty conditions:

- Riding on dry sand
- Riding on dry dirt covered surfaces
- Riding on dry gravel roads or similar conditions.
- Riding in areas with high concentration of seeds or crop husks.
- Riding in severe snow conditions.

NOTICE When riding in dusty conditions or sand, the air box needs to be cleaned before every ride.

NOTE: Riding in a group in these conditions would increase even more the air filter replacement requirement.

Removing the Air Filter

Tilt cargo box.

Unlatch air filter cover and remove air filter.

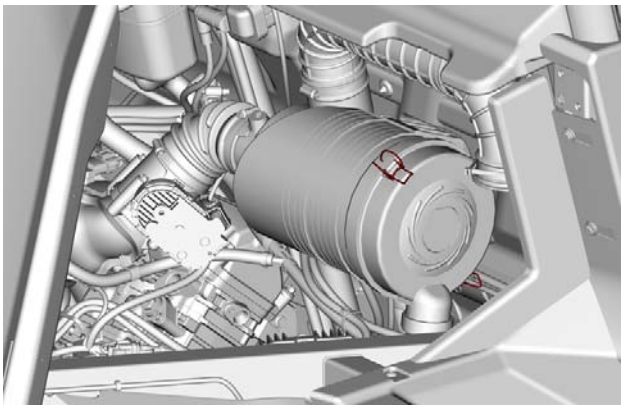

tmr2016-111-001

The filter fits tightly over the outlet tube and there will be some initial resistance. Gently move the end of the filter back and forth to break the seal, then rotate while pulling straight out. Avoid knocking the filter against the housing.

Replace air filter if clogged. Always use the recommended air filter or an equivalent.

Cleaning the Duckbill Valve

Visually check and physically squeeze the duckbill valve. Make sure the valve is flexible and not inverted, damaged or plugged.

Installing the Air Filter

Insert the filter carefully. Seat the filter by hand, making certain it is inserted completely into the air cleaner housing. Apply pressure by hand at the outer rim of the filter, not the flexible center.

Secure air filter cover with latches.

AIR FILTER HOUSING

Removing Air Filter Housing

Release clamps and remove air filter cover and filter.

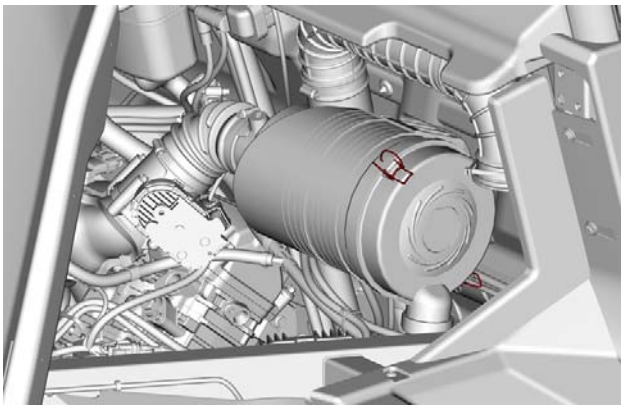

tmr2016-111-001

Remove fasteners behind passenger seat.

tmr2016-111-002

Installing Air Filter Housing

The installation is the reverse of the removal procedure. However, pay attention to the following.

Align installation marks on throttle body, air box and housing vent hose and make sure bellow is not crushed.

TIGHTENING TORQUE	
Air filter housing screws	10 N•m ± 2 N•m (89 lbf•**in** ± 18 lbf•**in**)

EXHAUST SYSTEM (HD7)

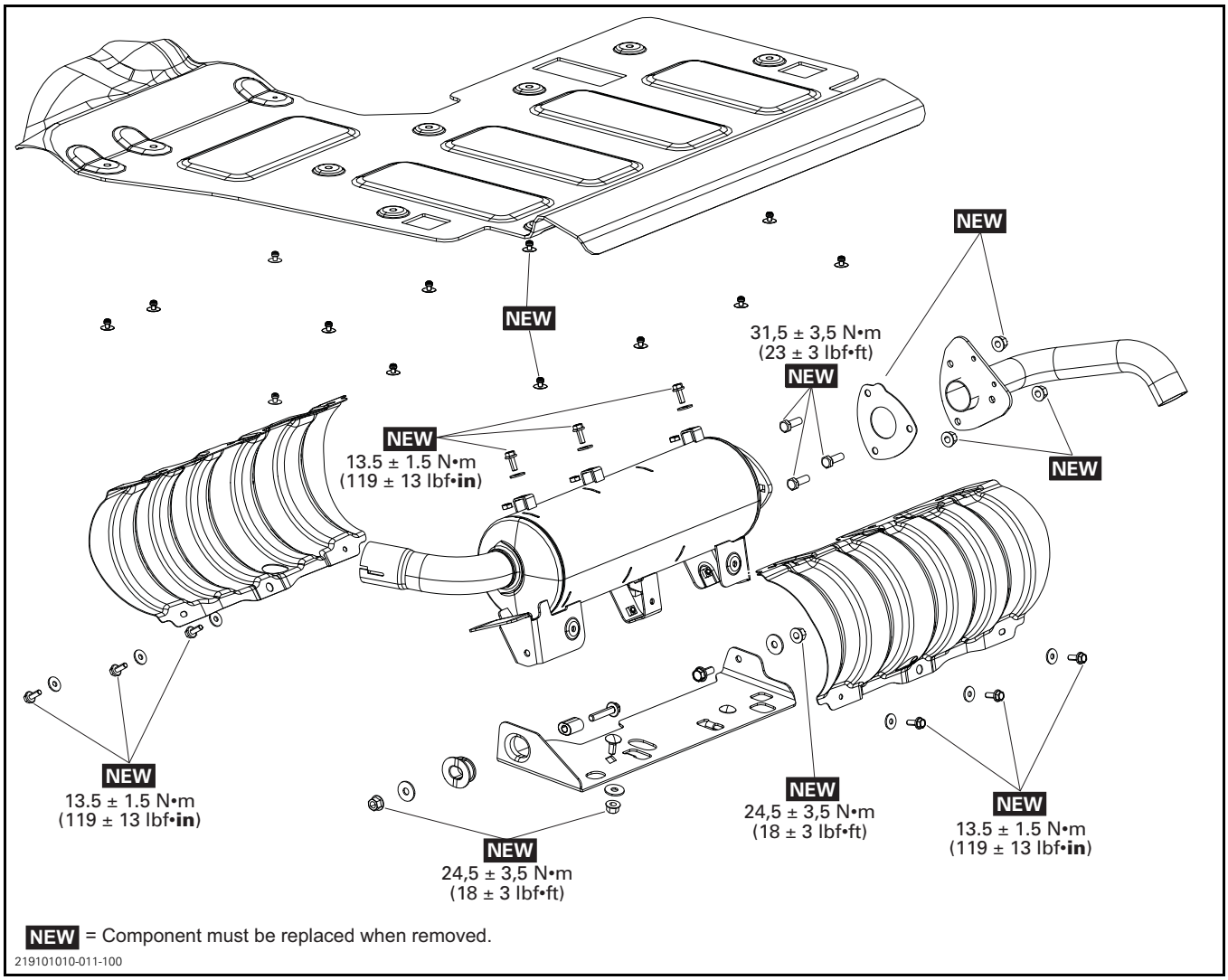

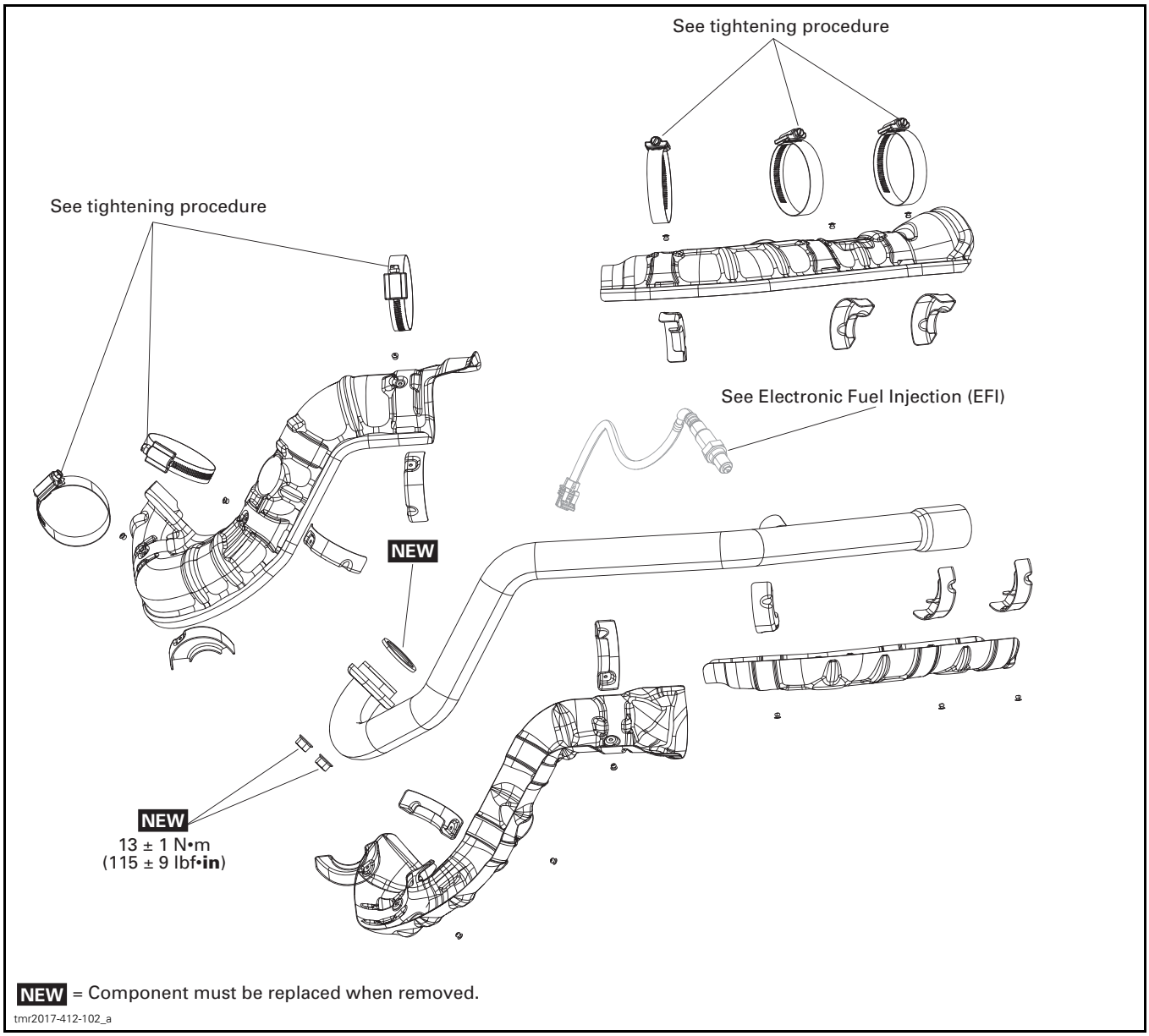
See tightening procedure
See tightening procedure
See Electronic Fuel Injection (EFI)
NEW
NEW
13 ± 1 N•m
(115 ± 9 lbf•in)
NEW = Component must be replaced when removed.
tmr2017-412-102_a

GENERAL

⚠ WARNING

Never touch exhaust system components immediately after the engine has been running.

PROCEDURES

MUFFLER

Cleaning the Muffler

For muffler cleaning procedure, refer to *PERIODIC MAINTENANCE PROCEDURES* subsection.

Removing the Muffler

1. Loosen the muffler clamp.

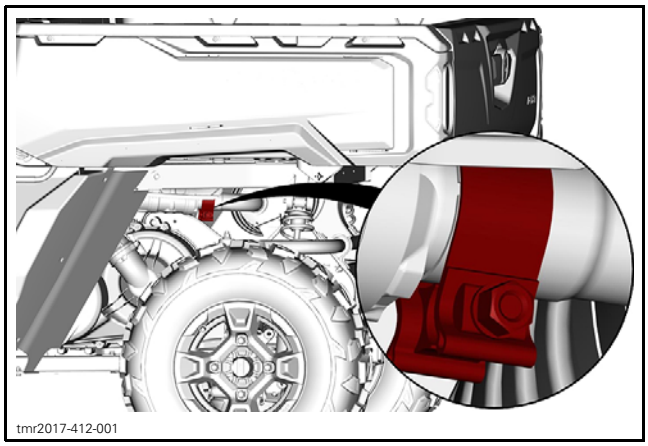

2. Remove engine support and muffler support retaining bolts and washers.

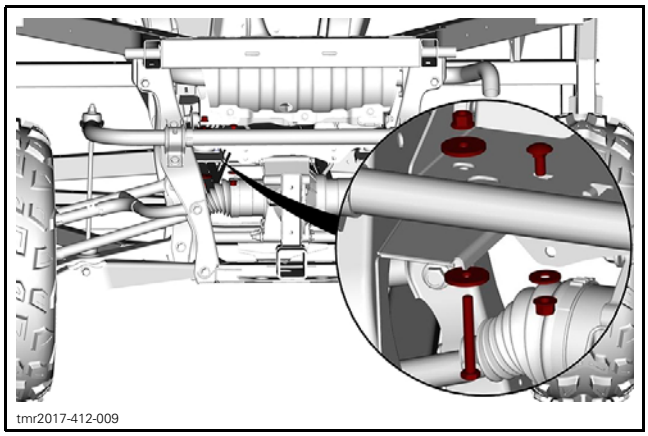

LH SHOWN - PARTS REMOVED FOR CLARITY

3. Remove the muffler support and heat shields if necessary.

Inspecting the Muffler

Check muffler for cracks or other damages. Replace if necessary.

Check heat shields for cracks or other damages. Replace if necessary.

Check if the rubber supports are brittle, hard or otherwise damaged. Replace if needed.

Installing the Muffler

1. Install the heat shields on the muffler.

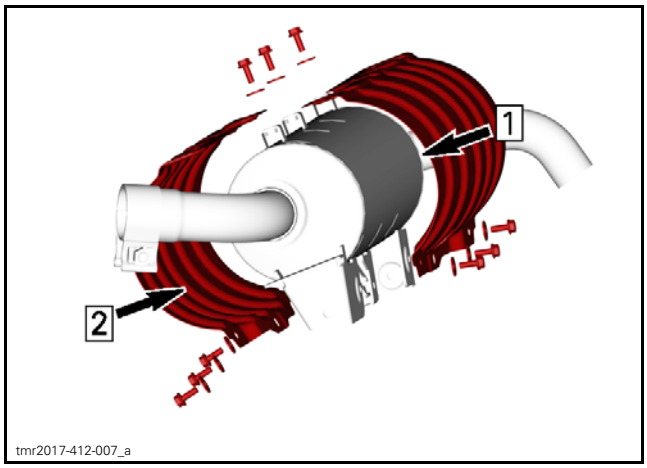

NOTE: Tighten the top screws last.

2. Install the support on the muffler. Do not tighten bolts yet.

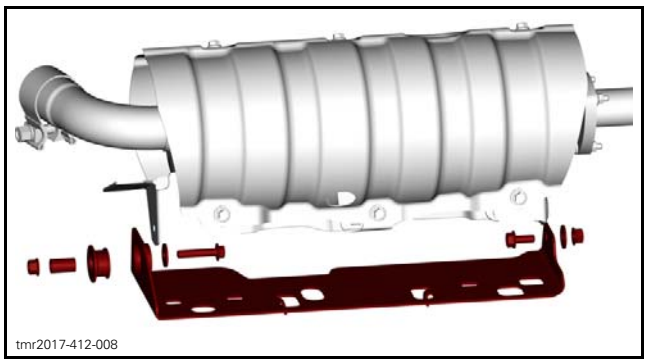

3. Install the head pipe if required, refer to *INSTALLING THE HEAD PIPE*. Do not tighten nuts yet.
4. Connect the muffler to the head pipe. Do not tighten the clamp yet.

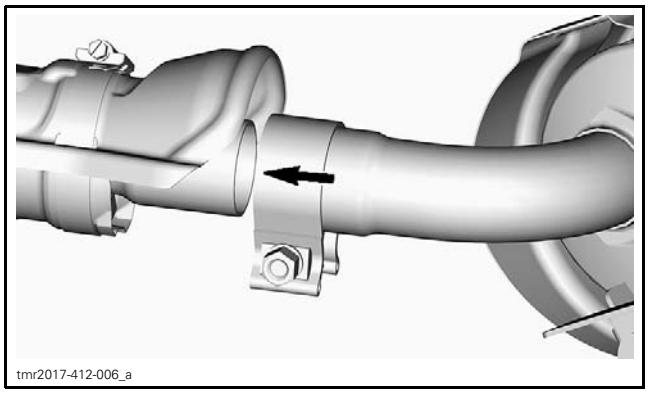
tmr2017-412-006_a

5. Tighten the RH muffler retaining bolt.

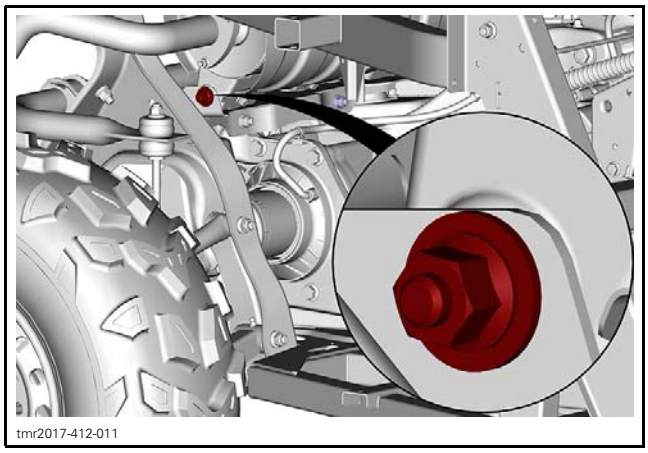
tmr2017-412-011

6. Push the LH side of muffler towards front while tightening the LH retaining bolt.

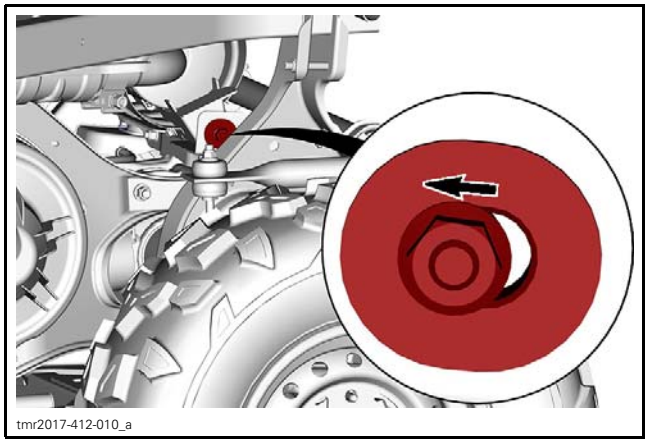
tmr2017-412-010_a

7. Tighten the remaining fasteners in this order:
   1. Head pipe nuts
   2. Muffler clamp
   3. Remaining muffler support bolts.

HEAD PIPE

Removing the Head Pipe

1. Loosen the muffler clamp.

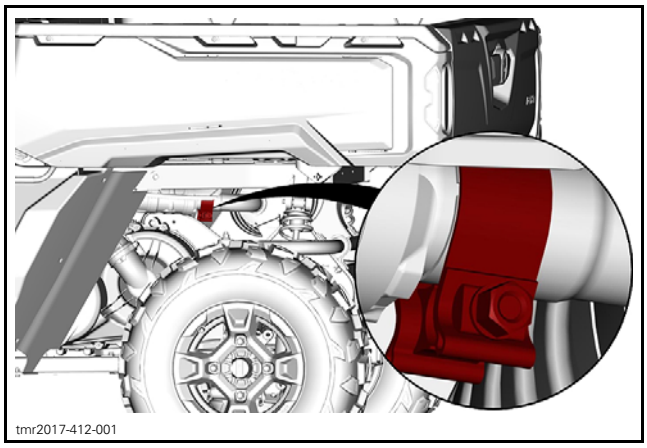
tmr2017-412-001

2. Disconnect the oxygen sensor connector.
3. Remove the front heat shield.

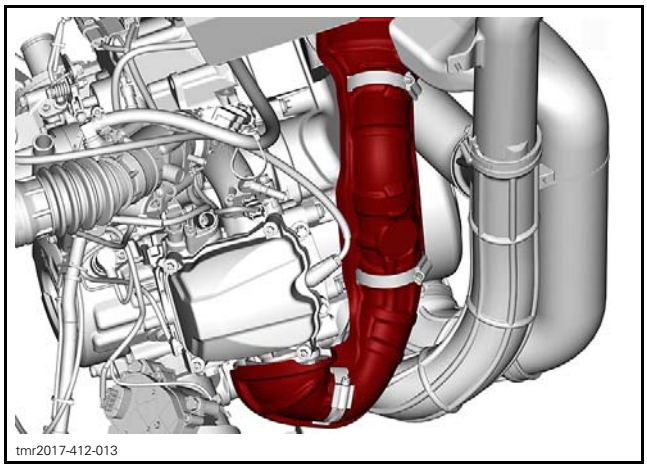
tmr2017-412-013

4. Remove the retaining nuts

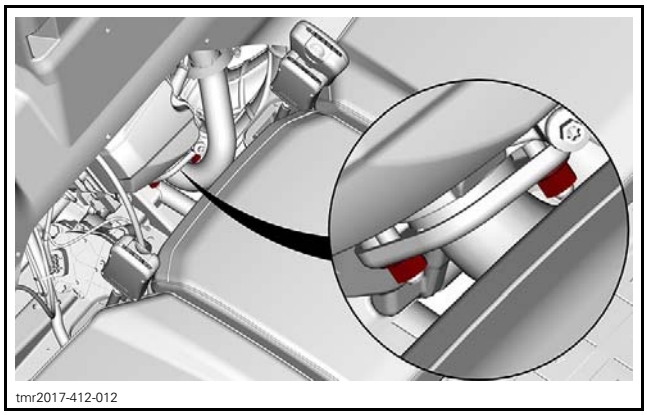
tmr2017-412-012

5. Pull the head pipe out of the muffler and cylinder head, then remove it from the vehicle.
6. Remove the rear heat shields.

Inspecting the Head Pipe

Check head pipe for cracks, bending or other damages. Replace if need.

Installing the Head Pipe

1. Place the rear heat shields on the head pipe.

NOTE: Use the oxygen sensor opening as a guideline.

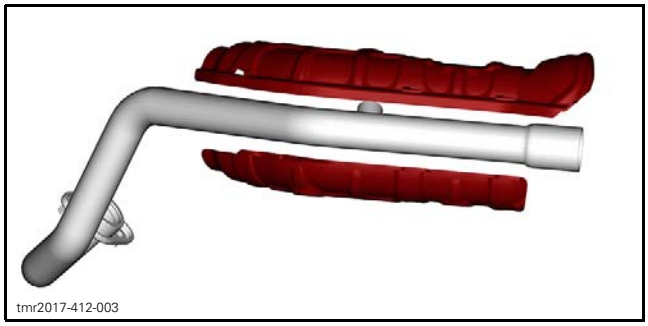

2. Pass the clamps through the openings in the upper shield and attach the shield halves together.

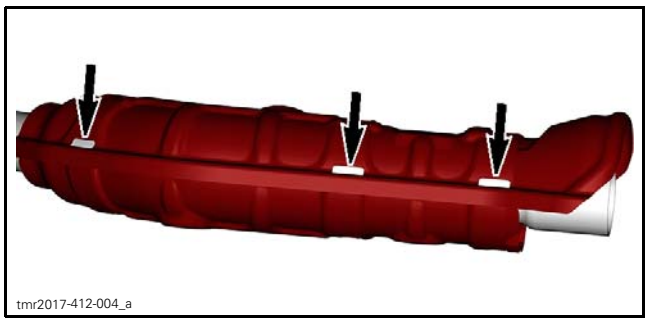

3. Tighten the clamps in the illustrated sequence.

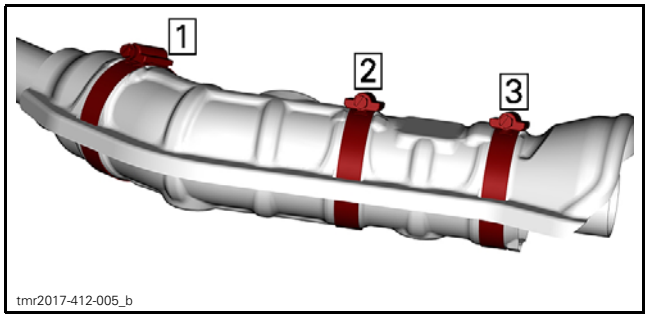

CLAMPS TIGHTENING SEQUENCE - REAR OF HEAD PIPE

TIGHTENING TORQUE	
Heat shield clamps	4 N•m ± 0.5 N•m (35 lbf•**in** ± 4 lbf•**in**)

4. Install the head pipe with a NEW gasket.

If muffler was removed, leave the retaining nuts and muffler clamp loose. Install muffler as described in *INSTALLING THE MUFFLER*.

If muffler was not removed, tighten the retaining nuts, then the muffler clamp.

5. Install the front heat shield.
6. Tighten the clamps in the illustrated sequence.

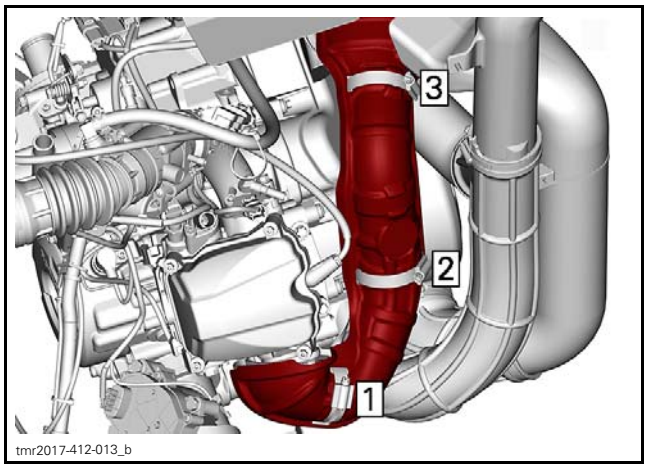

CLAMPS TIGHTENING SEQUENCE - FRONT OF HEAD PIPE

TIGHTENING TORQUE	
Heat shield clamps	4 N•m ± 0.5 N•m (35 lbf•**in** ± 4 lbf•**in**)

Retighten all clamps in the illustrated sequence.

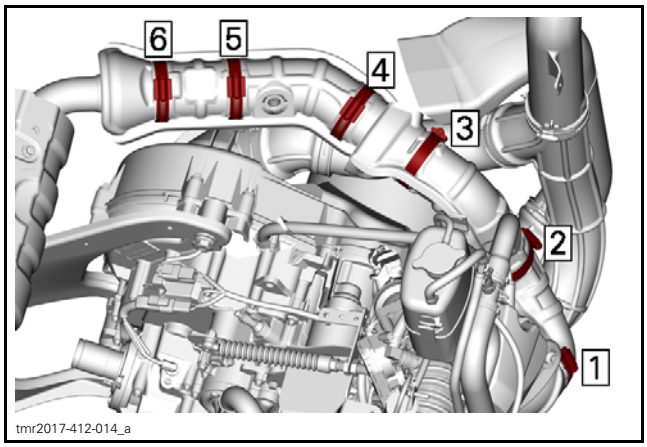

CLAMPS FINAL TIGHTENING SEQUENCE

TIGHTENING TORQUE	
Heat shield clamps (final torque)	9 N•m ± 1 N•m (80 lbf•**in** ± 9 lbf•**in**)

EXHAUST SYSTEM (HD9 / HD10)

***HD9** models*

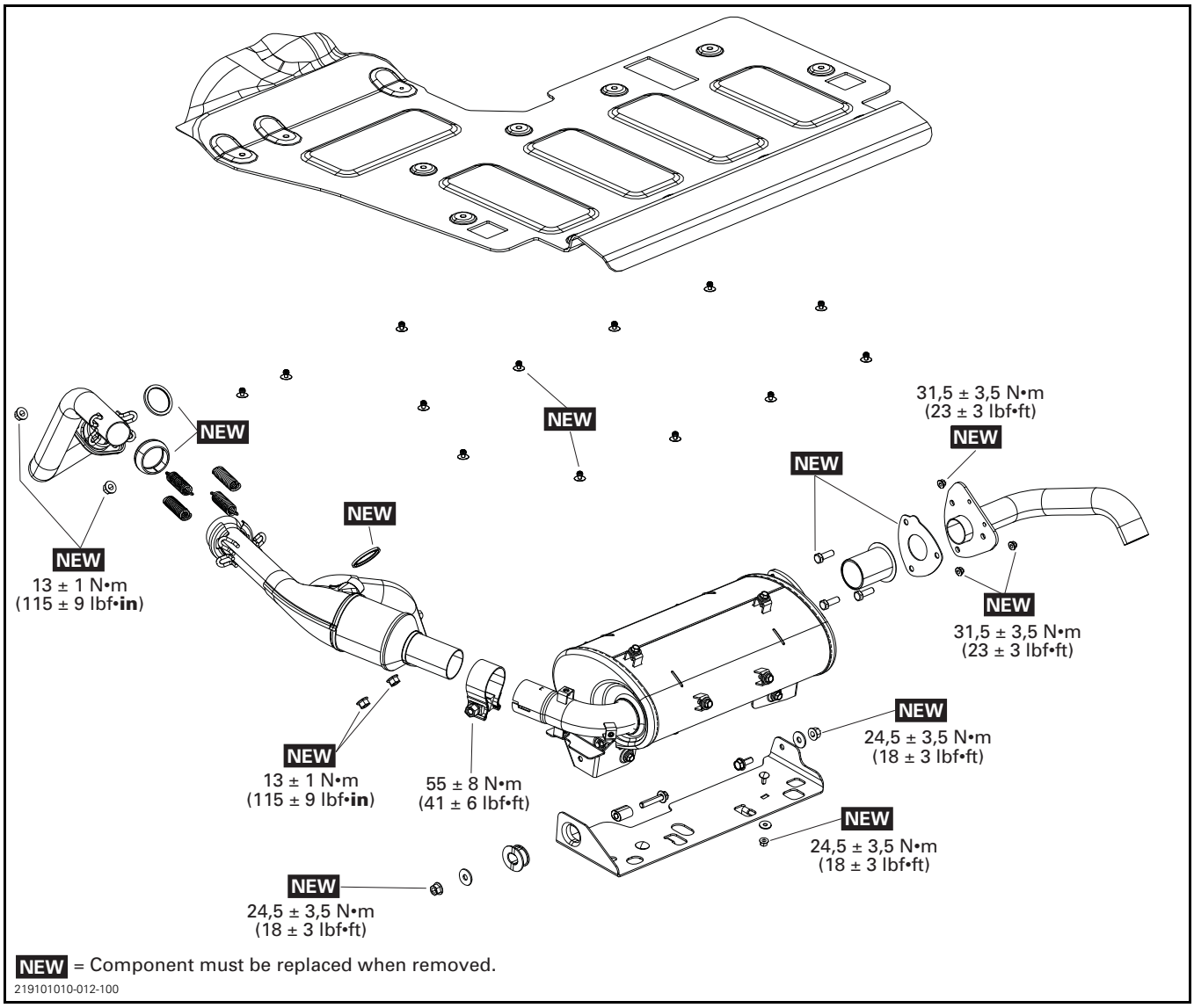

HD9 models

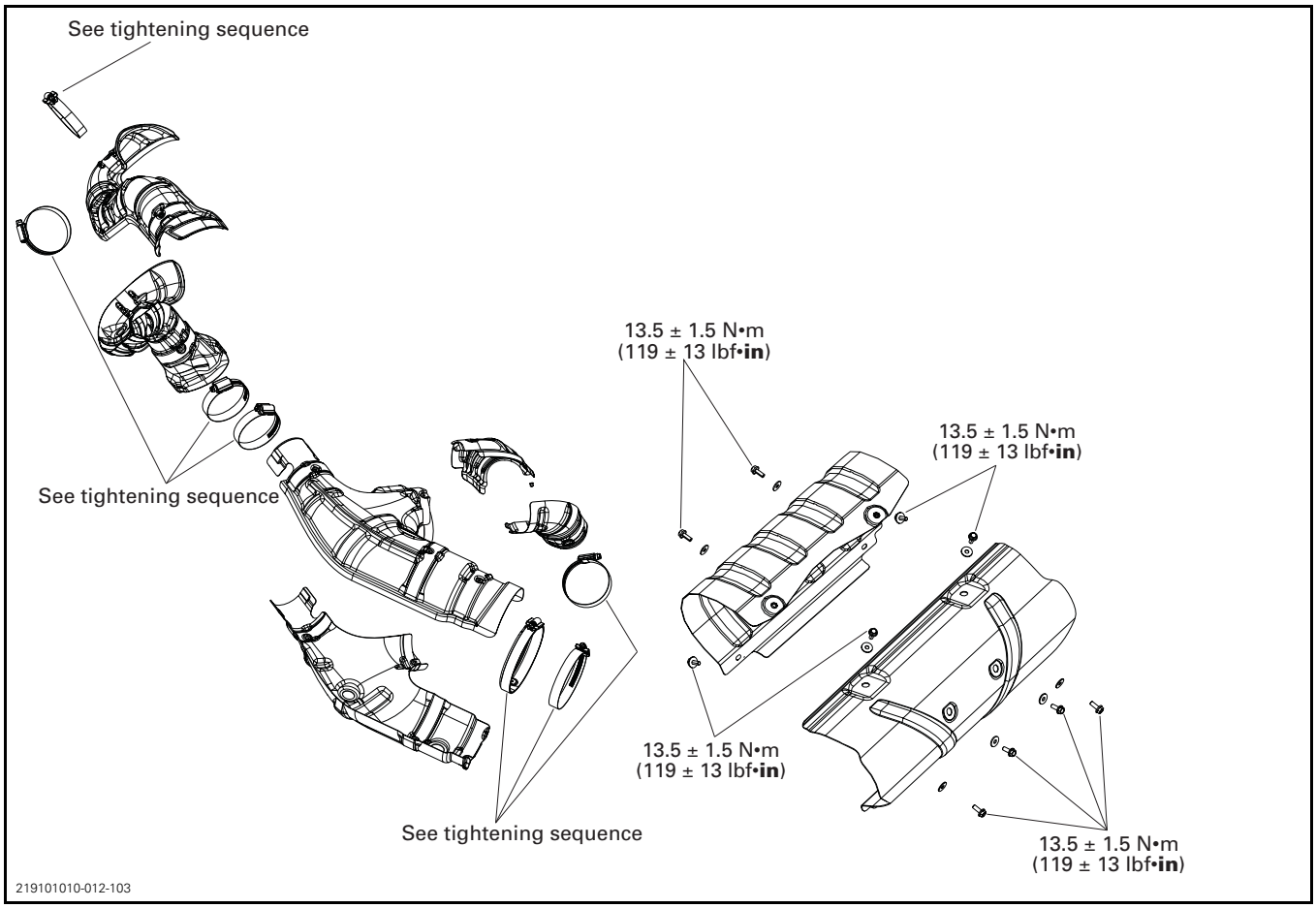
See tightening sequence
13.5 ± 1.5 N•m
(119 ± 13 lbf•in)
13.5 ± 1.5 N•m
(119 ± 13 lbf•in)
See tightening sequence
13.5 ± 1.5 N•m
(119 ± 13 lbf•in)
See tightening sequence
13.5 ± 1.5 N•m
(119 ± 13 lbf•in)
219101010-012-103

HD10 models

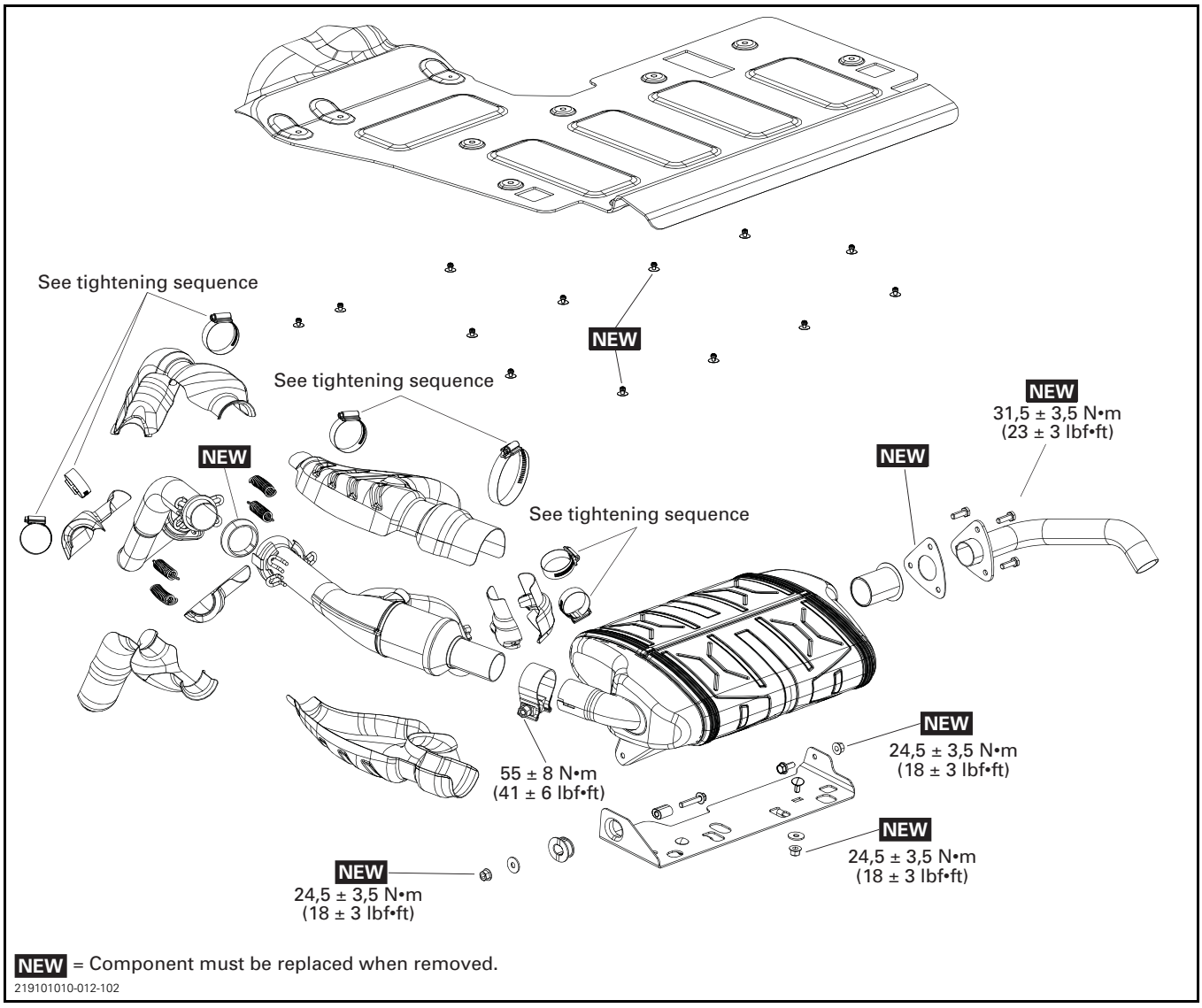
See tightening sequence
NEW
See tightening sequence
NEW
31,5 ± 3,5 N•m
(23 ± 3 lbf•ft)
NEW
NEW
See tightening sequence
NEW
24,5 ± 3,5 N•m
(18 ± 3 lbf•ft)
55 ± 8 N•m
(41 ± 6 lbf•ft)
NEW
24,5 ± 3,5 N•m
(18 ± 3 lbf•ft)
NEW
24,5 ± 3,5 N•m
(18 ± 3 lbf•ft)
NEW = Component must be replaced when removed.
219101010-012-102

GENERAL

⚠ WARNING

Never touch exhaust system components immediately after the engine has run.

PROCEDURES

SPARK ARRESTER

For spark arrester servicing, refer to *PERIODIC MAINTENANCE PROCEDURES* subsection.

MUFFLER

Removing Muffler

1. Loosen exhaust pipe clamp.

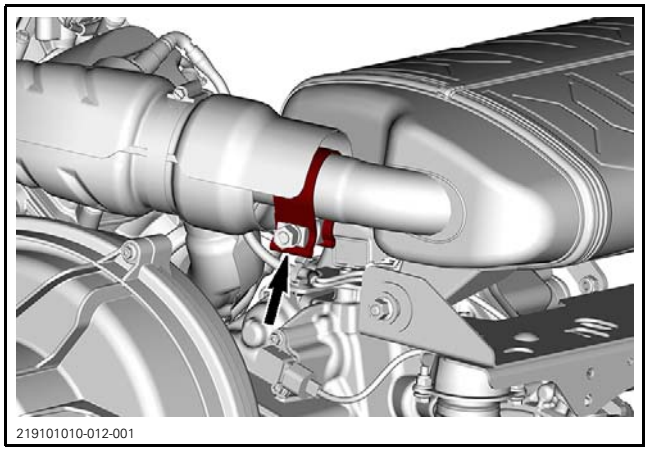

219101010-012-001

TYPICAL

2. Remove engine support retaining bolts. Refer to *ENGINE REMOVAL AND INSTALLATION*.

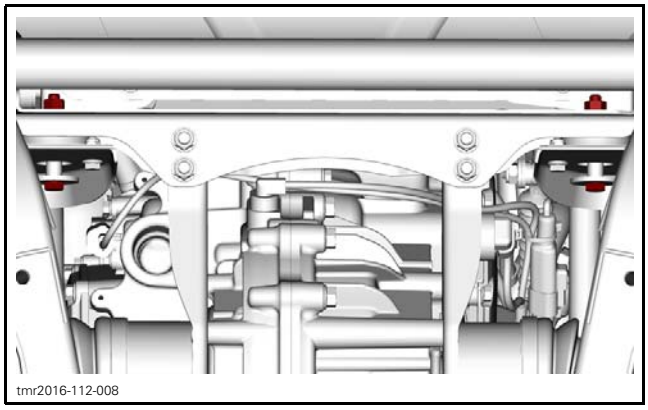

tmr2016-112-008

3. Remove muffler support bracket retaining nuts and washers.

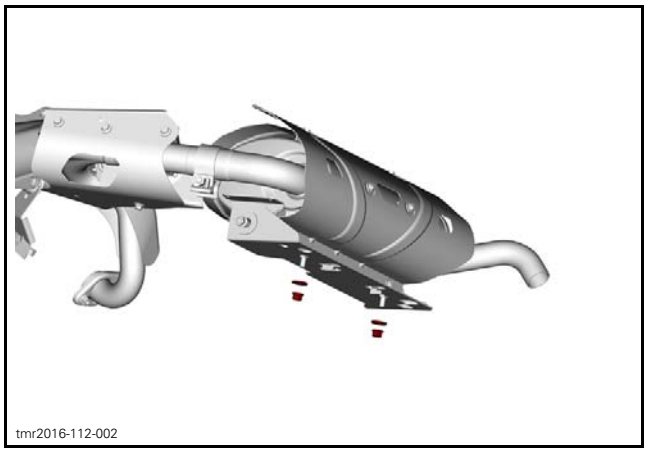

tmr2016-112-002

4. Remove muffler from support bracket if necessary.
5. Remove muffler heat shields if necessary.

NOTE: If head pipes are removed as well, follow tightening sequence when re-assembling.

Inspecting Muffler

Check muffler for cracks or other damages. Replace if necessary.

Check heat shields for cracks or other damages. Replace if necessary.

Check if the rubber supports are brittle, hard or otherwise damaged. Replace if needed.

Installing Muffler

Head Pipes Not Removed

The installation is the reverse of the removal procedure.

NOTE: Push muffler LH side towards front into rubber grommet.

Head Pipes Removed

NOTE: Do not tighten any components until indicated in tightening sequence.

1. Reinstall head pipes and springs with new gaskets, muffler and muffler bracket.

NOTE: All heat shields can be reinstalled except the front cylinder head pipe shield.

2. Tighten retaining nut then push the muffler LH side towards the front of vehicle.
3. Tighten rear cylinder head pipe then front cylinder head pipe retaining nuts as per following sequence.

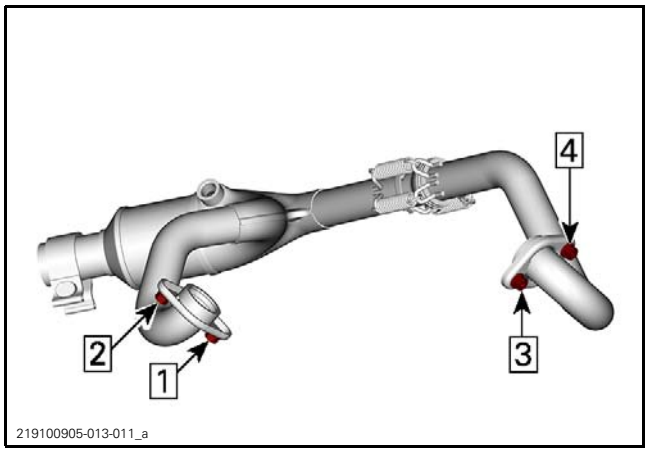

TIGHTENING TORQUE	
Cylinder head pipe retaining nuts	13 N•m ± 1 N•m (115 lbf•**in** ± 9 lbf•**in**)

4. While keeping muffler LH side pushed towards the front of vehicle, tighten the exhaust pipe clamp.
5. Tighten the RH muffler retaining nut, then the muffler bracket to the frame.

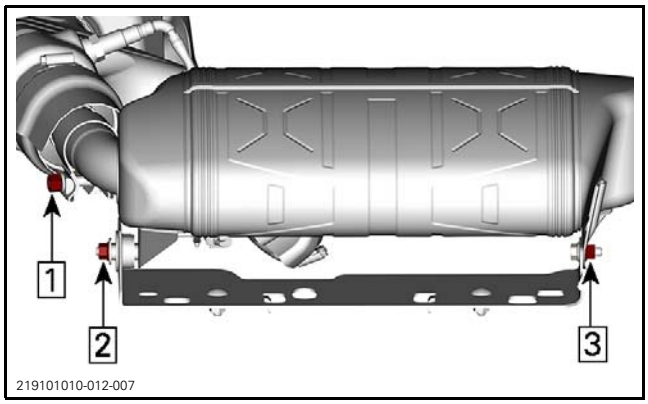

TIGHTENING TORQUE	
Exhaust clamp	55 N•m ± 8 N•m (41 lbf•ft ± 6 lbf•ft)
Muffler retaining nut	24.5 N•m ± 3.5 N•m (18 lbf•ft ± 3 lbf•ft)

6. Tighten engine support retaining bolts. Refer to *ENGINE REMOVAL AND INSTALLATION*.

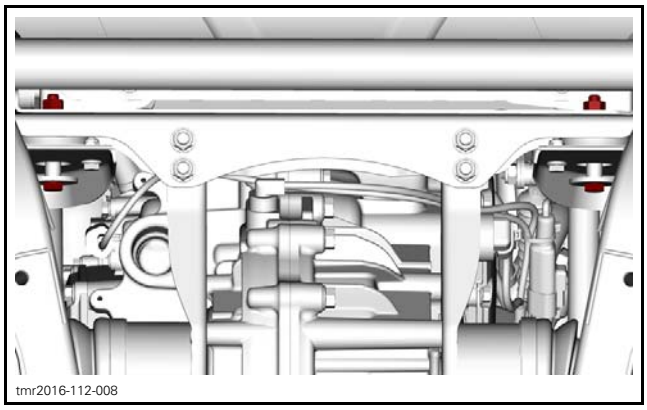

HEAD PIPE (FRONT CYLINDER)

Removing Front Head Pipe

1. Remove muffler. Refer to *REMOVING MUFFLER*.
2. Remove heat shields covering front head pipe by removing the gear clamps.

HD9

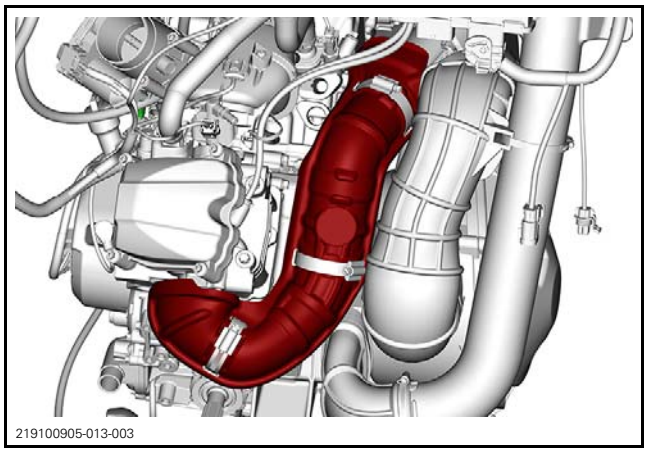

HD10

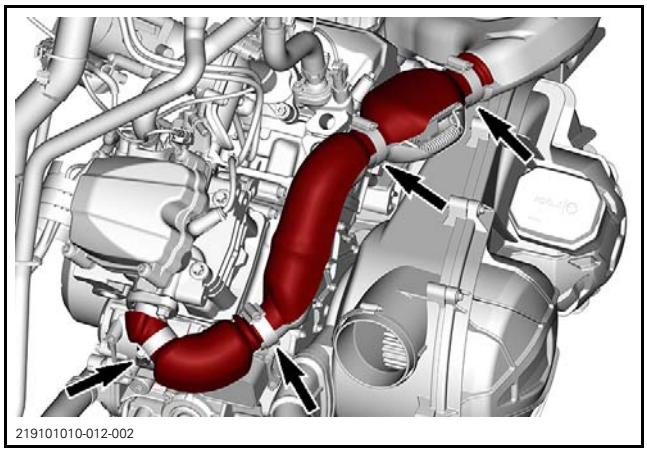

3. Remove springs securing rear head pipe to front head pipe. Discard gasket.

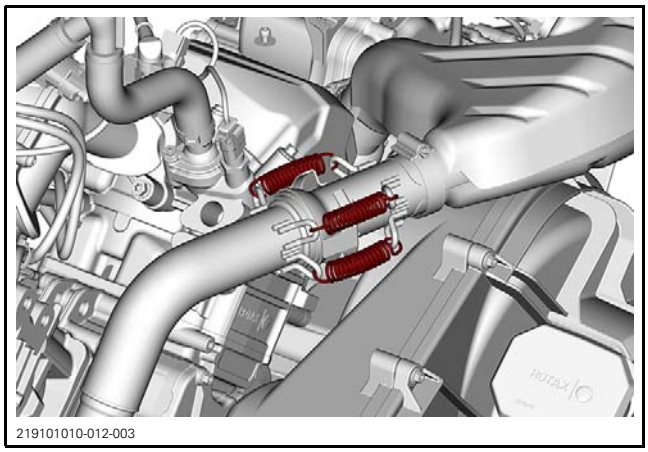
219101010-012-003

4. Remove retaining nuts from front cylinder head pipe flange. Discard nuts and gaskets.

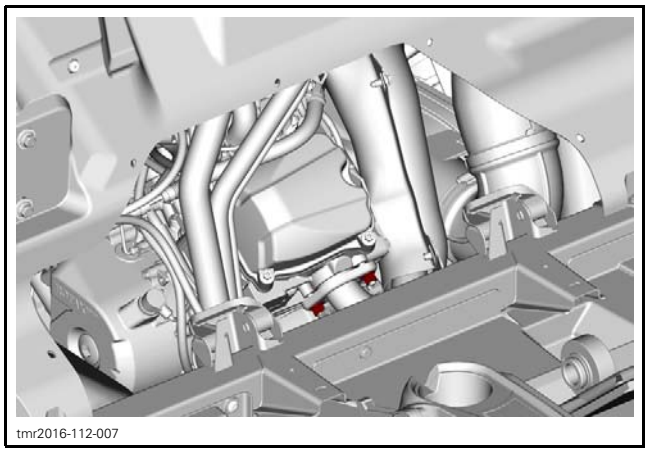
tmr2016-112-007

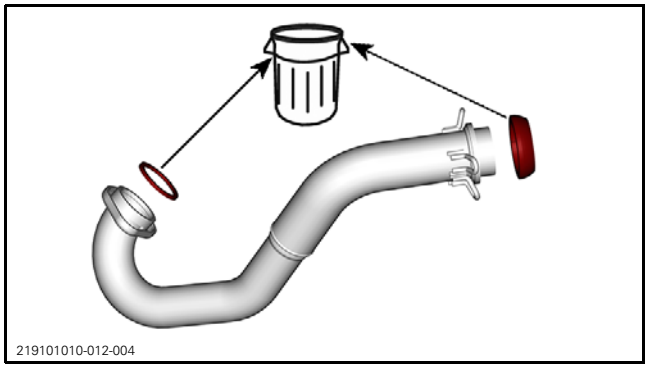
219101010-012-004
TYPICAL

5. Remove front cylinder head pipe.

Inspecting Front Head Pipe

Check head pipe for cracks, bending or other damages. Replace if needed.

Installing Front Head Pipe

1. The installation is the reverse of the removal procedure. However, pay attention to the following.

Install NEW exhaust gaskets and nuts.

Measure front head pipe springs. If spring length exceeds specification, replace spring.

SPECIFICATION	
Spring maximum length	67.5 mm (2.66 in)

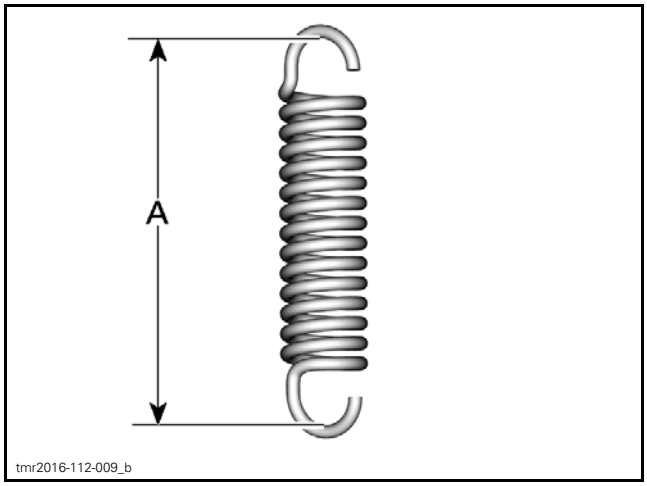

tmr2016-112-009_b
A. Maximum length

2. Install muffler. Refer to *INSTALLING MUFFLER*.
3. Reinstall heat shields of front head pipe, tighten gear clamps following the tightening sequence and specification.

HD9

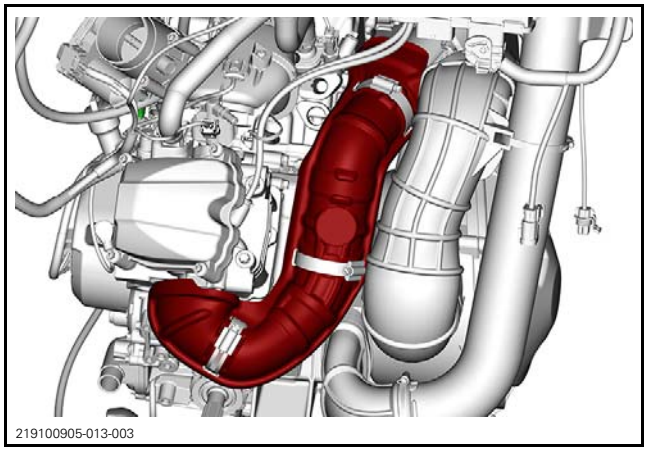
219100905-013-003

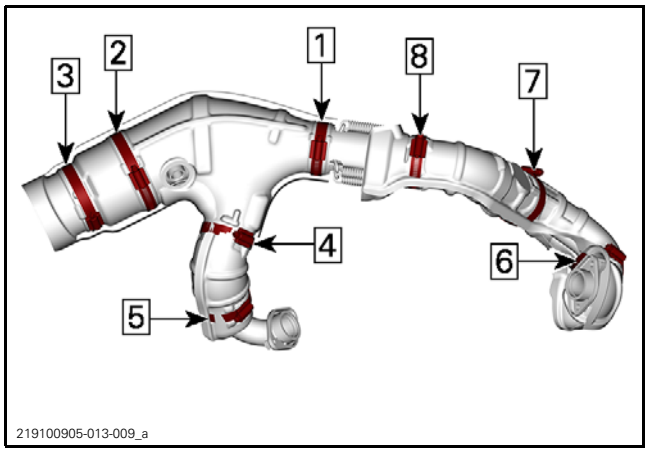

TIGHTENING SEQUENCE

HD10

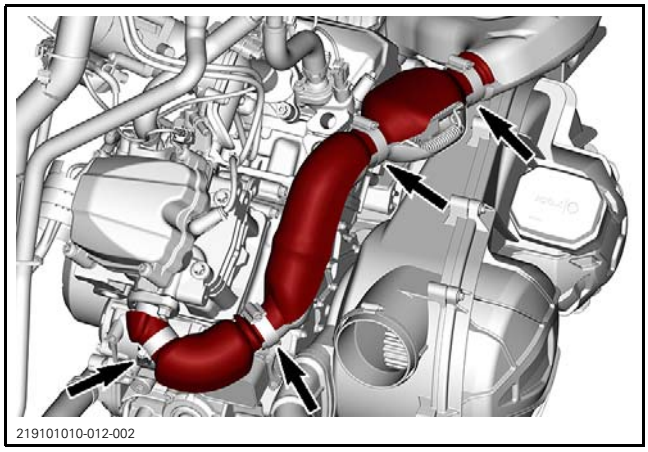

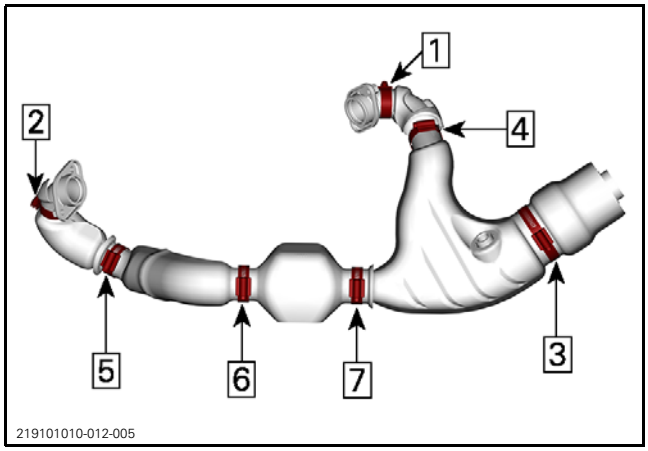

TIGHTENING SEQUENCE

TIGHTENING TORQUE	
Gear clamp (HD9)	4 N•m ± 0.5 N•m (35 lbf•**in** ± 4 lbf•**in**)
Gear clamp (HD10)	9 N•m ± 1 N•m (80 lbf•**in** ± 9 lbf•**in**)

HEAD PIPE (REAR CYLINDER)

Removing Rear Head Pipe

1. Remove muffler. Refer to *REMOVING MUFFLER*.
2. Remove heat shield covering front head pipe by removing the gear clamps.

HD9

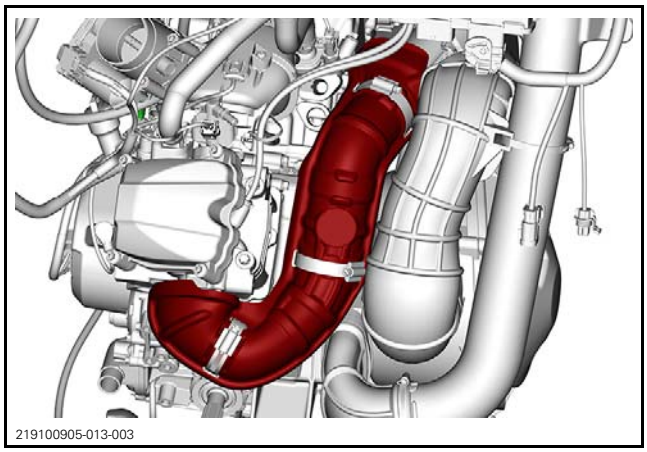

HD10

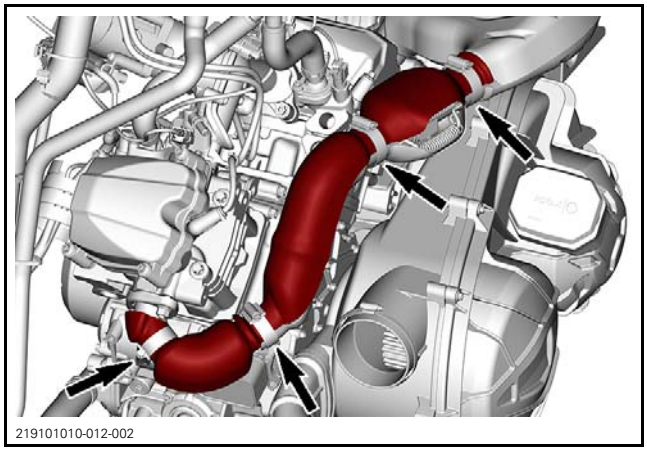

3. Remove springs securing rear head pipe to front head pipe.

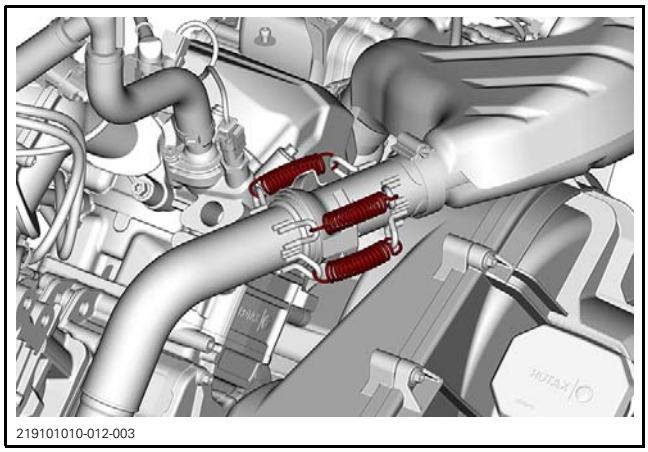
219101010-012-003

4. Remove both retaining nuts from rear cylinder head pipe flange. Discard nuts.

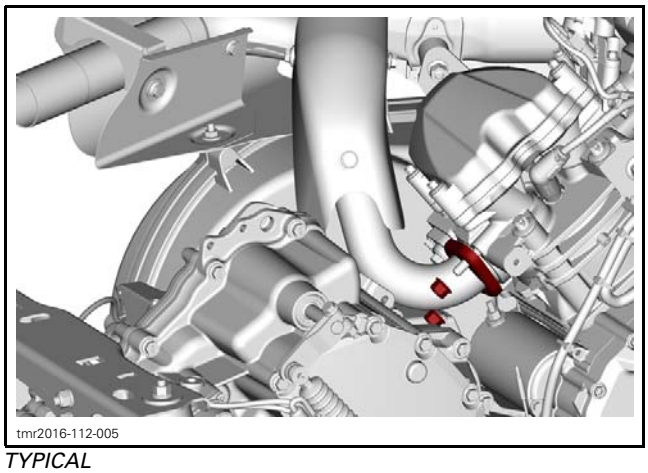
tmr2016-112-005
TYPICAL

5. Remove rear head pipe with "Y" exhaust pipe, and heat shields. Discard gasket and nuts.

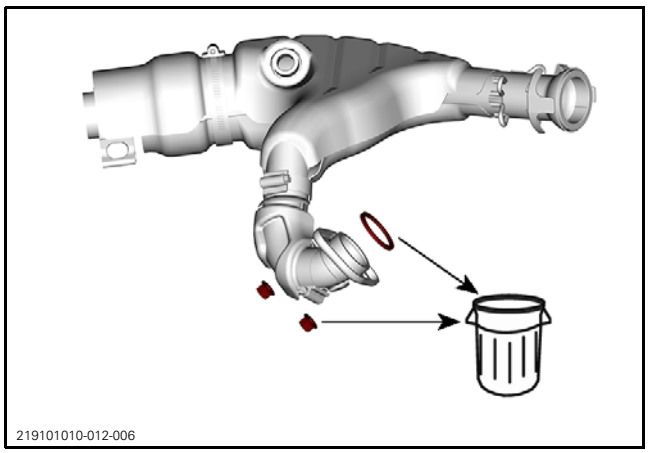
219101010-012-006

Inspecting Rear Head Pipe

Check head pipe for cracks, bending or other damages. Replace if need.

Installing Rear Head Pipe

The installation is the reverse of the removal procedure. However, pay attention to the following.

Do not tighten yet. Strictly adhere to tightening sequence. Refer to *FRONT HEAD PIPE*.

Install NEW exhaust gasket.

Install muffler. Refer to *INSTALLING MUFFLER*.

COOLING SYSTEM - VEHICLE COMPONENTS (HD7)

SERVICE TOOLS

Description	Part Number	Page
LARGE HOSE PINCHER	529 032 500	47
TEST CAP	529 035 991	47
VACUUM/PRESSURE PUMP	529 021 800	47

SERVICE PRODUCTS

Description	Part Number	Page
EXTENDED LIFE PRE-MIXED COOLANT	779150	45

RADIATOR

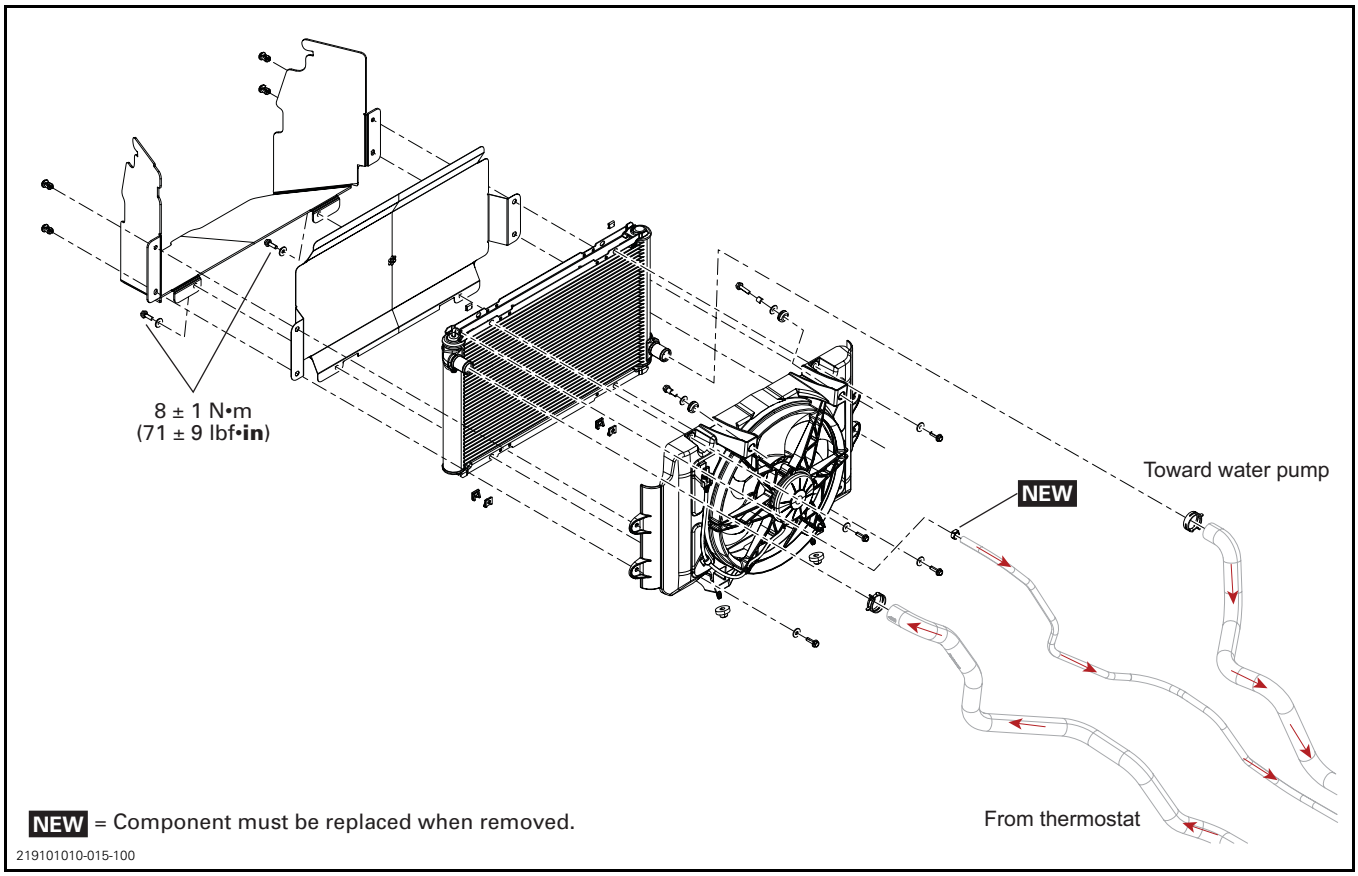

COOLING HOSES

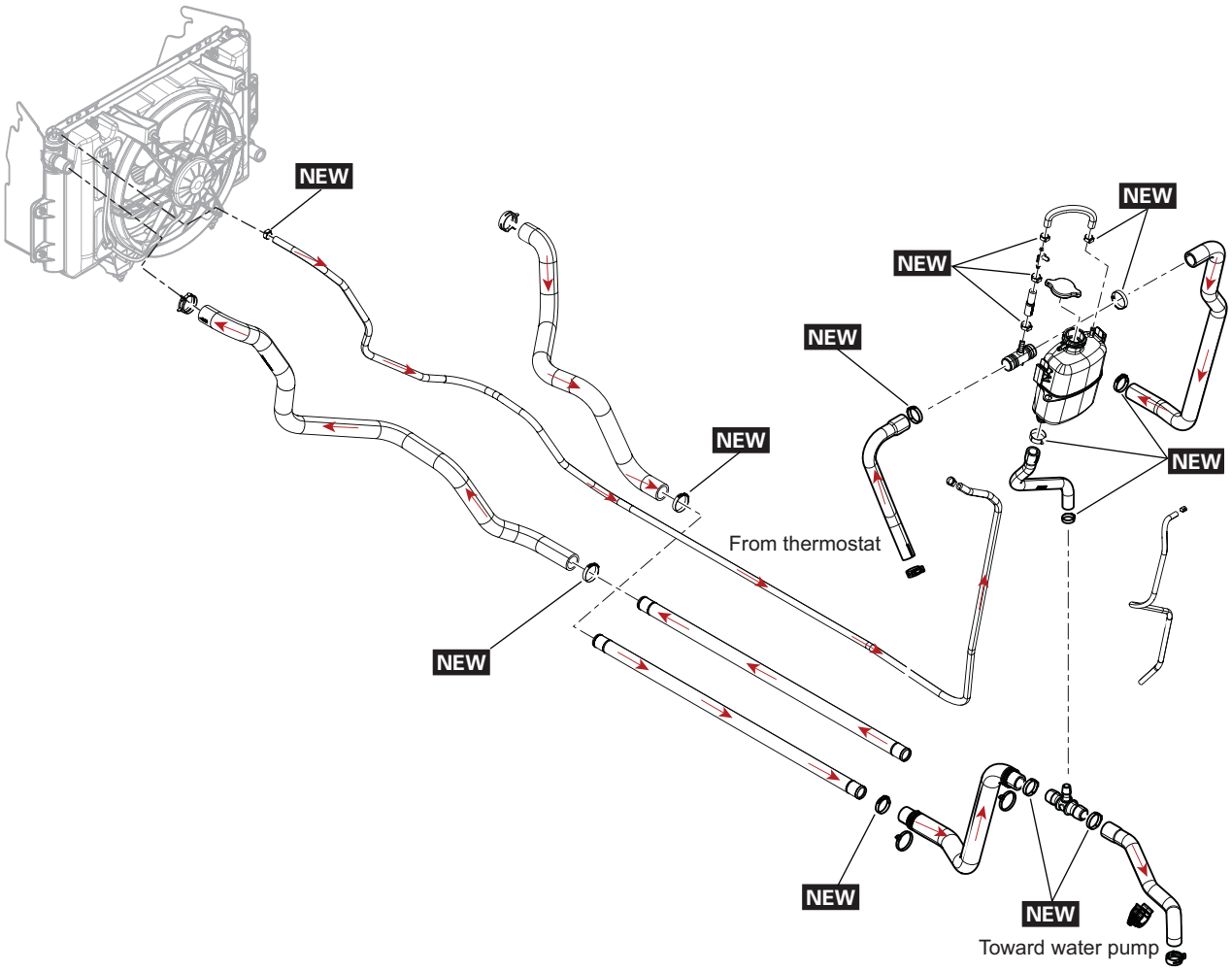

NEW = Component must be replaced when removed.

219101010-015-101

GENERAL

NOTICE Never start engine without coolant. Some engine parts such as the rotary seal on the water pump shaft can be damaged.

MAINTENANCE

RECOMMENDED ENGINE COOLANT

RECOMMENDED ENGINE COOLANT	
Scandinavia	EXTENDED LIFE PRE-MIXED COOLANT (P/N 779150)
All other countries	EXTENDED LIFE PRE-MIXED COOLANT (P/N 779150)
If THE RECOMMENDED ENGINE COOLANT IS NOT AVAILABLE	
Use a blend of 50% distilled water with 50% antifreeze (especially formulated for aluminum engines)	

To prevent antifreeze deterioration, always use the same brand. Never mix different brands unless cooling system is completely flushed and refilled.

NOTICE To prevent rust formation or freezing condition, always replenish the system with the BRP premixed coolant or with 50% antifreeze and 50% distilled water. Do not use tap water, straight antifreeze or straight water in the system. Tap water contains minerals and impurities which build up in the system. During cold weather, straight water causes the system to freeze while straight antifreeze thickens (like slush ice) and does not have the same efficiency. Always use ethylene glycol antifreeze containing corrosion inhibitors specifically recommended for aluminum engines.

VERIFYING THE ENGINE COOLANT LEVEL

⚠ WARNING

Check coolant level with engine cold.

1. Place vehicle on a level surface.
2. Tilt cargo box.

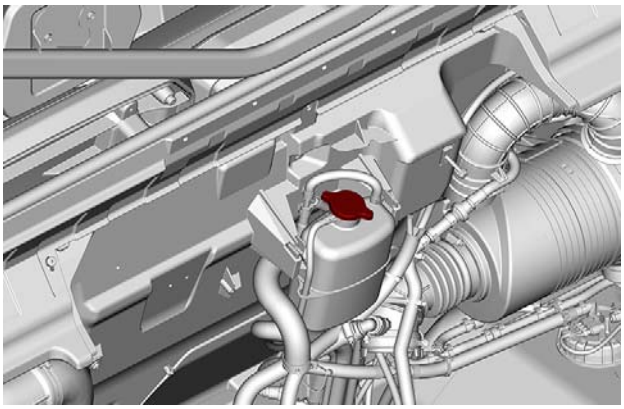

219001807-008

3. Remove the pressure cap.

⚠ WARNING

In order to avoid potential burns, do not remove the pressure cap if the engine is hot.

4. Ensure cooling system is full up to the MAX line.

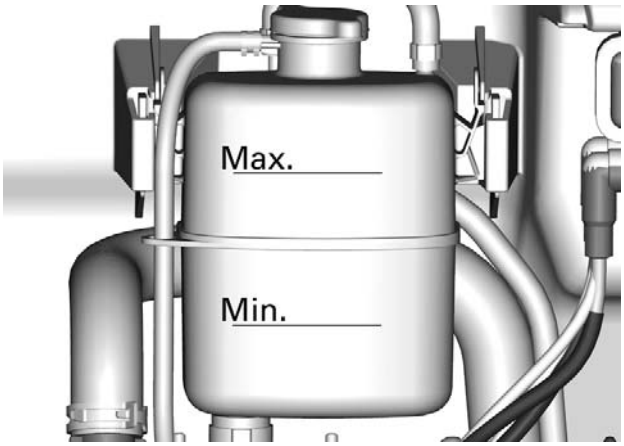

tmo2016-010-004_a

5. Add coolant in system as necessary. **Do not overfill**.
6. Properly reinstall pressure cap.
7. Close the cargo box.

NOTE: A cooling system that frequently requires addition of coolant is an indication of leaks or engine problems.

CHECKING THE ENGINE COOLANT SPECIFIC GRAVITY

Remove pressure cap.

Use an antifreeze tester to test coolant strength.

MINIMUM RECOMMENDED COOLANT STRENGTH
-30°C (-22°F)

REPLACING THE ENGINE COOLANT

Draining the Cooling System

⚠ WARNING

In order to avoid potential burns, do not remove the pressure cap or loosen the coolant drain plug if the engine is hot.

1. Tilt the cargo box.
2. Remove the cooling system pressure cap.

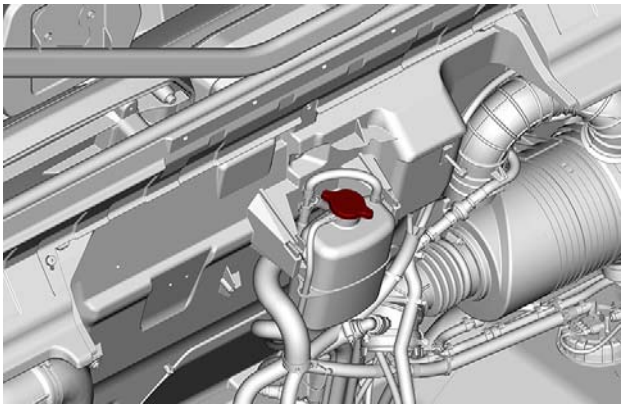

219001807-008

3. Place a drain pan underneath the vehicle.
4. Unscrew coolant drain plug and drain the coolant into a suitable container.

NOTE: Do not unscrew the coolant drain plug completely.

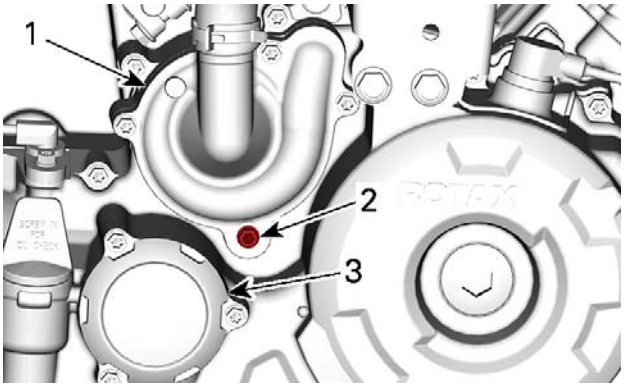

219001750-009_a

1. Water pump cover
2. Coolant drain plug
3. Oil filter cover

5. Disconnect the lower radiator hose and drain the remaining coolant into a suitable container.

NOTE: Take note of the position of the hose clamp on the lower radiator hose at the radiator.

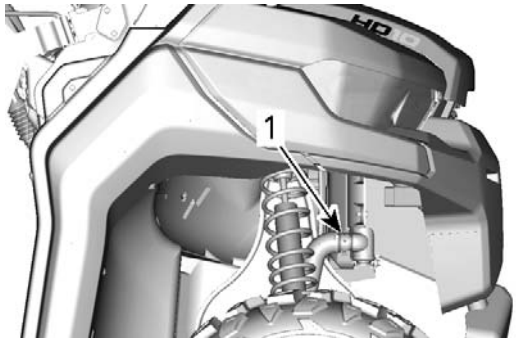

tmo2016-010-090_a

1. Lower radiator hose to disconnect

6. Drain cooling system completely.
7. Reinstall coolant drain plug.

TIGHTENING TORQUE	
Coolant drain plug	10 N•m ± 1 N•m (89 lbf•**in** ± 9 lbf•**in**)

8. Reinstall radiator hose as noted prior to removal.

TIGHTENING TORQUE	
Radiator hose clamp	3 N•m ± 0.5 N•m (27 lbf•**in** ± 4 lbf•**in**)

9. Fill cooling system with coolant, refer to *BLEEDING THE COOLING SYSTEM* procedure.

Bleeding the Cooling System

1. Remove the pressure cap.
2. Fill the cooling system until coolant is full up to the MAX line of the coolant reservoir.
3. Install pressure cap.
4. Run engine at idle with the pressure cap ON until the cooling fan cycles on for a second time.
5. Stop the engine and let it cool down.

⚠ WARNING

In order to avoid potential burns, do not remove the pressure cap if the engine is hot.

6. When the engine is cool, check coolant level. Add coolant if required.

7. After the next ride following this procedure, check coolant level. Add coolant as required. Refer to *VERIFYING THE ENGINE COOLANT LEVEL* in this subsection.

INSPECTING THE COOLING SYSTEM

1. Check general condition of hoses and clamps for tightness.
2. Carry out the *CHECKING THE ENGINE COOLANT SPECIFIC GRAVITY* as detailed in this subsection.
3. Carry out the *TESTING THE PRESSURE CAP* as detailed in this subsection.
4. Replace engine coolant if contaminated.

NOTE: Engine coolant should be replaced every 5 years or if contaminated.

PERFORMING A COOLING SYSTEM LEAK TEST

⚠ WARNING

To avoid potential burns, do not remove the pressure cap or loosen the cooling system drain plug if the engine is hot.

1. Tilt the cargo box
2. Replace the pressure cap by the following test cap.
3. Install the vacuum/pressure pump on the test cap.

REQUIRED TOOL	
TEST CAP (P/N 529 035 991)	
VACUUM/PRESSURE PUMP (P/N 529 021 800)	

529035991

4. Pressurize cooling system.

COOLING SYSTEM LEAK TEST
103 kPa (15 PSI)

If there is no pressure drop after 10 minutes, there is no leak in the cooling system.

If the pressure drops, check all hoses, radiator, cylinders and engine base for coolant leaks or air bubbles.

TESTING THE PRESSURE CAP

Test the pressure cap using a cooling system tester.

Replace the cap if it does not hold the pressure, or if it opens at a relief pressure that is too low or too high.

PRESSURE CAP RELIEF PRESSURE
Approximately 110 kPa (16 PSI)

PROCEDURES

RADIATOR

Inspecting the Radiator

Check radiating fins for clogging or damage.

Remove insects, mud or other obstructions with compressed air or low pressure water.

Removing the Radiator

1. Install a hose pincher on both radiator hoses.

REQUIRED TOOL	
LARGE HOSE PINCHER (P/N 529 032 500)	

2. Refer to *BODY* and remove the following parts to reach radiator:
   – Front fenders
   – Service center tray with service cover
   – Front fascia and head lights
   – Radiator deflector.
3. Remove the following parts from the radiator:
   – Radiator outlet hose (RH lower)
   – Radiator inlet hose (LH upper)
   – Coolant reservoir vent hose (LH upper)
   – Radiator mounting screws (2 at top of radiator).

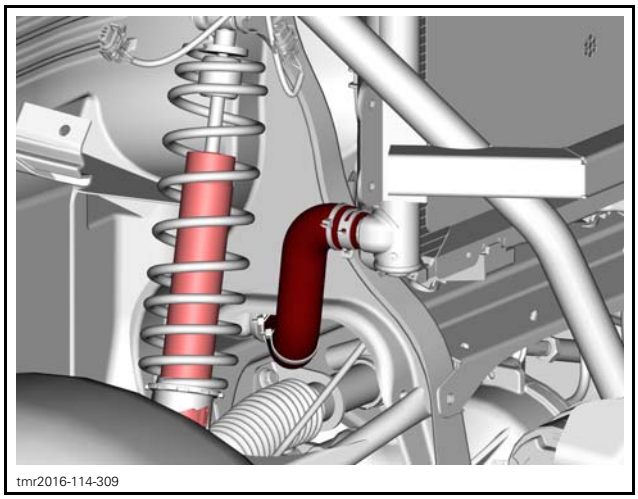
tmr2016-114-309

RADIATOR OUTLET HOSE

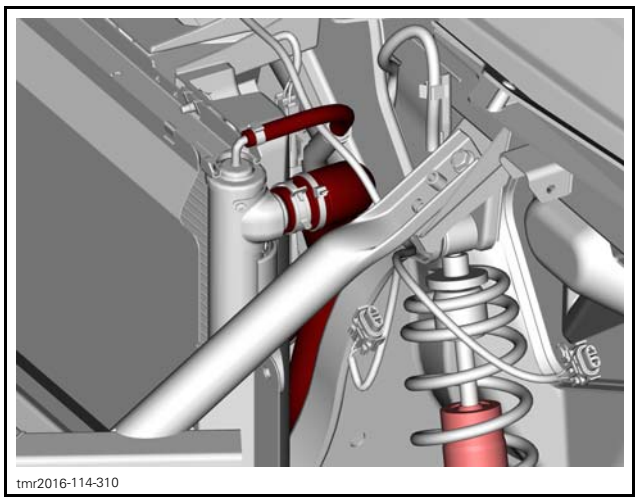
tmr2016-114-310

RADIATOR INLET HOSE AND RESERVOIR VENT HOSE

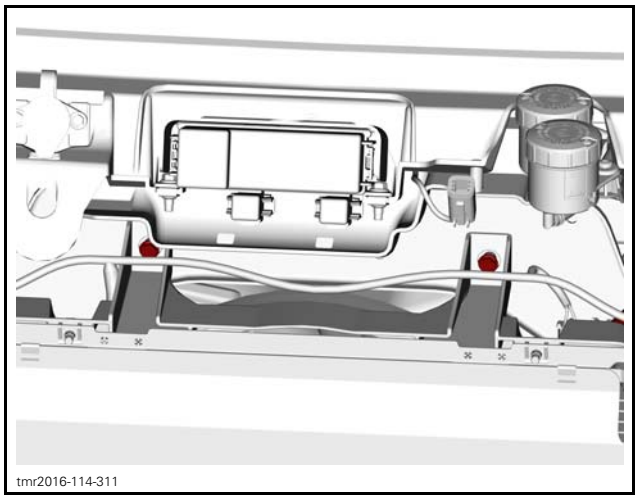
tmr2016-114-311

RADIATOR MOUNTING SCREWS

4. Disconnect cooling fan electrical connector.
5. Carefully remove radiator.

Installing the Radiator

The installation is the reverse of the removal procedure however, pay attention to the following.

Fill radiator with the recommended coolant. Refer to *PERIODIC MAINTENANCE PROCEDURES* subsection.

Bleed the cooling system, refer to *BLEEDING THE COOLING SYSTEM* in this subsection.

Check for coolant leaks from radiator and hoses.

RADIATOR COOLING FAN RELAY (R1)

Installing the Relay

Relay may be inverted by 180° at installation and it will work correctly.

tmr2016-114-312_a

1. R1: Radiator cooling fan relay

Testing the Relay Operation

The easiest way to check the relay is to remove it and temporarily substitute with a new one. If the radiator cooling fan operates, the relay is defective.

RADIATOR COOLING FAN

Radiator Cooling Fan Operation

The ECM controls the radiator cooling fan via the inputs of the coolant temperature sensor (CTS). Refer to the following table.

ENGINE TEMP.	96°C (205°F)	92°C (198°F)	114°C (237°F)
COOLING FAN	Turns ON	Turn OFF	ON
CHECK ENGINE LIGHT	—	—	OFF
MESSAGE IN GAUGE	—	—	- Limp Home - Hi Temp
LIMP HOME MODE	—	—	Gradual power reduction according to engine temperature.

Radiator Cooling Fan Fuse Location

The fuse (25A) is located in the fuse box underneath the passenger seat, near the battery.

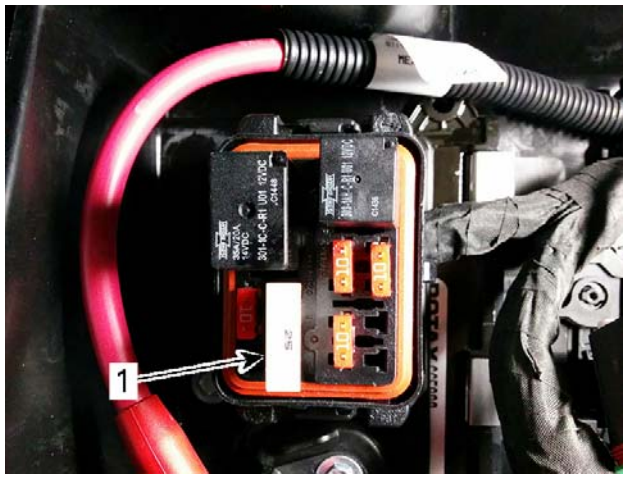

tmr2016-114-312_b

1. Cooling fan fuse

Testing the Radiator Cooling Fan

1. Connect the vehicle to BUDS2, refer to *COMMUNICATION TOOLS* for procedure and connector location.
2. In BUDS2 software, select the following:
   - **Scan** button
   - **Function** tab
   - **ECM** tab
   - **Cooling Fan** button.

If fan turns on, check CTS, wiring harness and connectors. If all parts are good, replace the ECM.

If fan does not turn on when the **Cooling Fan** button is pressed, refer to the following troubleshooting chart.

COOLING FAN TROUBLESHOOTING CHART		
Is fan working?	YES →	Everything is OK
NO ↓		
Check fan fuse (25A). Is fuse burnt?	YES →	Replace fuse Is fan working?
NO ↓		
Bypass fan relay R1		
↓		
Fan turns?	YES →	Replace relay Is fan working?
NO ↓		
Apply 12 Vdc to fan connector		
↓		
Fan turns?	NO →	Replace fan Is fan working?
YES ↓		
Check CTS		
↓		
CTS works?	NO →	Replace CTS Is fan working?
YES ↓		
Check wiring harness and connectors		
↓		
Harness and connectors good?	NO →	Repair or replace defective part(s)
YES ↓		
Try a new ECM	→	Is fan working?

Removing the Radiator Cooling Fan

1. Remove the radiator.
2. Remove 4 fan retaining screws.
3. Remove the radiator fan.

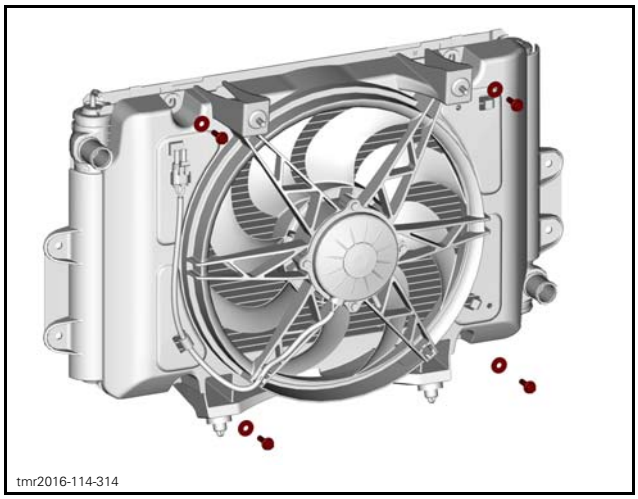

FAN RETAINING SCREWS

Installing the Radiator Cooling Fan

The installation is the reverse of the the removal procedure.

COOLING SYSTEM - VEHICLE COMPONENTS (HD9 / HD10)

SERVICE TOOLS

Description	Part Number	Page
LARGE HOSE PINCHER	529 032 500	60
TEST CAP	529 035 991	59
VACUUM/PRESSURE PUMP	529 021 800	59

SERVICE PRODUCTS

Description	Part Number	Page
EXTENDED LIFE PRE-MIXED COOLANT	779150	57

RADIATOR

All except Limited Models

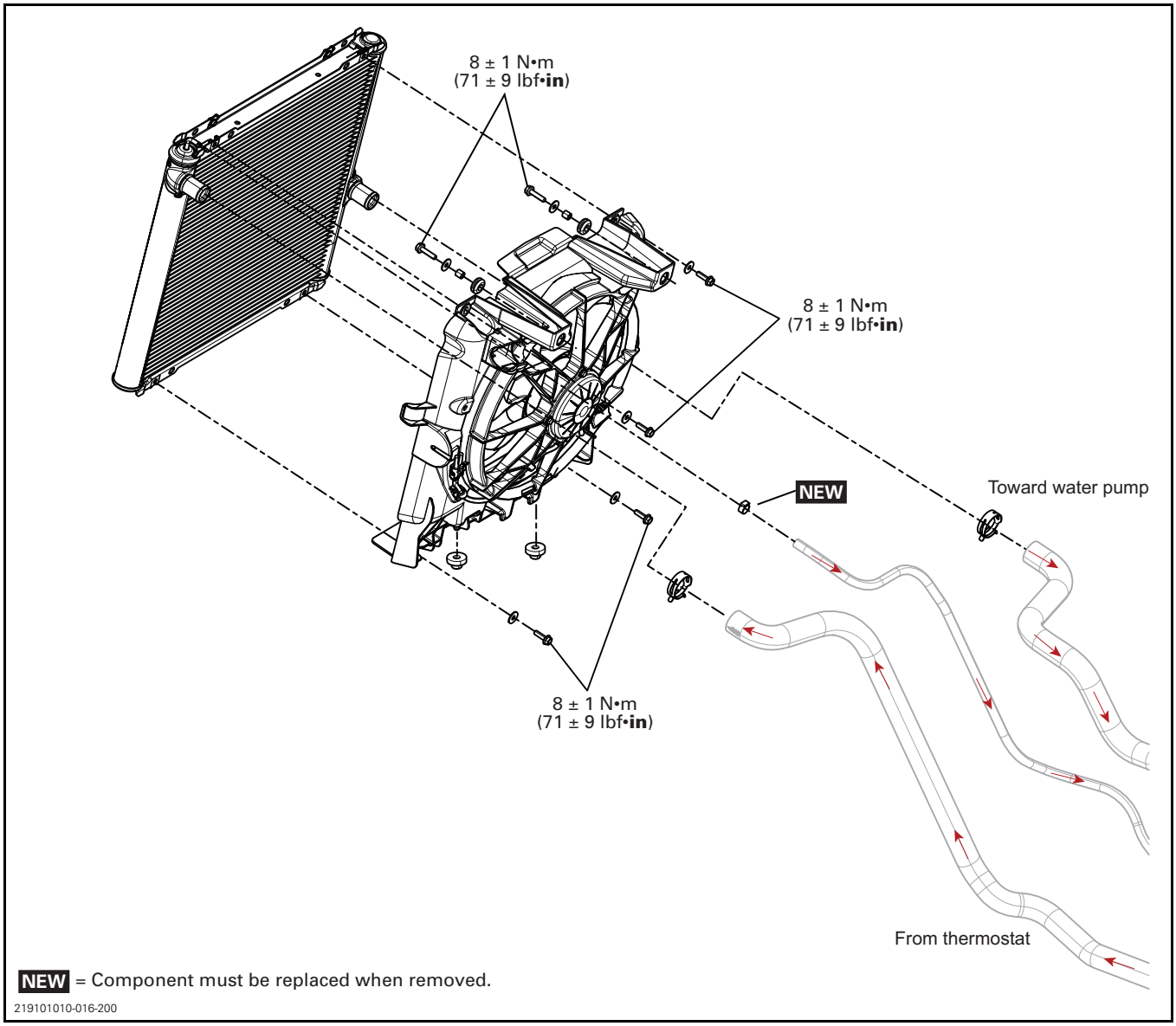

COOLING HOSES

All except Limited Models

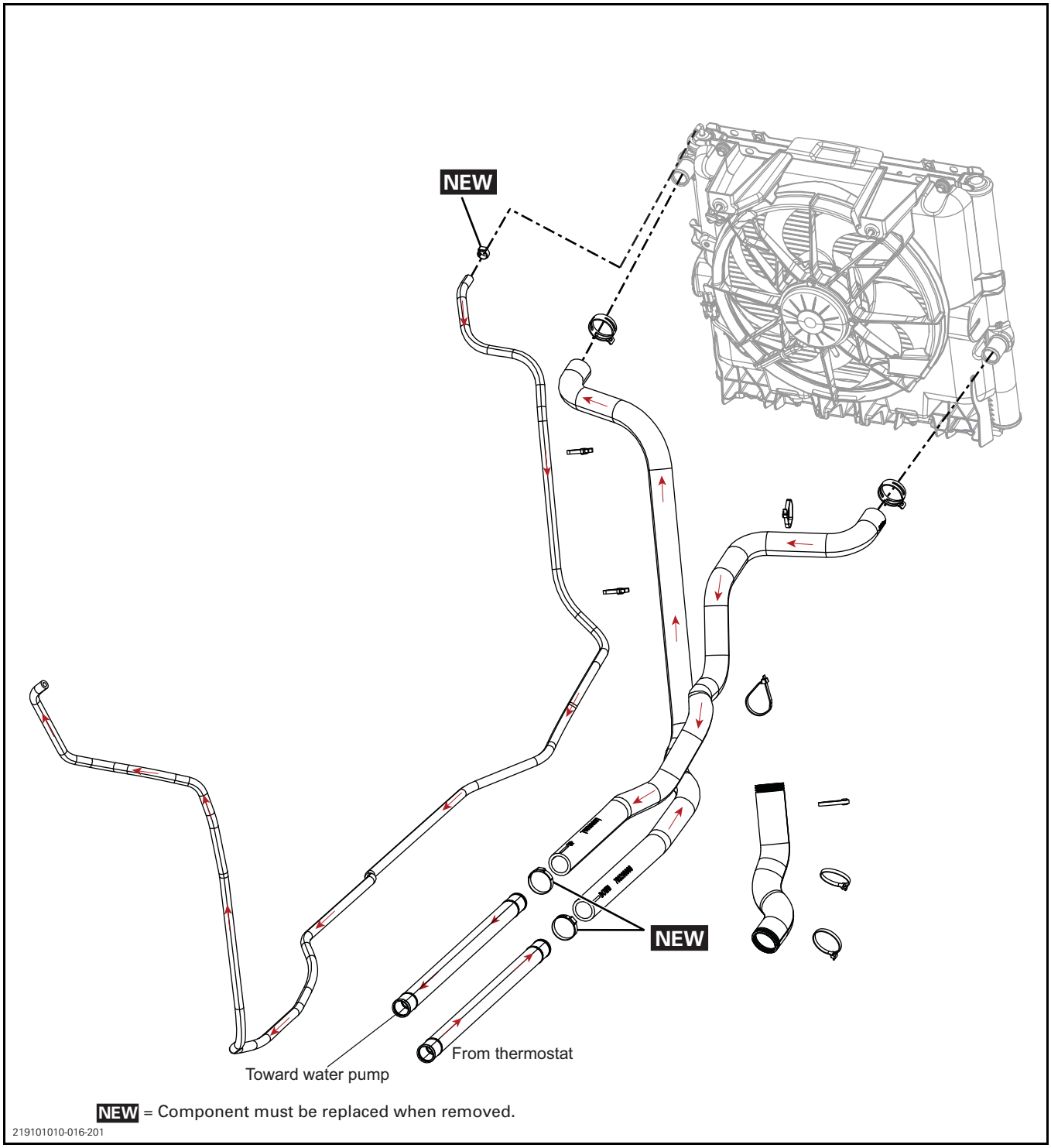

All except Limited Models

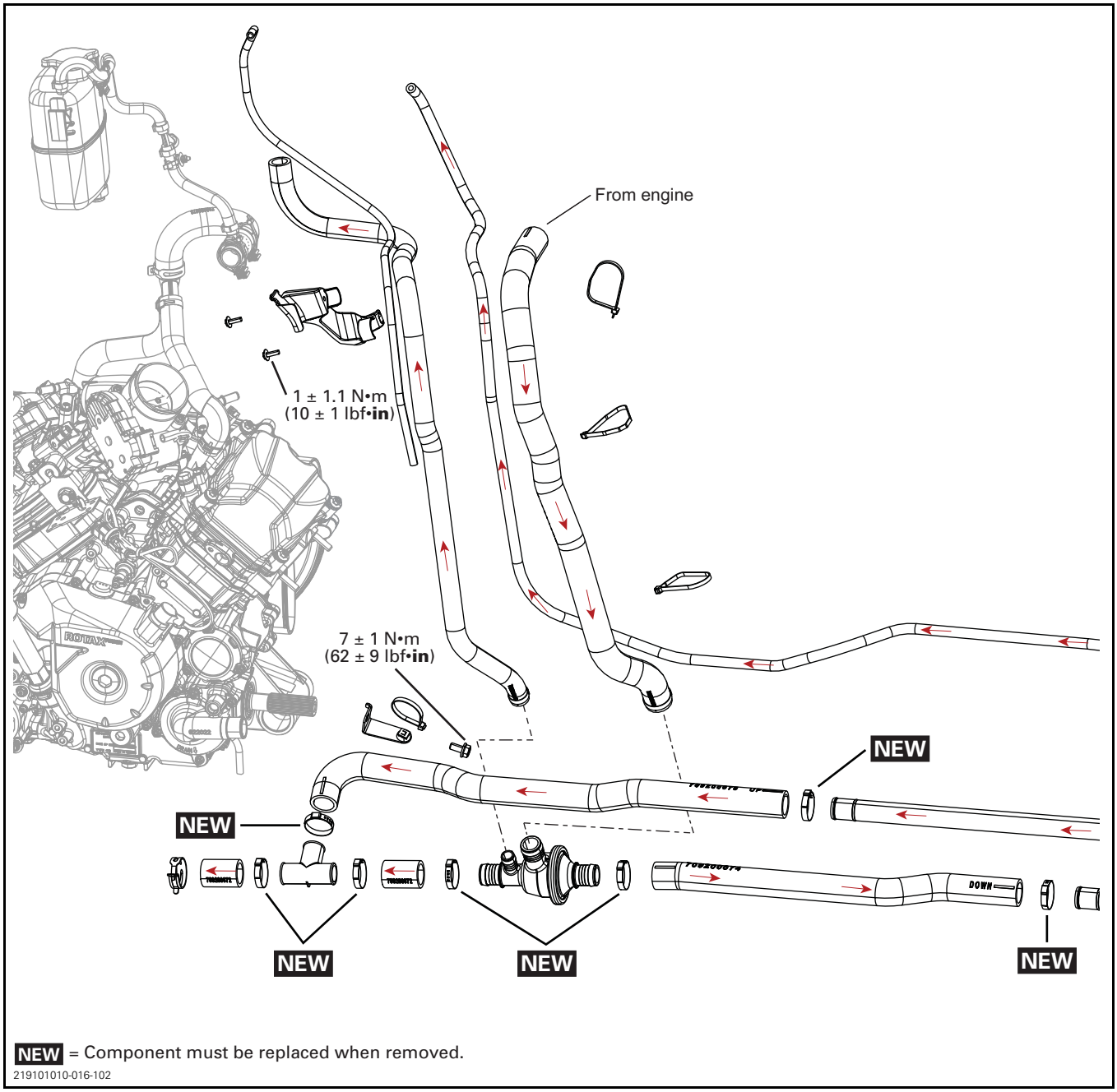

All except Limited Models

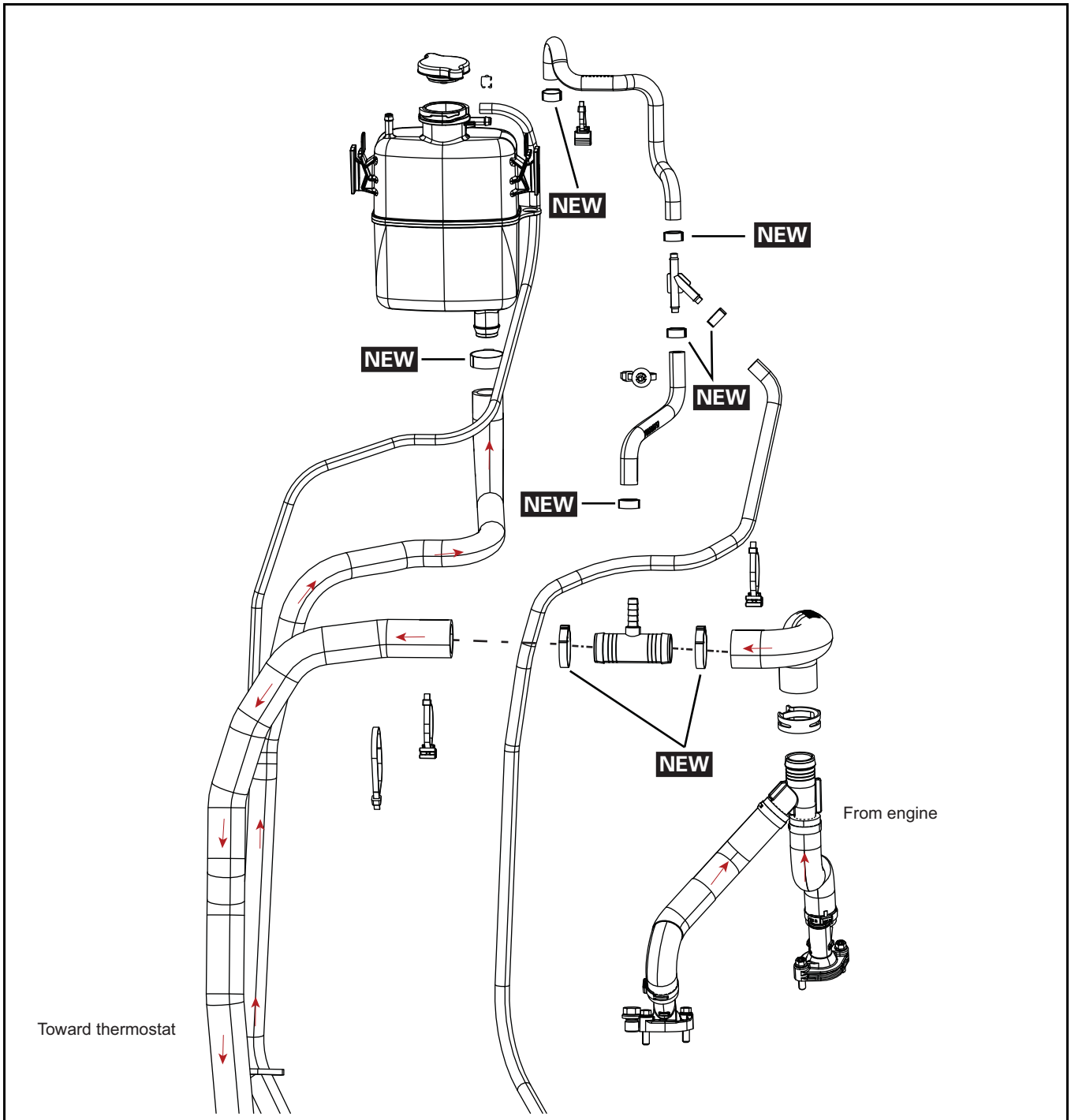

NEW = Component must be replaced when removed.

219101010-016-103

COOLING SYSTEM

Limited Models

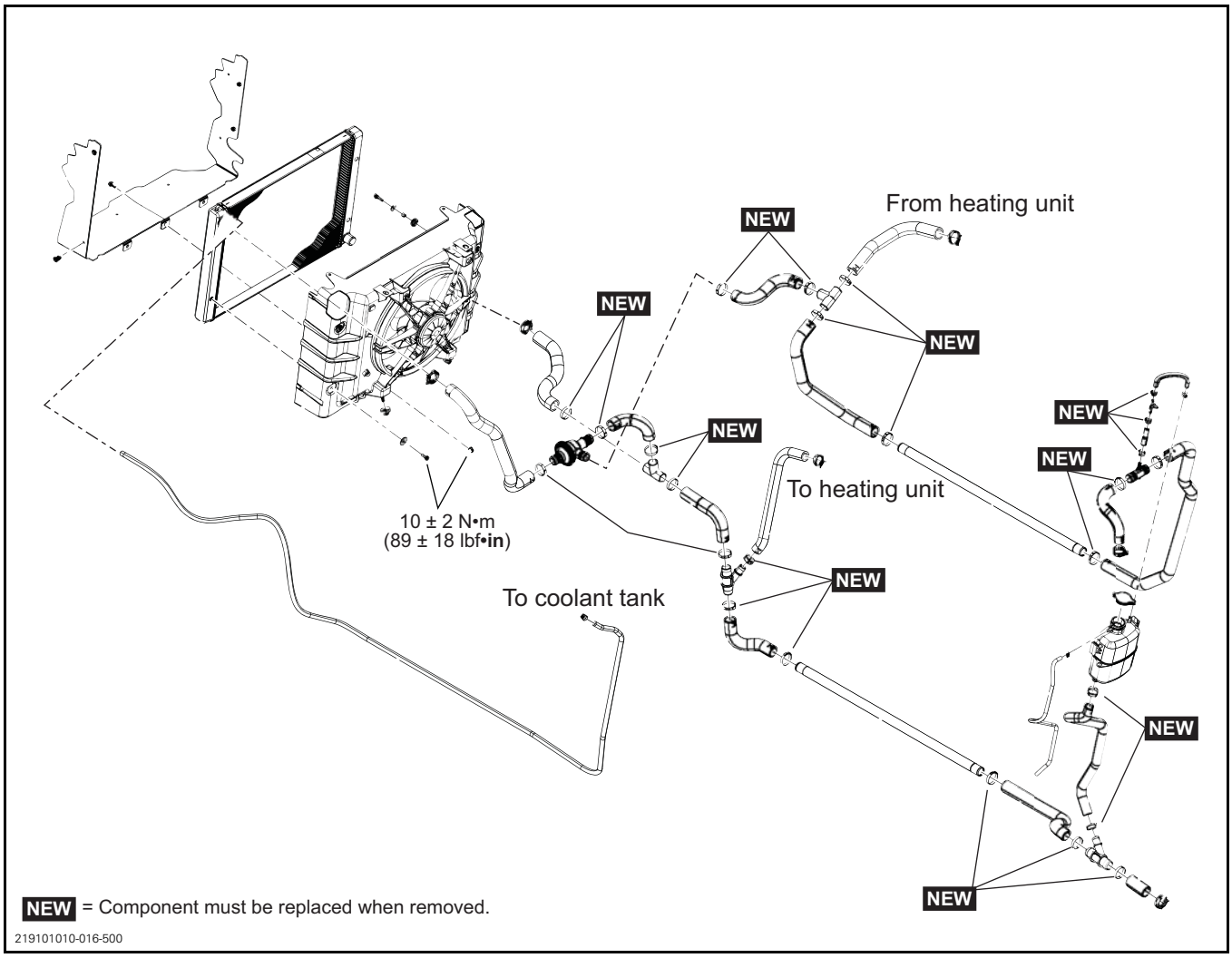

GENERAL

NOTICE Never start engine without coolant. Some engine parts such as the rotary seal on the water pump shaft can be damaged.

MAINTENANCE

RECOMMENDED ENGINE COOLANT

RECOMMENDED ENGINE COOLANT	
Scandinavia	EXTENDED LIFE PRE-MIXED COOLANT (P/N 779150)
All other countries	EXTENDED LIFE PRE-MIXED COOLANT (P/N 779150)
IF THE RECOMMENDED ENGINE COOLANT IS NOT AVAILABLE	
Use a blend of 50% distilled water with 50% antifreeze (especially formulated for aluminum engines)	

To prevent antifreeze deterioration, always use the same brand. Never mix different brands unless cooling system is completely flushed and refilled.

NOTICE To prevent rust formation or freezing condition, always replenish the system with the BRP premixed coolant or with 50% antifreeze and 50% distilled water. Do not use tap water, straight antifreeze or straight water in the system. Tap water contains minerals and impurities which build up in the system. During cold weather, straight water causes the system to freeze while straight antifreeze thickens (like slush ice) and does not have the same efficiency. Always use ethylene glycol antifreeze containing corrosion inhibitors specifically recommended for aluminum engines.

VERIFYING THE ENGINE COOLANT LEVEL

⚠ WARNING

Check coolant level with engine cold.

1. Place vehicle on a level surface.
2. Tilt cargo box.

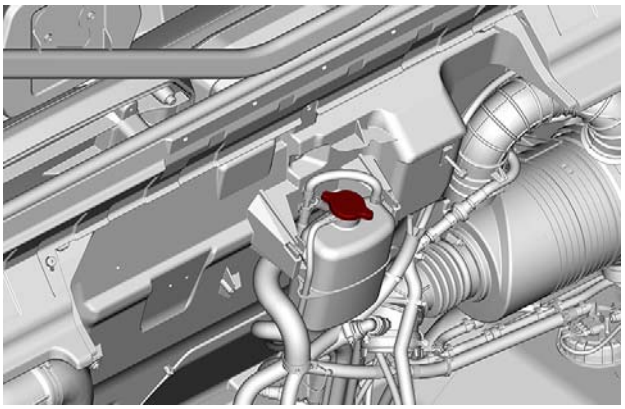

219001807-008

3. Remove the pressure cap.

⚠ WARNING

In order to avoid potential burns, do not remove the pressure cap if the engine is hot.

4. Ensure cooling system is full up to the MAX line.

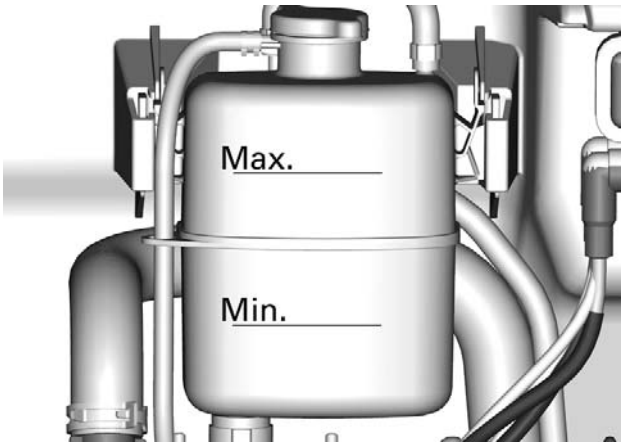

tmo2016-010-004_a

5. Add coolant in system as necessary. **Do not overfill**.
6. Properly reinstall pressure cap.
7. Close the cargo box.

NOTE: A cooling system that frequently requires addition of coolant is an indication of leaks or engine problems.

CHECKING THE ENGINE COOLANT SPECIFIC GRAVITY

Remove pressure cap.

Use an antifreeze tester to test coolant strength.

MINIMUM RECOMMENDED COOLANT STRENGTH
-30°C (-22°F)

REPLACING THE ENGINE COOLANT

Draining the Cooling System

⚠ WARNING

In order to avoid potential burns, do not remove the pressure cap or loosen the coolant drain plug if the engine is hot.

1. Tilt the cargo box.
2. Remove the cooling system pressure cap.

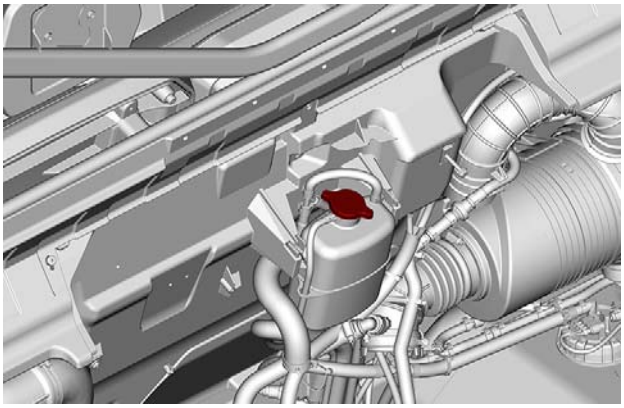

219001807-008

3. Place a drain pan underneath the vehicle.
4. Unscrew coolant drain plug and drain the coolant into a suitable container.

NOTE: Do not unscrew the coolant drain plug completely.

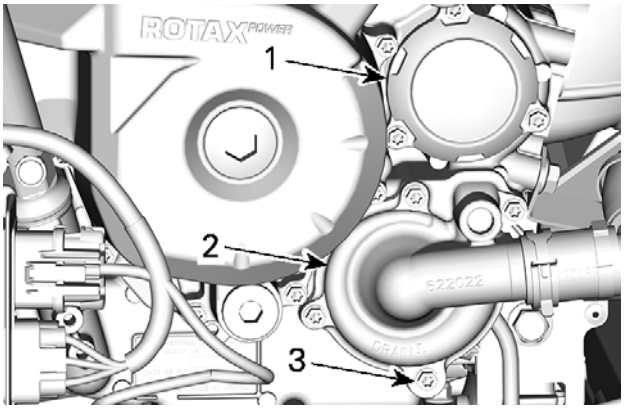

219001880-067_a

1. Oil filter cover
2. Water pump cover
3. Coolant drain plug

5. Disconnect the lower radiator hose and drain the remaining coolant into a suitable container.

NOTE: Take note of the position of the hose clamp on the lower radiator hose at the radiator.

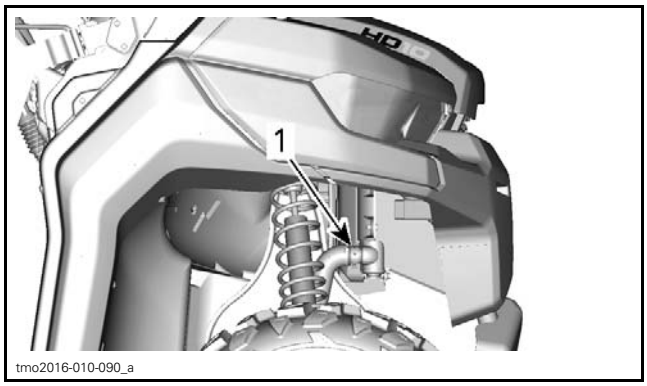

tmo2016-010-090_a

1. Lower radiator hose to disconnect

6. Drain cooling system completely.
7. Reinstall coolant drain plug.

TIGHTENING TORQUE	
Coolant drain plug	10 N•m ± 1 N•m (89 lbf•**in** ± 9 lbf•**in**)

8. Reinstall radiator hose as noted prior to removal.

TIGHTENING TORQUE	
Radiator hose clamp	3 N•m ± 0.5 N•m (27 lbf•**in** ± 4 lbf•**in**)

9. Fill cooling system with coolant, refer to *BLEEDING THE COOLING SYSTEM* in this subsection.

Bleeding the Cooling System

1. Remove the pressure cap.
2. Fill the cooling system until coolant is full up to the MAX line of the coolant reservoir.
3. Install pressure cap.
4. Run engine at idle with the pressure cap ON until the cooling fan cycles on for a second time.
5. Stop the engine and let it cool down.

⚠ WARNING

In order to avoid potential burns, do not remove the pressure cap if the engine is hot.

6. When the engine is cool, check coolant level. Add coolant if required.

7. After the next ride following this procedure, check coolant level. Add coolant as required. Refer to *VERIFYING THE ENGINE COOLANT LEVEL* in this subsection.

INSPECTING THE COOLING SYSTEM

1. Check general condition of hoses and clamps for tightness.
2. Carry out *CHECKING THE ENGINE COOLANT SPECIFIC GRAVITY* as detailed in this subsection.
3. Carry out *TESTING THE PRESSURE CAP* as detailed in this subsection.
4. Replace engine coolant if contaminated.

NOTE: Engine coolant should be replaced every 5 years or if contaminated.

PERFORMING A COOLING SYSTEM LEAK TEST

⚠ WARNING

To avoid potential burns, do not remove the pressure cap or loosen the cooling system drain plug if the engine is hot.

1. Tilt the cargo box
2. Replace the pressure cap by the following test cap.
3. Install the vacuum/pressure pump on the test cap.

REQUIRED TOOL	
TEST CAP (P/N 529 035 991)	
VACUUM/PRESSURE PUMP (P/N 529 021 800)	

4. Pressurize cooling system.

COOLING SYSTEM LEAK TEST
103 kPa (15 PSI)

If there is no pressure drop after 10 minutes, there is no leak in the cooling system.

If the pressure drops, check all hoses, radiator, cylinders and engine base for coolant leaks or air bubbles.

TESTING THE PRESSURE CAP

Test the pressure cap using a cooling system tester.

Replace the cap if it does not hold the pressure, or if it opens at a relief pressure that is too low or too high.

PRESSURE CAP RELIEF PRESSURE
Approximately 110 kPa (16 PSI)

PROCEDURES

THERMOSTAT

The thermostat is a single action type.

Thermostat Location

All except Limited Models

The thermostat is mounted in-line in the cooling system circuit.

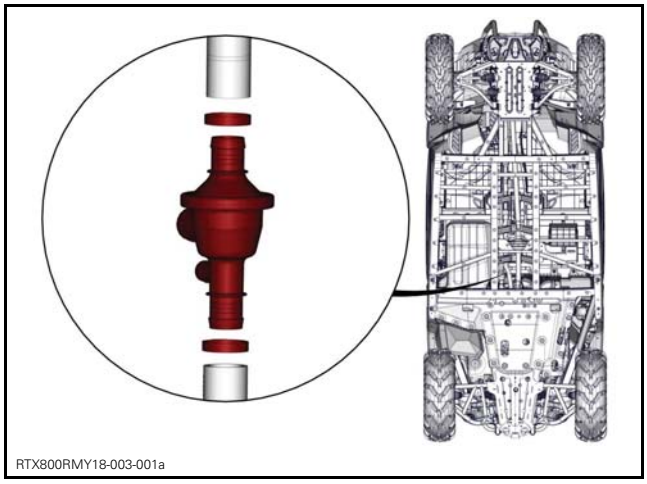

Limited Models

The thermostat is located in front of the vehicle above the front differential.

It can be reached by removing the left front wheel.

Removing the Thermostat

1. Drain the cooling system, refer to *DRAINING THE COOLING SYSTEM* in this subsection.
2. Remove Oetiker clamps that secure hoses to thermostat.
3. Remove thermostat.

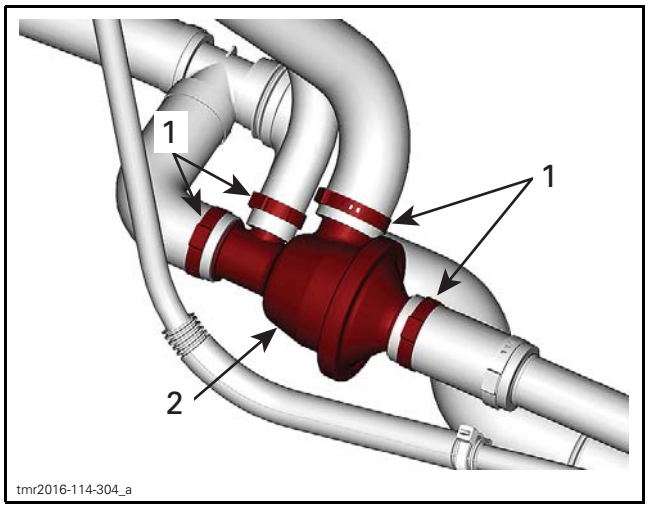

TYPICAL
1. Clamps
2. Thermostat

Testing the Thermostat

To check thermostat, put it in water and heat the water.

Compare data with the thermostat specifications indicated in the subsection *TECHNICAL SPECIFICATION - 1000 ENGINE* subsection.

Replace thermostat if it does not begin to open at specified temperature.

Check if gasket is brittle, hard or damaged. If so, replace gasket.

Installing the Thermostat

The installation is the reverse of the removal procedure.

Refill and bleed cooling system, refer to *BLEEDING THE COOLING SYSTEM* in this subsection.

NOTICE **The cooling system must be bled as specified.**

Check for coolant leaks.

RADIATOR

Inspecting the Radiator

Check radiating fins for clogging or damage.

Remove insects, mud or other obstructions with compressed air or low pressure water.

Removing the Radiator

1. Install a hose pincher on both radiator hoses.

REQUIRED TOOL	
LARGE HOSE PINCHER (P/N 529 032 500)	

2. Refer to *BODY* and remove the following parts to reach radiator:
   - Front fenders
   - Service center tray with service cover
   - Front fascia and head lights
   - Radiator deflector.
3. Remove the following parts from the radiator:
   - Radiator outlet hose (RH lower)
   - Radiator inlet hose (LH upper)
   - Coolant reservoir vent hose (LH upper)
   - Radiator mounting screws (2 at top of radiator).

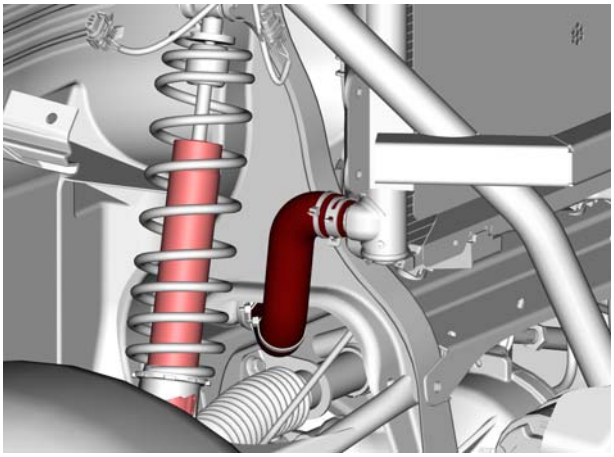

RADIATOR OUTLET HOSE

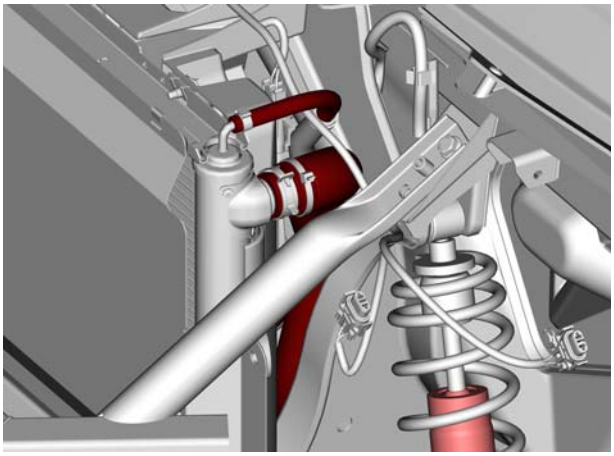

RADIATOR INLET HOSE AND RESERVOIR VENT HOSE

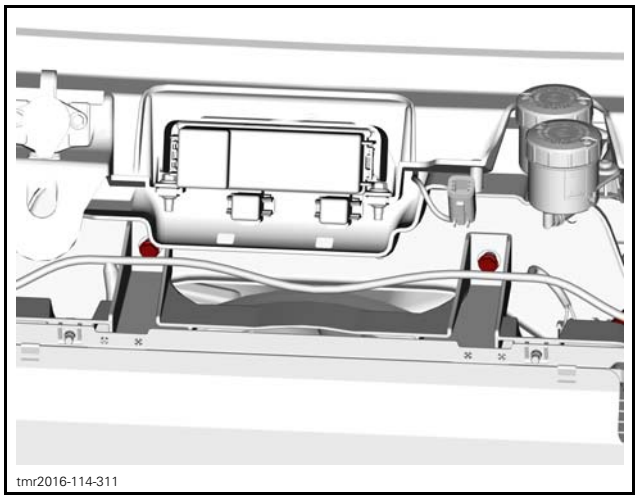

RADIATOR MOUNTING SCREWS

4. Disconnect cooling fan electrical connector.
5. Carefully remove radiator.

Installing the Radiator

The installation is the reverse of the removal procedure. However, pay attention to the following.

Refill and bleed the cooling system, refer to *BLEEDING THE COOLING SYSTEMS* in this subsection.

Check for coolant leaks from radiator and hoses.

RADIATOR COOLING FAN

Radiator Cooling Fan Operation

The ECM controls the radiator cooling fan via the inputs of the coolant temperature sensor (CTS). Refer to the following table.

ENGINE TEMP.	96°C (205°F)	92°C (198°F)	114°C (237°F)
COOLING FAN	Turns ON	Turn OFF	ON
CHECK ENGINE LIGHT	—	—	OFF
MESSAGE IN GAUGE	—	—	- Limp Home - Hi Temp
LIMP HOME MODE	—	—	Gradual power reduction according to engine temperature.

Radiator Cooling Fan Fuse Location

The fuse (25A) is located in the fuse box underneath the passenger seat, near the battery.

1. *Cooling fan fuse*

Testing the Radiator Cooling Fan

1. Connect the vehicle to the BRP diagnostic software (BUDS2), refer to *COMMUNICATION TOOLS* for procedure and connector location.
2. In BUDS2, go to:
   – **Functions** page
   – **ECM** button
   – **IO Controls** tab.
3. Select **Activate Cooling Fan** action

If fan turns on, check CTS, wiring harness and connectors. If all parts are good, replace the ECM.

If fan does not turn on when the **Activate Cooling Fan** button is pressed, refer to the following troubleshooting chart.

COOLING FAN TROUBLESHOOTING CHART		
Is fan working?	YES →	Everything is OK
NO ↓		
Check fan fuse (25A). Is fuse burnt?	YES →	Replace fuse Is fan working?
NO ↓		
Bypass fan relay R1		
↓		
Fan turns?	YES →	Replace relay Is fan working?
NO ↓		
Apply 12 Vdc to fan connector		
↓		
Fan turns?	NO →	Replace fan Is fan working?
YES ↓		
Check CTS		
↓		
CTS works?	NO →	Replace CTS Is fan working?
YES ↓		
Check wiring harness and connectors		
↓		
Harness and connectors good?	NO →	Repair or replace defective part(s)
YES ↓		
Try a new ECM	→	Is fan working?

Removing the Radiator Cooling Fan

1. Remove the radiator.
2. Remove 4 fan retaining screws.
3. Remove the radiator fan.

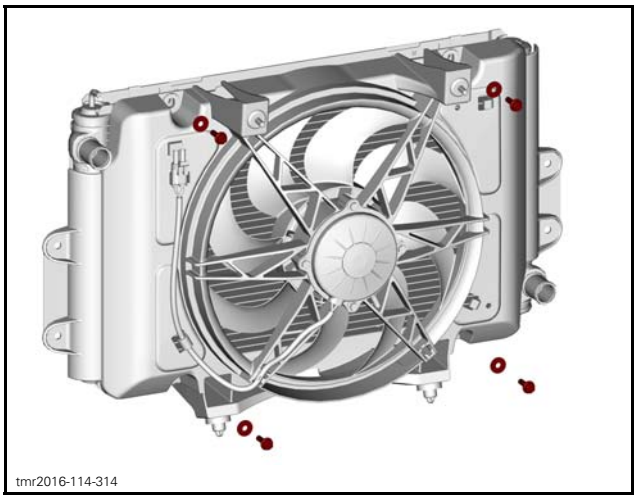

FAN RETAINING SCREWS

Installing the Radiator Cooling Fan

The installation is the reverse of the removal procedure.

HEATING SYSTEM

DUCTS AND AIR VENTS

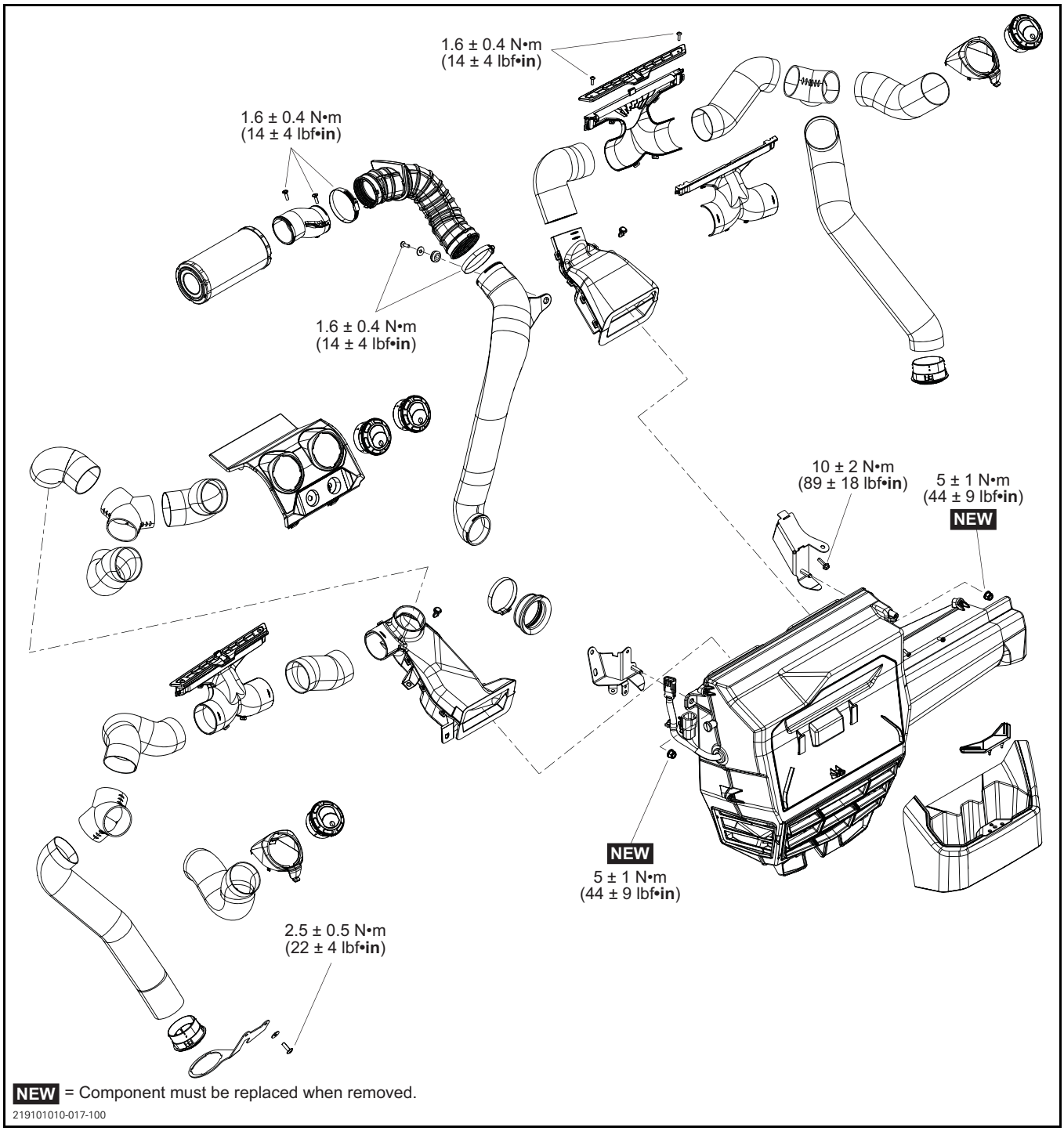

NEW = Component must be replaced when removed.

219101010-017-100

HEATING UNIT

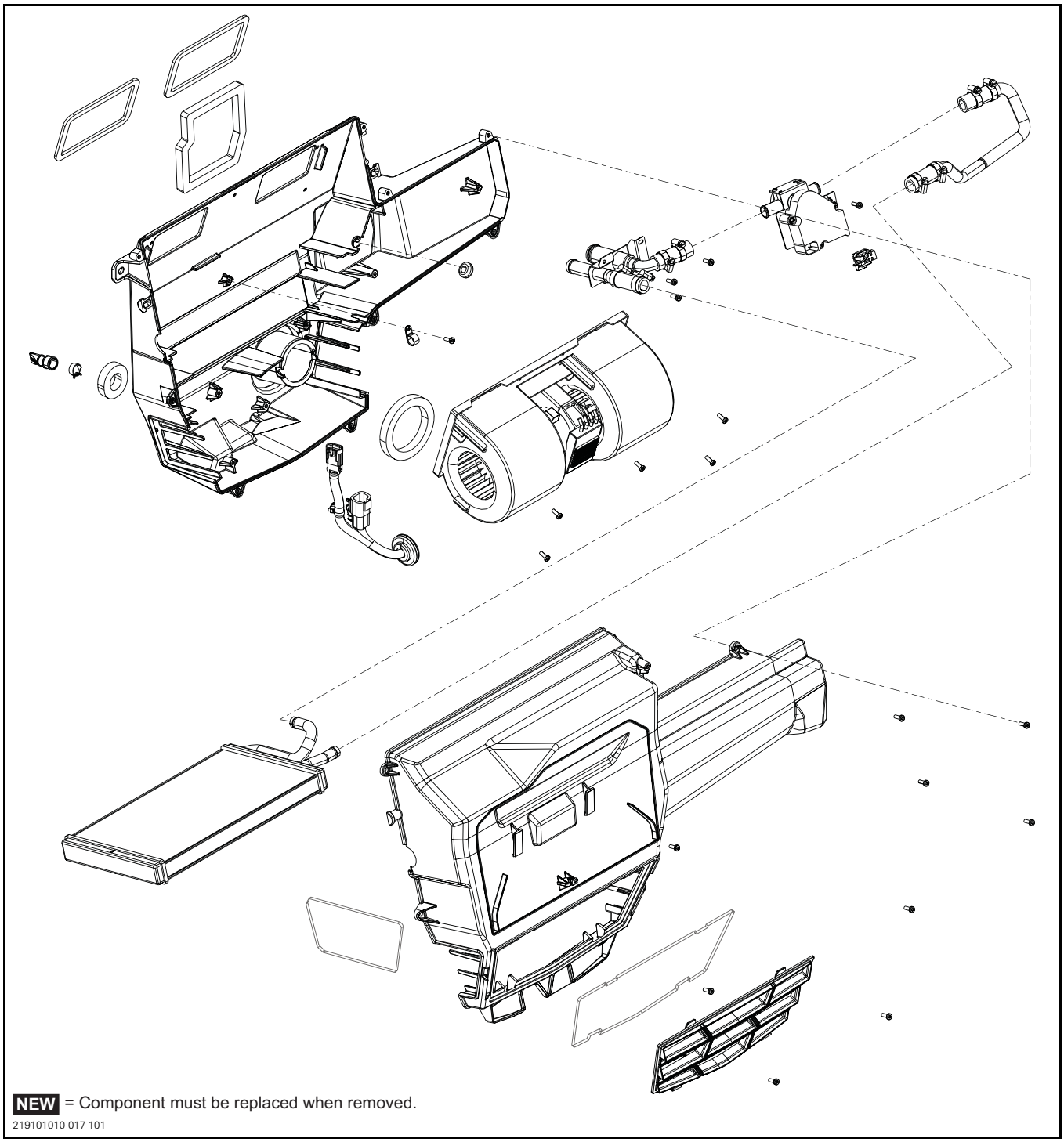

NEW = Component must be replaced when removed.

219101010-017-101

MAINTENANCE

INSPECTING AND REPLACING THE A/C AIR FILTERS

NOTICE **The cleaning of the filters must be performed more often than recommended when riding in dusty conditions or sand.**

Fresh Air Filter

Open hood to access fresh air filter.

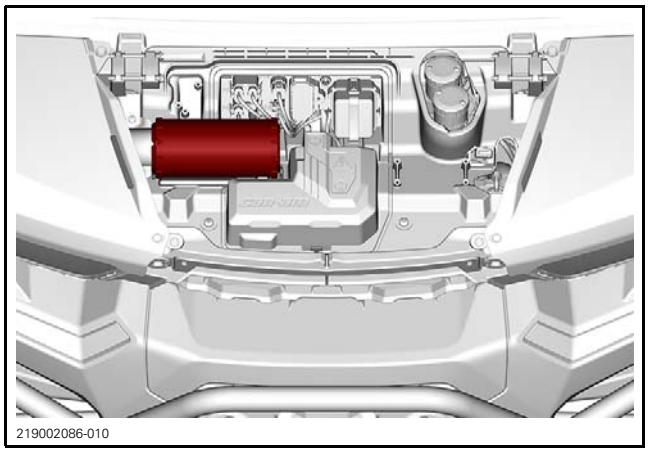

Lift and slide filter to remove.

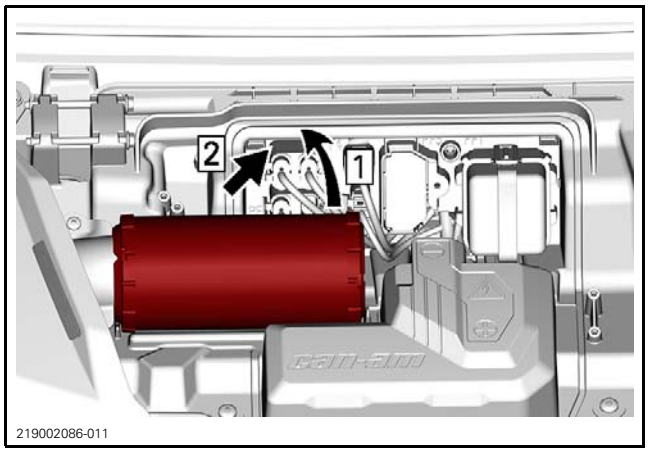

Step 1: Lift
Step 2: Slide

Inspect the filter for any signs of leaks. A streak of dust on the clean side of the filter is a telltale sign. Replace filter if there is any damages. Eliminate any source of air leaks before installing a new filter.

Clean air filter by tapping out heavy dust from paper element, this will allow dirt and dust to get out of the paper filter.

NOTICE **It is not recommended to blow compressed air on the paper element; this could damage the paper fibers and reduce its filtration ability when used in dusty environments. If air filter is too dirty and cannot be cleaned following the recommended procedure, it should be replaced.**

Use a clean damp cloth to wipe both the filter sealing surface and the inside of the outlet tube. Ensure that the outlet tube sealing area is undamaged.

The installation is the reverse of the removal procedure.

Cockpit Air filters

Cockpit air filters are located at the bottom of the center console. There are 3 filters:

– One at the front of the unit
– One on each side of the unit.

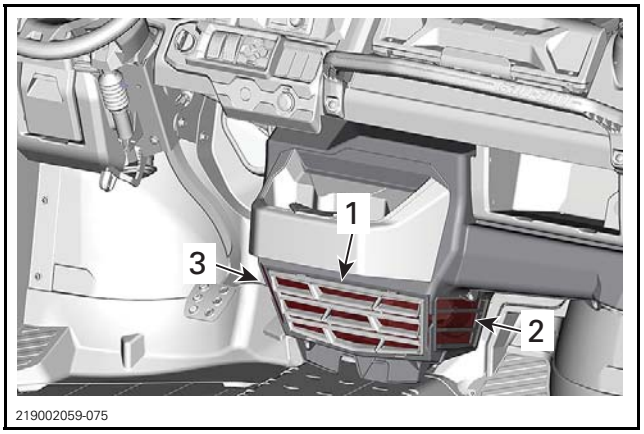

1. *Front cockpit air filter*
2. *Lateral cockpit air filter - passenger side*
3. *Lateral cockpit air filter - driver side*

Front Cockpit Air Filter

To remove this filter, lift the grille tabs and pull up.

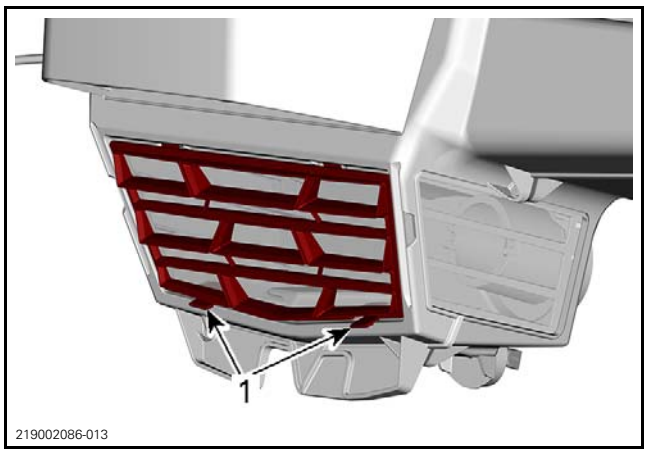

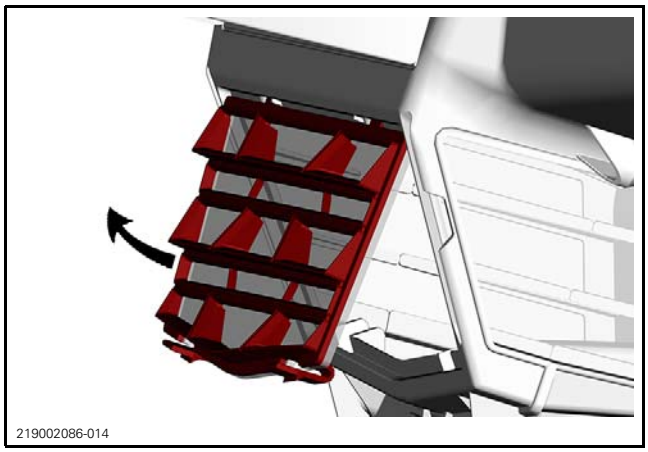

Clean air filter by washing it in lukewarm water with mild soap. Remove excess water and air dry before installation.

Before installing the filter, clean the inside of the heating/air conditioning unit and the evaporator coil using vacuum and a soft brush.

NOTICE **Be careful when brushing to avoid damaging the evaporator coil fins.**

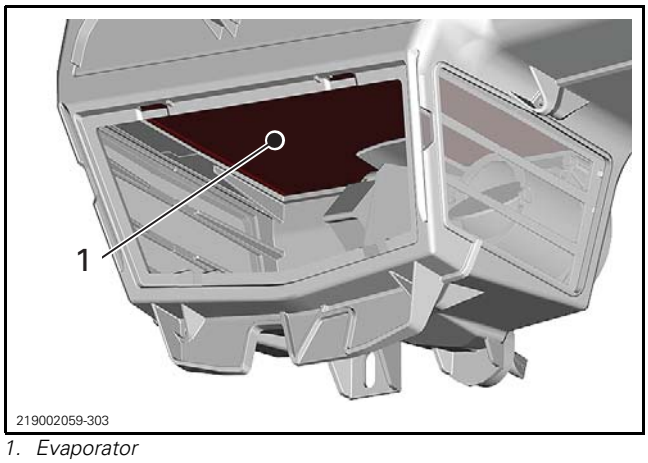

1. Evaporator

The installation is the reverse of the removal procedure.

Lateral Cockpit Air Filters

To remove these filters, grab the grille tab and pull.

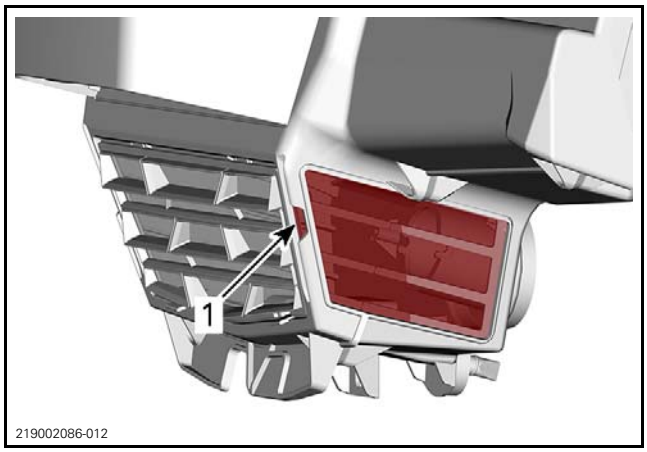

1. Grille tab

Clean air filters by washing them in lukewarm water with mild soap. Remove excess water and air dry before installation.

The installation is the reverse of the removal procedure.

TROUBLESHOOTING

BLOWER MOTOR DOES NOT OPERATE

POSSIBLE CAUSE	INSPECTION	SOLUTION
1 - Blown fuse	Inspect fuse and wiring harness.	Replace fuse or repair wiring harness.
2 - Relay	Check power into and out of the relay.	Replace the relay or repair the wiring harness.
3 - Broken wire or bad connection	Check ground and connections of the blower motor.	Repair wiring harness or connector.
4 - Blower motor malfunction	Check the motor power wires.	Replace the motor.

BLOWER MOTOR OPERATES NORMALLY, BUT AIR FLOW IS INSUFFICIENT

POSSIBLE CAUSE	INSPECTION	SOLUTION
1 - Plugged cockpit air filters	Check the cockpit air filters.	Replace the cockpit air filters.
2 - Clogged air ducts	Check cleanliness of ducts.	Clean ducts.

PROCEDURES

AIR VENTS

Removing the Air Vent

Windshield Air Vent

1. Open the windshield.
2. Remove screws retaining the windshield air vent.

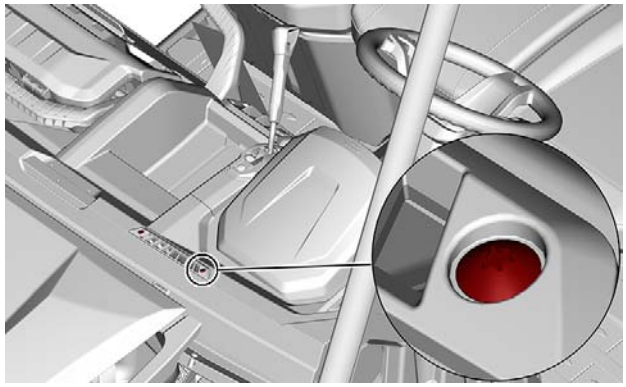

tmr2016-151-002_a

3. Pull on the windshield air vent and remove it.

Central Air Vents

To remove central air vents, the dash removal is required.

Installing the Air Vents

The installation is the reverse of the removal procedure. However, pay attention to the following.

TIGHTENING TORQUE	
Windshield air vent screws	1.6 N•m ± 0.4 N•m (14 lbf•**in** ± 4 lbf•**in**)

AIR DUCTS

Removing the Air Ducts

To remove air ducts, the dash removal is required.

Installing the Air Ducts

The installation is the reverse of the removal procedure.

HEATING UNIT

Removing the Heating Unit Cover

1. Remove screws securing the cover.

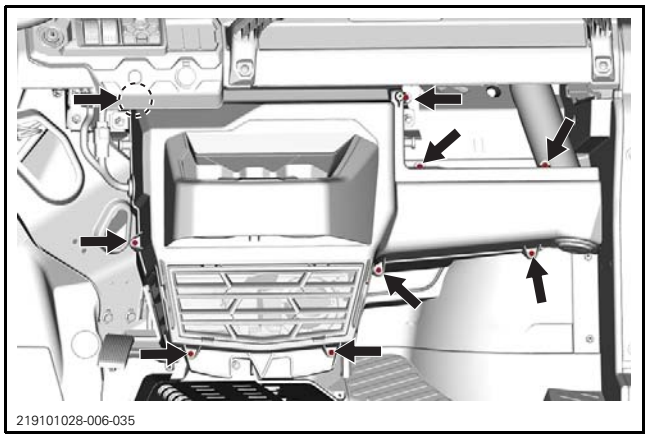
219101028-006-035

2. Pull the cover to remove it.

Installing the Heating Unit Cover

The installation is the reverse of the removal procedure. However, pay attention to the following.

TIGHTENING TORQUE	
Heating unit cover screws	1.35 N•m (12 lbf•**in**)

Removing the Heating Unit

1. Remove the right storage compartment.

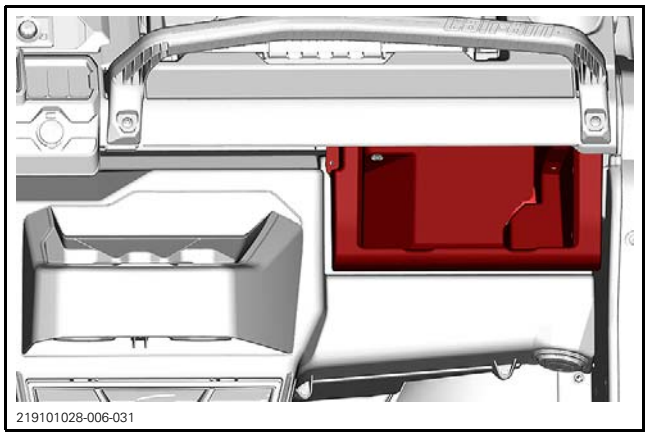
219101028-006-031

2. Remove the nuts on both side of the heating unit.

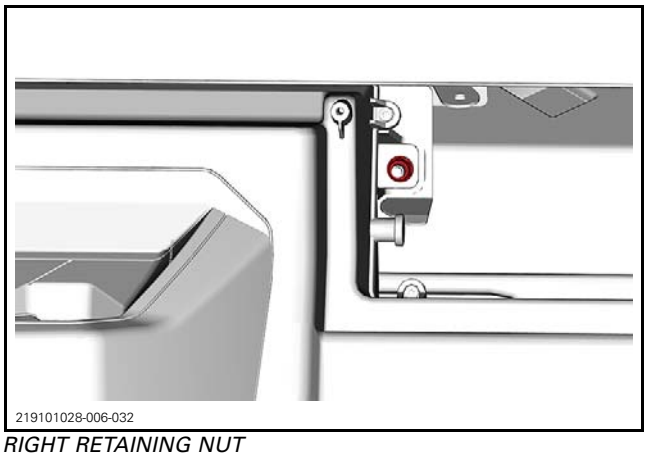
219101028-006-032

RIGHT RETAINING NUT

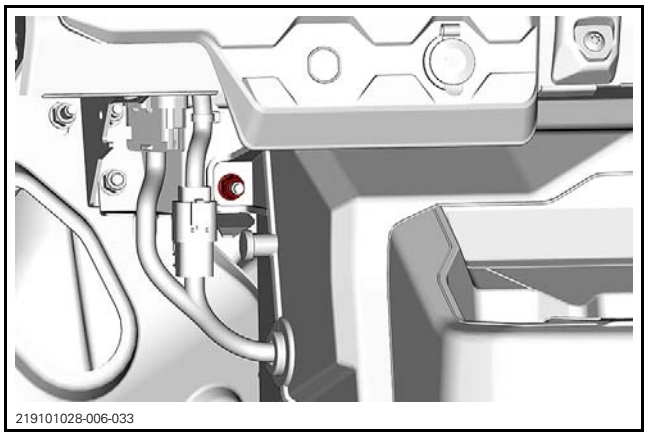
219101028-006-033

LEFT RETAINING NUT

3. Remove the lower central retaining nut.

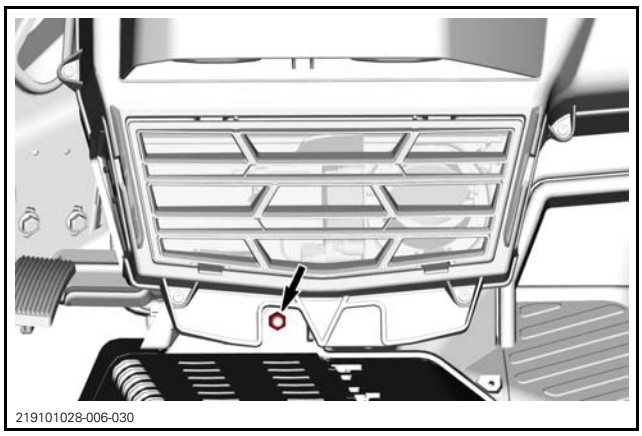
219101028-006-030

If the heating unit must be moved aside to work behind, pull the unit slightly and turn it towards the right side of the vehicle to make room.

If the unit must be removed from the vehicle, do the following.

4. Unplug the blower and heater valve connectors.

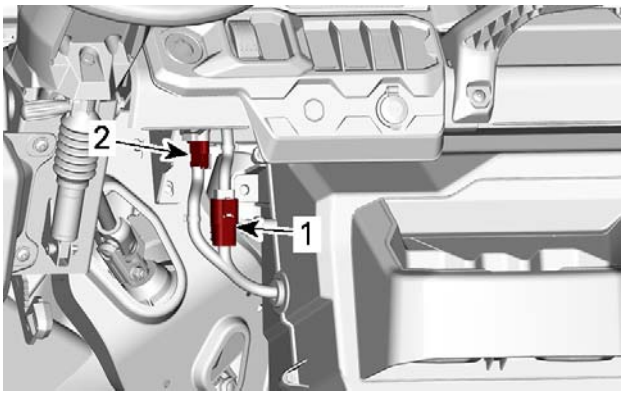

219101010-017-050

1. *Blower connector*
2. *Heater valve connector*

5. From behind the front right wheel, install a hose pincher on each coolant hose.

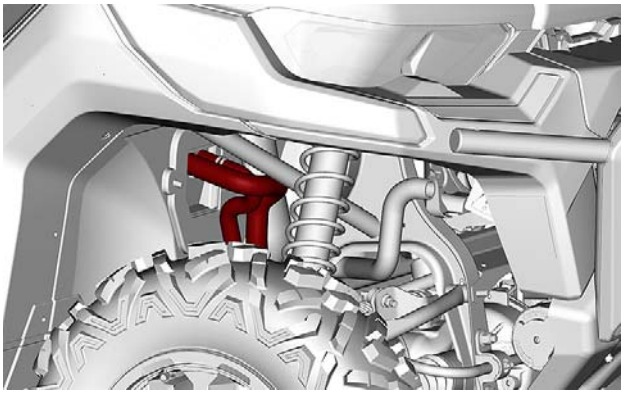
219101010-017-061

6. Unplug hoses and recover any coolant flow.
7. Pull the unit and disconnect the air ducts.
8. Remove the heating unit from the vehicle.

Installing the Heating Unit

The installation is the reverse of the removal procedure. However, pay attention to the following.

TIGHTENING TORQUE	
Heating unit retaining nuts	5 N•m ± 1 N•m (44 lbf•**in** ± 9 lbf•**in**)

Fill and bleed the cooling system. Refer to *COOLING SYSTEM - VEHICLE COMPONENTS* subsection.

Check for coolant leaks.

BLOWER

The blower assembly includes the blower resistor, the blower motor and the blower fans.

Heating Unit Fuses Location

The fuse box is located into the front service compartment.

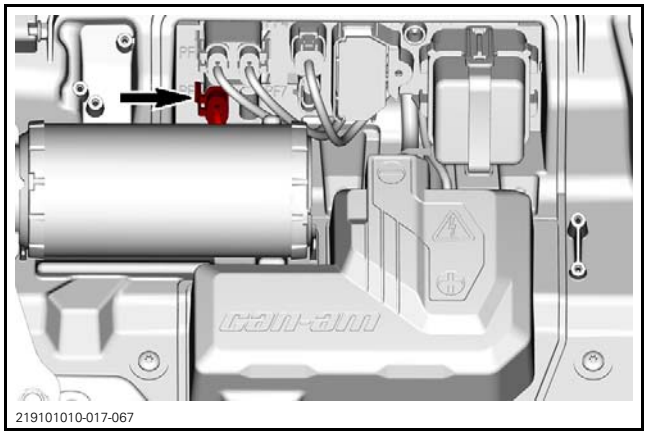
219101010-017-067

Testing the Blower Motor

Turn the vehicle key switch to ON.

Turn the blower speed switch to low, medium, then high.

HEATING UNIT TROUBLESHOOTING CHART		
Is blower working?	YES →	Everything is OK
NO ↓		
Check for power on main accessory posts under dashboard	NO →	Refer to *POWER DISTRIBUTION AND GROUNDS* subsection
YES ↓		
Check blower fuse (20A). Is fuse burnt?	YES →	Replace fuse Is blower working?
NO ↓		
Check wiring harness, connectors, and ground		
↓		
Harness and connectors good?	NO →	Repair or replace defective part(s)
YES ↓		
Blower turns?	YES →	Reinstall all removed parts
NO ↓		
Bypass blower speed switch		
↓		
Blower turns?	YES →	Replace blower speed switch Is blower working?
	NO →	Replace blower

Blower Motor Resistor

The blower motor resistor provides electrical resistance in series to the blower motor.

The fan speed control switch sends current to one blower resistor pin based on selected fan speed.

Adding resistance to the circuit slows the blower motor.

Removing resistance from the circuit speeds the blower motor.

Testing the Blower Motor Resistor

Refer to the appropriate *WIRING DIAGRAM*.

The blower motor resistor cannot be tested independently from the blower motor.

1. Turn the fan on to low, medium, then high.
2. Read the voltage at the blower assembly connector for each speed.

If battery voltage is available at each pin of the blower assembly connector and the blower motor does not come on. Ensure there is a good ground.

If all electrical tests are good, replace the blower.

Blower speed switch

The blower speed switch sends current to one pin of the blower motor resistor depending on selected speed.

The blower speed switch also activates the relay which allows the temperature control sensor signal to reach the heater control valve actuator.

Testing the Blower Speed Switch

Refer to the appropriate *WIRING DIAGRAM*.

1. Unclip the bottom of the central console panel.

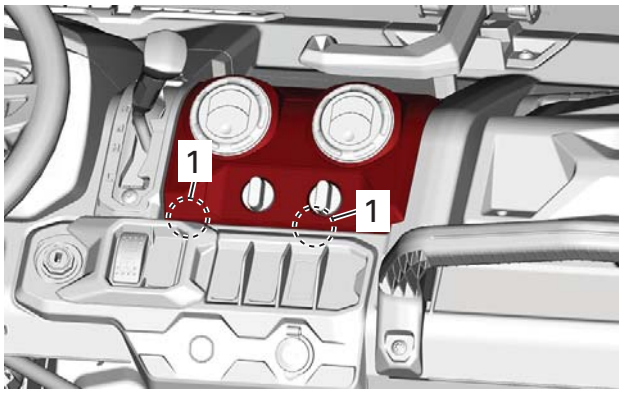

1. Locking tab location

2. Lift the panel to reach the connectors.
3. Disconnect blower speed switch.
4. Ensure battery voltage is available at pin B (harness side).
5. Disconnect blower speed switch.
6. Test resistance as per following table.

SPEED	PINS	SPECIFICATION
Off	B and C	O.L.
Any speed	B and C	0 Ω
Low	B and 9	0 Ω
Medium	B and 8	0 Ω
High	B and 7	0 Ω

Replace blower speed switch if test is not as per specifications.

Removing the Blower

1. Remove the heating unit cover.
2. Remove the blower retaining screws.

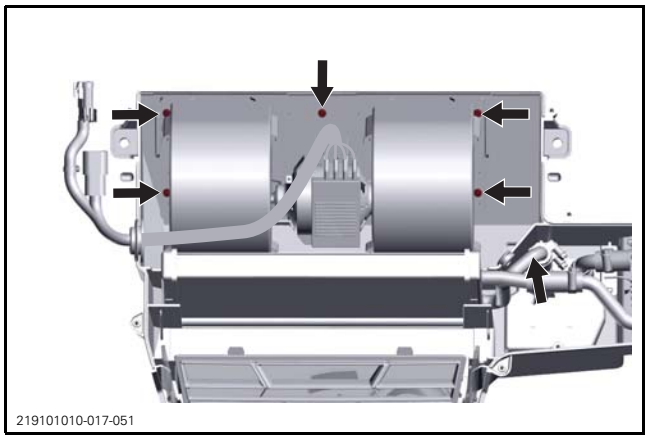
219101010-017-051

3. Remove blower harness from the rubber grommet.

Installing the Blower

The installation is the reverse of the removal procedure. However, pay attention to the following.

TIGHTENING TORQUE	
Blower retaining screws	1.35 N•m (12 lbf•**in**)

HEATER VALVE

The heater valve includes the valve and the actuator.

The actuator controls the valve opening or closing to allow or not the circulation of the heated coolant through the heater unit.

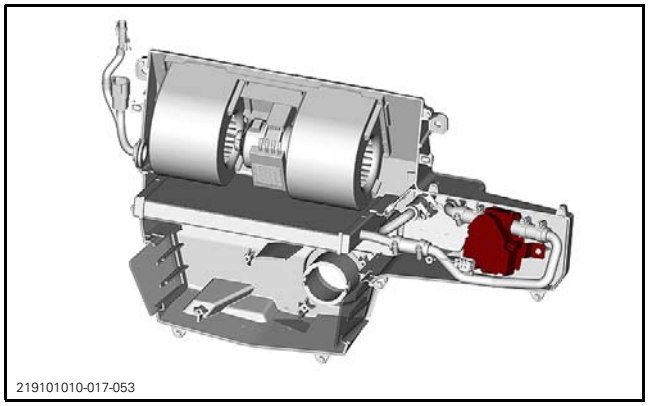
219101010-017-053

Testing the Heater Valve

1. Disconnect the heater valve connector, located on the left side of the heating unit.

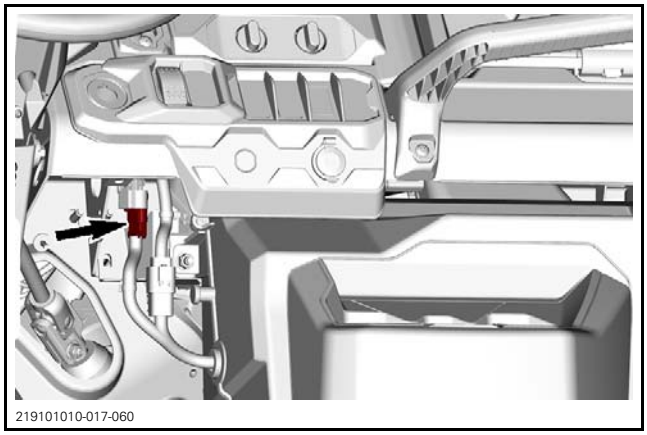
219101010-017-060

2. On vehicle connector, verify the voltage.

HEATER VALVE CONNECTOR PINS		RESULT
A	B	Battery voltage

No battery voltage, check fuse F17 and wiring harness.

Low battery voltage, recharge or replace battery by a fully charge one and retest.

3. Good battery voltage; check the signal from the potentiometer.

HEATER VALVE CONNECTOR PINS		RESULT
B	C	Voltage should vary when turning the temperature control knob.

If the voltage vary while turning the knob, replace the heater valve.

Otherwise, replace the potentiometer.

Removing the Heater Valve

1. From behind the front right wheel, install a hose pincher on each coolant hose.

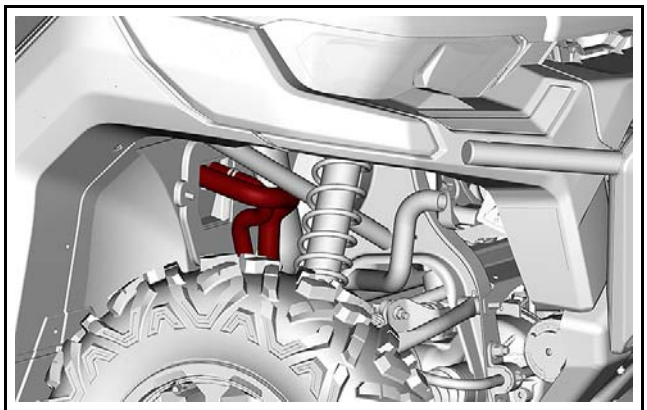
219101010-017-061

2. Remove the heating unit cover. See procedure in this subsection.
3. Disconnect the heater valve connector.
4. Loosen gear clamps on both side of the heater valve.

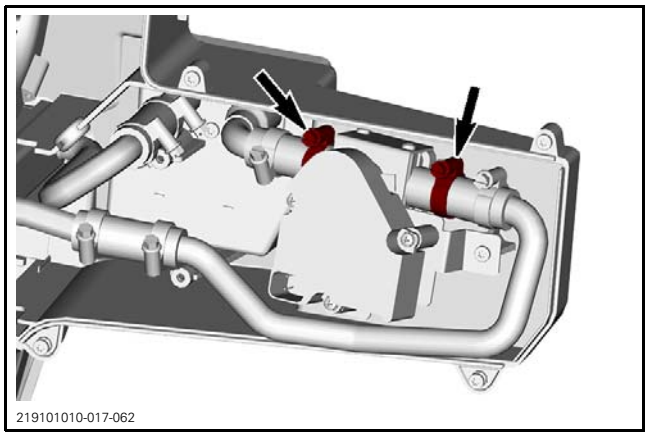
219101010-017-062

5. Remove the heater valve retaining screw.

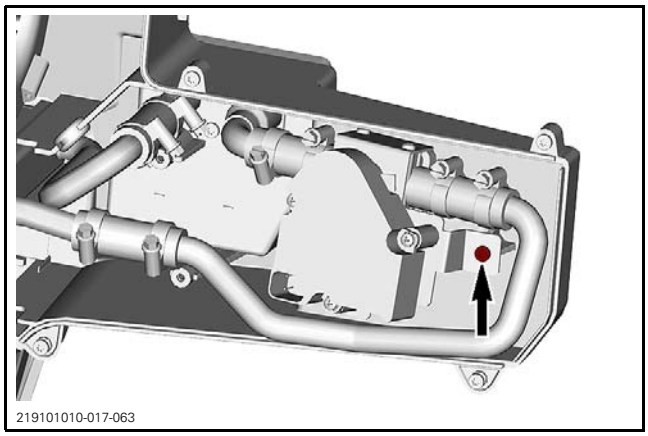
219101010-017-063

6. Remove the heater valve.
7. Catch and clean coolant flow.

Installing the Heater Valve

The installation is the reverse of the removal procedure. However, pay attention to the following.

TIGHTENING TORQUE	
Heater valve retaining screw	1.35 N•m (12 lbf•**in**)

Fill and bleed the cooling system with the recommended coolant. Refer to *COOLING SYSTEM - VEHICLE COMPONENTS* subsection.

Check for coolant leaks.

TEMPERATURE CONTROL

The temperature control is a potentiometer that varies the voltage output through the signal wire.

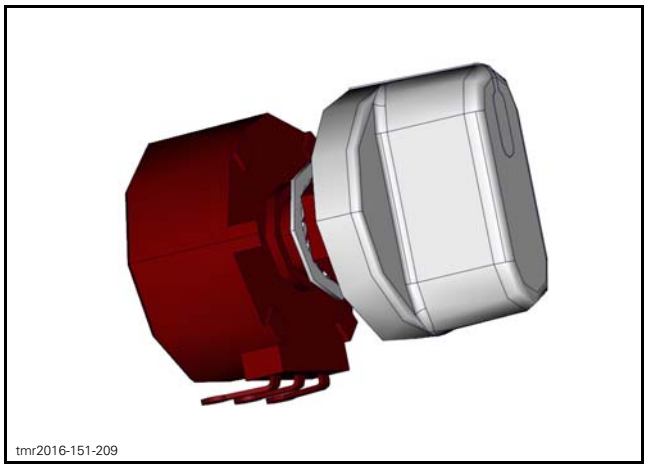
tmr2016-151-209

Testing the Temperature Control Potentiometer

Refer to *WIRING DIAGRAM*.

Turn blower motor on to any speed.

1. Ensure battery voltage is available at pin A.
2. Ensure a good ground is available at pin C.
3. Backprobe pin B.
   3.1 Voltage should vary when turning the temperature control knob.

Removing the Temperature Control Potentiometer

1. Unclip the bottom of the central console panel.

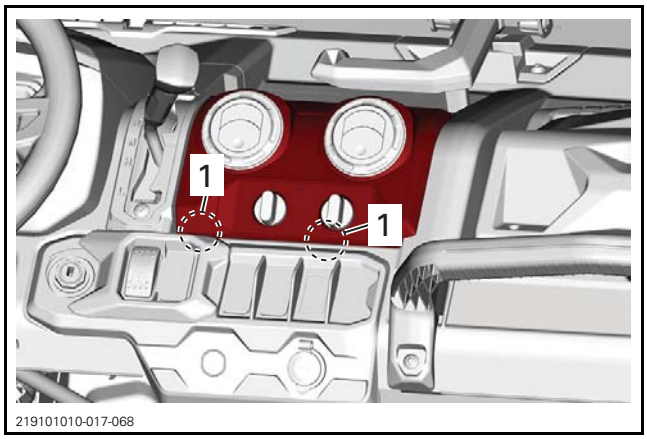

219101010-017-068

1. Locking tab location

2. Remove knob from the potentiometer.
3. Unscrew the nut retaining the potentiometer.
4. Remove the potentiometer from the panel.
5. Disconnect the potentiometer connector.

Installing the Temperature Control Potentiometer

The installation is the reverse of the removal procedure.

HEATER CORE

Removing the Heater Core

1. From behind the front right wheel, install a hose pincher on each coolant hose.

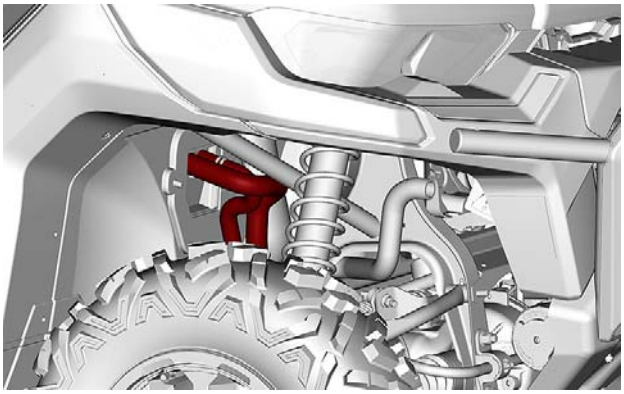

219101010-017-061

2. Remove the heating unit cover. See procedure in this subsection.
3. Loosen gear clamps securing the rubber hoses to the rigid tubes of the heater core.

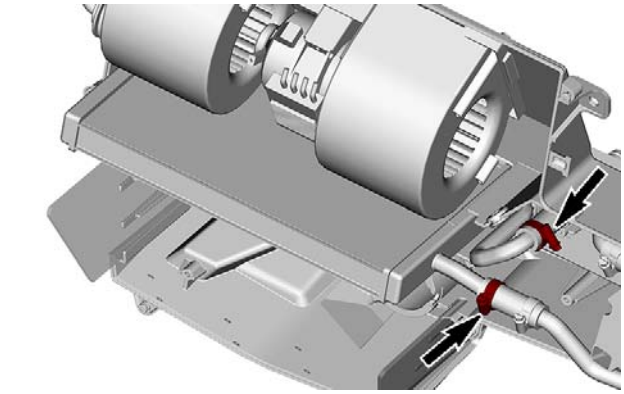

219101010-017-065

4. Remove the heater core.
5. Catch and clean coolant flow.

Installing the Heater Core

The installation is the reverse of the removal procedure. However, pay attention to the following.

Fill and bleed the cooling system with the recommended coolant. Refer to *COOLING SYSTEM - VEHICLE COMPONENTS* subsection.

Check for coolant leaks.

SHIFTER (HD7)

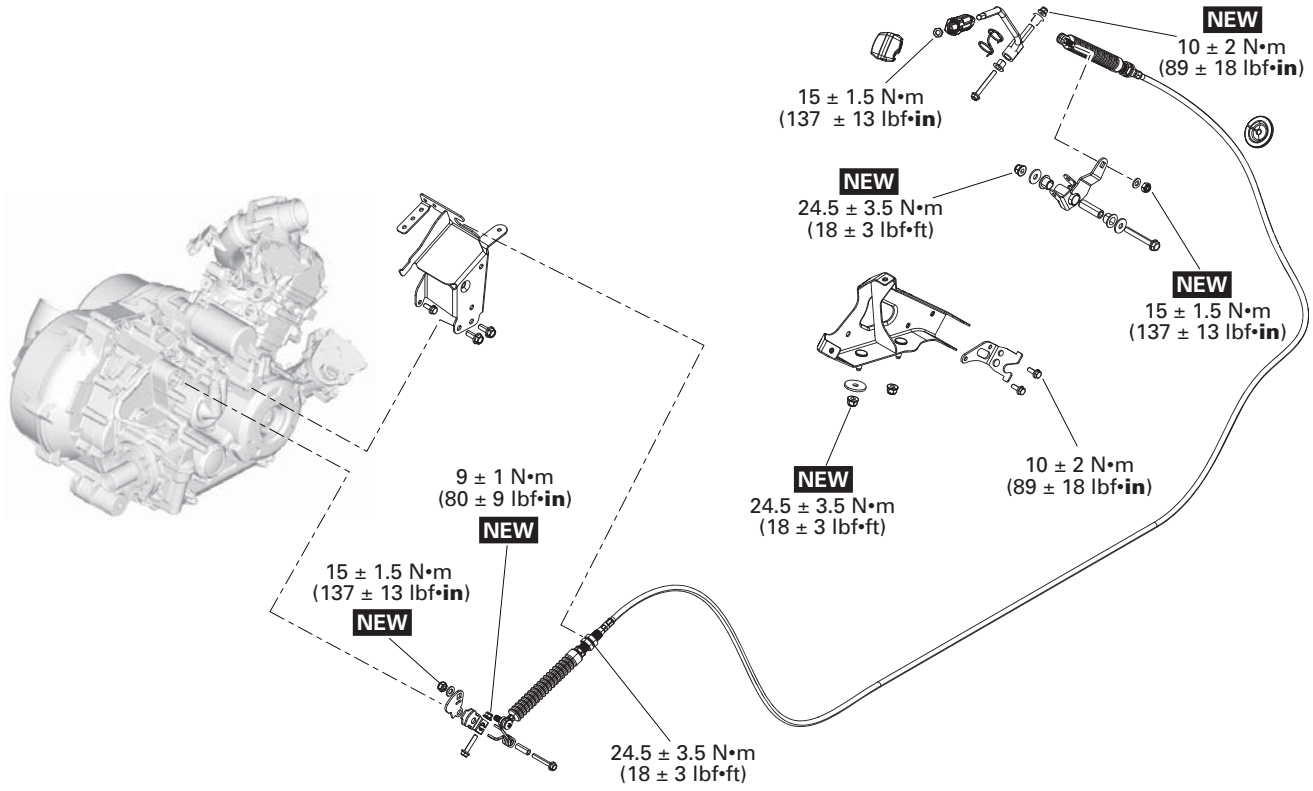

NEW = Component must be replaced when removed.

tmr2017-414-101_a

PROCEDURES

SHIFT LEVER

Removing the Shift Lever

1. Place shift lever in NEUTRAL position.
2. Secure vehicle using wheel blocks.
3. Hold the jam nut located underneath the shift lever knob and unscrew the knob.

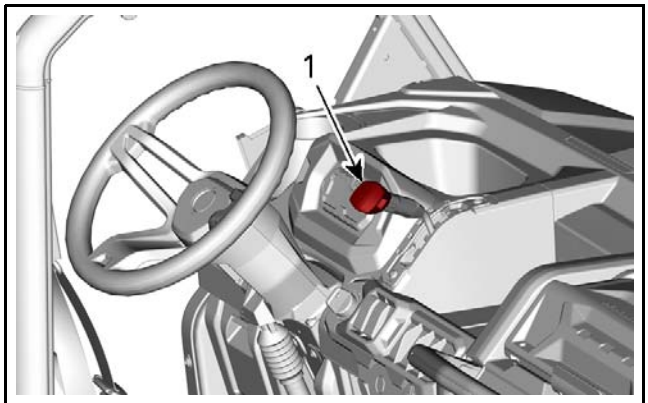

tmr2016-122-004_a

1. Knob

4. Remove the jam nut.
5. Remove shift lever trim.

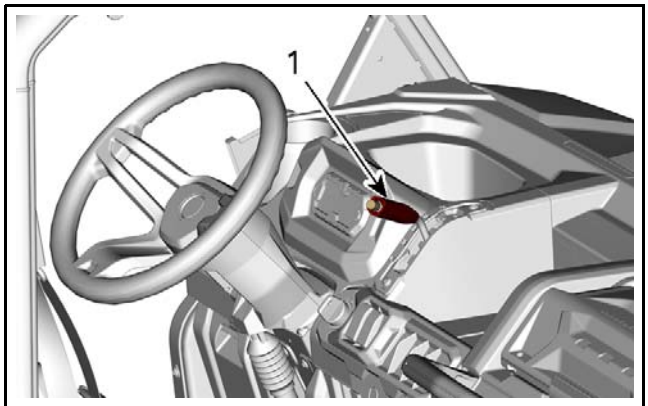

tmr2016-122-005_a

1. Trim

6. Detach shifter cable from shift lever by removing nut and washer.

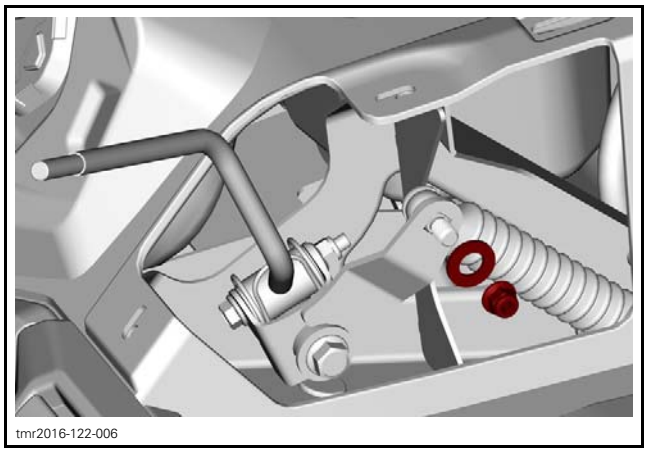
tmr2016-122-006

7. Remove shift lever pivot bolt and nut.

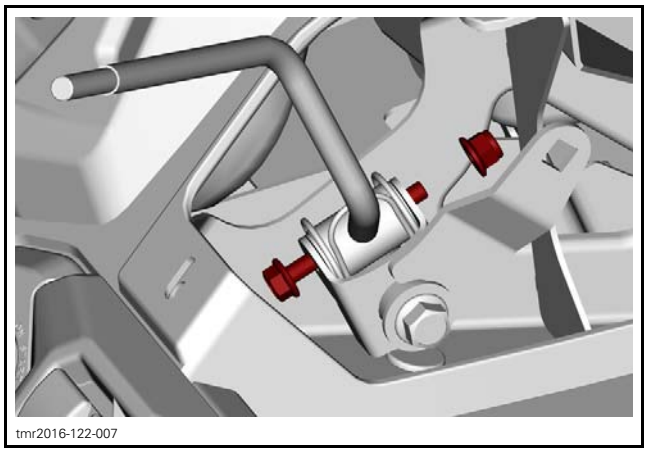
tmr2016-122-007

8. Remove shift lever.

Inspecting the Shift Lever

Check shift lever for bending or cracks.

Check spring and bushing condition.

Replace all damaged parts.

Installing the Shift Lever

The installation is the reverse of the removal procedure. However, pay attention to the following.

Ensure shift lever is tilting toward the center of vehicle

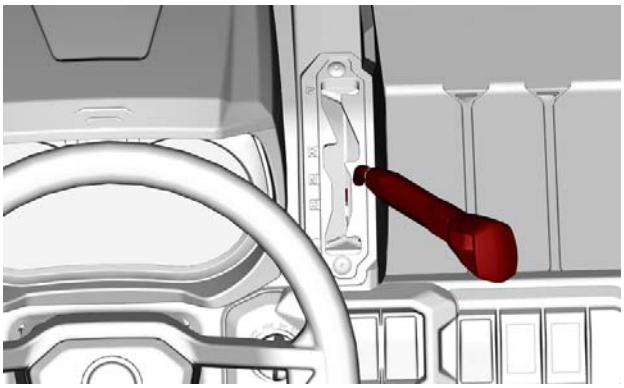

TYPICAL

Screw the jam nut all the way down the threads.

Screw the knob on the shift lever until it reaches the jam nut.

Place it at the right position.

Lock the knob in place using the jam nut.

TIGHTENING TORQUE	
Shift lever knob jam nut	15.5 N•m ± 1.5 N•m (137 lbf•**in** ± 13 lbf•**in**)

Adjust shifter cable, refer to *ADJUSTING THE SHIFTER CABLE* in this subsection.

Check if shift lever works properly in all positions.

SHIFTER CABLE

Adjusting the Shifter Cable

1. Place shift lever in **NEUTRAL** position.
2. Move the vehicle forward and backward to ensure that the gearbox is engaged in neutral.
3. Secure vehicle using wheel blocks.
4. Loosen cable adjustment nuts (engine side).

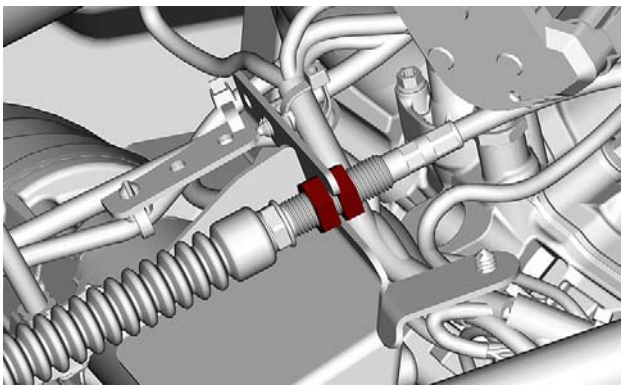

5. Adjust cable nuts until the shift lever is **well centred** in the neutral notch.

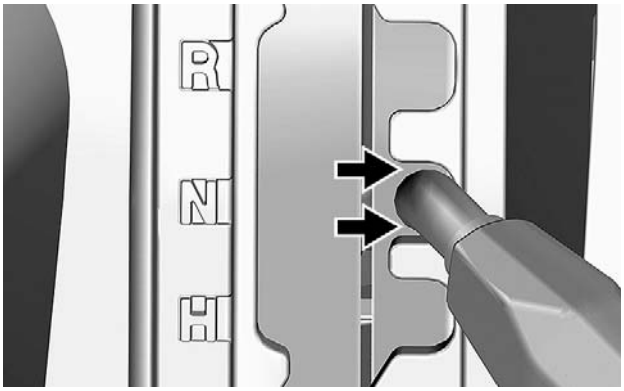

SHIFT LEVER WELL CENTERED

NOTE: The free play must be equal before and behind the lever.

6. Tighten cable adjustment nuts to specification.

TIGHTENING TORQUE	
Cable adjustment nuts	24.5 N•m ± 3.5 N•m (18 lbf•ft ± 3 lbf•ft)

7. Move shift lever in **R** position then in **H** position.
8. Place shift lever in **NEUTRAL** position.
9. Check if shift lever is properly centered with neutral notch. Readjust if required.
10. Test the shifter to confirm that the system works properly in all positions.

⚠ WARNING

After adjustment, make sure that PARK position works properly.

SHIFT PLATE

Removing the Shift Plate

Do not remove shift plate needlessly.

1. Remove shifter cable from shift plate.

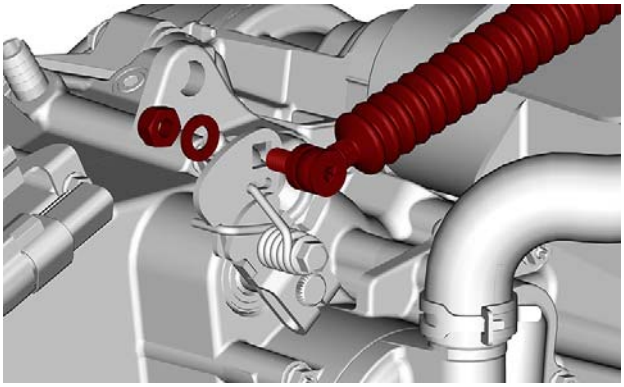

2. Mark the indexation between the main shift plate and the shift shaft.

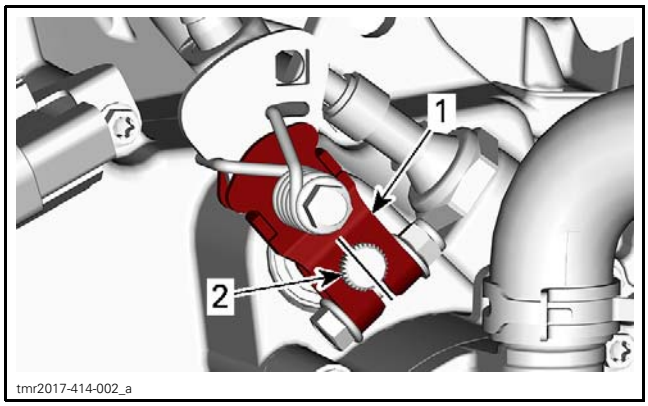

tmr2017-414-002_a

1. Main shift plate
2. Shift shaft

3. Remove shift plate pinch bolt.

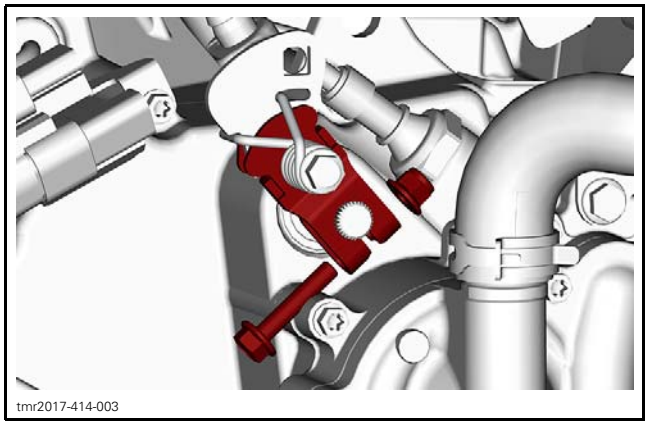
tmr2017-414-003

4. Remove shift plate.

Inspecting the Shift Plate

Check shift plate components for:
- Excessive play between parts
- Cracks
- Bending
- Splines condition.

Disassembling the Shift Plate

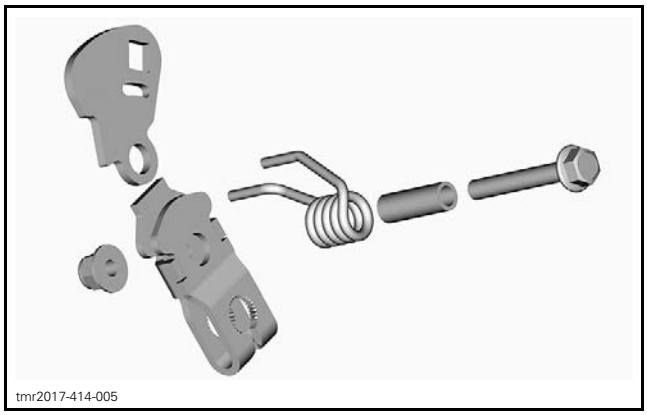
tmr2017-414-005

Assembling the Shift Plate

The assembling is the reverse of the disassembling procedure. However, pay attention to the following.

Index the plates and spring as shown.

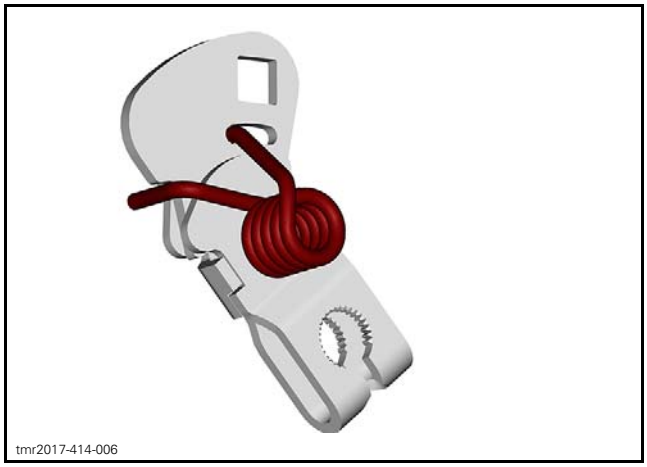
tmr2017-414-006

Installing the Shift Plate

The installation is the reverse of the removal procedure. However, pay attention to the following.

Place the gearbox in NEUTRAL before shift plate installation.

Install and align shift plate using marks previously traced.

If shift plate is installed on a new engine, install it in the indicated angle.

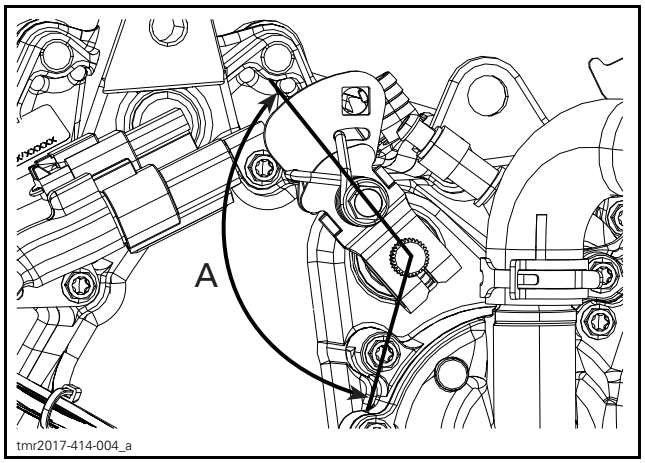

CORRECT ANGLE IN NEUTRAL
A. 120°

NOTE: When correctly installed, the upper shift plate is square with the shifter cable.

Tighten shift plate nut to specification.

TIGHTENING TORQUE	
Shift plate nut	9 N•m ± 1 N•m (80 lbf•**in** ± 9 lbf•**in**)

Install and adjust shifter cable, refer to *ADJUSTING THE SHIFTER CABLE* in this subsection.

SHIFTER (HD9 / HD10)

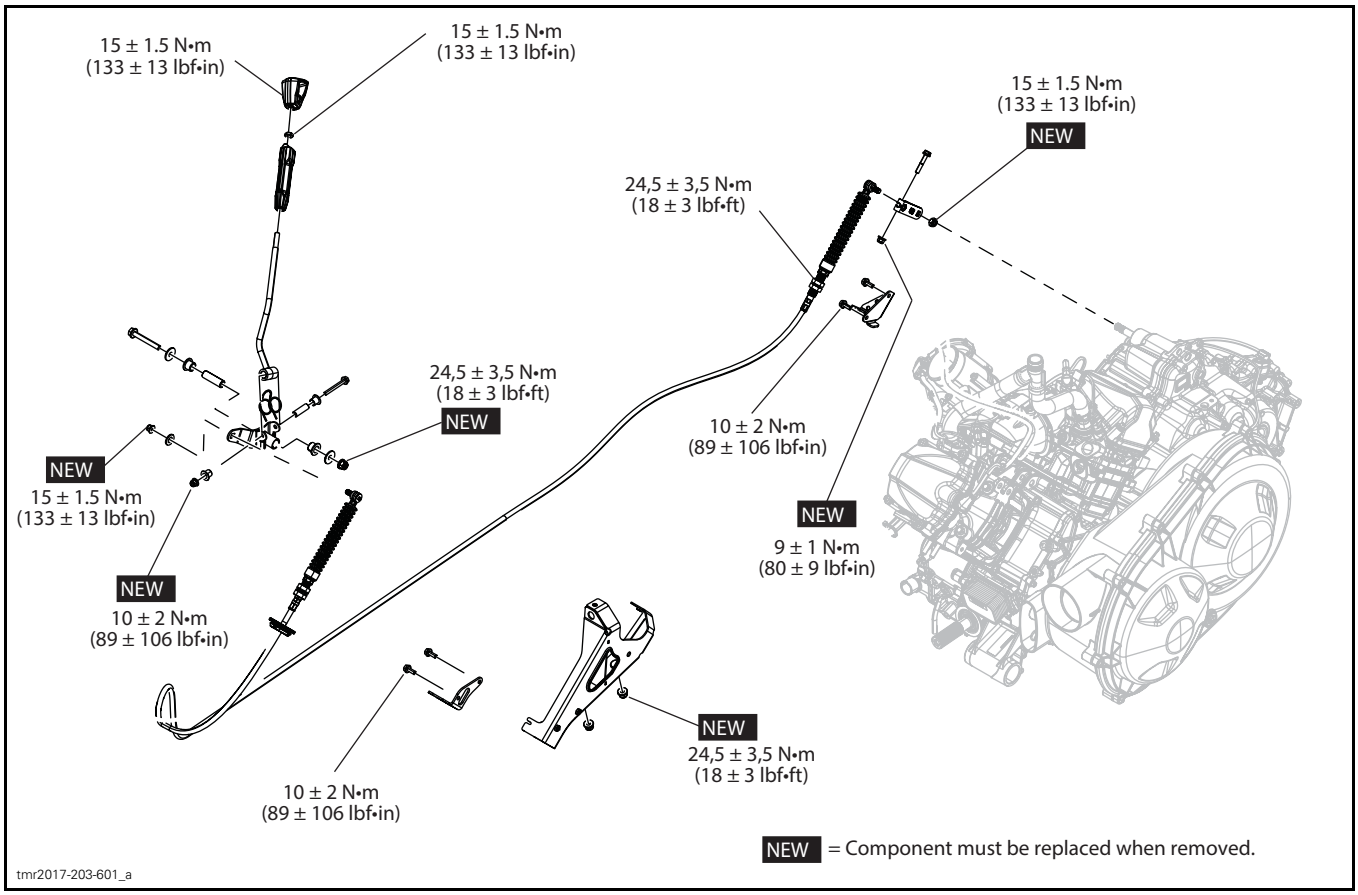

PROCEDURES

SHIFT LEVER

Removing the Shift Lever

1. Place shift lever in **NEUTRAL** position.
2. Secure vehicle using wheel blocks.
3. Unscrew shift lever handle.

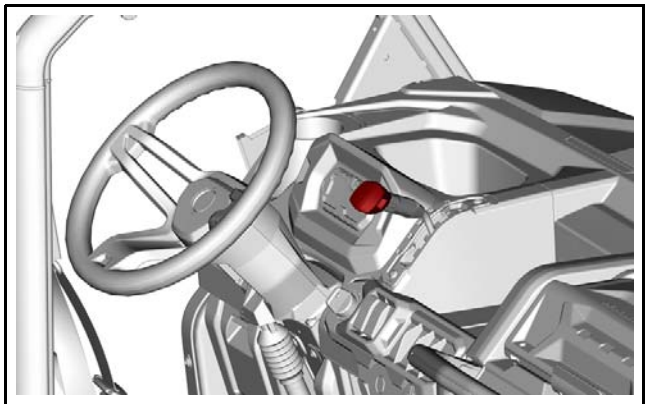
tmr2016-122-004

4. Remove shift lever trim

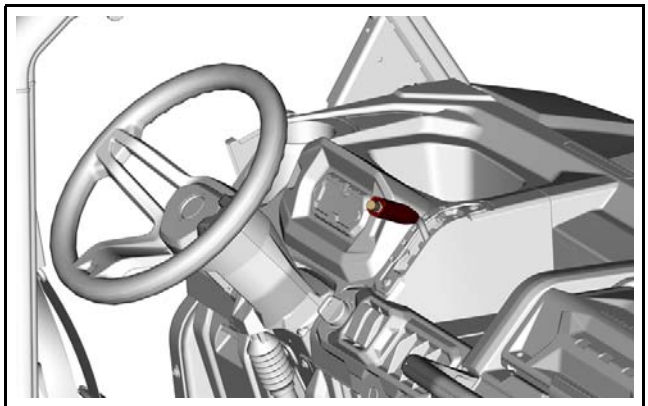
tmr2016-122-005

5. Detach shifter cable from shift lever by removing nut and washer.

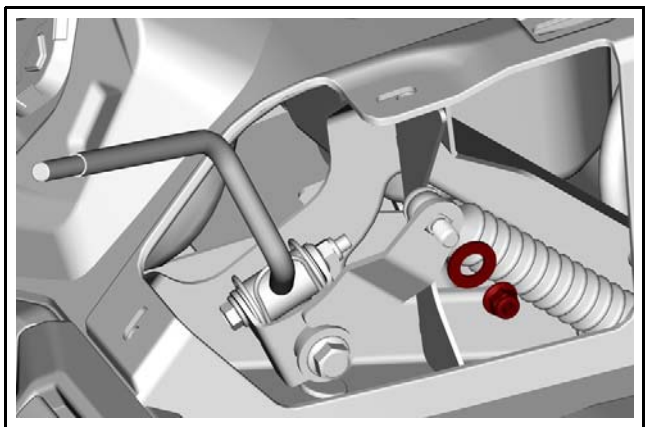
tmr2016-122-006

6. Remove shift lever pivot bolt and nut.

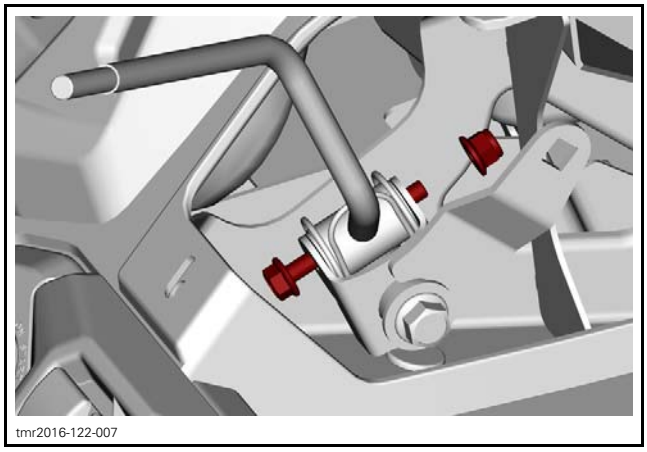
tmr2016-122-007

7. Remove shift lever.

Inspecting the Shift Lever

Check shift lever for bending or cracks.

Check spring and bushing condition.

Replace all damaged parts.

Installing the Shift Lever

The installation is the reverse of the removal procedure. However, pay attention to the following.

Ensure shift lever is tilting toward the center of vehicle

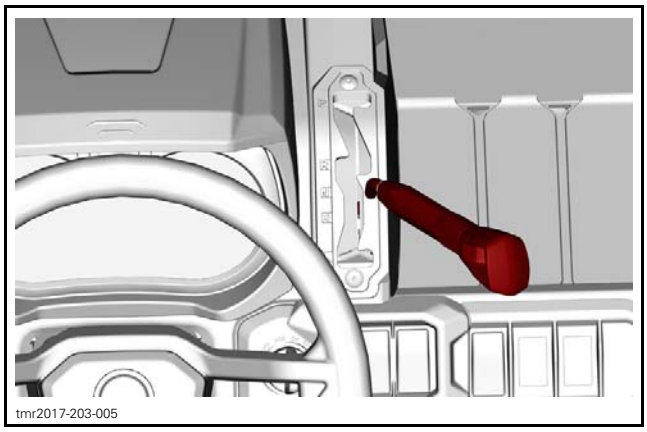
tmr2017-203-005

Tighten shift lever handle nut to specification.

TIGHTENING TORQUE	
Shift lever handle nut	15.5 N•m ± 1.5 N•m (137 lbf•**in** ± 13 lbf•**in**)

Adjust shifter cable, refer to *ADJUSTING THE SHIFTER CABLE* in this subsection.

Check if shift lever works properly in all positions.

SHIFTER CABLE

Adjusting the Shifter Cable

1. Place shift lever in **NEUTRAL** position.

NOTE: Move vehicle back and forth to ensure gearbox is set in neutral position.

2. Secure vehicle using wheel blocks.
3. Loosen cable adjustment nuts at engine end of cable.

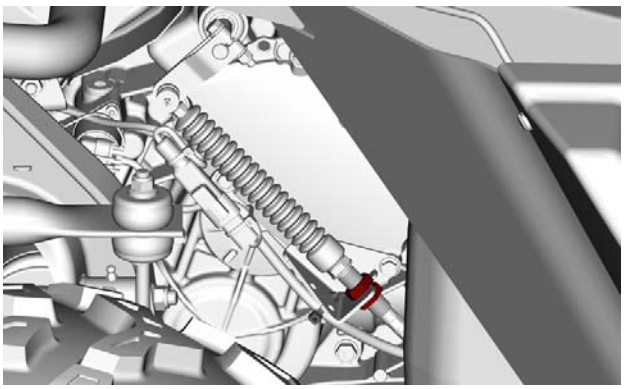
tmr2016-122-008

4. Adjust cable nuts in order to center shift lever with neutral notch.

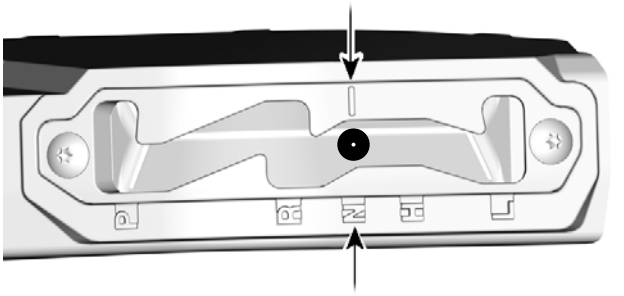
tmr2017-203-001_a

CORRECT ADJUSTMENT

NOTE: UP and DOWN shifter arm free play must be symmetrical about the center line of neutral notch.

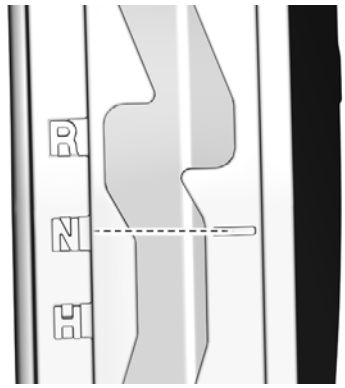

tmr2017-203-003_a

5. Tighten cable adjustment nuts to specification.

TIGHTENING TORQUE	
Cable adjustment nuts	24.5 N•m ± 3.5 N•m (18 lbf•ft ± 3 lbf•ft)

6. Move shift lever in **R** position then in **H** position.
7. Place shift lever in **NEUTRAL** position.
8. Check if shift lever is properly centered with neutral notch. Readjust as required.

NOTE: To properly check shift lever alignment with notch, move shift lever toward the LH side then let it return to position.

9. Test the shifter to confirm that the system works properly in all positions.

⚠ WARNING

After adjustment, make sure that PARK position works properly.

SHIFT PLATE

Removing the Shift Plate

Do not remove shift plate needlessly.

1. Place gearbox in **NEUTRAL** position.
2. If the engine is still in the vehicle, detach shifter cable from shift plate.

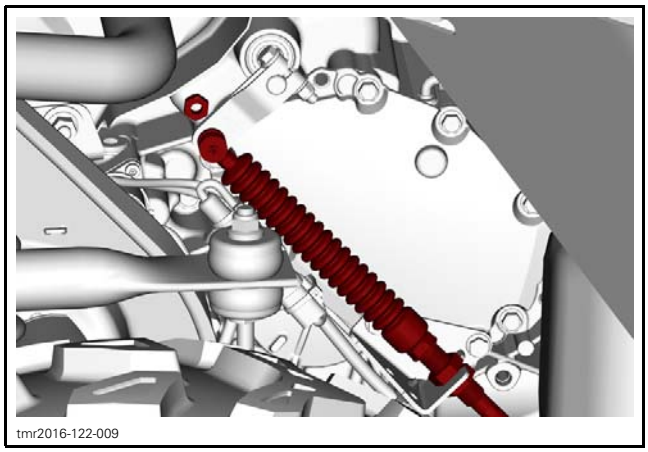
tmr2016-122-009

3. Mark the shift plate position on the shift shaft end and on the housing

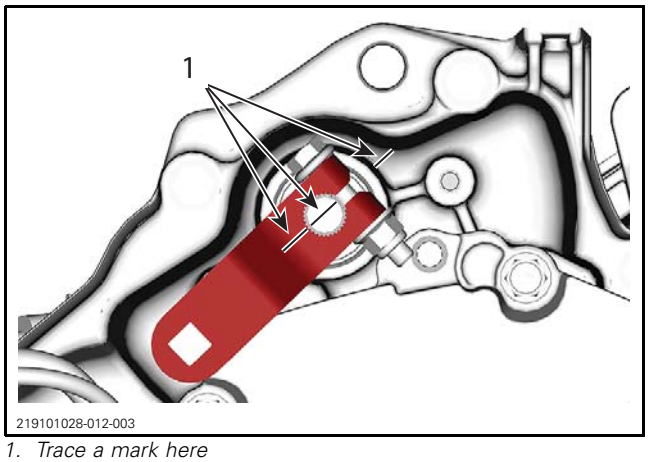

219101028-012-003

1. Trace a mark here

4. Remove shift plate bolt. Discard the nut.

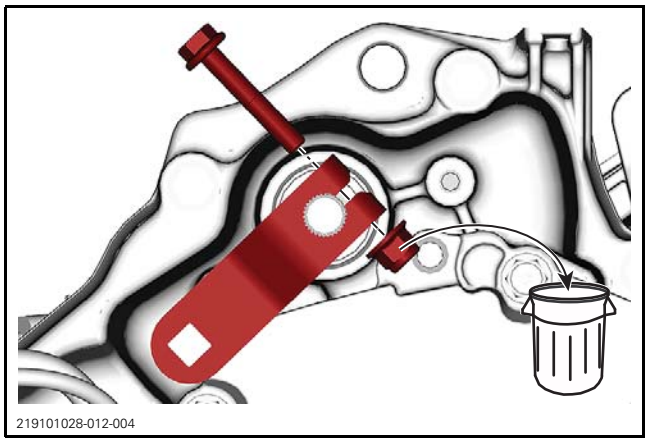
219101028-012-004

5. Remove shift plate.

Inspecting the Shift Plate

Check shift plate for:
- Cracks
- Bending
- Spline condition.

Installing the Shift Plate

The installation is the reverse of the removal procedure. However, pay attention to the following.

Ensure gearbox in NEUTRAL position before shift plate installation.

Install and align shift plate using marks previously traced.

If shift plate is installed on a new engine, align the shift plate opening with the gearbox screw as per the following illustration.

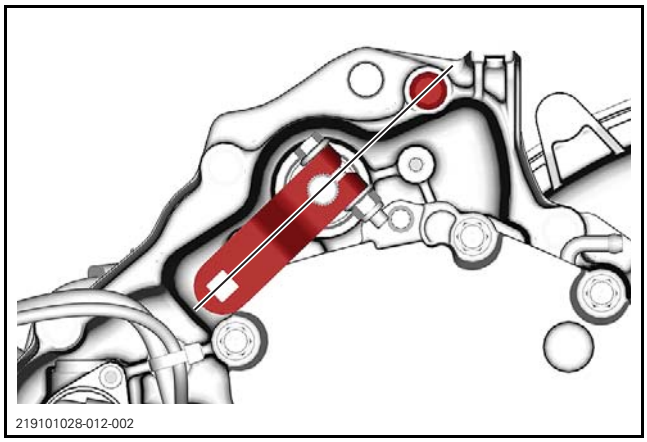
219101028-012-002

Adjust shifter cable, refer to *ADJUSTING THE SHIFTER CABLE* in this subsection.

NOTE: The shift cable must be positioned at 90° from the shift plate.

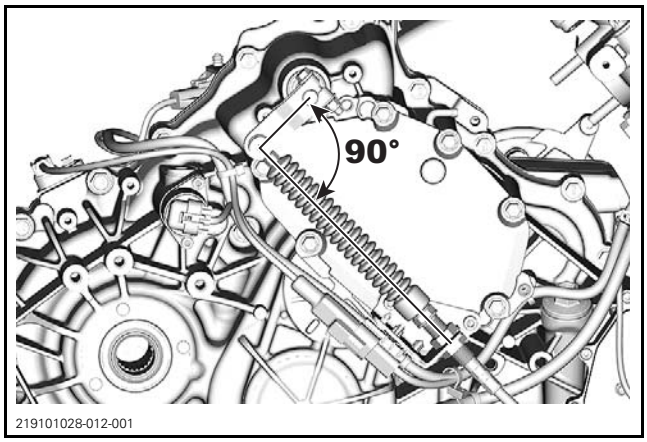

219101028-012-001

Tighten shift plate nut to specification.

TIGHTENING TORQUE	
Shift plate nut	9 N•m ± 1 N•m (80 lbf•**in** ± 9 lbf•**in**)

AIR CONDITIONING - VEHICLE COMPONENTS

AIR CONDITIONING SYSTEM

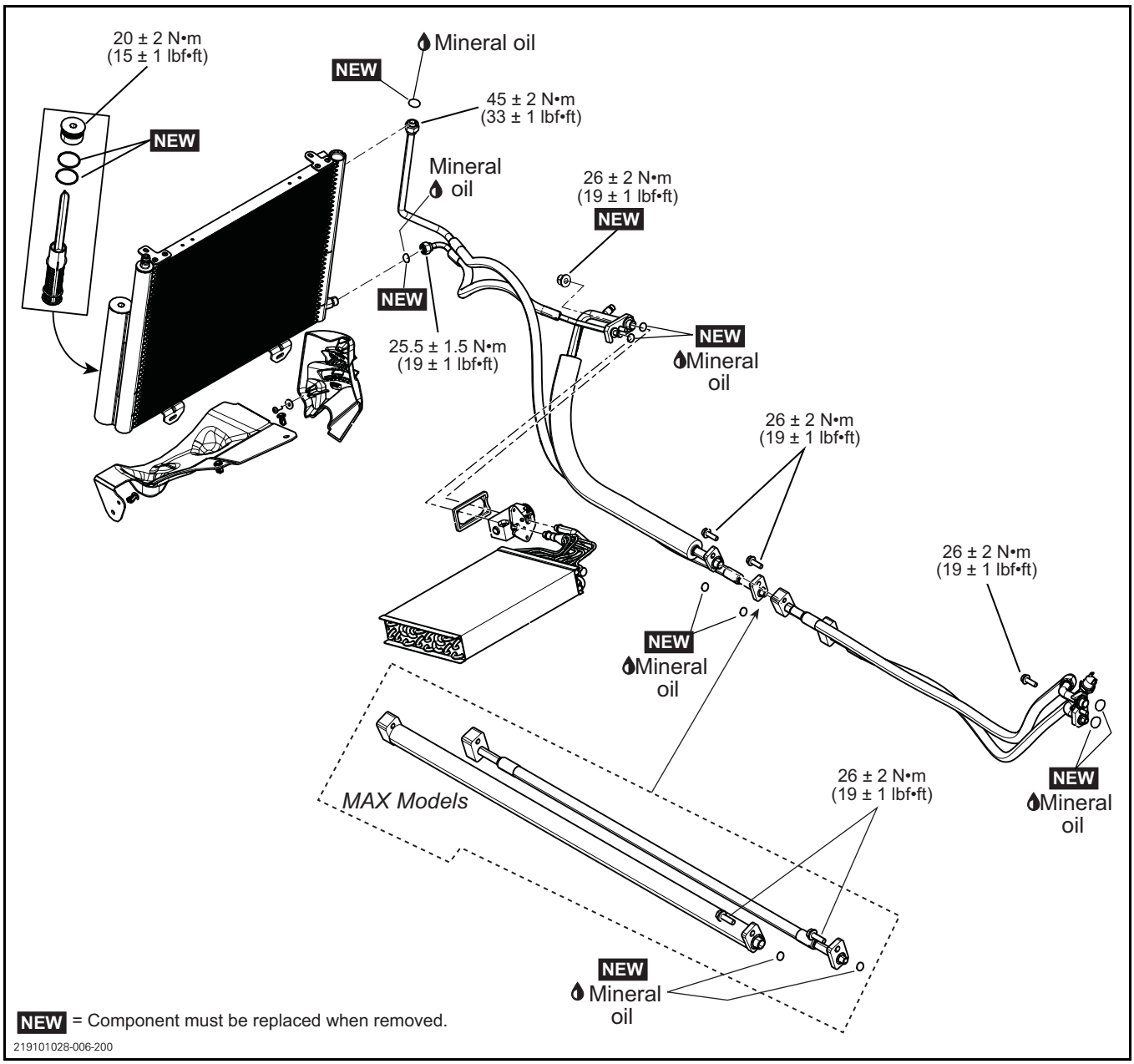

GENERAL

SYSTEM COMPONENTS

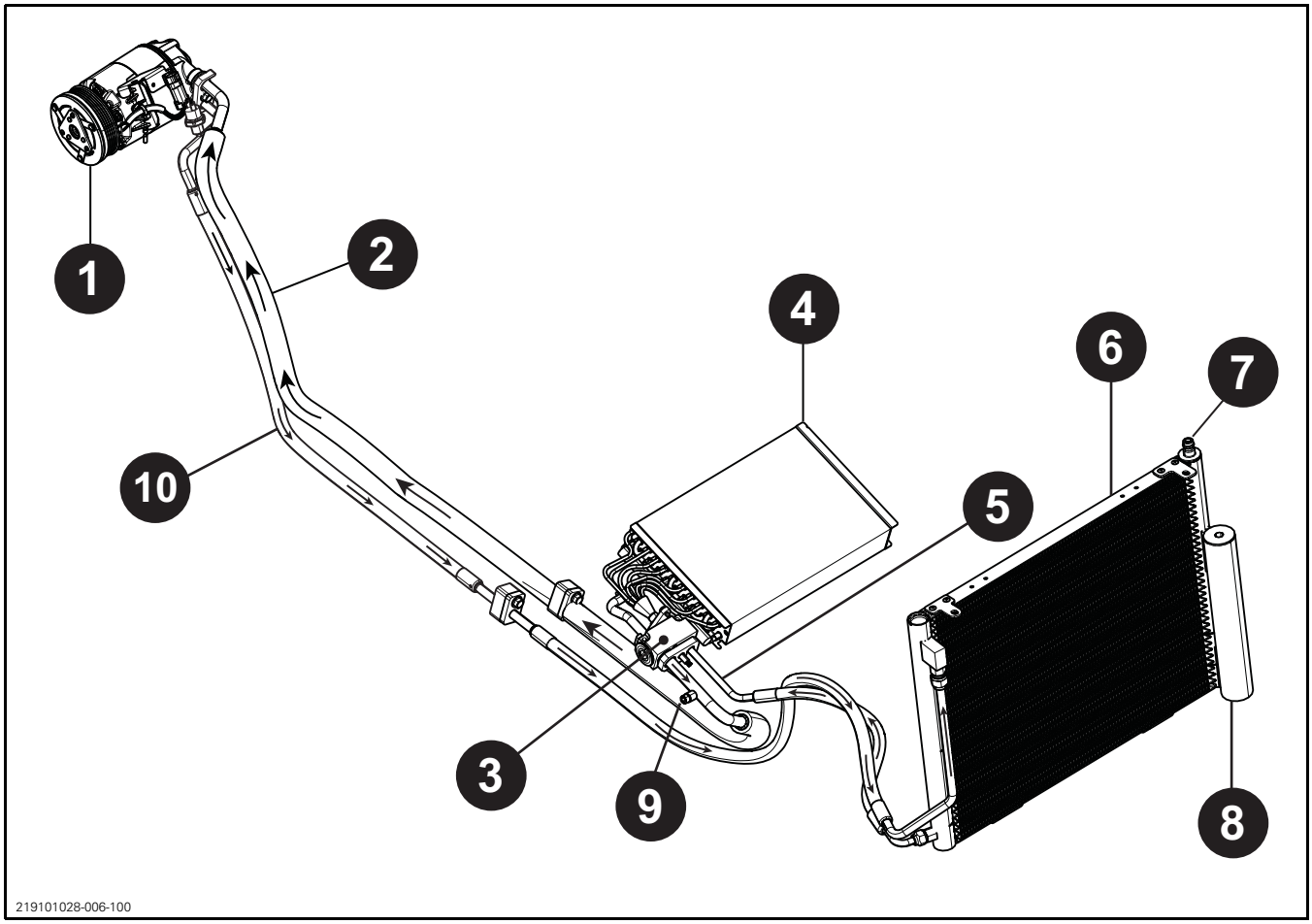

1. *Compressor*
2. *Low pressure gas hose*
3. *Expansive valve*
4. *Evaporator*
5. *High pressure liquid hose*
6. *Condenser*
7. *High pressure side service port*
8. *Receiver / drier (including the desiccant cartridge)*
9. *Low pressure side service port*
10. *High pressure gas hose*

In an air conditioning system, the heat is evacuated from the cockpit by circulating a refrigerant through a closed system containing several components. At each component the refrigerant goes through pressure and temperature changes.

The compressor: The compressor is fastened on the engine. It is driven by a belt and engaged by an electromechanical clutch. It is responsible for compressing and transferring refrigerant gas. The compressor takes in the low pressure refrigerant, pressurized it towards the condenser. The compressor is loaded in function of cooling demand. Less demand equals less torque request from compressor to the engine.

The condenser: Ambient air passing through the condenser removes the heat from the refrigerant. This action transforms the gas to liquid.

Then, the liquid moves into the receiver / drier where it is filtered to remove moisture and dirt. The receiver / drier also serves as the storage tank for the refrigerant in liquid state.

The expansion valve: After the receiver / drier, the refrigerant is sent towards the expansion valve. This valve has a controlled restriction to create an important refrigerant pressure drop and change of phase from liquid to gas. Thus the refrigerant in the evaporator is cold.

The evaporator: The refrigerant flowing inside the evaporator coil absorbs the heat from the warm air flowing on the evaporator coil. Thus the moisture from the warm air condensates on the evaporator coil and drips from the cab.

The refrigerant cycle is completed when the heated low pressure gas is again drawn into the compressor.

Receiver / drier: The liquid refrigerant coming from the condenser passes through the receiver / drier to remove moisture and foreign matter from the system. The only time the receiver / drier must be opened is to replace the desiccant cartridge when the refrigerant system is opened to ambient air (e.g.: during A/C component replacement) or a major leak has occurred within the systems components.

The low pressure side service port: Located on the front portion of the low pressure gas hose. Accessible behind the right front wheel.

The high pressure side service port: Located on the top of the condenser, on the left side of the vehicle. Accessible through the front service center.

A/C Service Products

Refrigerant	Type	R-134a
	Filling capacity	520 g (18 oz)
Oil	Type	PAG 46
	Quantity	Factory filled 155 ml (.33 pt (U.S. liq.))

Safe Practices with R134a Refrigerant

All technicians who work on the air conditioning system must be trained (certified) to use the refrigerant products and the recovery, recycling and refrigerant charging stations.

BRP is not offering training on A/C system to be certified. The majority of non-A/C parts can be replaced without having to disconnect refrigerant lines. The engine can be removed without disconnecting the refrigerant lines from the compressor.

In the event the refrigerant lines need to be disconnected:

- The refrigerant in the system must be recuperated by a certified technician using the proper equipment and having the knowledge and the experience to service refrigeration equipment.
- The vehicle can now repaired by a non-certified technician.
- After the repair, the system must be leak tested (no leak accepted) and charged by a certified technician using proper equipment.

The R-134a refrigerant inside the A/C system is under pressure. In case of major leak, the refrigerant temperature drops below freezing level instantly.

If the refrigerant splashes on the skin or eyes, rinse the area thoroughly with COOL water and consult a medical promptly.

⚠ CAUTION Safety glasses or a transparent face shield are mandatory safety items and one or the other is absolutely required when working with R134a refrigerant.

⚠ WARNING

R-134a refrigerant is dangerous if not properly handled.
Liquid R-134a may cause blindness when contacts the eyes and may cause serious frostbite when contacts the skin.
Gaseous R-134a, in ambient air, can be flammable if it contacts open flame or very hot substances.
Any servicing work that involves release or addition of R-134a to the system must be done by a certified technician using the proper equipment and having the knowledge and the experience to service refrigeration equipment.

Air Conditioning System Functioning Prerequisite

The engine RPM must be greater than 800 rpm.

The compressor will NOT be activated if the engine coolant temperature is lower than 10°C (50°F) or is higher than 120°C (248°F).

Also, the battery voltage must be above 11 volts.

If these conditions are not satisfied, the compressor clutch is not activated.

HVAC Sensors

Various sensors are used to monitor and control the HVAC system.

- Outside temperature sensor - located under the hood.
- Inside temperature sensor - located in the bottom of the HVAC unit, in the air, before the evaporator coil.

- Coil temperature sensor - located in the air after evaporator and heater coils.
- Evaporator De-icing sensor - located on the evaporator coil refrigerant outlet tube.
- Pressure switch - located on the high pressure gas line, near the compressor.

Temperature sensors: Measures internal and external temperatures to allow the controller to determine the best parameters to be used.

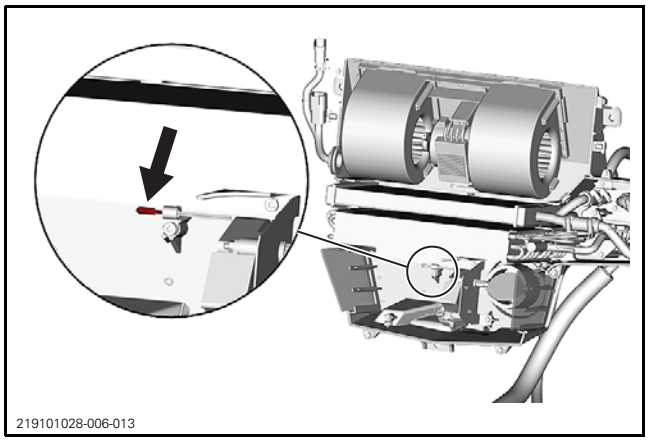

INSIDE TEMPERATURE SENSOR

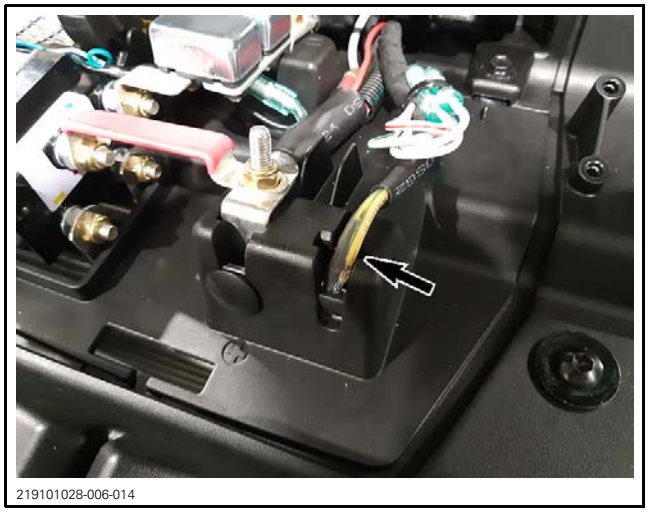

OUTSIDE TEMPERATURE SENSOR

Coil temperature sensor: Used to know the air temperature that comes out from the blower.

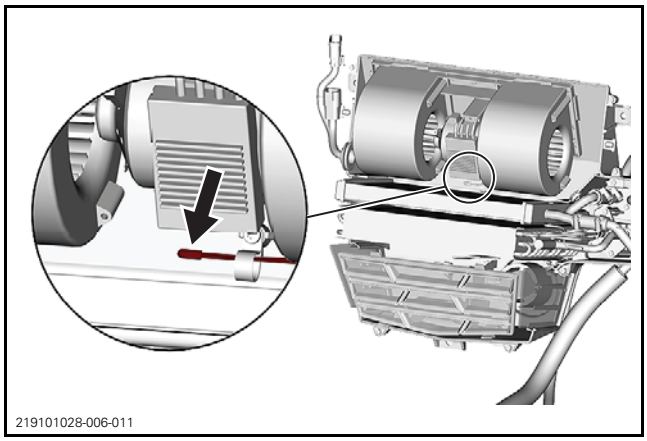

Evaporator De-icing sensor: Detects freezing on the evaporator coil and starts the de-ice mode.

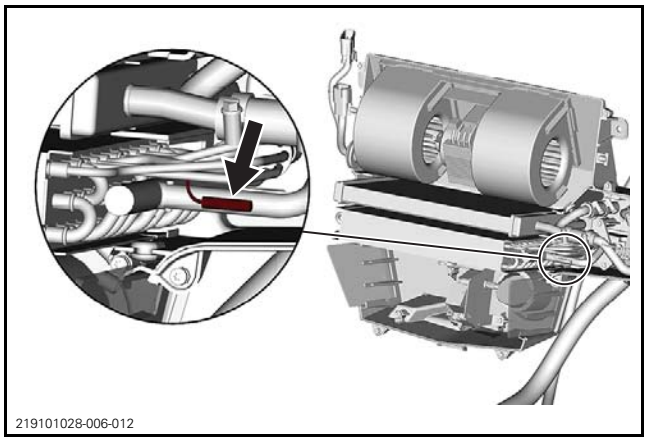

Pressure switch: Reacts to the refrigerant high side pressure and opens the circuit (shutting off compressor) if the pressure is over or below the defined thresholds.

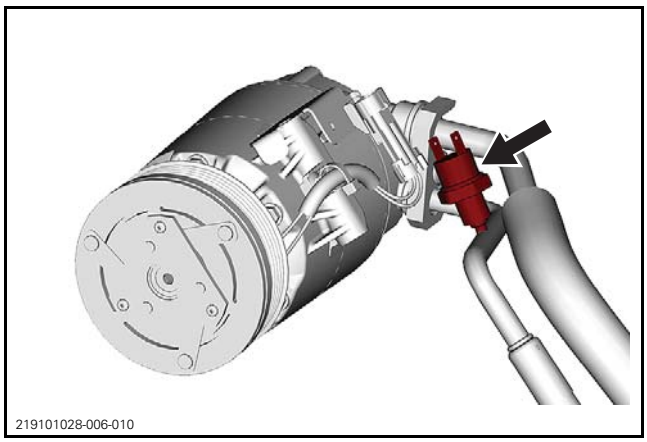

MAINTENANCE

INSPECTING AND REPLACING THE A/C AIR FILTERS

NOTICE **The cleaning of the filters must be performed more often than recommended when riding in dusty conditions or sand.**

Fresh Air Filter

Open hood to access fresh air filter.

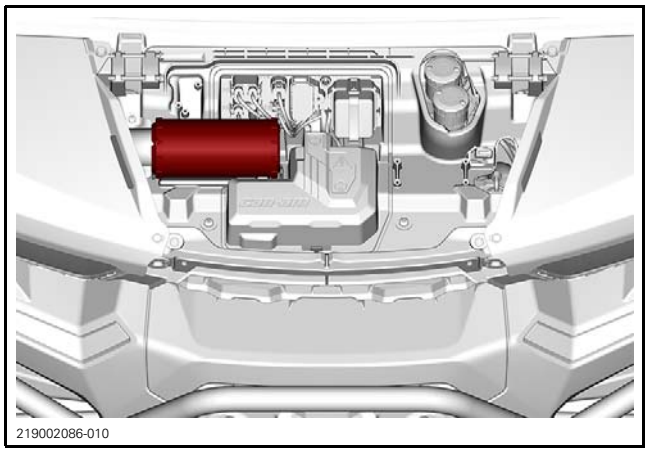

Lift and slide filter to remove.

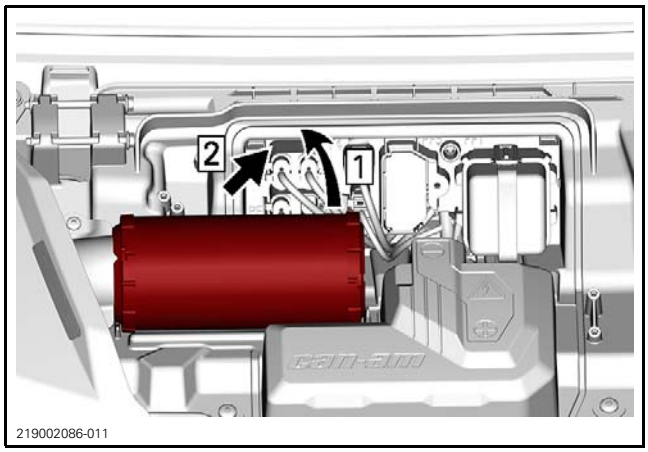

Step 1: Lift
Step 2: Slide

Inspect the filter for any signs of leaks. A streak of dust on the clean side of the filter is a telltale sign. Replace filter if there is any damage. Eliminate any source of air leaks before installing a new filter.

Clean the air filter by tapping out heavy dust from paper element, this will allow dirt and dust to get out of the paper filter.

NOTICE **It is not recommended to blow compressed air on the paper element; this could damage the paper fibers and reduce its filtration ability when used in dusty environments. If air filter is too dirty and cannot be cleaned following the recommended procedure, it should be replaced.**

Use a clean damp cloth to wipe both the filter sealing surface and the inside of the outlet tube. Ensure that the outlet tube sealing area is undamaged.

The installation is the reverse of the removal procedure.

Cockpit Air filters

Cockpit air filters are located at the bottom of the center console. There are 3 filters:

– One at the front of the unit
– One on each side of the unit.

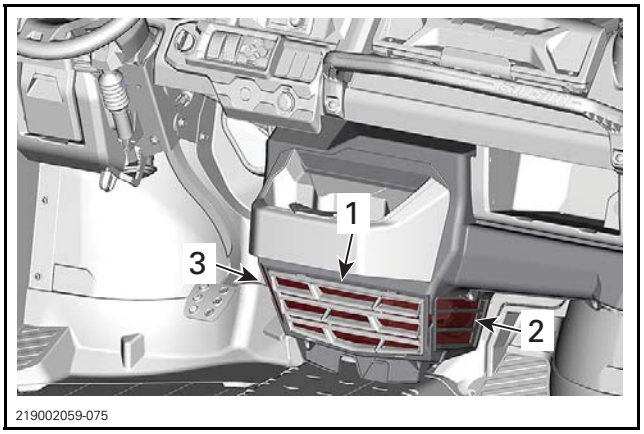

1. *Front cockpit air filter*
2. *Lateral cockpit air filter - passenger side*
3. *Lateral cockpit air filter - driver side*

Front Cockpit Air Filter

To remove this filter, lift the grille tabs and pull up.

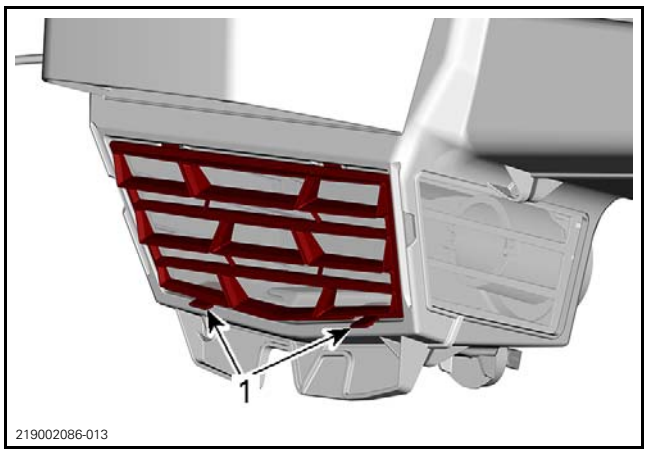

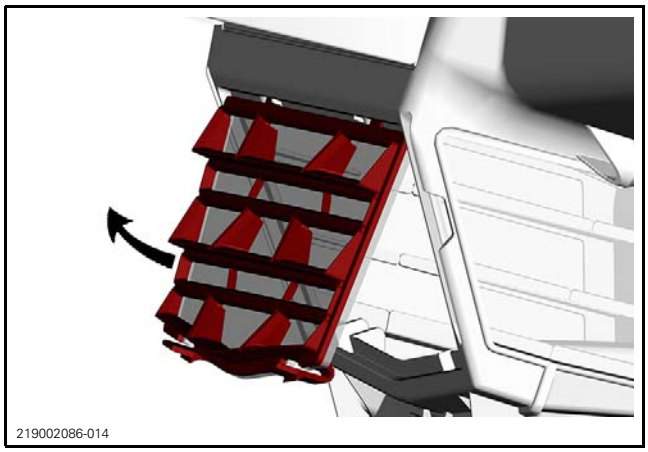

Clean air filter by washing it in lukewarm water with mild soap. Remove excess water and air dry before installation.

Before installing the filter, clean the inside of the heating/air conditioning unit and the evaporator coil using vacuum cleaner and a soft brush.

NOTICE **Be careful when brushing to avoid damaging the evaporator coil fins.**

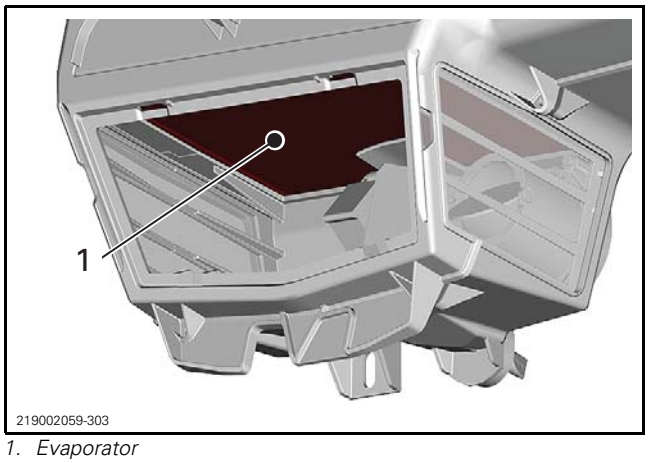

1. Evaporator

The installation is the reverse of the removal procedure.

Lateral Cockpit Air Filters

To remove these filters, grab the grille tab and pull.

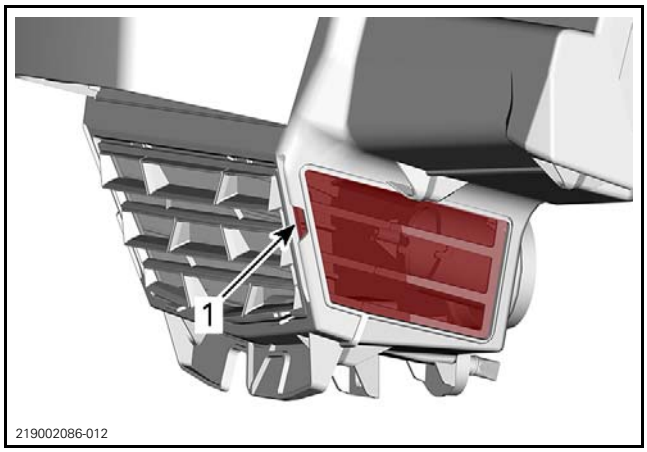

1. Grille tab

Clean air filters by washing them in lukewarm water with mild soap. Remove excess water and air dry before installation.

The installation is the reverse of the removal procedure.

INSPECTING THE COMPRESSOR DRIVE BELT

Refer to *AIR CONDITIONING - ENGINE COMPONENTS* for complete procedure to inspect or replace the compressor drive belt.

CLEANING THE CONDENSER

The condenser should be cleaned occasionally using water and a mild cleaner only.

The condenser is located in front of the radiator.

To reach the condenser, remove the front grille.

- Pull the bottom of the grille to release both retaining tabs.
- Remove the grille.

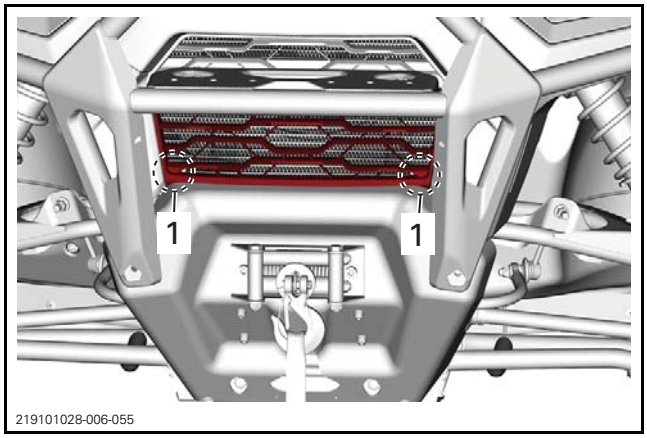

1. Retaining tab location

TROUBLESHOOTING

BLOWER MOTOR DOES NOT OPERATE

POSSIBLE CAUSE	INSPECTION	SOLUTION
1 - Blown fuse	Inspect fuse and wiring harness.	Replace fuse or repair wiring harness.
2 - Relay	Check power into and out of the relay.	Replace the relay or repair the wiring harness.
3 - Broken wire or bad connection	Check ground and connections of the blower motor.	Repair wiring harness or connector.
4 - Blower motor malfunction	Check the motor power wires.	Replace the motor.

BLOWER MOTOR OPERATES NORMALLY, BUT AIR FLOW IS INSUFFICIENT

POSSIBLE CAUSE	INSPECTION	SOLUTION
1 - Evaporator inlet is obstructed	Check evaporator for obstruction.	Remove obstruction and clean the evaporator fins.
2 - Clogged cockpit air filters	Check the cockpit air filters.	Clean or replace the cockpit air filters.
3 - Ice on evaporator	Check the de-icing sensor status in the climate control module.	Clear code and replace the sensor.
4 - Clogged air ducts	Check cleanliness of ducts.	Clean ducts.

A/C UNIT NOT COOLING SUFFICIENTLY

POSSIBLE CAUSE	INSPECTION	SOLUTION
1 - Broken compressor drive belt	Check the condition of the compressor drive belt.	Replace the compressor drive belt.
2 - System low on refrigerant or empty	The pressure on the high pressure side will be low.	Recover the refrigerant. Repair any leaks. Recharge the system with proper quantity.
3 - Excessive quantity of refrigerant	The pressure on the high pressure side will be high.	Recover refrigerant and recharge the system with proper quantity.
4 - Air in the system	The pressure is high on the high pressure and low pressure sides.	Recover refrigerant and recharge the system with proper quantity.
5 - Dirty evaporator or condenser	Check evaporator and condenser cleanliness.	Clean evaporator and/or condenser.

PRESSURE GAUGE - RELATED TROUBLESHOOTING

As a general rule, the pressure on the high pressure side will be around 8 times greater than the pressure on the low pressure side.

The Pressure on the Low Pressure Side Too High

The pressure on the low pressure side becomes too high when the pressure on the high pressure side is too high.

POSSIBLE CAUSE	INSPECTION	SOLUTION
1 - Expansive valve opens too far	Frost on the line between condenser and the expansive valve.	Replace expansion valve.
2 - Defective compressor	The pressure gauges (high and low pressure) equalize when the magnetic clutch is disengaged.	Replace the compressor.

The Pressure on the Low Pressure Side Too Low

POSSIBLE CAUSE	INSPECTION	SOLUTION
1 - Low refrigerant quantity	The pressure on the high pressure side will be low and bubbles may be present in the system.	Recover the refrigerant. Repair any leaks. Recharge the system with proper quantity.
2 - Restriction between condenser and the block valve	Frost on the line between condenser and the expansive valve.	Recover refrigerant and recharge the system with proper quantity. Replace the hose.

The Pressure on the High Pressure Side Too High

POSSIBLE CAUSE	INSPECTION	SOLUTION
1 - Poor condenser performance	Dirt or clogged condenser fins.	Clean condenser fins.
2 - Excessive quantity of refrigerant	Refer to the Pressure-Temperature charts.	Recover refrigerant and recharge the system with proper quantity.
3 - Excessive quantity of oil	The pressure on the high pressure side will be too high.	Recover refrigerant. Remove oil from compressor and condenser. Flush the system using nitrogen. Recharge the system with appropriate oil and recommended quantity.
4 - Air in the system	Pressure is high on the high pressure and low pressure sides.	Recover refrigerant and recharge the system with proper quantity.
5 - Restriction in the receiver/drier, in the condenser or in hoses of the high pressure side.	The pressure on the high pressure side will be high, and the pressure on the low pressure side will be low.	Recover refrigerant. Flush the system using nitrogen. Replace defective part(s). Recharge the system with proper quantity.

The Pressure on the High Pressure Side Too Low

POSSIBLE CAUSE	INSPECTION	SOLUTION
1 - Low refrigerant quantity	The pressure on the high pressure side will be low.	Recover the refrigerant. Repair any leaks. Recharge the system with proper quantity.
2 - Compressor not operating	The pressure is equal on the high pressure and the low pressure side.	Replace the compressor or ccmpressor clutch.
	Check if compressor is clutching at cooling mode (Temperature = Minimum and Fan Speed = Maximum)	
	Check if there 12V at the clutch connector.	No voltage - check fuse, relay and wiring harness. If 12V but clutch does not engage - replace the clutch magnet.

PROCEDURES

TESTING THE AIR CONDITIONING SYSTEM EFFICIENCY

NOTE: To make the calculation simple, make sure the temperature unit is in Fahrenheit degrees.

1. Put the shift lever at PARK then turn the key to the ON position without starting the engine.
2. Using the selector knob on the climate control, select "MIN" mode.

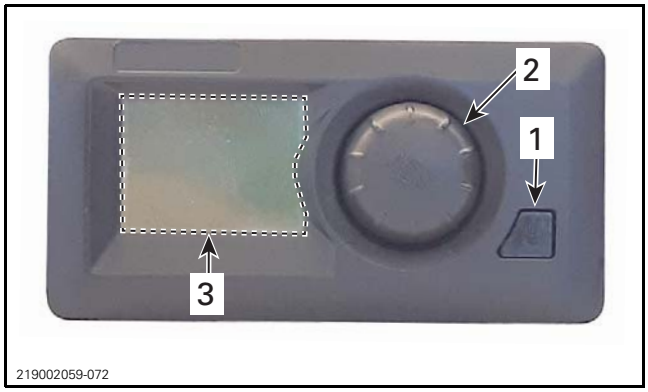

219002059-072

1. Power switch
2. Selector knob
3. Display

219002059-070

3. Press and hold the selector knob until one of the following icons appear. Select "COOL" mode.

4. Press and hold the selector knob until the fan icon appears. Select "HIGH" mode.

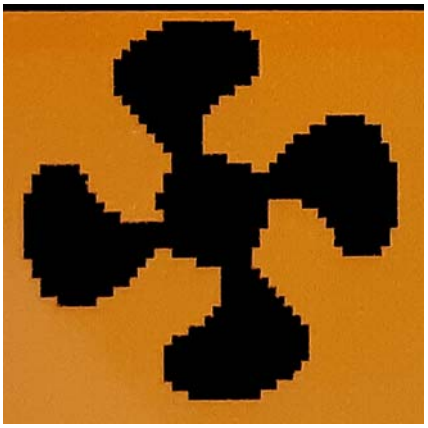
AC fan icon

5. Once you are on the fan speed selection menu, hold the power switch pressed and turn the selector knob counterclockwise six (6) clicks simultaneously .
6. Select "VIEW" mode and press selector knob.
7. Note the "DE-ICE" temperature as initial de-ice.

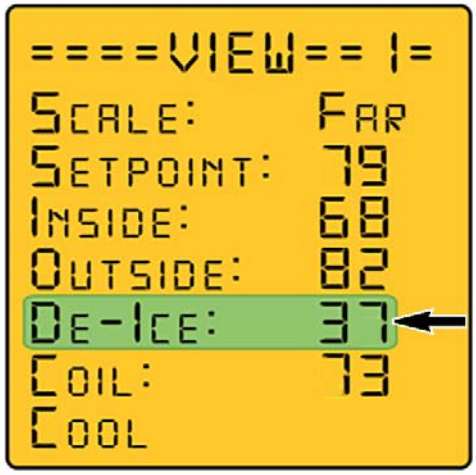

tbl2020-043-202

TYPICAL

8. Start the engine and let it run for at least 2 minutes and 30 seconds.
9. Note the "DE-ICE" temperature as final de-ice.

Acceptance criteria

– If the initial de-ice is below 75°F, the result of (initial de-ice) - (final de-ice) should be at least 20°F.
– If the initial de-ice is above or equal to 75°F, the result of (initial de-ice) - (final de-ice) should be at least 25°F.
– If the initial de-ice is above or equal to 85°F, the result of (initial de-ice) - (final de-ice) should be at least 30°F.

If the vehicle does not fulfill these conditions, it must be inspected as per the troubleshooting procedure.

Example:

INITIAL DE-ICE	FINAL DE-ICE	DELTA	STATUS
80°F	50°F	30°F	OK because difference is greater than 25°F

10. If results are out of specification, connect the vehicle to A/C pressure gauges.
11. Observe and record the system pressures (low and high pressure) with A/C still operating.
12. Activate the diagnostic mode of the climate control module. Go in the window VIEW 1 and note the COIL temperature.
13. Compare results with the following tables.

NOTE: In the following tables, the data in **BOLD** indicate the normal temperature range.

COIL TEMPERATURE	PRESSURE ON THE LOW PRESSURE SIDE
-3.3°C (26°F)	108.18 kPa (15.69 PSI)
-2.2°C (28°F)	117.49 kPa (17.04 PSI)
-1.1°C (30°F)	**127.07 kPa (18.43 PSI)**
0°C (32°F)	**137 kPa (19.87 PSI)**
1.1°C (34°F)	**147.2 kPa (21.35 PSI)**
2.2°C (36°F)	**157.75 kPa (22.88 PSI)**
3.3°C (38°F)	**168.71 kPa (24.47 PSI)**
4.4°C (40°F)	**179.95 kPa (26.10 PSI)**
5.6°C (42°F)	**191.61 kPa (27.79 PSI)**
6.7°C (44°F)	**203.53 kPa (29.52 PSI)**
7.8°C (46°F)	**215.94 kPa (31.32 PSI)**
8.9°C (48°F)	**228.7 kPa (33.17 PSI)**
10°C (50°F)	**241.8 kPa (35.07 PSI)**
11.1°C (52°F)	**255.31 kPa (37.03 PSI)**
12.2°C (54°F)	**269.24 kPa (39.05 PSI)**
12.8°C (55°F)	**276.41 kPa (40.09 PSI)**
15.6°C (60°F)	313.57 kPa (45.48 PSI)
18.3°C (65°F)	353.49 kPa (51.27 PSI)
21.1°C (70°F)	396.24 kPa (57.47 PSI)
23.9°C (75°F)	441.95 kPa (64.10 PSI)
26.7°C (80°F)	490.84 kPa (71.19 PSI)
29.4°C (85°F)	542.96 kPa (78.75 PSI)
32.2°C (90°F)	598.47 kPa (86.80 PSI)
35°C (95°F)	657.76 kPa (95.40 PSI)
37.8°C (100°F)	719.81 kPa (104.40 PSI)
38.3°C (101°F)	732.91 kPa (106.30 PSI)
38.9°C (102°F)	746.01 kPa (108.20 PSI)

OUTSIDE TEMPERATURE	PRESSURE ON THE HIGH PRESSURE SIDE
11.7°C (53°F)	759.8 kPa (110.20 PSI)
12.2°C (54°F)	772.9 kPa (112.10 PSI)
12.8°C (55°F)	786.69 kPa (114.10 PSI)
15.6°C (60°F)	857.02 kPa (124.30 PSI)
16.7°C (62°F)	885.98 kPa (128.50 PSI)
17.8°C (64°F)	916.31 kPa (132.90 PSI)
18.9°C (66°F)	946.65 kPa (137.30 PSI)
20°C (68°F)	**978.37 kPa (141.90 PSI)**
21.1°C (70°F)	**1 010.08 kPa (146.50 PSI)**
22.2°C (72°F)	**1 043.18 kPa (151.30 PSI)**
23.3°C (74°F)	**1 076.27 kPa (156.10 PSI)**
24.4°C (76°F)	**1 110.75 kPa (161.10 PSI)**
25.6°C (78°F)	**1 145.22 kPa (166.10 PSI)**
26.7°C (80°F)	**1 181.07 kPa (171.30 PSI)**

OUTSIDE TEMPERATURE	PRESSURE ON THE HIGH PRESSURE SIDE
27.8°C (82°F)	**1 217.61 kPa (176.60 PSI)**
28.9°C (84°F)	**1 254.85 kPa (182.00 PSI)**
30°C (86°F)	**1 292.77 kPa (187.50 PSI)**
31.1°C (88°F)	**1 331.38 kPa (193.10 PSI)**
32.2°C (90°F)	**1 371.37 kPa (198.90 PSI)**
35°C (95°F)	**1 473.41 kPa (213.70 PSI)**
37.8°C (100°F)	**1 581.66 kPa (229.40 PSI)**
40.6°C (105°F)	**1 694.73 kPa (245.80 PSI)**
43.3°C (110°F)	**1 813.32 kPa (263.00 PSI)**
46.1°C (115°F)	**1 938.12 kPa (281.10 PSI)**
48.9°C (120°F)	**2 069.12 kPa (300.10 PSI)**
51.7°C (125°F)	2 206.32 kPa (320.00 PSI)
54.4°C (130°F)	2 349.73 kPa (340.80 PSI)

OPERATING PRESSURES DIAGNOSIS

PRESSURE		**HOSES**		**AIR FLOW**	**CONDITION**
LOW PRESSURE SIDE	HIGH PRESSURE SIDE	LIQUID REFRIGERANT	GAS REFRIGERANT		
Very low	Very low	Slightly warm	Slightly warm	Warm	Lack of refrigerant
Low	Low	Warm	Warm to very warm	Warm to very warm	Lost of refrigerant
Low	Low	Warm	Warm	Very warm	Expansion valve closed
Normal (may decrease)	Normal	Warm	Warm	Slightly cold	Lack of refrigerant and air in the system
Normal (may decrease)	Normal (may decrease)	Warm	Very warm	Warm	Humidity in the system
Normal	High	Warm	Warm	Slightly cold	Clogged condenser or refrigerant overload
High	High	Warm	Very warm	Slightly cold	Expansion valve opened
High	High	Warm	Very warm	Warm	Contaminated refrigerant and air in the system
High	High	Very warm	Very warm	Very warm	Defective condenser

SLOW LEAK DIAGNOSIS

Validate the pressure switch by replacing it with a known good one from your inventory. If the system is still not working, install back the previously removed pressure switch.

NOTE: The following MUST be completed by a licensed A/C repair shop.

1. Recover the refrigerant from the system.
2. From either service port, pressurize the system to 1 723.7 kPa (250 PSI) using nitrogen. Ensure the pressure is stabilized in the system before proceeding.

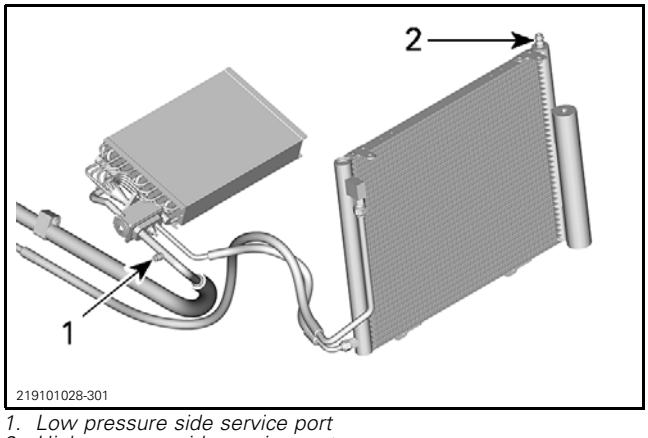

1. Low pressure side service port
2. High pressure side service port

3. The system must maintain pressure for 30 minutes.
4. If the pressure decreases, spray ALL connections using soapy water or a product specific for A/C leak detection. More than one leak can be present, ensure to validate all connections of the system up-to the expansion valve.

TIGHTENING TORQUE	
Compressor bolt	19 N•m ± 2 N•m (168 lbf•**in** ± 18 lbf•**in**)

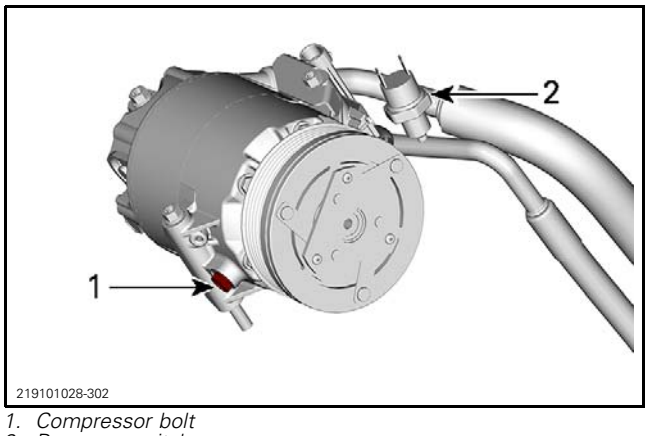

1. Compressor bolt
2. Pressure switch

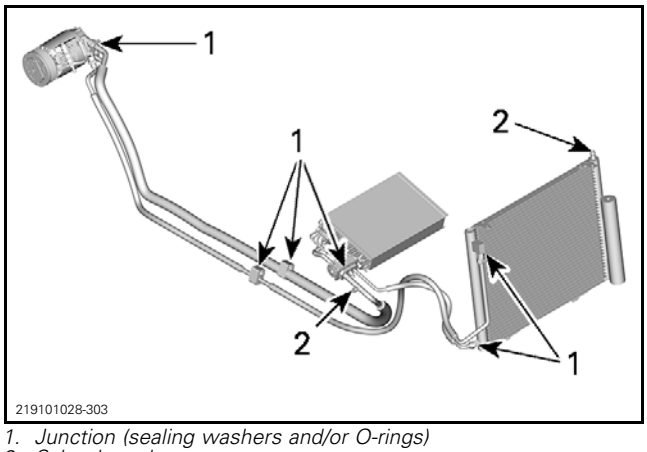

1. Junction (sealing washers and/or O-rings)
2. Schrader valves

5. Always replace defective sealing washers and/or O-rings where leaks were found.

If the pressure keeps dropping and no leaks were found or after fixing found leaks, validate expansion valve.

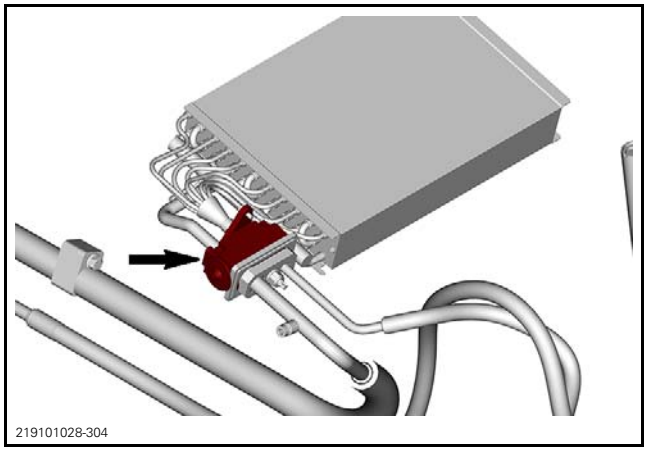

EXPANSION VALVE

COMPRESSOR AND DRIVE BELT

Refer to *AIR CONDITIONING - ENGINE COMPONENTS* subsection.

AIR VENTS

Removing the Air Vent

Windshield Air Vent

1. Open the windshield.
2. Remove screws retaining the windshield air vent.

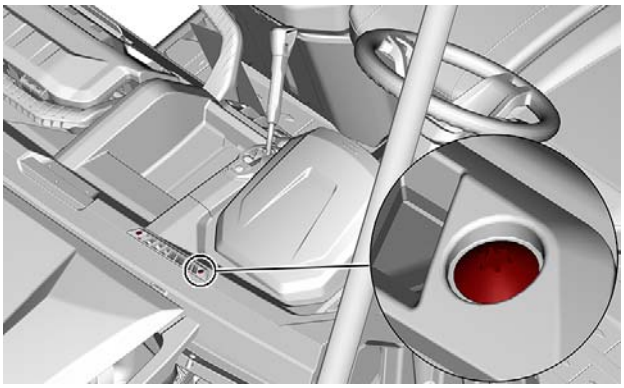
tmr2016-151-002_a

3. Pull on the windshield air vent and remove it.

Central Air Vents (Left and Right)

1. Unclip the vent and lift it.
2. Cut locking tie.

Central Air Vents (in the middle of dash)

1. Unclip the bottom of the central console panel.

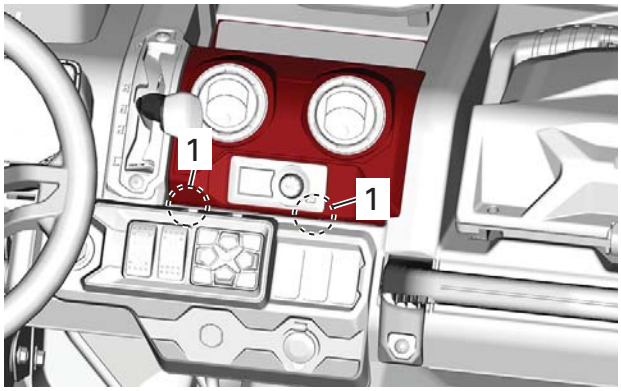

219101028-006-043

1. Locking tab location

2. Lift the panel and cut locking tie.

Installing the Air Vents

The installation is the reverse of the removal procedure. However, pay attention to the following.

TIGHTENING TORQUE	
Windshield air vent screws	1.6 N•m ± 0.4 N•m (14 lbf•**in** ± 4 lbf•**in**)

AIR DUCTS

Removing the Air Ducts

To remove air ducts, the dash removal is required.

Installing the Air Ducts

The installation is the reverse of the removal procedure.

HVAC UNIT

Removing the HVAC Unit Cover

1. Remove screws securing the cover.

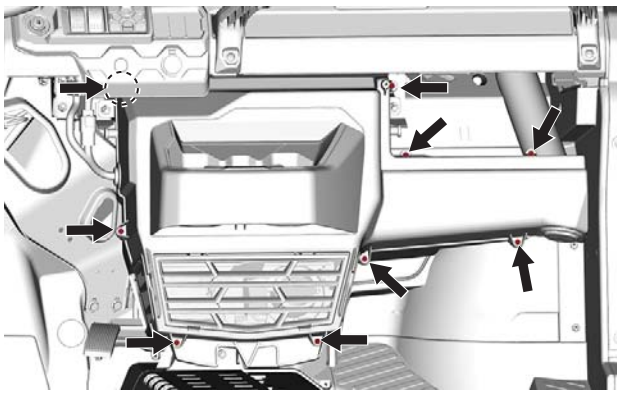
219101028-006-035

2. Pull the cover to remove it.

Installing the HVAC Unit Cover

The installation is the reverse of the removal procedure. However, pay attention to the following.

TIGHTENING TORQUE	
HVAC unit cover screws	1.35 N•m (12 lbf•**in**)

Removing the HVAC Unit

1. Remove the right storage compartment.

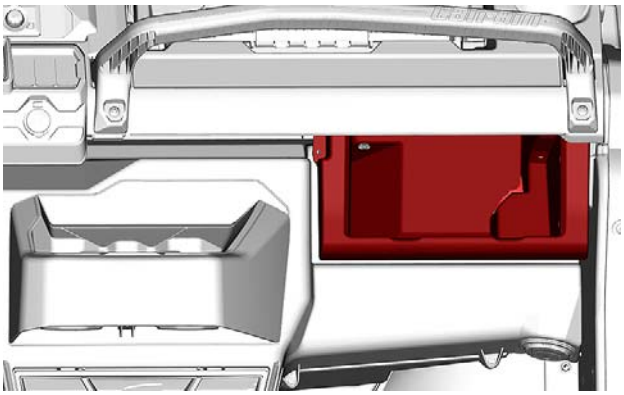
219101028-006-031

2. Remove the nuts on both side of the HVAC unit.

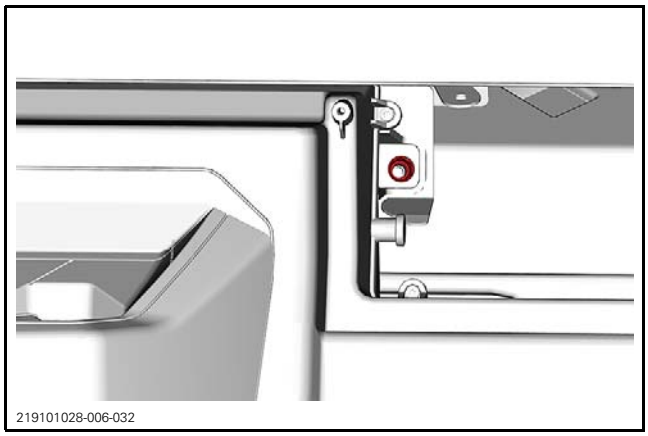

RETAINING NUT ON RIGHT SIDE

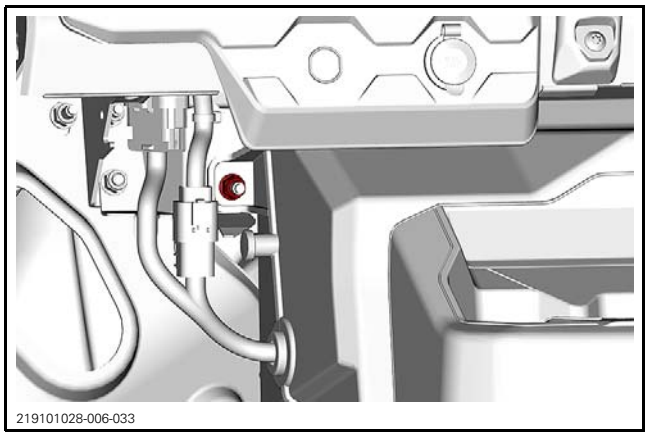

RETAINING NUT ON LEFT SIDE

3. Remove the lower central retaining nut.

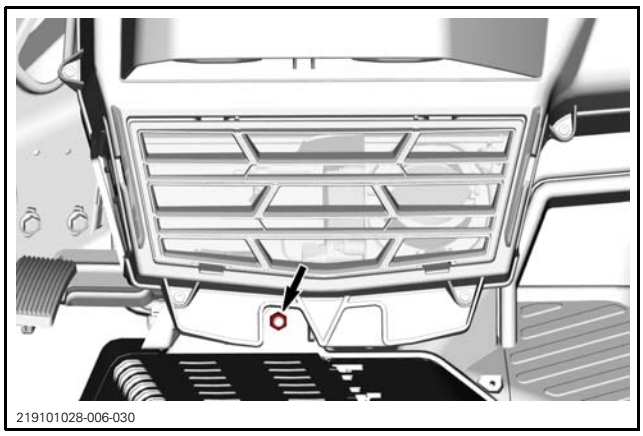

If the HVAC unit must be moved aside to work behind, pull the unit slightly and turn it towards the right side of the vehicle to make room.

If the unit must be removed from the vehicle, do the following.

4. Recover the refrigerant in the HVAC system. Refer to a certified technician.
5. Unplug the blower and HVAC connectors.

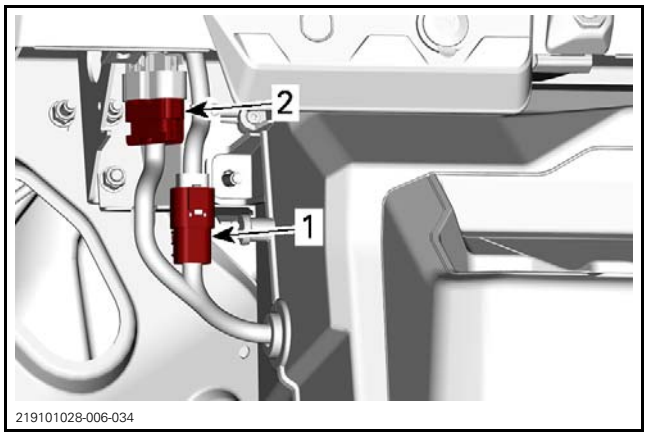

1. Blower connector
2. HVAC connector

6. From behind the front right wheel, install a hose pincher on each coolant hose.

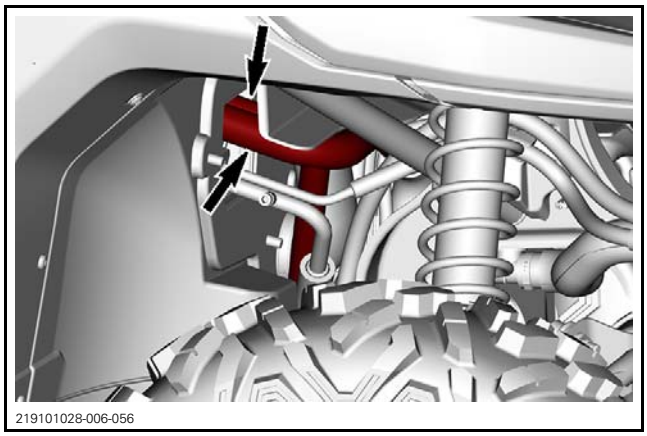

7. Unplug hoses and recover any coolant flow.

NOTICE **Clean any coolant on the A/C hoses.**

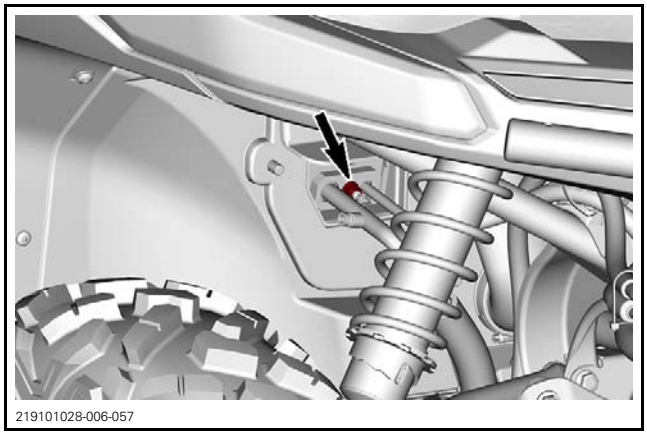

8. Remove the nut securing A/C hoses to the expansion valve.

NOTICE **Block A/C hoses and expansion valve opening to avoid contamination.**

9. Pull the unit.

10. Remove the HVAC unit from the vehicle.

Installing the HVAC Unit

The installation is the reverse of the removal procedure. However, pay attention to the following.

TIGHTENING TORQUE	
HVAC unit retaining nuts	5 N•m ± 1 N•m (44 lbf•**in** ± 9 lbf•**in**)

Fill and bleed the cooling system. Refer to *COOLING SYSTEM - VEHICLE COMPONENTS* subsection.

Check for coolant leaks.

Replace the desiccant cartridge.

Have the HVAC system recharged and checked by a certified technician.

BLOWER

The blower assembly includes the blower resistor, the blower motor and the blower fans.

HVAC Unit Fuses and Relays Location

The fuse box is located into the front service compartment.

219101010-017-066

Testing the Blower Motor

Turn the vehicle key switch to ON.

Turn the blower speed switch to low, medium, then high.

HVAC UNIT TROUBLESHOOTING CHART		
Is blower working?	YES →	Everything is OK
NO ↓		
Check for power on main accessory posts under dashboard	NO →	Refer to *POWER DISTRIBUTION AND GROUNDS* subsection
YES ↓		
Check blower fuse (20A). Is fuse burnt?	YES →	Replace fuse Is blower working?
NO ↓		
Check wiring harness, connectors, and ground		
↓		
Harness and connectors good?	NO →	Repair or replace defective part(s)
YES ↓		
Blower turns?	YES →	Reinstall all removed parts
NO ↓		
Bypass blower speed switch		
↓		
Blower turns?	YES →	Replace blower speed switch Is blower working?
	NO →	Replace blower

Blower Motor Resistor

The blower motor resistor provides electrical resistance in series to the blower motor.

The fan speed control switch sends current to one blower resistor pin based on selected fan speed.

Adding resistance to the circuit slows the blower motor.

Removing resistance from the circuit speeds the blower motor.

Testing the Blower Motor Resistor

Refer to the appropriate *WIRING DIAGRAM*.

The blower motor resistor cannot be tested independently from the blower motor.

1. Turn the fan on to low, medium, then high.

2. Read the voltage at the blower assembly connector for each speed.

If battery voltage is available at each pin of the blower assembly connector and the blower motor does not come on. Ensure there is a good ground.

If all electrical tests are good, replace the blower.

Removing the Blower

1. Remove the HVAC unit cover.
2. Remove the blower retaining screws.

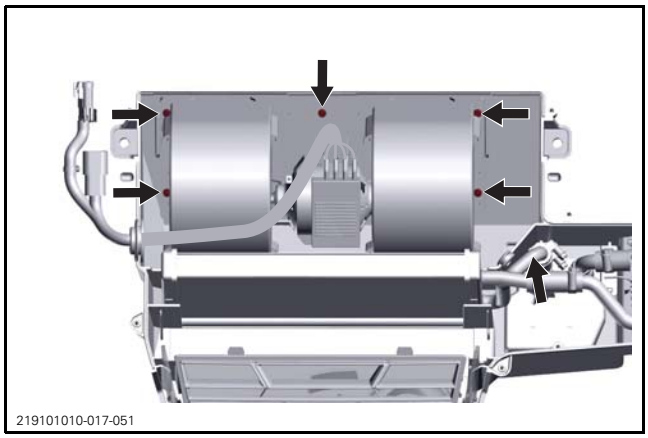
219101010-017-051

3. Remove blower harness from the rubber grommet.

Installing the Blower

The installation is the reverse of the removal procedure. However, pay attention to the following.

TIGHTENING TORQUE	
Blower retaining screws	1.35 N•m (12 lbf•**in**)

HEATER VALVE

The heater valve includes the valve and the actuator.

The actuator controls the valve opening or closing to allow or not the circulation of the heated coolant through the heater unit.

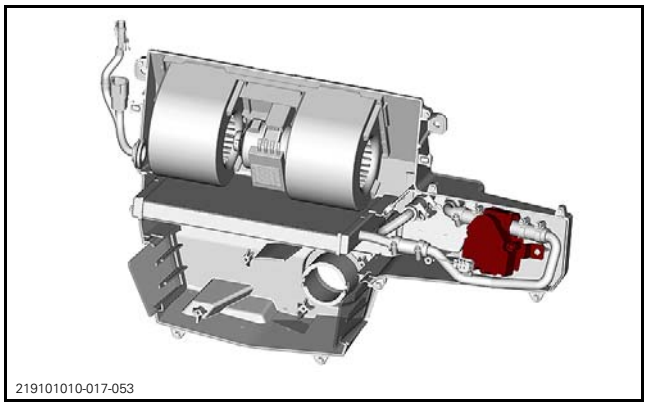
219101010-017-053

Testing the Heater Valve

1. Disconnect the HVAC connector, located on the left side of the HVAC unit.

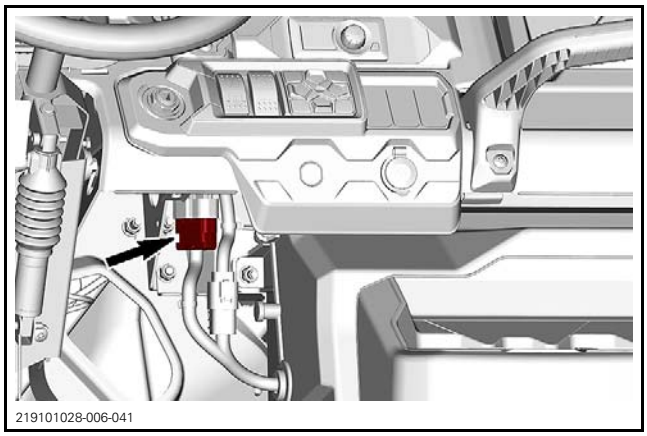
219101028-006-041

2. On vehicle connector, verify the voltage.

HEATER VALVE CONNECTOR PINS		RESULT
N	P	Battery voltage

No battery voltage, check fuse F1 and wiring harness.

Low battery voltage, recharge or replace battery by a fully charge one and retest.

3. Good battery voltage; check the signal from the climate control module.

HEATER VALVE CONNECTOR PINS		RESULT
L	K	Voltage should vary when the temperature is modified.

If the voltage vary, replace the heater valve.

If not, replace the climate control module.

Removing the Heater Valve

1. From behind the front right wheel, install a hose pincher on each coolant hose.

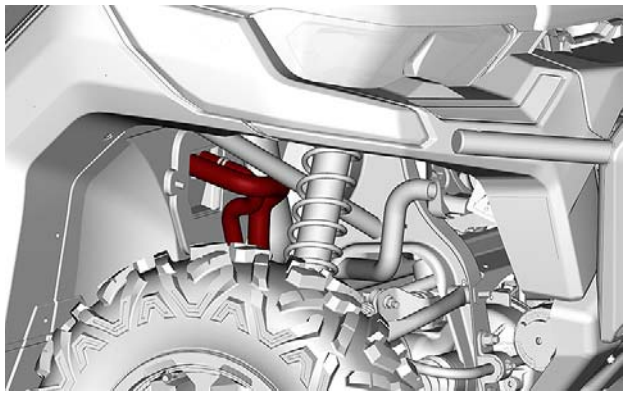
219101010-017-061

2. Remove the HVAC unit cover. See procedure in this subsection.
3. Disconnect the heater valve connector.
4. Loosen gear clamps on both side of the heater valve.

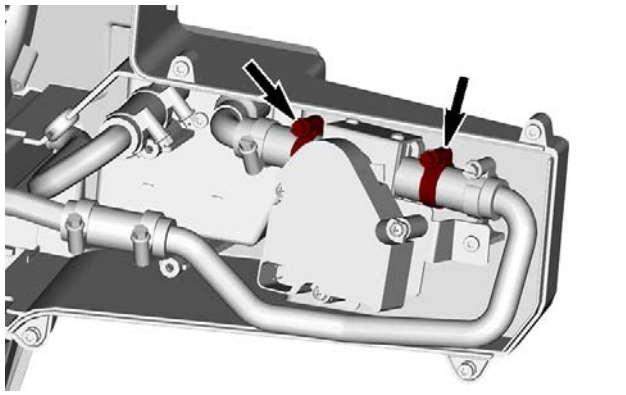
219101010-017-062

5. Remove the heater valve retaining screw.

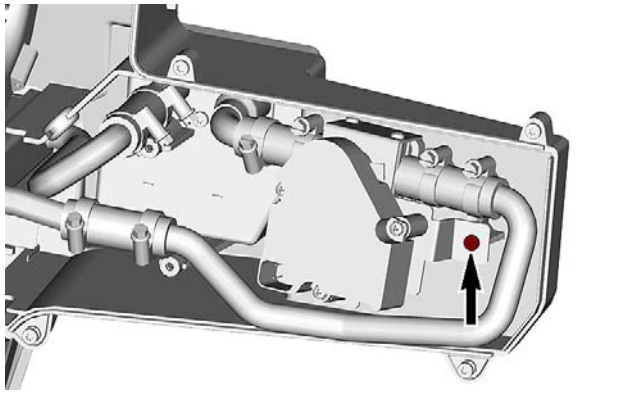
219101010-017-063

6. Remove the heater valve.
7. Catch and clean coolant flow.

Installing the Heater Valve

The installation is the reverse of the removal procedure. However, pay attention to the following.

TIGHTENING TORQUE	
Heater valve retaining screw	1.35 N•m (12 lbf•**in**)
Gear clamp	3 N•m (27 lbf•**in**)

Fill and bleed the cooling system with the recommended coolant. Refer to *COOLING SYSTEM - VEHICLE COMPONENTS* subsection.

Check for coolant leaks.

HEATER CORE

Removing the Heater Core

1. From behind the front right wheel, install a hose pincher on each coolant hose.

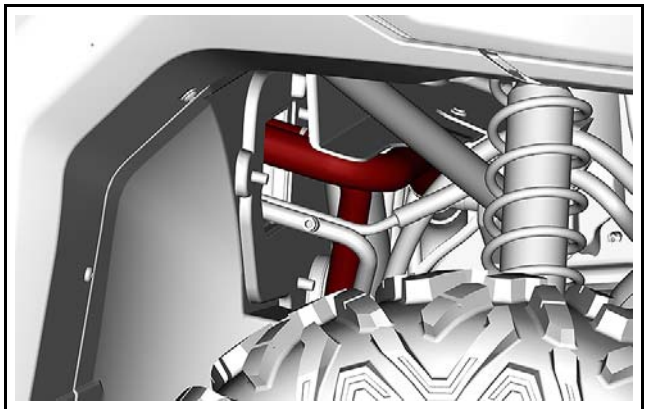
219101028-006-042

2. Remove the HVAC unit cover. See procedure in this subsection.
3. Loosen gear clamps securing the rubber hoses to the rigid tubes of the heater core.

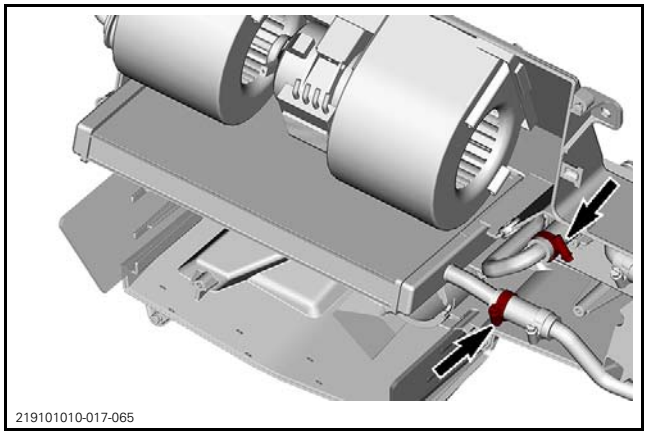
219101010-017-065

4. Remove the heater core.
5. Catch and clean coolant flow.

Installing the Heater Core

The installation is the reverse of the removal procedure. However, pay attention to the following.

TIGHTENING TORQUE	
Gear clamp	3 N•m (27 lbf•**in**)

Fill and bleed the cooling system with the recommended coolant. Refer to *COOLING SYSTEM - VEHICLE COMPONENTS* subsection.

Check for coolant leaks.

EVAPORATOR

Removing the Evaporator

1. Recover the refrigerant in the HVAC system. Refer to a certified technician.
2. Remove the HVAC unit cover. See procedure in this subsection.
3. From behind the front right wheel, remove the nut securing A/C hoses.

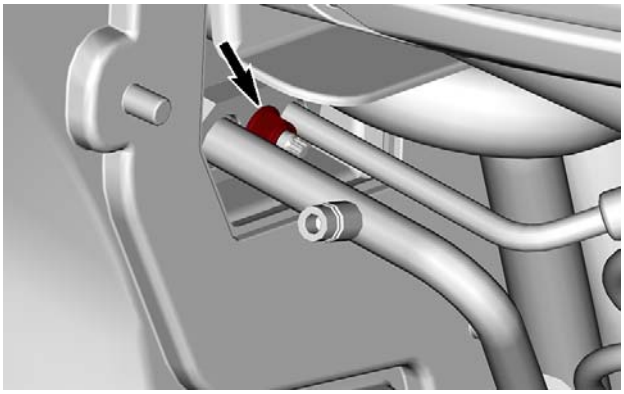

219101028-006-048

4. Remove evaporator retaining screws.

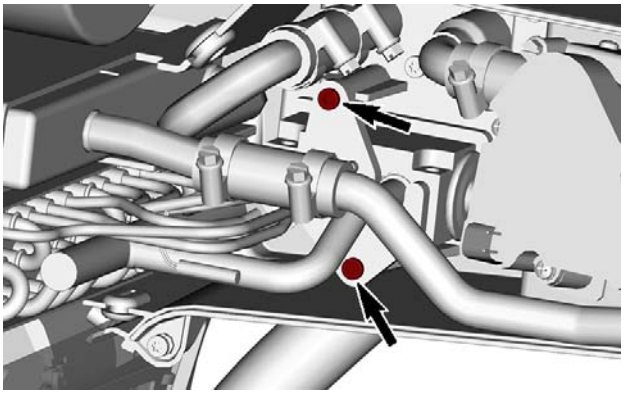

219101028-006-049

5. Remove the evaporator and the block valve in an assembly.

Installing the Evaporator

The installation is the reverse of the removal procedure. However, pay attention to the following.

TIGHTENING TORQUE	
Evaporator screws	1.35 N•m (12 lbf•**in**)
Expansion valve nut	26 N•m ± 2 N•m (19 lbf•ft ± 1 lbf•ft)

Have the HVAC system recharged and checked by a certified technician.

EXPANSION VALVE

Removing the Expansion Valve

1. Remove the evaporator.
2. Remove the block valve retaining screws.

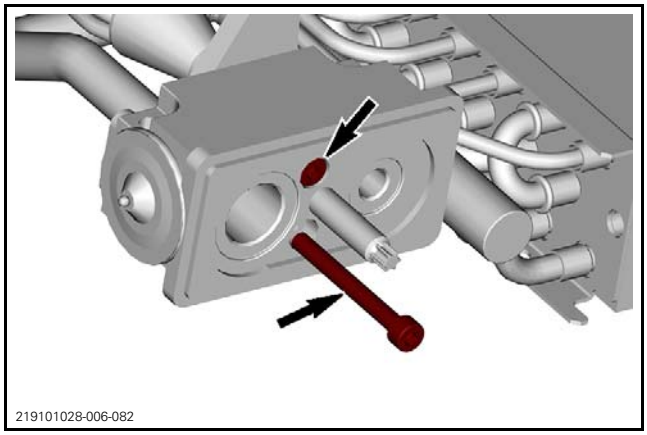

219101028-006-082

3. Remove the expansion valve.

Installing the Expansion Valve

The installation is the reverse of the removal procedure. However, pay attention to the following.

TIGHTENING TORQUE	
Expansion valve retaining screws	4.5 N•m (40 lbf•**in**)

Have the HVAC system recharged and checked by a certified technician.

CLIMATE CONTROL MODULE

Climate Control Module Diagnostic Mode

The climate control module has diagnostic capabilities.

1. Select the FAN SPEED page.
2. Press and hold the power button.
3. Rotate the knob counterclockwise 6 clicks to access to the 4 diagnostic screens:
   - Setup
   - View
   - Error List
   - Statistics

SETUP: This screen allows to show the latest software update date and know the module's software version.

VIEW: Split in 2 screens providing information on current status of sensors and settings.

View 1

Scale:	Celsius or Fahrenheit (as per customer preference)
Setpoint:	Temperature selected by the customer
Inside:	Cockpit temperature from the inside temperature sensor located in the bottom of the HVAC unit.
Outiside:	Outside temperature from the outside temperature sensor located under the hood.
De-Ice:	Temperature from the evaporator de-icing sensor located on the evaporator coil refrigerant outlet tube.
Coil:	Temperature from the coil temperature sensor located in the air after evaporator and heater coils.
Mode:	Display the current mode of the climate control module. Can be AUTO, COOL or HEAT.

View 2

AC:	OFF or ON
Blower:	Fan speed selected by the customer/system
Valve:	Heater valve opening in %
Eng S:	Engine RPM
Eng T:	Engine operating temperature
Bat V:	Battery voltage
Thr P:	Throttle position

ERROR LIST: Split in 3 screens which provides information on sensor / component error counts.

STATISTICS: Split in 2 screens which provide information on activation cycles and duration of the module, compressor and clutch, and the blower.

RESETTING ERROR LIST: From the error page, turn the knob left then push on it to reset the list. The error list must be reset every time a HVAC sensor is replaced.

Removing the Climate Control Module

1. Unclip the bottom of the central console panel.

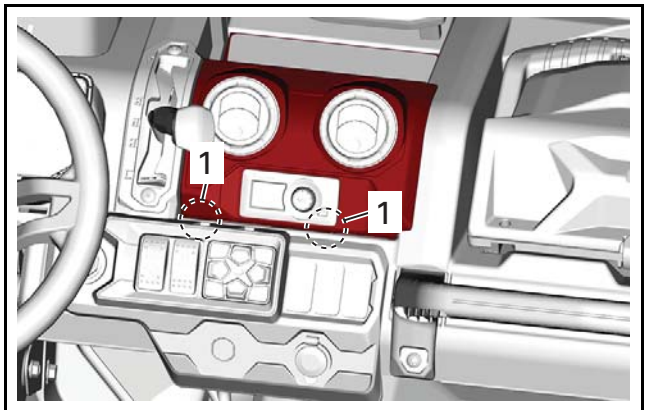

219101028-006-043

1. Locking tab location

2. Lift the panel and press tabs on each side of the climate control module.
3. Remove module from the panel.
4. Unplug both connectors from the module.

Installing the Climate Control Module

The installation is the reverse of the removal procedure.

CONDENSER

Removing the Condenser

1. Empty the HVAC system. Refer to a certified technician.
2. Remove front fenders.

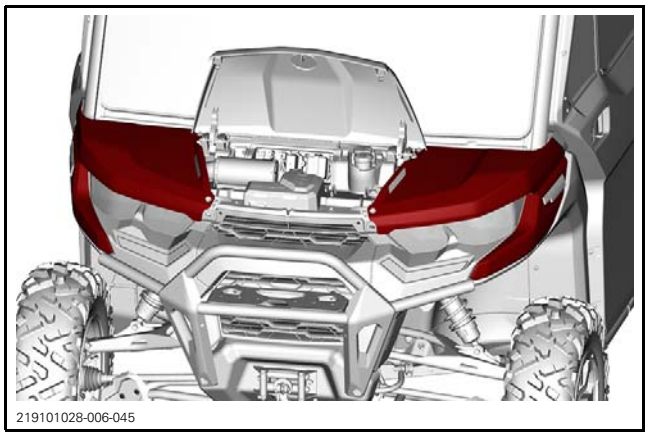
219101028-006-045

3. Remove the front service compartment tray.

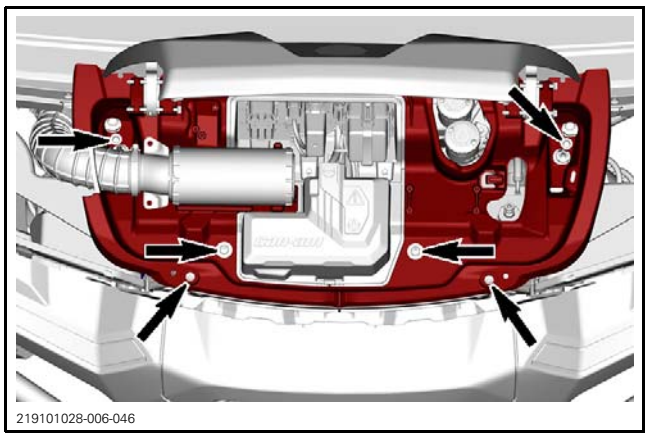
219101028-006-046

4. Move the electrical tray aside to make room.

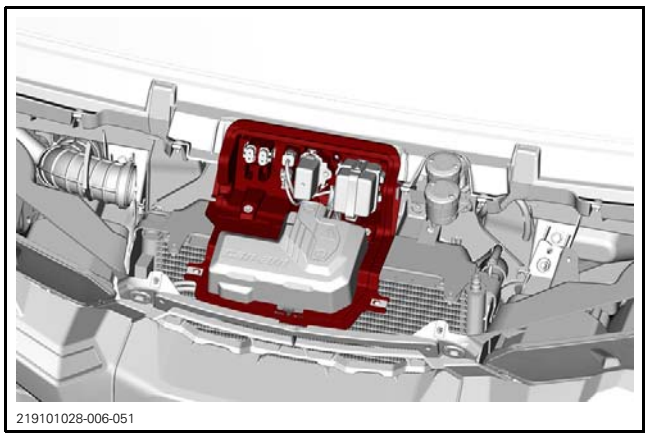
219101028-006-051

5. Remove both retaining screws at the bottom of the condenser.

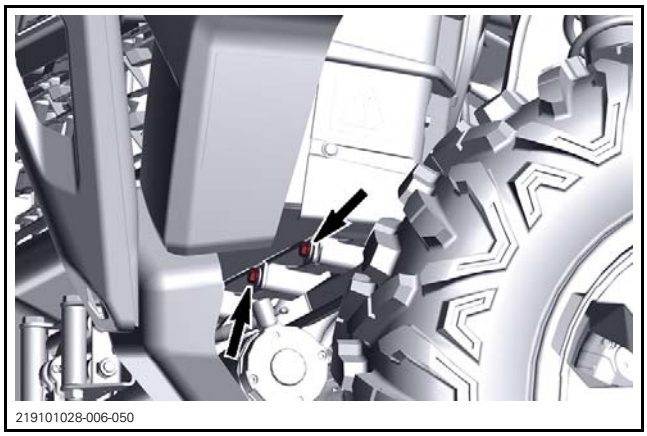
219101028-006-050

6. Disconnect both A/C hoses from the condenser.
7. Remove the condenser from the vehicle.

Installing the Condenser

The installation is the reverse of the removal procedure.

Have the HVAC system recharged and checked by a certified technician.

DESICCANT CARTRIDGE

Desiccant Cartridge Replacement

NOTICE **The desiccant cartridge must be replaced when the refrigerant system is opened to ambient air (e.g.: during A/C component replacement) or when a major leak has occurred.**

1. Ensure the HVAC system is empty. Refer to a certified technician.
2. Remove front fenders.

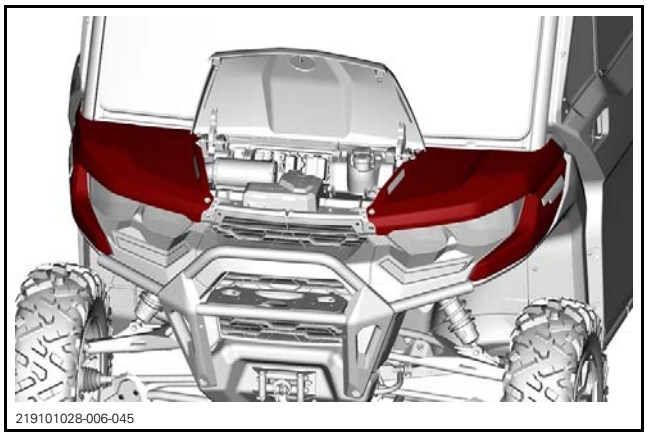
219101028-006-045

3. Remove the front service compartment tray.

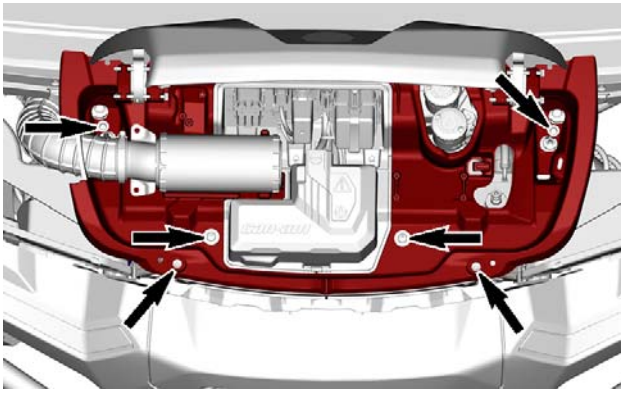

219101028-006-046

4. Using a 10 mm Allen key, remove the receiver / drier cap.

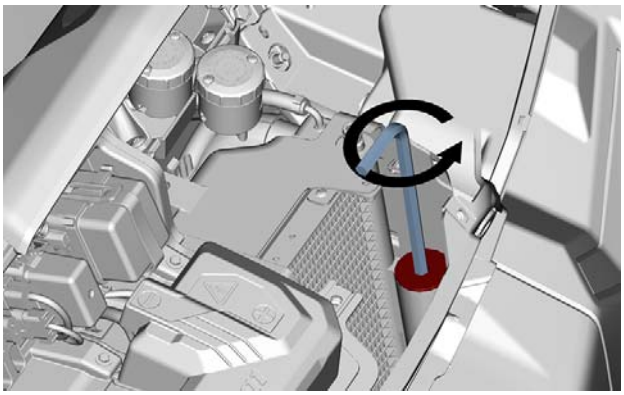

219101028-006-047

5. Replace the desiccant cartridge.
6. Check the condition of the cap and replace it if required.
7. Replace both O-rings and apply mineral oil on them.
8. Reinstall the cap.
9. Have the HVAC system recharged and checked by a certified technician.

ENGINE MANAGEMENT SYSTEM (EMS)

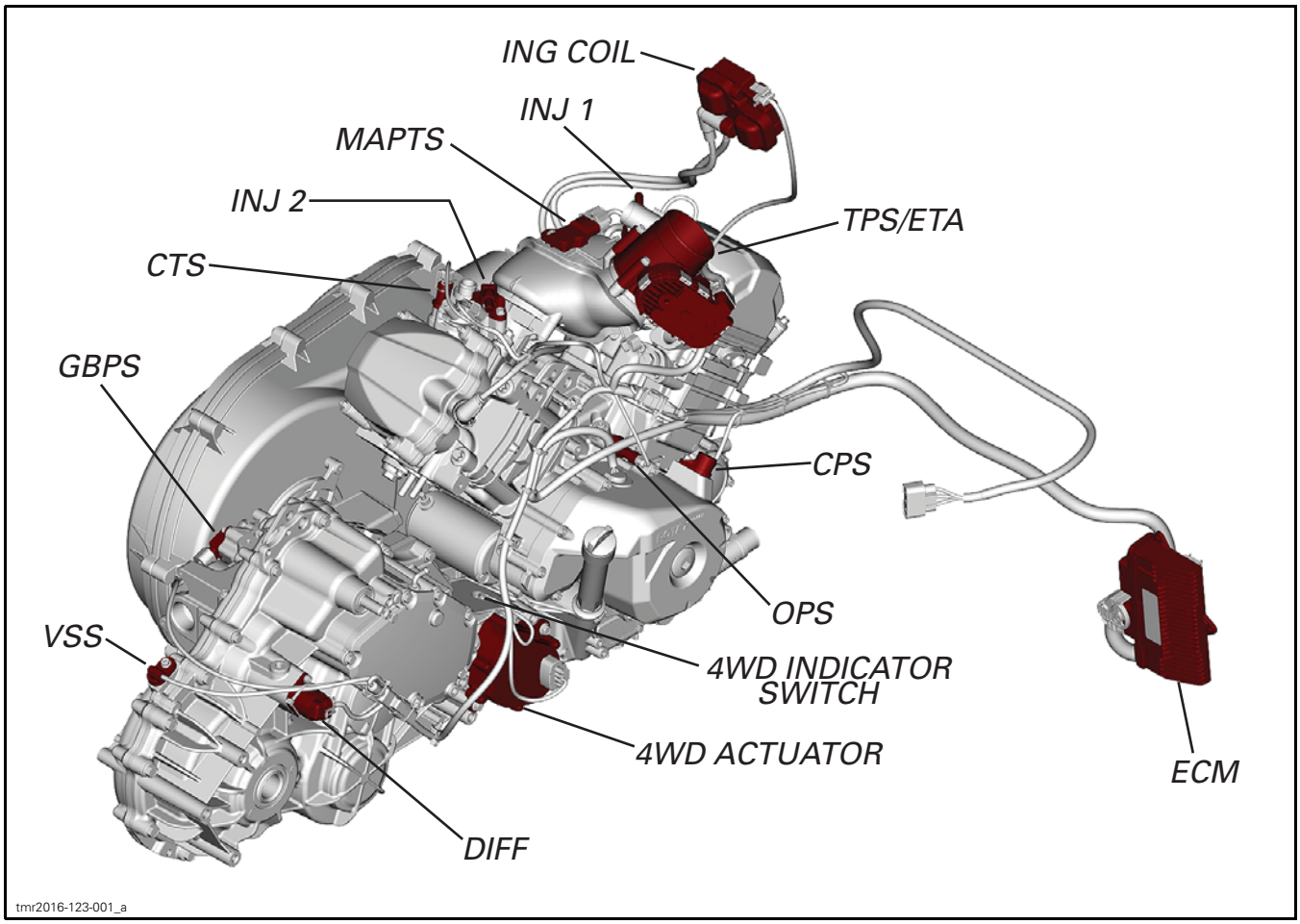

HD9 AND HD10 MODELS

4WD Actuator
4WD Indicator Switch
CPS = Crankshaft Position Sensor
CTS = Cooling Temperature Sensor
DIFF = Differential Locking Actuator
ECM = Engine Control Module
ETA = Electric Throttle Actuator
GBPS = GearBox Position Sensor
IGN COIL = Ignition coil
INJ 1= Injector 1
INJ 2 = Injector 2
MAPTS = Manifold Air Pressure/Temperature Tensor
OPS = Oil Pressure Switch
TPS = Throttle Position Sensor
VSS = Vehicle Speed Sensor

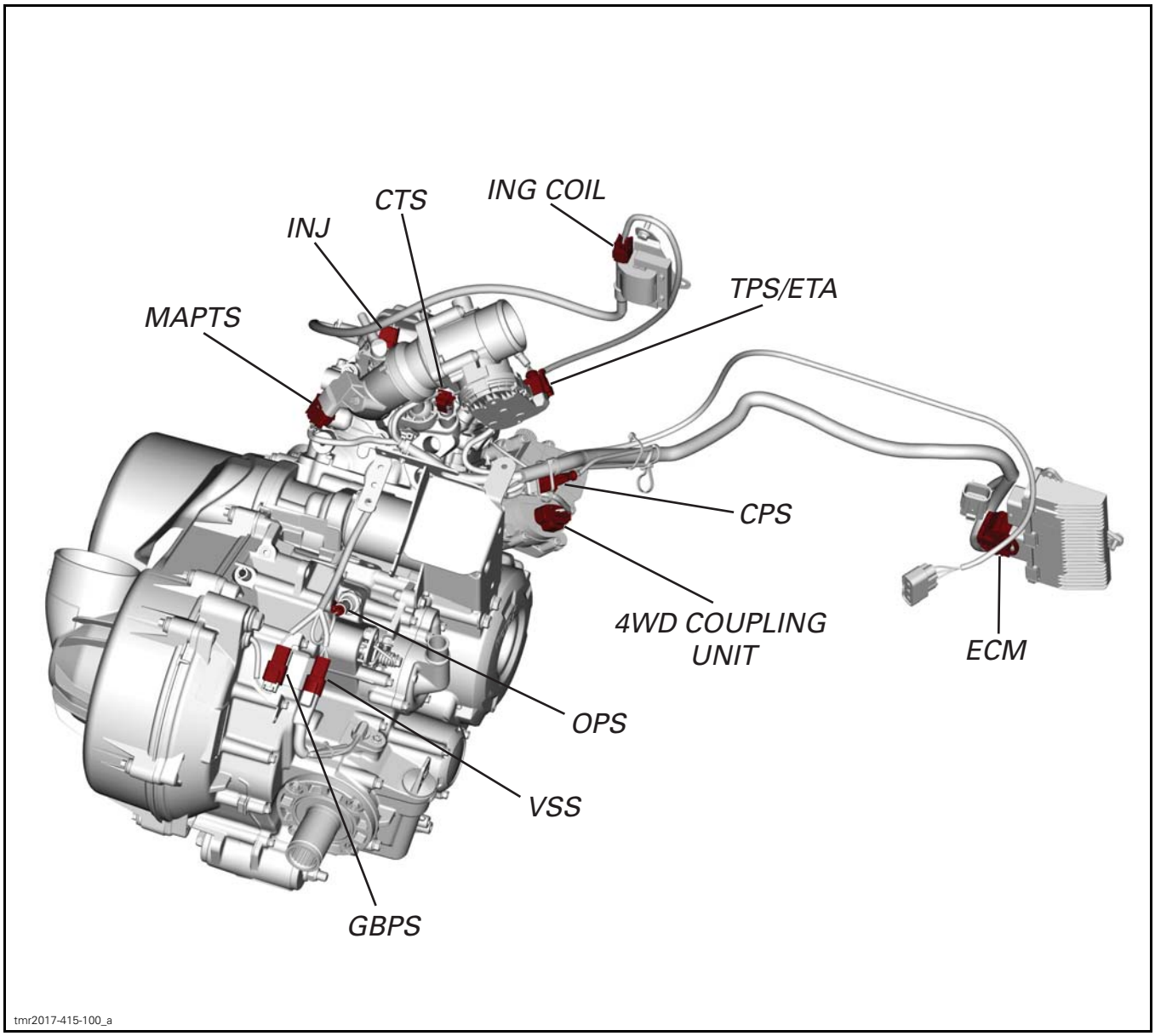

HD7 MODELS

4WD Actuator
CPS = Crankshaft Position Sensor
CTS = Cooling Temperature Sensor
ECM = Engine Control Module
ETA = Electric Throttle Actuator
GBPS = Gearbox Position Sensor
IGN COIL = Ignition coil
INJ= Fuel Injector
MAPTS = Manifold Air Pressure/Temperature Tensor
OPS = Oil Pressure Switch
TPS = Throttle Position Sensor
VSS = Vehicle Speed Sensor

GENERAL

SYSTEM DESCRIPTION

The ECM ensures a high power output with clean combustion.

There are 7 main systems that are controlled by the ECM:

1. Electronic Fuel Injection (EFI)
2. Intelligent throttle control
3. Cooling system (cooling fan)
4. Ignition system
5. Starting system
6. Fuel system

NOTE: For further information related to these systems, refer to the applicable subsection.

The ECM is the central point of the engine management system.

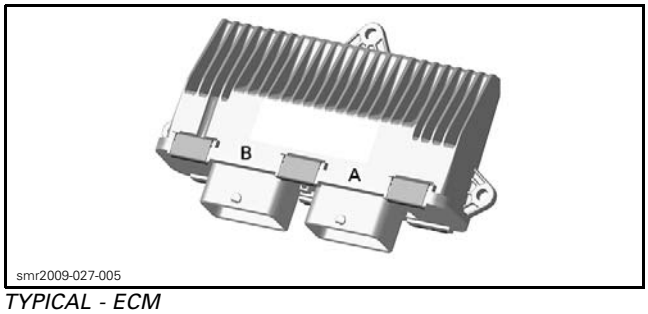

TYPICAL - ECM

The ECM is located under the right passenger's seat, to the right of the fuse box and behind the starter solenoid.

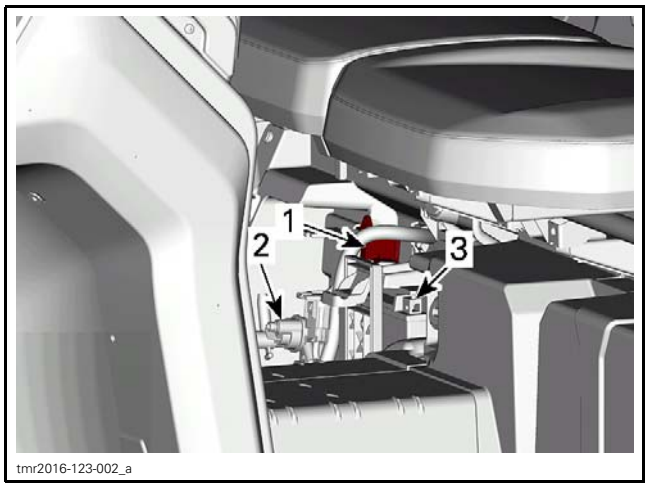

ECM LOCATION
1. ECM
2. Starter solenoid
3. Battery

The ECM reads input signals from various switches, controls, and sensors, that it compares to predetermined parameters, makes computations, and provides control signal outputs required for proper engine management.

The ECM also interacts through CAN bus with the gauge module for various functions, information exchange and display of messages. Refer to *CONTROLLER AREA NETWORK (CAN)* and appropriate *GAUGE* subsections.

The ECM also features a permanent memory that will store the information on the various ignition keys programmed to the vehicle, fault codes, customer information, and other engine information, even when the battery is removed from the vehicle.

Diagnostic Mode

The ECM features a self-diagnostic mode that is activated on system power up (ignition key ON) for certain systems and components, and when the engine is running for others. Refer to *DIAGNOSTIC AND FAULT CODES* subsection for more information.

Monitoring System

The MONITORING SYSTEM monitors various electrical and electronic components of the engine control systems such as the:

– ETA (Electric Throttle Actuator)
– TPS (Throttle Position Sensor)
– TAS (Throttle Accelerator Sensor)
– ECM (Engine Control Module).

The engine management system provides for redundancies in these components should a failure or partial failure occur to which it will adjust system operation to protect the vehicle and most of importantly, the driver.

Should the engine management system not respond (or not respond correctly) to a failure, then the monitoring system will react to ensure vehicle and driver safety.

The monitoring system therefore ensures the engine management system is functioning correctly.

Limp Home Mode

When a major component of the EMS is not operating properly, limp home mode will be set.

Engine RPM will be limited and/or engine behavior and control may be modified depending on the cause of the failure.

LIMP HOME will be displayed in the multifunction gauge and the CHECK ENGINE light symbol will be on in the gauge.

A failure of any of the following major components will force the vehicle into LIMP HOME MODE:

- TPS / ETC / TAS
- GBPS
- Injectors
- Low oil pressure
- High engine coolant temp
- MAPTS signal fault.

CONTROLLER AREA NETWORK (CAN)

GENERAL

SYSTEM DESCRIPTION

The CAN (Controller Area Network) protocol is an ISO standard for serial data communication.

The CAN bus links the ECM and multifunction gauge together so that they communicate to interact as required. The components are connected together by 2 wires and they are in constant communication with each other at a rate of about every 20 milliseconds. CAN lines consist of a pair of twisted wires (WHITE/BEIGE and WHITE/BLACK).

If a component or system malfunction is detected, a module may generate a fault code, which it transmits through the CAN bus as a signal. The fault signal may be used for various functions such as triggering the display of an error message in the multifunction gauge display, turning on a fault indicator light, limiting or inhibiting vehicle or engine operation, or viewed using the BRP diagnostic software BUDS2 for troubleshooting.

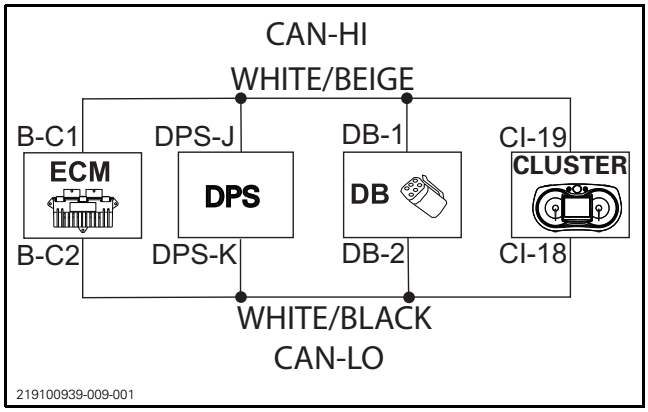

CLUSTER: Multifunction Gauge
DB: Diagnostic Connector
DPS: Dynamic Power Steering
ECM: Engine Control Module

COMMUNICATION TOOLS

SERVICE TOOLS

Description	Part Number	Page
12 V BATTERY SUPPLY CABLE	529 035 997	113
DIAGNOSTIC CABLE	710 000 851	113
MPI-2 INTERFACE CARD	529 036 018	113
MPI-3 INTERFACE CARD	529 036 353	113

GENERAL

Refer to the **B.U.D.S. directory** on *KNOWLEDGE CENTER* for all BUDS related information, including:

- Download link
- User manual (programming keys, reading fault codes, navigation through menus, writing data to modules etc.)
- Installation instructions.

Download and install the software on a PC.

Connect the vehicle to the BRP diagnostic software (BUDS2).

REQUIRED TOOLS

MANDATORY TOOLS	
A personal computer (laptop or desktop)	
MPI-2 INTERFACE CARD (P/N 529 036 018) **OR** MPI-3 INTERFACE CARD (P/N 529 036 353)	
DIAGNOSTIC CABLE (P/N 710 000 851)	
12 V BATTERY SUPPLY CABLE (P/N 529 035 997)	
OPTIONAL TOOL	
Extension cable available at electronic retail outlets. Do not exceed 7.5 m (25 ft)	

Multi-Purpose Interface Card (MPI-2 or MPI-3)

The Multi-Purpose Interface (MPI) in conjunction with the diagnostic cable is used with BUDS2 to communicate with the engine control module (ECM) and other modules.

The MPI card uses the power from the PC computer's USB port.

DIAGNOSTIC CONNECTOR LOCATION

The diagnostic connector is located under the hood, stored in it's protective cap.

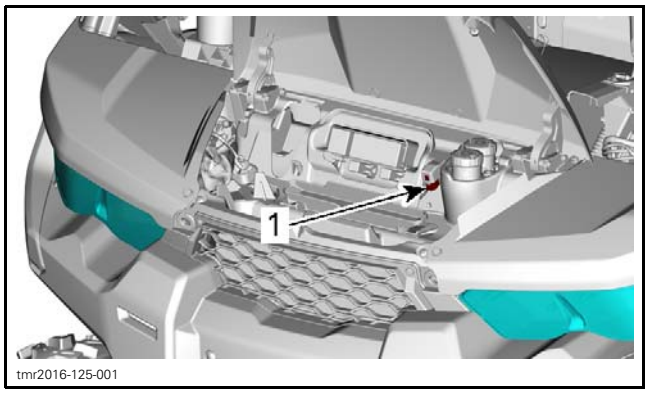

1. Diagnostic connector

TROUBLESHOOTING

DIAGNOSTIC TIPS

IMPORTANT: Make sure all connections are made and vehicle is powered up **before starting the BRP diagnostic software (BUDS2)** to allow proper communication between the vehicle and BUDS2.

Multi-Purpose Interface Card Connection Troubleshooting

MPI Status Lights

The MPI card includes 2 status lights that indicate the connection condition: USB and CAN. **Both lights must be GREEN** to function properly. Otherwise, refer to the following charts.

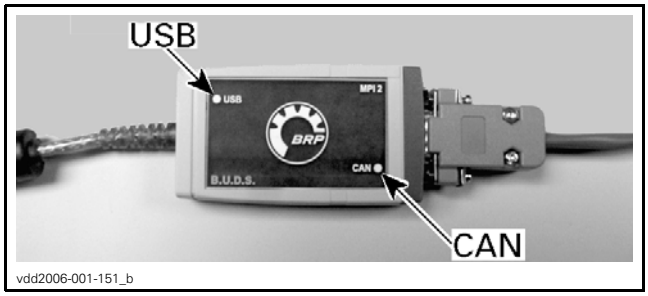

MPI-2 CARD

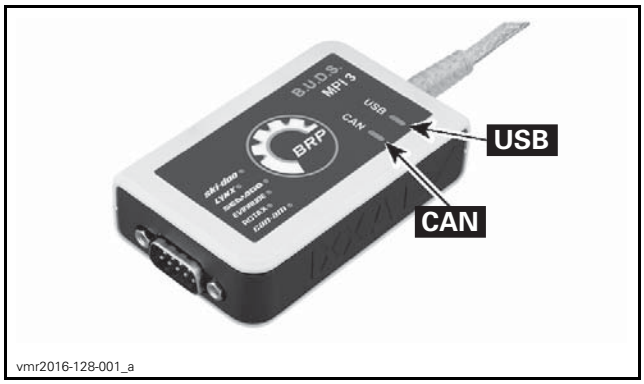

MPI-3 CARD

Prerequisite for USB Communication:
- Computer turned on.
- MPI card connected to computer.

COMMUNICATION PROBLEM (USB)	
STATUS	WHAT TO DO
Light is OFF	Check USB connection between MPI card and computer. Check USB operation on computer (hardware or USB drivers)
Light is GREEN	Connections are GOOD. Communication can take place on USB side

Prerequisite for CAN Communication:
- MPI card connected to diagnostic connector on vehicle.
- Computer turned ON
- The D.E.S.S. key installed on the engine D.E.S.S. post (if applicable).
- ECM is powered.
- Ignition key installed and turned to ON (electrical system powered up without engine started).
- BUDS2 started and logged on.

COMMUNICATION PROBLEM (CAN)	
STATUS	WHAT TO DO
CAN Light is OFF	– BUDS2 does not communicate with the vehicle. – Check if ignition key is in *ON* position. – Check connections from computer to vehicle. – Check if BUDS2. is started. – Check if vehicle is powered: is cluster turned ON?
CAN Light is RED	This occurs when BUDS2 looses communication with vehicle. – Check if ignition key is in *ON* position. – Check connections from computer to vehicle. – Check if vehicle is powered: is cluster turned ON?
CAN Light is GREEN	– Connections are GOOD. BUDS2 communicates normally with the vehicle.

DIAGNOSTIC AND FAULT CODES

GENERAL

MONITORING SYSTEM

The Engine Management System (EMS) features a monitoring system that self-diagnoses various electrical and electronic components. This mode becomes active when the ignition key is turned ON.

NOTE: Some components require the engine to be running to be monitored (fuel injectors for example).

The monitoring system continuously validates that the components (control modules, sensors and actuators) are not faulty or defective. When a malfunction is detected, the related electronic module(s):

- Sets an active fault code.
- Adapts the proper protection strategy according to the failure.
- Sends out signals to the digital display to inform the rider of a particular condition.

A fault code is an indication that a glitch or malfunction is detected by the monitoring system of the vehicle.

If a minor fault occurs, the engine and vehicle will continue to operate without noticeable loss of performance.

If a more important fault occurs, engine RPM may be limited. The engine/vehicle will continue to operate with reduced performance.

If a major component of the EMS fails, engine RPM will be limited as well as vehicle speed.

These strategies are used to protect engine and electrical system from damage and to maintain safe operation of the vehicle. In extreme cases, the engine may also be completely shut down.

Message in Gauge for Problematic Conditions

If an abnormal condition occurs, the gauge will display one of the following messages. It can be combined with a pilot lamp.

MESSAGE	DESCRIPTION
D.E.S.S. KEY NOT RECOGNIZED	**Optionnal D.E.S.S. key installed**: D.E.S.S. key requires cleaning.
BAD KEY	**Optionnal D.E.S.S. key installed**:Wrong key used in the ignition switch. Use the right key for the vehicle.
CHECK ENGINE	All active or previously activated faults that require attention. No engine limitation engaged.
LIMP HOME	Critical faults requiring diagnostic as soon as possible. An engine limitation is engaged and/or the engine behavior is modified.
ECM CRC ERROR	Error message from ECM.
TPS FAULT	Throttle body fault, generally followed by a Limp Home message.
BRAKE SWITCH FAULT	Brake signal fault.
ECM NOT RECOGNIZED	Message displayed when the gauge is unable to identify the ECM.
CHECK DPS (models with DPS)	Check engine pilot light on. Indicates that the DPS (Dynamic Power Steering) does not work properly.
PPS FAULT	Faulty Pedal Position Sensor(s) (PPS).
FUEL SENDER RANGE PERFORMANCE	When the fuel sender resistor value is out of range the digital display will detect it and display the message.

Limp Home Mode

When a major component of the EMS is not operating properly, limp home mode will be set.

Engine RPM will be limited and/or engine behavior and control may be modified depending on the cause of the failure.

This mode allows the rider to return home, which would otherwise not be possible without this advanced system.

LIMP HOME will be displayed in the digital display and the CHECK ENGINE light symbol will be on in the gauge.

FAULT CODES

Fault Code Categories

A fault code consists of an alphanumeric designator followed by a hexadecimal number of 3 digits. The alphanumeric designator defines the category of the fault code while the hexadecimal number refers to a unique fault.

FAULT CODE CATEGORIES		
ALPHANUMERIC DESIGNATOR	MODULE/ SYSTEM	EXAMPLE OF FAULT CODE
From P0 to P3	Power train and DPS	P0116
From U0 to U3	Communication between module and sensors	U0073

RELATED MODULE AND FAULTS	
MODULE	FAULT CODE CATEGORY
ECM	P and U
DPS	P and U
Cluster	P and U
Smart-Lok	P and U

Fault Code States

Fault codes have 3 possible states:
- Active
- Occurred
- Inactive.

Active Fault Codes

An active fault code is an indication of a fault that is **currently triggered**.

The active fault may or may not compromise normal operation of the system(s). Service action should be taken to correct the problem that caused the fault code.

Once the fault condition(s) of the active fault is no longer present, its state will change to "occurred".

Occurred Fault Codes

An occurred fault code indicates a fault that was active, but **no longer** is.

The occurred fault does not presently affect system or component operation but is retained as a history of the faults that were detected.

The fault may have been generated due to a system or component that was momentarily operating outside normal parameters. Repeated occurred faults of this type should be considered when troubleshooting a problem, and may require that maintenance action be taken.

An occurred fault may also be generated when disconnecting and reconnecting a component, replacing a burnt fuse, when the software update of an electronic module has been carried out, or may be due to a momentary high or low voltage.

Inactive Fault Codes

An inactive fault code represents a fault code that is neither active, nor occurred. It is simply part of a list of all possible faults that can be monitored by the ECM and digital display, which may become active or occurred if the monitoring system detects an applicable fault. These codes can be viewed in the BRP diagnostic software (BUDS2).

How to Read Fault Codes Using the Digital Display

NOTE: A fault code must be in an "Active" state to be displayed in the Digital Display. The BRP diagnostic software (BUDS2) must be used to read all fault codes states.

Proceed as follows to view the active fault codes:

1. Turn ignition key to ON position.

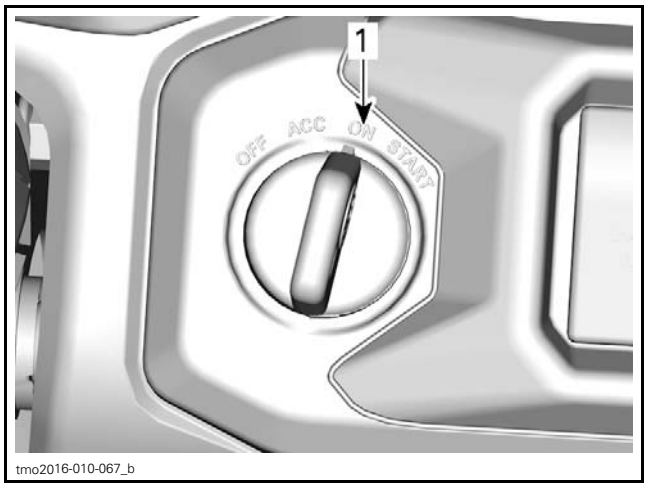

1. Key ON

7.6" Digital Display

NOTE: Only when fault codes are actives.

Using MENU button, in settings select **CODES** and hold to see active fault codes. Fault codes will be scrolled on the Lower Display.

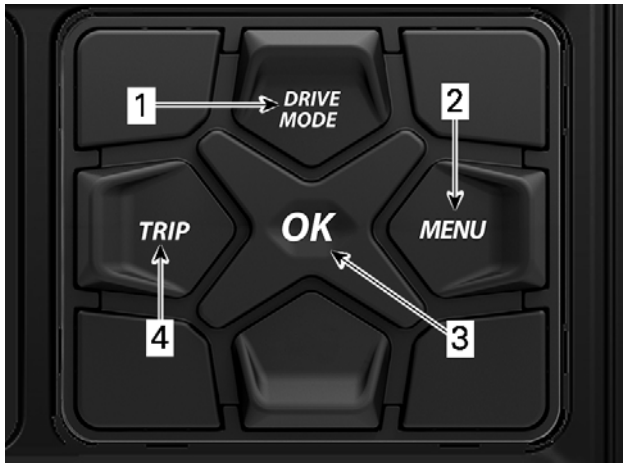

219002049-302

1. *DRIVE MODE button*
2. *MENU button*
3. *OK button*
4. *TRIP button*

4.5" Digital Display

NOTE: Only when codes are actives.

Using LOWER button, in settings select **CODES** and hold to see actives fault codes. Fault codes will be scrolled on the Lower Display.

219002066-007

1. *Upper button*
2. *Lower button*

If there are multiple fault codes, the display will cycle through each fault code repeatedly. A maximum of 10 fault codes may be displayed.

How to Read Fault Codes Using BUDS2

1. Connect the vehicle to the BRP diagnostic software (BUDS2).
2. In BUDS2, go to:
   – **Faults** page
   – **Vehicle** button
   – **Active/Occurred** tab.

Only active or occurred faults are displayed in this tab. The areas stay empty if there is no detected faults.

FAULT NOMENCLATURE	
COLUMN	INFORMATION
Code	Fault code number. When 2 stars (**) precedes the code, detailed conditions when the fault occurred, can be displayed by clicking the "More details" button
State	Display the fault state (active, occurred, inactive)
Module	Displays the module that reports the fault code. This is the module that detects or has received a message of an anomaly and reports it. List of modules: - Cluster (digital display) - DPS (dynamic power steering) - ECM (engine control module)
Description	Provides a short description of the fault

How to Clear Fault Codes Using BUDS2

1. Connect the vehicle to the BRP diagnostic software (BUDS2).
2. In BUDS2, go to:
   – **Faults** page
   – **Vehicle** button
   – **Active/Occurred** tab.

By selecting the refresh or the clear button on the top right of the Active/Occurred Tab, the faults are reloaded from the vehicle, or cleared.

How to Find Fault Code Descriptions

Connect the vehicle to the BRP diagnostic software (BUDS2) and go to **Faults** page.

In the list, select the related fault code.

Check in the **Possible Causes** tab of the bottom table for the problem description.

DIAGNOSTIC AND FAULT CODES

GENERAL

FAULT CODE TABLE

PCODE	MODULE	DESCRIPTION	CAUSE	ACTION
C0051	DPS GLOBE	ROTOR ENCODER SPI COM FAIL	internal comm fail error or damaged DPS	change dps if condition still active after key-on cycle
C0052	DPS GLOBE	ROTOR INCODER VARIANCE	internal INCODER fail or damaged DPS	change dps if condition still active after key-on cycle
C1203	DPS GLOBE	TORQUE SENSOR OUT OF RANGE	internal error or damaged DPS	change dps if condition still active after key-on cycle
C1304	DPS GLOBE	TORQUE SENSOR LINEARITY CHECK FAIL	internal error or damaged DPS	change dps if condition still active after key-on cycle
C1309	DPS GLOBE	TEMPERATURE HIGH	DPS temp upper range due to excessive use of DPS	verify with customer condition when dps ovr show-up
C1310	DPS GLOBE	TEMPERATURE OVER	DPS temp exceed due to excessive use of DPS	verify with customer condition when dps ovr show-up
C1318	DPS GLOBE	SEPIC LOW	internal error or damaged DPS	change DPS
C1319	DPS GLOBE	SEPIC HIGH	internal error or damaged DPS	change DPS
C2109	SCM	Release Valve Activation delay Exceed	If pressure threshold not reach after calibrated time delay (When release valve activated)	Open SCM Activation page in BUDS, performe a combined test in System self test sequence section
C210A	SCM	Suspension Valve Activation time Exceed	If the suspension valve maximum allowed activation time in a specific time window is exceeded for (counter > CntExceed).	Open SCM Activation page in BUDS, performe a combined test in System self test sequence section
C210B	SCM	Outlet Valve Activation time Exceed	If the suspension valve maximum allowed activation time in a specific time window is exceeded for (counter > CntExceed).	Open SCM Activation page in BUDS, performe a combined test in System self test sequence section
C2111	SCM	Pressure sensor signal Invalid	Sensor input voltage < 0.5V for hardcoded debounce time	Open SCM Activation page in BUDS, performe a pressure sensor test in System self test sequence section

PCODE	MODULE	DESCRIPTION	CAUSE	ACTION
C21D0	SCM	Pressure threshold not Reach outlet adjustment	If pressure threshold not reach after calibrated time delay (threshold change in function of compressor temperature) (When outlet pressure adjustment activated)	Open SCM Activation page in BUDS, performe a combined test in System self test sequence section
C21D2	SCM	Compressor over temperature condition	If over temp threshold reach for time delay	Open SCM Activation page in BUDS, performe a pressure test in System self test sequence section
C21D3	SCM	Over pressure detected	If pressure > 350PSI	Open SCM Activation page in BUDS, performe a pressure sensor test in System self test sequence section
C21E0	SCM	Pressure threshold not reach Rear suspension adjustment	If pressure threshold not reach after calibrated time delay (threshold change in function of compressor temperature) (When Rear suspension adjustment activated)	Open SCM Activation page in BUDS, performe a combined test in System self test sequence section
C21E1	SCM	Air Leak Plausibility check Rear suspension	If maximum number of readjustment for rear suspension is reach	Open SCM Activation page in BUDS, performe a combined test in System self test sequence section
C21F0	SCM	Pressure threshold not reach Front suspension adjustment	If pressure threshold not reach after calibrated time delay (threshold change in function of compressor temperature) (When front suspension adjustment activated)	Open SCM Activation page in BUDS, performe a combined test in System self test sequence section
C21F3	SCM	Air Leak Plausibility check Front Right suspension	If maximum number of readjustment for front right suspension is reach	Open SCM Activation page in BUDS, performe a combined test in System self test sequence section
C21F4	SCM	Air Leak Plausibility check Front left suspension	If maximum number of readjustment for front left suspension is reach	Open SCM Activation page in BUDS, performe a combined test in System self test sequence section

PCODE	MODULE	DESCRIPTION	CAUSE	ACTION
P0030	ECM	Internal fault path number for Signal error : power stage of heater of Sensor upstream catalyst	Damaged O2 sensor, damaged circuit wires, damaged connector or damaged ECM output pins.	Check related fuse(s) Disconnect the 1st oxygen sensor (FRONT cylinder) and measure his resistance (Expected value: 7 to 12 Ohms) Measure the voltage of the harness power wire relative to ground (Expected value: Battery voltage) Disconnect the associated ECM connector and measure resistance between harness wires and ground (Expected value: open) Measure the resistance of the harness wires, between the ECM and sensor connectors (Expected value < 2 Ohms)
P0031	ECM	Internal fault path number for Min error : power stage of heater of Sensor upstream catalyst	Damaged O2 sensor, damaged circuit wires,damaged connector or damaged ECM output pins.	Check related fuse(s) Disconnect the 1st oxygen sensor (FRONT cylinder) and measure his resistance (Expected value: 7 to 12 Ohms) Measure the voltage of the harness power wire relative to ground (Expected value: Battery voltage) Disconnect the associated ECM connector and measure resistance between harness wires and ground (Expected value: open) Measure the resistance of the harness wires, between the ECM and sensor connectors (Expected value < 2 Ohms)

Midwest Manuals
Green Manuals
Paperless Manuals
For a Better Tomorrow
www.green-manuals.com
If you bought this manual from any other seller please leave them NEGATIVE feeddback and notify me at bestshopmanuals@gmail.com

PCODE	MODULE	DESCRIPTION	CAUSE	ACTION
P0032	ECM	Internal fault path number for Max error: power stage of heater of Sensor upstream catalyst	Damaged O2 sensor, damaged circuit wires,damaged connector or damaged ECM output pins.	Check related fuse(s) Disconnect the 1st oxygen sensor (FRONT cylinder) and measure his resistance (Expected value: 7 to 12 Ohms) Measure the voltage of the harness power wire relative to ground (Expected value: Battery voltage) Disconnect the associated ECM connector and measure resistance between harness wires and ground (Expected value: open) Measure the resistance of the harness wires, between the ECM and sensor connectors (Expected value < 2 Ohms)
P0037	ECM	Internal fault path number for Min error : power stage of heater of Sensor upstream catalyst, LSU 2	Blown fuse, damaged or disconnected O2 sensor, damaged or disconnected circuit wires, damaged ECM output pins.	Check related fuse(s) Disconnect the 2nd oxygen sensor (REAR cylinder) and measure his resistance (Expected value: 7 to 12 Ohms) Measure the voltage of the harness power wire relative to ground (Expected value: Battery voltage) Disconnect the associated ECM connector and measure resistance between harness wires and ground (Expected value: open) Measure the resistance of the harness wires, between the ECM and sensor connectors (Expected value < 2 Ohms)

PCODE	MODULE	DESCRIPTION	CAUSE	ACTION
P0038	ECM	Internal fault path number for Max error: power stage of heater of Sensor upstream catalyst, LSU 2	Blown fuse, damaged or disconnected O2 sensor, damaged or disconnected circuit wires, damaged ECM output pins.	Check related fuse(s) Disconnect the 2nd oxygen sensor (REAR cylinder) and measure his resistance (Expected value: 7 to 12 Ohms) Measure the voltage of the harness power wire relative to ground (Expected value: Battery voltage) Disconnect the associated ECM connector and measure resistance between harness wires and ground (Expected value: open) Measure the resistance of the harness wires, between the ECM and sensor connectors (Expected value < 2 Ohms)
P0106	ECM	Manifold Absolute Pressure circuit range/performance	Damaged sensor, damaged circuit wires, damaged connector or damaged ECM pins, ECM voltage supply	Make sure sensor connector is well inserted Disconnect the sensor, measure the voltage of the harness power wires (Expected value: 4.8 to 5.1 Volts) Measure the resistance of the harness wires, between the ECM and sensor connectors (Expected value < 2 Ohms)
P0107	ECM	Manifold Air Pressure Sensor voltage too Low	Damaged sensor, damaged circuit wires, damaged connector or damaged ECM pins, ECM voltage supply Low	Make sure sensor connector is well inserted Disconnect the sensor, measure the voltage of the harness power wires (Expected value: 4.8 to 5.1 Volts) Measure the resistance of the harness wires, between the ECM and sensor connectors (Expected value < 2 Ohms)

PCODE	MODULE	DESCRIPTION	CAUSE	ACTION
P0108	ECM	Manifold Air Pressure Sensor voltage too High	Damaged sensor, wires shorted to battery +, ECM voltage supply too High.	Make sure sensor connector is well inserted Disconnect the sensor, measure the voltage of the harness power wires (Expected value: 4.8 to 5.1 Volts) Measure the resistance of the harness wires, between the ECM and sensor connectors (Expected value < 2 Ohms)
P0112	ECM	Intake Air Temperature Sensor 1 circuit Low	Damaged sensor, damaged circuit wires, damaged connector or damaged ECM pins, ECM voltage supply Low	Make sure sensor connector is well inserted Disconnect the sensor, measure the voltage of the harness power wires (Expected value: 4.8 to 5.1 Volts) Measure the resistance of the harness wires, between the ECM and sensor connectors (Expected value < 2 Ohms)
P0113	ECM	Intake Air Temperature Sensor 1 circuit High	Damaged sensor, wires shorted to battery +, ECM voltage supply too High.	Make sure sensor connector is well inserted Disconnect the sensor, measure the voltage of the harness power wires (Expected value: 4.8 to 5.1 Volts) Measure the resistance of the harness wires, between the ECM and sensor connectors (Expected value < 2 Ohms)

PCODE	MODULE	DESCRIPTION	CAUSE	ACTION
P0116	ECM	Engine Coolant Temperature Sensor 1 circuit range/performance	Damaged sensor, wires shorted to battery +, ECM voltage supply.	Disconnect the sensor and check for a change in the fault code. If the fault code stays the same, look for a short circuit on the harness. If the fault code is different, replace the sensor Measure the sensor resistance (Expected value: 2280 to 2736 Ohms at 19 to 21°C (66 to 70°F)) Measure the resistance of the harness wires, between the ECM and sensor connectors (Expected value < 2 Ohms)
P0117	ECM	Engine Coolant Temperature Sensor 1 circuit Low	Engine temperature sensor or circuit wires shorted to ground.	Disconnect the sensor and check for a change in the fault code. If the fault code stays the same, look for a short circuit on the harness. If the fault code is different, replace the sensor Measure the sensor resistance (Expected value: 2280 to 2736 Ohms at 19 to 21°C (66 to 70°F)) Measure the resistance of the harness wires, between the ECM and sensor connectors (Expected value < 2 Ohms)
P0118	ECM	Engine Coolant Temperature Sensor 1 circuit High	Disconnected sensor, or sensor resistance too High.	Make sure sensor connector is well inserted Measure the sensor resistance (Expected value: 2280 to 2736 Ohms at 19 to 21°C (66 to 70°F)) Measure the resistance of the harness wires, between the ECM and sensor connectors (Expected value < 2 Ohms)

PCODE	MODULE	DESCRIPTION	CAUSE	ACTION
P0122	ECM	First Throttle Accelerator Sensor (TAS) Short circuit to GND	Damaged circuit wires, damaged sensor or damaged ECM pins.	Make sure sensor connector is well inserted Measure the resistance of the harness wires, between the ECM and sensor connectors (Expected value < 2 Ohms)
P0123	ECM	First Throttle Accelerator Sensor (TAS) shorted to battery +	Damaged circuit wires, damaged sensor or damaged ECM pins.	Make sure sensor connector is well inserted Measure the resistance of the harness wires, between the ECM and sensor connectors (Expected value < 2 Ohms)
P0127	ECM	Intake Air Temperature too High	Air Temperature in intake High	
P0130	ECM	ECU int. fault path no.: electrical diagnosis for lambda sensor upstream catalyst. npl-error	Damaged O2 sensor, damaged circuit wires, damaged connector or damaged ECM output pins.	Check related fuse(s) Disconnect the 1st oxygen sensor (FRONT cylinder) and measure his resistance (Expected value: 7 to 12 Ohms) Measure the voltage of the harness power wire relative to ground (Expected value: Battery voltage) Disconnect the associated ECM connector and measure resistance between harness wires and ground (Expected value: open) Measure the resistance of the harness wires, between the ECM and sensor connectors (Expected value < 2 Ohms)

PCODE	MODULE	DESCRIPTION	CAUSE	ACTION
P0131	ECM	ECU int. fault path no.: electrical diagnosis for lambda sensor upstream cat. min-error	Damaged O2 sensor, damaged circuit wires, damaged connector or damaged ECM output pins.	Check related fuse(s) Disconnect the 1st oxygen sensor (FRONT cylinder) and measure his resistance (Expected value: 7 to 12 Ohms) Measure the voltage of the harness power wire relative to ground (Expected value: Battery voltage) Disconnect the associated ECM connector and measure resistance between harness wires and ground (Expected value: open) Measure the resistance of the harness wires, between the ECM and sensor connectors (Expected value < 2 Ohms)
P0132	ECM	ECU int. fault path no.: electrical diagnosis for lambda sensor upstream cat. max-error	Damaged O2 sensor, damaged circuit wires, damaged connector or damaged ECM output pins.	Check related fuse(s) Disconnect the 1st oxygen sensor (FRONT cylinder) and measure his resistance (Expected value: 7 to 12 Ohms) Measure the voltage of the harness power wire relative to ground (Expected value: Battery voltage) Disconnect the associated ECM connector and measure resistance between harness wires and ground (Expected value: open) Measure the resistance of the harness wires, between the ECM and sensor connectors (Expected value < 2 Ohms)

PCODE	MODULE	DESCRIPTION	CAUSE	ACTION
P0133	ECM	ECU int. fault path no.: diagnosis lambda sensor upstream catalyst	Damaged O2 sensor, damaged circuit wires, damaged connector or damaged ECM output pins.	Check related fuse(s) Disconnect the 1st oxygen sensor (FRONT cylinder) and measure his resistance (Expected value: 7 to 12 Ohms) Measure the voltage of the harness power wire relative to ground (Expected value: Battery voltage) Disconnect the associated ECM connector and measure resistance between harness wires and ground (Expected value: open) Measure the resistance of the harness wires, between the ECM and sensor connectors (Expected value < 2 Ohms)
P0135	ECM	ECU int. fault path no.: lambda sensor heating upstream cat.	Damaged O2 sensor, damaged circuit wires, damaged connector or damaged ECM output pins.	Check related fuse(s) Disconnect the 1st oxygen sensor (FRONT cylinder) and measure his resistance (Expected value: 7 to 12 Ohms) Measure the voltage of the harness power wire relative to ground (Expected value: Battery voltage) Disconnect the associated ECM connector and measure resistance between harness wires and ground (Expected value: open) Measure the resistance of the harness wires, between the ECM and sensor connectors (Expected value < 2 Ohms)

PCODE	MODULE	DESCRIPTION	CAUSE	ACTION
P0136	ECM	ECU int. fault path no.: electrical diagnosis for second lambda sensor upstream cat. npl-error	Damaged O2 sensor, damaged circuit wires, damaged connector or damaged ECM output pins.	Check related fuse(s) Disconnect the 2nd oxygen sensor (REAR cylinder) and measure his resistance (Expected value: 7 to 12 Ohms) Measure the voltage of the harness power wire relative to ground (Expected value: Battery voltage) Disconnect the associated ECM connector and measure resistance between harness wires and ground (Expected value: open) Measure the resistance of the harness wires, between the ECM and sensor connectors (Expected value < 2 Ohms)
P0137	ECM	ECU int. fault path no.: electrical diagnosis for second lambda sensor upstream cat. min-error	Damaged O2 sensor, damaged circuit wires, damaged connector or damaged ECM output pins.	Check related fuse(s) Disconnect the 2nd oxygen sensor (REAR cylinder) and measure his resistance (Expected value: 7 to 12 Ohms) Measure the voltage of the harness power wire relative to ground (Expected value: Battery voltage) Disconnect the associated ECM connector and measure resistance between harness wires and ground (Expected value: open) Measure the resistance of the harness wires, between the ECM and sensor connectors (Expected value < 2 Ohms)

PCODE	MODULE	DESCRIPTION	CAUSE	ACTION
P0138	ECM	ECU int. fault path no.: electrical diagnosis for second lambda sensor upstream cat. max-error	Damaged O2 sensor, damaged circuit wires, damaged connector or damaged ECM output pins.	Check related fuse(s) Disconnect the 2nd oxygen sensor (REAR cylinder) and measure his resistance (Expected value: 7 to 12 Ohms) Measure the voltage of the harness power wire relative to ground (Expected value: Battery voltage) Disconnect the associated ECM connector and measure resistance between harness wires and ground (Expected value: open) Measure the resistance of the harness wires, between the ECM and sensor connectors (Expected value < 2 Ohms)
P0139	ECM	ECU int. fault path no.: diagnosis lambda sensor upstream catalyst (exhaust bank2)	Damaged O2 sensor, damaged circuit wires, damaged connector or damaged ECM output pins.	Check related fuse(s) Disconnect the 2nd oxygen sensor (REAR cylinder) and measure his resistance (Expected value: 7 to 12 Ohms) Measure the voltage of the harness power wire relative to ground (Expected value: Battery voltage) Disconnect the associated ECM connector and measure resistance between harness wires and ground (Expected value: open) Measure the resistance of the harness wires, between the ECM and sensor connectors (Expected value < 2 Ohms)

PCODE	MODULE	DESCRIPTION	CAUSE	ACTION
P0141	ECM	ECU int. fault path no.: lambda sensor heating upstream cat.	Damaged O2 sensor, damaged circuit wires, damaged connector or damaged ECM output pins.	Check related fuse(s) Disconnect the 2nd oxygen sensor (REAR cylinder) and measure his resistance (Expected value: 7 to 12 Ohms) Measure the voltage of the harness power wire relative to ground (Expected value: Battery voltage) Disconnect the associated ECM connector and measure resistance between harness wires and ground (Expected value: open) Measure the resistance of the harness wires, between the ECM and sensor connectors (Expected value < 2 Ohms)
P0201	ECM	Power stage sig error injector 2	ECM injector power stage error	Open ECM ACTIVATION page in BUDS. Activate injector and check if injector is reacting as expected
P0202	ECM	Power stage sig error injector 1	ECM injector power stage error	Open ECM ACTIVATION page in BUDS. Activate injector and check if injector is reacting as expected
P0217	ECM	Engine Coolant over temperature condition	Coolant fluid temperature too high	Check for coolant fluid leak and coolant fluid level Check radiator condition Check for other fault, Check thermostat
P0222	ECM	2nd Throttle Accelerator Sensor (TAS) shorted to GND	Damaged circuit wires, damaged sensor, or damaged ECM pins.	Make sure sensor connector is well inserted Measure the resistance of the harness wires, between the ECM and sensor connectors (Expected value < 2 Ohms)

Midwest Manuals
Green Manuals
Paperless Manuals For a Better Tomorrow www.green-manuals.com
If you bought this manual from any other seller please leave them NEGATIVE feeddback and notify me at bestshopmanuals@gmail.com

PCODE	MODULE	DESCRIPTION	CAUSE	ACTION
P0223	ECM	2nd Throttle Accelerator Sensor (TAS) shorted to battery +	Damaged circuit wires, damaged sensor, or damaged ECM pins.	Make sure sensor connector is well inserted Measure the resistance of the harness wires, between the ECM and sensor connectors (Expected value < 2 Ohms)
P0231	ECM	Fuel Pump circuit shorted to ground, or open circuit	Blown fuse, damaged or disconnected fuel pump, damaged circuit wires, damaged connectors or damaged ECM output pins.	Check related fuse(s) Disconnect the fuel pump and measure his winding resistance (Expected value < 2 Ohms) Measure the voltage of the harness power wire relative to ground (Expected value: Battery voltage) Disconnect the associated ECM connector Measure the resistance of the harness wire, between the ECM and fuel pump connectors (Expected value < 2 Ohms)
P0232	ECM	Fuel Pump circuit shorted to battery +	Damaged fuel pump, damaged circuit wires, damaged connectors or damaged ECM output pins.	Check related fuse(s) Disconnect the fuel pump and measure his winding resistance (Expected value < 2 Ohms) Measure the voltage of the harness power wire relative to ground (Expected value: Battery voltage) Disconnect the associated ECM connector Measure the resistance of the harness wire, between the ECM and fuel pump connectors (Expected value < 2 Ohms)

PCODE	MODULE	DESCRIPTION	CAUSE	ACTION
P0261	ECM	Cylinder 1 injector open circuit or shorted to ground	Blown fuse, damaged or disconnected injector, damaged or disconnected circuit wires, damaged ECM output pins.	Check related fuse(s) Disconnect injector 1 and measure his resistance (Expected value: 14 to 15 Ohms) Measure the voltage of the harness power wire relative to ground (Expected value: Battery voltage) Disconnect the associated ECM connector Measure the resistance of the harness wire, between the ECM and injector 1 connectors (Expected value < 2 Ohms) Check if HIC connector is connecting the engine harness to the vehicle harness
P0262	ECM	Cylinder 1 injector shorted to battery +	Damaged injector, damaged circuit wires, damaged connector or damaged ECM output pins.	Check related fuse(s) Disconnect injector 1 and measure his resistance (Expected value: 14 to 15 Ohms) Measure the voltage of the harness power wire relative to ground (Expected value: Battery voltage) Disconnect the associated ECM connector Verify the isolation between harness injectors signals (Expected value: open) Measure the resistance of the harness wire, between the ECM and injector 1 connectors (Expected value < 2 Ohms) Check if HIC connector is connecting the engine harness to the vehicle harness

PCODE	MODULE	DESCRIPTION	CAUSE	ACTION
P0264	ECM	Cylinder 2 injector open circuit or shorted to ground	Blown fuse, damaged or disconnected injector, damaged or disconnected circuit wires, damaged ECM output pins.	Check related fuse(s) Disconnect injector 2 and measure his resistance (Expected value: 14 to 15 Ohms) Measure the voltage of the harness power wire relative to ground (Expected value: Battery voltage) Disconnect the associated ECM connector Measure the resistance of the harness wire, between the ECM and injector 2 connectors (Expected value < 2 Ohms) Check if HIC connector is connecting the engine harness to the vehicle harness
P0265	ECM	Cylinder 2 injector shorted to battery +	Damaged injector, damaged circuit wires, damaged connector or damaged ECM output pins.	Check related fuse(s) Disconnect injector 2 and measure his resistance (Expected value: 14 to 15 Ohms) Measure the voltage of the harness power wire relative to ground (Expected value: Battery voltage) Disconnect the associated ECM connector Verify the isolation between harness injectors signals (Expected value: open) Measure the resistance of the harness wire, between the ECM and injector 2 connectors (Expected value < 2 Ohms) Check if HIC connector is connecting the engine harness to the vehicle harness
P0324	ECM	Diagnostic Fault Code for min error of knock sensor	Damaged knock sensor, damaged circuit wires, damaged connector or damaged ECM output pins.	Make sure sensor connector is fully inserted and check knock system.

PCODE	MODULE	DESCRIPTION	CAUSE	ACTION
P032A	ECM	Diagnostic Fault Code for min error of knock sensor	Damaged knock sensor, damaged circuit wires, damaged connector or damaged ECM output pins.	Make sure sensor connector is fully inserted and check knock system.
P0335	ECM	Crankshaft Position Sensor	Damaged CPS, damaged circuit wires, damaged connector or damaged ECM output pins.	Make sure sensor connector is well inserted Disconnect the associated ECM connector Measure the resistance of the harness wires, between the ECM and sensor connectors (Expected value < 2 Ohms)
P0359	ECM	Ignition coil	Damaged ignition coil, damaged circuit wires, damaged connector or damaged ECM output pins.	Open the ECM Activation page in BUDS Perform an ignition coil activation and check if ignition coil is reacting as expected Check related fuse(s) Measure the voltage of the harness power wire relative to ground (Expected value: Battery voltage) Disconnect the associated ECM connector Measure the resistance of the harness wires, between the ECM and tested device connectors (Expected value < 2 Ohms) Check if HIC connector is connecting the engine harness to the vehicle harness Refer to the service manual for detailed ignition coil testing procedure

PCODE	MODULE	DESCRIPTION	CAUSE	ACTION
P0360	ECM	Ignition coil	Damaged ignition coil, damaged circuit wires, damaged connector or damaged ECM output pins.	Open the ECM Activation page in BUDS Perform an ignition coil activation and check if ignition coil is reacting as expected Check related fuse(s) Measure the voltage of the harness power wire relative to ground (Expected value: Battery voltage) Disconnect the associated ECM connector Measure the resistance of the harness wires, between the ECM and tested device connectors (Expected value < 2 Ohms) Check if HIC connector is connecting the engine harness to the vehicle harness Refer to the service manual for detailed ignition coil testing procedure
P0361	ECM	Ignition coil range/performance	Damaged ignition coil, damaged circuit wires, damaged connector or damaged ECM output pins.	Open the ECM Activation page in BUDS Perform an ignition coil activation and check if ignition coil is reacting as expected Check related fuse(s) Measure the voltage of the harness power wire relative to ground (Expected value: Battery voltage) Disconnect the associated ECM connector Measure the resistance of the harness wires, between the ECM and tested device connectors (Expected value < 2 Ohms) Check if HIC connector is connecting the engine harness to the vehicle harness Refer to the service manual for detailed ignition coil testing procedure

PCODE	MODULE	DESCRIPTION	CAUSE	ACTION
P0362	ECM	Ignition coil range/performance	Damaged ignition coil, damaged circuit wires, damaged connector or damaged ECM output pins.	Open the ECM Activation page in BUDS Perform an ignition coil activation and check if ignition coil is reacting as expected Check related fuse(s) Measure the voltage of the harness power wire relative to ground (Expected value: Battery voltage) Disconnect the associated ECM connector Measure the resistance of the harness wires, between the ECM and tested device connectors (Expected value < 2 Ohms) Check if HIC connector is connecting the engine harness to the vehicle harness Refer to the service manual for detailed ignition coil testing procedure
P0480	ECM	Radiator cooling fan relay	Blown fuse, damaged or disconnected relay, damaged circuit wires or connectors, damaged ECM output pins, damaged Relay.	Check related fuse(s) Disconnect relay and measure his coil resistance (Expected value: 70 to 90 Ohms) Disconnect the associated ECM connector and measure resistance between harness wires and ground (Expected value: open) Measure the resistance of the harness wire, between the ECM and tested device connectors (Expected value < 2 Ohms)

PCODE	MODULE	DESCRIPTION	CAUSE	ACTION
P0500	DPS	Invalid or missing vehicle speed	No vehicle speed available & Vehicle is in (H or L Gear) with Engine RPM over 4000RPM. Damaged Vehicle Speed sensor circuit, Damaged sensor, Wrong mounting position of speed sensor.	Check if vehicle speed is available in BUDS Monitoring page Check related fuse(s) Disconnect the sensor, measure the voltage of the harness power wire relative to ground (Expected value: Battery voltage) Measure the resistance of the harness wires, between the ECM and sensor connectors (Expected value < 5 Ohms)
P0501	ECM	Vehicle speed not plausible	Vehicle speed correlation check failed	Check if vehicle speed is available in Monitoring page in BUDS Check related fuse(s) Disconnect the sensor, measure the voltage of the harness power wire relative to ground (Expected value: Battery voltage) Measure the resistance of the harness wires, between the ECM and sensor connectors (Expected value < 5 Ohms)
P0504	ECM	Brake signal not plausible	Brake signal correlation check failed	Open the ECM Monitoring page in BUDS. Check fuse Press on brake pedal. Ensure that brake switch light comes on ECM Monitoring page
P0512	ECM	Starter control circuit	Damaged or disconnected relay, damaged circuit wires, damaged connectors or damaged ECM output pins.	Measure voltage between harness connector SS1 and ground (Expected value: 11 to 13 volts) Measure resistance from connector: ECMB-L4 to SS2 (Expected value: < 2 ohms)
P0513	ECM	Invalid Access Key Detected	A non stored access key was detected when key switch was turned to ON.	Use a stored access key to turn key switch. If no stored access keys are available program one and try again

PCODE	MODULE	DESCRIPTION	CAUSE	ACTION
P0520	ECM	Engine oil pressure sensor circuit malfunction	Damaged switch, damaged circuit wires, damaged connector, damaged ECM pins.	Measure resistance between harness connector EOP and ground When engine stopped. (Expected value < 2 Ohms) Measure resistance between harness connector EOP and ground When engine running. (Expected value = open) Measure resistance from harness connector: EOP to ECMA-E3 (Expected value: < 2 Ohms) Check if HIC connector is properly connected (engine harness to the vehicle harness).
P0523	ECM	Engine oil pressure sensor sticking	Damaged switch, damaged circuit wires, damaged connector, damaged ECM pins.	Measure resistance between harness connector EOP and ground When engine stopped. (Expected value < 2 Ohms) Measure resistance between harness connector EOP and ground When engine running. (Expected value = open) Measure resistance from harness connector: EOP to ECMA-E3 (Expected value: < 2 Ohms) Check if HIC connector is properly connected (engine harness to the vehicle harness).

PCODE	MODULE	DESCRIPTION	CAUSE	ACTION
P0524	ECM	Engine oil pressure too Low	Damaged switch, damaged circuit wires, damaged connector, damaged ECM pins.	Measure resistance between harness connector EOP and ground When engine stopped. (Expected value < 2 Ohms) Measure resistance between harness connector EOP and ground When engine running. (Expected value = open) Measure resistance from harness connector: EOP to ECMA-E3 (Expected value: < 2 Ohms) Check if HIC connector is properly connected (engine harness to the vehicle harness)
P0551	DPS	TORQUE_SENSOR_ OPEN	Damaged DPS	External troubleshooting is not possible Clear the Fault. If Fault becomes Active Replace the DPS
P0552	DPS	TORQUE_SENSOR_ SHORT_GND	Damaged DPS	External troubleshooting is not possible Clear the Fault. If Fault becomes Active Replace the DPS
P0553	DPS	TORQUE_SENSOR_ SHORT_5V	Damaged DPS	External troubleshooting is not possible Clear the Fault. If Fault becomes Active Replace the DPS
P0560	ECM	Non-plausibility error on system voltage	Battery failure, voltage regulator failure, damaged circuit wires or connection, damaged magneto generator. An external battery charger may have been used.	Measure battery voltage with engine stopped. (Expected value: 11 to 13 volts) Measure battery voltage with engine running. (Expected value: 13 to 14.7 volts) Check connections on voltage regulator. Check ground and positive connections on battery. Check ground on vehicle frame

PCODE	MODULE	DESCRIPTION	CAUSE	ACTION
P0562	DPS	System voltage low	Blown fuse, battery low (damaged magneto/regulator), damaged circuit wires or connection, Intense usage of WINCH	Check related fuse(s) Measure battery voltage with engine stopped (Expected value: 11 to 13 Volts) Check ground and positive connections on battery Validate that all the DPS connectors are secured On the DPS power connector, measure the voltage between the two harness wires (Expected value: Battery voltage)
P0562	DPS GLOBE	BATTERY LOW	Battery low (damaged magneto/regulator), damaged circuit wires or connection. Intense usage of WINCH	Measure battery voltage with engine stopped (Expected value: 11 to 13 Volts) Check ground and positive connections on battery Validate that all the DPS connectors are secured On the DPS power connector pins, measure the voltage between the two harness power wires (Expected value: Battery voltage) Measure the resistance of the harness wire, between the DPS power connector and ground (Expected value < 2 Ohms)
P0562	ECM	System voltage low	Blown fuse FC, battery failure, voltage regulator failure, damaged circuit wires or connection, damaged magneto generator. An external battery charger may have been used. Intense usage of WINCH	Measure battery voltage with engine stopped. (Expected value: 11 to 13 volts) Measure battery voltage with engine running. (Expected value: 13 to 14.7 volts) Check connections on voltage regulator. Check ground and positive connections on battery. Check ground on vehicle frame

PCODE	MODULE	DESCRIPTION	CAUSE	ACTION
P0563	DPS	system voltage high	Rectifier failure, damaged circuit wires or connection.	Measure battery voltage with engine stopped. (Expected value: 11 to 13 volts) Measure battery voltage with engine Running at 3500RPM. (Expected value: 13 to 14.7 volts) Check connections on voltage regulator. Check ground and positive connections on battery.
P0563	DPS GLOBE	BATTERY HIGH	Rectifier failure, damaged circuit wires or connection./ Improper battery charger could raise that fault	Measure battery voltage with engine stopped. (Expected value: 11 to 13 volts) Measure battery voltage with engine Running at 3500RPM. (Expected value: 13 to 14.7 volts) Check connections on voltage regulator. Check ground and positive connections on battery.
P0563	ECM	System voltage high	Damaged regulator. An external battery charger may have been used.	Measure battery voltage with engine stopped. (Expected value: 11 to 13 volts) Measure battery voltage with engine running. (Expected value: 13 to 14.7 volts) Check connections on voltage regulator. Check ground and positive connections on battery. Check ground on vehicle frame
P0601	DPS	CALIBRATION FAULT	DPS not calibrated or damage DPS	Try updating the DPS
P0601	SCM	SCM calibration fault	Calibration Checksum err	Update SCM
P0602	DPS GLOBE	Manufacturing CRC Programming Error	Internal error or damaged DPS	change dps if condition always active
P0605	SCM	EEPROM COMMUNICATION FAULT	Last minute memory or last modes memory check	External troubleshooting is not possible Check for communication fault using BUDS
P0606	DPS GLOBE	Application CRC(boot)	Application CRC(boot)	reflash DPS

PCODE	MODULE	DESCRIPTION	CAUSE	ACTION
P0606	ECM	Control Module Processor	Faulty calibration Faulty programming Damaged ECM	Try updating the ECM calibration If the problem persists, reflash ECM If the problem persists, replace the ECM.
P0607	DPS GLOBE	Boot Count(boot)	Battery low (damaged magneto/regulator), damaged circuit wires or connection. Intense usage of WINCH	Measure battery voltage with engine stopped (Expected value: 11 to 13 Volts) Check ground and positive connections on battery Validate that all the DPS connectors are secured On the DPS power connector, measure the voltage between the two harness power wires (Expected value: Battery voltage)
P060D	ECM	Throttle Accelerator Sensor (TAS) synchronistic error between sensor 1 and 2	Throttle Accelerator Sensors (TAS) plausibility check error	Make sure sensor connector is well inserted Disconnect the associated ECM connector Measure the resistance of the harness wires, between the ECM and sensor connectors (Expected value < 2 Ohms)
P060E	ECM	Throttle position performance	TPS plausibility check error	Disconnect the associated ECM connector Measure the resistance of the harness wires, between the ECM and sensor connectors (Expected value < 2 Ohms)
P0610	ECM	Variant Coding error	Faulty variant coding Faulty programming Wrong ECM after replacement	Try updating the ECM variant or calibration If the problem persists, reflash ECM If the problem persists, replace ECM.
P062F	DPS GLOBE	EEPROM SPI	internal error or damaged DPS, EEPROM SPI	change dps if condition still active after key-on cycle external troobleshooting not possible

PCODE	MODULE	DESCRIPTION	CAUSE	ACTION
P062F	ECM	Internal control module EEPROM error	Faulty calibration or variant Faulty programming Damaged ECM	Try updating the ECM variant or calibration If the problem persists, reflash ECM If the problem persists, replace ECM.
P0635	DPS GLOBE	EXCESSIVE ERROR CURRENT	internal error or damaged DPS	change DPS
P0636	DPS	MOTOR LOW CURRENT FAULT	Internal error or damaged DPS	External troubleshooting is not possible Clear the Fault. If Fault becomes Active Replace the DPS
P0637	DPS	MOTOR HIGH CURRENT FAULT	Internal error or damaged DPS	External troubleshooting is not possible Clear the Fault. If Fault becomes Active Replace the DPS
P0637	DPS GLOBE	OVER CURRENT	short-circuit in motor/ internal error	change DPS
P0658	DPS	PHASE A_LOW	DPS motor supply Damaged DPS	External troubleshooting is not possible Clear the Fault. If Fault becomes Active Replace the DPS
P0659	DPS	PHASE A_HIGH	DPS motor supply Damaged DPS	External troubleshooting is not possible Clear the Fault. If Fault becomes Active Replace the DPS
P0666	DPS	HIGH TEMPERATURE	High temperature of the DPS. Extreme usage of the unit.	Let the unit cool down.
P0685	ECM	Accessory relay circuit	Blown fuse, damaged or disconnected relay, damaged circuit wires, damaged connectors or damaged ECM output pins	Check related fuse(s) Disconnect Accessories and Lights relays, turn key switch (on w/lights) Measure coil resistance of both relays (Expected value: 70 to 90 Ohms) Measure the voltage of the harness power wires of both relays relative to ground (Expected value: Battery voltage) Disconnect the associated ECM connector Measure the resistance of the harness wires, between the ECM and both relays (Expected value < 2 Ohms)

PCODE	MODULE	DESCRIPTION	CAUSE	ACTION
P0686	ECM	Accessory relay circuit shorted to ground or open circuit	Blown fuse, damaged or disconnected relay, damaged circuit wires, damaged connectors or damaged ECM output pins	Check related fuse(s) Disconnect Accessories and Lights relays, turn key switch (on w/lights) Measure coil resistance of both relays (Expected value: 70 to 90 Ohms) Measure the voltage of the harness power wires of both relays relative to ground (Expected value: Battery voltage) Disconnect the associated ECM connector Measure the resistance of the harness wires, between the ECM and both relays (Expected value < 2 Ohms)
P0687	ECM	Accessory relay circuit shorted to battery +	Damaged relay, damaged circuit wires, damaged connector or damaged ECM output pins.	Check related fuse(s) Disconnect Accessories and Lights relays, turn key switch (on w/lights) Measure coil resistance of both relays (Expected value: 70 to 90 Ohms) Measure the voltage of the harness power wires of both relays relative to ground (Expected value: Battery voltage) Disconnect the associated ECM connector Measure the resistance of the harness wires, between the ECM and both relays (Expected value < 2 Ohms)
P0691	ECM	Radiator fan circuit shorted to ground or open circuit	Blown fuse, damaged or disconnected fan relay, damaged circuit wires, damaged connectors or damaged ECM output pins.	Check related fuse(s) Disconnect radiator fan relay and measure his coil resistance (Expected value: 70 to 90 Ohms) Measure the voltage of the harness power wire of relay relative to ground (Expected value: Battery voltage) Disconnect the associated ECM connector Measure the resistance of the harness wire, between the ECM and relay (Expected value < 2 Ohms)

PCODE	MODULE	DESCRIPTION	CAUSE	ACTION
P0692	ECM	Radiator fan circuit shorted to battery +	Damaged fan relay, damaged circuit wires, damaged connector or damaged ECM output pins.	Check related fuse(s) Disconnect radiator fan relay and measure his coil resistance (Expected value: 70 to 90 Ohms) Measure the voltage of the harness power wire of relay relative to ground (Expected value: Battery voltage) Disconnect the associated ECM connector Measure the resistance of the harness wire, between the ECM and relay (Expected value < 2 Ohms)
P0790	ECM	Check of Override Button	Damaged switch, damaged circuit wires, damaged connector, damaged ECM pins.	Open the ECM Monitoring page in BUDS. Press on Override button. Ensure that the 2 switch light change of state.
P0811	ECM	Clutch slippage detected	Excessive clutch slippage	Check clutch for proper clutch behavior
P1036	ECM	Internal fault path number for Signal error : power stage of heater of Sensor upstream catalyst, LSU 2	Blown fuse, damaged or disconnected O2 sensor, damaged or disconnected circuit wires, damaged ECM output pins.	Check related fuse(s) Disconnect the 2nd oxygen sensor and measure his resistance (Expected value: 7 to 12 Ohms) Measure the voltage of the harness power wire relative to ground (Expected value: Battery voltage) Disconnect the associated ECM connector and measure resistance between harness wires and ground (Expected value: open) Measure the resistance of the harness wires, between the ECM and sensor connectors (Expected value < 2 Ohms)
P1120	ECM	Wrong Throttle Accelerator Sensor (TPS) position	Wrong TPS sensor position. Both TPS position failed test.	Check TAS adjustment.

PCODE	MODULE	DESCRIPTION	CAUSE	ACTION
P1130	ECM	ECU int. fault path no.: electrical diagnosis for lambda sensor upstream cat. Sig-error	Damaged O2 sensor, damaged circuit wires, damaged connector or damaged ECM output pins.	Check related fuse(s) Disconnect the 1st oxygen sensor (FRONT cylinder) and measure his resistance (Expected value: 7 to 12 Ohms) Measure the voltage of the harness power wire relative to ground (Expected value: Battery voltage) Disconnect the associated ECM connector and measure resistance between harness wires and ground (Expected value: open) Measure the resistance of the harness wires, between the ECM and sensor connectors (Expected value < 2 Ohms)
P1136	ECM	ECU int. fault path no.: electrical diagnosis for second lambda sensor upstream cat. Sig-error	Damaged O2 sensor, damaged circuit wires, damaged connector or damaged ECM output pins.	Check related fuse(s) Disconnect the 2nd oxygen sensor (REAR cylinder) and measure his resistance (Expected value: 7 to 12 Ohms) Measure the voltage of the harness power wire relative to ground (Expected value: Battery voltage) Disconnect the associated ECM connector and measure resistance between harness wires and ground (Expected value: open) Measure the resistance of the harness wires, between the ECM and sensor connectors (Expected value < 2 Ohms)

PCODE	MODULE	DESCRIPTION	CAUSE	ACTION
P1171	ECM	Diagnostic Fault code for Fuel Supply System (ORA Max Fault) Exhaust Bank1	Injection and fuel supply system. Adaptation of the air charge reaching the limits (min and max) based on the lambda sensors feedback. Too much variation in the engine itself in reference to a nominal engine. It can be cause by an engine that has been modified or out of spec (airbox, air filter, injectors, exhaust system, valve clearance, etc.) or any other components that can influence the engine performance.	Check injector and fuel supply system.
P1172	ECM	Diagnostic Fault code for Fuel Supply System (ORA Min Fault) Exhaust Bank1	Injection and fuel supply system. Adaptation of the air charge reaching the limits (min and max) based on the lambda sensors feedback. Too much variation in the engine itself in reference to a nominal engine. It can be cause by an engine that has been modified or out of spec (airbox, air filter, injectors, exhaust system, valve clearance, etc.) or any other components that can influence the engine performance.	Check injector and fuel supply system.
P1174	ECM	Diagnostic Fault code for Fuel Supply System (ORA Max Fault) Exhaust Bank2	Injection and fuel supply system. Adaptation of the air charge reaching the limits (min and max) based on the lambda sensors feedback. Too much variation in the engine itself in reference to a nominal engine. It can be cause by an engine that has been modified or out of spec (airbox, air filter, injectors, exhaust system, valve clearance, etc.) or any other components that can influence the engine performance.	Check injector and fuel supply system.

PCODE	MODULE	DESCRIPTION	CAUSE	ACTION
P1175	ECM	Diagnostic Fault code for Fuel Supply System (ORA Min Fault) Exhaust Bank2	Injection and fuel supply system. Adaptation of the air charge reaching the limits (min and max) based on the lambda sensors feedback. Too much variation in the engine itself in reference to a nominal engine. It can be cause by an engine that has been modified or out of spec (airbox, air filter, injectors, exhaust system, valve clearance, etc.) or any other components that can influence the engine performance.	Check injector and fuel supply system.
P1339	ECM	Signal fault at phase determination	backup phase detection strategies not able to find the correct phase	
P1606	ECM	Control Module Processor	Internal ECM problem	Check for ECM fault External troubleshooting not possible
P160E	ECM	Electrical Throttle Actuator (ETA) control fault	Damaged ETC, damaged circuit wires, damaged connector or damaged ECM output pins.	Disconnect ETC Measure the resistance of the harness wires, between the ECM and tested device connectors (Expected value < 2 Ohms)
P1610	ECM	Electrical Throttle Actuator (ETA) shorted to V +	Damaged ETC, damaged circuit wires, damaged connector or damaged ECM output pins.	Disconnect ETC Measure the resistance of the harness wires, between the ECM and tested device connectors (Expected value < 2 Ohms)
P1611	ECM	Electrical Throttle Actuator (ETA) shorted to ground	Damaged ETC, damaged circuit wires, damaged connector or damaged ECM output pins.	Disconnect ETC Measure the resistance of the harness wires, between the ECM and tested device connectors (Expected value < 2 Ohms)
P1612	ECM	Electrical Throttle Actuator (ETA) signal not plausible	Damaged ETC, damaged circuit wires, damaged connector or damaged ECM output pins.	Disconnect ETC Measure the resistance of the harness wires, between the ECM and tested device connectors (Expected value < 2 Ohms)

PCODE	MODULE	DESCRIPTION	CAUSE	ACTION
P1613	ECM	Electrical Throttle Actuator (ETA)	Damaged ETC, damaged circuit wires, damaged connector or damaged ECM output pins.	Disconnect ETC Measure the resistance of the harness wires, between the ECM and tested device connectors (Expected value < 2 Ohms)
P1614	ECM	Throttle idle position failure on throttle release	Throttle mechanical adjustment No initialization after throttle body/ ECM replacement	Check throttle mechanical adjustment. Check idle stop for wear. Ensure throttle plate is against throttle stop. Check throttle angle at idle. Perform THROTTLE POSITION SENSOR RESET in BUDS with throttle completely OFF. Refer to the service manual for more details.
P1615	ECM	TPS position deviation fault	Throttle mechanical adjustment No initialization after throttle body/ ECM replacement	Check throttle mechanical adjustment. Check idle stop for wear. Ensure throttle plate is against throttle stop. Check throttle angle at idle. Perform THROTTLE POSITION SENSOR INITIALIZATION in BUDS with throttle completely OFF. Refer to the service manual for more details.
P1616	ECM	Throttle limp-home-position failed	Throttle mechanical stop No initialization after throttle body/ ECM replacement	Check throttle mechanical adjustment. Check idle stop for wear. Ensure throttle plate is against throttle stop. Check throttle angle at idle. Perform THROTTLE POSITION SENSOR INITIALIZATION in BUDS with throttle completely OFF.. Refer to the service manual for more details.

PCODE	MODULE	DESCRIPTION	CAUSE	ACTION
P1619	ECM	TPS adaptation failure	Wrong throttle body mechanical position during reset of closed TPS or no initialization after ECM replacement.	Check THROTTLE cable adjustment. Check idle stop for wear. Ensure throttle plate is against throttle stop. Perform THROTTLE POSITION SENSOR INITIALIZATION in BUDS with throttle completely OFF.FF.
P1620	ECM	TPS adaptation failure	Wrong throttle body mechanical position during reset of closed TPS or no initialization after ECM replacement.	Check cable adjustment. Check idle stop for wear. Make sure throttle plate is against throttle stop. Perform THROTTLE POSITION SENSOR INITIALIZATION in BUDS with throttle completely OFF.
P1621	ECM	TPS adaptation cancelled lower mechanical stop failed	Throttle mechanical stop No initialization after throttle body/ ECM replacement	Check cable adjustment. Check idle stop for wear. Ensure throttle plate is against throttle stop. Check throttle angle at idle. Perform THROTTLE POSITION SENSOR INITIALIZATION in BUDS with throttle completely OFF. Refer to the service manual for more details.
P1622	ECM	TPS adaptation failed	Throttle mechanical stop No initialization after throttle body/ ECM replacement	Check cable adjustment. Check idle stop for wear. Ensure throttle plate is against throttle stop.. Check throttle angle at idle. Perform THROTTLE POSITION SENSOR INITIALIZATION in BUDS with throttle completely OFF. Refer to the service manual for more details.
P16C0	ECM	ECU ADC plausibility check	Monitoring plausibility check failed	Check for ECM fault
P16C1	ECM	ECU ADC test failed	Monitoring plausibility check failed	Check for ECM fault
P16C2	ECM	ECU monitoring error	Monitoring plausibility check failed	Check for ECM fault
P16C3	ECM	Throttle Accelerator Sensors (TAS) monitoring check fault	Monitoring plausibility check failed	Check for ECM fault

PCODE	MODULE	DESCRIPTION	CAUSE	ACTION
P16C4	ECM	Engine speed monitoring check fault	Monitoring plausibility check failed	Check for ECM fault
P16C5	ECM	Safety fuel cut-off activated monitoring check level 1	Monitoring plausibility check failed	Check for ECM fault
P16C6	ECM	Safety fuel cut-off activated monitoring check level 2	Monitoring plausibility check failed	Check for ECM fault
P16C7	ECM	Throttle valve plausibility check failed	Monitoring plausibility check failed	Check for ECM fault
P16C8	ECM	Permitted throttle valve position monitoring check exceeded	Monitoring plausibility check failed	Check for ECM fault
P1F01	DPS	Power output overload	Motor short circuit or power output failed	Reset fault, If fault re-occur, replace DPS unit
P1F02	DPS	Power output overload (18V).	High voltage at the unit input.	Measure battery voltage with engine stopped. (Expected value: 11 to 13 volts) Measure battery voltage with engine running. (Expected value: 13 to 14.7 volts) test charging system as per shop manual
P1F03	DPS	Electronic Circuit Overheat	Hi temperature detected by on board temperature sensor.	Fault may become Active in extreme use situations. Reset fault and let DPS cool down. If fault re-occur in normal riding conditions, replace DPS unit
P1F05	DPS	Motor current sensor range/performance	Motor input vs output Current correlation check failed	External troubleshooting is not possible Clear the Fault. If Fault becomes Active Replace the DPS
P20EB	ECM	Main relay de-energized too late or sticking	Damaged circuit wires, damaged connectors or damaged ECM output pins. Damaged relay	Disconnect main relay and measure his coil resistance (Expected value: 70 to 90 Ohms)

PCODE	MODULE	DESCRIPTION	CAUSE	ACTION
P212C	ECM	2nd Throttle Accelerator Sensors (TPS) low	Damaged TPS, damaged circuit wires, damaged connector or damaged ECM output pins.	Make sure sensor connector is well inserted Disconnect the sensor and associated ECM connector Measure the resistance of the harness wires, between the ECM and sensor connectors (Expected value < 2 Ohms)
P212D	ECM	2nd Throttle Accelerator Sensors (TPS) high	Damaged TPS, damaged circuit wires, damaged connector or damaged ECM output pins.	Make sure sensor connector is well inserted Disconnect the sensor and associated ECM connector Measure the resistance of the harness wires, between the ECM and sensor connectors (Expected value < 2 Ohms)
P2228	ECM	Ambient pressure sensor shorted to ground	Damaged sensor, damaged circuit wires, damaged connector or damaged ECM pins, ECM voltage supply low	Make sure sensor connector is well inserted Disconnect the sensor, measure the voltage of the harness power wires (Expected value: 4.8 to 5.1 Volts) Measure the resistance of the harness wires, between the ECM and sensor connectors (Expected value < 2 Ohms)
P2229	ECM	Ambient pressure sensor short to V +	Damaged sensor, wires shorted to battery +, ECM voltage supply too high.	Make sure sensor connector is well inserted Disconnect the sensor, measure the voltage of the harness power wires (Expected value: 4.8 to 5.1 Volts) Measure the resistance of the harness wires, between the ECM and sensor connectors (Expected value < 2 Ohms)
P2279	ECM	Intake Air System leak	Check for cracked plenum	Intake or throttle body air leak

PCODE	MODULE	DESCRIPTION	CAUSE	ACTION
P2299	ECM	Throttle and break pedal are used at the same time	If the accelerator pedal and the brake are activated simultaneously for a delay time and the vehicle is moving faster than Speed-threshold	
P2416	ECM	exchanged lambda sensors upstream catalyst	Wrong O2 sensor position after O2 replacement or wire replacement.	Swap O2 sensor wires.
P2530	ECM	Ignition switch state not plausible	Ignition key switch connection or internal switch fault	Check ignition key contacts and wire connections
P2620	ECM	Throttle Accelerator Sensors (TPS) position	Wrong TPS sensor position.	Check TAS adjustment.
P2621	ECM	First Throttle Accelerator Sensor (TPS) low	Damaged TPS, damaged circuit wires, damaged connector or damaged ECM output pins.	Make sure sensor connector is well inserted Disconnect the sensor and associated ECM connector Measure the resistance of the harness wires, between the ECM and sensor connectors (Expected value < 2 Ohms)
P2622	ECM	First Throttle Accelerator Sensors (TPS) high	Damaged TPS, damaged circuit wires, damaged connector or damaged ECM output pins.	Make sure sensor connector is well inserted Disconnect the sensor and associated ECM connector Measure the resistance of the harness wires, between the ECM and sensor connectors (Expected value < 2 Ohms)
P2670	DPS	PHASE B_LOW	DPS motor supply Damaged DPS	External troubleshooting is not possible Clear the Fault. If Fault becomes Active Replace the DPS
P2671	DPS	PHASE B_HIGH	DPS motor supply Damaged DPS	External troubleshooting is not possible Clear the Fault. If Fault becomes Active Replace the DPS

PCODE	MODULE	DESCRIPTION	CAUSE	ACTION
P2801	ECM	Gear position sensor invalid range	Damaged circuit wires, damaged gear position sensor, damaged ECM pins or damaged transmission.	Open ECM Monitoring page in BUDS, Verify that gear position information changes with gear selection changes on vehicle. Disconnect GBPS Measure voltage between harness connector 5-GBPS-1 and 5-GBPS-3. (Expected value: 4.8 to 5.1 Volts) Measure resistance from connector: 5-ECM-B13 to 5-GBPS-2 (Expected value: < 2 Ohms) Measure resistance from connector: 5-ECM-B22 to 5-GBPS-3 (Expected value: < 2 Ohms)
P2806	ECM	Gear position sensor angle defined area vs position not plausible	Damaged circuit wires, damaged gear position sensor, damaged ECM pins or damaged transmission.	Open ECM Monitoring page in BUDS, Verify that gear position information changes with gear selection changes on vehicle. Disconnect GBPS Measure voltage between harness connector 5-GBPS-1 and 5-GBPS-3. (Expected value: 4.8 to 5.1 Volts) Measure resistance from connector: 5-ECM-B13 to 5-GBPS-2 (Expected value: < 2 Ohms) Measure resistance from connector: 5-ECM-B22 to 5-GBPS-3 (Expected value: < 2 Ohms)
U0073	DPS	CAN bus off, no messages	Damaged circuit wires or damaged DPS pins.	On the Diagnostic connector, measure the resistance between the two CAN lines (Expected value: 50 to 70 Ohms) Measure the resistance of each CAN wire in the harness, between the Diagnostic and DPS connectors (Expected value < 5 Ohms)

PCODE	MODULE	DESCRIPTION	CAUSE	ACTION
U0073	DPS GLOBE	CAN LOSS/CANBUS FAILURE/CANBUSS OFF	Damaged CAN Bus wires to Network, damaged DPS pins or wires.	On the Diagnostic connector, measure the resistance between the two CAN lines (Expected value: 50 to 70 Ohms) Measure the resistance of each CAN wire in the harness, between the Diagnostic and DPS connectors (Expected value < 5 Ohms)
U0073	SCM	CAN-Bus failure, CAN-Bus OFF	Damaged circuit wires or damaged SCM pins.	On the Diagnostic connector, measure the resistance between the two CAN lines (Expected value: 50 to 70 Ohms) Measure the resistance of each CAN wire in the harness, between the Diagnostic and SCM connectors (Expected value < 2 Ohms)
U0100	DPS	Lost communication with ECM (lost of CAN ID's)	Damaged CAN Bus wires to ECM, damaged DPS/ECM pins.	On the Diagnostic connector, measure the resistance between the two CAN lines (Expected value: 50 to 70 Ohms) Measure the resistance of each CAN wire in the harness, between the Diagnostic and ECM connectors (Expected value < 5 Ohms)
U0100	DPS GLOBE	ECM CAN COMMUNICATION OFF	Damaged CAN Bus wires to Network, damaged DPS pins or wires.	On the Diagnostic connector, measure the resistance between the two CAN lines (Expected value: 50 to 70 Ohms) Measure the resistance of each CAN wire in the harness, between the Diagnostic and DPS connectors (Expected value < 5 Ohms)
U0100	SCM	Lost Communication With ECM (lost of CAN ID's)	Missing CAN ID from ECM Internal module error Damaged circuit wires or damaged module pins.	On the Diagnostic connector, measure the resistance between the two CAN lines (Expected value: 50 to 70 Ohms) Measure the resistance of each CAN wire in the harness, between the Diagnostic and ECM connectors (Expected value < 2 Ohms)

PCODE	MODULE	DESCRIPTION	CAUSE	ACTION
U0155	DPS	Lost communication with CLUSTER	Damage CAN Bus wires to cluster Damaged circuit wires or damaged Cluster module pins.	On the Cluster power connector, measure the voltage between the two harness power wires (Expected value: Battery voltage) On the Diagnostic connector, measure the resistance between the two CAN lines (Expected value: 50 to 70 Ohms) Measure the resistance of each CAN wire in the harness, between the Diagnostic and Cluster connectors (Expected value < 2 Ohms)
U0155	ECM	Lost communication with CLUSTER (lost of CAN ID's)	Missing CAN ID Module internal error Damaged circuit wires or damaged module pins.	With vehicle connected to BUDS with MPI2, check for CLUSTER fault or ECM fault Disconnect the cluster connector Measure the voltage of the harness power wires relative to ground (Expected value: Battery voltage) Disconnect MPI2 from DB connector Measure the resistance between the two CAN lines (Expected value: 50 to 70 Ohms) Disconnect the ECM connector Measure the resistance of each CAN wire in the harness, between the Diagnostic and ECM connectors (Expected value < 2 Ohms) Measure the resistance of each CAN wire in the harness, between the Diagnostic and Cluster connectors (Expected value < 2 Ohms)

PCODE	MODULE	DESCRIPTION	CAUSE	ACTION
U0155	ECM	Lost communication with CLUSTER (lost of CAN ID's)	Missing CAN ID Module internal error Damaged circuit wires or damaged module pins.	With vehicle connected to BUDS with MPI2, check for CLUSTER fault or ECM fault Disconnect the cluster connector Measure the voltage of the harness power wires relative to ground (Expected value: Battery voltage) Disconnect MPI2 from DB connector Measure the resistance between the two CAN lines (Expected value: 50 to 70 Ohms) Disconnect the ECM connector Measure the resistance of each CAN wire in the harness, between the Diagnostic and ECM connectors (Expected value < 2 Ohms) Measure the resistance of each CAN wire in the harness, between the Diagnostic and Cluster connectors (Expected value < 2 Ohms)
U0155	SCM	Lost Communication With Cluster (lost of CAN ID's)	Missing CAN ID Module internal error Damaged circuit wires or damaged module pins.	Check for Cluster fault Measure the voltage of the cluster harness power wires relative to ground (Expected value: Battery voltage) On the Diagnostic connector, measure the resistance between the two CAN lines (Expected value: 50 to 70 Ohms) Measure the resistance of each CAN wire in the harness, between the Diagnostic and SCM connectors (Expected value < 2 Ohms) Measure the resistance of each CAN wire in the harness, between the Diagnostic and Cluster connectors (Expected value < 2 Ohms)

PCODE	MODULE	DESCRIPTION	CAUSE	ACTION
U0167	ECM	Lost communication with Vehicle Immobilizer Control Module	The Vehicle Immobilizer is reporting an electrical fault on the communication line.	Check for dirty or oxidized Key contact. Clean key contact if needed. Check for broke key contact Ensure sensor connector is fully inserted. Measure resistance between ECMB-A1 and CC-C (Expected value < 2 Ohms). Measure resistance between ECMB-C2 and CC-E (Expected value < 2 Ohms).
U0300	ECM	Invalid Security Exchange received	Incorrect ECM or CLUSTER, Incorrect software version.	Install the proper ECM or CLUSTER on vehicle. Update security coding using BUDS
U0301	ECM	Variant Coding, software incompatibility (DFC_MoFVar)	Faulty calibration or variant Faulty programming Damaged ECM	Try updating the ECM variant or calibration If the problem persists, reflash ECM If the problem persists, replace ECM.
U0302	ECM	Variant Coding, software incompatibility (DFC_MTVARNPL)	Faulty calibration or variant Faulty programming Damaged ECM	Try updating the ECM variant or calibration If the problem persists, reflash ECM If the problem persists, replace ECM.
U0400	DPS	Variant Coding failure Software incompatibility	Faulty variant coding Faulty programming	Check in the BUDS Tab "vehicle configuration" if the DPS option is checked. Reflash the DPS with the latest software
U0400	DPS GLOBE	VARIANT IMCOMPATIBILITY	vehicle configuration error or DPS software mismatch or error	look at BUDS vehicle config. check DPS for reflash write config and cycle on/off vehicle
U0400	SCM	Variant Coding failure Software incompatibility	SCM not install on expected vehicle Faulty programming	Check if SCM is install on a valid vehicle Update SCM Open Vehicle Configuration in Setting page in BUDS & if check vehicle configuration is set as expected for the vehicle.

PCODE	MODULE	DESCRIPTION	CAUSE	ACTION
U0416	DPS GLOBE	VEHICLE SPEED ERROR VALUE	vehicle speed error value received from ECM	Check if vehicle speed is available in Monitoring page in BUDS Check related fuse(s) Remove the sensor connector, measure the voltage of the harness power wire relative to ground (Expected value: Battery voltage) Measure the resistance of the harness wires, between the ECM and sensor connectors (Expected value < 5 Ohms)
U0426	ECM	Invalid Data Received From Vehicle Immobilizer Control Module	The Vehicle Immobilizer could not read the number of the access key.	Check for dirty or oxidized Key contact. Clean key contact if needed. Check for broke key contact Ensure sensor connector is fully inserted. Measure resistance between ECMB-A1 and CC-C (Expected value < 2 Ohms). Measure resistance between ECMB-C2 and CC-E (Expected value < 2 Ohms).
U220E	ECM	Invalid Check Sum from CLUSTER message	Check Sum error	External troubleshooting is not possible Check for communication fault
U3001	DPS	Module improper shutdown	Lost of power on DPS that can be caused by damaged circuit wires or damaged DPS pins.	Check the two DPS fuses Ensure DPS connector is fully inserted. Check for Damaged tail light, DPS, Cluster circuit wires Check for damaged DPS pins.
U3001	SCM	Module improper shutdown	Lost of power on SCM Damaged circuit wires or damaged SCM pins.	Check fuse Ensure SCM connector is fully inserted. Check for Damaged circuit wires or damaged SCM pins.

INTELLIGENT THROTTLE CONTROL (iTC)

GENERAL

SYSTEM DESCRIPTION

The iTC is an electronic throttle control system that includes:

– Throttle accelerator sensor (TAS)
– Electric throttle actuator (ETA)
– Throttle position sensor (TPS).

The TAS is part of the accelerator pedal module. The ETA and TPS are comprised in the throttle body.

The iTC is often referred to as a "throttle by wire" system (no throttle cable is used).

According to the accelerator pedal position and other EMS inputs, the ECM powers the ETA motor using pulse width modulation (PWM), to control the throttle plate. When the ECM detects through the TPS that the throttle plate has reached the targeted position, the ECM stops the throttle actuator.

Depending on various conditions and the type of key used, the iTC can modify the ETA response, limit the engine torque or vehicle speed.

For torque limitation, the ECM processes the TAS input differently depending on the specific mode. In other words, the driver's demand may not necessarily result in the corresponding throttle opening.

For vehicle speed limitation, the iTC controls the throttle opening to maintain a maximum set speed even if the accelerator is pedal fully depressed.

SYSTEM MAIN FEATURES

The use of the iTC allows the following features:

– Types of keys
– ECO/ECO OFF/Work modes

Types of Keys

OptionalPerformance Key

No limitation, just like the non-DESS keys that come with the Defender.

Optional ECO OFF Key

Limits vehicle speed to maximum 70 km/h (43 MPH) with only 90% engine torque available.

Optional Work Key

Limits vehicle speed to maximum 40 km/h (25 MPH) with full engine torque available.

ECO/ECO OFF/Work Modes

The ECO (fuel economy mode) setting reduces fuel consumption by limiting throttle response and maximum throttle opening to maintain an optimal cruising setting. Use ECO mode on bumpy trails to provide smoother ride conditions

The ECO OFF mode offers no engine torque reduction as well as a sportier driving experience.

The work mode is optimized to be able to work with high loads in a smooth way but still with the full engine torque available. This mode is also effective for getting over obstacles and rough terrain.

SYSTEM OTHER FEATURES

Driver's Seat Belt Monitoring

If driver's seat belt not fastened, speed is limited to approximately 20 km/h (12 MPH).

Brake Monitoring

If the ECM receives a brake switch signal while gearbox is in gear and the vehicle moving, the ETA will decrease throttle plate opening and engine speed will drop to idle.

NOTE: A defective brake light switch that would stay in a closed position would force the engine to run at idle.

Low Range Operation

When gearbox is in low range, engine delivers less than the accelerator pedal demand and the accelerator pedal response is smoother than in high gear.

NOTE: All three driving modes are available in LOW gear.

Drive Shaft Saver

In a case where the drive wheels would momentarily leave the ground while the driver holds the throttle, this mode protects the drive system.

The system will enter the drive shaft saver mode if the ECM detects an excessive wheel acceleration rate. In such a case, the iTC will reduce the engine torque. .

Engine Temperature Monitoring

If coolant gets too hot, engine will deliver less than the accelerator pedal demand. The limitation is proportional to the overheat degree.

Battery Voltage Monitoring

If the battery voltage gets low, the engine idle RPM will be increased at approximately 1350 RPM.

Drowned Mode

In case of a fuel flood, the engine can be cranked without fuel injection.

To enter the drowned mode, depress and hold accelerator pedal (at least 50% of the travel) while cranking engine.

Limp Home Mode

When certain faults are occurring, the ECM will enter the limp home mode. In this mode, the engine will deliver less than the accelerator pedal demand.

PROCEDURES

ECO/ECO OFF/WORK MODE SWITCH

ECO/ECO OFF/Work Mode Switch Wire Information

FUNCTION	PIN
ECO signal (to ECM B pin D4)	1
Ground	2
WORK signal (to ECM B pin C4)	3

SEAT BELT SWITCH

Seat Belt Switch Wire Information

FUNCTION	PIN
Signal (to ECM B pin E3)	1
Ground through ECM (to ECM B pin A1)	2

THROTTLE ACCELERATOR SENSOR (TAS)

TAS Description

The throttle accelerator sensor (TAS) is a double hall effect sensor that sends a signal to the ECM which is proportional to the accelerator pedal. The redundancy is used for security purposes.

The voltage output of the hall effect sensors are different.

TAS Removal and Installation

The TAS is part of the accelerator pedal.

1. Note the wire routing and locking tie position.
2. Disconnect electrical connector.
3. Remove both accelerator pedal retaining nuts by outside near the steering column. Reach nuts by the LH side of the vehicle.

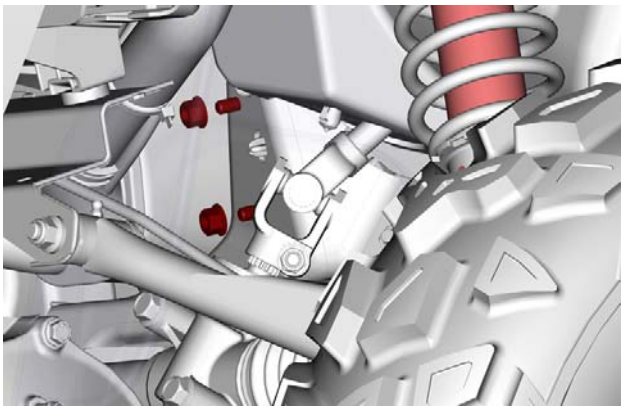

tmr2016-127-001

To install, reverse the removal procedure, however pay attention to the following:

Route and attach wires correctly.

Tighten nuts to the specified torque.

TIGHTENING TORQUE	
Accelerator pedal retaining nuts	13 N•m ± 1 N•m (115 lbf•**in** ± 9 lbf•**in**)

Carry out the *ECM FIRST INITIALIZATION*, refer to *ELECTRONIC FUEL INJECTION (EFI)* subsection.

TAS Wire Information

FUNCTION	PIN
Signal	A
Ground through ECM	B
Voltage input (5 volt)	C

FUNCTION	PIN
Voltage input (5 volt)	D
Signal	E
Ground through ECM	F

TAS Failure

If one TAS signal fails, the vehicle will enter the limp home mode.

If both TAS signals fail, the engine speed will drop to idle.

TAS Test with BUDS2

Connect the vehicle to the BRP diagnostic software (BUDS2).

In BUDS2, go to:
- **Measurements** page
- **Vehicle** or **ECM** button
- **ECM-Basic** tab.

In the bottom table, look the **Throttle Opening** line.

The TAS signal should vary from near 0% to near 100% depending on the pedal position and selected driving mode, which confirms the TAS signal reaches the ECM.

If the TAS signal is above 2% with the accelerator pedal at release. replace the accelerator pedal assembly.

FUEL TANK AND FUEL PUMP (HD7)

SERVICE TOOLS

Description	Part Number	Page
FLUKE 115 MULTIMETER	529 035 868	132
FUEL HOSE ADAPTER	529 036 396	127
FUEL PUMP NUT TOOL	529 035 899	133
OETIKER PLIER	295 000 070	130
PRESSURE GAUGE	529 036 395	127
SMALL HOSE PINCHER	295 000 076	126, 136
VACUUM/PRESSURE PUMP	529 021 800	126, 137

SERVICE TOOLS – OTHER SUPPLIER

Description	Part Number	Page
FLUKE RIGID BACK PROBE	TP88	132

SERVICE PRODUCTS

Description	Part Number	Page
BRAKE AND PARTS CLEANER PRO S2	779245	135

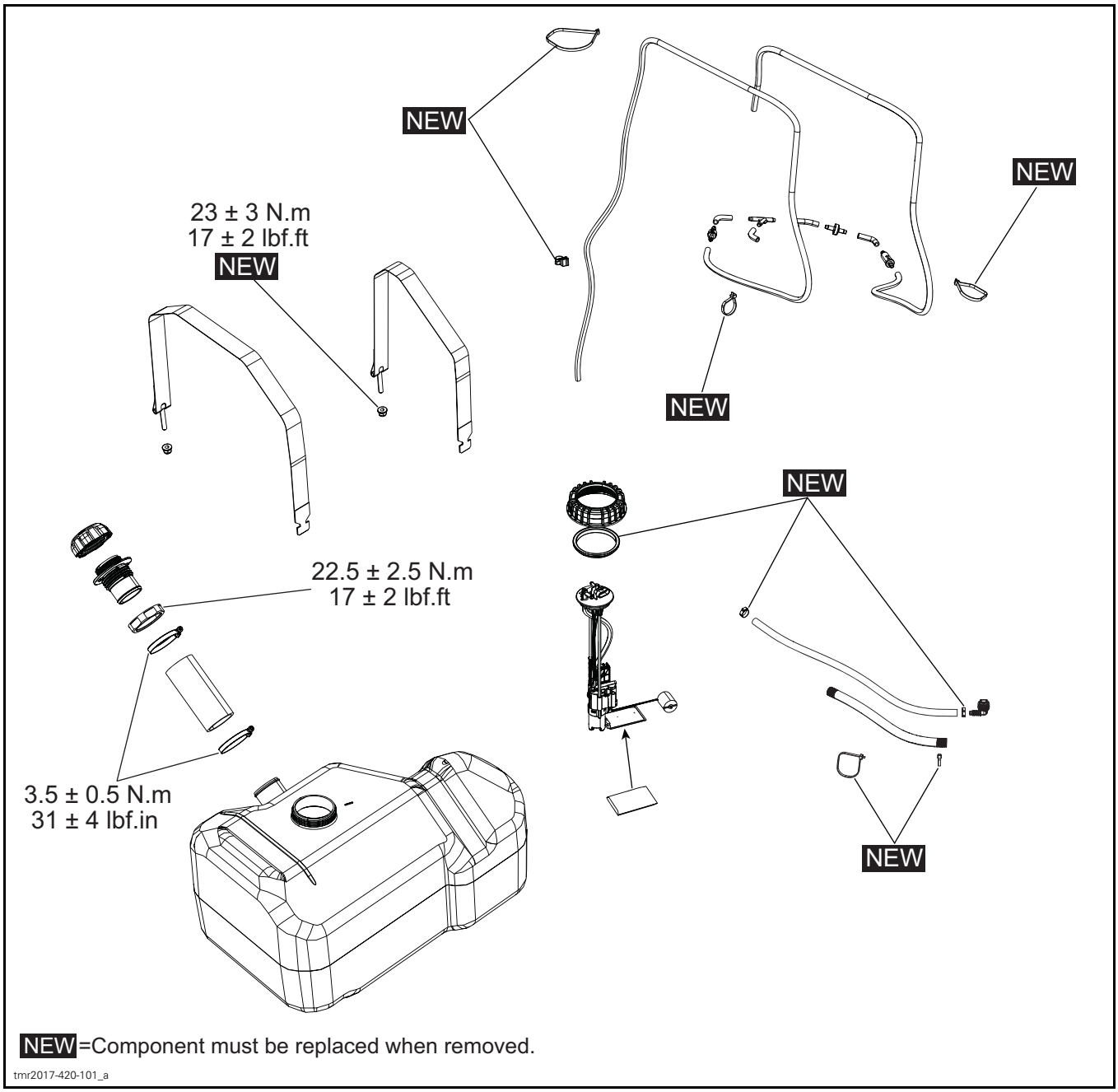
NEW
NEW
23 ± 3 N.m
17 ± 2 lbf.ft
NEW
NEW
NEW
22.5 ± 2.5 N.m
17 ± 2 lbf.ft
3.5 ± 0.5 N.m
31 ± 4 lbf.in
NEW
NEW=Component must be replaced when removed.
tmr2017-420-101_a

GENERAL

⚠ WARNING

Fuel is flammable and explosive under certain conditions. Ensure work area is well ventilated. Do not smoke or allow open flames or sparks in the vicinity.

⚠ WARNING

Always disconnect battery prior disconnecting a fuel system pressure hose.

⚠ WARNING

Always proceed with care and use appropriate safety equipment when working on pressurized fuel system. Wear safety glasses.

⚠ WARNING

Do not allow fuel to spill on hot engine parts and/or on electrical connectors.

When the repair is completed, ensure that all hoses are connected and secured. Perform the *TESTING THE FUEL PRESSURE* and the *TESTING FOR A FUEL TANK LEAK* as explained in this subsection.

Fuel lines remain under pressure at all times. Proceed with care when removing/installing high pressure test equipment.

SYSTEM DESCRIPTION

Fuel Tank Vent System

The vent system provides the relief of overpressure or negative pressure in the fuel tank

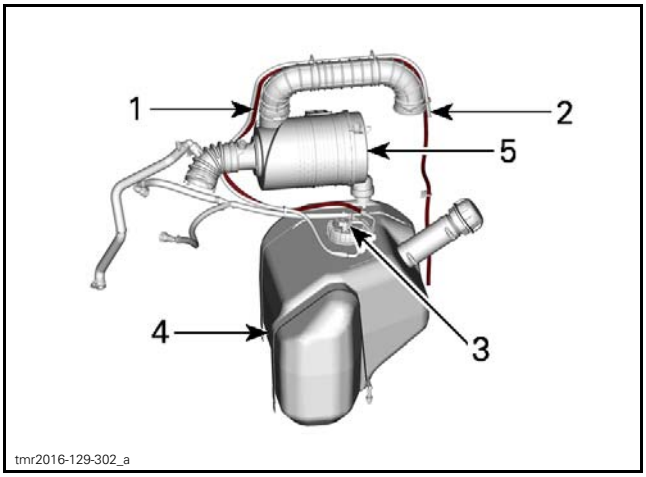

TYPICAL - FUEL TANK VENT SYSTEM
1. *Vent hose*
2. *Vent system hose inlet*
3. *Vent system connected to fuel pump*
4. *Fuel tank*
5. *Engine air intake system*

Air can enter the fuel tank at all times through the vent system INLET check valve. This prevents negative pressure within the fuel tank which could cause a fuel starvation.

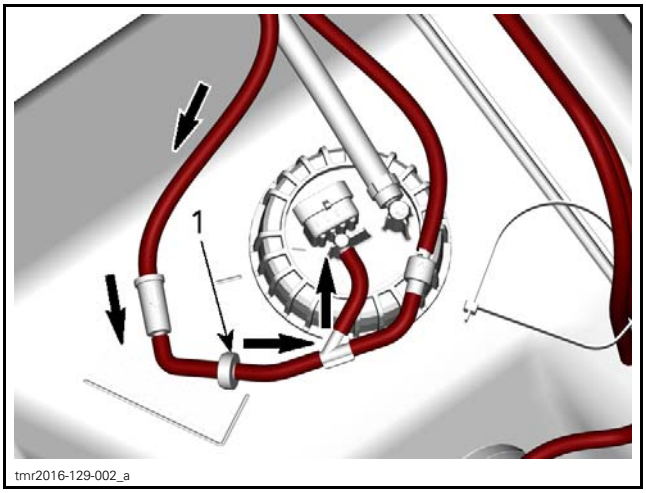

TYPICAL - AMBIENT AIR PRESSURE IN
1. *Vent inlet check valve*

The inlet check valve also prevents fuel from flowing out through the inlet of the vent system.

If the pressure in the fuel tank builds up and exceeds 2.5 kPa - 7.6 kPa (.36 PSI - 1.1 PSI), the pressure relief valve opens and lets the excess pressure evacuate through the vent system OUTLET hose.

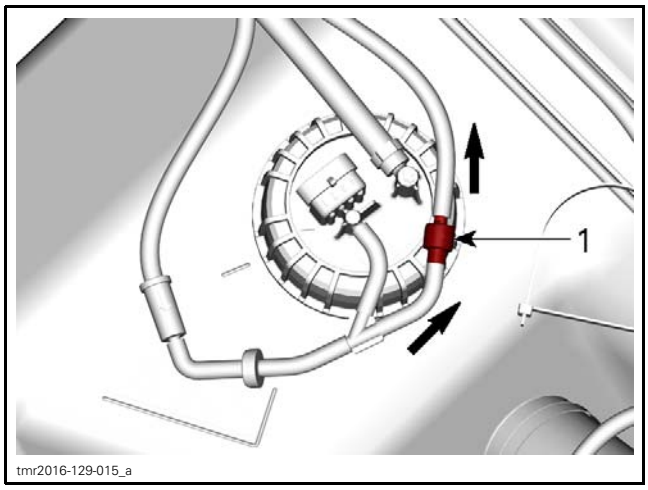

TYPICAL - OVER PRESSURE RELIEF
1. Outlet pressure relief valve

Fuel Tank Vent Breather Filter

The vent system is equipped with an in-line breather filter that prevents the entry of particles such as dust or small insects. It is located next to the fuel pump, on the inlet hose, before the air inlet check valve.

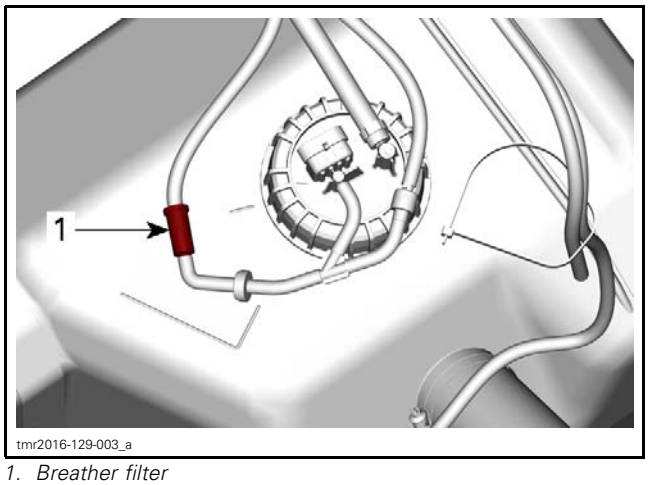

1. Breather filter

Fuel Pump Module

The fuel pump module is inserted in the fuel tank. It provides fuel delivery for the EFI system and encompasses the following components:

- Electric fuel pump
- Fuel pump pre-filter
- Fuel pressure regulator
- Fuel level sender.

Fuel Filters

The system comprises one level of filtration:

- A replaceable pre-filter element attached to the bottom of the fuel pump.

Fuel Pump Pressure Regulator

The fuel pressure regulator is integral to the fuel pump module. The pressure regulator maintains proper fuel pressure for the EFI system.

INSPECTION

TESTING FOR A FUEL TANK LEAK

⚠ WARNING

Always carry out a fuel tank leak test whenever the fuel tank shows signs of wear or damage which may cause a leak, or when the fuel pump has been removed or replaced, or if you suspect a leak. If the fuel tank is damaged, the fuel tank should be replaced even if no leak is present. Do not attempt to repair the fuel tank.

1. Refill fuel tank and ensure fuel tank cap is in good condition and properly installed.
2. Block the outlet vent hose using a small hose pincher.

REQUIRED TOOL	
SMALL HOSE PINCHER (P/N 295 000 076)	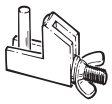

3. Pressurize the fuel tank through the inlet vent hose.

REQUIRED TOOL	
VACUUM/PRESSURE PUMP (P/N 529 021 800)	

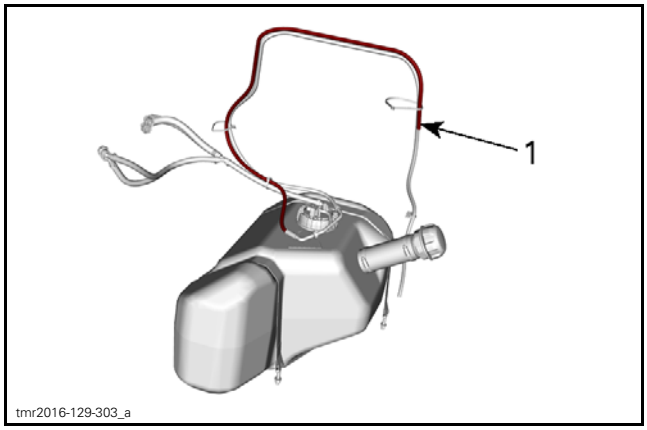

1. Fuel tank vent hose inlet

PRESSURE	TIME WITHOUT PRESSURE DROP
14 kPa (2 PSI)	3 minutes

If pressure drops, locate fuel leak(s) and repair or replace leaking component(s).

To locate a leak, check for a fuel smell or leaking fuel.

To ease locating leak(s), spray soapy water on all hose connections and components; bubbles will indicate the leak location(s).

TESTING THE FUEL PRESSURE

The pressure test will show the available pressure in the system. It validates the pressure regulator and the fuel pump, and allows for checking the fuel system for leaks (high pressure side).

Ensure there are no leaks from hoses and fittings. Repair any leaks.

NOTE: Refer to the *FUEL SYSTEM DIAGNOSTIC FLOW CHART* in this subsection to help diagnose a fuel system related problem.

1. Ensure the fuel level in the tank is sufficient.
2. Ensure the battery voltage is over 12 volts.
3. Disconnect fuel pump electric connector
4. Release fuel pressure by running the engine until it runs out of gas.
5. Disconnect the fuel pressure hose. Refer to *DISCONNECTING A FUEL PRESSURE HOSE* in *FUEL HOSE AND OETIKER CLAMPS*.

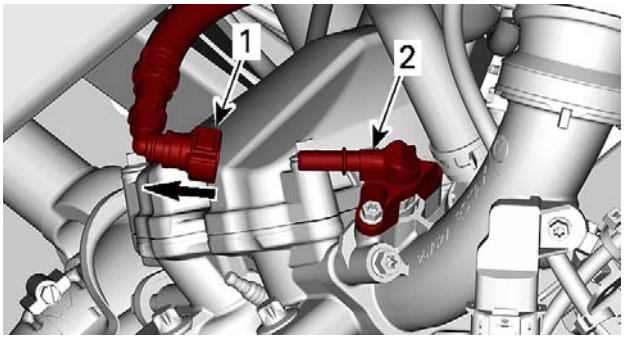

tmr2017-420-002_a

1. Fuel pressure hose fitting
2. Fuel rail

REQUIRED TOOLS	
PRESSURE GAUGE (P/N 529 036 395)	
FUEL HOSE ADAPTER (P/N 529 036 396)	

6. Install the fuel hose adapter between the disconnected fitting and the fuel rail (in-line installation).

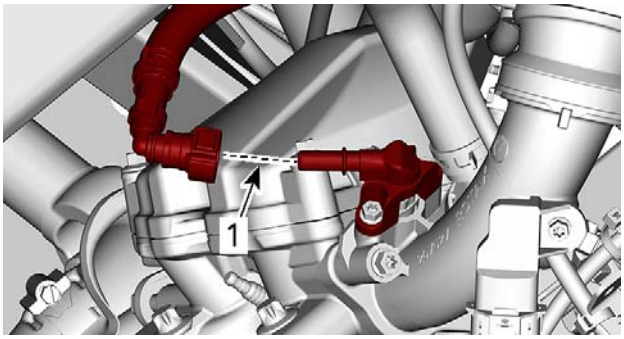

tmr2017-420-002_b

1. Fuel hose adapter location

7. Install the pressure gauge on the fuel hose adapter.
8. Reconnect the fuel pump electric connector.
9. Clear fault codes using the appropriate BRP diagnostic software. Refer to the *COMMUNICATION TOOLS*.
10. Turn ignition key ON or activate the fuel pump using the BRP diagnostic software.
11. Monitor the fuel pressure reading and compare to the specification.

FUEL PRESSURE (AT 12V ± 0.1V)
350 kPa ± 10 kPa (51 PSI ± 1 PSI)

12. Start engine and observe fuel pressure.
13. Stop engine.
14. Refer to *TEST RESULT*.

Test Result

The fuel pressure should be within specification in static or dynamic tests.

Rapid Pressure Drop

If there is a rapid pressure drop after the engine is stopped, check for leakage at:

– A fuel hose

– The fuel rail.

NOTE: The fuel pump check valve (integral to the fuel pump module) may also be at fault.

If no leak is detected, replace fuel pump.

Slow Pressure Drop

If there is a slow pressure drop after the engine is stopped, check the fuel injector for leaks as follows:

NOTE: The fuel pressure regulator or fuel pump check valve (integral to the fuel pump module) may also be at fault.

1. With the fuel rail connected, remove the intake manifold from the cylinder head.
2. From the inside of the intake manifold, check if the fuel injector tip is leaking.

If the fuel injector leaks, replace it.

If no leak is detected, replace the fuel pump.

3. Reinstall the intake manifold.

TIGHTENING TORQUE	
Intake manifold retaining screws	20 N•m ± 2 N•m (15 lbf•ft ± 1 lbf•ft)

TROUBLESHOOTING

FUEL SYSTEM DIAGNOSTIC FLOW CHART

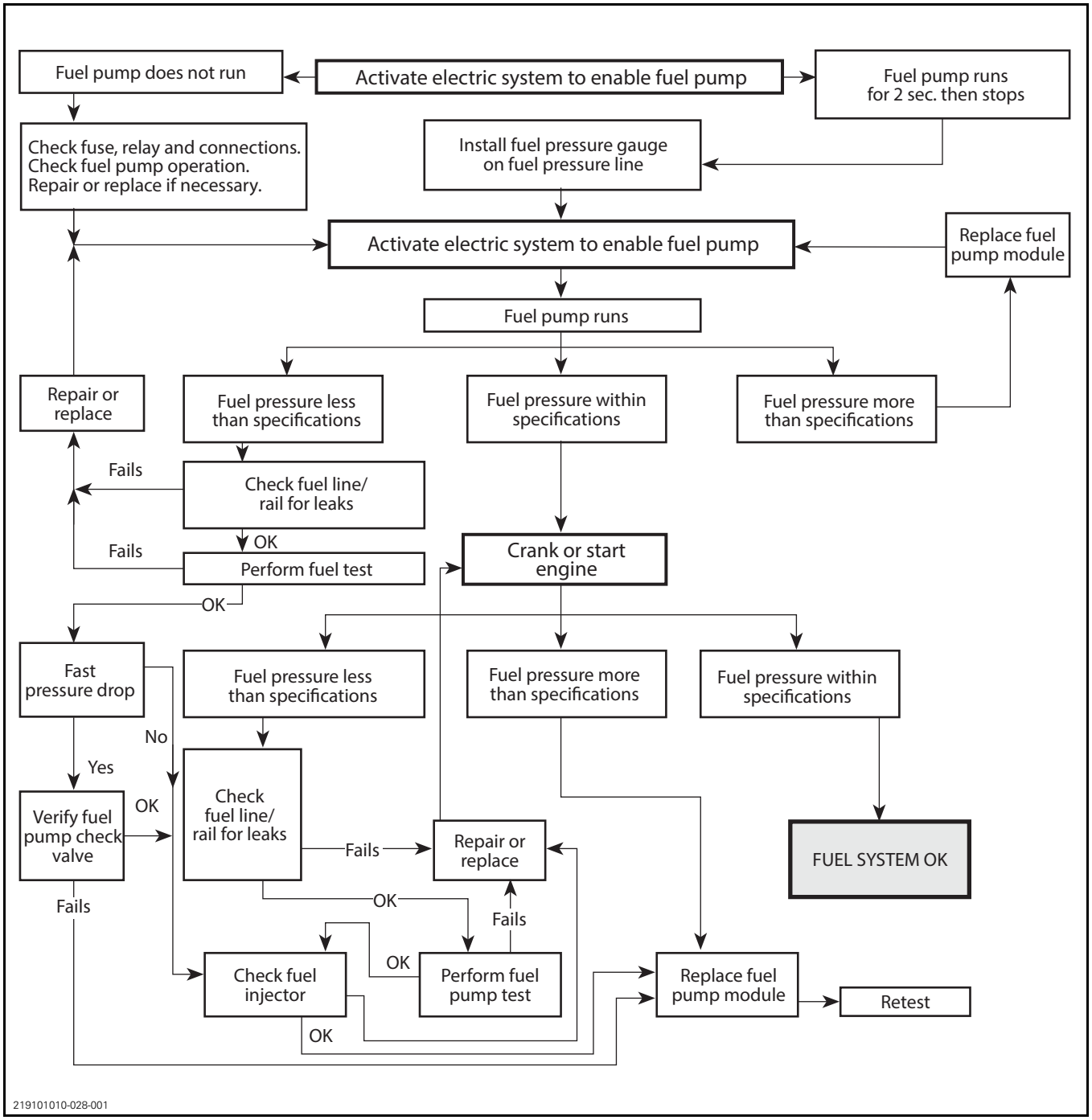

PROCEDURES

FUEL HOSE AND OETIKER CLAMPS

Disconnecting a Fuel Pressure Hose

1. Drain fuel tank. Refer to *DRAINING THE FUEL TANK*.
2. Release fuel pressure by running engine until it runs out of fuel.
3. Carefully disconnect the fuel hose fitting from the injector by pressing on the release tab of the quick disconnect fitting.

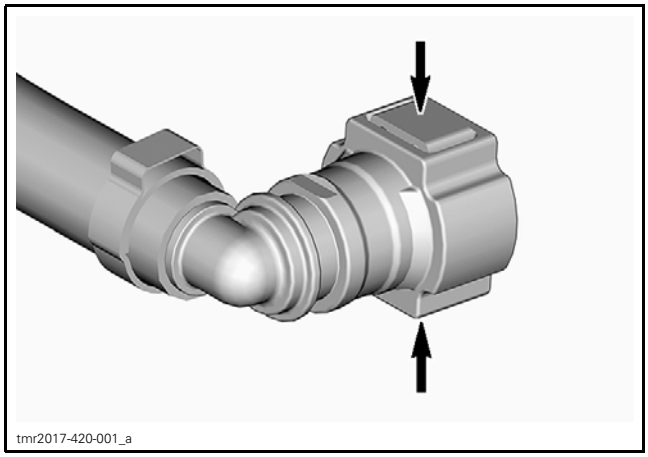

Replacing a Fuel Hose

When replacing fuel hoses, be sure to use hoses and clamps as available from BRP parts department. This will ensure continued proper and safe operation.

⚠ WARNING

Use of fuel lines other than those recommended by BRP may compromise fuel system integrity.

⚠ WARNING

Whenever removing a hose in the fuel system, always use new Oetiker clamps at assembly. Then validate fuel system tightness by performing a fuel pressure test.

Replacing an Oetiker Clamp

REQUIRED TOOL	
OETIKER PLIER (P/N 295 000 070)	

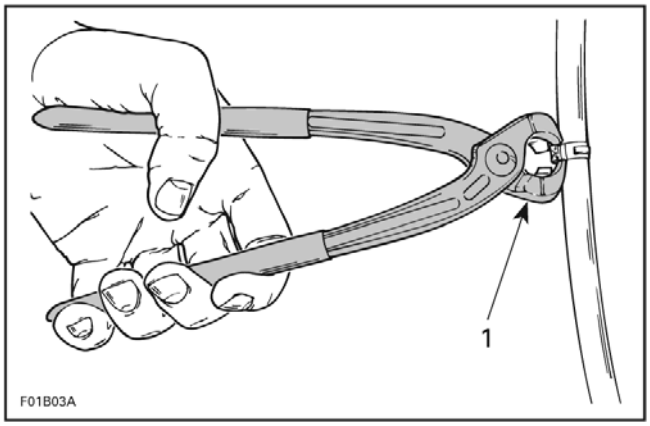

1. Cutting clamp

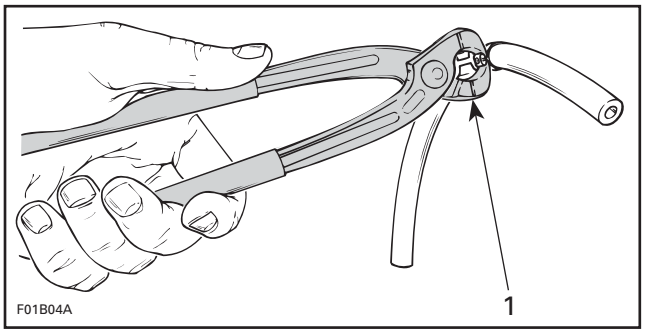

1. Securing clamp

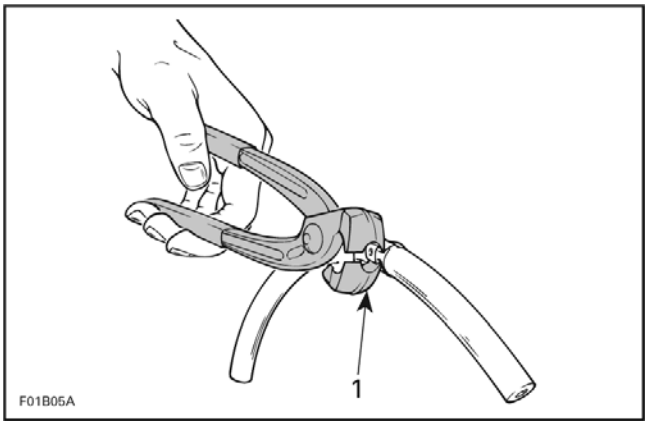

1. Securing clamp in limited access

FUEL TANK

Draining the Fuel Tank

Remove fuel tank cap and siphon gas into an approved fuel container.

Removing the Fuel Tank

1. Drain fuel tank. Refer to *DRAINING THE FUEL TANK* in this subsection.
2. Disconnect fuel pressure hoses from the fuel rail. Refer to *DISCONNECTING A FUEL PRESSURE HOSE* in *FUEL HOSE AND OETIKER CLAMPS*.

3. Disconnect the following from the fuel pump module:
   – Fuel pump electric connector
   – Vent hose

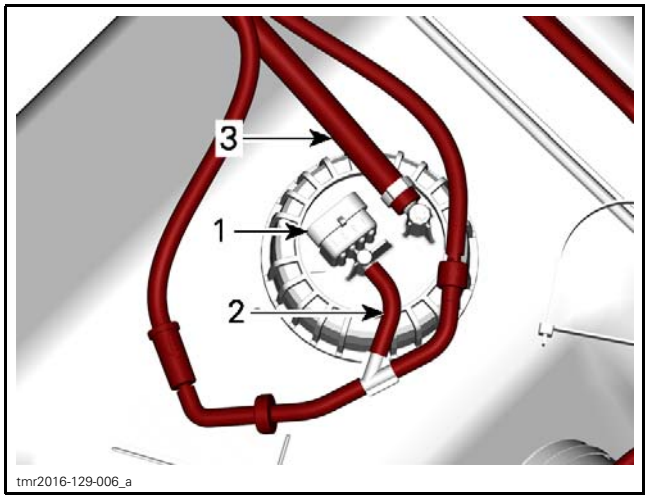

1. Fuel pump connector
2. Vent hose
3. High pressure fuel hose

4. Unscrew fuel tank retaining nuts (2) and unhook straps.

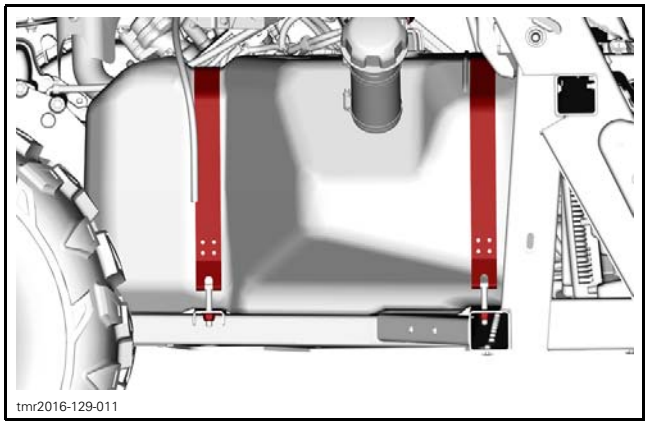

5. Loosen fuel filler neck hose clamp.
6. Remove fuel tank.

Inspecting the Fuel Tank

1. Visually inspect fuel tank for cracks, wear marks, signs of leakage or any other damages.
2. Visually inspect fuel system hoses for proper rooting, cracking, wear marks, signs of leakage or any other damages.
3. Refer to *TESTING FOR A FUEL TANK LEAK* and carry out instructions.

⚠ WARNING

All fuel system leaks must be repaired. Damaged, worn or leaking fuel system components should be replaced to ensure fuel system tightness.

If cracks, gouges or other damages which may lead to a fuel leak, or damages to attachment points that could prevent the tank from being secure are found, replace fuel tank.

Replacing Fuel Tank Vent Breather Filter

Ensure breather filter is installed with the flow arrow pointing towards the vent hose.

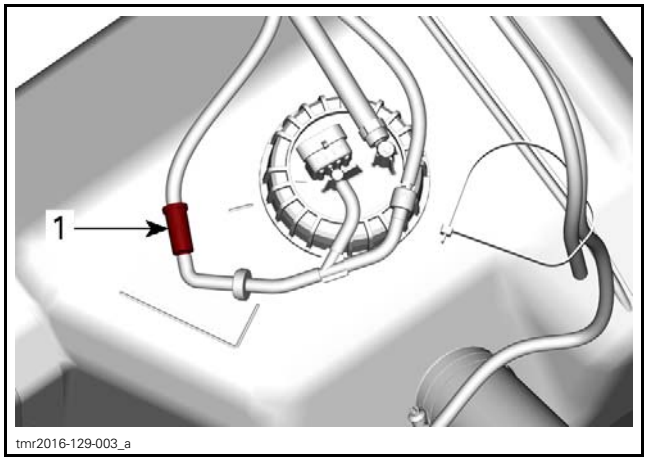

1. Fuel tank vent breather filter

Installing the Fuel Tank

Installation is the reverse of the removal procedure. However, pay attention to the following.

Use **NEW** retaining nuts.

TIGHTENING TORQUE	
Fuel tank straps retaining nuts	23 N•m ± 3 N•m (17 lbf•ft ± 2 lbf•ft)

Be sure to properly connect and route:
– Fuel tank vent tube
– Fuel pump pressure hose
– Electrical connector.

Refill tank and ensure there are no leaks by performing a *TESTING FOR A FUEL TANK LEAK* and a *TESTING THE FUEL PRESSURE* as described in this subsection.

FUEL PUMP

Testing the Fuel Pressure

Refer to *INSPECTION* in this subsection.

Testing the Fuel Pump Operation (Quick Test)

1. Turn ignition key to ON.
2. Listen for fuel pump operation.

NOTE: Fuel pump should come ON for a few seconds, then stop.

If fuel pump does not come ON, carry out the following:

– Check fuel pump relay fuse (F5) and Main relay (R2).
– Use the applicable BRP diagnostic software to read fault codes. Refer to the *COMMUNICATION TOOLS* subsection.
– Carry out a fuel pump input voltage test.

Testing the Fuel Pump Input Voltage

1. Disconnect the fuel pump connector.
2. Turn ignition key ON.
3. Read voltage as follows.

NOTE: The fuel pump voltage will be read only when the fuel pump is activated.

REQUIRED TOOLS	
FLUKE 115 MULTIMETER (P/N 529 035 868)	
FLUKE RIGID BACK PROBE (P/N TP88)	

FUEL PUMP INPUT VOLTAGE TEST		
TEST PROBES		VOLTAGE READING
Fuel pump connector Pin 3	Fuel pump connector Pin 4	Battery voltage

If battery voltage is read, carry out a fuel pump resistance test.

If battery voltage is not read, test fuel pump power input as follows.

FUEL PUMP POWER WIRE TEST		
TEST PROBES		VOLTAGE READING
Fuel pump connector Pin 3	Battery ground	Battery voltage

If battery voltage is now read, check fuel pump ground circuit between fuel pump connector FP-4 and battery ground.

If battery voltage is still not read, check the following:

– Fuse (F5)
– Main relay (R2)
– Fuel pump relay input voltage (control and power circuits)
– Fuel pump relay control circuit continuity to ECM-B M1
– Wiring and connectors.

Testing the Fuel Pump Resistance

1. Ensure fuel pump connector is properly connected.
2. Remove main relay (R2).

Disconnect fuel pump connector and measure resistance at fuel pump connector.

FUEL PUMP RESISTANCE TEST		
TEST PROBES		RESISTANCE READING
Fuel pump connector (pump side) Pin 3	Fuel pump connector (pump side) Pin 4	Approximately 2 Ω

If test failed at pump connector, replace fuel pump.

If test succeeded at pump connector, check wiring and connectors from:

– Fuse box to fuel pump
– Fuel pump to battery ground.

Repair or replace as necessary.

Releasing Fuel System Pressure

Refer to *DISCONNECTING A FUEL PRESSURE HOSE* in this subsection.

Removing the Fuel Pump

1. Release the pressure of the fuel system.
2. Disconnect the following from the fuel pump:
   – Fuel pump electric connector

– Fuel system vent hose
– Fuel pump pressure hose.

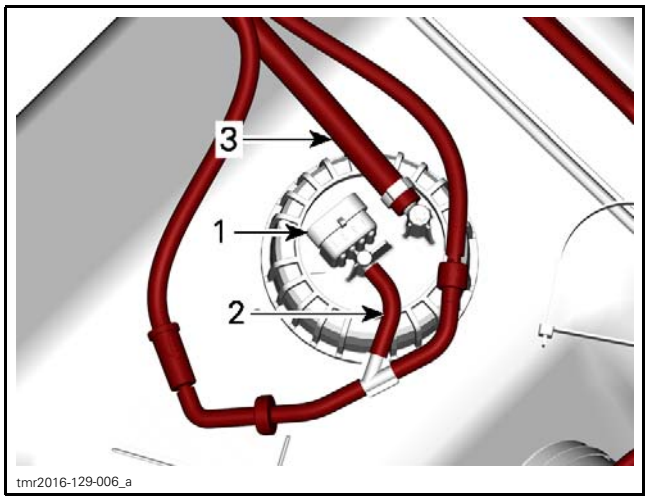

1. Fuel pump connector
2. Vent hose
3. High pressure fuel hose

3. Remove fuel pump retaining nut.

⚠ WARNING

Fuel vapors are flammable and explosive under certain conditions. Use only non-sparking tools.

⚠ CAUTION Replace fuel pump gasket whenever fuel pump retaining nut is loosened.

REQUIRED TOOL	
FUEL PUMP NUT TOOL (P/N 529 035 899)	

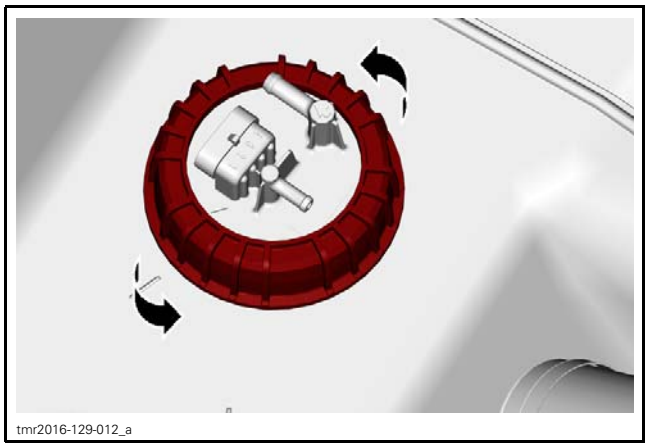

TYPICAL - FUEL PUMP REMOVAL
1. Fuel pump retaining nut

4. Carefully pull out and rotate fuel pump as required.

NOTICE Pay attention not to damage fuel sender and fuel pump prefilter.

5. Discard gasket ring.
6. Wipe off any fuel spillage.

Installing the Fuel Pump

The installation is the reverse of the removal procedure. However, pay attention to the following.

Rotate fuel pump during insertion as per removal procedure.

NOTICE Pay attention not to damage fuel sender and fuel pump pre-filter.

1. Install a NEW gasket ring.
2. Place gasket so that it is properly located between fuel pump and fuel pump mounting neck on fuel tank.

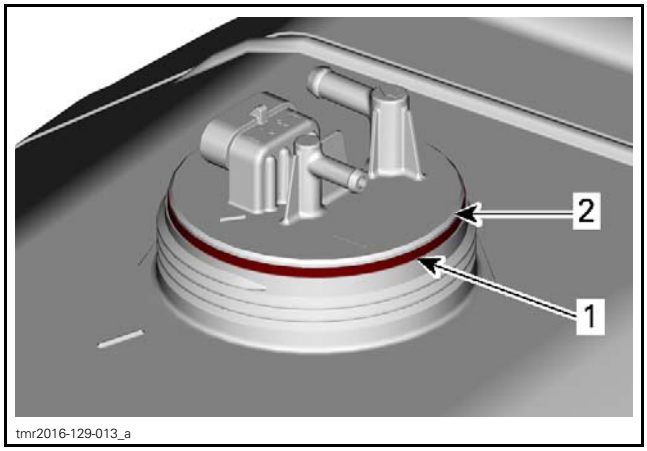

TYPICAL
1. Gasket ring here
2. Fuel pump flange

NOTICE Ensure gasket ring makes good contact all around fuel pump and fuel pump mounting neck on fuel tank.

3. Ensure proper fuel pump orientation as in following illustration.

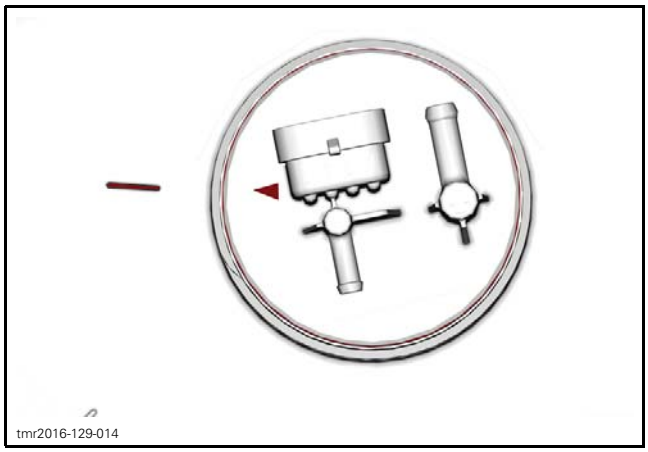

4. Insert fuel pump retaining nut over the fuel pressure hose and electrical wiring connector.
5. While firmly holding pump against tank, engage fuel pump retaining nut on fuel tank flange.

NOTE: If necessary, move the pump in order to ensure the flange is sitting completely flat on the tank.

6. Tighten fuel pump retaining nut to specification.
   6.1 Ensure pump locking ring is fully engaged.
   6.2 To apply the proper torque to the fuel pump retaining nut, install the fuel pump nut tool on a torque wrench with it's handle perpendicularly (90°) to the torque wrench.
   6.3 Ensure pump is properly aligned with index marks after nut it tightened to specification.

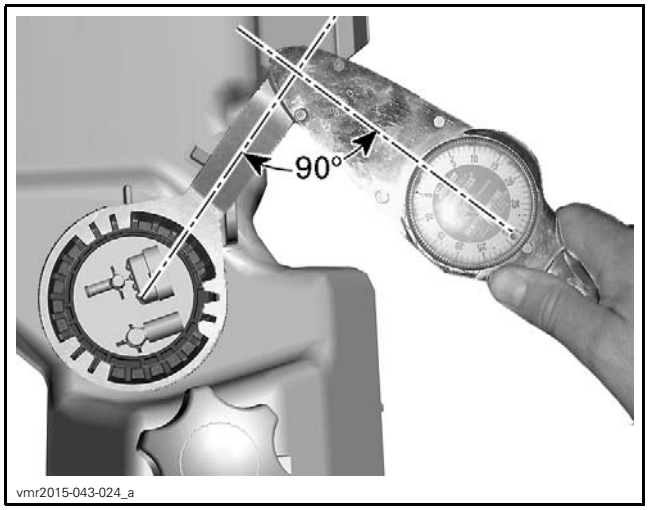

TYPICAL - TORQUE WRENCH PERPENDICULAR TO TOOL HANDLE

TIGHTENING TORQUE	
Fuel pump retaining nut	29 N•m ± 1 N•m (21 lbf•ft ± 1 lbf•ft)

7. Install fuel pressure hose on fuel pump using a NEW Oetiker clamp.
8. Install fuel vent tube on fuel pump.
9. Install electrical connector on fuel pump.
10. Refuel tank and ensure there are no leaks by performing a *TESTING FOR FUEL TANK LEAK* and *TESTING THE FUEL PRESSURE* as described in this subsection.
11. Check fuel level sender operation.

FUEL PUMP PRE-FILTER (STRAINER)

Replacing the Fuel Pump Pre-filter

1. Remove *FUEL PUMP*, see *REMOVING THE FUEL PUMP* in this subsection.
2. Unlock 3 tabs on strainer plastic ring.

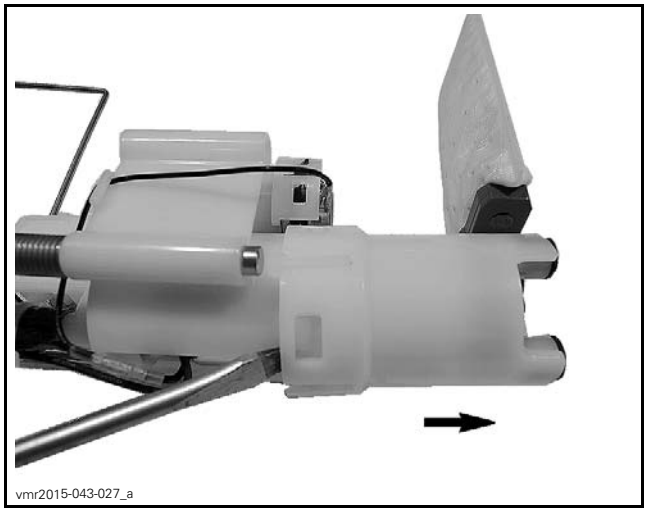

3. Remove rubber pad.

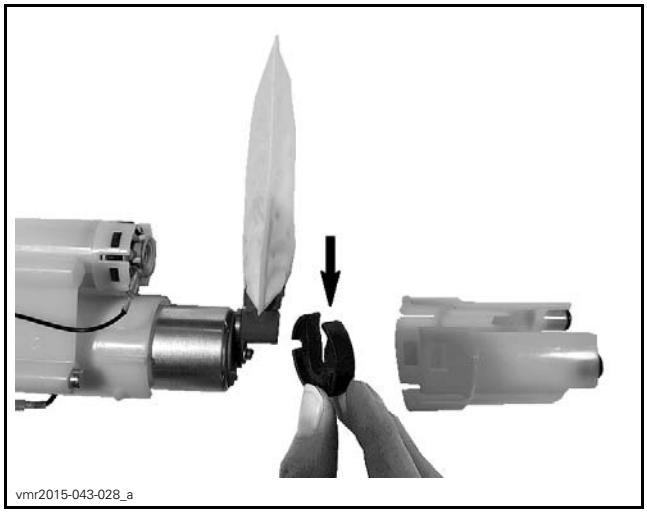

4. Remove push nut securing strainer to fuel pump. Be careful not to break the assembly locator pin.

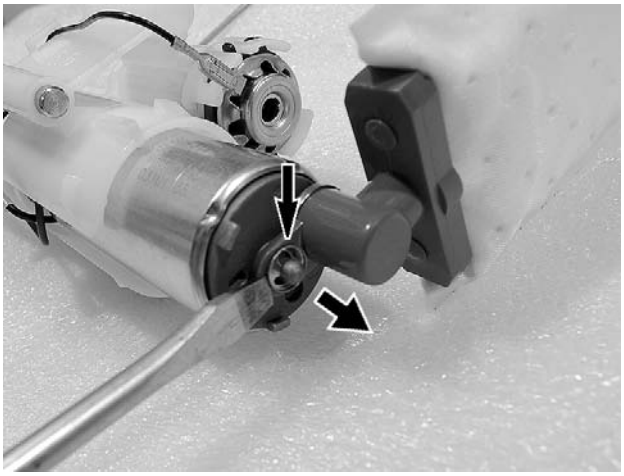
vmr2015-043-029_a

5. Pull strainer off fuel pump.

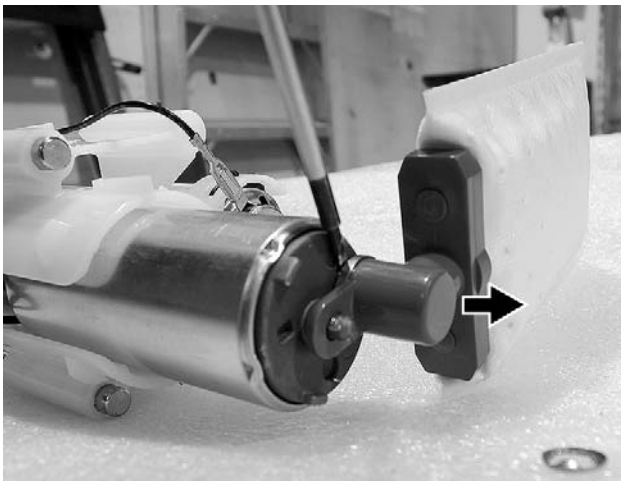
vmr2015-043-030_a

6. Before installing new strainer on fuel pump, lubricate assembly areas circled, with o-ring lubricant or clean oil.

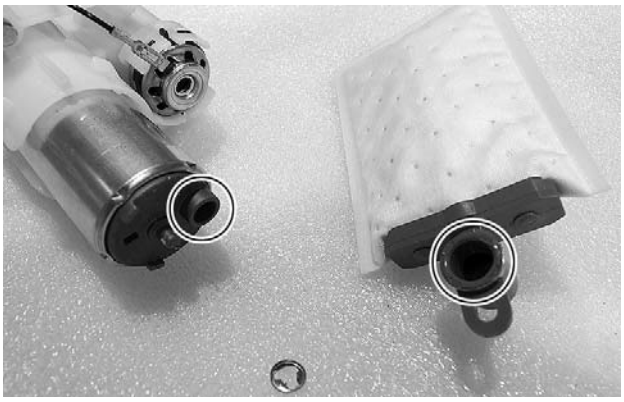
vmr2015-043-031_a

7. Insert the new strainer on fuel pump making sure to press it in fully and tightly against the fuel pump surface.
8. Using a small nut driver or socket, press in a NEW push nut to secure strainer.
9. Reinstall remaining removed parts.

Cleaning Fuel Pump Prefilter

1. Remove fuel pump from fuel tank, refer to *REMOVING THE FUEL PUMP* in *FUEL TANK AND FUEL PUMP* subsection.
2. Clean the fuel pump prefilter (strainer) using the recommended products and low pressure air.

RECOMMENDED PRODUCTS
BRAKE AND PARTS CLEANER PRO S2 (P/N 779245)

3. If the fuel pump prefilter is heavily soiled, clogged or damaged:
   – Replace it with a new one. Refer to *REPLACING THE FUEL PUMP STRAINER* in the *FUEL TANK AND FUEL PUMP* subsection.
   – Inspect inside of fuel tank for contaminants.
   – Clean fuel tank as required.
   – Inspect fuel tank vent breather filter. Replace as necessary. Refer to *FUEL TANK VENT BREATHER FILTER* in *FUEL TANK AND FUEL PUMP* subsection.

FUEL LEVEL SENDER

The fuel level sender is a float actuated variable resistance type that is part of the fuel pump.

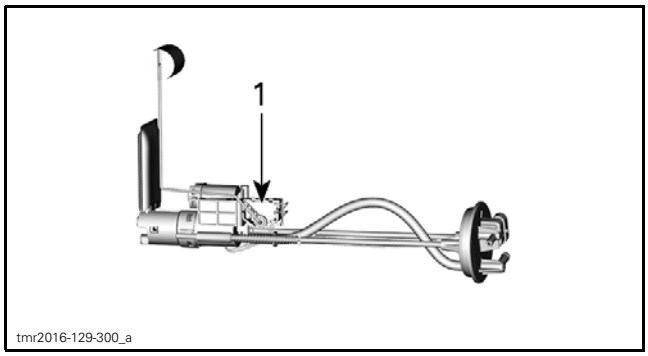

1. Fuel level sender

Testing the Fuel Level Sender Resistance (Fuel Pump Module Installed)

1. Disconnect multifunction gauge, refer to the *LIGHTS/GAUGE/ACCESSORIES* subsection.
2. Measure the resistance of the fuel level sender as follows.

FUEL LEVEL SENDER RESISTANCE TEST		
FUEL LEVEL	GAUGE CONNECTOR	RESISTANCE Ω @ 20°C (68°F)
Full	Pins 3 and 8	6 Ω ± 1
Empty		90 Ω ± 4.5

If readings are out of specification, refer to *TESTING THE FUEL LEVEL SENDER RESISTANCE (AT FUEL PUMP CONNECTOR)*.

If readings are as specified, refer to *TESTING THE FUEL LEVEL SENDER INPUT VOLTAGE*.

Testing the Fuel Level Sender Resistance (at Fuel Pump Connector)

FUEL LEVEL SENDER RESISTANCE TEST		
FUEL LEVEL	FUEL PUMP CONNECTOR (PUMP SIDE)	RESISTANCE Ω @ 20°C (68°F)
Full	PFins 1 and 2	6 Ω ± 1
Empty		90 Ω ± 4.5

If resistance test at fuel pump connector is failed, replace fuel pump module.

Testing the Fuel Level Sender Input Voltage

1. Set ignition switch to ON.
2. Disconnect fuel pump connector.
3. Measure for input voltage as follows.

FUEL LEVEL SENDER INPUT VOLTAGE TEST		
FUEL PUMP CONNECTOR (HARNESS SIDE)	BATTERY	VOLTAGE
Pin 2	Negative terminal	5V

TEST RESULT	SERVICE ACTION
5V is not read	Test wiring continuity between fuel level sender and multifunction gauge
Wiring continuity is good	Replace multifunction gauge
Wiring continuity is not obtained	Repair or replace wiring

Replacing the Fuel Level Sender Replacement

Replace fuel pump. Refer to *FUEL PUMP* in this subsection.

FUEL TANK VENT VALVES

Testing the Fuel Tank Vent Valve

Testing the Inlet Check Valve

1. Install a small hose pincher between the pressure relief valve and the vent inlet.

REQUIRED TOOL	
SMALL HOSE PINCHER (P/N 295 000 076)	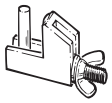

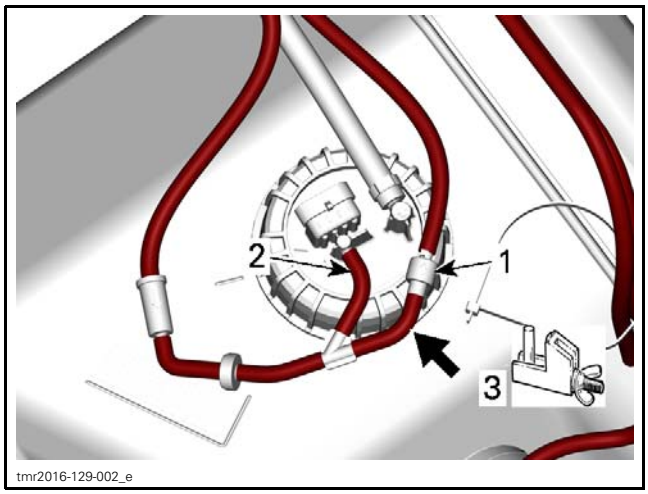

TYPICAL
1. *Pressure relief valve*
2. *Fuel pump vent inlet*
3. *Install small hose pincher here*

2. Connect the vacuum/pressure pump to the fuel tank vent hose inlet.

REQUIRED TOOL	
VACUUM/PRESSURE PUMP (P/N 529 021 800)	

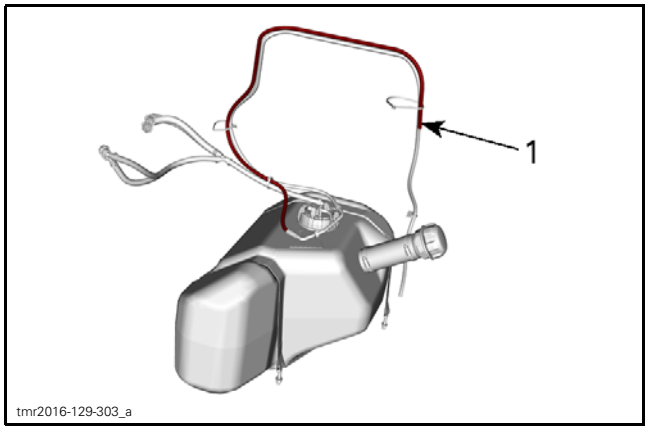

1. *Fuel tank vent hose inlet*

3. Remove fuel tank cap.
4. Set vacuum/pressure pump to **PRESSURE** and activate pump. The gauge on the pump **should not change in reading**.
5. Set vacuum/pressure pump to **VACUUM** and activate pump. The **gauge should increase in reading**.

If the test failed, carry out the following:
- Ensure breather filter is properly installed, refer to *PERIODIC MAINTENANCE PROCEDURES*.
- Ensure inlet check valve is properly installed, refer to *INSTALLING THE FUEL TANK VENT VALVE* in this subsection.
- Test inlet check valve separately. If good, replace the breather filter, refer to *PERIODIC MAINTENANCE PROCEDURES*.

Testing the Pressure Relief Valve

1. Install the small hose pincher between the inlet check valve and the inlet fitting.

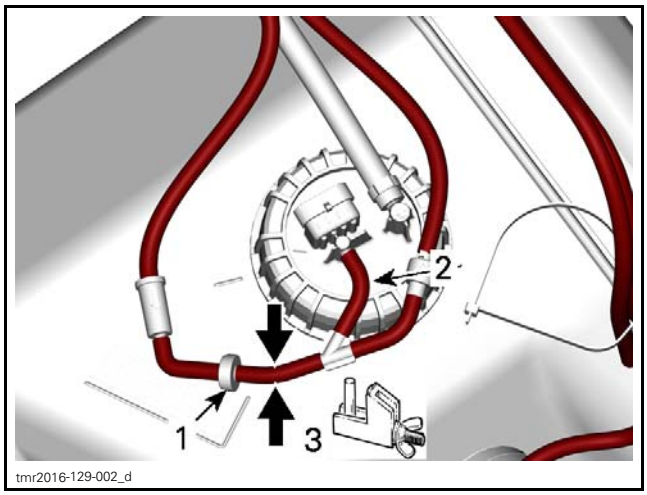

TYPICAL
1. *Inlet check valve*
2. *Vent inlet fitting*
3. *Install small hose pincher here*

2. Set vacuum/pressure pump to **PRESSURE** and activate pump. The **gauge should increase in reading**.
3. Set vacuum/pressure pump to **VACUUM** and activate pump. The gauge on the pump **should not change in reading**.

If the test failed, carry out the following:
- Ensure pressure relief valve is properly installed, refer to *INSTALLING THE PRESSURE RELIEF VALVE* in this subsection.
- Replace pressure relief valve if it fails the test.

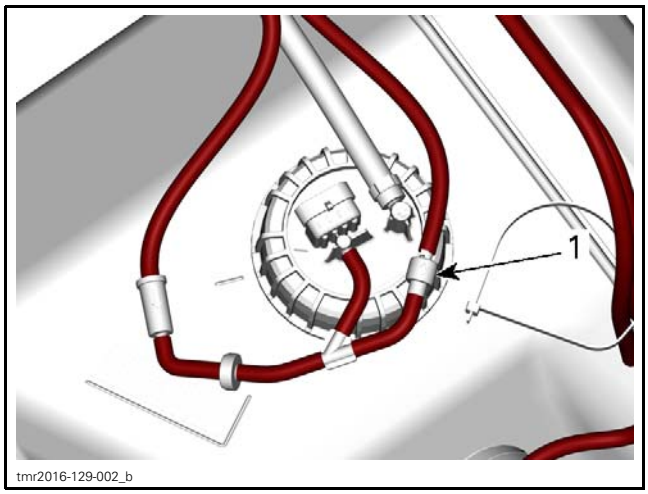

TYPICAL
1. Pressure relief valve flow direction arrow

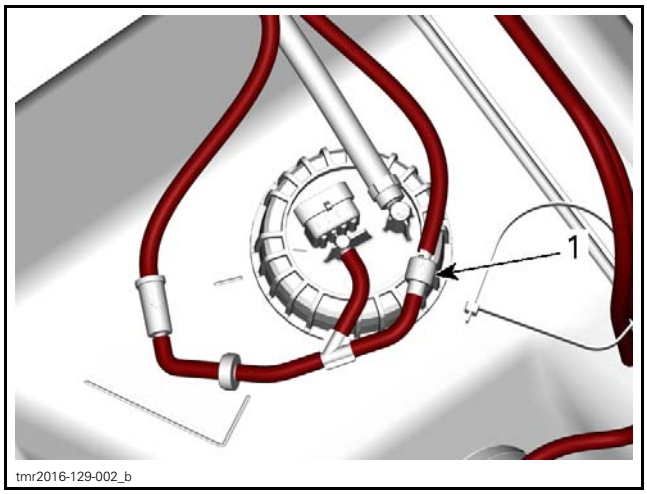

TYPICAL
1. Pressure relief valve flow direction arrow

Installing the Fuel Tank Vent Valve

Installing the Inlet Check Valve

Ensure white portion of inlet check valve is towards the vent breather filter.

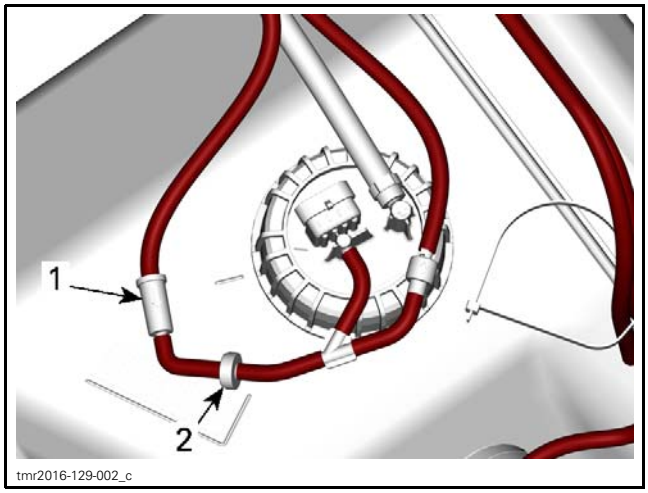

TYPICAL
1. Vent breather filter
2. White portion of inlet check valve

Installing the Pressure Relief Valve

Ensure pressure relief valve flow arrow is pointing away from fuel pump vent fitting.

FUEL TANK AND FUEL PUMP (HD9 / HD10)

SERVICE TOOLS

Description	Part Number	Page
FLUKE 115 MULTIMETER	529 035 868	147
FUEL HOSE ADAPTER	529 036 396	143
FUEL PUMP NUT TOOL	529 035 899	148
OETIKER PLIER	295 000 070	146
PRESSURE GAUGE	529 036 395	143
SMALL HOSE PINCHER	295 000 076	152
VACUUM/PRESSURE PUMP	529 021 800	143, 152

SERVICE TOOLS – OTHER SUPPLIER

Description	Part Number	Page
FLUKE RIGID BACK PROBE	TP88	147

SERVICE PRODUCTS

Description	Part Number	Page
BRAKE AND PARTS CLEANER PRO S2	779245	151
XPS BRAKES AND PARTS CLEANER (USA)	219 701 705	151

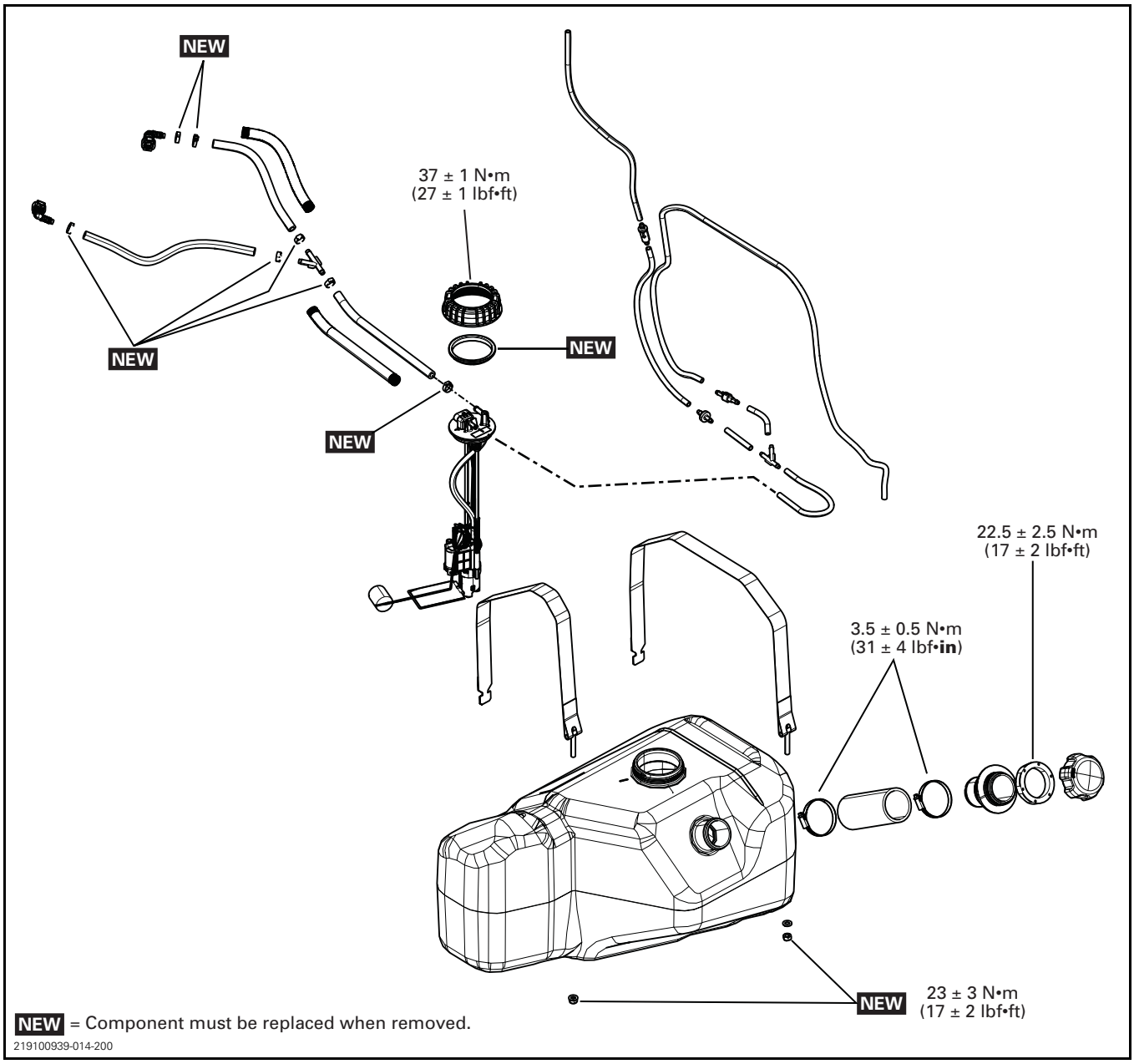
NEW
37 ± 1 N•m
(27 ± 1 lbf•ft)
NEW
NEW
NEW
22.5 ± 2.5 N•m
(17 ± 2 lbf•ft)
3.5 ± 0.5 N•m
(31 ± 4 lbf•in)
NEW
23 ± 3 N•m
(17 ± 2 lbf•ft)
NEW = Component must be replaced when removed.
219100939-014-200

GENERAL

⚠ WARNING

Fuel is flammable and explosive under certain conditions. Ensure work area is well ventilated. Do not smoke or allow open flames or sparks in the vicinity.

⚠ WARNING

Always disconnect battery prior disconnecting a fuel system pressure hose.

⚠ WARNING

Always proceed with care and use appropriate safety equipment when working on pressurized fuel system. Wear safety glasses.

⚠ WARNING

Do not allow fuel to spill on hot engine parts and/or on electrical connectors.

When the repair is completed, ensure that all hoses are connected and secured. Perform the *TESTING THE FUEL PRESSURE* and the *TESTING FOR A FUEL TANK LEAK* as explained in this subsection.

Fuel lines remain under pressure at all times. Proceed with care when removing/installing high pressure test equipment.

SYSTEM DESCRIPTION

Fuel Tank Vent System

The fuel tank is equipped with a vent system that provides over pressure relief and negative pressure relief of the fuel tank.

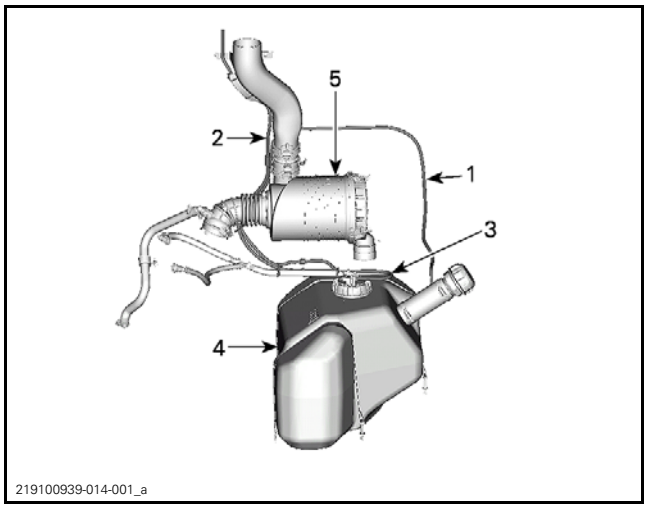

TYPICAL - FUEL TANK VENT SYSTEM
1. *Vent hose*
2. *Vent system hose inlet*
3. *Vent system connected to fuel pump*
4. *Fuel tank*
5. *Engine air intake system*

Air can enter the fuel tank at all times through the vent system INLET check valve. This prevents negative pressure within the fuel tank which could cause fuel starvation.

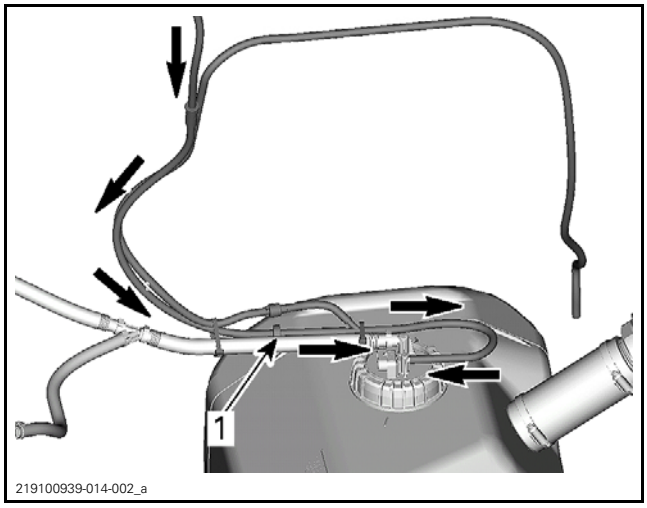

TYPICAL - AMBIENT AIR PRESSURE IN
1. *Vent inlet check valve*

The vent inlet check valve also prevents fuel from flowing out through the inlet of the vent system.

If the pressure in the fuel tank builds up and exceeds 2.5 kPa - 7.6 kPa (.36 PSI - 1.1 PSI), the pressure relief valve opens and lets the excess pressure evacuate through the vent system OUTLET hose.

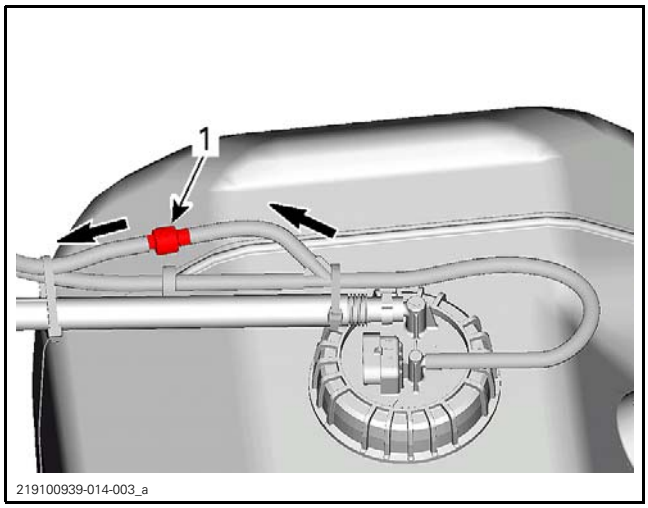

TYPICAL - OVER PRESSURE RELIEF
1. Outlet pressure relief valve

Fuel Tank Vent Breather Filter

The vent system is equipped with an in-line breather filter that prevents entry of particles such as dust or small insects. It is located next to the fuel pump, on the inlet hose, before the air inlet check valve.

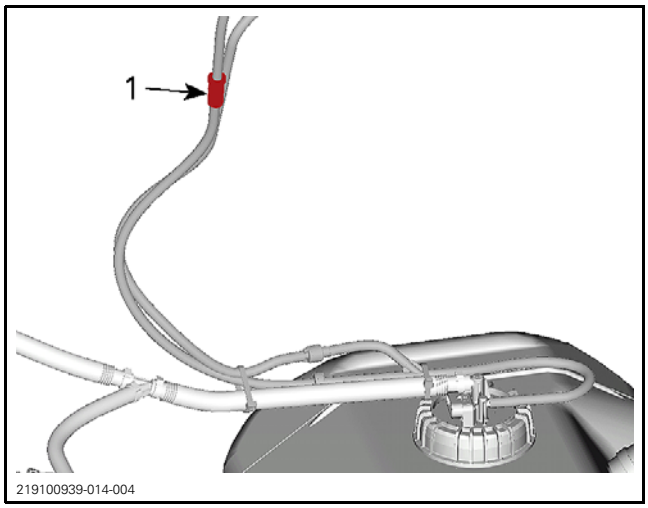

Replacing Fuel Tank Vent Breather Filter

Ensure breather filter is installed with the flow arrow pointing towards the vent hose.

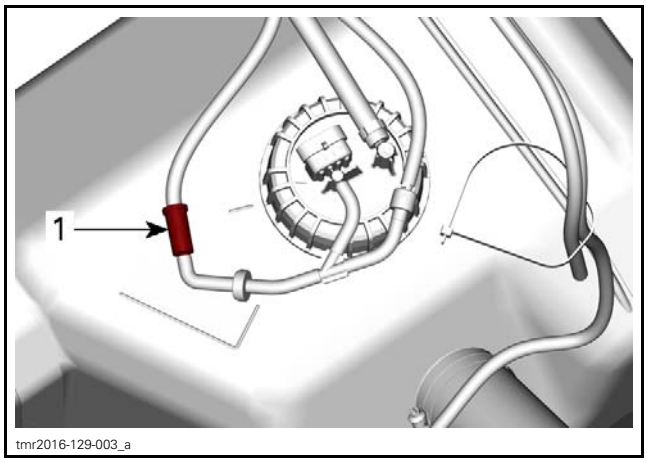

1. Fuel tank vent breather filter

Fuel Pump Module

The fuel pump module is inserted in the fuel tank. It provides fuel delivery for the EFI system and encompasses the following components:

- Electric fuel pump
- Fuel pump pre-filter
- Fuel pressure regulator
- Fuel level sender.

Fuel Filters

The system comprises one level of filtration:

- A replaceable pre-filter element attached to the bottom of the fuel pump.

Fuel Pump Pressure Regulator

The fuel pressure regulator is integral to the fuel pump module. The pressure regulator maintains proper fuel pressure for the EFI system.

INSPECTION

TESTING FOR A FUEL TANK LEAK

⚠ WARNING

Always carry out a fuel tank leak test whenever the fuel tank shows signs of wear or damage which may cause a leak, or when the fuel pump has been removed or replaced, or if you suspect a leak. If the fuel tank is damaged, the fuel tank should be replaced even if no leak is present. Do not attempt to repair the fuel tank.

1. Refill fuel tank and ensure fuel tank cap is in good condition and properly installed.
2. Pressurize the fuel tank through the vent hose.

REQUIRED TOOL	
VACUUM/PRESSURE PUMP (P/N 529 021 800)	

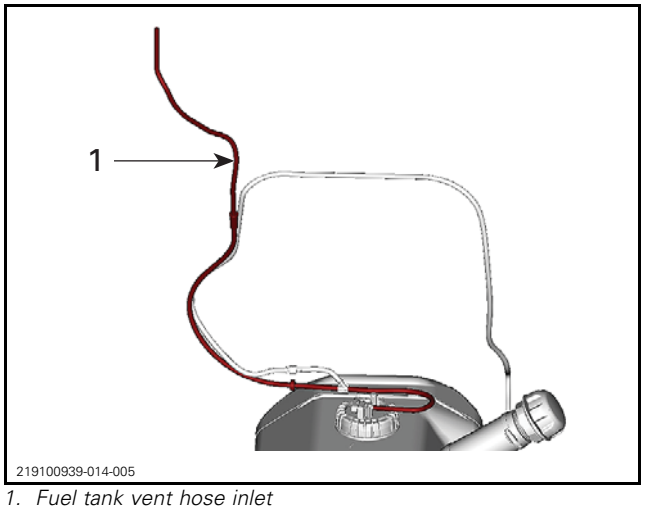

1. *Fuel tank vent hose inlet*

PRESSURE	TIME WITHOUT PRESSURE DROP
14 kPa (2 PSI)	3 minutes

If pressure drops, locate fuel leak(s) and repair or replace leaking component(s).

To locate a leak, check for a fuel smell or leaking fuel.

To ease locating leak(s), spray soapy water on all hose connections and components; bubbles will indicate the leak location(s).

TESTING THE FUEL PRESSURE

The pressure test will show the available pressure in the system. It validates the pressure regulator and the fuel pump, and allows for checking the fuel system for leaks (high pressure side).

Ensure there are no leaks from hoses and fittings. Repair any leaks.

NOTE: Refer to the *FUEL SYSTEM DIAGNOSTIC FLOW CHART* in this subsection to help diagnose a fuel system related problem.

1. Ensure the fuel level in the tank is sufficient.
2. Ensure the battery voltage is over 12 volts.
3. Disconnect fuel pump electric connector
4. Release fuel pressure by running the engine until it runs out of gas.
5. Disconnect both fuel pressure hoses. Refer to *DISCONNECTING A FUEL PRESSURE HOSE* in *FUEL HOSE AND OETIKER CLAMPS*.

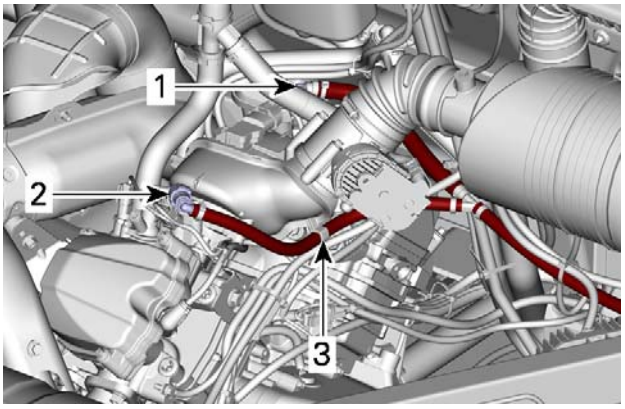

1. *Front cylinder injector fitting*
2. *Rear cylinder injector fitting*
3. *Hose retaining hook*

6. Install the fuel pressure gauge and fuel hose adapter between the disconnected injector fitting and fuel rail (in-line installation).

REQUIRED TOOLS	
PRESSURE GAUGE (P/N 529 036 395)	
FUEL HOSE ADAPTER (P/N 529 036 396)	

TYPICAL - PRESSURE GAUGE SETUP
1. *Pressure gauge to fuel hose adapter*
2. *Fuel hose adapter to fuel rail*
3. *Fuel hose adapter to fuel pump pressure hose*

7. Reconnect the fuel pump electric connector. Clear all fault codes using the BRP diagnostic software (BUDS2).

8. Turn ignition key ON and observe fuel pressure.

FUEL PRESSURE (Valid at 12v ± 0.1v)	350 kPa ± 10 kPa (51 PSI ± 1 PSI)

9. Start engine and observe fuel pressure.
10. Stop engine.
11. Remove test equipment and reconnect fuel hose to injector fuel rail by proceeding in the same manner as for its installation.

Test Conclusion

The fuel pressure should be within specification in static or dynamic tests.

Rapid Pressure Drop

If there is a rapid pressure drop after the engine is stopped, check for leakage at:

– A fuel hose
– A fuel rail.

NOTE: The fuel pump check valve integral to the fuel pump module may also be at fault.

If no leak is detected, replace fuel pump.

Slow Pressure Drop

If there is a slow pressure drop after the engine is stopped, check for a fuel injector leak. Refer to *ELECTRONIC FUEL INJECTION (EFI)* subsection.

NOTE: The fuel pressure regulator or fuel pump check valve integral to the fuel pump module may also be at fault.

If no leak is detected, replace fuel pump.

TROUBLESHOOTING

FUEL SYSTEM DIAGNOSTIC FLOW CHART

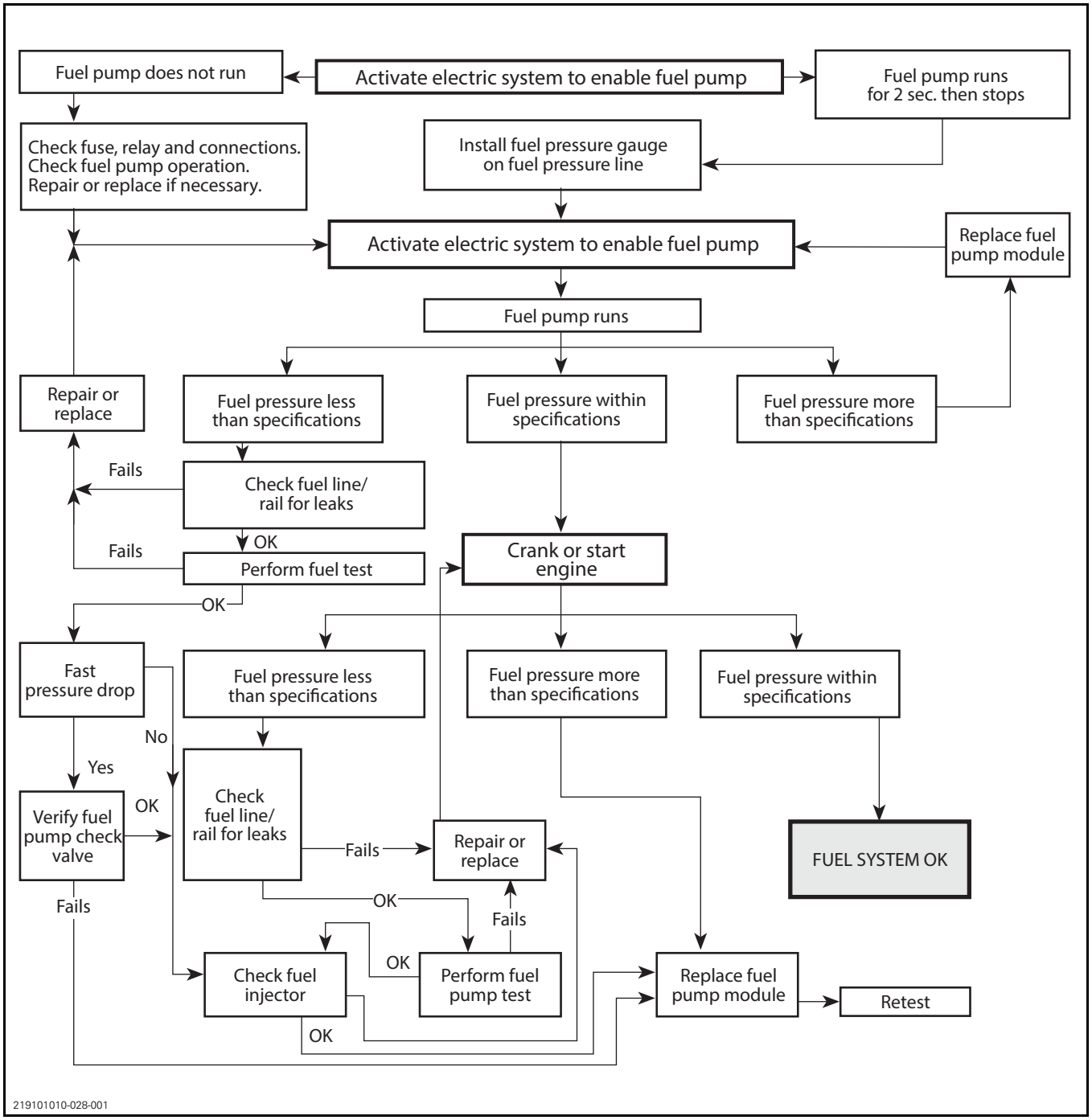

PROCEDURES

FUEL HOSE AND OETIKER CLAMPS

Disconnecting a Fuel Pressure Hose

1. Drain fuel tank. Refer to *DRAINING THE FUEL TANK*.
2. Release fuel pressure by running engine until it runs out of fuel.
3. Carefully disconnect the fuel hose fitting from the injector by pressing on the release tab of the quick disconnect fitting.

Replacing the Fuel Hose

When replacing fuel hoses, be sure to use hoses and clamps as available from BRP parts department. This will ensure continued proper and safe operation.

⚠ WARNING

Use of fuel lines other than those recommended by BRP may compromise fuel system integrity.

⚠ WARNING

Whenever removing a hose in the fuel system, always use new Oetiker clamps at assembly. Then validate fuel system tightness by performing a fuel pressure test.

Replacing the Oetiker Clamp

REQUIRED TOOL	
OETIKER PLIER (P/N 295 000 070)	

FUEL TANK

Draining the Fuel Tank

Remove fuel tank cap and siphon gas into an approved fuel container.

Removing the Fuel Tank

1. Drain fuel tank. Refer to *DRAINING THE FUEL TANK* in this subsection.
2. Disconnect fuel pressure hoses from the fuel injector fuel rails. Refer to *DISCONNECTING A FUEL PRESSURE HOSE* in *FUEL HOSE AND OETIKER CLAMPS*.
3. Disconnect the following from the fuel pump module:
   – Fuel pump electric connector
   – Fuel system vent hose

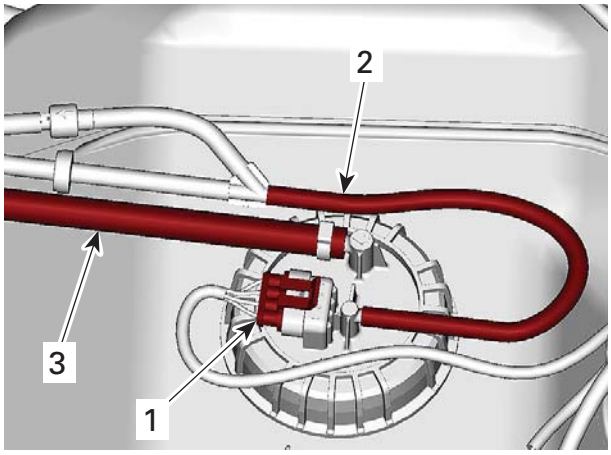

219100939-014-006

1. Fuel pump connector
2. Vent hose
3. High pressure fuel hose

4. Unscrew fuel tank retaining nuts (2) and unhook straps.

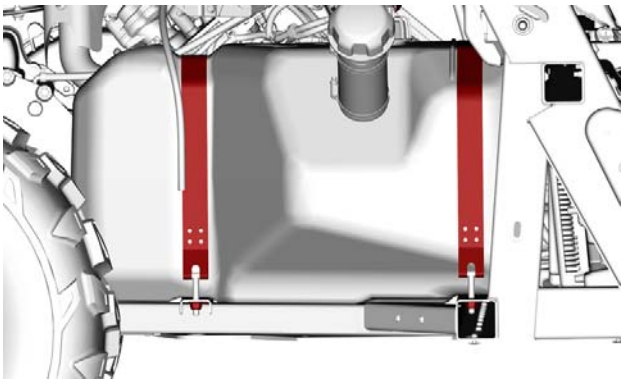
tmr2016-129-011

5. Loosen fuel filler neck hose clamp.
6. Remove fuel tank.

Inspecting the Fuel Tank

1. Visually inspect fuel tank for cracks, wear marks, signs of leakage or any other damages.
2. Visually inspect fuel system hoses for proper rooting, cracking, wear marks, signs of leakage or any other damages.
3. Carry out a *TESTING FOR A FUEL TANK LEAK*, refer to *FUEL TANK AND FUEL PUMP* subsection.

⚠ WARNING

All fuel system leaks must be repaired. Damaged, worn or leaking fuel system components should be replaced to ensure fuel system tightness.

If cracks, gouges or other damages which may lead to a fuel leak, or damages to attachment points that could prevent the tank from being secure are found, replace fuel tank.

Installing the Fuel Tank

Installation is the reverse of the removal procedure. However, pay attention to the following.

Use NEW retaining nuts.

Apply specified torque to fuel tank retaining nuts.

TIGHTENING TORQUE	
Fuel tank retaining nuts	23 N•m ± 3 N•m (17 lbf•ft ± 2 lbf•ft)

Be sure to properly connect and route:
- Fuel tank vent tube
- Fuel pump pressure hose
- Electrical connector.

Refuel tank and ensure there are no leaks by performing a *TESTING FOR A FUEL TANK LEAK* and a *TESTING THE FUEL PRESSURE* as described in this subsection.

FUEL PUMP

Testing the Fuel Pressure

Refer to *INSPECTION* in this subsection.

Quickly Testing the Fuel Pump

1. Turn ignition key to ON.
2. Listen for fuel pump operation.

NOTE: Fuel pump should come ON for a few seconds, then stop.

If fuel pump does not come ON, carry out the following:
- Check fuel pump relay fuse (F5) and Main relay (R2).
- Check in the BRP diagnostic software (BUDS2) for applicable fault codes.
- Carry out a fuel pump input voltage test.

Testing the Fuel Pump Input Voltage

1. Disconnect the fuel pump connector.
2. Turn ignition key ON.
3. Read voltage as follows.

NOTE: The fuel pump voltage will be read only when the fuel pump is activated.

REQUIRED TOOLS	
FLUKE 115 MULTIMETER (P/N 529 035 868)	
FLUKE RIGID BACK PROBE (P/N TP88)	

TESTING THE FUEL PUMP INPUT VOLTAGE		
TEST PROBES		VOLTAGE READING
Fuel pump connector Pin 3	Fuel pump connector Pin 4	Battery voltage

If battery voltage is read, carry out a fuel pump resistance test.

If battery voltage is not read, test fuel pump power input as follows.

TESTING THE FUEL PUMP POWER WIRE		
TEST PROBES		VOLTAGE READING
Fuel pump connector Pin 3	Battery ground	Battery voltage

If battery voltage is now read, check fuel pump ground circuit between fuel pump connector FP-4 and battery ground.

If battery voltage is still not read, check the following:
- Fuse (F5)
- Main relay (R2)
- Fuel pump relay input voltage (control and power circuits)
- Fuel pump relay control circuit continuity to ECM-M1
- Wiring and connectors.

Testing the Fuel Pump Resistance

1. Ensure fuel pump connector is properly connected.
2. Remove main relay (R2).

Disconnect fuel pump connector and measure resistance at fuel pump connector.

TESTING THE FUEL PUMP RESISTANCE (AT FUEL PUMP CONNECTOR)	
Pins 3 and 4	Approximately 2 Ω

If test failed at pump connector, replace fuel pump.

If test succeeded at pump connector, check wiring and connectors from:

– Fuse box to fuel pump
– Fuel pump to battery ground.

Repair or replace as necessary.

Releasing the Fuel System Pressure

Refer to *DISCONNECTING A FUEL PRESSURE HOSE* in this subsection.

Removing the Fuel Pump

1. Release the pressure of the fuel system.
2. Disconnect the following from the fuel pump:
   – Fuel pump electric connector
   – Fuel system vent hose
   – Fuel pump pressure hose.

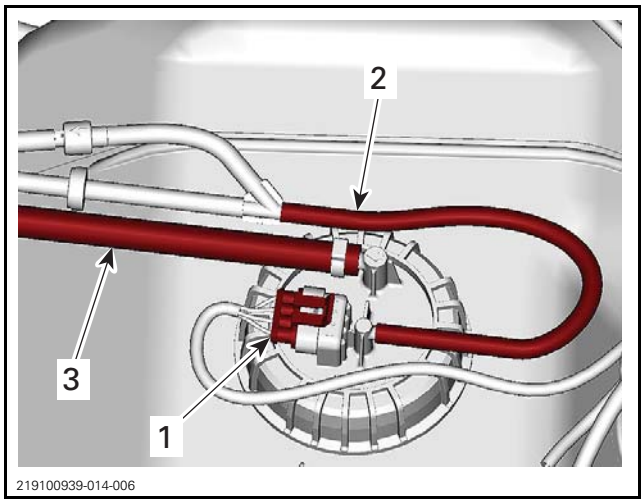

1. Fuel pump connector
2. Vent hose
3. High pressure fuel hose

3. Remove fuel pump retaining nut.

⚠ WARNING

Fuel vapors are flammable and explosive under certain conditions. Use only non-sparking tools.

NOTICE **Replace fuel pump gasket whenever fuel pump retaining nut is loosened.**

REQUIRED TOOL	
FUEL PUMP NUT TOOL (P/N 529 035 899)	

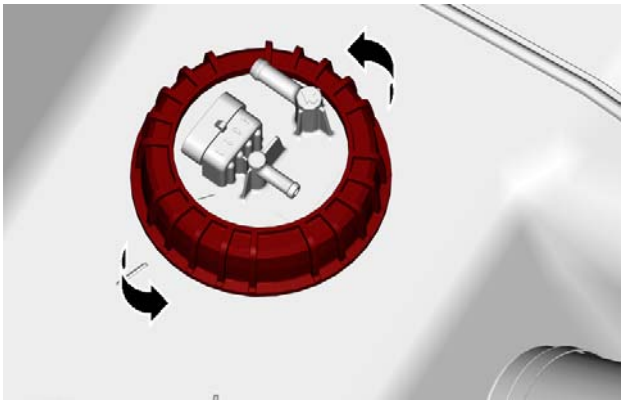

TYPICAL
1. Fuel pump retaining nut

4. Carefully pull out and rotate fuel pump as required.

NOTICE **Pay attention not to damage fuel sender and fuel pump prefilter.**

5. Discard gasket ring.
6. Wipe off any fuel spillage.

Installing the Fuel Pump

The installation is the reverse of the removal procedure. However, pay attention to the following.

Rotate fuel pump during insertion as per removal procedure.

NOTICE **Pay attention not to damage fuel sender and fuel pump pre-filter.**

1. Install a NEW gasket ring.
2. Place gasket so that it is properly located between fuel pump and fuel pump mounting neck on fuel tank.

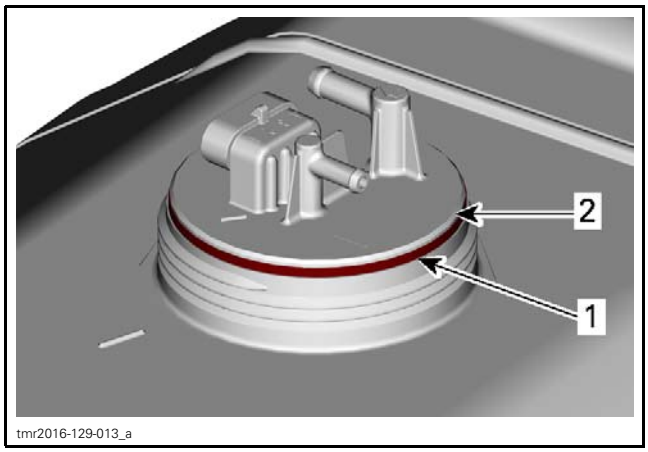

TYPICAL
1. Gasket ring here
2. Fuel pump flange

NOTICE Ensure gasket ring makes good contact all around fuel pump and fuel pump mounting neck on fuel tank.

3. Ensure proper fuel pump orientation as in following illustration.

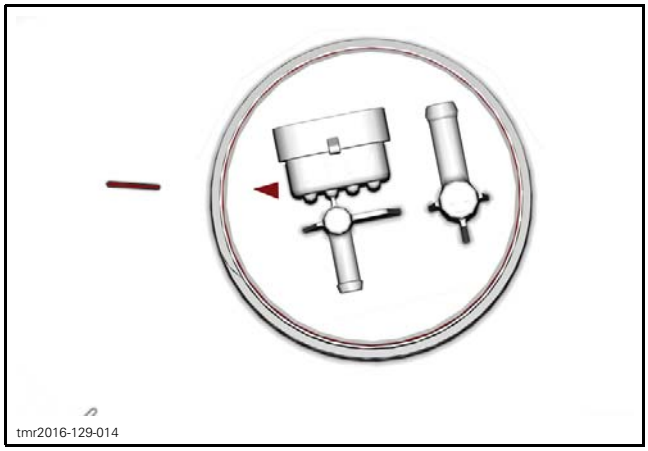

4. Insert fuel pump retaining nut over the fuel pressure hose and electrical wiring connector.
5. While firmly holding pump against tank, engage fuel pump retaining nut on fuel tank flange.

NOTE: If necessary, move the pump in order to ensure the flange is sitting completely flat on the tank.

6. Tighten fuel pump retaining nut to specification.
   6.1 Ensure pump locking ring is fully engaged.
   6.2 To apply the proper torque to the fuel pump retaining nut, install the fuel pump nut tool on a torque wrench with it's handle perpendicularly (90°) to the torque wrench.
   6.3 Ensure pump is properly aligned with index marks after nut it tightened to specification.

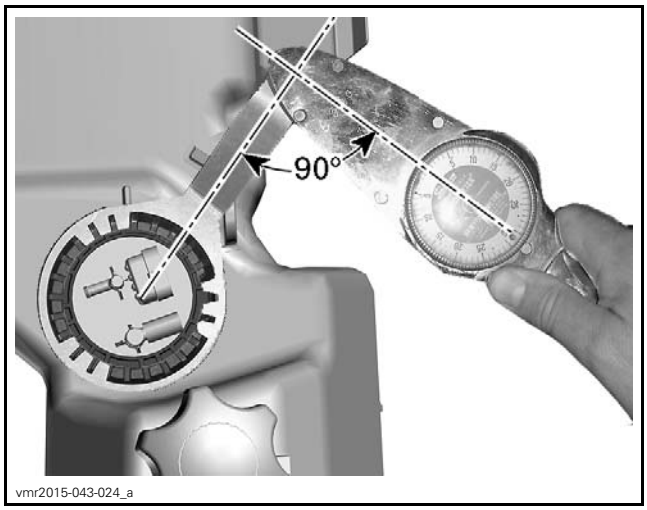

TYPICAL - TORQUE WRENCH PERPENDICULAR TO TOOL HANDLE

TIGHTENING TORQUE	
Fuel pump retaining nut	29 N•m ± 1 N•m (21 lbf•ft ± 1 lbf•ft)

7. Install fuel pressure hose on fuel pump using a NEW Oetiker clamp.
8. Install fuel vent tube on fuel pump.
9. Install electrical connector on fuel pump.
10. Install main relay (R2).
11. Refuel tank and ensure there are no leaks by performing a *FUEL TANK LEAK TEST* and a *FUEL PRESSURE TEST* as described in this subsection.
12. Check fuel level sender operation.

FUEL PUMP PRE-FILTER (STRAINER)

Replacing the Fuel Pump Pre-filter

1. Remove *FUEL PUMP*, see *REMOVING THE FUEL PUMP* in this subsection.
2. Unlock 3 tabs on strainer plastic ring.

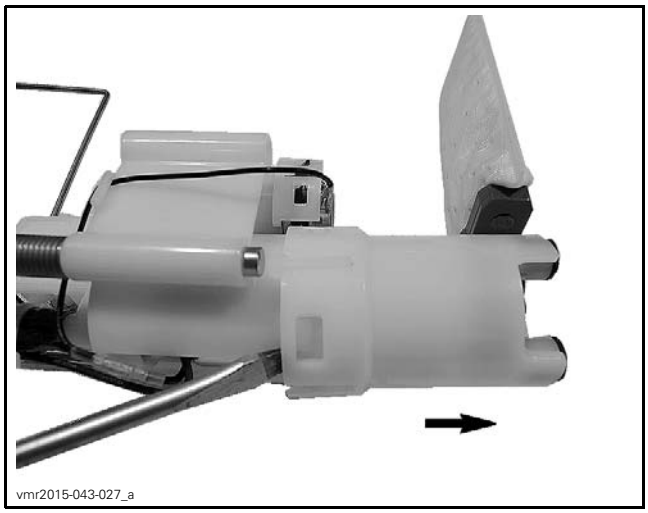
vmr2015-043-027_a

3. Remove rubber pad.

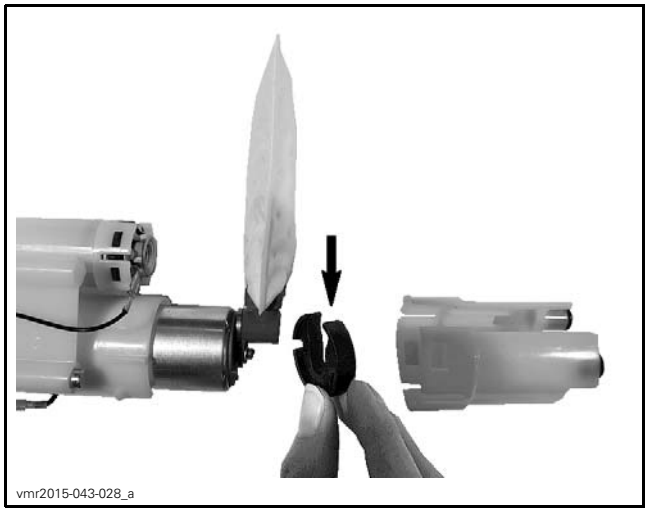
vmr2015-043-028_a

4. Remove push nut securing strainer to fuel pump. Be careful not to break the assembly locator pin.

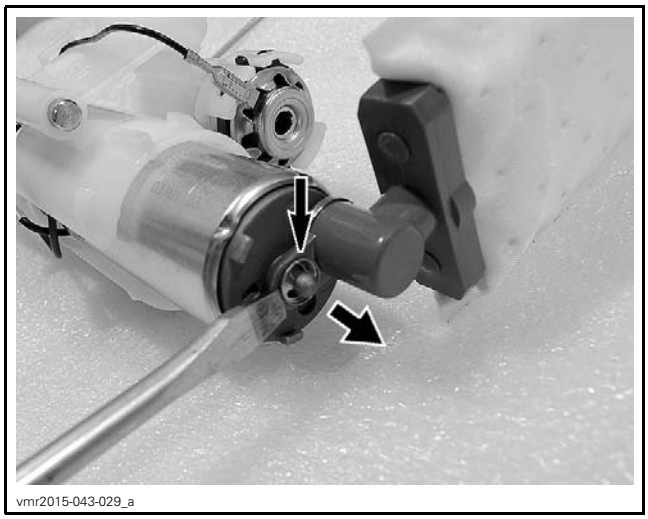
vmr2015-043-029_a

5. Pull strainer off fuel pump.

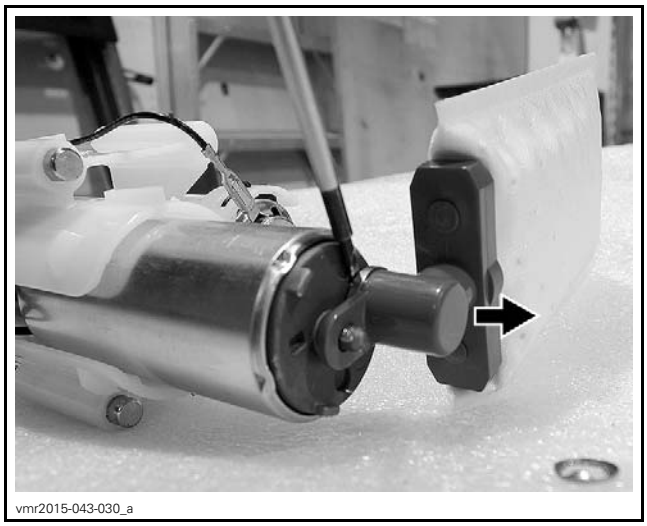
vmr2015-043-030_a

6. Before installing new strainer on fuel pump, lubricate assembly areas circled, with O-ring lubricant or clean oil.

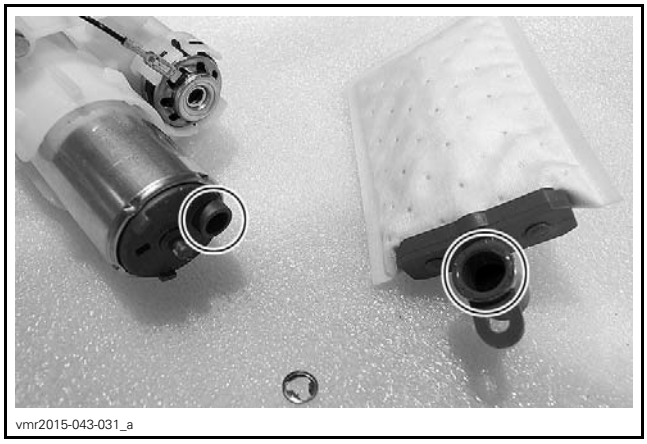
vmr2015-043-031_a

7. Insert the new strainer on fuel pump making sure to press it in fully and tightly against the fuel pump surface.
8. Using a small nut driver or socket, press in a **NEW** push nut to secure strainer.
9. Reinstall remaining removed parts.

Cleaning Fuel Pump Prefilter

1. Remove fuel pump from fuel tank, refer to *REMOVING THE FUEL PUMP* in *FUEL TANK AND FUEL PUMP* subsection.
2. Clean the fuel pump prefilter (strainer) using the recommended products and low pressure air.

RECOMMENDED PRODUCTS
XPS BRAKES AND PARTS CLEANER (USA) (P/N 219 701 705) or BRAKE AND PARTS CLEANER PRO S2 (P/N 779245)

3. If the fuel pump prefilter is heavily soiled, clogged or damaged:
   – Replace it with a new one. Refer to *REPLACING THE FUEL PUMP PRE-FILTER* in the *FUEL TANK AND FUEL PUMP* subsection.
   – Inspect inside of fuel tank for contaminants.
   – Clean fuel tank as required.
   – Inspect fuel tank vent breather filter. Replace as necessary. Refer to *FUEL TANK VENT BREATHER FILTER* in *FUEL TANK AND FUEL PUMP* subsection.

FUEL LEVEL SENDER

The fuel level sender is a float actuated variable resistance type that is part of the fuel pump.

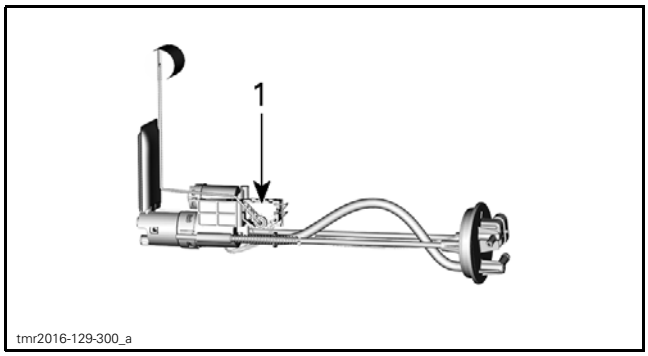

1. Fuel level sender

Testing the Fuel Level Sender Resistance (Fuel Pump Module Installed)

1. Disconnect multifunction gauge.
2. Measure the resistance of the fuel level sender as follows.

TESTING THE FUEL LEVEL SENDER RESISTANCE		
FUEL LEVEL	GAUGE CONNECTOR	RESISTANCE Ω @ 20°C (68°F)
Full	Pins 3 and 8	6 Ω ± 1
Empty		90 Ω ± 4.5

If readings are out of specification, refer to *TESTING THE FUEL LEVEL SENDER RESISTANCE (AT FUEL PUMP CONNECTOR)*.

If readings are as specified, refer to *TESTING THE FUEL LEVEL SENDER INPUT VOLTAGE*.

Testing the Fuel Level Sender Resistance (at Fuel Pump Connector)

TESTING THE FUEL LEVEL SENDER RESISTANCE		
FUEL LEVEL	FUEL PUMP CONNECTOR	RESISTANCE Ω @ 20°C (68°F)
Full	Pins 1 and 2	6 Ω ± 1
Empty		90 Ω ± 4.5

If resistance test at fuel pump connector is failed, replace fuel pump module.

Testing the Fuel Level Sender Input Voltaget

1. Set ignition switch to ON.
2. Disconnect fuel pump connector, refer to *FUEL PUMP CONNECTOR ACCESS* in this subsection.
3. Measure for input voltage as follows.

TESTING FUEL LEVEL SENDER INPUT VOLTAGE		
FUEL PUMP CONNECTOR	BATTERY	VOLTAGE
Pin 2	Negative terminal	5V

TEST RESULT	SERVICE ACTION
5V is not read	Test wiring continuity between fuel level sender and multifunction gauge
Wiring continuity is good	Replace multifunction gauge
Wiring continuity is not obtained	Repair or replace wiring

Replacing the Fuel Level Sender

Replace fuel pump. Refer to *FUEL PUMP* in this subsection.

FUEL TANK VENT VALVES

Testing the Fuel Tank Vent Valves

Testing the Inlet Check Valve

1. Remove rear body module, refer to *BODY* subsection.
2. Install a small hose pincher between the vent pressure relief valve and the fuel pump vent inlet.

REQUIRED TOOL	
SMALL HOSE PINCHER (P/N 295 000 076)	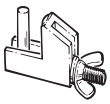

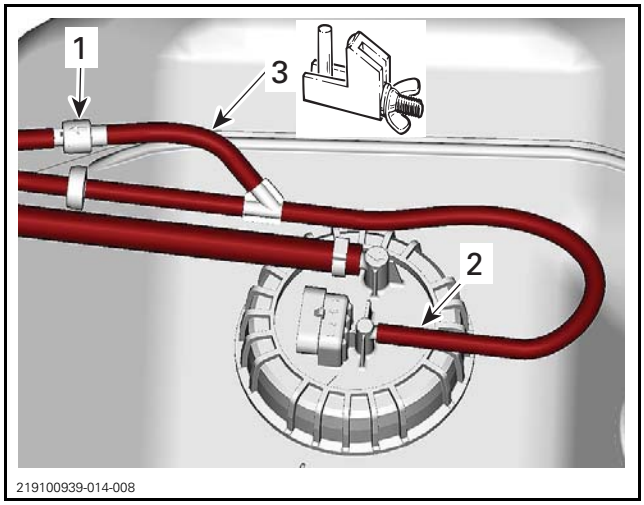

TYPICAL
1. *Pressure relief valve*
2. *Fuel pump vent inlet*
3. *Install small hose pincher here*

3. Connect the vacuum/pressure pump to the fuel tank vent hose inlet.

REQUIRED TOOL	
VACUUM/PRESSURE PUMP (P/N 529 021 800)	

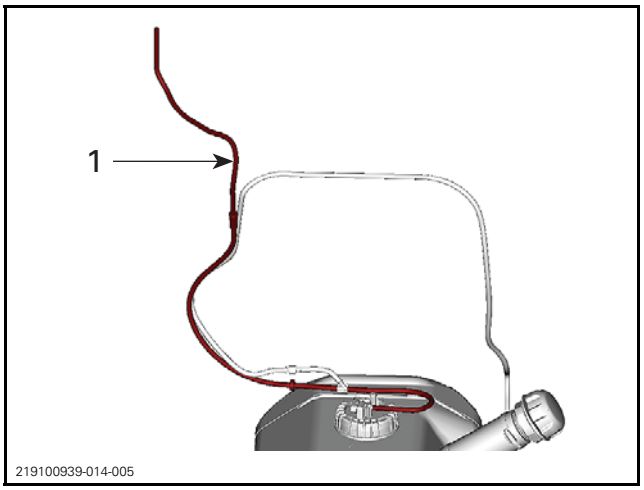

1. *Fuel tank vent hose inlet*

4. Remove fuel tank cap.
5. Set vacuum/pressure pump to **PRESSURE** and activate pump. The gauge on the pump **should not change in reading**.
6. Set vacuum/pressure pump to **VACUUM** and activate pump. The **gauge should increase in reading**.

If the test failed, carry out the following:

– Ensure breather filter is properly installed, refer to *PERIODIC MAINTENANCE PROCEDURES*.
– Ensure inlet check valve is properly installed, refer to *INSTALLING THE FUEL TANK VENT VALVE* in this subsection.
– Test inlet check valve separately. If good, replace the breather filter, refer to *PERIODIC MAINTENANCE PROCEDURES*.

Testing the Pressure Relief Valve

1. Install the small hose pincher between the inlet check valve and the fuel pump vent inlet fitting.

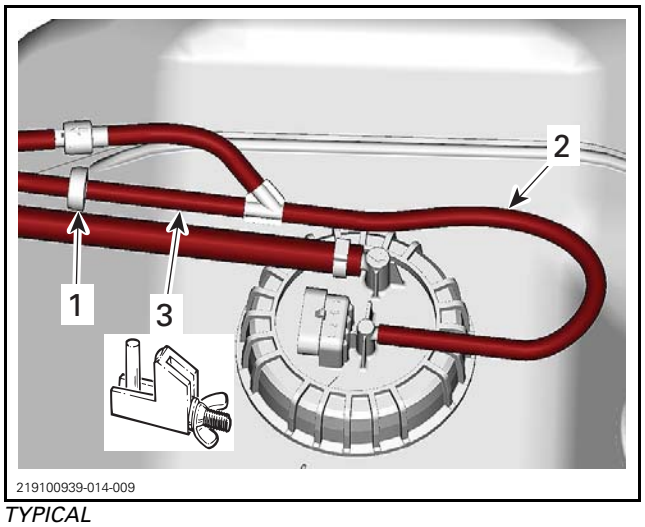

TYPICAL
1. *Inlet check valve*
2. *Fuel pump vent inlet fitting*
3. *Install small hose pincher here*

2. Set vacuum/pressure pump to **PRESSURE** and activate pump. The **gauge should increase in reading**.
3. Set vacuum/pressure pump to **VACUUM** and activate pump. The gauge on the pump **should not change in reading**.

If the test failed, carry out the following:

– Ensure pressure relief valve is properly installed, refer to *INSTALLING THE PRESSURE RELIEF VALVE* in this subsection.
– Replace pressure relief valve if it fails the test.

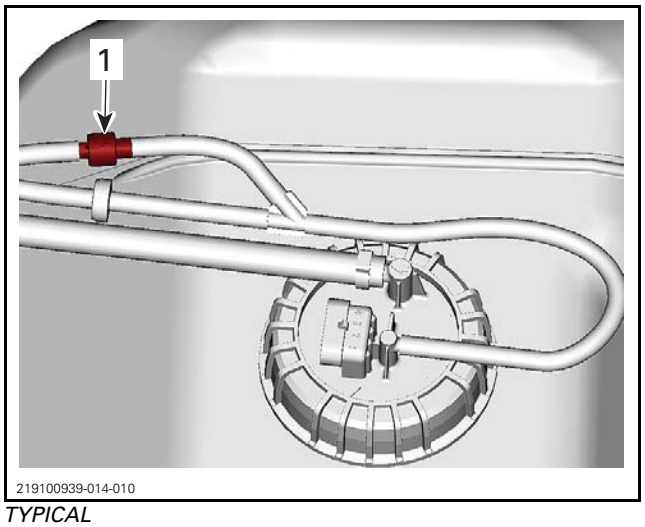

TYPICAL
1. *Pressure relief valve*

Installing the Fuel Tank Vent Valves

Installing the Inlet Check Valve

Ensure white portion of inlet check valve is towards the vent breather filter.

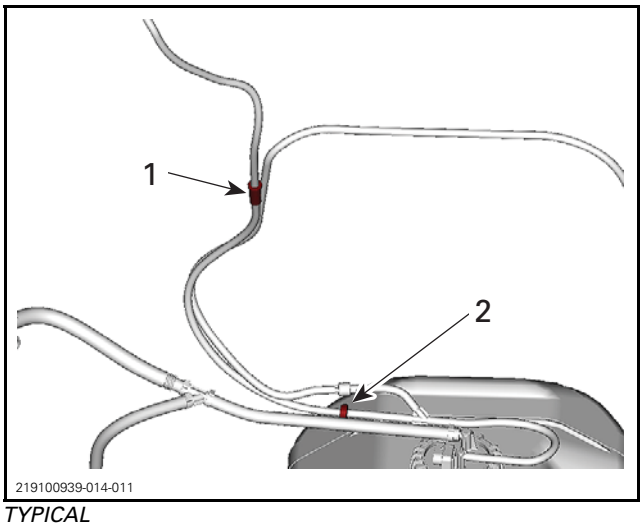

TYPICAL
1. *Vent breather filter*
2. *White portion of inlet check valve*

Installing the Pressure Relief Valve

Ensure pressure relief valve flow arrow does not point toward the fuel pump

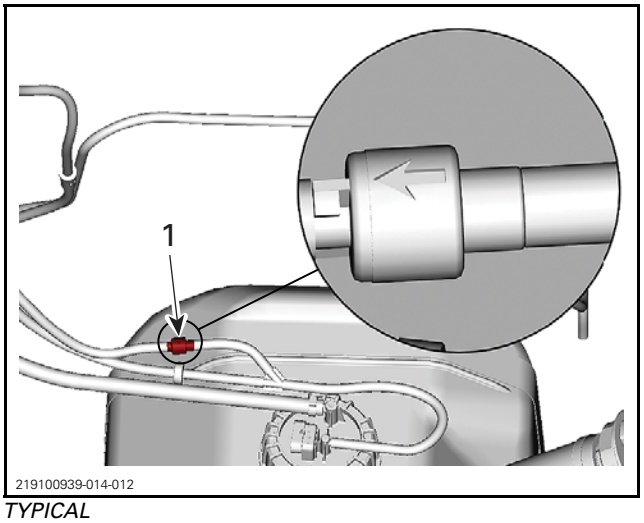

TYPICAL
1. *Pressure relief valve flow direction arrow*

EVAPORATIVE EMISSION CONTROL SYSTEM (EVAP)

SERVICE TOOLS

Description	Part Number	Page
VACUUM/PRESSURE PUMP	529 021 800	160

SERVICE TOOLS – OTHER SUPPLIER

Description	Part Number	Page
SNAP-ON SMOKE MACHINE	EELD100	159

GENERAL

The evaporative emission control system (EVAP) is designed to prevent fuel vapors from escaping into the atmosphere.

When vehicle is at rest, fuel vapors accumulate in the canister.

When engine is running in predetermined conditions, the ECM controls the purge valve, allowing the engine aspirate the fuel vapors through the intake manifold in order to burn them.

Fresh air is drawn at the other end of the canister through a pre-filter.

NOTE: The illustrations in this document are from a typical system and may not represent the exact parts layout of the vehicle to be serviced.

TYPICAL PARTS IDENTIFICATION

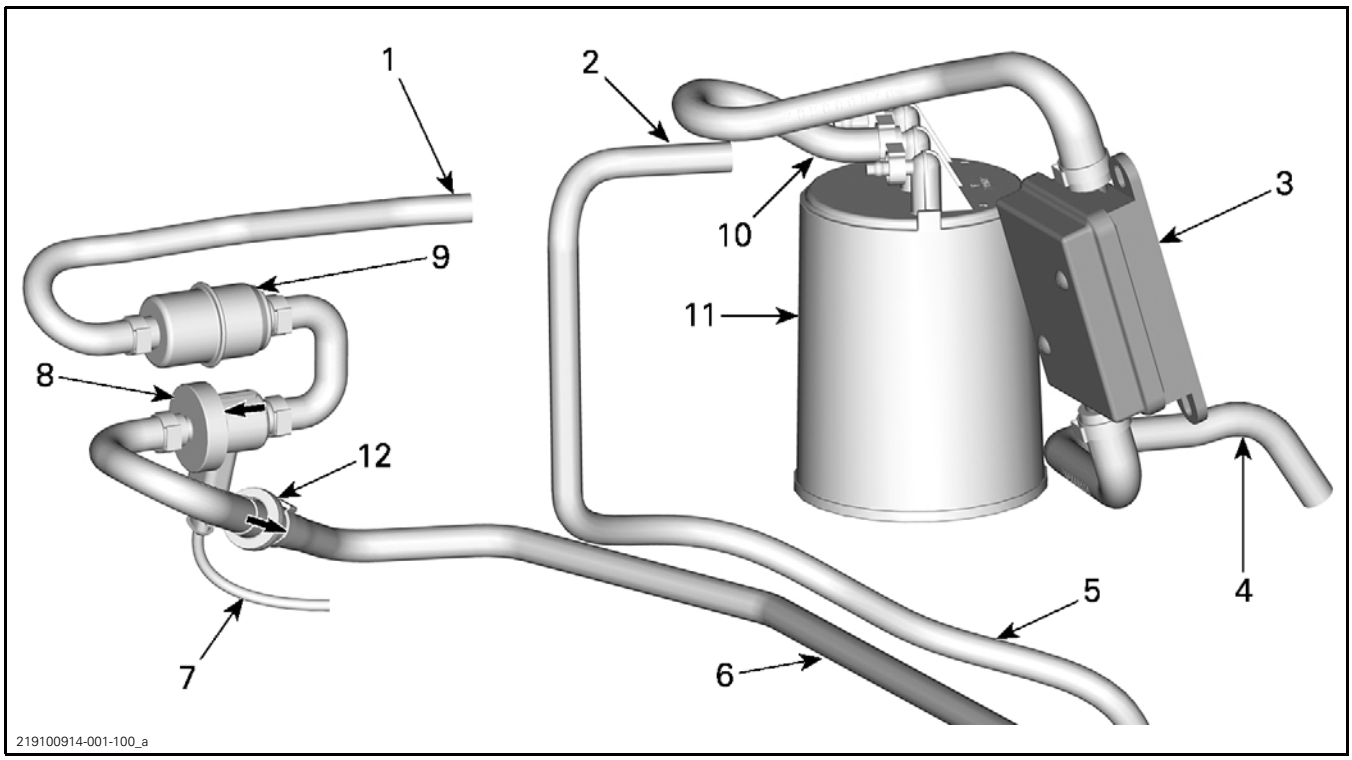

CANISTER AREA
1. *Canister purge hose (to canister port P)*
2. *Fuel tank vent hose (to canister port T)*
3. *Canister vent pre-filter*
4. *Canister vent hose inlet (To chassis)*
5. *Fuel tank vent hose (to fuel tank - rollover valve)*
6. *Canister purge hose (to intake manifold)*
7. *Purge valve wiring harness*
8. *Purge valve*
9. *Filter*
10. *Canister vent hose (to canister port A)*
11. *Canister*
12. *Check valve*

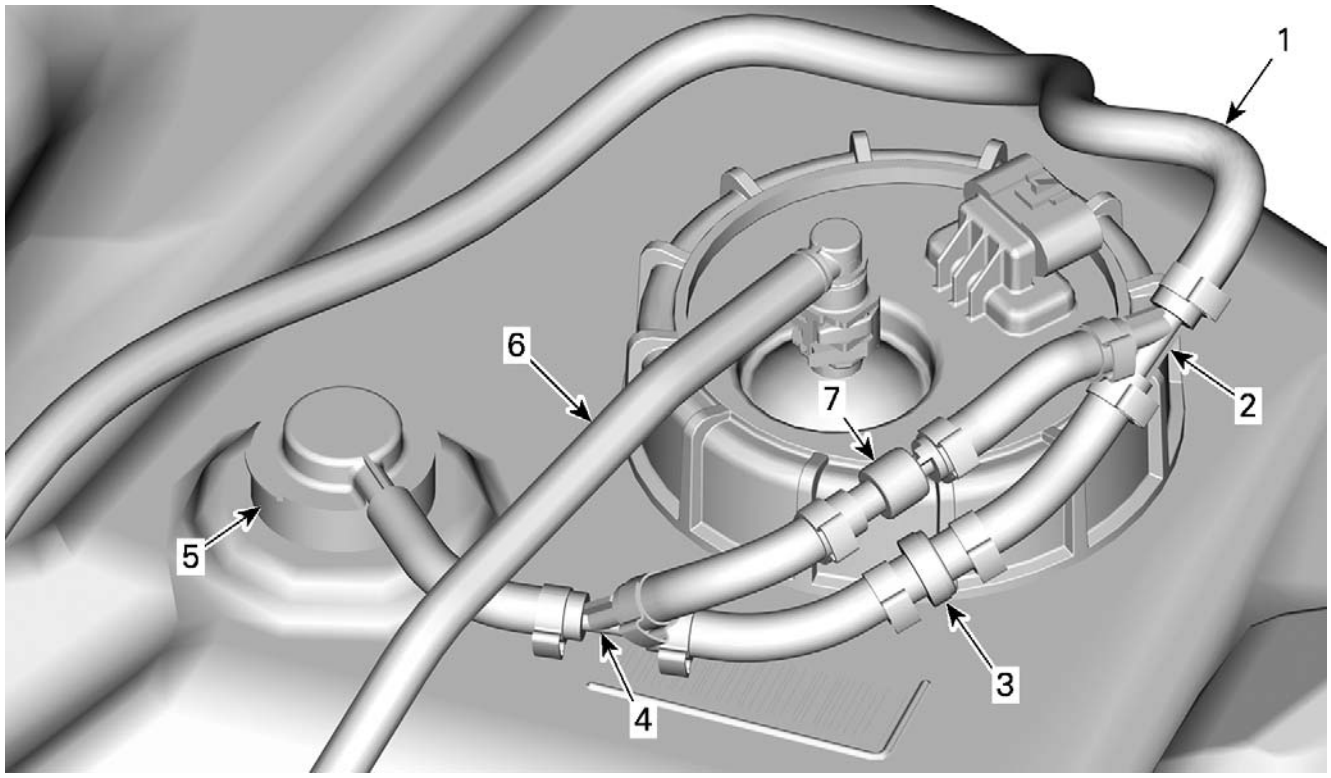

219100914-001-101_a

FUEL TANK AREA
1. *Fuel tank vent hose (to canister port T)*
2. *Y fitting*
3. *Check valve*
4. *Y fitting*
5. *Rollover valve*
6. *Fuel hose (to fuel injectors)*
7. *Pressure relief valve*

SYSTEM SCHEMATIC

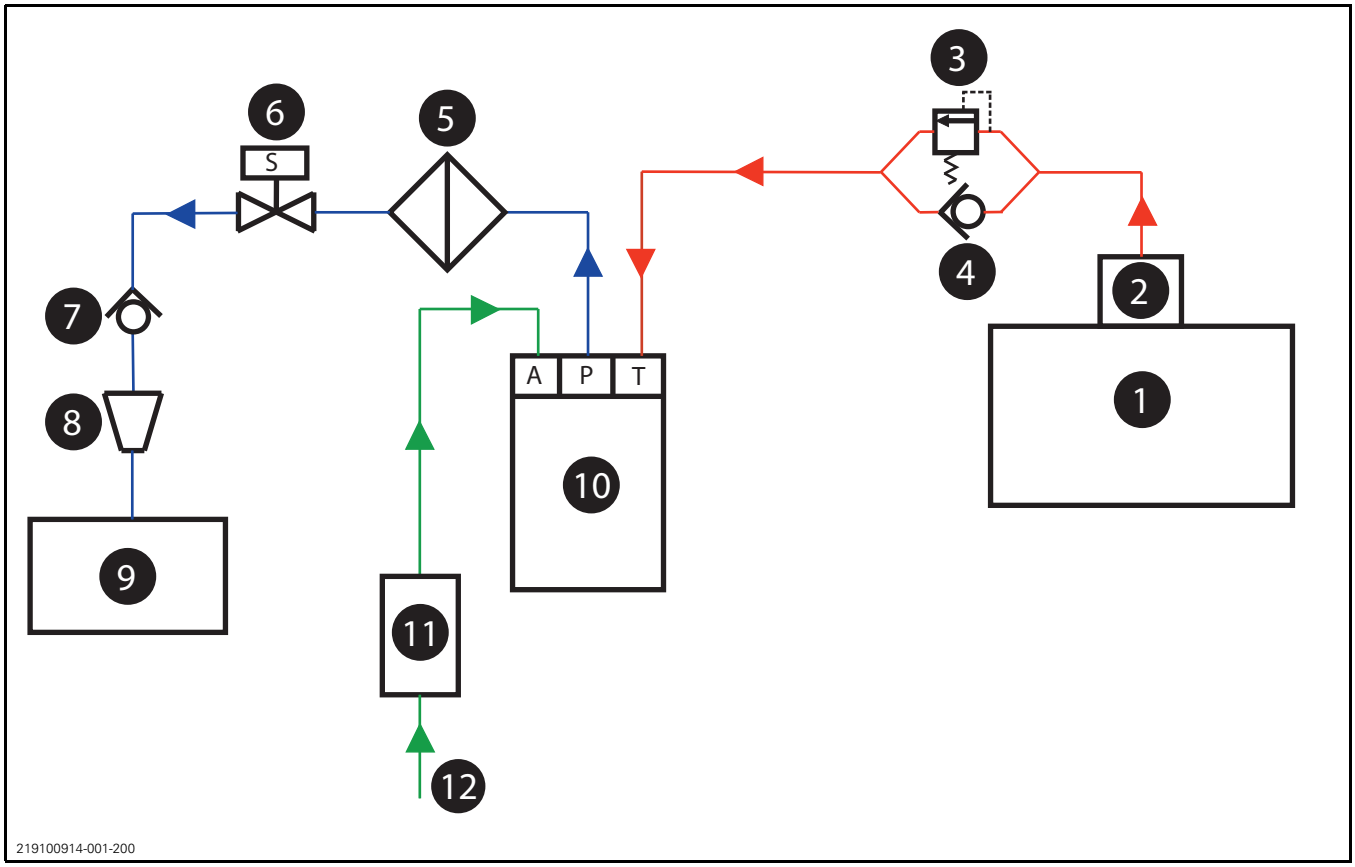

1. *Fuel tank*
2. *Rollover valve*
3. *Pressure relief valve*
4. *Check valve*
5. *Filter*
6. *Purge valve*
7. *Check valve*
8. *Flow reducer (if equipped)*
9. *Engine intake manifold*
10. *Canister*
11. *Vent pre-filter*
12. *Vent hose*

S: Solenoid
A: Vent port (to ambient air)
P: Purge port (to purge valve)
T: Vapor inlet port (to fuel tank)

MAINTENANCE

REPLACING THE CANISTER VENT PRE-FILTER

To replace the pre-filter:

1. Remove the hose clamps.
2. Remove the pre-filter assembly.

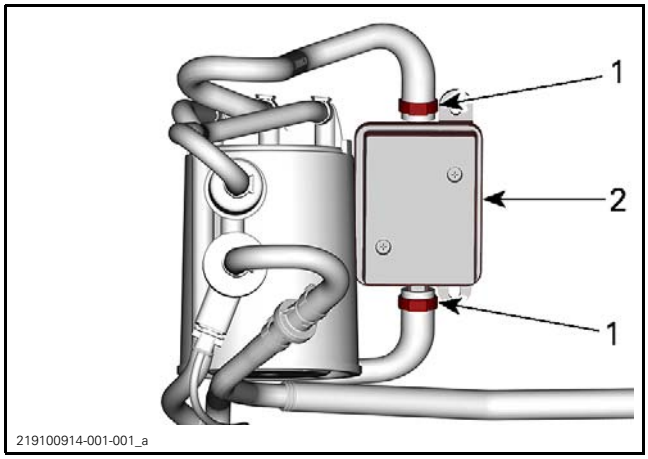

1. Clamps
2. Pre-filter

3. Install the pre-filter assembly with new Oetiker clamps.

NOTE: Install the filter in the direction indicated by the arrow in the illustration.

INSPECTION

INSPECTING THE EVAP COMPONENTS

Check parts and hoses for:

– Proper rooting (ensure there is no kinks)
– Cracks or other damage
– Loose connections
– Clamps condition

TESTING THE FUEL SYSTEM FOR LEAKS

1. Disconnect the fuel tank vent hose from the rollover valve.

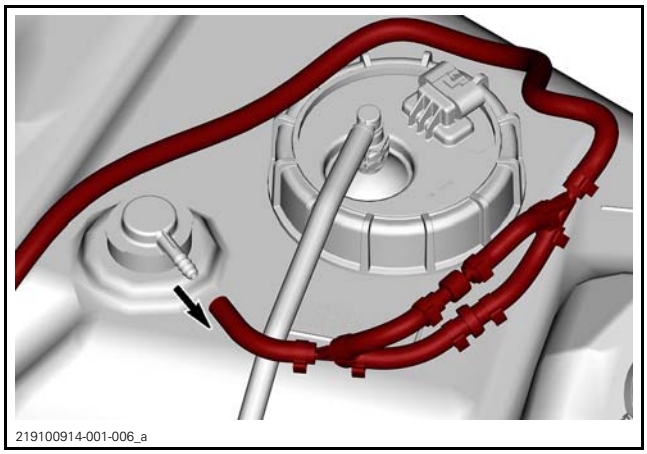

2. Install the SNAP-ON SMOKE MACHINE (P/N EELD100) or equivalent on the hose previously disconnected.

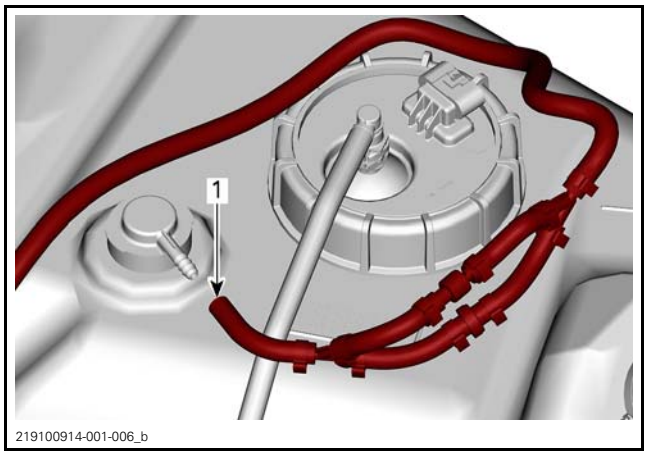

1. Connect here

3. Pinch the canister vent hose.

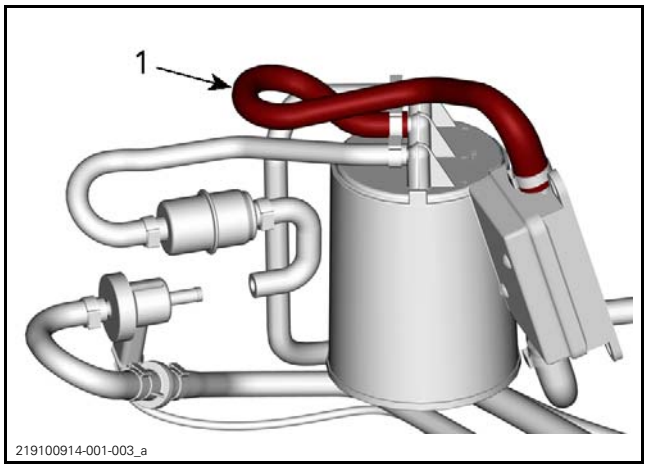

1. Pinch here

4. Pressurize the fuel system as per the following specifications.

FUEL SYSTEM LEAK TEST	
PRESSURE	TIME WITHOUT PRESSURE DROP
21 kPa (3 PSI)	30 seconds

If pressure drops, locate leak(s) and repair.

If pressure does not drop, carry out a *FUEL TANK LEAK TEST*. Refer to *FUEL TANK AND FUEL PUMP* subsection.

5. Reinstall purge hose with a new Oetiker clamp.

PROCEDURES

TESTING THE PURGE SOLENOID VALVE

Before carrying out the following tests:

– Connect vehicle to the BRP diagnostic software (BUDS2) and check for purge valve related fault code(s).
– Make sure the fuse protecting the purge valve is good. Refer to the appropriate *WIRING DIAGRAM*.

Testing the Purge Valve Operation

1. Disconnect the purge hose on the intake manifold side.
2. Install the VACUUM/PRESSURE PUMP (P/N 529 021 800) on the purge hose.

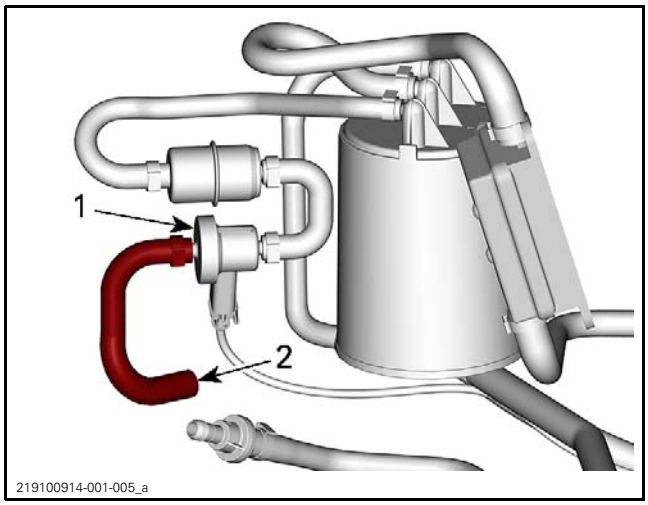

1. Purge valve
2. Connect here

3. Set vacuum/pressure pump to **vacuum** function.
4. Activate vacuum/pressure pump lever until vacuum reaches the specification.

The air must not pass through the purge valve. If passes, replace the purge valve.

EVAP PURGE VALVE VACUUM
20 kPa (3 PSI) for 10 seconds

If the valve cannot stand the vacuum applied for 10 seconds, replace valve.

If the valve stands the vacuum for 10 seconds, continue as follows.

5. In BUDS2, select:
   – **Functions** page
   – **ECM** button
   – **IO Controls** tab
   – **Activate Purge valve**.
6. Follow the instructions on the screen to activate the purge valve.

You should feel it "clicking" and air should flow through the valve.

If the purge valve "clicks" but air does not flow, replace the purge valve.

If the purge valve doesn't not "click" and air doesn't flow, carry out: *TESTING THE PURGE VALVE SOLENOID*.

Testing the Purge Valve Solenoid

1. Disconnect the purge valve connector.

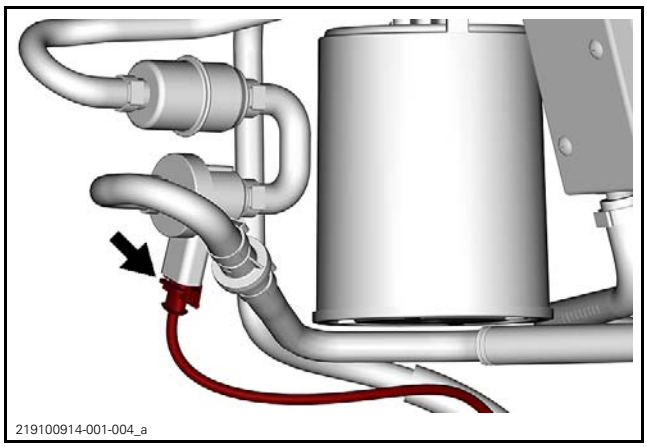

2. Measure the resistance in the valve solenoid as per following table.

PURGE VALVE SOLENOID TEST	
RESISTANCE @ 20°C (68°F)	10 to 20 Ω

If the resistance is out of specification, replace the purge valve.

If resistance is good, carry out *TESTING PURGE VALVE SUPPLY VOLTAGE*.

Testing Purge Valve Supply Voltage

1. Disconnect the purge valve connector.

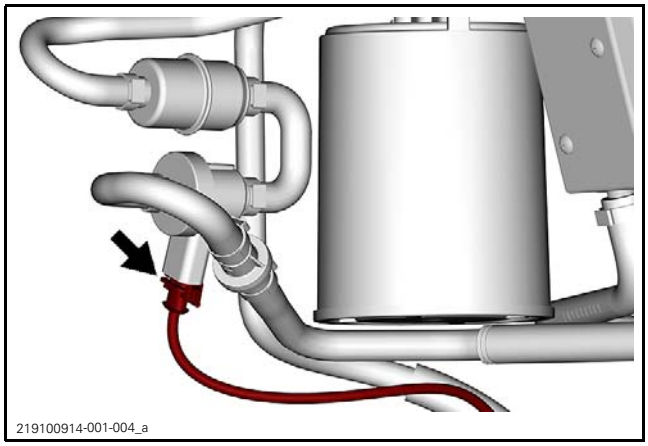

2. Activate the vehicle electrical system.
3. Refer to the appropriate *WIRING DIAGRAM* and identify the positive (voltage supply) wire of the purge valve harness.
4. Set multimeter to Vdc and test circuit voltage as per following table.

TEST PROBES		VOLTAGE (APPROXIMATE)
Purge solenoid voltage supply pin	Chassis ground	12 to 14 Vdc

If voltage is not as specified, verify power supply wiring continuity. Refer to the appropriate *WIRING DIAGRAM* for test points.

If voltage is good, verify wiring continuity in the control circuit. Refer to the appropriate *WIRING DIAGRAM* for test points.

REPLACING PARTS

For proper hose and parts connection, refer to *TYPICAL PARTS IDENTIFICATION* and *SYSTEM SCHEMATIC*.

Secure hoses with new Oetiker clamps.

Carry out *TESTING THE FUEL SYSTEM FOR LEAKS* after any repair.

POWER DISTRIBUTION AND GROUNDS

GENERAL

OVERVIEW

The battery is the primary source of power for the electrical system, it is recharged by the magneto.

Some components are permanently connected to the battery (unswitched) while some require a relay or switch to be closed (switched). Refer to the color *WIRING DIAGRAM* on *KNOWLEDGE CENTER*.

At high RPM if the magneto power is greater than the loads, the rectifier/regulator will regulate power as necessary.

The system uses an external voltage regulator/rectifier.

FUSE HOLDERS PF3 - PF4 - PF7

The fuse holders are located on the front fuse box (PF1) support.

FUSE HOLDERS		
NO	DESCRIPTION	RATING
PF3	DPS	40 A
PF4	Accessory post (Under dash terminal block)	40 A
PF7	Smart-Lok	20 A

FRONT FUSE BOX (PF1)

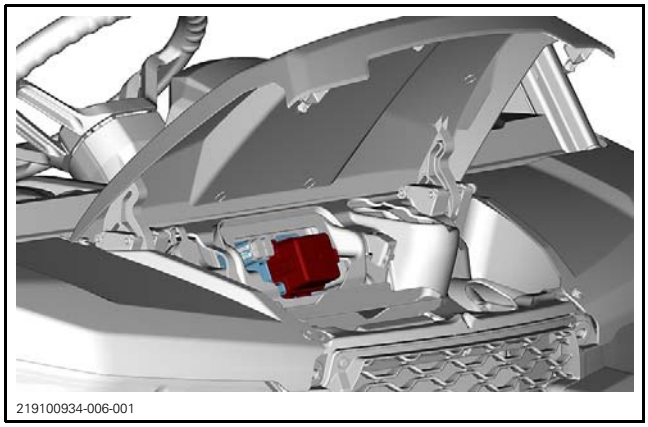

FRONT SERVICE COVER OPEN

Fuses

FUSE IDENTIFICATION			
Fuses	F10	Accessories (T models)	10 A
	F11	Headlights **If equipped:** Turn signal module Front position lights Horn Trailer light module F2/F3 in console fuse box	20 A
	F12	Accessories connector (DC3) 12V outlet 1 (DC1)	10 A
	F14	12V accessory outlet USB	10 A
	F16	Taillights Brake lights	10 A
	SP1	N/A	20 A

Relays

RELAY IDENTIFICATION		
Relays	R3	ECM accessory 12V relay
	R8	Brake lights relay
	R9	Keyswitch Accessory relay

REAR FUSE BOX (PF2)

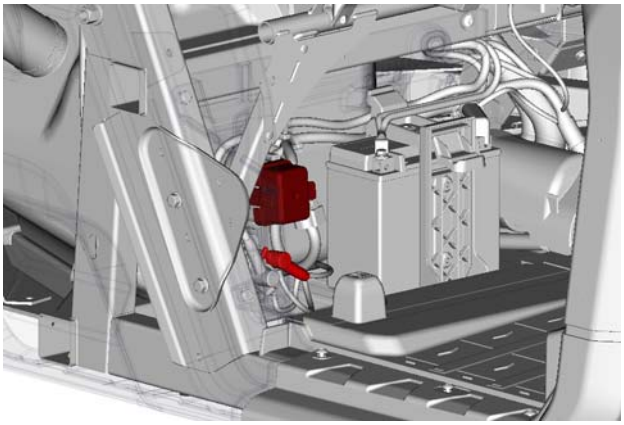

BATTERY COVER REMOVED

Fuses

FUSE IDENTIFICATION			
Fuses	F4	Gauge DPS unit Relay R3 Diagnostic connector Brake light switch F1 in consolefuse box (T Models)	10 A
	F5	Relay R1 Ignition coil Fuel injectors Speed sensor Fuel pump	10 A
	F6	Engine Control Module (ECM)	10 A
	F7	4X4 actuator Switches back lighting	10A
	F8	Ignition switch Clock	10 A
	F9	Cooling fan (thermal fuse)	25 A
	F18	Oxygen sensor Emission control	10 A
	SP1	N/A	10A
	SP2	N/A	10A
	SP3	N/A	10A

Relays

RELAY IDENTIFICATION		
Relays	R1	Cooling fan
	R2	Main

FUSIBLE LINKS

FL-1 is located between BP1 and PF2.

FL-2 is located between POST+ and PF1.

Fusible link gauge (AWG) varies by current capacity.

FUSIBLE LINK IDENTIFICATION			
Fusible links (FL)	FL-1	Protects rear fuse box (PF2)	18 AWG
	FL-2	Protects front fuse box (PF1)	14 AWG

GROUND LOCATIONS

For more specific main harness ground locations, refer to *WIRING HARNESS AND CONNECTORS*.

GROUND	
NAME	LOCATIONS
Main Harness	
BAT2	Rear vehicle
BN1	
BN3	Front vehicle
POST-	
Power Harness	
BN_BAT2	Engine
BN_BODY	
BN_ENGINE	

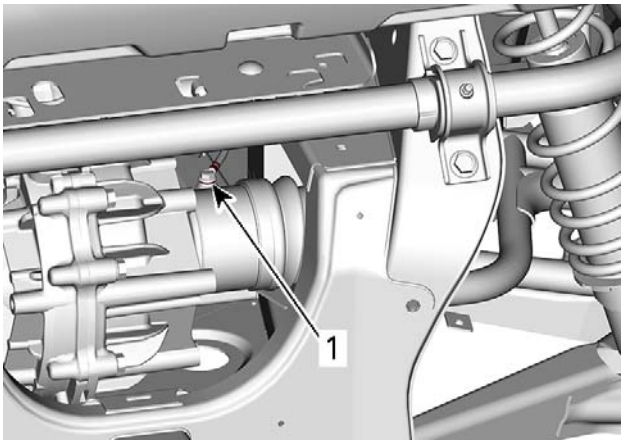

219101010-031-001

TYPICAL CHASSIS GROUND - REAR SIDE VIEW
1. BN_BODY

TIGHTENING TORQUE	
Battery ground terminal	9 N•m ± 1 N•m (80 lbf•**in** ± 9 lbf•**in**)

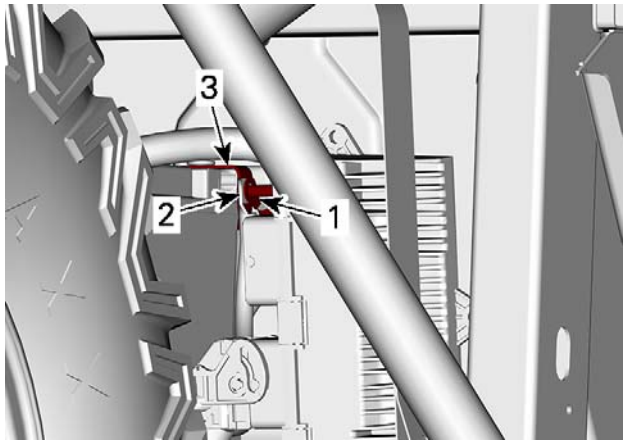

TYPICAL BATTERY GROUND - RIGHT SIDE VIEW
1. *BN1*
2. *BAT2*
3. *BN_BAT2*

TIGHTENING TORQUE	
Chassis ground terminal	9 N•m ± 1 N•m (80 lbf•**in** ± 9 lbf•**in**)

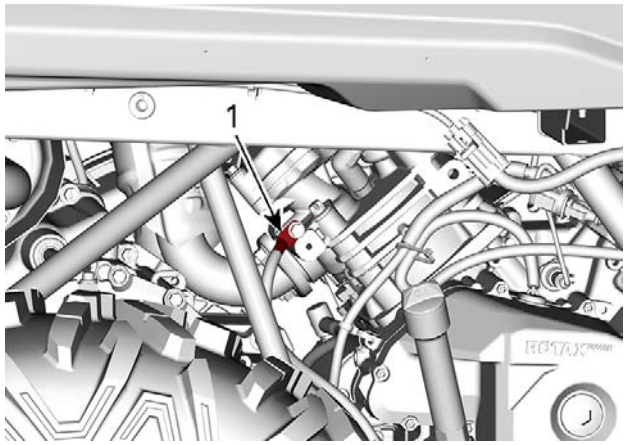

HD9 AND HD10 ENGINE GROUND - RIGHT SIDE VIEW
1. *BN_ENGINE*

TIGHTENING TORQUE	
HD9 and HD10 engine ground terminal	9 N•m ± 1 N•m (80 lbf•**in** ± 9 lbf•**in**)

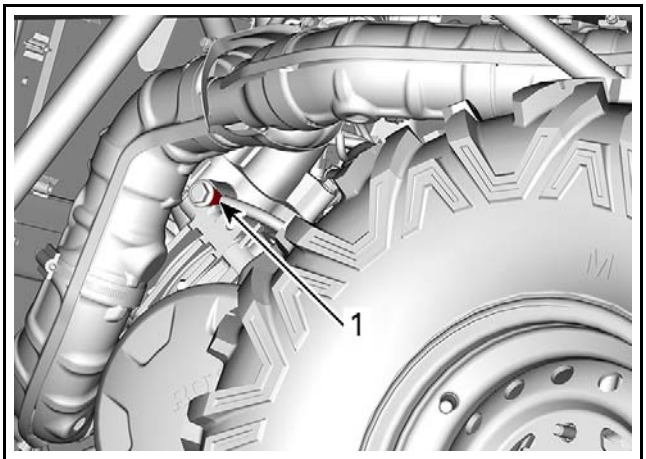

HD7 ENGINE GROUND - LEFT SIDE VIEW
1. *BN_ENGINE*

TIGHTENING TORQUE	
HD7 Engine ground terminal	17.5 N•m ± 2.5 N•m (155 lbf•**in** ± 22 lbf•**in**)

WIRING HARNESS AND CONNECTORS

SERVICE TOOLS

Description	Part Number	Page
ECM ADAPTER TOOL	529 036 166	177
ECM TERMINAL REMOVER 2.25	529 036 175	178
ECM TERMINAL REMOVER 3.36	529 036 174	178

SERVICE TOOLS – OTHER SUPPLIER

Description	Part Number	Page
DELPHI TERMINAL EXTRACTOR	12094429	180–181
FCI TERMINAL EXTRACTOR TOOL	54241678	179–180
GM TERMINAL EXTRACTOR	12094430	175
MOLEX 150 TERMINAL EXTRACTOR TOOL	63813 - 1500	179–180

MAIN HARNESS NON T CATEGORY (FRONT)

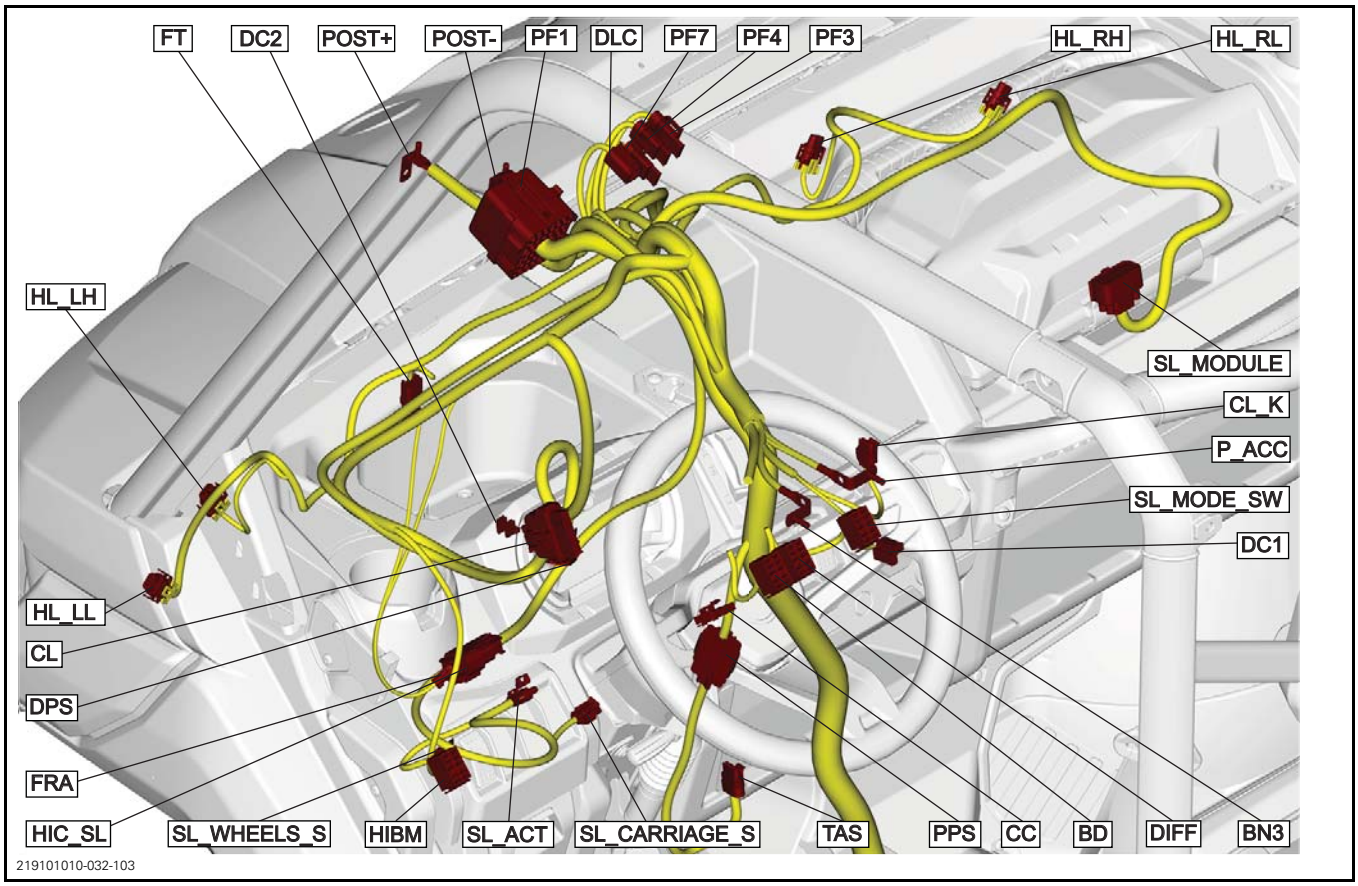

MAIN HARNESS T CATEGORY (FRONT)

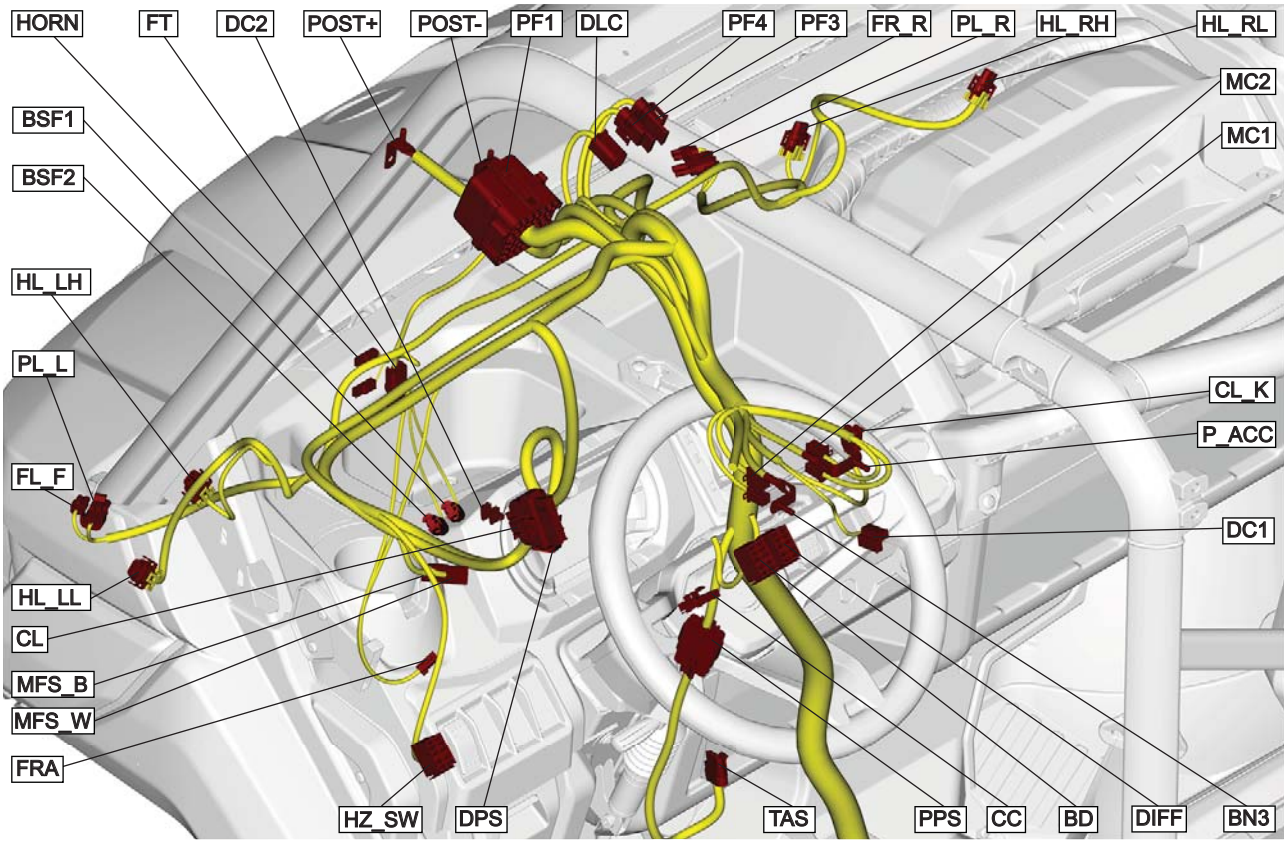

219101010-032-105

MAIN HARNESS NON T CATEGORY (REAR)

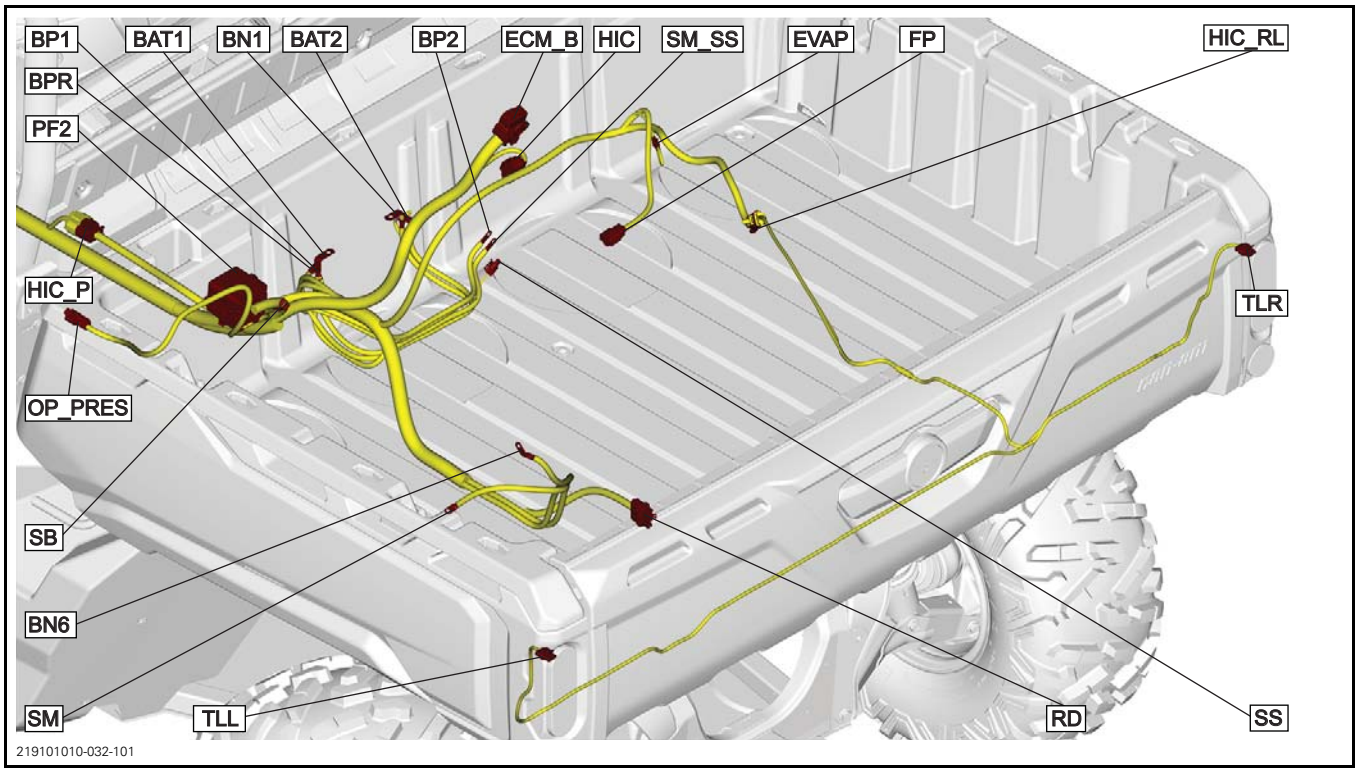

MAIN HARNESS T CATEGORY (REAR)

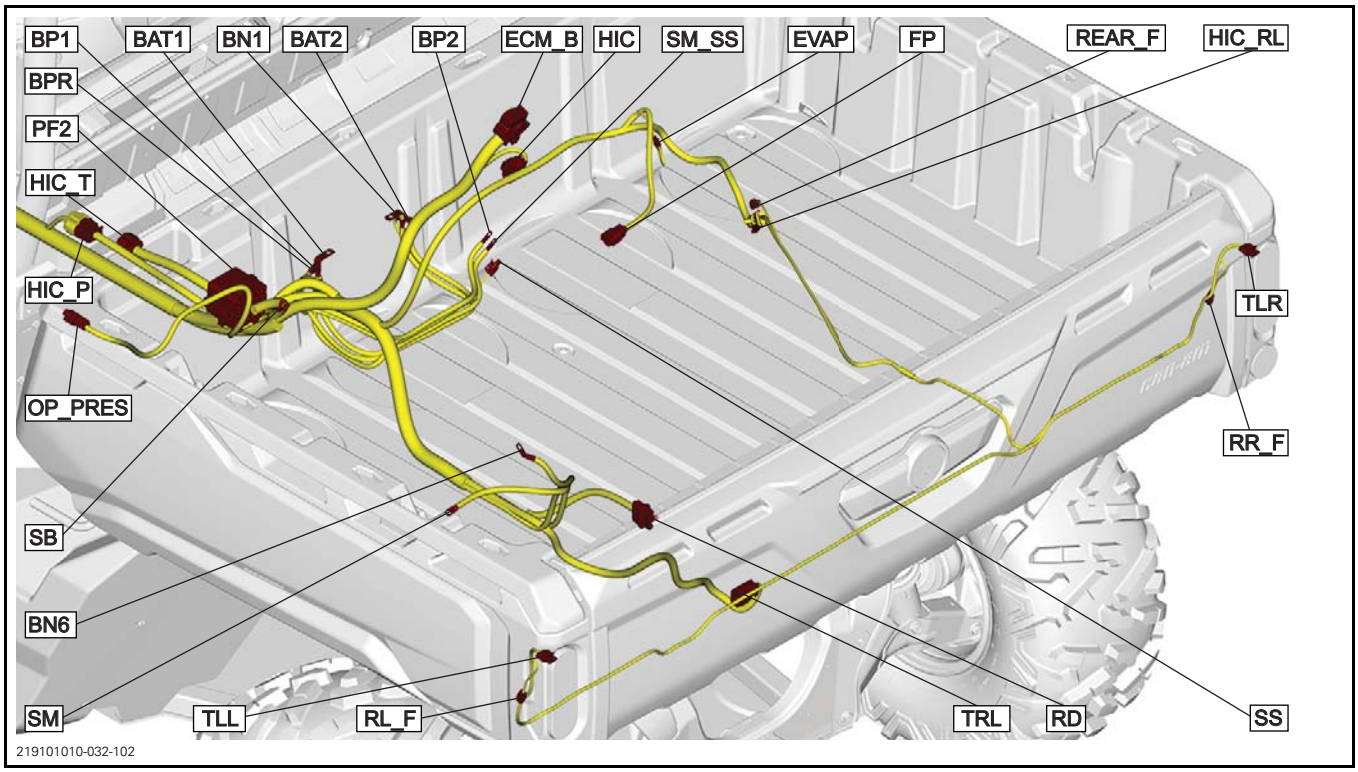

ROOF HARNESS

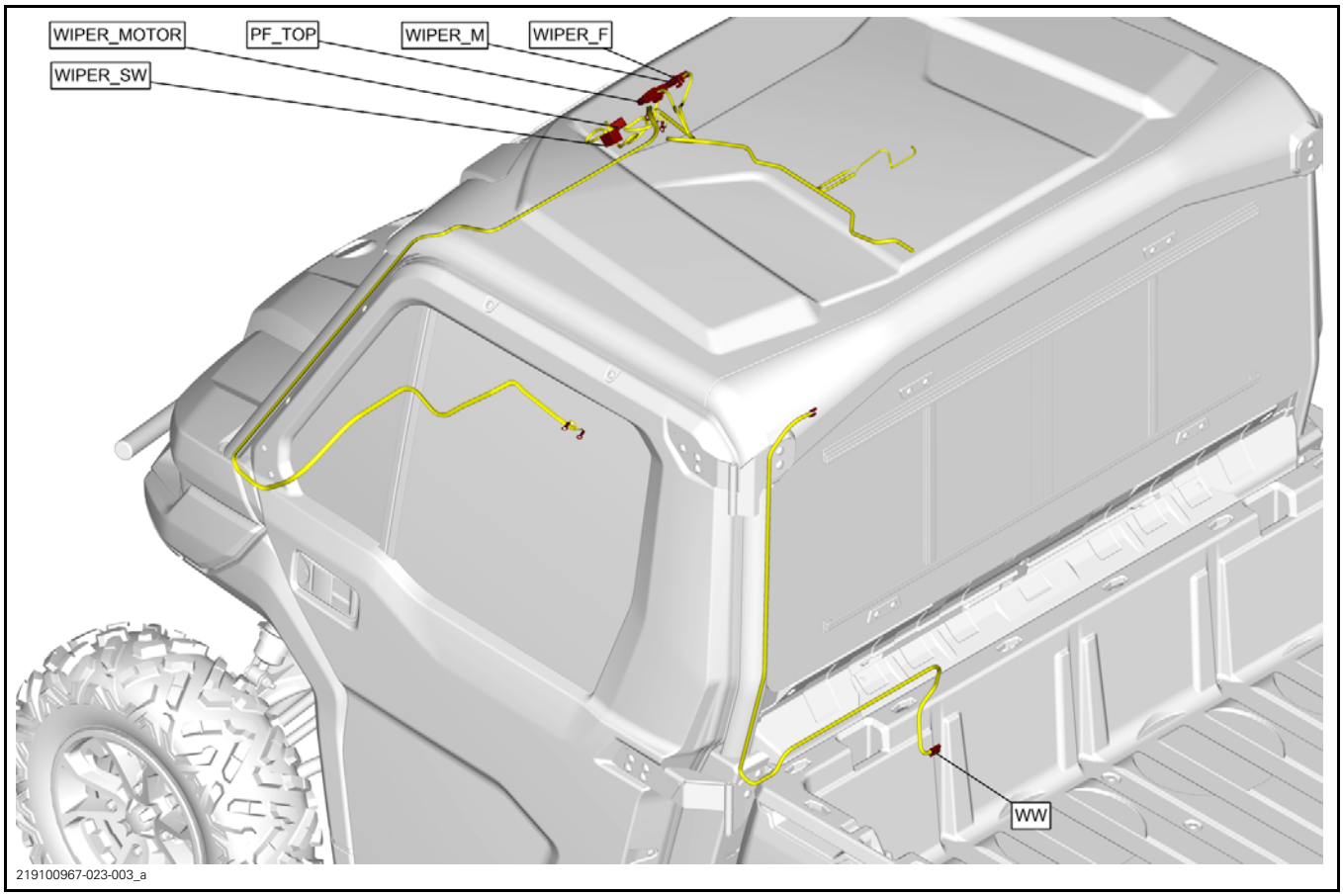

WINCH HARNESS

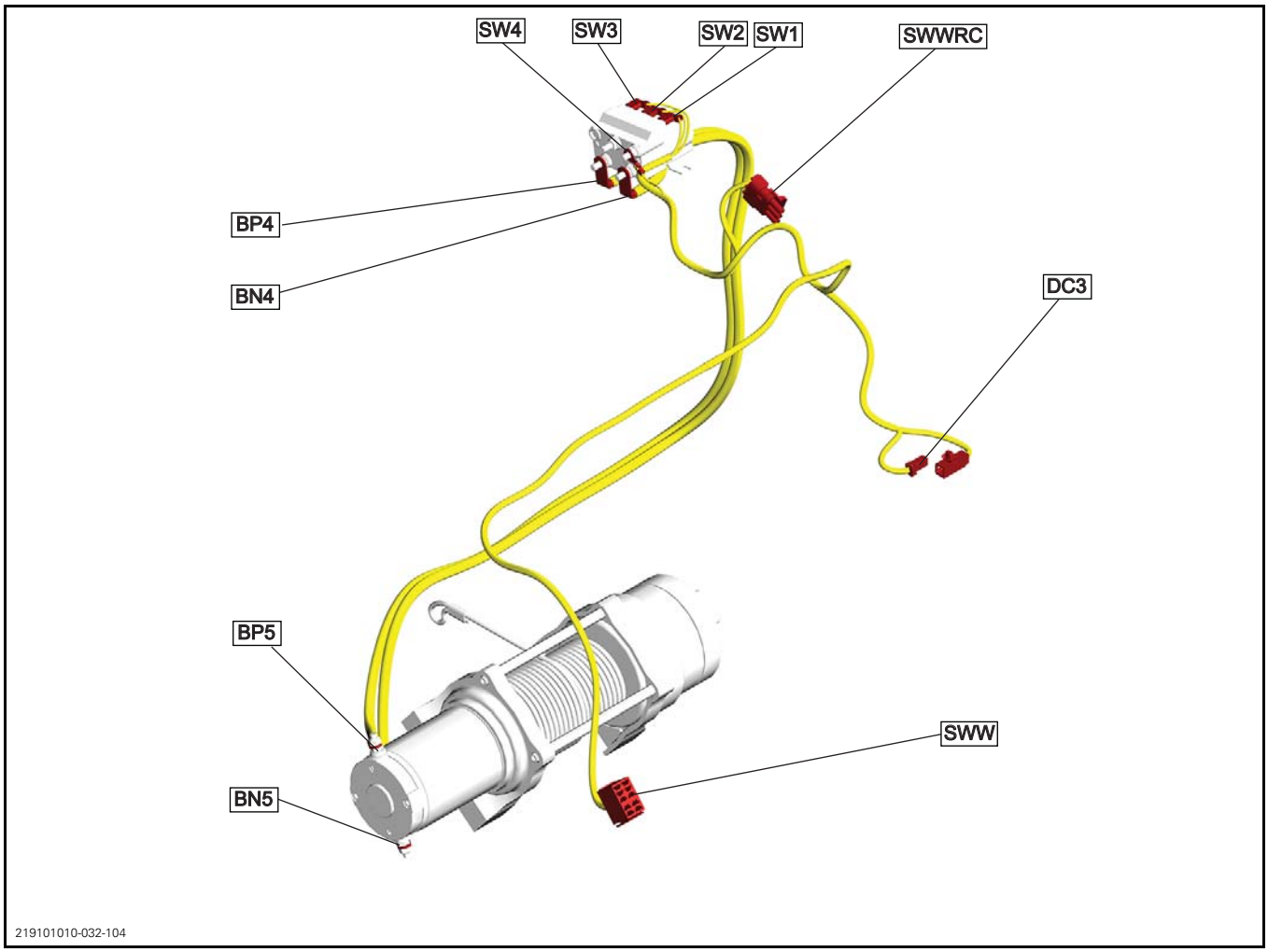

GENERAL

The wiring harnesses illustrations are typical. Several variants of the connector types, such as different number of pin cavities, are used on the vehicle.

For engine harness, consult applicable *ENGINE MANAGEMENT SYSTEM (EMS)* subsection.

CONNECTOR ABBREVIATION DESCRIPTION

ABBREVIATION	DESCRIPTION
BAT	Battery
BD	Multifunction switch
BFS	Break Fluid Sensor (T Category)
BN	Ground terminal
BP	Positive terminal
CC	Key contact
CL	Cluster
CL_K	Cluster keypad
DC	Accessory
DIFF	Mode Switch rear differential
DLC	Diagnostic connector
DPS	Dynamic power steering
ECMB	Engine Control Module (Connector B)
EVAP	EVAP
FL F	Front Left Flasher (T Category)
FP	Fuel pump
FRA	Rear Brake Light
FR F	Front Right Flasher (T Category)
FT	Cooling fan
HIBM	HI Beam
HIC	Harness interconnect Engine
HIC_P	Harness interconnect Power
HIC_RL	Harness interconnect Rear Lights
HIC_SL	Harness interconnect Smart-Lok
HIC_T	Harness interconnect Trailer (T Category)
HL LL	LH LO beam headlight
HL LH	LH HI beam headlight
HL RL	RH LO beam headlight

ABBREVIATION	DESCRIPTION
HL RH	RH HI beam headlight
HORN	Horn (T Category)
HZ_SW	Hazard Switch (T Category)
MC1	Flasher Module 1 (T Category)
MC2	Flasher Module 2 (T Category)
MFS_B	Flasher Module - Flasher and horn switch (T Category)
MFS_W	Flasher Module - Headlamp switch (T Category)
OP_PRES	Operator Presence
P_BN	Post battery negative
P_BP	Post battery positive
P_ACC	Post Accessories
PF	Fuse box
PL_L	Left position light (T Category)
PL_R	Right position light (T Category)
POST	Front accessories
PPS	Pedal Position Sensor
REAR_F	Rear Flasher (T Category)
RL_F	Rear Left Flasher (T Category)
RD	Voltage regulator/rectifier
RR_F	Rear Right Flasher (T Category)
SB	Seat Belt
SL_ACT	Smart-Lok Actuator motor
SL_CARRIAGE_S	Smart-Lok position sensor
SL_MODE_SW	Smart-Lok Mode Switch
SL_MODULE	Smart-Lok Module
SL_WHEELS_S	Smart-Lok Wheel sensor
SM	Starter Motor
SM_SS	Starter Motor Solenoid
SS	Starter solenoid
SW	Winch relay (If winch equipped)
SWW	Winch switch (If winch equipped)

ABBREVIATION	DESCRIPTION
SWWRC	Winch remote control (If winch equipped)
TAS	Throttle Accelerator Sensor
TL_L	Taillight left
TL_R	Taillight right
TRL	Trailer harness (T Category)
WIPER	Wiper connector
WIPER_MOTOR	Wiper motor
WIPER_SW	Wiper Switch
WW	Windshield washer

PROCEDURES

NOTICE When disassembling any connector for repair or replacement on the vehicle, always disconnect the battery to ensure all electrical power is removed and prevent any possibility of a short circuit. Refer to *CHARGING SYSTEM* subsection.

DEUTSCH CONNECTORS

Disassembling and Reassembling a Deutsch Connector

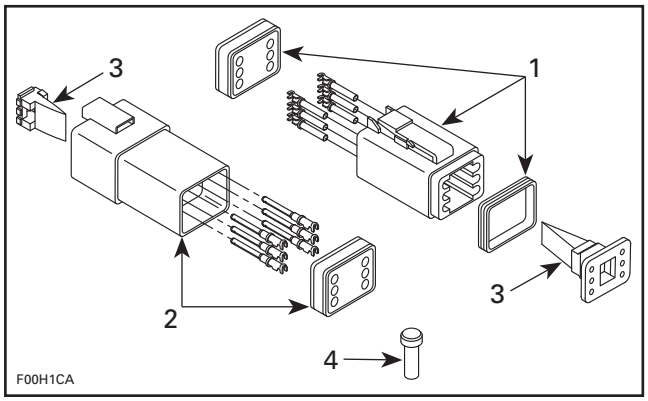

TYPICAL - DEUTSCH CONNECTOR
1. *Male connector*
2. *Female connector*
3. *Secondary lock*
4. *Sealing cap*

NOTICE Do not apply dielectric grease on terminal inside connector.

Removing a Terminal

To remove terminals from connector, proceed as follows:

1. Using long nose pliers, pull out the secondary plastic lock from between the terminals.

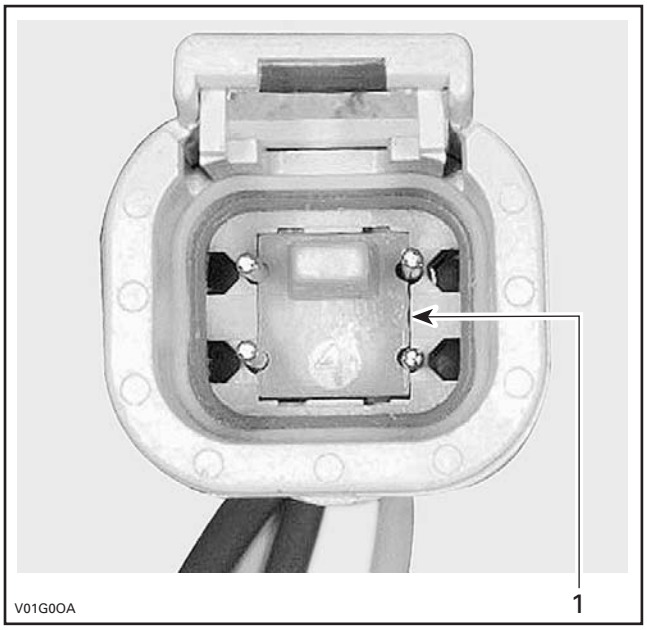

FEMALE CONNECTOR
1. *Female lock*

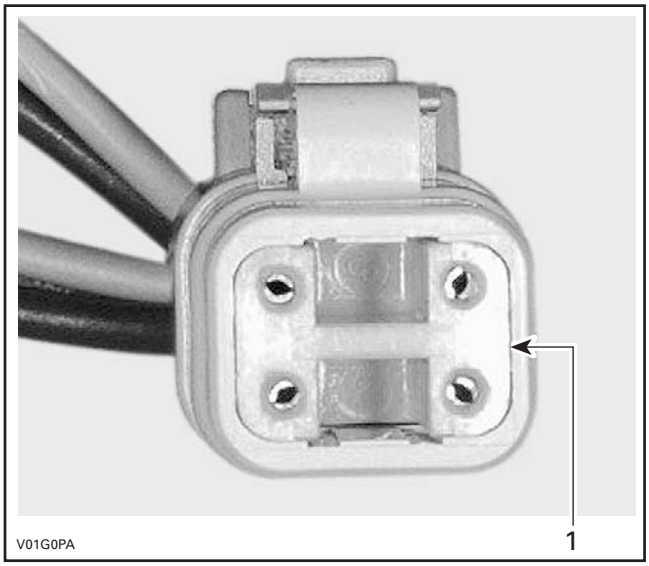

MALE CONNECTOR
1. *Male lock*

NOTE: Before pin extraction, push wire forward to relieve pressure on retaining tab.

2. Insert a 4.8 mm (.189 in) wide screwdriver blade inside the front of the terminal cavity.
3. Pry the retaining tab away from the terminal while gently pulling the wire and terminal out of the back of the connector.

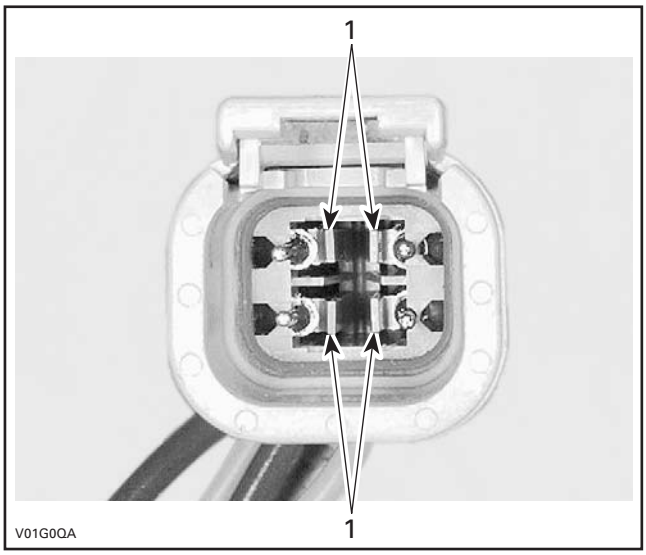

FEMALE CONNECTOR
1. Retaining tab

Inserting a Terminal

1. For insertion of a terminal, ensure the secondary plastic lock is removed.
2. Insert terminal through the back of the connector in the appropriate position, and push it in as far as it will go. You should feel or hear the terminal lock engage.
3. Pull back on the terminal wire to be sure the retention fingers are holding the terminal.
4. After all required terminals have been inserted, the lock must be installed.

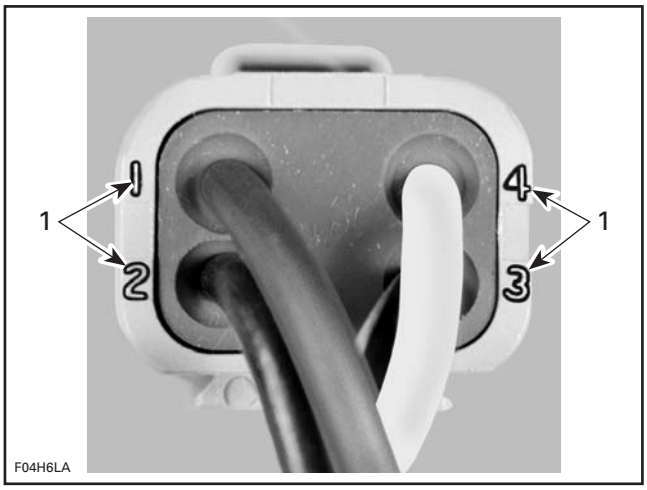

CONNECTOR PIN-OUT
1. Terminal position identification numbers

FURUKAWA CONNECTOR

Furukawa Connector Application

Voltage regulator/rectifier.

Removing a Terminal

1. Remove the secondary lock (plastic insert).

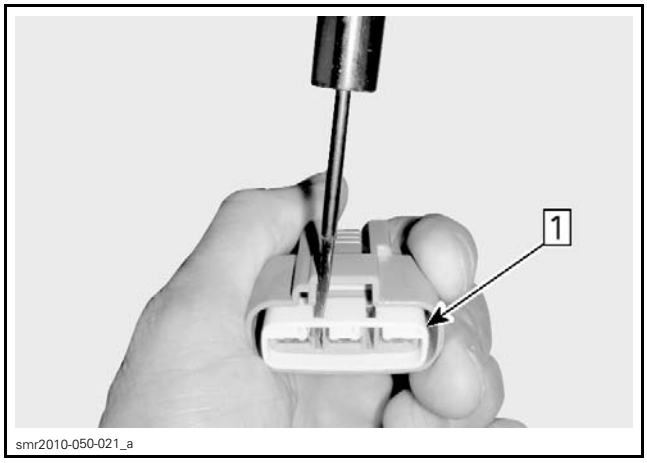

Step 1: Remove the secondary lock

2. Carefully insert the GM terminal extractor between the lock and the pin to release the pin.

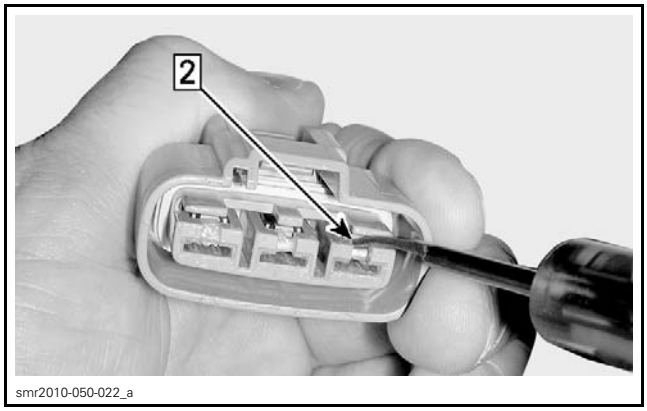

Step 2: Insert GM extractor tool (P/N 12094430)

SERVICE TOOL	
GM TERMINAL EXTRACTOR (P/N 12094430)	

3. Gently pull on the wire to extract the pin out the back of the connector.

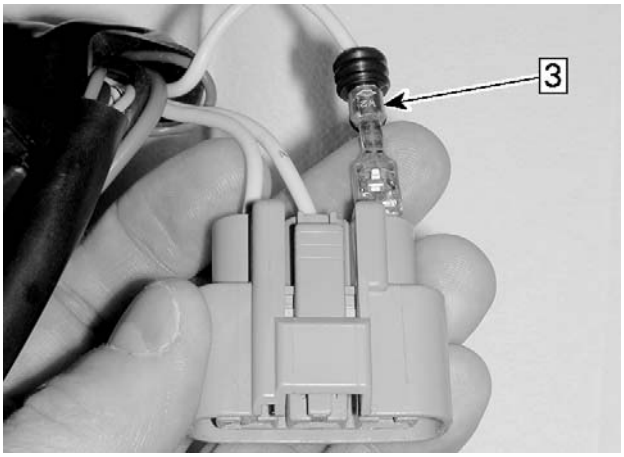

smr2010-050-023_a

Step 3: Pull wire to extract pin

NOTICE **Before installing terminals in the connectors, ensure all terminals are properly crimped on the wires. After installation of the wire terminals in the connectors, ensure they are properly locked by gently pushing on them as if to extract them.**

MOLEX CONNECTOR (ECM)

There are 2 connectors on the ECM.

The engine wiring harness connector is connected to ECM connector "A". The vehicle wiring harness connector is connected to ECM connector "B".

Each ECM connector has 48 pins however, connectors "A" and "B" are not interchangeable due to their specific keyways.

NOTE: If you need to remove the connector, be sure to not disconnect fuel quick-connector at ECM. If you need to remove the ECM or fuel quick connector, insure the ECM electrical connectors are securely in place and avoid fuel intrusion into connector/seal.

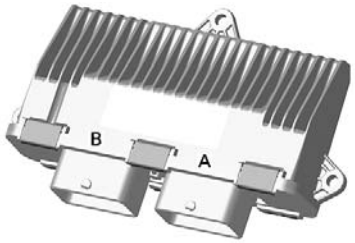

smr2009-027-005

Removing the Connector

1. Press and hold the locking tab on the connector to be disconnected.

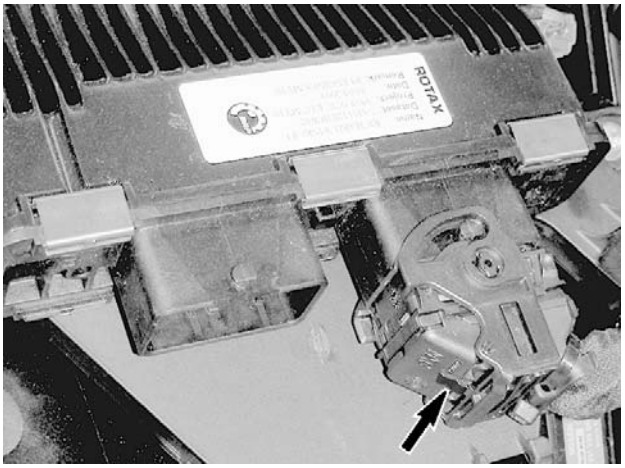

smr2009-045-011_a

LOCKING TAB TO PRESS AND HOLD

2. As you hold the locking tab, rotate the connector locking cam until it stops.

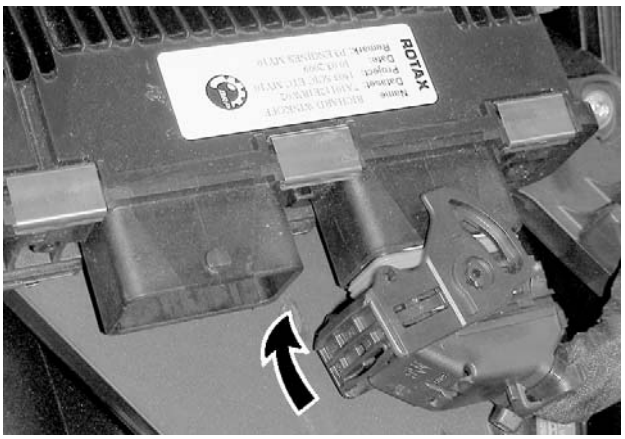

smr2009-045-012_a

CONNECTOR LOCKING CAM ROTATION TO RELEASE

3. Pull connector off ECM.

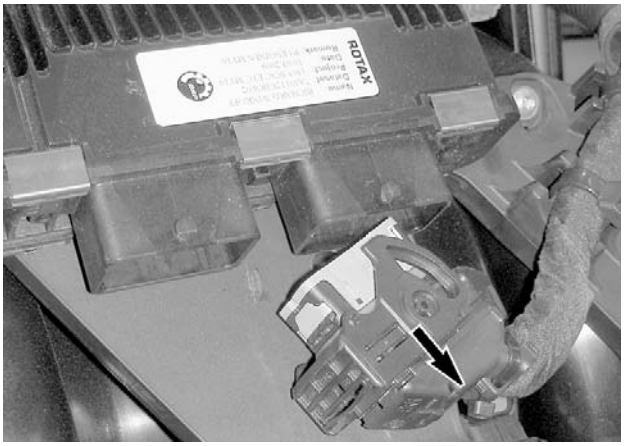

smr2009-045-013_a

Installing the Connector

1. Fully open connector locking cam.

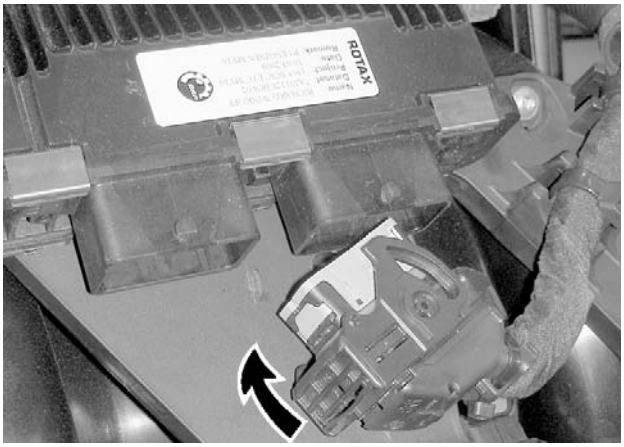

smr2009-045-013_b

CONNECTOR LOCKING CAM IN RELEASE POSITION

2. Insert connector on ECM.
3. As you push the connector onto the ECM, rotate the connector locking cam until it snaps locked.

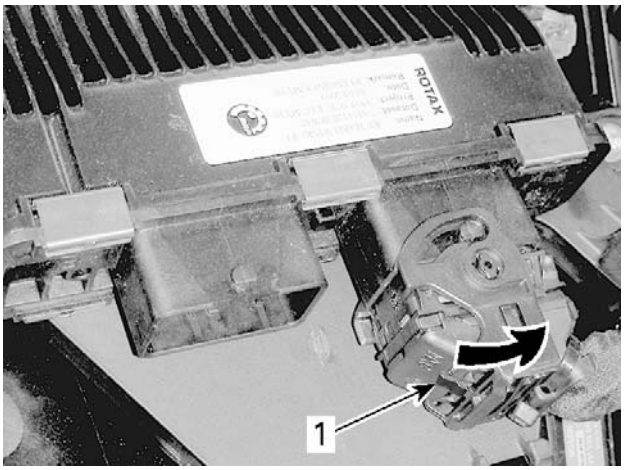

smr2009-045-011_b

1. Locked here

4. Ensure the locking tab is fully out.

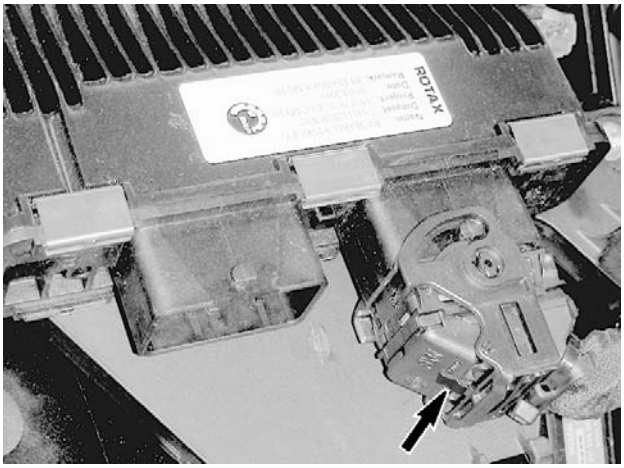

smr2009-045-011_a

LOCKING TAB FULLY OUT

Inspecting the Connector

Before replacing an ECM, always check electrical connections.

1. Ensure connector locking mechanism is functioning properly.
2. Ensure all wire terminals (pins) are properly locked in the connector.
3. Ensure they are very tight, make good contact with the pins in the ECM.
4. Ensure the pins in the harness connector and the ECM connector are clean, shiny and corrosion-free.
5. Check wiring harness for signs of scoring.

NOTE: A "defective ECM module" could possibly be repaired simply by disconnecting and reconnecting it.

NOTICE **Do not apply any lubricant product to the pins of the ECM connector.**

Probing the Connector

The most recommended and safest method to probe the MOLEX (ECM) connector terminals is to use a ECM adapter tool. This tool will prevent deforming or enlarging of the terminals, which would lead to bad ECM terminal contact creating intermittent or permanent problems.

SERVICE TOOL	
ECM ADAPTER TOOL (P/N 529 036 166)	

1. Disconnect the ECM connector to be probed, and reconnect it on the ECM adapter.

2. Probe wire terminals of the circuit to be tested directly in the adapter holes.

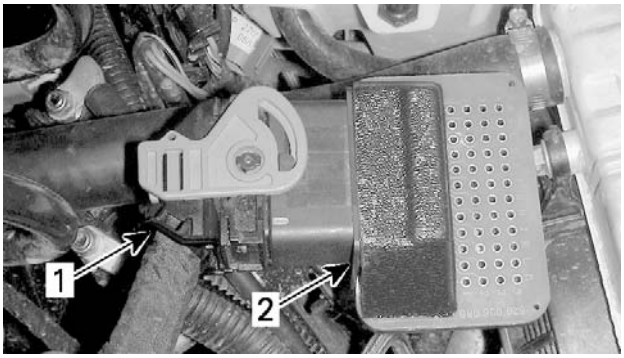

vmr2008-139-016_a

TYPICAL
1. ECM connector
2. ECM adapter

NOTICE **Never probe directly on the ECM harness connector. This could change the shape or enlarge the terminals and create intermittent or permanent contact problems.**

Removing a Terminal (Harness Connector)

To remove a signal terminal from the ECM harness connector, use a terminal remove 2.25.

To remove a power terminal, use a terminal remover 3.36.

SERVICE TOOL	
ECM TERMINAL REMOVER 2.25 (P/N 529 036 175)	
ECM TERMINAL REMOVER 3.36 (P/N 529 036 174)	

1. Remove rear protector from connector.
2. Pull out the connector lock.

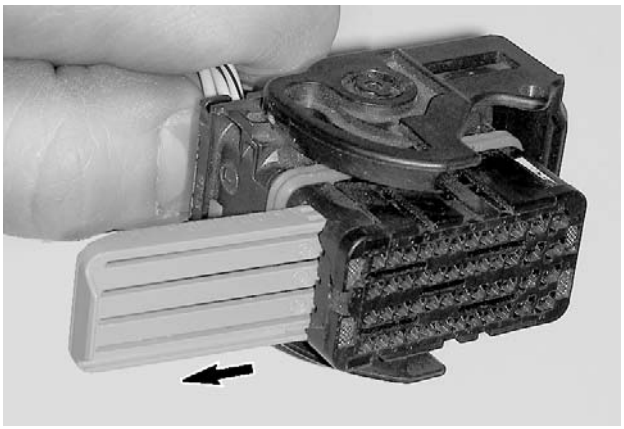
smr2009-045-025_a

3. Insert tool to unlock terminal.

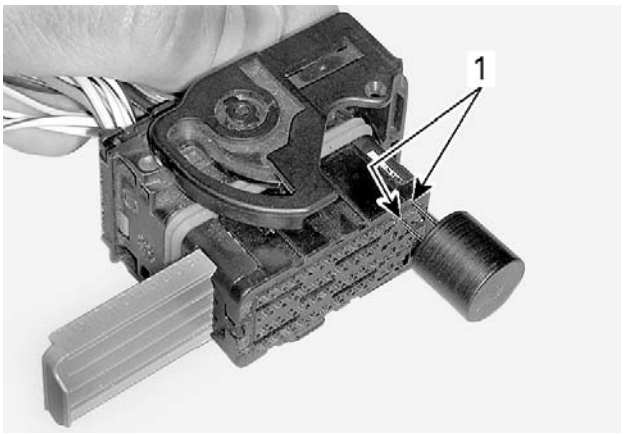

smr2009-045-026_a

1. Unlock here

4. Gently pull on the wire to extract the terminal out the back of the connector.

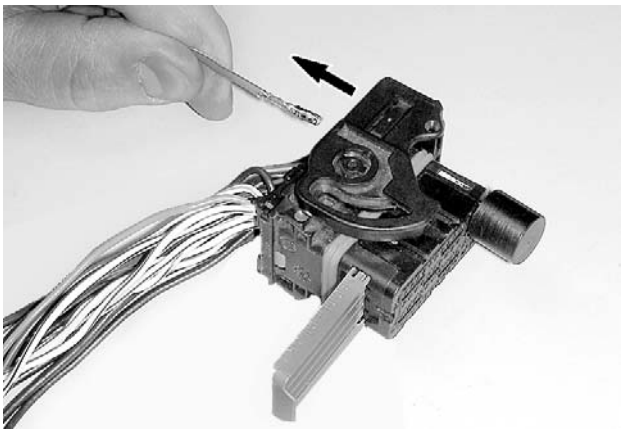
smr2009-045-027_a

NOTICE **Before installing wire terminals in the connector, ensure all terminals are properly crimped on wires. After installation of wire terminals in the connectors, ensure they are properly locked by gently pulling on them as if to extract them.**

MOLEX CONNECTORS (EXCEPT ECM)

Extracting a Terminal (Female Connector)

The same procedure must be done to remove a seal plug.

1. Insert a small flat screwdriver in the pry holes of the terminal locator, on the terminal side of the connector.

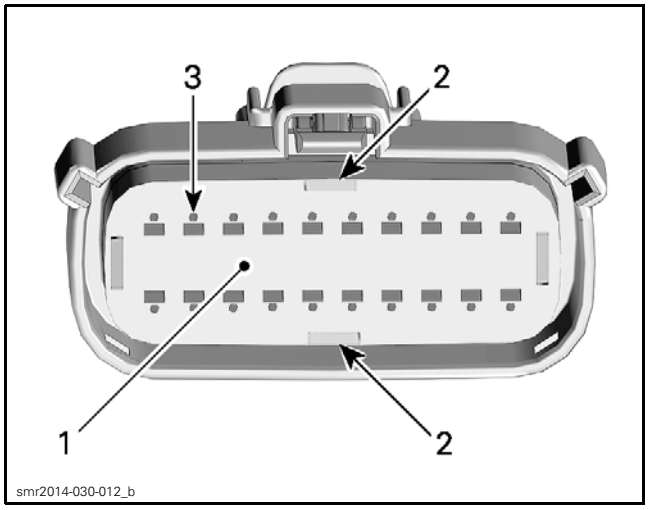

1. Terminal locator
2. Pry holes
3. Holes for inserting terminal extractor tool

2. Apply slight pressure and pry the terminal locator out until it clicks (± 4 mm (.16 in)).

NOTE: Do not remove the terminal locator from the connector housing.

3. Insert an appropriate extractor tool in the small hole adjacent to the terminal.

NOTE: Push the extractor tool in only as far as required to release the lock from the terminal. The tool should slide along the terminal and be inserted between the connector housing and the terminal lock.

REQUIRED TOOL	
FCI TERMINAL EXTRACTOR TOOL (P/N 54241678)	
or,	
MOLEX 150 TERMINAL EXTRACTOR TOOL (P/N 63813 - 1500)	

4. Gently pull on the wire to extract the terminal out the back of the connector.

Extracting the Terminal (Male Connector)

The same procedure must be done to remove a seal plug.

1. Using a pair of thin long nose pliers, pull the terminal locator (the white plastic insert in the connector) out to the detent position (± 13 mm (1/2 in) between terminal locator and connector housing face). This will allow unlocking of the pins.

NOTICE **Do not attempt to remove the terminal locator or damage will occur. Be careful not to bend the pins when using the pliers.**

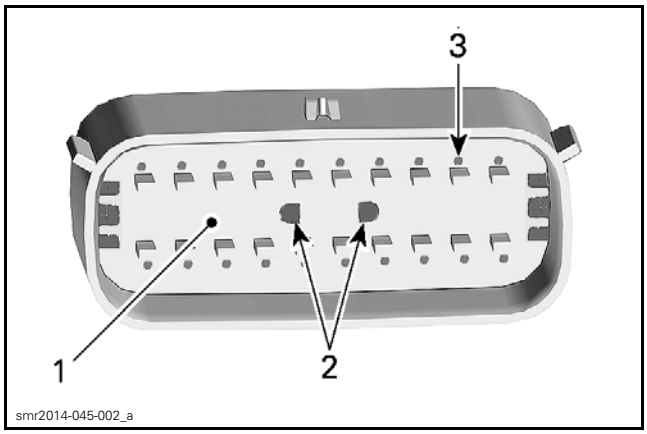

1. Terminal locator
2. Insert long nose pliers here
3. Holes for inserting terminal extractor tool

2. Insert an appropriate extractor tool in the small hole adjacent to the terminal.

NOTE: Push the extractor tool in only as far as required to release the lock from the terminal. The tool should slide along the terminal and be inserted between the connector housing and the terminal lock.

REQUIRED TOOL
FCI TERMINAL EXTRACTOR TOOL (P/N 54241678)
or,
MOLEX 150 TERMINAL EXTRACTOR TOOL (P/N 63813 - 1500)

3. Gently pull on the wire to extract the terminal out the back of the connector.

Inserting the Terminal

1. Ensure the terminal is properly crimped onto the wire.
2. Ensure the terminal locator (the white plastic insert in the connector) is out in the detent position.
3. Orient the key on the back of the male terminal with the keyway on the rear of the housing

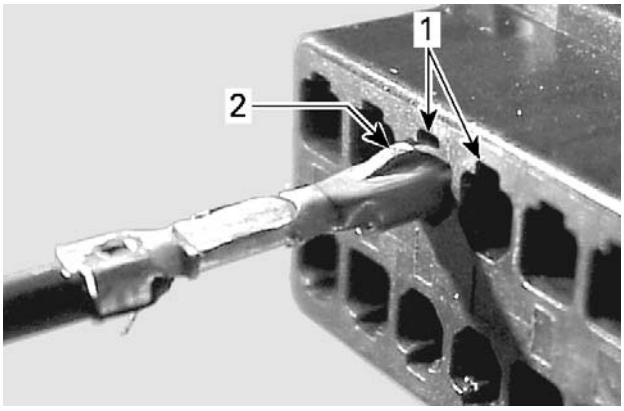

smr2014-045-004_a

TYPICAL - PIN INSERTION
1. Keyway
2. Terminal key

4. Push the terminal into the housing until it clicks.
5. Gently pull on the terminal to ensure it is properly locked.
6. Repeat previous steps for each terminal to be inserted.
7. Push the terminal locator into the connector to the locked position.

DELPHI/PACKARD CONNECTORS

Removing the Connector Terminal

To remove a terminal (pin) from the connector, use a special tool such as the Delphi terminal extractor.

REQUIRED TOOL
DELPHI TERMINAL EXTRACTOR (P/N 12094429)

NOTE: Grinding the tool end to a taper is required.

1. Carefully insert the tool in the space provided to release the pin lock.
2. Push the pin out the front of the connector by pushing on the wire.

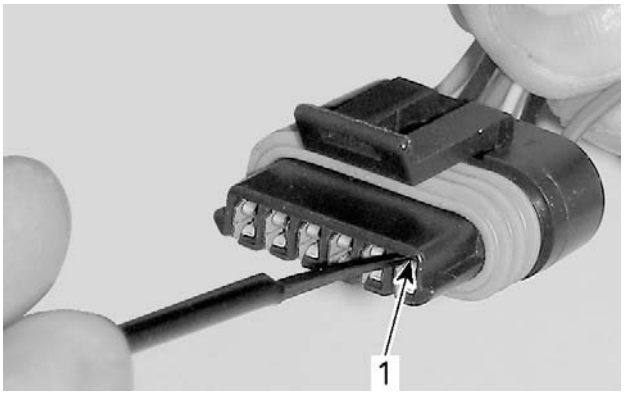

smr2009-045-014_a

1. Unlock terminal here

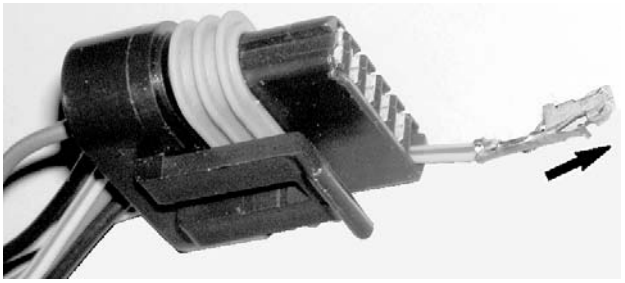
smr2009-045-015_a

NOTICE **Before installing terminals in the connectors, ensure all terminals are properly crimped on the wires. After installation of the wire terminals in the connectors, ensure they are properly locked by gently pushing on them as if to extract them.**

DELPHI CONNECTORS

Removing the Terminal

1. To remove a terminal from connector, first remove the locking cap.

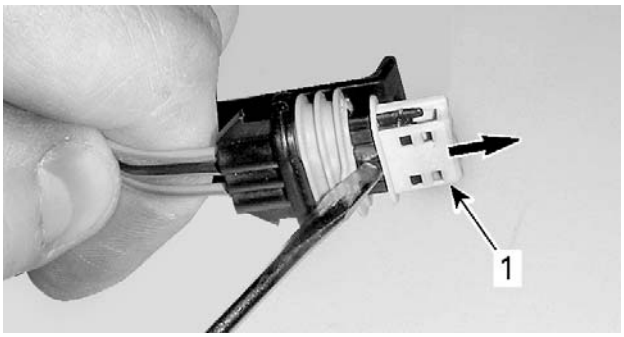

smr2009-045-023_a

1. Pry out locking cap

2. Carefully insert the Delphi terminal extractor in the space provided to release the pin lock.

REQUIRED TOOL	
DELPHI TERMINAL EXTRACTOR (P/N 12094429)	

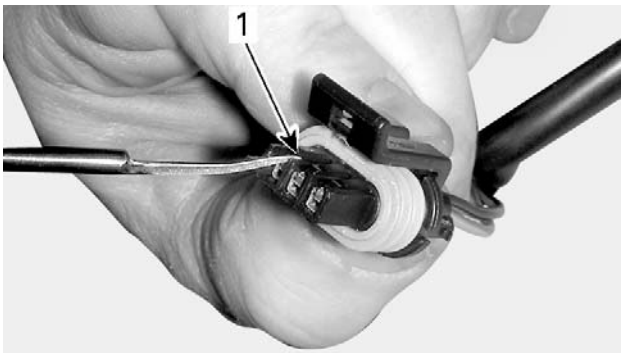

smr2009-045-024_a

1. Unlock here

3. Gently pull on the wire to extract the pin out the back of the connector.

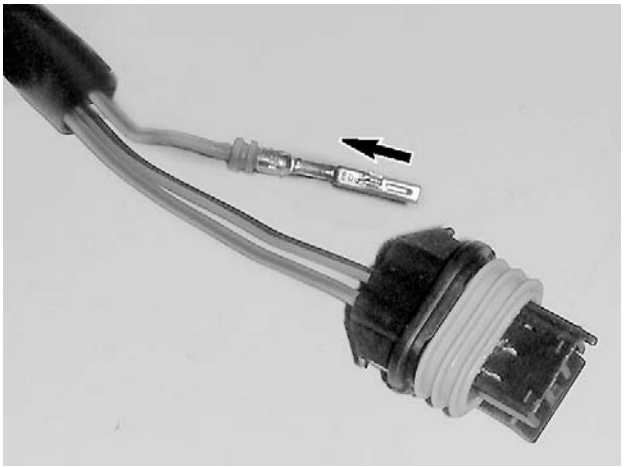

smr2009-045-028_a

NOTICE Before installing terminals in the connectors, ensure all terminals are properly crimped on the wires. After installation of the wire terminals in the connectors, ensure they are properly locked by gently pushing on them as if to extract them.

BATTERY AND STARTER CABLE TERMINALS

Crimping a Cable

Carefully strip the wire approximately to 10 mm (3/8 in) in length, using a wire stripping tool or sharp blade/knife.

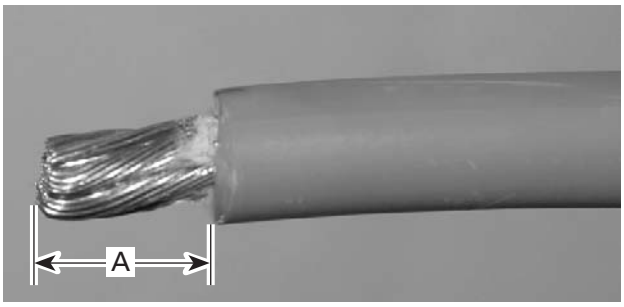

A32E2QA

A. 10 mm (3/8 in)

NOTE: Make sure not to cut wire strands while stripping the wire.

Install the appropriate terminal on the wire according to the requirement. Refer to appropriate *PARTS CATALOG*.

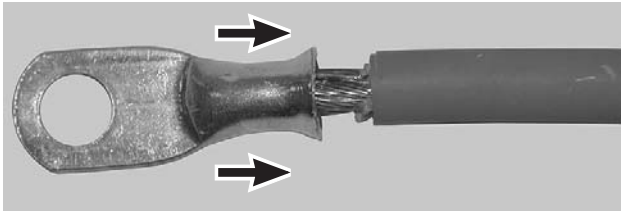

A32E2RA

INSTALLATION OF TERMINAL

Use a crimping tool (for heavy gauge wire) and follow the instructions provided with the tool to select the proper position of the tool.

NOTE: Different wires require different crimping pliers settings.

After positioning the crimping pliers, crimp the terminal already installed on wire.

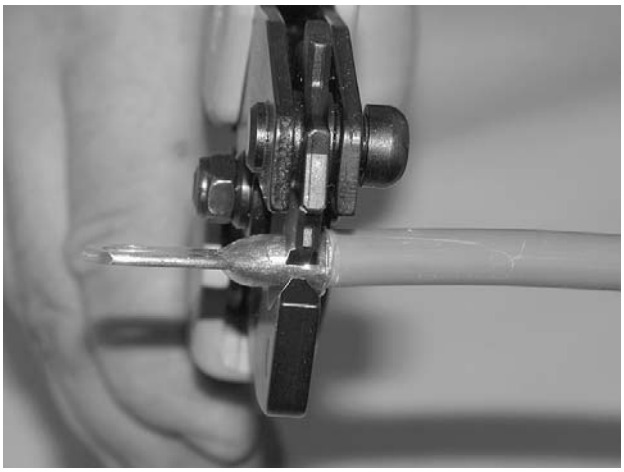
A32E2TA

CRIMPING OF WIRE

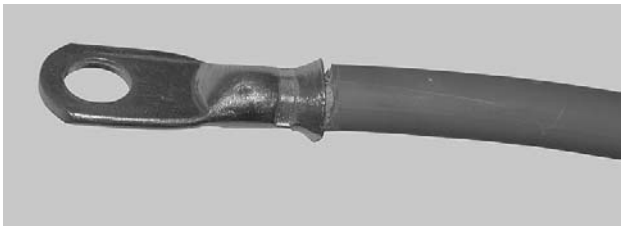
A32E2UA

PROPERLY CRIMPED WIRE

To verify, if the wire is properly crimped, apply some pulling force on wire and the terminal at the same time from both directions.

NOTICE **Never weld the wire to the terminal. Welding can change the property of the wire and it can become brittle and break.**

Install the protective heat shrink rubber tube on the terminal. Heat the heat shrink rubber tube using the heat gun so that it grasps the wire and the terminal.

NOTICE **Make sure that the protective heat shrink rubber tube has been properly installed and no part of wire is exposed.**

SPLICES REPAIR PROCEDURE

1. Make sure to perform the usual tests described in *ELECTRICAL SYSTEM* sections before investigating the harness splices.
2. If an electrical issue can not be found with the usual tests, locate the main harness splice that is involved in the faulty circuit and repair it referring to the following cases.
3. To repair a splice, we recommend the use of a tin solder meeting the followings requirements or an equivalent.

TIN SOLDER REQUIREMENTS
SN 60
PB 40
DIA 0.062
FLUX RA 2%

CASE 1: Wire Detached from Splice

⚠ WARNING

Repairs described in this section should never be performed on harness sections that can be exposed to water.

1. Locate splice. Refer to splices location diagrams.
2. Remove wires from protector tube.
3. Locate the shrink tube protecting the defective splice.

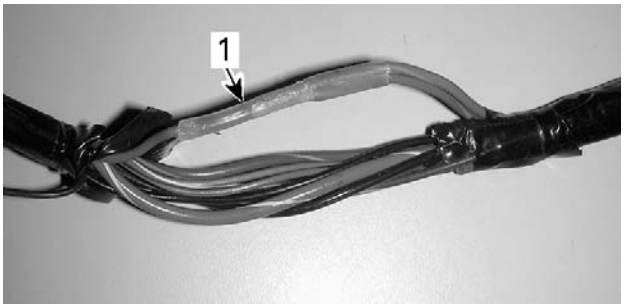

mmr2010-043-001_a

1. Shrink tube

4. Remove the shrink tube.
   4.1 Using a blade, cut the shrink tube.

mmr2010-043-002

NOTICE **Be careful with the blade to avoid cutting wires insulation.**

   4.2 Slightly heat the shrink tube using a heat gun.

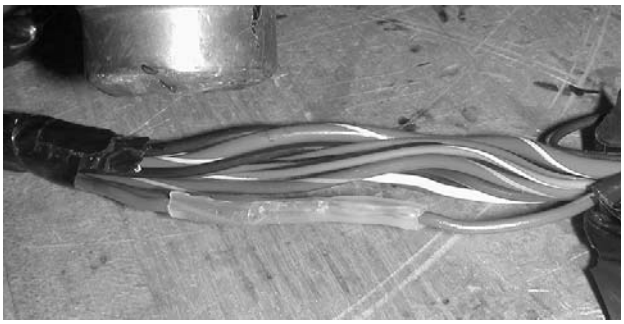

mmr2010-043-003

4.3 Remove the shrink tube with long nose pliers.

5. Locate detached wire from splice.

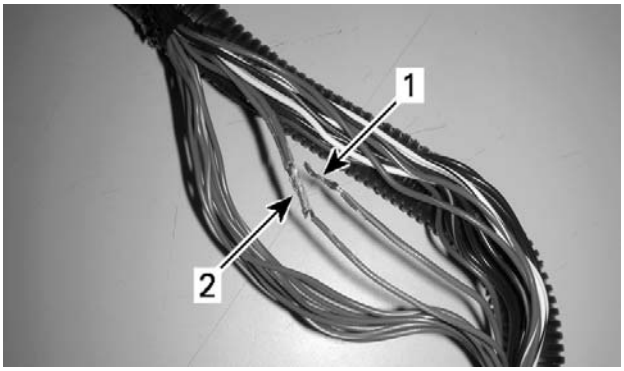

mbg2008-021-116_a

1. *Detached wire*
2. *Splice*

6. Twist detached wire around splice.

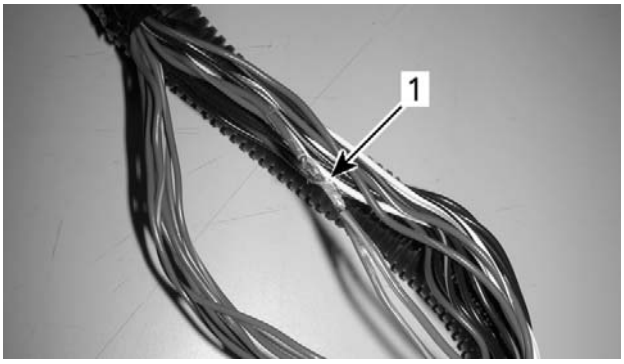

mbg2008-021-117_a

1. *Twisted wire*

7. Perform a tin solder on twisted wire.
8. Apply electrical tape to cover splice.

NOTE: Make sure tape overlaps on wire insulation, approximately 13 mm (1/2 in) each side.

9. Reinstall wires into protector tube.

CASE 2: Wire Broken from Splice

⚠ WARNING

Repairs described in this section should never be performed on harness sections that can be exposed to water.

1. Locate splice. Refer to splices location diagrams.
2. Remove wires from protector tube.
3. Locate the shrink tube protecting the defective splice.

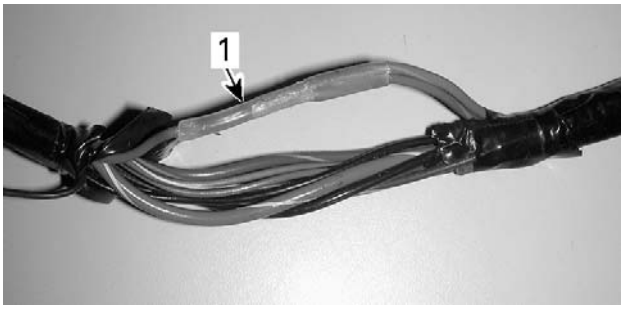

mmr2010-043-001_a

1. *Shrink tube*

4. Remove the shrink tube.

4.1 Using a blade, cut the shrink tube.

mmr2010-043-002

NOTICE **Be careful with the blade to avoid cutting wires insulation.**

4.2 Slightly heat the shrink tube using a heat gun.

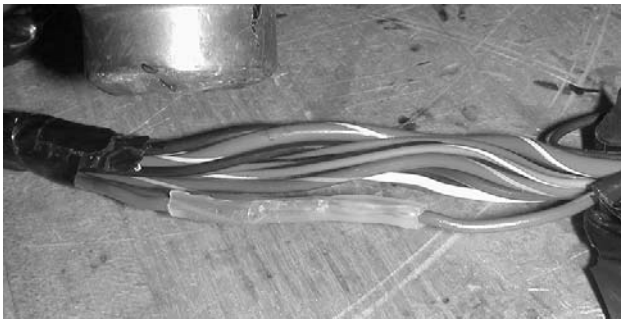

mmr2010-043-003

4.3 Remove the shrink tube with long nose pliers.

5. Locate broken wire from splice.

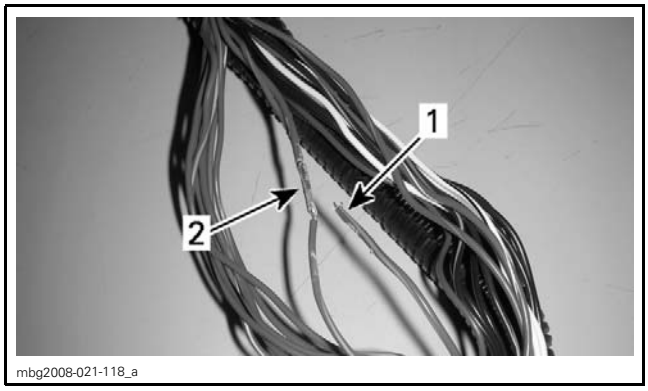

1. Broken wire
2. Splice

6. Strip wire insulation at the end of broken wire.

7. Strip wire insulation below the splice.

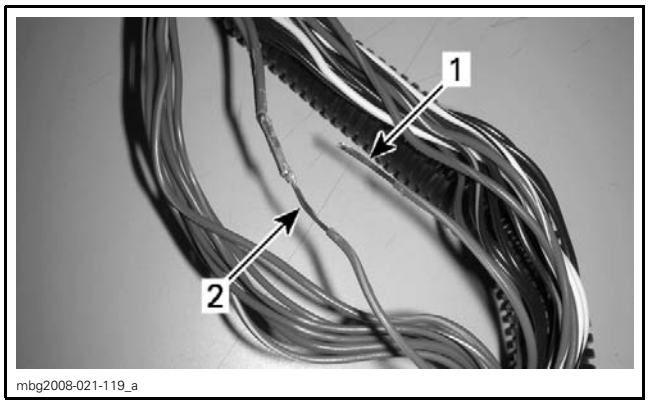

1. Broken wire stripped
2. Splice wire stripped

8. Twist wire around stripped wire.

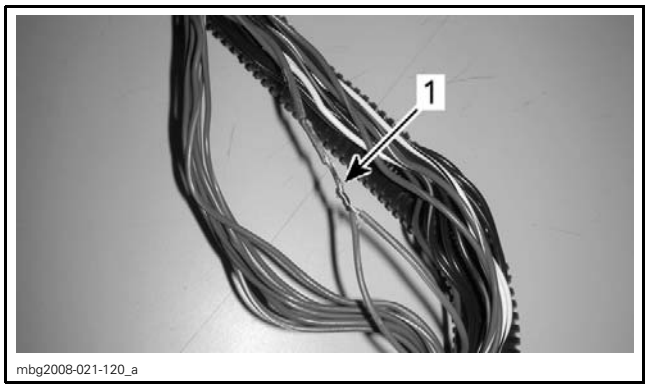

1. Twisted wire

9. Perform a tin solder on twisted wire.

10. Apply electrical tape to cover splice.

NOTE: Make sure tape overlaps on wire insulation, approximately 13 mm (1/2 in) each side.

11. Reinstall wires into protector tube.

NOTE: Always perform a solder on a bigger wire (lower gauge).

IGNITION SYSTEM

SERVICE TOOLS

Description	Part Number	Page
ECM ADAPTER TOOL	529 036 166	188
FLUKE 115 MULTIMETER	529 035 868	187

SERVICE PRODUCTS

Description	Part Number	Page
LOCTITE 767 (ANTI-SEIZE LUBRICANT)	293 800 070	185

GENERAL

SYSTEM DESCRIPTION

The battery supplies the primary side of ignition coil through the main relay (R2) while the ECM completes the circuit for each cylinder by switching it to the ground at the right moment. The ECM can detect open and short circuit in the primary winding but it does not check the secondary winding.

The ECM controls the ignition system. For more information, refer to *ENGINE MANAGEMENT* section.

Ignition Timing

Ignition timing is not adjustable.

MAINTENANCE

REPLACING THE SPARK PLUG

Removing the Spark Plug

Unplug the spark plug cable.

Clean the spark plug area with pressurized air.

Unscrew spark plug using a spark plug socket.

Installing the Spark Plug

Prior to installation make sure that contact surfaces of the cylinder head and spark plug are free of grime.

1. Using a wire feeler gauge, verify the electrode gap as specified in *TECHNICAL SPECIFICATIONS*.
2. Apply antiseize lubricant over the spark plug threads to prevent possible seizure.
3. Hand screw spark plug into cylinder head, then tighten with a torque wrench and an appropriate spark plug socket.

CAUTION Do not overtighen spark plugs, engine damage can occur.

TIGHTENING TORQUE	
Service product	LOCTITE 767 (ANTI-SEIZE LUBRICANT) (P/N 293 800 070)
Spark plug	20 N•m ± 2 N•m (15 lbf•ft ± 1 lbf•ft)

TROUBLESHOOTING

It is good practice to check for fault codes using the BRP diagnostic software (BUDS2) as a first troubleshooting step. Refer to *DIAGNOSTIC AND FAULT CODES* subsection.

Always refer to the *WIRING DIAGRAM* when troubleshooting an electrical circuit.

Refer to *POWER DISTRIBUTION AND GROUNDS* for fuse and relay information.

DIAGNOSTIC GUIDELINES

The following is provided to help in diagnosing the probable cause of a problem. It is a guideline and should not be assumed to list all possible causes.

ENGINE WILL NOT START (ENGINE TURNS OVER)

1. **Fouled or defective spark plug**
   - *Replace.*
2. **Defective CPS**
   - *Check operation of CPS and replace if necessary. Refer to ELECTRONIC FUEL INJECTION (EFI).*

3. Defective trigger wheel / Damaged trigger wheel.
   - *Check, refer to ROTOR in the MAGNETO AND STARTER subsection.*
4. Defective ignition circuit
   - *Check fuse 5 of fuse box 2, ignition coil and wiring condition.*
5. Defective fuel pump
   - *Check fuel pump, refer to FUEL SYSTEM.*
6. Defective fuel injectors or circuit
   - *Check fuel injectors, refer to ELECTRONIC FUEL INJECTION (EFI).*

ENGINE HARD TO START

1. Spark plug faulty, fouled or worn out
   - *Check spark plug condition. Replace if necessary.*
2. Low fuel pressure
   - *Test fuel pressure, refer to FUEL SYSTEM.*

ENGINE MISFIRES, RUNS IRREGULARLY

1. Fouled, defective, worn spark plugs
   - *Check/verify heat range/gap/replace.*
2. Defective or loose CPS
   - *Check. Refer to ELECTRONIC FUEL INJECTION (EFI).*
3. Damaged trigger wheel.
   - *Check. Refer to ROTOR in the MAGNETO AND STARTER subsection.*
4. Defective ignition circuit
   - *Check ignition coil, fuse 5 of fuse box 2, and wiring condition.*
5. Poor engine grounds
   - *Check/clean/repair.*
6. Fuel level indicator lamp is ON
   - *Check fuel level.*

ENGINE CONTINUALLY BACKFIRES

1. Fouled, defective spark plugs
   - *Clean/replace.*
2. Defective or loose CPS
   - *Check, refer to ELECTRONIC FUEL INJECTION (EFI).*
3. Damaged trigger wheel.
   - *Check, refer to ROTOR in the MAGNETO AND STARTER subsection.*

PROCEDURES

SAFETY PRECAUTIONS

⚠ WARNING

To prevent powerful electric shock while cranking engine, do not touch any of the ignition components (ignition coil, spark plug wire, etc.) nor tester leads. Also make sure that tester leads do not touch any metallic object.

IGNITION SWITCH

Testing the Ignition Switch (Quick Test)

Turn ignition switch to ON position.

If multifunction gauge turns on (assuming it works), the ignition switch is good.

If multifunction gauge does not turn on, check the following in this order:

– Battery
– Fusible links between starter solenoid and fuse box 2
– Fuses 4 and 8 of fuse box 2
– ECM is properly powered (refer to *ENGINE MANAGEMENT*)
– Ignition switch.

Ignition Switch Wire Identification

FUNCTION	PIN	WIRE COLOR
Ground signal to ECM in OFF position 12 Vdc to ECM in ON position	A	YE/OG
12 Vdc input	B	BE/WH
12 Vdc output (Accessory relay)	C	YE/BU
12 Vdc output (ECM, starter solenoid and start switch)	D	BK/YE
Ground (through ECM)	F	OG/VI

IGNITION COIL

When troubleshooting an ignition coil problem, first carry out a spark occurrence test, refer to *SPARK PLUG* in this subsection.

If there is no spark, carry out *TESTING THE IGNITION COIL INPUT VOLTAGE* and *TESTING THE IGNITION COIL GROUND CIRCUIT CONTINUITY*.

vmr2006-018-100

Ignition Coil Access

Tilt the cargo box to reach the ignition coils.

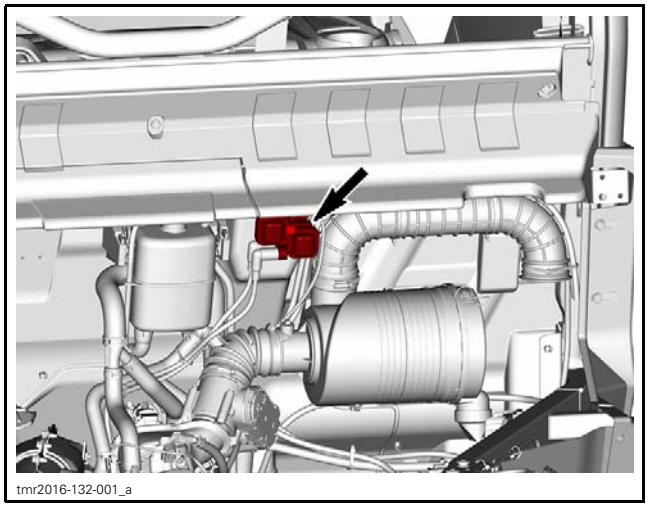
tmr2016-132-001_a

Installing the Ignition Coil

Install a new elastic nut and tighten to the specified torque.

TIGHTENING TORQUE	
Ignition coil retaining bolt	10 N•m ± 1 N•m (89 lbf•**in** ± 9 lbf•**in**)

Quick Test with BUDS2

Connect vehicle to the BRP diagnostic software (BUDS2). Refer to *COMMUNICATION TOOLS* subsection.

In BUDS2, select:

– **Functions** page
– **ECM** button
– **IO Controls** tab
– **Activate Ignition Coils**.

You should hear the spark occurring. In doubt, use an inductive spark tester. If there is no spark, perform the following tests.

NOTE: Producing a good spark in a combustion chamber requires a higher voltage than in a static test. In doubt, try a known good ignition coil.

Testing the Ignition Coil Input Voltage

Disconnect the 3-pin connector from the ignition coil.

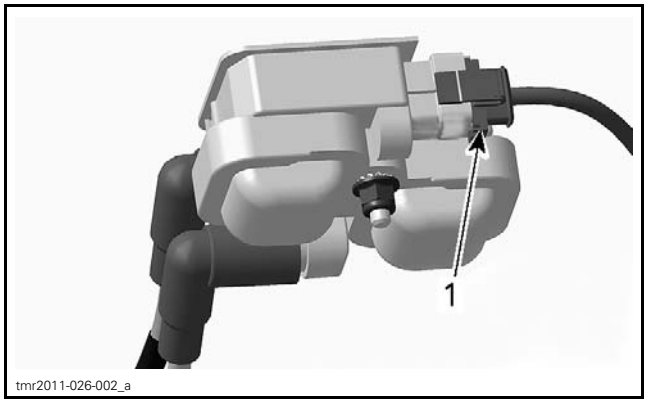

tmr2011-026-002_a

1. Ignition coil connector

Turn ignition switch to ON.

Check voltage.

REQUIRED TOOL	
FLUKE 115 MULTIMETER (P/N 529 035 868)	

IGNITION COIL CONNECTOR	VOLTAGE
Pin 2 with battery ground	Battery voltage

Battery voltage should be read.

If battery voltage is NOT read, check continuity of ignition coil supply circuit.

Testing the Ignition Coil Ground Circuit Continuity

Disconnect the ECM connector “A” and connect it to the ECM adapter tool.

REQUIRED TOOL	
ECM ADAPTER TOOL (P/N 529 036 166)	

Check wiring continuity as per following table.

COMPONENT	PIN (IGNITION COIL CONNECTOR)	PIN (ECM CONNECTOR)
Cylinder 1 (front)	1	A-M2
Cylinder 2 (rear)	3	A-M1

Testing the Ignition Coil Resistance

An ignition coil with good resistance measurement can still be faulty. Voltage leak can occur at high voltage level which is not detectable with an ohmmeter. Replacing the ignition coil may be necessary as a test.

Disconnect ignition cables from spark plugs.

Primary Windings

Disconnect ECM "A" connector and connect it to the ECM adapter tool.

REQUIRED TOOL	
ECM ADAPTER TOOL (P/N 529 036 166)	

Using a multimeter, check resistance in primary windings as follows.

PRIMARY CIRCUIT	ENGINE CONNECTOR (HIC)	ECM CONNECTOR "A"	RESISTANCE @ 20°C (68°F)
Cylinder 1 (front)	Fuse F5	A-M2	.3 - .6 Ω
Cylinder 2 (rear)		A-M1	

If any resistance is not good, measure resistance directly on coil. If second test is ok, check wiring / connector.

Secondary Windings

Due to the integrated diode, it is not possible to take any resistance measurement of the secondary winding.

SPARK PLUG

For spark plug replacement procedure, refer to *MAINTENANCE* in this subsection.

Testing for Spark Occurrence

⚠ WARNING

Never check for ignition spark from an open coil and/or spark plug as spark may cause potential fuel vapors to ignite.

Use an approved inductive type spark tester to test for ignition. Follow spark tester manufacturer procedures.

Remove the LH side panel for access to the spark plug and spark plug cable.

Turn ignition switch to ON.

Set engine stop switch to RUN.

Press and hold the start button.

If nothing happens when the start button is pressed, refer to the *STARTING SYSTEM* subsection.

If the starter rotates the engine and there is no spark indicated by the tester, follow the ignition system troubleshooting sequence as indicated.

If the inductive spark tester indicates ignition to the spark plug, install a new spark plug.

If a known good spark plug does not solve the problem, continue testing the other system components. The ignition spark may not be correct due to other system components being out of tolerance.

NOTE: Keep in mind that even if there is a spark during this static test, the voltage requirement to produce a spark in the combustion chamber is higher when the engine is running. The ignition coil may not be functioning properly. Replacing the ignition coil may be necessary as a test.

Troubleshooting Fouled Spark Plug

Fouling of the spark plug is indicated by irregular running of the engine, decreased engine speed due to misfiring, reduced performance, and increased fuel consumption. This is due to a loss of compression. Other possible causes are: prolonged idling or low-speed riding, a clogged air filter, incorrect fuel, defective ignition system, incorrect spark plug gap, lubricating oil entering the combustion chamber, or too cold spark plug. The plug face of a fouled spark plug has either a

wet black deposit or a black carbon fouling. Such coatings form a conductive connection between the center electrode and ground.

Spark Plug Analysis

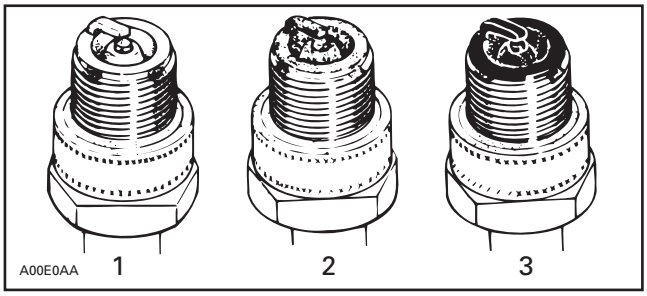

TYPICAL
1. Overheated (light grey, white)
2. Normal (light brown, brown)
3. Fouled (black, wet or dry, dark deposits, grey, melted coating)

The plug face reveals the condition of the engine, operating condition, method of driving and fuel mixture. For this reason it is advisable to inspect the spark plug at regular intervals, examining the plug face (i.e. the part of the plug projecting into the combustion chamber).

CHARGING SYSTEM

GENERAL

SYSTEM DESCRIPTION

The purpose of the charging system is to keep the battery at a full state of charge and to provide the electrical system with the required electrical power for normal vehicle operation.

Magneto

The magneto is the primary source of electrical energy. It transforms magnetic field into electric current (AC).

The magneto has a 3 phase series stator.

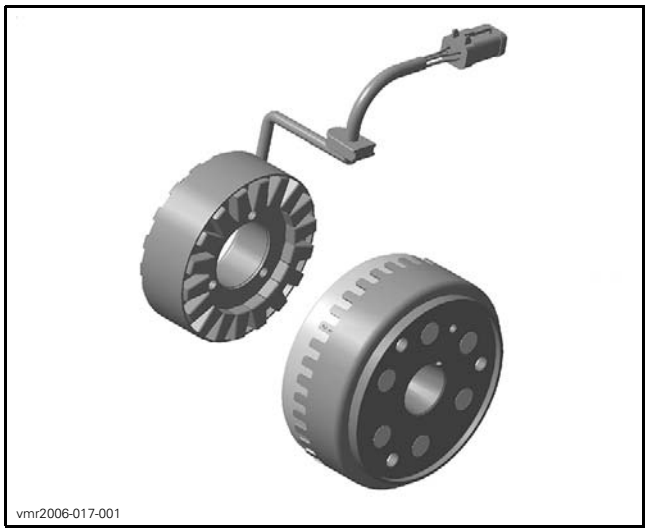

TYPICAL

Voltage Regulator/Rectifier

The rectifier receives AC current from the magneto and transforms it into direct current (DC).

The voltage regulator, included in the same unit, limits voltage to prevent any damage to electrical components.

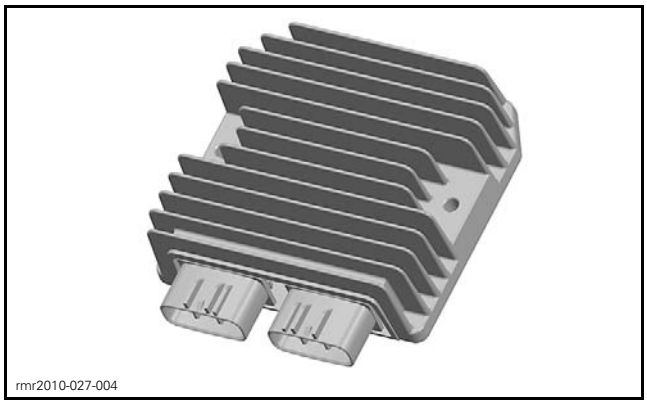

TYPICAL – VOLTAGE REGULATOR/RECTIFIER

Battery

The battery supplies DC power to the electric starter for cranking the engine. During engine starting, it also supplies DC power to the entire electrical system.

At low engine RPM operation and high current load conditions, it supplements the magneto output and helps to maintain a steady system voltage.

INSPECTION

CHARGING SYSTEM OUTPUT

First ensure that battery is in good condition prior to performing the following tests.

Testing the Output Voltage Using BUDS2

1. Connect the vehicle to the BRP diagnostic software (BUDS2).
2. In BUDS2, go to:
   – **Measurements** page
   – **Vehicle** or **ECM** button
   – **ECM - Basic** tab.
3. Start engine with the less consumption as possible (no lights, no accessories).
4. Increase engine RPM as specified in the following table and read voltage in the **Battery Voltage (V)** box.

OUTPUT VOLTAGE TEST USING BUDS2	
ENGINE SPEED	VOLTAGE (DC)
4000 RPM	14.8 ± .4 Vdc

If voltage is above specification, replace voltage regulator/rectifier.

If voltage is below specification, check stator output and wiring harness prior to concluding that voltage regulator/rectifier is defective. Refer to *MAGNETO AND STARTER* subsection.

TROUBLESHOOTING

It is good practice to check for fault codes using the BRP diagnostic software (BUDS2) as a first troubleshooting step.

BATTERY REGULARLY DISCHARGED OR WEAK

1. **Loose or corroded battery cables connections.**
   - *Tighten or repair battery cables connections.*
2. **Worn or defective battery.**
   - *Charge and test battery.*
3. **Defective magneto stator.**
   - *Test stator, refer to MAGNETO AND STARTER subsection.*
4. **Defective regulator/rectifier.**
   - *Test system voltage.*
5. **Damaged magneto rotor or Woodruff key.**
   - *Replace magneto rotor or Woodruff key, refer to MAGNETO AND STARTER subsection.*

PROCEDURES

Ensure battery is fully charged.

Refer to *WIRING HARNESS AND CONNECTORS* subsection for harness layout and connector locations on vehicle.

Refer to appropriate *WIRING DIAGRAM* for additional information.

⚠ WARNING

Ensure vehicle is in PARK when performing charging system tests.

BATTERY LOAD TEST

1. Connect a battery load tester.
2. Ensure proper test conditions.

TEST CONDITIONS	
Initial battery voltage‡	Above 12.5 Vdc
Engine	OFF

TEST CONDITIONS	
Load	3 times the amp-hour (AH) rating
Time	15 seconds
‡ Required for accurate testing	

SPECIFICATION	
Battery	Above 9.6 Vdc

If battery voltage drops below specification during test, replace battery and perform a *CHARGING SYSTEM LOAD TEST*.

CHARGING SYSTEM LOAD TEST

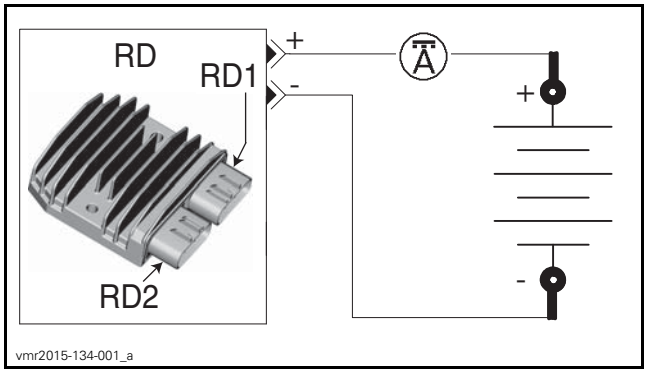

1. Connect a battery load tester.
2. Start vehicle and read voltage on tester.

SPECIFICATION	
Voltage	12.5 - 15 Vdc

If voltage is **above** specification, replace regulator and continue *CHARGING SYSTEM LOAD TEST*.

3. Connect an ammeter around RD1-1 wire.

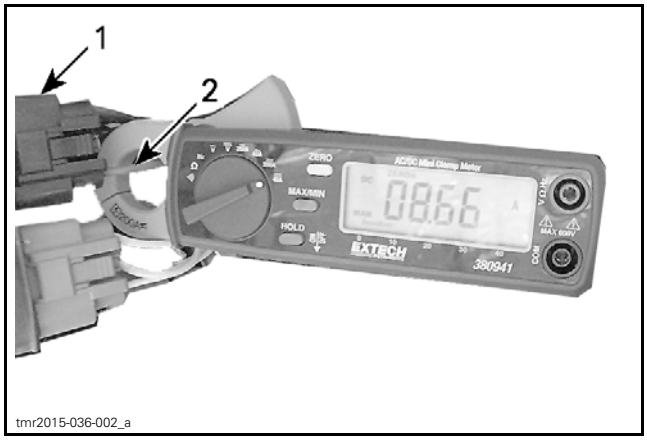

DC CURRENT TEST WITH INDUCTIVE AMMETER
1. Output connector of voltage regulator
2. Ammeter clamped over RED wire

4. Ensure proper test conditions.

TEST CONDITIONS	
Battery voltage at idle‡	Above 12.6 Vdc
Engine	Increase to 4000 RPM
Load	As required to decrease battery voltage to 12 Vdc
Time	15 seconds
‡ Required for accurate testing	

5. Read amperage on ammeter.

MODEL	SPECIFICATION
All models	50 ± 5 Amps

NOTE: With a fully charged battery and no electrical loads, specification is less than 10A.

If amperage or voltage is not within specification, verify magneto and wires. Refer to *MAGNETO AND STARTER* subsection.

If the magneto is within specifications, replace the voltage regulator.

VOLTAGE REGULATOR (RD)

Testing the Voltage Regulator Continuity

Due to internal circuitry, there is no static test available.

Voltage Regulator Location

The voltage regulator is located on the RH member of the extension frame, near the air filter housing.

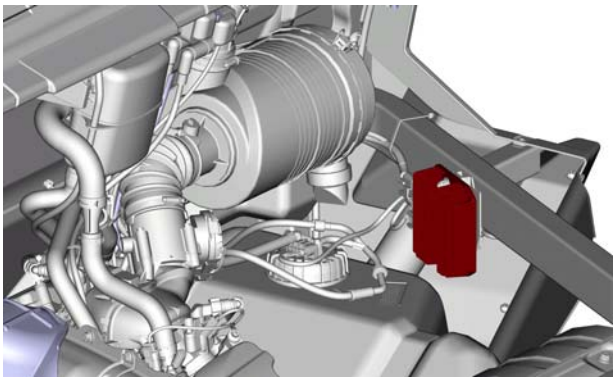

tmr2016-133-001

Voltage Regulator Wire Identification

FUNCTION	PIN	COLOR
12 Vdc output	RD1-1	RD
12 Vdc ground	RD1-3	BK
12 Vac input	RD2-1	YE
12 Vac input	RD2-2	YE
12 Vac input	RD2-3	YE

Testing the Voltage Regulator Power

1. Check voltage at RD1-1.

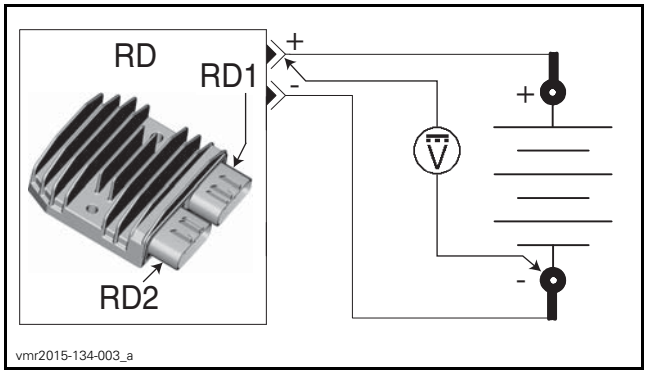

vmr2015-134-003_a

TEST CONDITIONS	
RD1-1	Hot at all times

BACKPROBE	PROBE	SPECIFICATION
RD1-1	BAT2 (-)	Battery voltage

2. Connect a battery load tester.
3. Start vehicle.
4. Ensure proper test conditions.

TEST CONDITIONS	
Battery voltage at idle‡	Above 12.6 Vdc
Engine	Increase to 4000 RPM
Load	As required to decrease battery voltage to 12 Vdc
Time	15 seconds
‡ Required for accurate testing	

5. Measure voltage drop.

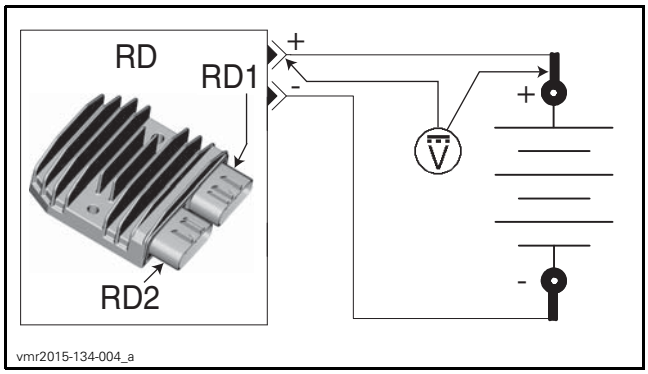

BACKPROBE	PROBE	SPECIFICATION
RD1-1	BAT1 (+)	Under 0.2 Vdc

If voltage drop is above specification, locate and repair damaged connector/wire.

Testing the Voltage Regulator Ground

1. Check ground at RD1-3.

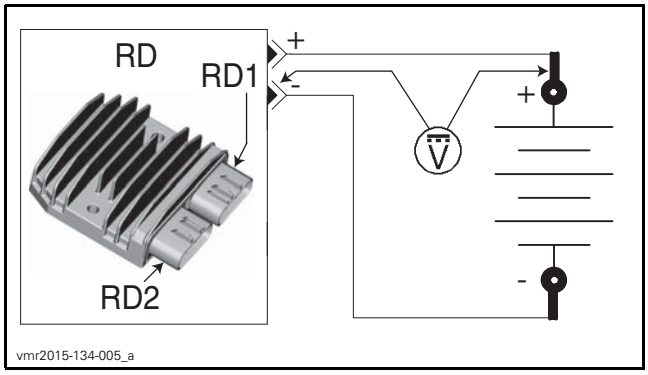

TEST CONDITIONS	
RD1-3	Permanent ground

BACKPROBE	PROBE	SPECIFICATION
RD1-3	BAT1 (+)	Battery voltage

2. Connect a battery load tester.
3. Start vehicle.
4. Ensure proper test conditions.

TEST CONDITIONS	
Battery voltage at idle‡	Above 12.6 Vdc
Engine	Increase to 4000 RPM
Load	As required to decrease battery voltage to 12 Vdc
Time	15 seconds
‡ Required for accurate testing	

5. Measure voltage drop.

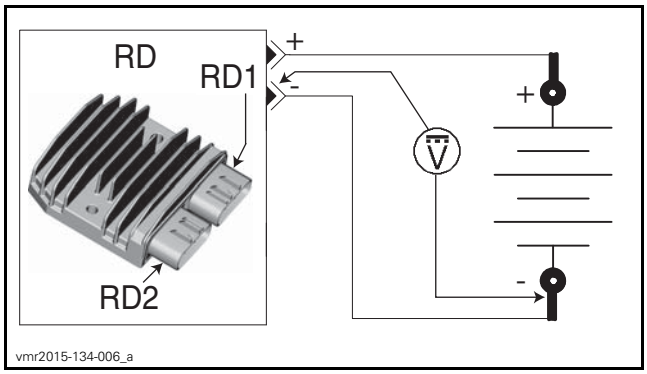

BACKPROBE	PROBE	SPECIFICATION
RD1-3	BAT2 (-)	Under 0.4 Vdc

If voltage drop is above specification, locate and repair damaged connector/wire.

BATTERY

Battery Information

These vehicles are equipped with a VRLA battery (Valve Regulated Lead Acid). **It is a maintenance-free type battery.**

Refer to battery manufacturer's instructions for proper filling, activation and routine charging procedures.

Battery Location

3-UP Models

The battery is located underneath the right passenger's seat.

MAX Models

The battery is located underneath the right rear passenger's seat.

Removing the Battery

1. Remove under seat storage compartment if equipped.
2. Remove battery cover

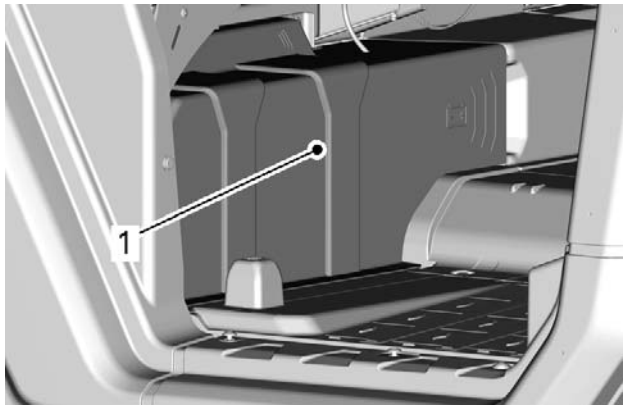

1. Battery cover

3. Disconnect BLACK (-) cable first, then the RED (+) cable.

NOTICE Always respect this order for removal; disconnect BLACK (-) cable first.

4. Remove battery holder retaining screws.

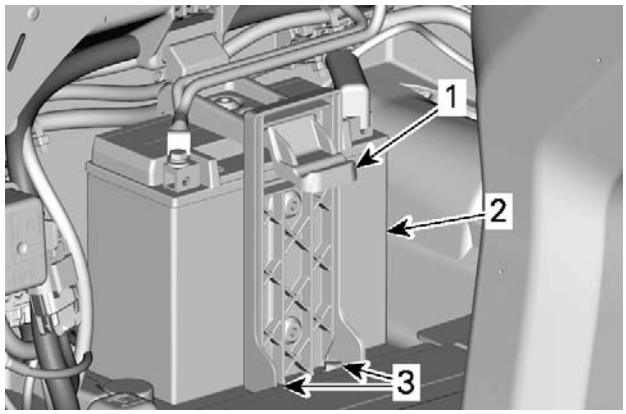

1. Battery holder
2. Battery
3. Battery holder retaining screw(s)

5. Remove battery holder.
6. Remove battery.

Cleaning the Battery

Clean the battery rack, cables and battery posts using a solution of baking soda and water.

Remove corrosion (if so) from battery cable terminals and battery posts using a firm wire brush. Rinse with clear water and dry well.

Inspecting the Battery

Visually inspect battery casing for cracks or any other damages. If casing is damaged, replace battery and thoroughly clean battery support with a water and baking soda solution.

Inspect condition of battery posts, battery support, holding strap and strap attachment points and wire terminal lugs.

Battery Storage

It is not necessary to remove the battery during vehicle storage but it is recommended for long term storage.

If the battery is left in the vehicle during storage or used infrequently, disconnect the BLACK (-) negative battery cable to eliminate battery current drain from the electrical equipment.

Recharge the battery once a month with an approved battery charger as per manufacturer's recommendations.

Clean battery, battery support and connections as required, refer to *CLEANING THE BATTERY* in this section.

For other recommendations during storage, refer to battery manufacturers instructions.

⚠ WARNING

Ensure battery is stored in a safe place, out of reach for children.

Activating a New Battery

Refer to the instructions provided with the battery.

Charging a Battery

⚠ WARNING

Always wear safety equipment and charge in a well ventilated area. Never charge or boost a battery while it is installed on vehicle. Do not open the sealed cap during charging. Do not place battery near open flame.

NOTICE If battery becomes hot, stop charging and allow it to cool before continuing.

NOTE: Sealed VRLA batteries have an internal safety valve. If battery pressure increases due to overcharging, the valve opens to release excess pressure, preventing battery damage.

An automatic charger is a fast and convenient way for error-proof charging.

Always follow the battery manufacturer's charging instructions.

When using a constant current charger, charge battery according to the chart below.

Battery Voltage Below 12.8 V and Above 11.5 V

STANDARD CHARGING (RECOMMENDED)	
APPROXIMATE TIME	CHARGE
4 - 9 HOURS	2 A

QUICK CHARGING	
APPROXIMATE TIME	CHARGE
50 MINUTES	10 A

Installing the Battery

The installation is the reverse of the removal procedure. However, pay attention to the following details.

NOTICE Always connect RED (+) cable first then BLACK (-) cable.

Tighten battery holder retaining screws to specification.

TIGHTENING TORQUE	
Battery holder retaining screws	3.4 N•m ± 0.3 N•m (30 lbf•**in** ± 3 lbf•**in**)

STARTING SYSTEM

GENERAL

SYSTEM DESCRIPTION

The starting system is composed of an electric starter supplied in current by the battery through a solenoid.

The starter solenoid receives a 12 volt input from the ignition switch and the ground signal is provided by the ECM when the following engine cranking conditions are met.

– Gearbox in Park or Neutral position and/or brake pedal held.
– Ignition switch turned to the start position and held until the engine starts.

NOTE: If the ignition switch is left ON for more than 30 minutes, engine will not start unless ignition switch is turned OFF, then ON again.

TROUBLESHOOTING

It is good practice to check for fault codes using the BRP diagnostic software (BUDS2) as a first troubleshooting step. Refer to *DIAGNOSTIC AND FAULT CODES* subsection.

Clear any fault code after solving a problem.

Always refer to the *WIRING DIAGRAM* when troubleshooting an electrical circuit.

Refer to *POWER DISTRIBUTION* for fuse and relay information.

Check all connections, cables and wires. Tighten any loose connections. Replace any chafed or corroded wires/cables.

DIAGNOSTIC GUIDELINES

FUSE 8 IN FUSE BOX 2 BURNS WHILE ATTEMPTING TO CRANK ENGINE

1. Defective D2 Diode
   - *Test diode, see procedure in this subsection.*
2. Defective starter solenoid
   - *Test starter solenoid, see procedure in this subsection.*
3. Wiring short to ground
   - *Check wiring.*

ENGINE DOES NOT CRANK AND GAUGE DOES NOT TURN ON

1. Burnt fuse F8 in fuse box 2
   - *Check fuse.*
2. Connection problem in the starting system
   - *Check all positive and ground cable connections, tighten or repair if necessary.*
3. Defective or discharged battery
   - *Test battery, refer to CHARGING SYSTEM.*
4. Defective ignition switch or circuit
   - *Check ignition switch, refer to IGNITION SYSTEM.*

ENGINE DOES NOT CRANK BUT GAUGE TURNS ON

1. Connection problem in the starting system
   - *Check all positive and ground cable connections, tighten or repair if necessary.*
2. Defective brake switch
   - *Check brake switch, refer to BRAKES section.*
3. Defective gearbox position sensor (GBPS)
   - *Check GBPS, refer to GEARBOX AND 4X4 COUPLING UNIT subsection.*
4. Defective starter solenoid or circuit
   - *Test starter solenoid, see procedure in this subsection.*
5. Defective starter motor
   - *Check starter motor, refer to MAGNETO AND STARTER subsection.*

PROCEDURES

STARTER SOLENOID

Starter Solenoid Access

3-Up Models

The starter solenoid is located beside the fuse box, underneath passenger seat.

MAX Models

The starter solenoid is located beside the fuse box, underneath rear passenger seat.

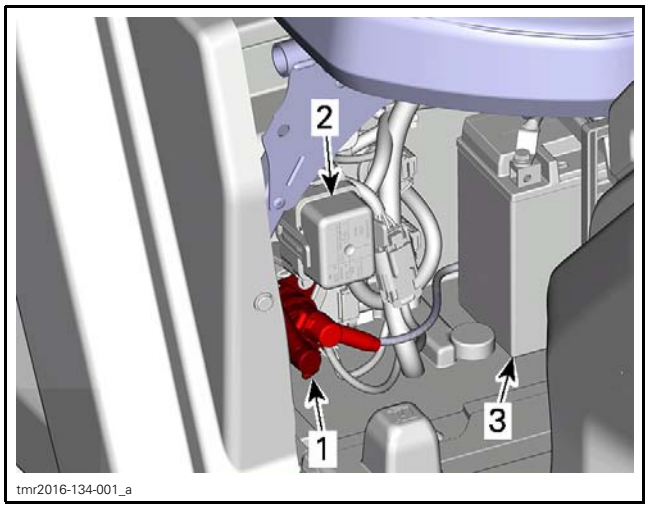

1. Starter solenoid
2. Fuse box
3. Battery

Starter Solenoid Wire Identification

FUNCTION	PIN	WIRE COLOR
12 volt input from ignition switch	SS-A	BK/YE
Ground from ECM-B pin L4	SS-B	OG/BN

Testing the Starter Solenoid Input Voltage

1. Disconnect the starter solenoid connector (SS).

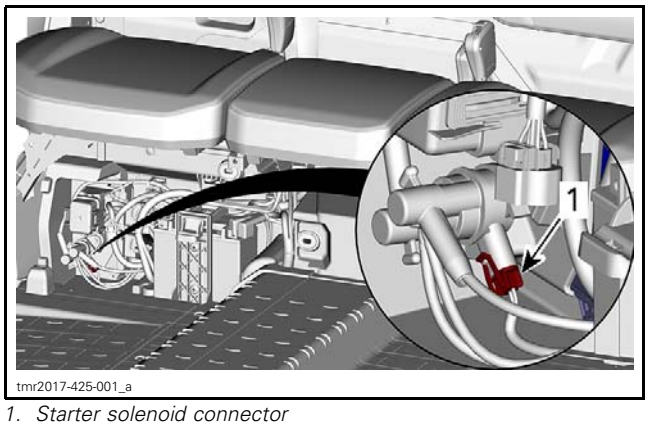

1. Starter solenoid connector

2. Hold ignition switch to START.
3. Measure voltage as per following table.

STARTER SOLENOID INPUT VOLTAGE TEST		
TEST PROBES		RESULT
SS connector pin A	Battery ground	Battery voltage

Testing the Starter Solenoid Ground Signal

1. Disconnect the solenoid connector (SS).
2. Hold ignition switch to START.
3. Measure voltage as per following table.

STARTER SOLENOID GROUND SIGNAL TEST		
TEST PROBES		RESULT
SS connector pin B	Battery positive post	Battery voltage

Testing the Starter Solenoid Winding Resistance

Remove the starter solenoid.

NOTICE **Disconnect the battery negative terminal (-) before removing the starter solenoid.**

With a multimeter, measure the resistance in the solenoid winding as follows.

STARTER SOLENOID WINDING RESISTANCE TEST		
TEST PROBES		RESULT @ 20°C (68°F)
Starter solenoid pin A	Starter solenoid pin B	Approximately 5 Ω

If measurement is out of specification, replace solenoid.

Testing the Starter Solenoid Internal Voltage Drop

Measure voltage as per following table while cranking engine in **drowned mode** (to prevent engine starting).

NOTE: For informations on the drowned mode, refer to *ENGINE MANAGEMENT* subsection.

STARTER SOLENOID INTERNAL VOLTAGE DROP TEST		
TEST PROBES		RESULT (WHILE CRANKING)
Post coming from battery	Post going to starter	0.2 Vdc max.

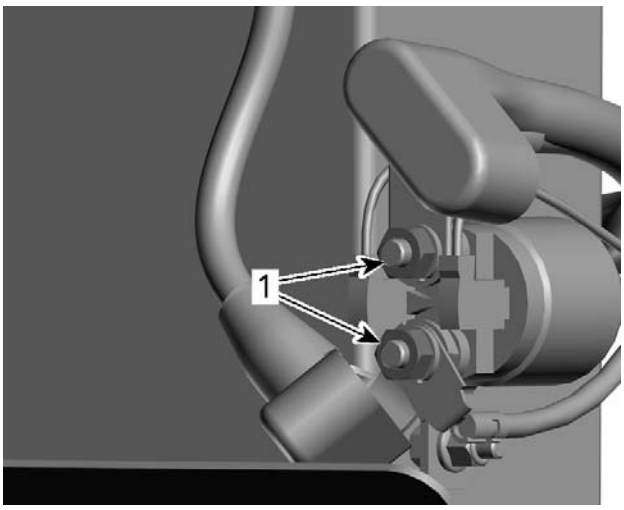

tmr2013-085-001_a

TYPICAL
1. VDC

If voltage is out of specification, replace solenoid.

D2 DIODE (STARTER SOLENOID)

Diode Location

The diode is located in the main harness, near starter solenoid.

Testing the Diode

1. Make sure ignition switch is OFF.
2. Disconnect the starter solenoid connector (SS).

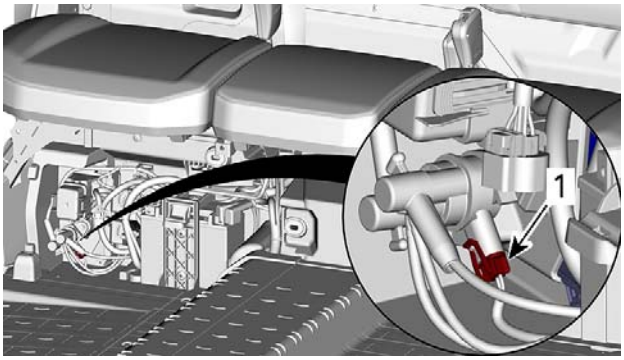

tmr2017-425-001_a

1. Starter solenoid connector

3. Set multimeter to "diode check".

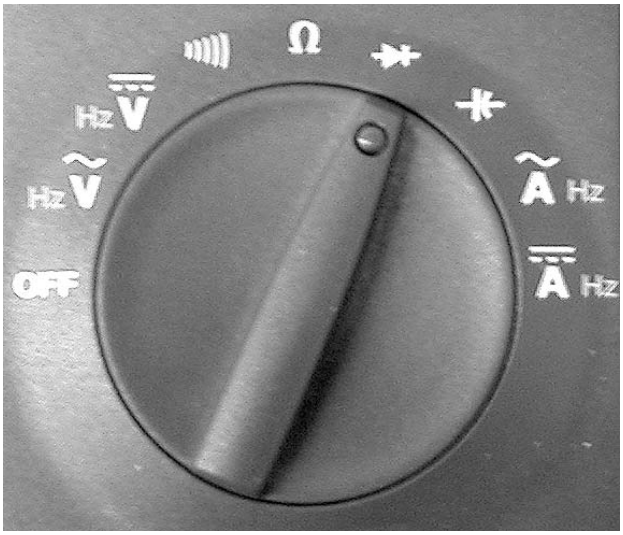

vmr2006-020-005

4. Test diode as per following table.

D2 DIODE TEST		
MULTIMETER POSITIVE PROBE	MULTIMETER NEGATIVE PROBE	RESULT
SS connector pin A	SS connector pin B	Overload (open)
SS connector pin B	SS connector pin A	Approximately 0.5 volts

If diode fails any test, replace it.

LIGHTS

SERVICE PRODUCTS

Description	Part Number	Page
DIELECTRIC GREASE	293 550 004	201

GENERAL

NOTICE It is recommended to always disconnect the battery when replacing any electric or electronic parts. Always disconnect battery exactly in the specified order, BLACK (-) cable first.

TROUBLESHOOTING

DIAGNOSTIC TIPS

IMPORTANT: When troubleshooting an electrical system fault, check battery condition, cables and connections first.

Testing a Circuit

Check the related-circuit fuse condition with a fuse tester or test lamp (a visual inspection could lead to a wrong conclusion).

NOTE: If the ignition switch is left ON for more than 30 minutes, the accessory relay will shut down.

Inspecting an Electrical Connection

When replacing an electric or electronic component, always check electrical connections. Make sure they are tight, make good contact, and are corrosion-free. Dirty, loose or corroded contacts are poor conductors and are often the source of a system or component malfunction.

Pay particular attention to ensure that pins are not bent or pushed out of their connectors.

Ensure all wire terminals are properly crimped on wires, and connector housings are properly fastened.

Check for signs of moisture, corrosion or dullness. Clean pins properly and coat them with dielectric grease or other appropriate lubricant when reassembling them, except if otherwise specified such as for the ECM connectors.

SERVICE PRODUCT
DIELECTRIC GREASE (P/N 293 550 004)

Pay attention to ground wires.

PROCEDURES

HEADLIGHTS

Headlight Wire Identification

LOW BEAM - AT BULB		
FUNCTION	PIN	COLOR
12 volt input from light switch	B	GN
Ground	A	BK

HIGH BEAM - AT BULB		
FUNCTION	PIN	COLOR
12 volt input from multifunction switch	B	BU
Ground	A	BK

Headlights Circuit Protection

CONDITION	CIRCUIT PROTECTION
Supplied with accessory relay (R3) activated	Fuse F11 of fuse block PF1

Testing the Headlight

Disconnect headlight connector.

Turn ignition switch ON.

Using a multimeter, measure the voltage on headlight connector as follows.

SWITCH POSITION	WIRE COLOR		VOLTAGE
LO beam	GN	BK	Battery voltage
HI beam	BU	BK	

Replacing a Headlight Bulb

NOTICE Never touch glass portion of a halogen bulb with bare fingers, it shortens its operating life. If glass is touched, clean it with isopropyl alcohol which will not leave a film on the bulb.

Unplug connector from bulb.

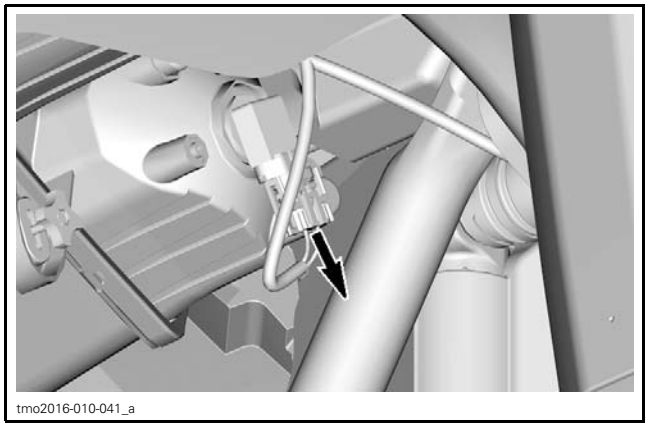

TYPICAL

Rotate bulb.

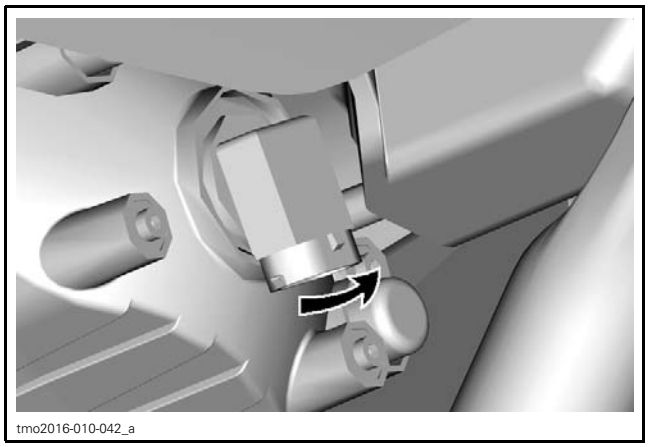

TYPICAL

Pull out bulb.

Reinstall parts in the reverse order.

Validate headlights operation.

Headlamp Beam Aiming

Select high beam.

Beam aiming is correct when center of high beam is 130 mm (5 in) below the headlight horizontal center line, scribed on a test surface, 5 m (16 ft) away.

NOTE: Load vehicle as per normal use.

Measure headlight center distance from the ground. Scribe a line at this height on test surface (wall or screen). Light beam center should be 130 mm (5 in) below scribed line.

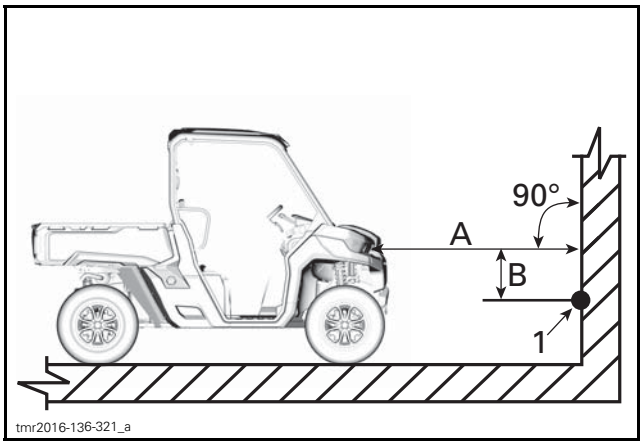

1. Light beam center
A. 5 m (17 ft)
B. 131 mm (5 in)

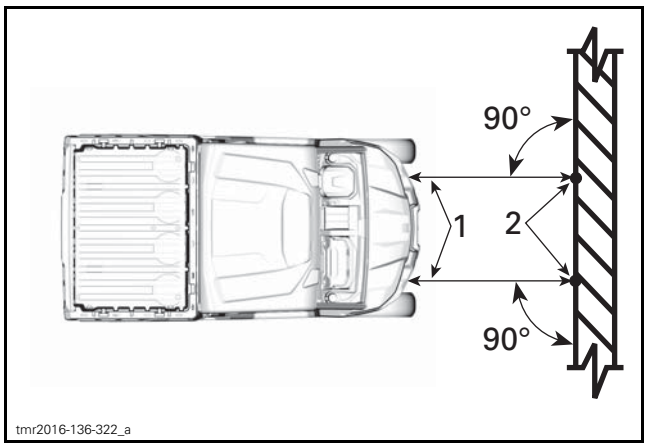

1. Headlight center lines
2. Light beam center

Adjusting Beam Aiming

Turn adjustment screws to adjust beam height and side orientation as described below. Adjust both headlight evenly.

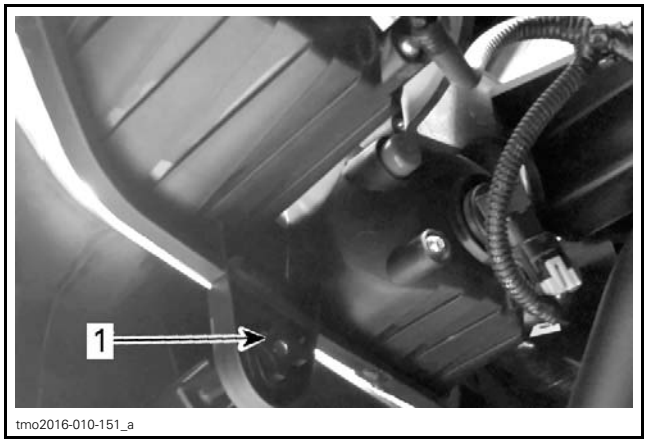

1. Adjustment screws

TAILLIGHTS/BRAKE LIGHTS

Taillight/Brake Light Wire Identification

TAILLIGHT/BRAKE LIGHT ASSEMBLY		
FUNCTION	PIN	COLOR
12 volt input to taillight from accessory relay R3	2	VT/WH
12 volt input to brake light from brake light relay (R8)	3	WH/OG
Common ground	1	BK

BRAKE LIGHT RELAY (R8)		
FUNCTION	PIN	COLOR
12 volt input from fuse F16 (in PF1)	B6	VT/WH
12 volt input from brake light switch (relay winding input)	B5	RD/OG
12 volt output to brake lights	A5	WH/OG
Relay winding ground (to ground terminal BN1)	A6	BK

BRAKE LIGHT SWITCH		
FUNCTION	PIN	COLOR
12 volt input from fuse F4 (of PF2)	2	OG/GN
12 volt output to R8 relay winding	1	RD/OG

Taillight/Brake Light Circuit Protection

CONDITION	CIRCUIT PROTECTION
Supplied with main relay R2 activated	Fuse F4 of fuse block PF2 10A
Supplied with accessory relay R3 activated	Fuse F16 of fuse block PF1 10A

Replacing the Taillight/Brake Light Bulb

If a LEDs in the taillight or brake light fail, the entire taillight must be replaced.

1. Open tail gate.
2. Remove taillight/brake light assembly retaining screws.
3. Pull the taillight/brake light assembly out of the cargo box side wall.

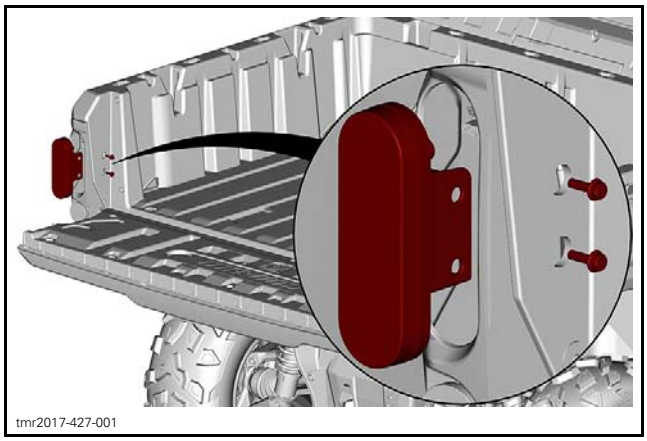
tmr2017-427-001

4. Disconnect the electrical connector.
5. Install the new taillight/brake light assembly in the reverse order.

TIGHTENING TORQUE	
Taillight/brake light assembly screws	9.5 N•m ± 1.5 N•m (84 lbf•**in** ± 13 lbf•**in**)

GAUGE 4.5" DIGITAL DISPLAY

SERVICE TOOLS

Description	Part Number	Page
FLUKE 115 MULTIMETER	529 035 868	205

GENERAL

Most of the electrical tests require the following tools.

REQUIRED TOOLS
FLUKE 115 MULTIMETER (P/N 529 035 868)
Test light

Refer to *WIRING DIAGRAM INFORMATION* subsection for diagnostic tips on troubleshooting electrical problems.

NOTICE **It is recommended to always disconnect the battery when replacing any electrical component. Always disconnect battery as specified, BLACK (-) cable first. Do not place tools on battery.**

INDICATOR LAMPS DESCRIPTION

Important information about vehicle condition is displayed on the multifunction gauge. When starting the engine, always look at the gauge for any indicator lamps or special messages.

NOTE: The low oil indicator lamp will stay ON as long as the engine is not started.

Important information messages can also be displayed temporarily in the lower display to assist indicator lamps.

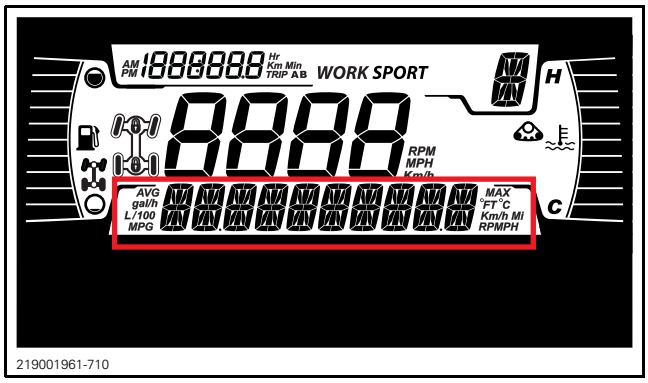

LOWER DISPLAY

NOTE: Depending on the vehicle, not all the indicator lamps and messages will be applicable.

INDICATOR LAMPS (MALFUNCTIONS)			
INDICATOR LAMP	Message	CAUSE	WHAT TO DO
NA	BAD KEY	Defective key	Replace key.
	WRONG KEY	Wrong key	Use the right key for the vehicle.
	CHECK KEY	Problem of reading key	Verify and replace key if necessary.
	HIGH ENGINE TEMPERATURE	Engine is overheating or faulty sensor	– Stop and wait for engine to cool off. – Check for leaks. – Check coolant level and adjust (see *MAINTENANCE PROCEDURES*).
	LO BATT VOLT or HI BATT VOLT	Low battery voltage	– Check charging system. – Check battery connections.
	BRAKE FAILURE - LOW BRAKE FLUID	Low brake fluid level or faulty sensor	– Check for brake fluid leaks. – Check brake fluid level and adjust (see *MAINTENANCE PROCEDURES*).
	CHECK DPS	Dynamic power steering component	Refer to *DYNAMIC POWER STEERING (DPS)* for diagnostic procedure.
	TRANSMISSION SIGNAL FAULT	Transmission Control Module component	– Remove key, wait 20 seconds, and reinsert key. – Diagnose using the BRP diagnostic software (BUDS2)
(ON)	CHECK ENGINE	Engine management component malfunction	Stop the engine. Connect the vehicle to the BRP diagnostic software (BUDS2). Check faults codes and perform recommended actions.
(Flashing)	LIMP HOME MODE	Important engine management component malfunction	Diagnose using the BRP diagnostic software (BUDS2)
	LOW OIL - STOP ENGINE	Low oil pressure	– Check for oil leaks. – Check oil level and adjust (see *MAINTENANCE PROCEDURES*.
(Flashing)	- - -	Faulty sensor	– Check sensor. – Check sensor connection to cluster.
NA = Not applicable			

TROUBLESHOOTING

DIAGNOSTIC TIPS

IMPORTANT: When solving an electrical problem, the first thing to do is to check the battery condition as well as its cables and connections.

Install a battery charger on battery terminals for any tests that involves a prolonged "key ON" period. If battery voltage gets too low, not only test results can be altered, but the vehicle electrical system may not operate normally.

Pay attention to ground wires. They could become loose or corroded which causes them to act as an additional load in a circuit, dropping voltage and reducing current to components.

Some components may be grounded through their outer casing and mounting hardware. This should also be considered.

Electrical Connectors

Pay particular attention to ensure that pins are not out of their connectors, loose, or damaged. The troubleshooting procedures may not cover problems resulting from one of these causes.

NOTICE **Ensure all terminals are properly crimped on wires and connector housings are properly fastened. When replacing any electric or electronic part(s), always check electrical connections. Make sure that they are clean, corrosion-free, tight and make good contact. The voltage and current might be too weak to go through dirty or corroded connector pins or terminals.**

MULTIFUNCTION GAUGE TROUBLESHOOTING

GAUGE FUNCTIONS INOPERATIVE OR WORKING INTERMITTENTLY

1. Power supply or ground problem
   - *Check power supply and ground circuits.*

PROCEDURES

MULTIFUNCTION GAUGE

Testing the Multifunction Gauge

Testing the Multifunction Gauge Using BRP Diagnostic Software (BUDS2).

1. Connect the vehicle to the BRP diagnostic software (BUDS2).
2. In BUDS2, select the following:
   – **Functions** page
   – **Cluster** button
   – **Execute WOW Test**

NOTE: The **WOW Test** only tests the gauge **LEDs** and **LCD**. It does not test the actual circuit functions related to each indication.

Testing the Multifunction Gauge Power Input

If the multifunction gauge is inoperative, first check for fault codes with BRP Diagnostic Software, record all faults then erase them. Reactivate the electrical system and recheck for faults. If any fault code appears, perform service actions required. Refer to *COMMUNICATION TOOLS* subsection.

1. Remove multifunction gauge.
2. Perform testing at multifunction gauge connector as per following illustration and tables.

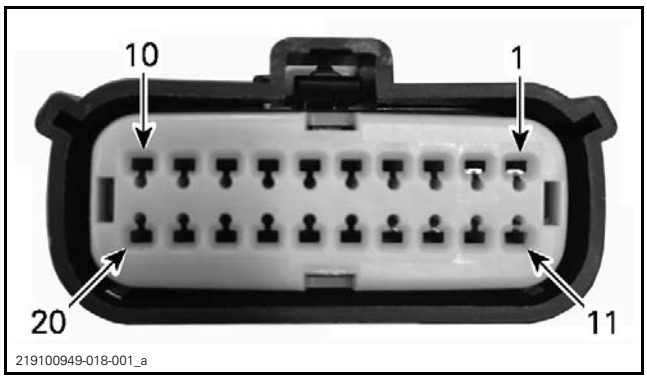

MULTIFUNCTION GAUGE CONNECTOR (PIN-OUT)

MULTIFUNCTION GAUGE POWER TEST			
CL CONNECTOR	BATTERY	IGNITION POSITION	RESULTS
Multifunction connector pin 1	Negative (-) post	Any	Close to battery voltage
Multifunction connector pin 11		ON	Close to battery voltage

If there is no power at pin 1, check fuse F1 and the related circuit.

If there is no power at pin 11, in check fuse F6, relay RY3, and the related circuit.

If the power test is within specification, continue with *TESTING THE MULTIFUNCTION GAUGE GROUND CIRCUIT*.

Testing the Multifunction Gauge Ground Circuit

Test as per the following table.

MULTIFUNCTION GAUGE GROUND TEST		
CL CONNECTOR	BATTERY	RESULT
Pin 2	Negative (-) post	Close to 1 Ω

If the ground at pin 2 is not within specification, check the related circuit.

If the ground tested to specification, continue with *TESTING THE MULTIFUNCTION GAUGE CAN CIRCUIT*.

Testing the Multifunction Gauge CAN Circuit

1. Locate the DLC (Diagnostic Link Connector). Refer to *COMMUNICATION TOOLS* subsection.
2. Test as per the following table.

MULTIFUNCTION GAUGE CAN WIRE TEST		
CL CONNECTOR	DLC	RESULTS
Pin 13 (CAN HI)	Pin 1	Close to 0.4 Ω
Pin 14 (CAN LO)	Pin 2	Close to 0.4 Ω

If the CAN wire verification test fails, check the related circuit.

If the multifunction gauge functions, however there is a suspected communication problem with another component, perform this test between the multifunction gauge and that component.

If the multifunction gauge power, ground and CAN verification tests are all to specifications and the multifunction gauge is inoperative, replace the multifunction gauge.

Removing the Multifunction Gauge

Remove gauge support.

– Push in on each tab to disengage it.
– Lift up and pull forward to remove.

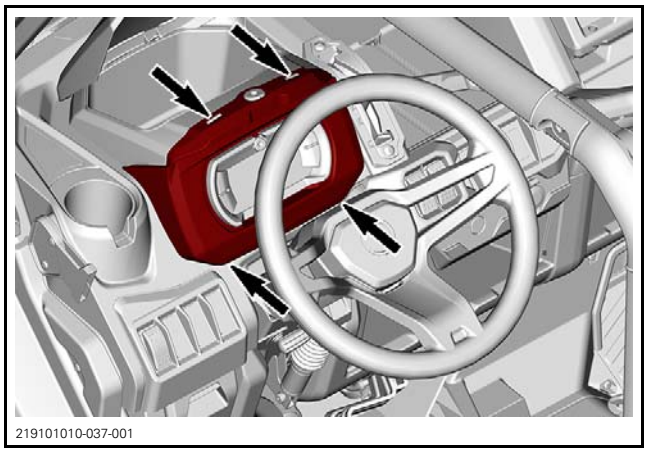

ALL MODELS EXCEPT BASE

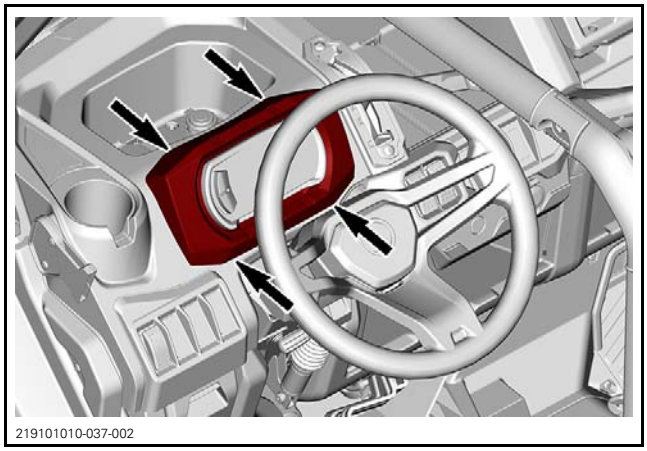

BASE MODELS

Disconnect the gauge connector and remove it.

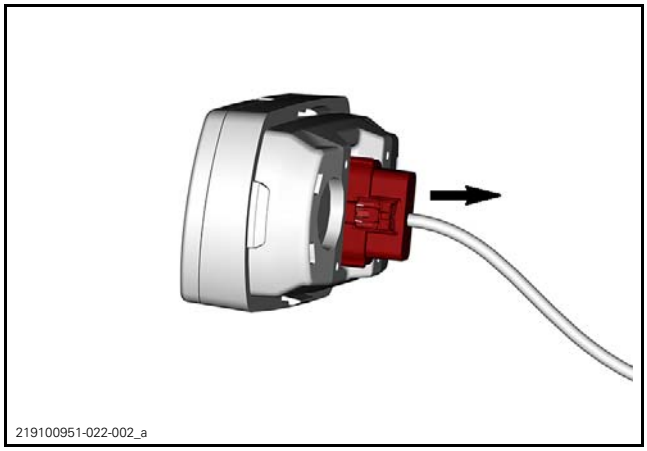

From the back of the gauge support, release the gauge retaining tabs and remove the gauge from its support.

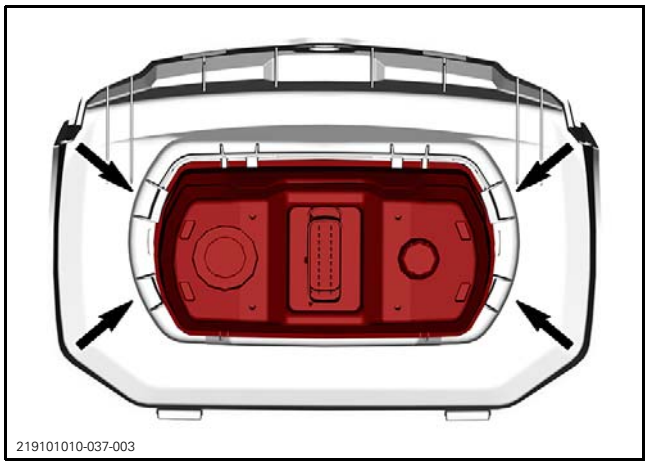

Installing the Multifunction Gauge

The installation is the reverse of the removal procedure. However, pay attention to the following.

Start vehicle engine and test gauge functions.

When updates are completed, perform the following:

- Transfer the vehicle mileage as described in *VEHICLE MILEAGE TRANSFER*.
- Change settings as per customer preferences (language and units) as described in *SETTING LANGUAGE AND UNITS OF MEASUREMENT*

Vehicle Mileage Transfer

1. In BUDS2, go to:
   - SETTINGS page
   - CLUSTER button
   - SETTINGS tab.
2. Select Increase Odometer Mileage.
3. Click on the upper right arrow in the green circle.
4. Read carefully the on-screen instructions before clicking in the value box.
5. Enter the new mileage if it is different from the indicated one.
6. Press SET button.
7. Press the WRITE TOTAL button.
8. Select OK to confirm the mileage.
9. Close the window.

Setting Language and Units of Measurement

1. In BUDS2, go to:
   - SETTINGS page
   - CLUSTER button
   - SETTINGS tab
   - CONFIGURE LANGUAGE AND UNITS.

GAUGE 7.6" DIGITAL DISPLAY

SERVICE TOOLS

Description	Part Number	Page
FLUKE 115 MULTIMETER	529 035 868	211

GENERAL

Most of the electrical tests require the following tool.

REQUIRED TOOL
FLUKE 115 MULTIMETER (P/N 529 035 868)

Refer to *WIRING DIAGRAM INFORMATION* subsection for diagnostic tips on troubleshooting electrical problems.

NOTICE **It is recommended to always disconnect the battery when replacing any electrical component. Always disconnect battery as specified, BLACK (-) cable first.**

INDICATOR LAMPS DESCRIPTION

Important information about vehicle condition is displayed on the multifunction gauge. When starting the engine, always look at the gauge for any indicator lamps or special messages.

NOTE: The low oil indicator lamp will stay ON as long as the engine is not started.

Important information messages can also be displayed temporarily in the lower display to assist indicator lamps.

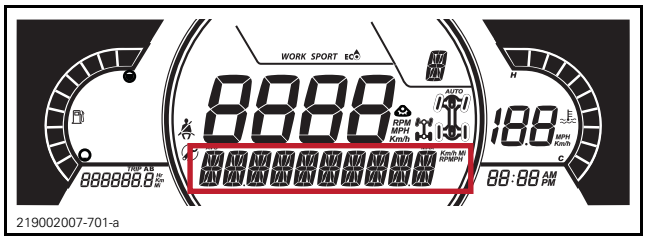

LOWER DISPLAY

NOTE: Depending on the vehicle, not all the indicator lamps and messages will be applicable.

INDICATOR LAMPS (MALFUNCTIONS)			
INDICATOR LAMP	Message	CAUSE	WHAT TO DO
NA	BAD KEY	Defective key	Replace key.
	WRONG KEY	Wrong key	Use the right key for the vehicle.
	CHECK KEY	Problem of reading key	Verify and replace key if necessary.
	HIGH ENGINE TEMPERATURE	Engine is overheating or faulty sensor	– Stop and wait for engine to cool off. – Check for leaks. – Check coolant level and adjust (see *MAINTENANCE PROCEDURES*).
	LO BATT VOLT or HI BATT VOLT	Low battery voltage	– Check charging system. – Check battery connections.

INDICATOR LAMPS (MALFUNCTIONS)			
INDICATOR LAMP	Message	CAUSE	WHAT TO DO
	BRAKE FAILURE - LOW BRAKE FLUID	Low brake fluid level or faulty sensor	– Check for brake fluid leaks. – Check brake fluid level and adjust (see *MAINTENANCE PROCEDURES*).
!	CHECK DPS	Dynamic power steering component	Refer to *DYNAMIC POWER STEERING (DPS)* for diagnostic procedure.
!	TRANSMISSION SIGNAL FAULT	Transmission Control Module component	– Remove key, wait 20 seconds, and reinsert key. – Diagnose using the BRP diagnostic software (BUDS2)
(ON)	CHECK ENGINE	Engine management component malfunction	Stop the engine. Connect the vehicle to the BRP diagnostic software (BUDS2). Check faults codes and perform recommended actions.
(Flashing)	LIMP HOME MODE	Important engine management component malfunction	Diagnose using the BRP diagnostic software (BUDS2)
	LOW OIL - STOP ENGINE	Low oil pressure	– Check for oil leaks. – Check oil level and adjust (see *MAINTENANCE PROCEDURES*.
(Flashing)	- - -	Faulty sensor	– Check sensor. – Check sensor connection to cluster.
NA = Not applicable			

TROUBLESHOOTING

DIAGNOSTIC TIPS

IMPORTANT: When solving an electrical problem, the first thing to do is to check the battery condition as well as its cables and connections.

Make sure the battery is fully charged or install a power pack for any tests that involves a prolonged "key ON" period. If battery voltage gets too low, not only test results can be altered, but the vehicle electrical system may not operate normally.

Pay attention to ground wires. They could become loose or corroded which causes them to act as an additional load in a circuit, dropping voltage and reducing current to components. Some components may be grounded through their outer casing and mounted hardware. This should also be considered.

Electrical Connectors

Pay particular attention to ensure that pins are not out of their connectors, loose, or damaged. The troubleshooting procedures may not cover problems resulting from one of these causes.

NOTICE **Ensure all terminals are properly crimped on wires and connector housings are properly fastened. When replacing any electric or electronic part(s), always check electrical connections. Make sure that they are clean, corrosion-free, tight and make good contact. The voltage and current might be too weak to go through dirty or corroded connector pins or terminals.**

MULTIFUNCTION GAUGE TROUBLESHOOTING

GAUGE FUNCTIONS INOPERATIVE OR WORKING INTERMITTENTLY

1. Power supply or ground problem
   - *Check power supply and ground circuits.*

PROCEDURES

MULTIFUNCTION GAUGE

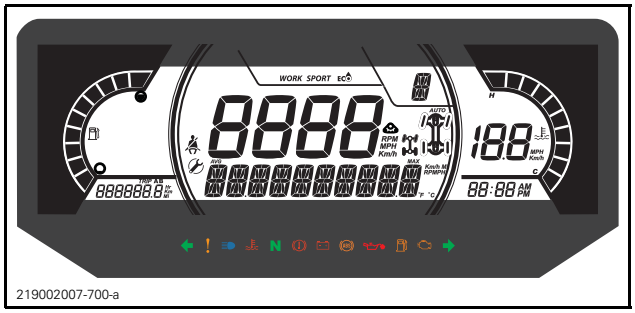

Testing the Multifunction Gauge

Before beginning any troubleshooting, test or repair, always check for fault codes.

1. Check for fault codes using BUDS2.
2. Record all fault codes, then erase them.
3. Perform a complete shutdown of the electrical system and reactivate it.
4. Check fault codes. If a previous fault codes reappears, perform the required service actions.

Testing the Multifunction Gauge Using BRP Diagnostic Software (BUDS2)

Connect the vehicle to the BRP diagnostic software (BUDS2).

In BUDS2, go to:

– **Functions** page
– **Cluster** button
– **Routines - Execute Cluster WOW test**.

All indications will come and stay ON so that you can verify each indication.

NOTE: The **WOW Test** only tests the gauge **LEDs** and **LCD**. It does not test the actual circuit functions related to each indication.

Testing the Multifunction Gauge Power Input

1. Remove multifunction gauge.
2. Perform the test at multifunction gauge connector as per following illustration and tables.

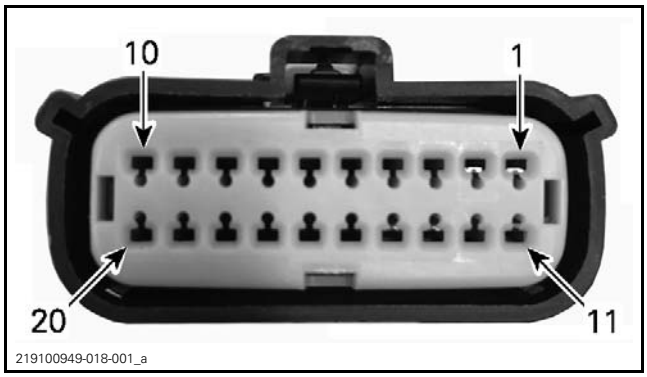

MULTIFUNCTION GAUGE CONNECTOR (PIN-OUT)

MULTIFUNCTION GAUGE POWER TEST			
CL_A CONNECTOR	BATTERY	IGNITION POSITION	RESULTS
Multifunction connector pin 1	Negative (-) post	Any	Close to battery voltage
Multifunction connector pin 11		ON	Close to battery voltage

If there is no power at pin 1, check fuse F8 and the related circuit.

If there is no power at pin 11, in check fuse F4, MAIN relay R2, and the related circuit.

If the power test is within specification, continue with *TESTING THE MULTIFUNCTION GAUGE GROUND CIRCUIT*.

Testing the Multifunction Gauge Ground Circuit

Test as per the following table.

MULTIFUNCTION GAUGE GROUND TEST		
CL CONNECTOR	BATTERY	RESULT
Pin 2	Negative (-) post	Close to 1 Ω

If the ground at pin 2 is not within specification, check the related circuit.

If the ground tested to specification, continue with *TESTING THE MULTIFUNCTION GAUGE CAN WIRE CIRCUIT*.

Testing the Multifunction Gauge CAN Circuit

1. Locate the DLC (Diagnostic Link Connector). Refer to *COMMUNICATION TOOLS* subsection.
2. Test as per the following table.

MULTIFUNCTION GAUGE CAN WIRE TEST		
CL CONNECTOR	DLC	RESULTS
Pin 13 (CAN HI)	Pin 1	Close to 0.4 Ω
Pin 14 (CAN LO)	Pin 2	Close to 0.4 Ω

If the CAN wire verification test fails, check the related circuit.

If the multifunction gauge functions, however there is a suspected communication problem with another component, perform this test between the multifunction gauge and that component.

If the multifunction gauge power, ground and CAN verification tests are all to specifications and the multifunction gauge is inoperative, replace the multifunction gauge.

Removing the Multifunction Gauge

Remove gauge support.
- Push in on each tab to disengage it.
- Lift up and pull forward to remove.

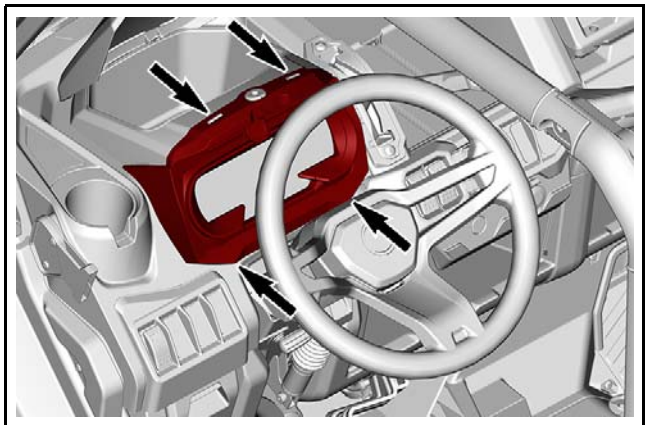
219101010-038-001

Disconnect the gauge connector.

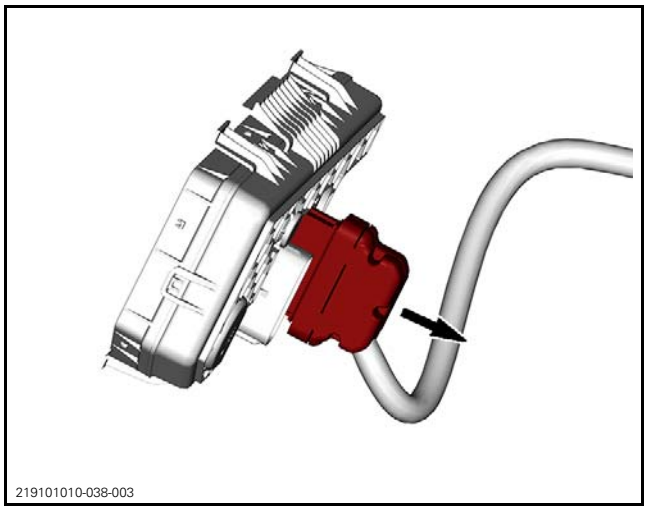
219101010-038-003

From the back of the gauge support, release the gauge retaining tabs and remove the gauge from its support.

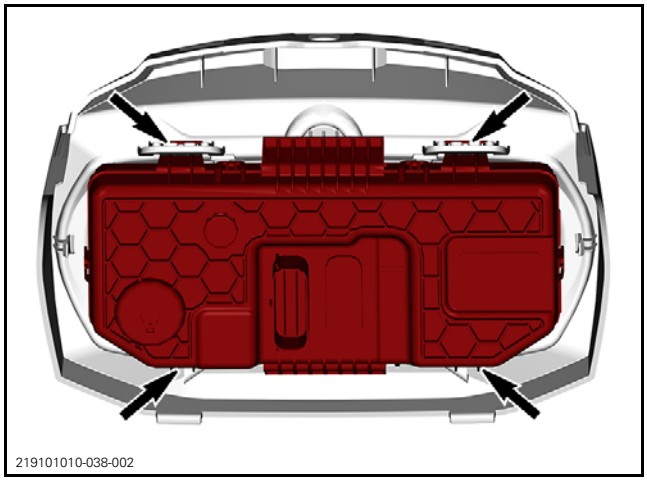
219101010-038-002

Installing the Multifunction Gauge

The installation is the reverse of the removal procedure. However, pay attention to the following.

Start vehicle engine and test gauge functions.

When updates are completed, perform the following:
- Transfer the vehicle mileage as described in *VEHICLE MILEAGE TRANSFER*.
- Change settings as per customer preferences (language and units) as described in *SETTING LANGUAGE AND UNITS OF MEASUREMENT*

Vehicle Mileage Transfer

1. In BUDS2, go to:
   - **SETTINGS** page
   - **CLUSTER** button
   - **SETTINGS** tab.
2. Select **Increase Odometer Mileage**.

3. Click on the upper right arrow in the green circle.
4. Read carefully the on-screen instructions before clicking in the value box.
5. Enter the new mileage if it is different from the indicated one.
6. Press SET button.
7. Press the WRITE TOTAL button.
8. Select OK to confirm the mileage.
9. Close the window.

Setting Language and Units of Measurement

1. In BUDS2, go to:
   - SETTINGS page
   - CLUSTER button
   - SETTINGS tab
   - CONFIGURE LANGUAGE AND UNITS.

ACCESSORIES

SERVICE PRODUCTS

Description	Part Number	Page
DIELECTRIC GREASE	293 550 004	217

GENERAL

NOTICE It is recommended to always disconnect the battery when replacing any electric or electronic parts. Always disconnect battery exactly in the specified order, BLACK (-) cable first.

TROUBLESHOOTING

DIAGNOSTIC TIPS

IMPORTANT: When troubleshooting an electrical system fault, check battery condition, cables and connections first.

Testing a Circuit

Check the related-circuit fuse condition with a fuse tester or test lamp (a visual inspection could lead to a wrong conclusion).

NOTE: If the ignition switch is left ON for more than 30 minutes, the accessory relay will shut down.

Inspecting an Electrical Connection

When replacing an electric or electronic component, always check electrical connections. Make sure they are tight, make good contact, and are corrosion-free. Dirty, loose or corroded contacts are poor conductors and are often the source of a system or component malfunction.

Pay particular attention to ensure that pins are not bent or pushed out of their connectors.

Ensure all wire terminals are properly crimped on wires, and connector housings are properly fastened.

Check for signs of moisture, corrosion or dullness. Clean pins properly and coat them with grease or other appropriate lubricant when reassembling them, except if otherwise specified such as for the ECM connectors.

RECOMMENDED PRODUCTS
DIELECTRIC GREASE (P/N 293 550 004)

Pay attention to ground wires.

PROCEDURES

CONSOLE SWITCHES

Switches Access

The switches connectors can be reached by the openings underneath the dash.

Replacing a Switch

Disconnect electrical connector.

Release retaining clips, then push switch out of the console.

tmr2011-030-012_a

TYPICAL
1. Retaining clips

The installation is the reverse of the removal procedure.

Identifying Switches Illumination Wire

SWITCHES BACK LIGHTING		
FUNCTION	PIN	COLOR
12 volt input from fuse PF2-F7	See note	RD/BK

NOTE: The back lighting circuit of all console switches is supplied by the RD/BK wire but the pin location differ from one to another.

Switches Back Lighting Circuit Protection

CONDITION	CIRCUIT PROTECTION
Supplied with main relay PF2-R2 activated	Fuse PF2-F7 (from main relay PF2-R2)

12 VOLT POWER OUTLET

Replacing a 12 Volt Power Outlet

Unplug the connectors of the power outlet.

Unscrew the retaining nut.

The installation is the reverse of the removal procedure.

Identifying 12 Volt Power Outlet Wire

12 VOLT POWER OUTLET		
FUNCTION	PIN	COLOR
12 volt input from fuse PF1-F12	2	RD/BN
Ground	1	BK

12 Volt Power Outlet Circuit Protection

CONDITION	CIRCUIT PROTECTION
Supplied with accessories relay PF1-R3 activated	Fuse PF1-F12 (from accessories relay PF1-R3)

USB CONNECTOR

Replacing USB Connector

Unplug the connectors of the power outlet.

Unscrew the retaining nut.

The installation is the reverse of the removal procedure.

Identifying USB Connector Wire

12 VOLT POWER OUTLET		
FUNCTION	PIN	COLOR
USB connector input from fuse PF1-F14	2	RD/VT
Ground	1	BK

USB Connector Circuit Protection

CONDITION	CIRCUIT PROTECTION
Supplied with accessories relay PF1-R9 activated	Fuse PF1-F14 (from accessories relay PF1-R9)

WINCH

Identifying Winch Wire

WINCH RELAY		
FUNCTION	PIN	COLOR
12 volt input from battery (winch power)	2	RD
Ground	1	BK
12 volt input from switch ("IN")	SW2	GN/BU
12 volt input from switch ("OUT")	SW1	LT BU
Motor power (switches polarity depending on rotation direction)	BP4	RD (with Yellow tape)
Motor power (switches polarity depending on rotation direction)	BN4	RD (without tape)

WINCH SWITCH		
FUNCTION	PIN	COLOR
12 volt input from fuse PF2-F12	2	RD/BK
12 volt output to relay winding ("IN")	1	GN/BU
12 volt output to relay winding ("OUT")	3	LT BU

⚠ CAUTION Before testing, make sure the winch is in FREESPOOL mode (Freespool clutch disengaged).

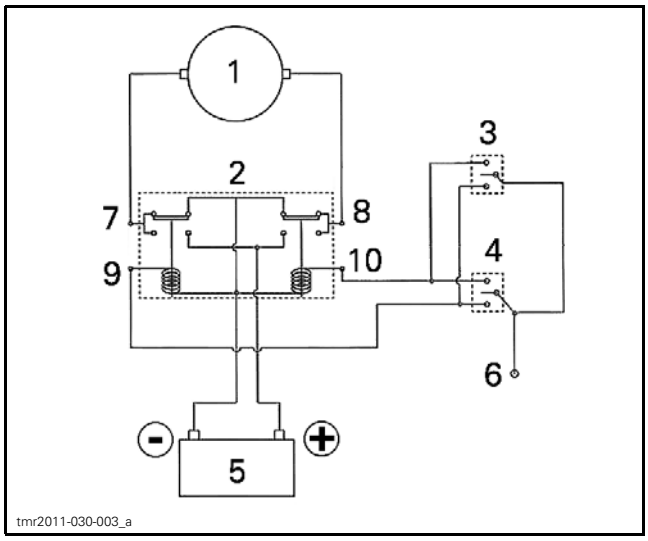

SIMPLIFIED WINCH WIRING DIAGRAM
1. *Winch motor*
2. *Winch relay*
3. *Winch remote control*
4. *Winch switch*
5. *Battery*
6. *12 volt input to switch (switch pin 2 - from fuse 12)*
7. *Winch motor power (BP4)*
8. *Winch motor power (BN4)*
9. *12 volt input to relay winding ("IN" - SW1)*
10. *12 volt input to relay winding ("OUT" - SW2)*

Winch Switch Circuit Protection

CONDITION	CIRCUIT PROTECTION
Supplied with accessories relay activated PF1-R3	Fuse PF1-F12 (from accessories relay PF1-R3)

Winch Motor Circuit Protection

Two circuit breakers (50 A) are used to protect the winch motor in case of overheating.

Removing the Winch

1. Disconnect, the battery BLACK (-) cable first, then the RED (+) cable.

NOTICE **Always respect this order for disassembly; disconnect BLACK (-) cable first.**

2. Remove the hook.
   2.1 Remove and discard the cotter pin.
   2.2 Remove the hook pin.

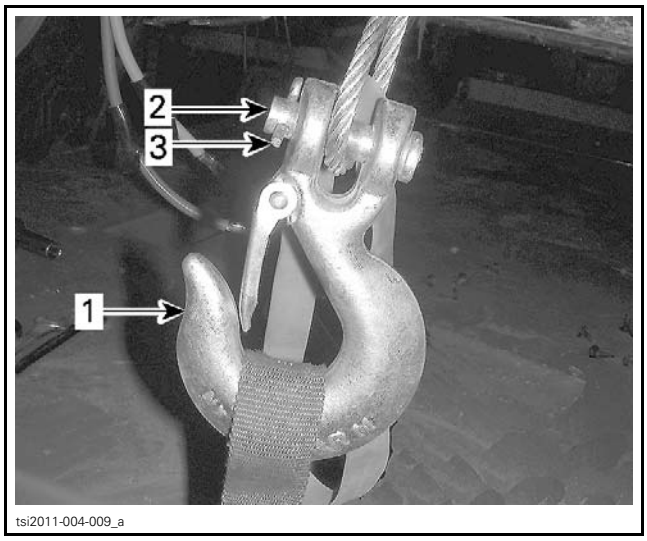

1. *Hook*
2. *Hook pin*
3. *Cotter pin*

3. Remove the four retaining screws from underneath the winch motor.

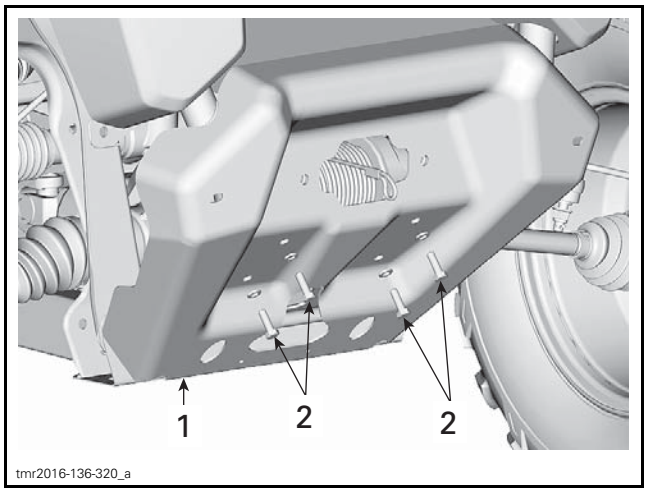

1. *Bumper plate*
2. *Retaining screws*

4. Disconnect both winch power cables.

NOTE: Note the position of the power cables for reinstallation.

5. Pass the cable through the roller fairlead.
6. Remove winch.

Installing the Winch

The installation is the reverse of the removal procedure. However, pay attention to the following.

Tighten winch retaining screws to specification.

TIGHTENING TORQUE	
M8 x 25 Bolt	16 N•m ± 2 N•m (142 lbf•**in** ± 18 lbf•**in**)

Connect wires, the YELLOW wire at front and the BLUE one at back.

Install a NEW cotter pin on the hook pin.

WHEELS AND TIRES

PROCEDURES

TIRES

⚠ WARNING

Do not rotate tires. The front and rear tires have a different size. Respect direction of rotation when applicable.

Tire Pressure

⚠ WARNING

Tire pressure greatly affects vehicle handling and stability. Insufficient pressure may cause tire to deflate and rotate on wheel. Excessive pressure may burst the tire. Always follow recommended pressure.

Check pressure when tires are **cold** before using the vehicle. Tire pressure changes with temperature and altitude. Recheck pressure if one of these conditions has changed.

Refer to technical specifications for tire pressure table.

Tire Inspection

Check tire for presence of slits, bulges, wear or other damage. Replace if necessary.

Tire Replacement

Use an automotive tire changer to replace tires.

⚠ WARNING

- **Replace tires only with the same type and size as original tires.**
- **For unidirectional tread pattern, ensure that the tires are installed in the correct direction of rotation.**

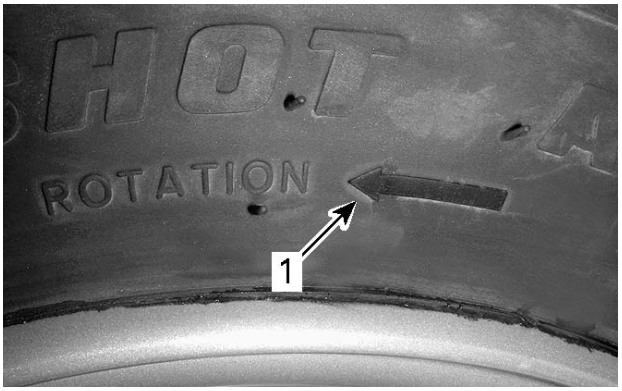

tmr2011-033-002_a

TYPICAL
1. Direction of rotation

WHEELS

Removing the Wheel

Loosen nuts just enough to be able to unscrew them once the vehicle will be off the ground.

Lift and support the vehicle. Refer to *INTRODUCTION* subsection.

Remove nuts, then remove wheel.

Inspecting the Wheel

Inspect wheel for wear or damage especially at the mounting holes.

Installing the Wheel

Check wheel studs and wheel nuts thread condition.

Check if tires are unidirectional.

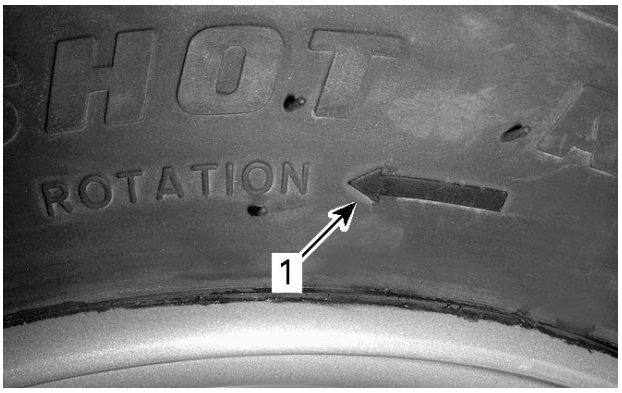

tmr2011-033-002_a

TYPICAL
1. Direction of rotation

Install in the right direction of rotation.

Install lug nuts with the taper towards the wheel.

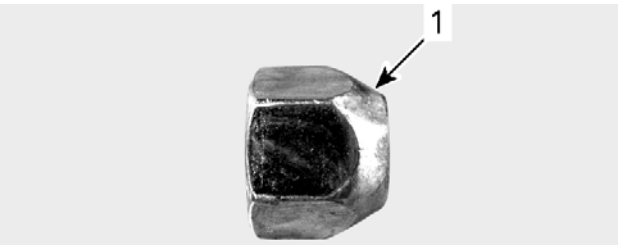

tmr2011-033-001_a

TYPICAL
1. Taper (towards the wheel)

Tighten wheel lug nuts to the specified torque using the illustrated sequence.

TIGHTENING TORQUE	
Wheel lug nuts	100 N•m ± 10 N•m (74 lbf•ft ± 7 lbf•ft)

tmo2011-001-081_a

TIGHTENING SEQUENCE

NOTICE Always use the recommended wheel nuts for the type of wheel. Using a different nut could cause damages to the rim or studs.

FRONT DRIVE

SERVICE TOOLS

Description	Part Number	Page
BACKLASH MEASUREMENT TOOL	529 036 387	232
BELLOWS CLAMP PLIERS	529 036 120	228
CV JOINT EXTRACTOR	529 036 005	229
MULTIFUNCTION DIFFERENTIAL TOOL	529 036 385	234
SPLINE DRIVER	529 036 386	233–234

SERVICE PRODUCTS

Description	Part Number	Page
75W90 SYNTHETIC GEAR OIL (EUR)	779212	227
75W90 SYNTHETIC GEAR OIL	779158	227
LOCTITE 271 (RED)	293 800 005	235–236
SYNTHETIC GREASE	779162	228, 230, 236

FRONT DRIVE SHAFTS AND FRONT PROPELLER SHAFT

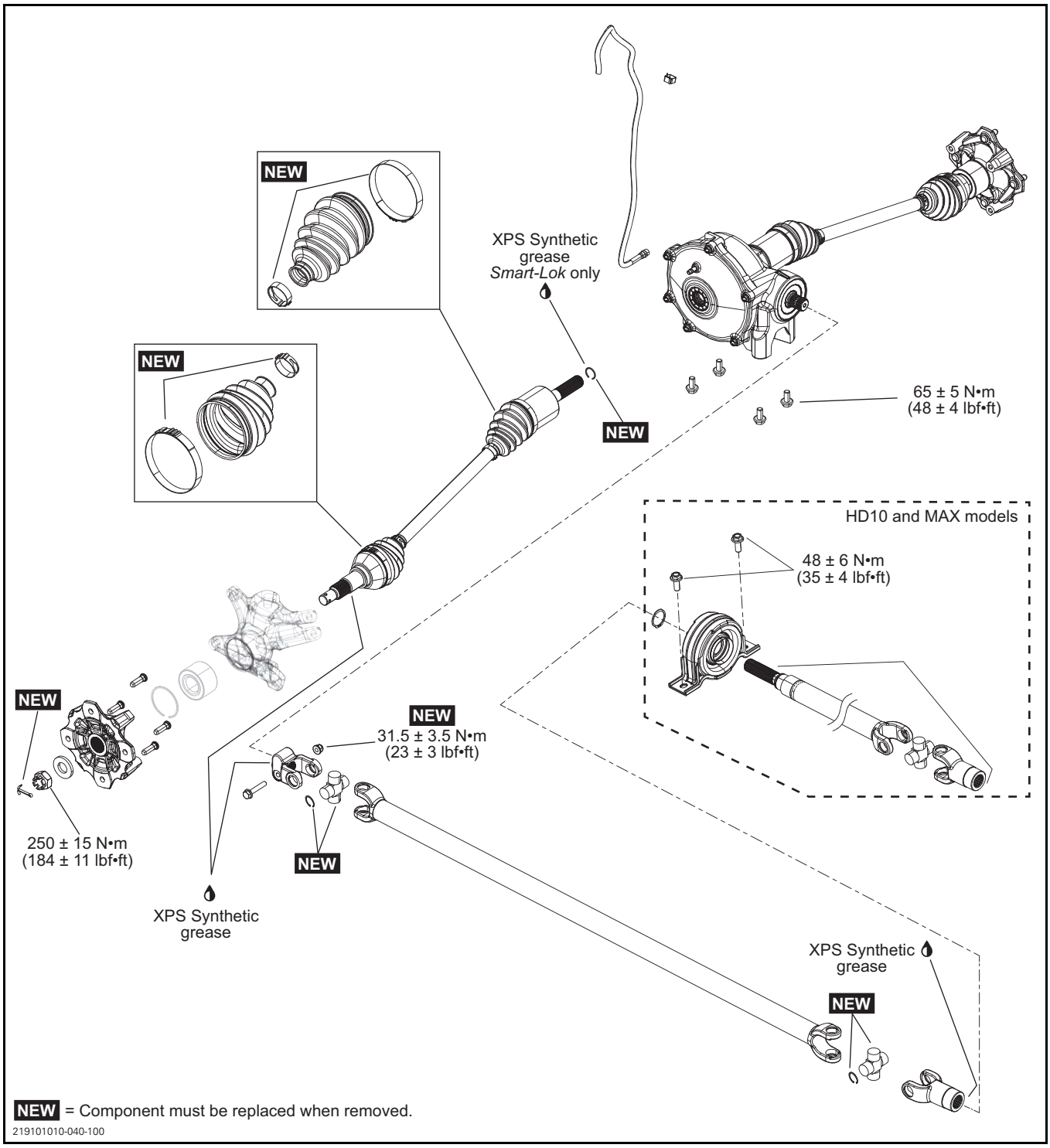

FRONT DIFFERENTIAL

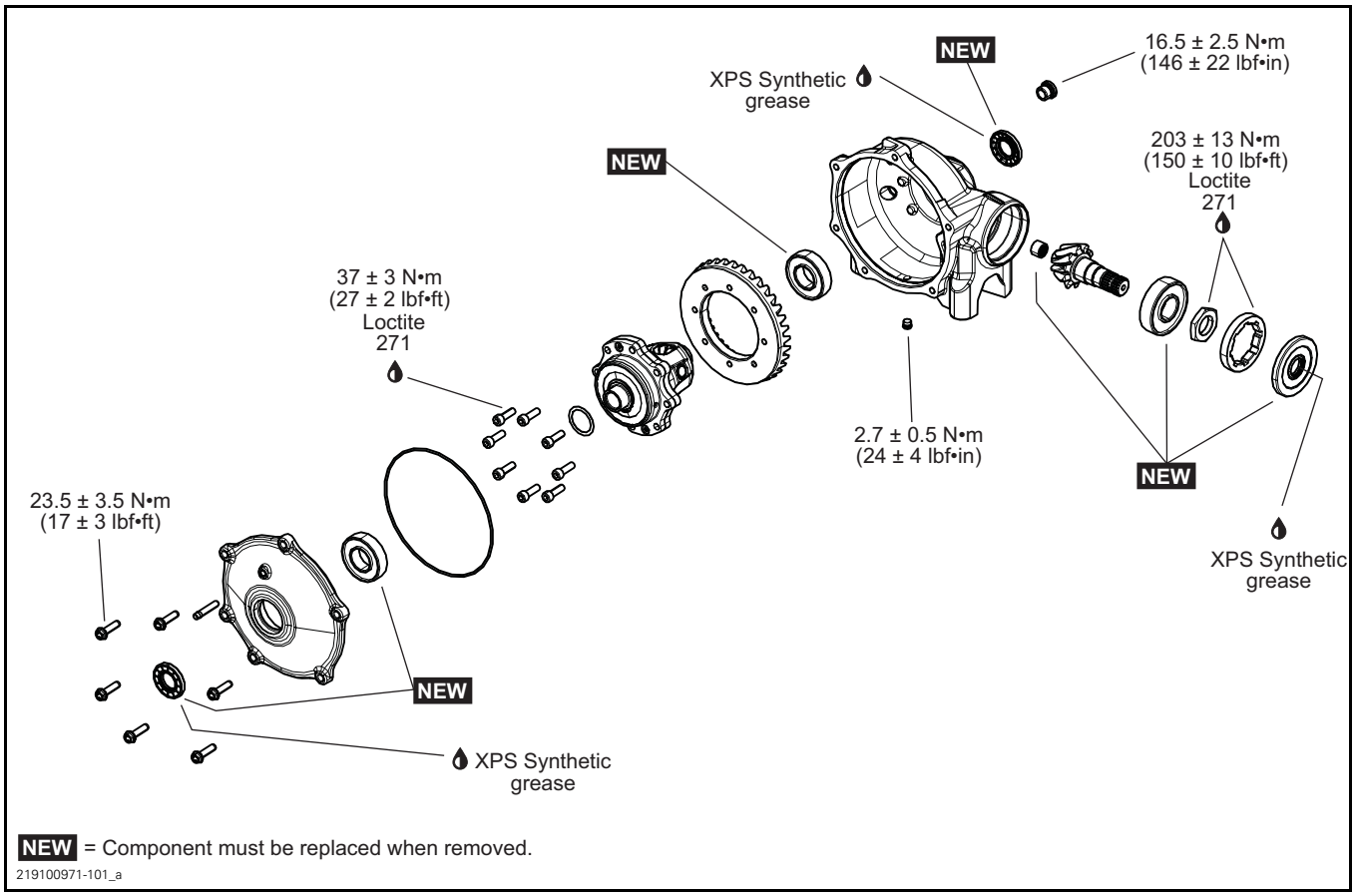

GENERAL

The procedure explained below is the same for the RH and LH sides unless otherwise specified.

IMPORTANT
For any information concerning the inspection, the disassembly and the assembly of a Smart-Lok differential, refer to the *SMART-LOK DIFFERENTIAL* subsection.

SYSTEM DESCRIPTION

When one wheel is spinning above a certain rate faster than the other wheel, the Visco-Lok® system progressively locks the wheels through its multi-plate clutch.

In the event of a failure, the entire Visco-Lok pump and its carrier will have to be replaced. The Visco-Lok pump itself is a non-serviceable item.

NOTE: If the pump was disassembled, its viscous fluid would be lost and it could not be replaced.

MAINTENANCE

VERIFYING THE FRONT DIFFERENTIAL OIL LEVEL

Clean filler plug prior to checking oil level.

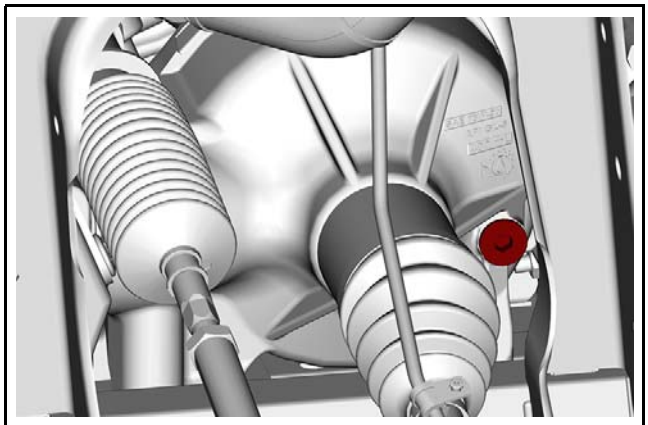

TYPICAL - FRONT RIGHT SIDE OF VEHICLE

With vehicle on a level surface, check oil level by removing filler plug. Oil level must reach the lower edge.

Reinstall filler plug.

TIGHTENING TORQUE	
Filler plug	16.5 N•m ± 2.5 N•m (146 lbf•**in** ± 22 lbf•**in**)

REPLACING THE FRONT DIFFERENTIAL OIL

Place vehicle on a level surface. Set gearbox in park position.

From underneath of vehicle, clean drain plug area.

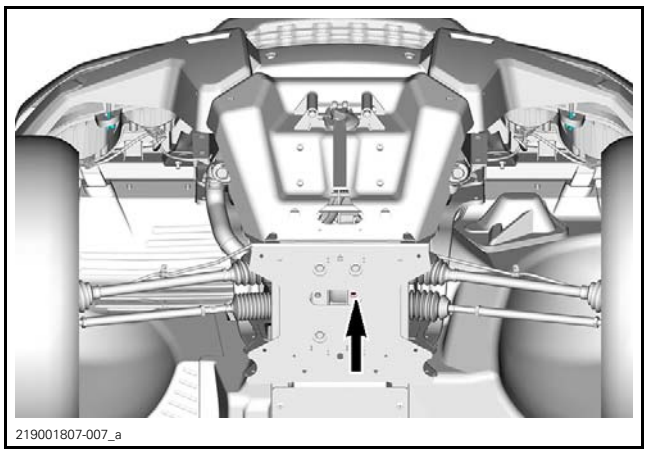

TYPICAL
1. Drain plug access hole

Place a drain pan under the front differential.

Remove drain plug.

Unscrew filler plug.

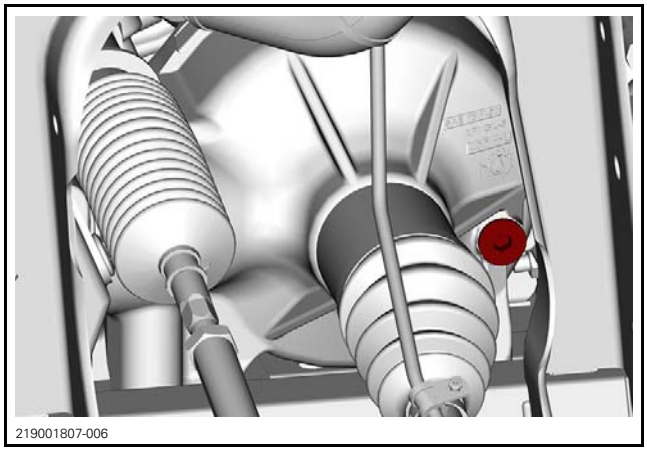

TYPICAL - FRONT RIGHT SIDE OF VEHICLE

Install drain plug.

TIGHTENING TORQUE	
Drain plug	2.7 N•m ± 0.3 N•m (24 lbf•**in** ± 3 lbf•**in**)

Refill front differential with recommended oil.

RECOMMENDED OIL	
Scandinavia	75W90 SYNTHETIC GEAR OIL (EUR) (P/N 779212)
All other countries	75W90 SYNTHETIC GEAR OIL (P/N 779158)

NOTE: The XPS oil is specially formulated to meet the lubrication requirements of this gearbox. BRP strongly recommends the use of its XPS oil. However, if the XPS synthetic gear oil is not available, use the following lubricant:

FRONT DIFFERENTIAL MINIMUM OIL REQUIREMENT
75W 90 API GL-5 synthetic gear oil

CAPACITY
400 ml (13.5 U.S. oz)

NOTICE **Do not use another type of oil when servicing.**

Reinstall filler plug.

TIGHTENING TORQUE	
Filler plug	16.5 N•m ± 2.5 N•m (146 lbf•**in** ± 22 lbf•**in**)

INSPECTING THE DRIVE SHAFT BOOT AND PROTECTOR

Visually inspect each drive shaft boot for grease leak, cracks or opening.

Check if the drive shaft boot protector are fixed firmly, not torn or otherwise damaged.

Replace if necessary.

INSPECTING THE DRIVE SHAFT JOINT

Turn and move drive shaft to detect excessive play.

INSPECTING THE PROPELLER SHAFT U-JOINT

Check yoke U-joints for wear, backlash or axial play, replace if necessary.

PROCEDURES

WHEEL HUB

Removing the Wheel Hub

1. Lift and support vehicle. Refer to *INTRODUCTION* section for proper procedure.
2. Select the 4WD position and place the transmission lever on "P".
3. Remove caliper from knuckle. Refer to *BRAKES* subsection.
4. Remove the following parts:
   – Wheel
   – Cotter pin
   – Castellated nut
   – Belleville washer.

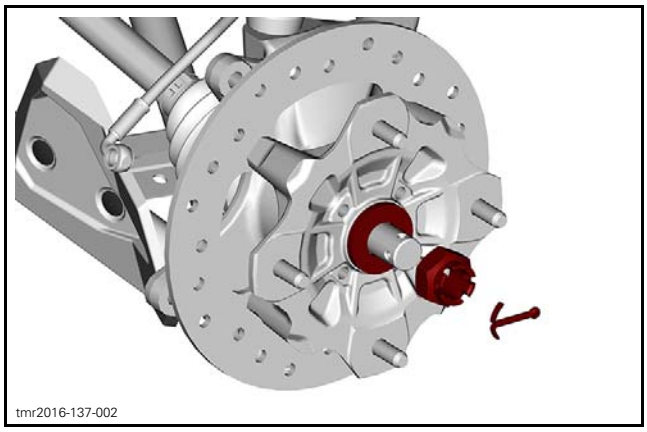
tmr2016-137-002

5. Remove wheel hub.

Inspecting the Wheel Hub

Check wheel studs for damaged threads and overall conditions

Check wheel hub for cracks or other damages.

Check inner splines for wear or other damages.

Replace wheel hub and / or studs if any damage is detected.

Installing the Wheel Hub

The installation is the reverse of removal procedure. However, pay attention to the following.

Install Belleville washer with its domed side outwards.

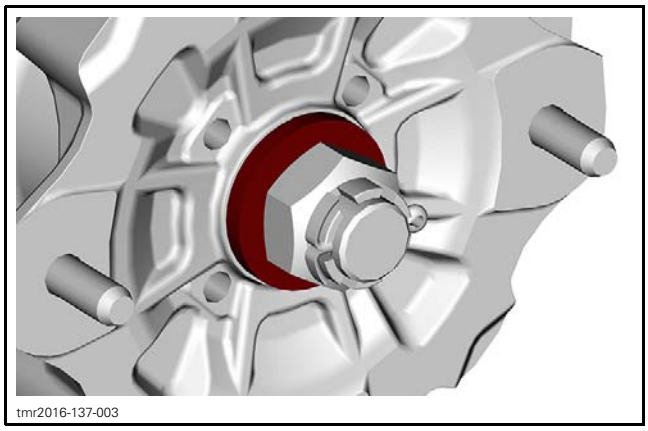

TIGHTENING TORQUE	
Castellated nut	250 N•m ± 15 N•m (184 lbf•ft ± 11 lbf•ft)

NOTE: Tighten further castellated nut if required to align grooves with drive shaft hole.

Install a new cotter pin.

FRONT DRIVE SHAFT

Removing the Front Drive Shaft

1. Remove the wheel hub. Refer to procedure in this subsection.
2. Remove the knuckle. Refer to *STEERING SYSTEM* subsection.
3. Strongly pull drive shaft out of differential.
4. Discard the stop ring at the end of the shaft.

Inspecting the Front Drive Shaft

Inspect the condition of boots. If there is any damage or evidence of leaking lubricant, replace them. Refer to *DRIVE SHAFT BOOT*.

Check splines for excessive wear. Replace if necessary.

NOTE: If the splines on plunging joint are worn, a check of differential inner splines should be done.

Installing the Front Drive Shaft

The installation is the reverse of the removal procedure. However, pay attention to the following.

Install a new stop ring.

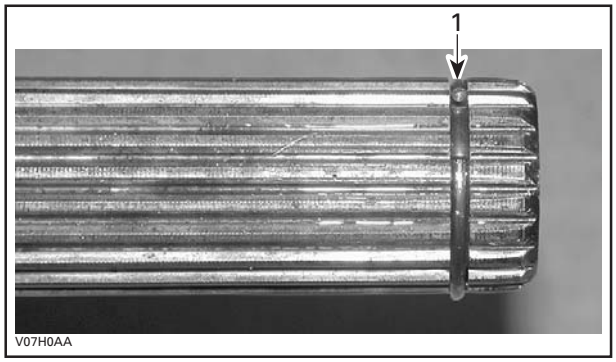

1. Stop ring

Models with Smart-Lok Differential

Apply grease to the differential side splines of the shaft.

SERVICE PRODUCT
SYNTHETIC GREASE (P/N 779162)

All models

Apply grease to the wheel side splines of the shaft.

SERVICE PRODUCT
SYNTHETIC GREASE (P/N 779162)

DRIVE SHAFT BOOT

Removing the Drive Shaft Boot

1. Remove the drive shaft from the vehicle.
2. Remove drive shaft boot clamps.

REQUIRED TOOL	
BELLOWS CLAMP PLIERS (P/N 529 036 120)	

3. Dislodge the large boot end.
4. Separate the joint from the shaft. Two procedures can be done.

Without the Special Tool

1. Clamp joint housing in a vise.
2. Align shaft with joint.
3. Pull hard on shaft to remove from joint.
4. Remove boot from drive shaft.
5. Remove and discard the circlip.

With the Special Tool

REQUIRED TOOL	
CV JOINT EXTRACTOR (P/N 529 036 005)	

1. Place drive shaft in vice with the joint downward.
2. Install the cv joint extractor on the bearing.

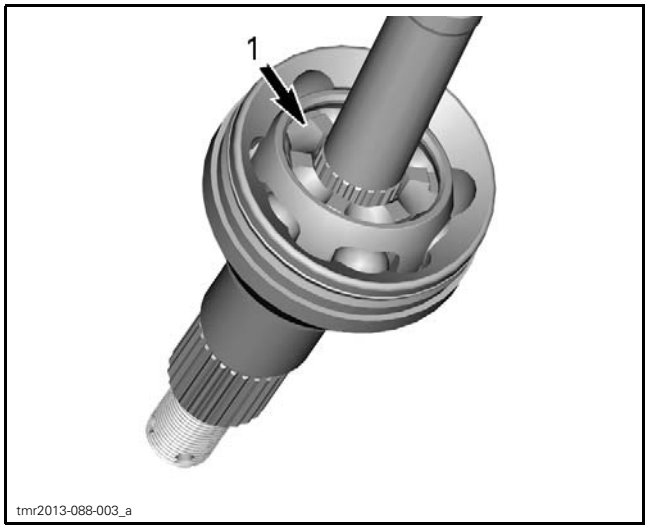

TYPICAL - CV JOINT SHOWN
1. Position joint extractor tool here

3. With a hammer, hit on the tool to separate joint from shaft.
4. When joint and shaft are separated, remove boot from drive shaft.
5. Remove and discard the circlip.

Installing the Drive Shaft Boot

The installation is the reverse of the removal procedure. However, pay attention to the following.

Install the new circlip.

Pack bearing area with grease included with the new boot kit.

NOTE: Do not use or add other grease.

FRONT PROPELLER SHAFT

Removing the Front Propeller Shaft

1. Remove propeller shaft screw and nut on differential end.

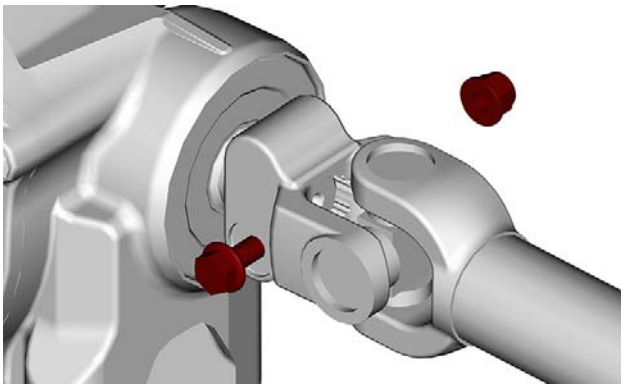

2. Remove the 4 first row of rivets on the central skid plate starting from the rear.

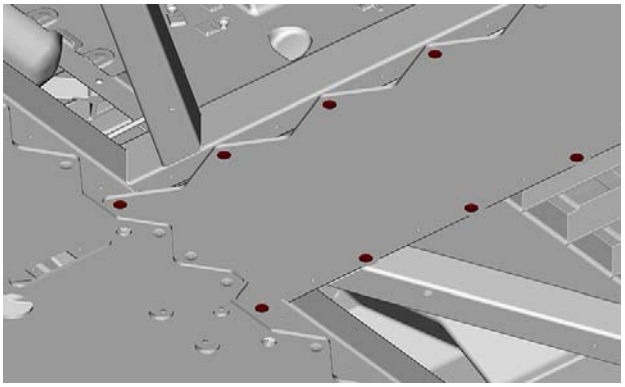

3. Remove both retaining bolts and nuts securing bearing flange.

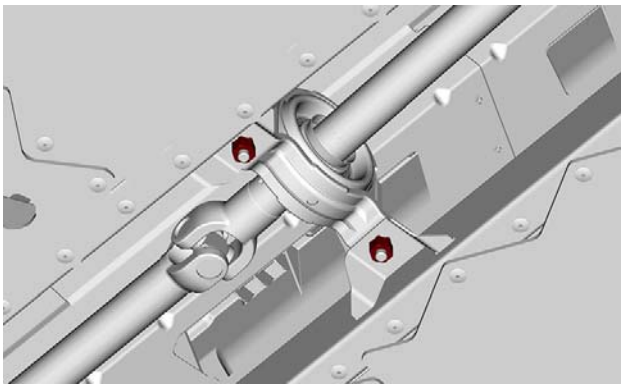

4. Dislodge the propeller shaft from the differential side first by pushing it towards the engine. When it is disengaged from the differential, move it towards front, beside the differential to disengage from the engine.
5. Remove front propeller shaft through skid plate opening.

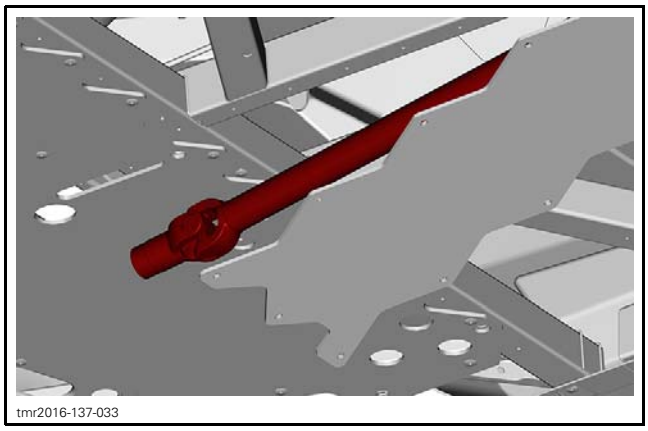
tmr2016-137-033

6. Remove circlip to separate propeller shaft halves.

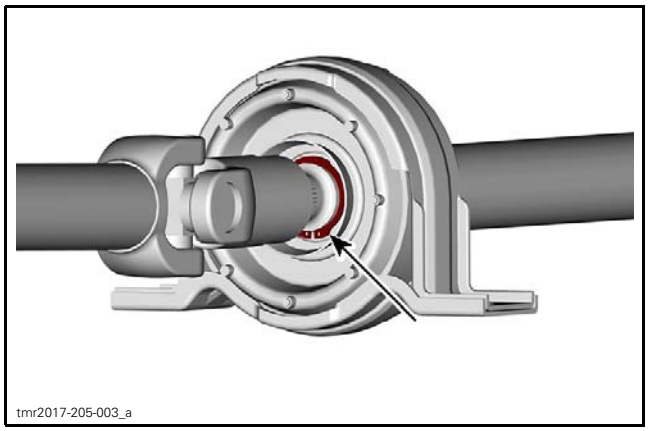
tmr2017-205-003_a

Inspecting the Front Propeller Shaft

Inspect if propeller shaft is not bent or twisted.

Check propeller shaft splines for wear or damage.

Check both U-joint crosses. They should rotate smoothly without any play.

Replace if required.

Installing the Front Propeller Shaft

The installation is the reverse of the removal procedure. However, pay attention to the following.

Apply grease to splines on engine side.

SERVICE PRODUCT
SYNTHETIC GREASE (P/N 779162)

TIGHTENING TORQUE	
Propeller shaft nut	31.5 N•m ± 3.5 N•m (23 lbf•ft ± 3 lbf•ft)
Bearing flange retaining bolts	61 N•m ± 9 N•m (45 lbf•ft ± 7 lbf•ft)

PROPELLER SHAFT U-JOINTS

Removing the Propeller Shaft U-Joint

1. Remove internal snap ring from bearing caps.

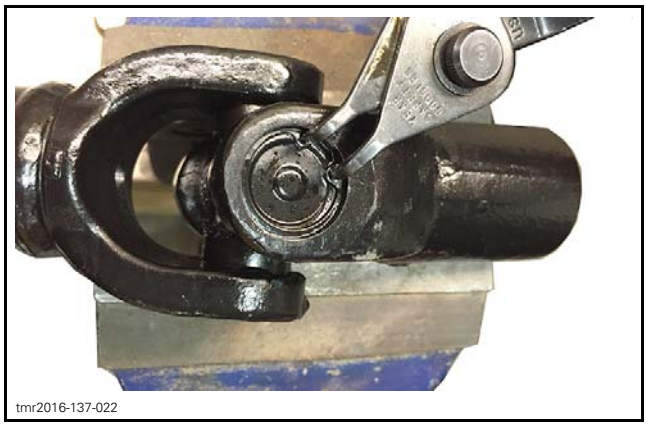
tmr2016-137-022

2. In a vice, use a suitable box to lock the yoke on one side, and a smaller one to push on the U-joint cross on the other side..

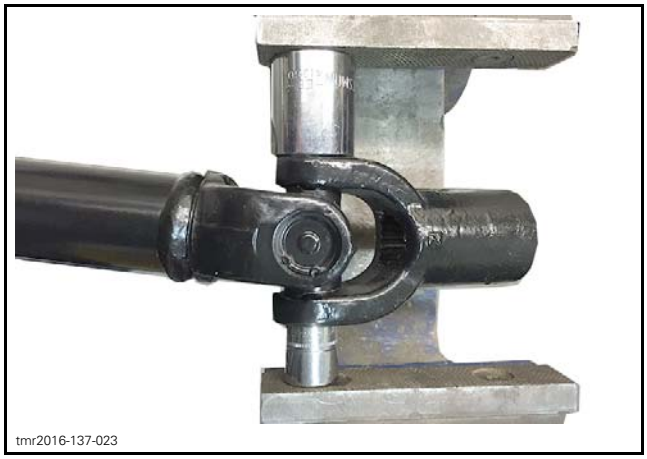
tmr2016-137-023

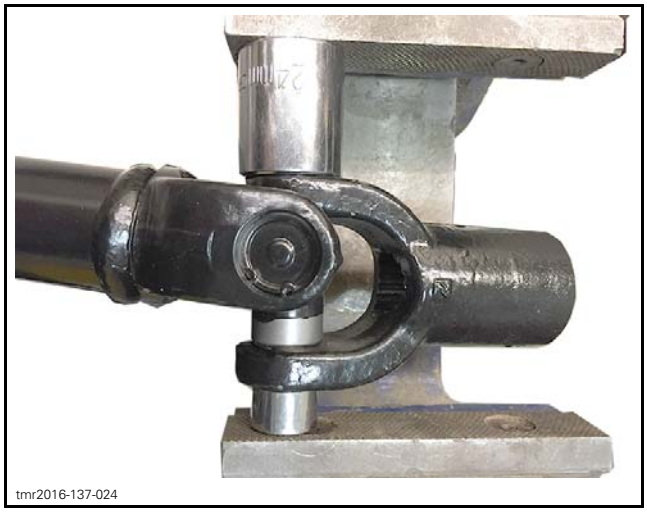
tmr2016-137-024

3. Squeeze the bearing cap in vice and hit the yoke with a soft hammer to remove it.

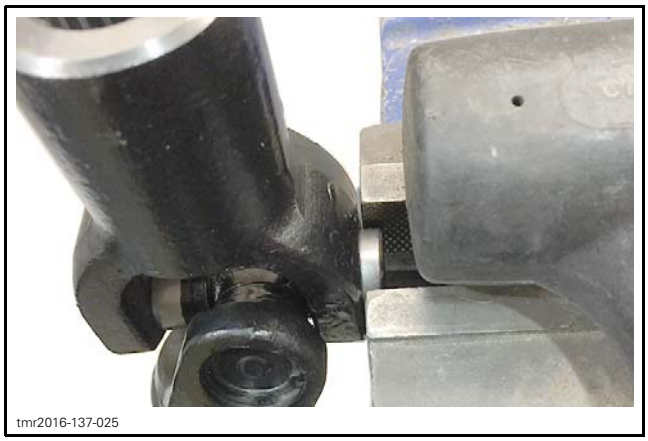
tmr2016-137-025

4. Press the cross on the other side of the yoke to disengage it.

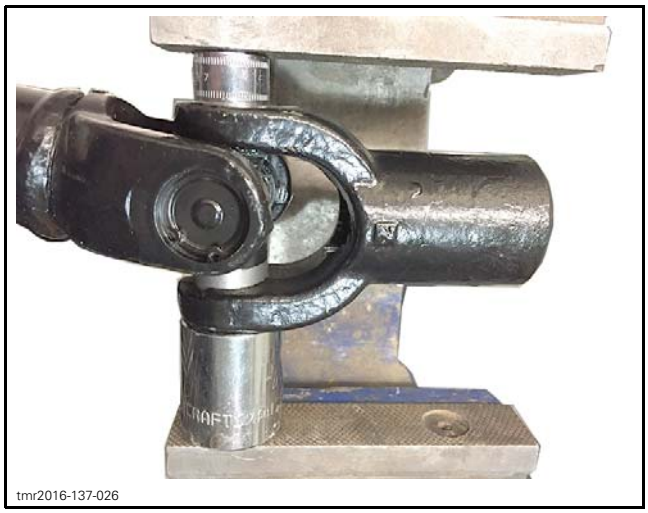
tmr2016-137-026

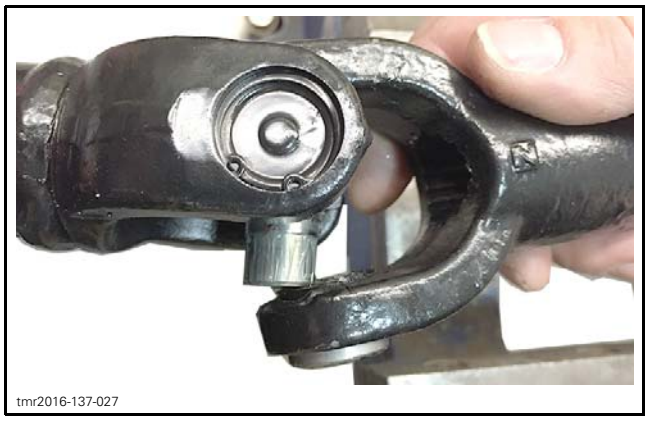
tmr2016-137-027

5. Remove bearing cap.

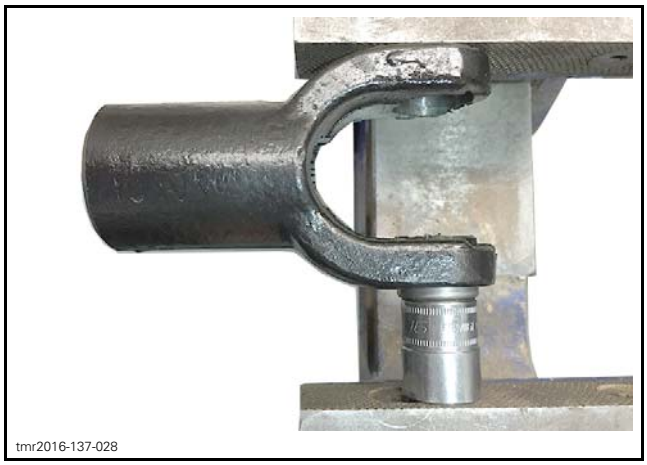
tmr2016-137-028

6. Repeat steps to remove the remaining bearing caps.
7. Remove U-joint cross.

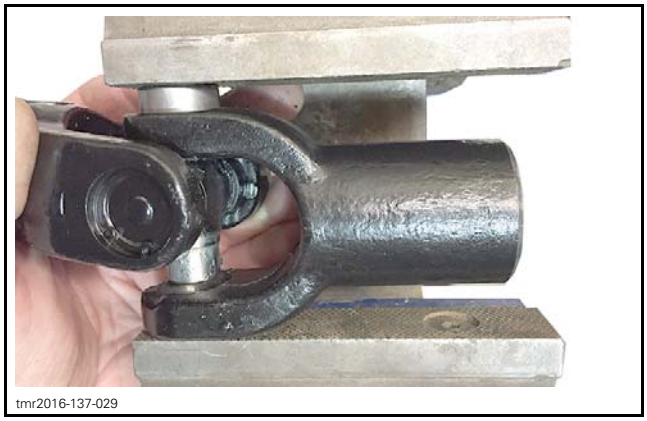
tmr2016-137-029

Installing the Propeller Shaft U-Joint

1. Use a vise to insert the first bearing cap flush with the inner wall of the yoke.

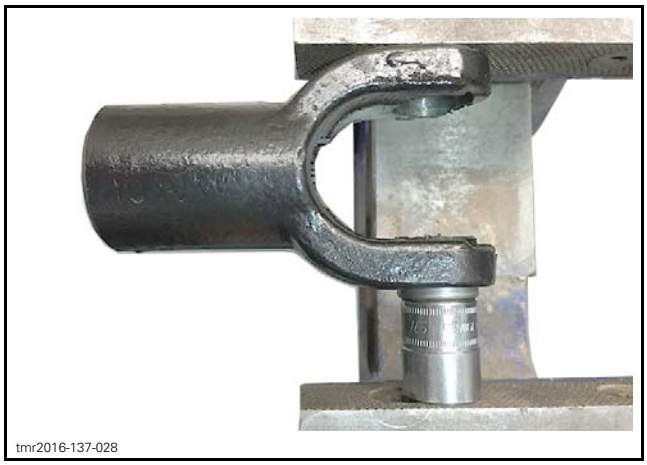
tmr2016-137-028

2. Install new U-joint cross in yoke and slide it in the bearing cap.

NOTICE **Ensure bearing needles are perfectly positioned in caps to avoid damage to cross.**

3. Fully seat bearing cap on one side.

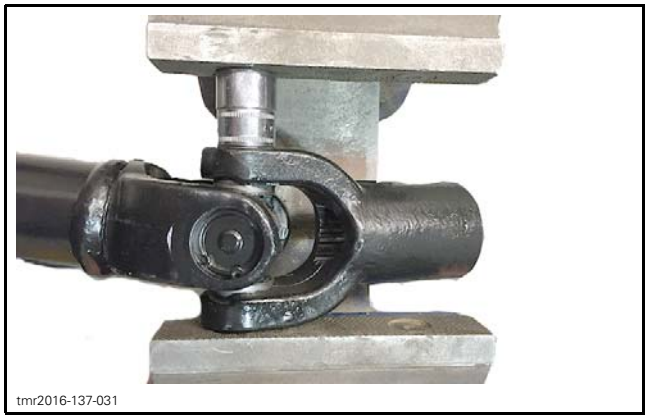
tmr2016-137-031

4. Install snap ring.
5. Install the second bearing cap, then snap ring.

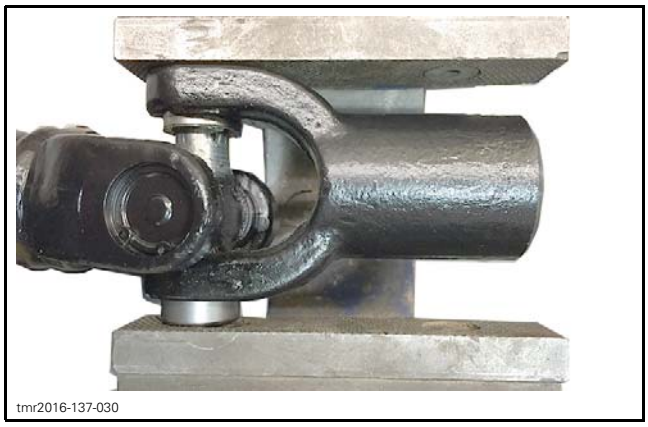
tmr2016-137-030

Ensure U-joint is operating smoothly.

FRONT DIFFERENTIAL

Removing the Front Differential

1. Drain the differential. Refer to *MAINTENANCE* in this subsection.
2. Remove both drive shafts. Refer to *REMOVING THE FRONT DRIVE SHAFT* procedure in this subsection.
3. Remove front bumper. Refer to *FRAME* subsection.
4. Remove the 4 retaining screws from the bottom skid plate.

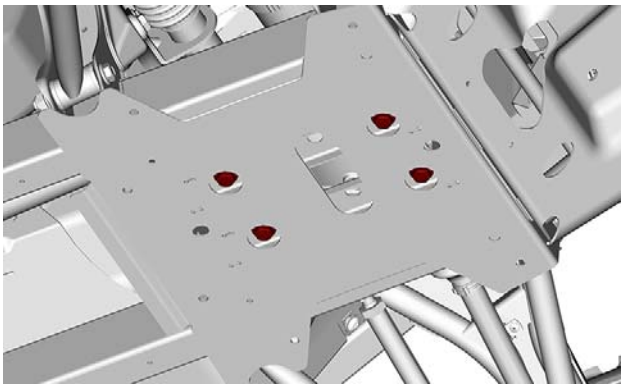
tmr2016-137-001

5. Remove the differential with the propeller shaft from the front of vehicle.
6. Remove the propeller shaft if required.

Inspecting the Front Differential (Assembled)

Check if oil seals are brittle, hard or damaged. Replace if necessary.

Inspecting the Backlash

When measuring backlash, the differential cover should be upside down to pull the ring gear out of mesh.

1. Measure the backlash with a dial indicator.

REQUIRED TOOL	
BACKLASH MEASUREMENT TOOL (P/N 529 036 387)	

2. Place the backlash measurement tool at the end of pinion gear.

tmr2017-205-002

A. 23 mm (29/32 in)

3. Position the dial indicator tip against the tab at a 90° angle and right in the dimple.

4. Gently, move the tab back and forth. Note the result.

NOTE: While measuring the backlash, make sure the ring gear is not moving.

5. Rotate pinion gear 1/2 turn and check backlash again. Note the result.
6. Rotate pinion gear 1 turn and check backlash again.

BACKLASH SPECIFICATION
0.1 mm (.004 in) to 0.25 mm (.01 in)

If backlash is out of specification, split front differential housing and adjust shim thickness as per following guideline.

BACKLASH ADJUSTMENT GUIDELINE	
BACKLASH MEASUREMENT	WHAT TO DO
Below 0.1 mm (.004 in)	Remove shim(s) and recheck backlash
Above 0.25 mm (.01 in)	Add shim(s) and recheck backlash

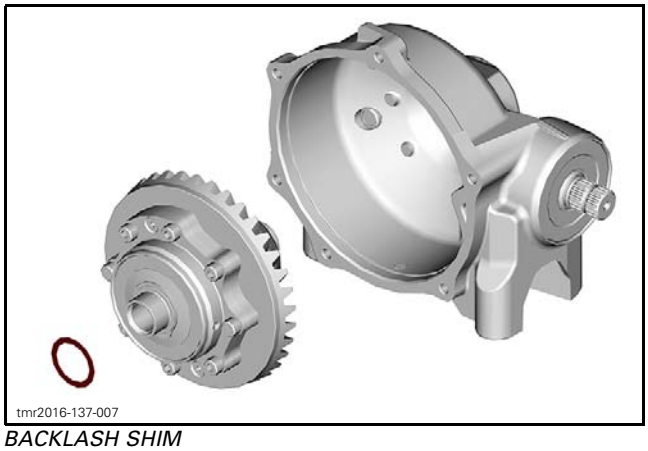

BACKLASH SHIM

Inspecting the Preload

Install the spline adapter tool on the pinion shaft.

REQUIRED TOOL	
SPLINE DRIVER (P/N 529 036 386)	

Using a needle torque wrench, measure the drag torque.

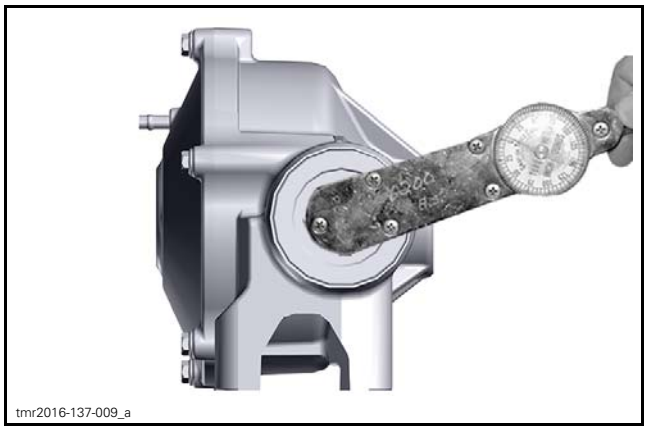

PRELOAD SPECIFICATION
Maximum 0.50 N•m (4 lbf•**in**)

If preload is out of specification, split front differential housing and check all bearings conditions.

Disassembling the Front Differential

Differential Housing

1. Remove front differential housing screws.

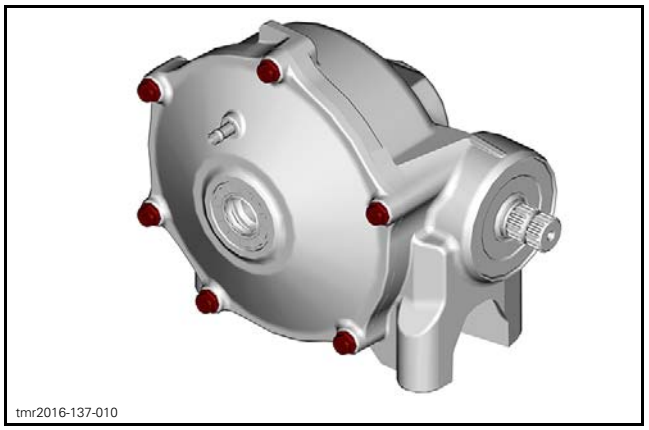

2. Separate half housings.
3. Remove oil seals.

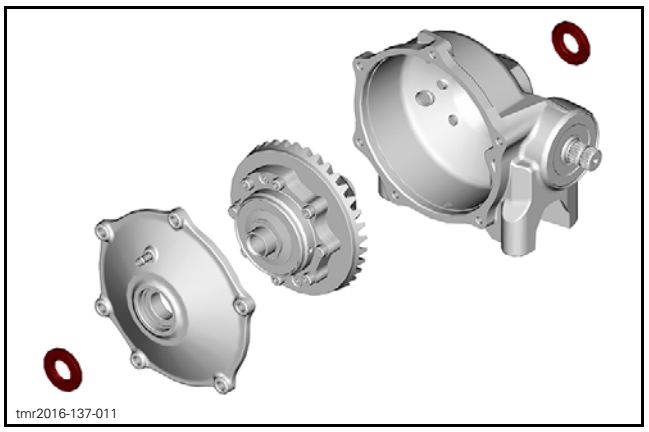

Visco-Lok Carrier/Ring Gear

1. Remove Visco-Lok carrier/ring gear out of half housing.

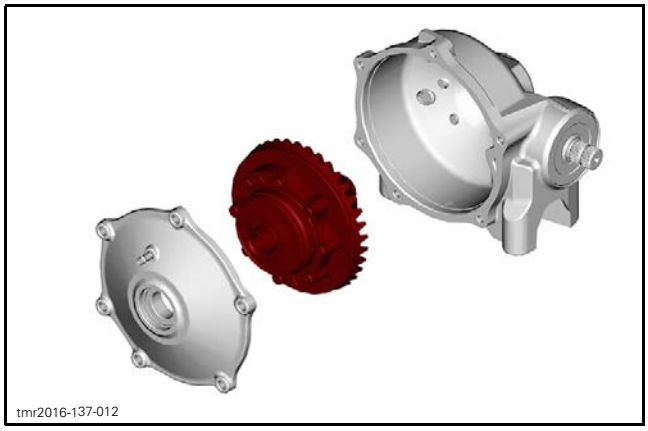
tmr2016-137-012

2. Remove screws securing ring gear to Visco-Lok unit.

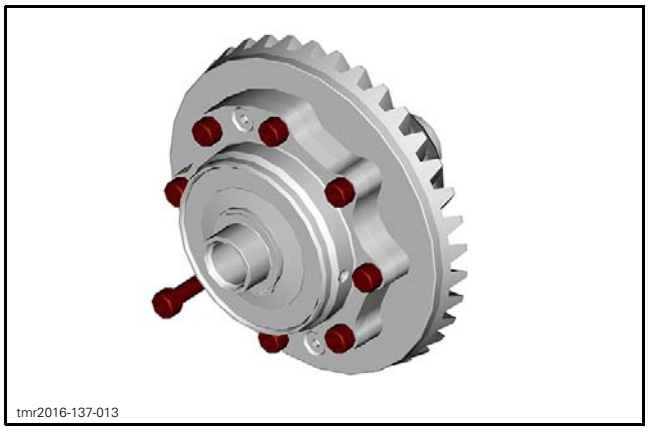
tmr2016-137-013

3. Separate ring gear from Visco-Lok unit.

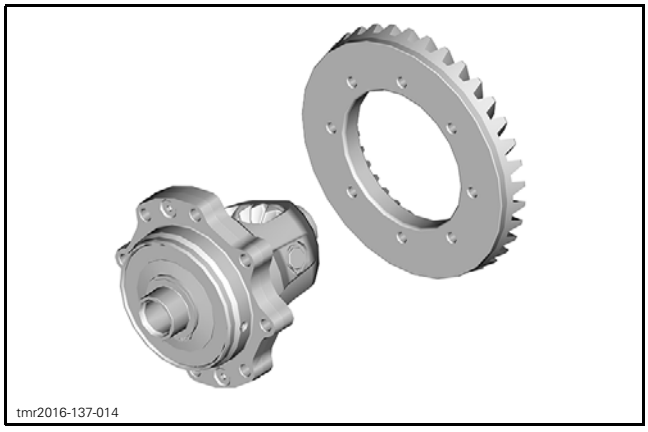
tmr2016-137-014

Pinion Gear

REQUIRED TOOLS	
SPLINE DRIVER (P/N 529 036 386)	
MULTIFUNCTION DIFFERENTIAL TOOL (P/N 529 036 385)	

1. Remove and discard oil seal.

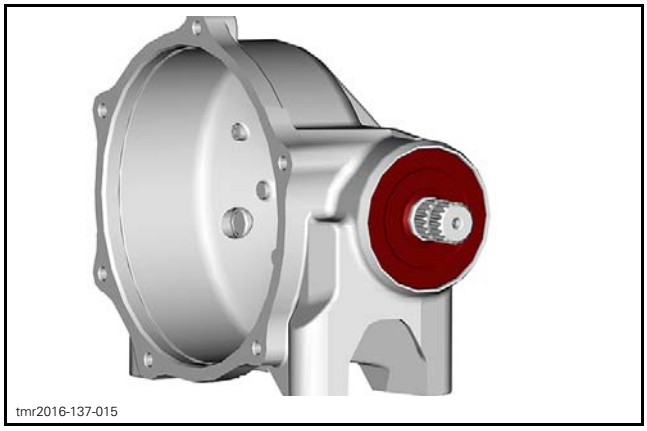
tmr2016-137-015

2. Unscrew the pinion nut.
   2.1 Lock the multifunctional tool with the pinion driver.
   2.2 Slide the tools until it engage the nut.
   2.3 Unscrew the nut.

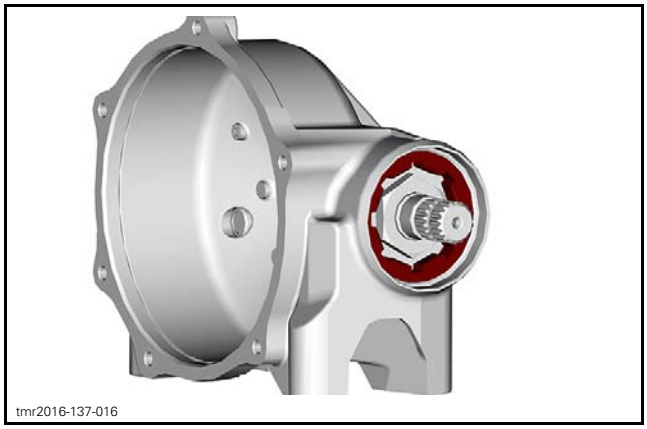
tmr2016-137-016

3. Remove bearing and pinion gear together.

NOTE: If pinion is hard to pull out, attach the propeller shaft to it and pull while hitting the yoke with a soft hammer.

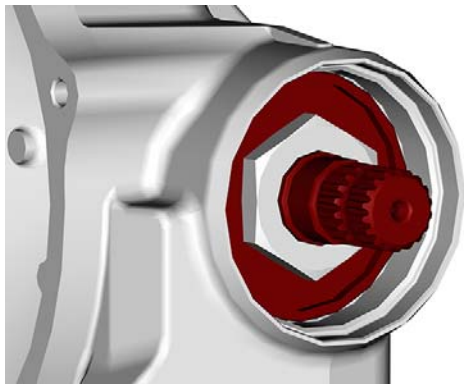
tmr2016-137-017

4. Remove nut from pinion.
   4.1 Install the multifunctional tool in a vice.
   4.2 Slide the spline driver on the pinion shaft.
   4.3 Slide the pinion and the spline driver in the multifunctional tool until the nut is engaged.
   4.4 Unscrew the pinion.

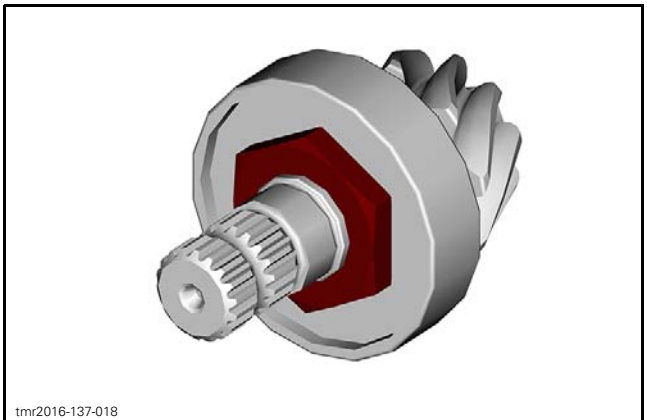
tmr2016-137-018

5. Remove bearing from pinion gear.

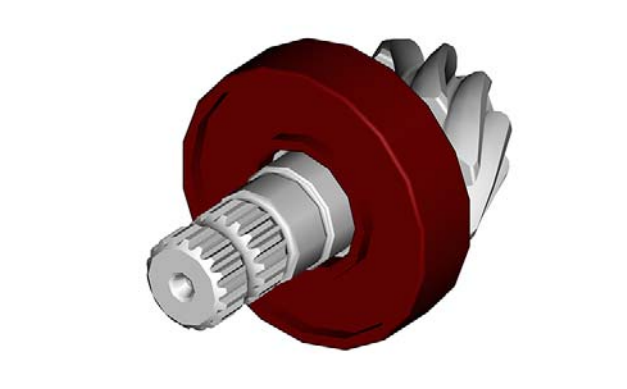
tmr2016-137-019

6. Remove and discard the needle bearing.

Assembling the Front Differential

Adjustment is required when any of the following part is changed.
- Pinion gear
- Ring gear
- Viscolok unit
- Housing.

As a preliminary setup, install shim according to the following table.

RECOMMENDED SHIM THICKNESS	
BACKLASH	0.5 mm (.02 in) (as a preliminary adjustment)

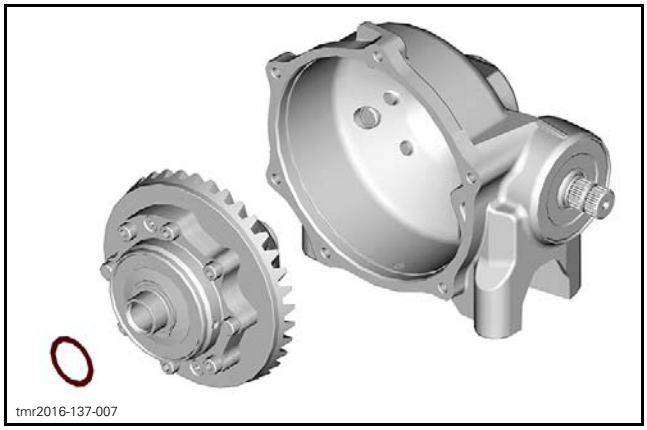
tmr2016-137-007

BACKLASH SHIM

Prior to finalizing assembly, proceed in this order:
- Temporarily assemble final drive using recommended torques.
- Do not apply thread locker product.
- Do not install a new pinion nut.
- Check backlash.
- Check preload.

Visco-Lok Carrier/Ring Gear

The installation is the reverse of the removal procedure. However, pay attention to the following.

Tighten ring gear screws to specification.

TIGHTENING TORQUE	
Ring gear screws	37 N•m ± 3 N•m (27 lbf•ft ± 2 lbf•ft) + LOCTITE 271 (RED) (P/N 293 800 005)

Check condition of seal. Replace if damaged.

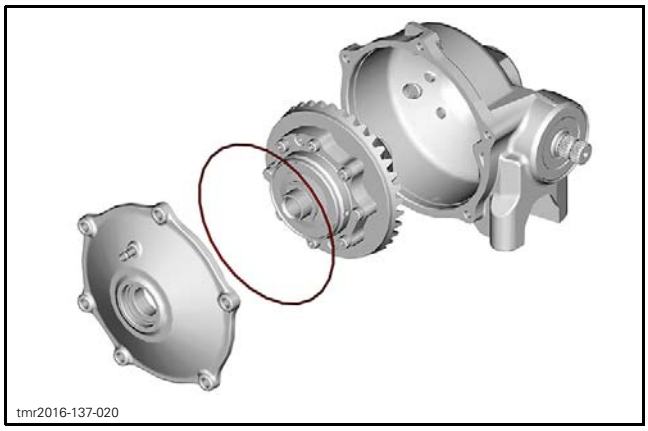

Check bearings. Replace with new bearings if necessary.

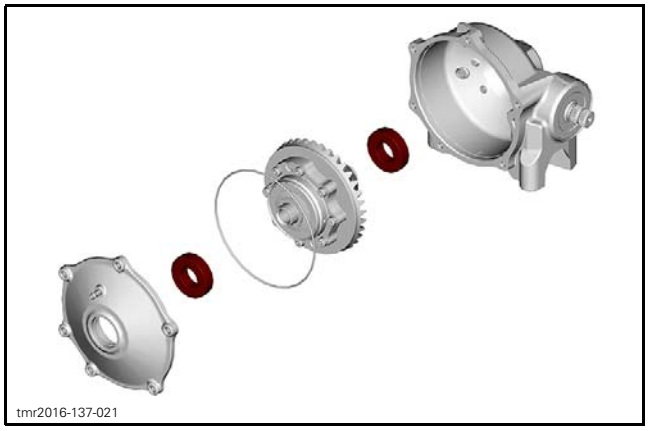

Apply grease on new oil seals and install.

SERVICE PRODUCT
SYNTHETIC GREASE (P/N 779162)

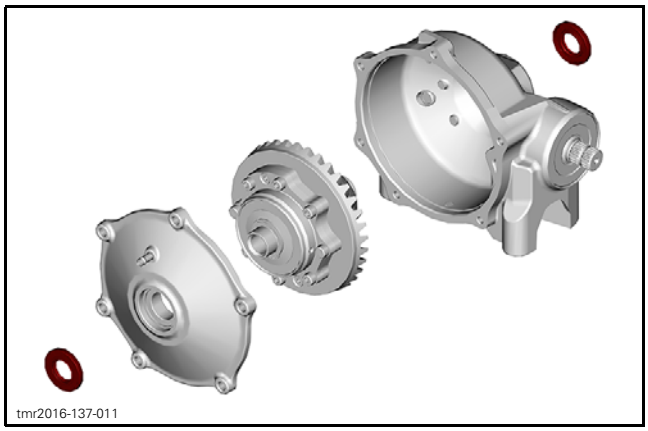

Tighten differential housing screws to specification.

TIGHTENING TORQUE	
Differential housing screws	23.5 N•m ± 3.5 N•m (17 lbf•ft ± 3 lbf•ft)

Pinion Gear

Install a new ball bearing.

Install a new O-ring.

Install a new needle bearing.

Apply loctite to pinion nut.

SERVICE PRODUCT
LOCTITE 271 (RED) (P/N 293 800 005)

Install and tighten the pinion nut to specification.

TIGHTENING TORQUE	
Pinion nut (housing and shaft)	203 N•m ± 13 N•m (150 lbf•ft ± 10 lbf•ft) + LOCTITE 271 (RED) (P/N 293 800 005)

Apply grease on new oil seal and install.

SERVICE PRODUCT
SYNTHETIC GREASE (P/N 779162)

Installing the Front Differential

The installation is the reverse of the removal procedure. However, pay attention to the following.

TIGHTENING TORQUE	
Differential retaining screw	65 N•m ± 5 N•m (48 lbf•ft ± 4 lbf•ft)

Refill the front differential with recommended oil. Refer to *MAINTENANCE* in this subsection.

SMART-LOK DIFFERENTIAL

SERVICE TOOLS

Description	Part Number	Page
BACKLASH MEASUREMENT TOOL	529 036 387	244
MULTIFUNCTION DIFFERENTIAL TOOL	529 036 385	255
SPLINE DRIVER	529 036 386	244, 255

SERVICE PRODUCTS

Description	Part Number	Page
75W90 SYNTHETIC GEAR OIL (EUR)	779212	246
75W90 SYNTHETIC GEAR OIL	779158	246
LOCTITE 5910	293 800 081	251

SMART-LOK DIFFERENTIAL

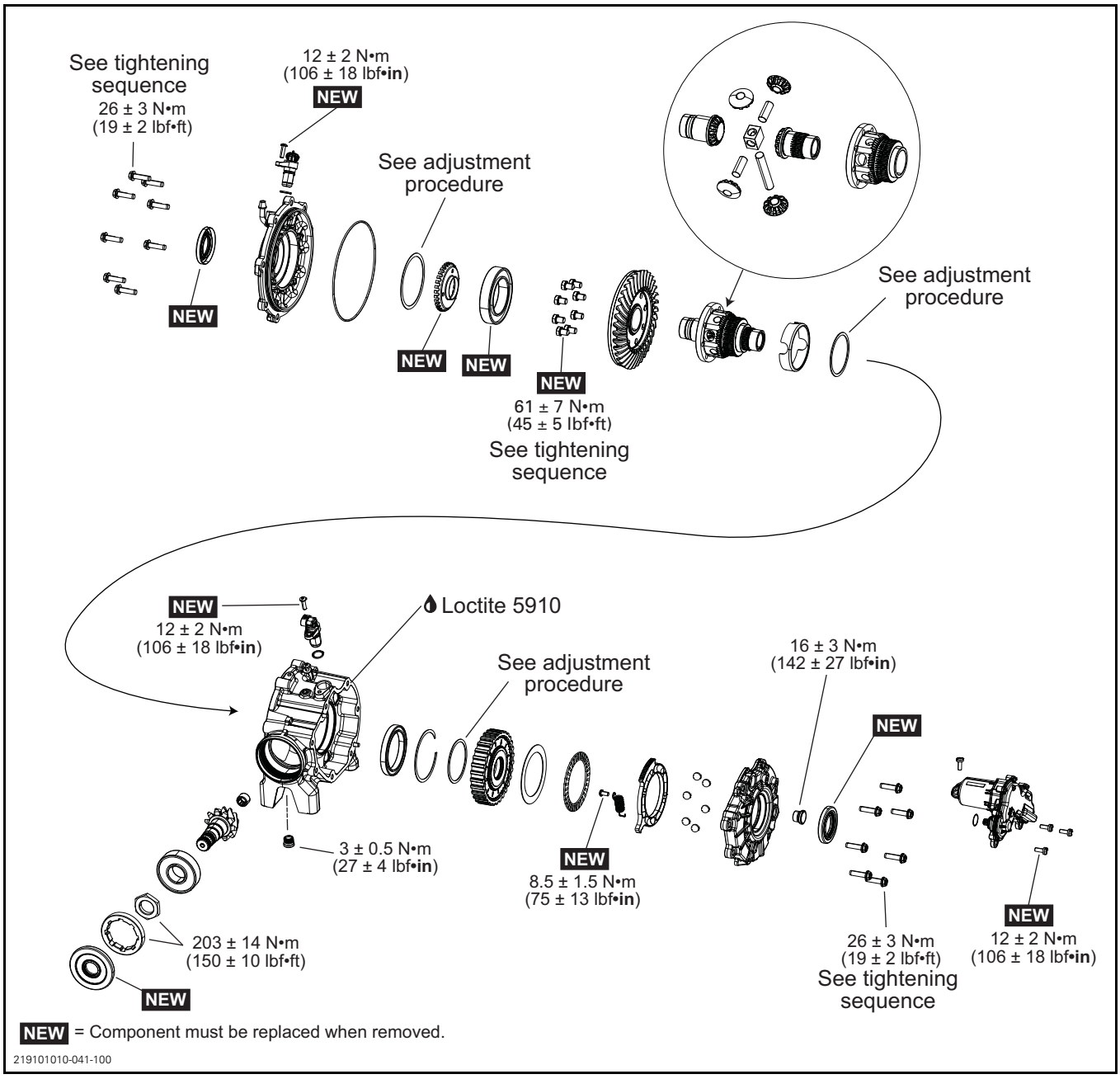

WIRING HARNESS AND CONNECTORS

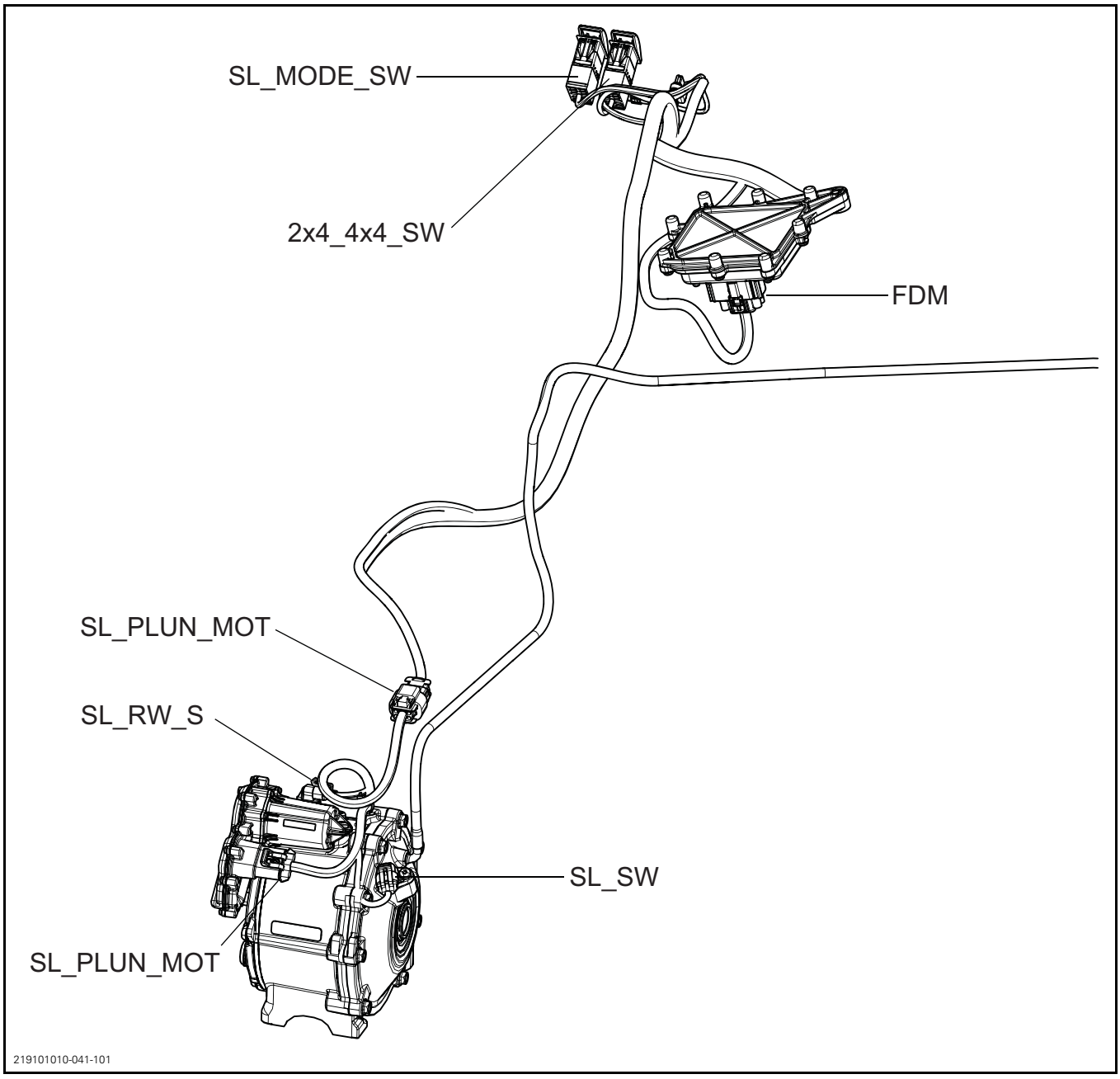

GENERAL

The Front Differential Module (FDM) electronically manages the pressure on the clutch pack in order to optimize the traction and handling characteristics of the vehicle while in 4x4 mode.

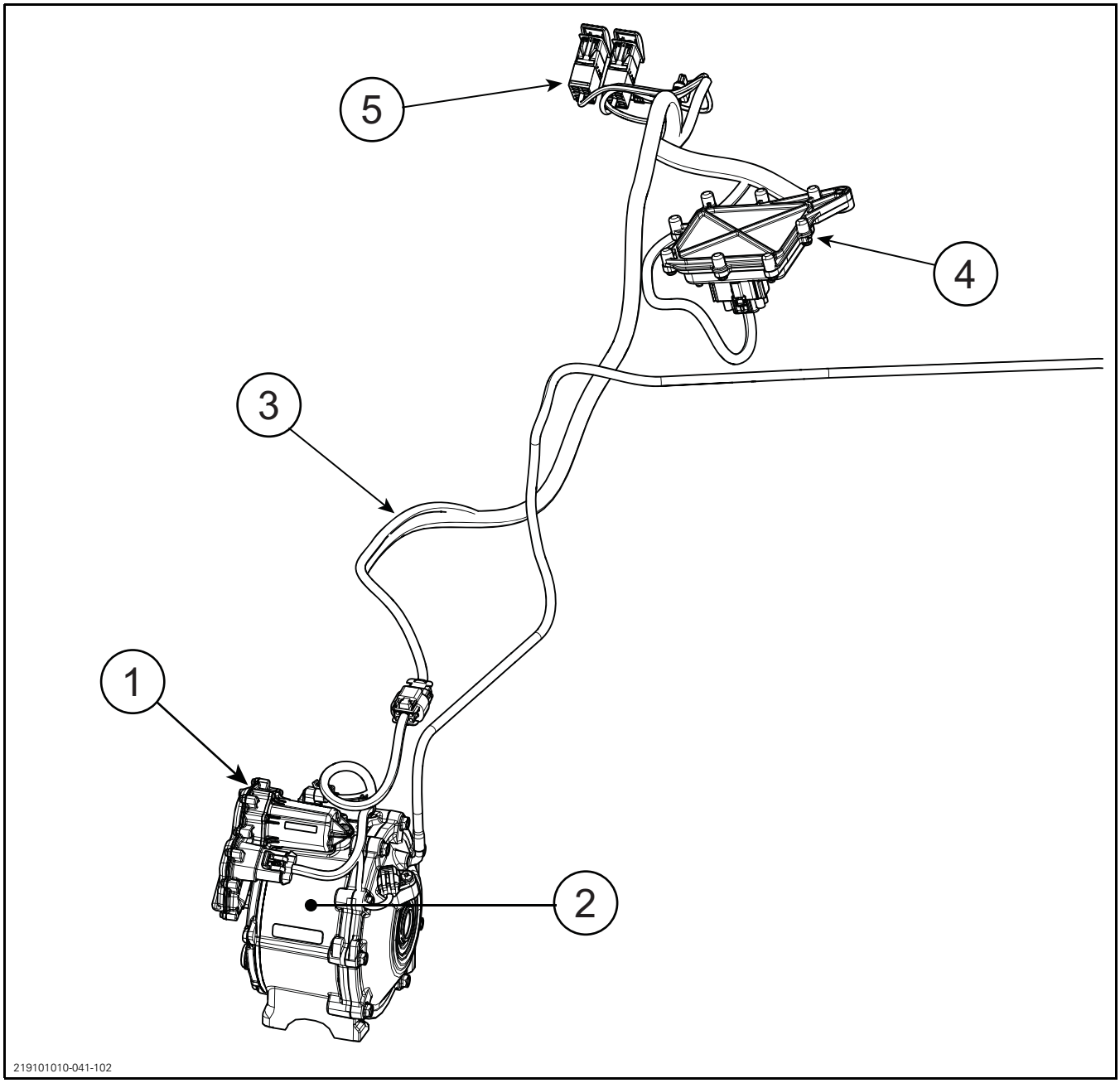

SMART-LOK FRONT DIFFERENTIAL SYSTEM
1. *The actuator motor*
2. *The front differential*
3. *A wiring harness*
4. *The Front Differential Module (FDM)*
5. *The 2 switches on the dash*

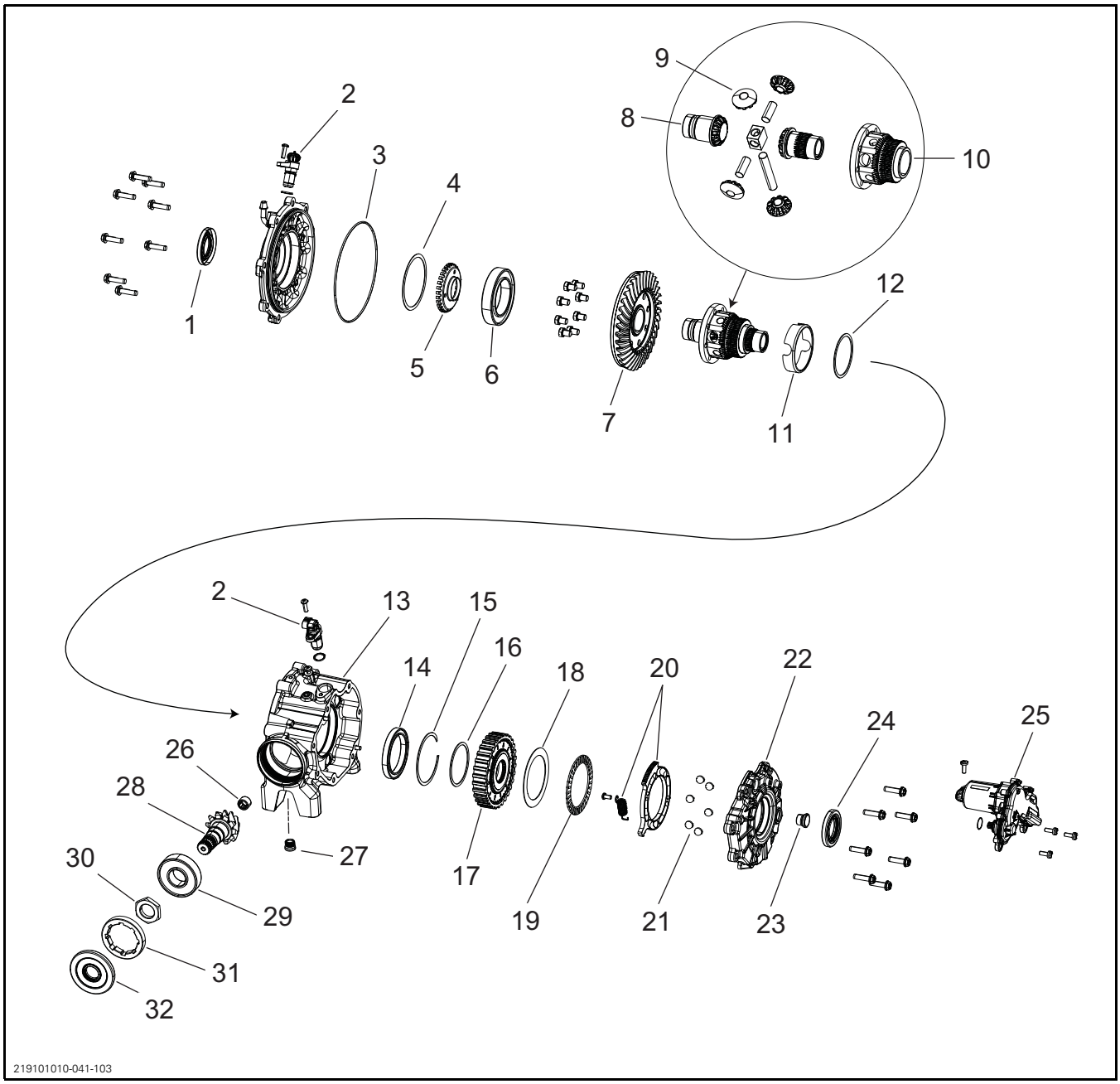

1. Oil seal
2. Speed sensor
3. O-ring
4. Backlash shim
5. Tone ring
6. Ball bearing
7. Ring gear
8. Output gear
9. Spider gear
10. Spider gear housing
11. Cross pin retainer
12. Fill shim
13. Center case
14. Ball bearing
15. Retaining ring
16. Clutch pack adjustment shim
17. Clutch pack
18. Thrust washer
19. Thrust bearing
20. Ball ramp and return spring
21. Balls
22. Right hand cover
23. Fill plug
24. Oil seal
25. Actuator assembly
26. Needle bearing
27. Drain plug
28. Pinion
29. Pinion bearing
30. Nut
31. Nut
32. Pinion seal

LOCKING SEQUENCE

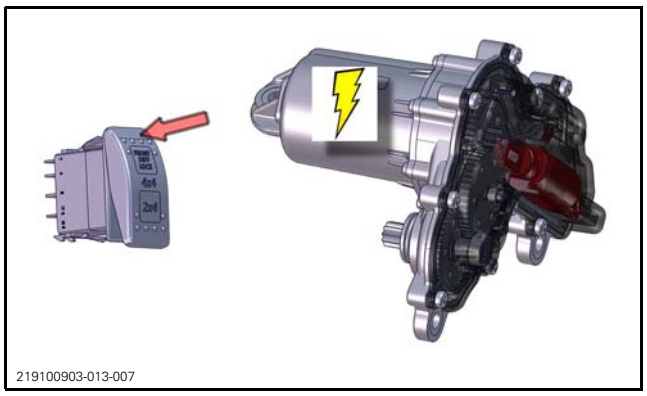
219100903-013-007

When the FDM receives the lock signal from the front diff lock switch, it applies full current to the actuator motor for 1,5 seconds.

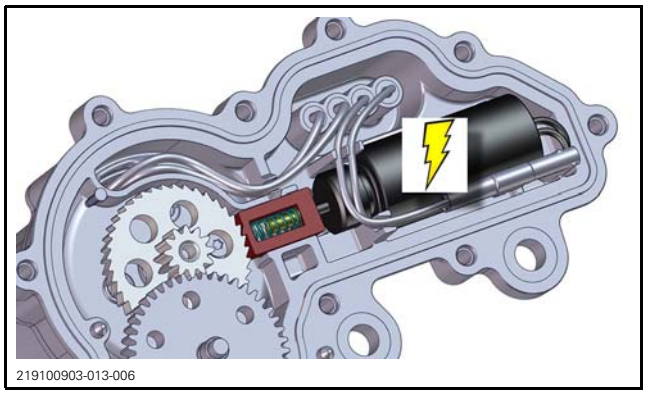
219100903-013-006

1 second after receiving the lock signal, the FDM will activate the lock solenoid.

The FDM will remove current from the actuator motor, and the locking pawl will maintain the differential in full lock mode.

When the actuator motor turns the locking mechanism, it is possible to hear it.

DIFFERENTIAL

The Smart-Lok differential can be viewed in 3 main sections.

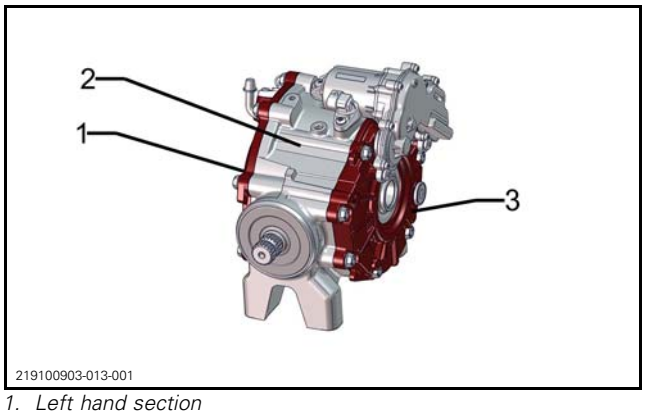

219100903-013-001

1. *Left hand section*
2. *Middle section*
3. *Right hand section*

Left Hand Section

The left hand section includes the ring gear, backlash adjustment, spider gears, and output gears.

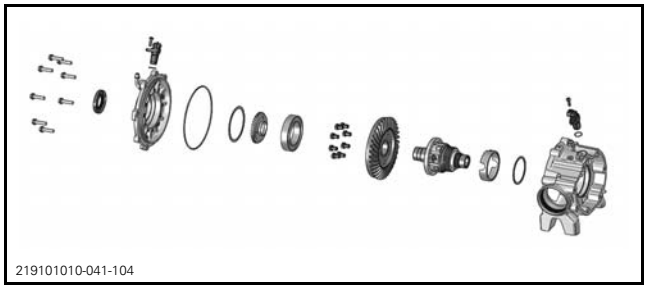
219101010-041-104

Middle section

The middle section contains the pinion.

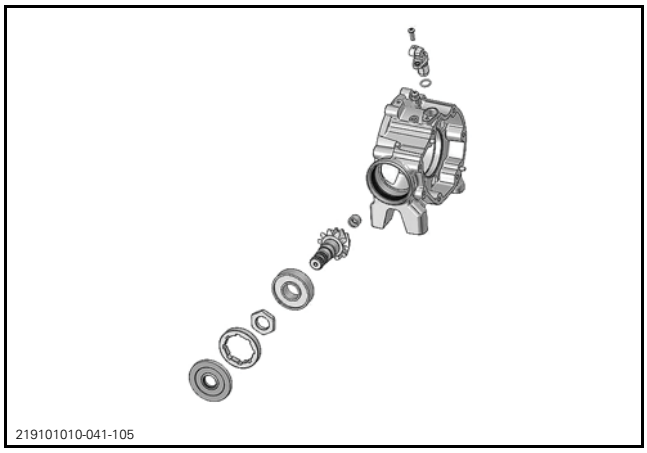
219101010-041-105

Right hand section

The right hand section contains the ball ramp and clutch pack.

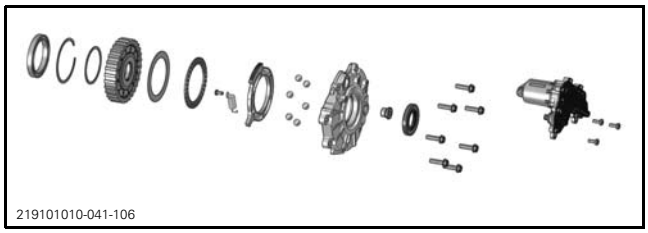

ACTUATOR MOTOR ASSEMBLY

The actuator motor assembly includes an electric motor, reduction gears, and a solenoid that controls the locking pawl.

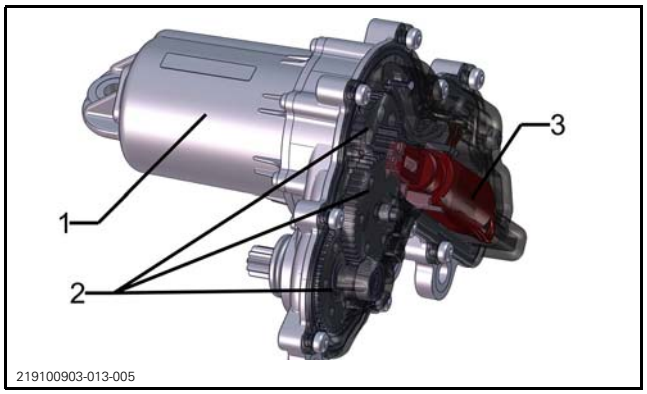

1. *Electric motor*
2. *Reduction gears*
3. *Solenoid and pawl*

The solenoid activates the locking pawl when the front differential is locked.

SWITCHES

There are two switches:

- 3 position combination toggle/push button switch (front 2x4, 4x4, diff lock)
- Front differential mode switch (if applicable, according to vehicle package)

When the toggle switch is set to 4X4, the FDM electronically manages the front differential according to the selected mode on the mode switch (modes vary by model, see the *OPERATOR'S GUIDE*).

When the top of the front diff lock switch is pressed, the FDM will begin the *LOCKING SEQUENCE*.

The front differential will remain locked until the button is pressed again, the mode is changed, or the unit is turned off.

FRONT DIFFERENTIAL MODULE (FDM)

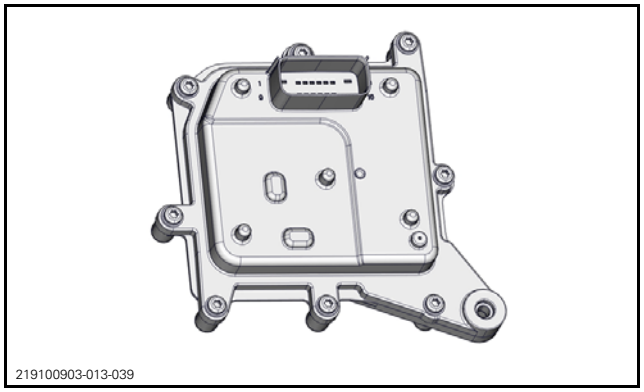

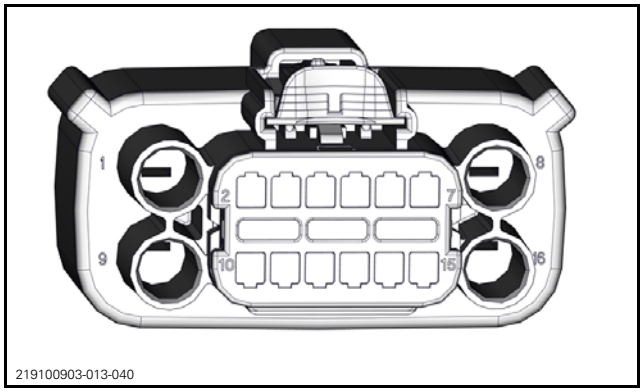

The FDM controls the current to the actuator motor, which applies torque to the clutch pack.

FDM Inputs

From the CAN bus:

- Estimated steering position
- Engine speed and torque
- Transmission gear position
- Vehicle speed (from rear wheel speed sensor)
- TAS signal
- Vehicle configuration identifier (CDID).

Direct inputs:

- Diff lock switch
- 4X4 switch
- Mode switch (if applicable, according to vehicle package)
- Front wheel speed sensors
- Switched power supply from vehicle.

FDM Outputs

- Actuator motor
- Lock solenoid
- Switch backlight.

ADJUSTMENT

There are adjustment shims for the backlash and the clutch pack.

The backlash must be adjusted and the left hand side of the differential must be assembled before adjusting the clutch pack shim(s).

PRELOAD

Install the spline driver tool on the pinion shaft.

REQUIRED TOOL	
SPLINE DRIVER (P/N 529 036 386)	

Using a needle torque wrench, measure the drag torque.

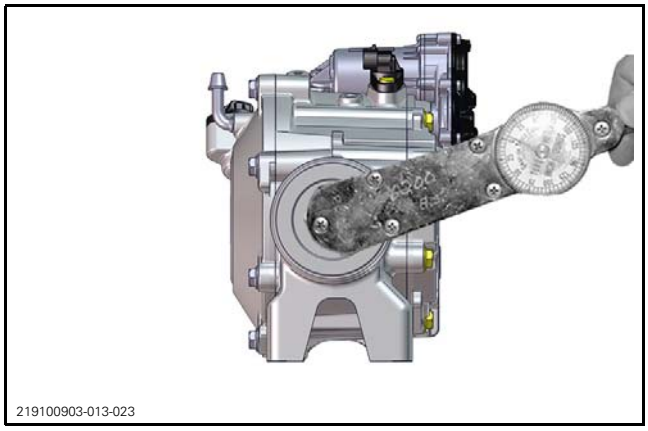
219100903-013-023

PRELOAD SPECIFICATION
Maximum 1.5 N•m (13 lbf•**in**)

If preload is out of specification, split front differential housing and check all bearings conditions.

BACKLASH

Turn the pinion gear by hand 4 full turns before checking backlash, there should be no tight spots or binding.

If rebuilding the differential, check and adjust the backlash without the fill shim.

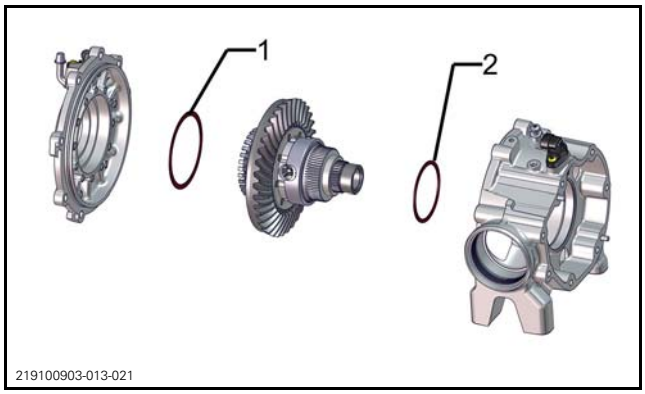

219100903-013-021

1. Backlash shim
2. Fill shim

Inspecting and Adjusting Backlash

Do not damage the speed sensor.

When measuring backlash, the differential cover should be upside down to pull the ring gear out of mesh.

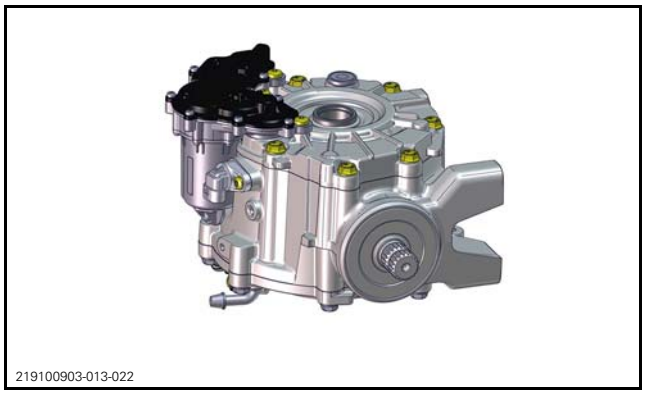
219100903-013-022

1. Measure the backlash with a dial indicator.

REQUIRED TOOL	
BACKLASH MEASUREMENT TOOL (P/N 529 036 387)	

2. Place the backlash measurement tool at the end of pinion gear.

A. 23 mm (29/32 in)

3. Position the dial indicator tip against the tab at a 90° angle and right in the dimple.
4. Gently, move the tab back and forth. Note the result.

NOTE: While measuring the backlash, make sure the ring gear is not moving.

5. Rotate pinion gear 1/2 turn and check backlash again. Note the result.
6. Rotate pinion gear 1 turn and check backlash again.

BACKLASH SPECIFICATION
0.127 mm to 0.305 mm (.005 in to .012 in) to 0.25 mm (.01 in)

If backlash is out of specification, split front differential housing and adjust shim thickness as per following guideline.

BACKLASH ADJUSTMENT GUIDELINE	
BACKLASH MEASUREMENT	WHAT TO DO
Below 0.127 mm (.005 in)	Install a thinner shim and recheck backlash
Above 0.305 mm (.012 in)	Install a thicker shim and recheck backlash

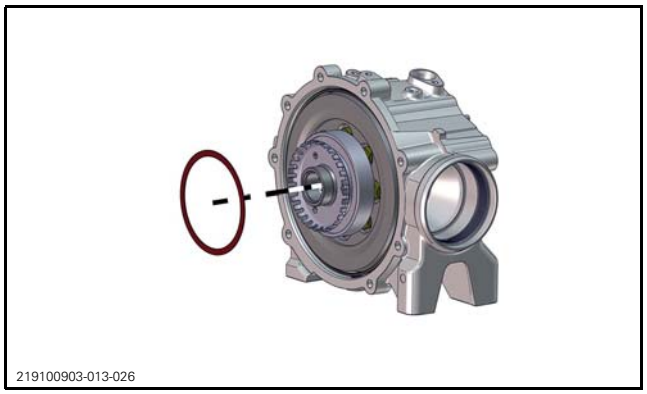

BACKLASH SHIM

Repeat until backlash is within specifications. Then more on to *MEASURING AND SELECTING A FILL SHIM*.

Measuring and Selecting a Fill Shim

NOTICE **It is important to install the correct backlash shim first. Only then move on with measuring and selecting a fill shim.**

1. Measure and note the distance between the middle casing and the bearing inner race **no. A**.

NOTE: Use a straight edge and a slide caliper.

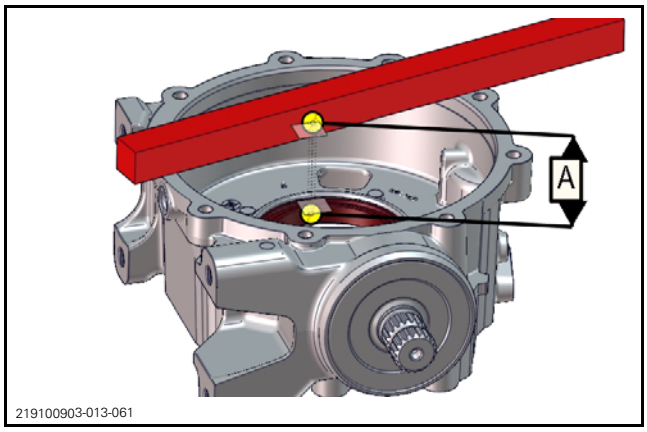

2. With the correct backlash shim installed and the bearing resting on this shim, measure and note the distance between the top of the differential gear assembly and the left hand cover.**no. B**.

NOTE: Use a straight edge and a slide caliper.

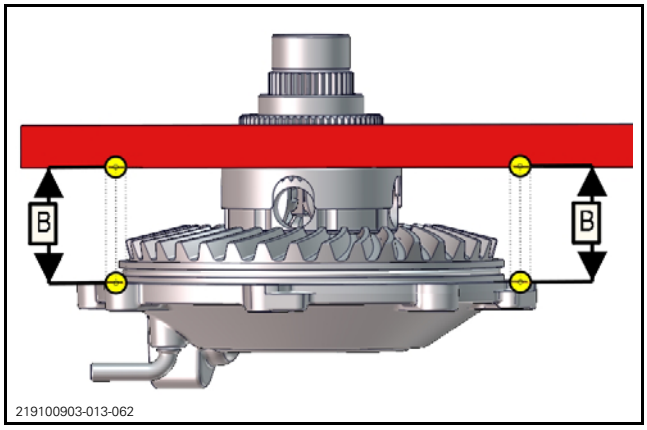

Use a shim thickness equal or less than the calculation result.

FILL SHIM GUIDELINE	
Measurement **no. A** - measurement **no. B**	= Fill shim thickness

3. Choose the correct fill shim from the available service kit.

CLUTCH PACK

Refer to *REPLACING THE CLUTCH PACK* in this subsection.

FLUID LEVEL

Recommended Differential Oil

XPS™ RECOMMENDED DIFFERENTIAL OIL	
Scandinavia	75W90 SYNTHETIC GEAR OIL (EUR) (P/N 779212)
Other countries	75W90 SYNTHETIC GEAR OIL (P/N 779158)
If THE RECOMMENDED XPS DIFFERENTIAL OIL IS NOT AVAILABLE	
Use the or a 75W90 gearbox oil that meets the API GL-5 specification.	

Verifying the Differential Oil Level

1. Park the unit on a level surface.
2. Remove the fill plug.

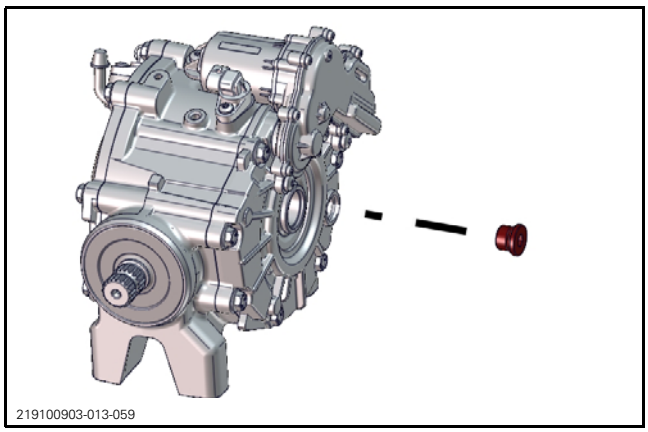

3. The fluid should be level with the bottom of the fill plug hole. Add oil if required.
4. Reinstall the fill plug. Refer to exploded view for specific tightening torque.

TROUBLESHOOTING

Connect the vehicle to the BRP diagnostic software (BUDS2). Correct any occurred faults prior doing any troubleshooting.

If unsure, a good place to start is with the *TESTING THE FDM* procedure in this subsection.

The FDM is able to self diagnose the system. There are several electrical diagnostic, functional diagnostic, and input diagnostics available thru BUDS2.

Wake-up the vehicle. If no connection:

– Validate FDM connections
– Validate switches using the measurement page
– Validate mode selected (Diff lock). The FDM should try to lock, if it fails, follow faults troubleshooting procedure in BUDS2.

DIFFERENTIAL WILL NOT LOCK - CANNOT HEAR ACTUATOR MOVING

1. **Loose connection at connector**
   - *Ensure FDM and all other connectors are corrosion free and properly connected.*
   - *Connect BUDS2 and check the FDM for faults to explain the situation.*
   - *If you cannot see the FDM in BUDS2, check FDM electrical connections.*
   - *Monitor switch functions in measurement page.*
   - *Validate mode selected (Diff lock) -The FDM should try to lock, if it doesn't, follow the fault troubleshooting procedure in BUDS2.*
   - *Use BUDS2 and refer to fault codes P3400 and P3401 for continuity test and actuator test.*

DIFFERENTIAL WILL NOT LOCK - CAN HEAR ACTUATOR MOVING

1. **Lock solenoid not working**
   - *Remove oil fill plug and observe ball ramp movement. Refer to REPLACING THE CLUTCH PACK in this subsection for proper movement and adjustment. If the ball ramp does not stay locked it suggests that the lock solenoid is not engaging.*
   - *Use BUDS2 and refer to fault codes P3402 and P3403 for continuity test and actuator test.*

CANNOT KEEP FRONT WHEELS LOCKED TOGETHER IN LOCK MODE

1. **Worn clutch pack or actuator/solenoid issue.**
   - *Use BUDS2 and refer to fault codes P3400 P3401 (Actuator motor)*
   - *Use BUDS2 and refer to fault codes P3402 P3403 P3404, (solenoid)*
   - *Use BUDS2 and refer to fault codes P3405 P3406 mechanical issues*
   - *Use BUDS2 and refer to fault code P215A for clutches issue (it could be also a left speed sensor fault for this specific code)*
2. **DPS fault, no steering angle calculation transmitted on CAN**
   - *Check for fault codes, module updates, or missing modules.*
3. **CAN system fault**
   - *Check for fault codes, module updates, or missing modules.*

4. Worn clutch pack
   - *Check adjustment. Refer to REPLACING THE CLUTCH PACK in this subsection.*

DIFFERENTIAL WILL NOT UNLOCK

1. Ball ramp not resetting to open position
   - *Check ball ramp return spring.*
2. Lock solenoid stuck
   - *Refer to BUDS2 fault codes for actuator, solenoid and mechanical issues. It could be detectable by the FDM. Check the ball ramp return spring.*
   - *Try a new actuator.*

PROCEDURES

TESTING BALL RAMP RETURN SPRING

NOTICE **Do not activate the actuator when it is removed from the differential, it can damage the actuator.**

1. Remove actuator.
2. Using a flat screwdriver on the ball ramp teeth, try to move the ball ramp counterclockwise.

You should feel the resistance of the spring.

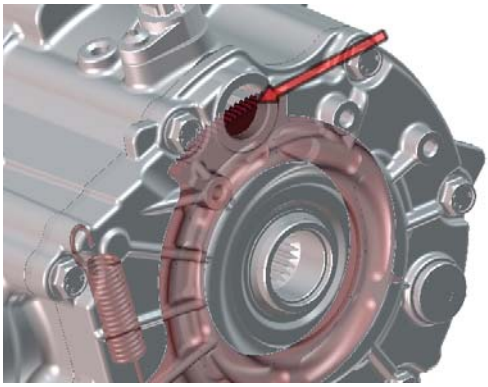

219100903-013-058

3. Remove the screwdriver and the ball ramp should return to it's original position.
4. If ball ramp turns freely (no resistance), remove right hand cover and inspect return spring.

TESTING A SPEED SENSOR

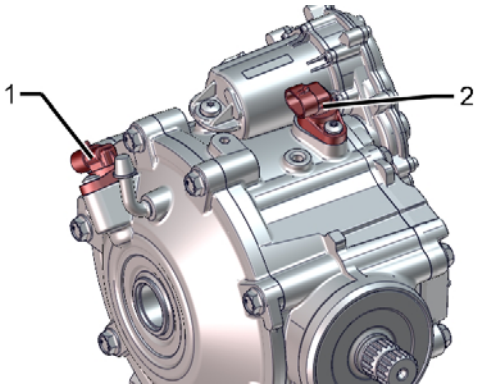

219100903-013-057

1. *Left hand wheel speed sensor (wheel sensor)*
2. *Average wheel speed sensor (Carriage sensor)*

PIN	SPECIFICATION
A	12 volts
B	Signal to FDM
C	Ground

1. Turn ignition ON.
2. Lock and unlock front differential to validate that it functions properly.
3. Verify sensor supply voltage at key-On.

PIN		RESULT
A	C	Battery voltage

4. Verify sensor pull-up voltage at key-On.

PIN		RESULT
B	C	More than 5 volts

5. Verify continuity between the following pins.

CONNECTOR	FDM	RESULT
B	10 or 11	Close to 0 Ω

6. Inspect the sensor and tone ring.

Testing the Speed Sensor Signal

NOTICE **Back probing is not recommended to maintain proper sealing of the electrical connectors.**

1. Lift and support the front of vehicle so that front wheels are off the ground.

2. Block rear wheels to avoid vehicle moving.
3. Set transmission to 2WD and to Neutral.
4. Connect the vehicle to the BRP diagnostic software (BUDS2) and logon.
5. Start the engine.

NOTE: The left speed sensor measures the exact speed from the left wheel. To generate a signal on the average front wheel speed sensor in 2WD mode, the right wheel has to be immobilized, then, by turning the left wheel both wheels sensors should signal a rotation.

6. Turn the wheels manually and observe the results in the BUDS2's Measurement page.
   – If no signal is measured, check the sensor's supply voltage. Refer to *TESTING A SPEED SENSOR* in this subsection.
   – If only one sensor doesn't signal RPM and all the electrical connections and wire continuity are good for the faulty sensor, both sensors may be swapped to validate if it is the speed sensor or a tone ring issue.

SIGNAL TEST		
TEST PROBES		RESULT (WHILE ROTATING WHEELS)
PIN B	PIN C	Alternate reading between battery voltage and 0 Vdc

NOTE: Since a pulsating voltage is measured, the numeric display will continuously change. The analog display may be easier to follow.

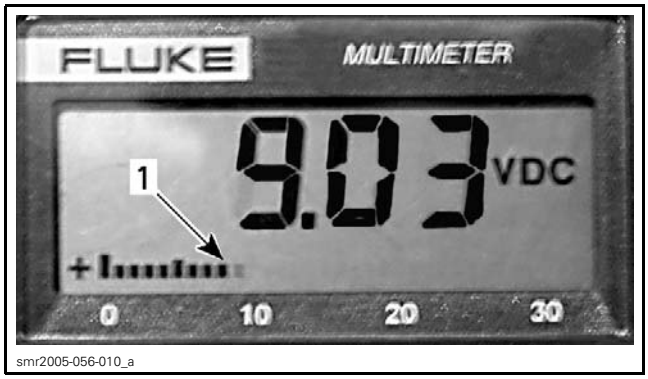

1. Analog display

If signal is not as per specification, remove sensor and inspect the tone ring.

If tone ring is in good condition, replace the sensor.

TESTING THE FDM

There are no specific tests for the FDM.

The FDM should be visible in BUDS2. Check for fault codes and updates.

If the module is not visible in BUDS2, refer to the wiring diagram and check for the following.

PIN	SPECIFICATION
FDM-1	12Vdc Power (hot at all times)
FDM-7	12 Vdc MODULE WAKE-UP at key on
FDM-9	Ground
FDM-2	CAN-HI
FDM-3	CAN-LOW

If the FDM receives power, ground, and CAN communication, test individual system components and their wires to the FDM. Refer to *GENERAL* for an overview of system components.

TESTING THE ACTUATOR

NOTICE **Do not bench test the actuator. Always perform the test with the actuator installed on the differential.**

1. Lift and support the front of vehicle so that front wheels are off the ground.
2. Wake up the vehicle by pressing the start/stop button or turning ignition switch to ON.
3. Ask an assistant to press the diff lock button and listen for the motor.
   – You should hear the motor turn on for 1.5 seconds.
   – You should hear the lock solenoid engage after 1 second.
   – The front wheels should be locked and should not turn individually.
4. Ask the assistant to press the diff lock button again, to unlock the differential.
   – You should hear the solenoid disengage.
   – The motor should wind down to it's original position.
   – Front wheels should turn individually.

REPLACING THE ACTUATOR

1. Disconnect the actuator's electrical connector.
2. Remove the retaining screws.

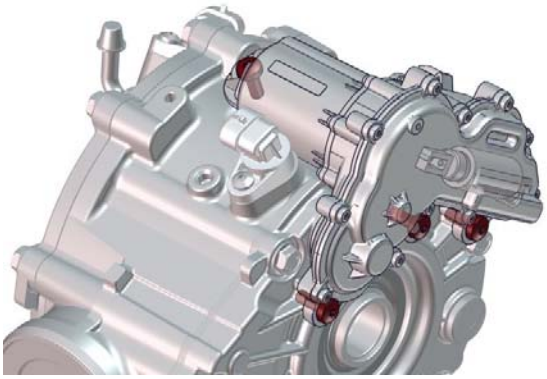
219100903-013-041

3. Remove the actuator.

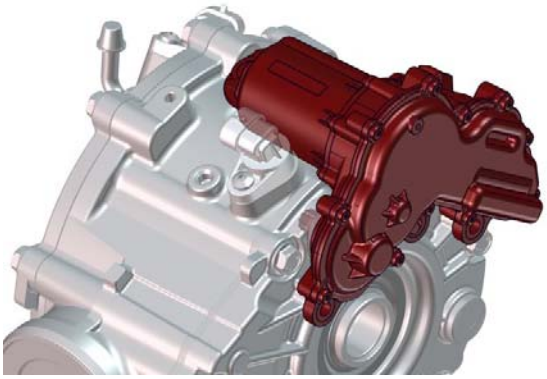
219100903-013-042

4. Lubricate the actuator's O-ring.

RECOMMENDED SERVICE PRODUCT
Differential oil

5. Install the new actuator.
6. Install and tighten the 3 retaining bolts on the right hand cover.

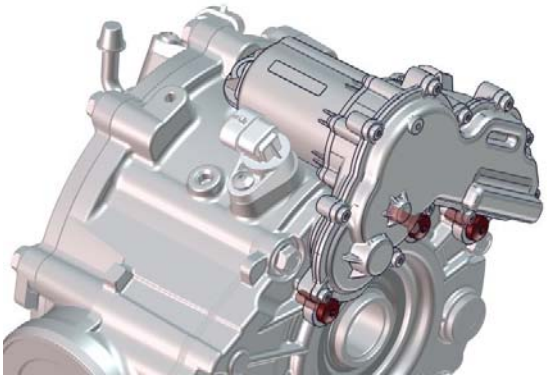
219100903-013-043

7. Install and tighten the remaining screw.
8. Connect the electrical connector.

REPLACING THE CLUTCH PACK

1. Remove the fill plug.

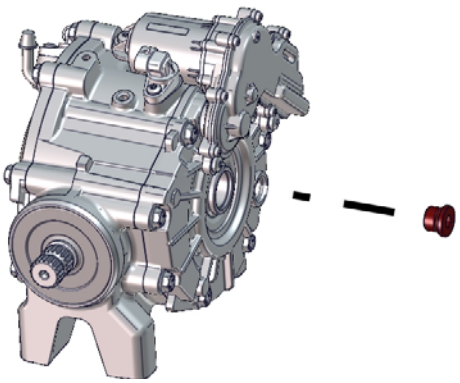
219100903-013-059

2. Remove the drain plug, drain the oil.

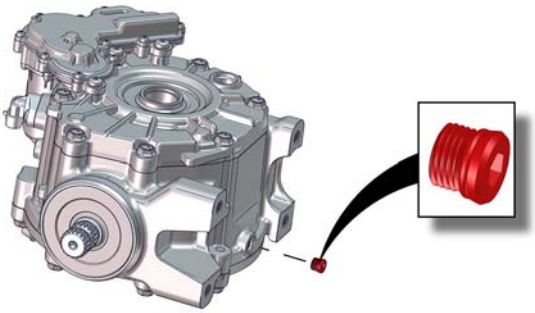
219100903-013-009

3. Remove the actuator assembly.

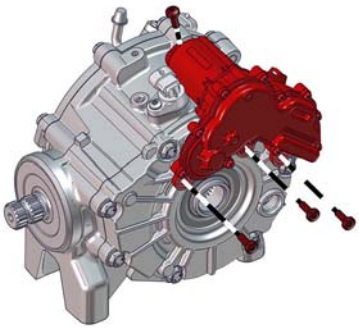
219100903-013-010

4. Remove the right hand cover.

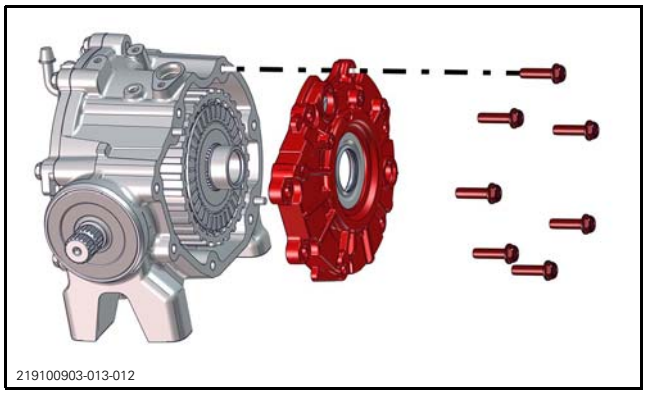

5. Remove the thrust bearing and thrust washer.

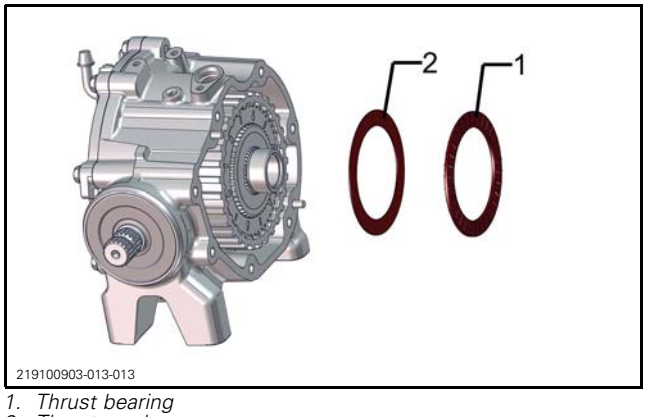

1. Thrust bearing
2. Thrust washer

6. Remove the clutch pack.

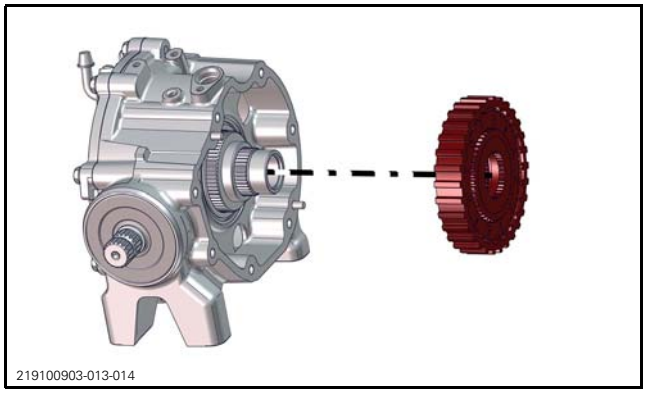

7. Clean the sealant off of the middle and right hand differential sections.

NOTE: Make sure to clean the sealant in the grooves of the right hand cover.

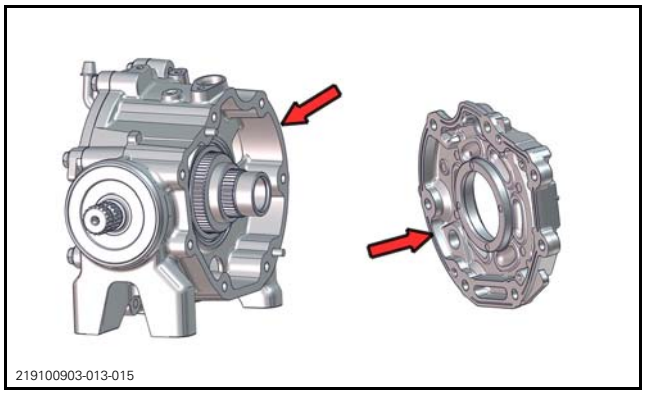

8. Keep the original shim installed in it's place.

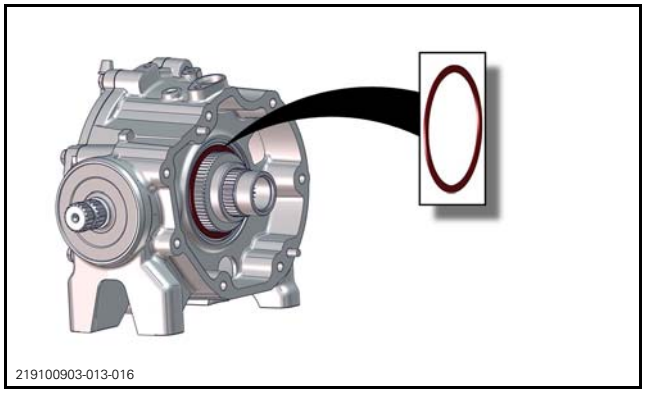

9. Install the new clutch pack, thrust washer, and thrust bearing.
10. Install and torque right hand cover following the sequence **without** any sealant.

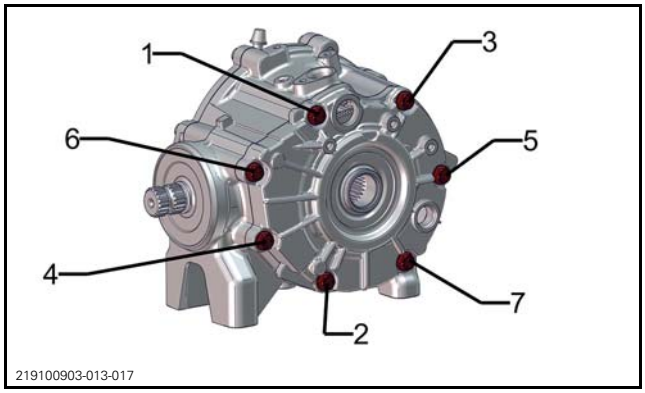

COVER TORQUE SEQUENCE

11. Install the actuator and torque retaining screws.
12. Connect the actuator motor to the electrical harness.
13. Wake-up the vehicle.
14. Observe the ball ramp through the fill plug hole while someone else presses the diff lock switch.

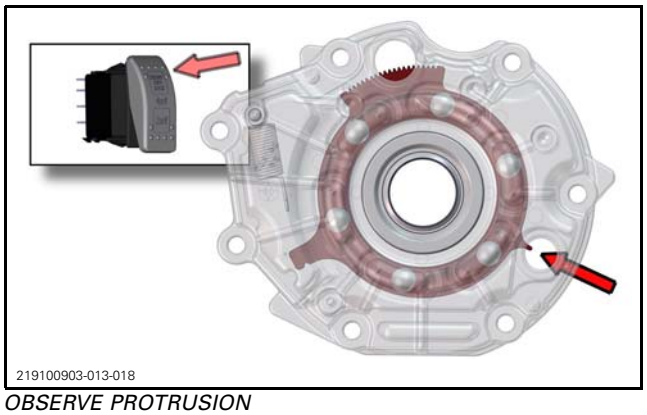

OBSERVE PROTRUSION

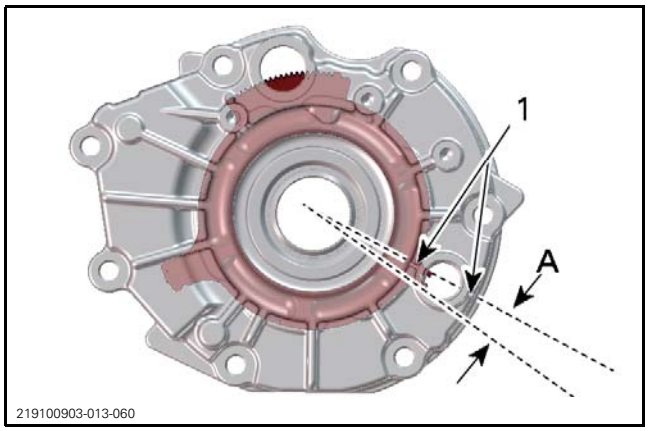

ACCEPTABLE ADJUSTMENT RANGE
1. Detail on right hand cover
A. Acceptable range for protrusion

15. The protrusion on the ball ramp should be within the acceptable range as visible in the fill hole when the differential is fully locked.
    - 15.1 If the protrusion goes past the hole, install a thicker shim.
    - 15.2 If the protrusion stops before the hole, install a thinner shim.
    - 15.3 Repeat until protrusion is visible straight thru the fill plug hole.

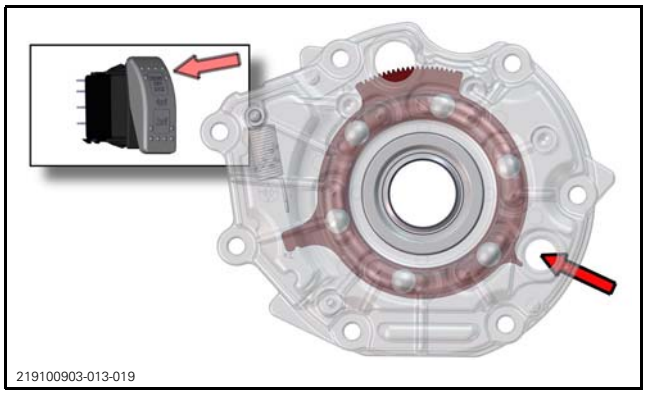

PROTRUSION STOPS BEFORE THE HOLE, INSTALL A THINNER SHIM

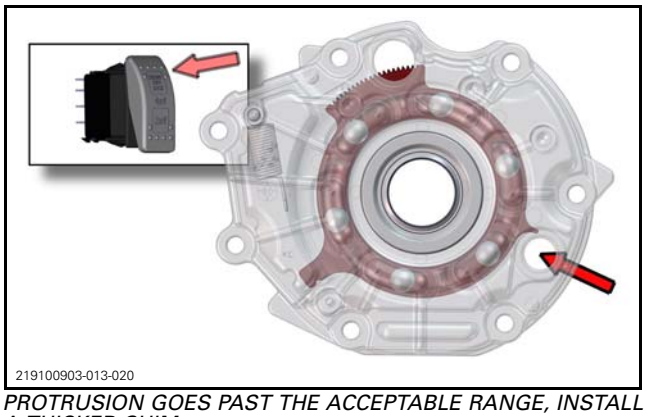

PROTRUSION GOES PAST THE ACCEPTABLE RANGE, INSTALL A THICKER SHIM

16. Once the clutch pack is properly adjusted, remove the right hand cover.
17. Apply sealant.

RECOMMENDED SERVICE PRODUCT
LOCTITE 5910 (P/N 293 800 081)

18. Install and torque right hand cover following the sequence and specifications.
19. Install the differential on the unit.
20. Connect all electrical connectors.
21. Adjust the differential oil level, refer to *FLUID LEVEL*.

DISASSEMBLING THE DIFFERENTIAL

1. Remove the clutch pack. Refer to *REPLACING THE CLUTCH PACK* in this subsection.
2. Remove speed sensors.

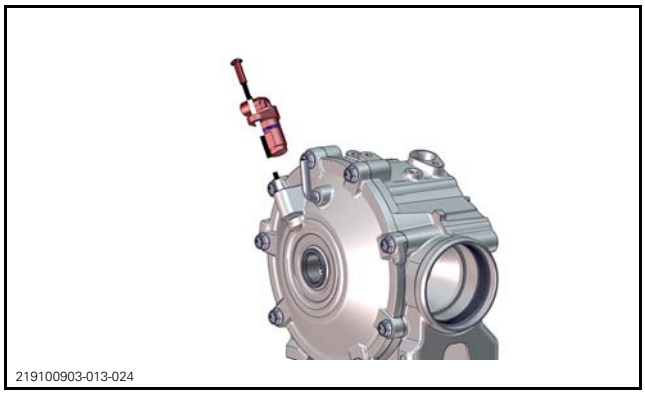

3. Remove the left hand cover.

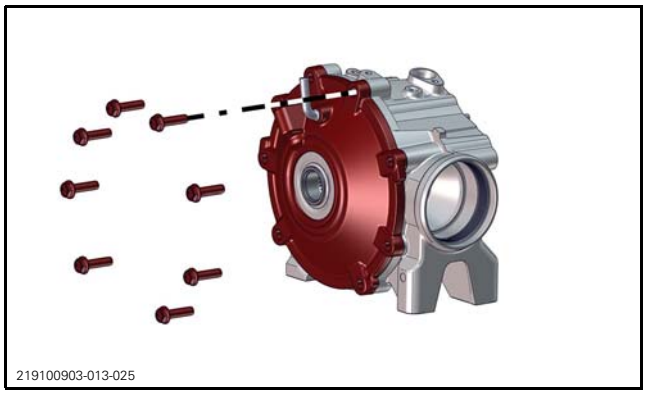
219100903-013-025

4. Inspect O-ring, replace if damaged.

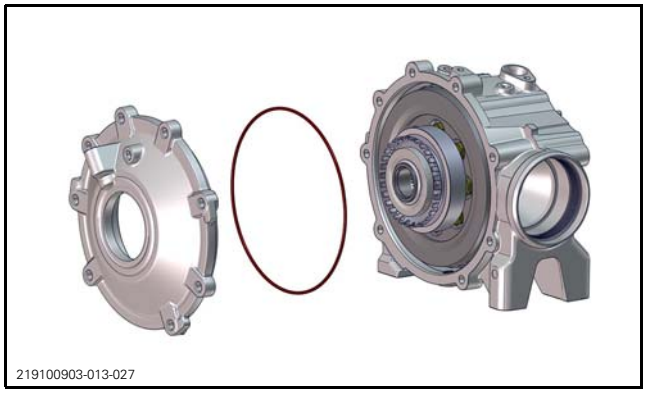
219100903-013-027

5. Remove the backlash shim.

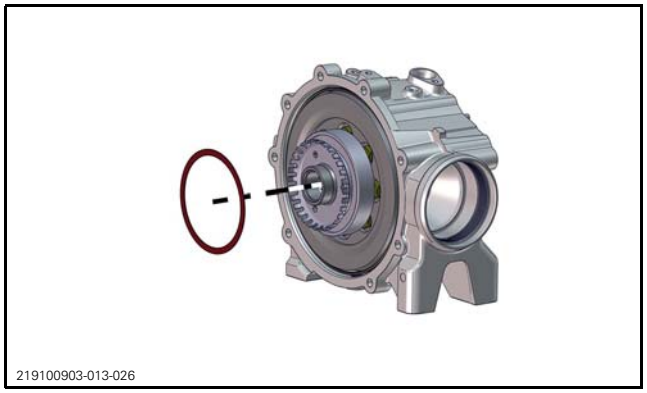
219100903-013-026

6. Remove the differential gear assembly.

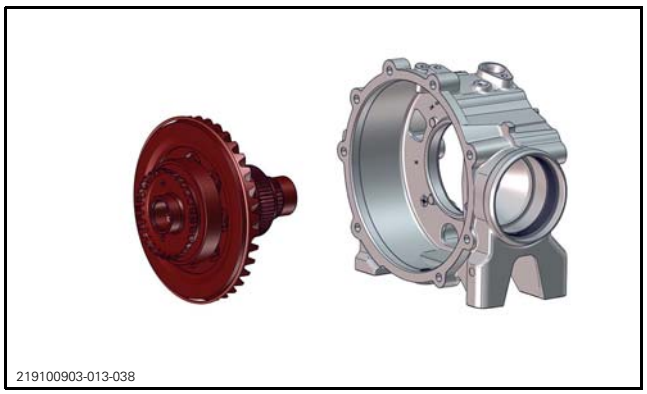
219100903-013-038

7. Remove the fill shim.

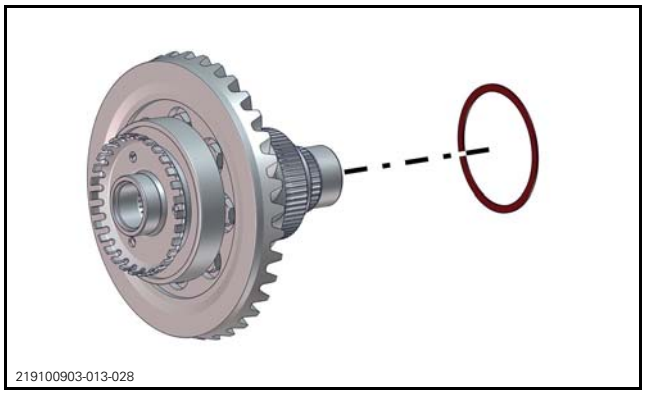
219100903-013-028

8. Use 2 screwdrivers to pry off the tone ring. Discard it.

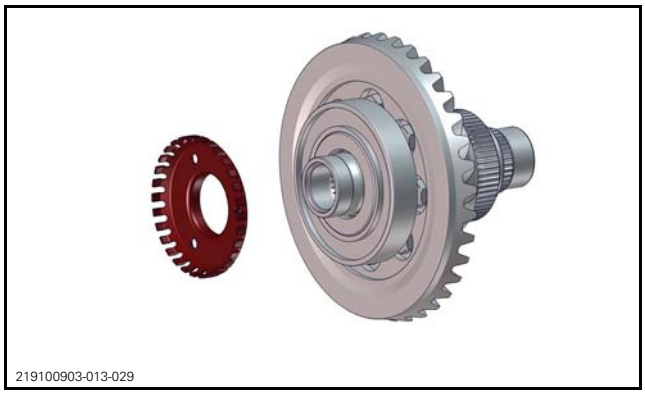
219100903-013-029

9. Use 2 screwdrivers to pry off the bearing. Discard it.

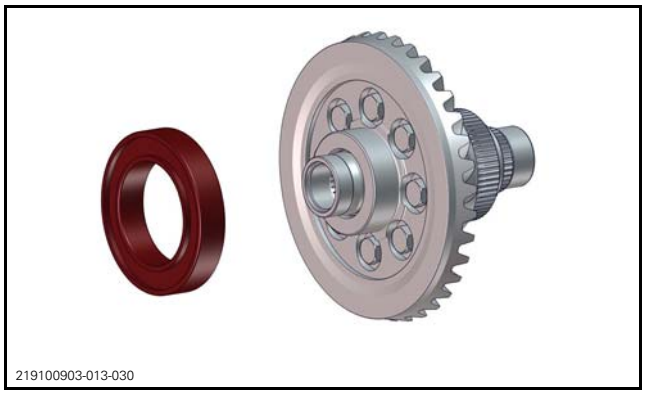
219100903-013-030

10. Mount the differential in a vise.

NOTICE **Use aluminum angle bars to over the jaws to protect the splines.**

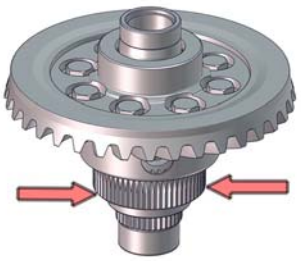
219100903-013-031

11. Remove the ring gear retaining screws. Discard them.

219100903-013-032

12. Remove the ring gear.

219100903-013-033

13. Remove the left hand output shaft.

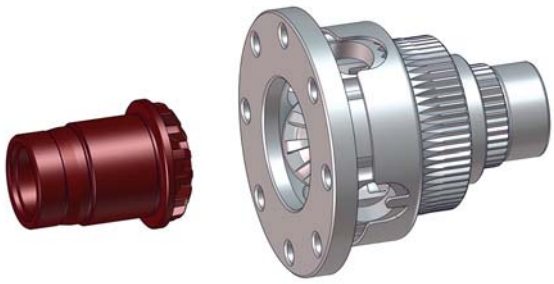
219100903-013-036

14. Remove the differential from the vise.
15. Straighten the locking tabs.

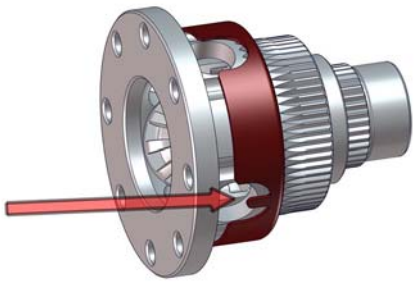
219100903-013-034

16. Remove the cross pin retainer.

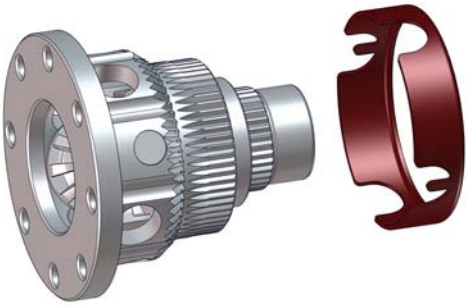
219100903-013-035

17. Remove the cross pins and coupler.

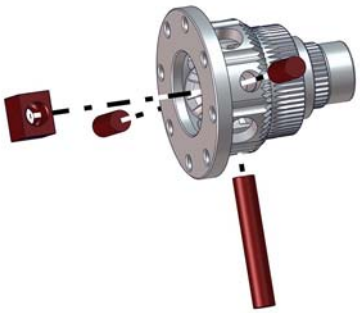
219100903-013-036_1

18. Remove spider gears and right hand output shaft.

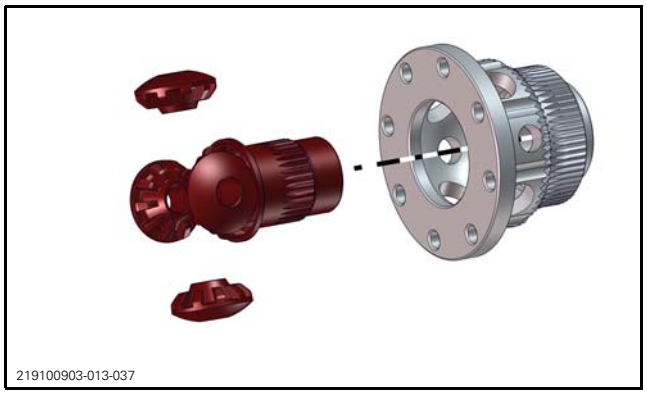
219100903-013-037

ASSEMBLING THE DIFFERENTIAL

Adjustment may be required when any of the following parts are replaced.

- Pinion gear
- Ring gear
- Bearing
- Clutch pack
- Housing.

Prior to finalizing assembly, proceed in this order:

- Temporarily assemble final drive using recommended torques.
- Do not apply thread locker product.
- Do not install a new pinion nut.
- Check backlash.
- Check preload.

NOTICE **Coat moving contact surfaces with differential oil during assembly.**

1. Reassemble the spider gear housing, refer to the illustration at the beginning of this subsection.

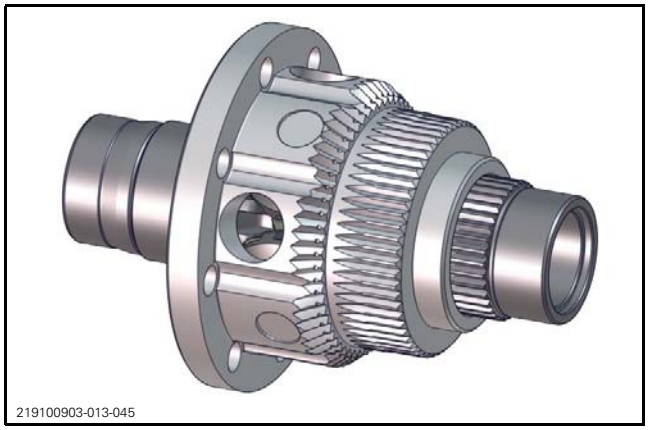
219100903-013-045

2. Install the cross pin retainer and punch down the tabs.

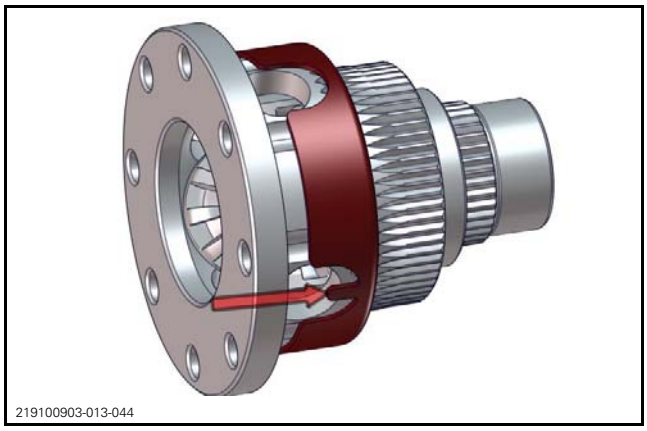
219100903-013-044

3. Install the ring gear and torque the new screws to specifications in a criss-cross pattern.

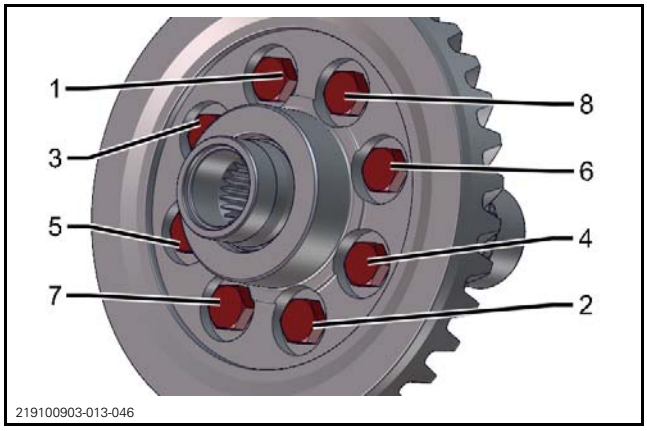

219100903-013-046

4. Recheck torque on all screws.
5. Install a new left hand bearing.

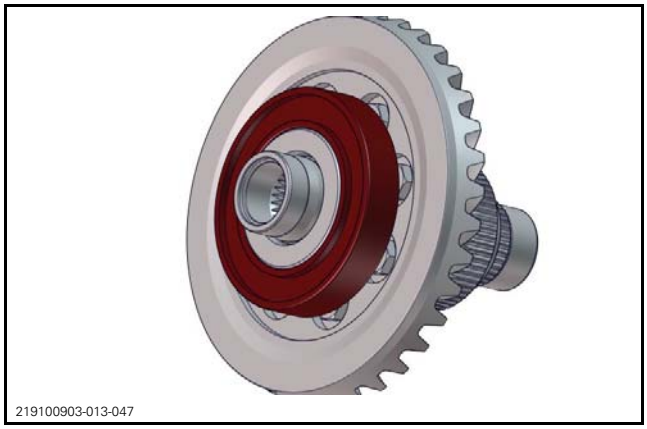
219100903-013-047

6. Install the right hand bearing.

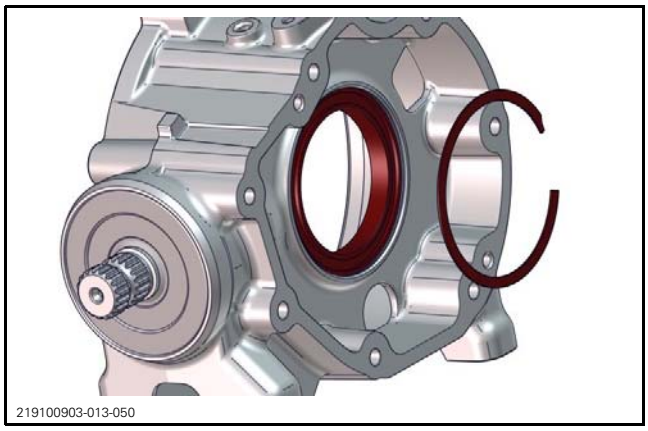
219100903-013-050

7. Install a new tone ring

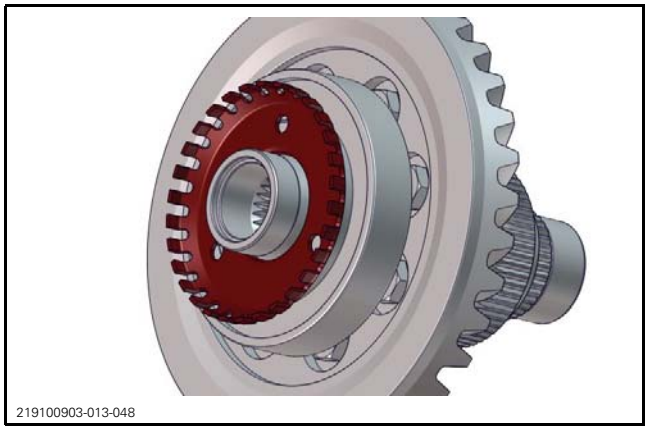
219100903-013-048

8. Install the previously removed backlash shim.

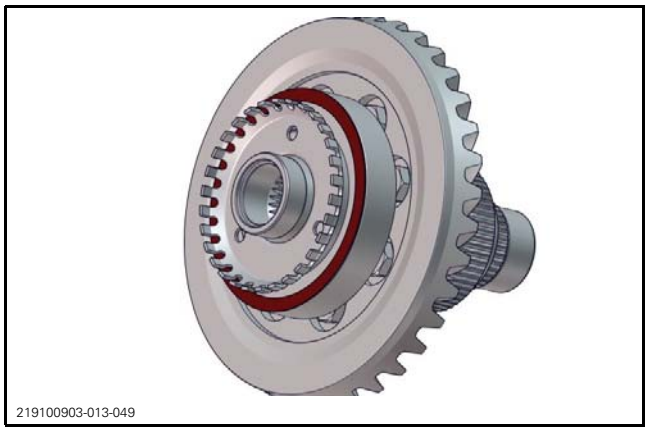
219100903-013-049

9. Install the ring gear assembly without the fill shim.
10. Check the backlash, adjust if necessary. Refer to *BACKLASH* in this subsection.
11. Install the applicable fill shim as specified in the *BACKLASH* adjustment procedure in this subsection.

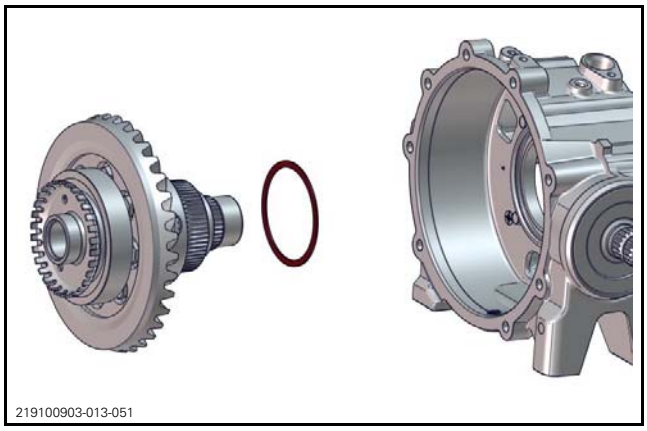
219100903-013-051

Check condition of O-ring. Replace if damaged.

12. Coat O-ring with differential fluid.
13. Install the left hand cover and O-ring.
14. Torque the left hand cover retaining screws.
15. Install the right hand side components. Refer to *REPLACING THE CLUTCH PACK* in this subsection.
16. Coat oil seals with differential oil.
17. Install all oil seals.
18. Check the preload. Refer to *PRELOAD* in this subsection.
19. Install the actuator.
20. Install the drain plug.
21. Install any other removed components like speed sensors.
22. Place the differential on a level work surface.
23. Fill the differential with the recommended oil. Refer to *FLUID LEVEL* in this subsection.
24. Install the differential on the unit.

REPLACING THE PINION

REQUIRED TOOLS	
MULTIFUNCTION DIFFERENTIAL TOOL (P/N 529 036 385)	
SPLINE DRIVER (P/N 529 036 386)	

1. Remove and discard oil seal.

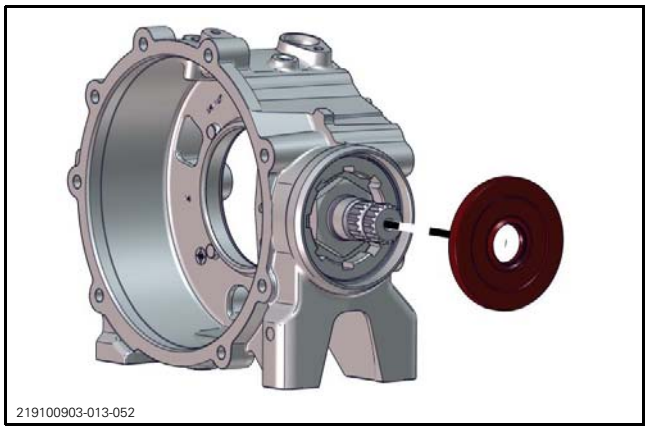
219100903-013-052

2. Unscrew the pinion nut.
   2.1 Lock the multifunctional tool and the spline driver together with a screwdriver.
   2.2 Slide the tools until it engage the nut.
   2.3 Unscrew the nut.

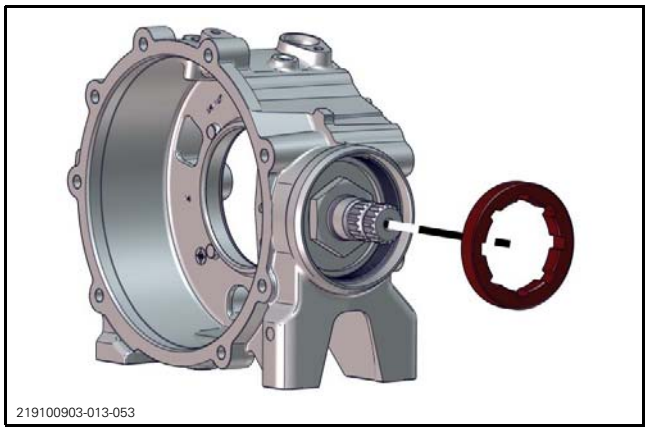
219100903-013-053

3. Remove bearing and pinion gear together.

NOTE: If pinion is hard to pull out, attach the propeller shaft to it and pull while hitting the yoke with a soft hammer.

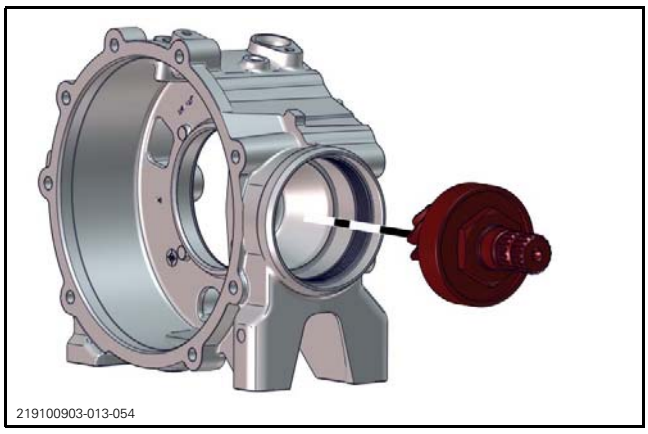
219100903-013-054

4. Remove nut from pinion.
   4.1 Install the multifunctional tool in a vice.
   4.2 Slide the spline driver on the pinion shaft.
   4.3 Slide the pinion and the spline driver in the multifunctional tool until the nut is engaged.
   4.4 Turn the spline driver clockwise to unscrew the pinion.

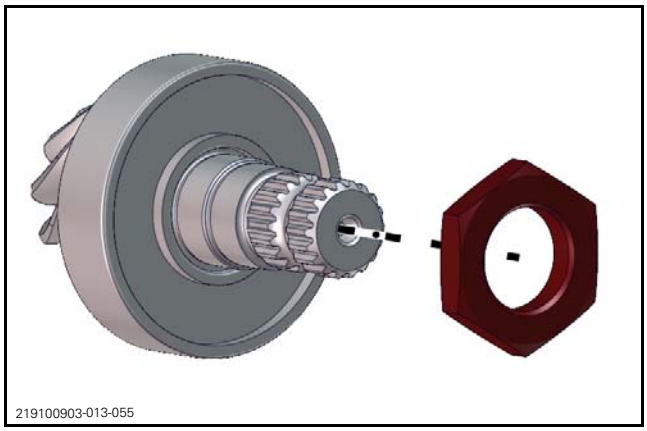
219100903-013-055

5. Remove bearing from pinion gear.

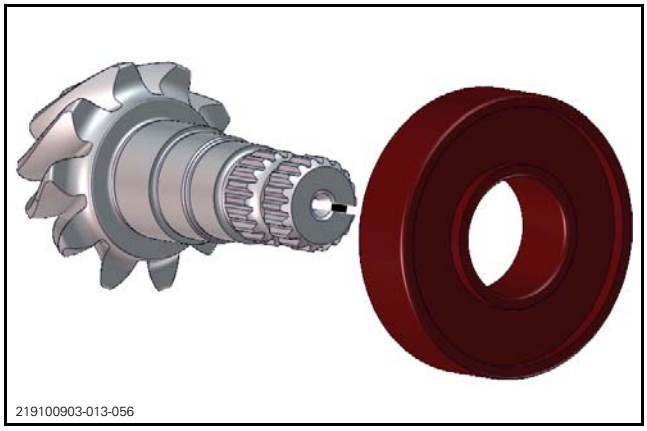
219100903-013-056

6. Remove and discard the bearing.

The assembly is the reverse of the disassembly procedure.

REAR DRIVE (HD7)

SERVICE TOOLS

Description	Part Number	Page
BACKLASH MEASUREMENT TOOL	529 035 665	263
BELLOWS CLAMP PLIERS	529 036 120	261
CV JOINT EXTRACTOR	529 036 005	261
SPANNER SOCKET	529 035 649	265

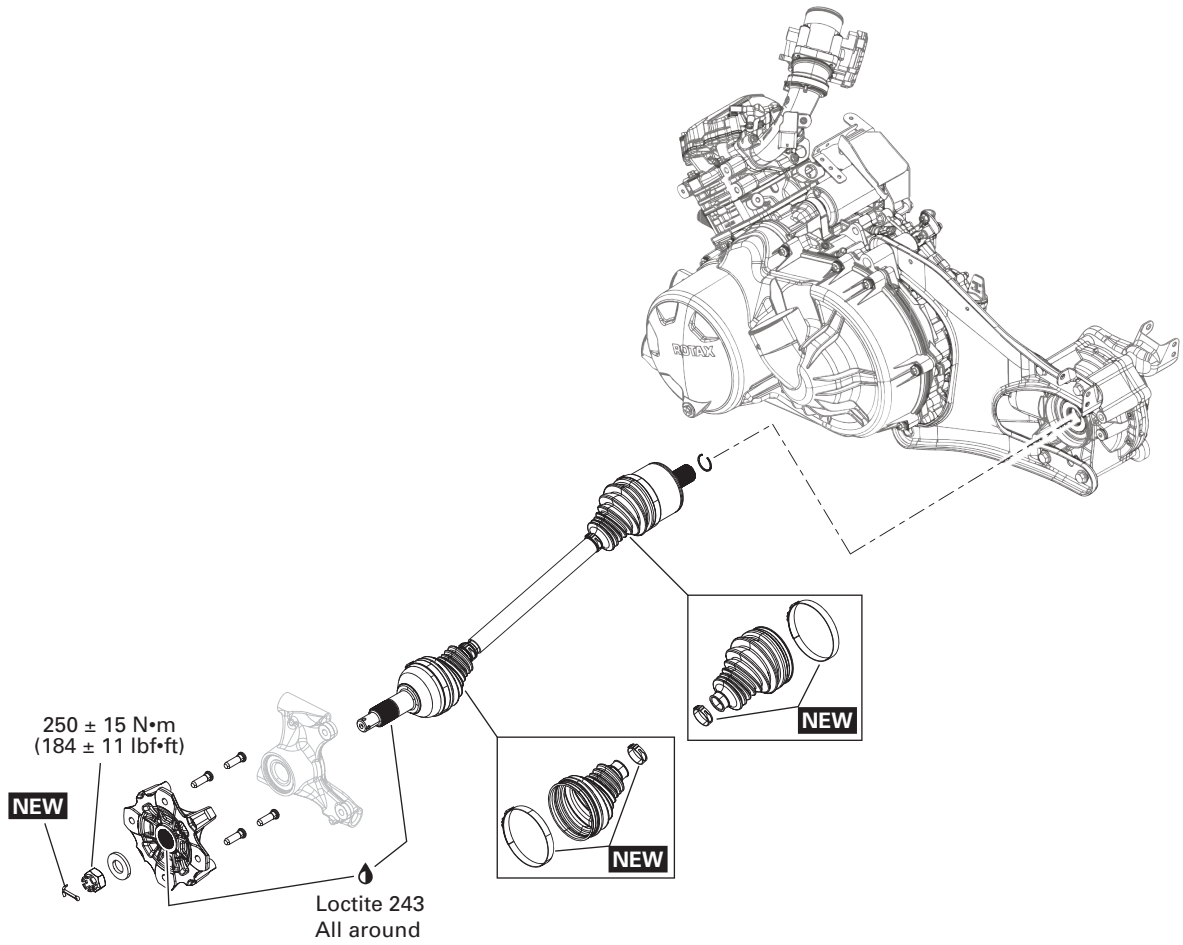

NEW = Component must be replaced when removed.

tmr2017-432-100_a

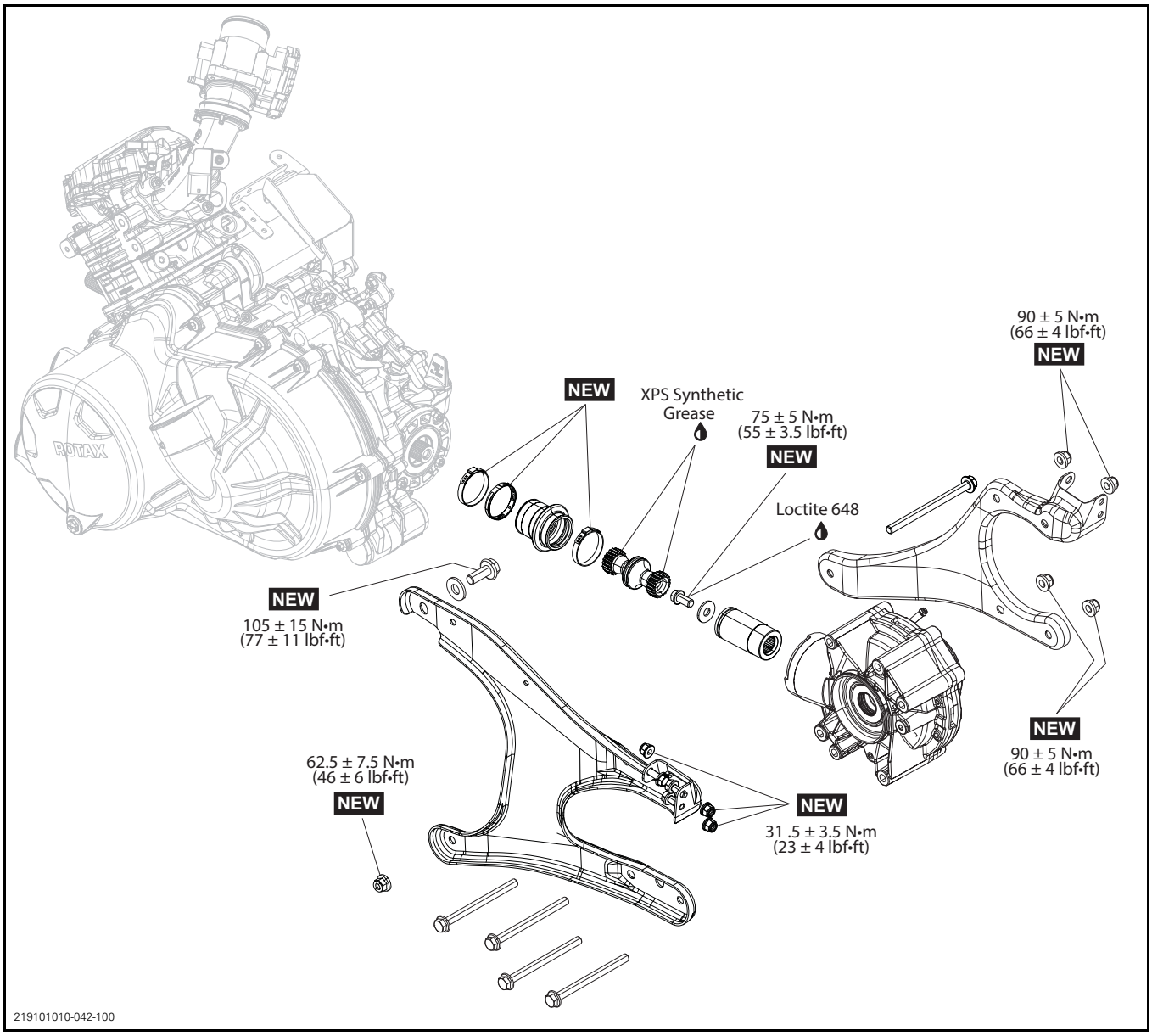
90 ± 5 N•m
(66 ± 4 lbf•ft)
NEW
NEW
XPS Synthetic
Grease
75 ± 5 N•m
(55 ± 3.5 lbf•ft)
NEW
Loctite 648
NEW
105 ± 15 N•m
(77 ± 11 lbf•ft)
NEW
90 ± 5 N•m
(66 ± 4 lbf•ft)
62.5 ± 7.5 N•m
(46 ± 6 lbf•ft)
NEW
NEW
31 .5 ± 3.5 N•m
(23 ± 4 lbf•ft)
ROTAX
219101010-042-100

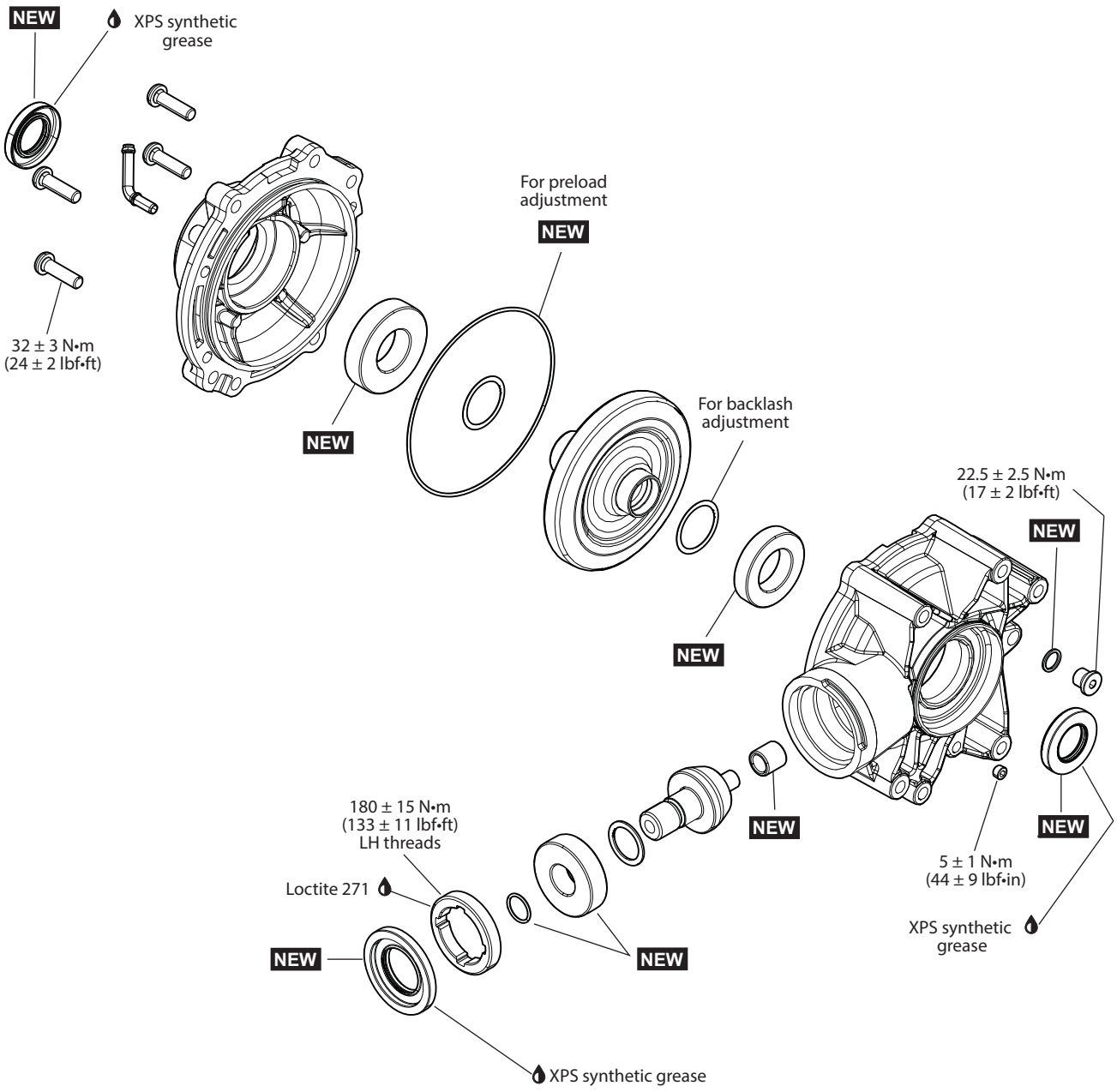

NEW = Component must be replaced when removed.

219101010-042-200

PROCEDURES

WHEEL HUB

Removing the Wheel Hub

1. Lift and support vehicle. Refer to *INTRODUCTION* section for proper procedure.
2. Select the 4WD position and place the transmission lever on PARK
3. Remove caliper from knuckle if applicable. Refer to *BRAKES* subsection.
4. Remove the following parts:
   – Cotter pin
   – Castellated nut
   – Belleville washer.

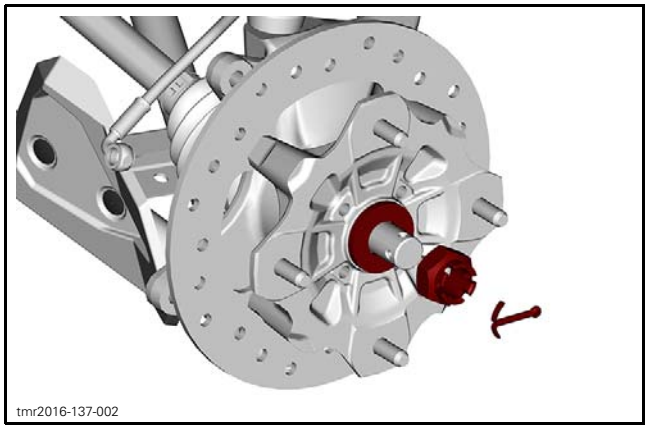
tmr2016-137-002

5. Remove wheel hub.

Inspecting the Wheel Hub

Check wheel studs for damaged threads and overall conditions

Check wheel hub for cracks or other damages.

Check inner splines for wear or other damages.

Replace wheel hub and / or studs if any damage is detected.

Installing the Wheel Hub

The installation is the reverse of removal procedure. However, pay attention to the following.

Apply service products and tighten fasteners as per exploded view.

Install Belleville washer with its domed side outwards.

NOTE: Tighten the castellated nut further if required to be able to install the cotter pin.

Install a new cotter pin.

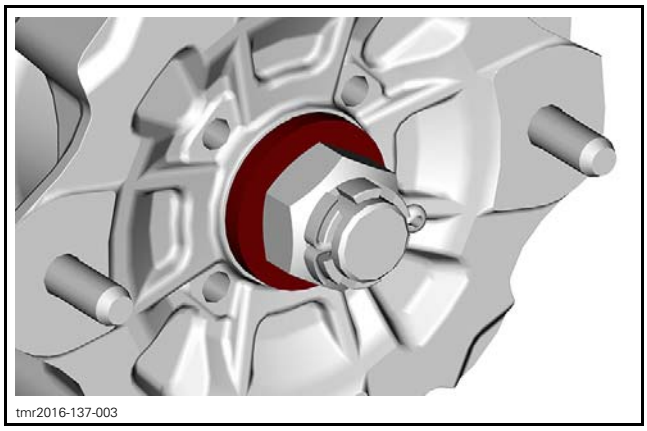
tmr2016-137-003

DRIVE SHAFT

Removing the Rear Drive Shaft

1. Remove the wheel hub. Refer to procedure in this subsection.
2. Remove the knuckle. Refer to *STEERING SYSTEM* subsection.
3. Pry drive shaft out of final drive unit.
4. Discard the stop ring at the end of the shaft.

Inspecting the Rear Drive Shaft

Inspect the condition of boots. If there is any damage or evidence of leaking lubricant, replace them. Refer to *DRIVE SHAFT BELLOWS*.

Check splines for excessive wear. Replace if necessary.

NOTE: If the splines on plunging joint are worn, a check of differential inner splines should be done.

Installing the Rear Drive Shaft

The installation is the reverse of the removal procedure. However, pay attention to the following.

Install a new stop ring.

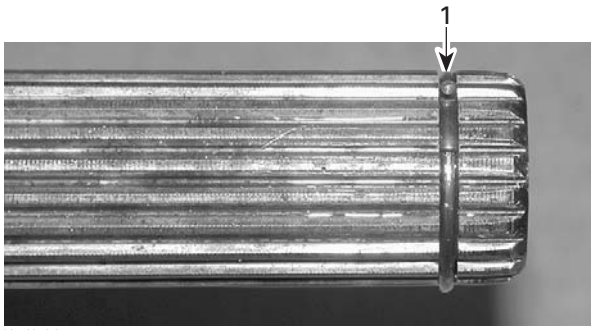

V07H0AA

1. Stop ring

Apply service products and tighten fasteners as per exploded view.

DRIVE SHAFT BELLOWS

Removing the Drive Shaft Bellows

1. Remove the drive shaft from the vehicle.
2. Remove drive shaft bellows clamps.

REQUIRED TOOL	
BELLOWS CLAMP PLIERS (P/N 529 036 120)	

3. Dislodge the large bellows end.
4. Separate the joint from the shaft. Two procedures can be done.

Without the Special Tool

1. Clamp joint housing in a vise.
2. Align shaft with joint.
3. Pull hard on shaft to remove from joint.
4. Remove bellows from drive shaft.
5. Remove and discard the circlip.

With the Special Tool

REQUIRED TOOL	
CV JOINT EXTRACTOR (P/N 529 036 005)	

1. Place drive shaft in vice with the joint downward.
2. Install the cv joint extractor on the bearing.

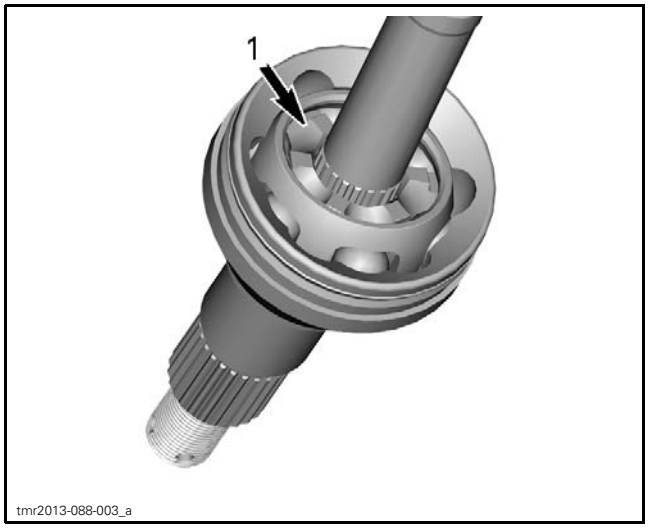

TYPICAL - CV JOINT SHOWN
1. Position joint extractor tool here

3. With a hammer, hit on the tool to separate joint from shaft.
4. When joint and shaft are separated, remove bellows from drive shaft.
5. Remove and discard the circlip.

Installing the Drive Shaft Bellows

The installation is the reverse of the removal procedure. However, pay attention to the following.

Install the new circlip.

Pack bearing area with grease included with the new bellows kit.

NOTE: Do not use or add other grease.

FINAL DRIVE UNIT

NOTE: In the following illustrations, some parts have been hidden for clarity.

Removing the Final Drive Unit (Engine in Vehicle)

1. Drain the final drive unit oil. Refer to *MAINTENANCE PROCEDURES*.
2. Remove both drive shafts. Refer to procedure in this subsection.
3. Disconnect the vent hose.
4. Cut the Oetiker clamp located near the engine.

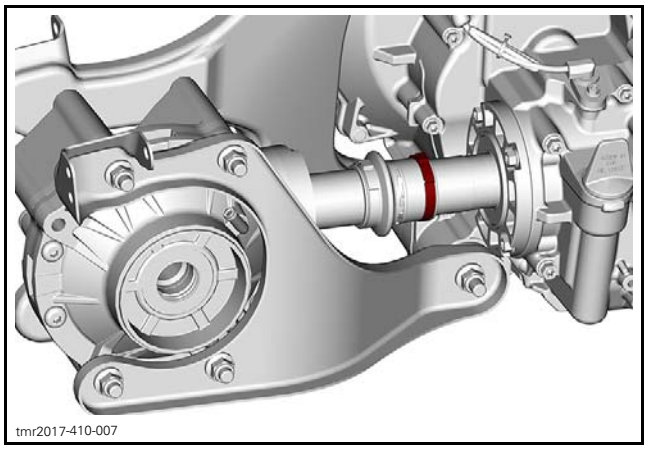

5. Remove the bolts securing the RH support the rear engine support.

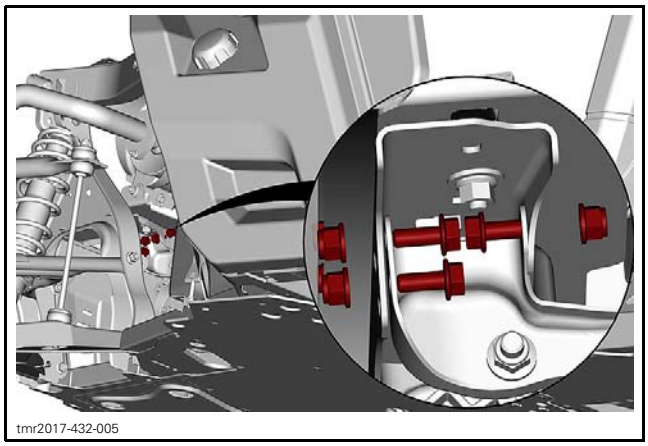
tmr2017-432-005

6. Remove the RH side support but leave the screws in place.

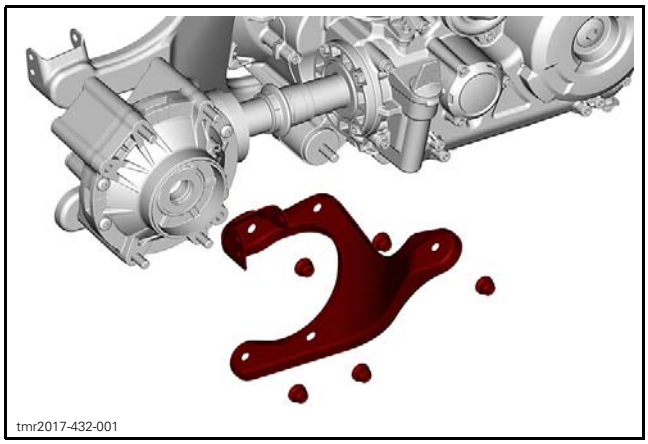
tmr2017-432-001

7. Support the final drive unit and remove the four screws on the LH side.

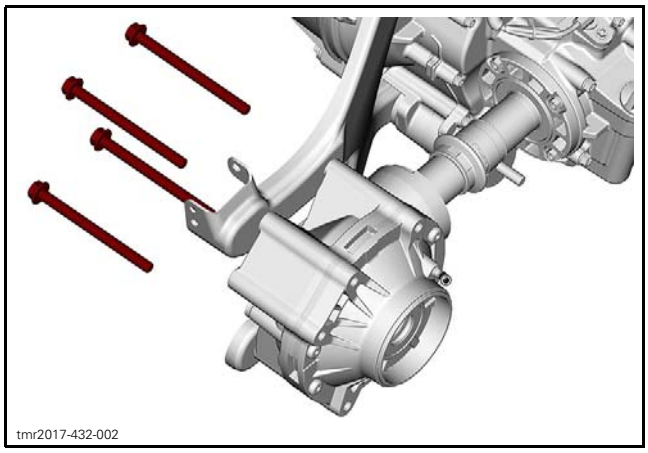
tmr2017-432-002

8. Pull the final drive unit off the engine.

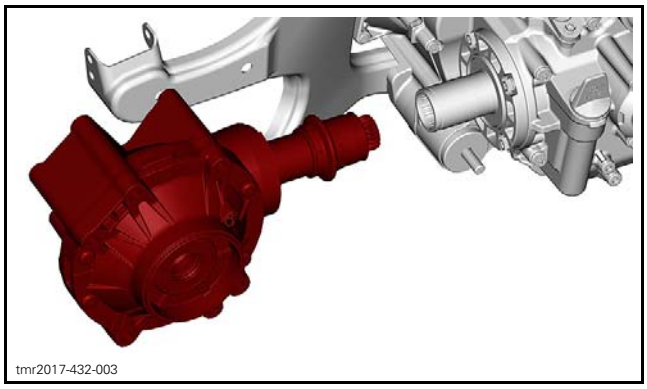
tmr2017-432-003

Removing the Final Drive Unit (Engine Out of the Vehicle)

1. Drain the final drive unit oil. Refer to *MAINTENANCE PROCEDURES*.
2. Remove the exhaust system. Refer to the *EXHAUST SYSTEM* subsection.
3. Remove the rear engine support.

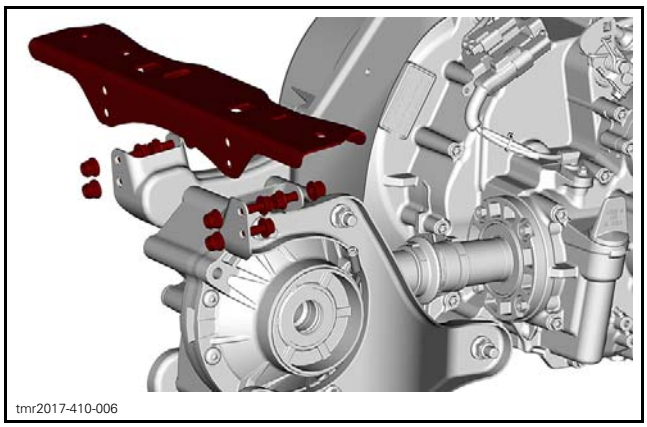
tmr2017-410-006

4. Cut the Oetiker clamp located near the engine.

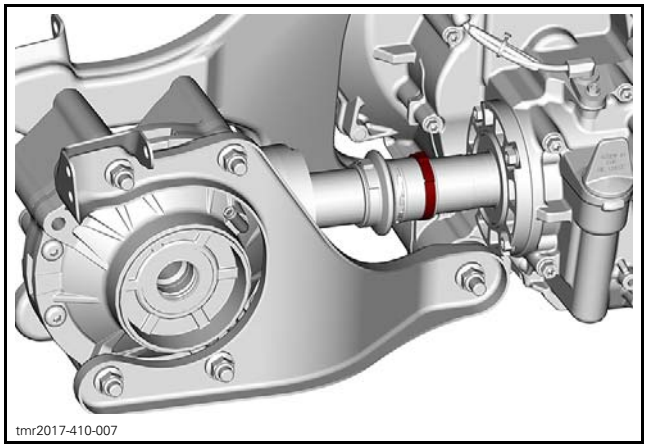
tmr2017-410-007

5. Remove the final drive unit supports front bolt.

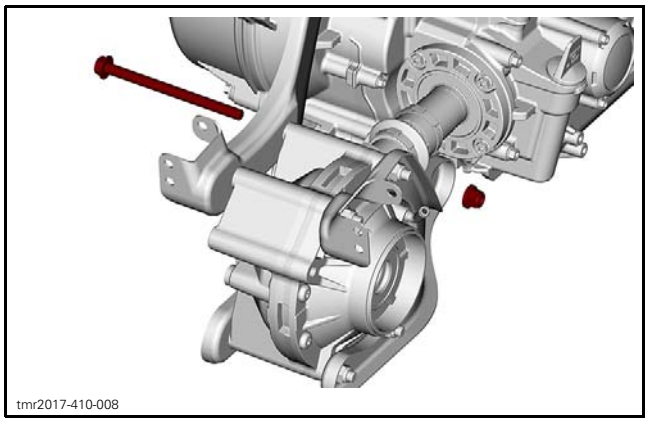
tmr2017-410-008

6. Remove the LH final drive unit support upper screw.

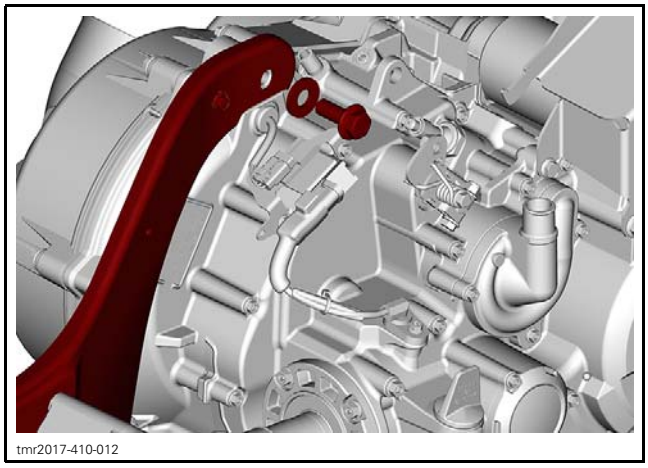
tmr2017-410-012

7. Pull the final drive unit, along with the supports, off the engine.

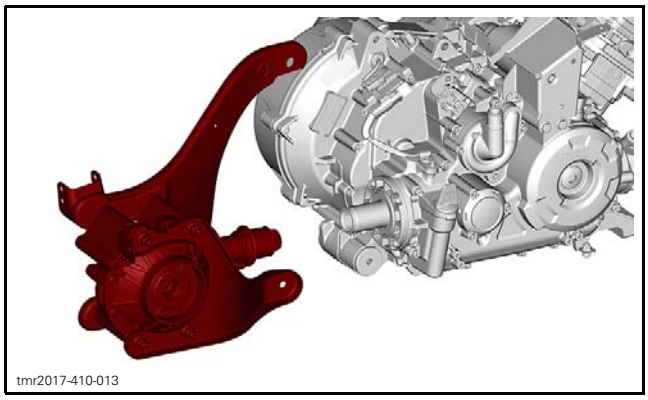
tmr2017-410-013

8. Remove the LH and RH supports from the final drive unit.

Inspecting the Final Drive (Assembled)

Manually turn final drive gear; it should turn smoothly. Repair if necessary.

Check if oil seals are brittle, hard or damaged. Replace if necessary.

Measuring the Backlash

Remove the coupling sleeve from the pinion shaft. Refer to *COUPLING SLEEVES* in this subsection.

Using a dial indicator and the BACKLASH MEASUREMENT TOOL (P/N 529 035 665), measure the backlash.

Place the backlash measurement tool at the end of pinion shaft.

From center of tool bolt, measure 25.4 mm (1 in) and scribe a mark on the tab.

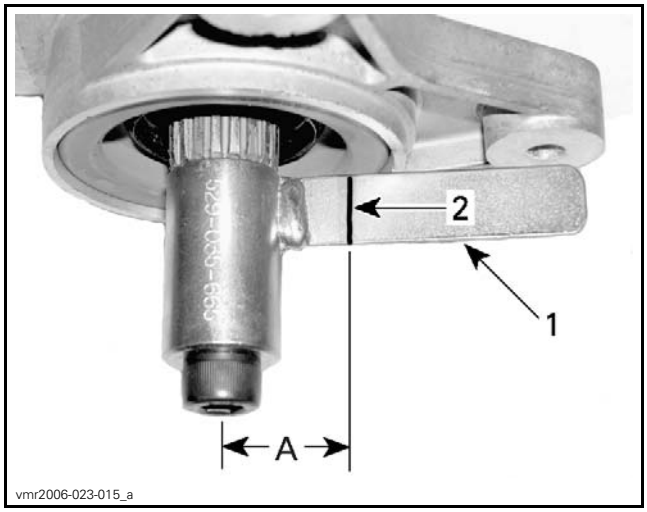

vmr2006-023-015_a

1. *Tab of backlash measurement tool*
2. *Mark on tab*

A. 25.4 mm (1 in)

Position the dial indicator tip against the tab at a 90° angle and right on the previously scribed mark.

Gently, move the tool tab back and forth. Note the backlash result.

vmr2006-023-016

Rotate pinion gear 1/2 turn and recheck backlash. Note the result.

Rotate pinion gear 1 turn and recheck backlash.

BACKLASH SPECIFICATION
0.1 mm (.004 in) to 0.35 mm (.014 in)

If backlash is out of specification, split final drive housing and adjust shim thickness as per following guideline.

BACKLASH ADJUSTMENT GUIDELINE	
BACKLASH MEASUREMENT	WHAT TO DO
Below 0.1 mm (.004 in)	Add shim(s) and recheck backlash
Above 0.35 mm (.014 in)	Remove shim(s) and recheck backlash

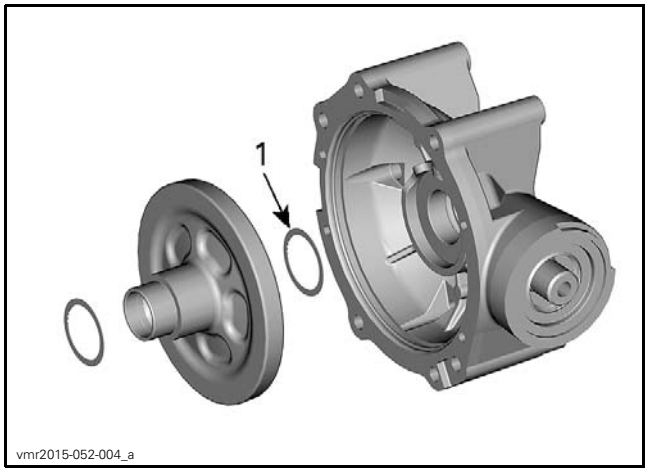

1. Backlash shim

Measuring the Preload Inspection

Screw the propeller shaft screw in pinion gear.

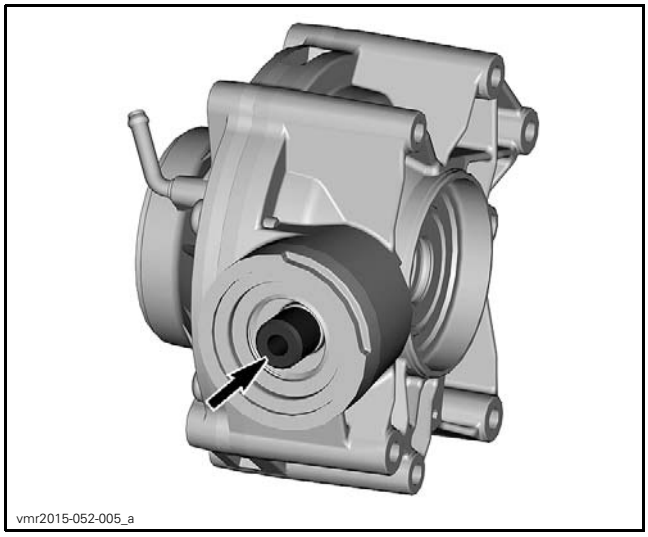

Using a needle torque wrench, measure the preload.

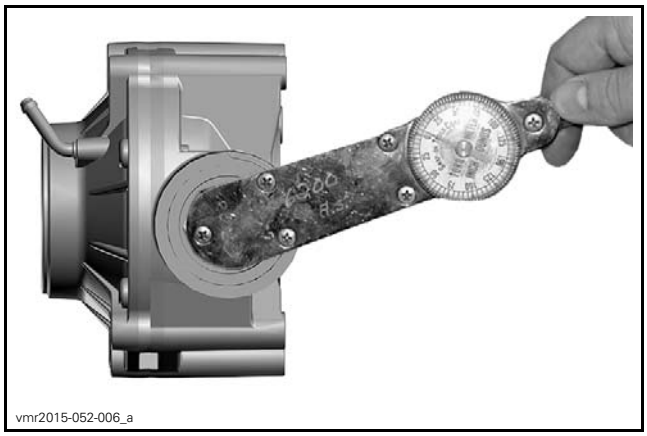

PRELOAD SPECIFICATION
0.06 N•m (.5 lbf•**in**) to 0.50 N•m (4 lbf•**in**)

If preload is out of specification, split final drive housing and adjust shim thickness as per following guideline.

PRELOAD GUIDELINE	
PRELOAD MEASUREMENT	WHAT TO DO
Below 0.06 N•m (.5 lbf•**in**)	Add shim(s) and recheck preload
Above 0.50 N•m (4 lbf•**in**)	Remove shim(s) and recheck preload

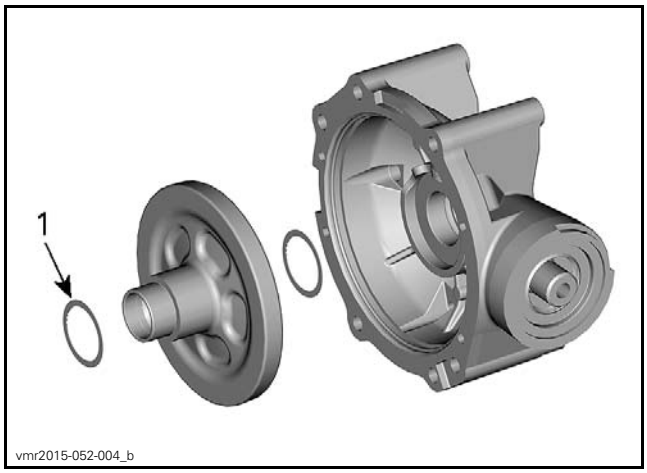

1. Preload shim

Disassembling the Final Drive

Ring Gear

Remove the coupling sleeve from the pinion shaft.

Remove the final drive housing screws.

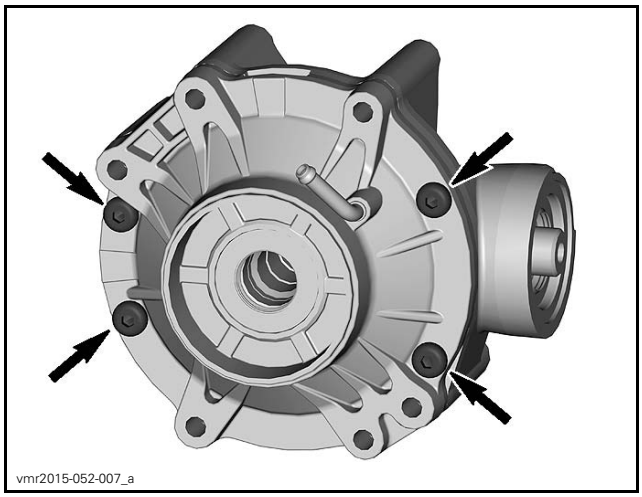

Split final drive housings.

NOTE: Be careful to keep track of shims on ring gear.

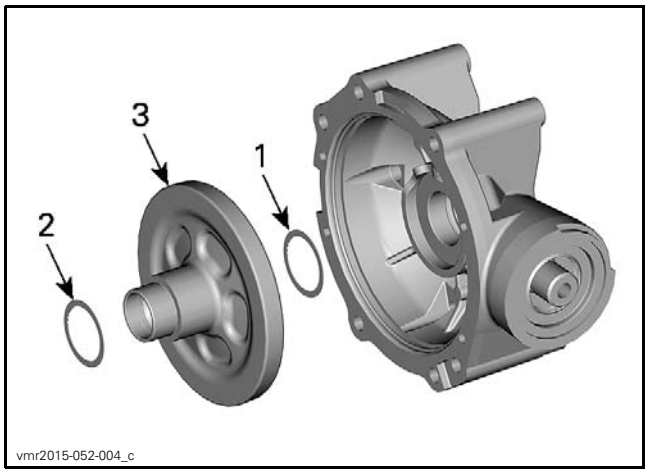

1. *Backlash shim*
2. *Preload shim*
3. *Ring gear*

Extract ring gear out of half housing.

Pinion Gear

Remove and discard oil seal.

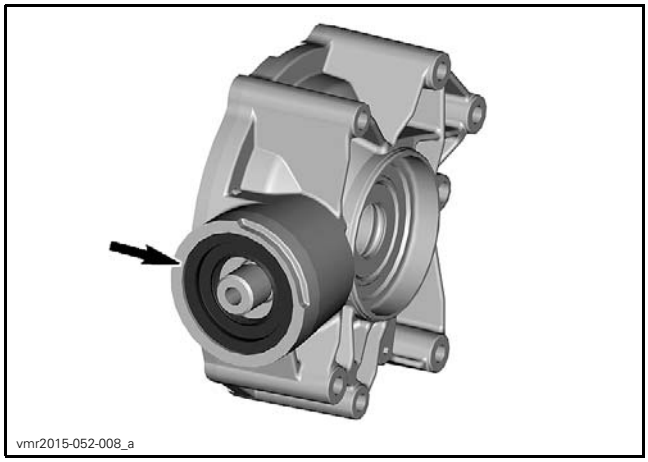

Unscrew the pinion nut. Use the SPANNER SOCKET (P/N 529 035 649).

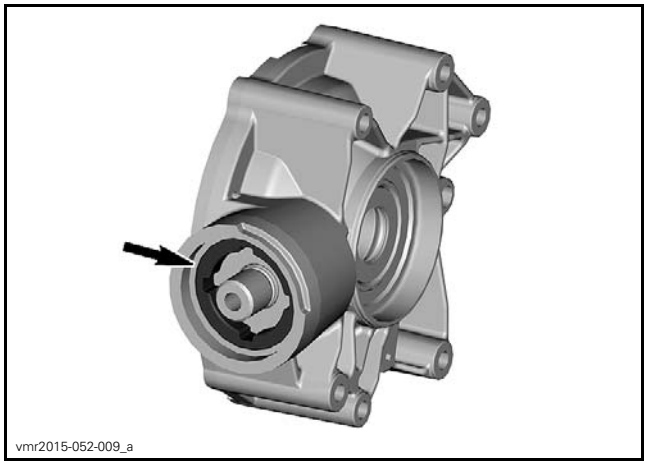

NOTE: The pinion nut is left hand threaded. Unscrew by turning clockwise.

Remove the bearing along with the pinion gear. Be careful to keep track of shims. Discard bearing.

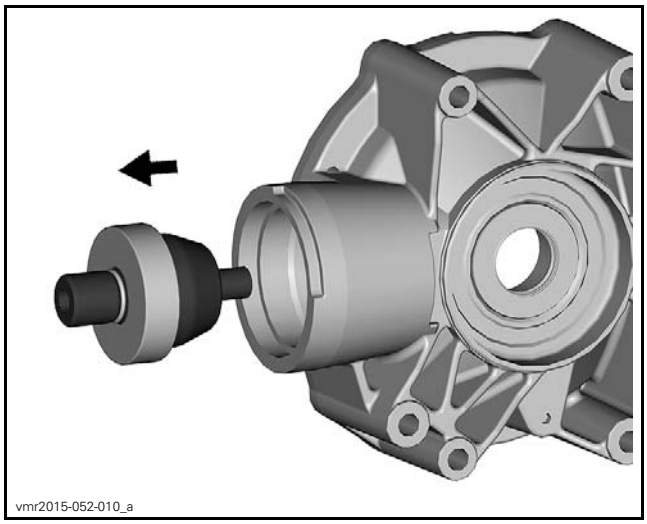

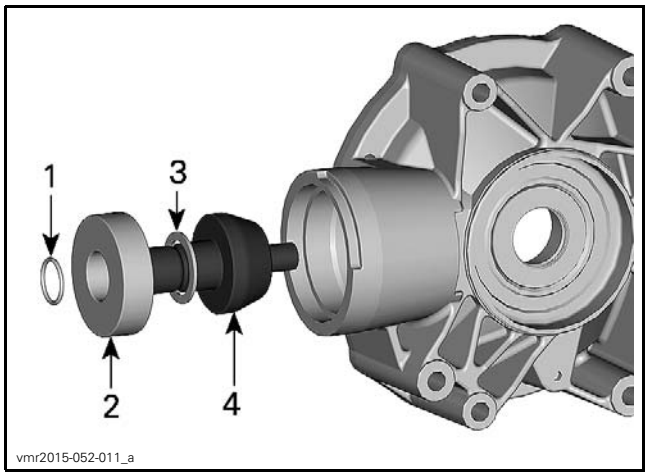

1. O-ring
2. Ball bearing
3. Pinion gear shim
4. Pinion gear

The pinion gear and bearing can be easily removed using the following suggested tool:

PART	QTY
Pipe: 83 mm (3-1/4 in) diameter x 127 mm (5 in)	1
Threaded rod: M10 x 1.25 x 178 mm (7 in)	1
M10 x 1.25 nut	3
Flat bar	1

Remove and discard the needle bearing.

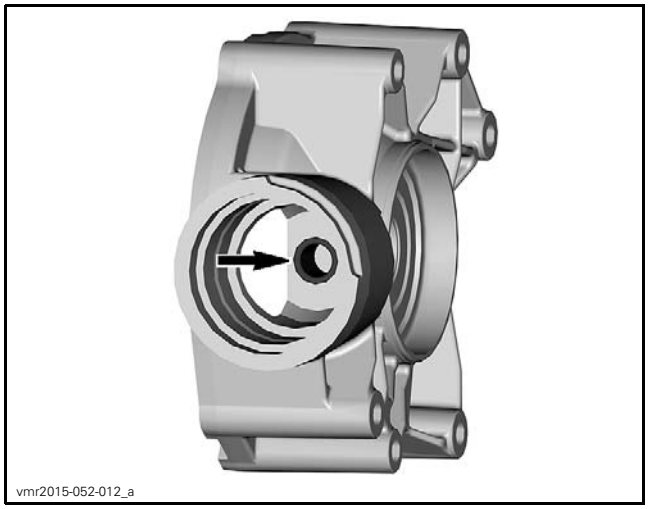

Installing the Final Drive Unit

The installation is the reverse of removal procedure, however, pay attention to the following.

Apply service products and tighten fasteners as per exploded view.

NOTE: If the engine was removed, tighten the final drive unit bolts first.

Fill the final drive unit with recommended oil. Refer to *MAINTENANCE PROCEDURES*.

PROPELLER SHAFT

Removing the Propeller Shaft

1. Remove the final drive unit. Refer to procedure in this subsection.
2. Cut the Oetiker clamp located in the center of the bellows.

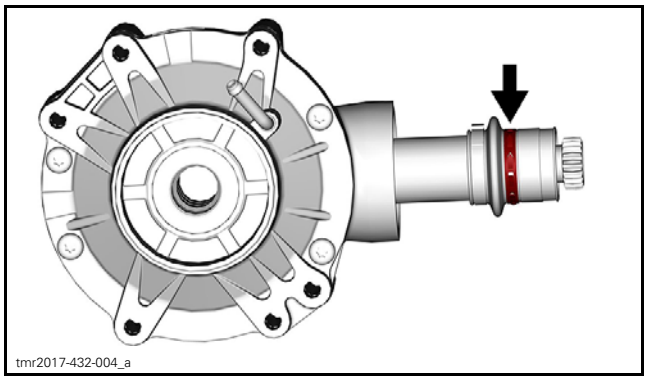

3. Pull the propeller shaft off the final drive unit.

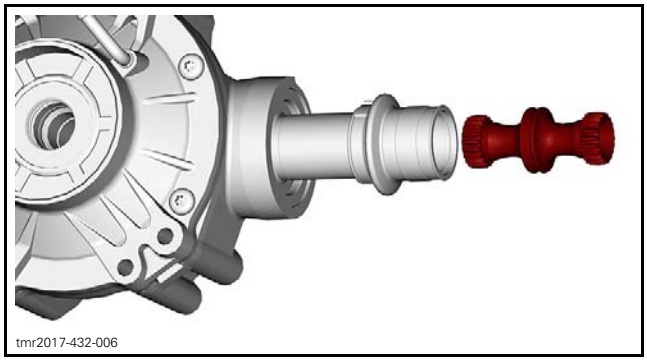

Inspecting the Propeller Shaft

Inspect the bellows. If there is any damage, replace it.

Check splines for excessive wear. Replace if the propeller shaft if damaged.

Installing the Propeller Shaft

The installation is the reverse of removal procedure, however, pay attention to the following.

Apply service products and tighten fasteners as per exploded view.

COUPLING SLEEVES

Removing the Final Drive Unit Coupling Sleeve

1. Remove the propeller shaft, refer to procedure in this subsection.
2. Cut the remaining Oetiker clamp, then remove the propeller shaft bellows.
3. Hold the coupling sleeve in a vice.

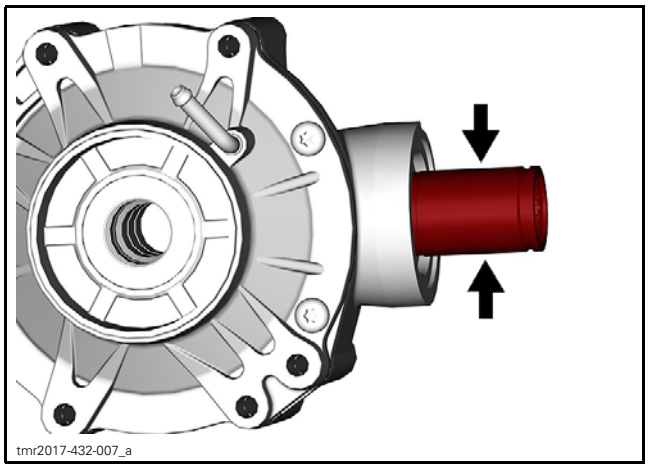

HOLD HERE

NOTICE **Be careful not to damage the coupling sleeve.**

4. While supporting the final drive unit, remove the screw and washer retaining the coupling sleeve to the pinion shaft.

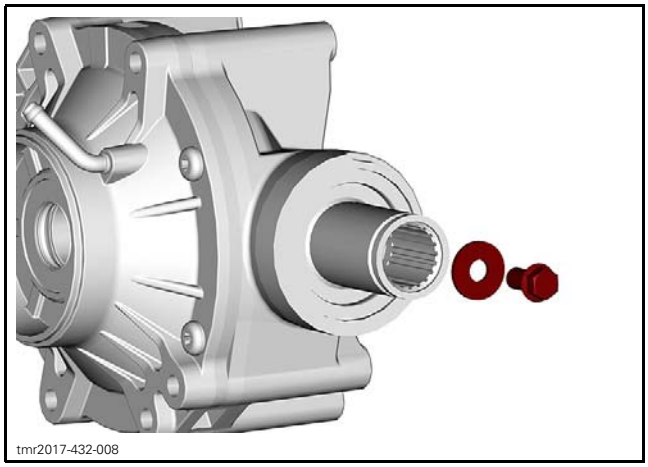

5. Separate the final drive unit and the coupling sleeve.

Removing the Engine Coupling Sleeve

1. Remove the final drive unit. Refer to procedure in this subsection.
2. Place the gearbox in PARK.
3. Remove the screw and washer retaining the coupling sleeve to the output shaft.

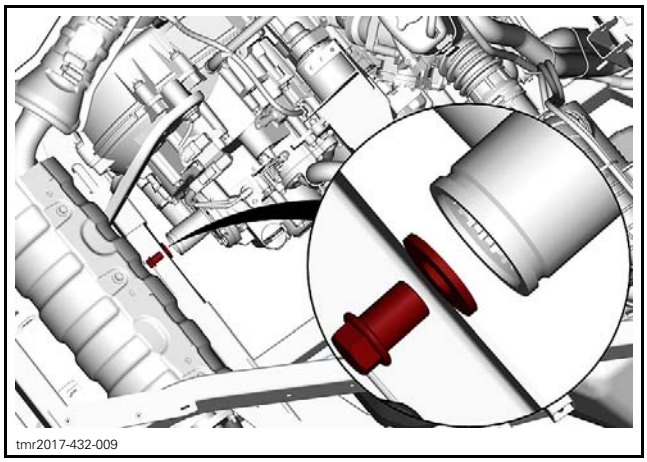

4. Remove the coupling sleeve.

Installing the Coupling Sleeve

The installation is the reverse of removal procedure, however, pay attention to the following.

Apply service products and tighten fasteners as per exploded view.

REAR DRIVE (HD9 / HD10)

SERVICE TOOLS

Description	Part Number	Page
BELLOWS CLAMP PLIERS	529 036 120	271
CV JOINT EXTRACTOR	529 036 005	271

SERVICE PRODUCTS

Description	Part Number	Page
LOCTITE 243 (BLUE)	293 800 060	270–271
SYNTHETIC GREASE (EUR)	779231	271
SYNTHETIC GREASE	779162	271

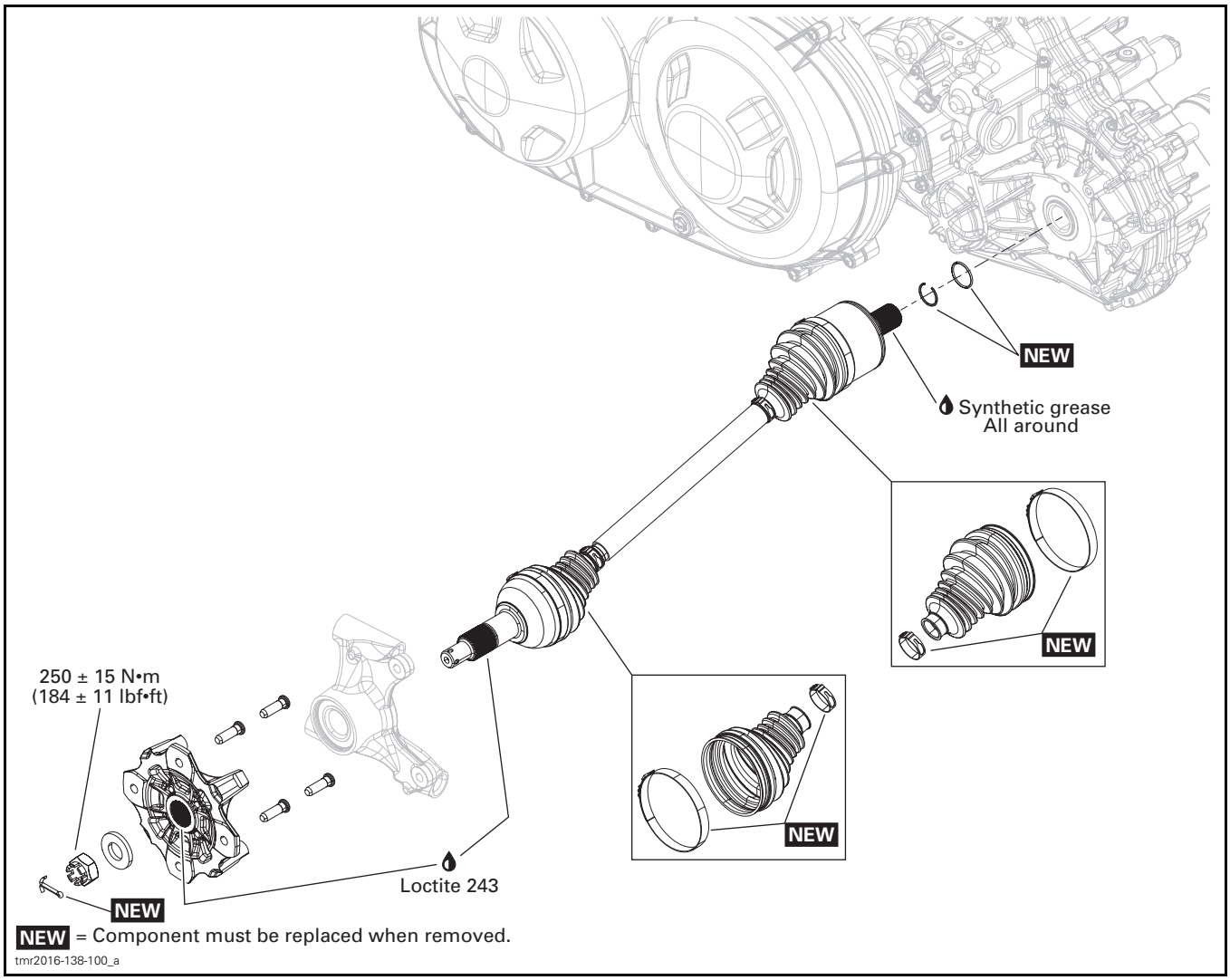

PROCEDURES

WHEEL HUB

Removing the Wheel Hub

1. Lift and support vehicle. Refer to *INTRODUCTION* subsection for proper procedure.
2. Select the 4WD position, place the transmission lever on "P", and make sure the rear differential is in **Lock** position.
3. Remove caliper from knuckle. Refer to *BRAKES* subsection.
4. Remove the following parts:
   – Cotter pin
   – Castellated nut
   – Belleville washer.

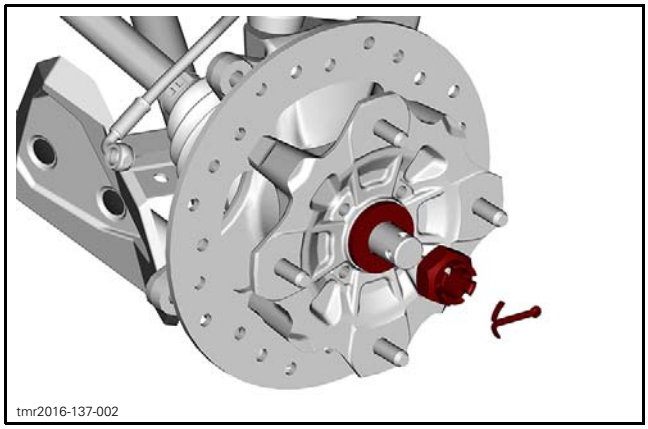
tmr2016-137-002

5. Remove wheel hub.

Inspecting the Wheel Hub

Check wheel studs for damaged threads and overall conditions

Check wheel hub for cracks or other damages.

Check inner splines for wear or other damages.

Replace wheel hub and / or studs if any damage is detected.

Installing the Wheel Hub

The installation is the reverse of removal procedure. However, pay attention to the following.

Apply the recommended service product all around drive shaft and wheel hub splines.

RECOMMENDED SERVICE PRODUCT
LOCTITE 243 (BLUE) (P/N 293 800 060)

Install Belleville washer with its domed side outwards.

Tighten the castellated nut.

TIGHTENING TORQUE	
Castellated nut	250 N•m ± 15 N•m (184 lbf•ft ± 11 lbf•ft)

NOTICE **Tighten further castellated nut if required to align grooves with drive shaft hole.**

Install a new cotter pin.

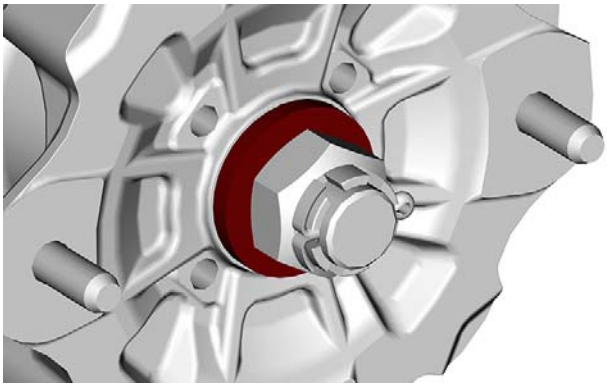
tmr2016-137-003

DRIVE SHAFT

Removing the Rear Drive Shaft

1. Remove the wheel hub. Refer to procedure in this subsection.
2. Remove the knuckle. Refer to *STEERING SYSTEM* subsection.
3. Strongly pull drive shaft out of gearbox.

NOTE: Keep track of the O-ring between the drive shaft and the gearbox.

4. Discard the stop ring at the end of the shaft.

Inspecting the Rear Drive Shaft

Inspect the condition of bellows. If there is any damage or evidence of leaking lubricant, replace them. Refer to *DRIVE SHAFT BELLOWS*.

Check splines for excessive wear. Replace if necessary.

NOTE: If the splines on plunging joint are worn, a check of differential inner splines should be done.

Installing the Rear Drive Shaft

The installation is the reverse of the removal procedure. However, pay attention to the following.

Apply the recommended service product all around drive shaft and wheel hub splines.

RECOMMENDED SERVICE PRODUCT
LOCTITE 243 (BLUE) (P/N 293 800 060)

Install a new stop ring.

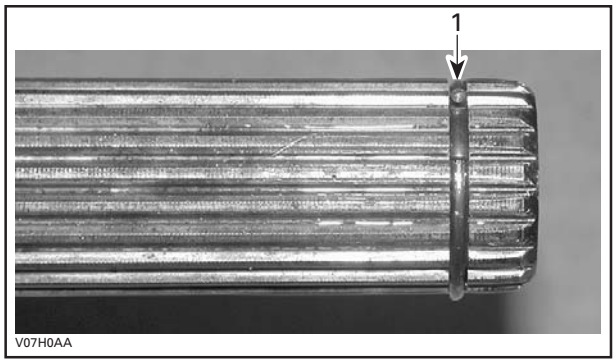

1. Stop ring

Apply grease all around splines at the gearbox end, from the plunging joint up to the stop ring.

RECOMMENDED SERVICE PRODUCT	
Scandinavia	SYNTHETIC GREASE (EUR) (P/N 779231)
Other countries	SYNTHETIC GREASE (P/N 779162)

Ensure the O-ring is properly installed.

DRIVE SHAFT BELLOWS

Removing the Drive Shaft Bellows

1. Remove the drive shaft from the vehicle.
2. Remove drive shaft bellows clamps.

REQUIRED TOOL	
BELLOWS CLAMP PLIERS (P/N 529 036 120)	

3. Dislodge the large bellows end.
4. Separate the joint from the shaft. Two procedures can be done.

Without the Special Tool

1. Clamp joint housing in a vise.
2. Align shaft with joint.
3. Pull hard on shaft to remove from joint.
4. Remove bellows from drive shaft.
5. Remove and discard the circlip.

With the Special Tool

REQUIRED TOOL	
CV JOINT EXTRACTOR (P/N 529 036 005)	

1. Place drive shaft in vice with the joint downward.
2. Install the cv joint extractor on the bearing.

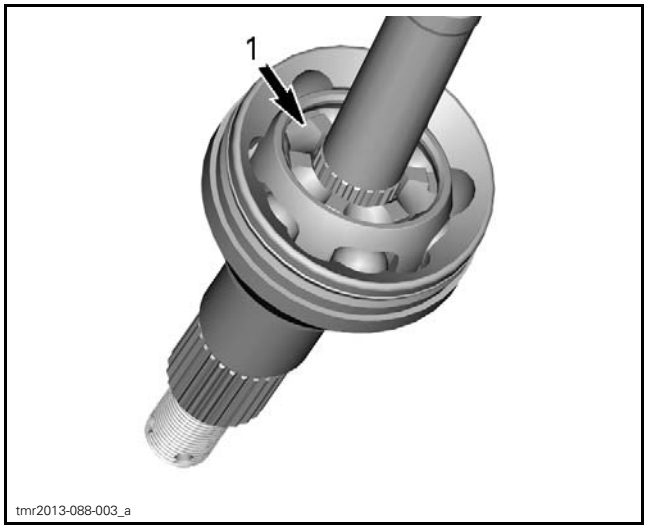

TYPICAL - CV JOINT SHOWN
1. Position joint extractor tool here

3. With a hammer, hit on the tool to separate joint from shaft.
4. When joint and shaft are separated, remove bellows from drive shaft.
5. Remove and discard the circlip.

Installing the Drive Shaft Bellows

The installation is the reverse of the removal procedure. However, pay attention to the following.

Install the new circlip.

Pack bearing area with grease included with the new bellows kit.

NOTE: Do not use or add other grease.

STEERING SYSTEM

SERVICE PRODUCTS

Description	Part Number	Page
LOCTITE 767 (ANTI-SEIZE LUBRICANT)	293 800 070	279
SYNTHETIC GREASE (EUR)	779231	279
SYNTHETIC GREASE	779162	279

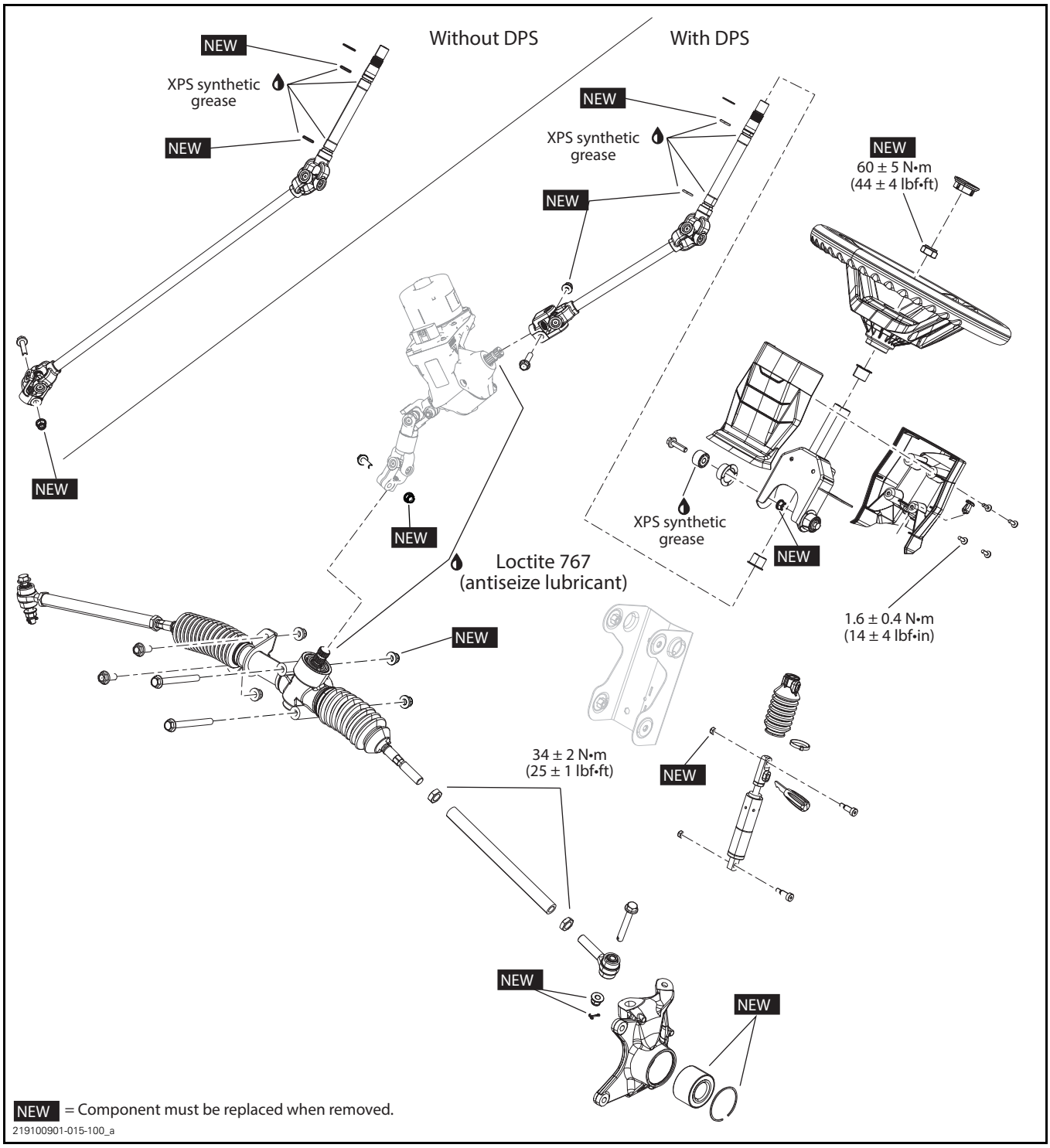
Without DPS
With DPS
NEW
XPS synthetic grease
NEW
NEW
XPS synthetic grease
NEW
NEW
60 ± 5 N•m
(44 ± 4 lbf•ft)
NEW
NEW
XPS synthetic grease
NEW
Loctite 767
(antiseize lubricant)
1.6 ± 0.4 N•m
(14 ± 4 lbf•in)
NEW
34 ± 2 N•m
(25 ± 1 lbf•ft)
NEW
NEW
NEW
NEW = Component must be replaced when removed.
219100901-015-100_a

GENERAL

NOTICE **Never perform arc welding in the DPS area. Otherwise, poor DPS operation might occur.**

The procedures described below are the same for the RH and LH sides, unless otherwise instructed.

ADJUSTMENT

ALIGNING THE WHEELS

1. Place vehicle on a level surface.
2. Inflate tires to recommended pressure.
3. Find rack and pinion center to center as follows:
   3.1 Calculate the total steering wheel rotations from side to side.
   3.2 Position the steering wheel at **half** the total rotations.
4. Check steering wheel position:
   4.1 If steering wheel is centered (within ± 5°), go to **step 6**.
   4.2 If steering wheel is offset more than 5°, go to **step 5**.

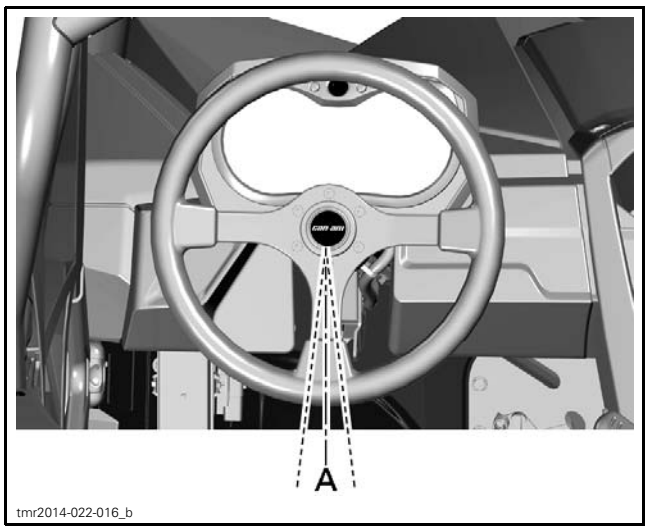

TYPICAL
A. Steering wheel angle ± 5°

5. Reposition steering wheel on steering shaft as follows:

   NOTICE **Make sure rack and pinion does not move during steering wheel repositioning.**

   5.1 Remove steering wheel. Refer to *REMOVING THE STEERING COLUMN*.
   5.2 Reinstall steering wheel to the closest centered position (nearest spline).
6. Center steering wheel.

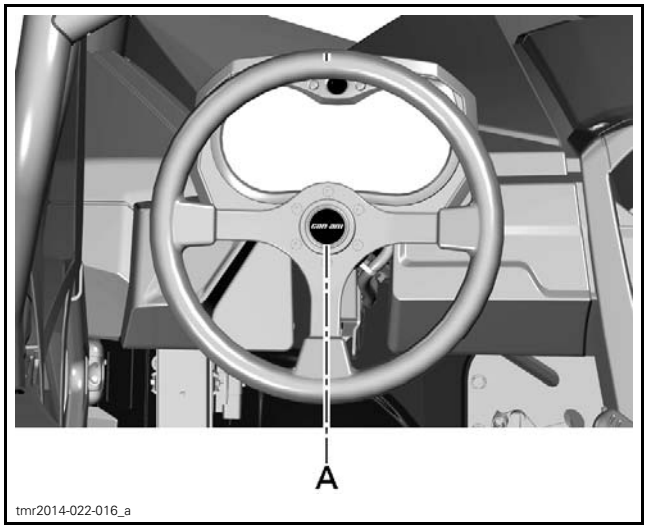

TYPICAL
A. Steering wheel centered

7. Place one mark on each front tire with a chalk at height of the center of the wheel. The mark must be under the frame, from a side point of view.

NOTE: The marks must be at the exact same height on each front tire.

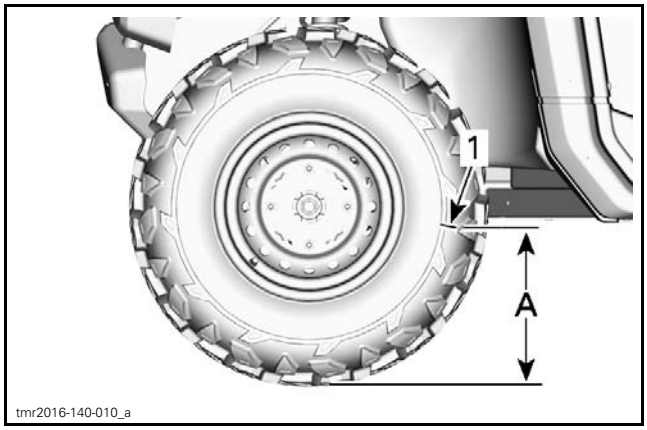

FRONT LH VIEW
1. Mark tire
A. Distance from ground to mark

8. Measure and note the distance between the center of the wheels, level with the marks on the tires.

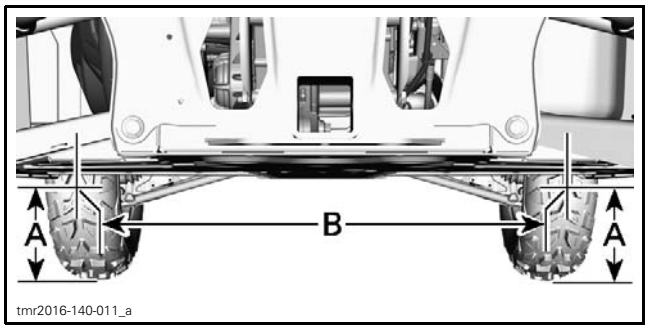

REAR VIEW
A. Height of mark
B. Measure distance

9. Move vehicle so that the marks are positioned towards front at the same height.

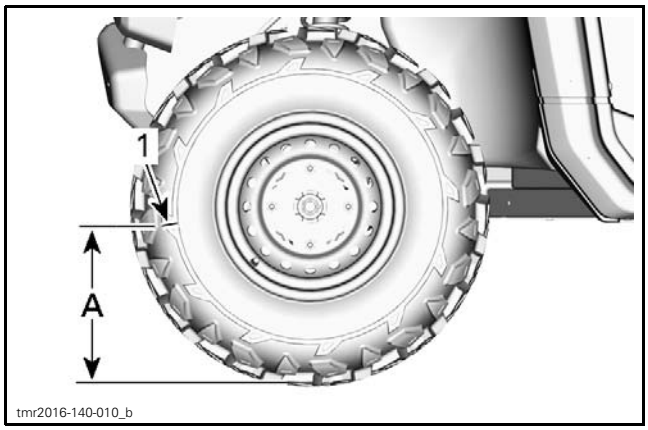

FRONT LH VIEW AFTER ROTATION
A. Height of mark

10. Measure and note the distance between the same two marks as step 8.

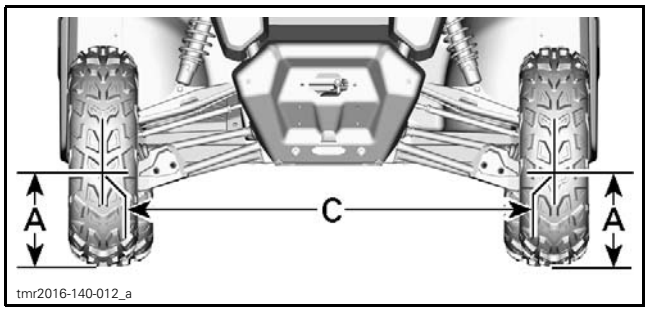

FRONT VIEW
A. Height of mark
C. Measure distance

11. The difference between the front and the rear measurements must be as per the following specification:

MAXIMUM TOE
0 mm ± 4.8 mm (0 in ± .19 in)

Adjusting the Front Toe

1. If the front wheel toe measurement is out of specification lock steering wheel at center.
2. Measure the distance between vehicle center and each wheel.

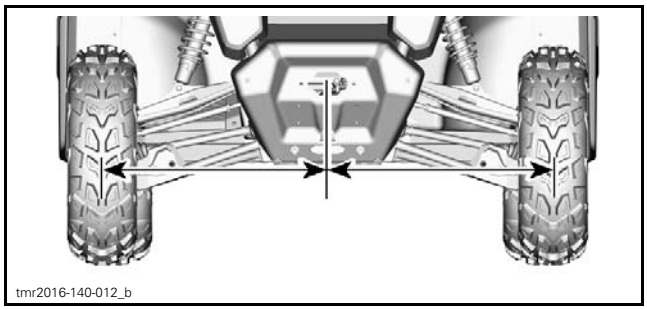

DISTANCE BETWEEN VEHICLE CENTER AND WHEEL

3. Loosen tie-rod end locking nut.

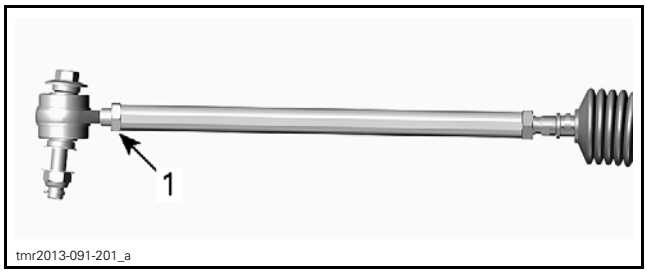

FRONT TIE ROD ASSEMBLY
1. Tie rod end locking nut

4. Turn tie-rod adjustment sleeve until distance measured in step 2 is equal for each wheel.

NOTE: Adjustment sleeve and inner tie rod will turn together.

⚠ WARNING

The minimum inner tie-rod and tie rod end engagement in adjustment sleeve must be 25 mm (1 in).

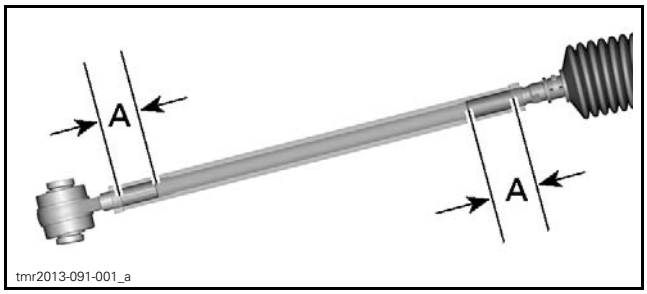

FRONT TIE ROD ASSEMBLY
A. Minimum engagement length

5. Tighten tie-rod adjustment sleeve locking nuts to specification.

TIGHTENING TORQUE	
Tie rod end locking nut	34 N•m ± 2 N•m (25 lbf•ft ± 1 lbf•ft)

6. Recheck that vehicle toe is within limits by repeating procedure.

MAINTENANCE

INSPECTING THE WHEEL BEARING

1. Safely lift and support the front of vehicle. Refer to *INTRODUCTION* subsection.
2. Hold wheel by the top and the bottom and move it. Check for any play.

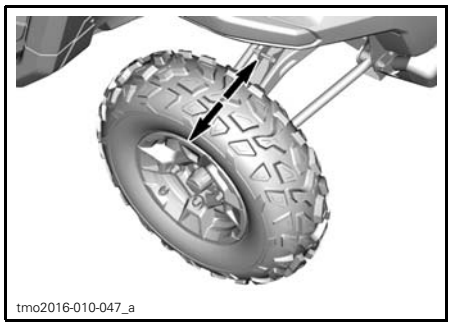

TYPICAL

3. If there is any loose, replace wheel bearing, refer to *STEERING SYSTEM* subsection.

NOTE: To properly locate play during this inspection, be sure to check other components for wear or loose (ball joints, suspension pivots, etc). If necessary repair or replace all defective parts before checking the wheel bearing condition. Be careful not to misjudge loose in the ball joint and loose in the wheel bearing.

INSPECTING THE STEERING SYSTEM

Steering Column

Turn and move steering column to detect any play.

Rack and Pinion

Check rack and pinion boots for:
– Damage
– Cracks.

Replace if necessary.

Tie-Rod End

Check tie-rod end ball joint for:
– Damage
– Pitting
– Play.

Replace if necessary.

TROUBLESHOOTING

UNEQUAL TURNING RADIUS

1. **Rack and pinion not centered during steering system parts installation.**
   - *Refer to ALIGNING THE WHEELS in this subsection.*

PROCEDURES

STEERING WHEEL

Removing the Steering Wheel

1. Remove steering wheel center cap and nut.

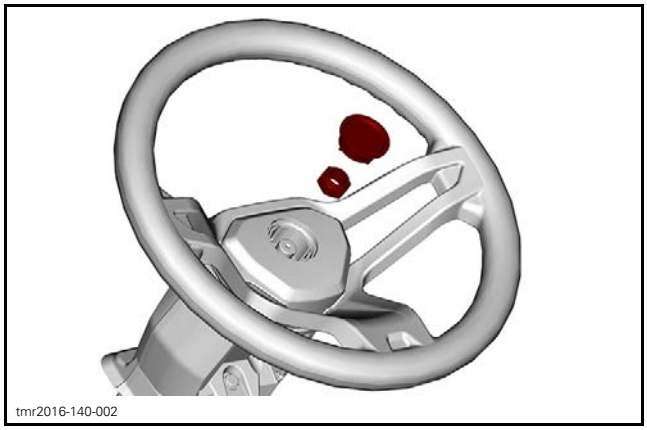

2. Remove the cover.

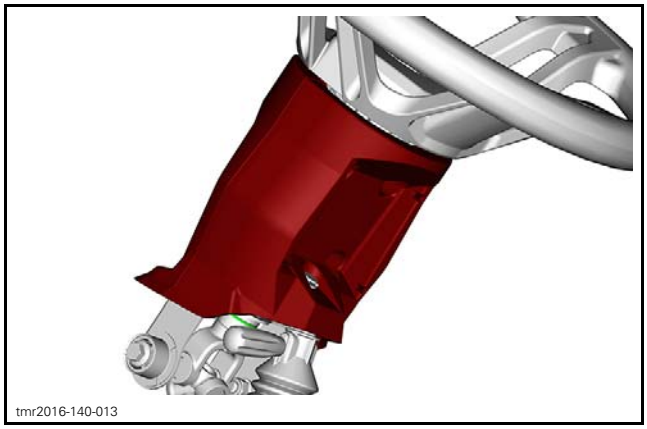

3. Use a suitable wheel extractor that sits on the steering wheel shoulder, around the pivot tube, to remove the steering wheel.

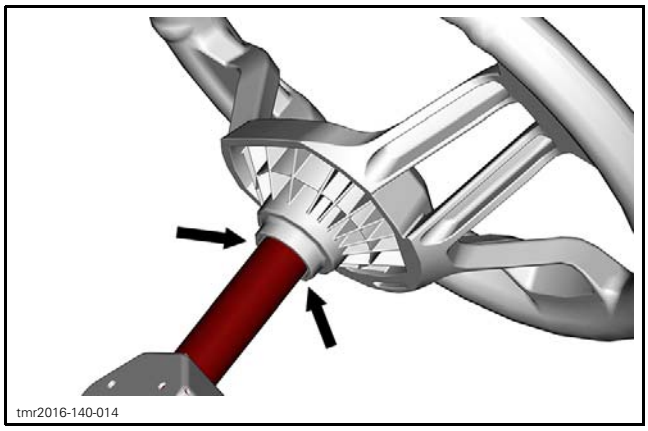
tmr2016-140-014

Installing the Steering Wheel

The installation is the reverse of the removal procedure. However, pay attention to the following.

Install a new nut and tighten to specification.

TIGHTENING TORQUE	
Steering wheel nut	60 N•m ± 5 N•m (44 lbf•ft ± 4 lbf•ft)

STEERING COLUMN

Removing the Steering Column

1. Position the front wheels parallel to the rear wheels.

Models without DPS

2. Remove both front wheels.

All Models

3. Remove the LH and RH lower dash boards. Refer to *BODY* subsection.
4. Remove bolt and nut securing lower U-joint to:
   – DPS unit input shaft, if equipped
   – Rack and pinion shaft (no DPS).

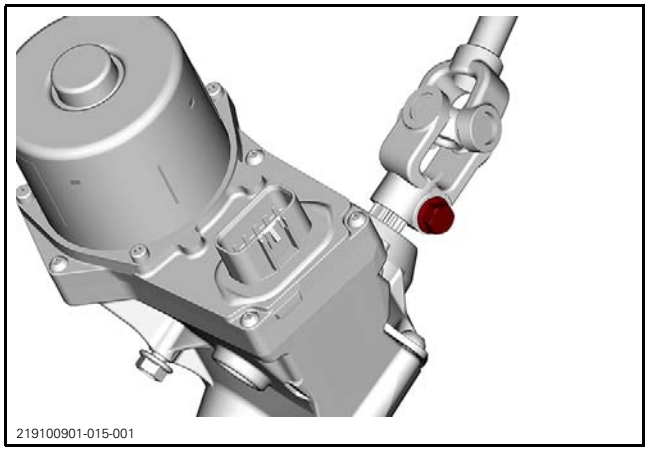
219100901-015-001

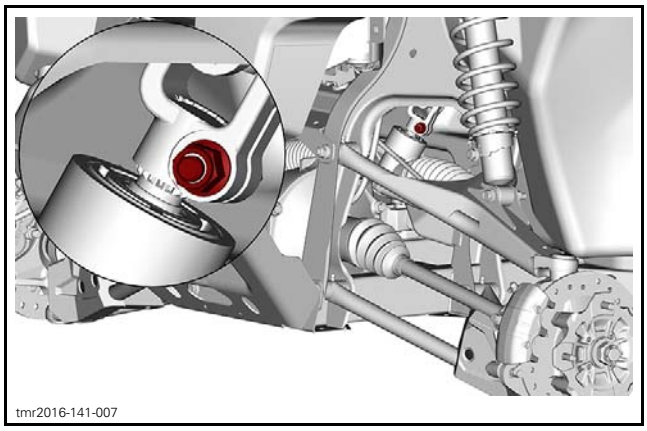
tmr2016-141-007

5. Remove screws on each side of the steering support.

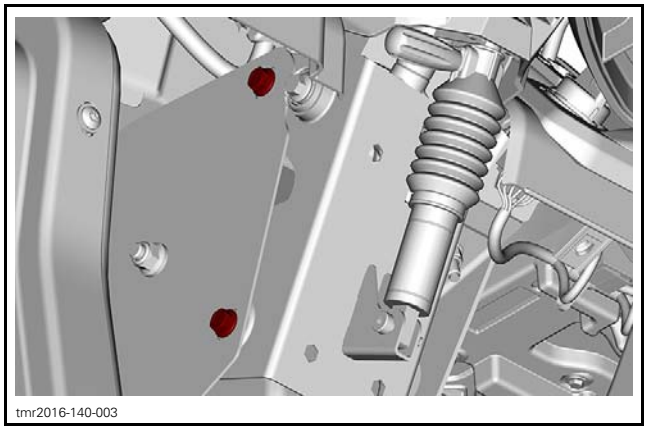
tmr2016-140-003

6. Remove steering column from vehicle.
7. Remove steering support and cover if required.

Inspecting the Steering Column

Check steering column for wear, cracks or bending.

Check steering shaft for wear, cracks or bending.

Ensure universal joints are not worn and move freely.

Ensure steering shaft O-rings are not worn, brittle, hard or otherwise damaged.

Replace if necessary.

Installing the Steering Column

The installation is the reverse of the removal procedure. However, pay attention to the following.

Prior to installing the steering column, position front wheels parallel with longitudinal axis of the vehicle.

Refer to exploded view for proper grease and antiseize application.

COUNTRY	GREASE REQUIRED
Scandinavia	SYNTHETIC GREASE (EUR) (P/N 779231)
All other countries	SYNTHETIC GREASE (P/N 779162)

SERVICE PRODUCT REQUIRED
LOCTITE 767 (ANTI-SEIZE LUBRICANT) (P/N 293 800 070)

Model with DPS

NOTE: Make sure to match blind spline between the DPS input shaft and the steering column lower U-joint.

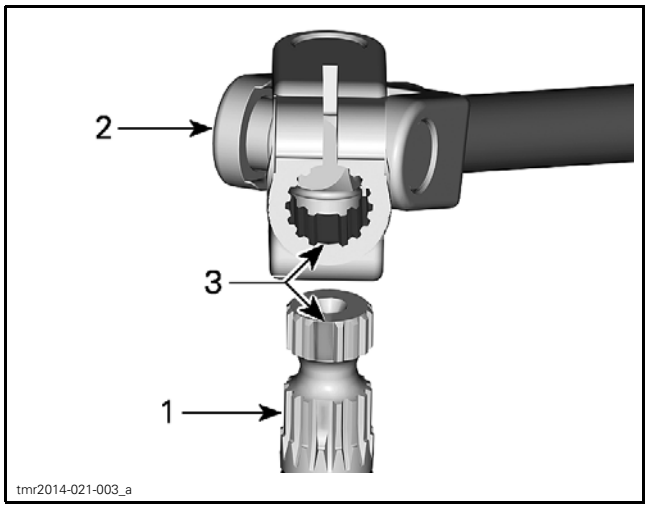

1. *DPS input shaft*
2. *Lower steering column U-joint*
3. *Blind splines (alignment keys)*

All Models

IMPORTANT: Make sure to engage bolt in the input shaft groove.

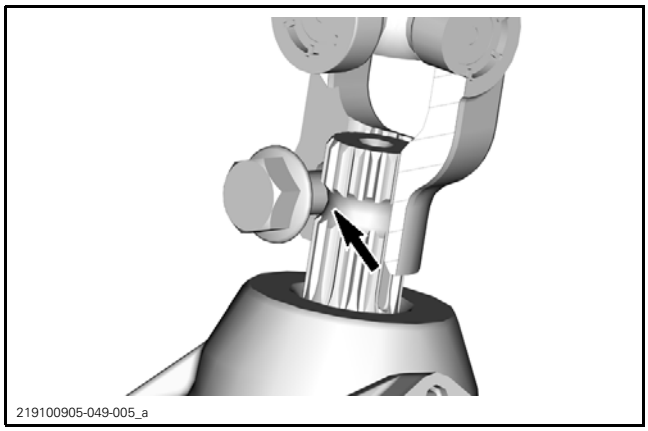

YOKE CROSSCUT - INPUT SHAFT GROOVE

NOTE: Tightening torque must be applied on the nut only.

TIGHTENING TORQUE	
Steering shaft yoke nut	40 N•m ± 5 N•m (30 lbf•ft ± 4 lbf•ft)

Check front wheel alignment. Refer to *ALIGNING THE WHEELS* in this subsection.

RACK AND PINION

Servicing the Rack and Pinion

The rack and pinion cannot be serviced except for replacement of the boots and tie rods.

Removing the Rack and Pinion

1. Remove both front wheels.
2. Detach tie-rod ends from knuckles. Refer to *REPLACING THE TIE ROD END* in this subsection.
3. Remove the lower yoke pinch bolt and nut.

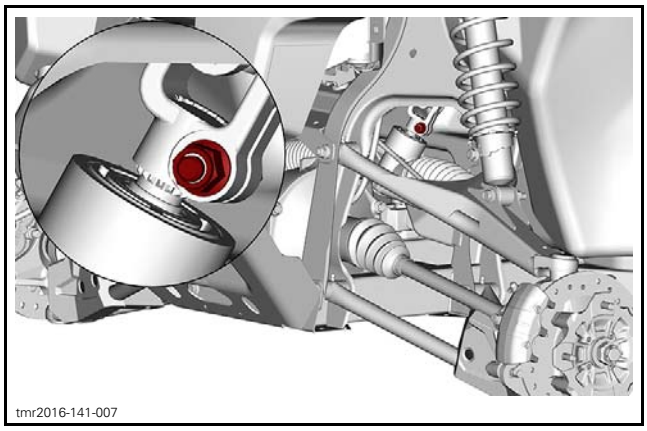

4. Remove the bolts and nuts securing rack and pinion to frame.
5. Disengage the rack and pinion shaft from the lower yoke.
6. From the LH side, remove rack and pinion from vehicle.

Installing the Rack and Pinion

The installation is the reverse of the removal procedure. However, pay attention to the following.

Find rack and pinion center as follows:

– Calculate the total pinion shaft rotations from side to side
– Position the pinion shaft at **half** the total rotations
– Using a paint marker, make an alignment mark on pinion and on the rack housing.

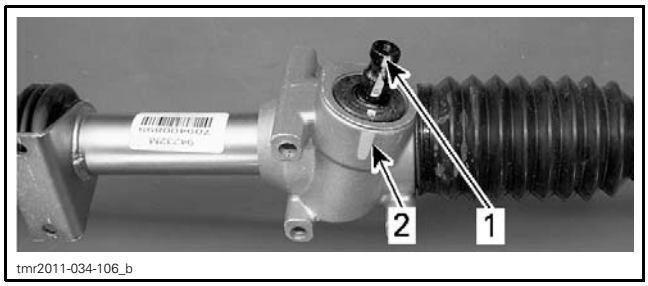

1. Alignment mark on pinion
2. Alignment mark on rack housing

Ensure steering wheel is centered (horizontal).

Apply antiseize on pinion shaft.

Position rack and pinion in frame and engage pinion in lower yoke. Make sure steering wheel remains centered.

Install rack and pinion retaining bolts and nuts.

Install lower yoke pinch bolt and nut.

Check steering alignment. Refer to *ALIGNING THE WHEELS* in this subsection.

TIE ROD ADJUSTMENT SLEEVE

Always perform a thorough inspection before replacing a tie rod adjustment sleeve. If any other components of the steering or suspension systems are damaged, replace the component(s).

Inspecting the Steering components

Before removing any components:

1. Raise front wheels off the ground.
2. Turn steering wheel from stop to stop.
3. Ensure steering wheel turns smoothly.

Before replacing the tie rod adjustment sleeve, inspect the following:

– Knuckle must not be cracked
– Tie rod end bolt must not be bent

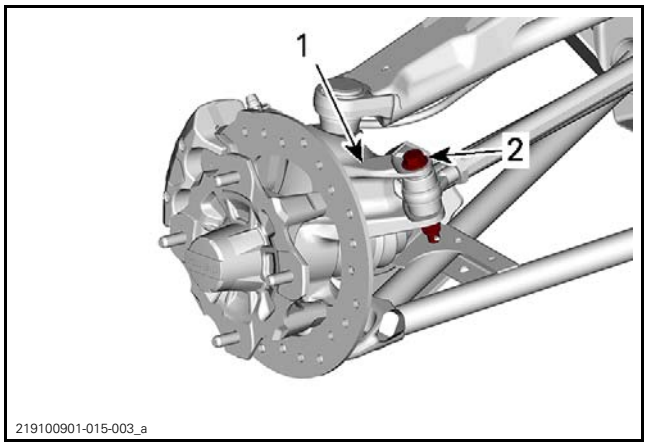

TYPICAL
1. Knuckle
2. Tie rod end bolt

– Rack and pinion shaft must not be loose
– Rack and pinion mounting bracket must not be cracked or deformed
– Rack and pinion steering support must not be cracked or deformed

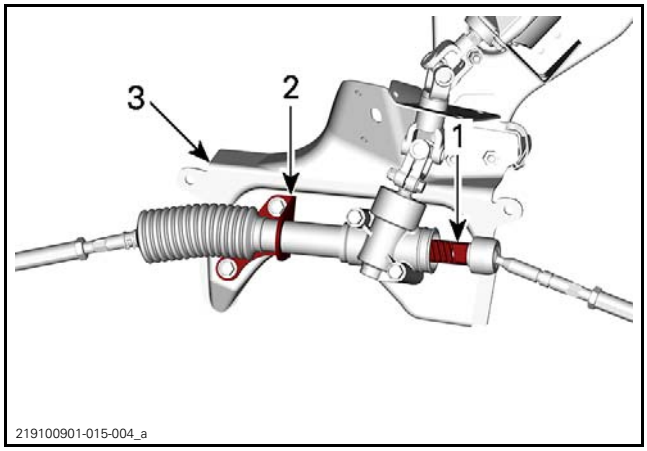

TYPICAL
1. Rack and pinion shaft
2. Rack and pinion mounting bracket
3. Rack and pinion steering support

Removing the Tie Rod

1. Loosen inner tie rod adjustment sleeve locking nut.

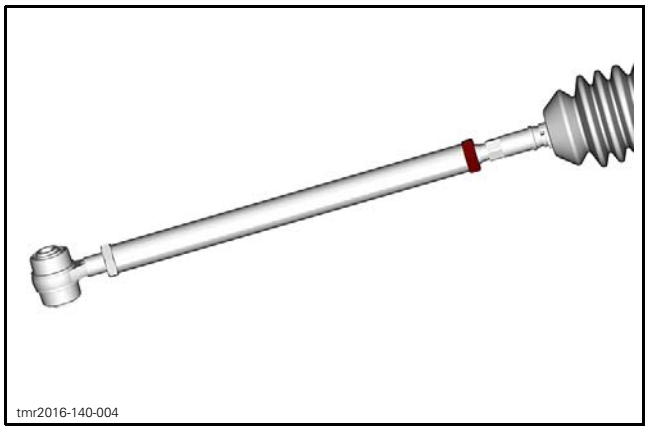

2. Remove tie rod end bolt.

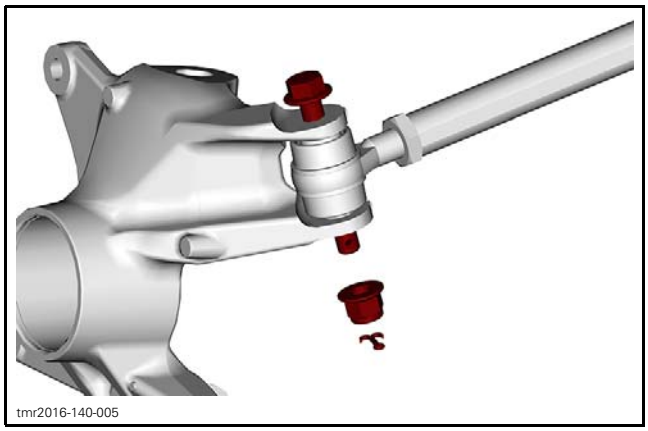

3. Hold inner tie rod and unscrew tie rod adjustment sleeve.

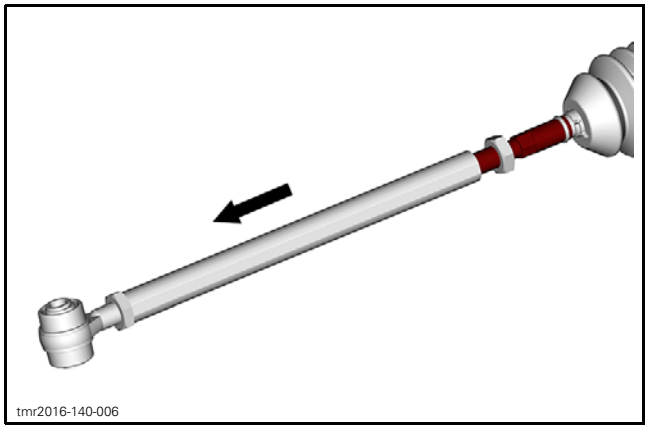

Installing the Tie Rod

The installation is the reverse of the removal procedure. However, pay attention to the following.

Adjust inner and outer tie rods to the nominal engagement length.

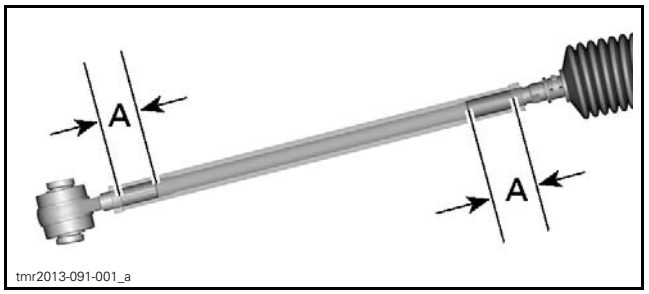

A. Tie rod engagement length

NOMINAL TIE ROD ENGAGEMENT LENGTH A
32 mm (1-1/4 in)

⚠ WARNING

The minimum tie-rod engagement length at both ends must be 25 mm (1 in).

1. Lock inner locking nut.

TIGHTENING TORQUE	
Tie rod locking nut	34 N•m ± 2 N•m (25 lbf•ft ± 1 lbf•ft)

Align vehicle. Refer to *ALIGNING THE WHEELS* in this subsection.

TIE-ROD ENDS

Replacing the Tie-Rod End

1. Remove front wheel.
2. Loosen tie rod locking nut.

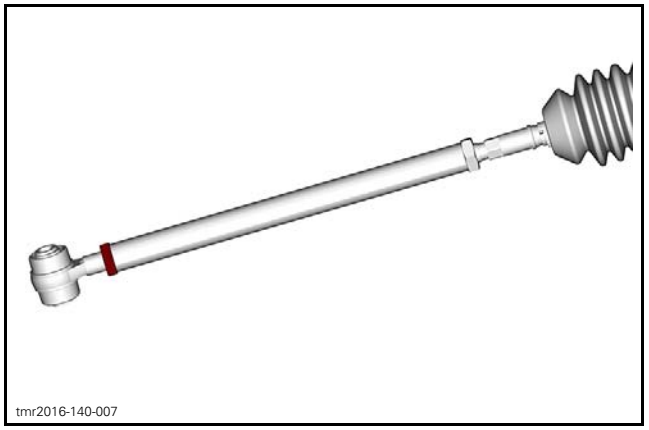

3. Detach tie-rod end.

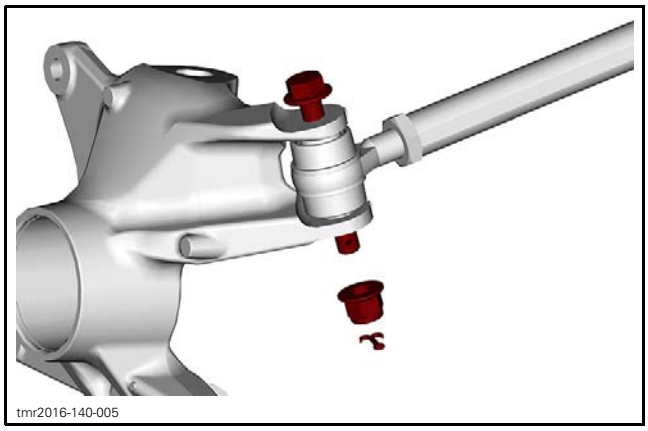
tmr2016-140-005

4. Install new tie-rod end.
5. Adjust tie-rod end to the nominal engagement length.

NOTE: The tie rod must be engaged the same amount at both ends for the tie-rod adjustment to be centered.

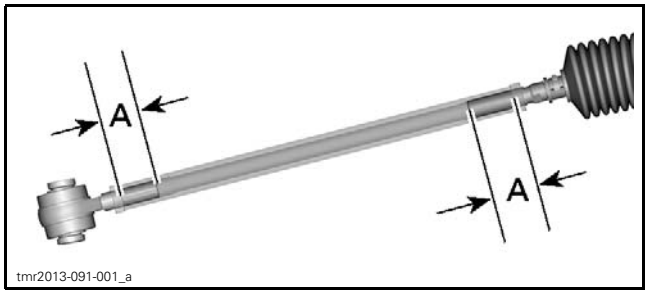

tmr2013-091-001_a

RH TIE ROD ASSEMBLY SHOWN
A. Nominal engagement length

TIE-ROD END NOMINAL ENGAGEMENT LENGTH A
32 mm (1-1/4 in)

⚠ WARNING

The minimum tie-rod engagement length at both ends must be 25 mm (1 in).

6. Tighten tie-rod end locking nut to specification.

TIGHTENING TORQUE	
Tie rod end locking nut	34 N•m ± 2 N•m (25 lbf•ft ± 1 lbf•ft)

7. Attach tie-rod end to steering knuckle.
8. Install a new tie-rod end retaining nut and tighten to specification.

TIGHTENING TORQUE	
Tie rod end retaining nut	48 N•m ± 6 N•m (35 lbf•ft ± 4 lbf•ft)

9. Install a new cotter pin. Both ends of cotter pins must be folded.
10. Install front wheel.
11. Check steering alignment, refer to *ALIGNING THE WHEELS* in this subsection.

KNUCKLES

Removing the Knuckle

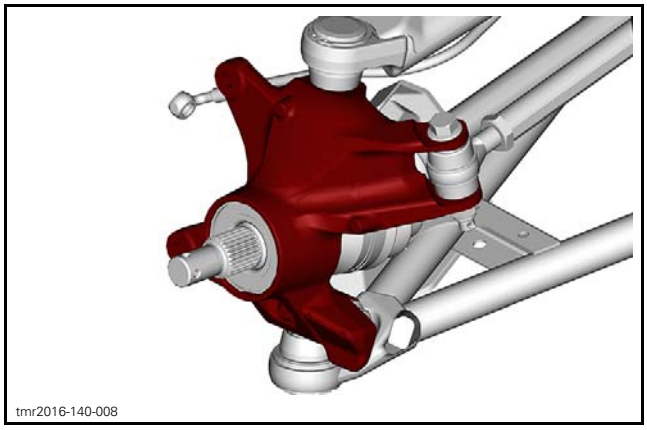
tmr2016-140-008

Remove front wheel.

1. Remove caliper, refer to *BRAKES* subsection.
2. Remove wheel hub, refer to *FRONT DRIVE* subsection.
3. Detach tie-rod end from knuckle (front knuckles). Refer to *TIE-ROD ENDS* in this subsection.
4. Detach upper and lower suspension arm from knuckle. Refer to *FRONT SUSPENSION* subsection.
5. Remove knuckle from vehicle.

Inspecting the Knuckle

Check knuckle for cracks or other damages.

Replace if necessary.

Installing the Knuckle

The installation is the reverse of the removal procedure.

WHEEL BEARINGS

Inspecting the Wheel Bearing (Maintenance)

Refer to *MAINTENANCE* in this subsection.

Inspecting the Wheel Bearing (During Component Removal)

Whenever the drive axle or knuckle is removed, check if wheel bearing turns freely and smoothly.

Replace if necessary.

Removing the Wheel Bearing

1. Remove knuckle from vehicle, refer to *REMOVING THE KNUCKLE* in this subsection.
2. Remove and discard circlip.

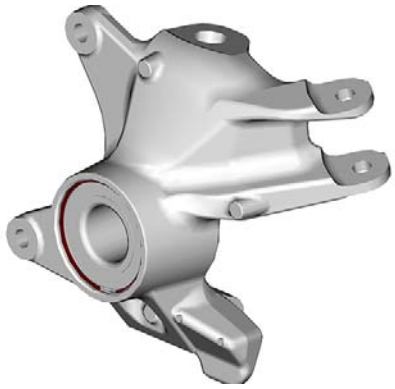

tmr2016-140-009

3. Install knuckle on a press.
4. Remove bearing from knuckle with an appropriate bearing remover.

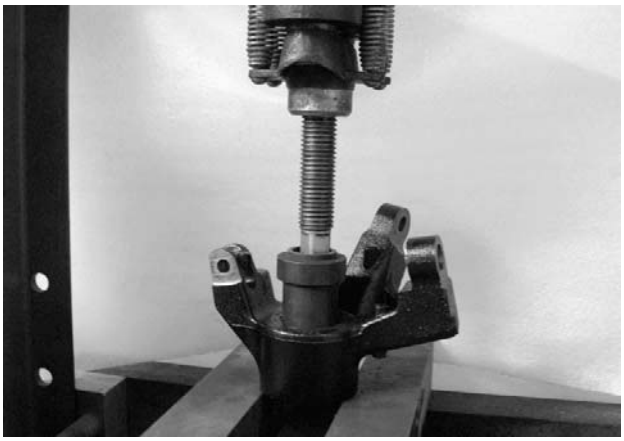

tmr2011-034-109

TYPICAL

NOTE: Heat the knuckle to ease bearing removal.

⚠ WARNING

Clean all grease, outside and inside, from knuckle before heating it.

Installing the Wheel Bearing

The installation is the reverse of the removal procedure. However, pay attention to the following.

To ease wheel bearing installation:

– Place bearing in a freezer for 10 minutes.
– Place knuckle in oven to 100°C (212°F) for 30 minutes maximum.

When knuckle is cooled down, install new circlip.

DYNAMIC POWER STEERING (DPS)

SERVICE TOOLS

Description	Part Number	Page
FLUKE 115 MULTIMETER	529 035 868	289

SERVICE PRODUCTS

Description	Part Number	Page
DIELECTRIC GREASE	293 550 004	296
LOCTITE 767 (ANTI-SEIZE LUBRICANT)	293 800 070	295

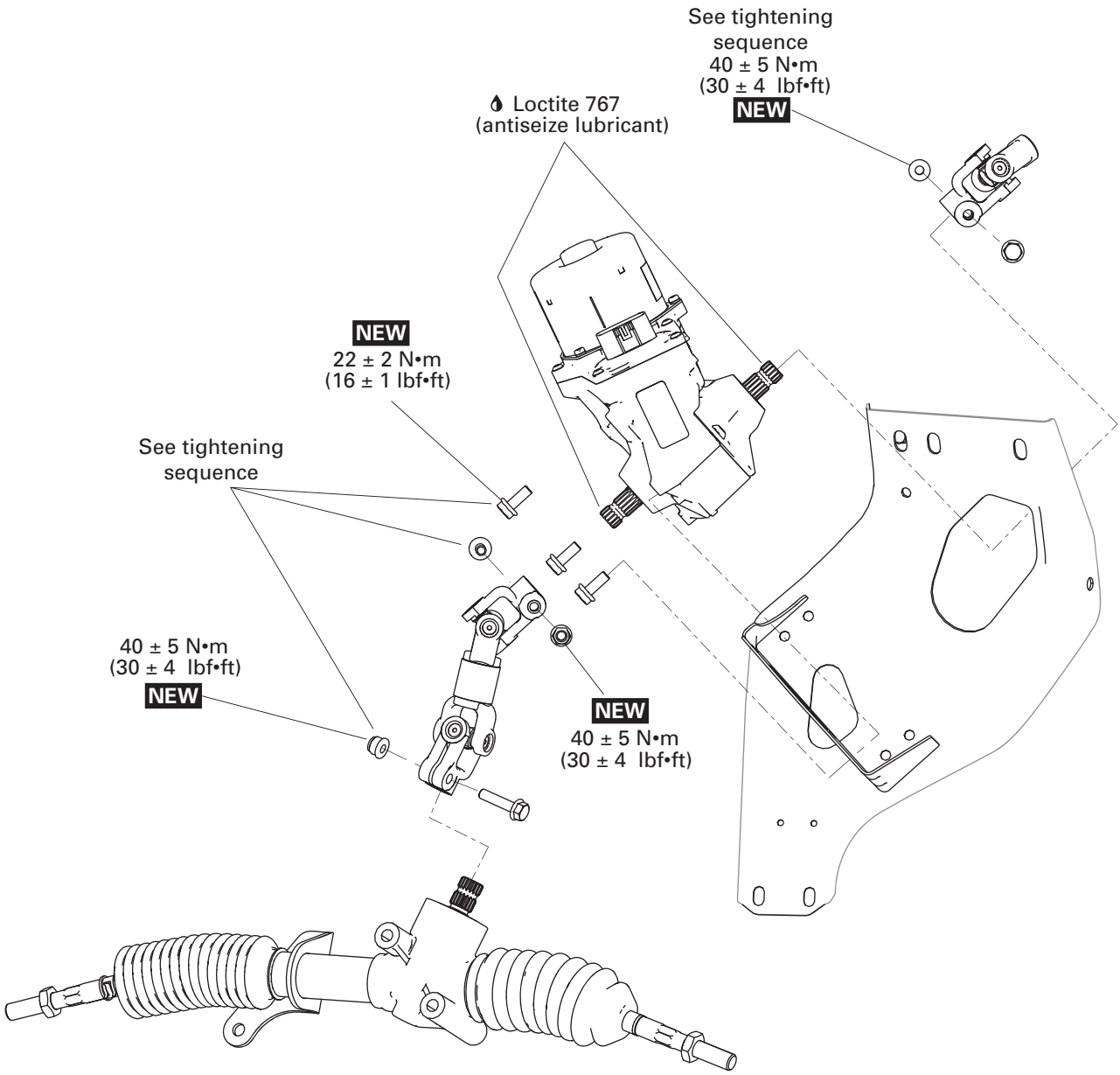

NEW = Component must be replaced when removed.

219100901-009-100

GENERAL

NOTICE Never perform arc welding in the DPS area. Otherwise, poor DPS operation might occur.

SYSTEM DESCRIPTION (FEATURES)

The Dynamic Power Steering (DPS) provides a computer controlled, variable power assist, achieved by an electric motor to optimize the amount of steering input required by the rider.

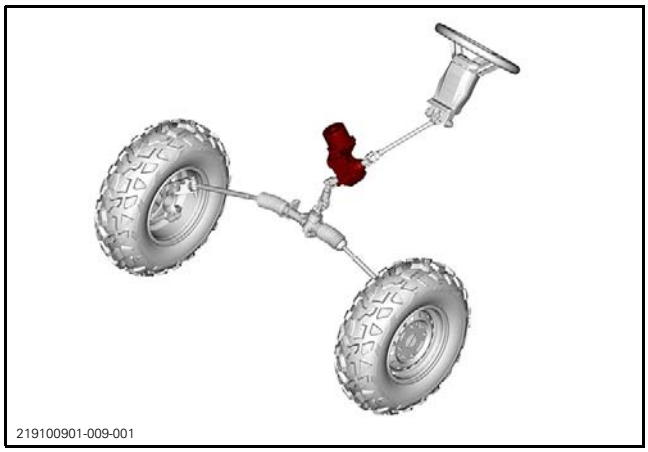

The DPS system uses the following parameters to determine how much steering assist it provides:

– Engine RPM
– Battery/electrical system voltage
– Vehicle speed
– DPS shaft torque sensor input.
– DPS internal temperature.

The amount of steering assist provided is dependent on the handlebar effort (steering torque), electrical power available, and vehicle speed.

The greater the handlebar effort (torque), the greater the assist will be.

The slower the vehicle speed, the greater the assist will be.

If the electrical system is activated but the engine is **not** running, DPS assist will be provided for approximately 30 seconds. DPS assist will resume once the engine is started.

After turning the ignition key OFF, DPS assist will be provided for approximately 20 seconds.

When the handlebar is in the straight ahead position, there is no steering assist.

Steering torque may also come from the wheels due to rough terrain. Steering kickback is reduced while providing feedback to the driver.

The greater the power steering assist, the greater the load on the electrical system.

When the electrical system is under high load (battery not at full charge, operating the vehicle for prolonged periods of time at slow speed and low RPM which, requires higher power steering assist), the battery power reserve will gradually decrease. This further increases the load on the charging system and the electrical system voltage will drop. As system voltage drops, so does power steering assist.

NOTE: It is important to maintain the battery at a full state of charge to ensure proper DPS operation.

DPS Derating Explanation

Derating is an internal protection system integrated in the DPS electronic module.

This system protects the electronic components when the DPS works too intensively and the internal temperature reaches a critical level, or when the battery voltage becomes too low.

The internal protection system decreases the assistance level available to protect its electronic board. The normal assistance level will return when riding conditions are back to normal and the internal temperature decreases, and/or when the battery voltage increases above a threshold voltage.

NOTE: This reaction is a normal protective behavior of the unit and does not necessarily raise a fault in the cluster. However, under extreme conditions, a scrolling DPS OVERHEAT message may appear in the cluster. When the DPS is allowed to cool down below the threshold recovery temperature, the DPS OVERHEAT message will cease.

DPS SYSTEM DESCRIPTION (COMPONENTS)

DPS Unit

The DPS unit is a self contained unit that includes the steering gear, the DPS module, the DPS motor, and the torque sensor.

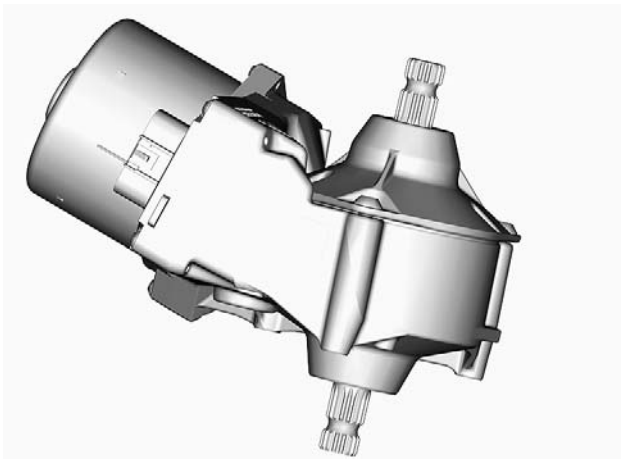
vmr2017-113-005

DPS UNIT

The DPS module provides DC power to the motor. The amount and duration of that DC power is determined by the inputs to the DPS module.

The DPS motor does not "spin", but rather turns in very small increments based on the amount, duration, and direction of DC power delivered by the DPS module.

NOTE: Should the DPS unit fail, the vehicle steering is still available with moderate increase in steering effort.

Steering Torque Sensor

The steering column is connected to the shaft on the DPS unit. A small area of the DPS shaft is magnetized. Inside the DPS unit, a torque sensor surrounds the magnetized area of the DPS shaft.

When the steering is turned, torque is applied to the shaft which tends to twist it slightly, deforming the magnetic field in the shaft. The sensor detects the torque by measuring the deviation of the magnetic field.

The torque sensor is very sensitive and can detect very small changes in the magnetic field. The harder the steering is turned, the greater the magnetic deviation, the greater the power steering assist.

NOTICE The internal torque sensor is very sensitive to external magnetic source. **All components touching the DPS unit** must be kept in a non-magnetic area and avoid any contact with components. If a magnetic source or part is in contact with the DPS shaft, or touching components, it will affect the torque reading values and inadvertently affect the behavior of the DPS unit.

ADJUSTMENT

RESETTING THE TORQUE OFFSET

When replacing the following parts or adjusting steering alignment, the sensor torque offset MUST be reset to zero for proper system operation.

PART ADJUSTED OR REPLACED	WHAT TO DO
– DPS unit – Steering column – Tie rod – Tie rod end – Knuckle – Wheel bearing – Ball joint – Front suspension arm (lower/upper) – Steering alignment	Reset Torque Offset in **Setting, DPS**

1. Position the steering wheel at the center position.
2. Connect vehicle to the BRP diagnostic software BUDS2. Refer to *COMMUNICATION TOOLS* subsection.
3. Check if a software update is available and warranted for the DPS. Select:
   – **Flash** page.
   – **DPS** or **Vehicle** button.
   – **Flash** tab.

If an update is available, install it before resetting the torque offset.

REQUIRED CONDITIONS TO ALLOW THE RESET PROCEDURE
DPS unit temperature above freezing point.
Steering wheel should be free and centered. There MUST NOT be any effort applied to the steering column.
Torque sensor value must be within offset threshold value of ± 10Nm.
Engine not running.

4. To reset the torque offset, select:
   – **Settings** page.
   – **DPS** or **Vehicle** button.
   – **Initialization** tab.
5. Select **Torque Sensor Offset**.

NOTE: Torque reading must be stable and not exceeding 2Nm during procedure. Torque sensor reset may not be possible if the torque value is over the 10Nm above the original setting.

With the steering wheel centered and no effort is applied, if the indicated **Torque Sensor** value is over the threshold value of 1.5Nm, a steering imbalance may be noticeable.

If all steering components are undamaged, in good working order, and the steering components were correctly aligned, repeated torque offset reset procedures will not solve the problem if the torque offset is greater than ±10Nm. DPS unit replacement may be required.

STEERING SYSTEM SELF TEST

This test verifies the DPS torque reading on the entire steering angle range. It will not test any internal function or any performance of the DPS itself and it will not verify the accuracy of the vehicle wheel alignment.

It is made to detect:

- Steering component misalignment
- Magnetized component in contact with DPS main shaft.

If the test fails, the BRP diagnostic software will provide a description of the failure and suggest a corrective action.

To initiate the test:

1. Connect the vehicle to the BRP diagnostic software (BUDS2). Refer to *COMMUNICATION TOOLS* subsection.
2. In BUDS2, go to:
   - **Functions** page.
   - **DPS** button.
   - **Routines** tab.
3. Follow the instructions on the screen.
4. Click on **Validate Steering Assembly**.

The test will run by itself, then the result will be displayed.

NOTICE **Ensure to perform corrective action as per the procedures outlined in this subsection.**

PROCEDURES

DPS UNIT

REQUIRED TOOL	
FLUKE 115 MULTIMETER (P/N 529 035 868)	

Testing the DPS Fuse

A 40 A fuse located in fuse box **no. 3** (PF3-F1) under the hood, provides power to the DPS motor.

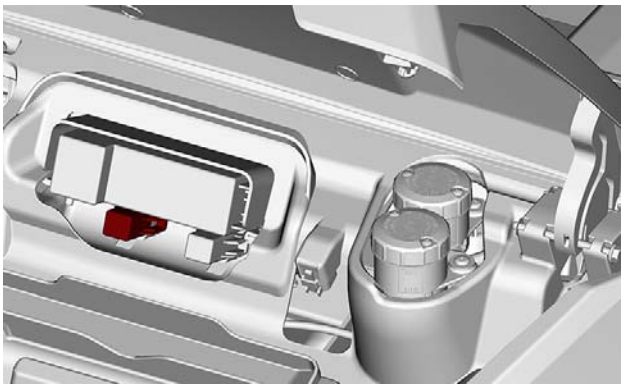
tmr2016-141-002

1. Remove the DPS fuse cap to expose the fuse contacts.
2. Set the multimeter to VDC and test for a voltage drop across the DPS fuse while the DPS is in operation.
3. If a voltage is measured, turn power off and remove fuse.
4. Check fuse continuity, fuse contacts and fuse box contact condition. Replace fuse as required.

DPS Wire Identification

For circuit details, refer to *WIRING DIAGRAM*.

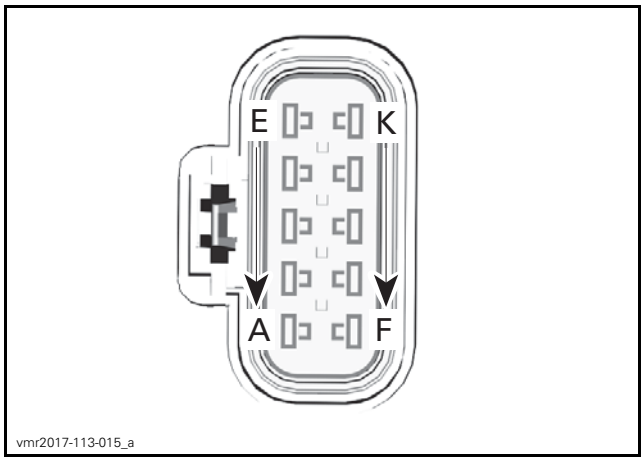

DPS CONNECTOR HARNESS SIDE

DPS CONNECTOR		
FUNCTION	PIN	COLOR
12 volt input (from fuse F1)	C	RD/PK
12 volt input (from fuse F1)	D	RD/PK
12 volt input (from fuse F1)	E	RD/PK
12 volt switched input (from fuse F4)	G	OR/GN
CAN HI	J	WH/BE
CAN LO	K	WH/BK
Ground	A	BK
Ground	B	BK
Ground	F	BK

Testing the DPS Input Voltage

1. Disconnect the DPS connector.

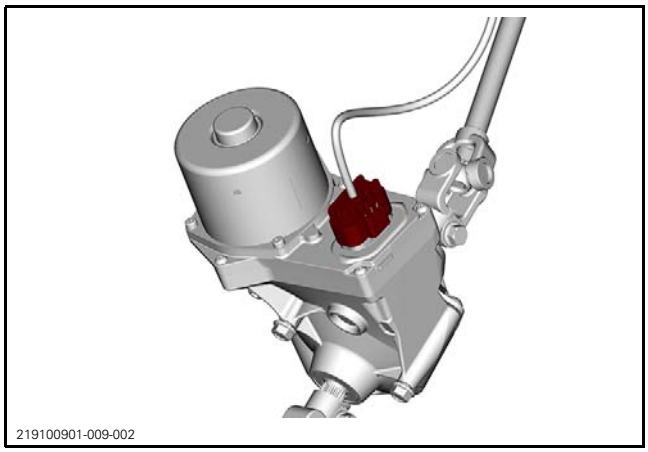

2. Test for 12 Vdc DPS motor power at DPS connector as per following table.

MULTIMETER PROBE POSITIONS		VOLTAGE
DPS connector pin C	Battery ground	Battery voltage
DPS connector pin D		
DPS connector pin E		

If NO voltage is measured, test the 40 A DPS fuse (F1). If good, check wires and connector pins. Replace or repair defective parts and reset fault codes.

If battery voltage is measured, test the DPS ignition signal voltage.

NOTE: This test may also be carried out by connecting a 12 Vdc test light between connector pins (C, D and E), and the battery (-) negative terminal. The test light must come on bright.

Testing the DPS Ignition Signal Voltage

1. Disconnect DPS connector.

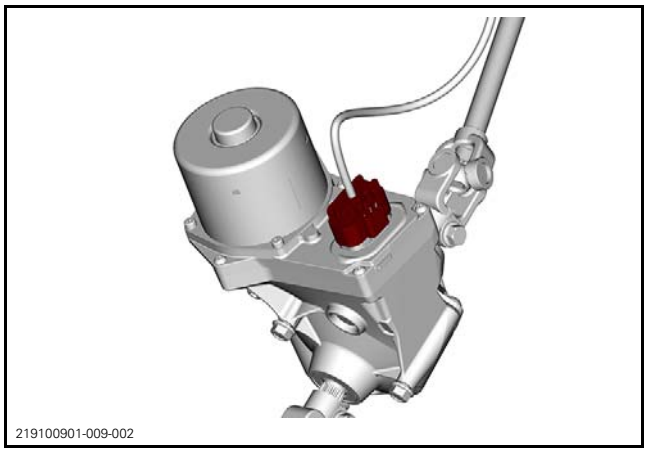

2. Set the ignition switch to ON.
3. Test for 12 Vdc power at the DPS connector as per following table.

MULTIMETER PROBE POSITIONS		VOLTAGE
DPS connector (harness side) pin G	Battery ground	Battery voltage

If NO voltage is measured, check wires and connector pins from the DPS unit to the fuse (F4) in the front fuse box (PF1-F4). Replace or repair defective parts and reset fault codes.

If battery voltage is measured, test the DPS ground circuit.

NOTE: This test may also be carried out by connecting a 12 Vdc test light between the DPS connector (pin G), and the battery (-) negative terminal. The test light must come on bright.

Testing the DPS Ground Circuit

1. Disconnect the DPS connector.

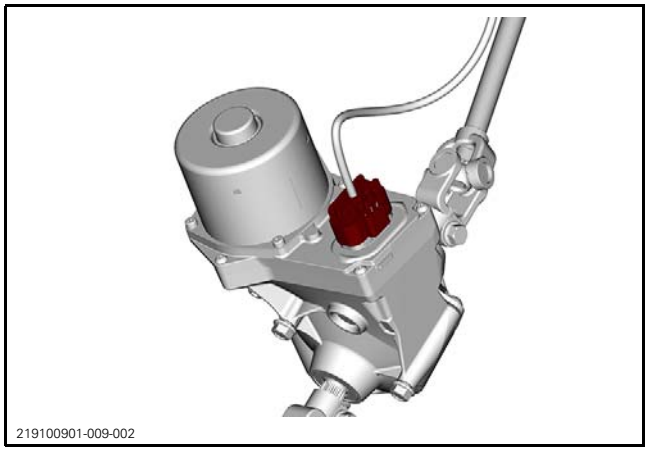

2. Test for continuity between DPS connector and battery ground.

MULTIMETER PROBE POSITIONS		READING
DPS connector (harness side) pin A	Battery ground	Continuity (close to 0 Ω)
DPS connector (harness side) pin B		
DPS connector (harness side) pin F		

If there is NO continuity or a high resistance is measured, check wires and connector pins from DPS unit to chassis ground post. Replace or repair defective parts and reset fault codes.

If there is good continuity, carry out: *TESTING THE DPS UNIT COMMUNICATION LINK (CAN) CONTINUITY*.

NOTE: This test may also be carried out by connecting a 12 Vdc test light between each GDN connector pin and the battery (+) positive terminal. The test light must come on bright.

Testing the DPS Communication Link (CAN) Continuity

NOTE: DPS unit must receive an RPM signal to provide power steering assist.

1. Disconnect the DPS connector and the diagnostic connector.
2. Test continuity of CAN Bus Wires as per following table.

MULTIMETER PROBE POSITIONS		RESISTANCE @ 20°C (68°F)
DPS CONNECTOR (HARNESS SIDE)	DIAGNOSTIC CONNECTOR	
Pin J	Pin 1	Less than 1 Ω
Pin K	Pin 2	

If resistance measured is out of specification, check wires and connector pins. Carry out repairs as required and reset fault codes using the applicable BRP diagnostic software version.

If resistance measured is good, replace the DPS unit and reset fault codes using the applicable BRP diagnostic software version.

Testing the DPS System Load

If the charging system cannot sustain normal voltage when the DPS is operating, DPS ASSIST may be greatly reduced or nonexistent. Carry out the following steps.

1. Measure the battery voltage.

NOTE: If battery voltage is low, recharge battery.

2. Ensure the vehicle transmission is set to PARK.
3. Start the engine.
4. Note the voltage on the multimeter with the engine running (charging system voltage).
5. Press the RANGE button repeatedly to select **Manual Range 6 0**.

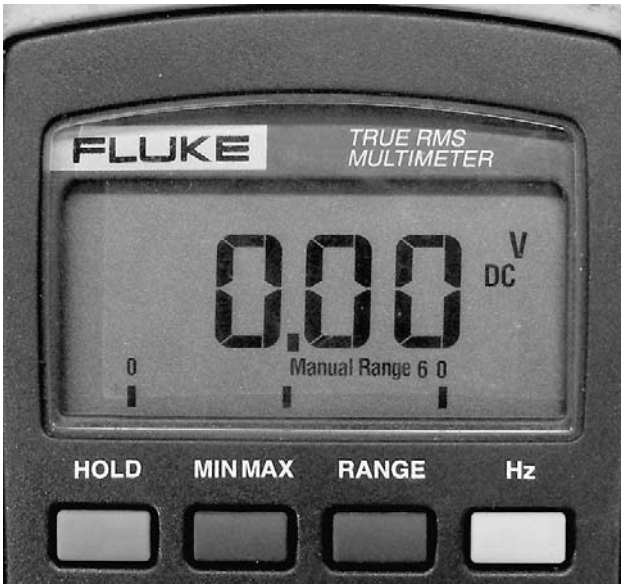

mmr2009-023-027_a

VDC SELECTED TO MANUAL RANGE 6 0

6. Press the **MIN MAX** button on the multimeter to engage the MIN function.

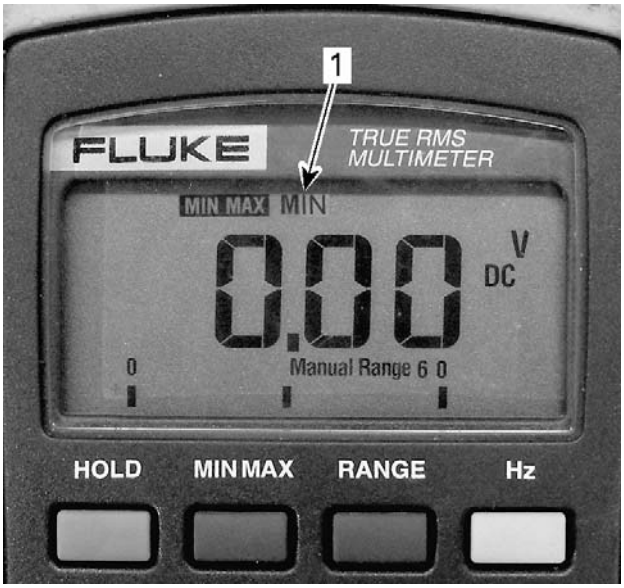

mmr2009-023-027_e

1. MIN function selected

7. Turn the steering **momentarily** against the frame stops to each side.

NOTE: Do not hold steering against frame stops for an extended period of time.

8. Read the MIN charging system voltage recorded while the steering was turned against each stop.

DPS SYSTEM LOAD TEST			
PROBE POSITIONS		STEERING POSITION	VOLTAGE READING
Battery (-) terminal	DPS fuse holder pin B	LH stop	At least 12 Vdc
		RH stop	

NOTE: Turning the steering momentarily against the frame stops generates maximum DPS load (maximum current draw on electrical system). Electrical system must sustain at least 12 Vdc for proper DPS operation.

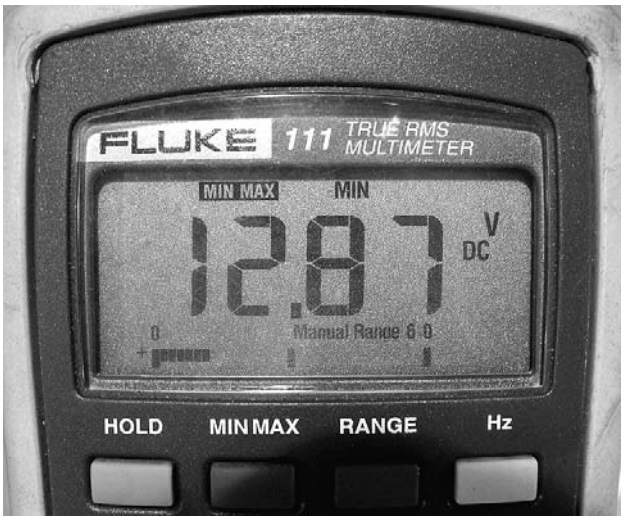

vmr2010-003-007

If the electrical system cannot sustain at least 12 Vdc, check the following:

– Battery
– Battery connections
– DPS unit power and ground connections
– Charging system
– Chassis and engine ground studs.

If the previously listed items are correct, , carry out: *TESTING THE DPS UNIT CURRENT*.

Testing the DPS Unit Current

1. Connect vehicle to the BRP diagnostic software BUDS2. Refer to *COMMUNICATION TOOLS* subsection.
2. Select:
   – **Measurements** page.
   – **DPS** button.
   – **Custom** tab.
3. With the vehicle engine running in PARK and without any steering effort, the reading should be as per following table.

TORQUE SENSOR	DPS CURRENT
0 N•m ± 1 N•m (0 lbf•**in** ± 9 lbf•**in**)	0 Amp

4. Turn the steering wheel side to side, momentarily against each steering hard stop and observe the DPS **Torque Sensor** value. The torque value should increase with steering effort applied to the steering wheel.

The **DPS Current** value should increase proportionately to the torque applied, and decrease with the torque as steering assist is provided.

NOTE: The increase and decrease in torque and current readings is very brief as steering assist is quickly provided. Current draw should remain within green scale but may momentarily peak to or exceed 60 amps, then drop off close to 0 amps as torque applied is nulled out by steering assist. If steering is held against hard stops the torque and current readings will remain high.

If current draw tends to remain high, carry out the following:

– *ALIGNING THE STEERING COMPONENTS*
– *RESETTING THE TORQUE OFFSET* (only if steering components alignment did not solve the problem)
– DPS unit replacement.

NOTE: The *ALIGNING THE STEERING COMPONENTS* procedure must always be carried out before even considering a torque offset reset.

5. Turn steering to LH stop and hold at least 8 Nm. Note DPS current value.
6. Turn steering to RH stop and hold at least 8 Nm. Note DPS current value.
7. Repeat previous two steps while holding at (+ or -) 5 Nm. Note DPS current value.

LH and RH DPS current readings should be the same for the same applied torque.

If the *ALIGNING THE STEERING COMPONENTS* and *RESETTING THE TORQUE OFFSET* procedures have been carried out, and the current or steering imbalance is too great, the DPS unit will require replacement to resolve the problem.

Removing the DPS Unit

NOTICE **Before proceeding with the DPS removal, remove the 40 Amp DPS fuse (F1) in the fuse box no. 3. Handle the DPS unit with extreme care as it is very sensitive to physical chock. Store unit in a secured area. If the DPS unit is dropped, it must be replaced even if only minimal damage is apparent.**

1. Position the front wheels parallel to the rear wheels.
2. Remove both front wheels.
3. Mark the alignment of the lower steering shaft with the input shaft and the rack and pinion housing.

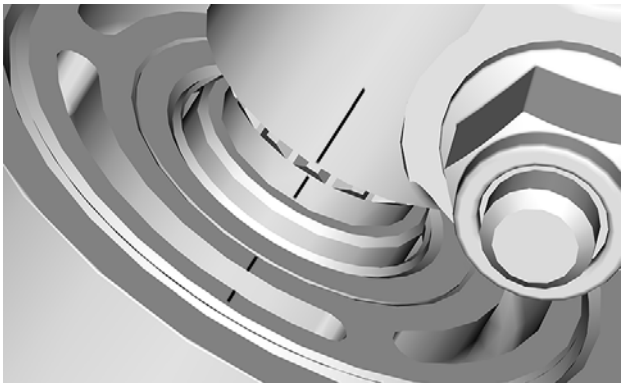
tmr2016-141-012

4. Remove access panel under LH front inner fender.

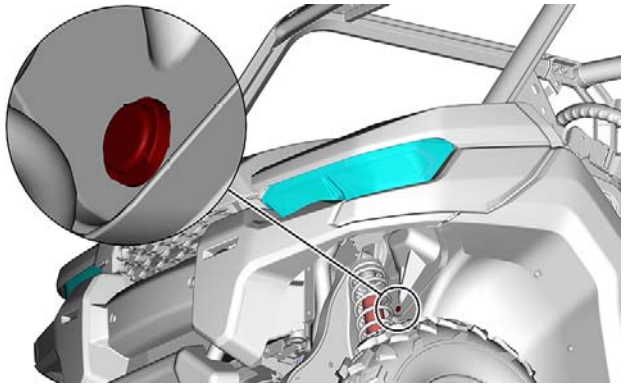
tmr2016-144-005

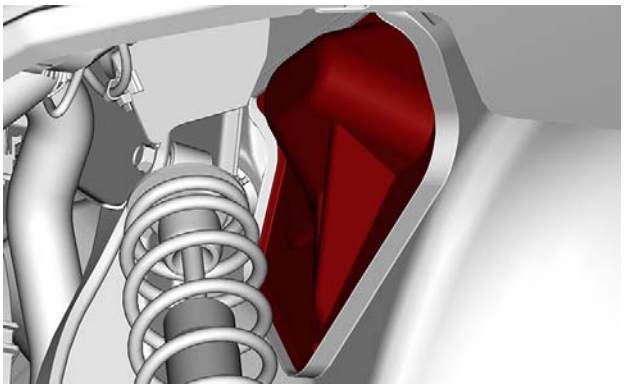
tmr2016-144-006

5. Disconnect the electrical connector from the DPS unit.

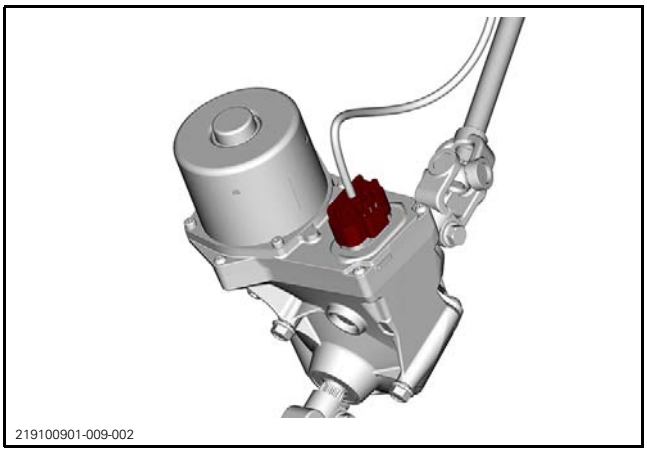
219100901-009-002

6. Remove steering column. Refer to *REMOVING THE STEERING COLUMN* subsection.
7. Remove the lower steering shaft pinch bolt and nut.

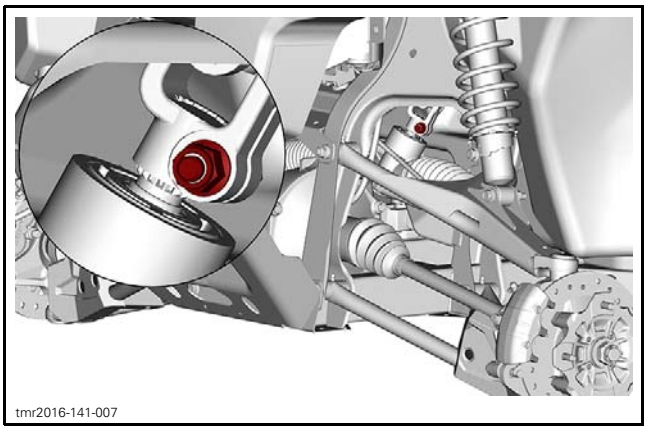
tmr2016-141-007

8. Remove the shifter module support retaining nuts and screw.

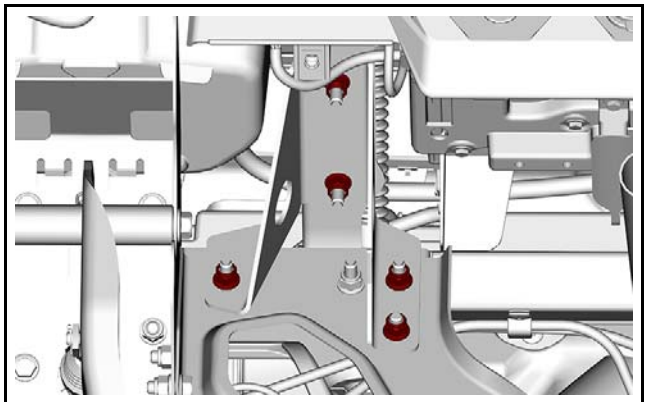
tmr2016-141-008

9. Slightly lift the dash board to remove the shifter support.

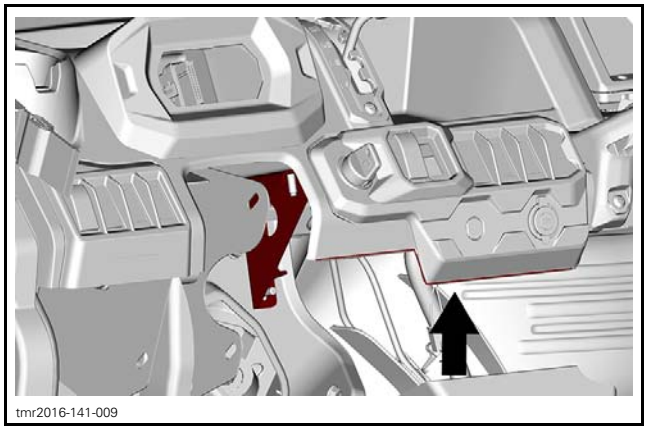
tmr2016-141-009

10. Remove all DPS unit support retaining screws.

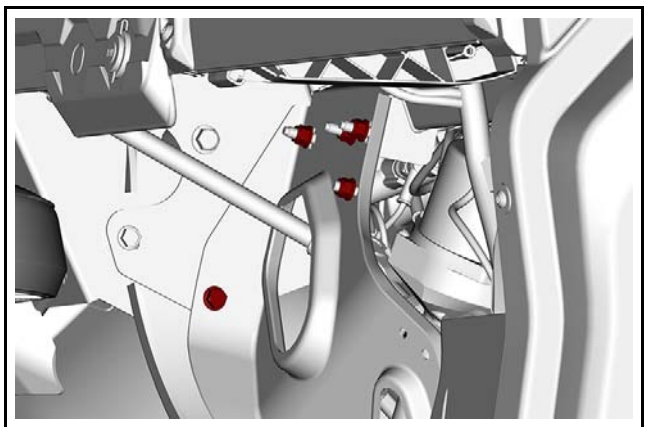
219100901-009-005

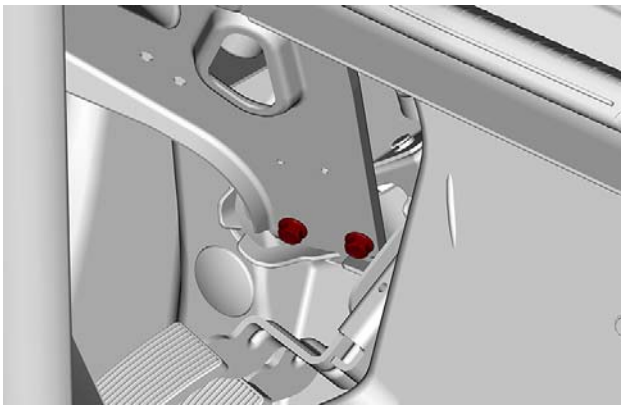

11. Pull up on DPS unit and support to disengage from the rack and pinion shaft and remove it from the vehicle.

NOTE: If replacing DPS unit, remove the DPS support and the lower steering shaft from the unit.

Installing the DPS Unit

If Replacing DPS Unit

1. Install the support on the new DPS unit.
2. Apply antiseize lubricant to DPS input and output shaft splines.

SERVICE PRODUCT
LOCTITE 767 (ANTI-SEIZE LUBRICANT) (P/N 293 800 070)

3. Install locking bolt and nut.

IMPORTANT: Make sure to engage bolt in the input shaft groove.

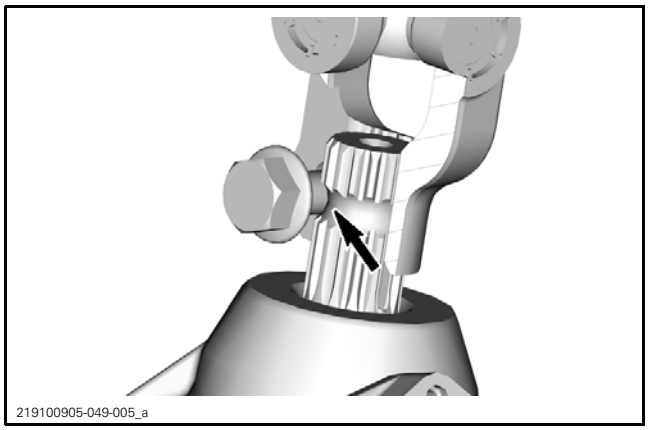

YOKE CROSSCUT - INPUT SHAFT GROOVE

Continue with *IF INSTALLING SAME DPS UNIT*.

If Installing Same DPS Unit

1. Apply antiseize lubricant to rack and pinion shaft splines.

SERVICE PRODUCT
LOCTITE 767 (ANTI-SEIZE LUBRICANT) (P/N 293 800 070)

2. While lowering the DPS unit with its support and the lower steering shaft in place, a second technician engage the lower yoke on the rack and pinion shaft.

Make sure to align marks previously made on lower yoke, rack and pinion input shaft and housing.

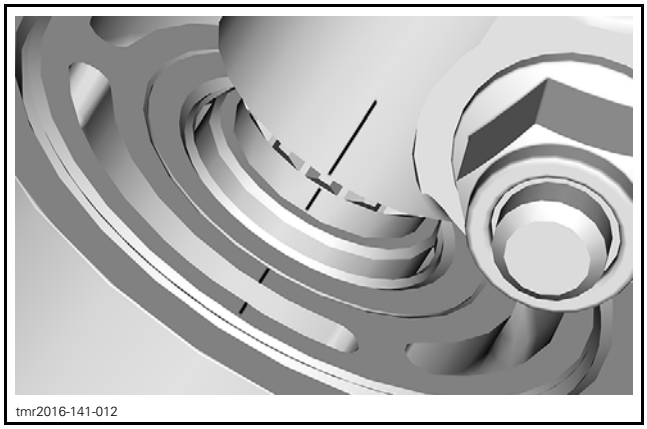

3. Install and tighten locking bolt and nut.

IMPORTANT: Make sure to engage bolt in the input shaft groove.

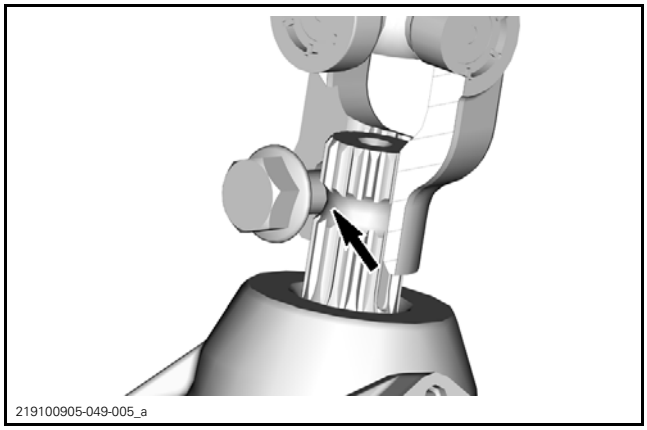

YOKE CROSSCUT - INPUT SHAFT GROOVE

4. Install shifter support.
5. Install fasteners, then tighten as per the following sequence.

NOTE: Ensure the shifter support makes good contact with the shifter module and the DPS support while tightening the nuts 3, 4, and 5.

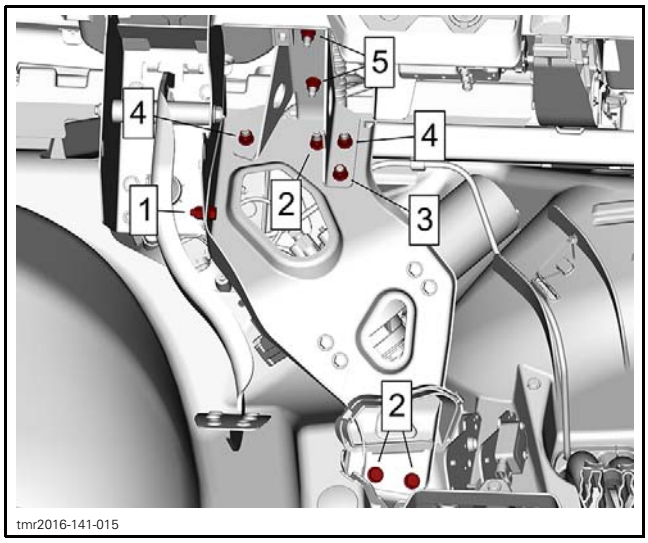

6. Install the steering column. Refer to *STEERING SYSTEM* subsection.
7. Apply grease on harness connector terminals.

SERVICE PRODUCT
DIELECTRIC GREASE (P/N 293 550 004)

8. Connect DPS connector to DPS unit.
9. If installing a replacement DPS unit, refer to *REPLACING THE DPS* in this subsection.
10. Align wheels. Refer to *STEERING SYSTEM* subsection.
11. Verify DPS system.

Replacing the DPS Unit

New DPS units **do not** come with the required software programmed into the unit. A DPS unit fault will be generated when the vehicle is powered up. The check engine light will come on and a CHECK DPS message will appear in the multi-function gauge.

The new DPS unit will require 2 mandatory updates. The first update is required for the DPS to recognize what type of vehicle it is installed in, the second to upload the software required for proper operation on that vehicle.

When DPS unit installation is complete, carry out the following steps.

1. Connect the vehicle to the BRP diagnostic software BUDS2. Refer to *COMMUNICATION TOOLS* subsection.
2. Select the **Flash** page.
3. A message window will appear asking you if you would like to update the DPS module; select **YES** and follow the instructions. When a second window appears asking you the same question, select **YES** again.
4. Once the correct DPS software file is installed, go to the **Faults** page and clear the fault codes.
5. Carry out: *RESETTING THE TORQUE OFFSET* (if required) as described in this subsection.
6. Test drive the vehicle to ensure proper DPS operation.

DPS System Final Verification

With the front wheels off the ground:

1. Enable DPS unit (turn ignition switch ON or start engine).

NOTE: Steering assist will be provided for 30 seconds with the ignition switch ON and engine not running.

2. Slowly turn steering wheel from one side to the other 3 times.

Make sure:

– Assistance and travel are equal when turning right or left
– Steering system operates smoothly through all its range.

3. Lower vehicle on the ground.
4. Repeat step 2.

RESULT	ACTION
Uneven/incorrect steering behavior	Troubleshoot steering problem

NOTE: A verification carried out with the engine not running and a weak battery may result in unsatisfactory DPS performance. In doubt, retest with the engine running.

5. Perform the *STEERING SYSTEM SELF TEST* procedure in this subsection.
6. Carry out a test ride of the vehicle to ensure proper operation of the DPS unit.

FRONT SUSPENSION

SERVICE PRODUCTS

Description	Part Number	Page
SYNTHETIC SUSPENSION GREASE (EUR)	779226	298–299
SYNTHETIC SUSPENSION GREASE	779163	298–299

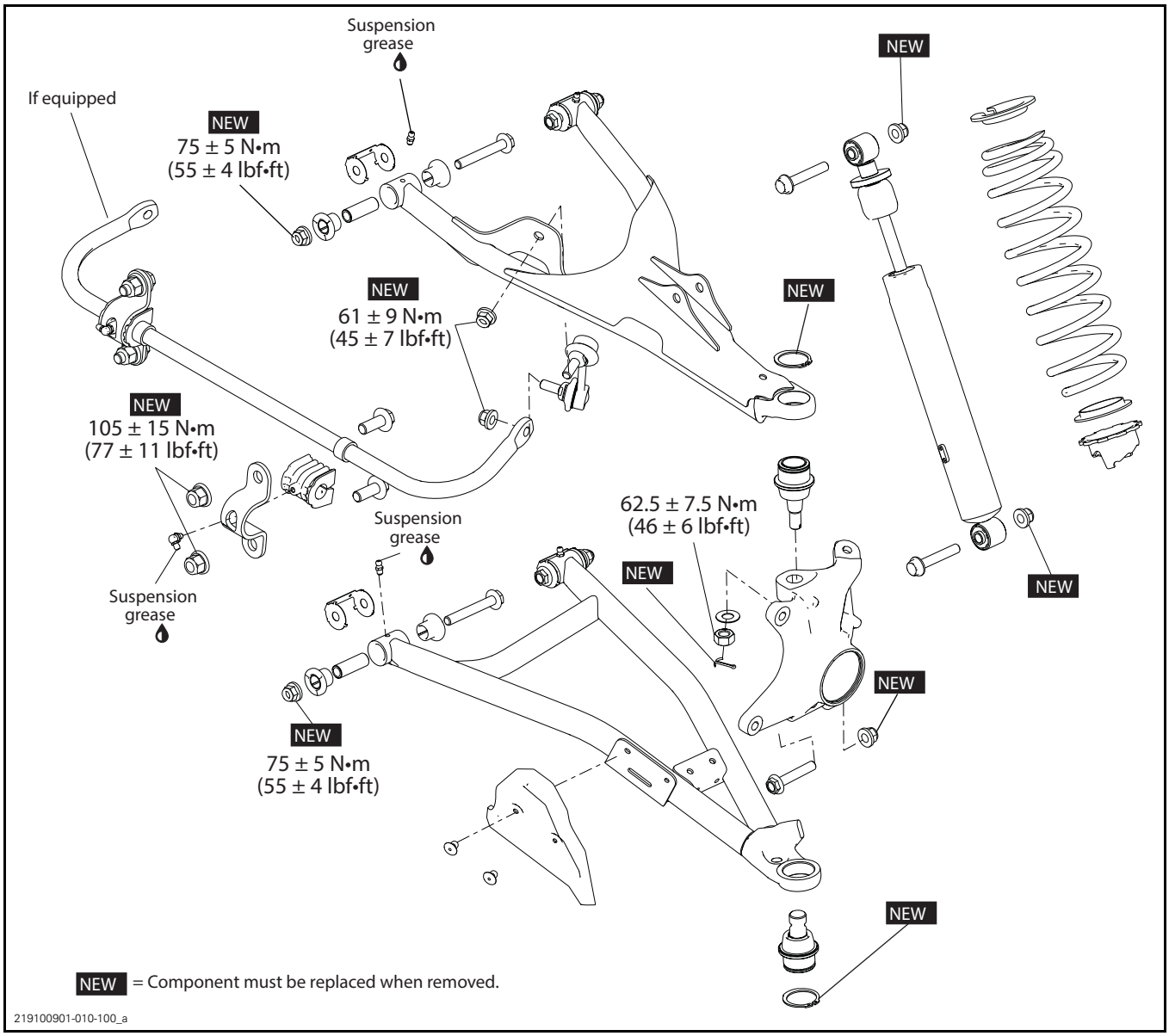

GENERAL

The procedure explained below is the same for the RH and LH sides unless otherwise noted.

MAINTENANCE

INSPECTING THE SHOCK ABSORBER

Check shock absorber for any leaks, replace if necessary.

LUBRICATING THE SUSPENSION ARM AND STABILIZER BAR BUSHINGS (IF EQUIPPED)

Lubricate suspension arm and stabilizer bar bushings (if equipped) at grease fittings.

SUSPENSION GREASE	
Scandinavia	SYNTHETIC SUSPENSION GREASE (EUR) (P/N 779226)
All other countries	SYNTHETIC SUSPENSION GREASE (P/N 779163)

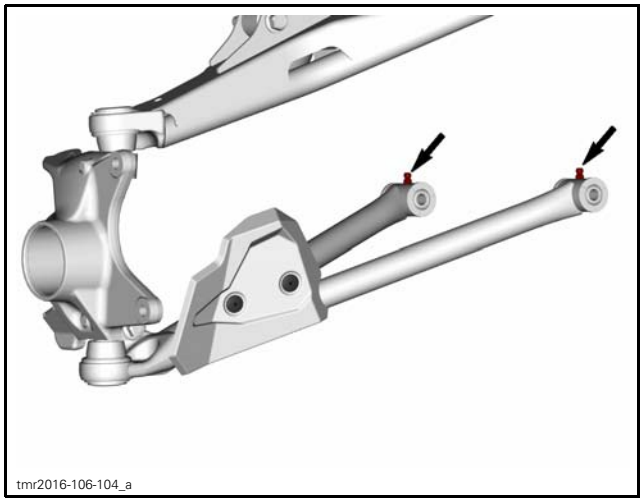

LOWER SUSPENSION ARM

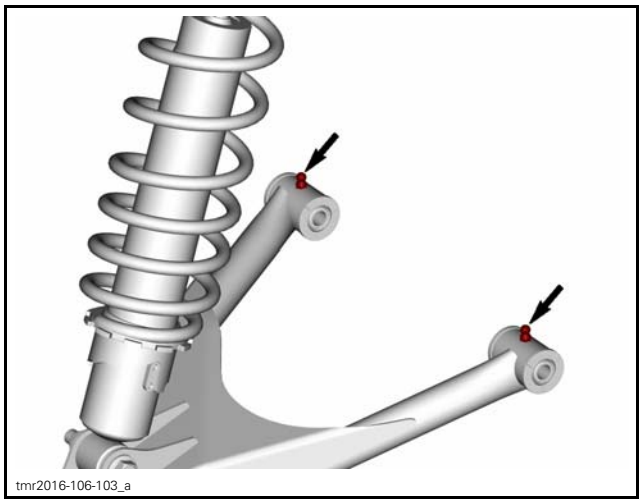

UPPER SUSPENSION ARM

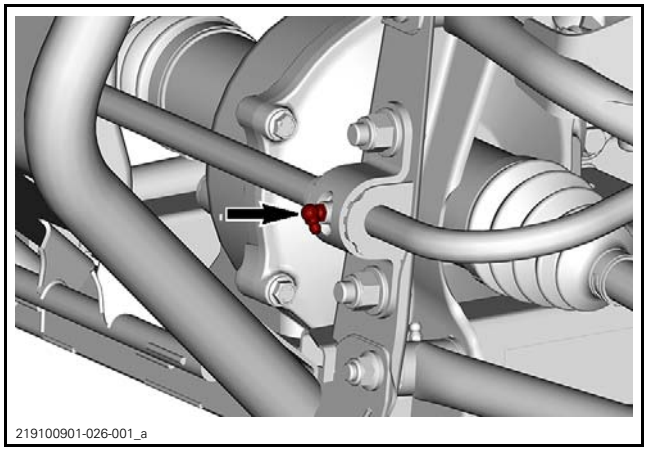

FRONT STABILIZER BAR BUSHINGS

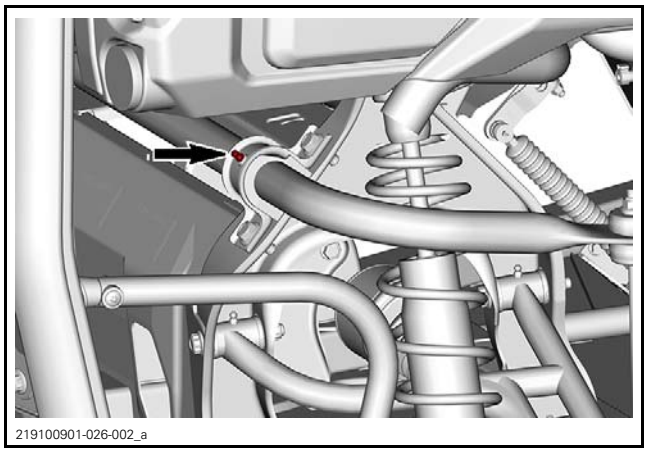

REAR STABILIZER BAR BUSHINGS

LUBRICATING THE REAR KNUCKLE

KNUCKLE LUBRICATION	
Scandinavia	SYNTHETIC SUSPENSION GREASE (EUR) (P/N 779226)
All other countries	SYNTHETIC SUSPENSION GREASE (P/N 779163)

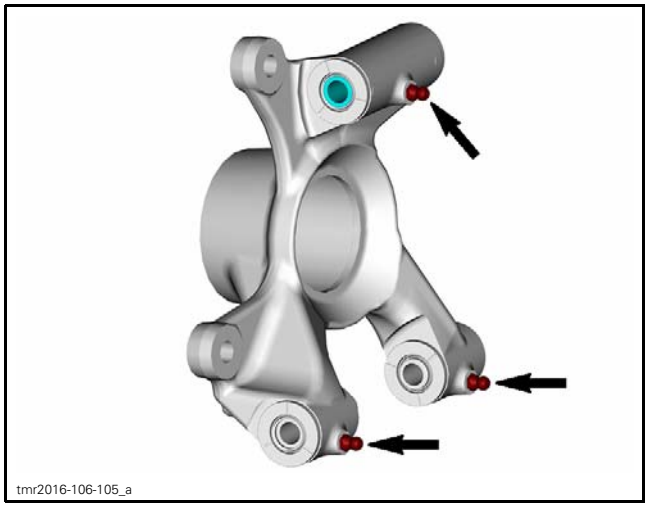
tmr2016-106-105_a

INSPECTING THE SUSPENSION ARM

Check suspension arm for:
- Cracks
- Pitting
- Bending
- Distortion.

Check suspension arm for abnormal play:
- Side to side
- Up and down.

If any play is detected, inspect:
- Bushings
- Cushions
- Wear plates.

Check ball joint for:
- Damage
- Pitting
- Play.

Check ball joint bellows for:
- Damage
- Cracks.

PROCEDURES

SHOCK ABSORBER

Removing the Shock Absorber

1. Safely lift and support the vehicle of the ground. Refer to *INTRODUCTION* subsection.
2. Remove bolts and nuts retaining shock absorber.

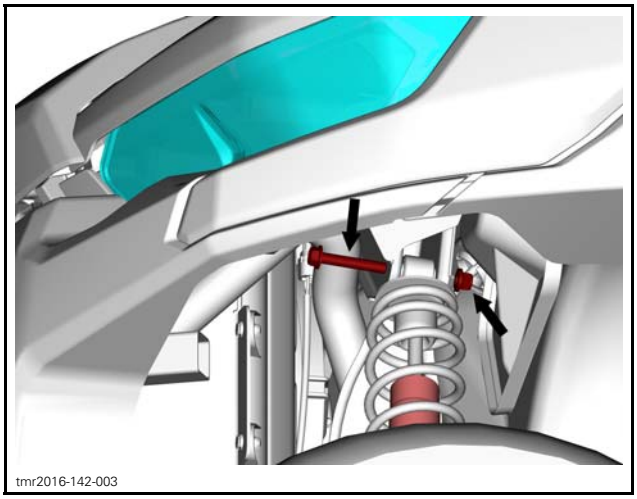
tmr2016-142-003

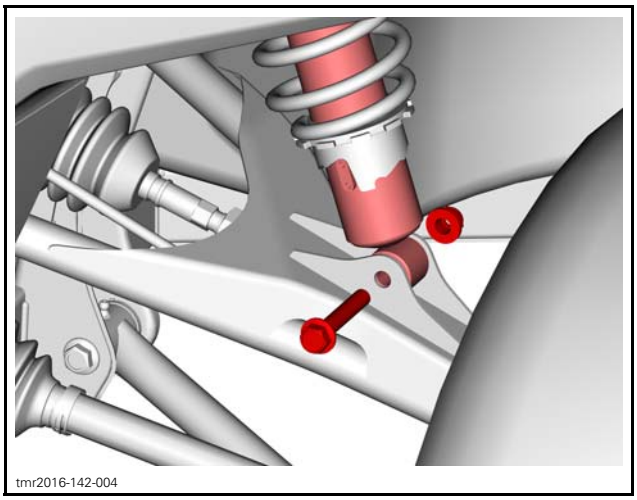
tmr2016-142-004

3. Remove shock absorber.

Inspecting the Shock Absorber

Remove spring from shock absorber. Refer to *SPRINGS* in this subsection.

Secure the end of shock body in a vise with its rod upward.

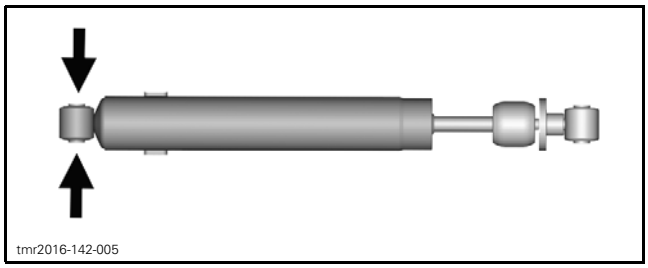

TYPICAL - VICE JAWS POSITION

NOTICE **Do not clamp directly on shock body.**

Extend and compress the piston several times over its entire stroke. Check that it moves smoothly and with uniform resistance with its rod upward.

Check the following conditions that will denote a defective shock:

- A skip or a hang back when reversing stroke at mid travel.
- Seizing or binding condition except at extreme end of either stroke.
- Oil leakage.
- A gurgling noise, after completing one full compression and extension stroke.

Replace if any faults are present.

Installing the Shock Absorber

The installation is the reverse of the removal procedure.

SHOCK ABSORBER SPRINGS

Refer to *SPRINGS* in *REAR SUSPENSION* subsection for complete procedures.

STABILIZER BAR (IF EQUIPPED)

Removing the Stabilizer Bar

1. Safely lift and support the vehicle off the ground. Refer to *INTRODUCTION* subsection.
2. Remove the stabilizer bar retaining screws and link lower nuts.

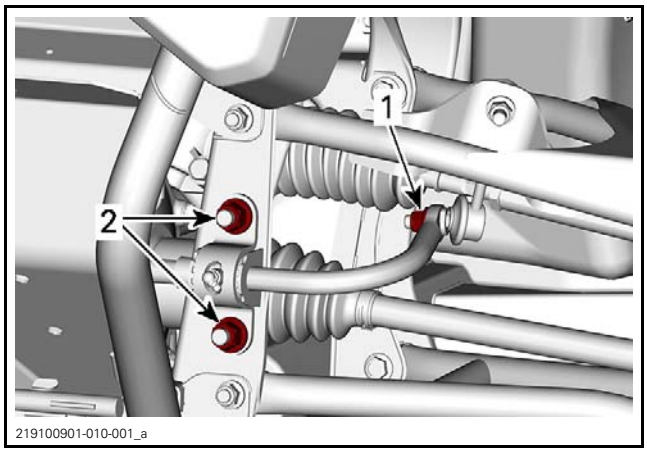

PARTS REMOVED FOR CLARITY
1. Stabilizer bar link lower nut
2. Stabilizer bar retaining screws

3. Remove stabilizer bar.

Inspecting the Stabilizer Bar

Check stabilizer bar for cracks, bending or other damages.

Replace if necessary.

Installing the Stabilizer Bar

The installation is the reverse of the removal procedure. However, pay attention to the following.

Install stabilizer link nuts and stabilizer bar screws loosely.

Using the following sequence, tighten fasteners as per the specification.

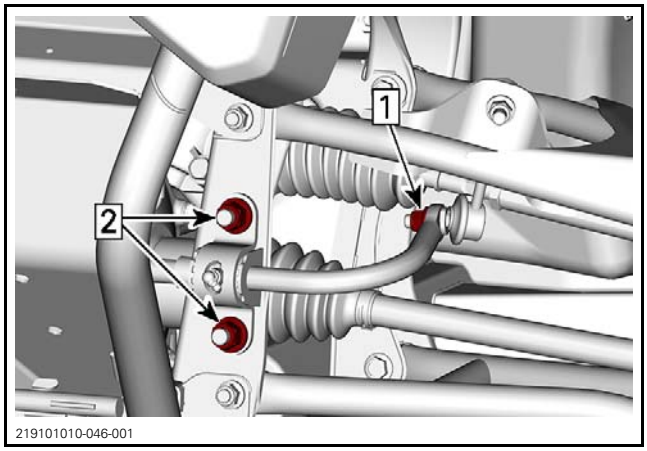

PARTS REMOVED FOR CLARITY
1. Stabilizer bar link lower nut
2. Stabilizer bar retaining screws

TIGHTENING TORQUE	
Stabilizer link nut	57.5 N•m ± 2.5 N•m (42 lbf•ft ± 2 lbf•ft)
Stabilizer bar screw	105 N•m ± 15 N•m (77 lbf•ft ± 11 lbf•ft)

LOWER SUSPENSION ARM

Removing the Lower Suspension Arm

1. Safely lift and support the vehicle off the ground. Refer to *INTRODUCTION* subsection.
2. Remove wheel, refer to *WHEELS AND TIRES* subsection.
3. Remove bolt and nut securing lower ball joint to knuckle.

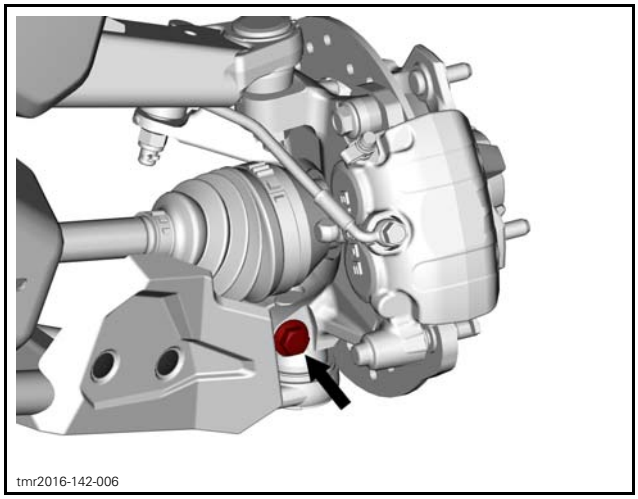
tmr2016-142-006

4. Remove bolts and nuts securing suspension arm to frame.

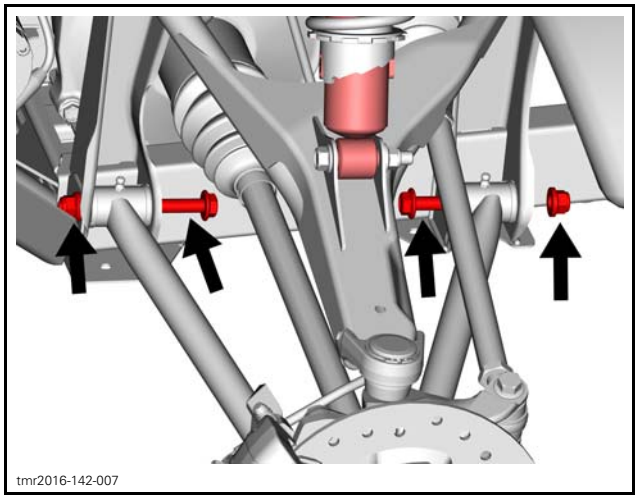
tmr2016-142-007

5. Remove suspension arm.

Installing the Lower Suspension Arm

The installation is the reverse of the removal procedure. However, pay attention to the following.

Lubricate suspension arm.

UPPER SUSPENSION ARM

Removing the Upper Suspension Arm

1. Safely lift and support the vehicle off the ground. Refer to *INTRODUCTION* subsection.
2. Remove wheel, refer to *WHEELS AND TIRES* subsection.
3. Remove the clamp retaining brake hose from the suspension arm.

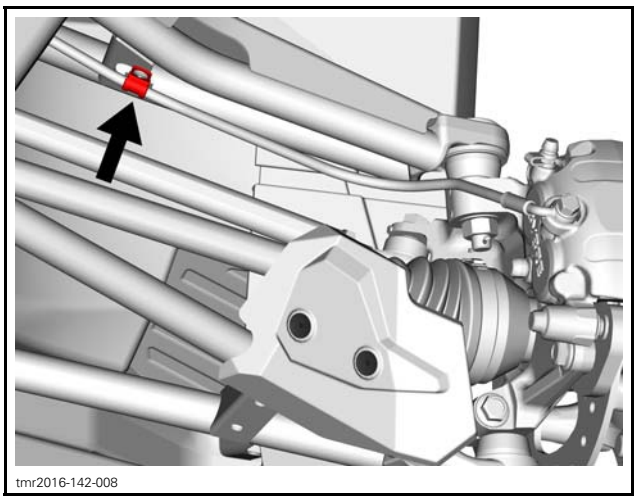
tmr2016-142-008

4. Remove and discard cotter pin retaining ball joint.

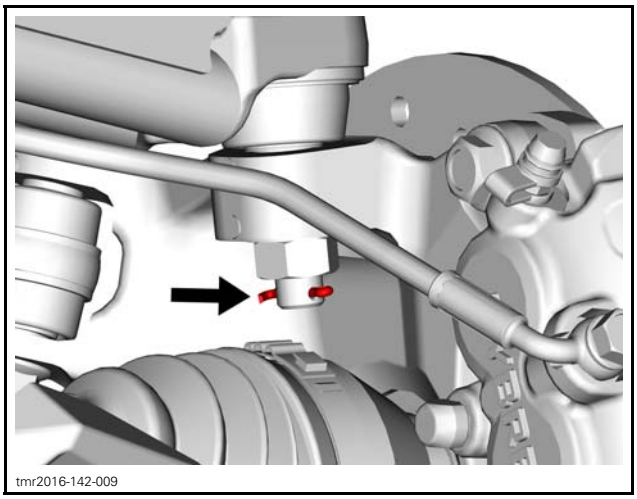
tmr2016-142-009

5. Remove ball joint nut and washer.

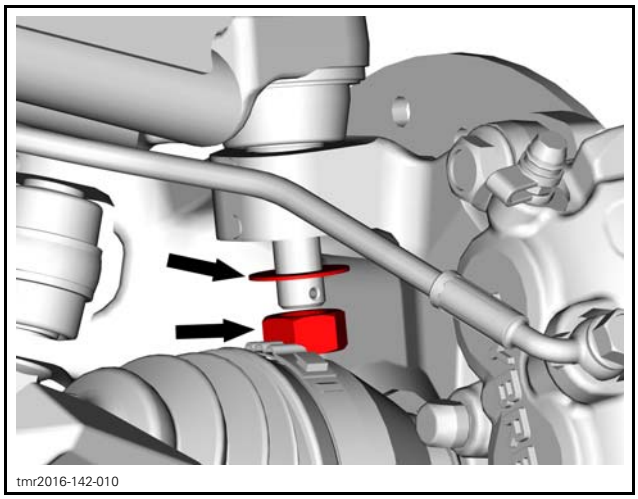
tmr2016-142-010

6. Using a plastic hammer, carefully hit on the knuckle side to separate ball joint from knuckle.

NOTE: A ball joint remover can be used if the ball joint is jammed into knuckle.

NOTICE **Never hit on suspension arm to avoid damaging it permanently.**

7. Remove the lower bolt securing the shock absorber.
8. If equipped, remove stabilizer bar link upper nut and move link away.

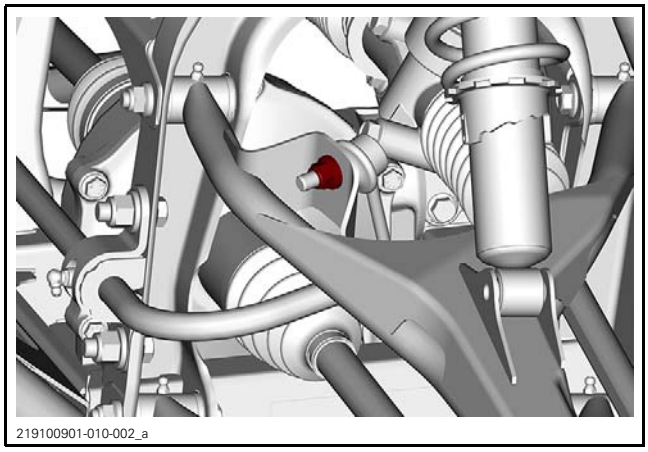
219100901-010-002_a

9. Remove fasteners securing suspension arm to frame.

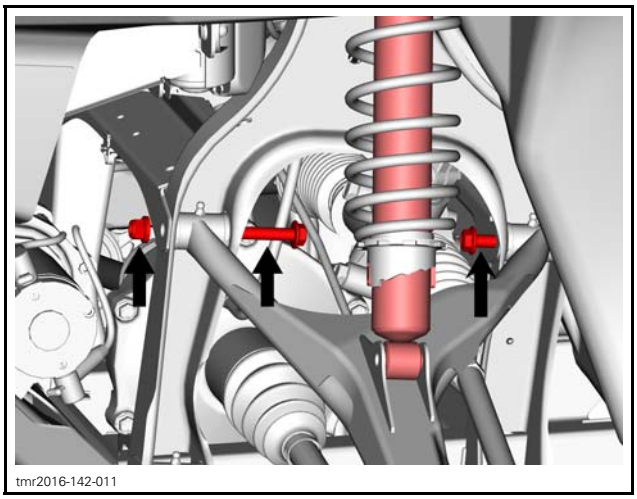
tmr2016-142-011

10. Remove suspension arm.

Installing the Upper Suspension Arm

The installation is the reverse of the removal procedure. However, pay attention to the following.

Lubricate suspension arm. Refer to *MAINTENANCE* in this subsection.

Install a NEW cotter pin to secure ball joint nut. Both end of cotter pin must be folded.

SUSPENSION ARM BUSHINGS

Removing the Suspension Arm Bushings

1. Remove wear plates, cushions and inner bushings from suspension arm.

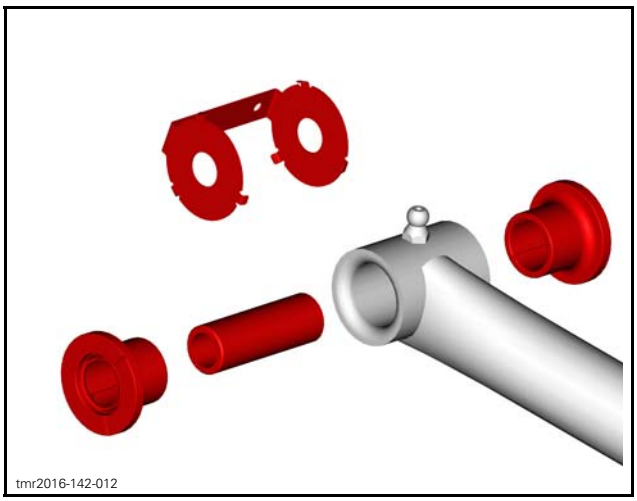
tmr2016-142-012

TYPICAL

Installing the Suspension Arm Bushings

The installation is the reverse of the removal procedure. However, pay attention to the following.

Lubricate suspension arm. Refer to *MAINTENANCE* in this subsection.

BALL JOINTS

Removing the Ball Joint

1. Remove suspension arm from vehicle. Refer to *REMOVING THE SUSPENSION ARM* in this subsection.
2. Remove and discard the circlip from ball joint.

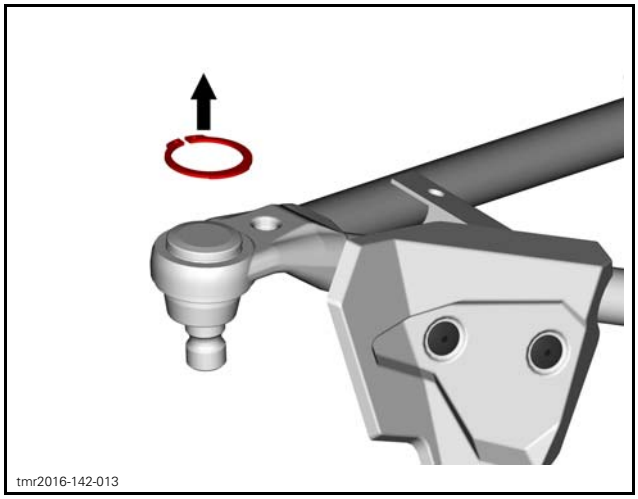

LOWER BALL JOINT

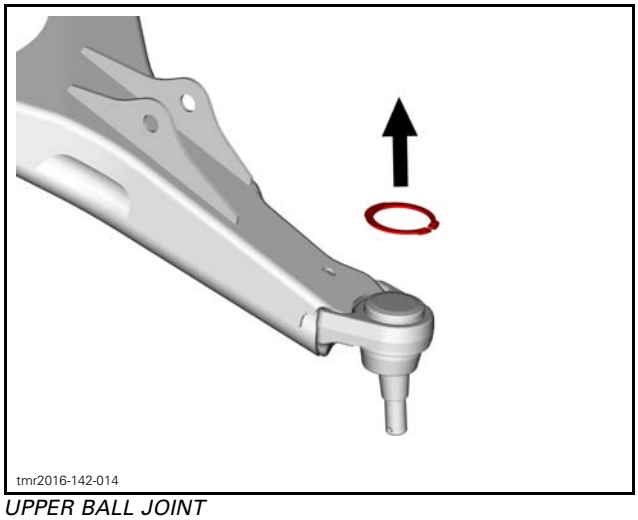

UPPER BALL JOINT

3. Install suspension arm on a press.
4. Use an appropriate ball joint remover.

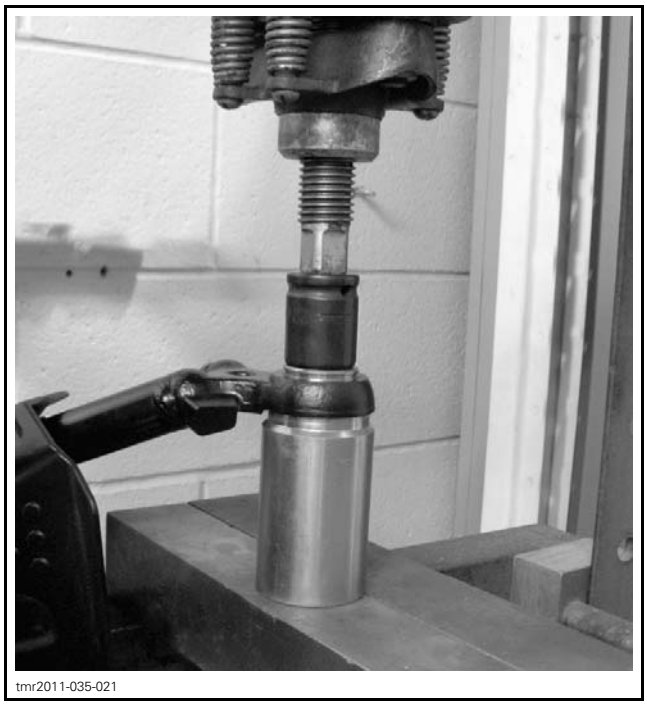

5. Remove ball joint from suspension arm.

NOTICE **Make sure that suspension arm is properly supported on the press during ball joint removal.**

Installing the Ball Joint

The installation is the reverse of the removal procedure. However, pay attention to the following.

Install a **NEW** circlip to secure ball joint.

REAR SUSPENSION

SERVICE TOOLS

Description	Part Number	Page
SPRING COMPRESSOR	529 036 184	307

SERVICE PRODUCTS

Description	Part Number	Page
SYNTHETIC SUSPENSION GREASE (EUR)	779226	306
SYNTHETIC SUSPENSION GREASE	779163	306

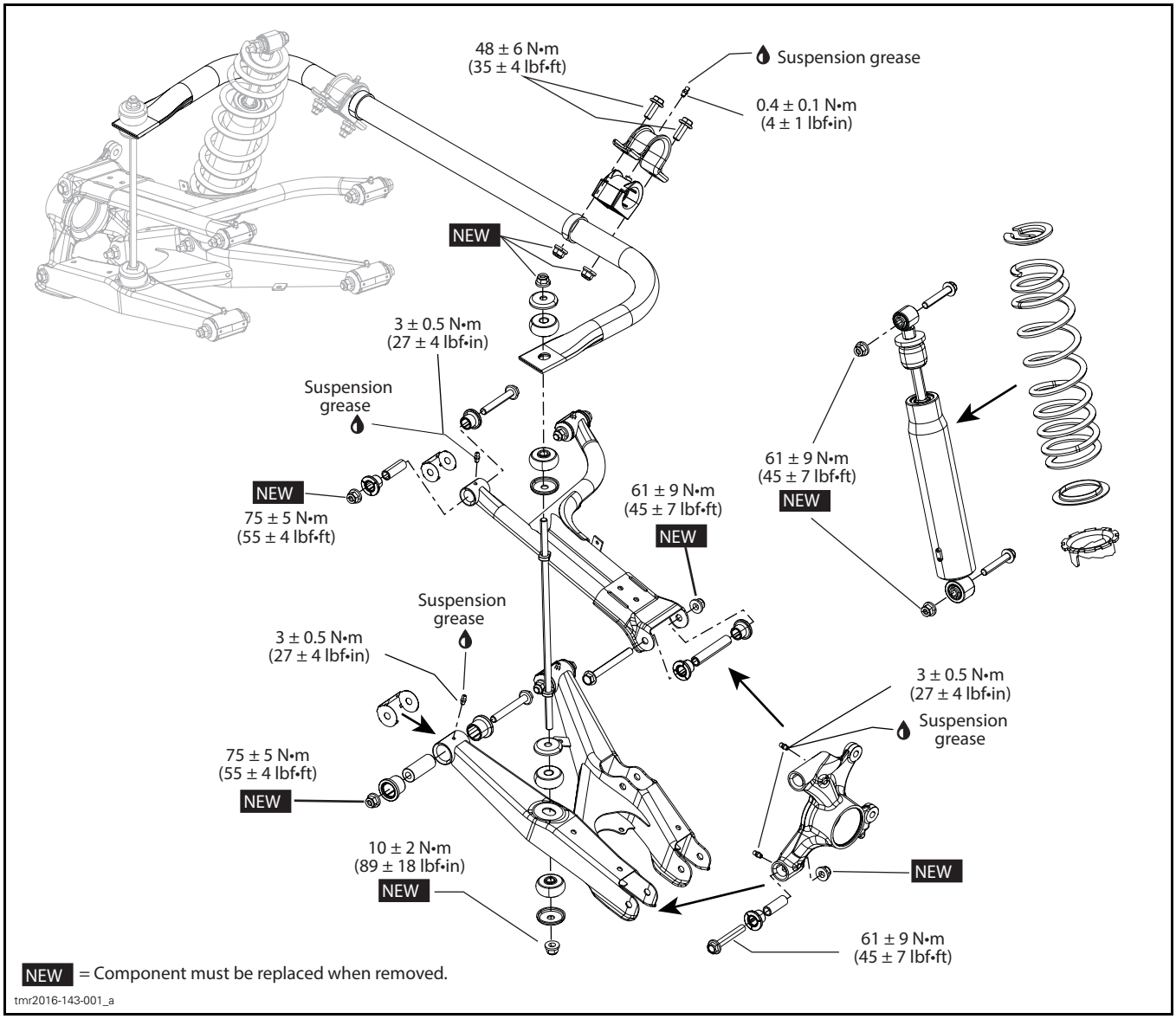

GENERAL

The procedure described below is the same for the RH and LH sides, unless otherwise instructed.

MAINTENANCE

INSPECTING THE SHOCK ABSORBER

Check shock absorber for any leaks, replace if necessary.

LUBRICATING THE SUSPENSION ARM AND STABILIZER BAR BUSHINGS (IF EQUIPPED)

Lubricate suspension arm and stabilizer bar bushings (if equipped) at grease fittings.

SUSPENSION GREASE	
Scandinavia	SYNTHETIC SUSPENSION GREASE (EUR) (P/N 779226)
All other countries	SYNTHETIC SUSPENSION GREASE (P/N 779163)

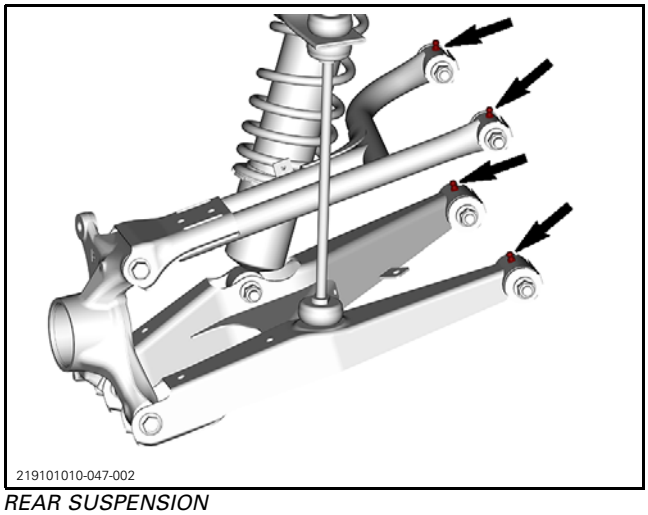

REAR SUSPENSION

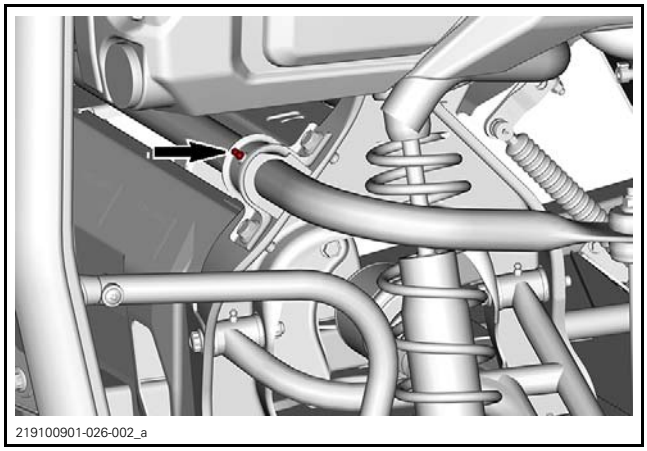

REAR STABILIZER BAR BUSHINGS

LUBRICATING THE REAR KNUCKLE

KNUCKLE LUBRICATION	
Scandinavia	SYNTHETIC SUSPENSION GREASE (EUR) (P/N 779226)
All other countries	SYNTHETIC SUSPENSION GREASE (P/N 779163)

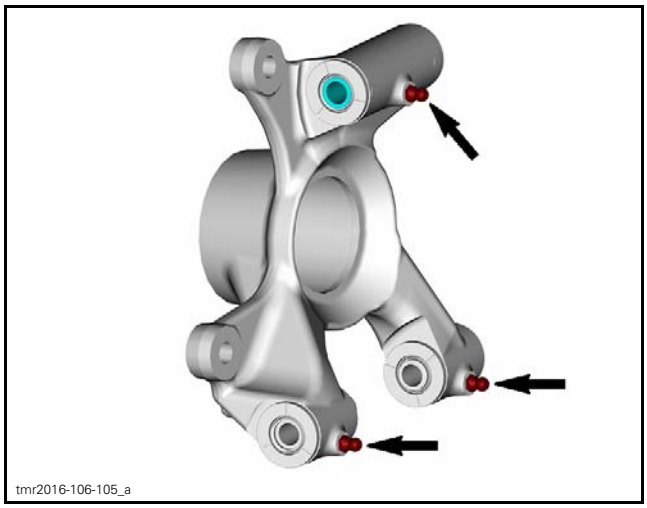

INSPECTING THE SUSPENSION ARM

Check suspension arm for:
- Cracks
- Pitting
- Bending
- Distortion.

Check suspension arm for abnormal play:
- Side to side
- Up and down.

If any play is detected, inspect:
– Bushings
– Cushions
– Wear plates.

Check ball joint for:
– Damage
– Pitting
– Play.

Check ball joint bellows for:
– Damage
– Cracks.

PROCEDURES

SHOCK ABSORBERS

Removing the Shock Absorber

1. Safely lift and support the vehicle off the ground. Refer to *INTRODUCTION* subsection.
2. Open cargo box.
3. Remove bolts and nuts retaining shock absorber.

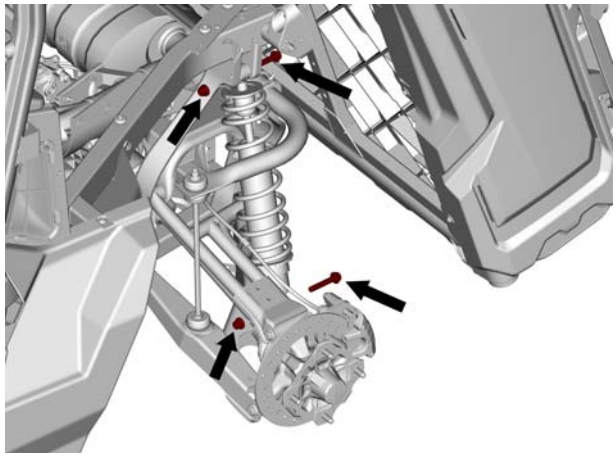
tmr2016-143-002

4. Remove shock absorber.

Inspecting the Shock Absorber

Remove spring from shock absorber. Refer to *SPRINGS* in this subsection.

Inspect bushings condition. Replace as required.

Secure the end of shock body in a vise with its rod upward.

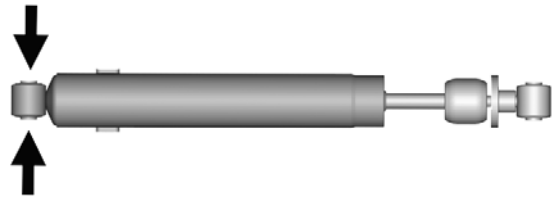
tmr2016-142-005

TYPICAL - VICE JAWS POSITION

NOTICE **Do not clamp directly on shock body.**

Extend and compress the piston several times over its entire stroke. Check that it moves smoothly and with uniform resistance with its rod upward.

Check the following conditions that will denote a defective shock:
– A skip or a hang back when reversing stroke at mid travel.
– Seizing or binding condition except at extreme end of either stroke.
– Oil leakage.
– A gurgling noise, after completing one full compression and extension stroke.

Replace if any faults are present.

Installing the Shock Absorber

The installation is the reverse of the removal procedure.

SPRINGS

Removing the Spring

All models except X mr

1. Remove shock absorber from vehicle. Refer to *SHOCK ABSORBERS* in this subsection.
2. Place the spring compressor in a vice.

REQUIRED TOOL	
SPRING COMPRESSOR (P/N 529 036 184)	

3. Position the shock absorber in the tool.
4. Install the spring compressor pins.
5. Tighten spring remover screw until the spring is sufficiently compressed to remove spring cap.
6. Remove spring cap from shock absorber.
7. Release spring remover screw.
8. Remove spring from shock absorber.

For X mr models

1. Remove shock absorber from vehicle. Refer to *SHOCK ABSORBERS* in this subsection.
2. Use an appropriate spring remover and follow the manufacturer's instructions to remove spring from shock absorber.

Inspecting the Spring

Inspect the spring for damage.

Replace if necessary.

Installing the Spring

The installation is the reverse of the removal procedure.

STABILIZER BAR

Removing the Stabilizer Bar

1. Safely lift and support the vehicle off the ground. Refer to *INTRODUCTION* subsection.
2. Remove the stabilizer link upper nuts, stabilizer link bushing plates and stabilizer link bushings.

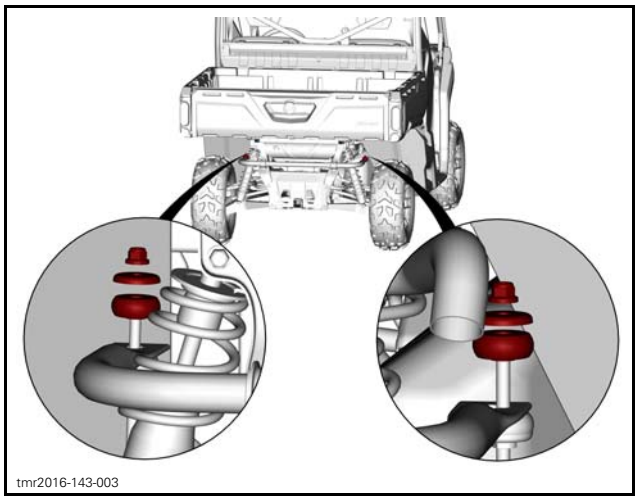

3. Remove stabilizer bar retaining screws.

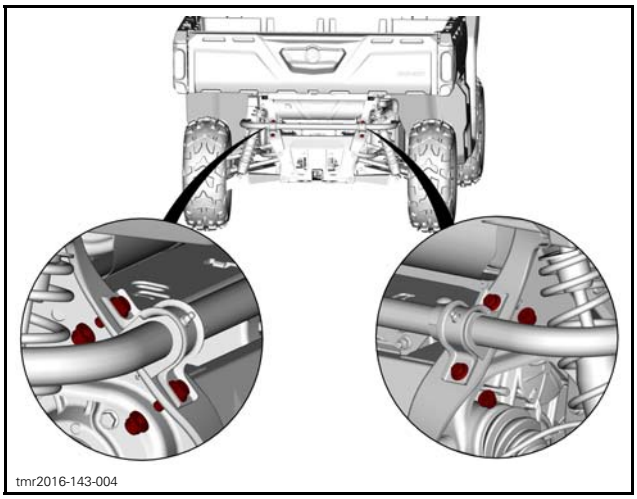

4. Remove stabilizer bar.

Inspecting the Stabilizer Bar

Check stabilizer bar for cracks, bending or other damages.

Replace if necessary.

Installing the Stabilizer Bar

The installation is the reverse of the removal procedure. However, pay attention to the following.

Install stabilizer link nuts and stabilizer bar screws loosely.

Using the following sequence, tighten fasteners as per specifications.

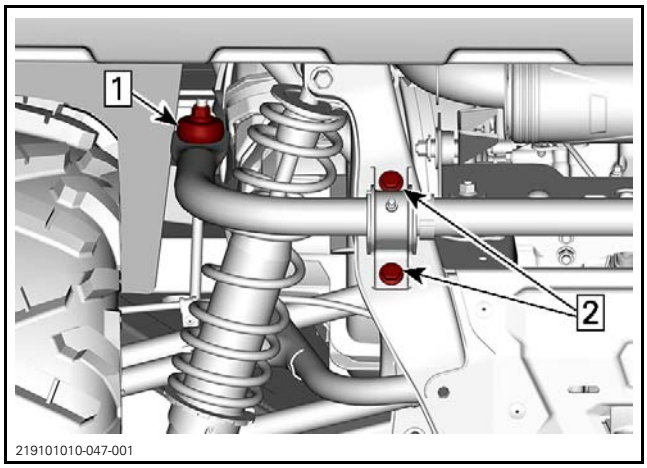

1. Stabilizer link nuts
2. Stabilizer bar screws

TIGHTENING TORQUE	
Stabilizer link nuts	10 N•m ± 2 N•m (89 lbf•**in** ± 18 lbf•**in**)
Stabilizer screws	48 N•m ± 6 N•m (35 lbf•ft ± 4 lbf•ft)

LOWER SUSPENSION ARM

Removing the Lower Suspension Arm

1. Safely lift and support the vehicle off the ground. Refer to *INTRODUCTION* subsection.
2. Remove wheel.
3. Detach the shock absorber from the lower suspension arm.

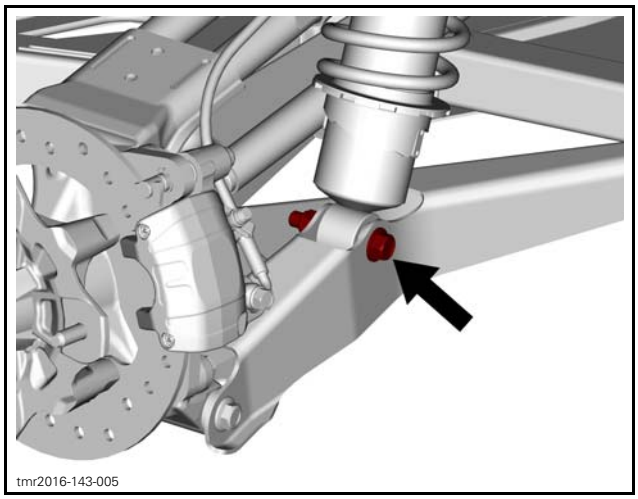
tmr2016-143-005

4. Remove bolts and nuts securing lower suspension arm to knuckle.

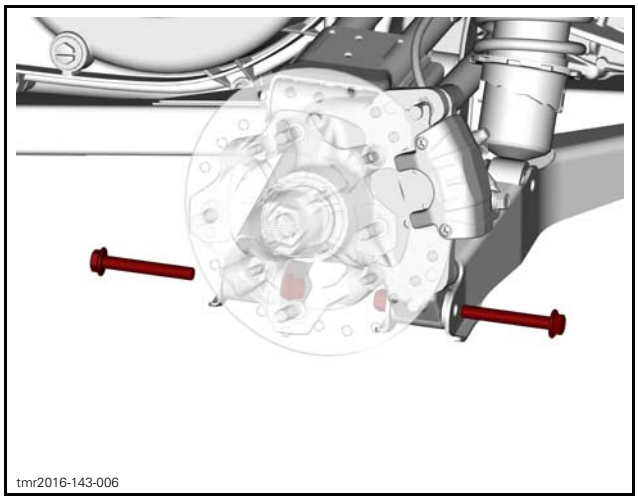
tmr2016-143-006

5. Detach the stabilizer link from the lower suspension arm.

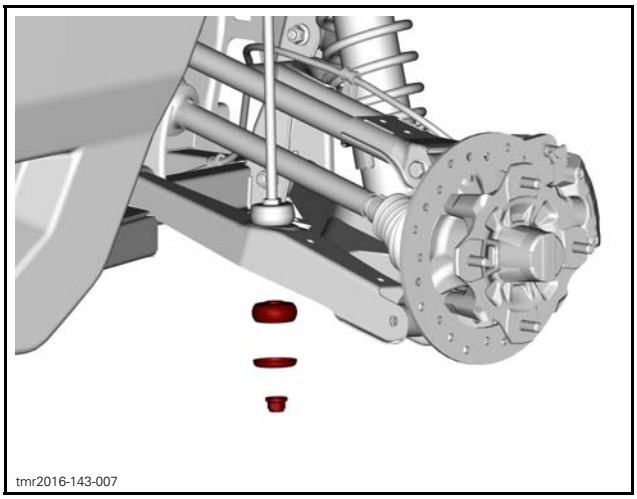
tmr2016-143-007

6. Remove bolts and nuts securing suspension arm to frame.

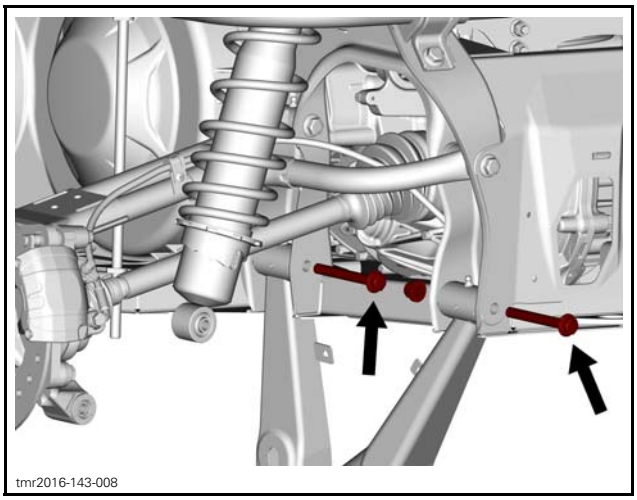
tmr2016-143-008

7. Remove suspension arm.

Installing the Lower Suspension Arm

The installation is the reverse of the removal procedure. However, pay attention to the following.

Lubricate suspension arm. Refer to *MAINTENANCE* in this subsection.

UPPER SUSPENSION ARM

Removing the Upper Suspension Arm

1. Safely lift and support the vehicle off the ground. Refer to *INTRODUCTION* subsection.
2. Remove wheel.
3. Detach the shock absorber from the lower suspension arm.

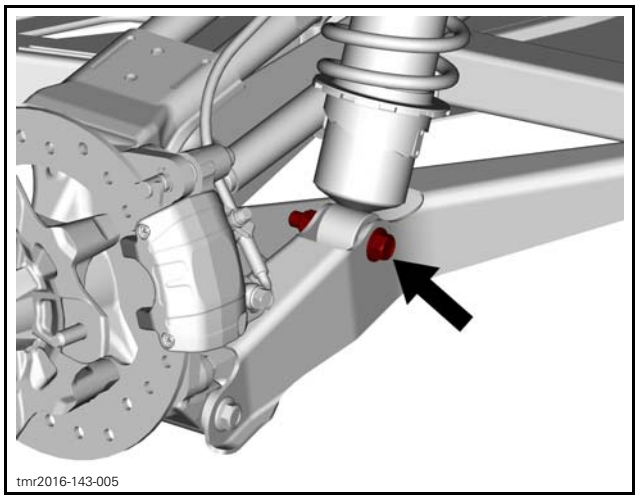
tmr2016-143-005

4. Remove the clamp retaining brake hose from the suspension arm.

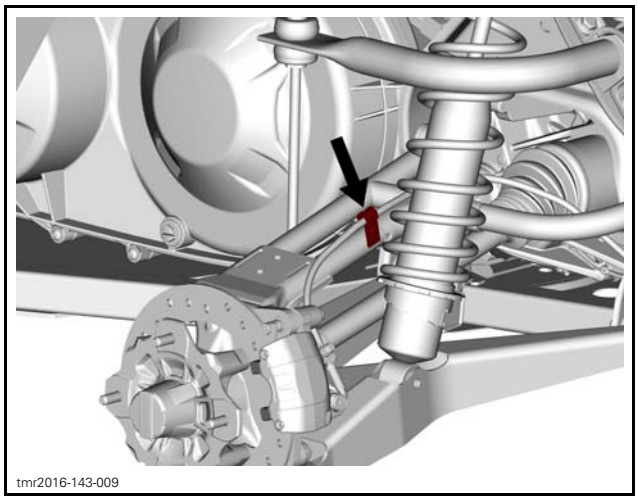
tmr2016-143-009

5. Separate the suspension arm from the knuckle.

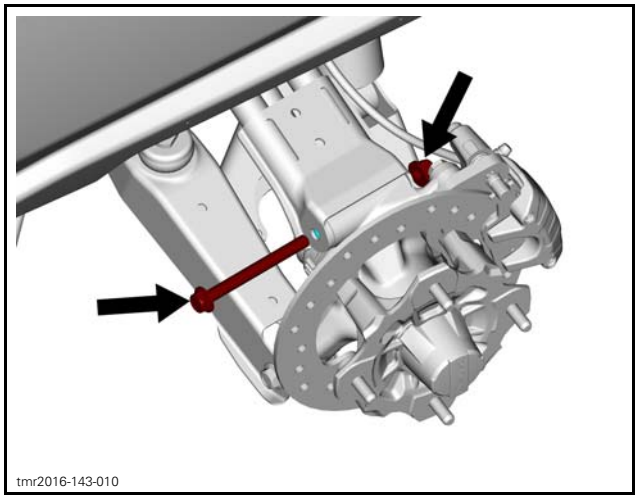
tmr2016-143-010

6. Remove fasteners securing suspension arm to frame.

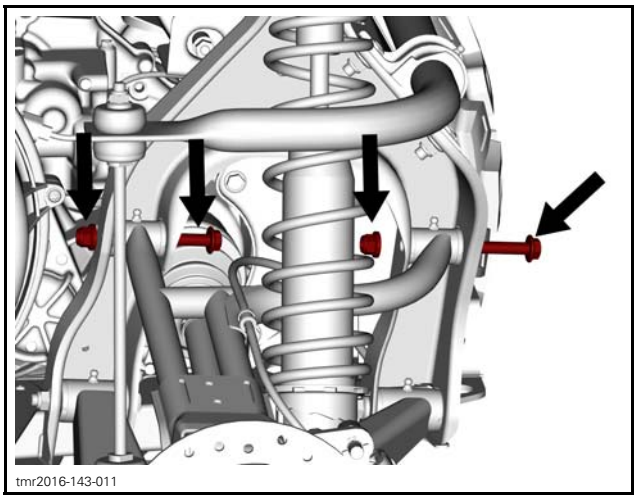
tmr2016-143-011

7. Remove suspension arm.

Installing the Upper Suspension Arm

The installation is the reverse of the removal procedure. However, pay attention to the following.

Lubricate suspension arm. Refer to *MAINTENANCE* in this subsection.

SUSPENSION ARM BUSHINGS

Removing the Suspension Arm Bushings

1. Remove wear plates, cushions and inner bushings from suspension arm.

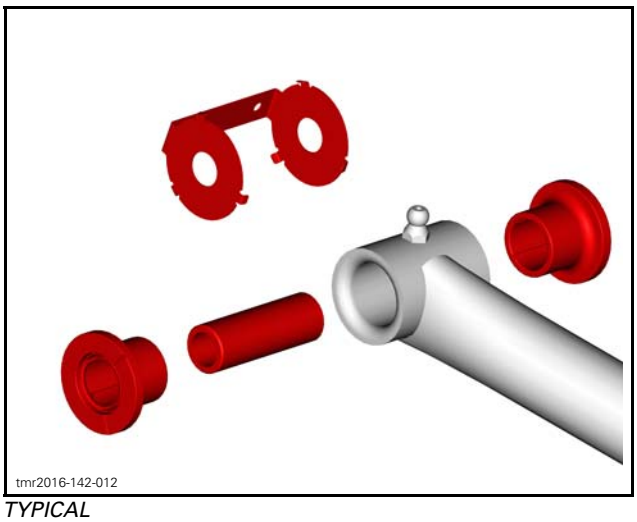
tmr2016-142-012

TYPICAL

Installing the Suspension Arm Bushings

The installation is the reverse of the removal procedure. However, pay attention to the following.

Lubricate suspension arm. Refer to *MAINTENANCE* in this subsection.

BRAKES

SERVICE TOOLS

Description	Part Number	Page
ECM ADAPTER TOOL	529 036 166	318
FLUKE 115 MULTIMETER	529 035 868	318
VACUUM/PRESSURE PUMP	529 021 800	315

SERVICE PRODUCTS

Description	Part Number	Page
BRAKE AND PARTS CLEANER PRO S2	779245	314
BRAKE FLUID DOT 4 (EUR)	779207	315
BRAKE FLUID DOT 4	779151	315
COSMO RUBBER GREASE	715 900 399	315, 319
SYNTHETIC GREASE (EUR)	779231	315
SYNTHETIC GREASE	779162	315
XPS BRAKES AND PARTS CLEANER (USA)	219 701 705	314, 321
XPS BRAKES AND PARTS CLEANER	219 701 776	321

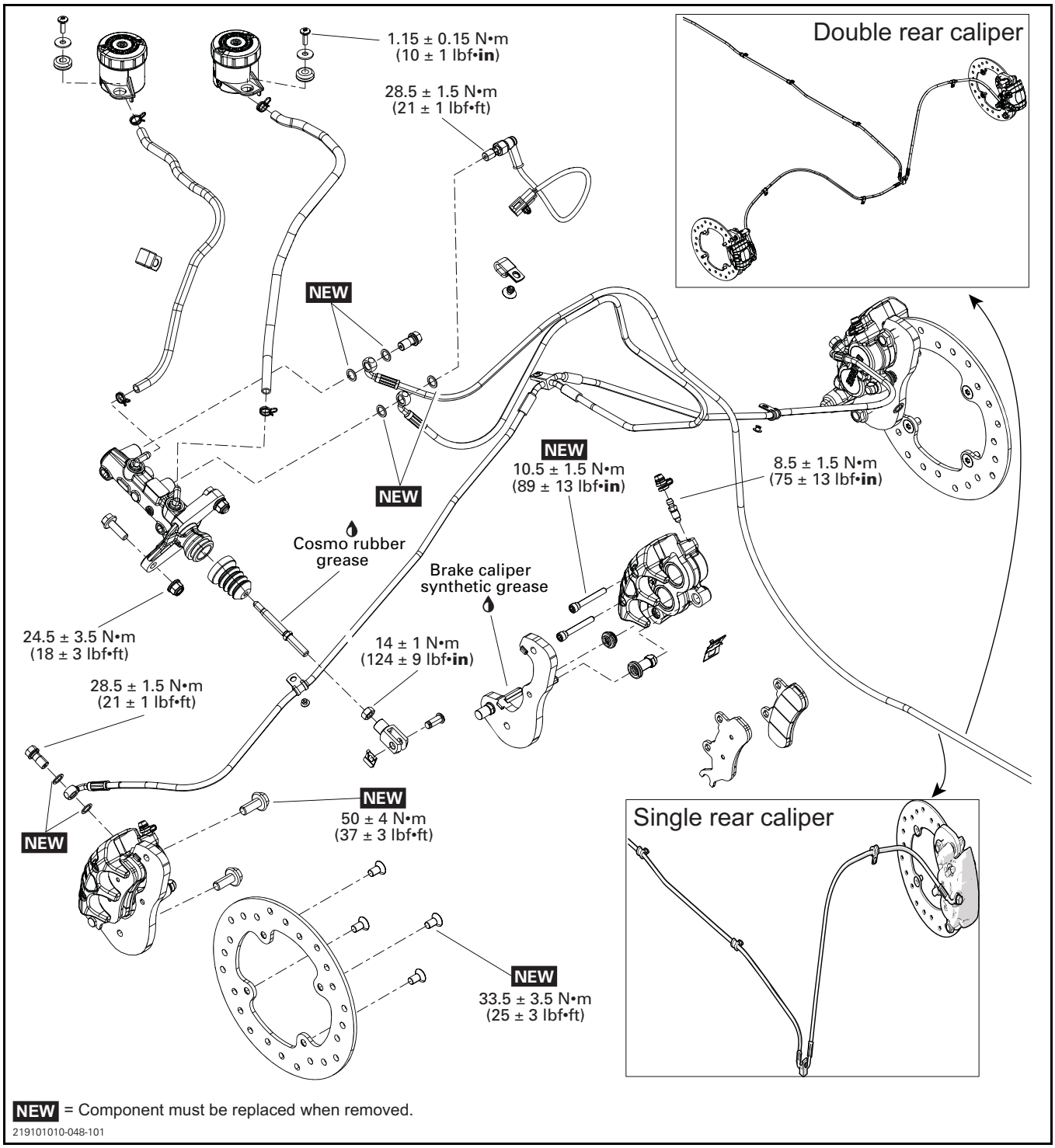
1.15 ± 0.15 N•m
(10 ± 1 lbf•in)
28.5 ± 1.5 N•m
(21 ± 1 lbf•ft)
Double rear caliper
NEW
NEW
NEW
10.5 ± 1.5 N•m
(89 ± 13 lbf•in)
8.5 ± 1.5 N•m
(75 ± 13 lbf•in)
Cosmo rubber grease
Brake caliper synthetic grease
24.5 ± 3.5 N•m
(18 ± 3 lbf•ft)
14 ± 1 N•m
(124 ± 9 lbf•in)
28.5 ± 1.5 N•m
(21 ± 1 lbf•ft)
NEW
50 ± 4 N•m
(37 ± 3 lbf•ft)
NEW
Single rear caliper
NEW
33.5 ± 3.5 N•m
(25 ± 3 lbf•ft)
NEW = Component must be replaced when removed.
219101010-048-101

BRAKE PEDAL AND BRAKE LOCKING MECHANISM

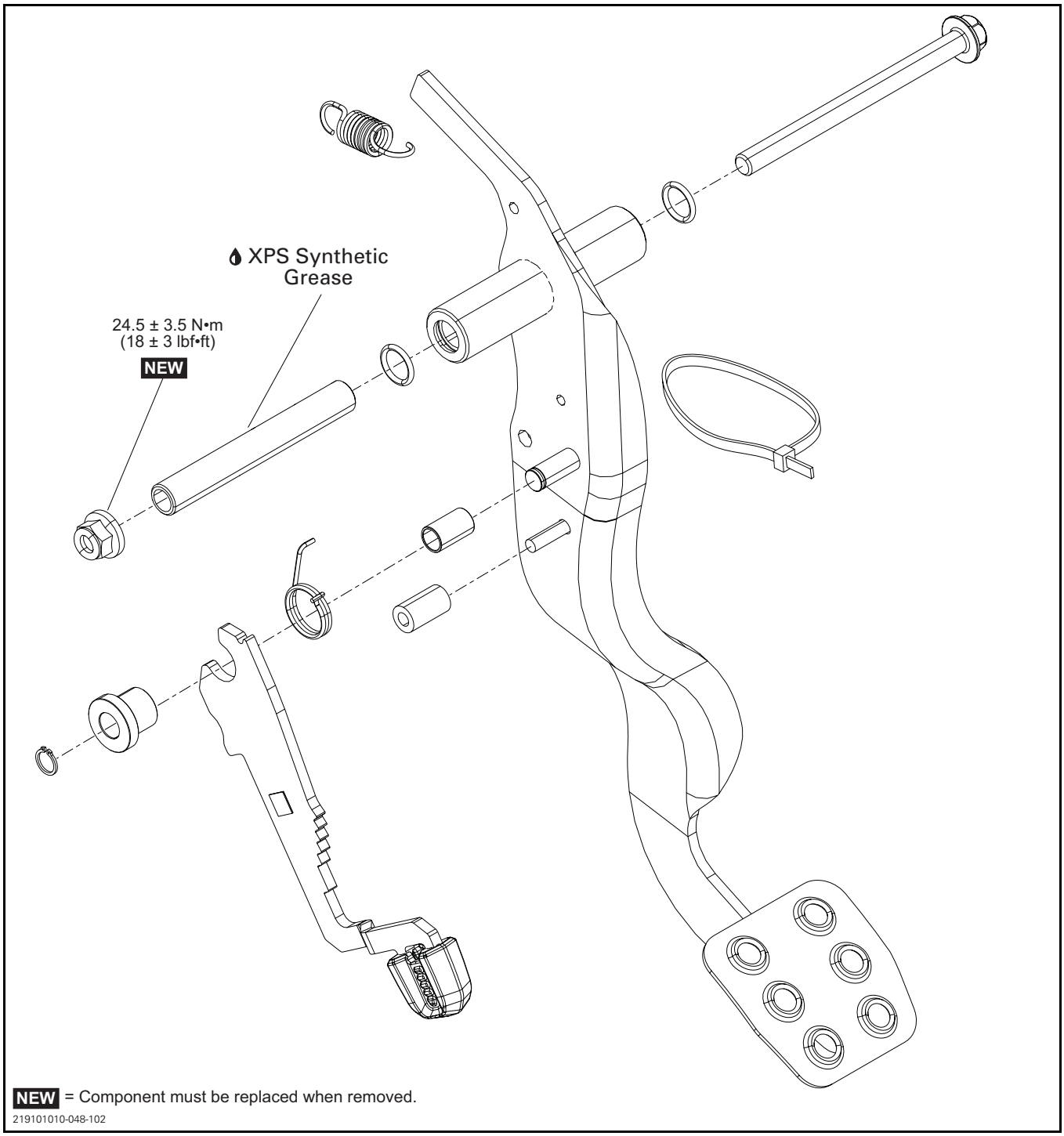

GENERAL

⚠ WARNING

Always check brake system operation after removing or servicing a brake component. If brake pedal feels spongy, make sure all components are properly installed and system is properly bled.

NOTICE **Avoid spilling brake fluid on plastic, rubber or painted parts. Protect these parts with a rag when servicing brake system.**

Sealing washers must be discarded and replaced with new ones every time a Banjo fitting is unscrewed.

Always clean the area around a brake component before servicing.

MAINTENANCE

CLEANING AND INSPECTING THE BRAKE SYSTEM

NOTICE **Do not clean brake components in petroleum based solvent. Use brake system cleaner only. Soiled brake pads must be replaced with new ones.**

Brake Pads

1. Measure brake pad lining thickness. Refer to *TECHNICAL SPECIFICATIONS*.

NOTE: The brake pad grooves are wear indicators.

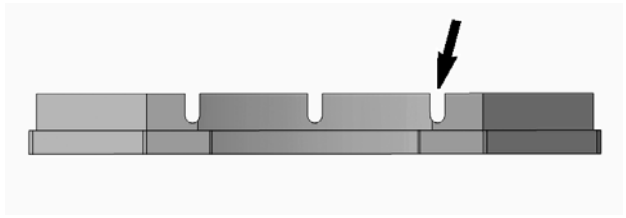

BRAKE PAD GROOVE

⚠ WARNING

Brake pads must always be replaced in pairs.

Brake Caliper

1. Remove calipers then check the following components:
   – Check brake pad pins
   – Check caliper boot for cracks
   – Check caliper movement on its support
   – Check pistons movement
   – Check pistons for scratches, rust or other damages.
2. Clean the following components using the recommended products :
   – Brake pads
   – Caliper support and slider
   – Caliper pistons, spring and pins.

SERVICE PRODUCT	
USA	XPS BRAKES AND PARTS CLEANER (USA) (P/N 219 701 705)
Other countries	BRAKE AND PARTS CLEANER PRO S2 (P/N 779245)

NOTE: Do not remove pistons from caliper for cleaning them.

3. Lubricate caliper sliders and pins using an appropriate brake caliper synthetic grease.

Brake Disc

1. Check brake disc as follows:
   – Check disc thickness
   – Check disc surfaces
   – Check disc warpage.

NOTE: Refer to *TECHNICAL SPECIFICATIONS* for details.

2. Clean brake disc using the recommended products.

SERVICE PRODUCT	
USA	XPS BRAKES AND PARTS CLEANER (USA) (P/N 219 701 705)
Other countries	BRAKE AND PARTS CLEANER PRO S2 (P/N 779245)

Master Cylinder

1. Check master cylinder as follows:
   – Check cleanliness of master cylinder rod and boot.
   – Check master cylinder boot for cracks or damage.
2. If required, clean then lubricate master cylinder rod and boot using rubber grease.

SERVICE PRODUCT
COSMO RUBBER GREASE (P/N 715 900 399)

Brake Pedal

1. Check brake pedal as follows:
   – Brake pedal pivot movement
   – Brake pedal pivot cleanliness.
2. If required, clean then lubricate brake pedal pivot using synthetic grease.

SERVICE PRODUCT	
Scandinavia	SYNTHETIC GREASE (EUR) (P/N 779231)
Other countries	SYNTHETIC GREASE (P/N 779162)

Brake Hoses

1. Check hoses for leaks, crushed, deformations, cracking or scrapes.

NOTE: Any deformation can restrict the proper flow of fluid and cause braking problems.

REPLACING THE BRAKE FLUID

Draining the Brake Fluid

1. Clean and remove reservoir cover with its diaphragm.
2. Connect a clear hose into caliper bleeder.

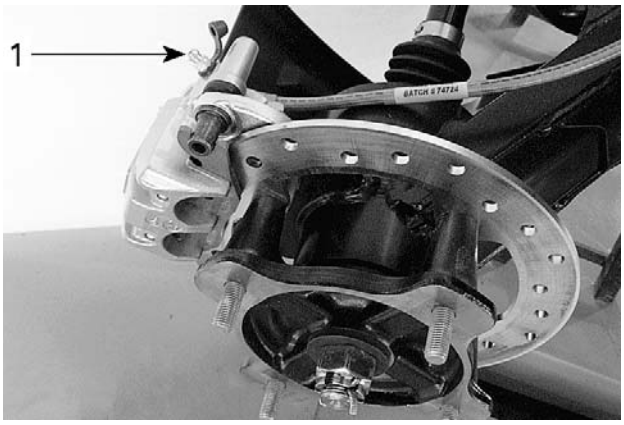

tmr2011-037-101_a

1. Caliper bleeder

3. Loosen caliper bleeder.
4. Pump brake pedal until no more fluid flows out.
5. Repeat draining procedure for the other caliper bleeders.

Filling the Brake Fluid

1. Add recommended brake fluid to MAX. mark. Do not overfill.

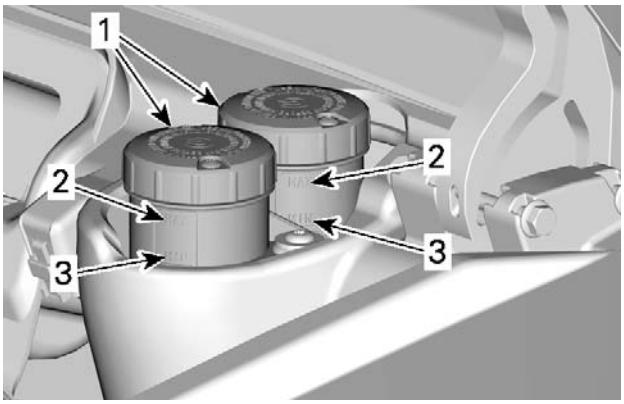

tmo2016-010-050_a

1. Brake fluid reservoirs
2. MAX
3. MIN

RECOMMENDED BRAKE FLUID	
Scandinavia	BRAKE FLUID DOT 4 (EUR) (P/N 779207)
All other countries	BRAKE FLUID DOT 4 (P/N 779151)

⚠ WARNING

– Use only DOT 4 brake fluid from a sealed container.
– Do not use brake fluid from an old or already opened container.

Bleeding the Brake System (Vacuum Pump)

NOTE: Brake fluid reservoir must be kept full to prevent air from being pumped into the system.

1. On each caliper, unscrew bleeder until brake fluid comes out then close it.
2. Install the vacuum pump onto caliper bleeder.

REQUIRED TOOL	
VACUUM/PRESSURE PUMP (P/N 529 021 800)	

3. Place pump to vacuum position.
4. Pump vacuum pump a few times.
5. Loosen bleeder.
6. Continue to pump until no more air bubbles appear in clear hose.
7. Close then tighten bleeder.

TIGHTENING TORQUE	
Bleeder	5.5 N•m ± 1.5 N•m (49 lbf•**in** ± 13 lbf•**in**)

8. Add recommended brake fluid to MAX. mark. Do not overfill.
9. Perform bleeding procedure for the other caliper bleeders.
10. Check brake pedal operation:
    – If brake pedal feels spongy, bleed system again then carry out the *BRAKE SYSTEM PRESSURE VALIDATION* as detailed in this subsection.

Bleeding the Brake System (Manual)

NOTE: Brake fluid reservoir must be kept full to prevent air from being pumped into the system.

1. Connect a clear hose onto caliper bleeder.
2. Pump up system pressure with brake pedal until pedal resistance is felt.
3. Depress and hold brake pedal.
4. Open bleeder and then close it.
5. Release brake pedal slowly.

NOTE: Do not release brake pedal until bleeder has been closed.

6. Repeat procedure until fluid flows out without any air bubbles.
7. Tighten bleeder.

TIGHTENING TORQUE	
Bleeder	5.5 N•m ± 1.5 N•m (49 lbf•**in** ± 13 lbf•**in**)

8. Perform bleeding procedure for the other caliper bleeders.
9. Check brake pedal operation:
    – If brake pedal feels spongy, bleed system again then carry out the *BRAKE SYSTEM PRESSURE VALIDATION* as detailed in this subsection.

INSPECTION

BRAKE SYSTEM PRESSURE VALIDATION

NOTICE **Do not pump up the brake pedal repeatedly before doing the validation.**

REQUIRED TOOLS	
Compression force gauge	
Ruler	

1. Position a ruler perpendicularly to brake pedal.

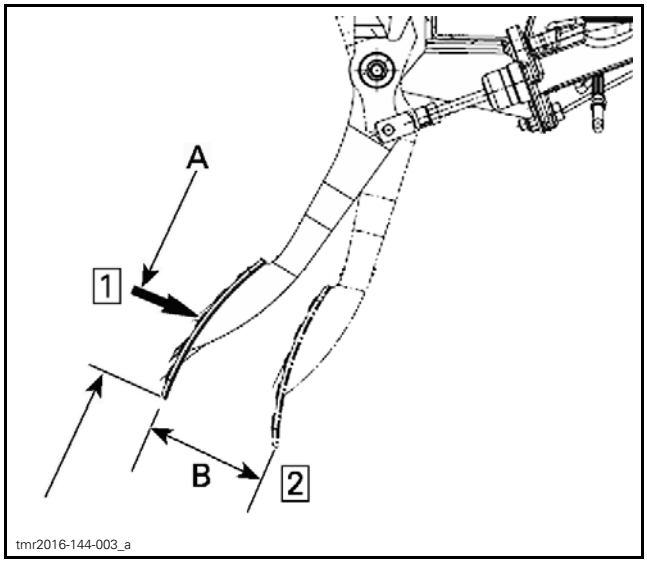

Step 1: Position compression force gauge at distance A
Step 2: Push brake pedal from distance B

A. 41 mm ± 5 mm (1.6 in ± .2 in)
B. 70 mm (2-3/4 in)

MINIMUM BRAKE PEDAL LOAD AT 70 MM	
Defender MAX Defender PRO	200 N (45 lbf)
Defender Defender 6x6	250 N (56.2 lbf)

2. If load reading is not in accordance with the specification:
   2.1 Clean and inspect the brake system.
   2.2 Bleed brake system.
   NOTE: Refer to *MAINTENANCE* in this subsection.

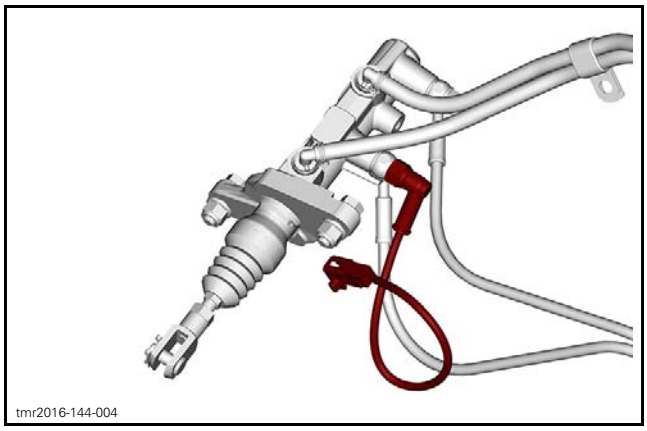
tmr2016-144-004

PROCEDURES

BRAKE LIGHT SWITCH

Brake Light Switch Location

Brake light switch is located underneath LH front fender on master cylinder.

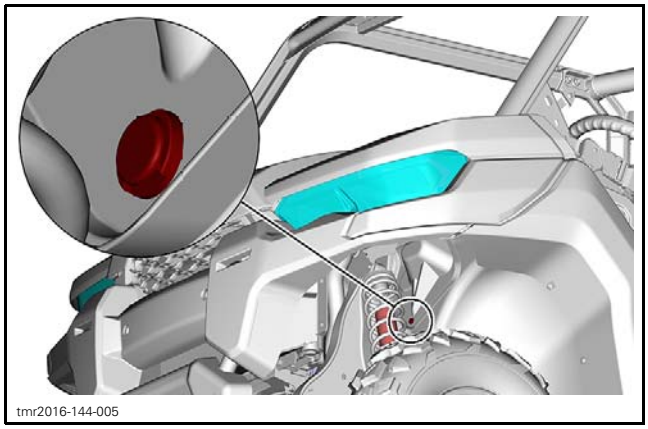
tmr2016-144-005

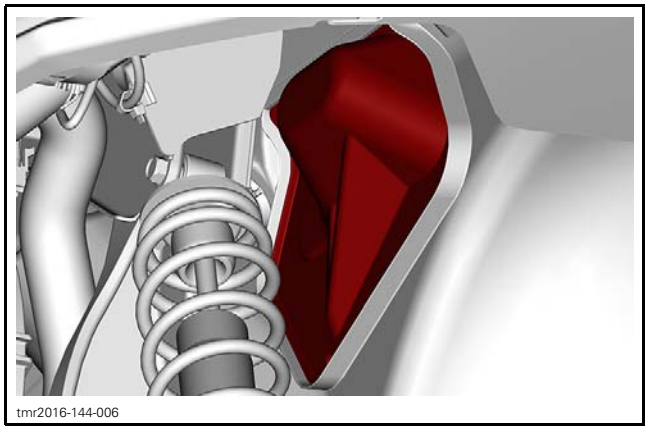
tmr2016-144-006

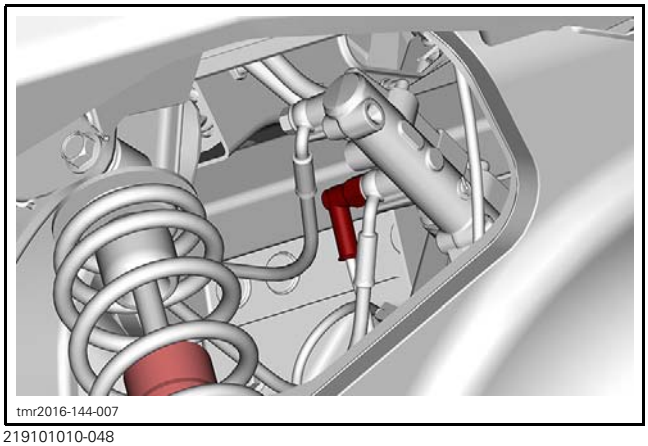
tmr2016-144-007

Testing the Brake Light Switch Resistance

REQUIRED TOOL	
FLUKE 115 MULTIMETER (P/N 529 035 868)	

1. Disconnect brake light switch connector.
2. Check switch operation as follows.

BRAKE LIGHT SWITCH POSITION	PIN		RESISTANCE
Firmly pushed	1	2	Close to 0 Ω
Released			Infinite (OL)

Replace switch as required.

If the switch tests good, verify wire continuity between harness connector and ECM-B connector.

REQUIRED TOOL	
ECM ADAPTER TOOL (P/N 529 036 166)	

ECM-B CONNECTOR PIN	HARNESS CONNECTOR WIRES	RESISTANCE
C-3	RED/ORANGE	Close to 0 Ω

NOTE: If only the LH taillight does not work, check brake relay (R8) in fuse box 1.

Replacing the Brake Light Switch

1. Disconnect brake light switch connector.
2. Drain front brake line.
3. Remove brake light switch from master cylinder.

NOTE: Use shop rags to catch any spilled brake fluid.

4. Install new sealing washers.
5. Install new brake light switch on master cylinder.

TIGHTENING TORQUE	
Brake light switch	28.5 N•m ± 1.5 N•m (21 lbf•ft ± 1 lbf•ft)

6. Connect brake light switch connector.
7. Refill and bleed brake system. Refer to *MAINTENANCE* in this subsection.

MASTER CYLINDER

Removing the Master Cylinder

1. Drain brake system, refer to *MAINTENANCE* in this subsection.
2. Remove master cylinder protective cover.

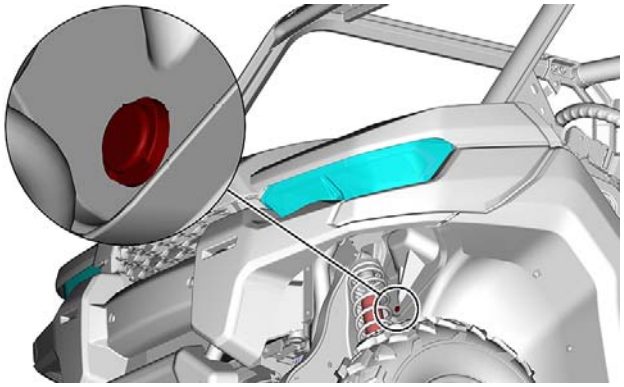
tmr2016-144-005

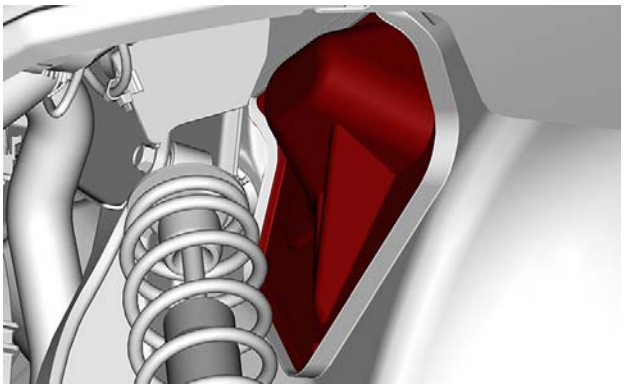
tmr2016-144-006

3. Remove / disconnect:
   1. Master cylinder push rod clip
   2. Brake light switch connector
   3. Brake light switch and rear brake hose banjo fitting screw.

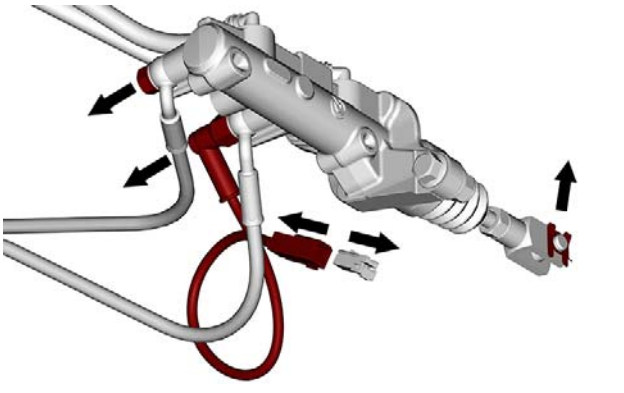
tmr2016-144-008

4. Remove / disconnect:
   1. Master cylinder push rod
   2. Brake oil reservoir hoses
   3. Master cylinder screws.

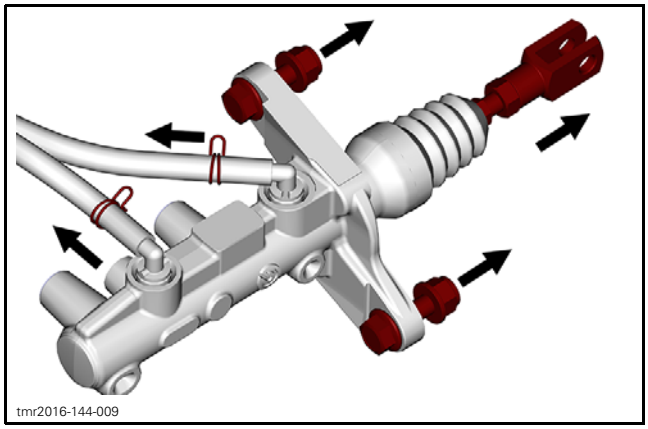
tmr2016-144-009

5. Remove master cylinder from vehicle.

Inspecting the Master Cylinder

Check boot for crack.

Check rod for wear and scratch.

Check master cylinder housing and reservoir for leaks or damage.

Installing the Master Cylinder

The installation is the reverse of the removal procedure. However, pay attention to the following.

Install new sealing washers.

TIGHTENING TORQUE	
Rear brake hose banjo fitting screw	28.5 N•m ± 1.5 N•m (21 lbf•ft ± 1 lbf•ft)
Brake light switch nut	

SERVICE PRODUCT	
Push rod end lubrication	COSMO RUBBER GREASE (P/N 715 900 399)
Master cylinder boot lubrication	

Refill and bleed brake system. Refer to *MAINTENANCE* in this subsection.

Adjust master cylinder rod. Refer to *ADJUSTING THE MASTER CYLINDER ROD* in this subsection.

Adjusting the Master Cylinder Rod

1. Loosen locking nut of master cylinder rod.

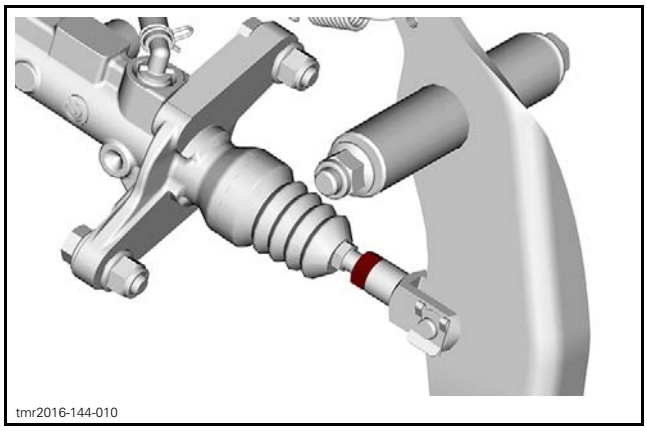
tmr2016-144-010

2. Move brake pedal up and down to check if there is a free play.

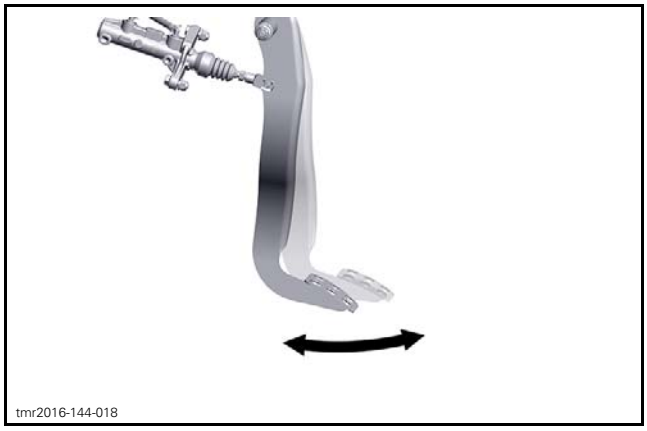
tmr2016-144-018

3. Rotate master cylinder rod to generate a free play according to specification.

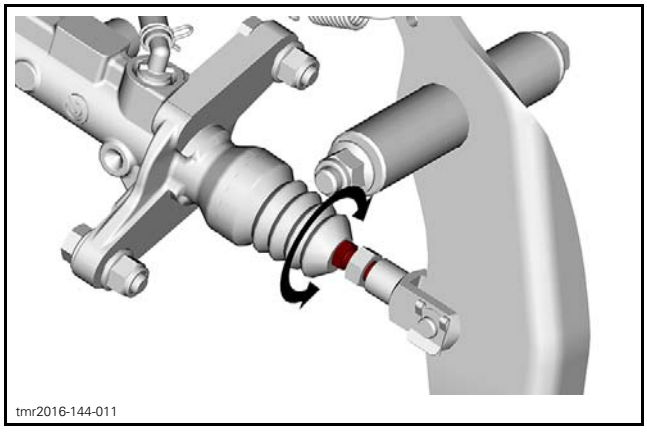
tmr2016-144-011

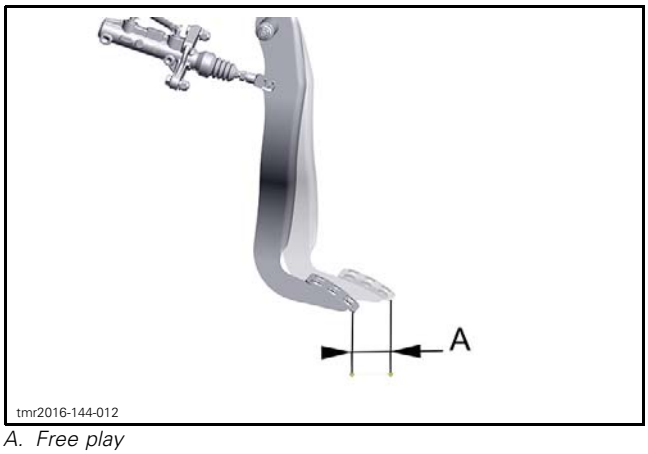

A. Free play

BRAKE PEDAL FREE PLAY
3.5 mm ± 1.5 mm (1/8 in ± 1/16 in)

4. Tighten locking nut of master cylinder rod to specification.

TIGHTENING TORQUE	
Rod locking nut	14 N•m ± 1 N•m (124 lbf•**in** ± 9 lbf•**in**)

CALIPER

Removing the Caliper

1. Remove wheel. Refer to *WHEELS AND TIRES* subsection.
2. If caliper is removed from vehicle for replacement, remove brake hose banjo fitting screw.

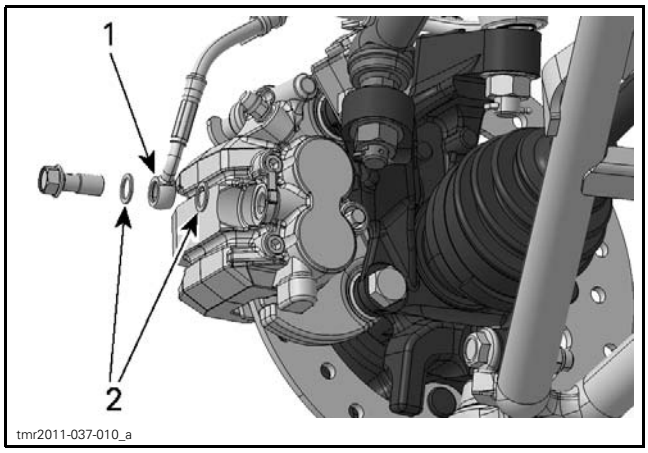

TYPICAL - FRONT CALIPER SHOWN
1. Brake hose
2. Sealing washers

3. Remove screws securing caliper support to knuckle.

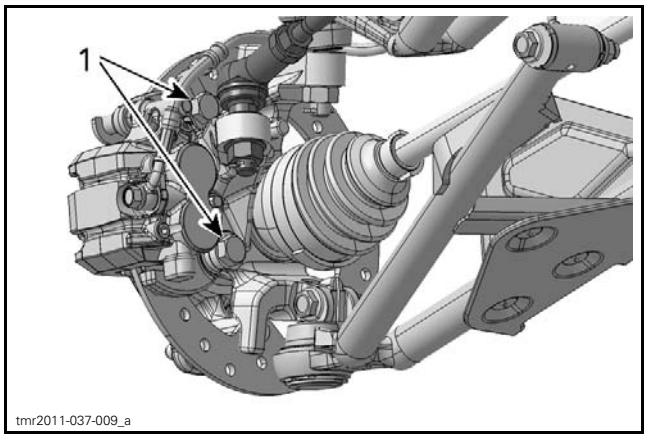

TYPICAL - FRONT CALIPER SHOWN
1. Caliper screws

4. Place caliper assembly onto a support.

NOTICE **Do not let caliper hangs by the hose and do not stretch or twist hose.**

Installing the Caliper

The installation is the reverse of the removal procedure. However, pay attention to the following.

If caliper was removed for replacement:
- Install new sealing washers.
- Refill and bleed brake system. Refer to *MAINTENANCE* in this subsection.

Install new caliper retaining screws

TIGHTENING TORQUE	
Brake hose banjo fitting screw	28.5 N•m ± 1.5 N•m (21 lbf•ft ± 1 lbf•ft)
Caliper retaining screw	50 N•m ± 4 N•m (37 lbf•ft ± 3 lbf•ft)

BRAKE PADS

Replacing the Brake Pads

1. Loosen brake pad pins.
2. Remove caliper from knuckle. Refer to *REMOVING THE CALIPER* in this subsection.
3. Remove and discard brake pad pins and pads.

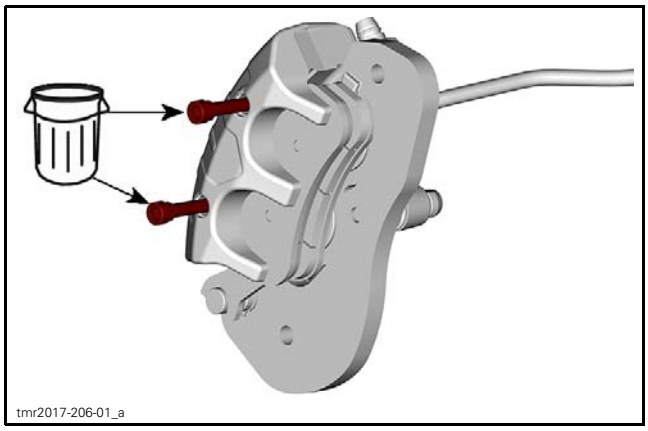

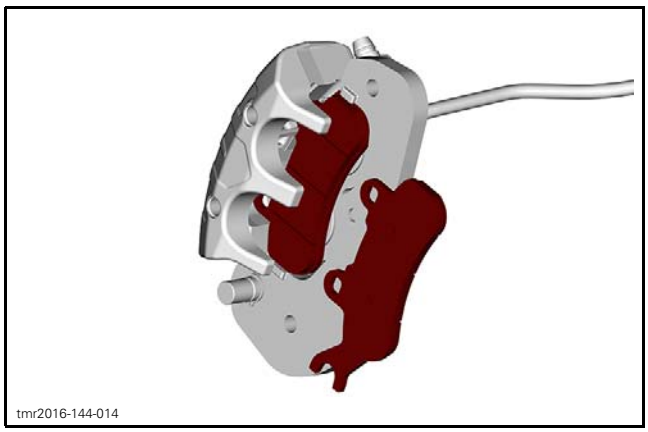

4. Use XPS brakes and parts cleaner to clean pistons end.

SERVICE PRODUCT	
USA	XPS BRAKES AND PARTS CLEANER (USA) (P/N 219 701 705)
Other countries	XPS BRAKES AND PARTS CLEANER (P/N 219 701 776)

5. Push caliper pistons inward.

NOTE: To avoid damaging pistons, use an old pad to push it into the caliper using a C-clamp.

6. Ensure brake pad spring is properly positioned onto caliper.

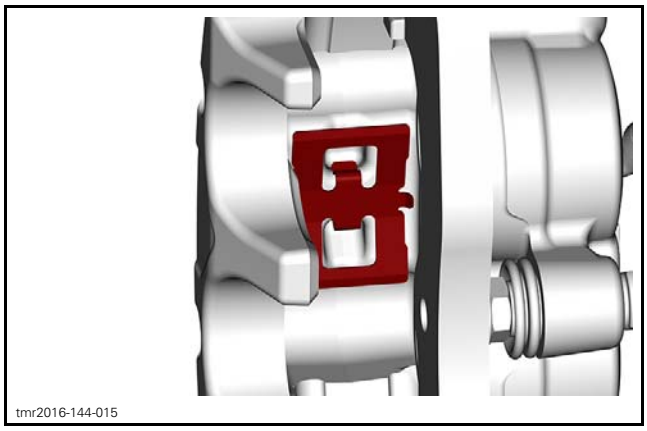

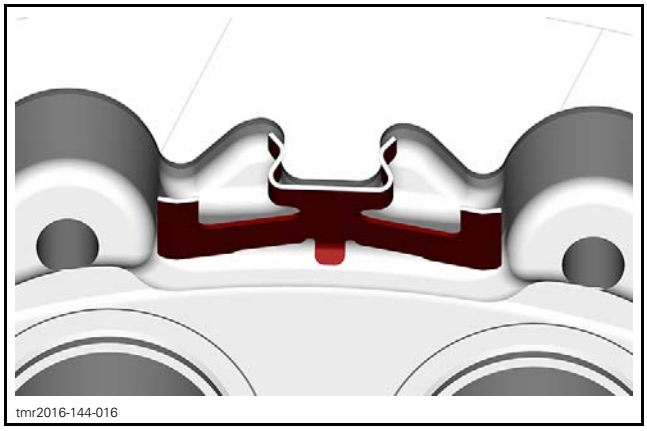

7. Install new brake pads.
8. Use XPS brakes and parts cleaner to clean brake pad pins.

SERVICE PRODUCT	
USA	XPS BRAKES AND PARTS CLEANER (USA) (P/N 219 701 705)
Other countries	XPS BRAKES AND PARTS CLEANER (P/N 219 701 776)

9. Install new brake pad pins.
10. Install caliper on knuckle, refer to *INSTALLING THE CALIPER* in this subsection.
11. Tighten brake pad pins to specification.

TIGHTENING TORQUE	
Brake pad pin	10 N•m ± 1.5 N•m (89 lbf•**in** ± 13 lbf•**in**)

BRAKE DISC

Inspecting the Brake Disc

Check disc surfaces for scratches or grooves on both sides.

Measure thickness and warpage of the disc. Ensure measures are as per specifications. Refer to *TECHNICAL SPECIFICATIONS*.

NOTICE Do not machine Brake discs.

Replacing the Brake Disc

1. Remove caliper from knuckle. Refer to *REMOVING THE CALIPER* in this subsection.
2. Remove wheel hub. Refer to *FRONT DRIVE* or *REAR DRIVE* subsection.
3. Remove brake disc screws.

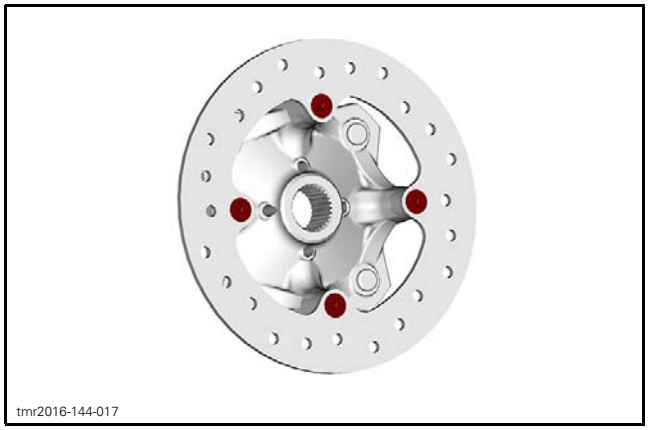

4. Replace brake disc.
5. Install new brake disc screws.
6. Tighten brake disc screws to specification.

TIGHTENING TORQUE	
Brake disc screw	33.5 N•m ± 3.5 N•m (25 lbf•ft ± 3 lbf•ft)

7. Install wheel hub, then caliper.
8. Install new cotter pin to secure wheel hub nut.

BODY (3-UP)

SERVICE PRODUCTS

Description	Part Number	Page
XPS ATV WASH	219 701 702	333

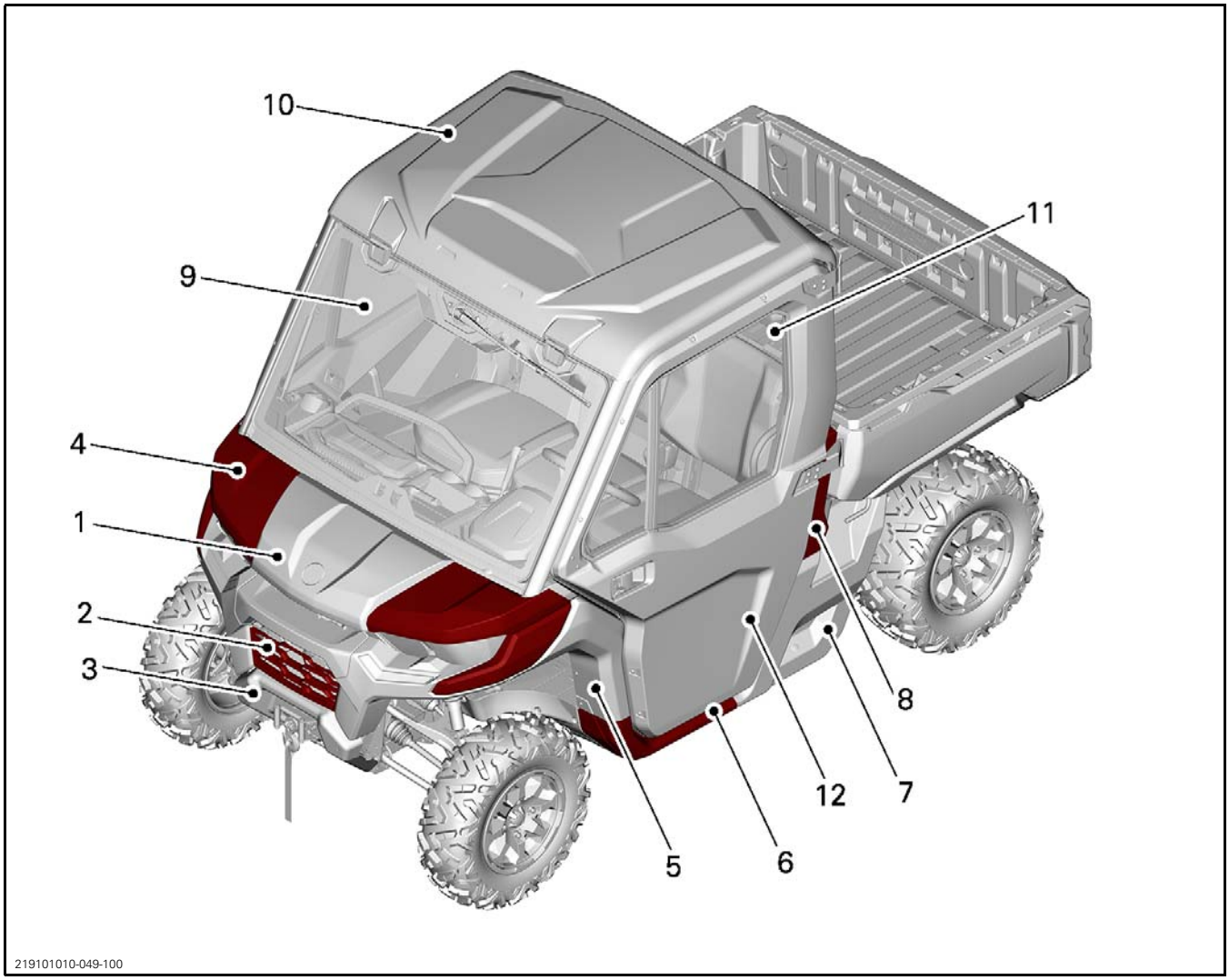

1. *Front service cover*
2. *Front grille*
3. *Front fascia*
4. *Front fender*
5. *Front lateral panel*
6. *Central lateral panel*
7. *Rear lateral panel*
8. *Upper lateral panel*
9. *Full windshield with wiper (CAB models only)*
10. *Roof (If equipped)*
11. *Rear window (CAB models only)*
12. *Full door (CAB models only)*

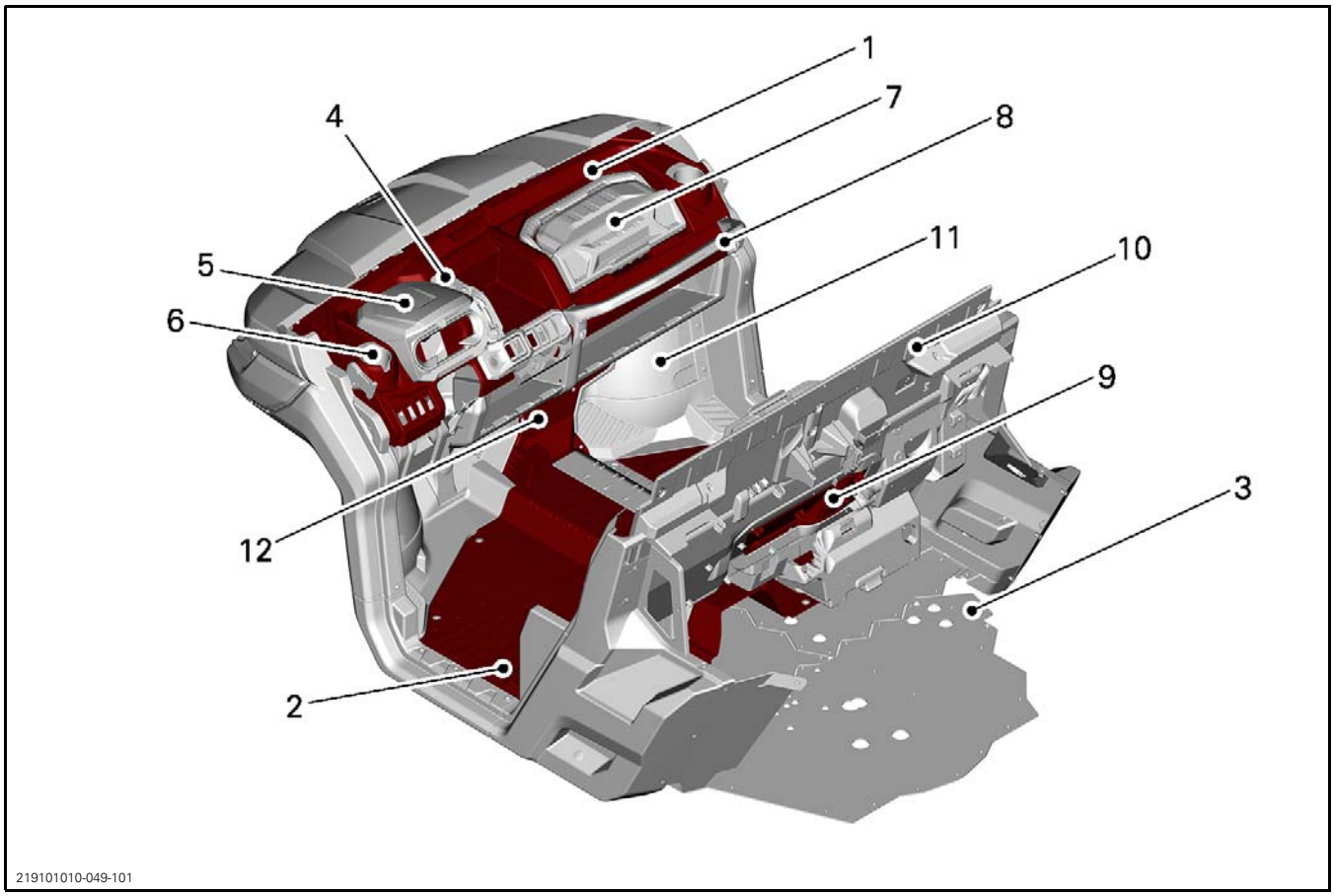

1. *Upper dash*
2. *Floor cover*
3. *Skid plate*
4. *Shift indicator*
5. *Gauge support and storage compartment cover*
6. *Cup holder*
7. *Removable glove box*
8. *Passenger handhold*
9. *Rear service cover*
10. *Rear upper bulkhead*
11. *Front bulkhead*
12. *Front trim panel*

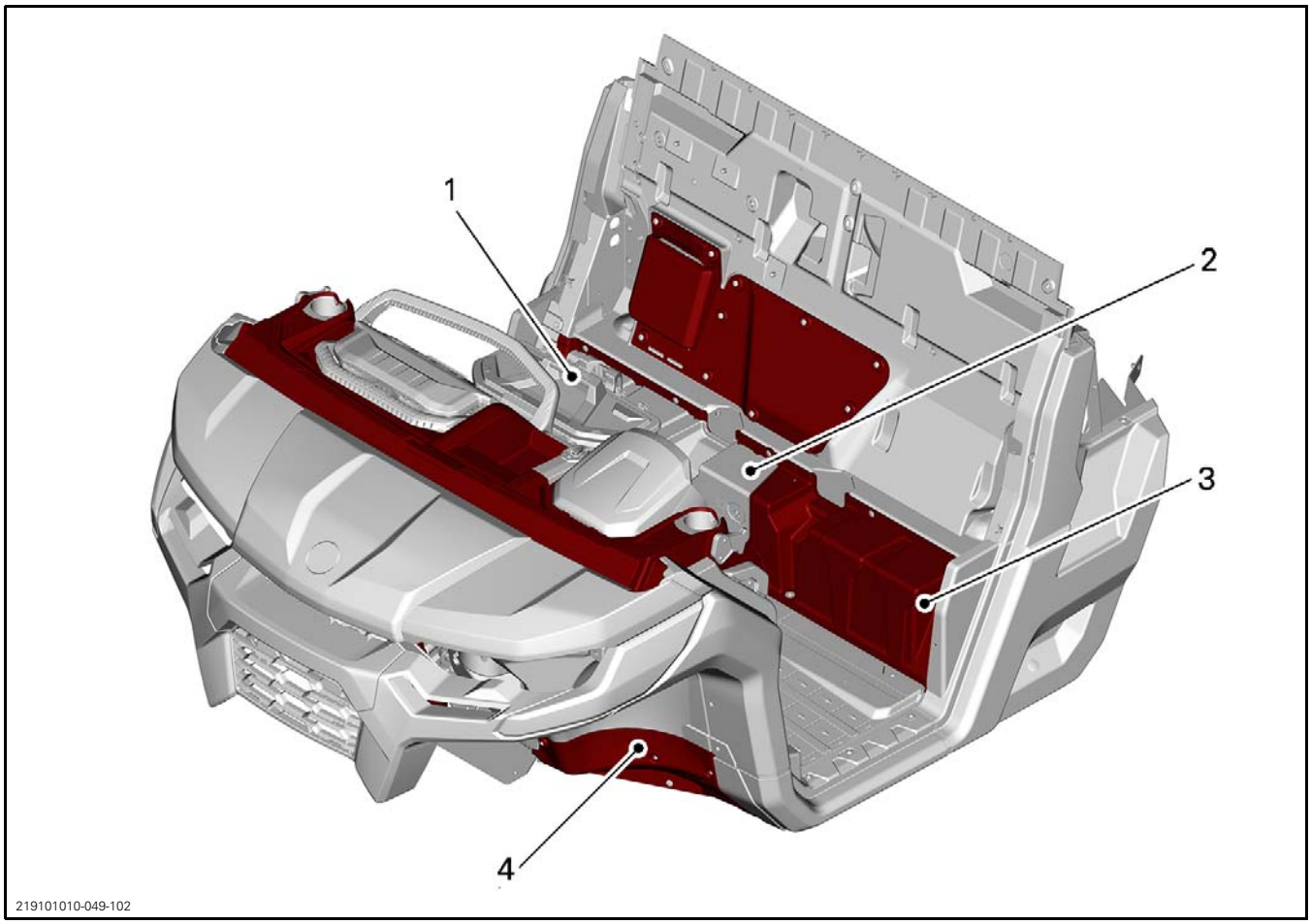

1. *Storage box*
2. *Battery cover*
3. *Rear lower bulkhead*
4. *Front deflector*

FRONT AND SIDE

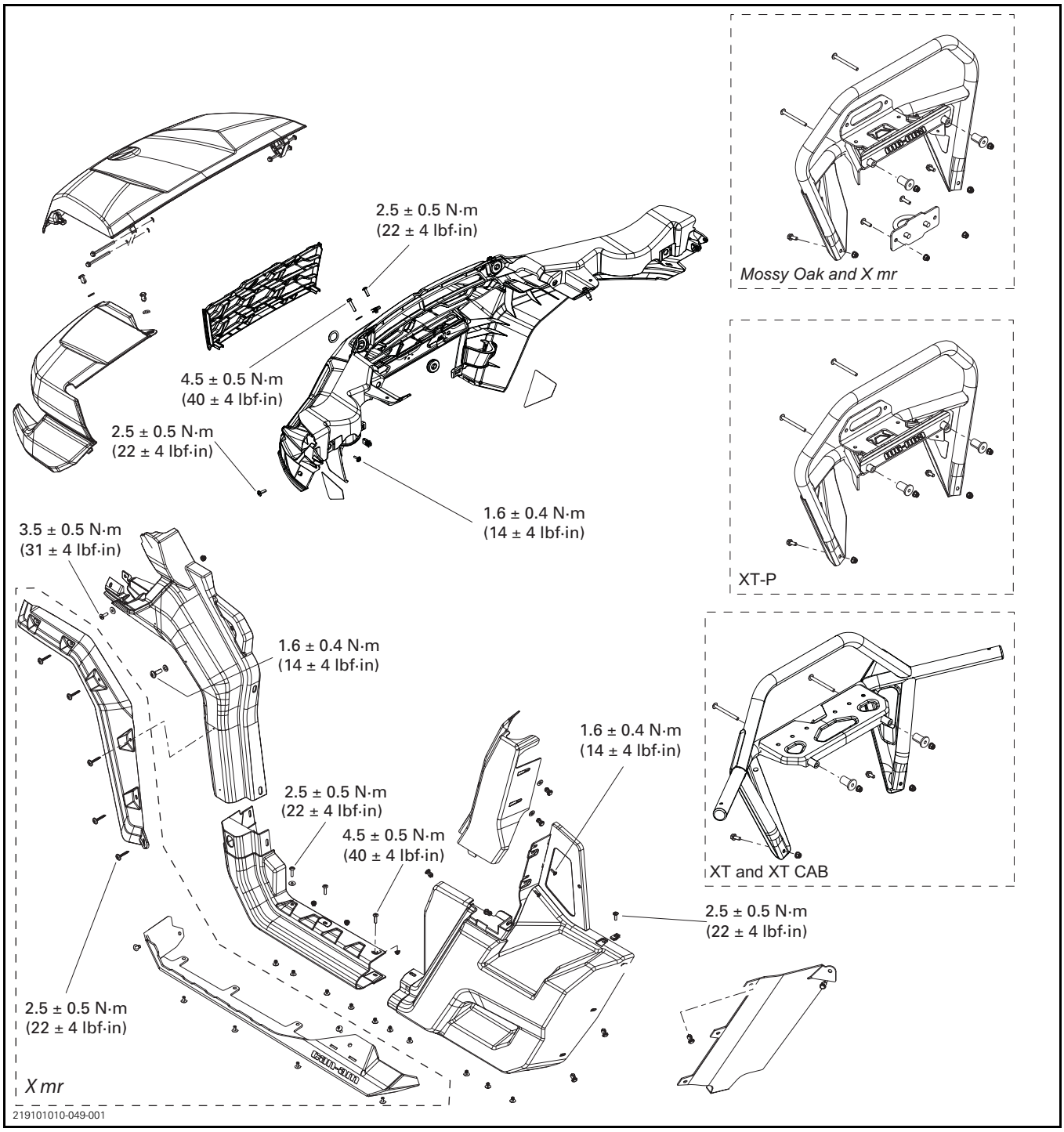

DASHBOARD

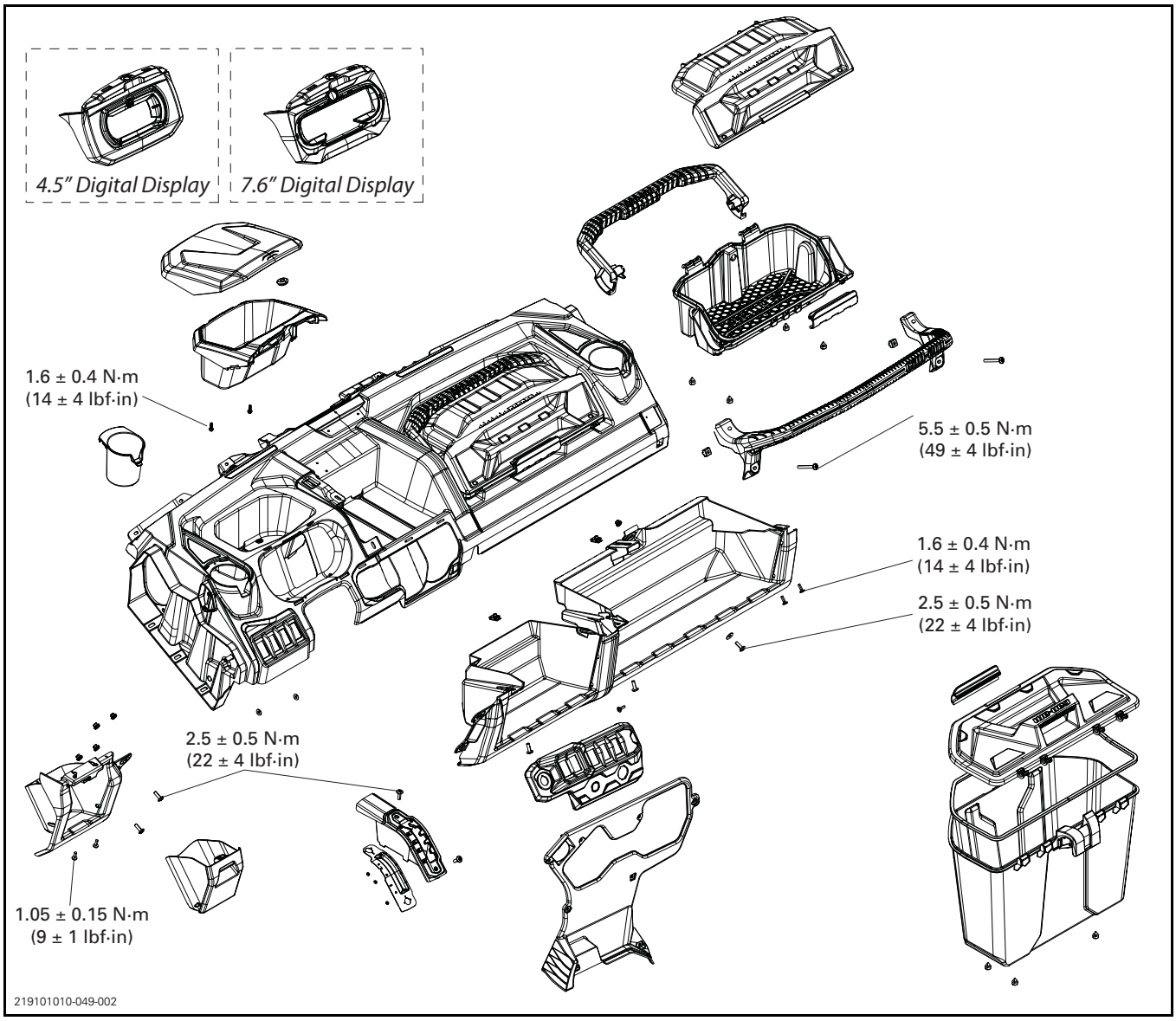
4.5" Digital Display
7.6" Digital Display
1.6 ± 0.4 N·m
(14 ± 4 lbf·in)
5.5 ± 0.5 N·m
(49 ± 4 lbf·in)
1.6 ± 0.4 N·m
(14 ± 4 lbf·in)
2.5 ± 0.5 N·m
(22 ± 4 lbf·in)
2.5 ± 0.5 N·m
(22 ± 4 lbf·in)
1.05 ± 0.15 N·m
(9 ± 1 lbf·in)
219101010-049-002

SKID PLATE

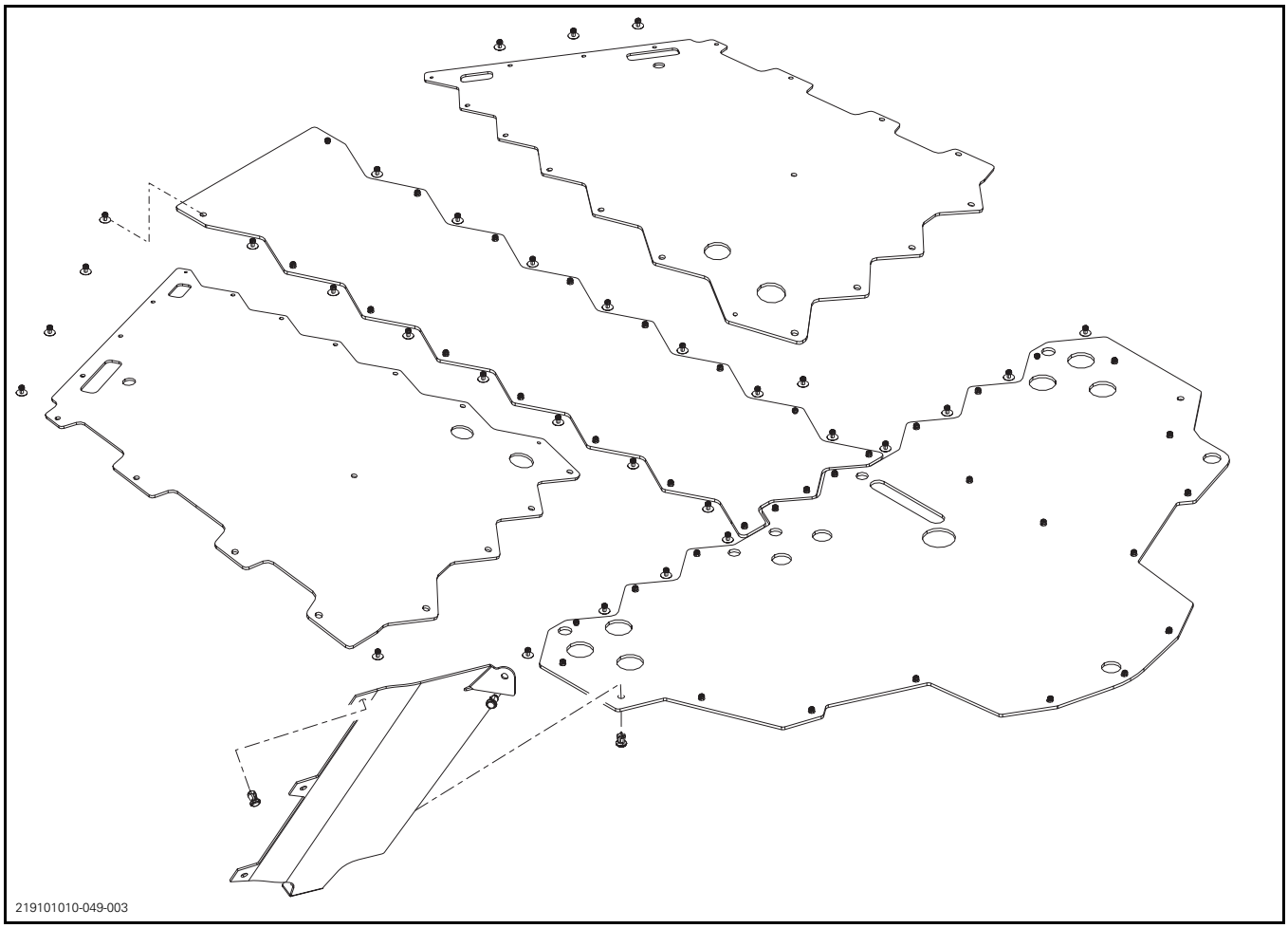

FIREWALLS AND FLOOR

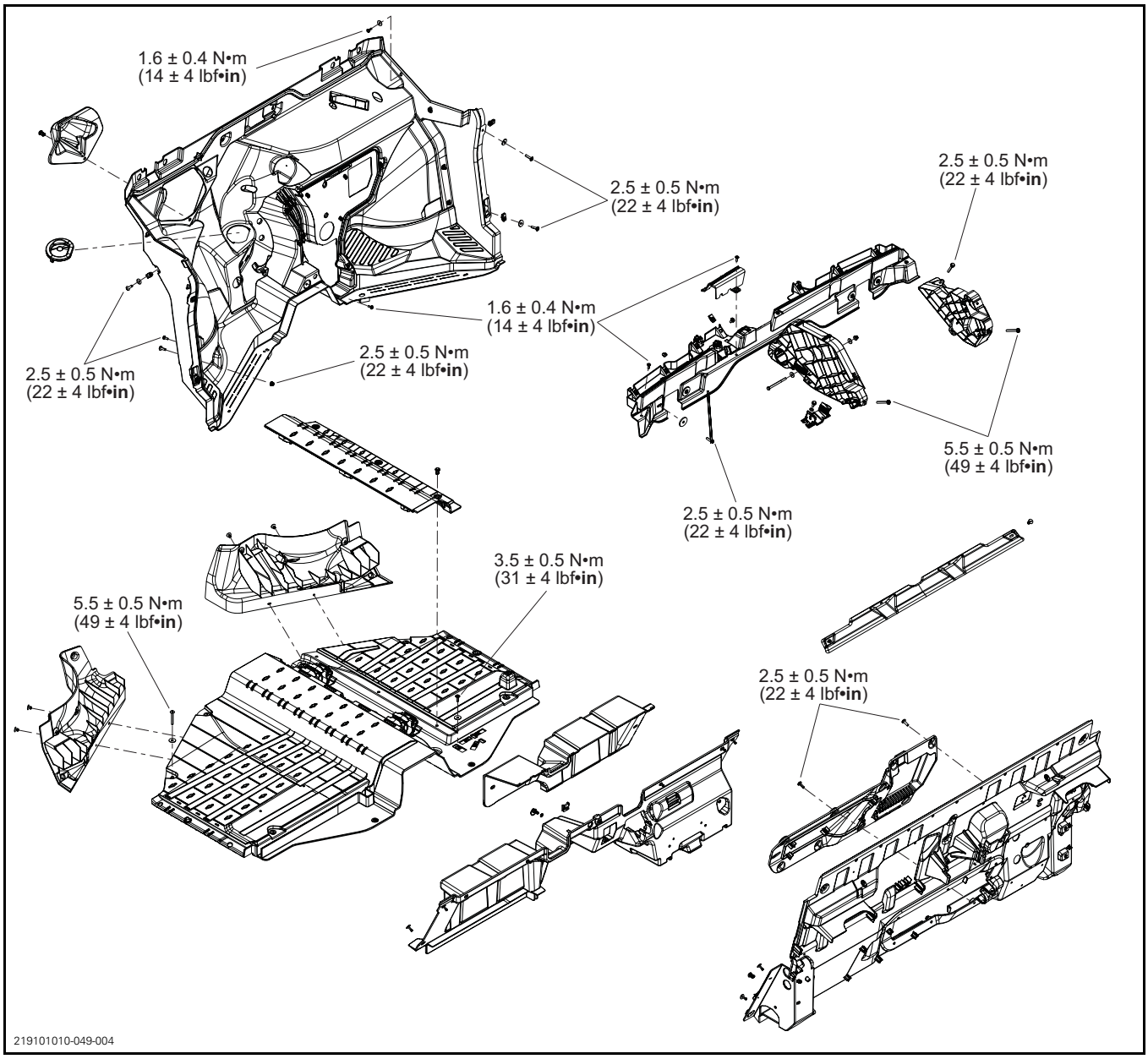

CAB ENCLOSURE WITH ROOF

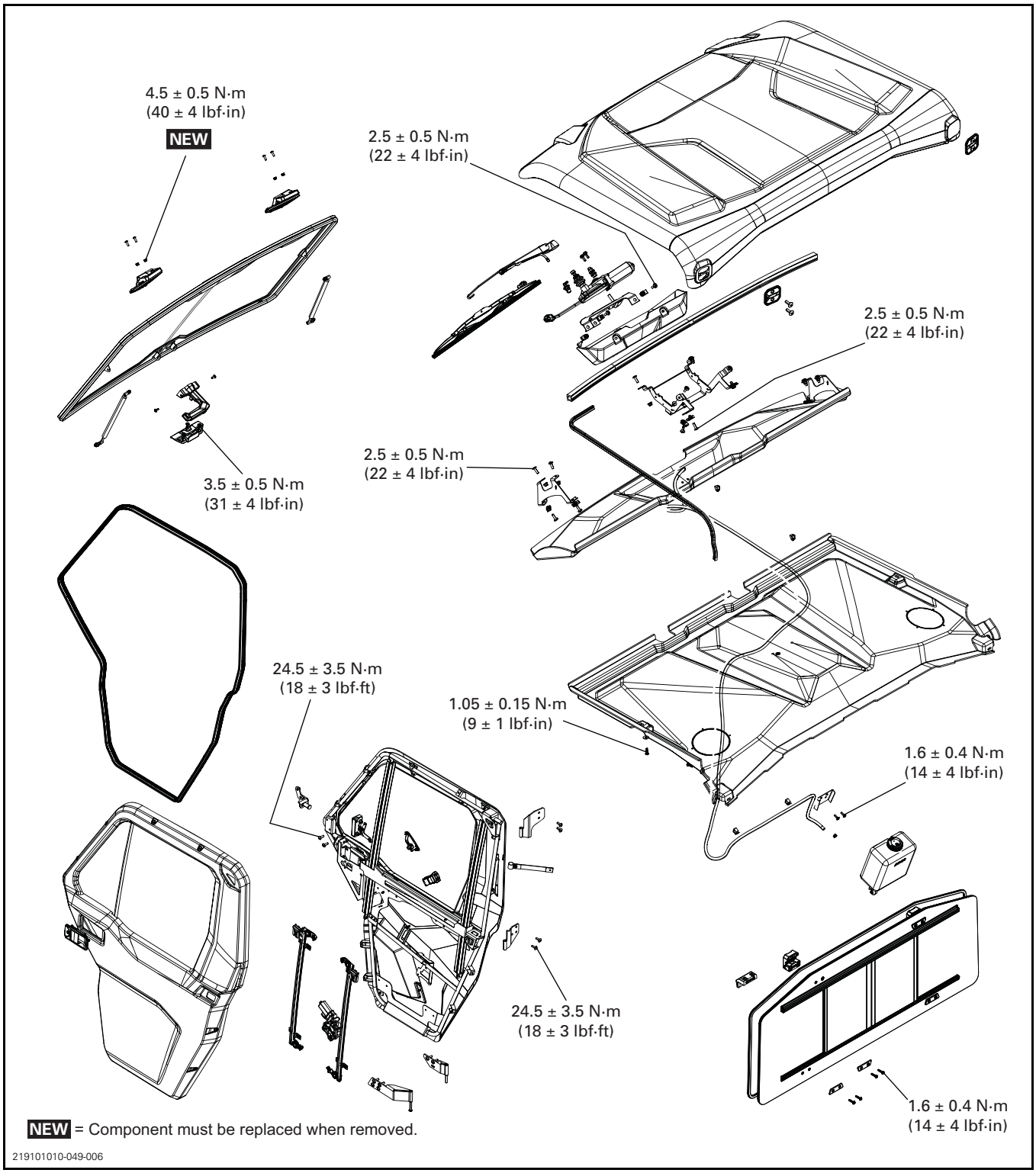

SEATS

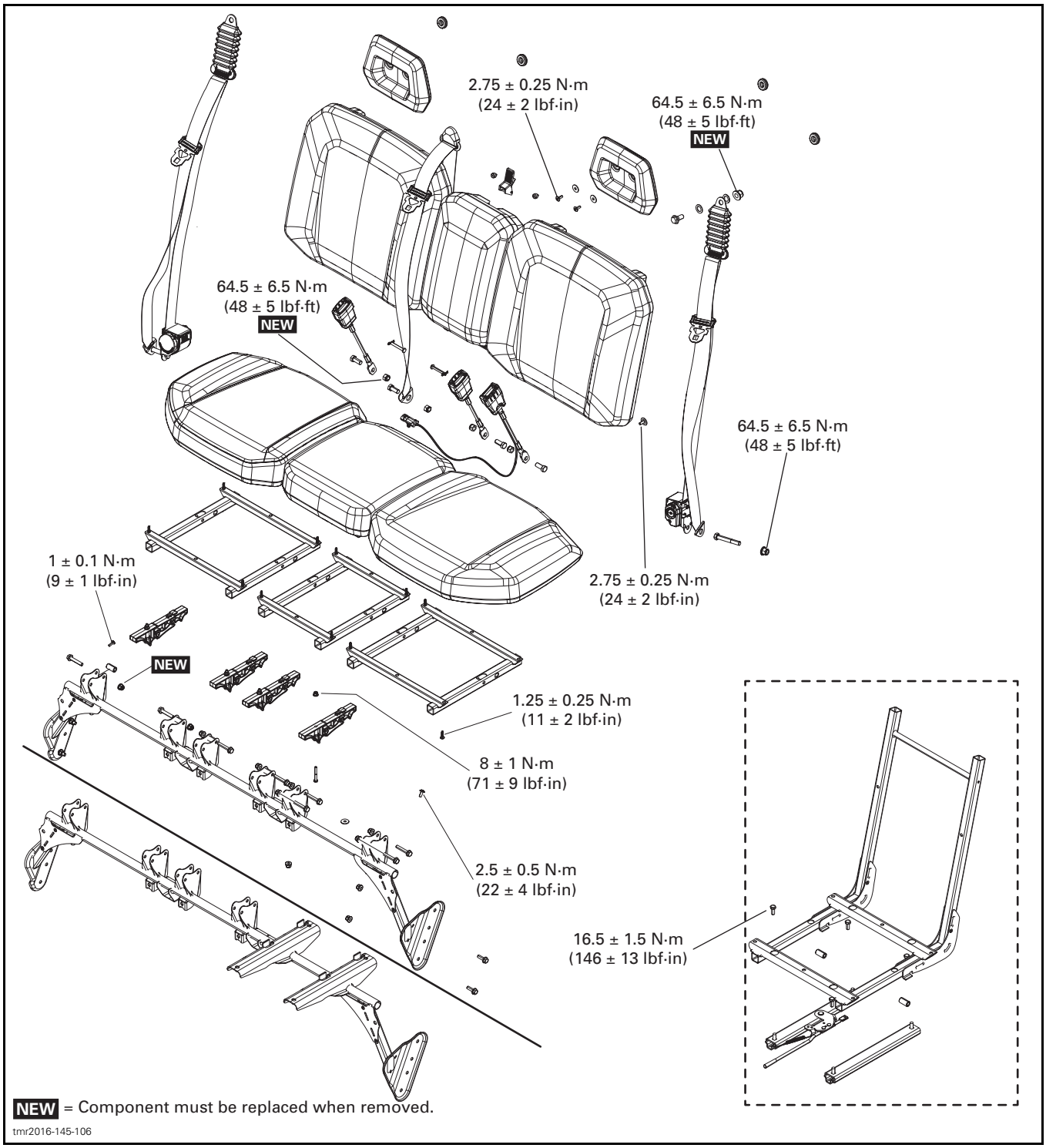
2.75 ± 0.25 N·m
(24 ± 2 lbf·in)
64.5 ± 6.5 N·m
(48 ± 5 lbf·ft)
NEW
64.5 ± 6.5 N·m
(48 ± 5 lbf·ft)
NEW
64.5 ± 6.5 N·m
(48 ± 5 lbf·ft)
1 ± 0.1 N·m
(9 ± 1 lbf·in)
2.75 ± 0.25 N·m
(24 ± 2 lbf·in)
NEW
1.25 ± 0.25 N·m
(11 ± 2 lbf·in)
8 ± 1 N·m
(71 ± 9 lbf·in)
2.5 ± 0.5 N·m
(22 ± 4 lbf·in)
16.5 ± 1.5 N·m
(146 ± 13 lbf·in)
NEW = Component must be replaced when removed.
tmr2016-145-106

SIDE NETS

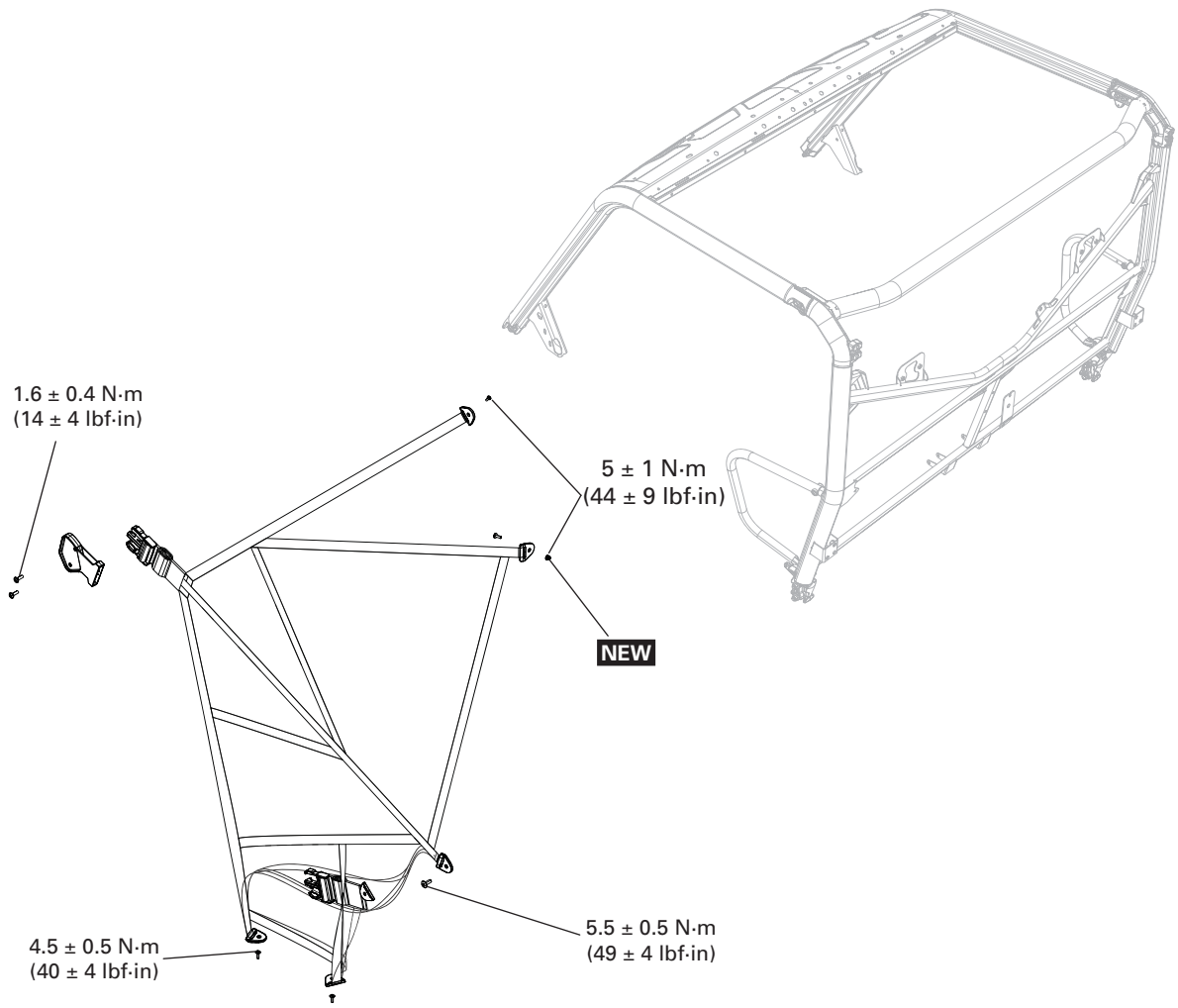

NEW = Component must be replaced when removed.

219101010-049-005

GENERAL

VEHICLE CARE

Cleaning the Vehicle

To clean the vehicle, **do not use high-pressure washers** (like the ones found in car washes) as they may damage certain parts of the vehicle.

To clean the vehicle:

1. Rinse the vehicle thoroughly with water to remove loose dirt.
2. Using a soft, clean cloth, wash the vehicle with water mixed with a mild detergent, such as soap specially formulated for motorcycles or automobiles.

Using warm water works well to remove bugs in the windshield and front panels.

NOTICE **Do not clean the windshield with alkaline or acid cleaner, gasoline or solvent to avoid windshield damage.**

For **Matte finishes**, hand-wash with a soft wash mitt and a mild cleaning product safe for matte paint. To remove foreign substances such as insects, use a soft applicator and a mild solvent. Saturate and soak area before cleaning. Rub lightly.

NOTICE **For Matte finishes, do not use wax, detail spray, or other products used on regular paint. Do not wash with abrasive materials. Do not use mechanical cleaners or polishers, and do not rub the surfaces vigorously.**

3. While washing the vehicle, check for grease or oil. You can use XPS ATV Wash or a mild automotive degreaser. Thoroughly follow the manufacturer's instructions.

SERVICE PRODUCT
XPS ATV WASH (P/N 219 701 702)

4. Dry the vehicle with a chamois or a soft towel.

Protecting the Vehicle

Apply non-abrasive wax to plastic parts.

NOTICE **Do not wax or polish matte surfaces.**

SURFACE	PRODUCT OR PRECAUTION
Glossy finishes	Apply only non-abrasive wax, safe for clear coat paints
Matte finishes	Do not apply wax

NOTICE **Do not polish windshield with any plastic cleaner or polisher.**

⚠ WARNING

Do not apply a vinyl or plastic protector on the seat as the surface will become slippery and the operator or the passenger may slip off the vehicle.

PROCEDURES

DECALS

Removing a Decal

Using a heat gun warm up one end of decal for a few seconds until decal can roll off when rubbing with your finger.

Pull decal slowly and when necessary apply more heat to ease removal on the area that has to be peeled off.

If decal tears while pulling off, it has to be heated for a few seconds longer. If decal tends to stretch while pulling off, stop heating and wait a few seconds to let it cool, then peel it off.

Installing a Decal

Using isopropyl alcohol, clean the surface and dry thoroughly.

Apply liquid soap to new decal and carefully position it. Using a sponge or a squeegee, remove the air bubbles and surplus water working from the center toward the edges. Allow to air dry.

NOTICE **Do not apply isopropyl alcohol or solvent directly on decals. Use these products in a well ventilated area.**

BODY (MAX)

SERVICE PRODUCTS

Description	Part Number	Page
XPS ATV WASH	219 701 702	347

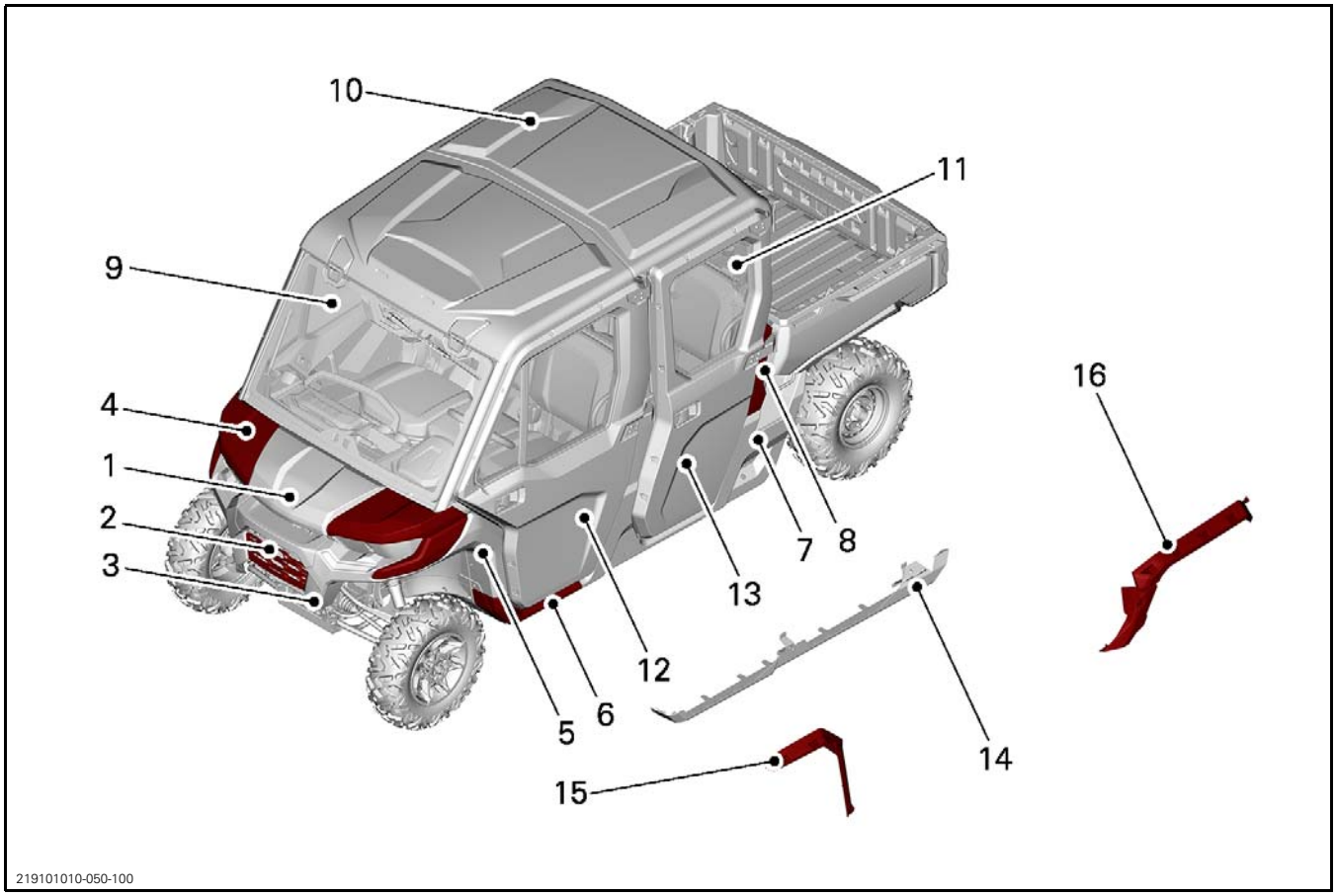

1. *Front service cover*
2. *Front grille*
3. *Front fascia*
4. *Front fender*
5. *Front lateral panel*
6. *Central lateral panel*
7. *Rear lateral panel*
8. *Rear upper lateral panel*
9. *Windshield with wiper (CAB models only)*
10. *Roof (If equipped)*
11. *Rear window (CAB models only)*
12. *Front door (CAB models only)*
13. *Rear door (CAB models only)*
14. *Rock Slider (if equipped)*
15. *Front mudguard (If equipped)*
16. *Rear mudguards (If equipped)*

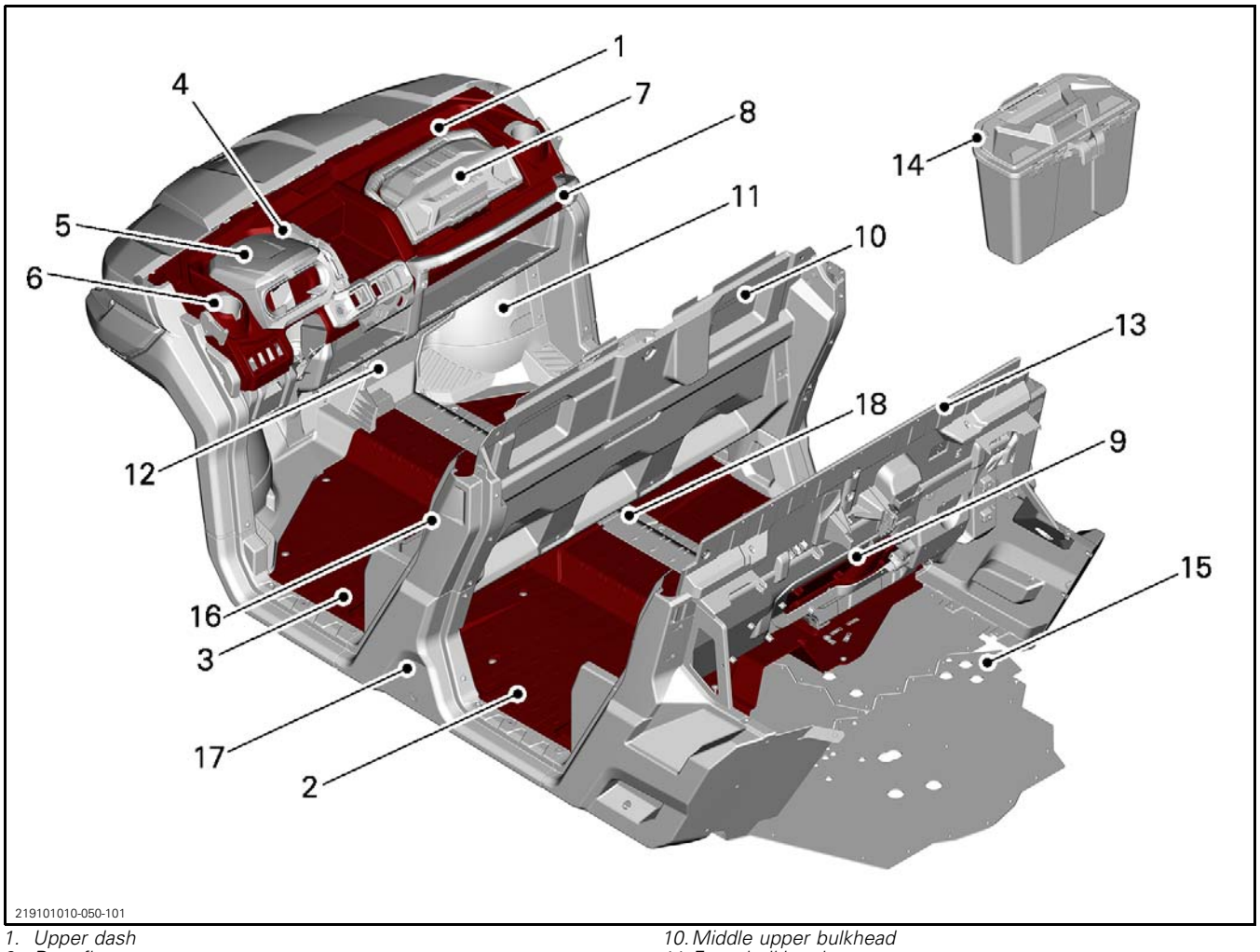

1. *Upper dash*
2. *Rear floor*
3. *Front floor*
4. *Shift indicator*
5. *Gauge support and storage compartment cover*
6. *Cup holder*
7. *Removable glove box*
8. *Passenger handhold*
9. *Rear service cover*
10. *Middle upper bulkhead*
11. *Front bulkhead*
12. *Front trim panel*
13. *Rear upper bulkhead*
14. *Storage box*
15. *Skid plate*
16. *Mid upper lateral panel*
17. *Mid lateral panel*
18. *Floor cover*

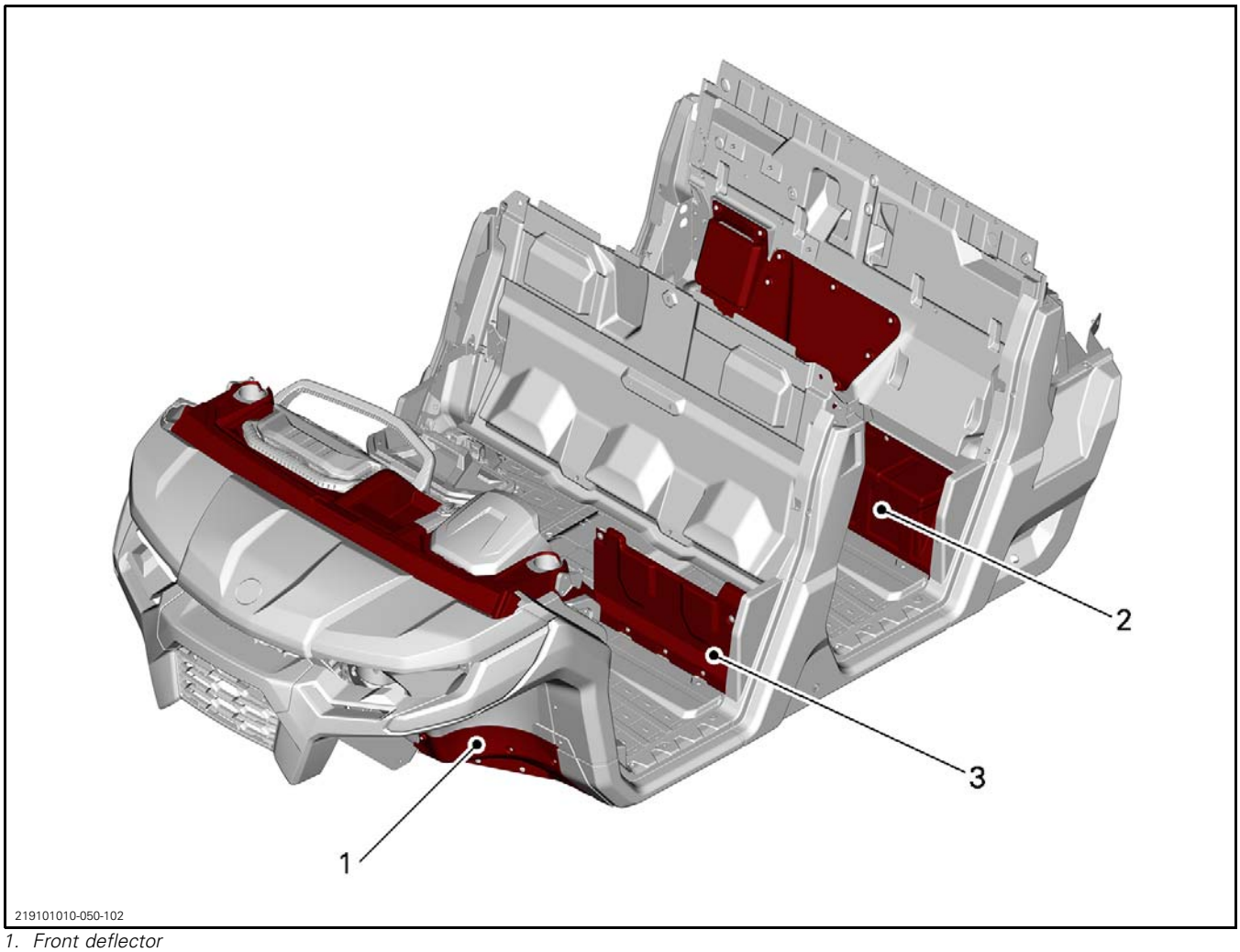

1. *Front deflector*
2. *Middle lower bulkhead*
3. *Rear lower bulkhead*

FRONT AND SIDE

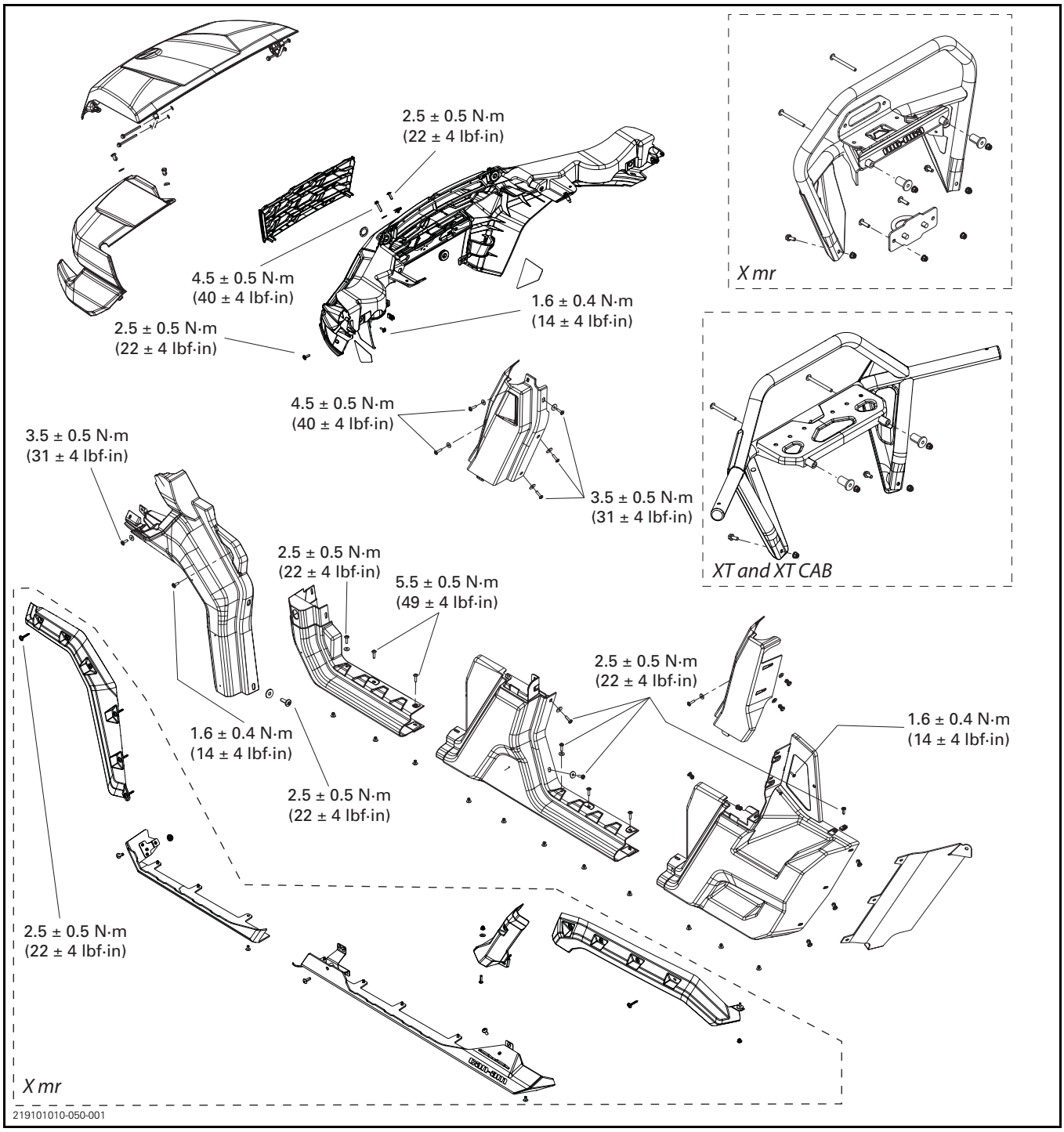

SKID PLATE

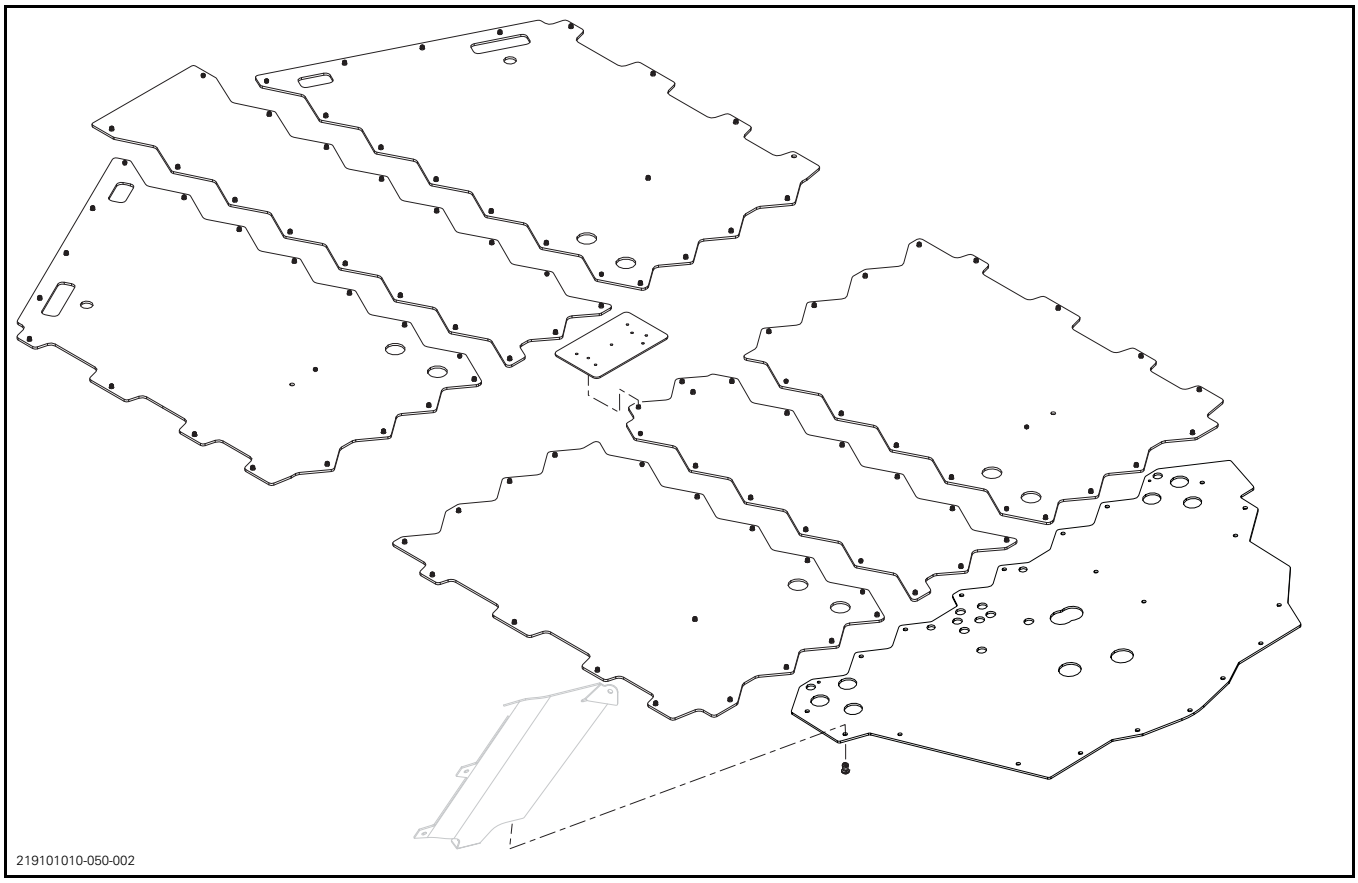

DASHBOARD

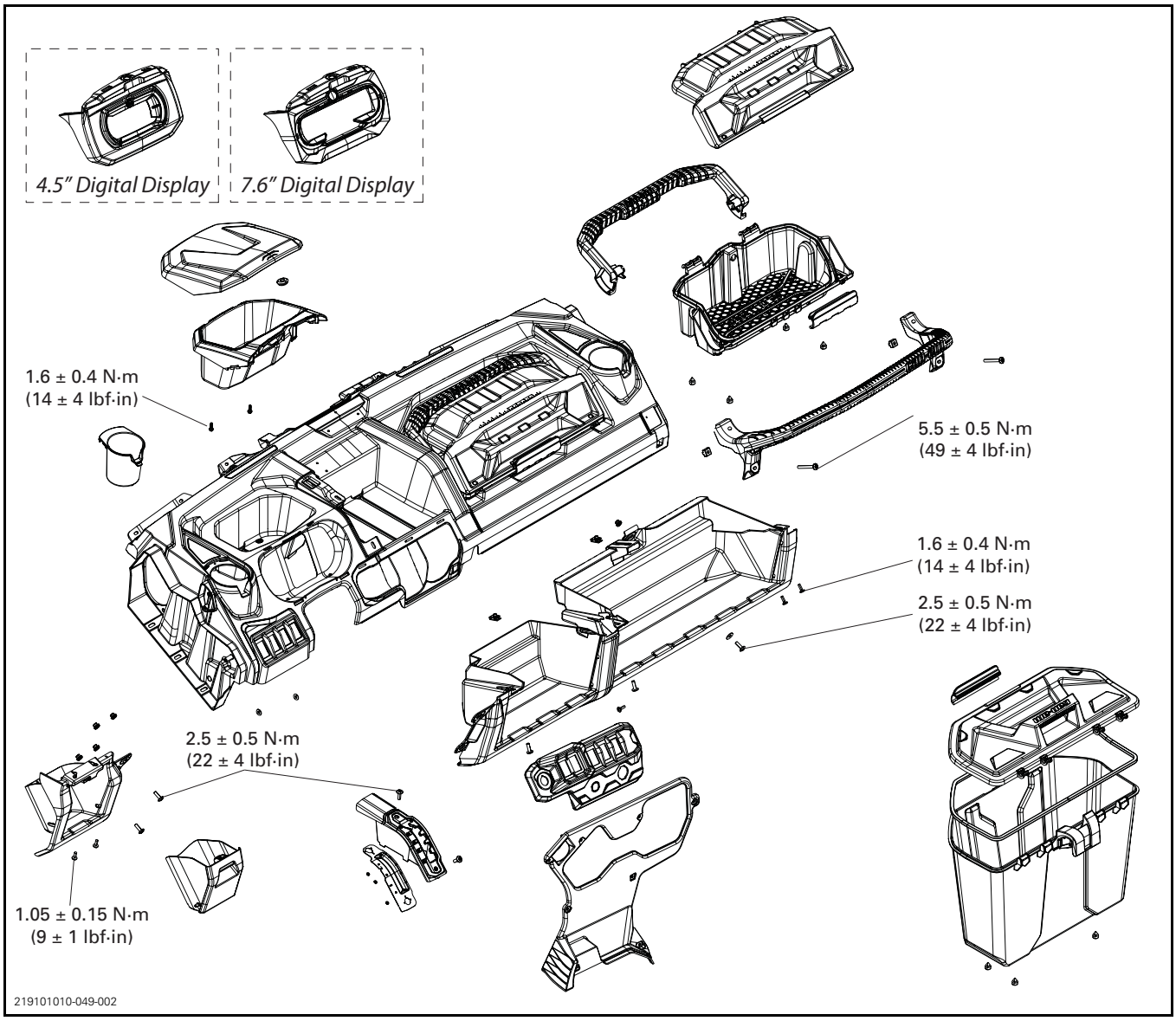
4.5" Digital Display
7.6" Digital Display
1.6 ± 0.4 N·m
(14 ± 4 lbf·in)
5.5 ± 0.5 N·m
(49 ± 4 lbf·in)
1.6 ± 0.4 N·m
(14 ± 4 lbf·in)
2.5 ± 0.5 N·m
(22 ± 4 lbf·in)
2.5 ± 0.5 N·m
(22 ± 4 lbf·in)
1.05 ± 0.15 N·m
(9 ± 1 lbf·in)
219101010-049-002

FRONT FIREWALLS AND FLOOR

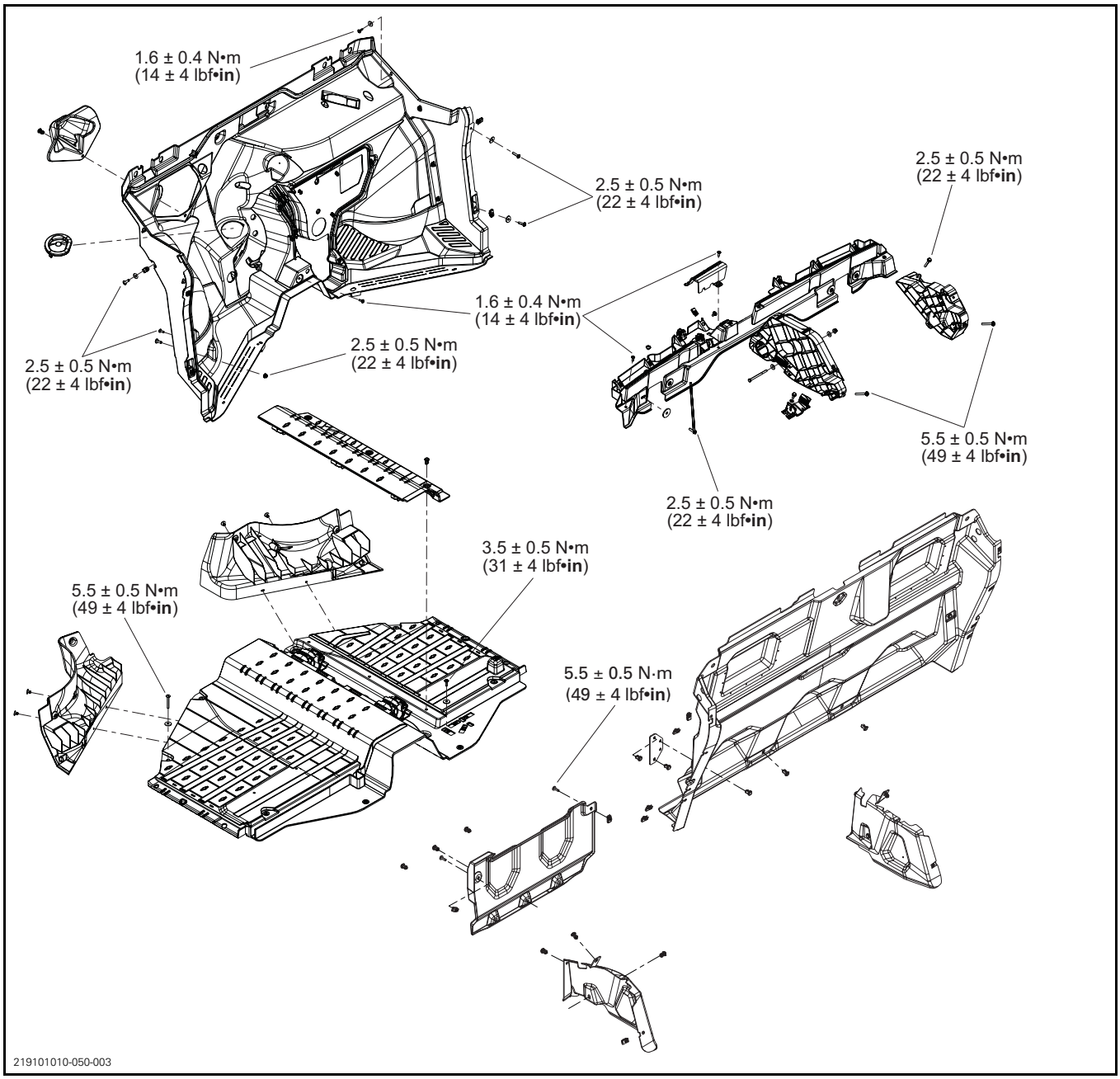

REAR FIREWALLS AND FLOOR

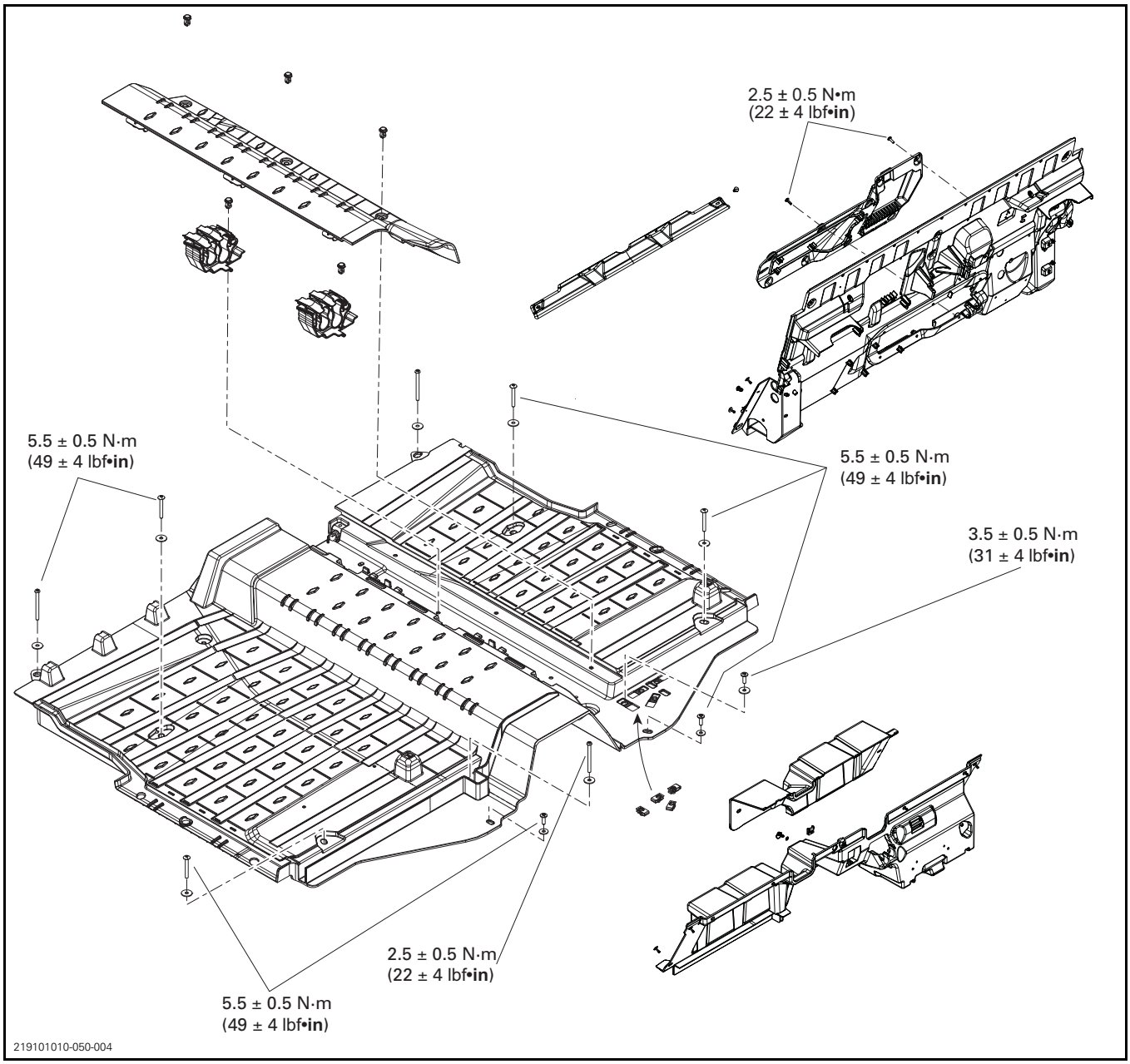

ROOF ASSEMBLY AND WINDSHIELD WITH WIPER

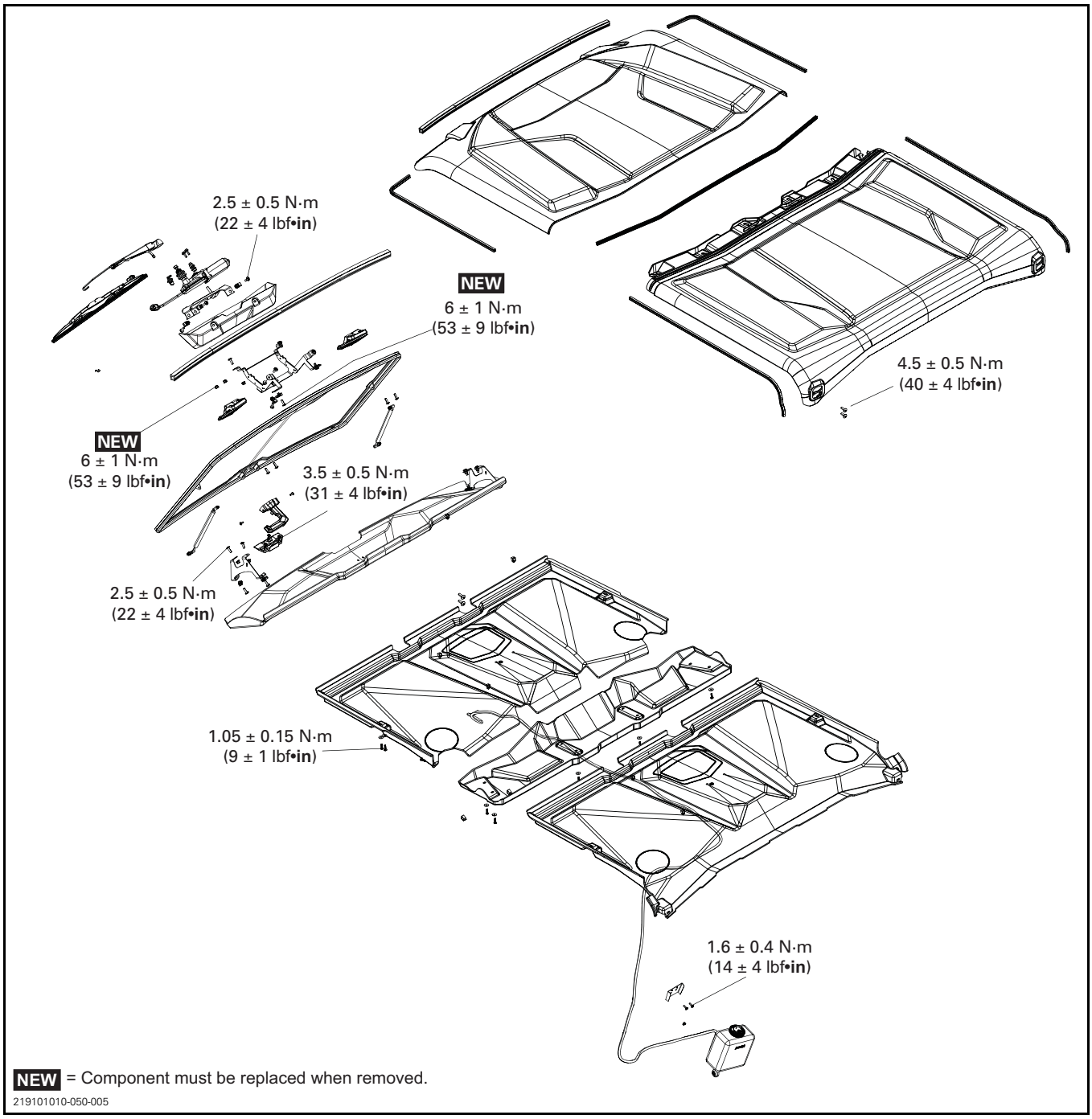

DOORS AND REAR WINDOW

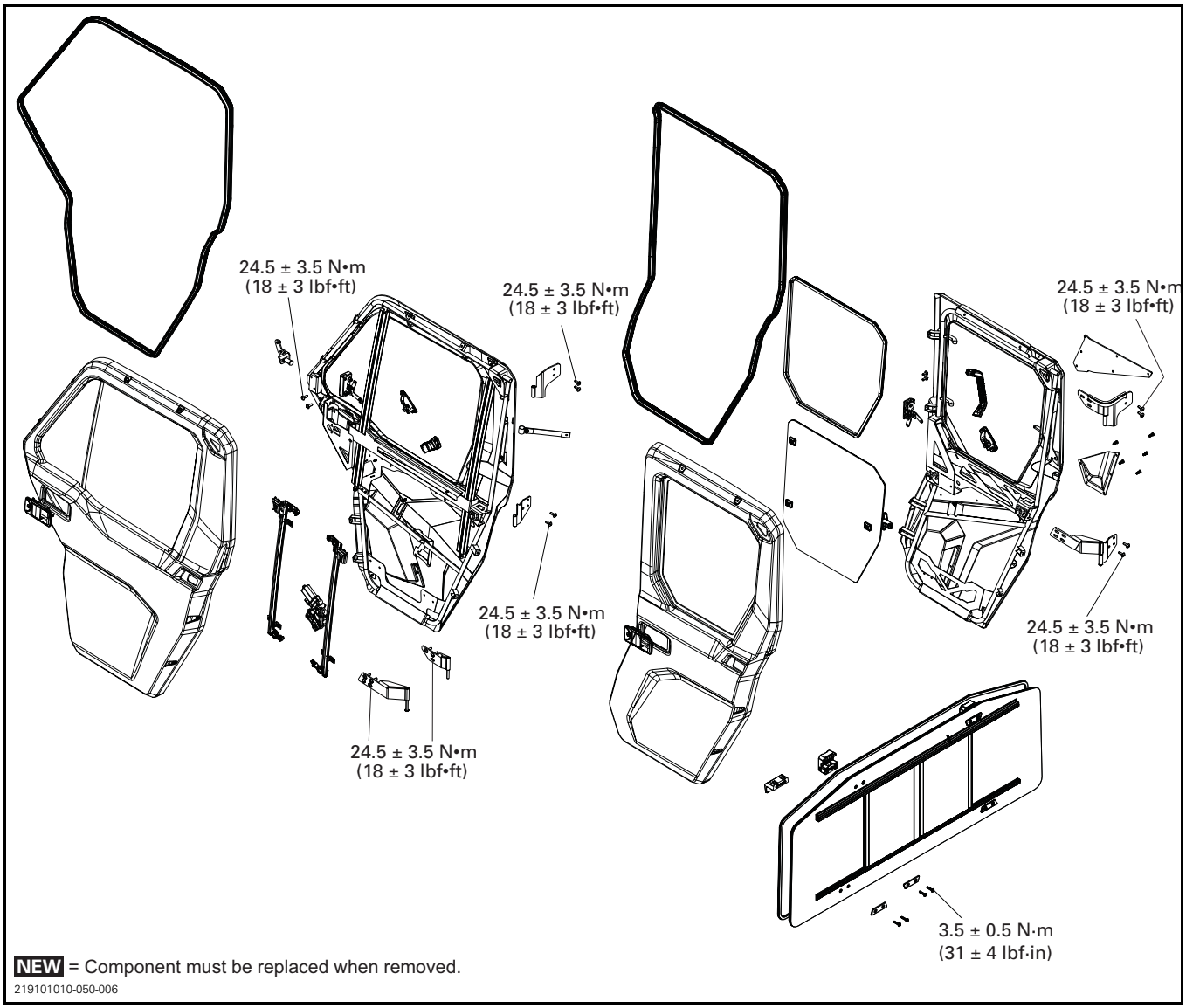

NEW = Component must be replaced when removed.

219101010-050-006

SEATS

Front and Rear seats have the same components

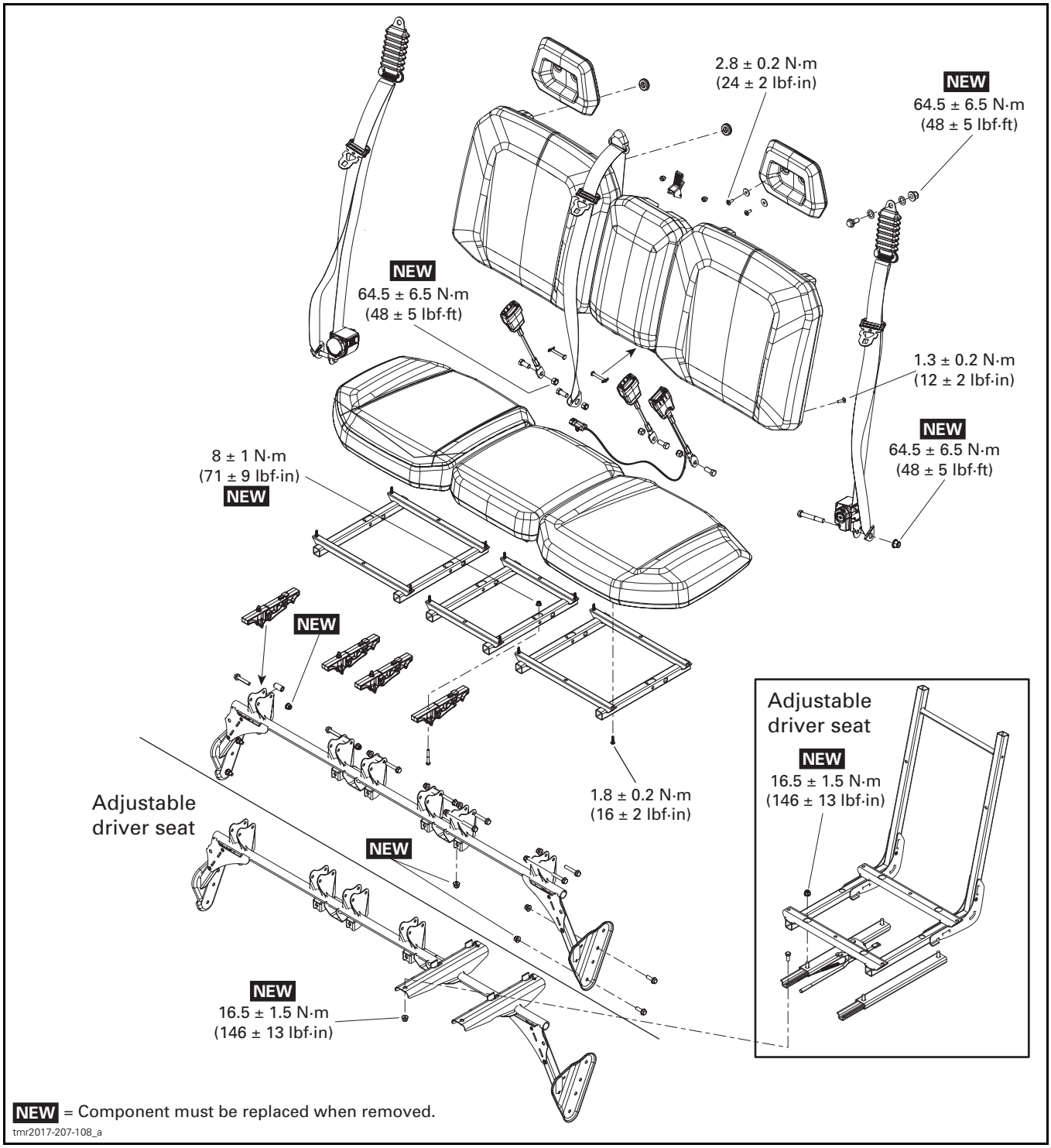

SIDE NETS

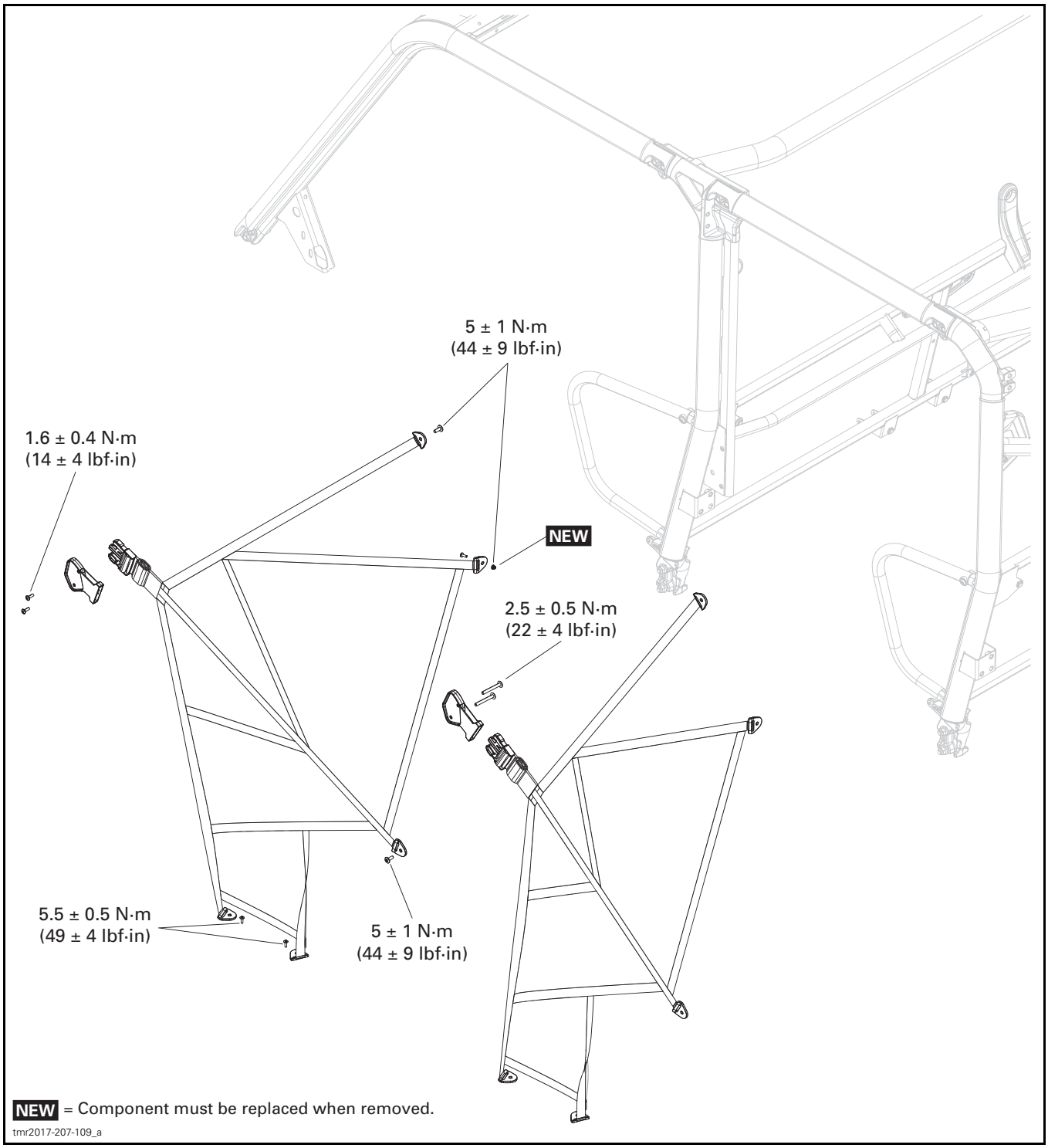
5 ± 1 N·m
(44 ± 9 lbf·in)
1.6 ± 0.4 N·m
(14 ± 4 lbf·in)
NEW
2.5 ± 0.5 N·m
(22 ± 4 lbf·in)
5.5 ± 0.5 N·m
(49 ± 4 lbf·in)
5 ± 1 N·m
(44 ± 9 lbf·in)
NEW = Component must be replaced when removed.
tmr2017-207-109_a

GENERAL

VEHICLE CARE

Cleaning the Vehicle

To clean the vehicle, **do not use high-pressure washers** (like the ones found in car washes) as they may damage certain parts of the vehicle.

To clean the vehicle:

1. Rinse the vehicle thoroughly with water to remove loose dirt.
2. Using a soft, clean cloth, wash the vehicle with water mixed with a mild detergent, such as soap specially formulated for motorcycles or automobiles.

Using warm water works well to remove bugs in the windshield and front panels.

NOTICE **Do not clean the windshield with alkaline or acid cleaner, gasoline or solvent to avoid windshield damage.**

For **Matte finishes**, hand-wash with a soft wash mitt and a mild cleaning product safe for matte paint. To remove foreign substances such as insects, use a soft applicator and a mild solvent. Saturate and soak area before cleaning. Rub lightly.

NOTICE **For Matte finishes, do not use wax, detail spray, or other products used on regular paint. Do not wash with abrasive materials. Do not use mechanical cleaners or polishers, and do not rub the surfaces vigorously.**

3. While washing the vehicle, check for grease or oil. You can use XPS ATV Wash or a mild automotive degreaser. Thoroughly follow the manufacturer's instructions.

SERVICE PRODUCT
XPS ATV WASH (P/N 219 701 702)

4. Dry the vehicle with a chamois or a soft towel.

Protecting the Vehicle

Apply non-abrasive wax to plastic parts.

NOTICE **Do not wax or polish matte surfaces.**

SURFACE	PRODUCT OR PRECAUTION
Glossy finishes	Apply only non-abrasive wax, safe for clear coat paints
Matte finishes	Do not apply wax

NOTICE **Do not polish windshield with any plastic cleaner or polisher.**

⚠ WARNING

Do not apply a vinyl or plastic protector on the seat as the surface will become slippery and the operator or the passenger may slip off the vehicle.

PROCEDURES

DECALS

Removing a Decal

Using a heat gun warm up one end of decal for a few seconds until decal can roll off when rubbing with your finger.

Pull decal slowly and when necessary apply more heat to ease removal on the area that has to be peeled off.

If decal tears while pulling off, it has to be heated for a few seconds longer. If decal tends to stretch while pulling off, stop heating and wait a few seconds to let it cool, then peel it off.

Installing a Decal

Using isopropyl alcohol, clean the surface and dry thoroughly.

Apply liquid soap to new decal and carefully position it. Using a sponge or a squeegee, remove the air bubbles and surplus water working from the center toward the edges. Allow to air dry.

NOTICE **Do not apply isopropyl alcohol or solvent directly on decals. Use these products in a well ventilated area.**

CARGO BOX

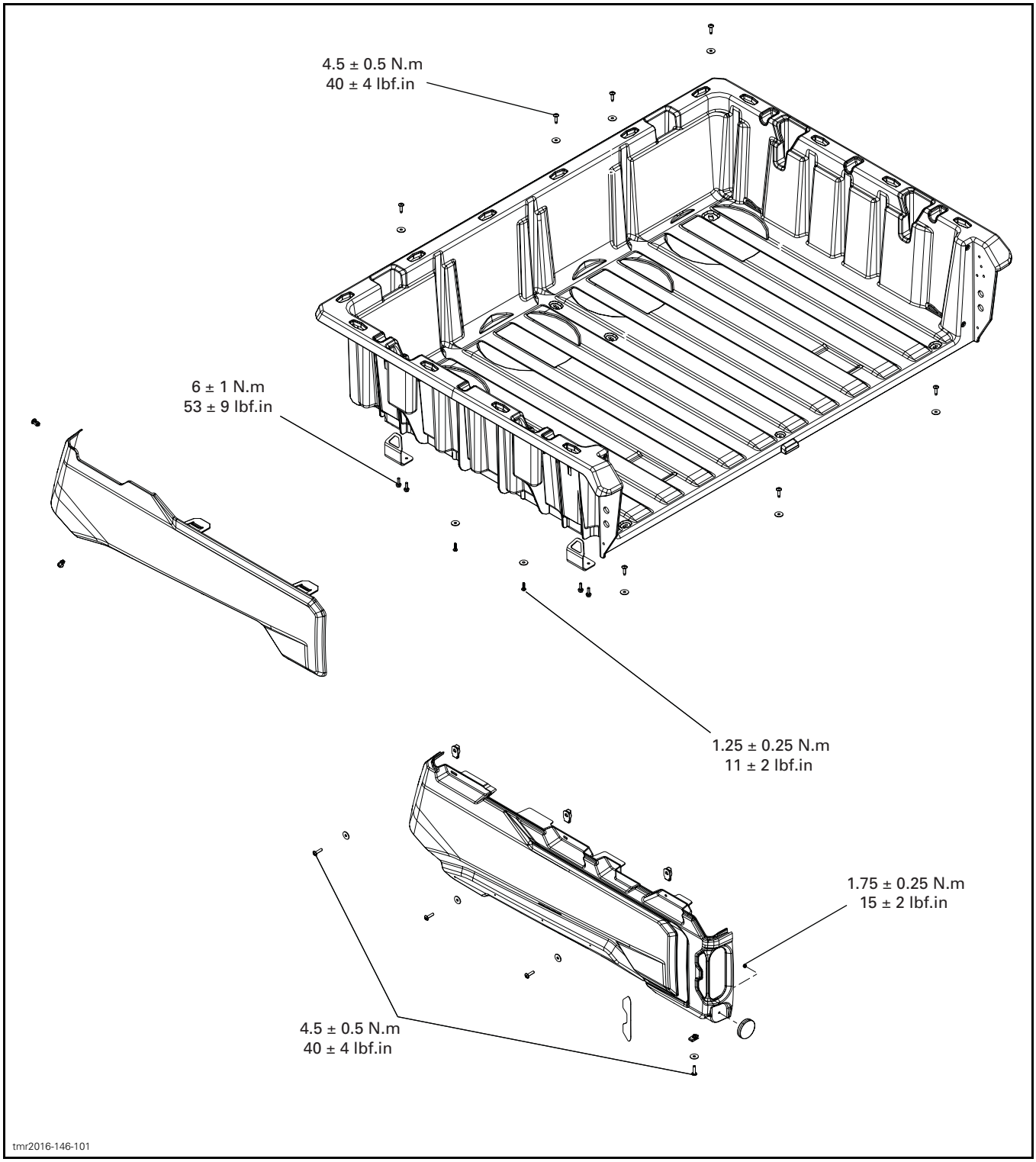
4.5 ± 0.5 N.m
40 ± 4 lbf.in
6 ± 1 N.m
53 ± 9 lbf.in
1.25 ± 0.25 N.m
11 ± 2 lbf.in
1.75 ± 0.25 N.m
15 ± 2 lbf.in
4.5 ± 0.5 N.m
40 ± 4 lbf.in
tmr2016-146-101

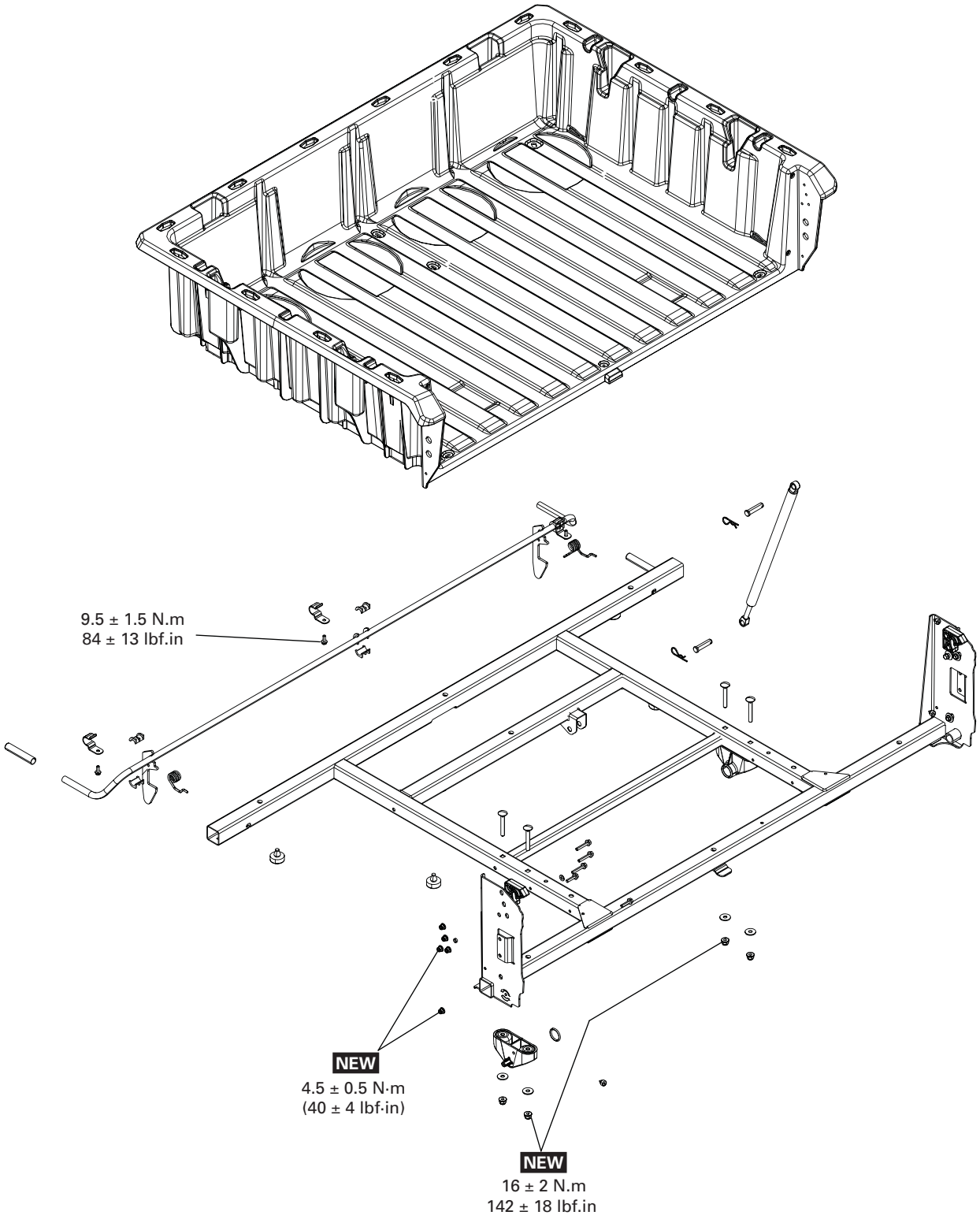

NEW =Component must be replaced when removed.

tmr2016-146-102

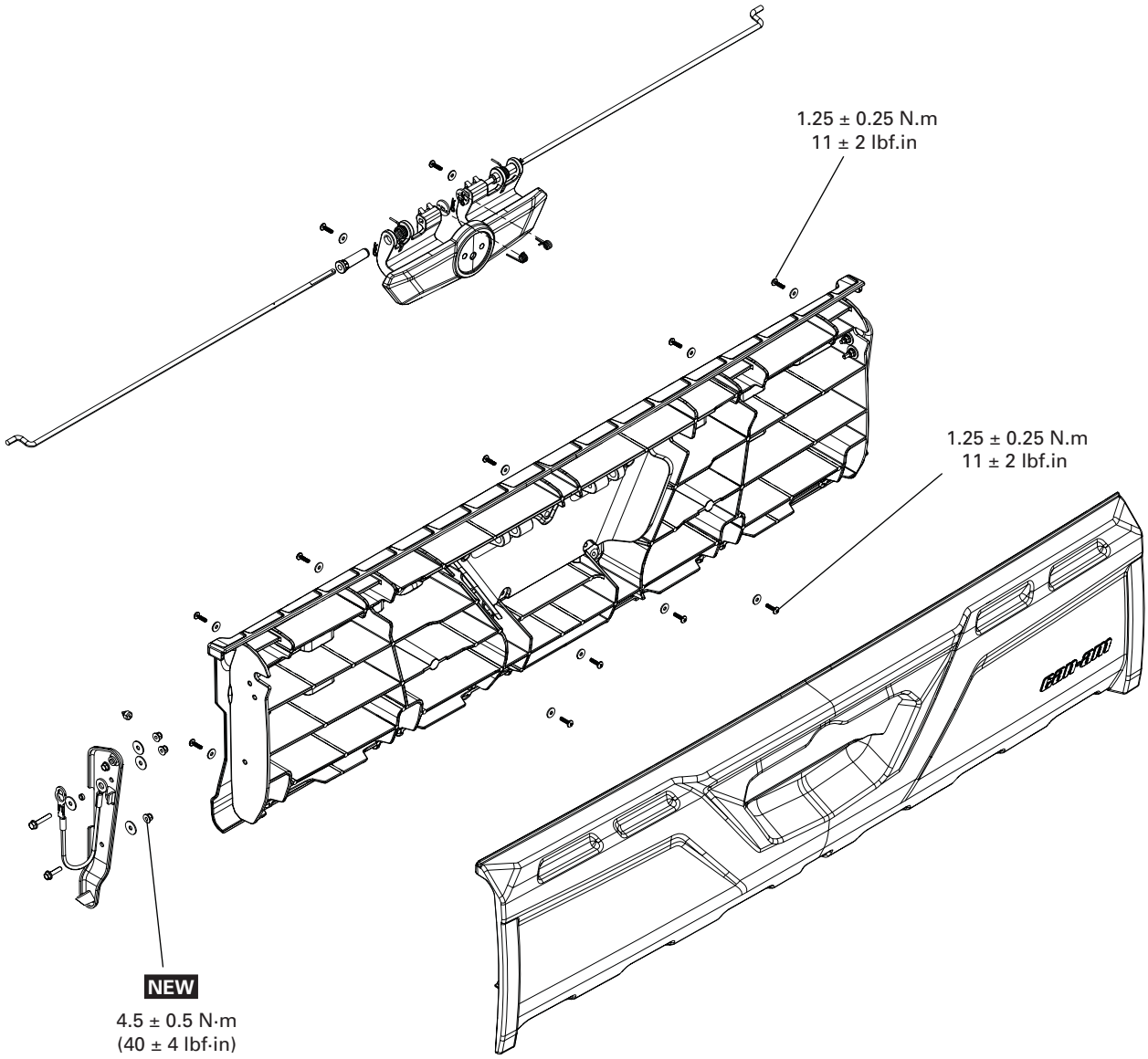

NEW =Component must be replaced when removed.

tmr2016-146-103

FRAME (3-UP)

SERVICE PRODUCTS

Description	Part Number	Page
LOCTITE 243 (BLUE)	293 800 060	354

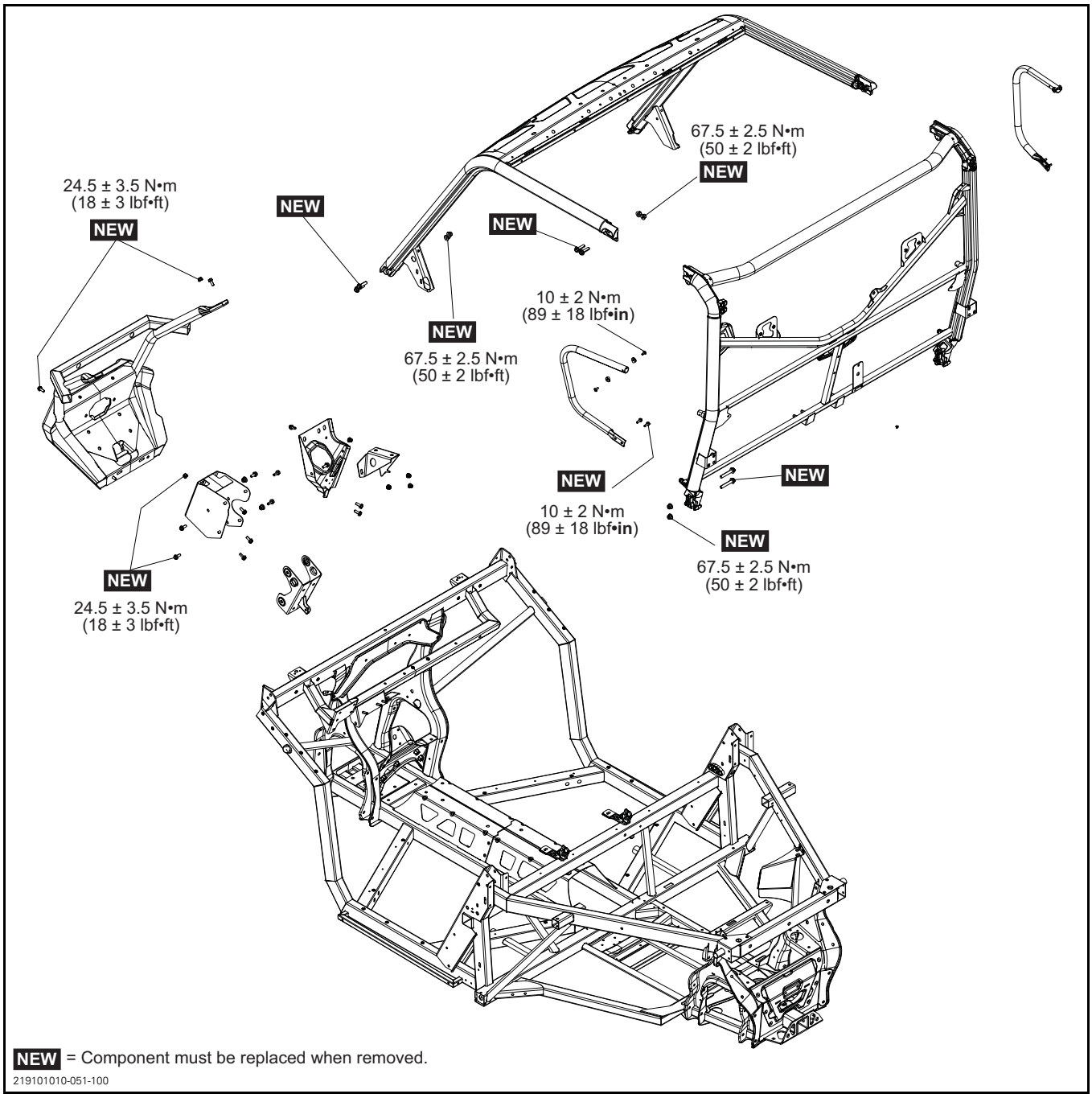

PROCEDURES

CAGE

⚠ WARNING

Never modify the mounting points of the shoulder nets and the seat belts. If they are found modified or damaged, contact a BRP service representative.

⚠ WARNING

Never drill holes, weld or modify the cage. Since this is an important protection component, any modification might compromise passenger safety.

Inspecting the Cage

Check cage for bending, cracks, weld damages or any other damage.

⚠ WARNING

Any damaged cage components must be replaced.

Installing the Cage

⚠ WARNING

When the cage mounting bolts are removed, they must be replaced with new ones or under exceptional conditions, have their threads cleaned then have blue loctite applied. Ensure to use only 10.9 grade fasteners.

SERVICE PRODUCT
LOCTITE 243 (BLUE) (P/N 293 800 060)

1. Assemble cage rear section onto vehicle. Do not tighten fasteners.
2. Assemble cage front section onto vehicle. Do not tighten fasteners.
3. Assemble both cage sections together. Do not tighten fasteners.
4. Make sure completed assembly is properly centered without any stressed components. Apply proper torque to all fasteners.

FRAME

Inspecting the Frame

Check frame for bending, cracks, weld damages or any other damage. Replace frame as necessary.

Welding the Frame

NOTICE **Welding on frame is not recommended. Components may be damaged.**

Replacing a Frame Insert

To install a new blind threaded insert, use a blind threaded insert installer available at any automotive parts retailer.

tmr2011-039-004

After insert installation, ensure insert can hold the torque applied to the screw it retains. Otherwise, install a new insert.

Replacing the Frame

Blind threaded inserts are not installed on replacement frames. Make sure to order 14 inserts when replacing frame.

FRAME (MAX)

SERVICE PRODUCTS

Description	Part Number	Page
LOCTITE 243 (BLUE)	293 800 060	356

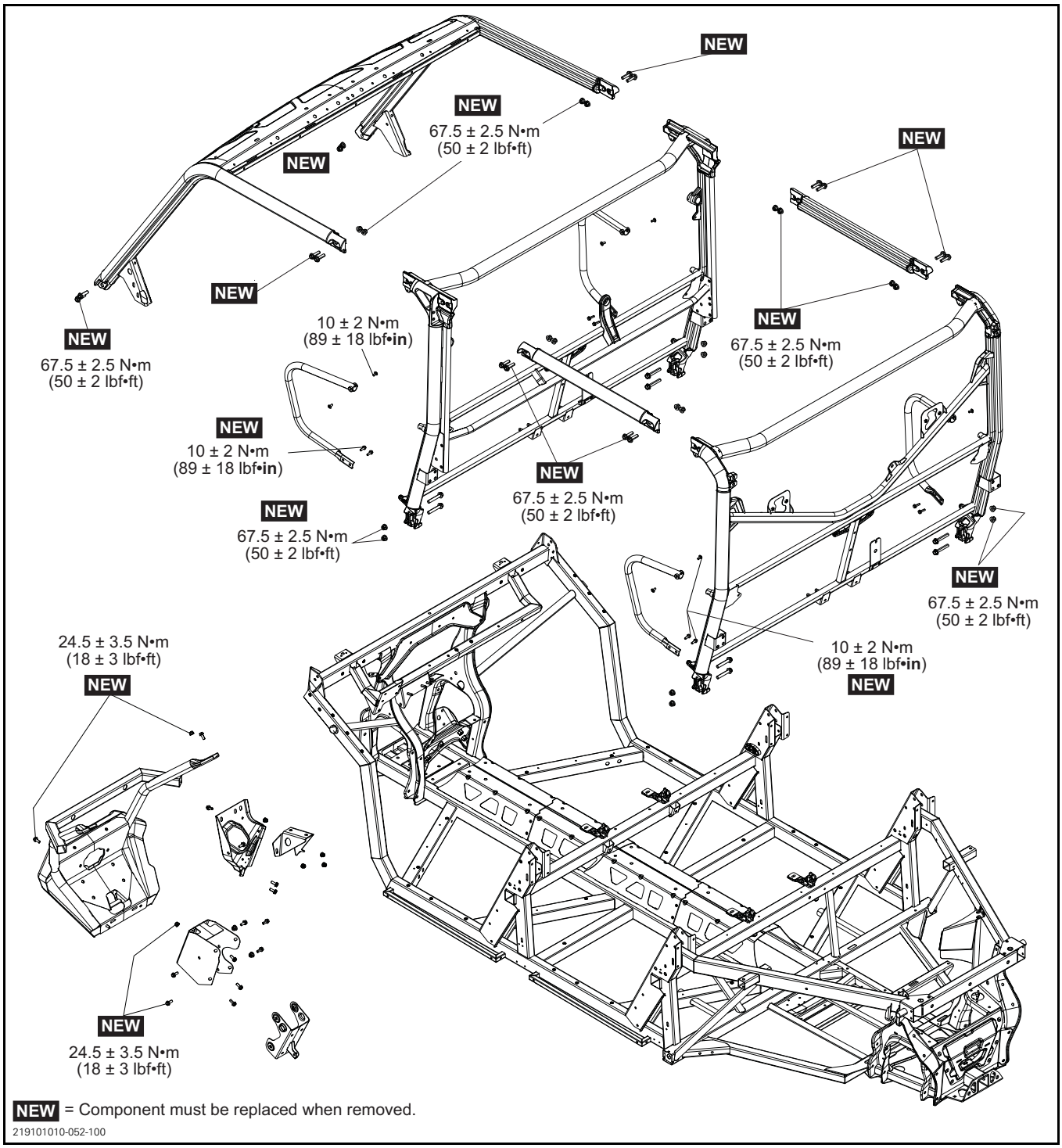

PROCEDURES

CAGE

⚠ WARNING

Never modify the mounting points of the shoulder nets and the seat belts. If they are found modified or damaged, contact a BRP service representative.

⚠ WARNING

Never drill holes, weld or modify the cage. Since this is an important protection component, any modification might compromise passenger safety.

Inspecting the Cage

Check cage for bending, cracks, weld damages or any other damage.

⚠ WARNING

Any damaged cage components must be replaced.

Installing the Cage

⚠ WARNING

When the cage mounting bolts are removed, they must be replaced with new ones or under exceptional conditions, have their threads cleaned then have blue loctite applied. Ensure to use only 10.9 grade fasteners.

SERVICE PRODUCT
LOCTITE 243 (BLUE) (P/N 293 800 060)

1. Assemble cage rear section onto vehicle. Do not tighten fasteners.
2. Assemble cage front section onto vehicle. Do not tighten fasteners.
3. Assemble both cage sections together. Do not tighten fasteners.
4. Make sure completed assembly is properly centered without any stressed components. Apply proper torque to all fasteners.

FRAME

Inspecting the Frame

Check frame for bending, cracks, weld damages or any other damage. Replace frame as necessary.

Welding the Frame

NOTICE **Welding on frame is not recommended. Components may be damaged.**

Replacing a Frame Insert

To install a new blind threaded insert, use a blind threaded insert installer available at any automotive parts retailer.

tmr2011-039-004

After insert installation, ensure insert can hold the torque applied to the screw it retains. Otherwise, install a new insert.

Replacing the Frame

Blind threaded inserts are not installed on replacement frames. Make sure to order 14 inserts when replacing frame.

VEHICLE

EXHAUST SYSTEM	
Exhaust system	Spark arrester approved by USDA Forest Service Catalyst on NRMM[1] models
[1] For NRMM models identification, refer to *INTRODUCTION* section.	

ELECTRICAL SYSTEM			
Magneto generator output		HD7	500 W @ 6000 RPM
		Limited	850 W @ 6000 RPM
		All other models	650 W @ 6000 RPM
Ignition system type			Inductive Discharge Ignition (IDI)
Spark plug	Quantity	HD7	1
		HD9/HD10	2
	Make and type	HD7	NGK LMAR8D-J or equivalent
		HD9	NGK DCPR8E or equivalent
		HD10	NGK LMAR8C-9 or equivalent
	Gap	HD7	0.7 mm to 0.9 mm (.028 in to .035 in)
		HD9	0.7 mm to 0.8 mm (.028 in to .031 in)
		HD10	0.8 mm to 0.9 mm (.031 in to .035 in)
Battery	Type		SLA (Sealed Lead Acid)
	Voltage		12 volts
	Nominal rating	Base DPS Pro	18 A•h
		All other models	30 A•h
	Power starter output		0.7 KW
Headlights			4 x 35 H 8
Taillight			2.3/3.5 W
Fuses Master fuse box (Inside front storage center)	T vehicle	F10	10 A
	Headlamps	F11	20 A
	DC1/DC3/12V accessory outlet 1	F12	10 A
	12 V Accessory outlet 2	F14	10 A
	Tail lamps	F16	10 A

ELECTRICAL SYSTEM			
Fuses Secondary fuse box (under passenger seat)	Cluster/relays	F4	10 A
	Ignition/injection/fuel pump	F5	10 A
	Engine Control Module (ECM)	F6	10 A
	4WD actuator	F7	10 A
	Ignition switch Clock	F8	10 A
	Cooling fan	F9	25 A
	Oxygen sensor Emission control	F18	10 A
Fuses Fuse box #5 (Inside front storage center)	Fan speed relays	F1	20 A
	Air conditioning relay	F3	5 A
Fuse Links	Main	1	18 awg
	Accessory post	2	14 awg
Relays Master fuse box (Inside front storage center)	ECM/Accessory 12V	R3	-
	Brake lights	R8	-
	Accessory post 12V/outlet 2	R9	-
Relays Secondary fuse box (under passenger seat)	Cooling fan	R1	-
	Main	R2	-
	Air conditioning	R10	-
Relays Fuse box #5 (Inside front storage center)	Fan speed relay - low	RLS	-
	Fan speed relay - medium	RMS	-
	Fan speed relay - high	RHS	-

FUEL SYSTEM			
Fuel delivery	Type		Electronic fuel injection (EFI) with iTC
Throttle body		HD7	46 mm with ETA
		HD9/HD10	54 mm with ETA
Fuel pump	Type		Electric (in fuel tank)
Idle speed			1250 ± 100 RPM (not adjustable)
Fuel	Type		Regular unleaded gasoline - Refer to *FUEL REQUIREMENTS*
	Minimum octane		87 Pump Posted AKI I (R+M)/2) (92 RON)
Fuel tank capacity			40. L (10.6 U.S. gal.)
Fuel remaining when low fuel light turns ON			± 8.5 L (2.2 U.S. gal.)

DRIVE SYSTEM		
Drive system type		Selectable 2WD/4WD
Front differential oil	Capacity	400 ml (14 U.S. oz)
	Recommended	75W90 Synthetic gear oil
	Alternate if XPS products are not available	75W90 Synthetic gear oil (API GL-5)
Front drive	Base	Spiral bevel gear Visco-lok† auto-locking front differential
	Mossy Oak	Spiral bevel gear Smart-Lok electronic control locking front differential
	All other models	Spiral bevel gear Visco-lok† QE auto-locking front differential
Front drive ratio		3.6:1
Rear drive	Base DPS	Angle drive (spool gear)
	All other models	Lockable differential
Rear drive ratio	HD7	3.6:1
	HD9/HD10	3.43:1
CV joint grease		CV joint grease (P/N 293 550 062) or equivalent
Spline's propeller shaft grease (grease applied to spline connections)		Propeller shaft grease (P/N 293 550 063) or equivalent

STEERING		
Type		Rack and pinion
Assisted steering system	All models except Base	Dynamic Power Steering (DPS)
Steering wheel		Adjustable tilt steering
Turning radius	X mr (3-UP)	4.88 m (16.01 ft)
	All other 3-UP models	3.98 m (13.06 ft)
	X mr (MAX)	5.36 m (17.59 ft)
	All other MAX models	5.26 m (17.26 ft)
Total toe (vehicle on ground)		0° ± 0.2°
Camber angle (vehicle on ground)		0°
Tie-rod maximum length unengaged threads		32 mm (1.26 in)

FRONT SUSPENSION			
Suspension type		Limited Lone star Mossy Oak XT CAB	Double arched suspension arms with stabilizer bar
		HD7 All other HD9	Double suspension arms
		All other HD10	Double arched suspension arms
Spring preload	Type		Cam
	Adjustment position		5
	Factory setting		Position 1
Suspension travel		All HD10 except Limited, Mossy Oak and XT CAB	279 mm (11 in)
		All other models	254 mm (10 in)
Shock absorber	Qty		2
	Type		Gas charged / 5 spring preload settings

REAR SUSPENSION			
Suspension type		HD7 HD9 except XT CAB	Torsional Trailing arms (TTA) with stabilizer bar
		All other models	Arched Torsional Trailing arms (TTA) with stabilizer bar
Spring preload	Type		Cam
	Adjustment position		5
	Factory setting		Position 1
Suspension travel		All HD10 except Limited, Mossy Oak and XT CAB	279 mm (11 in)
		All other models	254 mm (10 in)
Shock absorber	Qty		2
	Type		Gas charged / 5 spring preload settings

BRAKES			
Front brake	Type		Dual 220 mm ventilated disc brakes with hydraulic twin-piston calipers
Rear brake	Type	HD7	Single 220 mm ventilated disc brake with hydraulic twin-piston caliper
		HD9/HD10	Dual 220 mm ventilated disc brake with hydraulic single-piston calipers
Brake fluid	Capacity		Approximately 310 ml (10.5 U.S. oz)
	Type		DOT 4
Caliper			Floating
Brake pad material	Front/rear		Metallic/Metallic
Minimum brake pad thickness			0.5 mm (.02 in)
Minimum brake disc thickness	Front/Rear		4 mm (.157 in)
Maximum brake disc warpage			0.2 mm (.01 in)

TIRES			
Pressure	Front		97 kPa (14 PSI)
	Rear	EN-16990 compliant models (unloaded)	124 kPa (18 PSI)
		EN-16990 compliant models (loaded)	228 kPa (33 PSI)
		All other models	124 kPa (18 PSI)
Minimum tire thread depth			3 mm (.118 in)
Tire size	Front	HD7	25 x 8 x 12 (in)
		Base HD9	27 x 9 x 12 (in)
		Lone star Mossy Oak	28 x 9 x 14 (in)
		X mr	30 x 9 x 14 (in)
		All other models	27 x 9 x 14 (in)
	Rear	HD7	25 x 10 x 12 (in)
		Base HD9	27 x 11 x 12 (in)
		Lone star Mossy Oak	28 x 11 x 14 (in)
		X mr	30 x 11x 14 (in)
		All other models	27 x 11 x 14 (in)

WHEELS			
Type		Base models	Steel
		All other models	Cast Aluminum
Rim size	Front	HD7 Base HD9	12 x 6 (in)
		All other models	14 x 7 (in)
	Rear	Base models	12 x 8 (in)
		DPS HD7	12 x 7.5 (in)
		All other models	14 x 8.5 (in)
Wheel lug nuts torque			100 N•m ± 10 N•m (74 lbf•ft ± 7 lbf•ft)

CHASSIS	
Cage type	Profiled tube section, high strength steel, ROPS-approved cage

DIMENSIONS (3-UP MODELS)		
Overall length	Base DPS Pro	307.1 cm (121 in)
	Limited	320 cm (126 in)
	Mossy Oak X mr	328.6 cm (129.4 in)
	XT	319.4 cm (125.7 in)
	XT CAB	310.5 cm (122.2 in)
	XT-P	319.5 cm (125.8 in)
Overall width	Base DPS HD7 DPS HD9 Pro XT HD9	157.5 cm (62 in)
	DPS HD10 XT HD10 XT-P	162.5 cm (64 in)
	Limited	170 cm (67 in)
	Mossy Oak XT CAB	165.1 cm (65 in)
	X mr	169.4 cm (66.7 in)

DIMENSIONS (3-UP MODELS)			
Overall height		Base DPS HD7 DPS HD9 Pro	193 cm (76 in)
		DPS HD10 XT HD9	198.1 cm (78 in)
		Limited XT CAB	200.6 cm (79 in)
		Mossy Oak XT-P	203.2 cm (80 in)
		X mr	208.3 cm (82 in)
Wheelbase			211.5 cm (83 in)
Wheel track	Front	HD7 HD9 except XT CAB	130 cm (51 in)
		Limited Mossy Oak XT CAB	147.3 cm (58 in)
		X mr	146.6 cm (57.7 in)
		All other models	136.3 cm (53.7 in)
	Rear	HD7 HD9 except XT CAB	126 cm (49.5 in)
		Limited Mossy Oak XT CAB	142.3 cm (56 in)
		X mr	141 cm (55.5 in)
		All other models	130.4 cm (51.3 in)
Ground clearance		HD7	26.7 cm (10.5 in)
		HD9 except XT CAB	28 cm (11 in)
		HD10 except Limited and XT CAB	33 cm (13 in)
		Limited XT CAB	30.5 cm (12 in)
		X mr	38.1 cm (15 in)

DIMENSIONS (MAX MODELS)			
Overall length		Lone star	403.6 cm (159 in)
		Limited XT XT CAB	402 cm (158 in)
		X mr	411.2 cm (161.9 in)
		All other	389.6 cm (153 in)
Overall width		All HD9	161.2 cm (63 in)
		DPS HD10 XT HD10 X mr	162.5 cm (64 in)
		Limited Lone star	170 cm (67 in)
		XT CAB	165.1 cm (65 in)
Overall height		All HD9	193 cm (76 in)
		DPS HD10	197 cm (78 in)
		Limited XT CAB	201 cm (79 in)
		Lone star	203 cm (80 in)
		Traxter T	193 cm (76 in)
		XT HD10	202 cm (80 in)
		X mr	208.3 cm (82 in)
Wheelbase			294 cm (116 in)
Wheel track	Front	HD9	138.3 cm (54.4 in)
		Limited Lone star XT CAB	147.3 cm (58 in)
		X mr	146.6 cm (57.7 in)
		All other HD10	137.4 cm (54 in)
	Rear	HD9	133.3 cm (52.5 in)
		Limited Lone star XT CAB	142.3 cm (56 in)
		X mr	141 cm (55.5 in)
		All other HD10	131.5 cm (52 in)
Ground clearance		HD9	28 cm (11 in)
		HD10 except Limited and XT CAB	33 cm (13 in)
		Limited XT CAB	30.5 cm (12 in)
		X mr	38.1 cm (15 in)

WEIGHT (3-UP MODELS)		
Dry weight	Base HD7	592 kg (1,305.1 lb)
	Base HD9	662 kg (1,459.5 lb)
	DPS HD7	600 kg (1,322.8 lb)
	DPS HD9	690 kg (1,521.2 lb)
	DPS HD10	697 kg (1,536.6 lb)
	Limited	874.5 kg (1,928 lb)
	Mossy Oak	747 kg (1,646.9 lb)
	Pro	717 kg (1,580 lb)
	Traxter T HD7	601 kg (1,325 lb)
	Traxter T HD9	671 kg (1,479 lb)
	Traxter T PRO	716 kg (1,578.5 lb)
	X mr	770 kg (1,697.6 lb)
	XT HD9	719 kg (1,585.1 lb)
	XT HD10	726 kg (1,600.6 lb)
	XT CAB HD9	845 kg (1,863 lb)
	XT CAB HD10	850 kg (1,874 lb)
	XT-P	732 kg (1,613.8 lb)
Weight distribution (front/rear)	HD7 Mossey Oak XT	44/56
	Base HD9 DPS HD9 DPS HD10 Pro	42/58
	X mr	45/55
	Limited XT CAB	47/53
	XT-P	43/57

WEIGHT (3-UP MODELS)		
Gross vehicle weight rating	Base HD7	1 170 kg (2,579.4 lb)
	Base HD9	1 375.6 kg (3,032.7 lb)
	DPS HD7	1 178.2 kg (2,597.5 lb)
	DPS HD9	1 403.4 kg (3,094 lb)
	DPS HD10	1 410.7 kg (3,110.1 lb)
	Mossy Oak	1 460.9 kg (3,220.7 lb)
	Pro	1 430.7 kg (3,154.2 lb)
	Traxter T HD7	1 179 kg (2,600 lb)
	Traxter T HD9	1 384.6 kg (3,053 lb)
	Traxter T Pro	1 430 kg (3,153 lb)
	X mr	1 483.8 kg (3,271 lb)
	XT HD9	1 433.2 kg (3,159.7 lb)
	XT HD10	1 440.4 kg (3,175.5 lb)
	XT CAB HD9	1 424 kg (3,139.4 lb)
	Limited XT CAB HD10	1 429 kg (3,150.4 lb)
	XT-P	1 446 kg (3,187.9 lb)

WEIGHT (MAX MODELS)		
Dry weight	Base	778 kg (1,715.2 lb)
	DPS HD9 XT HD9	794 kg (1,750.5 lb)
	DPS HD10	803.4 kg (1,771.2 lb)
	Limited	1 060 kg (2,337 lb)
	Lone star	875 kg (1,929 lb)
	X mr	919 kg (2,026 lb)
	XT HD10	863 kg (1,902.6 lb)
	XT CAB	1 044 kg (2,302 lb)
Weight distribution (front/rear)	Base DPS	41/59
	Lone star	44/56
	X mr	45/55
	All other models	43/57

WEIGHT (MAX MODELS)		
Gross vehicle weight rating	Base	1 607.4 kg (3,543.7 lb)
	DPS HD9	1 623.4 kg (3,579 lb)
	DPS HD10	1 632.5 kg (3,599 lb)
	Lone star	1 693.8 kg (3,734.2 lb)
	X mr	1 692.9 kg (3,732 lb)
	XT HD9	1 682.9 kg (3,710.2 lb)
	XT HD10	1 692 kg (3,730.2 lb)
	Limited XT CAB	1 668 kg (3,677.3 lb)

LOADING CAPACITY (3-UP MODELS)		
Cargo box capacity	HD7 All California models	272 kg (600 lb)
	All other models	454 kg (1,000 lb)
Total vehicle load allowed (including driver, passengers, all other loads and added accessories	HD7 Limited XT CAB All California models	545 kg (1,200 lb)
	All other models	680 kg (1,500 lb)
Towing capacity	HD7	680 kg (1,500 lb)
	HD9/HD10	1 134 kg (2,500 lb)
Tongue capacity	HD7	68 kg (150 lb)
	HD9/HD10	114 kg (250 lb)
Hitch type		50.8 mm (2 in) hitch receiver
Winch capacity		2 041.2 kg (4,500 lb)

LOADING CAPACITY (MAX MODELS)		
Cargo box capacity	California models	272 kg (600 lb)
	All other models	454 kg (1,000 lb)

LOADING CAPACITY (MAX MODELS)		
Total vehicle load allowed (including driver, passengers, all other loads and added accessories)	California models except XT CAB	612 kg (1,349 lb)
	XT CAB (California models)	590 kg (1,301 lb)
	EN-16990 compliant models	545 kg (1,200 lb)
	Lone star	785 kg (1,731 lb)
	All other models	794 kg (1,750 lb)
Towing capacity		1 134 kg (2,500 lb)
Tongue capacity		114 kg (250 lb)
Hitch type		50.8 mm (2 in) hitch receiver
Winch capacity		2 041.2 kg (4,500 lb)

EN-16990 Compliant Models (Outside Canada/USA)

Vehicles who comply with regulation EN-16990 are required to have side mirrors and horn installed. If the vehicle is equipped with side mirrors and horn, it is EN-16990 compliant.

NOISE EMISSION AND VIBRATION VALUES*			
Noise	Sound pressure level (L_{pA})	HD9	83 dB (A)
		HD10	82 dB (A)
	Sound power level (L_{WA})	HD9	97 dB (A)
		HD10	96 dB (A)
Vibration	Hand-arm system		Less than 2.5 m/s^2
	Whole body at seat		Less than 0.5 m/s^2
*: Noise emission and Vibration values are measured in accordance with Standard EN-16990 on a paved surface, at neutral or without belt.			

Traxter T Models (Europe only)

NOISE (ACCORDING TO REGULATION (EU) NO 1322/2014 ANNEX XII)		
Noise level perceived by driver	HD7	79 dB (A)
	HD9 / HD10	72 dB (A)

VIBRATION (ACCORDING TO REGULATION (EU) NO 1322/2014 ANNEX XIV)		
Vibration measured at driver seat	HD7	0.59 m/s^2
	HD9 / HD10	0.50 m/s^2

NOISE (ACCORDING TO REGULATION (EU) NO 2015/96 ANNEX III)		
Stationary	HD7	81 dB (A)
	HD9	78 dB (A)
	HD10	80 dB (A)
Moving	HD7	85 dB (A)
	HD9 / HD10	83 dB (A)

WIRING DIAGRAM INFORMATION

GENERAL

WIRING DIAGRAM LOCATION

Wiring diagrams are found in the *WIRING DIAGRAM BOOKLET*.

WIRING DIAGRAM WITH COLORED LINES

The wiring diagram on the *KNOWLEDGE CENTER* is in color.

WIRING DIAGRAM CODES

The wiring diagrams use the following codes.

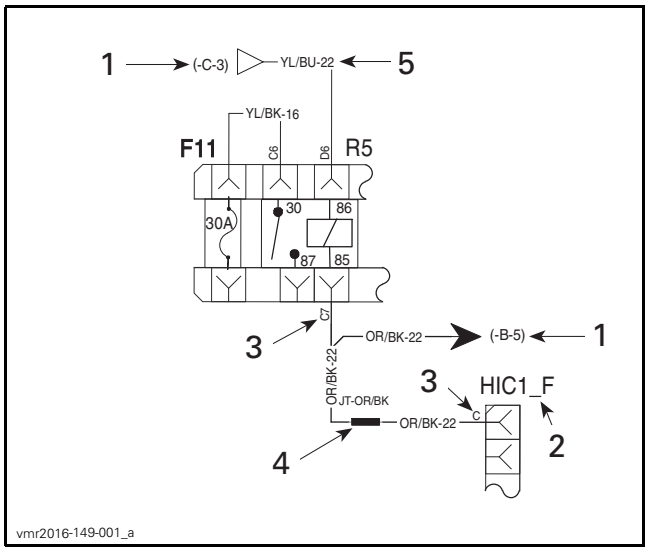

1. *Wiring diagram index*
2. *Connector code*
3. *Connector pin*
4. *Splice*
5. *Color and size*

Wiring Diagram Index

The wiring diagram is separated by rows (letters) and columns (numbers).

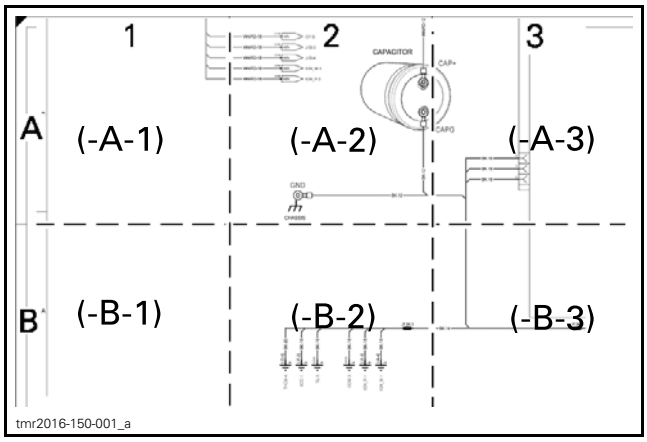

WIRING DIAGRAM INDEX

Connector Code

The wire connects to the indicated connector.

Connector Pin

The wire is the indicated pin in the connector.

NOTE: Could be identified by either a number or by a letter depending on the type of connector used.

FOLLOWING A CIRCUIT

To follow a circuit, search in the section of the wiring diagram shown in the wiring diagram index.

NOTE: The arrow indicates the direction of the power in the circuit.

In this example, the power comes **from** section (-B-4).

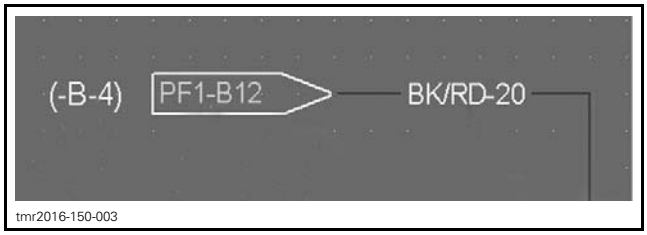

TYPICAL

In following example, the power goes **to** the section (-E-5).

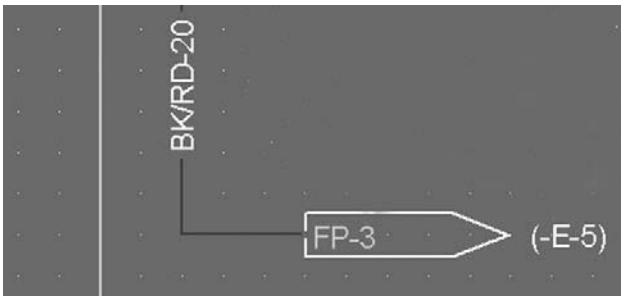

tmr2016-150-002

TYPICAL

WIRE COLORS AND SIZES

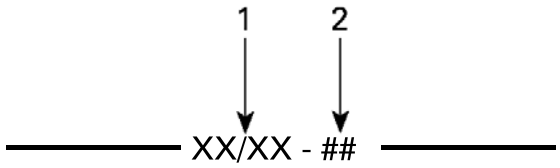

mmr2015-147-003_a

1. *Wire color*
2. *Wire gauge (AWG)*

The first color of a wire is the main color, second color is the stripe.

Example: YE/BK is a YELLOW wire with a BLACK stripe.

COLOR CODE					
BG	—	BEIGE	OG	—	ORANGE
BK	—	BLACK	RD	—	RED
BU	—	BLUE	VT	—	VIOLET
BN	—	BROWN	WH	—	WHITE
GN	—	GREEN	YE	—	YELLOW
GY	—	GRAY	PK	—	PINK
LT prefix means a "light" color. E.g: LT GN = Light green.					

SPLICES IN WIRING HARNESS

Splices in wiring harness are indicated on the wiring diagram as follows.

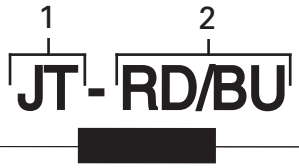

vmr2016-149-004_a

1. *JT: Splice indication*
2. *Spliced wire color*

PROCEDURES

This section gives the procedures in order to quickly repair electrical harness splices.

1. Make sure to perform the usual tests described in *ELECTRICAL SYSTEM* sections before investigating the harness splices.
2. If an electrical issue can not be found with the usual tests, locate the main harness splice that is involved in the faulty circuit and repair it as per the *SPLICES REPAIR PROCEDURE* in *WIRING HARNESS AND CONNECTORS* subsection.
3. To repair a splice, we recommend the use of a tin solder meeting the followings requirements or an equivalent.

TIN SOLDER REQUIREMENTS
SN 60
PB 40
DIA 0.062
FLUX RA 2%

2022 **MAIN HARNESS**

Defender and Defender MAX (except Limited)
Traxter and Traxter MAX (except T Category)

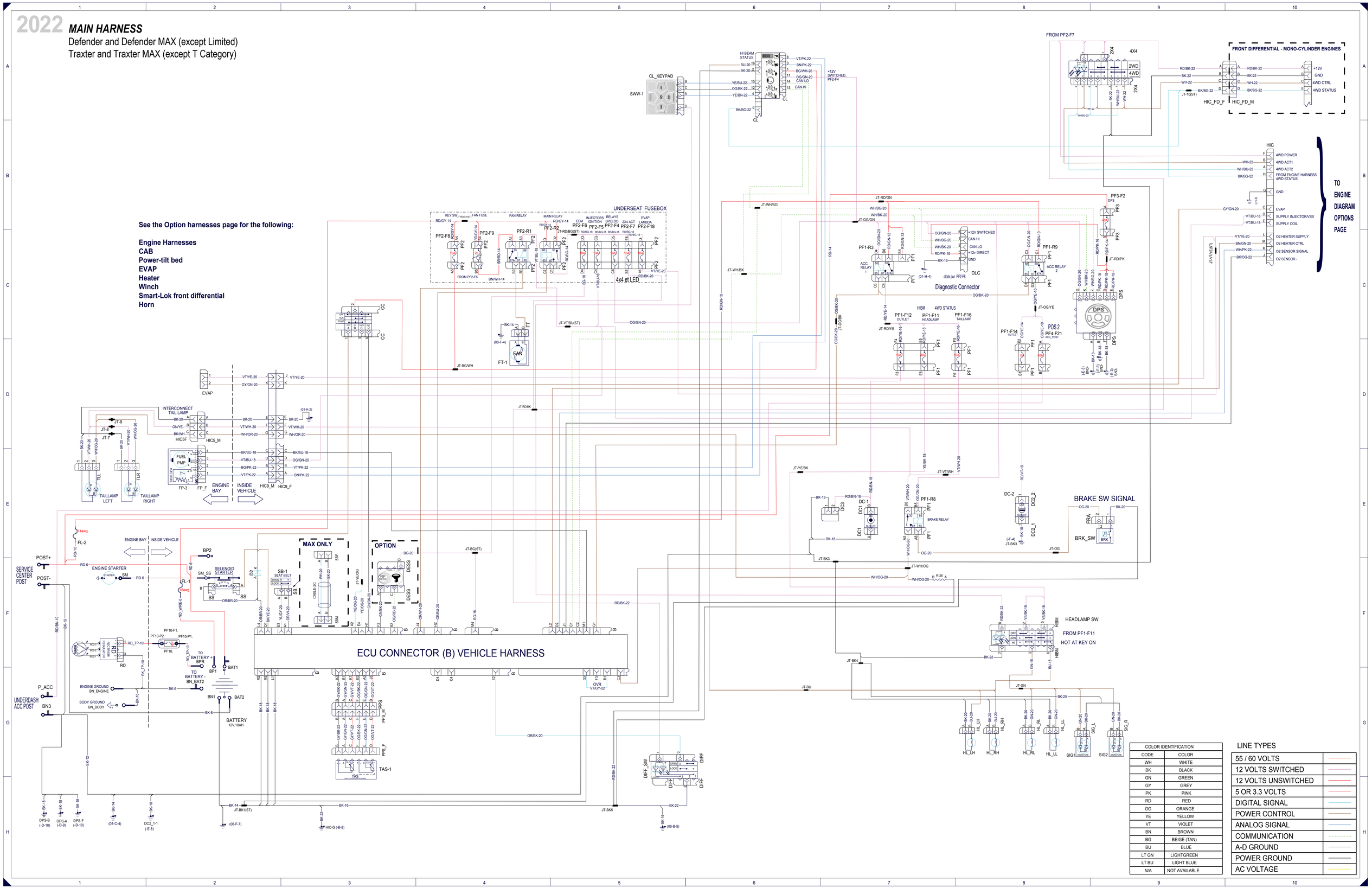

See the Option harnesses page for the following:

Engine Harnesses
CAB
Power-tilt bed
EVAP
Heater
Winch
Smart-Lok front differential
Horn

COLOR IDENTIFICATION	
CODE	COLOR
WH	WHITE
BK	BLACK
GN	GREEN
GY	GREY
PK	PINK
RD	RED
OG	ORANGE
YE	YELLOW
VT	VIOLET
BN	BROWN
BG	BEIGE (TAN)
BU	BLUE
LT GN	LIGHTGREEN
LT BU	LIGHT BLUE
N/A	NOT AVAILABLE

LINE TYPES
55 / 60 VOLTS
12 VOLTS SWITCHED
12 VOLTS UNSWITCHED
5 OR 3.3 VOLTS
DIGITAL SIGNAL
POWER CONTROL
ANALOG SIGNAL
COMMUNICATION
A-D GROUND
POWER GROUND
AC VOLTAGE

2022 **Main Harness HVAC**

Defender Limited

Defender MAX Limited

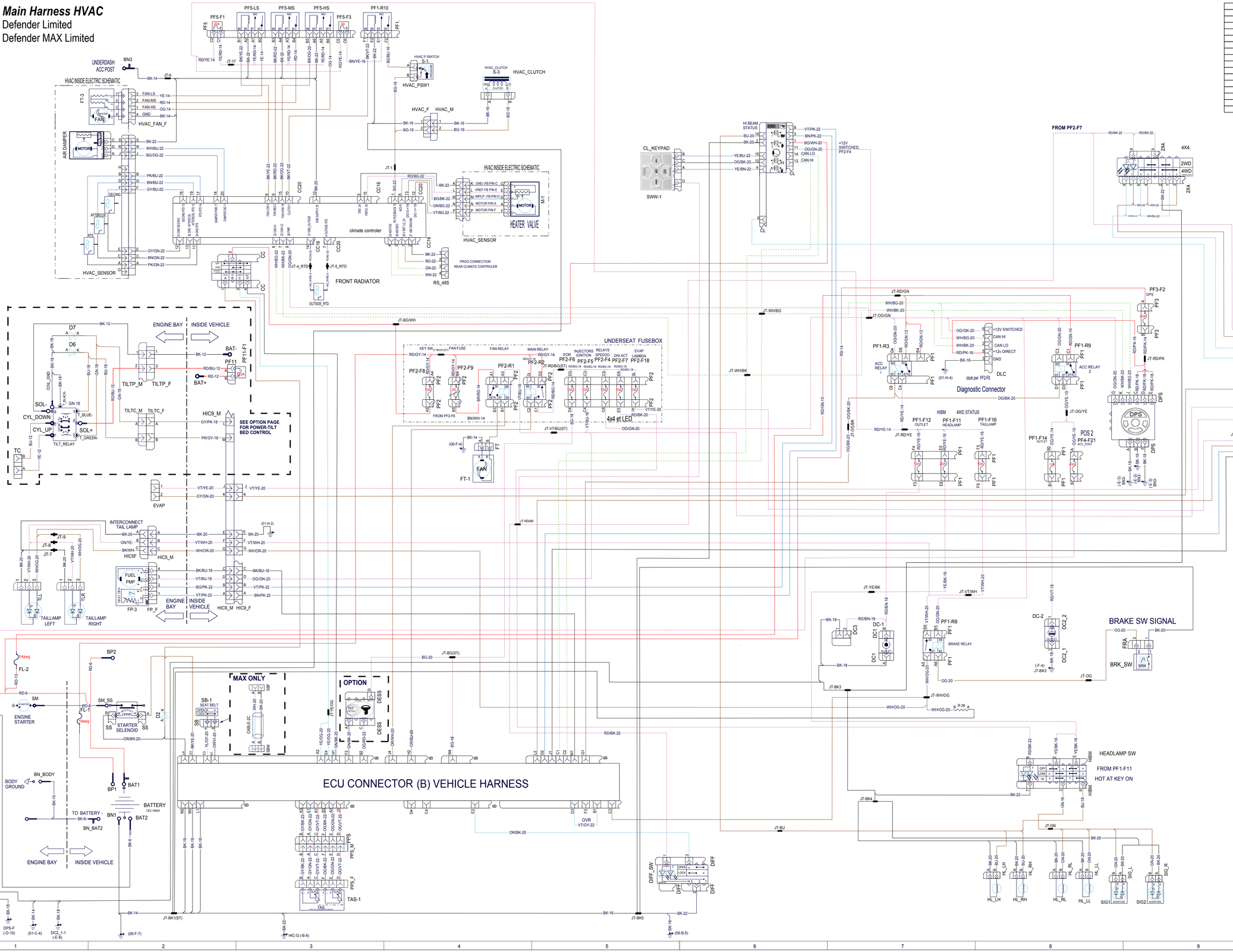

COLOR IDENTIFICATION	
CODE	COLOR
WH	WHITE
BK	BLACK
GN	GREEN
GY	GREY
PK	PINK
RD	RED
OG	ORANGE
YE	YELLOW
VT	VIOLET
BN	BROWN
BG	BEIGE (TAN)
BU	BLUE
LT GN	LIGHTGREEN
LT BU	LIGHT BLUE
N/A	NOT AVAILABLE

LINE TYPES

- 55 / 60 VOLTS
- 12 VOLTS SWITCHED
- 12 VOLTS UNSWITCHED
- 5 OR 3.3 VOLTS
- DIGITAL SIGNAL
- POWER CONTROL
- ANALOG SIGNAL
- COMMUNICATION
- A-D GROUND
- POWER GROUND
- AC VOLTAGE

2022 Main Harness

Traxter T Category

Traxter MAX T Category

COLOR IDENTIFICATION	
CODE	COLOR
WH	WHITE
BK	BLACK
GN	GREEN
GY	GREY
PNK	PINK
RD	RED
OG	ORANGE
YE	YELLOW
VT	VIOLET
BN	BROWN
BG	BEIGE (TAN)
BU	BLUE
LT GN	LIGHTGREEN
LT BU	LIGHT BLUE
N/A	NOT AVAILABLE

LINE TYPES	
55 / 60 VOLTS	
12 VOLTS SWITCHED	
12 VOLTS UNSWITCHED	
5 OR 3.3 VOLTS	
DIGITAL SIGNAL	
POWER CONTROL	
ANALOG SIGNAL	
COMMUNICATION	
A-D GROUND	
POWER GROUND	
AC VOLTAGE	

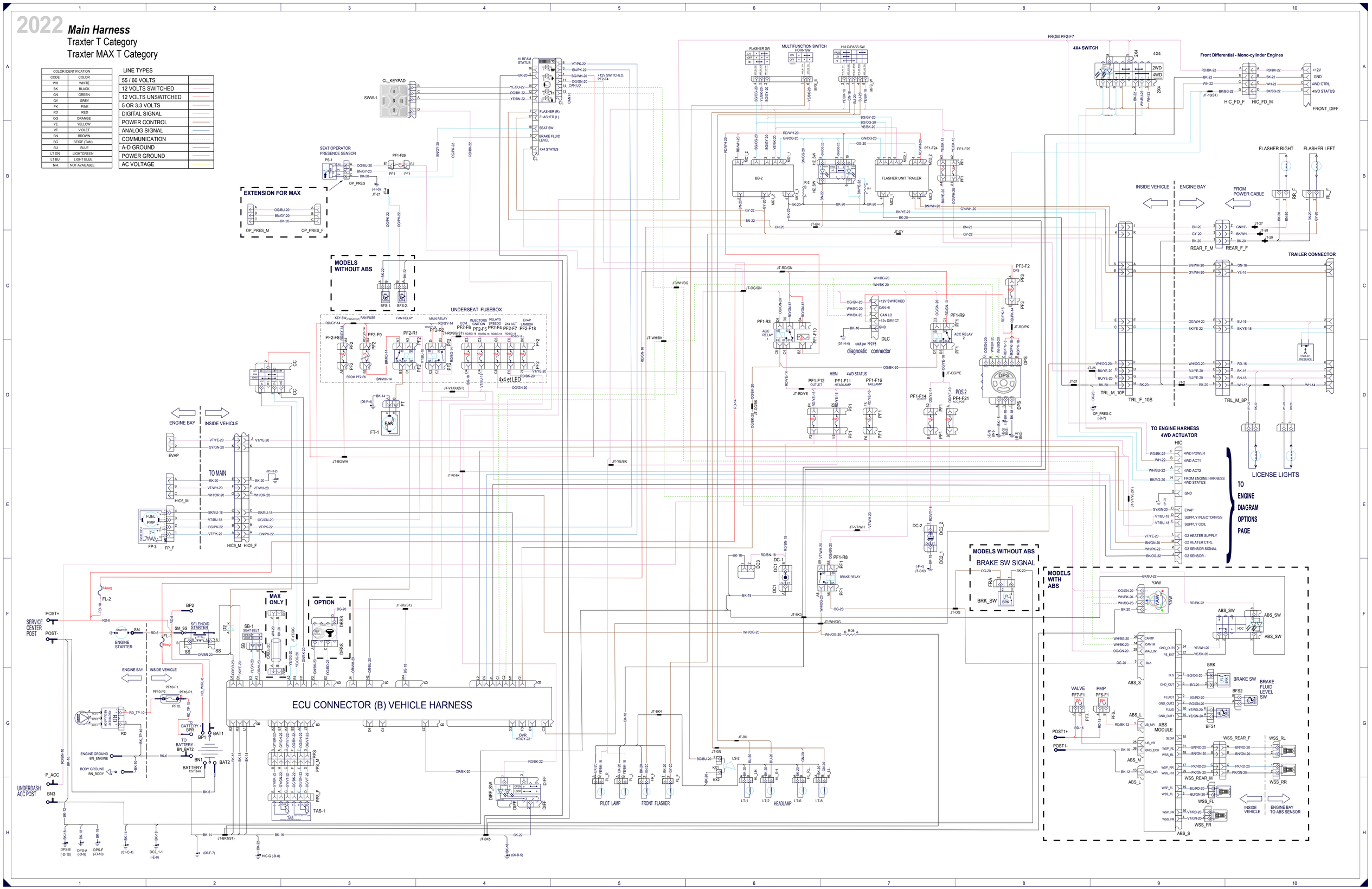

2022 *Main Harness Options*

Defender and Defender MAX Series
Traxter and Traxter MAX Series

ENGINE HARNESS - TWIN-CYLINDER ENGINE

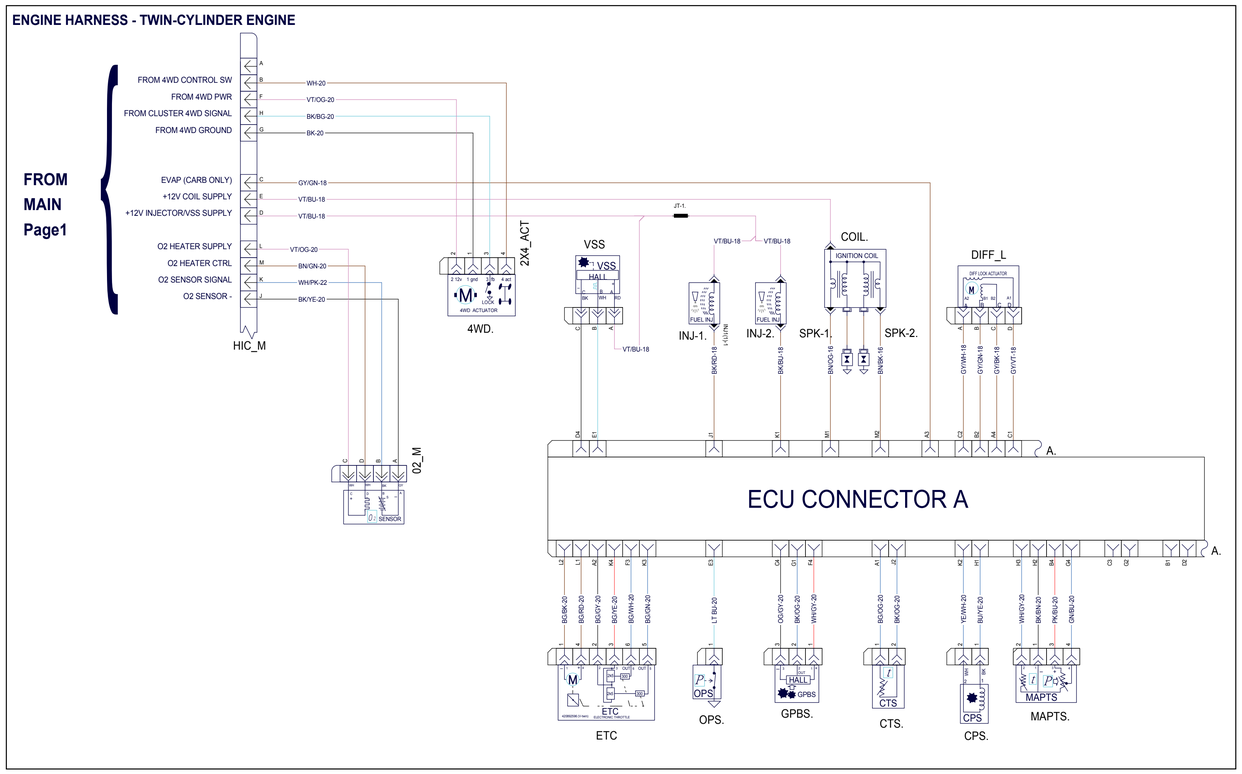

ROOF WITH CONNECTOR

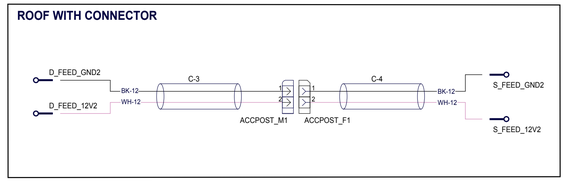

HORN

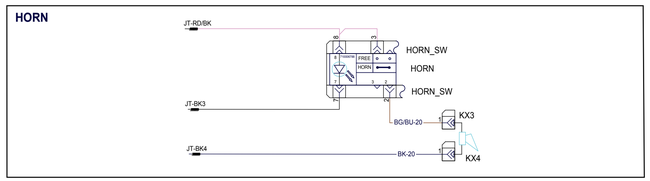

SMART-LOK FRONT DIFFERENTIAL

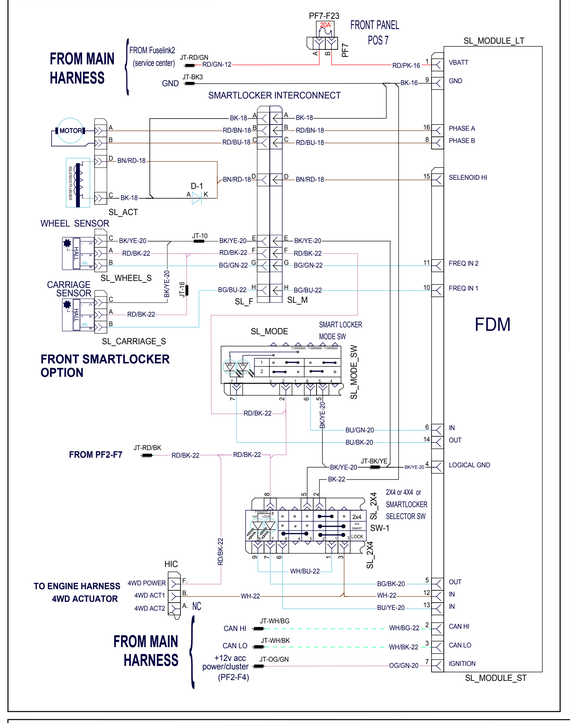

WINCH

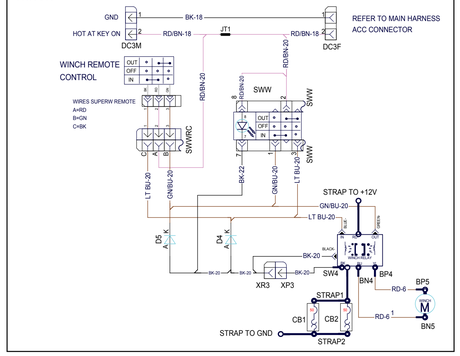

MAIN HARNESS

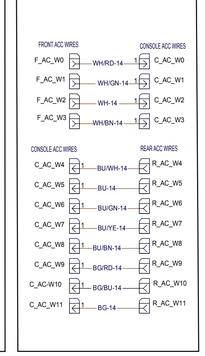

AUDIO (ROOF)

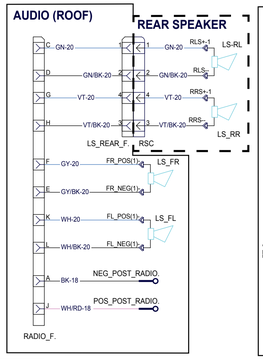

HEATER

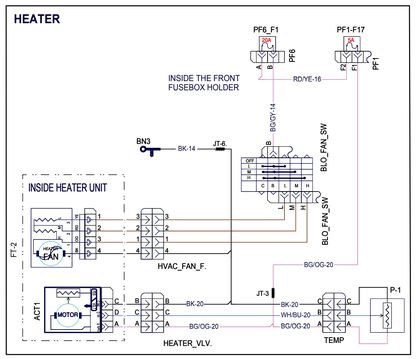

NEXT HD7 ENGINE HARNESS STANDARD (HD7) T-VARIANT (NO ABS) HEATER

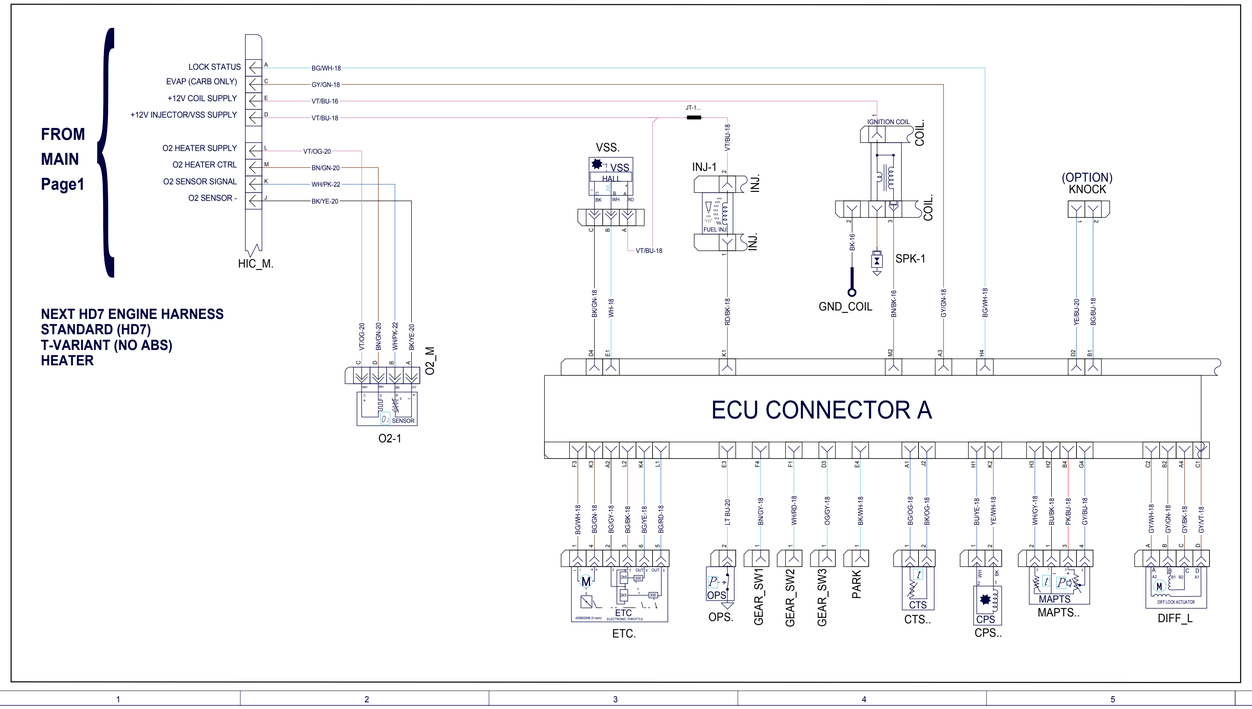

DOOR SWITCH DRIVER SIDE / WIPER (ROOF) / DOOR SWITCH PASSENGER SIDE / WINDSHEILD WASHER PUMP EXTENSION / DOME LIGHT / ROOF

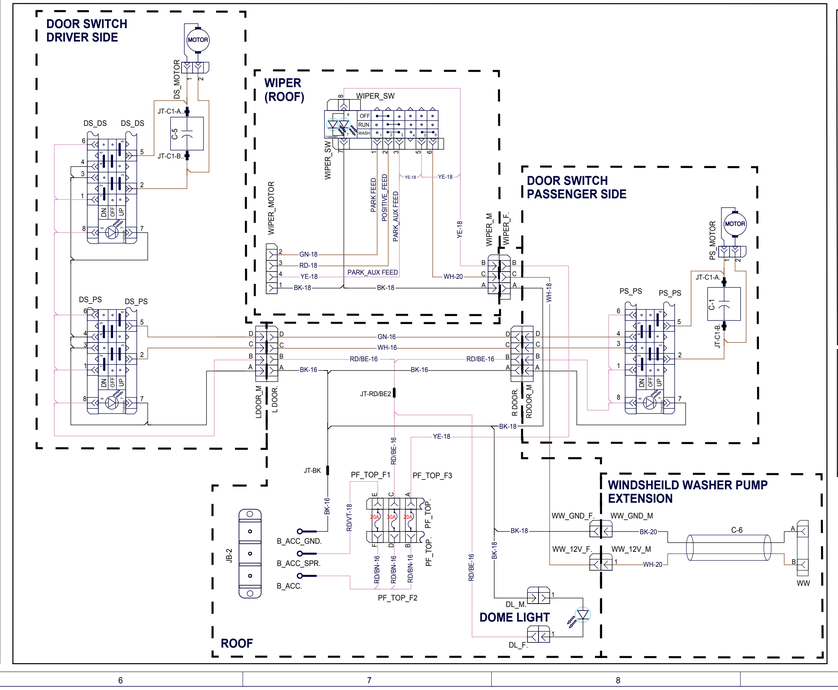

POWER-TILT BED

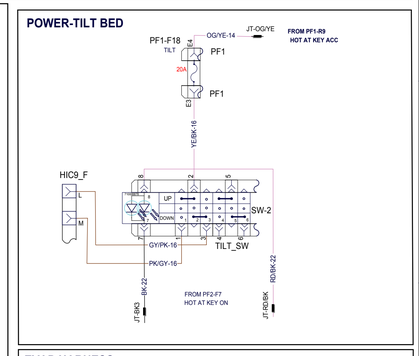

EVAP HARNESS

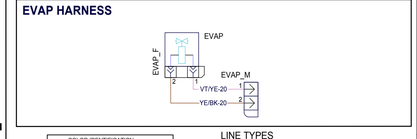

COLOR IDENTIFICATION	
CODE	COLOR
WH	WHITE
BK	BLACK
GN	GREEN
GY	GREY
PK	PINK
RD	RED
OG	ORANGE
YE	YELLOW
VT	VIOLET
BN	BROWN
BG	BEIGE (TAN)
BU	BLUE
LT GN	LIGHTGREEN
LT BU	LIGHT BLUE
N/A	NOT AVAILABLE

LINE TYPES

- 55 / 60 VOLTS
- 12 VOLTS SWITCHED
- 12 VOLTS UNSWITCHED
- 5 OR 3.3 VOLTS
- DIGITAL SIGNAL
- POWER CONTROL
- ANALOG SIGNAL
- COMMUNICATION
- A-D GROUND
- POWER GROUND
- AC VOLTAGE

ROTAX®

Engine Service Manual

HD7 and 700 Engines

Midwest Manuals
Green Manuals
Paperless Manuals
For a Better Tomorrow
www.green-manuals.com
If you bought this manual from any other seller please leave them
NEGATIVE feeddback and notify me at bestshopmanuals@gmail.com

Version B

TABLE OF CONTENTS

01 ENGINE 1
INTAKE MANIFOLD 2
PROCEDURES 3
MANIFOLD AIR PRESSURE AND TEMPERATURE SENSOR (MAPTS) 3
INTAKE MANIFOLD 5
LUBRICATION SYSTEM 8
INSPECTION 11
ENGINE OIL PRESSURE 11
TROUBLESHOOTING 11
TROUBLESHOOTING 11
PROCEDURES 12
ENGINE OIL 12
ENGINE OIL FILTER 13
OIL FILTER HOUSING 14
OIL COOLER 16
OIL PRESSURE SWITCH (OPS) 16
ENGINE OIL PRESSURE REGULATOR 17
OIL PUMP DRIVE 18
OIL PUMP 19
ENGINE OIL STRAINER 22
COOLING SYSTEM - ENGINE COMPONENTS 23
GENERAL 25
INSPECTION 25
INSPECTING THE ENGINE COOLING SYSTEM 25
PROCEDURES 25
COOLANT TEMPERATURE SENSOR (CTS) 25
THERMOSTAT COVER 25
WATER PUMP HOUSING 26
WATER PUMP IMPELLER 27
WATER PUMP SHAFT AND SEALS 27
MAGNETO AND STARTER 34
PROCEDURES 36
CRANKSHAFT POSITION SENSOR (CPS) 36
MAGNETO COVER 36
STATOR 37
ROTOR 39
SPRAG CLUTCH 41
SPRAG CLUTCH GEAR 42
STARTER DRIVE GEARS 42
ELECTRIC STARTER 43
TIMING CHAIN 45
GENERAL 46
TROUBLESHOOTING 46
TROUBLESHOOTING 46
PROCEDURES 46
TIMING CHAIN TENSIONER 46
CAMSHAFT TIMING GEARS 47
TIMING CHAIN 48
CHAIN GUIDES 49
CYLINDER HEAD 51
GENERAL 54
INSPECTION 54
CYLINDER LEAK TEST 54
TROUBLESHOOTING 55

TROUBLESHOOTING 55
PROCEDURES 55
VALVE COVER 55
CAMSHAFTS 56
CAMSHAFT HOLDER 61
VALVE LIFTERS BUCKETS 62
CYLINDER HEAD 63
VALVE SPRINGS 65
VALVES 66
CYLINDER 70
PISTON 71
PISTON RINGS 75
CYLINDER BLOCK 77
GENERAL 80
PROCEDURES 80
OUTPUT SHAFT OIL SEALS 80
SHIFT SHAFT OIL SEAL 81
CRANKSHAFT OIL SEAL 82
COUNTERSHAFT OIL SEAL 83
REED VALVES 84
CRANKCASE 85
BALANCER SHAFT 92
CRANKSHAFT 94

02 CONTINUOUSLY VARIABLE TRANSMISSION (CVT) 101
EXPLODED VIEW AND GENERAL WARNINGS 102
CVT COVER 104
DRAINING THE CVT COVER 104
REMOVING THE CVT COVER 104
CLEANING THE CVT AIR INLET/OUTLET 104
INSTALLING THE CVT COVER 105
DRIVE BELT 106
REMOVING THE DRIVE BELT 106
INSPECTING THE DRIVE BELT 106
INSTALLING THE DRIVE BELT 107
DRIVE PULLEY 108
REMOVING THE DRIVE PULLEY 108
DISASSEMBLING THE DRIVE PULLEY 109
SEPARATING FIXED AND SLIDING SHEAVES 109
REMOVING THE SPRING AND GOVERNOR CUP 110
REMOVING THE ROLLER 112
REMOVING THE ROLLER LEVER (WITHOUT GOVERNOR CUP) 113
REMOVING THE ROLLER LEVER (GOVERNOR CUP INSTALLED) 113
REMOVING THE INNER ROLLER AND OUTER ROLLER 114
FIXED SHEAVE 115
CLEANING THE DRIVE PULLEY 115
INSPECTING THE DRIVE PULLEY 116
GOVERNOR CUP 116
THRUST ROLLER BEARING SLEEVE 116
THRUST ROLLER 116
ROLLER LEVER BEARING SLEEVE 117
ROLLER LEVER 117
ROLLER BEARING SLEEVE 118
INNER AND OUTER ROLLER 118
SLIDING SHEAVE 118

SPRING, SPRING SUPPORT, SPRING SEAT AND TORQUE FLANGE 119
FIXED SHEAVE 119
HUB BEARING 120
ASSEMBLING THE DRIVE PULLEY 120
HUB BEARING 120
INNER AND OUTER ROLLERS 120
ROLLER LEVER 121
THRUST ROLLER 121
GOVERNOR CUP 122
TORQUE FLANGE 123
INSTALLING THE DRIVE PULLEY 123
DRIVEN PULLEY 125
REMOVING THE DRIVEN PULLEY 125
SLIDE SHOE 126
INSPECTING THE SLIDE SHOE 126
REMOVING THE SLIDE SHOE 126
INSTALLING THE SLIDE SHOE 127
DISASSEMBLING THE DRIVEN PULLEY 127
REMOVING THE SPRING AND SHEAVES 127
CLEANING THE DRIVEN PULLEY 128
INSPECTING THE DRIVEN PULLEY 128
SLIDING SHEAVE 128
FIXED SHEAVE 129
SPRING, SPRING SUPPORT AND SPRING SEAT 129
ASSEMBLING THE DRIVEN PULLEY 129
ASSEMBLING THE SHEAVES 129
INSTALLING THE DRIVEN PULLEY 131
CVT AIR GUIDE 133
REMOVING THE CVT AIR GUIDE 133
INSPECTING THE CVT AIR GUIDE 133
INSTALLING THE CVT AIR GUIDE 133

03 GEARBOX 135
EXPLODED VIEWS 136
GEARBOX OIL 138
RECOMMENDED GEARBOX OIL 138
VERIFYING THE GEARBOX OIL LEVEL 138
DRAINING THE GEARBOX OIL 138
FILLING THE GEARBOX OIL 139
VEHICLE SPEED SENSOR (VSS) 140
VSS LOCATION 140
VSS WIRE IDENTIFICATION 140
VSS CIRCUIT PROTECTION 140
TESTING THE VSS INPUT VOLTAGE 140
TESTING THE VSS SIGNAL 141
REMOVING THE VSS 141
CLEANING THE VSS 141
INSTALLING THE VSS 141
INTERMEDIATE DRIVE 142
REMOVING THE INTERMEDIATE DRIVE 142
INSPECTING THE INTERMEDIATE DRIVE 142
ASSEMBLING THE INTERMEDIATE DRIVE 143
GEARBOX AND SHIFTING MECHANISM 145
DISASSEMBLING THE GEARBOX 145
MAIN SHAFT AND COUNTERSHAFT 146

DISASSEMBLING THE MAIN SHAFT AND COUNTERSHAFT 147
ASSEMBLING THE MAIN SHAFT AND COUNTERSHAFT 148
SHIFTING UNIT 149
DISASSEMBLING THE SHIFTING UNIT 149
ASSEMBLING THE SHIFTING UNIT 149
OUTPUT SHAFT AND BEVEL GEAR 150
DISASSEMBLING THE OUTPUT SHAFT AND BEVEL GEAR 150
ASSEMBLING THE OUTPUT SHAFT AND BEVEL GEAR 151
INSPECTING THE GEARBOX 152
BEARINGS 152
GEARS 152
LEVERS 152
SHAFTS 152
SHIFT DRUM 153
SHIFTING SLEEVES 153
SHIFT FORKS 154
OUTPUT SHAFT AND BEVEL GEAR 154
ASSEMBLING THE GEARBOX 154
GEARBOX POSITION INDICATOR SWITCHES 157
TESTING THE GEARBOX POSITION INDICATOR SWITCH CONTINUITY 157
REMOVING THE GEARBOX POSITION INDICATOR SWITCH 158
INSTALLING THE GEARBOX POSITION INDICATOR SWITCH 158

04 ELECTRONIC MANAGEMENT SYSTEM 159
ELECTRONIC CONTROL MODULE 160
GENERAL 160
SYSTEM DESCRIPTION 160
TROUBLESHOOTING 160
DIAGNOSTIC TIPS 160
PROCEDURES 160
ENGINE CONTROL MODULE (ECM) 160

05 FUEL SYSTEM 163
ELECTRONIC FUEL INJECTION (EFI) 164
GENERAL 164
SYSTEM DESCRIPTION 164
IDLE SPEED 165
TROUBLESHOOTING 165
DIAGNOSTIC TIPS 165
PROCEDURES 166
FUEL INJECTOR 166
FUEL RAIL 168
THROTTLE BODY 169
THROTTLE POSITION SENSOR (TPS) 170

06 ELECTRICAL SYSTEM 173
IGNITION COIL AND SPARK PLUG 174
GENERAL 174
SYSTEM DESCRIPTION 174
TROUBLESHOOTING 174
IGNITION SYSTEM TESTING 174
PROCEDURES 175
IGNITION COILS 175

SPARK PLUG 177
ENGINE WIRING HARNESS 178
GENERAL 178
PROCEDURES 178
REMOVING THE ENGINE WIRING HARNESS 178
INSTALLING THE ENGINE WIRING HARNESS 178
INSTALLING THE ENGINE WIRING HARNESS BRACKET 179

07 TECHNICAL SPECIFICATIONS 183
ENGINE 184

Bearing installer (gearbox)
(P/N 529035763)

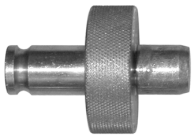

Page:90

Bearing pusher
(P/N 529036538)

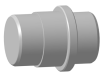

Page:88–89

Bearing pusher
(P/N 529036541)

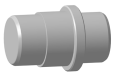

Page:88–89

Camshaft locking tool
(P/N 529036536)

Page:56

Circlip tool
(P/N 529036542)

Page:111

Clutch Holder
(P/N 529036559)

Page:108–109, 125, 131

Crankcase support (MAG side)
(P/N 529035916)

Page:89

Crankshaft locking tool
(P/N 529036535)

Page:95

Crankshaft position cap
(P/N 529036539)

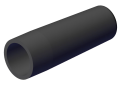

Page:91

Crankshaft protector (PTO)
(P/N 420876552)

Page:82

DDS Disassembly Kit
(P/N 529036548)

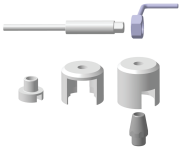

Page:127, 129

Drive pulley opening tool
(P/N 529036378)

Page:113

Drive pulley puller
(P/N 529000064)

Page:108–109

Drive pulley support
(P/N 529036371)

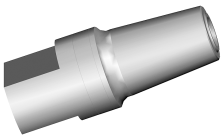

Page:109, 113

Drive shaft front oil seal pusher
(P/N 529036533)

Page:80

Drive shaft rear oil seal pusher
(P/N 529036534)

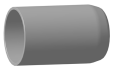

Page:81

ECM adapter tool
(P/N 529 036 166)

Page:161, 166

ECM adapter tool
(P/N 529036166)

Page:175

Engine leak down test kit
(P/N 529035661)

Page:54

Governor cup remover
(P/N 529036546)

Page:110

SERVICE TOOLS INDEX

Grease injector
(P/N 529036376)

Page:117

Handle
(P/N 420877650)

Page:31, 90

Magneto puller
(P/N 529035748)

Page:40

Oil pressure hose
(P/N 529036394)

Page:11

Oil pressure test cap
(P/N 529036158)

Page:11

Oil seal pusher
(P/N 529035757)

Page:31

Piston circlip installer
(P/N 529036532)

Page:73

Pressure gauge
(P/N 529036395)

Page:11

PTO oil seal installer
(P/N 529036216)

Page:83

Puller/locking tool
(P/N 529036098)

Page:106, 125

Pulley spring compressor tool
(P/N 529036545)

Page:110, 113

Punch
(P/N 529036425)

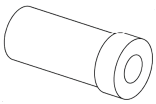

Page:80–81

Removing axle tool
(P/N 529036372)

Page:112–114

Roller axle puller
(P/N 529036557)

Page:115

Rotary Pusher Plate
(P/N 529036544)

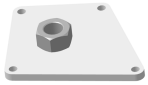

Page:29

Rotary seal pusher
(P/N 529036540)

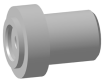

Page:29, 31

Rotary seal pusher
(P/N 529036540)

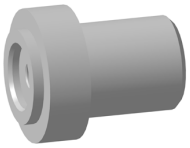

Page:32

Valve spring compressor cup
(P/N 529036161)

Page:65–66

Valve spring compressor
(P/N 529035724)

Page:65–66

WD Seal Installer - Protection Sleeve
(P/N 529036556)

Page:82

WD seal installer
(P/N 529036537)

Page:82

Black neoprene paint
Page:44

Brake and parts cleaner PRO S2
Page:37, 151

Clutch and pulley flange cleaner PRO S1
Page:40, 42, 115, 120, 128

Copaslip
Page:43, 154

Dielectric grease
Page:44

Engine oil
Page:36

Isoflex Grease Topas NB 5051
Page:120

Loctite 232
Page:41

Loctite 243 (blue)
Page:17, 19, 22, 26, 48, 50, 121–122, 127, 151

Loctite 5910
Page:37, 39, 91, 158

Loctite 648 (green)
Page:42, 123, 143

Loctite chisel (gasket remover)
Page:37

Super Lube grease
Page:29, 31, 66, 80–82, 141, 151

Triple-guard grease
Page:117

XPS Brakes and Parts cleaner
Page:131

ENGINE

01 Engine

Intake Manifold

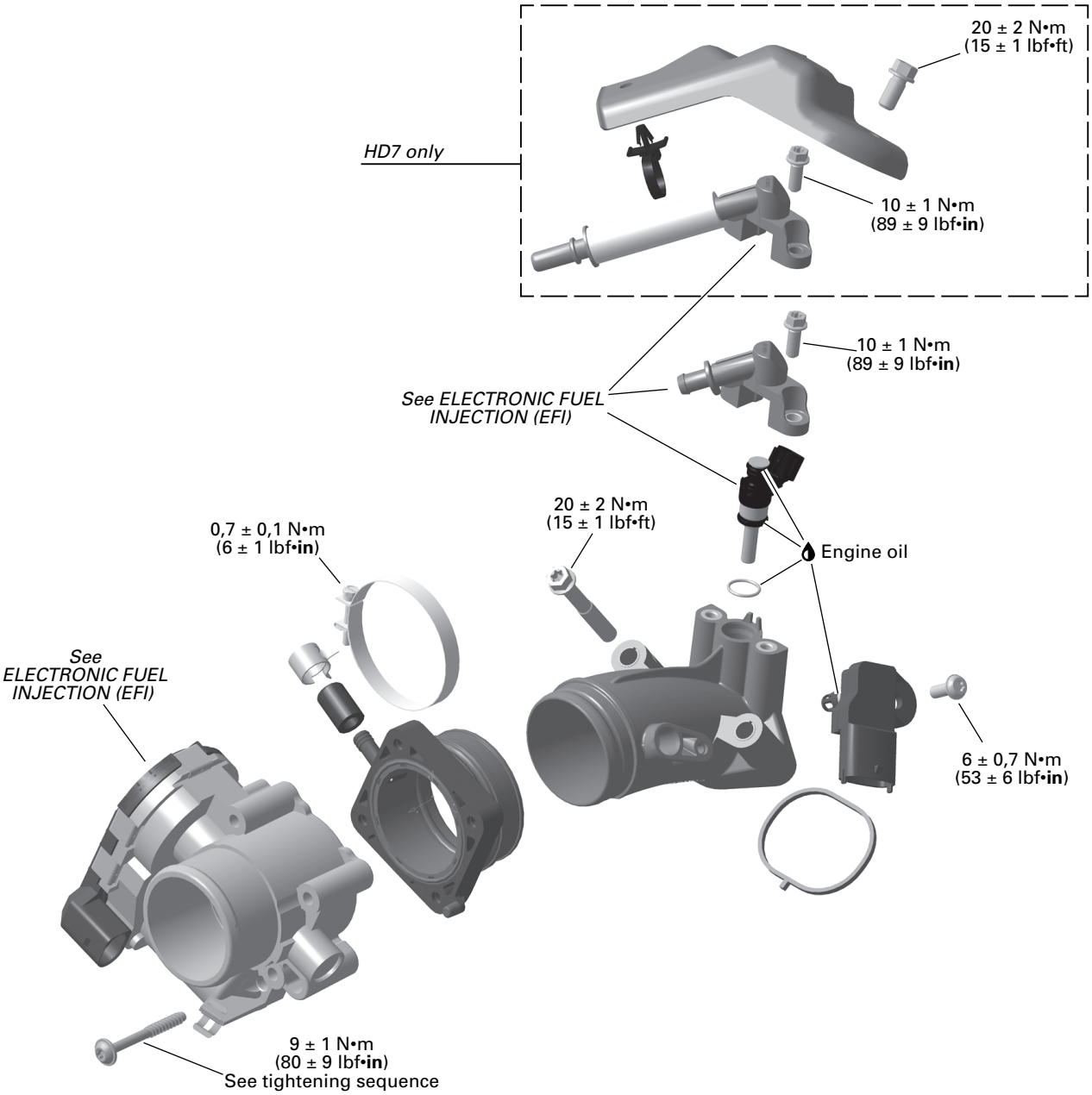

NEW = Component must be replaced when removed.

Procedures

Manifold Air Pressure and Temperature Sensor (MAPTS)

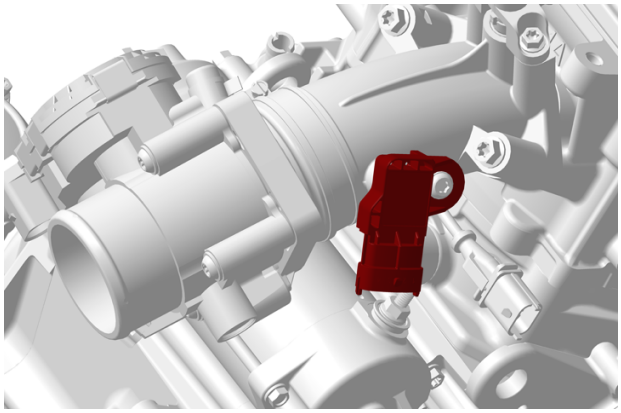

MAPTS Pressure Function

Before the engine is started, when power is applied to the system, the sensor measures the ambient air atmospheric pressure. The ambient pressure is, at that moment, stored in the ECM. Thereafter, once the engine is started, it measures the air pressure in the inlet end of the intake manifold at operating RPMs.

The sensor must be correctly installed on intake manifold. Otherwise, the MAPTS could generate a fault code for an unexpected sensor range at idle when it reads the atmospheric pressure. If this is the case, remove sensor and check for oil or dirt on its end and if problem persists, check throttle plate condition/position and the wiring harness. Perform the following tests.

Testing the MAPTS (Pressure Function)

1. Connect vehicle to the BRP diagnostic software (BUDS2).
2. In BUDS2, select the following:
   - Measurements page
   - ECM button
   - Custom tab
   - Manifold Pressure With Altitude Correction.
3. Look for and take note of the MAPTS pressure reading while the engine is stopped.
4. Perform the same test with a new MAPTS and compare both readings.

   Values have to be within ± 3.4 kPa (.5 lbf/in²).

Testing the MAPTS Pressure Function			
Result	Service Action		
No reading	Circuit Continuity Test of MAPTS Pressure Function	MAPTS Input Voltage Test	Repair or replace wiring
Value is out of range	Replace MAPTS		

Testing the MAPTS Input Voltage

Check the voltage output from ECM to the pressure sensor.

1. Turn ignition key ON.
2. Remove electrical connector from MAPTS.
3. Measure input voltage as per following table.

MAPTS connector		Specification
Pin		Voltage
1	3	5 Vdc

If voltage test is good, replace the MAPTS.

If voltage test is not good, carry out *Testing the MAPTS Circuit Continuity (Pressure Function)*.

Testing the MAPTS Circuit Continuity (Pressure Function)

1. Disconnect the ECM-A connector from the ECM.
2. Install the ECM-A connector on the ECM adapter tool.
3. Check continuity of the following circuits.

MAPTS Circuit Continuity Test (Pressure Function)		
ECM adapter pin	MAPTS Connector Pin	Specification
B4	3	Close to 0 Ω
G4	4	
H2	1	

If resistance is not within specification, repair or replace the wiring harness between the ECM connector and the MAPTS.

MAPTS Temperature Function

The sensor monitors the temperature in the inlet of the intake manifold.

Testing the MAPTS (Temperature Function)

1. Connect the vehicle to the BRP diagnostic software (BUDS2).
2. In BUDS2, select the following:
   - Measurements page
   - ECM button
   - Custom tab.
3. Look for the Intake Temperature reading while the engine is stopped.
4. Perform the same test with a new MAPTS and compare both readings.

   If the engine's MAPTS temperature reading is significantly different than the new MAPTS, replace it.

NOTE: Both sensors must measure the same ambient air temperature.

If there is no reading, carry out a *Testing the MAPTS Resistance (Temperature FUNCTION)*.

Testing the MAPTS Resistance (Temperature Function)

1. Disconnect the connector from the MAPTS.
2. Check the resistance of the sensor itself as shown.

MAPTS Resistance Test		
MAPTS pin		**Specification @ 20 °C (68 °F)**
1	2	2323 - 2690 Ω

3. If resistance is not within specification, replace the MAPTS.
4. If resistance tests good, reconnect the MAPTS and disconnect the connector “A” from the ECM.
5. Install the ECM-A connector on the ECM adapter tool.
6. Using a multimeter, recheck resistance value as per following table.

MAPTS Resistance Test at ecm connector		
ECM adapter pin		**Specification @ 20 °C (68 °F)**
A-H2	A-H3	2323 - 2690 Ω

MAPTS Temperature Sensor Test results			
Result	Service Action		
No reading	Circuit Continuity Test of MAPTS Tempera ture Function	MAPTS Input Voltage Test	Repair or replace wiring
Incorrect resistance value	Replace MAPTS		

Testing the MAPTS Circuit Continuity (Temperature Function)

MAPTS Circuit Continuity Test (temperature Function)		
ECM adapter pin	**MAPTS connector pin**	**Specification**
A-H2	1	Close to 0 Ω
A-H3	2	

Replacing the MAPTS

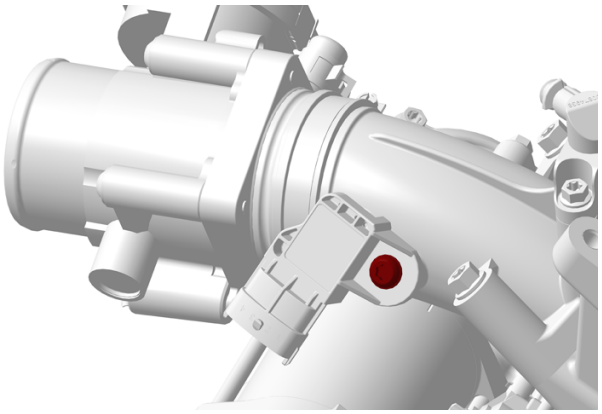

Disconnect MAPTS connector and remove the MAPTS from the intake manifold.

Install new MAPTS as per following table.

Tightening torque	
MAPTS retaining screw	6 ± 0.7 Nm (53 ± 6 lbf-in)

Intake Manifold

Removing the Intake Manifold

1. Release fuel pressure
   1. Disconnect the fuel pump connector
   2. Start engine and let it run out of gas.
2. If the engine is equipped with a protection plate over the fuel injector, cut the cable tie and remove the protector plate.

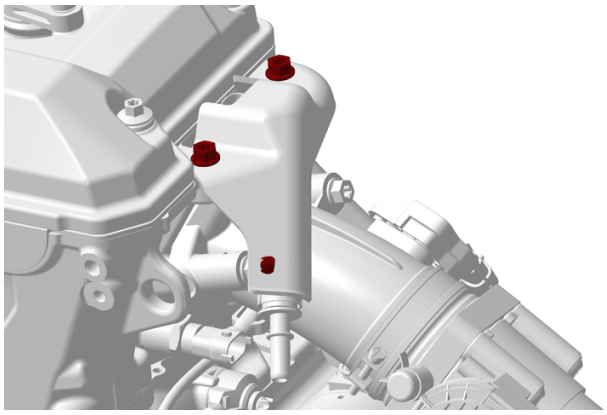

3. Loosen the lower clamp and pull off throttle body with intake socket from the intake manifold.

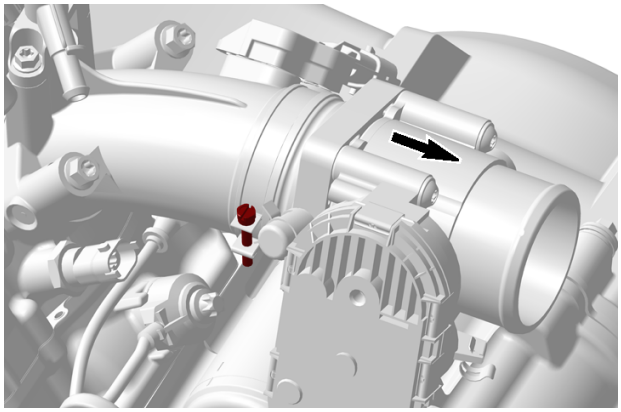

4. Disconnect the fuel hose from the fuel rail.

⚠ CAUTION
The fuel hose may still be under pressure.

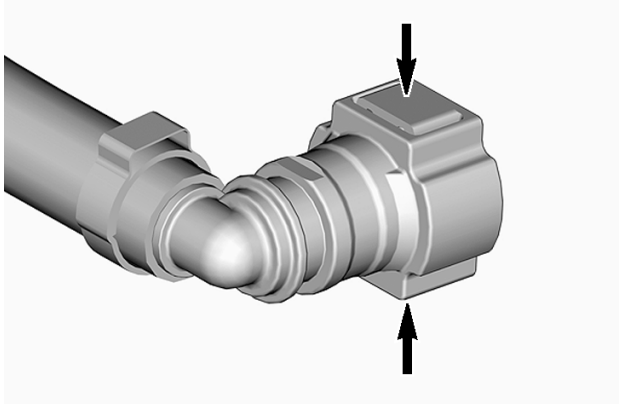

PRESS BUTTONS

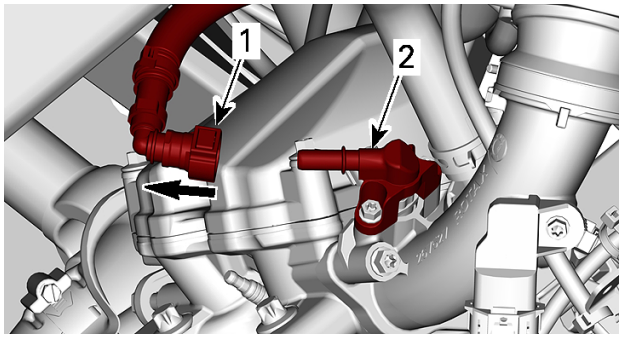

PULL OFF
1. Fuel pressure hose fitting
2. Fuel rail

5. Disconnect:
   - Fuel injector connector
   - MAPTS connector.

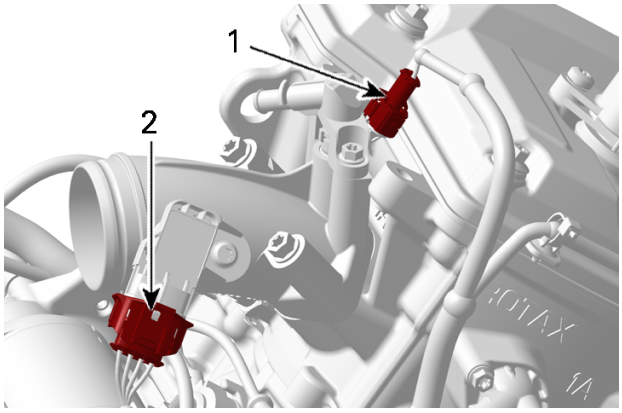

1. Fuel injector connector
2. MAPTS connector

6. Remove intake manifold from engine.

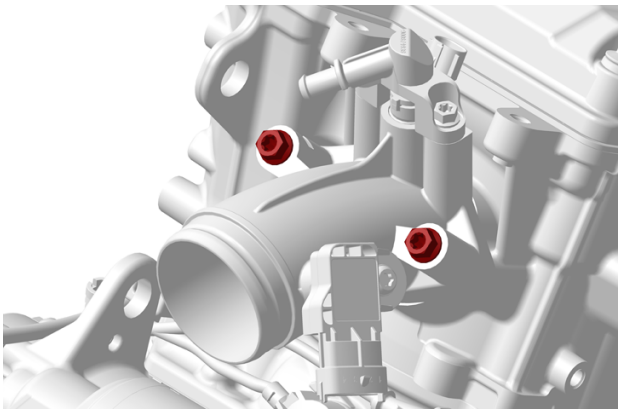

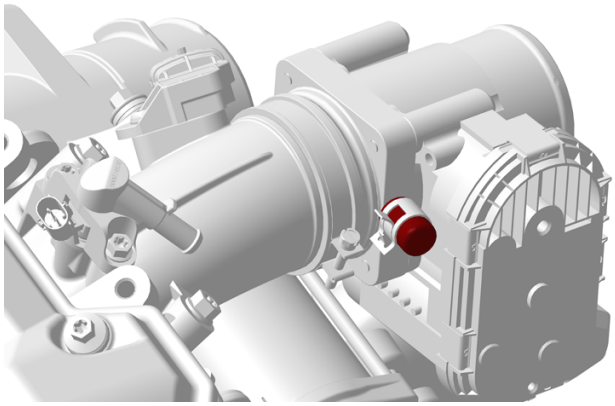

Inspecting the Intake Manifold

1. Check intake manifold for cracks, warping at flanges or any other damage. Replace as required.

Inspecting the Intake Socket and Closure Cap

1. Check intake socket for cracks, warping at flanges or any other visible damage. If required, remove it from throttle body and replace it.

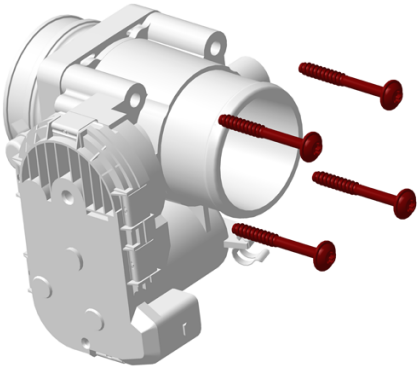

2. Check closure cap for porosity or cracks. Replace as required.

Installing the Intake Manifold

The installation is the reverse of the removal procedure. However, pay attention to the following.

1. Tighten intake manifold retaining screws to specification.

Tightening Torque	
Intake manifold screws	20 ± 2 Nm (15 ± 1 lbf-ft)

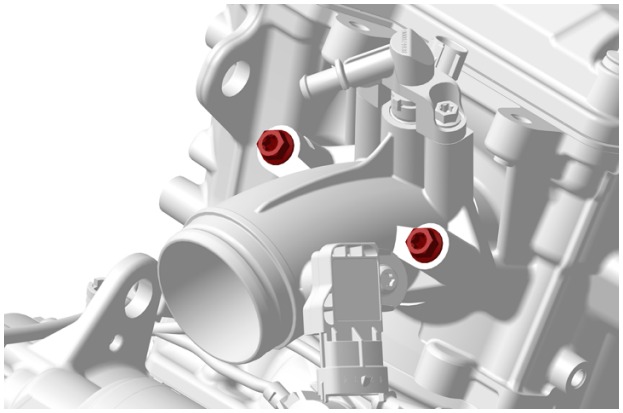

Installing the Intake Socket

1. If removed, install throttle body to the intake socket. Refer to *electronic fuel injection (efi)* subsection.
2. Install clamp on intake socket.
3. Install throttle body with intake socket to the intake manifold.

NOTE: Make sure to index intake socket notch with the intake manifold.

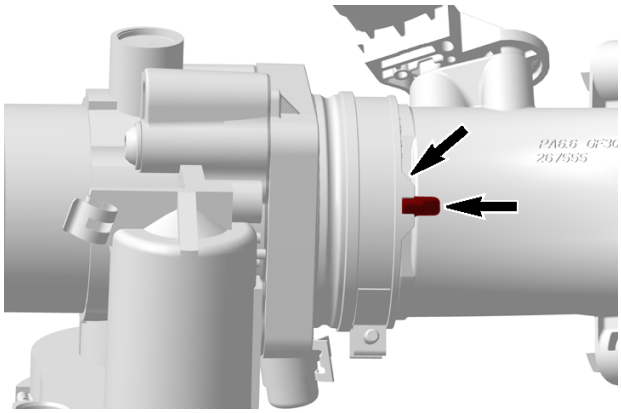

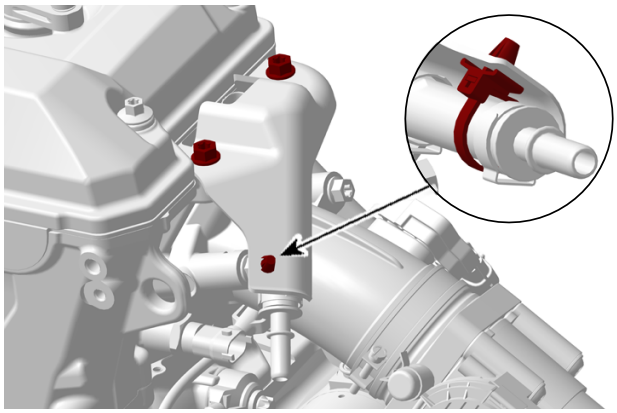

Position the clamp and tighten to specification.

Tightening Torque	
Intake socket clamp	0.7 ± 0.1 Nm (6 ± 1 lbf-in)

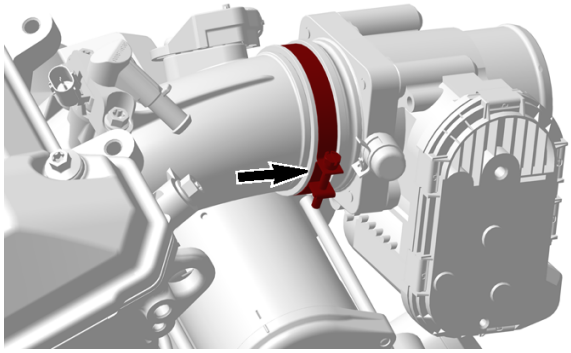

Installing the Protection Plate (if equipped)

1. Ensure proper position of the fuel hose.
2. Install and secure protection plate with locking tie.
3. Tighten protection plate retaining screws to specification.

Tightening Torque	
Protection plate screws	20 ± 2 Nm (15 ± 1 lbf-ft)

Lubrication System

SERVICE TOOLS

Description	Part Number	Page
OIL PRESSURE HOSE	(P/N 529036394)	11
OIL PRESSURE TEST CAP	(P/N 529036158)	11
PRESSURE GAUGE	(P/N 529036395)	11

SERVICE PRODUCTS

Description	Part Number	Page
LOCTITE 243 (BLUE)		17, 19, 22

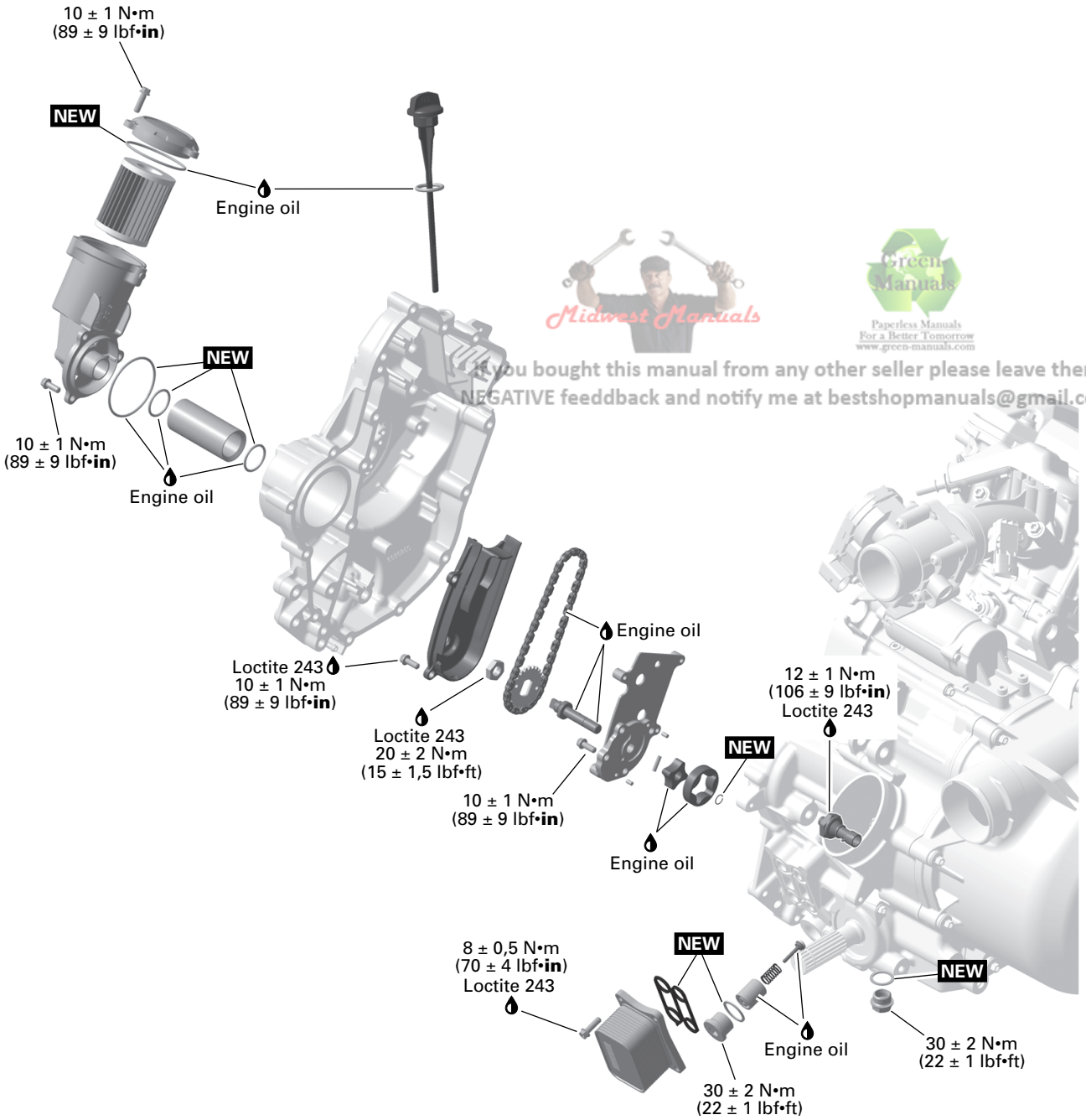

Midwest Manuals
Green Manuals
Paperless Manuals
For a Better Tomorrow
www.green-manuals.com
If you bought this manual from any other seller please leave them
NEGATIVE feeddback and notify me at bestshopmanuals@gmail.com

NEW = Component must be replaced when removed.

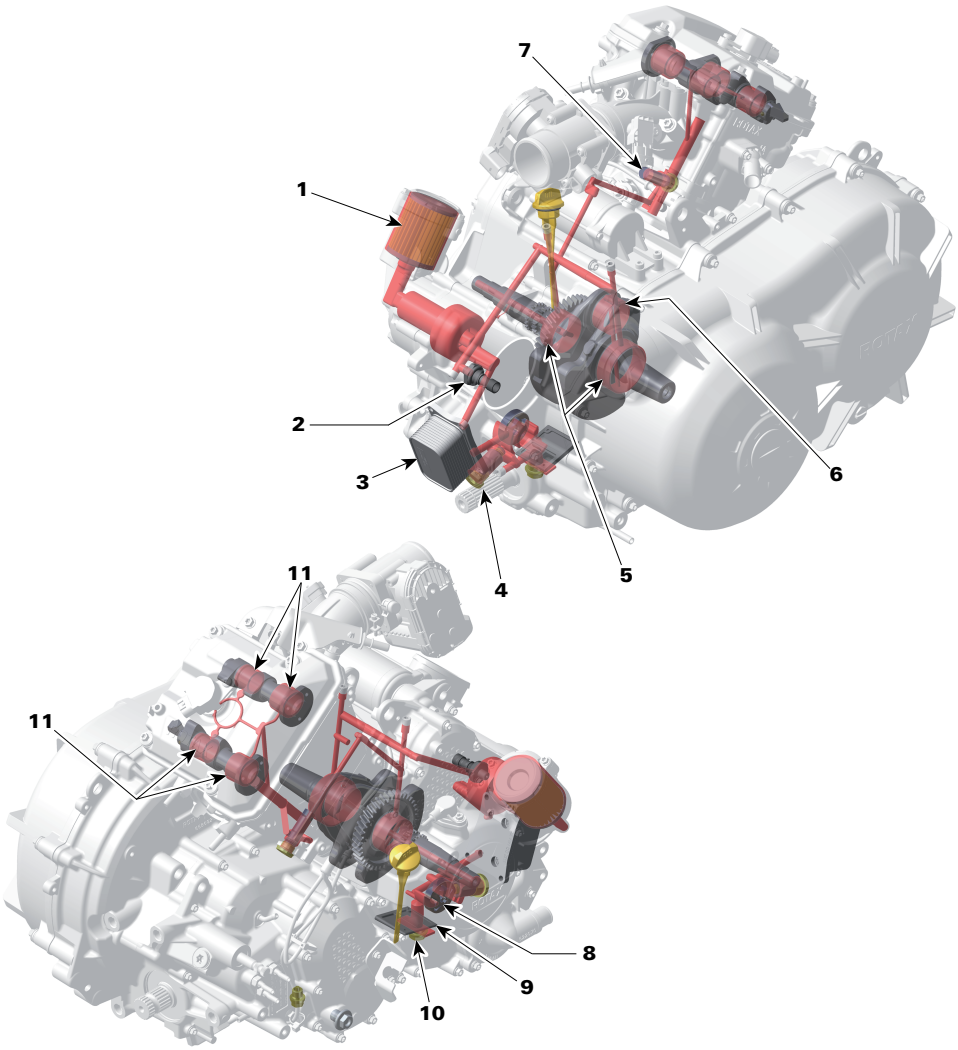

ENGINE LUBRICATION CIRCUIT

1. Oil filter
2. Oil pressure switch
3. Oil - Water Heat exchanger
4. Oil pressure regulator valve
5. Crankshaft main bearings
6. Connecting rod bearings
7. Chain tensioner
8. Oil pump
9. Oil strainer
10. Oil drain plug
11. Camshaft bearings

Inspection

Engine Oil Pressure

The engine oil pressure test should be done with a warm engine 100 ° C (212 ° F) and the recommended oil.

1. Assemble the test tool if not already done.

Oil pressure test cap (P/N 529036158)	
Oil pressure hose (P/N 529036394)	

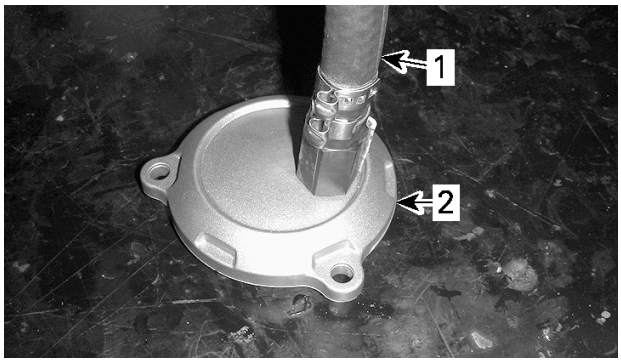

1. *Adapter hose*
2. *Oil pressure test cap*

2. Remove oil filter cover. Refer to *replacing the engine oil filter* in this subsection.
3. Install oil pressure test cap on oil filter housing. Position adapter hose near engine.
4. Connect pressure gauge to adapter hose.

Pressure gauge (P/N 529036395)	

5. Start engine and check oil pressure.

   The engine oil pressure should be within the following values.

OIL PRESSURE	1250 RPM	7000 RPM
MINIMAL	70 kPa (10.15 lbf/in²)	250 kPa (36.26 lbf/in²)
NOMINAL	120 kPa (17.4 lbf/in²)	320 kPa (46.41 lbf/in²)
MAXIMAL	200 kPa (29.01 lbf/in²)	450 kPa (65.27 lbf/in²)

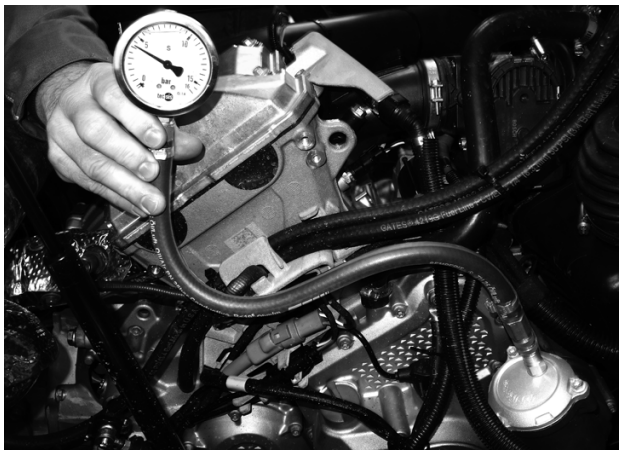

6. If the engine oil pressure is out of specifications, check the points described in *troubleshooting* in this subsection.
7. Turn off engine.
8. Remove engine oil pressure test tools.
9. Reinstall all removed parts.

Troubleshooting

Troubleshooting

1. LOW OR NO OIL PRESSURE

Oil level is too low.

– *Refill engine with recommended engine oil. Refer to Verifying the Oil Level in this subsection.*

– *Check for high oil consumption, refer to High oil consumption in this troubleshooting.*

Use of unsuitable engine oil type.

– *Replace engine oil by the recommended engine oil.*

Clogged oil filter.

– *Replace oil and oil filter at the same time.*

Defective oil pressure switch.

– *Test oil pressure switch, see procedure in this subsection.*

Defective or worn oil pump.

– *Check oil pump, see procedure in this subsection.*

Defective engine oil pressure regulator.

– *Check engine oil pressure regulator, see procedure in this subsection.*

Worn plain bearings in crankcase.

– *Check plain bearings clearance, refer to cylinder block subsection.*

Clogged engine oil strainer.

– *Clean engine oil strainer, see procedure in this subsection.*

No oil pressure

– *Check oil pump drive chain for wear or other damages, see procedure in this subsection.*

2. OIL CONTAMINATION

Defective water pump seal ring or rotary seal.

– *Check for oil or coolant leak from indicator hole near water pump, refer to Cooling System - Engine Components. Replace seal if necessary.*

Cylinder head or cylinder base gasket leak.

– *Retighten cylinder head to specified torque, refer to cylinder head subsection. Replace gasket if tightening does not solve the problem.*

Engine internal damage.

– *Repair engine.*

Oil cooler gasket leak.

– *Replace oil cooler gasket and change engine oil.*

3. HIGH OIL CONSUMPTION

Leaking breather oil seal.

– *Check if the oil seal of the breather is brittle, hard or damaged. Refer to cylinder block subsection.*

Valve stem seals worn or damaged.

– *Replace valve stem seals.*

Worn piston rings (blue exhaust smoke).

– *Replace piston rings.*

Procedures

Engine Oil

Recommended Engine Oil

Rotax® engines were developed and validated using the XPS™ oil.

BRP recommends the use of its XPS engine oil or an equivalent at all time.

Damages caused by the use of an oil not suitable for the engine may not be covered by the BRP Limited Warranty.

XPS Recommended Engine Oil	
General purpose	XPS 4T 5W40 Synthetic blend oil
Cold temperature	XPS 4T 0W40 Synthetic oil
Warm temperature	XPS 4T 10W50 Synthetic oil

If the recommended XPS engine oil is not available:

– Use a 4-stroke SAE engine oil meeting or exceeding the following lubricant industry specifications.
– Always check the API service label certification on the oil container, it must contain at least one of the indicated standards.
  – API service classification SJ, SL, SM or SN

Verifying the Engine Oil Level

NOTICE

Operating the engine with an improper level may severely damage engine.

NOTICE

Check the oil level when the engine is hot.

1. Start and let the engine run at idle for 60 seconds.
2. Stop engine.
3. Place the vehicle on a level surface.
4. Clean around dipstick to avoid foreign particles falling down the tube.

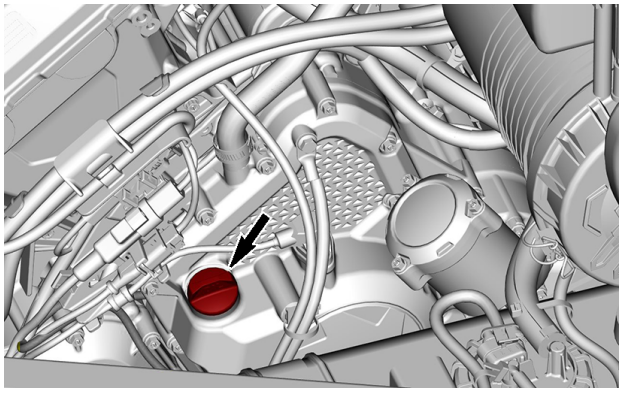

5. Unscrew dipstick, remove it and wipe clean.
6. Reinstall dipstick, screw in it completely.

7. Remove dipstick and check oil level. It should be near or equal to the upper mark.

1. MIN.
2. MAX.

If the level is between marks, reinstall the dipstick.

If the level is below the MIN mark, add oil as follow:

- Place a funnel into the dipstick hole.
- Add a small amount of recommended oil and recheck oil level.
- Continue to add oil until the level reaches the MAX mark.
- Wipe off any spillage.
- Reinstall the dipstick.

NOTICE
Do not overfill, there is 0.4 l (.85 pt(liq.,US)) between dipstick marks.

Changing the Engine Oil

NOTICE
Engine oil and oil filter must be replaced at the same time.

Oil change and oil filter replacement should be done with a warm engine.

⚠ CAUTION
The engine oil can be very hot. Wait until engine oil is warm.

1. Place the vehicle on a level surface.
2. Clean the dipstick area.
3. Remove the dipstick.
4. Place a drain pan under the engine drain plug area.
5. Clean the drain plug area.
6. Unscrew drain plug and discard the gasket ring.

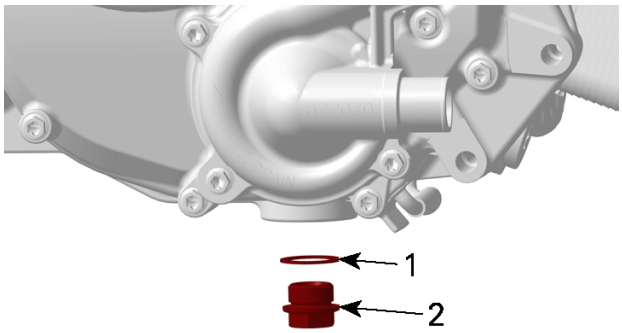

1. Gasket ring
2. Drain plug

7. Allow oil to drain completely from the crankcase.
8. Clean the drain plug from metal shavings and residue.

   Presence of debris gives an indication of internal engine damage.
9. Install a **NEW** gasket ring on the drain plug.

NOTICE
Never use the gasket ring a second time. Always replace by a new one.

10. Install and tighten drain plug to the recommended specification.

Tightening Torque	
Drain plug	30 ± 2 Nm (22 ± 1 lbf-ft)

11. Replace oil filter, refer to *Replacing the Engine Oil Filter* in this subsection.
12. Refill engine with recommended engine oil.
13. Start engine and let it idle for a 60 seconds.
14. Stop engine.
15. Verify the oil level immediately, refer to *Verifying the Engine Oil Level*.
16. Refill as necessary.
17. Ensure oil filter and drain plug areas are not leaking.
18. Dispose oil and filter as per your local environmental regulations.

Engine oil Filter

Removing the Oil Filter

1. Clean oil filter area.
2. Remove the oil filter cover and the O-ring.

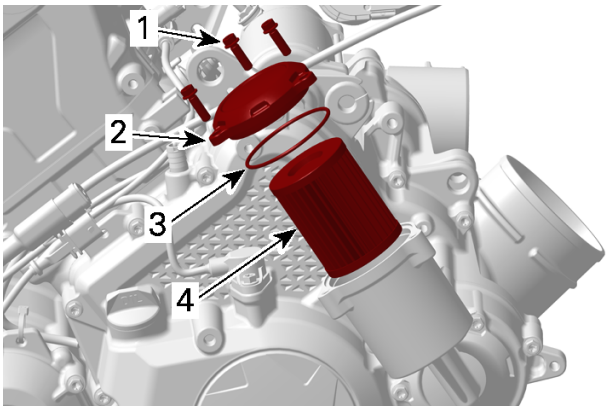

1. *Oil filter cover screw*
2. *Oil filter cover*
3. *O-ring*
4. *Oil filter*

3. Remove and discard the oil filter.

Installing the Oil Filter

1. Check and clean the oil filter inlet and outlet area for dirt and other contaminations.

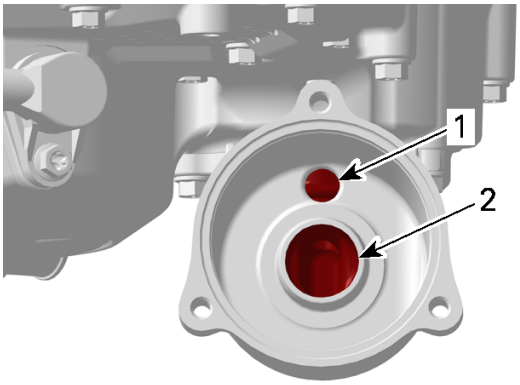

1. *Inlet bore from the oil pump to the oil filter*
2. *Outlet bore to the engine oil providing system*

2. Wet a NEW O-ring with engine oil and slip onto oil filter cover
3. Install the new filter into the cover.
4. Apply engine oil to the seal on the open end of the oil filter.
5. Install the **NEW** filter into the housing.

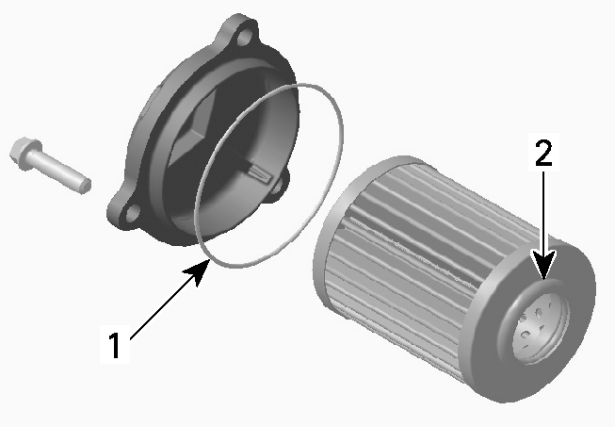

1. *Slightly oil*
2. *Slightly oil*

6. Install the cover on the oil filter housing.

NOTICE

Pay attention to avoid pinching the O-ring during filter and cover installation.

7. Tighten oil filter cover screws to specification.

Tightening Torque	
Oil filter cover screws	10 ± 1 Nm (89 ± 9 lbf-in)

Wipe off any oil spillage on engine.

Oil Filter Housing

Removing the Oil Filter Housing

1. Remove the engine oil filter.
2. Remove oil filter housing screws and withdraw housing.

NOTICE

Place a drain pan underneath to catch up spilling out engine oil. Up to 150 ml (5.1 fl oz (US)) of oil could flow out.

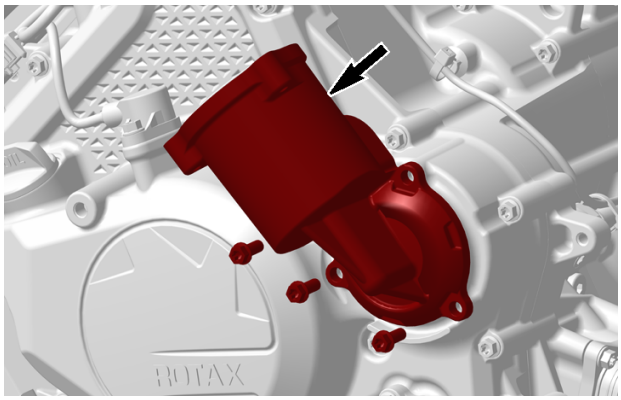

3. Remove
   - O-rings
   - Oil tube.

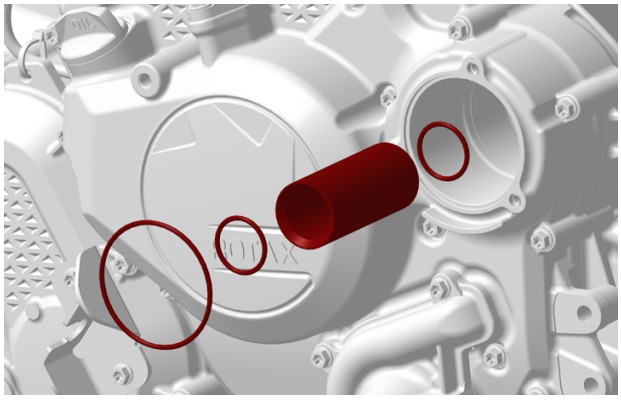

Inspecting the Oil Filter Housing

1. Inspect the oil filter housing for cracks or any other damages. Replace if necessary.
2. Clean oil orifices.

Installing the Oil Filter Housing

1. Lubricate O-ring and install it in crankcase.

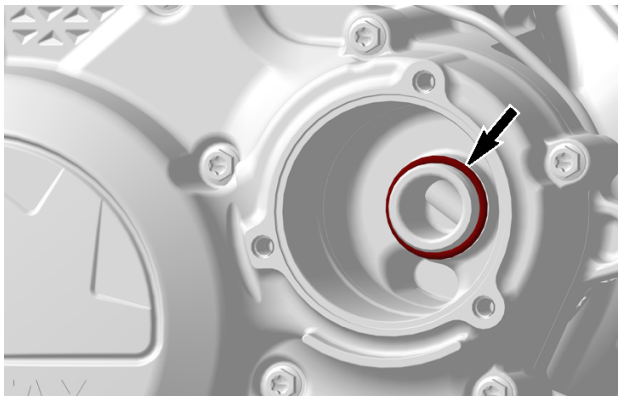

2. Lubricate O-rings and install them on the oil filter housing.

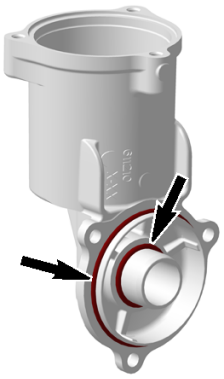

3. Install oil tube.

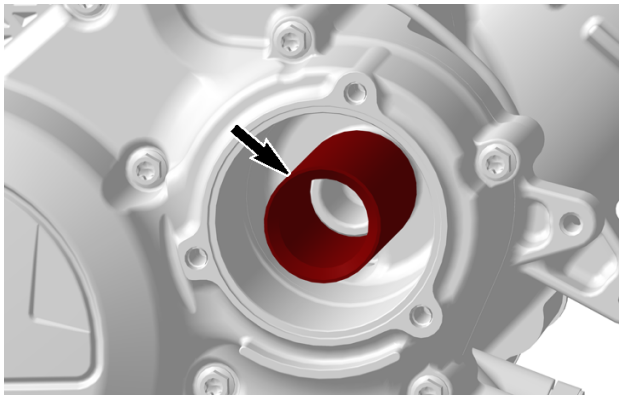

NOTICE

Ensure not squeezing or damaging the O-rings during tube and cover installation.

4. Install oil filter housing and tighten screws to specification.

Tightening Torque	
Oil filter housing screws	10 ± 1 Nm (89 ± 9 lbf-in)

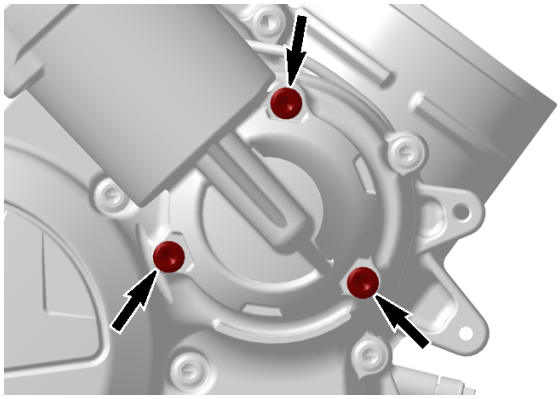

5. Install oil filter.
6. Refill engine oil and verify engine oil level.

Oil Cooler

Oil Cooler Access

Remove the fuel tank to reach the oil cooler. Refer to *Fuel Tank and Fuel Pump* in appropriate vehicle service manual.

Removing the Oil Cooler

1. Remove the engine from the vehicle.
2. Drain the engine oil.
3. Remove oil cooler retaining screws.

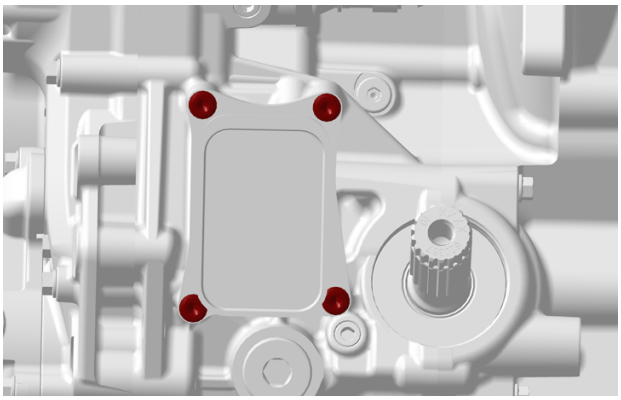

4. Place rags or towels under oil cooler to catch remaining oil and coolant.
5. Remove oil cooler and discard gasket.

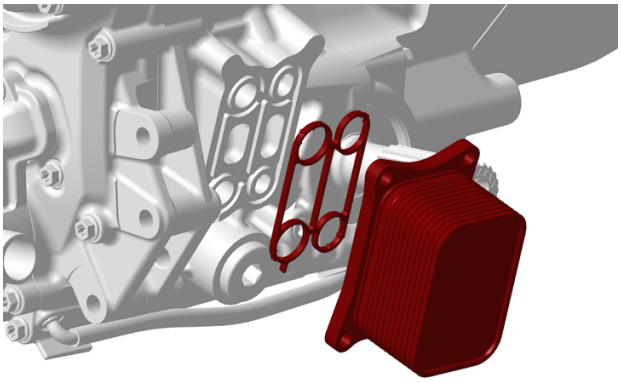

Inspecting the Oil Cooler

1. Check oil cooler for cracks or other damage.
2. Replace if necessary.

Installing the Oil Cooler

The installation is the reverse of the removal procedure. However, pay attention to the following details.

1. Wipe off any oil and coolant spillage.
2. Install a **NEW** gasket.
3. Tighten the oil cooler retaining screws as per following specification.

Tightening Torque	
Oil Cooler retaining screw	8 ± 0.5 Nm (71 ± 44 lbf-in)

Oil Pressure Switch (OPS)

Oil Pressure Switch Location

The oil pressure switch is located at engine MAG side above the oil cooler.

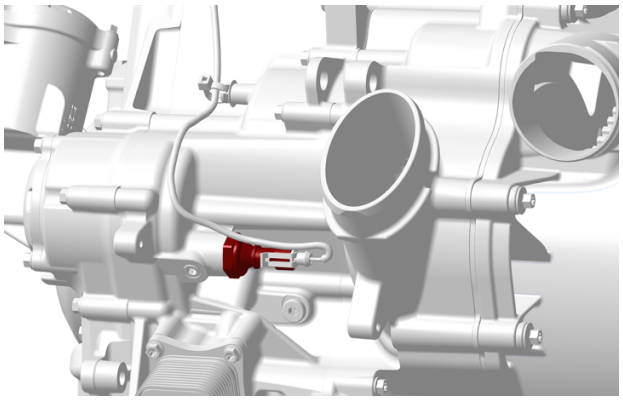

Oil Pressure Switch Activation

1. The oil pressure switch activates when the engine oil pressure is lower than following specified pressure range.

Oil Pressure Switch Operating Pressure
30 ± 10 kPa (4.35 ± 1.45 lbf/in²)

2. To check the function of the oil pressure switch, an oil pressure test has to be performed. Refer to *Engine Oil Pressure*.
3. If the engine oil pressure is good perform the oil pressure switch resistance test.

Testing the Oil Pressure Switch Resistance

1. If the engine is still in the vehicle, remove the plenum.
2. Cut the locking tie and disconnect the connector from the oil pressure switch.
3. Use a multimeter to check the resistance as shown.

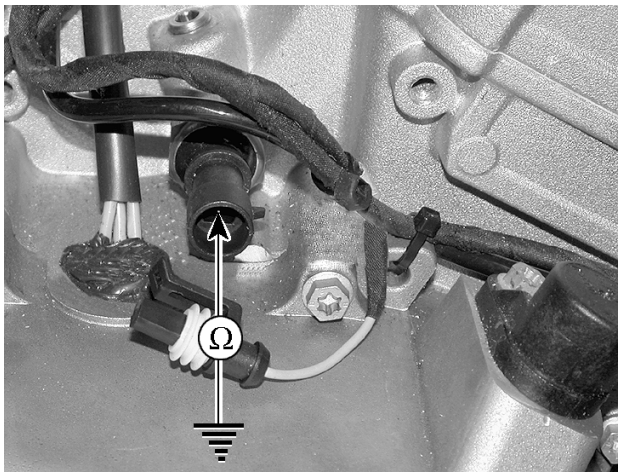

4. Read result and compare to table.

Resistance (Ω)		
Engine Not Running		
OPS pin	Engine ground	Close to 0 Ω (normally closed switch)

If resistance is out of specification, replace the oil pressure switch.

If the resistance is correct, continue procedure. It will be necessary to use jumper wires.

5. Start engine.
6. Read result and compare to table.

Resistance (Ω)		
Engine Running		
OPS pin	Engine ground	Infinitely high (OL)

If resistance is out of specification, replace the oil pressure switch.

If the resistance is correct, check the oil pressure switch circuit continuity.

Removing the Oil Pressure Switch

1. Cut the locking tie and disconnect the connector from the oil pressure switch.
2. Remove oil pressure switch.

Installing the Oil Pressure Switch

1. Apply a drop of threadlocker on the threads of the OPS.

Loctite 243 (blue)

2. Tighten oil pressure switch to specified torque.

Tightening Torque	
Oil pressure switch	12 ± 1 Nm (106 ± 9 lbf-in)

3. Route cable in a loop and secure it with a locking tie.

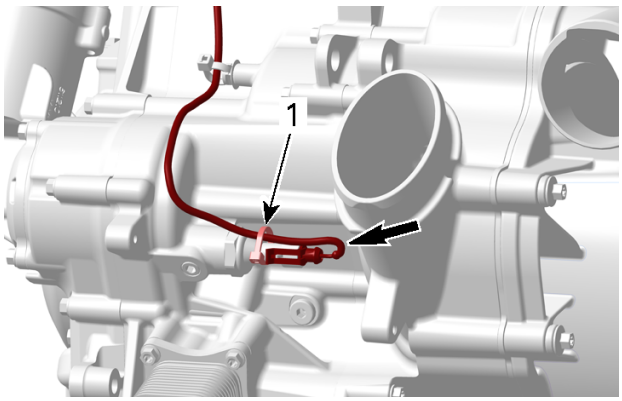

1. Cable tie

4. Reinstall all other removed parts.

Engine Oil Pressure Regulator

Oil Pressure Regulator Location

The oil pressure regulator is located on the engine front side below the oil cooler.

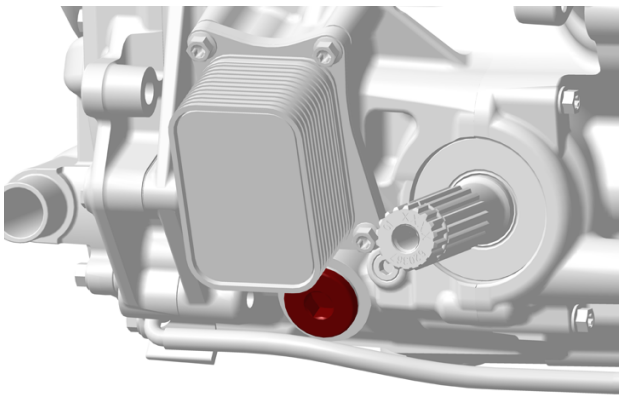

NOTE: The oil pressure regulator system works when the oil pressure exceeds 400 kPa (58 lbf/in²).

Removing the Oil Pressure Regulator

1. Remove the engine from the vehicle.
2. Remove plug screw and pull oil pressure regulator out.

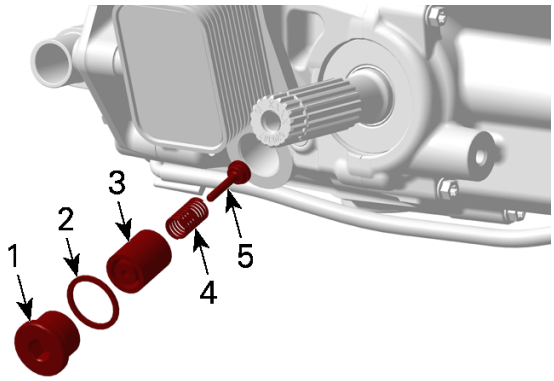

1. *Plug screw*
2. *Gasket ring*
3. *Pressure regulator housing*
4. *Spring*
5. *Pressure regulator valve*

Inspecting the Oil Pressure Regulator

1. Inspect pressure regulator housing and valve for scoring or other damages.
2. Check spring for free length.

Spring Free Length	
New	39 mm (1.535 in)
Service limit	37 mm (1.457 in)

NOTE: Replace worn or damaged components.

3. Clean bore and thread in the magneto housing from metal shavings and other contaminations.

Installing the Oil Pressure Regulator

The installation is the reverse of the removal procedure. However, pay attention to the following.

1. Always install a **NEW** gasket ring of the plug screw.
2. Tighten the plug screw to specification.

Tightening Torque	
Plug screws	30 ± 2 Nm (22 ± 1 lbf-ft)

Oil Pump Drive

Removing the Oil Pump Drive

The oil pump drive is located on the engine MAG side (behind magneto cover).

NOTE: Oil pump and water pump are driven by this drive.

1. Lock crankshaft, refer to *Crankshaft* in the *Cylinder Block* subsection.
2. Remove the rotor, refer to *Magneto and Starter*.
3. Remove the chain guide.

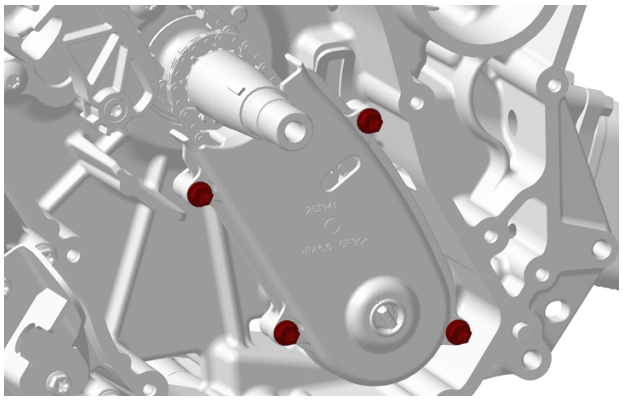

4. Remove oil pump drive nut.
5. Check drive chain for excessive radial play while still installed on timing gears, refer to *Inspection the Oil pump Drive*.

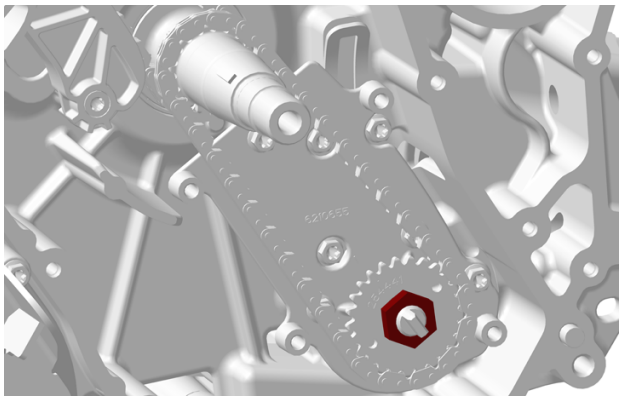

6. Pull drive gear together with drive chain from oil pump shaft.

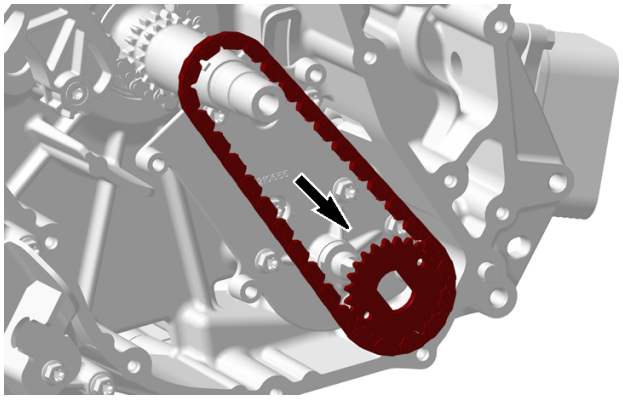

Inspection the Oil Pump Drive

1. Check drive chain on drive gear for excessive radial play.

2. If chain is excessively worn or damaged, replace chain together with drive gear.
3. If teeth on crankshaft worn or damaged, replace crankshaft. Refer to *Crankshaft* in the *cylinder Block* subsection.

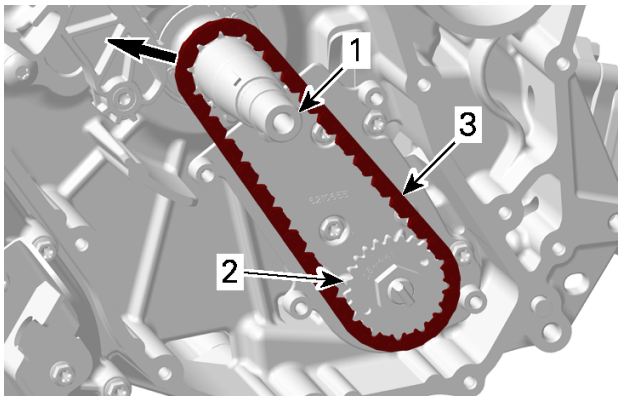

1. *Crankshaft*
2. *Drive gear*
3. *Drive chain*

4. Check chain guide for cracks or any other damages. Replace if necessary.

NOTE: Check shape of the oil pump shaft thread.

Installing the Oil Pump Drive

The installation is the reverse of the removal procedure. However, pay attention to the following details.

1. Lock crankshaft, refer to *Crankshaft* in the *Cylinder Block* subsection.
2. Install the drive gear together with drive chain.

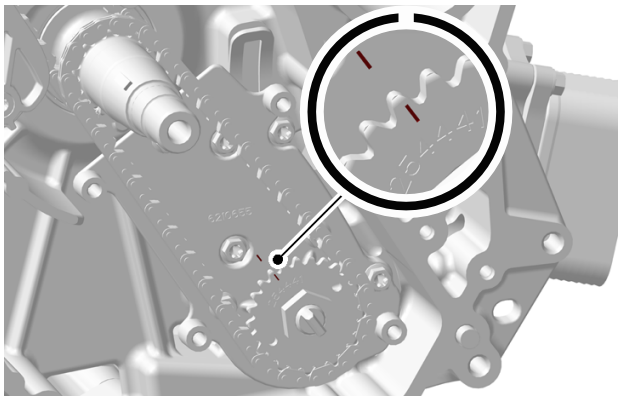

3. Apply a drop of threadlocker on the threads of the oil pump nut.

Loctite 243 (blue)

4. Tighten oil pump nut to specification.

   Align mark on drive gear with the mark on the oil pump housing.

Tightening Torque	
Oil pump nut	20 ± 2 Nm (15 ± 1 lbf-ft)

5. Install chain guide.

   Ensure chain guide is free of any contamination.
6. Apply a drop of threadlocker on the threads of the chain guide screws.

Loctite 243 (blue)

7. Tighten retaining screws to specification.

Tightening Torque	
Chain guide retaining screws	10 ± 1 Nm (89 ± 9 lbf-in)

Oil Pump

Oil Pump Location

The oil pump is located on the engine MAG side (behind magneto cover).

Removing the Oil Pump

1. Remove
   - Magneto cover, refer to *Magneto Cover* in the *Magneto and Starter* subsection.
   - Rotor, refer to *Rotor* in the *Magneto and Starter* subsection.
   - Oil pump drive, refer to *Oil Pump Drive* .
2. Remove oil pump housing retaining screw.

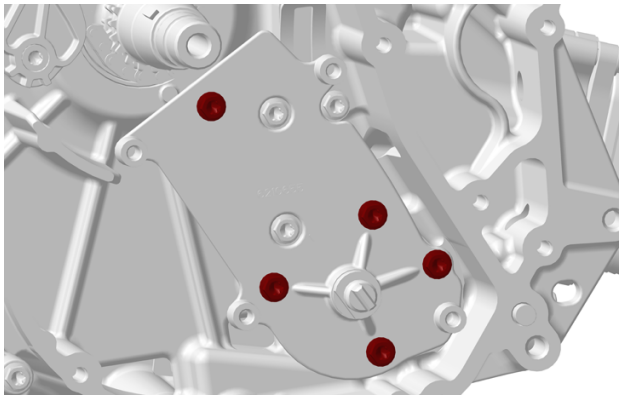

3. Pull oil pump housing straight out.
4. Remove:
   - Circlip (discard it)

- Inner rotor
- Needle pin.

5. Push oil pump shaft out of oil pump housing.

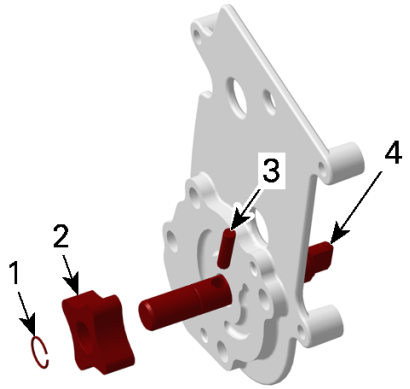

1. Circlip
2. Inner rotor
3. Needle pin
4. Oil pump shaft

6. Remove outer rotor.

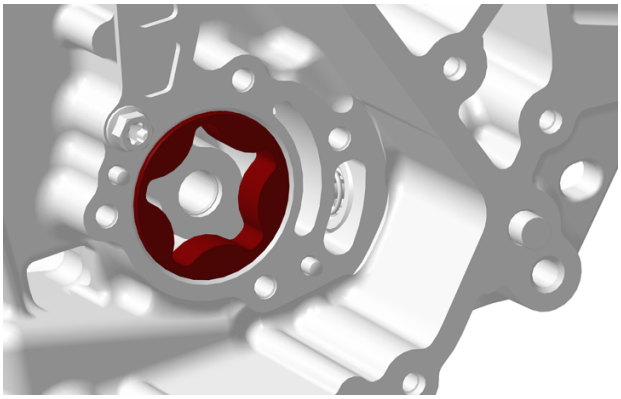

Inspecting the Oil Pump

1. Inspect oil pump and oil pump housing for marks, scratches or other damages.
2. Check for scratches in crankcase between outer rotor and oil pump bore. If so, replace damaged parts.

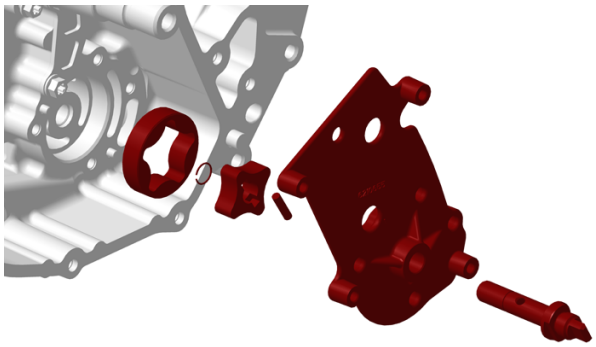

3. Check oil pump housing for damages and for surface straightness with a straightedge and a feeler gauge.

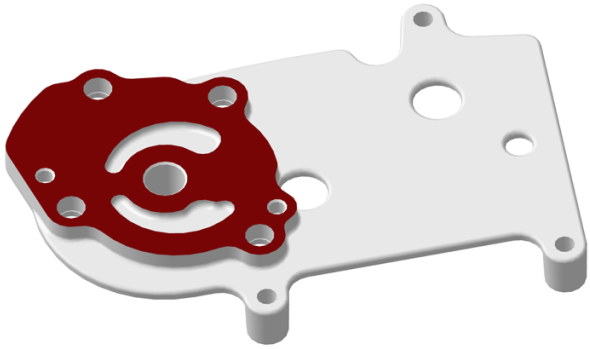

Surface Straitness	
Service limit	0.1 mm (.004 in)

4. Check inner rotor for corrosion pin holes or other damages. If so, replace oil pump shaft assembly.

Inner and Outer Rotor Clearance

1. Using a feeler gauge, measure the clearance of inner and outer rotors as shown.

Clearance of Inner and Outer Rotor	
Service limit	0.25 mm (.0098 in)

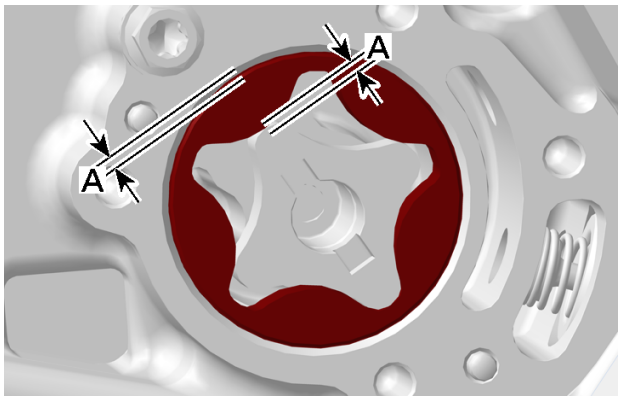

A. 0.25 mm (.0098 in)

2. If clearance of inner and outer rotors exceeds the tolerance, replace oil pump rotors. Ensure to also check oil pump housing. If damaged, replace the complete oil pump assembly.
3. If clearance between outer rotor and its bore in crankcase exceeds the tolerance, replace the complete oil pump rotors and/or the crankcase.

Oil Pump Axial Clearance

1. Measure the depth of oil pump housing at crankcase side.

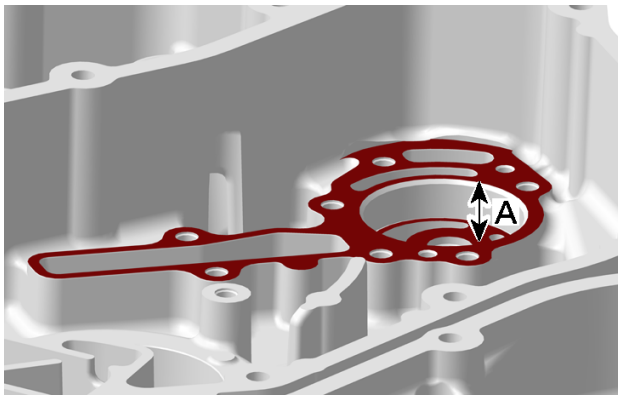

OIL PUMP HOUSING (CRANKCASE SIDE) — MEASUREMENT "A"

2. Measure thickness of inner and outer rotor.

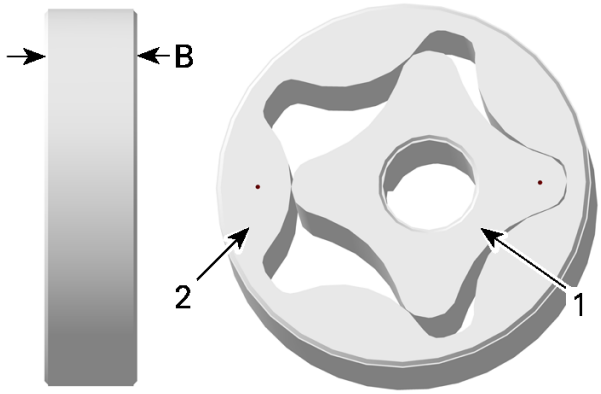

INNER AND OUTER OIL PUMP ROTOR— MEASUREMENT "B"
1. Inner rotor
2. Outer rotor

3. Substrate measurement "B" from measurement "A" to obtain axial clearance.

Oil Pump Axial Clearance	
Service limit	0.20 mm (.0079 in)

NOTE: When the axial clearance of the oil pump increases, the oil pressure decreases.

Installing the Oil Pump

The installation is the reverse of the removal procedure. However, pay attention to the following.

1. Install outer rotor.

NOTICE
Mark must face towards the inside of the crankcase.

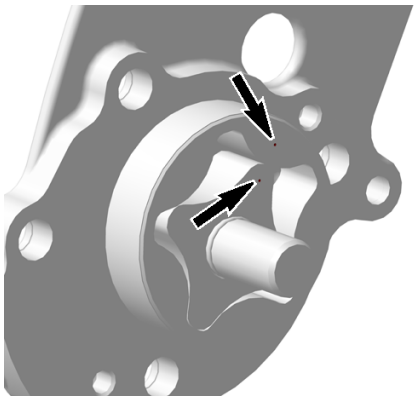

2. Reassembly oil pump shaft with oil pump housing.

   Always install a **NEW** circlip.
3. Install oil pump housing assembly.

NOTICE

Install inner rotor with mark facing towards the crankcase.

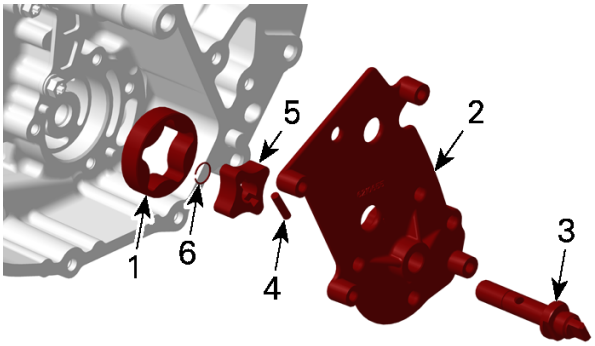

1. *Outer rotor*
2. *Oil pump housing*
3. *Oil pump shaft*
4. *Needle pin*
5. *Inner rotor*
6. *Circlip*

4. Tighten oil pump housing screws to specification as per the following sequence.

NOTICE

If the oil pump housing screws are not tightened as per the tightening sequence, the oil pump will turn hardly.

Tightening Torque	
Oil pump housing screws	10 ± 1 Nm (89 ± 9 lbf-in)

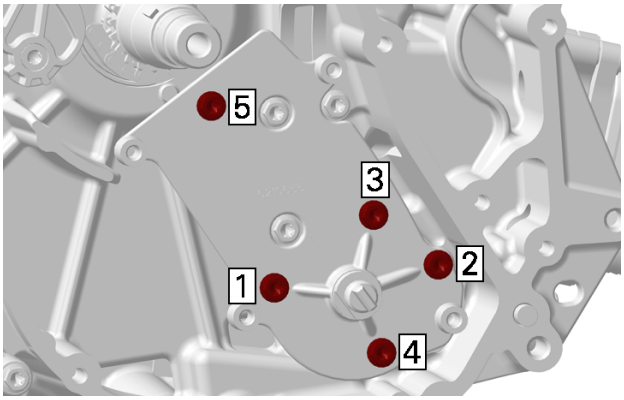

OIL PUMP HOUSING TIGHTENING SEQUENCE

5. After reinstallation of the remaining parts, check for smooth operation of the oil pump assembly.

Testing the Oil Pump Function

1. After engine is completely reassembled, start engine and make sure oil pressure is within specifications, refer to *Engine Oil Pressure*.

Engine Oil Strainer

Oil Strainer Location

The engine oil strainer is located between both crankcase halves.

Removing the Oil Strainer

1. Separate crankcase halves. Refer to *cylinder block* subsection.
2. Remove the engine oil strainer.

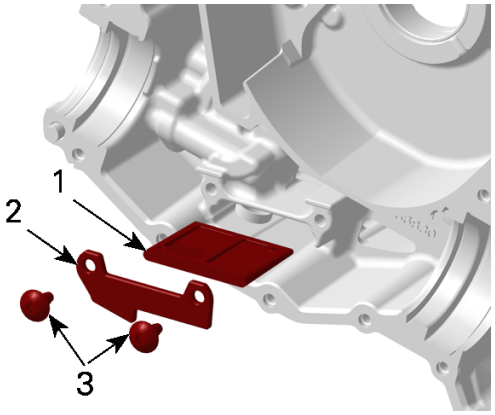

1. *Engine oil strainer*
2. *Retaining plate*
3. *Screws*

Cleaning and Inspecting the Oil Strainer

1. Clean engine oil strainer with a part cleaner then use an air gun to dry it.
2. Check engine oil strainer for cracks or other damage. Replace if damaged.

Installing the Oil Strainer

The installation is the reverse of the removal procedure.

1. Apply a drop of threadlocker on the threads of the oil strainer screws.

Loctite 243 (blue)

2. Tighten the oil strainer retaining screws to specification.

Tightening Torque	
Oil strainer retaining screws	10 ± 1 Nm (89 ± 9 lbf-in)

Cooling System - Engine Components

SERVICE TOOLS

Description	Part Number	Page
HANDLE	(P/N 420877650)	31
OIL SEAL PUSHER	(P/N 529035757)	31
ROTARY PUSHER PLATE	(P/N 529036544)	29
ROTARY SEAL PUSHER	(P/N 529036540)	29, 31–32

SERVICE PRODUCTS

Description	Part Number	Page
LOCTITE 243 (BLUE)		26
SUPER LUBE GREASE		29, 31

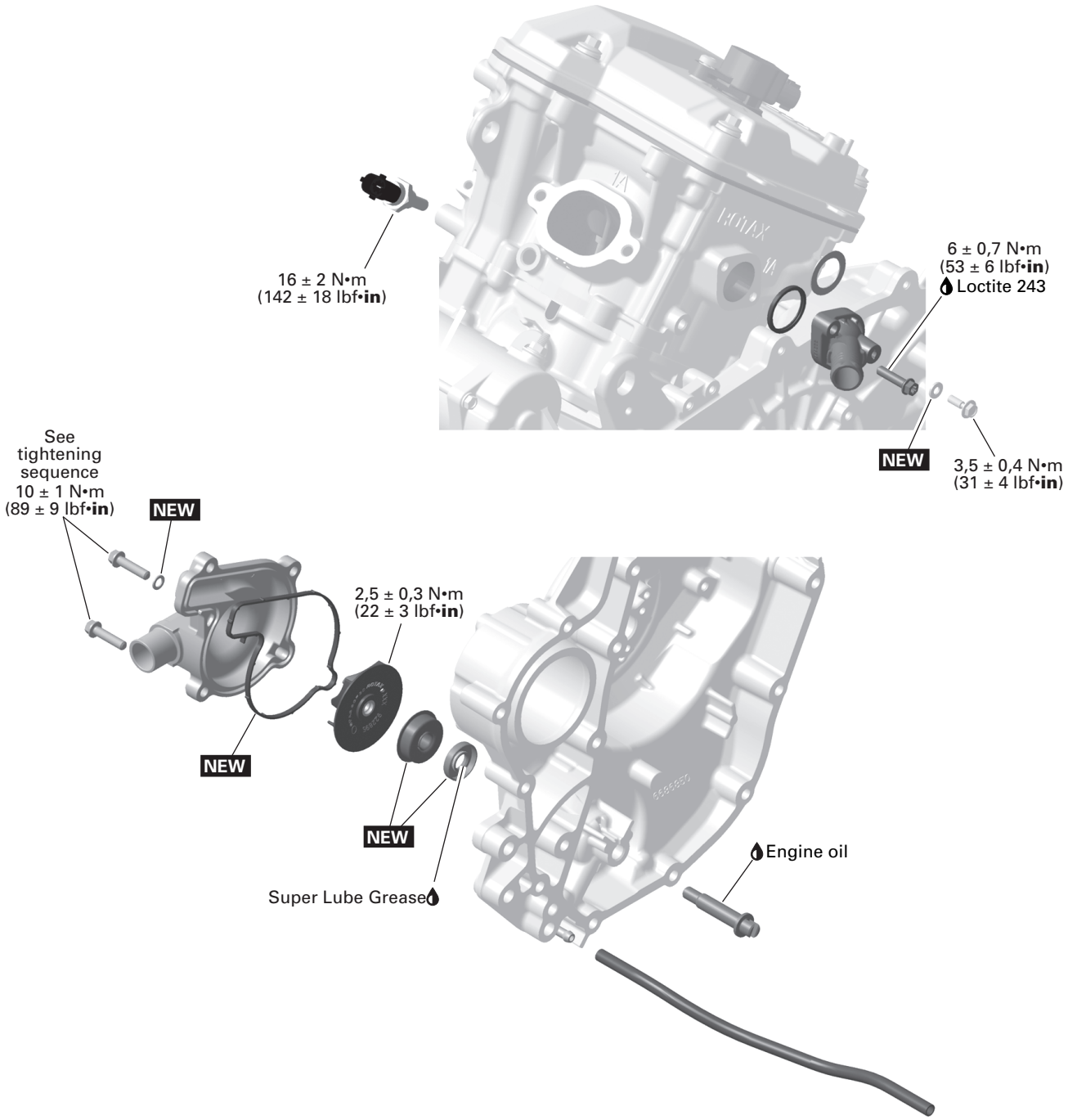

NEW = Component must be replaced when removed.

General

NOTICE

Never start engine without coolant. Some engine parts such as the rotary seal on the water pump shaft can be damaged.

Inspection

Inspecting the Engine Cooling System

1. Check the leak indicator hose for oil or coolant.

NOTE: Leaking coolant indicates a defective rotary seal. Leaking oil indicates a defective oil seal. If either seal is leaking, both seals must be replaced at the same time. Refer to *Water Pump Shaft and Seals*.

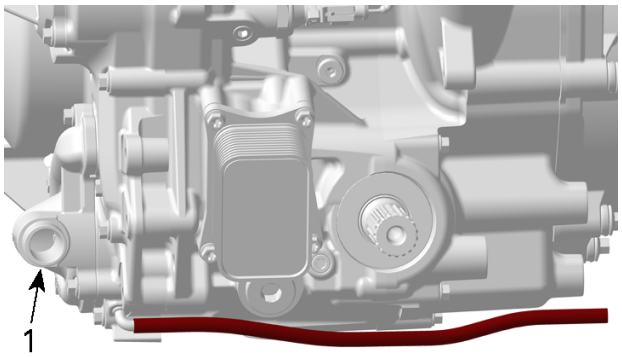

1. Water pump cover

Procedures

Coolant Temperature Sensor (CTS)

CTS Location

The CTS is located on cylinder head underneath the intake manifold.

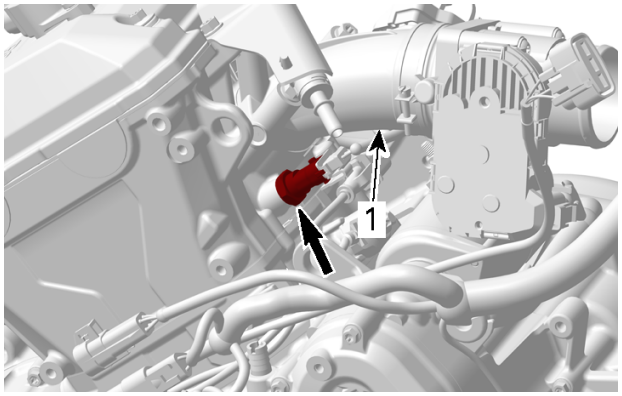

1. Intake manifold

Testing the CTS Resistance

1. Disconnect the plug connector from the CTS and check the resistance of the sensor itself.

CTS Resistance Test		
CTS pin		Specification @ 20 °C (68 °F)
1	2	2280 - 2740 Ω

2. If resistance is out of specification, replace the CTS.
3. If resistance test is good, reconnect the CTS and disconnect the ECM-A connector from the ECM.
4. Install the ECM-A connector on the ECM adapter tool.
5. Using a multimeter, recheck resistance from the ECM connector as per table.

CTS Resistance Test at ECM Adapter		
ECM adapter pin		Specification @ 20 °C (68 °F)
A-A1	A-J2	2280 - 2740 Ω

If resistance value is correct, replace the ECM.

If resistance value is incorrect, repair the connectors or replace the wiring harness between ECM connector and the CTS.

Replacing the CTS

1. Disconnect the CTS connector and remove the CTS.
2. Install the new CTS and torque as specified.

Tightening Torque	
CTS	16 ± 2 Nm (142 ± 18 lbf-in)

3. Reinstall remaining removed parts.

Thermostat Cover

Removing the Thermostat Cover

⚠ CAUTION

To avoid potential burns, do not remove the radiator cap or loosen the coolant drain plug if the engine is hot.

1. Drain cooling system.
2. Remove radiator inlet hose from thermostat cover.
3. Remove the thermostat housing and its gasket.

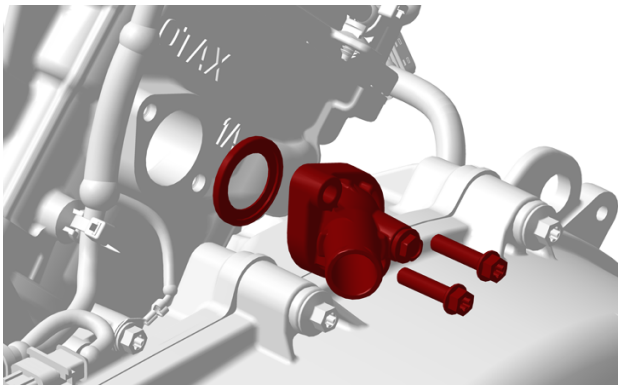

Inspecting the Thermostat Cover

1. Check gasket if it is brittle, hard or damaged. Replace as required.
2. Check cover for cracks or any other damages. Replace as required.

Installing the Thermostat Cover

The installation is the reverse of the removal procedure. However pay attention to the following.

NOTICE

Take care that the gasket is positioned exactly in the groove when installing the thermostat cover.

1. Apply a drop of threadlocker on the threads of the thermostat cover screws.

Loctite 243 (blue)

2. Tighten thermostat cover screws to specification.

Tightening Torque	
Thermostat cover screws	6 ± 0.7 Nm (53 ± 62 lbf-in)

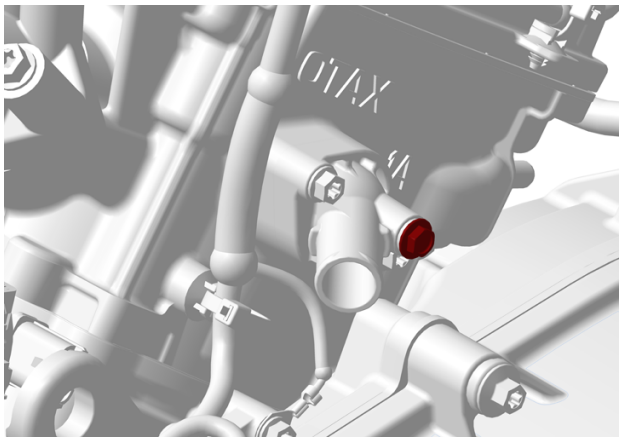

3. If engine is still in the vehicle, refill and bleed the cooling system.

Tightening Torque	
Bleeding screw	3.5 ± 0.4 Nm (31 ± 4 lbf-in)

Water Pump Housing

Water Pump Housing Location

The water pump housing is located on the engine MAG side (RH side of engine).

Removing the Water Pump Housing

⚠ CAUTION

To avoid potential burns, do not remove the radiator cap or loosen the coolant drain plug if the engine is hot.

1. Drain cooling system.
2. Remove radiator outlet hose from water pump housing.
3. Remove water pump housing retaining screws.
4. Discard the sealing ring.

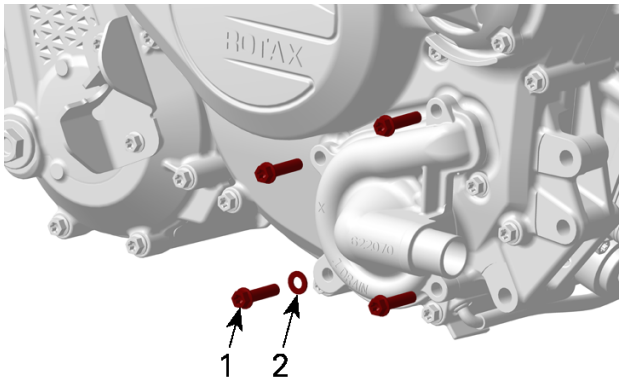

1. Coolant drain plug
2. Sealing ring (discard it)

5. Remove the water pump housing.

Inspecting the Water Pump Housing

1. Check if gasket is brittle, hard or damaged. Replace as required.

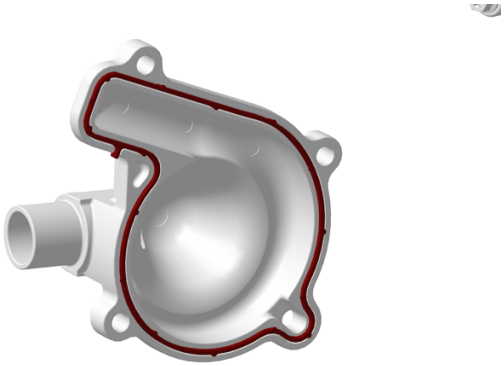

Installing the Water Pump Housing

The installation is the reverse of the removal procedure. However, pay attention to the following.

NOTICE
Take care that the gasket is positioned exactly in the groove when install the water pump housing.

1. Always install **NEW** sealing ring on coolant drain plug.
2. Tighten screws of water pump housing in a criss cross sequence to specification.

Tightening Torque	
Water pump housing screws	10 ± 1 Nm (89 ± 9 lbf-in)

3. If engine is still in the vehicle, refill and bleed the cooling system.

Water Pump Impeller

Removing the Water Pump Impeller

1. Remove the water pump housing, refer to *water pump housing* in this subsection.
2. Unscrew the impeller by turning it clockwise (left threads).

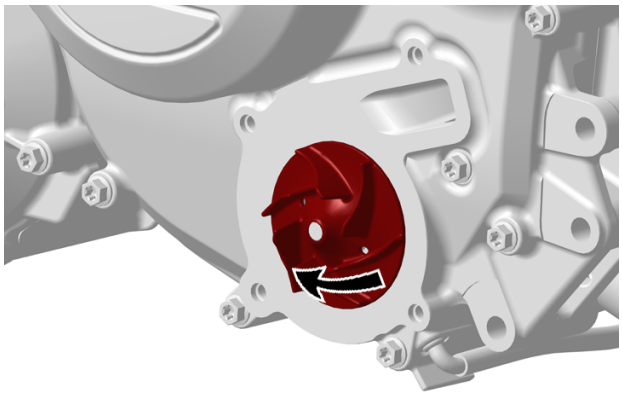

Inspecting the Water Pump Impeller

1. Check impeller for cracks or other damage. Replace as required.

Installing the Water Pump Impeller

The installation is the reverse of the removal procedure. However, pay attention to the following.

NOTICE
Be careful not to damage impeller fins during installation.

Tightening Torque	
Impeller	2.5 ± 0.3 Nm (22 ± 3 lbf-in)

Water pump shaft and seals

Use these guidelines to service these parts.

DEFECTIVE PART	ACTION
Rotary seal	Replace: - Rotary seal - Oil seal (assembled engine)
Oil seal	Replace: - Rotary seal - Oil seal (assembled engine)
Water pump shaft	Replace: - Water pump shaft assembly (including rotary seal) - Oil seal (engine disassembled)

NOTICE
Rotary seal must be replaced if water pump shaft is to be replaced.

Replacing the Water Pump Seals (Assembled Engine)

NOTE: Read and thoroughly understand the entire procedure before starting it.

Removing the Seals

1. Remove the water pump impeller.
2. Carefully pry out inner part of the rotary seal using 2 screwdrivers.

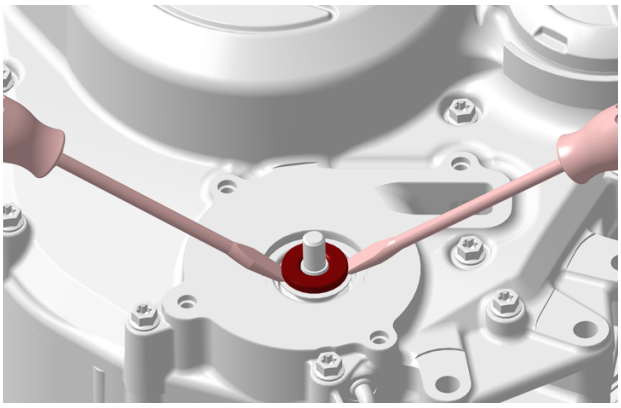

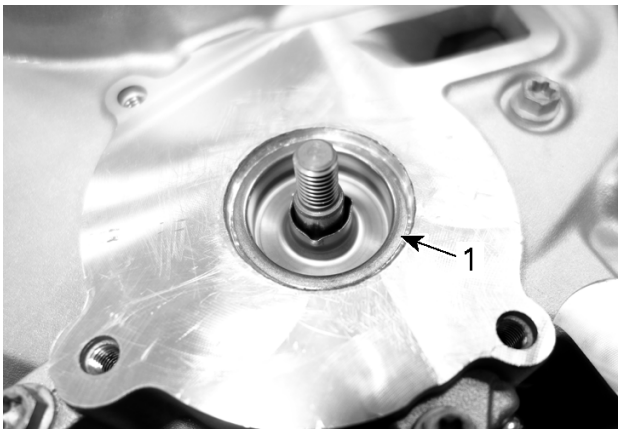

TYPICAL
1. Inner part of rotary seal removed

3. Carefully bend up the outer part of rotary seal lip using a small chisel or screwdriver.

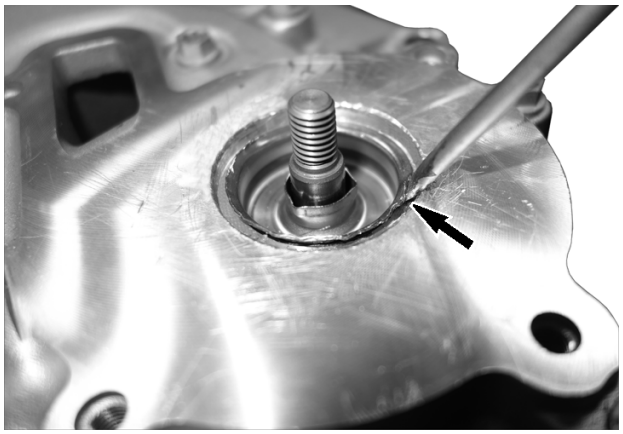

TYPICAL - BENT UP OUTER PART OF ROTARY SEAL

4. Punch the outer part of the rotary seal with a small chisel or screwdriver carefully towards the water pump shaft.

NOTE: Always punch at two different positions, facing each other to release the press fit.

NOTICE
Be careful not to damage the rotary seal seat.

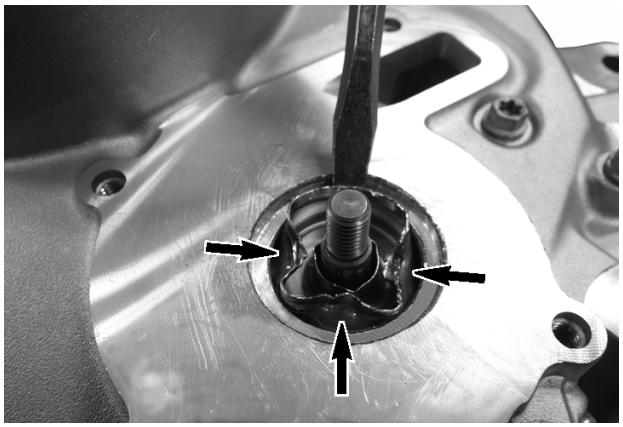

5. Pull the outer part of the rotary seal out of the magneto cover by using a pliers.

NOTICE

Be careful not to damage the magneto cover while removing outer part of the rotary seal.

6. Thoroughly remove sealing residue and burr of rotary seal from the rotary seal seat by using a scraper.

NOTICE

Be careful not to damage water pump shaft and rotary seal seat.

7. Remove oil seal from magneto cover by using an oil seal hook.

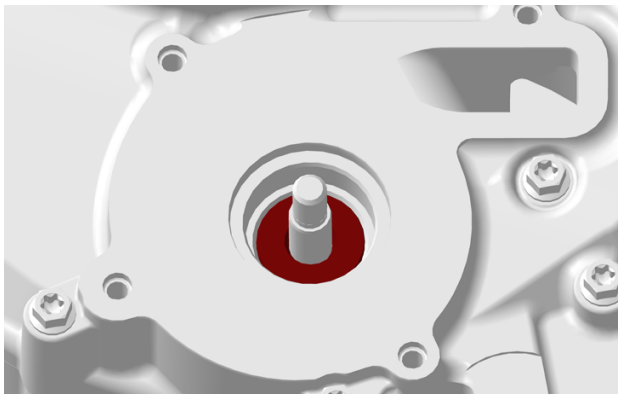

8. Clean oil seal seat.

Installing the Seals

1. Apply engine oil on water pump shaft.
2. Apply grease to the lips of the oil seal.

Super Lube grease

3. Carefully install the oil seal over the water pump shaft.
4. Push oil seal into the water pump cavity by using a suitable tube with the proper diameter.

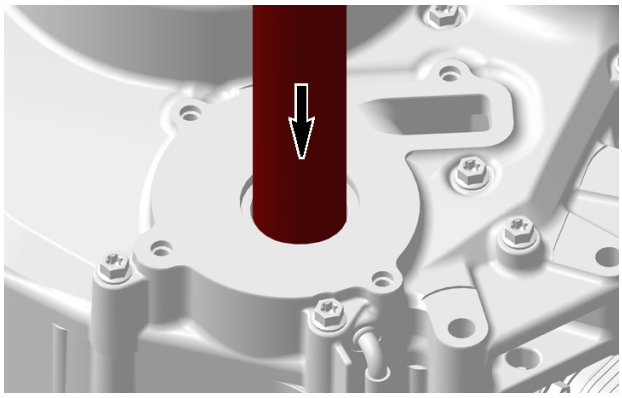

OIL SEAL INSTALLATION

5. Ensure that the oil seal is properly seated in water pump cavity.
6. Apply engine oil on water pump shaft.
7. Place rotary seal onto water pump shaft and pull out water pump shaft by hand.
8. Install rotary seal installation tools on magneto cover as follows.

Rotary Pusher Plate (P/N 529036544)	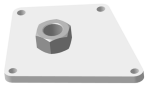
Rotary seal pusher (P/N 529036540)	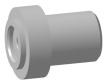

Locally purchased items:
4x M6 x 85 screws (P/N 420440347)
4x tubes 70 mm (2.75 in)

NOTE: Make sure pusher bolt has a plane surface.

1. Apply a little grease at the end of tool pusher bolt.
2. Ensure that pusher bolt is completely unscrewed.
3. Install rotary seal pusher plate on magneto cover by tightening M6 screws.

NOTICE

Do not use pneumatic or electric tools for tightening screws.

4. Install rotary seal pusher between rotary seal pusher plate and water pump shaft.

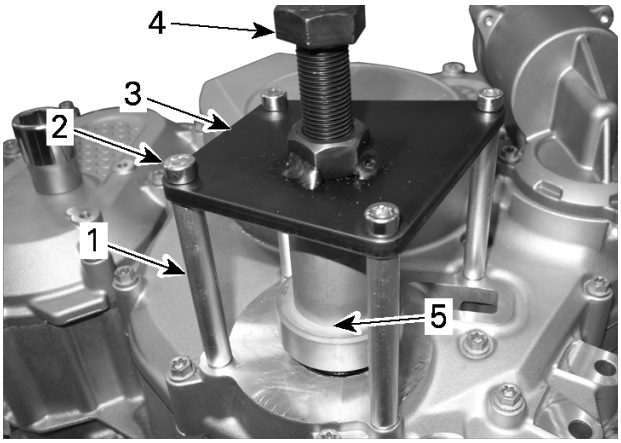

ROTARY SEAL PUSHER PLATE INSTALLATION

i. Tube (70 mm (2.75 in) length)
ii. M6 x 85 screw
iii. Rotary seal pusher plate
iv. Pusher bolt
v. Rotary seal pusher

5. Tighten the pusher bolt by hand until it stops against the seal pusher.

9. Carefully thread the pusher bolt and press the rotary seal in.

   Ensure that the rotary seal is going straight into magneto cover.

10. .

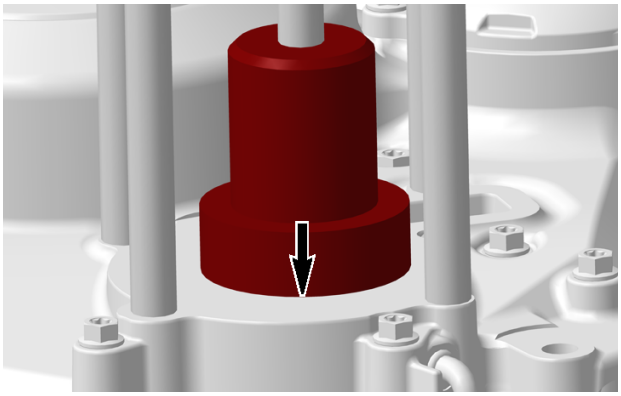

11. Remove tools from magneto cover.
12. Carry out the **final adjustment of the water pump shaft** as follows.

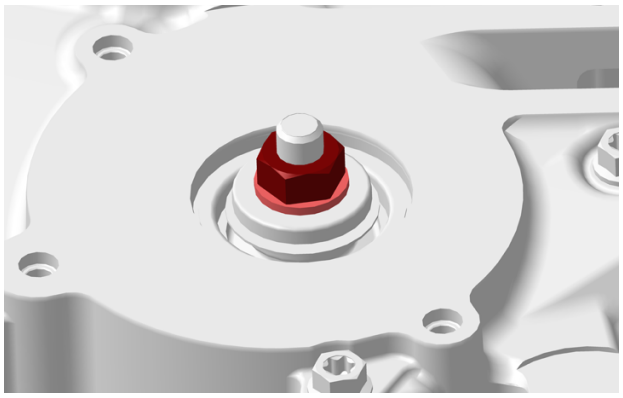

NOTICE

The water pump shaft must be properly adjusted with rotary seal. The water pump shaft must move freely while pushing it toward the magneto cover.

WATER PUMP SHAFT PROPERLY ADJUSTED WITH ROTARY SEAL

1. Install M8 x 1.25 nut 233 281 414 and thrust washer onto water pump shaft.
2. Carefully thread M8 nut until the rotary seal is flush with the end of water pump shaft threads.

13. Install all other removed parts.

Water Pump Shaft and Seals Replacement (Disassembled Engine)

Removing the Water Pump Shaft and Seals

1. Remove the magneto cover.
2. Remove the water pump impeller.
3. Push out water pump shaft with inner portion of rotary seal from the outside of the magneto cover.

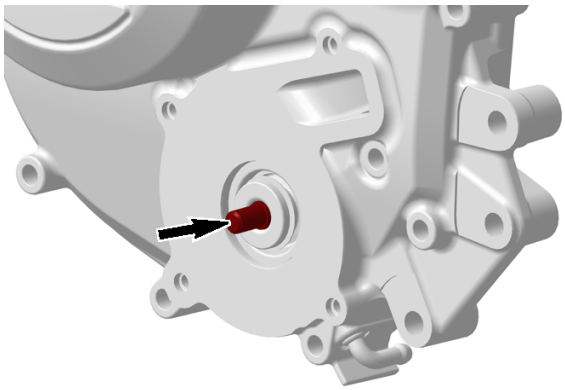

4. Using a blind hole puller, remove the rotary seal.

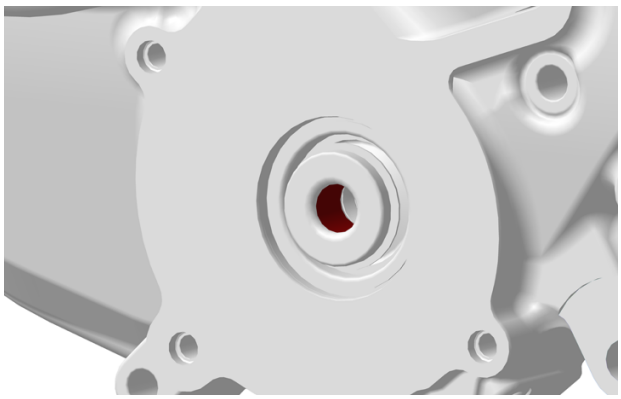

5. Remove the oil seal using an oil seal hook.

NOTICE
Be careful not to damage the rotary seal surface in magneto cover.

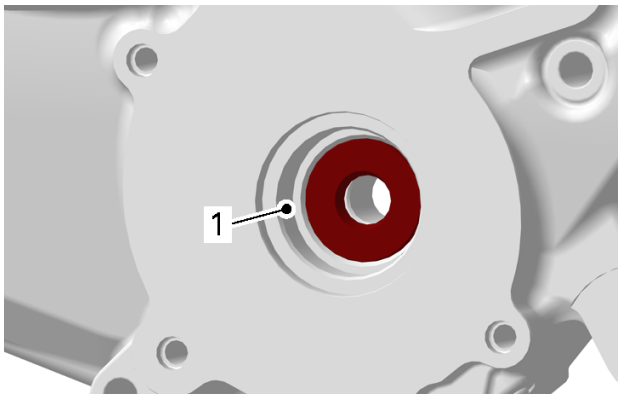

1. Machined surface for rotary seal

Installing the Oil Seal and Rotary Seal.

The installation is the reverse of the removal procedure. However, pay attention to the following.

NOTE: Never apply oil on the press fit area of the oil seal and rotary seal.

1. Clean rotary seal and oil seal surface of any old sealant.
2. Install **NEW** oil seal.
3. Lubricate sealing lip of the oil seal.

Super Lube grease

4. Push **NEW** oil seal in place.

Oil seal pusher (P/N 529035757)	
Handle (P/N 420877650)	

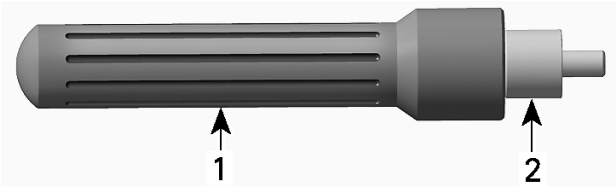

1. Handle
2. Pusher

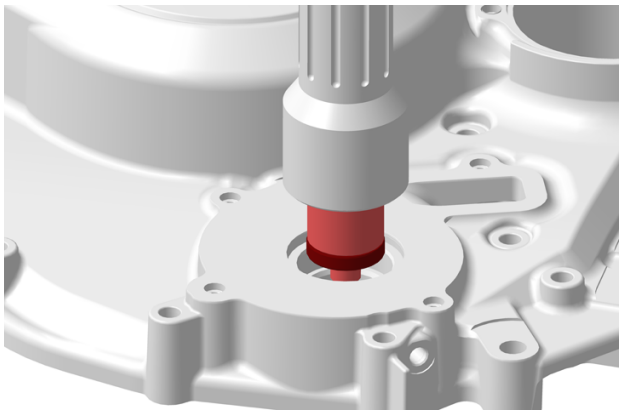

NOTICE
Never use a hammer for rotary seal installation. Only use a press to avoid damaging the ceramic component.

5. Install **NEW** rotary seal.

Rotary seal pusher (P/N 529036540)	

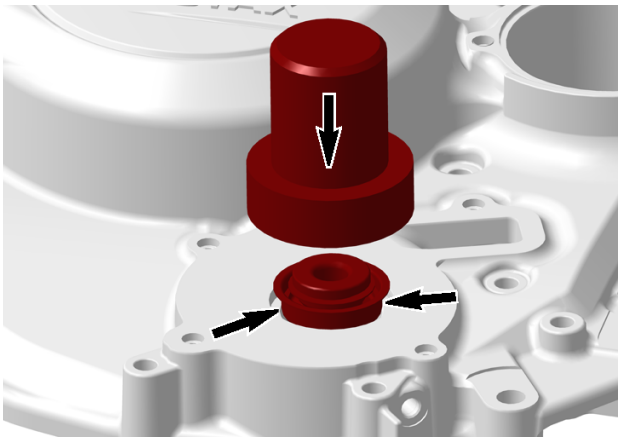

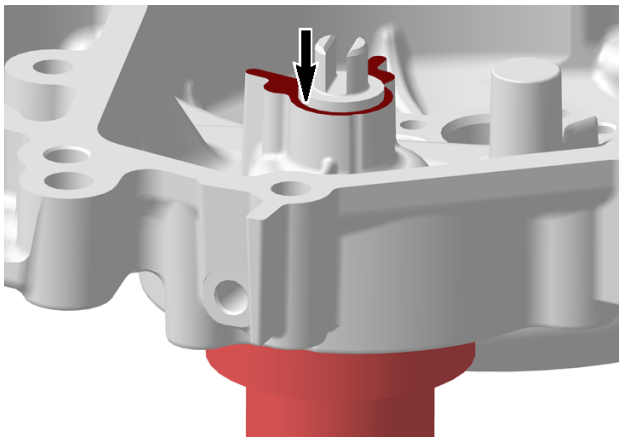

Assembling the Water Pump Shaft

1. Slide water pump shaft into rotary seal using a press and the rotary seal pusher.

Rotary seal pusher (P/N 529036540)	

NOTICE

Never use a hammer to install water pump shaft into rotary seal.

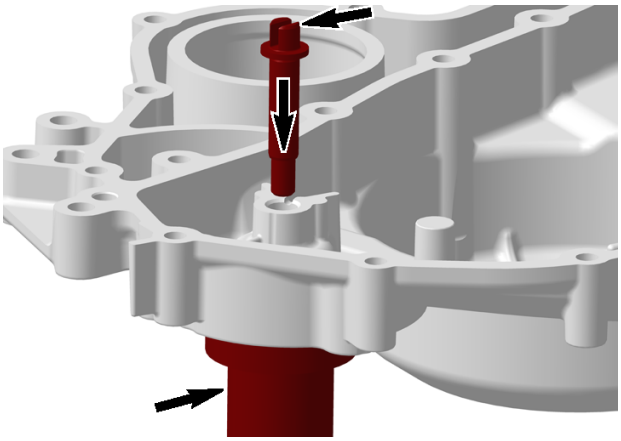

2. Carefully press in water pump shaft until collar touches magneto cover surface.

NOTE: After installation, water pump shaft must rotate freely.

3. Check correct position of water pump shaft and rotary seal.

   Surface of both parts need to be at same level. If not, refer to *Final Adjustment of Water Pump Shaft*.

4. Install impeller, refer to *Water Pump Impeller*.
5. Install magneto cover.

NOTE: Ensure that water pump shaft engages properly in oil seal shaft.

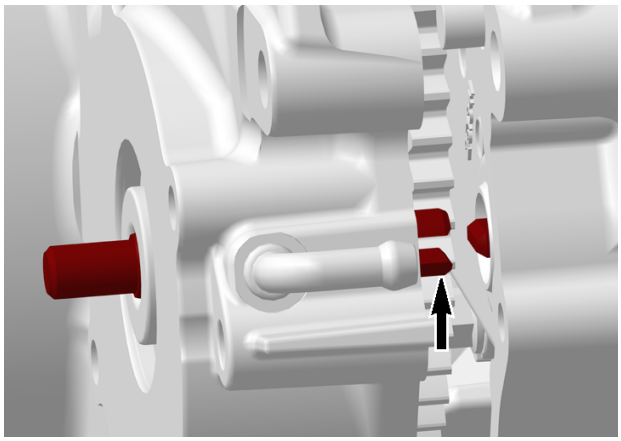

Magneto and Starter

SERVICE TOOLS

Description	Part Number	Page
MAGNETO PULLER	(P/N 529035748)	40

SERVICE PRODUCTS

Description	Part Number	Page
BLACK NEOPRENE PAINT		44
BRAKE AND PARTS CLEANER PRO S2		37
CLUTCH AND PULLEY FLANGE CLEANER PRO S1		40, 42
COPASLIP		43
DIELECTRIC GREASE		44
ENGINE OIL		36
LOCTITE 232		41
LOCTITE 5910		37, 39
LOCTITE 648 (GREEN)		42
LOCTITE CHISEL (GASKET REMOVER)		37

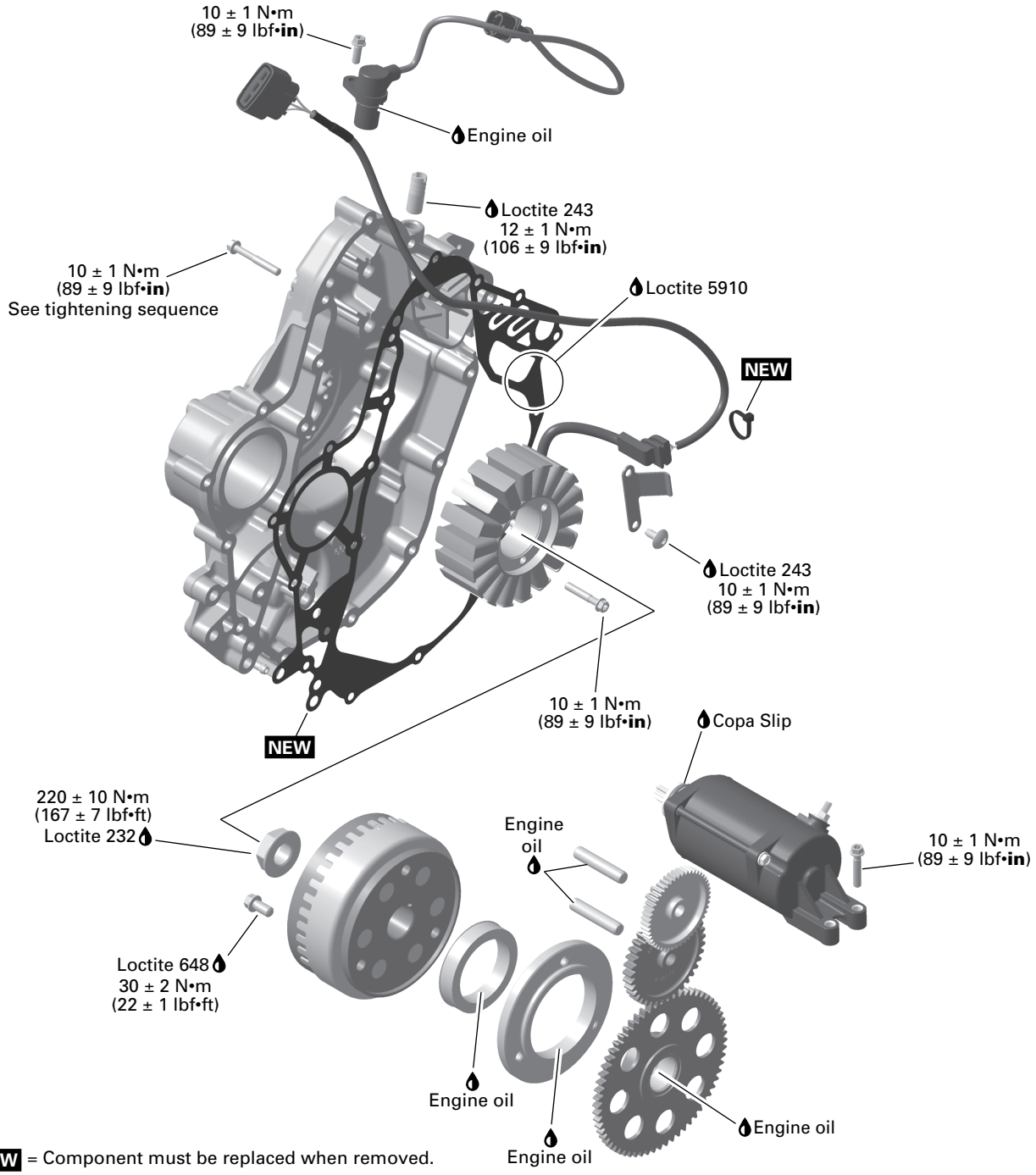

NEW = Component must be replaced when removed.

Procedures

Crankshaft Position Sensor (CPS)

Take into account that a CPS fault can be triggered by bent or missing encoder wheel teeth. First check fault codes using the BRP diagnostic software (BUDS2), then check the encoder wheel teeth condition if necessary.

CPS Location

The CPS is located on the top of the magneto cover.

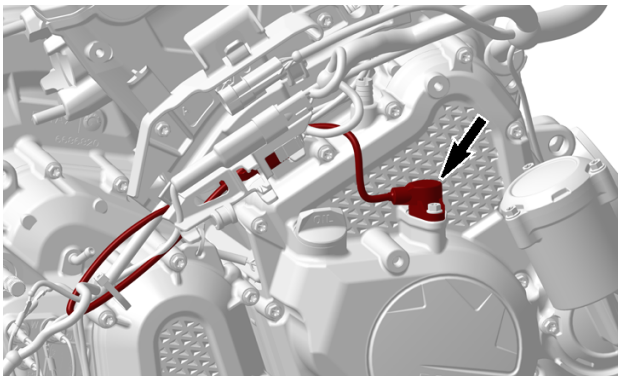

Testing the CPS Resistance

1. Disconnect CPS from wiring harness connector.
2. Probe terminals as per following table.

CPS Resistance Test		
CPS pin		Specification @ 20 °C (68 °F)
1	2	774 - 946 Ω

3. If resistance is not within specifications, replace the CPS.
4. If resistance tests good, reconnect the CPS connector and disconnect the ECM-A connector from the ECM.
5. Install the ECM-A connector on the ECM adapter tool.
6. Using a multimeter, recheck resistance as per table.

CPS Resistance Test at ECM Connector		
ECM adapter pin		Specification @ 20 °C (68 °F)
A-H1	A-K2	774 - 946 Ω

7. If resistance value is correct, refer to *Replacing the CPS*.
8. If resistance value is incorrect, repair the connectors or replace the wiring harness between the ECM-A connector and the CPS.

Replacing the CPS

1. Disconnect CPS connector and disengage the cable from bracket.
2. Remove CPS retaining screw and pull on CPS to remove it.

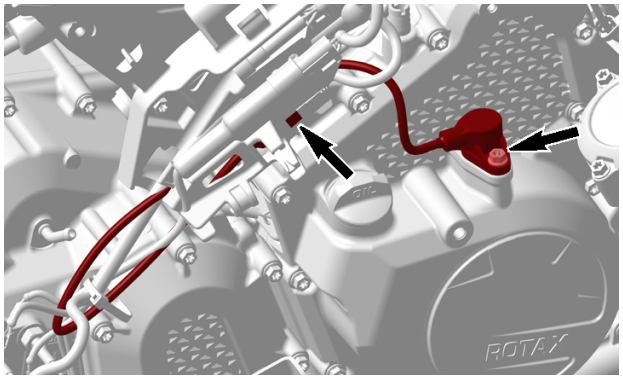

3. Lubricate O-ring of CPS.

Engine oil

4. Install **NEW** CPS and secure harness in the bracket with a locking tie.

Tightening Torque	
CPS retaining screw	10 ± 1 Nm (89 ± 9 lbf-in)

Magneto Cover

Removing the Magneto Cover

1. Drain the engine oil, refer to *lubrication system* subsection.
2. Drain the coolant, refer to *cooling system - vehicle components* subsection.
3. Remove dipstick and oil filter housing.
4. Remove coolant hoses from water pump housing.
5. Remove crankshaft position sensor (CPS).
6. Disconnect stator connector from voltage regulator/rectifier, refer to *Stator Connector Location* in this subsection.
7. Place an oil pan under magneto area to catch remaining oil.
8. Remove magneto cover retaining screws.

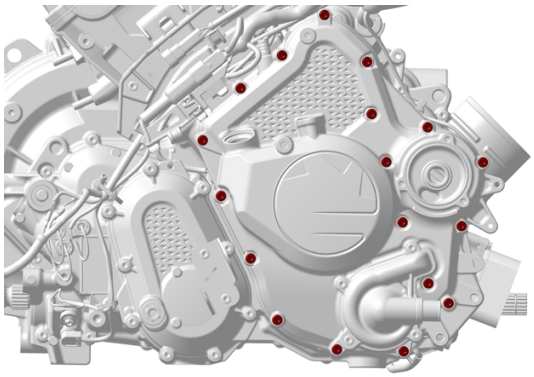

9. Pull magneto cover.
10. Discard magneto cover gasket.

Inspecting and Cleaning the Magneto Cover

1. Check magneto cover for cracks or other damages. Replace if necessary.
2. Check blow by labyrinth for any dirt. Clean if necessary.
3. Check stator journal for any damages.

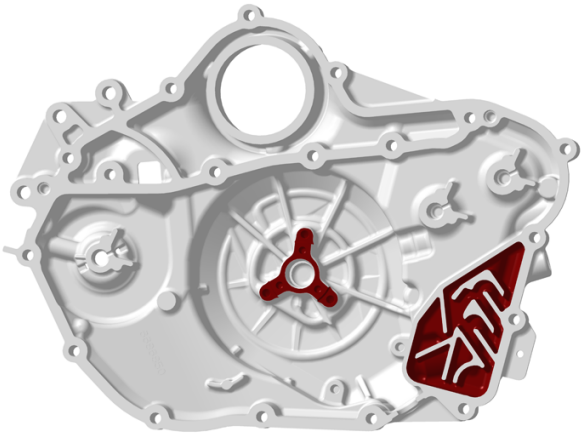

4. Clean magneto cover.
5. Clean sealing surfaces, the surfaces must be free of grease and oil.

Loctite chisel (gasket remover)
Brake and parts cleaner PRO S2

Installing the Magneto Cover

The installation is the reverse of the removal procedure. However, pay attention to the following.

1. Install a **NEW** magneto cover gasket.
2. Apply sealant on **NEW** gasket as shown in next illustration.

Loctite 5910

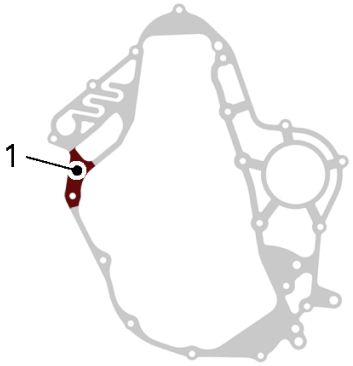

1. Apply sealant on both side of the gasket

3. Install stator grommet in to the recess.
4. Carefully install magneto cover.

⚠ CAUTION
Magnetic force between magneto flywheel and stator is very high. Avoid finger contusions.

5. Tighten magneto cover screws according the following sequence.

Tightening Torque	
Magneto cover screws	10 ± 1 Nm (89 ± 9 lbf-in)

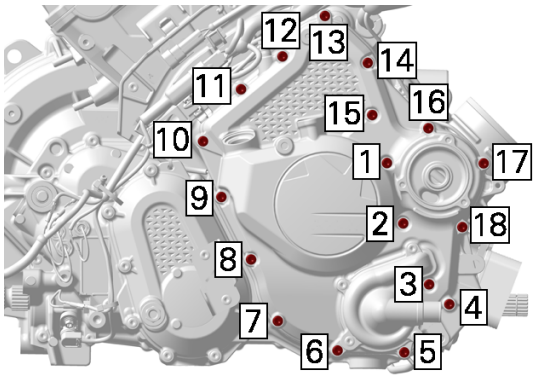

TIGHTENING SEQUENCE

stator

Testing the Stator Continuity

1. Disconnect the stator connector from the voltage regulator/rectifier.
2. Set the multimeter to Ω.
3. Probe each pair of YELLOW wires by touching (NOT inserting) terminals lock tabs as shown.

NOTICE
Never insert a multimeter probe into a terminal as it would ruin the terminal.

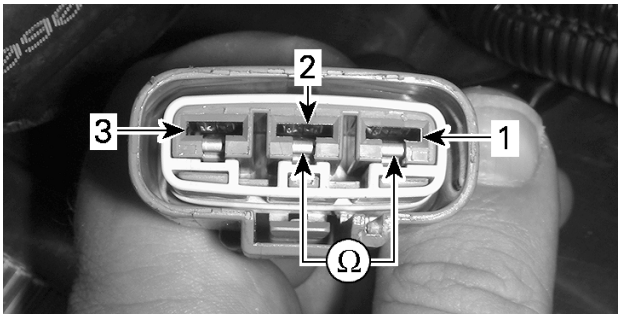

1. *Pin #1*
2. *Pin #2*
3. *Pin #3*

4. Read resistance as per following table.

Stator Continuity Test	
Yellow wires (each pair)	**Resistance @ 20 °C (68 °F)**
Pins 1 and 2	0.15 - 0.30 Ω
Pins 1 and 3	
Pins 2 and 3	

If any resistance reading is not as specified, the stator or the wiring (including connector) is open and needs to be repaired or replaced.

If resistance is good, perform the stator insulation test.

Testing the Stator Insulation

1. Connect multimeter between any YELLOW wire and chassis ground.

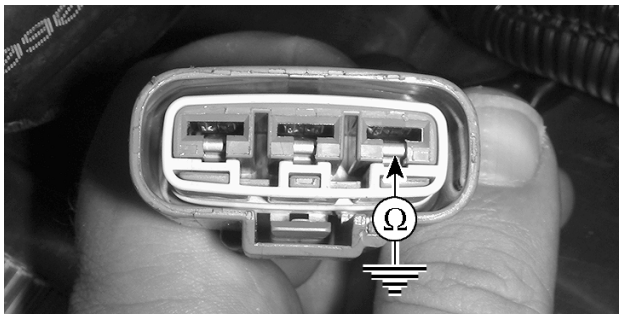

2. Read resistance.

Stator Insulation Test	
Probe positions	**Resistance @ 20 °C (68 °F)**
Any YELLOW wire and chassis ground	Infinity (OL)

If any resistance reading is not as specified, the stator or the wiring is shorted to ground and needs to be repaired or replaced.

If the insulation test is good, perform the output voltage test.

Testing the Stator Output Voltage

1. With the stator connector unplugs from the voltage regulator/rectifier, start engine and let it reach its operating temperature.
2. Set multimeter to Vac scale.
3. With engine idling, connect multimeter between each pair of YELLOW wires.

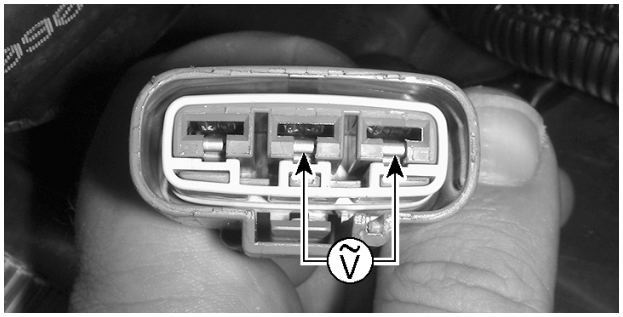

4. Read voltage.

Stator Output Voltage Test		
Test Engine Speed	**Terminal**	**Voltage**
Idle speed	1 and 2	± 25 Vac
	1 and 3	
	2 and 3	

If any voltage reading is significantly lower than specification, replace the stator.

Removing the Stator

1. Remove magneto cove, refer to *magneto cover* in this subsection.
2. Remove:
   - Holding strip screws
   - Stator retaining screws
   - Stator. Pull cable grommet carefully out of recess.

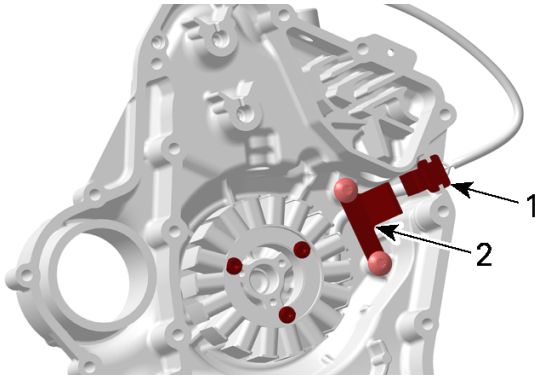

1. Stator cable grommet
2. Wire holding strip

Inspecting the Stator

1. Check stator windings and insulation for cracks or other damages. If damaged replace it.
2. Check if stator wires are brittle, hard or otherwise damaged.

Installing the Stator

The installation is the reverse of the removal procedure. However, pay attention to the following.

NOTICE
When installing the stator take care to route wires properly. Do not forget to install retaining strip.

1. Apply sealant on magneto cover recess.

Loctite 5910

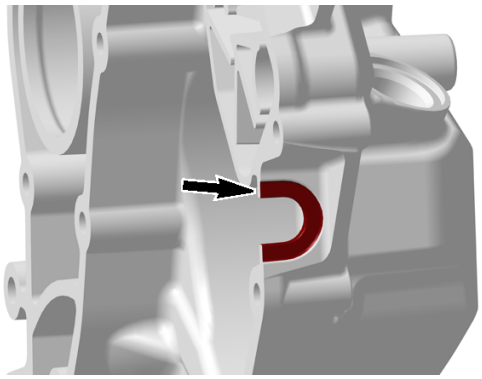

2. Install grommet into the recess.
3. Install screws and tighten to specified torque.

Tightening Torque	
Holding strip screws - Reused MAG cover	10 ± 1 Nm (89 ± 9 lbf-in) + Loctite 243 (blue) (P/N 293 800 060)
Holding strip screws - New MAG cover	12 ± 1 Nm (106 ± 9 lbf-in)

Tightening Torque	
Stator retaining screws	10 ± 1 Nm (89 ± 9 lbf-in)

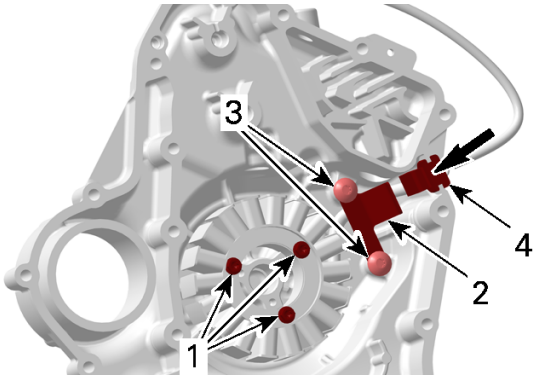

1. Stator retaining screws
2. Wire holding strip
3. Holding strip screws
4. Cable grommet

Rotor

Removing the Rotor

1. Remove magneto cover, refer to *Magneto Cover*.
2. Lock crankshaft, refer to *Crankshaft Locking Procedure* in the *Cylinder Block* subsection.

3. Heat up nut with a heat gun in order to break the threadlocker.
4. Remove rotor retaining nut.

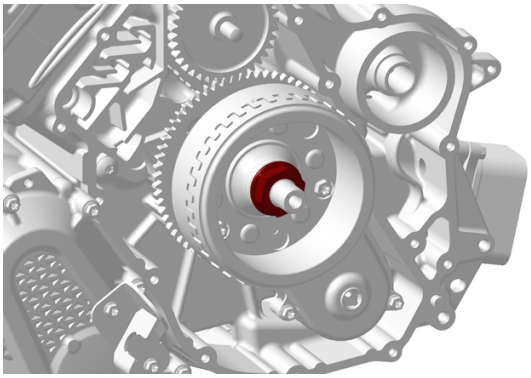

5. Remove rotor.

Magneto puller (P/N 529035748)	

NOTE: Apply some grease on the crankshaft end surface to ease puller operation.

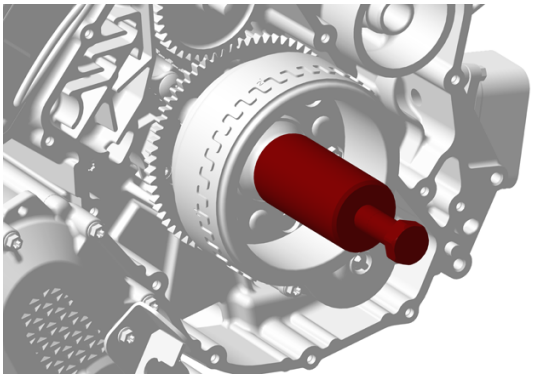

6. Screw magneto puller bolt to remove rotor.

Inspecting the Rotor

1. Check inner side of rotor for scratches or other damage.
2. Blow the oil passage in the magneto hub by using compressed air. Check if it is clogged.

3. Check keyway of the rotor for wear or damages.
4. Check if trigger wheel teeth are bent or otherwise damaged.
5. Check woodruff key and keyway on the crankshaft for wear or damages.
6. Replace parts as necessary.

Installing the Rotor

The installation is the reverse of the removal procedure. However, pay attention to the following.

1. Clean:

Clutch and pulley flange cleaner PRO S1

- Crankshaft taper
- Thread on crankshaft
- Oil passage at crankshaft taper
- Rotor taper
- Retaining nut.

NOTICE
Taper on crankshaft and rotor must be free of grease. Retaining nut must be free of any dirt before installation.

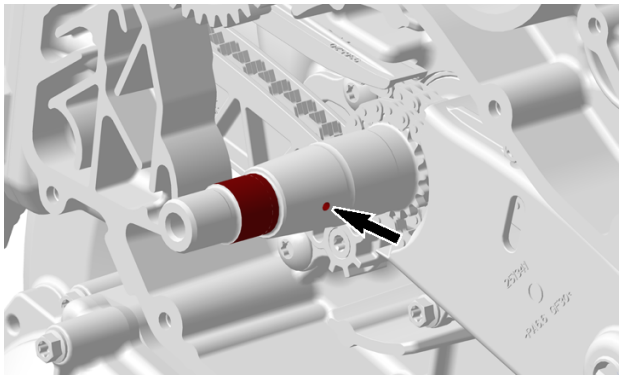

2. Apply oil on sprag clutch and needle bearing.

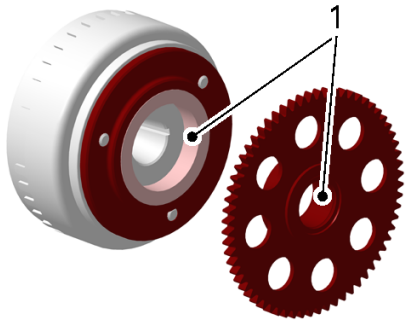

1. Apply engine oil here

3. Install sprag clutch gear onto the rotor.
4. Slide rotor onto crankshaft. The woodruff key and the keyway must be aligned.
5. Rotate starter double gear counterclockwise to align intermediate gear teeth with sprag clutch gear.

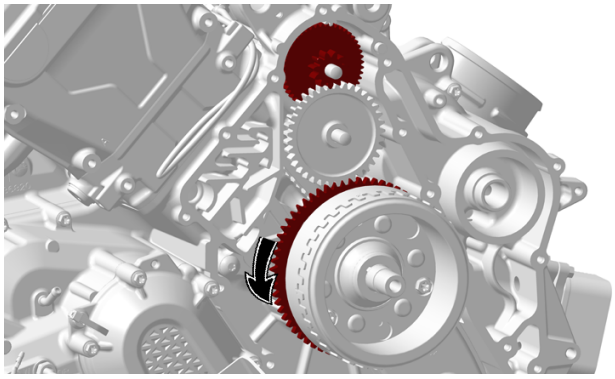

6. Apply a drop of threadlocker on threads of the rotor retaining nut.

Loctite 232

7. Tighten rotor retaining nut to specification.

Tightening Torque	
Rotor retaining nut	220 ± 10 Nm (167 ± 7 lbf-ft)

Sprag Clutch

Removing the Sprag Clutch

1. Remove magneto cover, refer to *magneto cover* in this subsection.
2. Lock crankshaft, refer to *crankshaft locking procedure* in the *cylinder block* subsection.
3. Heat up sprag clutch housing screws with a heat gun in order to break the threadlocker.
4. Loosen screws.

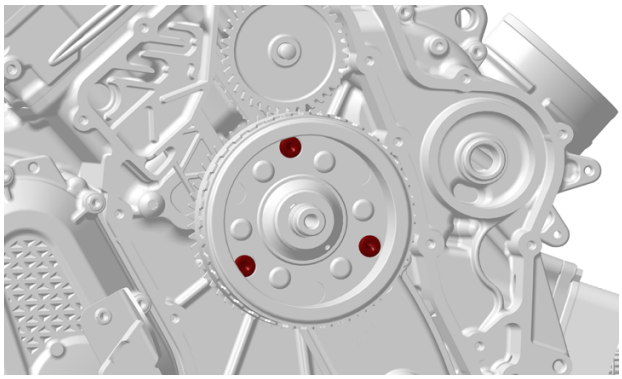

5. Remove rotor, refer to *rotor* in this subsection.
6. Remove sprag clutch gear.
7. Remove sprag clutch housing screws and sprag clutch housing.

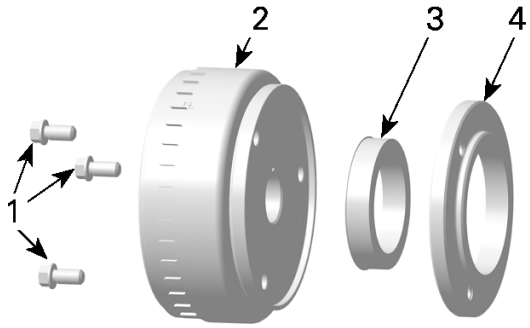

1. Sprag clutch housing screws
2. Rotor
3. Sprag clutch
4. Sprag clutch housing

Inspecting the Sprag Clutch

1. Inspect sprag clutch and sprag clutch housing for wear and damage.
2. Check the collar of the sprag clutch gear.
3. Rotate sprag clutch gear in sprag clutch. Sprag clutch must lock in counterclockwise direction.

SPRAG CLUTCH FUNCTIONAL TEST
1. Lock

Sprag clutch, housing and gear must be replaced at the same time, if damaged.

Installing the Sprag Clutch

The installation is the reverse of the removal procedure. However, pay attention to the following.

1. Clean:

Clutch and pulley flange cleaner PRO S1

   – Threads in sprag clutch housing
   – Threads of sprag clutch housing screws.
2. Apply threadlocker on threads of sprag clutch housing screws.

Loctite 648 (green)

3. Install screws but do not torque yet.
4. Apply engine oil on sprag clutch and sprag clutch gear needle bearing.

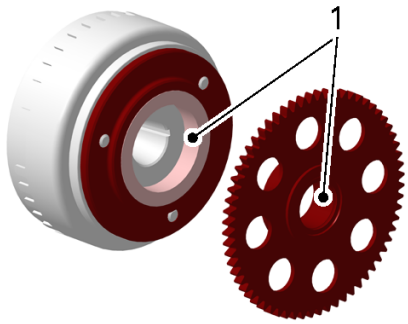

1. Apply engine oil here

5. Install rotor.
6. Tighten sprag clutch housing screws to specification.

Tightening Torque	
Sprag clutch housing screws	30 ± 2 Nm (22 ± 1 lbf-ft)

Sprag Clutch Gear

Removing the Sprag Clutch Gear

1. Remove rotor, refer to *rotor* in this subsection.
2. Pull sprag clutch gear out of the rotor.

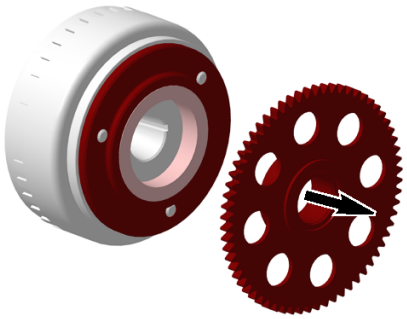

Inspecting the Sprag Clutch Gear

1. Inspect gear, especially teeth and sprag clutch collar, for wear and other damage.
2. Check needle bearing condition. Replace sprag clutch gear if necessary.

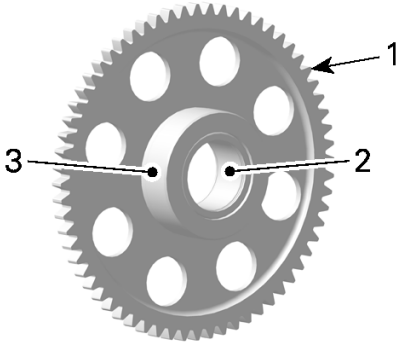

INSPECT
1. Teeth
2. Collar
3. Needle bearing

Installing the Sprag Clutch Gear

The installation is the reverse of the removal procedure.

NOTE: Apply engine oil on needle bearing and collar of sprag clutch gear.

Starter Drive Gears

Starter Drive Gear Location

The starter drive gears are located on the engine MAG side behind the magneto cover.

Removing the Starter Drive Gear

1. Remove magneto cover.
2. Remove:

   – Location pins
   – Starter double gear
   – Intermediate gear.

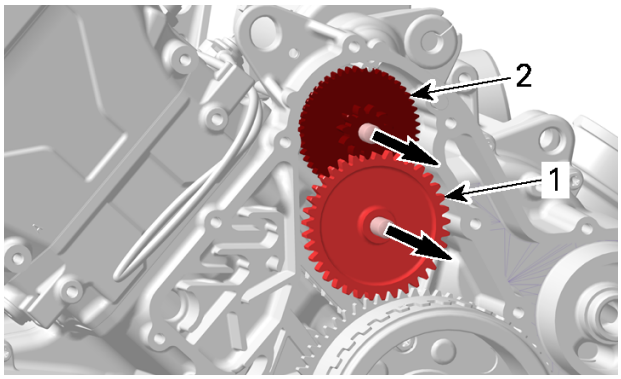

1. *Intermediate gear*
2. *Starter double gear*

Inspecting the Starter Drive Gear

1. Inspect gears and location pins for wear and damage.
2. Replace parts as necessary.

Installing the Starter Drive Gear

The installation is the reverse of the removal procedure. However, pay attention to the following.

1. Apply engine oil on starter gear before installing the starter double gear.
2. Apply engine oil on location pins.
3. Install starter double gear.
4. Install intermediate gear, then insert the location pin.

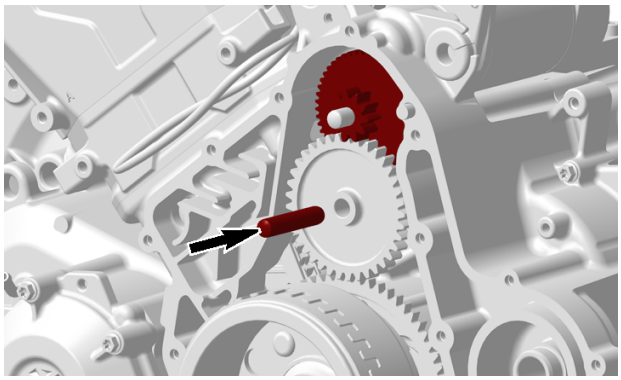

Electric Starter

Starter Location

Starter is located underneath the intake manifold.

Testing the Starter Operation

1. Ensure the starter power cable is properly connect from the starter solenoid to the starter terminal (clean, tight, no corrosion).
2. Using booster cables, carefully supply current from a 12 volt battery directly to the starter. First connect the BLACK (-) cable to the engine ground. Then, momentarily connect the remaining jumper cable from the battery to the starter terminal on the starter solenoid.
3. If starter turns, test other starting system components.

Removing the Starter

1. Disconnect the battery.
2. Clean starter area.
3. Remove starter retaining screws.
4. Carefully pry starter out of the crankcase.

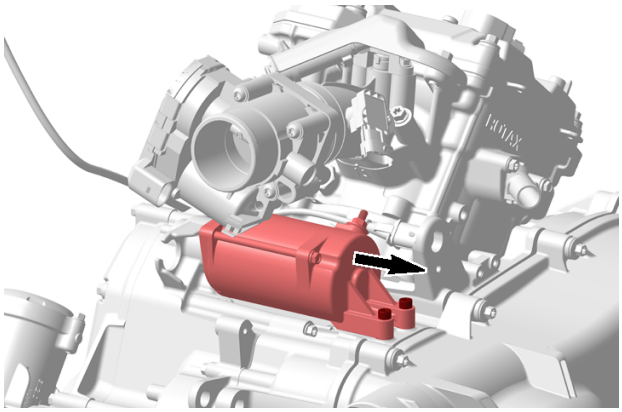

Installing the Starter

The installation is the reverse of the removal procedure. However, pay attention to the following.

1. Make sure that starter and engine mating surfaces are free of debris. Serious problem may arise if the starter is not properly aligned.
2. Lubricate starter boss and starter O-rings before installation.

Copaslip

3. Insert starter gear into engine.
4. Install starter retaining screw and tighten to specification.

Tightening Torque	
Starter screws	10 to 1 Nm (89 to 9 lbf-in)

5. Connect the RED (+) cable to the starter, terminal, and tighten nut to specification.

Tightening Torque	
Starter cable nut	9 ± 1 Nm (80 ± 9 lbf-in)

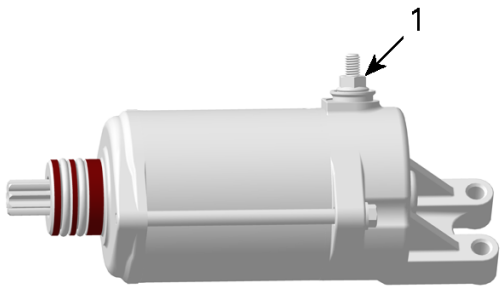

1. Starter cable nut

6. Apply one of these lubricants over the starter cable nut to protect it against rust.

Dielectric grease
Black neoprene paint

7. Reconnect BLACK (-) cable on battery post.

NOTICE
Always connect RED (+) starter cable first, and BLACK (-) battery cable last.

8. Test for proper starter operation.

Timing Chain

SERVICE PRODUCTS

Description	Part Number	Page
LOCTITE 243 (BLUE)		48, 50

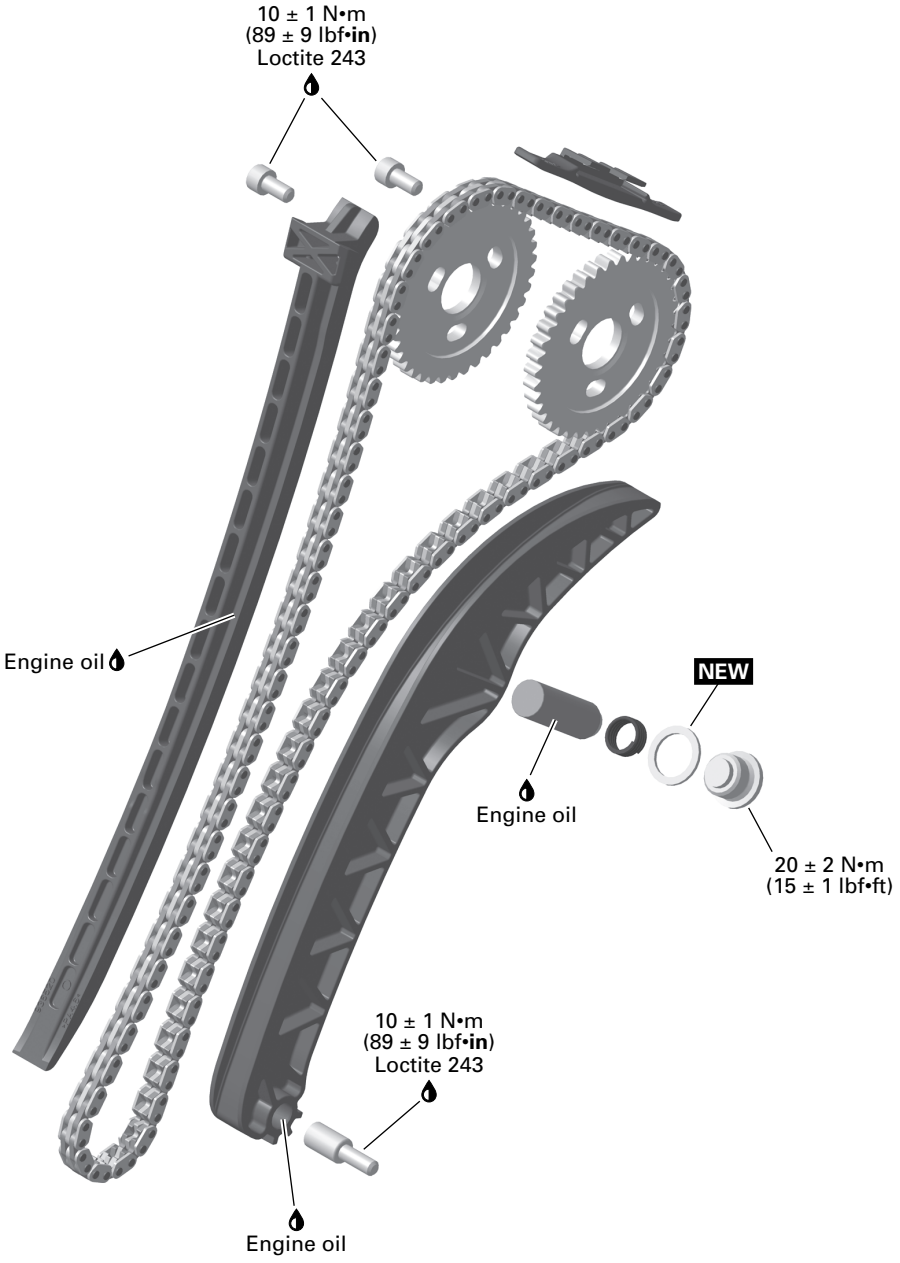

NEW = Component must be replaced when removed.

General

Engine removal is necessary to work on the following components:

– Timing chain
– Timing chain guide (tensioner side).

When disassembling parts that are duplicated in the engine, (e. g.: valves, springs, etc.), it is strongly recommended to note their position and to keep the parts of the same assembly as a “group”. If you find a defective component, it will be much easier to find the cause of the failure. Since parts were broken-in together during engine operation, they will maintain their matched fit when reassembled together within their “group”.

Troubleshooting

The following is provided to help in diagnosing the probable source of troubles. It is a guideline and should not be assumed to provide solutions to every cause of all problems.

Troubleshooting

1. UNUSUAL ENGINE NOISE OR VIBRATIONS

Faulty chain tensioner.

– *Replace chain tensioner.*

Chain guide(s) worn out.

– *Replace chain guide(s).*

Stretched timing chain or worn sprockets.

– *Replace timing chain and sprockets.*

Camshaft timing gear screws loose.

– *Retighten screws to recommended torque.*

Incorrect camshaft timing adjustment.

– *Replace damaged components and readjust camshaft timing.*

2. ENGINE LACKS ACCELERATION OR POWER

Incorrect camshaft timing adjustment.

– *Replace damaged components and readjust camshaft timing.*

Procedures

Timing Chain Tensioner

Timing Chain Tensioner Location

The timing chain tensioner is located in the cylinder beside the exhaust manifold.

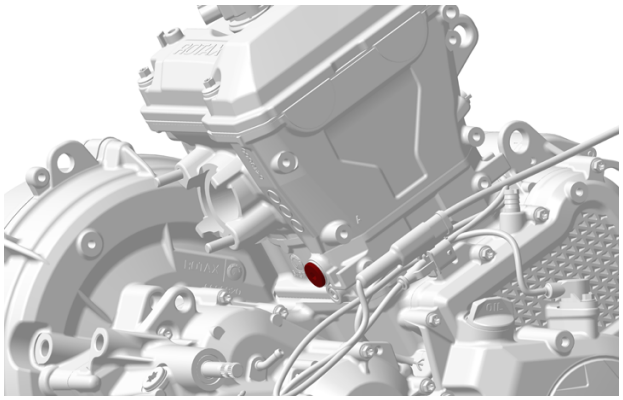

Removing the Timing Chain Tensioner

1. Lock crankshaft at TDC ignition , refer to *Crankshaft* in the *cylinder block* subsection.
2. Remove screw plug and discard the sealing washer.
3. Pull out spring and chain tensioner.

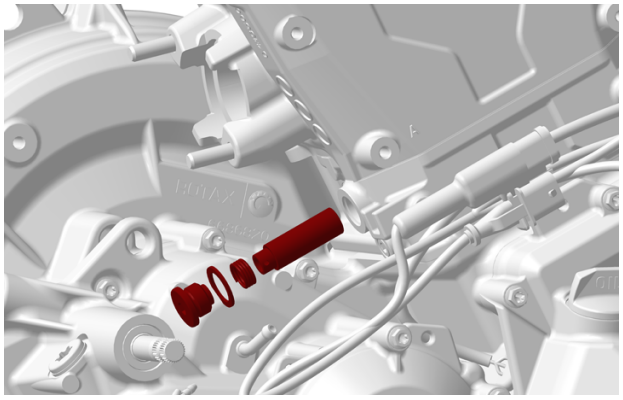

Inspecting the Timing Chain Tensioner

1. Check chain tensioner for scoring and freedom of movement in bore.
2. Compress chain tensioner and check for proper operation.

NOTE: The chain tensioner is difficult to compress when properly charged with oil, and easily compressed when it is not.

3. Check spring for straightness, corrosion and other visible damage.

Installing the Timing Chain Tensioner

1. Apply engine oil on chain tensioner.
2. Insert chain tensioner together with spring in its bore with the plunger pointing outwards.

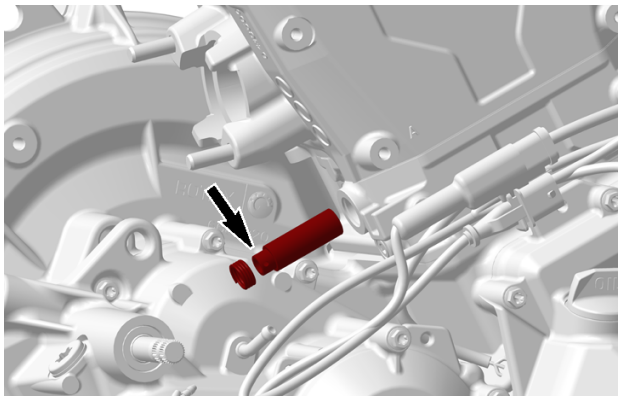

3. Install the screw plug with a **NEW** sealing washer.
4. Tighten screw plug to specified torque.

Tightening torque	
Screw plug	20 ± 2 Nm (15 ± 1 lbf-ft)

5. Install all other removed parts.

Camshaft Timing Gears

Removing the Camshaft Timing Gear

1. Lock crankshaft at TDC ignition, refer to *Crankshaft* in the *cylinder block* subsection.
2. Remove valve cover. Refer to *valve cover* in the *cylinder head* subsection

NOTE: When crankshaft is locked, the marks "IN" and "EX" on the camshaft timing gears must be aligned.

3. Check timing chain for excessive radial play while still installed on timing gears. Refer to *timing chain* in this subsection.
4. Remove the chain guide.
5. Unscrew camshaft timing gear screws.

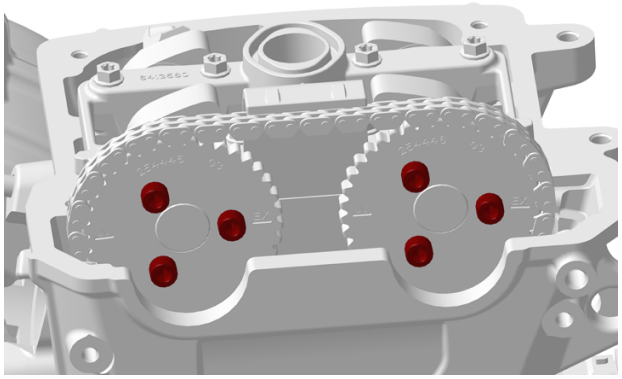

6. Remove timing chain tensioner.
7. Move timing chain aside and secure it against falling into the timing chain compartment.
8. Remove camshaft timing gear.

Inspecting the Camshaft Timing Gear

1. Check camshaft timing gears for wear or deterioration. If a gear is worn or damaged, replace camshaft timing gears and timing chain as a set.

NOTE: For crankshaft timing gear inspection, refer to *Cylinder Block* subsection.

Installing the Camshaft Timing Gear

The installation is the reverse of the removal procedure. However, pay attention to the following details.

NOTICE

Improper camshaft timing will damage engine components. Make sure camshafts and crankshaft are still locked.

1. Lock crankshaft, refer to *Crankshaft* in the *Cylinder block* subsection
2. Lock camshafts, refer to *Camshaft Locking Procedure* in the *Cylinder Head* subsection.
3. Clean mating surface and threads of camshafts prior installing camshaft timing gears
4. Install timing gears:

NOTE: Chain should be always lightly tensed during installation.

1. Install timing gear with timing chain on exhaust camshaft and align "EX" mark with cylinder head.
2. Tighten retaining screws hand tighten.

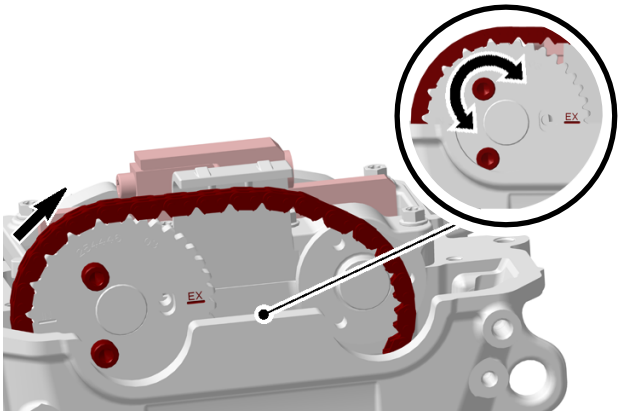

3. Install timing gear with timing chain on intake camshaft and align "IN" mark with cylinder head.
4. Tighten retaining screws hand tighten.

NOTE: "IN" and "EX" marks on camshaft timing gears must face together.

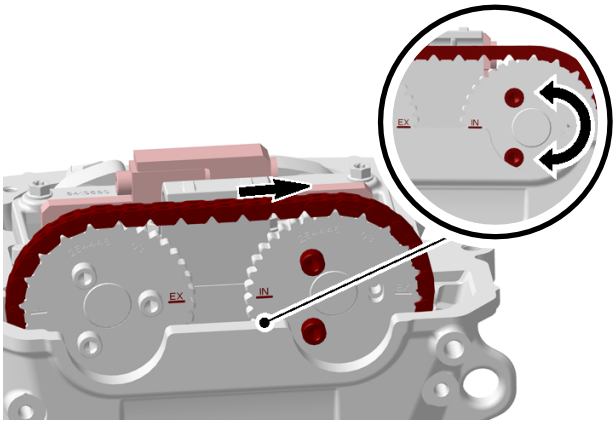

5. Install timing chain guides, refer to *Chain Guides* in this subsection.
6. Install chain tensioner, refer to *Timing Chain Tensioner* in this subsection
7. Ensure "IN" and "EX" marks are still aligned.

NOTICE
If marks are not in correct position, adjust timing gear and repeat the procedure.

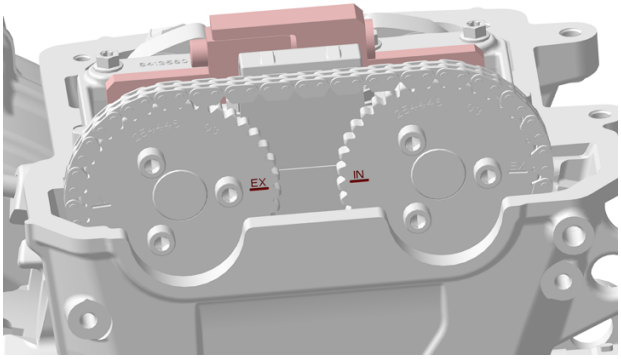

8. Apply a drop of threadlocker on threads of timing gear screws.

Loctite 243 (blue)

9. Tighten timing gear screws.

Tightening Torque	
Timing gear screws	10 ± 1 Nm (89 ± 9 lbf-in)

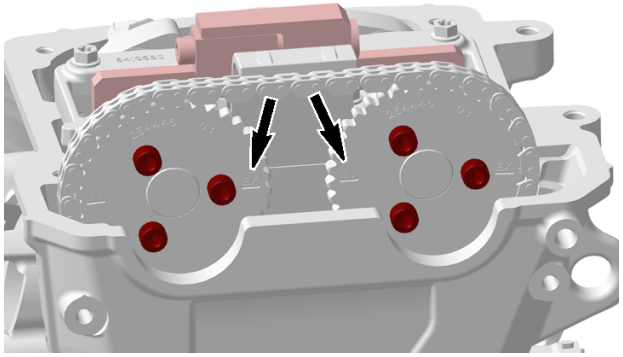

Timing Chain

Removing the Timing Chain

1. Remove engine from vehicle. refer to *engine removal and installation* subsection.
2. Drain engine oil, refer to *Lubrication system* subsection.
3. Refer to *Magneto and Starter* subsection and remove:
   - Magneto cover
   - Rotor.
4. Remove oil pump drive, refer to *lubrication system* subsection.
5. Remove valve cover, refer to *Cylinder Head* subsection.
6. Remove chain guide on cylinder head and upper chain guide, refer to *chain guides* in this subsection.
7. Check timing chain for excessive radial play while still installed on timing gears.

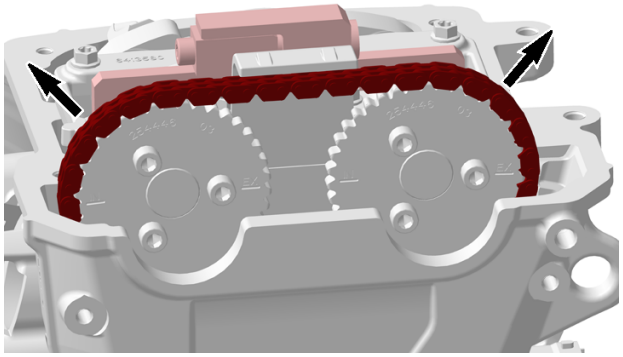

8. Remove the camshafts, refer to *cylinder head* subsection.
9. Remove timing chain.

NOTE: Make a mark on the timing chain to indicate the operating direction of the chain before removal.

10. Remove chain guide (tensioner side) from lower half of cylinder block.

Timing Chain Inspection

1. Check timing chain for wear and teeth condition.

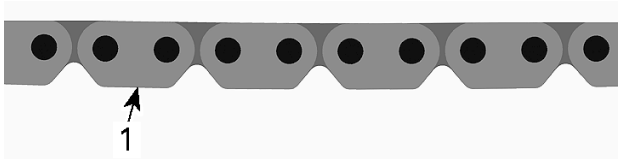

1. Check teeth condition

NOTICE

If timing chain is excessively worn or damaged, replace timing chain and camshaft timing gears together.

2. Check oil pump drive cover for cracks or deformation. Replace if necessary, refer to *lubrication system* subsection

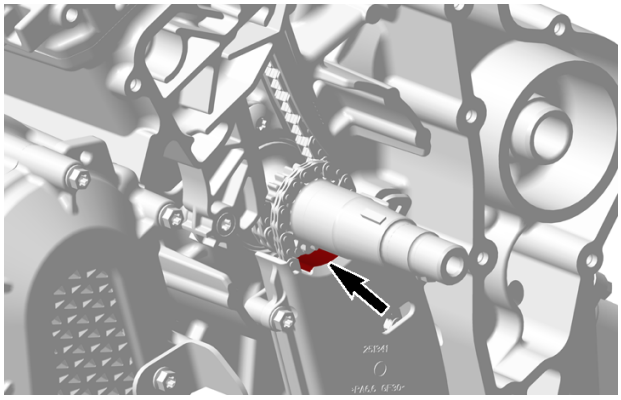

NOTE: Check the chain guides, Refer to *Chain Guide Inspection* in this subsection.

Installing the Timing Chain

The installation is the reverse of the removal procedure. However, pay attention to the following details.

1. Make sure that crankshaft is still locked, refer to *crankshaft* in the *cylinder block* subsection.
2. Install timing chain on crankshaft timing gear.

NOTE: If the same timing chain is reinstalled, be sure to reinstall it in the same operating direction as marked during removal procedure.

3. Install chain guide (tensioner side) in lower half of cylinder block, refer to *chain guides* in this subsection.
4. Reinstall oil pump drive and cover, refer to *lubrication system* subsection.
5. Reinstall timing chain properly on camshaft timing gears, refer to *Installing the camshaft* in the *cylinder head* subsection.

NOTICE

Improper camshaft timing will damage engine components.

6. Install all other removed parts.

NOTICE

Be sure to remove camshaft and crankshaft locking tools when timing chain is completely installed.

Chain Guides

Removing the Chain Guides

1. Remove valve cover, refer to *valve cover* in the *cylinder head* subsection
2. Remove chain guide on camshaft holder.

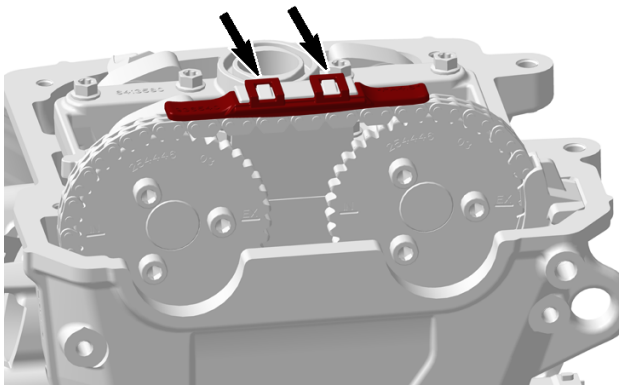

3. Pull chain guide up from cylinder head.

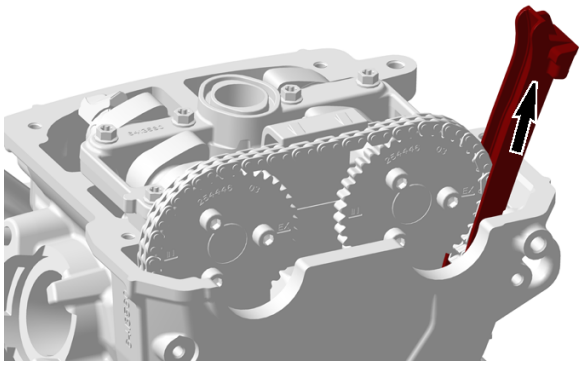

4. Remove timing chain tensioner, refer to *chain Tensioner* in this subsection.
5. Remove camshafts, refer to *camshaft* in the *Cylinder head* subsection.

6. Refer to *Magneto and Starter* subsection and remove:
   - Magneto cover
   - Rotor.
7. Remove timing chain, refer to *Timing chain* in this subsection.
8. Remove
   - bearing screw
   - chain guide (tensioner side), pull chain guide upwards out of cylinder head

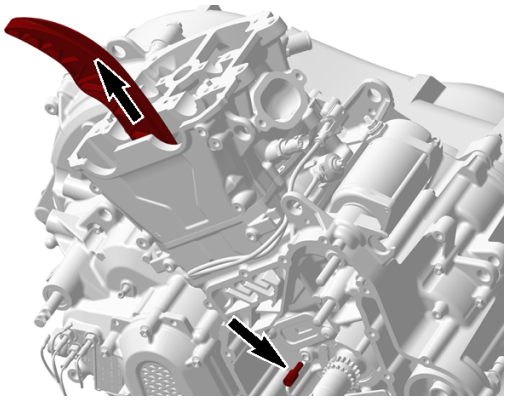

Inspecting the Chain Guides

1. Check chain guides for wear, cracks or deforming. Replace as required.
2. Replace chain guides if groove depth caused by timing chain exceeds service limit.

Chain Guide Groove Depth	
Service limit	1 mm (.039 in)

TYPICAL
1. Chain guide

Installing the Chain Guides

The installation is the reverse of the removal procedure. However, pay attention to the following details.

1. Insert chain guide (tensioner side).
2. Apply engine oil on bearing pin and install it.
3. Apply threadlocker on threads of the screw plug.

Loctite 243 (blue)

4. Tighten screw plug as specified.

NOTICE
Ensure chain guide bearing pin is properly inserted in the chain guide.

Tightening Torque	
Screw plug	10 ± 1 Nm (89 ± 9 lbf-in)

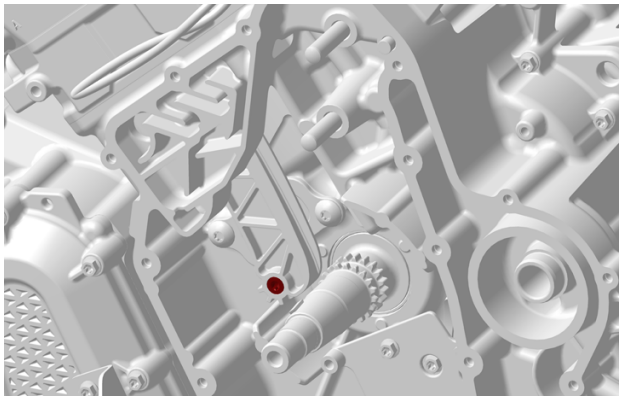

5. Properly reinstall camshaft with timing gears, refer to *Camshafts* in the *Cylinder Head* subsection.
6. Install timing chain, refer to *Timing Chain* in this subsection.
7. Insert chain guide and press it into cylinder head fitting.
8. Snap the chain guide on camshaft holder.

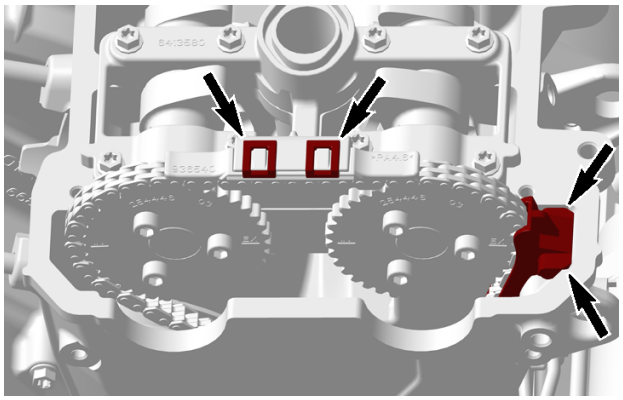

Cylinder Head

SERVICE TOOLS

Description	Part Number	Page
CAMSHAFT LOCKING TOOL	(P/N 529036536)	56
ENGINE LEAK DOWN TEST KIT	(P/N 529035661)	54
PISTON CIRCLIP INSTALLER	(P/N 529036532)	73
VALVE SPRING COMPRESSOR CUP	(P/N 529036161)	65–66
VALVE SPRING COMPRESSOR	(P/N 529035724)	65–66

SERVICE PRODUCTS

Description	Part Number	Page
SUPER LUBE GREASE		66

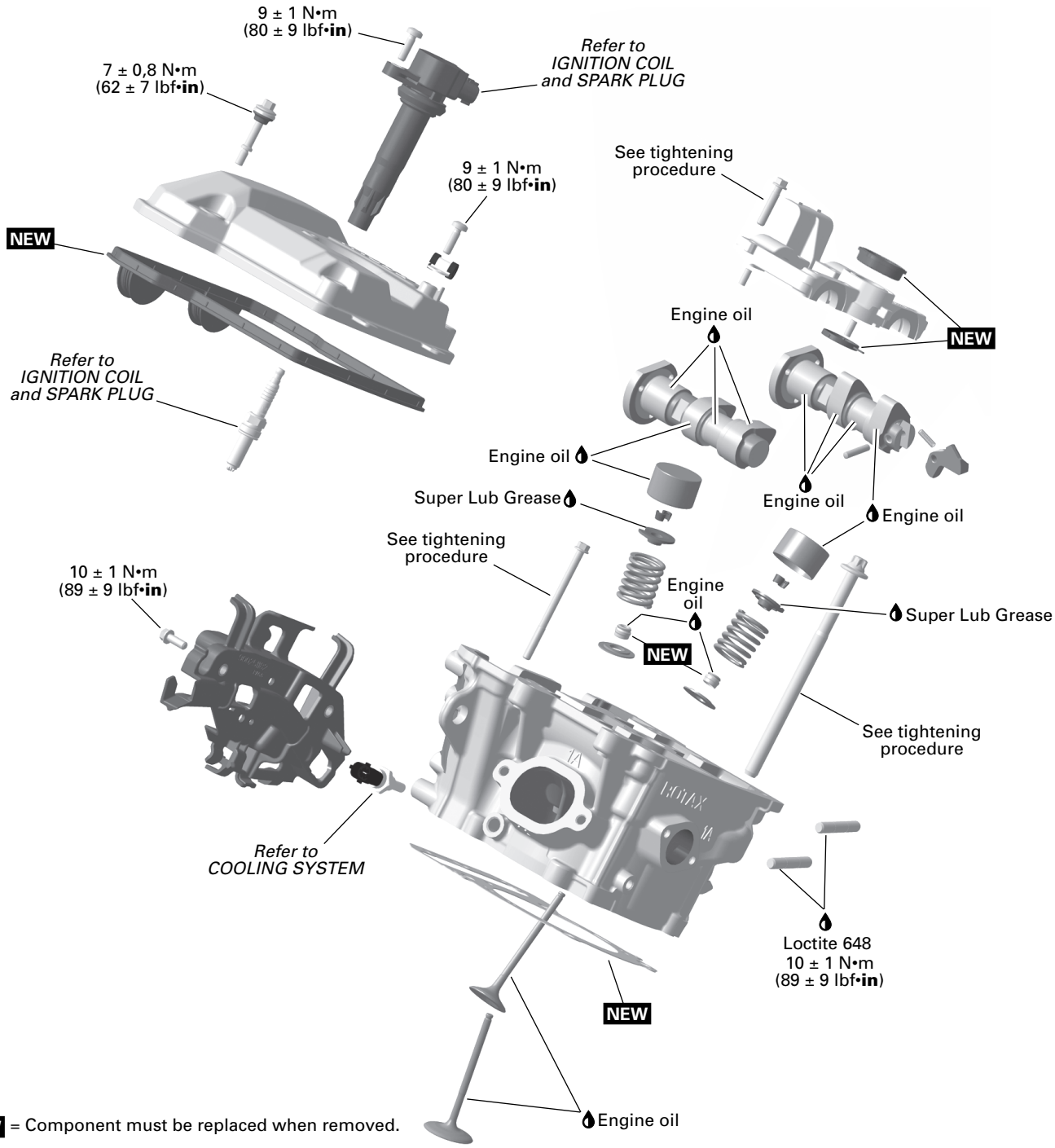

NEW = Component must be replaced when removed.

CYLINDER HEAD AND CAMSHAFTS

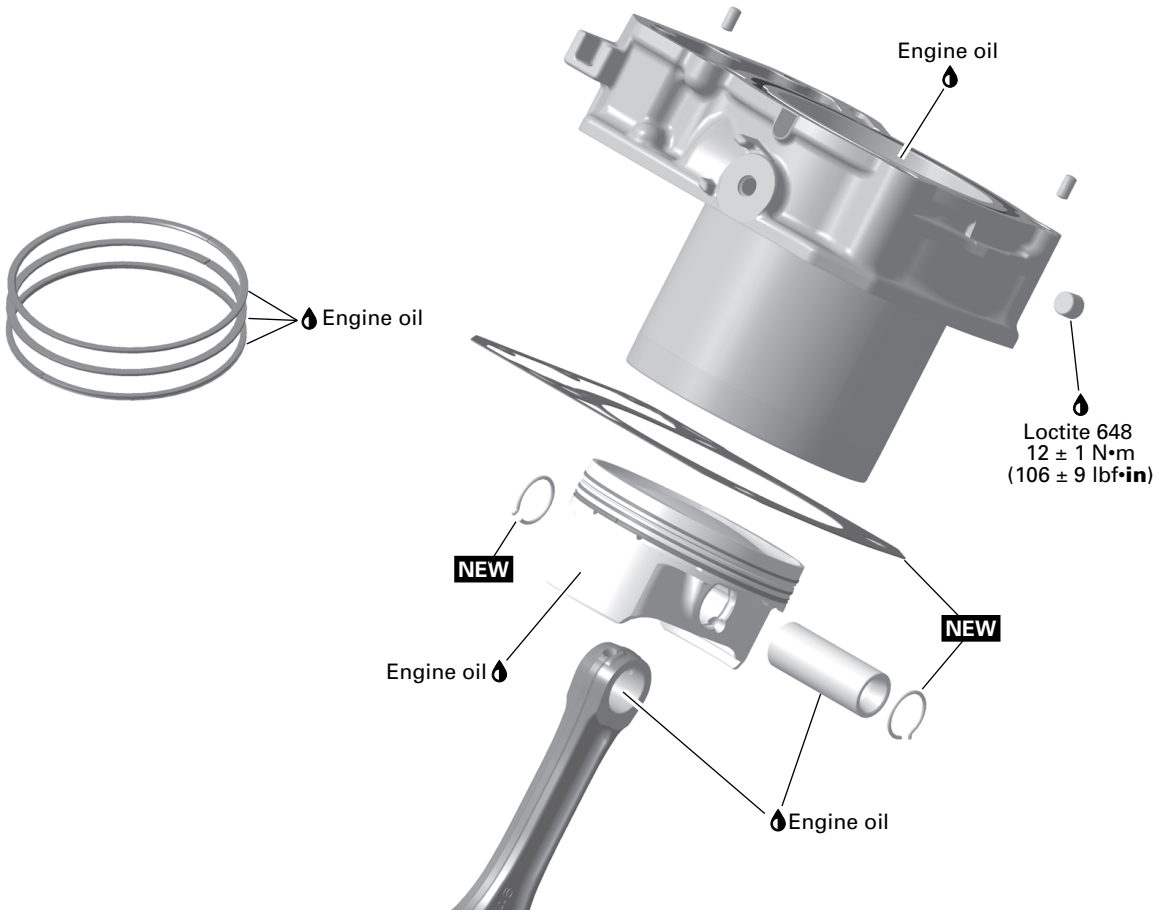

NEW = Component must be replaced when removed.

CYLINDER AND PISTON

General

NOTE: For a better understanding, some illustrations are taken with engine out of the vehicle.

Disconnect the battery before working on the engine.

NOTICE
Always disconnect BLACK (-) cable first and reconnect last.

When disassembling parts that are duplicated in the engine, (e. g.: valves, springs, etc.), it is strongly recommended to note their position and to keep the parts of the same assembly as a "group". If you find a defective component, it will be much easier to find the cause of the failure. Since parts were break-in together during the engine operation, they will keep their matched fit when parts are reassemble together within their "group".

Inspection

Cylinder Leak Test

General

Before performing the cylinder leak test, verify the following:

– Clamp tightness
– Hoses condition.

NOTE: For best accuracy, the leak test should be done with the engine at normal operating temperature.

⚠ CAUTION
Engine parts could be hot.

Preparation

1. Remove the *valve cover*, see procedure in this subsection.
2. Remove spark plug.
3. Remove plug screw from CVT cover. Refer to *Continuously variable transmission* subsection.
4. Using the drive pulley screw, turn the engine counterclockwise to bring piston to TDC of compression stoke. Use a dial gauge or a suitable tool to position the piston to TDC.

NOTE: The piston must be set precisely to TDC of compression stroke. If not, the engine will continue to rotate when pressure builds up.

Leak Test

1. Install a gauge adaptor into spark plug hole.

Engine leak down test kit (P/N 529035661)	

2. Connect the leak down tester to an adequate air supply.
3. Set gauge needle to zero.

NOTE: All testers have specific instructions on gauge operation and required pressure. Refer to manufacturer's instructions.

4. Supply combustion chamber with air pressure.
5. Note the amount or percentage of leakage (depending on tester).

LEAKAGE PERCENTAGE	ENGINE CONDITION
0% to 15%	Excellent condition
16% to 25%	Good condition
26% to 40%	Fair condition; reduced engine performance
41% and higher	Poor condition, diagnose and repair engine

Diagnosis

Listen for air leaks.

– Air escaping on intake port or throttle body means leaking intake valve(s).
– Air escaping on exhaust port means leaking exhaust valve(s).
– Air bubbles out of coolant tank means leaking cylinder head gasket.
– Air or coolant escaping from cylinder head means damaged gasket or loosened screws.
– Air escaping into crankcase area means excessively worn cylinder or broken piston rings.
– Air or oil escaping from crankcase means damaged gasket or loosened screws.

Repair Tips

Blue exhaust gas means damaged or worn piston rings or valve stem seals.

White exhaust gas means damaged cylinder head gasket.

Coolant tank cap opening without overheat means damaged cylinder head gasket.

Leaking valves can be caused by carbon deposits or burnt valve face.

Assembly

Reverse the preparation procedure.

Troubleshooting

Always check for fault codes. If a fault code is detected, service the fault code first. Refer to *Diagnostic and Fault Codes* subsection.

NOTE: When diagnosing an engine problem, always perform the cylinder leak test. This will help pinpoint a problem. Refer to *Cylinder Leak Test* in this subsection.

Troubleshooting

1. UNUSUAL ENGINE NOISE OR VIBRATIONS

Discharged or defective valve lifters.

– *Check engine oil pressure, refer to Lubrication System subsection.*

– *Replace valve lifters.*

Camshaft(s) or camshaft holder(s) worn out.

– *Check and replace damaged parts.*

Faulty chain tensioner.

– *Replace chain tensioner. Refer to timing chain subsection.*

Chain guide(s) worn out.

– *Replace chain guide(s). Refer to timing chain subsection.*

Stretched timing chain or worn out sprockets.

– *Replace timing chain and sprockets. Refer to timing chain subsection.*

Loose timing chain gear screws.

– *Retighten screws with recommended torque.*

Incorrect camshaft timing.

– *Replace damaged components and readjust camshaft timing.*

2. OIL LEAKAGE FROM CYLINDER HEAD

Leaking valve cover gasket.

– *Replace valve cover gaskets and retighten valve cover with recommended torque.*

– *Check valve cover for cracks or other damage.*

Leaking spark plug bore gaskets.

– *Replace valve cover small gaskets and camshaft holder gaskets.*

– *Clean spark plug area from oil spillage.*

Blow-by connector is leaking.

– *Replace blow by connector O-ring.*

Leaking cylinder head gasket.

– *Check cylinder head for damage.*

– *Replace cylinder head gasket and retighten screws with recommended torquing procedure.*

3. ENGINE SUDDENLY TURNS OFF OR LACKS ACCELERATION OR POWER

Incorrect camshaft timing.

– *Replace damaged components and readjust camshaft timing.*

Leaking intake or exhaust valves.

– *Perform a cylinder leak test. Repair or replace damaged components.*

Broken valve spring(s).

– *Replace defective parts.*

Procedures

Valve Cover

Removing the Valve Cover

1. Remove screws securing the electrical harness to the valve cover.
2. Disconnect ignition coil connector and remove ignition cable.
3. Remove ignition coil. Refer to *Ignition Coil and Spark Plug* subsection.

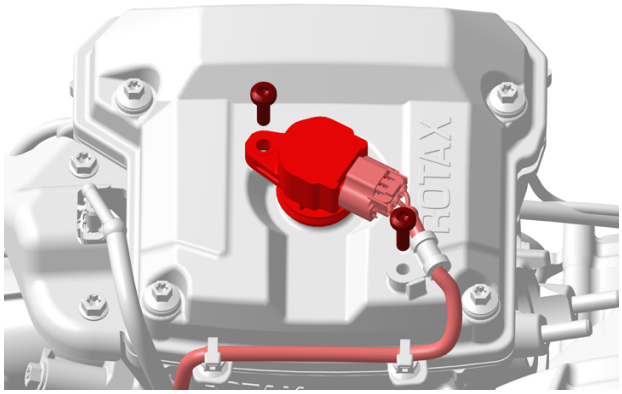

4. Remove valve cover retaining screws.

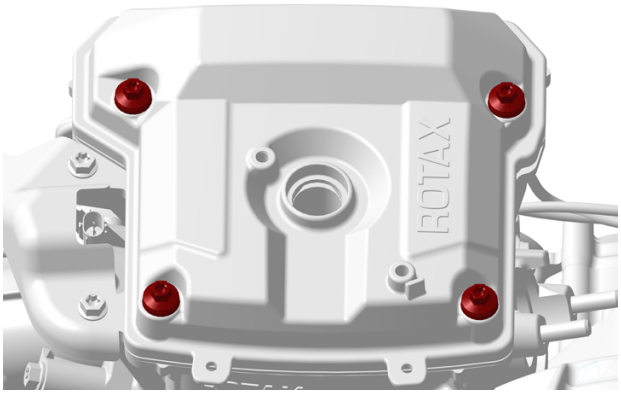

5. Remove valve cover.:
6. Remove and discard the large gasket and the small gaskets.

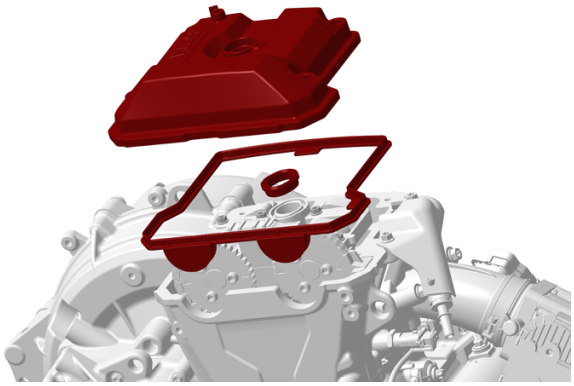

Inspecting the Valve Cover

1. Check the valve cover for cracks or other damage.
2. Replace defective parts.

Installing the Valve Cover

The installation is the reverse of the removal procedure. However, pay attention to the following details.

1. Properly fit the **NEW** small gaskets into camshaft holder grooves.
2. Properly fit the **NEW** large gasket into valve cover groove.
3. Install valve cover.
4. Ensure that valve cover gasket engage in right position to cylinder head.

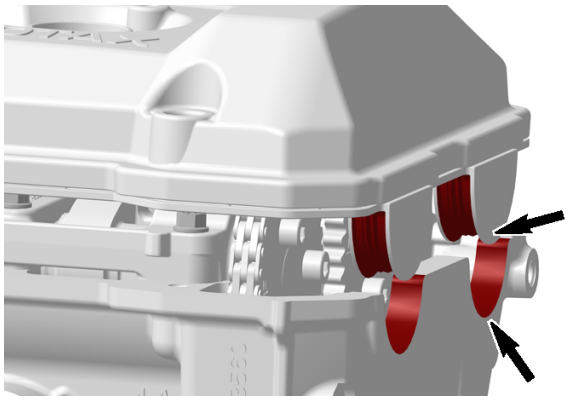

5. Install valve cover screws and tighten as per following sequence:

Tightening Torque	
Valve cover screws	7 ± 0.5 Nm (62 ± 4 lbf-in)

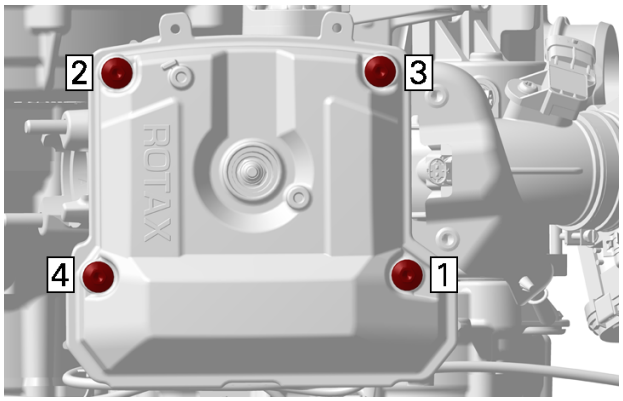

TIGHTENING SEQUENCE

Camshafts

Camshaft Locking Procedures

1. Lock crankshaft at TDC ignition, refer to *cylinder block* subsection.
2. Install locking tool, locking bolt facing to the exhaust side.
3. Ensure locking tool and camshaft are free of any dirt or any dust.

Camshaft locking tool (P/N 529036536)	

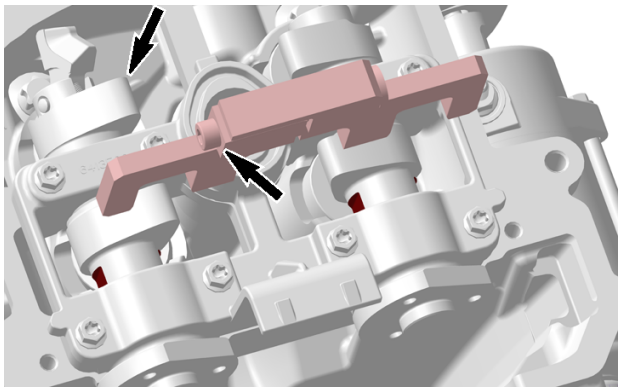

4. Check if the flats of the camshaft are parallel to the tool by turning the camshafts.

NOTE: If necessary, adjust it by turning the camshafts back and forth while screwing the locking bolt.

5. Tight locking bolt until camshafts are locked together.

Tightening Torque	
Camshaft locking bolt	3 ± 0.5 Nm (27 ± 4 lbf-in)

NOTICE
Camshafts and tool must not be able to move.

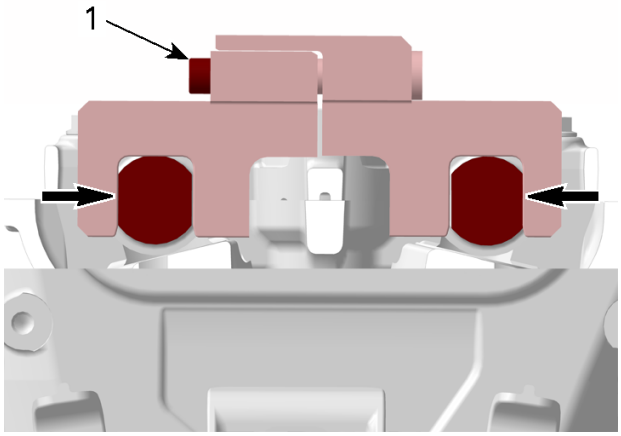

1. Camshaft locking bolt

Removing the Camshaft

1. Remove the valve cover, see procedure in this subsection.
2. Lock crankshaft at TDC ignition, refer to *Crankshaft Locking Procedure* in the *Cylinder Block* subsection.
3. Remove timing chain tensioner, refer to *Timing Chain*.
4. Remove the upper timing chain guide.

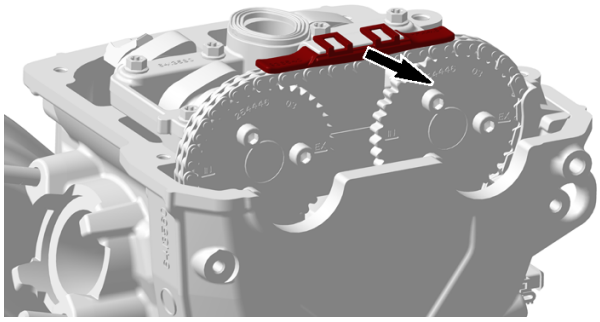

5. Remove the timing chain guide.

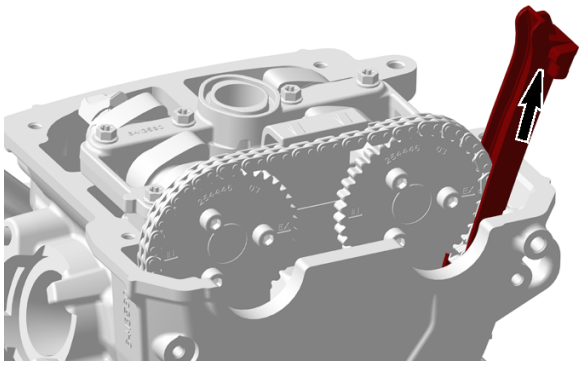

6. Remove timing chain from camshaft timing gears.
7. Remove camshaft holder retaining screws.

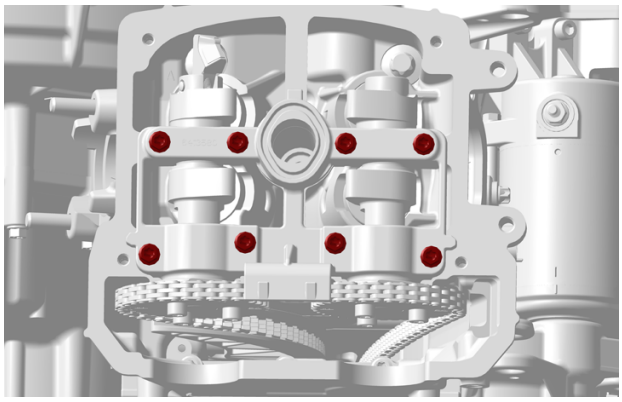

8. Remove upper camshaft holder and discard the gasket.

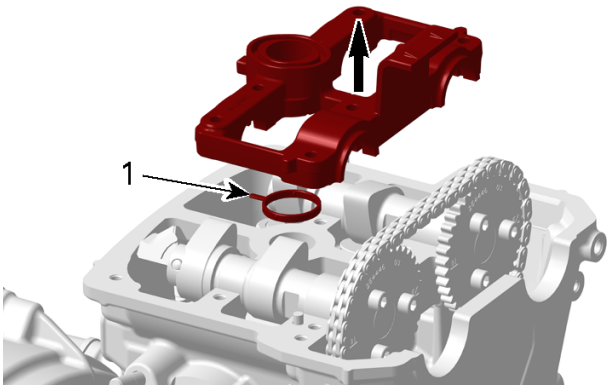

1. Gasket of upper camshaft holder

9. Remove camshafts with timing gears.

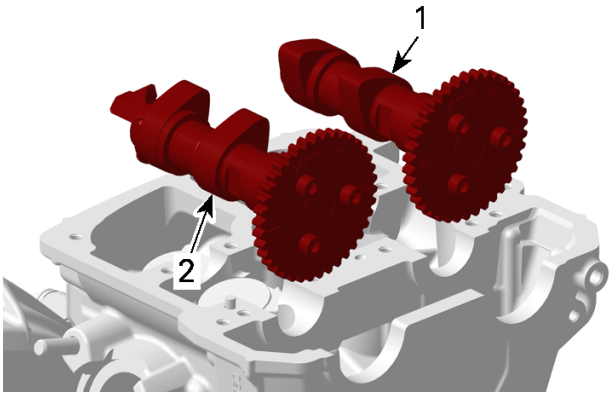

1. Intake camshaft
2. Exhaust camshaft

NOTE: Remove camshaft timing gears only if necessary, refer to *Timing Chain*.

Inspecting the Camshaft

1. Check each lobe and bearing journal for scoring, scuffing, cracks, or other signs of wear.
2. Measure camshaft bearing journal diameter and lobe height, using a micrometer.

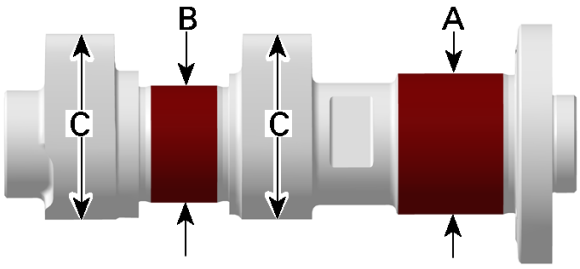

A. Camshaft journal (MAG)
B. Camshaft journal (CVT)
C. Camshaft lobes

Camshaft Journal Diameter	
MAG journal (A)	
New	28.947 to 28.960 mm (1.1396 to 1.1402 in)
Service limit	28.920 mm (1.139 in)
CVT journal (B)	
New	23.947 to 23.960 mm (.9428 to .9433 in)
Service limit	23.920 mm (.9417 in)

NOTE: Measure the lobe height on the camshaft always in the middle. Otherwise an incorrect measurement may result.

Camshaft Lobe Height	
Intake camshaft (C)	
New	41.40 to 41.60 mm (1.6299 to 1.6378 in)
Service limit	41.37 mm (1.6287 in)
Exhaust camshaft (C)	
New	41.90 to 42.10 mm (1.6496 to 1.6575 in)
Service limit	41.87 mm (1.6484 in)

For camshaft journal radial clearance and camshaft holder bearing diameter, refer to *Camshaft Holder* in this subsection.

3. Check the decompressor for cracks, extend wear and free movement. Replace exhaust camshaft if necessary.

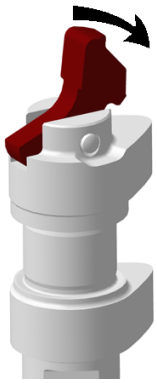

4. Check timing chain guide for wear, cracks or deformation. Refer to *Timing Chain* subsection.

   Replace parts if necessary.

Installing the Camshaft

The installation is the reverse of the removal procedure. However pay attention to the following details.

1. Ensure crankshaft is locked.
2. Clean camshaft bearings and camshaft holder from any dirt, dust or grease

NOTICE
Make sure the camshaft bearings are clean. Otherwise the camshafts may stick when the upper holder get tightened.

3. Apply engine oil on camshaft bearings.

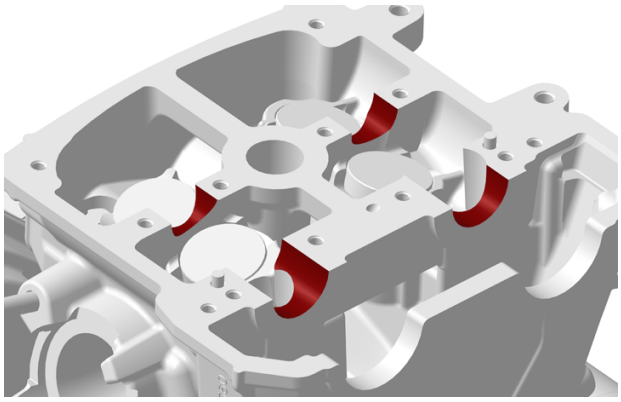

4. Apply engine oil on camshaft journal diameter.

NOTE: The camshafts are not identical. Any mix-up of the components would lead to engine damage. The exhaust camshaft has the decompressor on CVT side.

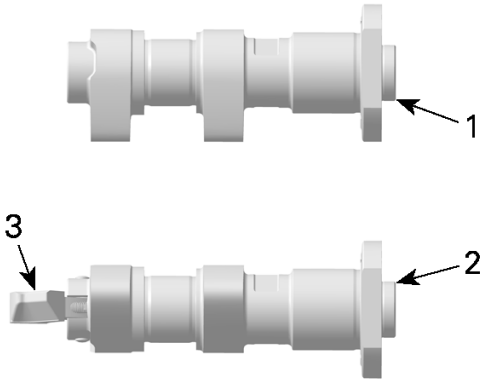

1. *Exhaust camshaft*
2. *Intake camshaft*
3. *Decompressor*

5. If camshaft timing gears have been removed, proceed with *Installing the Camshaft Gears* in the *Timing Chain* subsection.

NOTE: When timing gears are still installed on the camshafts, the "IN" an "EX" marks must face together.

6. Install exhaust camshaft assembly with mark "EX" parallel to cylinder head.

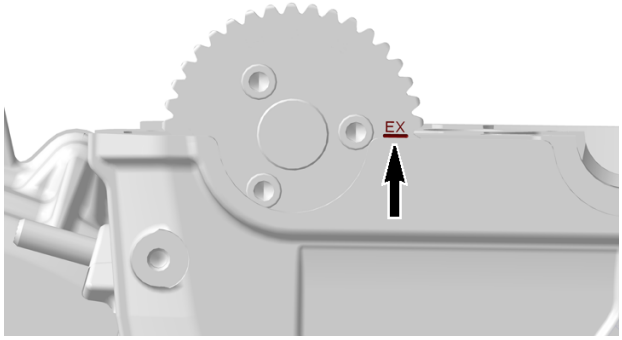

7. Install intake camshaft assembly with mark "IN" parallel to cylinder head.

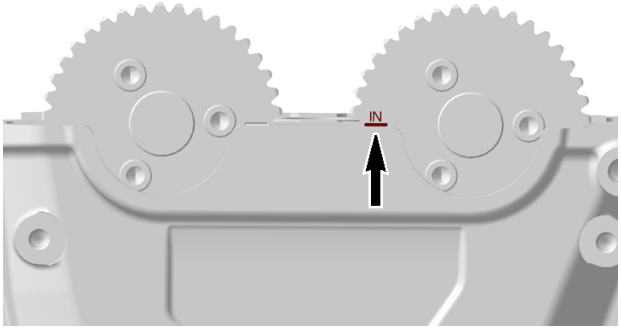

8. Install **NEW** gasket and the camshaft holder, then tighten screws as per following sequence:

Tightening Torque	
Camshaft holder retaining screws	10 ± 1 Nm (89 ± 9 lbf-in)

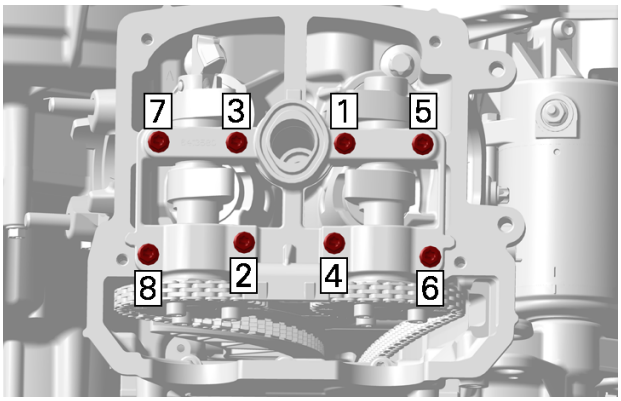

CAMSHAFT HOLDER TIGHTENING SEQUENCE

9. After reassembly of camshafts is completed, check if camshafts can be turned easily.
10. Lock camshafts, refer to *Camshafts Locking Procedures* in this subsection.

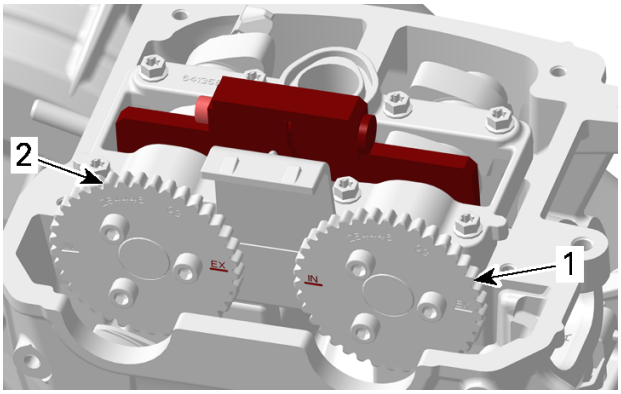

1. *Intake camshaft*
2. *Exhaust camshaft*

11. Lift timing chain out of timing chain compartment.
12. Pull timing chain up on exhaust side and install it on the exhaust camshaft timing gear.

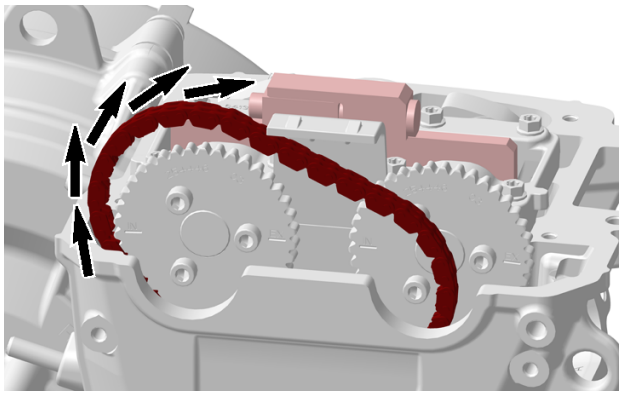

13. Pull timing chain towards intake side and install it on the intake camshaft timing gear.

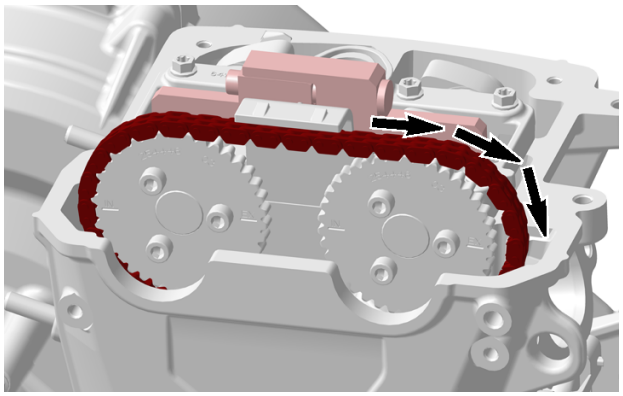

14. Install chain guide and upper chain guide on camshaft holder.
15. Install the timing chain tensioner. Refer to *Timing Chain* subsection.
16. Ensure marks on camshaft timing gears are still aligned. If not, repeat procedure.

NOTICE

After installation of timing chain tensioner, the marks "IN" on intake and "EX" on exhaust camshafts must face together.

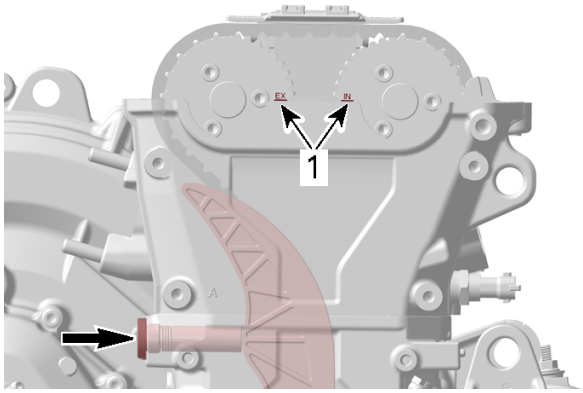

CAMSHAFT TIMING GEARS
1. Marks must be aligned

17. Remove camshaft locking tool.

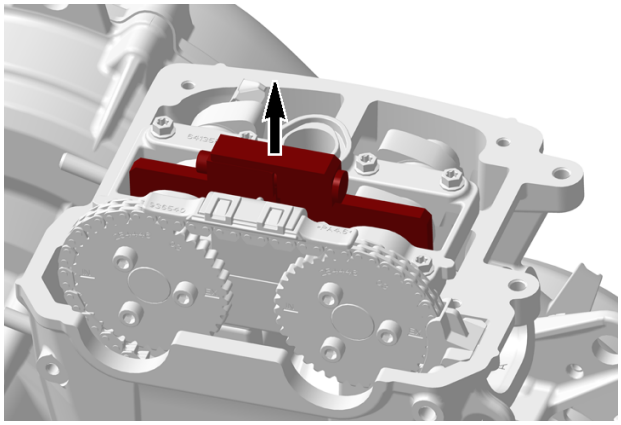

Camshaft Holder

Removing the Camshaft Holder

1. Remove valve cover, refer to *Valve Cover*.
2. Remove camshaft holder with gasket (discard it).

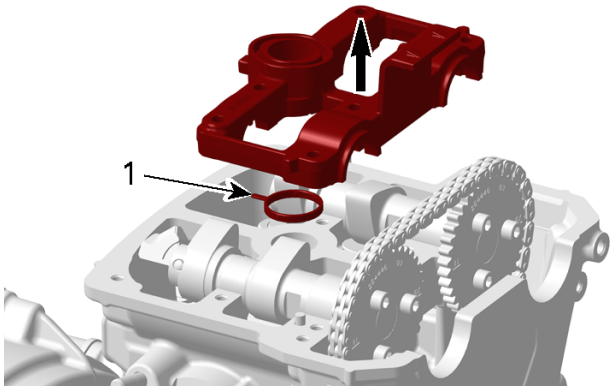

1. Gasket of upper camshaft holder

Inspecting the Camshaft Holder

1. Check camshaft holder for scoring, scuffing, cracks, or other signs of wear.
2. Make sure oil orifices are not clogged. Blow them out with pressurized air.

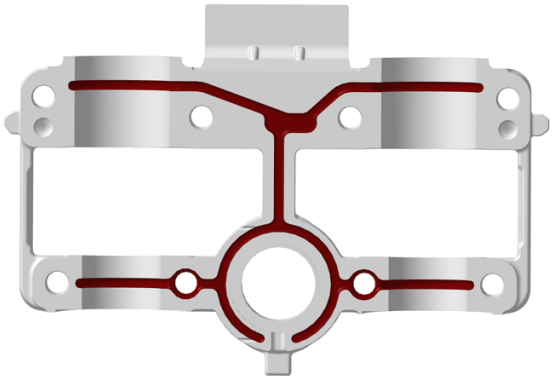

3. Install camshaft holder on cylinder head.
4. Tighten camshaft holder screws to specification, refer to *Installing the Camshaft* in this subsection.
5. Measure camshaft holder bearing diameter.

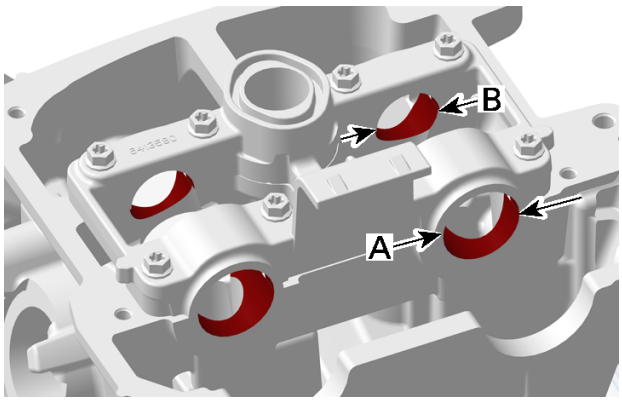

CAMSHAFT HOLDER BEARINGS
A. Diameter MAG bearing
B. Diameter CVT bearing

Camshaft Holder Bearing Diameter		
New	MAG	29.000 to 29.021 mm (1.1417 to 1.1426 in)
	CVT	24.000 to 24.021 mm (.9449 to .9457 in)
Service limit	MAG	29.050 mm (1.1437 in)
	CVT	24.050 mm (.9469 in)

6. Measure the clearance between camshaft journals and camshaft holder, using the plastic feeler gauge.

NOTE: The plastic feeler gauge is available at automotive parts retailer.

7. Place camshafts in cylinder head and apply a plastic-gauge on the camshaft bearing journal.

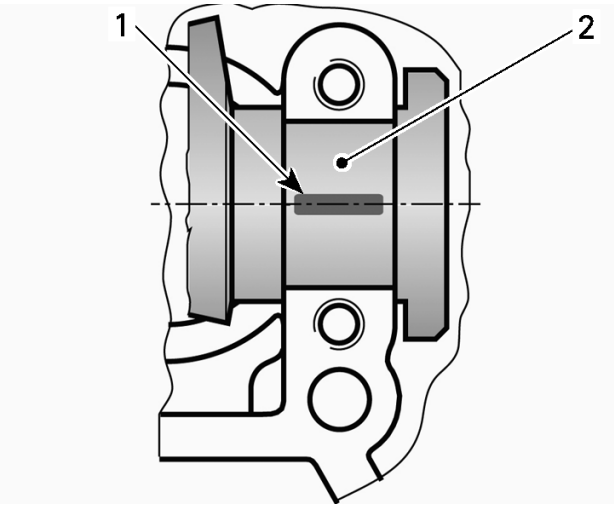

TYPICAL
1. Plastic gauge
2. Camshaft bearing journal

8. Install camshaft holder on cylinder head and tighten screws to specification, refer to *Installing the Camshaft* in this subsection.
9. Unfasten camshaft holder.
10. Measure the maximum width of the pressed plastic gauge with the corresponding graduated scale.

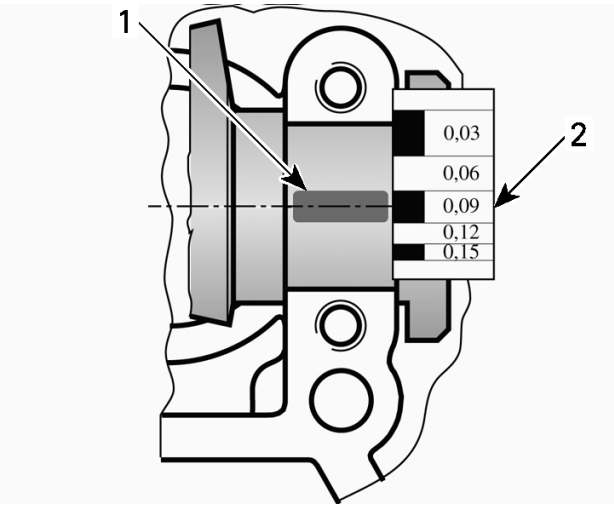

TYPICAL
1. Pressed plastic gauge
2. Graduated scale

Camshaft Journal Radial Clearance	
New	0.040 to 0.074 mm (.0016 to .0029 in)
Service limit	0.090 mm (.0035 in)

11. If camshaft holder out of specification replace cylinder head assembly, refer to *Cylinder Head* in this subsection.

Installing the Camshaft Holder

1. Install **NEW** gasket.
2. Install camshaft holder.
3. Continue procedure as explained in *Installing the Camshaft*.

Valve Lifters Buckets

Removing the Valve Lifter Buckets

1. Remove the camshafts.
2. Pull valve lifter buckets out of cylinder head by hand.

NOTE: When removing the valve lifter buckets, it is strongly recommended to note their original position. Do not use any tool for removal.

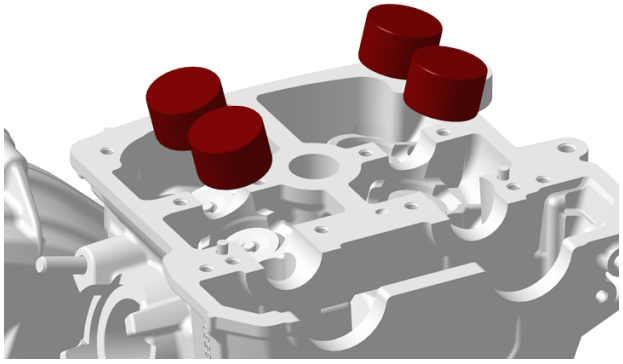

Inspecting the Valve Lifter Bucket

1. Check surface of valve lifter bucket for scoring or other damage.
2. Measure valve lifter diameter. Replace if out of specification.

Valve Lifter Bucket Diameter	
New	33.977 to 33.987 mm (1.338 to 1.338 in)
Service limit	33.963 mm (1.3371 in)

Valve Lifter Bucket Radial Clearance	
Service limit	0.080 mm (.0031 in)

Installing the Valve Lifter Buckets

The installation is the reverse of the removal procedure. However, pay attention to the following details.

1. Apply engine oil on the outside diameter of the valve lifter buckets.

NOTICE

Be sure to reinstall all parts in their original position as marked during removal.

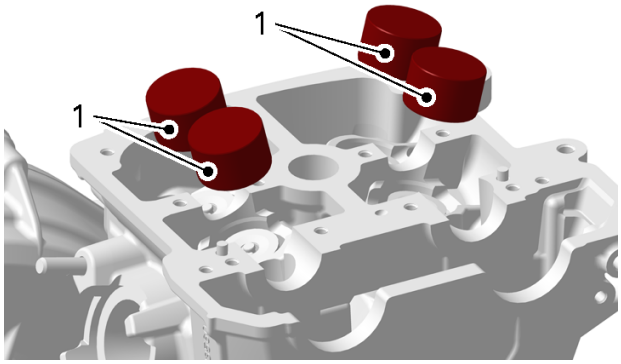

1. Apply engine oil on outer diameter

Cylinder Head

Removing the Cylinder Head

1. Remove the camshafts.
2. Remove the chain guide.
3. Remove M6 cylinder head screws.

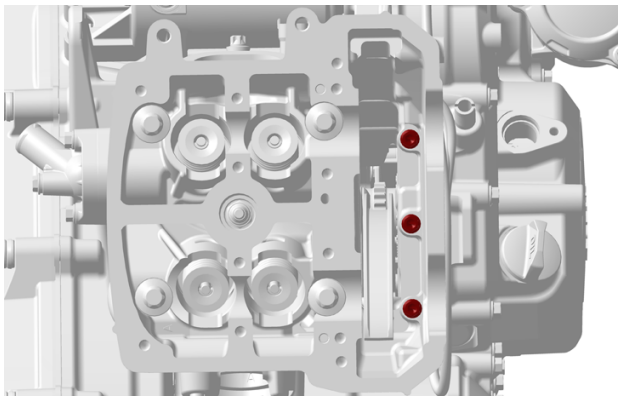

4. Remove M10 cylinder head screws.

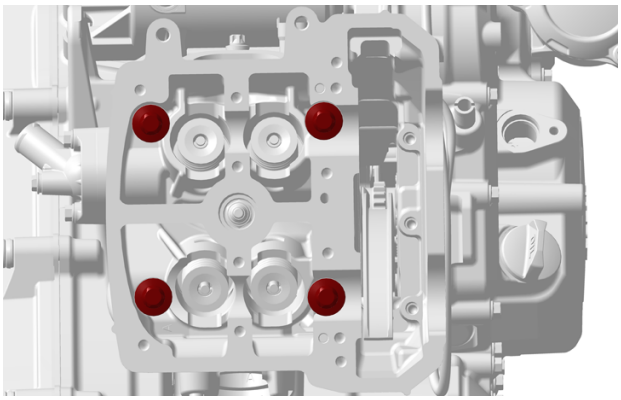

5. Pull cylinder head off the cylinder block.
6. Remove and discard cylinder head gasket.

Cleaning the Cylinder Head

1. Remove carbon deposits from combustion chambers, exhaust ports and piston tops.
2. Clean cylinder head, especially cylinder head screw surface from oil spillage.
3. Blow out the oil orifices with pressurized air and make sure they are not clogged.

Inspecting the Cylinder Head

1. Check for cracks , scratches other damage, if so, replace cylinder head assembly.
2. Check camshaft bearing diameter for any damages. Refer to *camshaft* in this subsection for a diameter check. Replace cylinder head assembly if necessary.

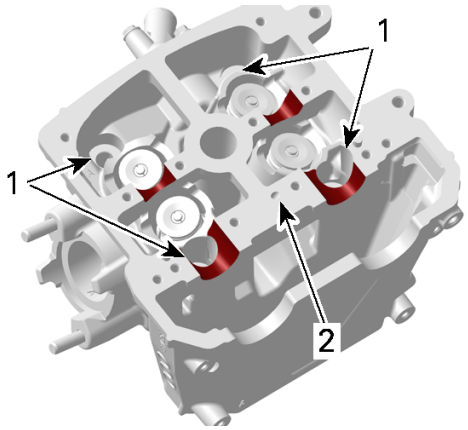

1. Screw holes
2. Oil orifices

3. Check valve lifter bores for scoring or other damage, if so, replace cylinder head assembly.
4. Check cylinder head mating surface for flatness using a straight edge and a feeler gauge.

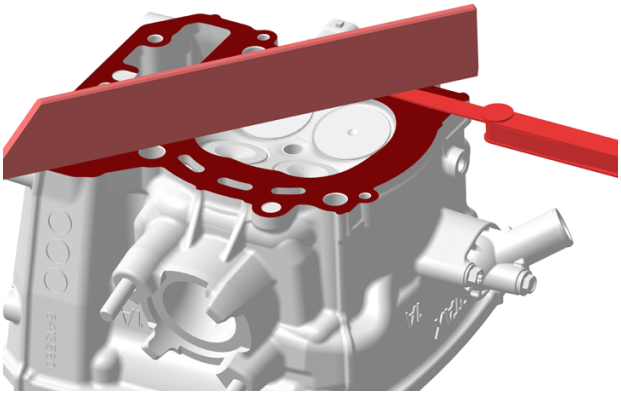

5. Check cylinder head for warping.

Cylinder head warpage	
Maximum	0.1 mm (.004 in)

6. If warping exceeds specification, use a 400 - 600 grit wet sandpaper on a surface plate and gently grind off the mating surface.

NOTICE

To ensure an even surface, rotate cylinder head several times during resurfacing.

7. Replace cylinder head assembly, if resurfacing fails.

Installing the Cylinder Head

The installation is the reverse of the removal procedure. However, pay attention to the following details.

1. Install a **NEW** cylinder head gasket.

NOTICE

Each installation of the cylinder head requires a NEW cylinder head gasket. Using a gasket twice would cause engine damage.

2. Install cylinder head on the cylinder block.
3. Install M10 cylinder head screws.

NOTICE

Avoid damaging the camshaft bearings during assembly process.

4. Tighten cylinder head screws as per the following sequence:

Tightening Torque		
Cylinder head M10 screws	Step A	5 ± 0.6 Nm (44 ± 53 lbf-in)

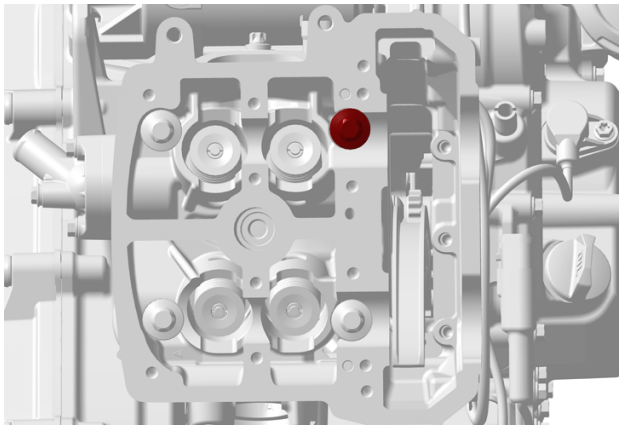

STEP A - TIGHTENING SEQUENCE

Tightening Torque		
Cylinder head M10 screws	Step B	20 ± 2 Nm (15 ± 1 lbf-ft)

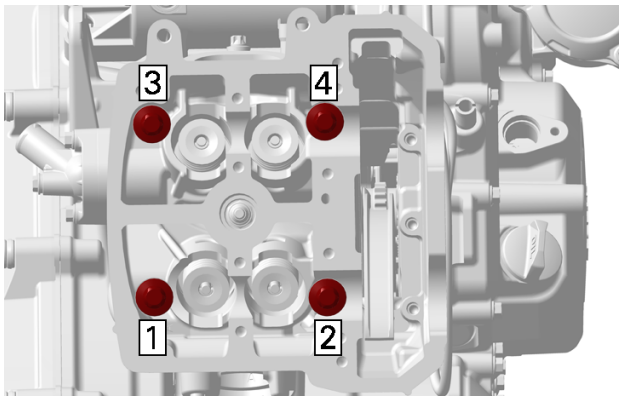

STEP B - TIGHTENING SEQUENCE

Tightening Torque		
Cylinder head M10 screws	Step C	180° ± 5°

NOTE: Use a torque angle gauge to carry out **step C**.

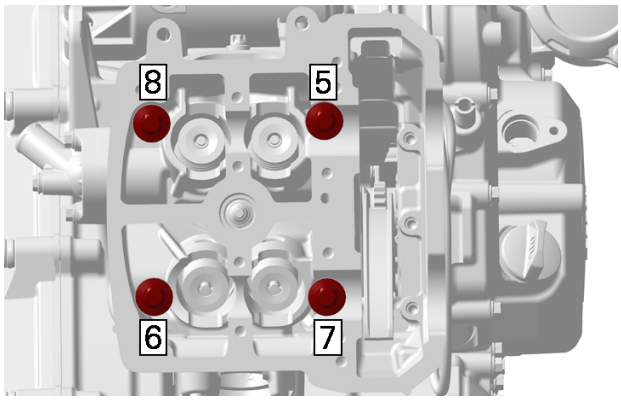

STEP C - TIGHTENING SEQUENCE

5. Install M6 screws. Tighten as follows.

Tightening Torque	
Cylinder head M6 screws	10 ± 1 Nm (89 ± 9 lbf-in)

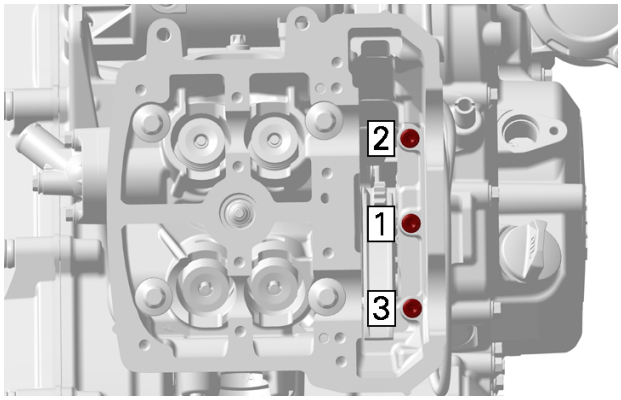

M6 SCREWS TIGHTENING SEQUENCE

Valve Springs

Removing the Valve Spring

1. Remove the cylinder head, see procedure in this subsection.
2. Compress valve spring.

Valve spring compressor (P/N 529035724)	
Valve spring compressor cup (P/N 529036161)	

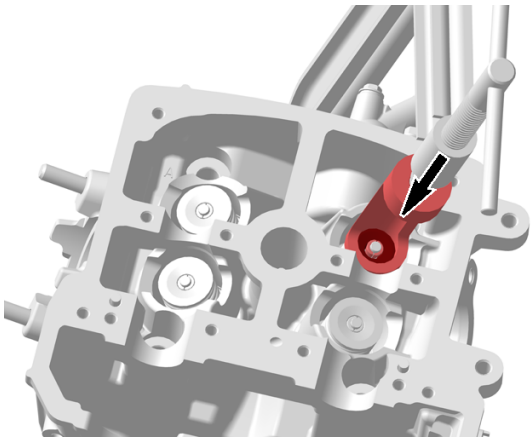

3. Remove valve cotters.
4. Withdraw valve spring compressor tools.
5. Remove valve spring retainer and valve spring.

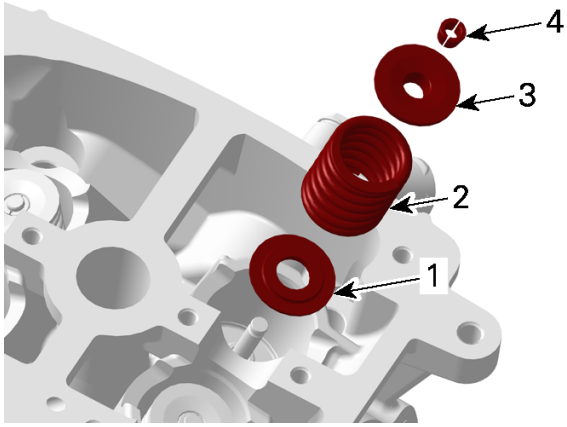

1. *Valve spring support*
2. *Valve spring*
3. *Valve spring retainer*
4. *Valve cotters*

NOTE: Identify the position of each part very carefully, so it can be reinstalled in its original place.

Inspecting the Valve Spring

1. Check valve spring for rust, corrosion or other visible damage.
2. Check valve spring free length and straightness.

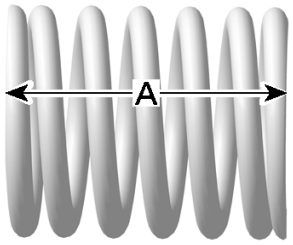

A. Spring free length

VALVE SPRING FREE LENGTH	
New	40.30 mm (1.587 in)
Service limit	39.00 mm (1.535 in)

3. Replace valve spring, if out of specification.

Installing the Valve Spring

The installation is the reverse of the removal procedure. However, pay attention to the following details.

NOTICE

Ensure to reinstall all parts in their original position as marked during removal.

1. Install spring support.
2. Install valve spring.

NOTE: Marked area of valve spring must be pointing towards the camshaft.

3. Install spring retainer.
4. Apply some grease on valve cotters, so that they remain in place while releasing the valve spring.

Super Lube grease

5. Install valve cotters.

Valve spring compressor (P/N 529035724)	
Valve spring compressor cup (P/N 529036161)	

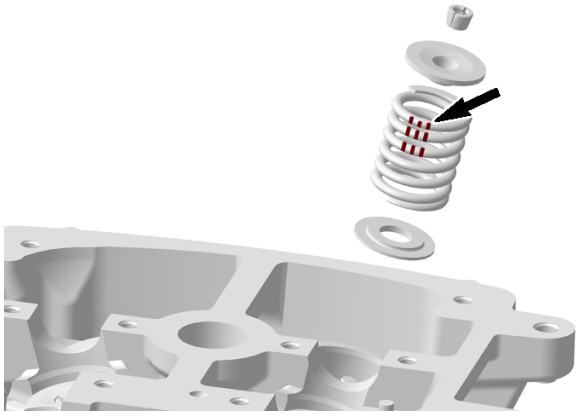

NOTICE

Make sure valve cotters are properly engaged into valve stem groove.

6. After spring is installed, ensure it is properly locked by lightly tapping on valve stem end with a soft hammer so that valve opens and closes a few times.

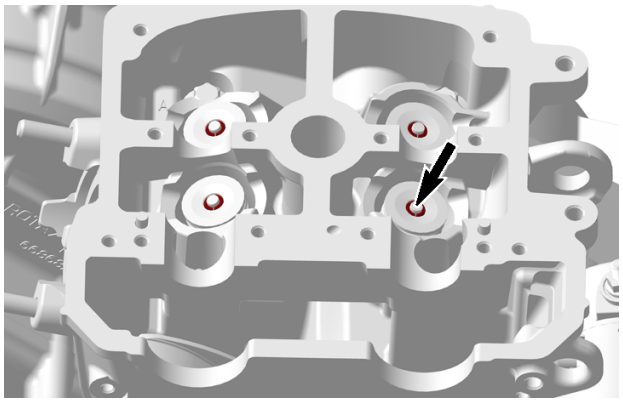

NOTICE

Improperly locked valve spring will cause severe engine damage and hitting the valve stem end with excessive force could damage the valve.

Valves

Valve Clearance Inspection

NOTICE

Check and adjust valve clearance only when engine is cold.

1. Remove the valve cover, refer to *Valve Cover*.
2. Turn crankshaft to TDC ignition, refer to *Cylinder Block*.
3. Measure the valve clearance by using a feeler gauge.

Valve Clearance	
Exhaust	0.31 to 0.39 mm (.012 to .015 in)
Intake	0.11 to 0.19 mm (.004 to .007 in)

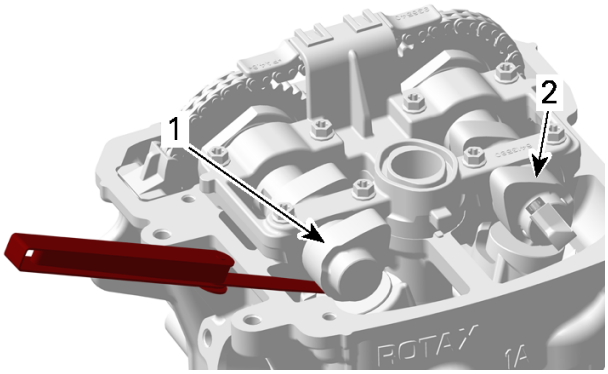

1. Intake
2. Exhaust

4. If the valve clearance is out of specification, **mark and note each value** and refer to *Valve Clearance Adjustment*.

Valve Clearance Adjustment

1. Lock crankshaft, refer to *Crankshaft Locking Procedure* in the *Cylinder Block* subsection.
2. Remove the timing chain from the timing gear, refer to *Timing Chain* subsection.
3. Attach thee timing chain against falling into the timing chain compartment.
4. Remove camshafts with timing gear, refer to *Camshafts* in this subsection.
5. Remove valve lifter bucket and check thickness specification.

NOTICE

Thickness specification is inscribed on the inner side of the valve lifter bucket.

NOTE: The components must be free of dirt, dust or grease during assembly.

6. Apply engine oil and install **NEW** valve lifter bucket with proper thickness, to meet the valve clearance specification.

NOTE: Adjust valve clearance to mean value of the specified tolerance.

7. Install:
   - Camshafts and camshaft holder. Refer to *Camshafts* in this subsection.
   - Camshaft locking tool, refer to *Camshaft Locking Procedures* in this subsection.
   - Timing chain, refer to *Timing Chain* subsection.
   - Chain guides and hydraulic chain tensioner, refer to *Timing Chain* subsection.
8. Recheck valve clearance, refer to *Valve Clearance Inspection* in this subsection.

Removing the Valve

NOTICE

Identify the position of each part very carefully, so it can be reinstalled in its original place.

1. Remove the valve spring, see procedure in this subsection.

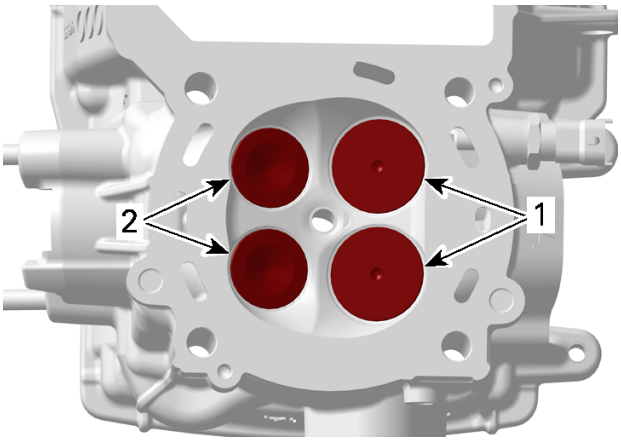

1. Intake valves 36.5 mm
2. Exhaust valves 31 mm

2. Push on the valve stem, then pull valves out of cylinder head.
3. Remove and discard valve stem seal using special pliers available in many automotive parts retailer.

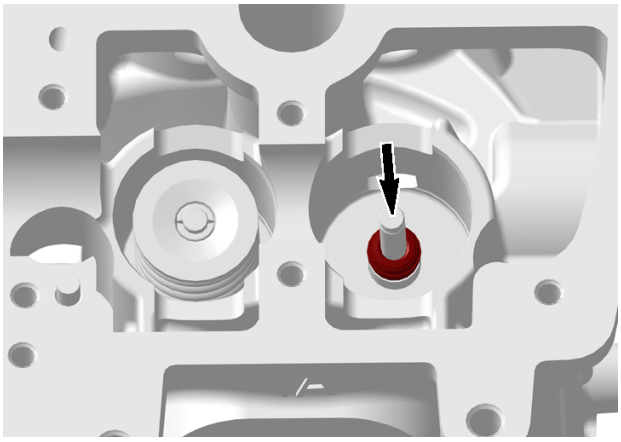

Inspecting the Valve

1. Inspect valve surface, check for abnormal stem wear and bending.

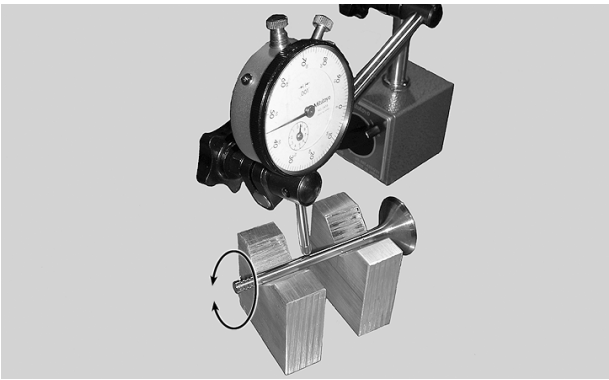

Valve Out of Round (Intake and exhaust)	
New	0.005 mm (.0002 in)
Service limit	0.060 mm (.0024 in)

2. Replace valve if out of specification.

Valve Stem and Valve Guide Clearance

1. Measure valve stem at three places, using a micrometer.

A. Valves stem diameter

Valve Stem Diameter		
New	Intake valve	5.471 to 5.486 mm (.2154 to .216 in)
	Exhaust valve	5.462 to 5.476 mm (.215 to .2156 in)
Service limit	Intake valve	5.453 mm (214.69 in)
	Exhaust valve	5.453 mm (214.69 in)

2. Replace valve if stem is out of specification or if its surface is damaged or worn.
3. Measure valve guide inner diameter, using a small bore gauge.

NOTE: Clean valve guide from carbon deposits before measuring.

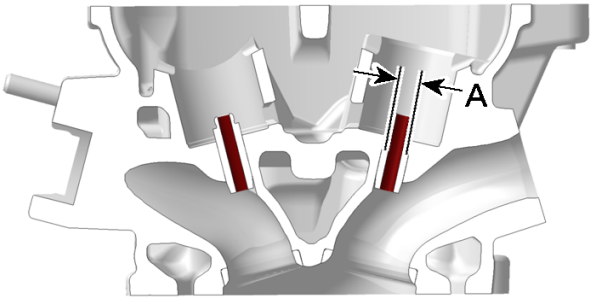

A. Valve guide inner diameter

Valve Guide Inner Diameter	
New	5.500 to 5.512 mm (.2165 to .217 in)
Service limit	5.572 mm (.2194 in)

4. Replace cylinder head assembly, if valve guide is out of specification.

Valve Face and Seat

1. Check valve face and seat for burning, pitting and other signs of damage.
2. Check if valve seats properly in cylinder head. Proceed as follows.
   1. Apply some lapping compound on valve face and work valve on its seat with a lapping tool.

NOTE: The location of contact area should be in center of valve face.

   2. Repeat procedure until valve seat and valve face fit together.
3. Measure valve seat contact width, using a caliper.

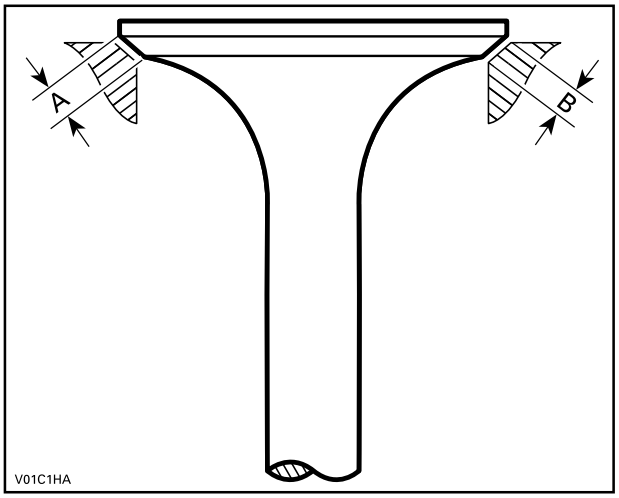

A. Valve face contact width
B. Valve seat contact width

Valve Seat Contact Width		
New	Intake valve	1.300 to 1.550 mm (.0512 to .061 in)
	Exhaust valve	1.500 to 1.750 mm (.0591 to .0689 in)
Service limit	Intake valve	1.800 mm (.0709 in)
	Exhaust valve	1.900 mm (.0748 in)

4. Replace cylinder head assembly if out of specification.

Installing the Valve

The installation is the reverse of the removal procedure. However, pay attention to the following details.

NOTICE

Ensure to reinstall all parts in their original position as marked during removal.

1. Install a **NEW** valve stem seal whenever valve is removed.
2. Apply engine oil on valve stem and carefully slide through cylinder head and valve stem seal.

NOTICE

Be careful when passing the valve stem through the sealing lip of the seal.

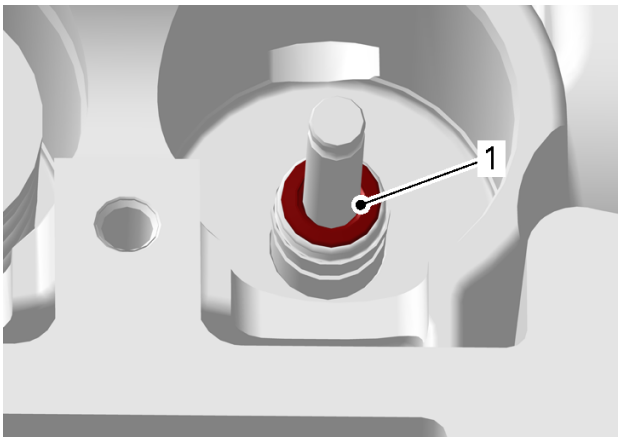

TYPICAL
1. Sealing lips of valve stem seal

3. Install *valve spring*. See procedure in this subsection.
4. Install all other removed parts.

Cylinder

Removing the Cylinder

1. Remove cylinder head, refer to *cylinder head* in this subsection.
2. Pull cylinder off.
3. Discard cylinder base gasket.

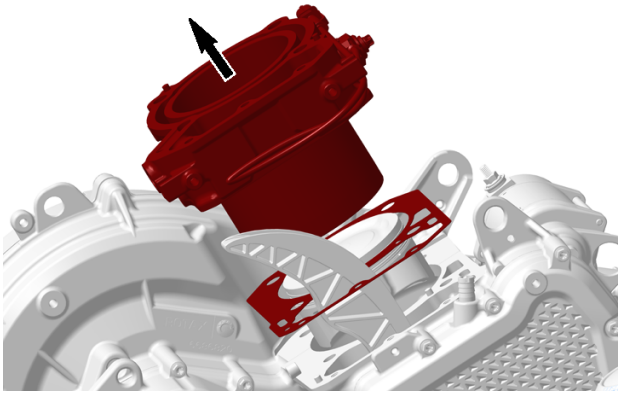

TYPICAL

Inspecting the Cylinder

1. Check cylinder for cracks, scoring and wear ridges on the top and bottom of the cylinder. If so, replace cylinder.

Cylinder Taper

1. Measure cylinder bore at 3 recommended positions.

A. First measurement (from cylinder bottom)
B. Second measurement
C. Third measurement

Cylinder Taper Measurements	
Measurement	**Specification**
A	5 mm (.197 in)
B	67.5 mm (2.66 in)
C	44 mm (1.73 in)

Cylinder Taper Specification	
New (maximum)	0.038 mm (.0015 in)
Service limit	0.090 mm (.0035 in)

2. Replace the cylinder and the piston rings if the distance between measurements exceeds the service limit mentioned above.

Cylinder Out of Round

1. Measure cylinder diameter in piston axis direction from top of cylinder. Take another measurement 90° from first one and compare.

NOTE: Take the same measuring points like described in *Cylinder Taper* above.

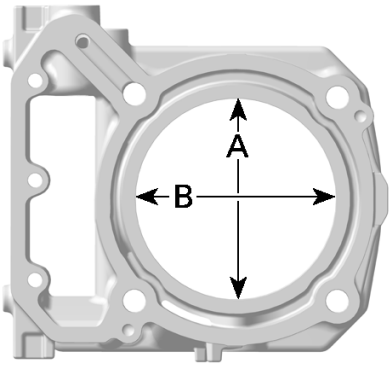

A. Perpendicular to crankshaft axis
B. Parallel to crankshaft axis

Cylinder Out of Round	
New (maximum)	0.015 mm (.0006 in)
Service limit	0.020 mm (.0008 in)

Installing the Cylinder

The installation is the reverse of the removal procedure. However, pay attention to the following.

1. Install **NEW** base gasket.

NOTICE

Always replace cylinder base gasket by a NEW one before installing the cylinder.

NOTE: Make sure piston rings are properly spaced, refer to *Piston Rings* in this subsection.

2. Apply engine oil:
   - In the bottom area of the cylinder bore
   - On the piston rings.
3. Compress piston rings.
4. Push the cylinder until the piston rings are completely inside.

NOTE: The cylinder can not be pushed fully over the piston unless the piston is located at TDC.

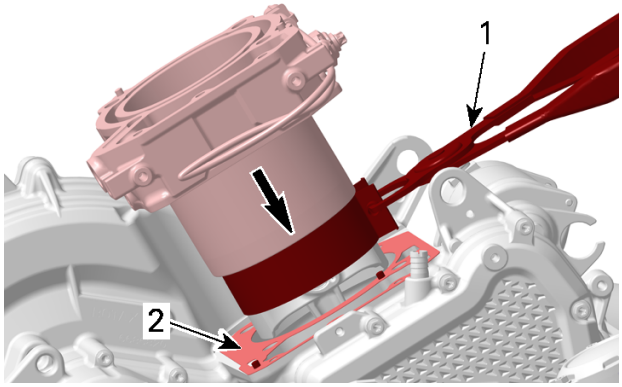

TYPICAL
1. Piston ring tension band pliers
2. Base gasket

5. Then remove the piston ring compressor.
6. Push cylinder completely in the proper position.
7. Install cylinder head and the other parts in accordance with the proper installation procedures.

Piston

Removing the Piston

1. Refer to following procedures in this subsection to remove:
   - Cylinder head
   - Cylinder
   - Magneto cover
   - Chain guides
   - Timing chain.
2. Place a rag under piston and in the area of timing chain compartment.

⚠ CAUTION

Piston circlips are spring loaded.

3. Remove piston circlip on MAG side and discard it.

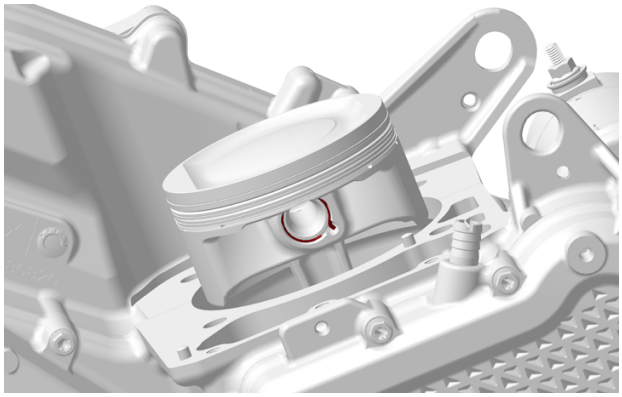

4. Push piston pin out of piston.

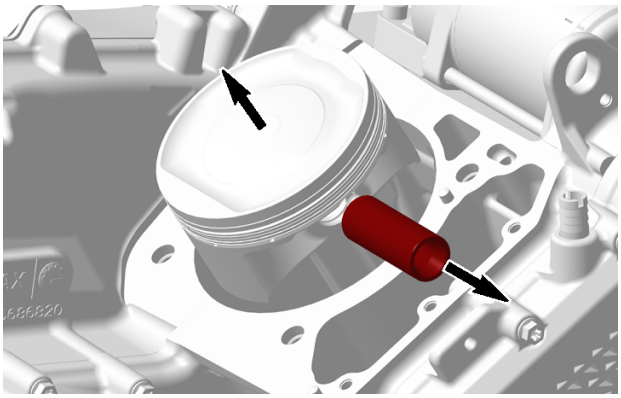

5. Detach piston from connecting rod.
6. Remove piston circlip on other side and discard it.

Inspecting the Piston

1. Inspect piston for scoring, cracking or other damages. Replace piston and piston rings if necessary.
2. Using a micrometer, measure piston at 14 mm (.551 in) perpendicularly (90°) to piston pin.

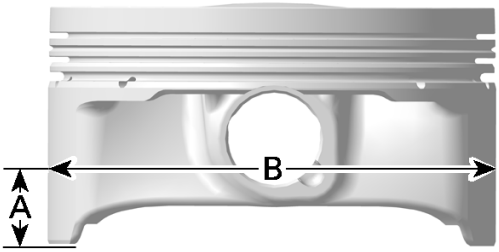

A. 14 mm (.551 in)
B. Measuring perpendicularly (90°) to piston pin

3. The measured dimension should be as described in the following table. If not, replace piston.

Piston Measurement	
New	96.932 to 96.982 mm (3.8162 to 3.8182 in)
Service limit	96.810 mm (3.8114 in)

Piston/Cylinder Clearance

1. Adjust and lock a micrometer to the piston dimension.

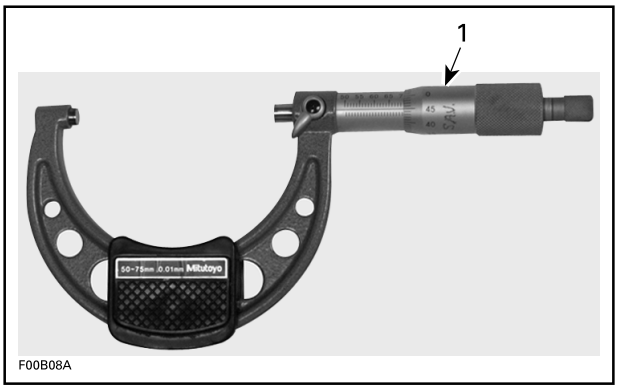

1. Micrometer set to the piston dimension

2. With the micrometer set to the dimension, adjust a cylinder bore gauge to the micrometer dimension and set the indicator to 0 (zero).

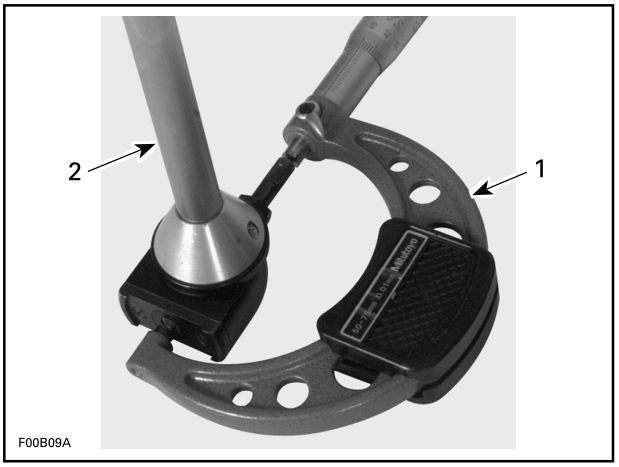

1. Use the micrometer to set the cylinder bore gauge
2. Dial bore gauge

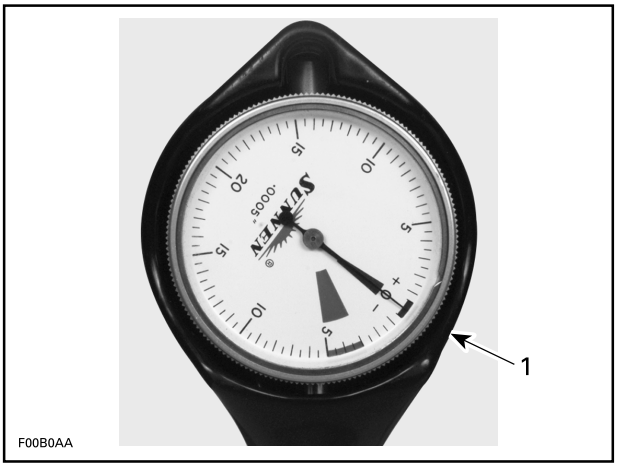

TYPICAL
1. Indicator set to 0 (zero)

3. Position the dial bore gauge 20 mm (.787 in) above cylinder base, measuring perpendicularly (90°) to piston pin axis.

4. Read the measurement on the cylinder bore gauge. The result is the exact piston/cylinder wall clearance.

Piston/Cylinder Clearance	
New	0.011 to 0.075 mm (.0004 to .003 in)
Service limit	0.100 mm (.0039 in)

NOTE: Make sure used piston is not worn.

5. If clearance exceeds specified tolerance, replace piston by a new one and measure piston/cylinder clearance again.

NOTE: Make sure the cylinder bore gauge indicator is set exactly at the same position as with the micrometer, otherwise the reading will be false.

Connecting Rod/Piston Pin Clearance

1. Using synthetic abrasive woven, clean piston pin from deposits.
2. Inspect piston pin for scoring, cracking or other damages.
3. Measure piston pin. See the following illustration for the proper measurement positions.

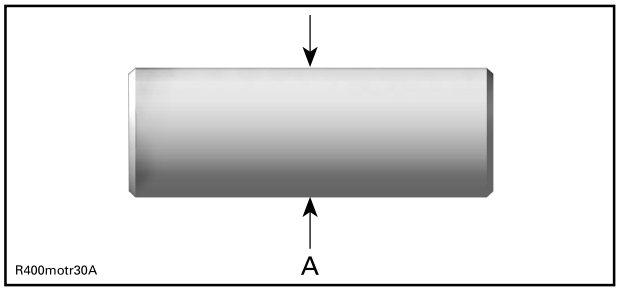

A. Piston pin diameter

Piston Pin Diameter	
New	19.996 to 20.000 mm (.7872 to .7874 in)
Service limit	19.980 mm (.7866 in)

4. Replace piston pin if diameter is out of specifications.
5. Measure inside diameter of connecting rod small end bushing.

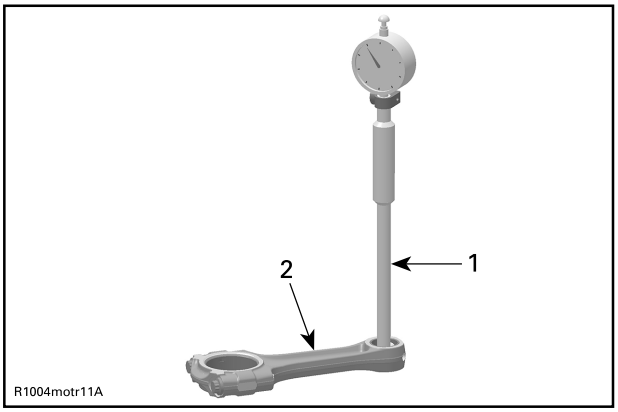

1. Bore gauge
2. Connecting rod

Connecting Rod Small End Diameter	
New	20.010 to 20.020 mm (.7878 to .7882 in)
Service limit	20.050 mm (.7894 in)

6. Replace connecting rod if diameter of connecting rod small end is out of specifications. Refer to *Cylinder Block* subsection for removal procedure.
7. Compare measurements to obtain the connecting rod/piston pin clearance.

Connecting Rod/ Piston Pin Clearance	
Service limit	0.070 mm (.0028 in)

Installing the Piston

The installation is the reverse of the removal procedure. However, pay attention to the following.

1. Apply engine oil on the piston pin.
2. Install piston pin and the **NEW** piston circlip on the left-hand side from the exhaust mark on the piston.

Piston circlip installer (P/N 529036532)	

1. Circlip on left hand side of piston

3. Pull piston pin back.
4. Assemble the piston on the connecting rod.

NOTICE

Exhaust mark on the piston must show to exhaust side of the engine

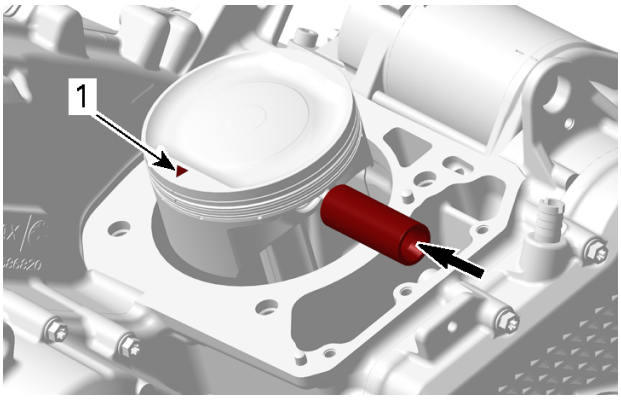

1. Mark on piston must show to exhaust side of cylinder

5. Install the **NEW** piston circlip on the right - hand side from the exhaust mark on the piston.

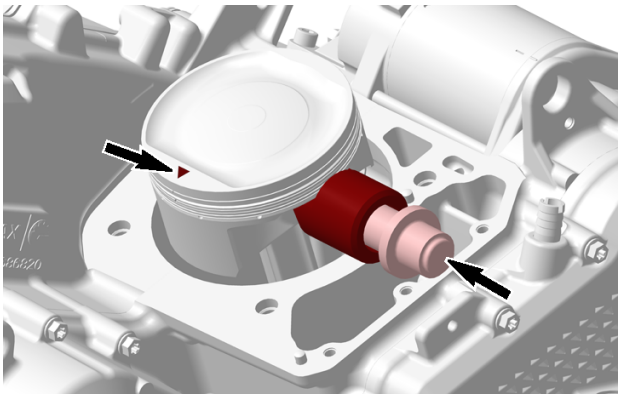

NOTICE

Always replace disassembled piston circlip (s) by NEW ones. Place a rag on cylinder base to avoid dropping the circlip inside the engine.

6. Use the piston appropriate circlip installer to assemble the **NEW** piston circlips as per following procedure:
7. Place circlip in sleeve as per following illustration.

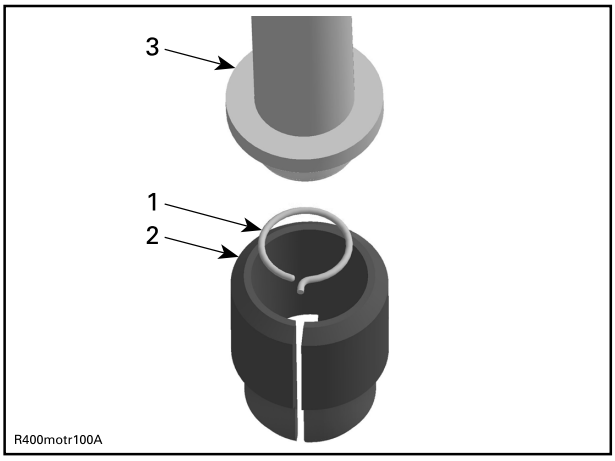

TYPICAL
1. Circlip
2. Sleeve
3. Assembly jig from piston clip installer

8. Push taper side of assembly jig until circlip reaches middle of sleeve.
9. Align sleeve with piston pin axis and push assembly jig until circlip engages in piston.

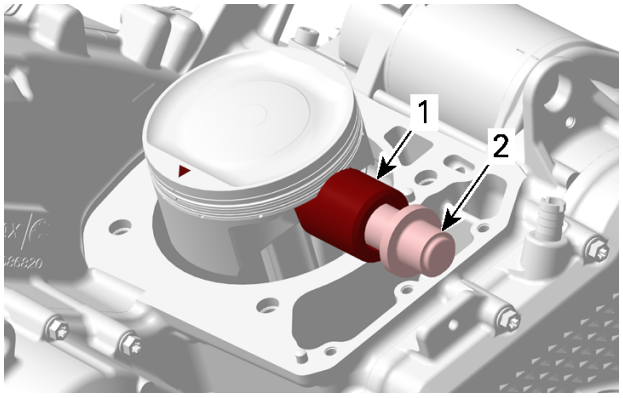

1. Sleeve
2. Assembly jig

NOTE: Take care that the hook of the piston circlip is positioned properly.

CORRECT POSITION OF THE PISTON CIRCLIP

Piston rings

Removing the Piston Ring

Remove the piston, see *Piston* in this subsection.

Inspecting the Piston Ring

Ring/Piston Groove Clearance

1. Using a feeler gauge measure each ring/piston groove clearance.
2. If the clearance is too large, the piston and the piston rings should be replaced.

Ring/Piston Groove Clearance	
Upper Compression Ring	
New	0.030 to 0.060 mm (.0012 to .0024 in)
Service limit	0.150 mm (.0059 in)
Lower Compression Ring	
New	0.030 to 0.060 mm (.0012 to .0024 in)
Service limit	0.150 mm (.0059 in)
Oil Scraper Ring	
New	0.040 to 0.120 mm (.0016 to .0047 in)
Service limit	0.250 mm (.0098 in)

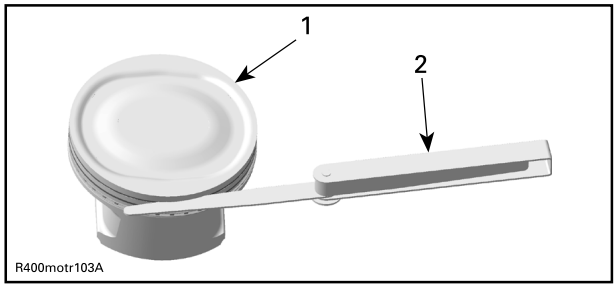

TYPICAL
1. Piston
2. Feeler gauge

Ring End Gap

Ring End Gap	
Upper Compression Ring	
New	0.25 to 0.35 mm (.0098 to .0138 in)
Service limit	0.60 mm (.024 in)
Lower Compression Ring	
New	0.900 to 1.050 mm (.0354 to .0413 in)
Service limit	1.300 mm (.0512 in)
Oil Scraper Ring	
New	0.20 to 0.70 mm (.008 to .028 in)
Service limit	1.00 mm (.039 in)

1. To measure the ring end gap place the ring in the cylinder in the area of 8 to 16 mm (5/16 to 5/8 in) from top of cylinder.

NOTE: In order to correctly position the ring in the cylinder, use piston as a pusher.

2. Using a feeler gauge, check ring end gap. Replace ring if gap exceeds above described specified tolerance.

Installing the Piston Ring

1. Install oil scraper rings by hand.
2. Using a ring expander, install the lower compression ring with the word “N and TOP “ facing up.
3. Using a ring expander, install the upper compression ring with the word “N and TOP “ facing up.

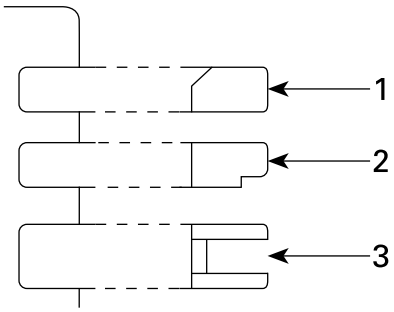

TYPICAL
1. *Upper compression ring*
2. *Lower compression ring*
3. *Oil scraper ring*

NOTICE

Ensure that top and second rings are not interchanged.

4. Check that rings rotate smoothly after installation.
5. Space the piston ring end gaps 120° apart and do not align the gaps with the piston pin bore or the thrust side axis.

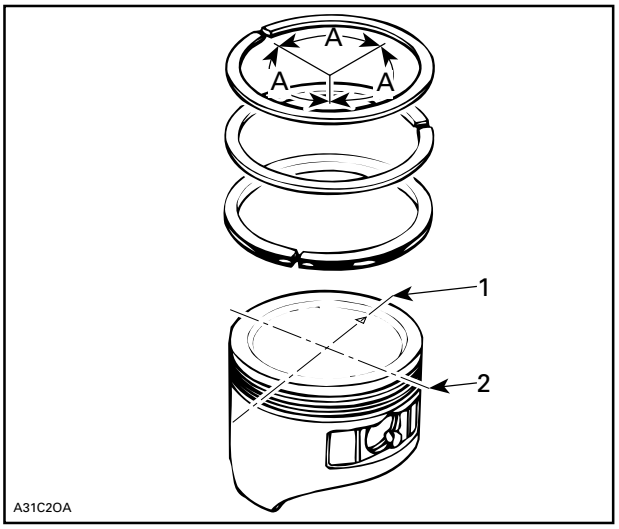

1. *DO NOT align ring gap with piston thrust side axis*
2. *DO NOT align ring gap with piston pin bore axis*

A. 120°

Cylinder Block

SERVICE TOOLS

Description	Part Number	Page
BEARING INSTALLER (GEARBOX)	(P/N 529035763)	90
BEARING PUSHER	(P/N 529036538)	88–89
BEARING PUSHER	(P/N 529036541)	88–89
CRANKCASE SUPPORT (MAG SIDE)	(P/N 529035916)	89
CRANKSHAFT LOCKING TOOL	(P/N 529036535)	95
CRANKSHAFT POSITION CAP	(P/N 529036539)	91
CRANKSHAFT PROTECTOR (PTO)	(P/N 420876552)	82
DRIVE SHAFT FRONT OIL SEAL PUSHER	(P/N 529036533)	80
DRIVE SHAFT REAR OIL SEAL PUSHER	(P/N 529036534)	81
HANDLE	(P/N 420877650)	90
PTO OIL SEAL INSTALLER	(P/N 529036216)	83
PUNCH	(P/N 529036425)	80–81
WD SEAL INSTALLER - PROTECTION SLEEVE	(P/N 529036556)	82
WD SEAL INSTALLER	(P/N 529036537)	82

SERVICE PRODUCTS

Description	Part Number	Page
LOCTITE 5910		91
SUPER LUBE GREASE		80–82

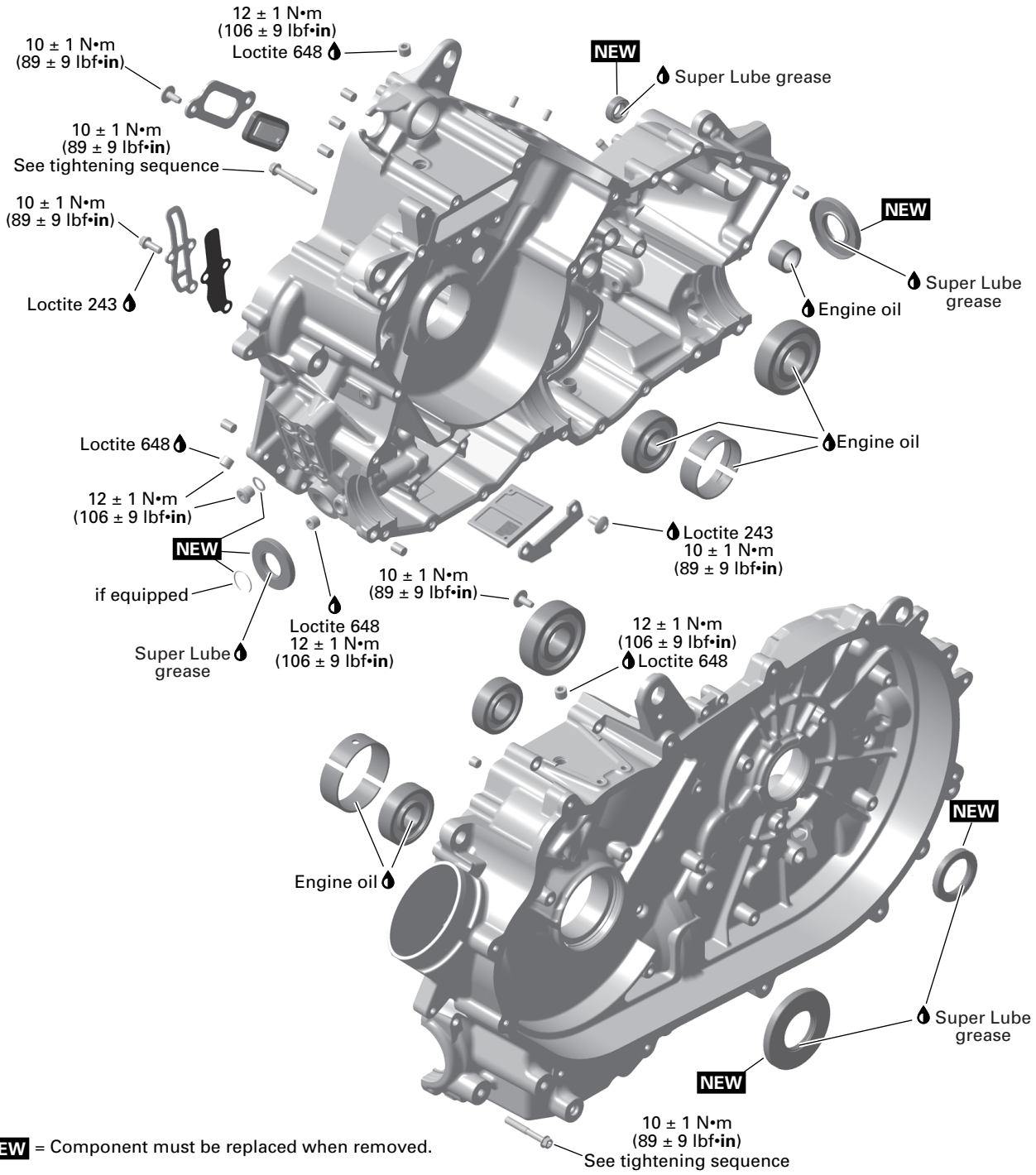

NEW = Component must be replaced when removed.

CRANKCASE

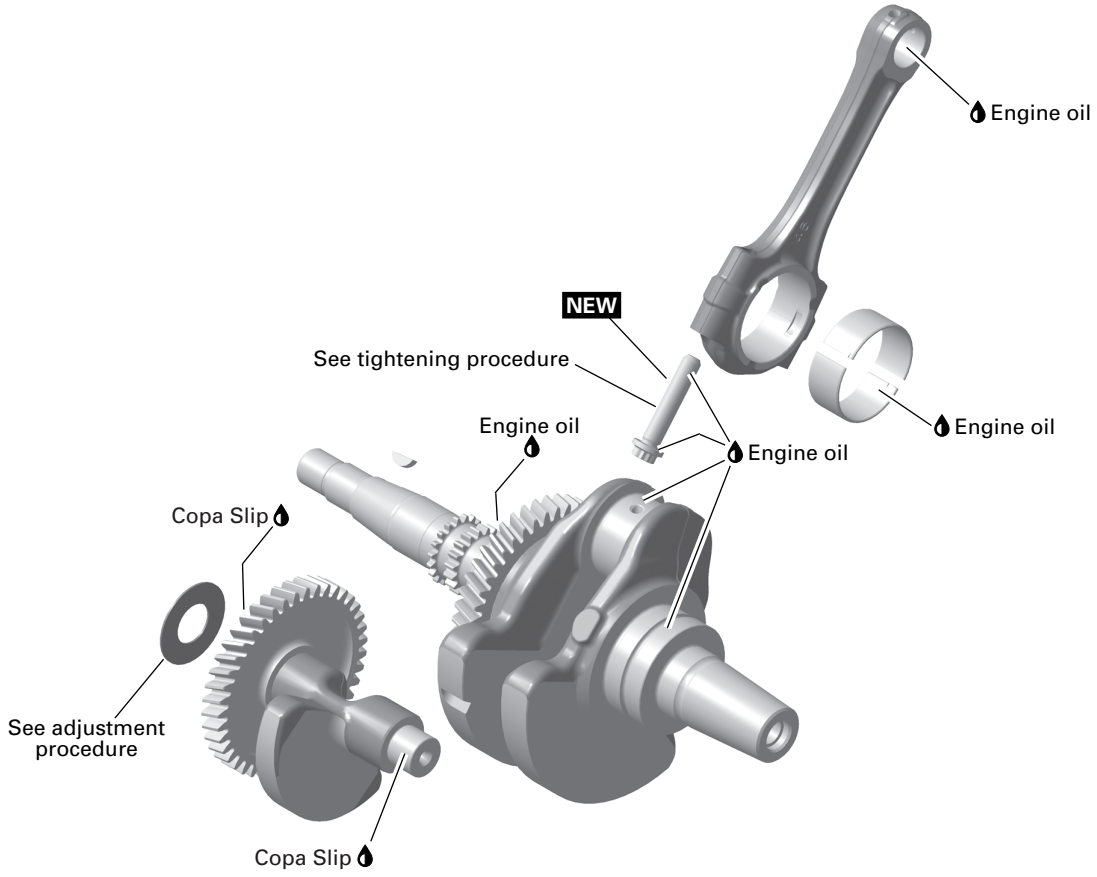

NEW = Component must be replaced when removed.

CRANKSHAFT/BALANCER SHAFT

General

This section includes the procedures pertaining to the crankcase, crankshaft and balancer shaft. For the gearbox, follow the procedure for the *crankcase* then refer to *GEARBOX* subsection.

During assembly or installation, use the torque values and service products as in the exploded views.

Clean threads before applying a thread locker.

⚠ WARNING

Torque wrench tightening specifications must strictly be adhered to.
Locking devices when removed (e.g.: locking tabs, elastic stop nuts, self-locking fasteners, etc.) must be installed or replaced with new ones where specified. If the efficiency of a locking device is impaired, it must be renewed.

Procedures

IMPORTANT: Note position of parts on disassembly. This may help to find the root cause of a problem. A component that is not replaced should be reinstalled in the same position as originally mounted.

Output Shaft Oil Seals

Removing the Front Output Shaft Oil Seal

NOTE: The output shaft oil seals can be removed and installed without removing the engine from vehicle.

Replace the oil seal if brittle, hard or otherwise damaged.

1. Set gearbox to PARK position.
2. Drain engine oil, refer to *Lubrication system* subsection.
3. If the engine is still in the vehicle, disconnect the front propeller shaft from the engine.
4. If equipped, remove the circlip from the output shaft.
5. Remove the oil seal.

NOTICE

Avoid scratching the sealing area or output shaft during oil seal removal.

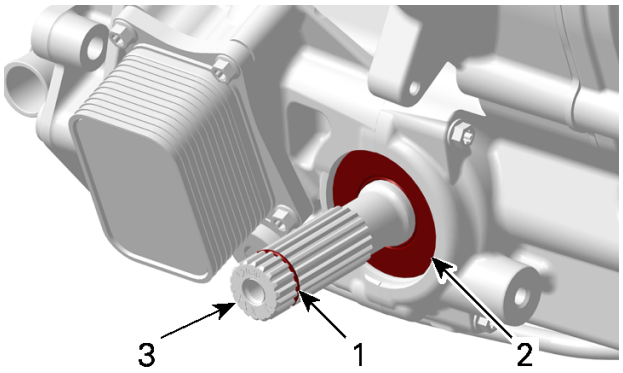

1. *Clirclip (except HD7)*
2. *Oil seal*
3. *Output shaft front side*

6. Check oil seal seating surface for grooves. Replace crankcase if necessary.
7. Check bearings behind oil seals for contamination and/or metal shavings. Replace if necessary.

Installing the Front Output Shaft Oil Seal

1. Install protection sleeve.
2. Fill up the groove between the oil seal sealing lips.

Super Lube grease

3. Install the **NEW** oil seal.

Drive shaft front oil seal pusher (P/N 529036533)	
Punch (P/N 529036425)	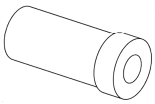

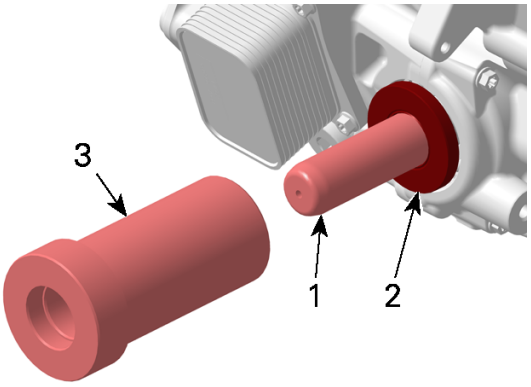

1. *Drive shaft front oil seal pusher*
2. *Oil seal*
3. *Punch*

Removing the Rear Output Shaft Oil Seal

1. Remove the final drive unit, refer to *rear drive*.
2. Set gearbox to PARK position.
3. Drain gearbox oil, refer to *Draining the Gearbox Oil* in the *Gearbox* subsection.
4. Remove oil seal.

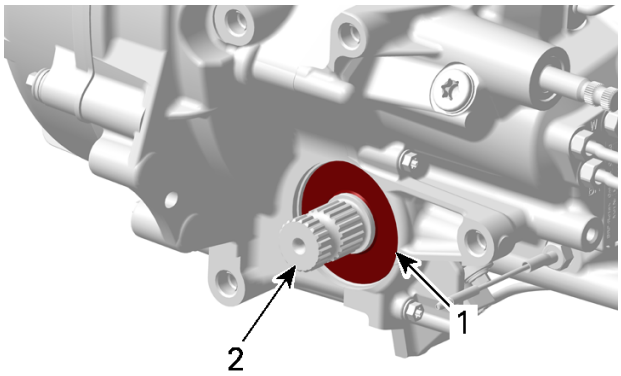

1. *Oil seal*
2. *Output shaft rear side*

NOTICE
Avoid scratching the sealing area or output shaft during oil seal removal.

5. Check oil seal seating surface for grooves. Replace crankcase if necessary.
6. Check bearings behind oil seals for contamination and/or metal shavings. Replace if necessary.

Installing the Output Shaft Oil Seal Rear

1. Install protection sleeve.
2. Fill up the groove between the oil seal sealing lips.

Super Lube grease

3. Install the **NEW** oil seal.

Drive shaft rear oil seal pusher (P/N 529036534)	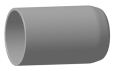
Punch (P/N 529036425)	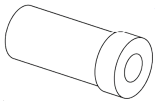

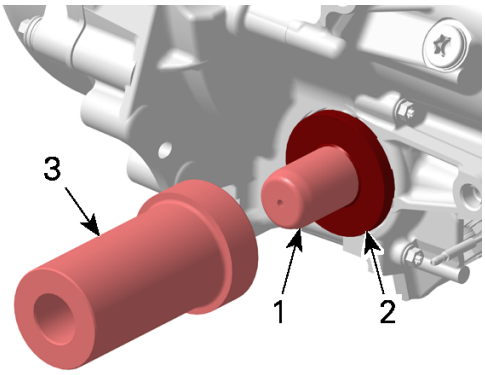

1. *Drive shaft rear oil seal pusher*
2. *Oil seal*
3. *Punch*

Install all remaining removed parts. Refer to applicable subsections.

Shift Shaft Oil Seal

Removing the Shift Shaft Oil Seal

Replace oil seal if brittle, hard or otherwise damaged.

1. Remove the shift plate from the shift shaft, refer to the *shifter* subsection.

NOTE: The shift shaft oil seal can be removed without removing the engine from vehicle.

2. Remove the shift shaft oil seal.

NOTICE
Avoid scratching the crankcase or shift shaft during oil seal removal.

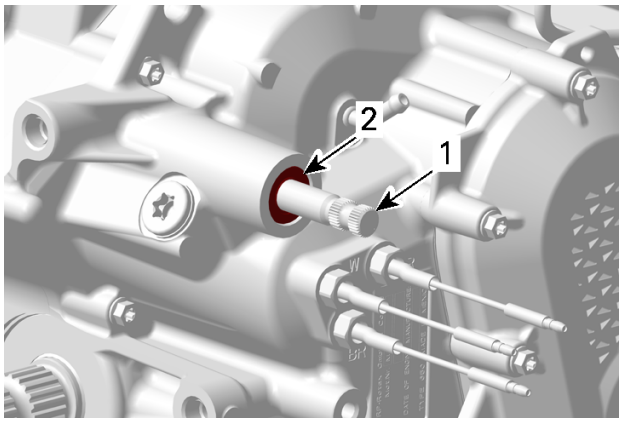

1. *Shift shaft*
2. *Shift shaft oil seal*

Installing the Shift Shaft Oil Seal

1. Install the oil seal protection sleeve on shifting shaft.

2. Install **NEW** oil seal.
3. Lubricate sealing lips.

Super Lube grease

4. Install the oil seal.

WD seal installer (P/N 529036537)	
WD Seal Installer - Protection Sleeve (P/N 529036556)	

Use collar step on oil seal installer for installation.

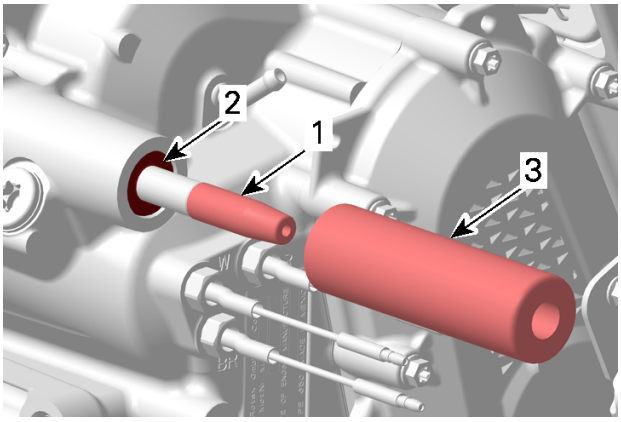

1. *Oil seal protection sleeve*
2. *Oil seal*
3. *WD seal installer*

5. Refer to the *Shifter* subsection and reinstall the shift plate and cable.

Crankshaft Oil Seal

Removing the Crankshaft Oil Seal

Replace oil seal if brittle, hard or otherwise damaged.

NOTE: The crankshaft oil seal can be removed without removing the engine from vehicle.

1. Remove the drive pulley, refer to *Continuously Variable Transmission (CVT)* subsection.
2. Install the crankshaft protector.

Crankshaft protector (PTO) (P/N 420876552)	

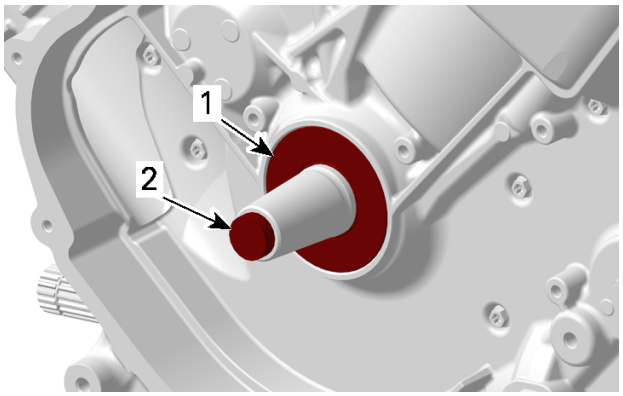

1. *Crankshaft oil seal*
2. *Crankshaft protector*

3. Carefully punch two holes into the old oil seal .

NOTE: Ensure the correct distance for the punched holes. Self tapping screws must allow to bite into the seal.

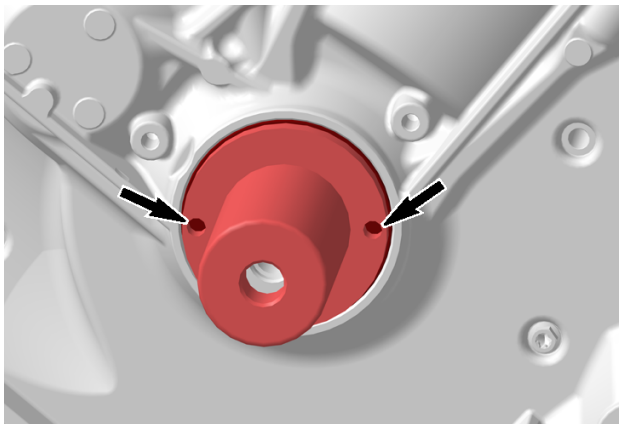

4. Install oil seal installer and screw in the provided self tapping screws.

NOTICE

If self tapping screws other than the ones provided are used, their length must not exceed 16 mm (5/8 in).

5. Thread in and tighten puller bolt to remove oil seal.

PTO oil seal installer (P/N 529036216)	

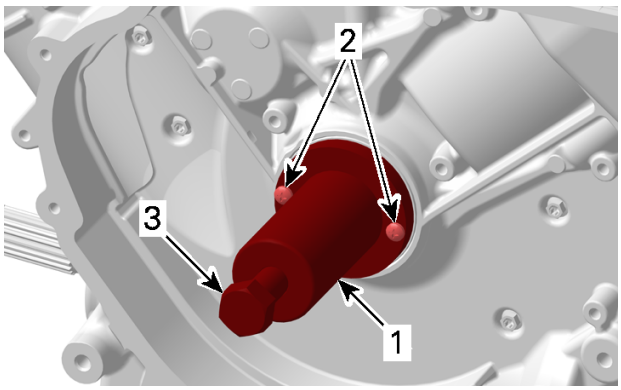

1. Oil seal installer
2. Self tapping screws
3. Puller bolt (M16 x1,5x 40mm)

6. Remove crankshaft protector and clean oil seal area.

NOTICE

Avoid scratching the crankcase or crankshaft during oil seal removal.

Installing the Crankshaft Oil Seal

NOTE: Check the oil seal running surface of crankshaft for grooves, before installation of oil seal.

1. Fill up the groove between the oil seal sealing lips.
2. Install:
   1. Push **NEW** oil seal until engaged with the crankcase.
   2. Lean the oil seal installer flange on the oil seal.

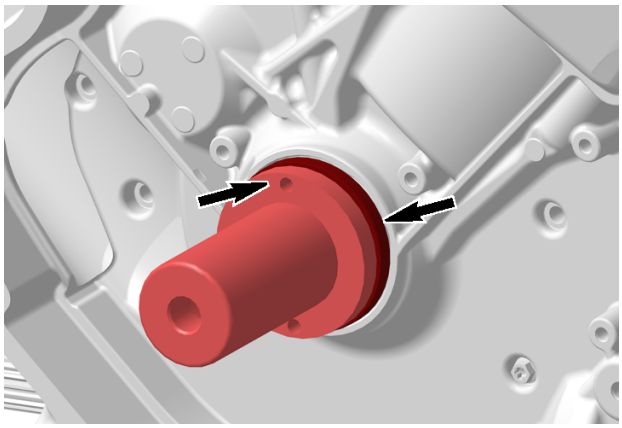

3. Screw puller bolt in the crankshaft and thread oil seal in place.

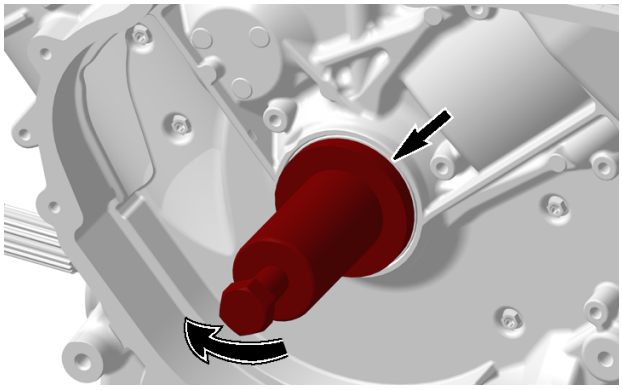

3. Clean the crankshaft, especially the cone, with part cleaner before assembling drive pulley. Refer to *Continuously variable transmission* subsection.

Countershaft Oil Seal

Removing the Countershaft Oil Seal

Replace oil seal if brittle, hard or otherwise damaged.

NOTE: The counter shaft oil seal can be removed without removing the engine from vehicle.

1. Remove the driven pulley. Refer to *Continuously Variable Transmission (CVT)* subsection.
2. Remove
   – Distance sleeve
   – O-ring.

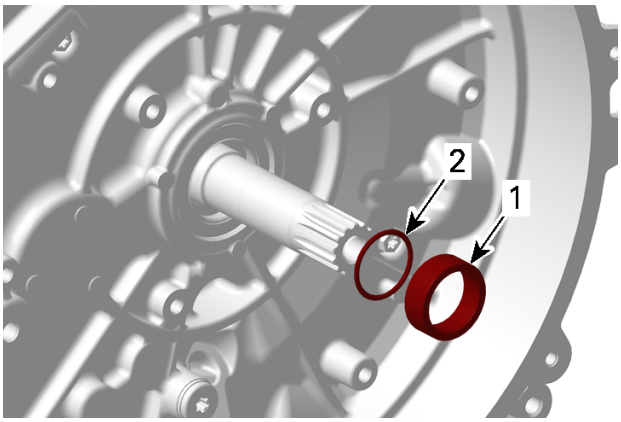

1. *Distance sleeve*
2. *O-ring*

3. Pry out countershaft oil seal.

NOTICE
Avoid scratching the crankcase or counter shaft during oil seal removal.

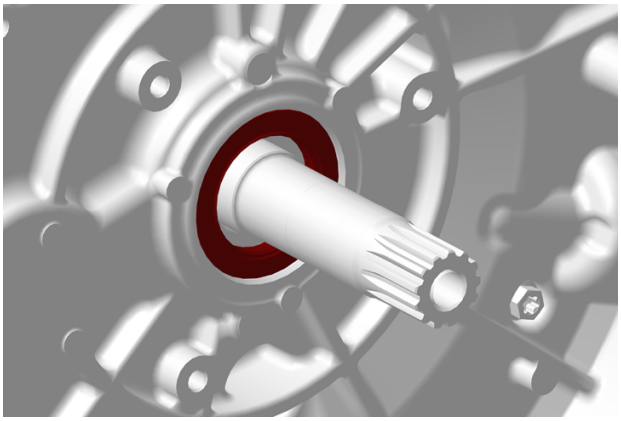

Installing the Countershaft Oil Seal

Using a suitable tube with the proper diameter to install the oil seal.

Install all removed parts.

Reed Valves

The engine is equipped with two reed valves which prevent accumulation of larger oil quantities in the crankcase.

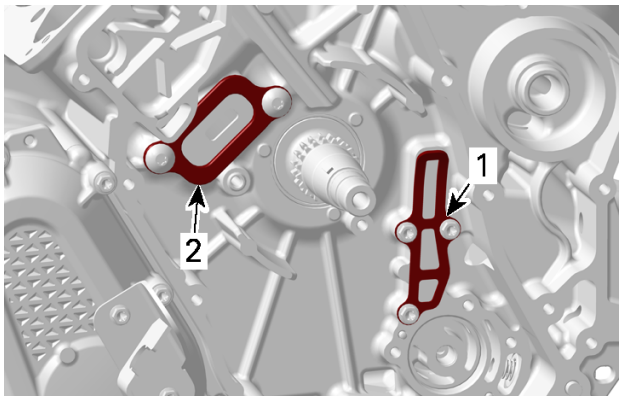

1. *Reed valve (behind oil pump)*
2. *Reed valve (behind timing chain)*

Removing the Reed Valves

1. Refer to in the *Magneto and Starter* subsection and remove:
   - Magneto cover.
   - Rotor.
2. Refer to *Lubrication System* subsection and remove:
   - Oil pump drive
   - Oil Pump housing.
3. Remove:
   - Reed valve retaining screws
   - Stopper plate
   - Reed valve.

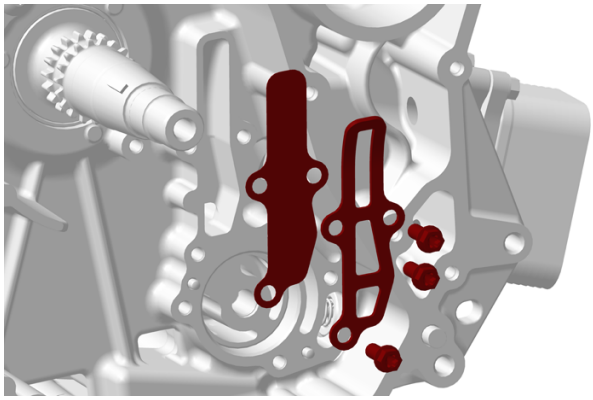

REED VALVE BEHIND OIL PUMP

4. Remove timing chain. Refer to *Timing Chain* subsection.
5. Remove:
   - Reed valve retaining screws
   - Stopper plate
   - Reed valve.

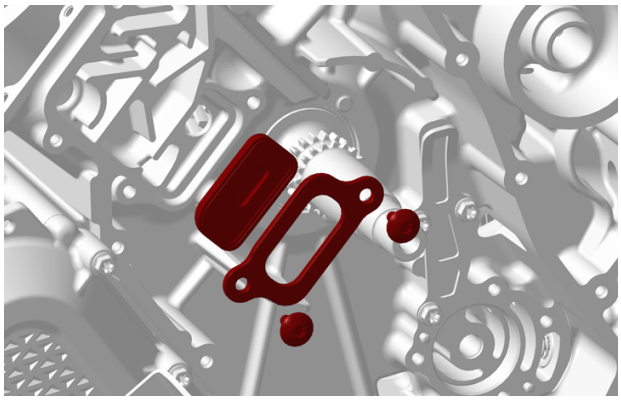

REED VALVE BEHIND TIMING CHAIN

Inspecting the Reed Valves

Check reed valves for cracks or other damages.

1. Replace reed valves if damaged.

Installing the Reed Valves

The installation is the reverse of the removal procedure.

Tightening Torque	
Reed valve retaining screws	10 ± 1 Nm (89 ± 9 lbf-in)

Crankcase

Disassembling the Crankcase

NOTE: Oil pump removal from crankcase MAG side is not necessary, but recommended to see condition of oil pump, refer to *Lubrication System* subsection.

1. Remove:
   - Engine from vehicle, refer to *Engine Removal and Installation* subsection
   - Wiring Harness, refer to *Wiring Harness* subsection.
   - Magneto cover and rotor, refer to *Magneto and Starter* subsection
   - Cylinder head and cylinder, refer to *Cylinder Head* subsection
   - Drive and driven pulley, refer to *Continuously Variable Transmission (CVT)* subsection
   - Intermediate gear, refer to *Gearbox* subsection.
   - Oil pressure switch, refer to *Lubrication System* subsection.
2. Measure axial clearance between the crankshaft and crankcase CVT with a feeler gauge.

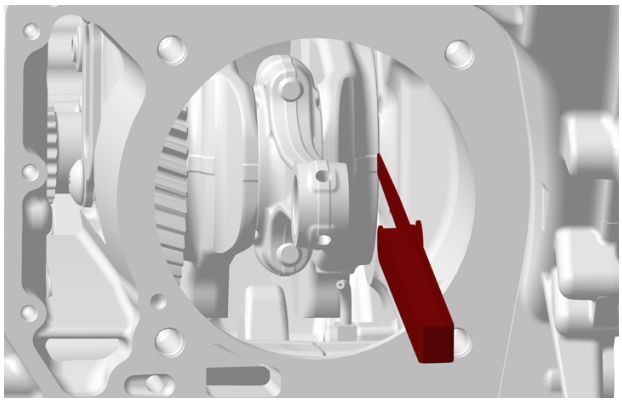

Crankshaft Axial Clearance	
Service limit	0.6 mm (.024 in)

3. If measurement is out of specification, inspect butting faces of crankshaft and crankcase (MAG/CVT side) for excessive wear.
4. Remove electric starter.

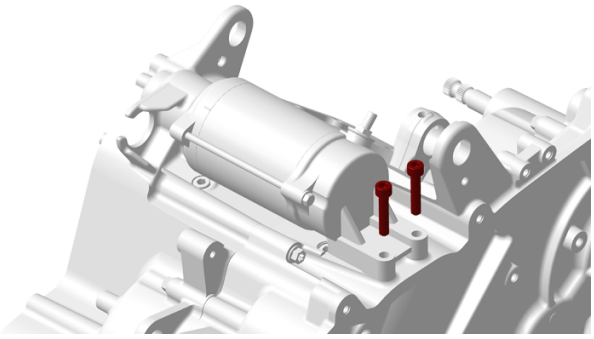

5. Remove crankshaft locking bolt.

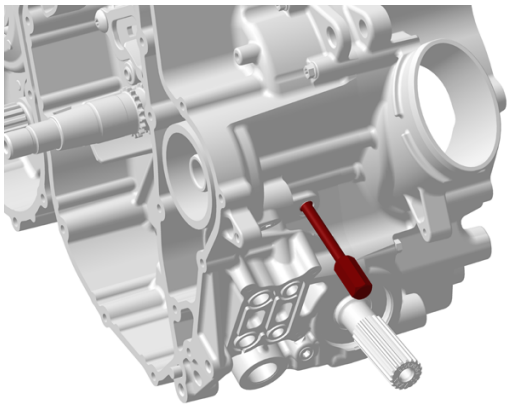

6. Remove crankcase MAG side retaining screws.

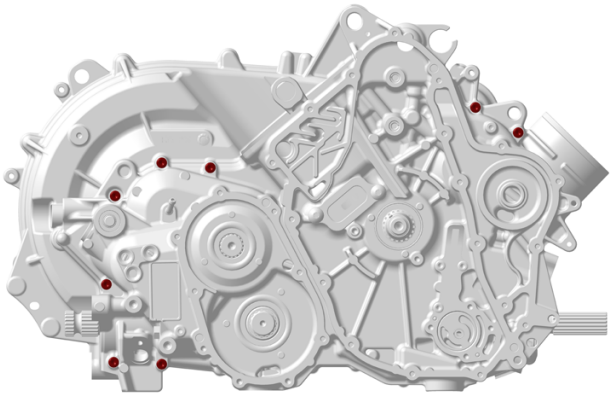

M6 X 45 MM (8 X)

7. Remove crankcase CVT side retaining screws

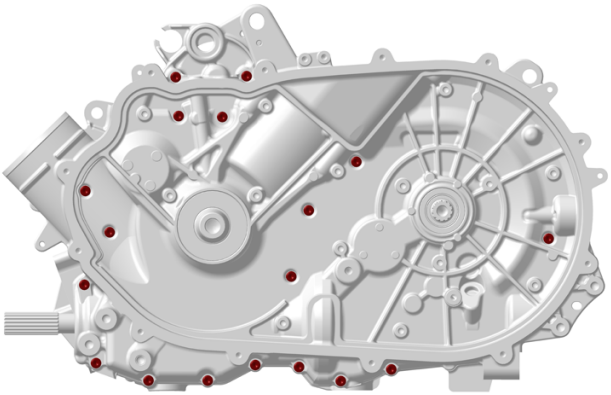

M6 X 45 MM (18 X)

8. Place the crankcase on a wooden stand, CVT side upwards.
9. Split crankcase using a screwdriver and lift by hand.

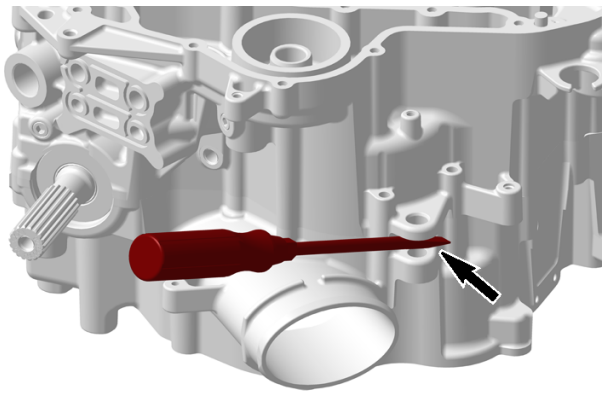

POSITION FOR BIG FLAT SCREWDRIVER

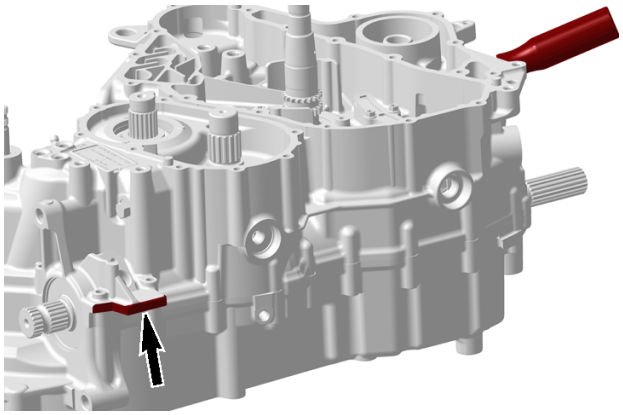

POSITION FOR LIFTING THE CRANKCASE

10. Remove oil strainer.

NOTE: Oil strainer removal for inspection and cleaning is recommended. Refer to *Lubrication System* subsection.

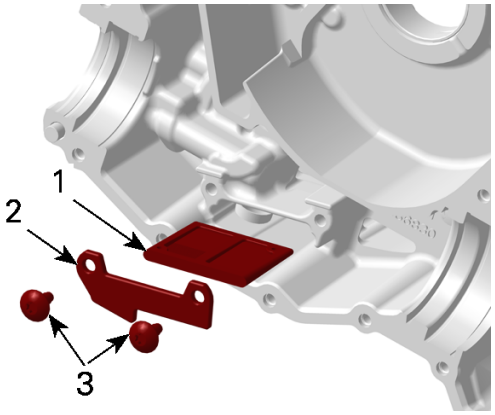

1. *Engine oil strainer*
2. *Retaining plate*
3. *Screws*

Cleaning the Crankcase

1. Using a brass brush and gasket remover, brush in one direction then make the final brushing perpendicularly (90°) to the first pass.
2. Clean crankcase using a part cleaner.
3. Dry crankcase using compressed air.

NOTICE
Do not wipe with rags. Use a new clean hand towel only.

4. Blow out the oil supply bores.

Inspecting the Crankcase

NOTE: To check some parts, it is recommended to remove all components from crankcase.

Crankshaft Plain Bearing

1. Check MAG and CVT plain bearings for scoring or other damages.
2. Measure plain bearing inside diameter.
3. Compare measurements to MAG/CVT main journal diameters of crankshaft, refer to *Crankshaft* in this subsection.
4. Replace if the measurement is out of specification.

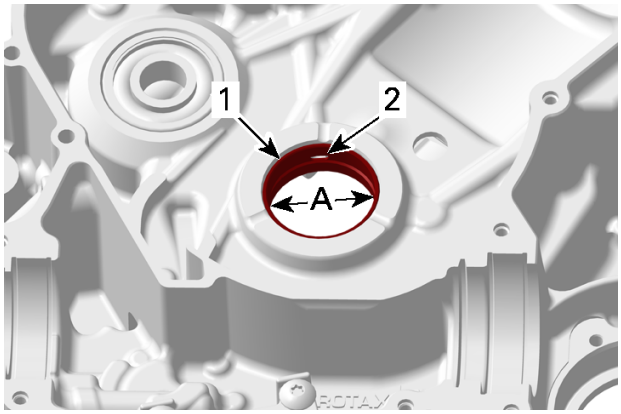

MAG PLAIN BEARING
1. Plain bearing
2. Oil bore
A. Plain bearing inside diameter

Plain Bearing Inside Diameter (MAG)	
Service limit	46.100 mm (1.81 in)

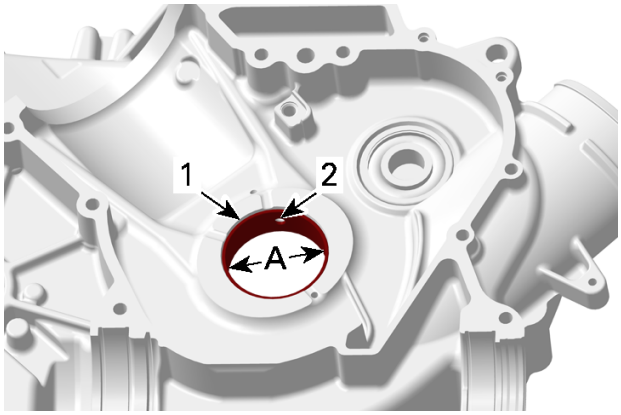

CVT PLAIN BEARING
1. Plain bearing
2. Oil bore
A. Plain bearing inside diameter

Plain Bearing Inside Diameter (CVT)	
Service limit	55.100 mm (2.17 in)

Ball and Needle Bearings

1. Check ball bearings and needle bearings for excessive play and smooth operation. Replace if necessary.

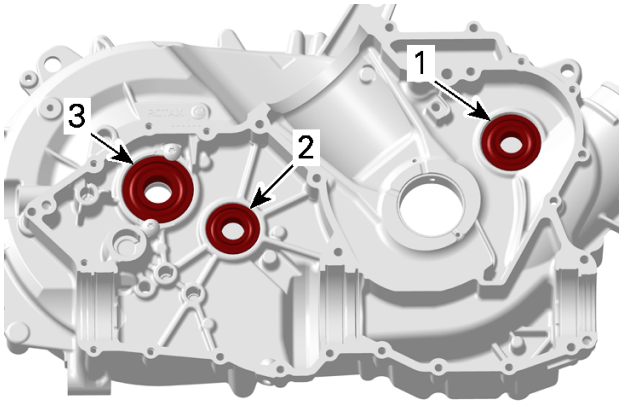

CRANKCASE CVT
1. Balancer shaft ball bearing
2. Main shaft ball bearing
3. Counter shaft ball bearing

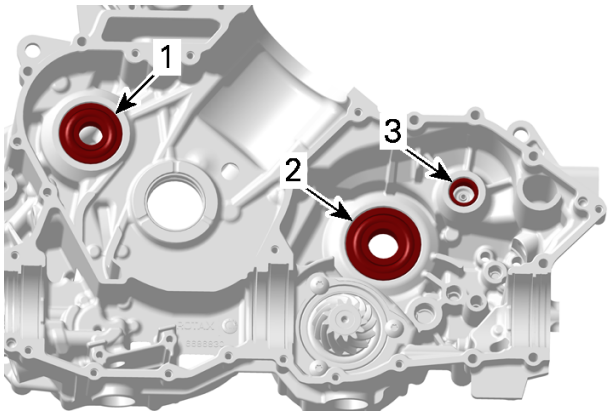

CRANKCASE MAG
1. Balancer shaft ball bearing
2. Main shaft ball bearing
3. Counter shaft needle bearing

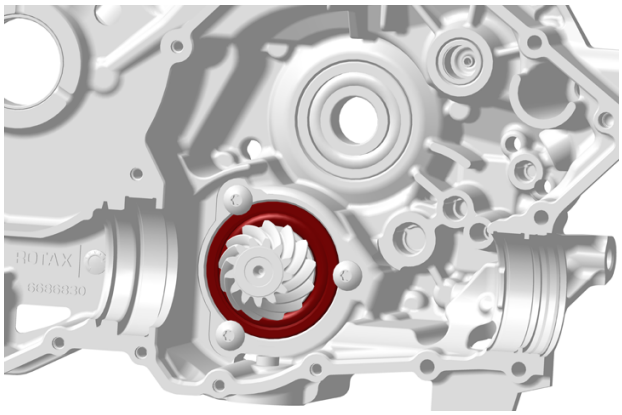

CRANKCASE MAG
1. Bevel gear ballbearing

Bearing Replacement Procedure

NOTICE

Clean oil, outside and inside, from crankcase.

NOTICE

Always support crankcase properly when ball bearings, needle bearings or plain bearings are removed or installed; otherwise, crankcase could be damaged.

Unless otherwise instructed, never use hammer to install ball bearings, needle bearings or plain bearings. Use press machine only.

NOTICE

Ball bearings have to be installed with closed bearing cage to the engine outside.

Removing the Crankshaft Plain Bearing

1. Carefully press the plain bearings out from inside towards the outside.

Bearing pusher (P/N 529036538)	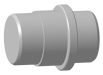
Bearing pusher (P/N 529036541)	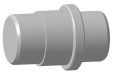

NOTICE

Use proper crankcase support when removing plain bearings. Refer to *Installing the Crankshaft Plain Bearing* in this subsection.

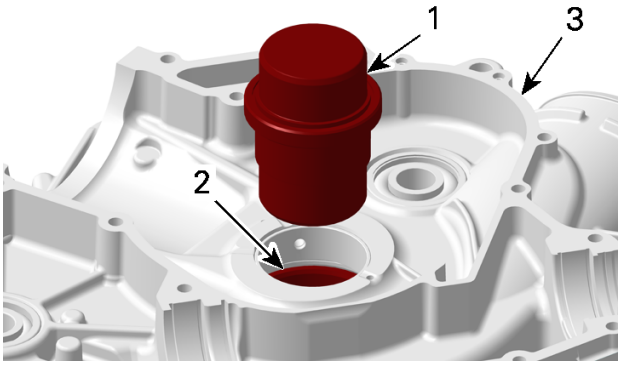

PRESS OUT PLAIN BEARINGS OUTSIDE (CVT SIDE)
1. Plain bearing remover/installer
2. Plain bearing
3. Crankcase (CVT side shown)

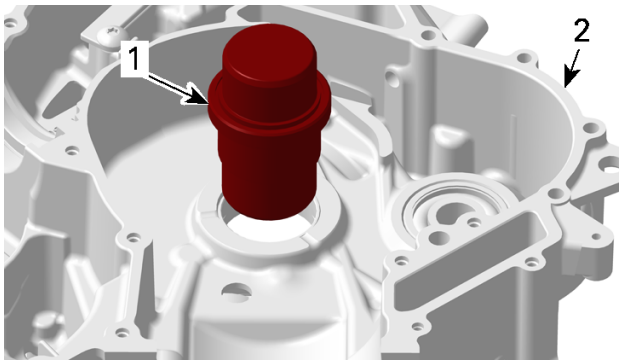

PRESS OUT PLAIN BEARING OUTSIDE (MAG SIDE)
1. Plain bearing remover/installer
2. Crankcase (MAG side shown)

Installing the Crankshaft Plain Bearing

NOTICE

Unless otherwise instructed, never use hammer to install plain bearings. Use press only.

Damages to crankcase may occur if this procedure is not performed correctly.

1. Use proper crankcase support when installing plain bearings.

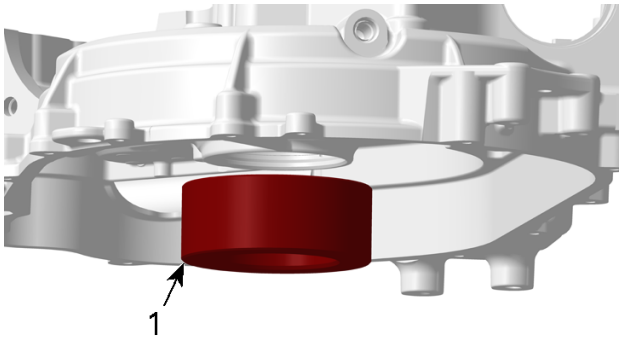

CRANKCASE CVT SIDE
1. Crankcase support CVT side

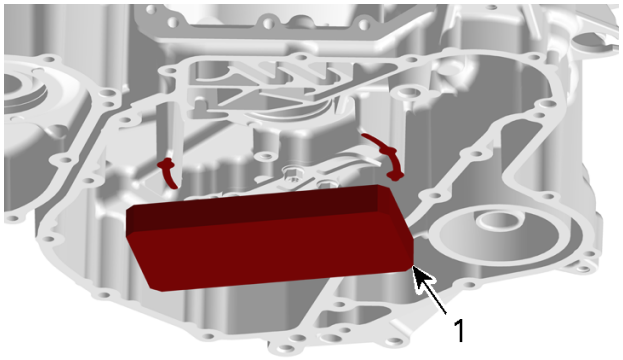

CRANKCASE MAG SIDE
1. Crankcase support MAG side (140 mmx 70 mm x 15 mm)

2. Install plain bearings in a cold crankcase.

Bearing pusher (P/N 529036538)	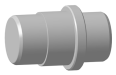
Bearing pusher (P/N 529036541)	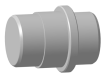
Crankcase support (MAG side) (P/N 529035916)	

NOTICE

Do not lubricate plain bearings and/or crankcase for installation.

3. Use an O-ring to hold plain bearings temporary in place during installation. The O-ring will disappear in the groove of the plain bearing remover/installer.

Crankcase	O-Ring
CVT side	55 mm (2.165 in) x 1 to 1.5 mm (.04 to .06 in)
MAG side	46 mm (1.811 in) x 1 to 1.5 mm (.04 to .06 in)

4. Mark position of plain bearing oil bore on plain bearing remover/installer.
5. Mark position of oil bore on crankcase half.
6. Align mark on plain bearing remover/installer with mark on crankcase half.
7. Carefully press in the plain bearings in the same direction as during disassembly, from the crankcase inside towards the outside.

NOTICE

Press in plain bearing 1.5 ± 0.1 mm (.059 ± .004 in) underneath the plane surface.

NOTICE

Misalignment of the plain bearing and crankcase oil bores will prevent proper oil supply to plain bearings.

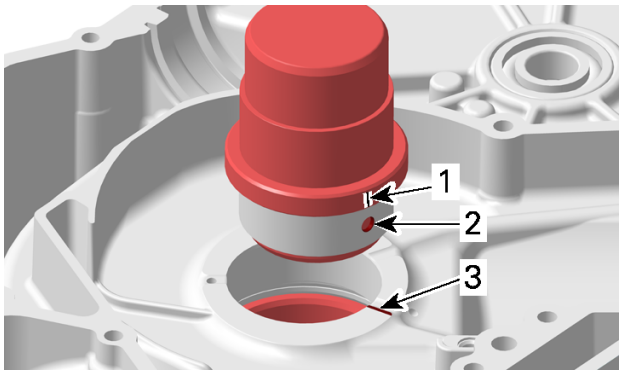

PRESS PLAIN BEARINGS INSIDE
1. Oil bore position marked on plain bearing remover/installer
2. Plain bearing oil bore
3. Oil bore position marked on crankcase

8. Carefully press in the plain bearings from inside the crankcase towards the outside.

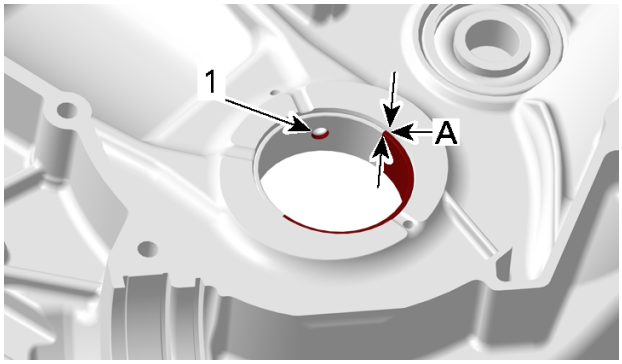

CRANKCASE MAG
1. Oil bore

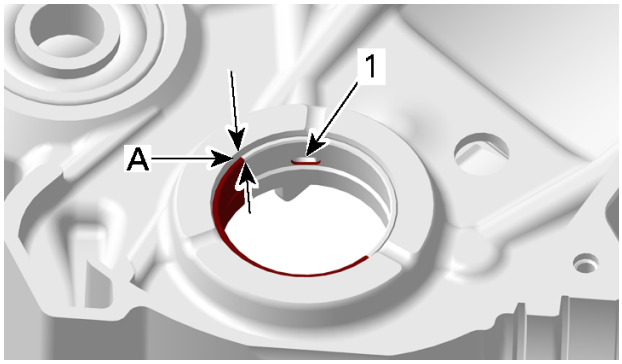

CRANKCASE CVT
1. Oil bore

Removing the Countershaft Needle Bearing

Remove needle bearing using a blind hole puller.

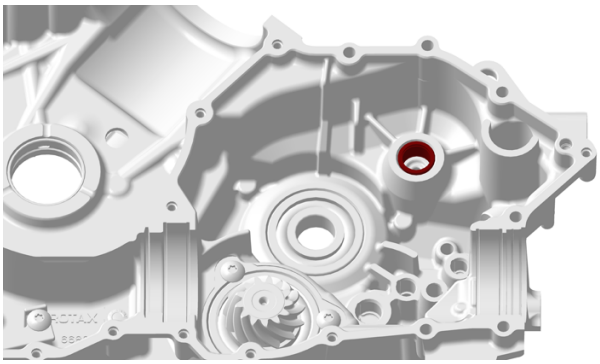

Installing the Countershaft Needle Bearing

1. Use the following tools to install the bearing.

Bearing installer (gearbox) (P/N 529035763)	
Handle (P/N 420877650)	

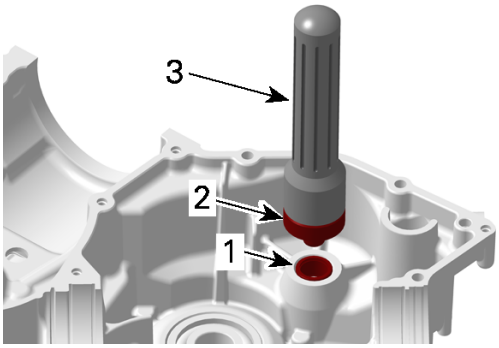

1. Bevel gear needle bearing
2. Needle bearing installer
3. Handle

Removing the Crankcase Ball Bearings

1. For removing the countershaft ball bearing remove retaining screws.

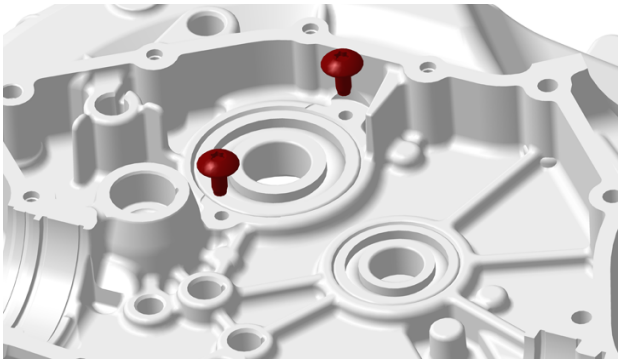

2. To remove ball bearings use a blind hole bearing puller.

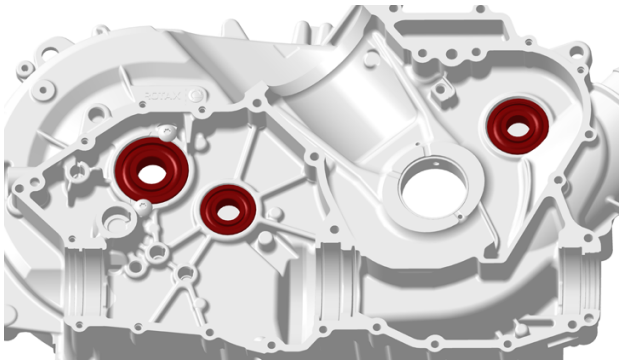

CRANKCASE CVT

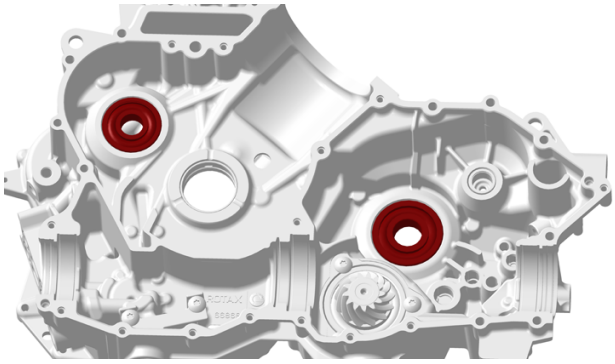

CRANKCASE MAG

Installing the Crankcase Ball Bearings

1. Use a suitable installer for installing ball bearings.

NOTICE

Install ball bearings with closed bearing cage towards outside of engine.

2. Tighten the retaining screws to specification.

Tightening Torque	
Retaining screws - **Reused** Crankcase	10 ± 1 Nm (89 ± 9 lbf-in) + Loctite 243 (blue) (P/N 293 800 060)
Retaining screws - **New** Crankcase	12 ± 1 Nm (106 ± 9 lbf-in)

Assembling the Crankcase

The assembly is the reverse of the disassembly procedure. However, pay attention to the following.

Never assemble the crankcase with gearbox at P - position. Parking lock lever must not engage in shifting sleeve.

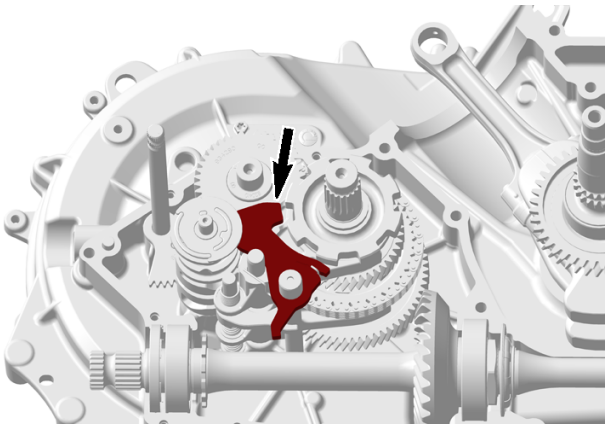

ENSURE PARKING LOCK LEVER IS NOT ENGAGED

1. Install crankshaft sleeve on the crankshaft.
2. Apply sealant on mating surfaces as indicated.

Loctite 5910

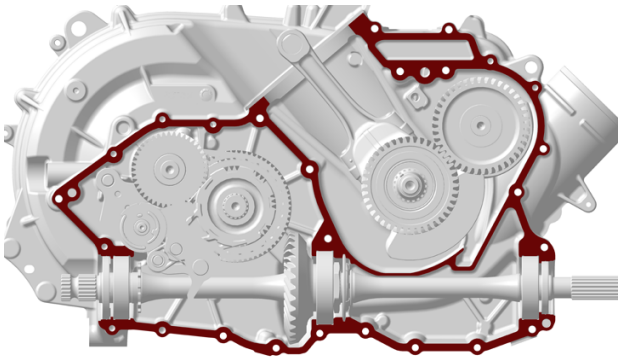

IMPORTANT: When beginning the application of the bearing cover sealant, the assembly and the first torquing should be done within 10 minutes. It is suggested to have all you need on hand to save time.

Use a plexiglass plate and apply some sealant on it. Use a soft rubber roller 50 - 75 mm (2 - 3 in), available in arts products suppliers for printing, and roll the sealant to get a thin uniform coat on the plate (spread as necessary). When ready, apply the sealant on bearing cover surfaces.

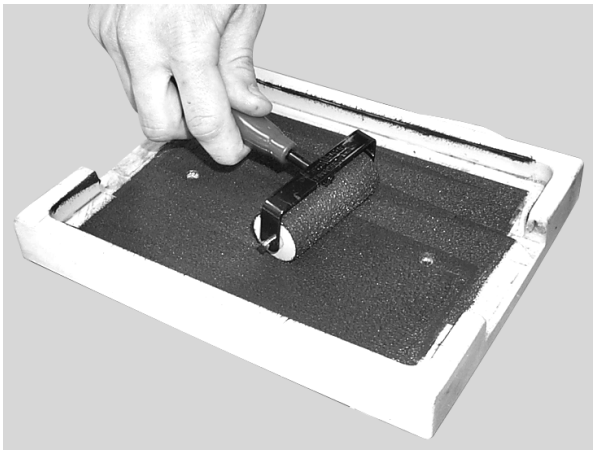

F12R17A

Do not apply in excess as it will spread out inside crankcase.

NOTE: It is recommended to apply this specific sealant as described here to get a uniform application without lumps. If you do not use the roller method, you may use your finger to uniformly distribute the sealant (using a finger will not affect the adhesion).

3. Assemble crankcase halves together.

Crankshaft position cap (P/N 529036539)	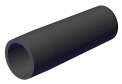

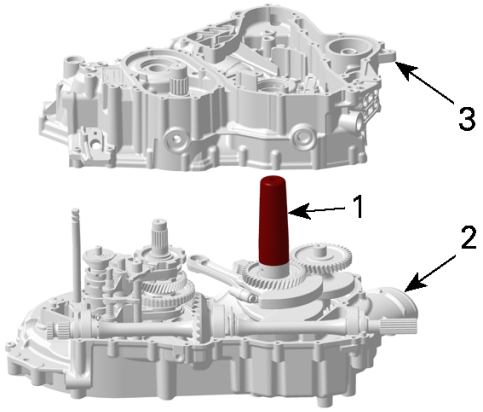

1. *Crankshaft position cap*
2. *Crankcase CVT*
3. *Crankcase MAG*

NOTE: Position cap and shifting shaft need to engaged first for a correct assemble.

4. Tighten crankcase M6 retaining screws on MAG side as per following sequence.

Tightening Torque	
Crankcase M6 retaining screws	10 ± 1 Nm (89 ± 9 lbf-in)

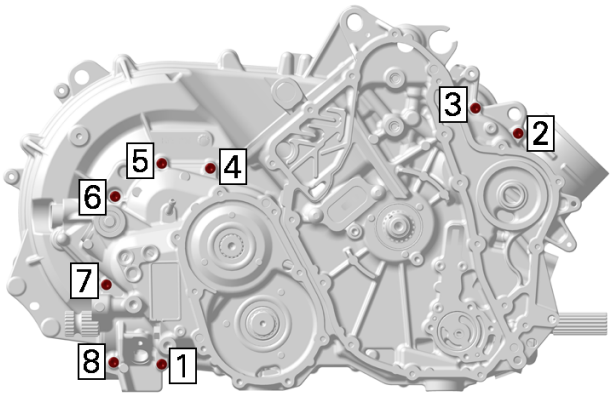

M6 SCREWS TIGHTENING SEQUENCE

5. Then tighten crankcase M6 retaining screws on CVT side as per following sequence.

Tightening Torque	
Crankcase M6 retaining screws	10 ± 1 Nm (89 ± 9 lbf-in)

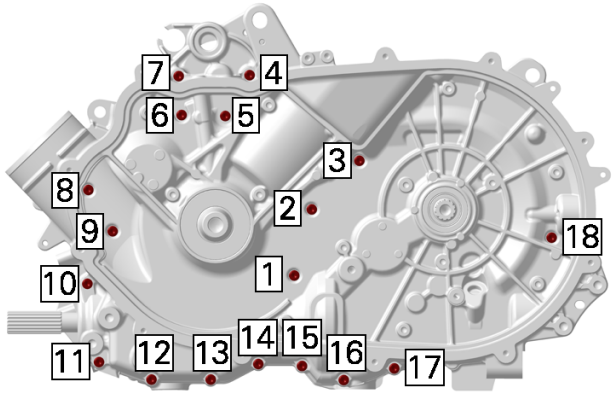

M6 SCREWS TIGHTENING SEQUENCE

Balancer Shaft

Removing the Balancer Shaft

1. Split crankcase, refer to *Crankcase* in this subsection.
2. Remove thrust washer.
3. Align the dot of crankshaft gear with the balancer shaft gear dot, then remove balancer shaft.

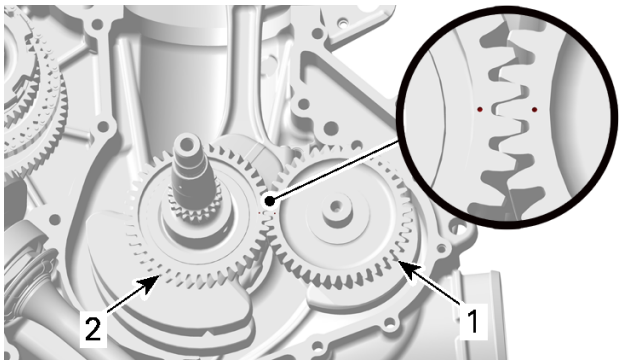

1. *Balancer shaft*
2. *Crankshaft*

Inspecting the Balancer Shaft

1. Check balancer shaft and replace if damaged.
2. Check ball bearings on MAG and CVT side for excessive play and smooth operation. Replace if necessary.
3. Inspect the balancer shaft gear for chipped, worn or broken teeth. Replace balancer shaft if necessary.

NOTE: If any imperfection is detected, check also the crankshaft gear, refer to *Crankshaft* in this subsection.

Installing the Balancer Shaft

The installation is the reverse of the removal procedure. However, pay attention to the following.

1. Align the dot on crankshaft gear with the balancer shaft gear dot.
2. Install the correct thrust washer. Refer to *Adjustment the balancer shaft axial clearance* in this subsection.

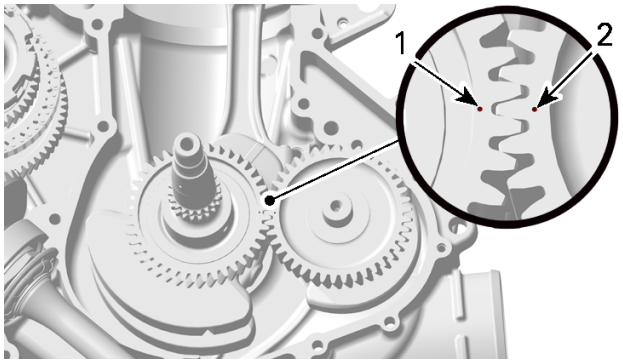

1. *Mark on crankshaft gear*
2. *Mark on balancer shaft gear*

Adjusting the Balancer Shaft Axial Clearance

NOTE: Only necessary if the axial clearance is out of specification or if **NEW** parts (crankcase, balancer shaft) are installed .

The axial clearance is adjusted by finding the proper thrust washer thickness J as per following procedure.

NOTE: Clean surface of crankcase and the balancer shaft before taking measurements.

Use the following course of calculation to determine the theoretical thrust washer thickness S:

S= A + B - C -1- 0.15

1. Measure the value A on the crankcase CVT side.

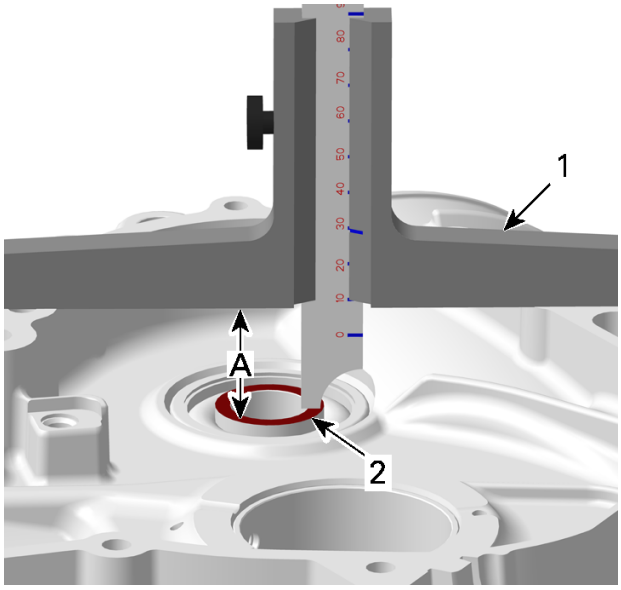

CVT SIDE MEASUREMENT - VALUE A
1. Depth gauge
2. Balancer shaft ball bearing

2. Measure the value B on the crankcase MAG side.

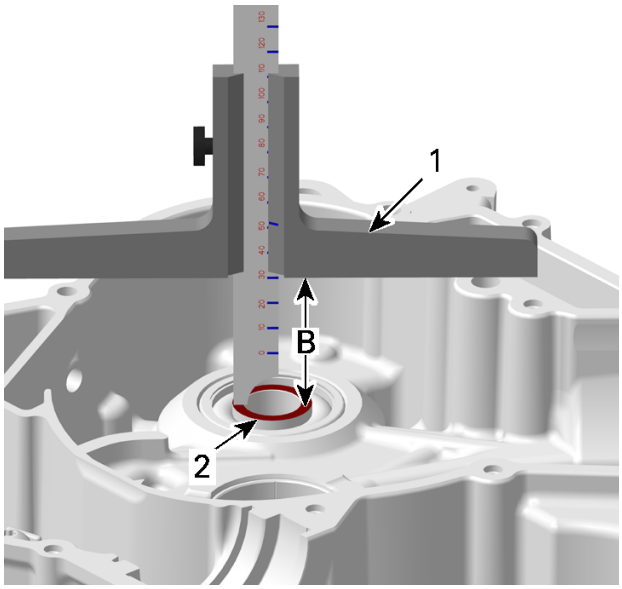

MAG SIDE MEASUREMENT - VALUE B
1. Depth gauge
2. Balancer shaft ball bearing

3. Measure the balancer shaft value C .

NOTE: Install a adjustment shim with a thickness of 1 mm (.04 in) to ensure the correct measurement.

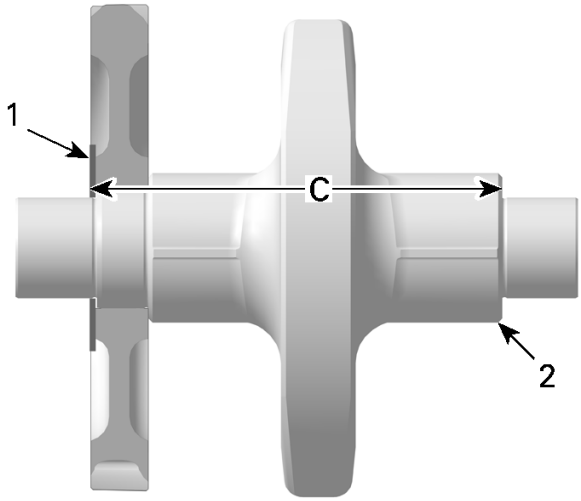

BALANCER SHAFT MEASUREMENT - VALUE C
1. Shim
2. Balancer shaft

4. Remove the 1 mm adjustment shim from the balancer shaft.
5. Calculate the theoretical thrust washer thickness S (S= A + B - C - 1 -0.15).
6. Take the obtained theoretical thrust washer thickness S and choose the proper thrust

washer J number according to the following table.

Theoretical Thrust Washer Thickness S	Thrust Washer Number J
0.65 to 0.74 mm (.026 to .029 in)	0.7 mm (.276 in)
0.75 to 0.84 mm (.03 to .033 in)	0.8 mm (.315 in)
0.85 to 0.94 mm (.033 to .037 in)	0.9 mm (.354 in)
0.95 to 1.04 mm (.037 to .041 in)	1 mm (.039 in)
1.05 to 1.14 mm (.041 to .045 in)	1.1 mm (.433 in)
1.15 to 1.24 mm (.045 to .049 in)	1.2 mm (.472 in)
1.25 to 1.34 mm (.049 to .053 in)	1.3 mm (.512 in)
1.35 to 1.44 mm (.053 to .057 in)	1.4 mm (.551 in)
1.45 to 1.55 mm (.057 to .061 in)	1.5 mm (.591 in)

NOTE: Axial clearance of 0.10 to 0.20 mm (.004 to .008 in) is included in the above table.

7. Install determined thrust washer on balancer shaft.

Crankshaft

Crankshaft Locking Procedure

1. Disconnect spark plug cable and remove the spark plug.
2. Remove the plug screw from CVT cover.

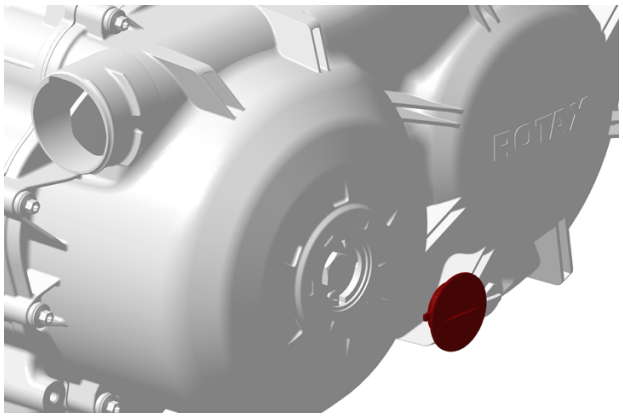

3. Turn engine to bring crankshaft to locking position.
4. Set piston to TDC ignition by turning the crankshaft.

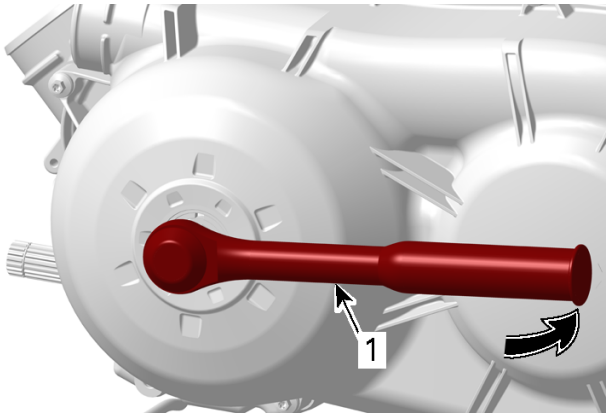

1. Wrench with 22 mm socket

TDC Ignition

NOTICE

When working on the valve train or timing chain, crankshaft must be locked at TDC ignition.

1. Remove valve cover. Refer to *Cylinder Head* subsection.
2. Verify if the printed marks "IN" and "EX" on the camshaft timing gears are facing each other.
3. If printed marks on camshaft timing gear are not as specified, turn crankshaft 360°.

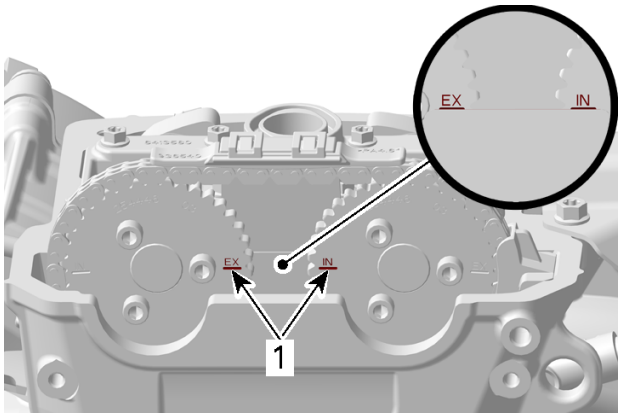

PISTON AT TDC IGNITION
1. Printed marks on camshaft timing gear

4. Remove:
   - Plug screw
   - Sealing ring.

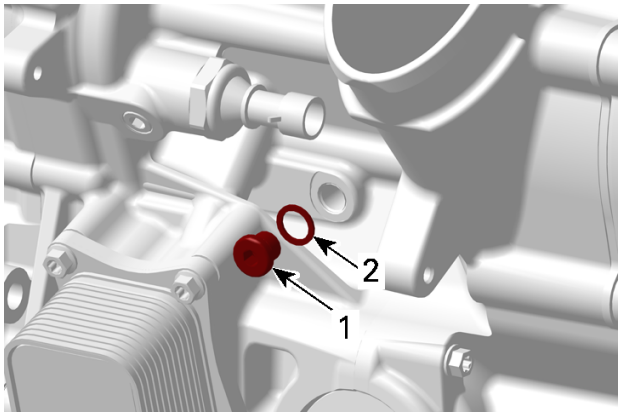

1. Plug screw
2. Sealing ring

5. Use a screwdriver to check if groove in crankshaft is aligned with the hole.

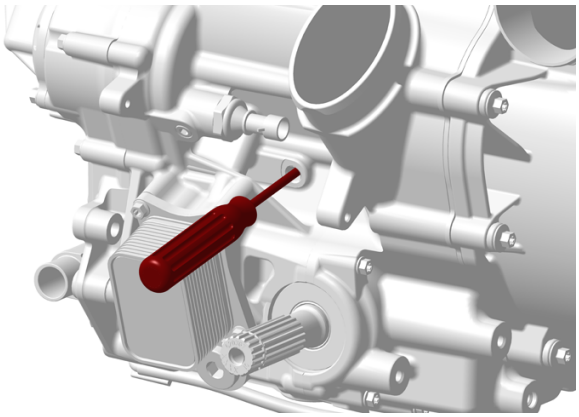

NOTICE

TDC ignition position is reached when "IN" and "EX" marks on camshaft timing gears dace together.

6. Lock crankshaft.

Crankshaft locking tool (P/N 529036535)	

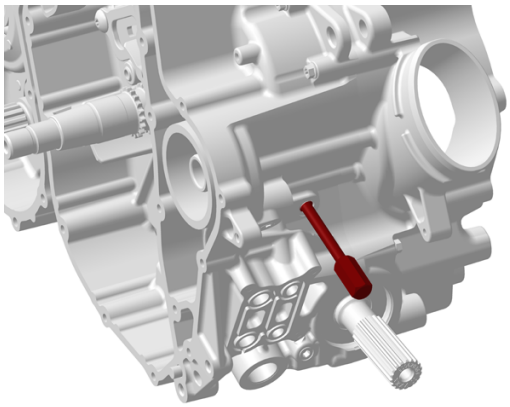

Removing the Crankshaft

1. Remove:
   - Balancer shaft, see *Balancer Shaft* in this subsection
   - Crankshaft.

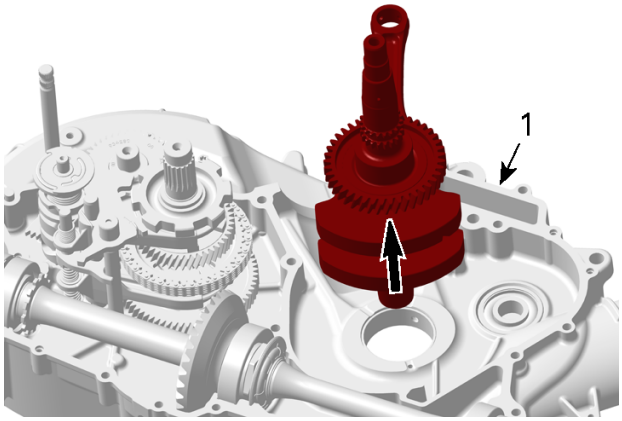

1. Crankcase CVT

Inspecting the Crankshaft

1. Replace crankshaft if the gears are worn or otherwise damaged.

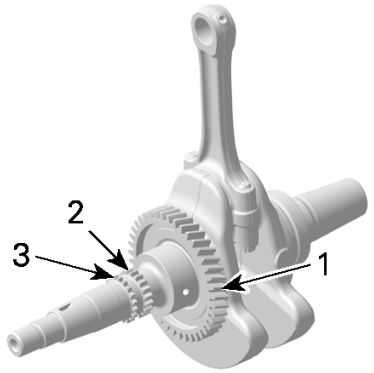

1. *Balancer gear*
2. *Crankshaft timing gear*
3. *Crankshaft oil pump gear*

Connecting Rod Big End Axial Play

1. Using a feeler gauge, measure distance between butting face of connecting rod and crankshaft counterweight. If the distance exceeds specified tolerance, replace the crankshaft.

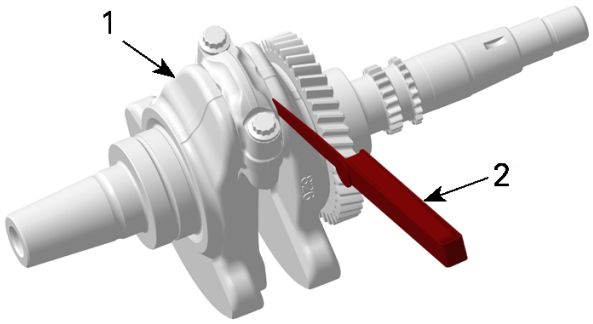

1. *Crankshaft*
2. *Feeler gauge*

Connecting Rod Big End Axial Play	
New	0.100 to 0.452 mm (.004 to .018 in)
Service limit	0.500 mm (.02 in)

Connecting Rod/Piston Pin Clearance

Refer to *Cylinder Head* subsection.

Connecting Rod Big End Radial Play

NOTE: Prior to remove connecting rod from the crankshaft, mark big end halves together to ensure a correct reinstallation (cracked surface fits in only one position).

1. Remove connecting rod from crankshaft.

NOTICE

Connecting rod screws are not reusable. Always discard screws and replace by NEW ones. It is recommended to install new plain bearings when reinstalling connecting rods.

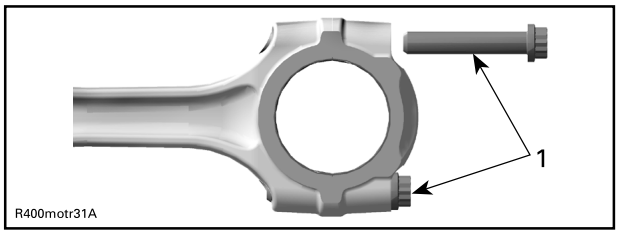

1. *Connecting rod screw*

2. Measure crankpin. Compare to inside diameter of connecting rod big end.

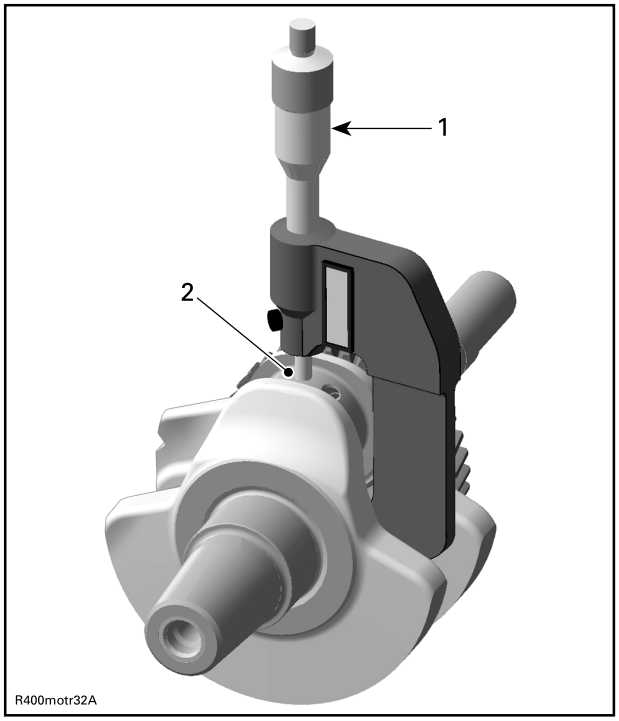

1. *Micrometer*
2. *Crankpin area for plain bearings*

Crankpin Diameter	
New	41.982 to 41.994 mm (1.6528 to 1.6533 in)
Service limit	41.960 mm (1.652 in)

3. If the crank pin diameter is out of specification, replace crankshaft.
4. To measure the connecting rod big end diameter, use the OLD screws.

5. Install the OLD plain bearings as they were mounted initially.
6. Carry out the tightening procedure described in *Assembling the Crankshaft* in this subsection.

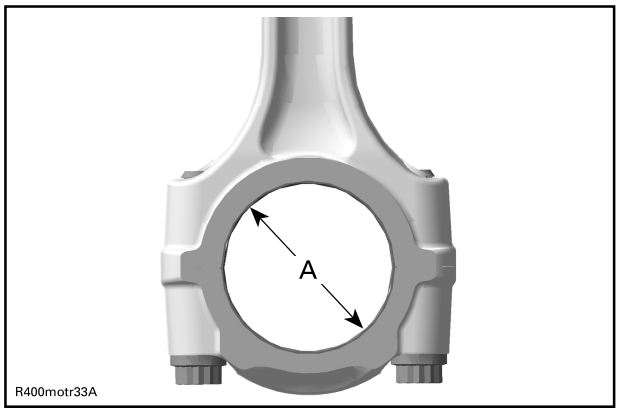

A. Connecting rod big end plain bearing

7. If the crank pin diameter is out of specification, replace crankshaft.

Connecting Rod Big End Diameter	
Service limit	42.090 mm (1.6571 in)

8. If connecting rod big end diameter is out of specification, replace plain bearings and recheck.

Connecting Rod Big End Radial Play	
Service limit	0.94 mm (.037 in)

9. If connecting rod big end radial clearance is out of specification, replace plain bearings and recheck.

Crankshaft Radial Play MAG/CVT Side

1. Measure crankshaft MAG/CVT side. Compare to inside diameter of MAG/CVT plain bearings, refer to *Crankcase* in this subsection.

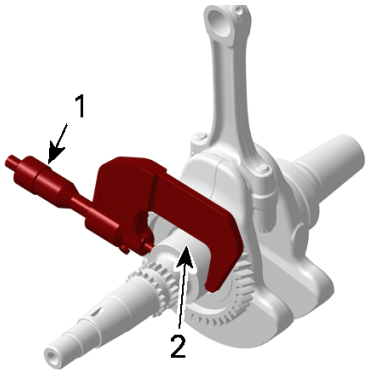

1. Micrometer
2. Crankshaft, MAG side main bearing journal

Crankshaft MAG Diameter	
New	45.972 to 45.996 mm (1.8099 to 1.8109 in)
Service limit	45.960 mm (1.8094 in)

Crankshaft MAG Radial Play	
Service limit	0.09 mm (.004 in)

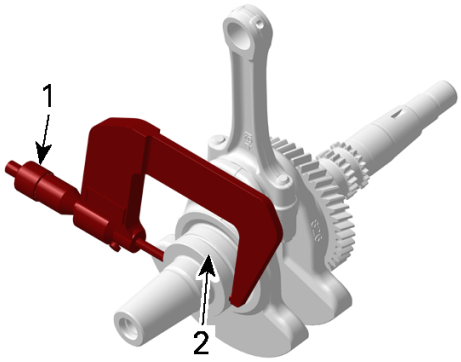

1. Micrometer
2. Crankshaft area for CVT plain bearing

Crankshaft CVT Diameter	
New	54.971 to 54.996 mm (2.1642 to 2.1652 in)
Service limit	54.950 mm (2.163 in)

Crankshaft CVT Radial Play	
Service limit	0.1 mm (.004 in)

Assembling the Crankshaft

The assembly is the reverse of the disassembly procedure. However, pay attention to the following.

Use **NEW** bearings, when connecting rod big end diameter is out of specification.

1. Clean the split surface on both sides (cracked area) and bearing seat carefully with compressed air and part cleaner.

NOTICE

Ensure bearing seats free of dirt, oil or grease.

2. Put plain bearings correctly in place.

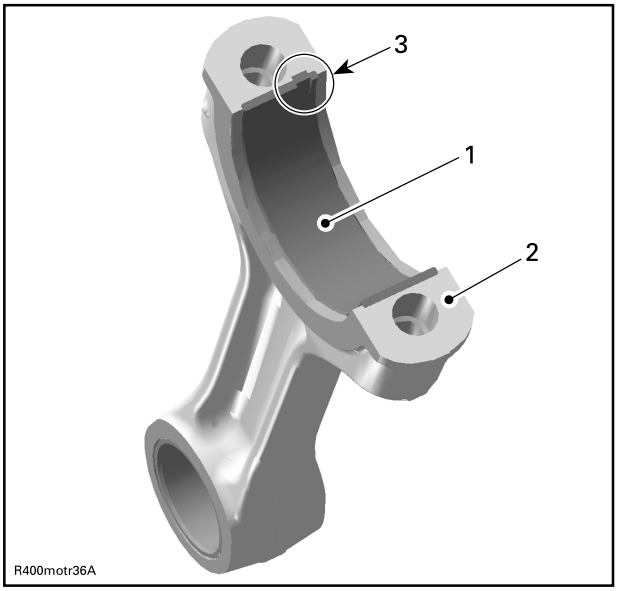

1. Half plain bearing of connecting rod big end
2. Split surface of the connecting rod
3. Nose of bearing in line with connecting rod groove

3. Oil the crank pin before installation.

NOTICE

Lower cap and rod must match together since there is a cracked surface.

Marker points must face each other.

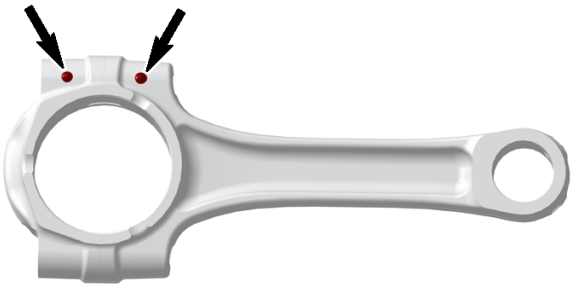

4. Oil **NEW** connecting rod screws.

NOTICE

Always use NEW connecting rod screws for the final assembly. They are not reusable.

5. Thread screws in connecting rod, then tighten as per following procedure.

NOTICE

Strictly adhere following instructions:

- **Do not apply any threadlocker.**
- **The running direction of the big end bearings and of the piston pins must not change.**
- **Failure to strictly follow procedure may cause connecting rod screws to loosen and lead to severe engine damage.**

Connecting Rod Screws Tightening Sequence	
Step 1	15 ± 3 Nm (133 ± 27 lbf-in)
Step 2	30 ± 3 Nm (22 ± 2 lbf-ft)
Step 3	Torque by an additional 90° ± 5° turn using an angle torque wrench

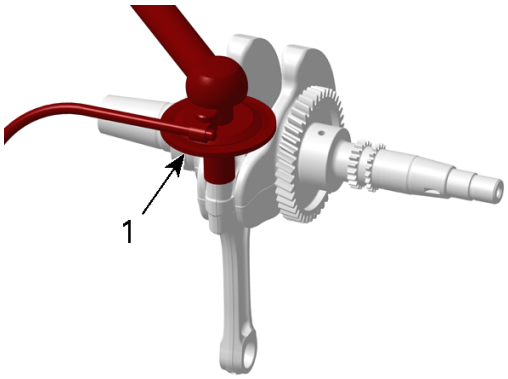

1. Angle torque wrench

Installing the Crankshaft

The installation is the reverse of the removal procedure. However, pay attention to following.

1. Install crankshaft first then balancer shaft.

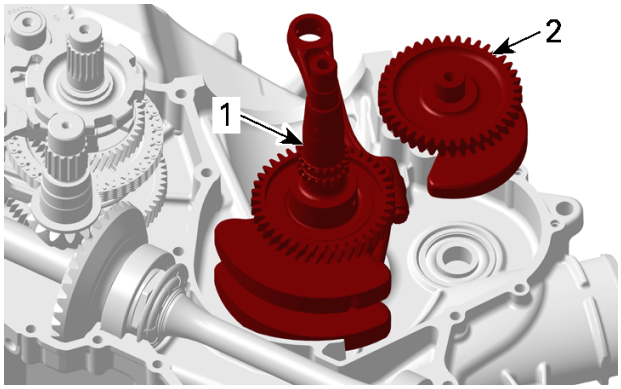

1. Crankshaft
2. Balancer shaft

2. Align the marks of crankshaft and balancer shaft.

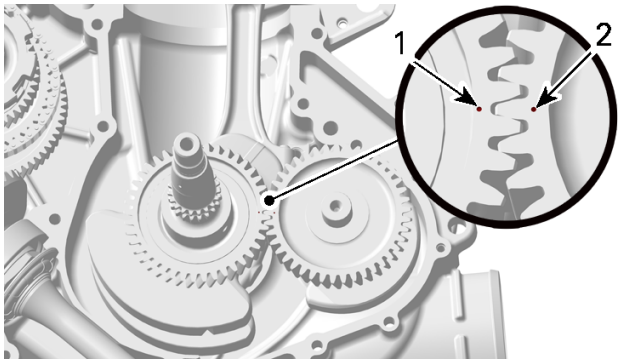

1. Mark on crankshaft gear
2. Mark on balancer shaft gear

3. Install the correct adjustment shim on balancer shaft. Refer to *Balancer shaft* in this subsection.

NOTICE

Make sure the woodruff key on crankshaft MAG is present and correctly in place.

Notes

Technician's Notes

Related Documents

Bulletins	

Instruction Sheets	

Other	

CONTINUOUSLY VARIABLE TRANSMISSION (CVT)

02 Continuously Variable Transmission (CVT)

Exploded View and General Warnings

Midwest Manuals
Green Manuals
Paperless Manuals For a Better Tomorrow www.green-manuals.com
If you bought this manual from any other seller please leave them NEGATIVE feeddback and notify me at bestshopmanuals@gmail.com

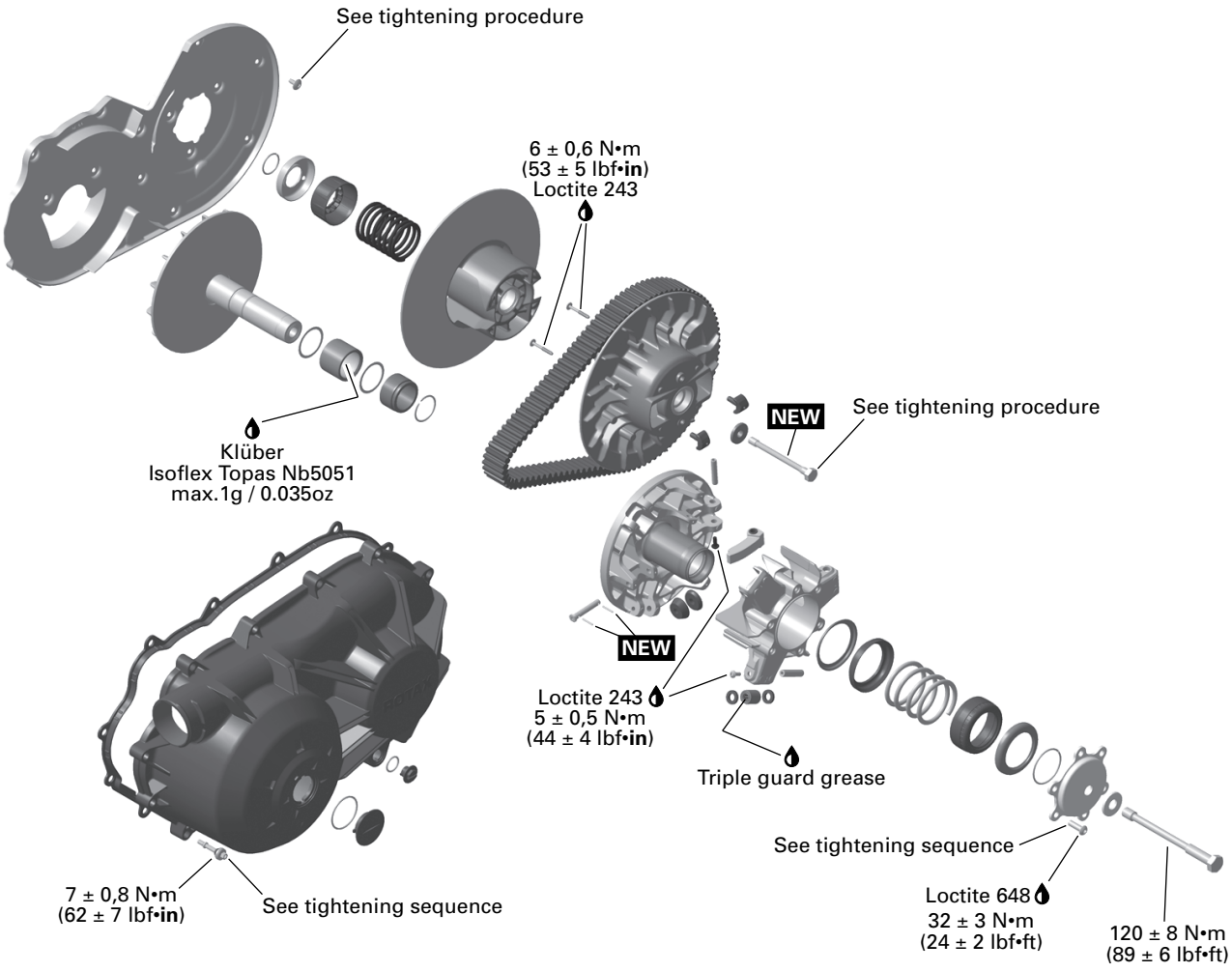

NEW = Component must be replaced when removed.

NOTE: For a better understanding, the illustrations are taken with engine out of vehicle. To perform the following instructions, it is not necessary to remove engine.

This CVT is lubrication free. Never lubricate any components except drive pulley hub and the needle bearings inside the rollers if necessary.

⚠ WARNING

Never touch CVT while engine is running. Never drive vehicle when CVT cover is removed.

⚠ WARNING

Any drive pulley repairs must be performed by an authorized Can-Am dealer. Subcomponent installation and assembly tolerances require strict adherence to procedures detailed.

⚠ WARNING

The clutch assembly is a precisely balanced unit. Never replace parts with used parts from another clutch assembly.

During assembly or installation, use the torque values and service products as in the exploded view(s).

Clean threads before applying a threadlocker.

⚠ WARNING

Torque wrench tightening specifications must be strictly adhered to. Locking devices when removed (e.g.: locking tabs, elastic stop nuts, cotter pins, etc.) must be replaced with new ones.

NOTICE

Hoses, cables or locking ties removed during a procedure must be reinstalled as per factory standards.

CVT Cover

Draining the CVT Cover

1. Turn bayonet cap 90° counterclockwise to open it.
2. Remove bayonet cap and O-ring.

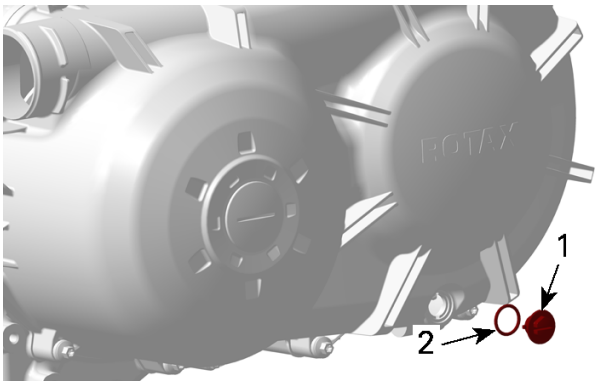

1. Bayonet cap
2. O-ring

3. Let water drain from CVT cover.
4. Reinstall bayonet cap and O-ring.

NOTICE
If any debris entered the CVT cover, CVT must be cleaned and inspected.

Removing the CVT Cover

1. Detach CVT hose from CVT cover.
2. Remove the CVT cover.

NOTE: Remove the center top screw last to support the cover during removal.

NOTICE
Do not use and impact tool to remove CVT cover screws.

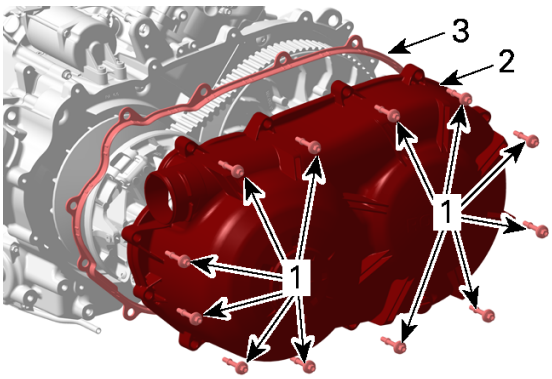

1. Retaining screws
2. CVT cover
3. Gasket

Cleaning the CVT Air Inlet/Outlet

1. Remove CVT cover.
2. Inspect and clean the air outlet opening from inside the CVT cover.

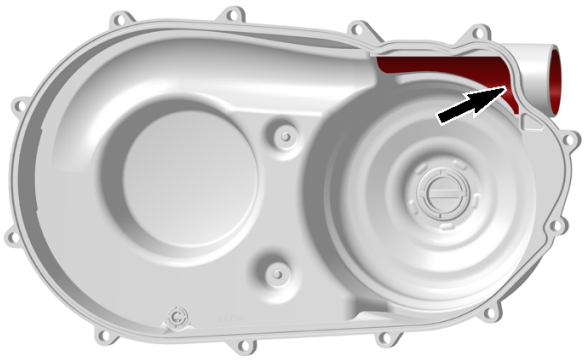

CVT COVER - CVTOUTLET OPENING

3. Check the CVT compartment if contaminated with engine oil. If so remove CVT air guide and inspect crankshaft oil seal, counter shaft oil seal and counter shaft O-ring for leakage, refer to *Cylinder Block* subsection for replacement.

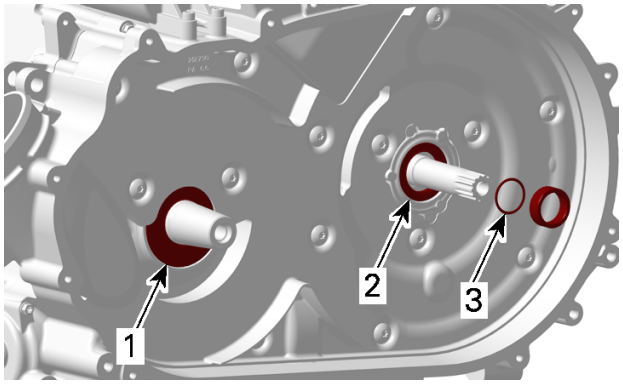

1. Crankshaft oil seal
2. Counter sahft oil seal
3. Counter shaft O-ring

4. Carefully clean the air inlet openings. If necessary remove the CVT air guide.

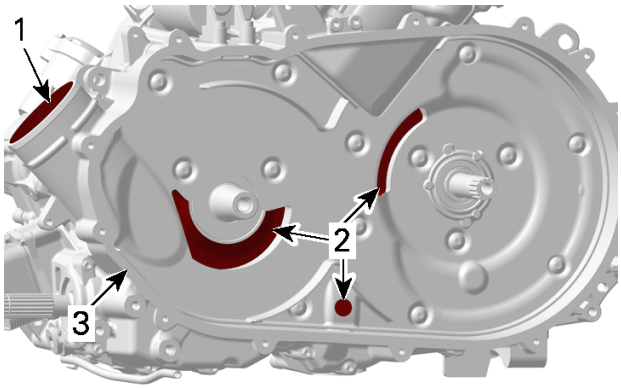

1. Air inlet
2. Air inlet openings
3. CVT air guide

5. Inspect and clean the end of air outlet duct at rear of the vehicle.

NOTE: If a lot of debris or grime are found in the CVT system, it may be necessary to remove the ducts and thoroughly clean them.

6. Reinstall CVT cover.

Installing the CVT Cover

1. Install the center top screw first.
2. Tighten the CVT cover retaining screws as per following sequence.

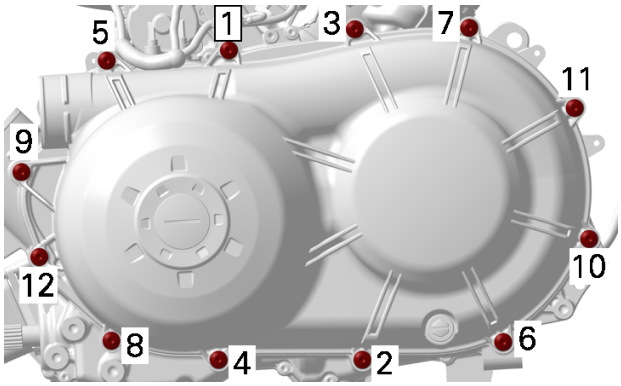

Tightening Torque	
CVT cover retaining screws	7 ± 0.8 Nm (62 ± 7 lbf-in)

Drive Belt

SERVICE TOOLS

Description	Part Number	Page
CIRCLIP TOOL	(P/N 529036542)	111
CLUTCH HOLDER	(P/N 529036559)	108–109, 125, 131
DDS DISASSEMBLY KIT	(P/N 529036548)	127, 129
DRIVE PULLEY OPENING TOOL	(P/N 529036378)	113
DRIVE PULLEY PULLER	(P/N 529000064)	108–109
DRIVE PULLEY SUPPORT	(P/N 529036371)	109, 113
GOVERNOR CUP REMOVER	(P/N 529036546)	110
GREASE INJECTOR	(P/N 529036376)	117
PULLER/LOCKING TOOL	(P/N 529036098)	106, 125
PULLEY SPRING COMPRESSOR TOOL	(P/N 529036545)	110, 113
REMOVING AXLE TOOL	(P/N 529036372)	112–114
ROLLER AXLE PULLER	(P/N 529036557)	115

Removing the Drive Belt

NOTICE

In case of a drive belt failure, the CVT, CVT cover and air outlet must be cleaned.

1. Remove the CVT cover.
2. Screw puller/locking tool in the threaded hole of the driven pulley and tighten it to open the pulley.

Puller/locking tool (P/N 529036098)	

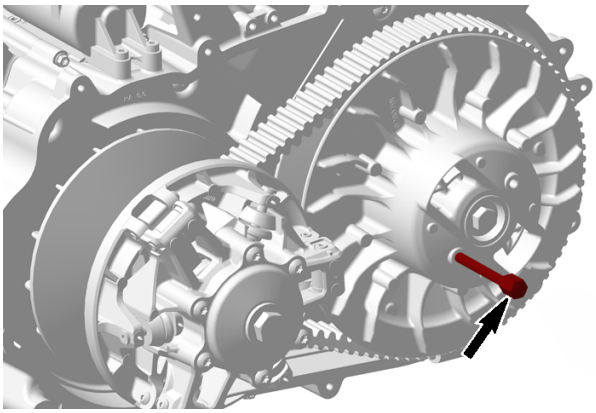

PULLER/LOCKING TOOL

3. Slip the belt over the top edge of fixed sheave to remove it.

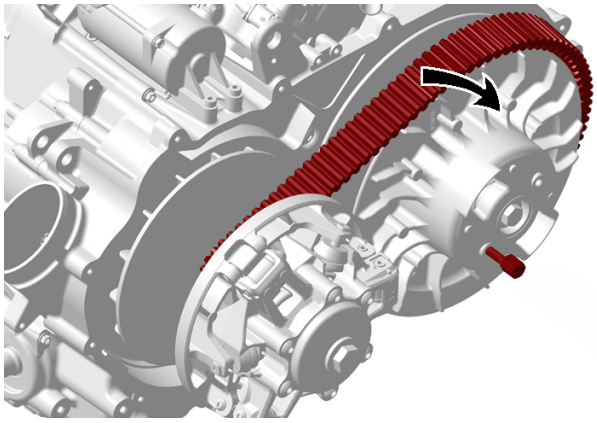

Inspecting the Drive Belt

1. Inspect belt for cracks, fraying or abnormal wear. Replace if necessary.
2. Check drive belt width at cord level. Replace if it is out of specification (see table below).

SERVICE LIMIT	
Drive belt width	34.7 mm (1.366 in)

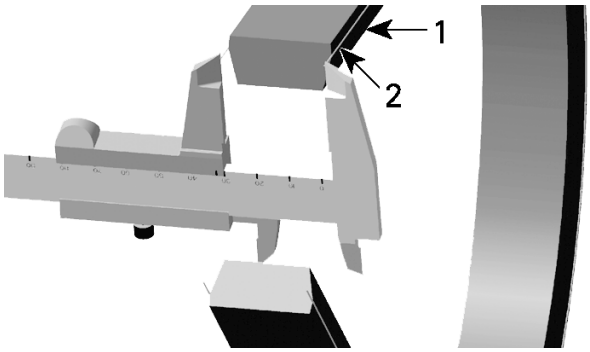

1. *Drive belt*
2. *Cord in drive belt*

Installing the Drive Belt

1. The installation is the reverse of the removal procedure. However, pay attention to the following.
2. The maximum drive belt life span is obtained when the drive belt has the proper rotation direction. Install it so that the arrow printed on belt is pointing towards front of the vehicle, viewed from top.

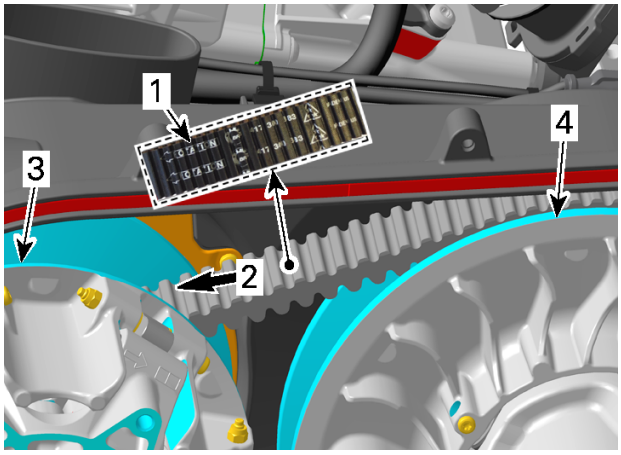

TYPICAL
1. Arrow printed on belt
2. Rotation direction
3. Drive pulley (front)
4. Driven pulley (rear)

Drive Pulley

SERVICE TOOLS

Description	Part Number	Page
CIRCLIP TOOL	(P/N 529036542)	111
CLUTCH HOLDER	(P/N 529036559)	108–109, 125, 131
DDS DISASSEMBLY KIT	(P/N 529036548)	127, 129
DRIVE PULLEY OPENING TOOL	(P/N 529036378)	113
DRIVE PULLEY PULLER	(P/N 529000064)	108–109
DRIVE PULLEY SUPPORT	(P/N 529036371)	109, 113
GOVERNOR CUP REMOVER	(P/N 529036546)	110
GREASE INJECTOR	(P/N 529036376)	117
PULLER/LOCKING TOOL	(P/N 529036098)	106, 125
PULLEY SPRING COMPRESSOR TOOL	(P/N 529036545)	110, 113
REMOVING AXLE TOOL	(P/N 529036372)	112–114
ROLLER AXLE PULLER	(P/N 529036557)	115

SERVICE PRODUCTS

Description	Part Number	Page
CLUTCH AND PULLEY FLANGE CLEANER PRO S1		115, 120, 128
ISOFLEX GREASE TOPAS NB 5051		120
LOCTITE 243 (BLUE)		121–122, 127
LOCTITE 648 (GREEN)		123
TRIPLE-GUARD GREASE		117
XPS BRAKES AND PARTS CLEANER		131

Removing the Drive Pulley

1. Remove drive belt. Refer to *Drive Belt* subsection.
2. Lock the drive pulley.
3. Remove the drive pulley bolt with spring washer.

Clutch Holder (P/N 529036559)	

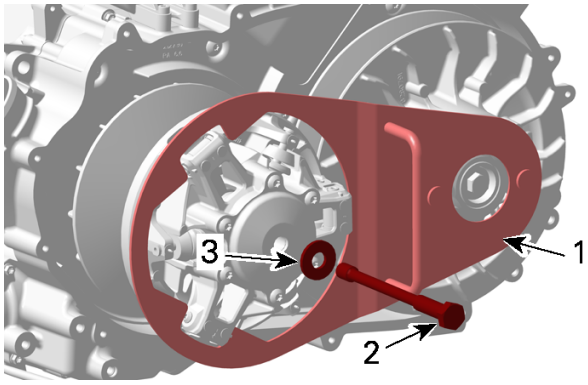

1. Clutch holder
2. Drive pulley bolt
3. Conical spring washer

NOTICE

Never use any type of impact wrench for drive pulley removal.

4. Remove the drive pulley from engine.

Drive pulley puller (P/N 529000064)	

NOTICE

Use only recommended tool.

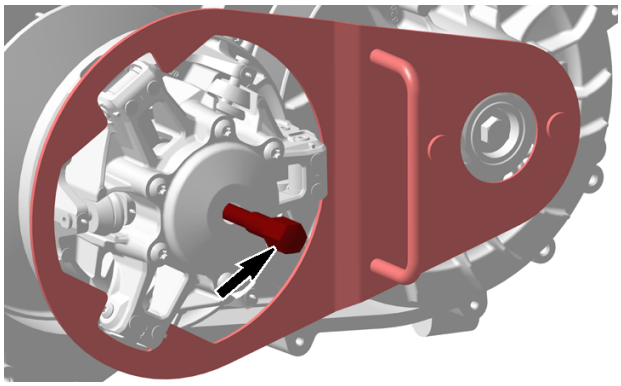

1. Make sure the clutches holder is properly installed.
2. Screw the puller in place of the drive pulley bolt.
3. Tighten the puller until the pulley is disengaged from the crankshaft end.

Disassembling the Drive Pulley

Separating Fixed and Sliding Sheaves

NOTICE

To avoid damaging the thrust rollers, NEVER knock directly on the drive pulley puller. Always use all of the following recommended tools.

NOTE: No component marking is required before disassembly. This drive pulley features factory apposed index marks as references.

NOTICE

Never use any type of torch to heat governor cup. Never tap on governor cup.

1. Fix drive pulley support in a vice and install the drive pulley on it.

Drive pulley support (P/N 529036371)	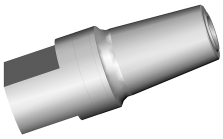

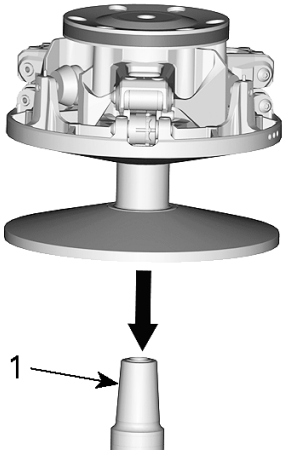

TYPICAL
1. *Drive pulley support*

2. Install clutch holder to the drive pulley and remove the torque flange retaining screws.

Clutch Holder (P/N 529036559)	

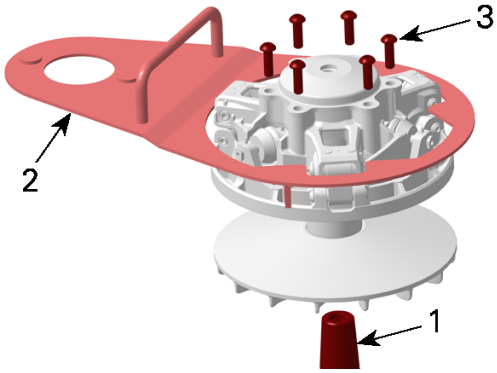

1. *Drive pulley support*
2. *Clutch holder*
3. *Torque flange retaining screws*

3. Screw the puller into governor cup until the puller head protrusion is 33 mm (1-5/16 in).

Drive pulley puller (P/N 529000064)	

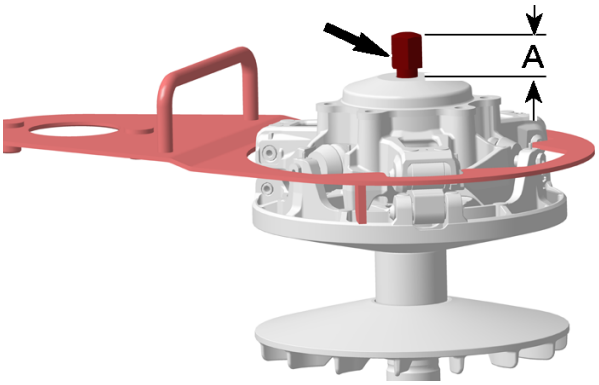

A. Puller head protrusion of 33 mm (1-5/16 in)

4. Place governor cup remover on governor cup.

Governor cup remover (P/N 529036546)	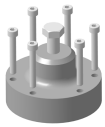

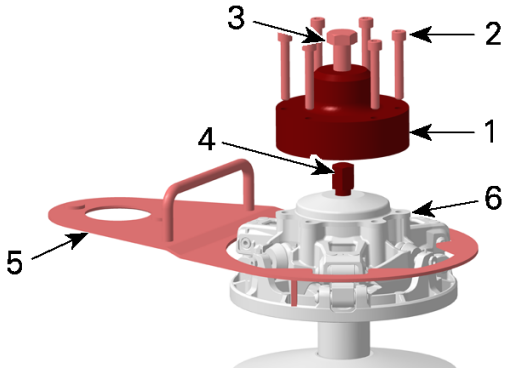

1. *Governer cup remover*
2. *M8x55 puller retaining screws*
3. *M16x60 puller screw*
4. *Drive pulley puller*
5. *Clutch holder*
6. *Governor cup*

NOTICE

Ensure that the hexagonal head of the drive pulley puller engages in the slot of the governor cup remover.

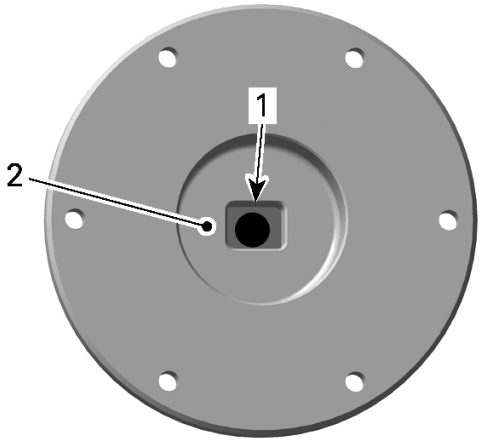

TYPICAL
1. *Slot*
2. *Inner side of remover*

5. Tighten M8 x 55 puller retaining screws.

Tightening Torque	
M8 x 55 remover retaining screws	20 ± 2 Nm (15 ± 1 lbf-ft)

6. Screw in the M16 x 60 puller screw to separate fixed and sliding sheaves.
7. Remove governor cup remover, clutch holder and drive pulley puller.
8. Remove torque flange.

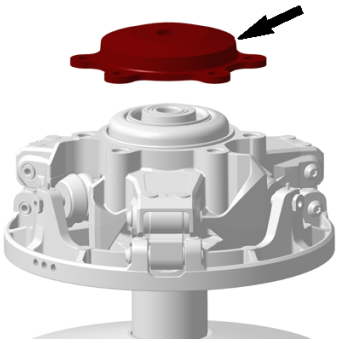

Removing the Spring and Governor Cup

1. Screw in the bolt of the pulley spring compressor tool.

Pulley spring compressor tool (P/N 529036545)	

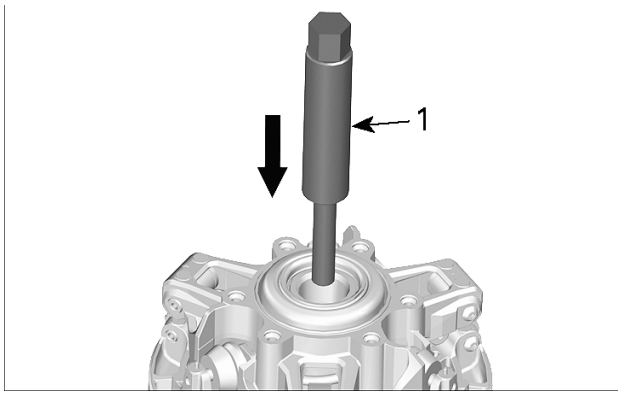

TYPICAL
1. Bolt

2. Place circlip installer/remover onto governor cup.

Circlip tool (P/N 529036542)	

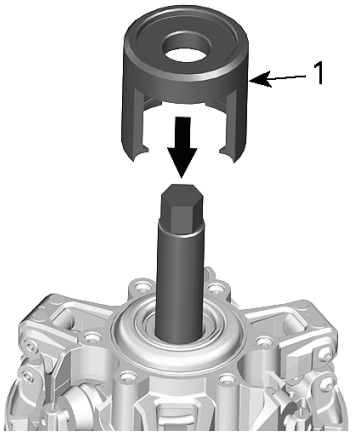

TYPICAL
1. Circlip installer/remover

3. Turn handle of pulley spring compressor tool clockwise to compress the spring.

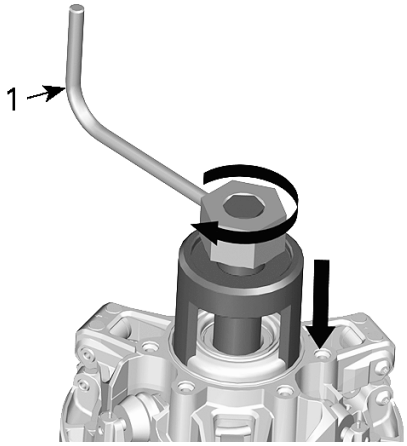

TYPICAL
1. Handle

4. Remove circlip.

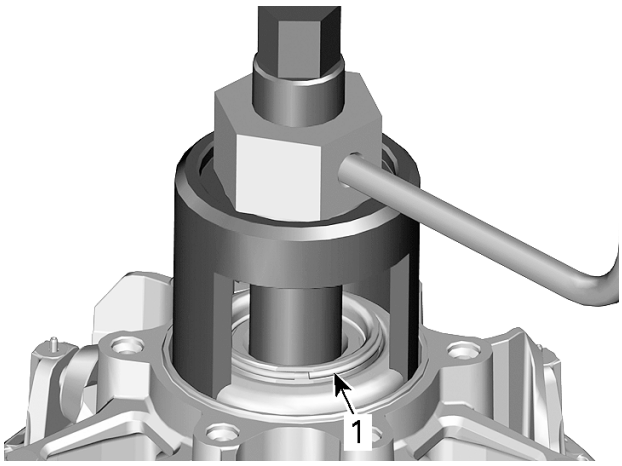

TYPICAL
1. Circlip

5. Remove handle of pulley spring compressor tool and circlip installer/remover.
6. Remove spring seat, spring support and spring.

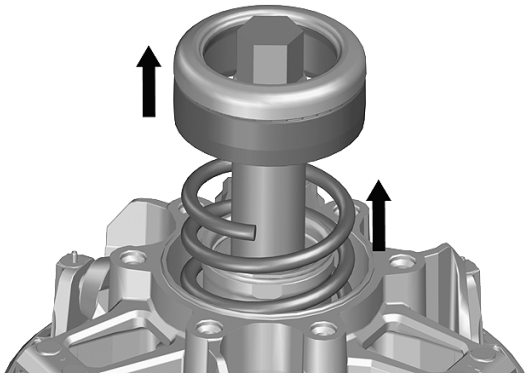

TYPICAL

7. Remove bolt of pulley spring compressor tool.

NOTICE
Remove bolt of pulley spring compressor tool to avoid damaging the bushings inside the governor cup.

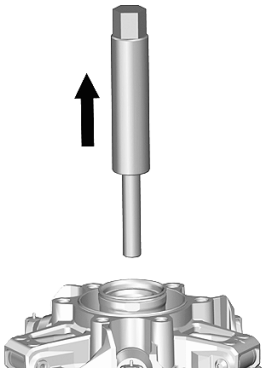

TYPICAL

8. Remove governor cup.

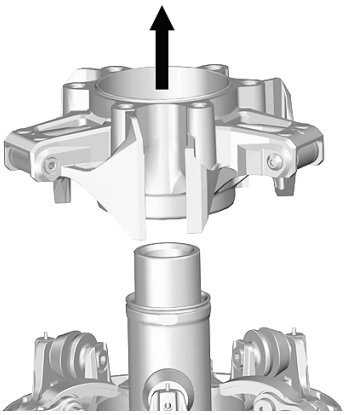

TYPICAL

Removing the Roller

1. Remove bearing sleeve retaining screw.

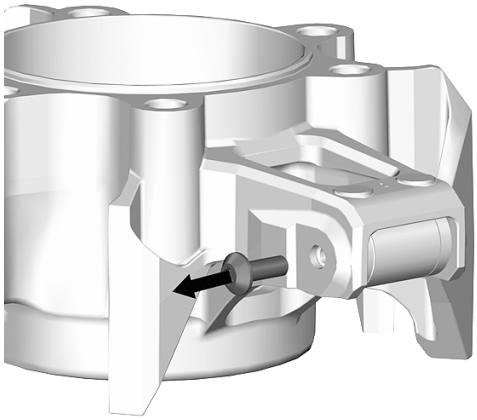

TYPICAL

2. Remove bearing sleeve.

Removing axle tool (P/N 529036372)	

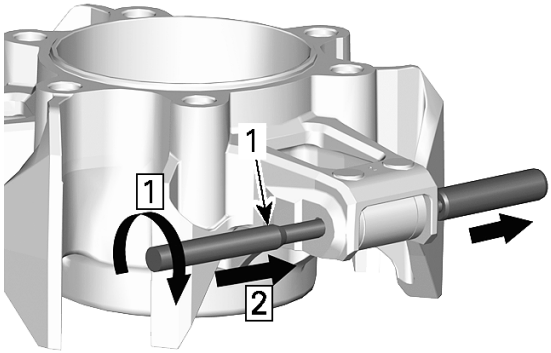

TYPICAL
1. Removing axle tool
Step 1. Screw the tool into the axle
Step 2. Push axle to the right side

3. Remove thrust roller and its thrust washers.

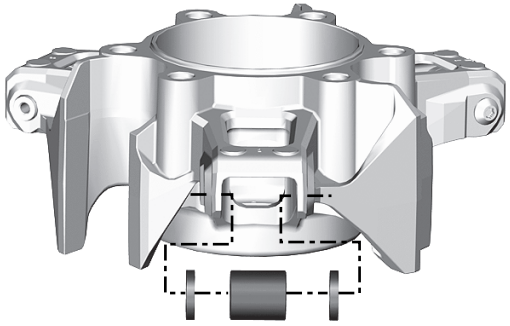

TYPICAL

Removing the Roller Lever (without Governor Cup)

1. Remove bearing sleeve retaining screw.

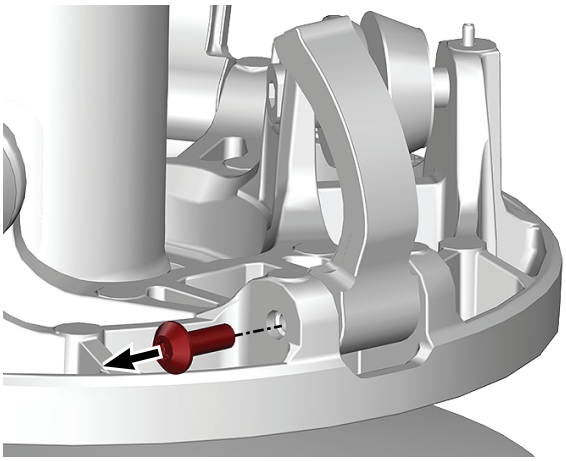

TYPICAL

2. Remove bearing sleeve.

Removing axle tool (P/N 529036372)	

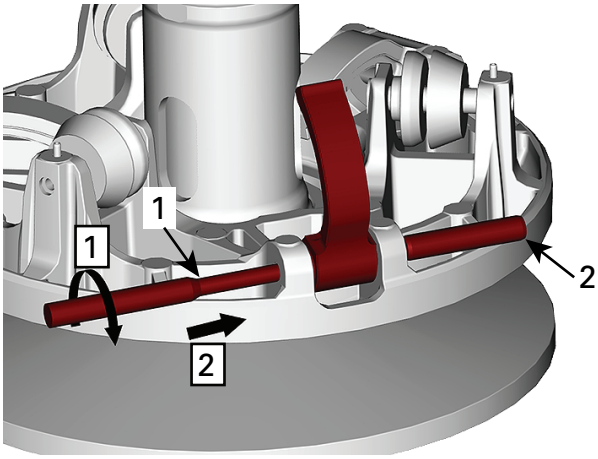

TYPICAL
1. Removing axle tool
2. Axle
Step 1. Screw the tool into the axle
Step 2. Push axle to the right side

3. Remove roller lever assembly.

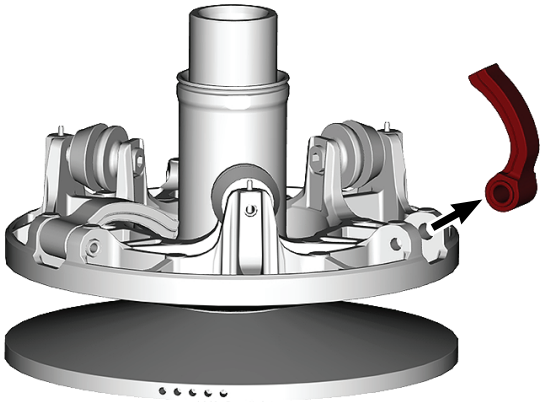

TYPICAL

Removing the Roller Lever (Governor Cup installed)

1. Lower the sliding sheave.

Drive pulley support (P/N 529036371)	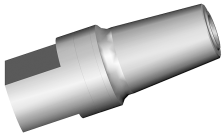
Pulley spring compressor tool (P/N 529036545)	
Drive pulley opening tool (P/N 529036378)	

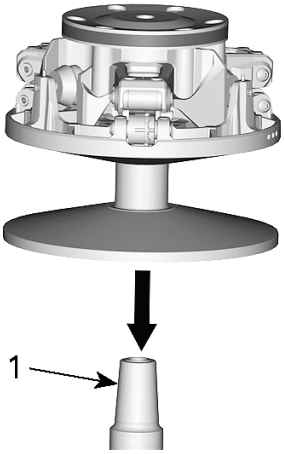

TYPICAL
1. Drive pulley support

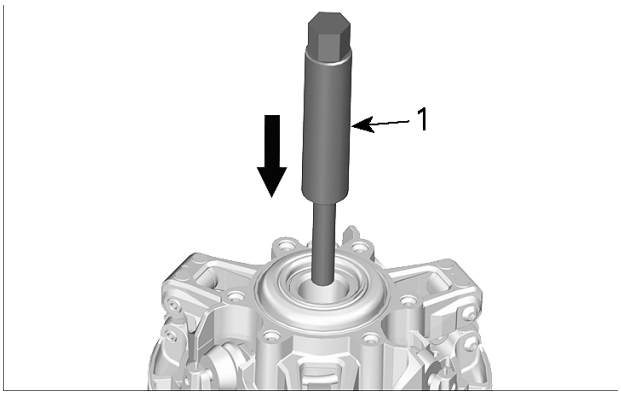

TYPICAL
1. Threaded shaft of the pulley spring compressor

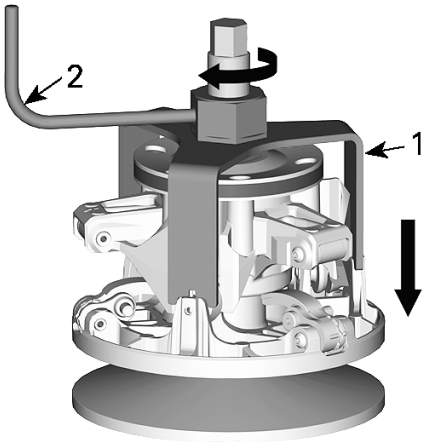

TYPICAL
1. Drive pulley opening tool
2. Handle of the pulley spring compressor

1. Secure the drive pulley support in a vice.
2. Install the drive pulley over the support.
3. Install the drive pulley opening tool and spring compressor tool.

2. Remove bearing sleeve retaining screw.

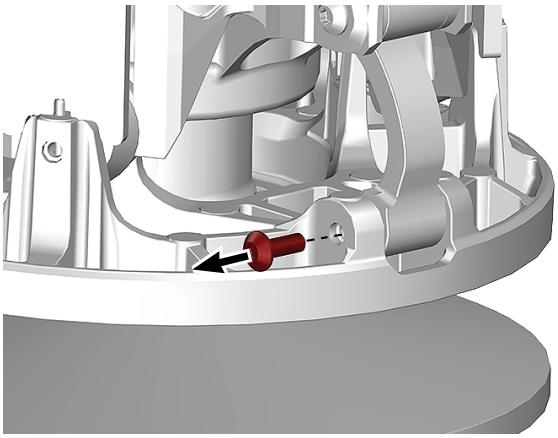

TYPICAL

3. Remove bearing sleeve.

Removing axle tool (P/N 529036372)	

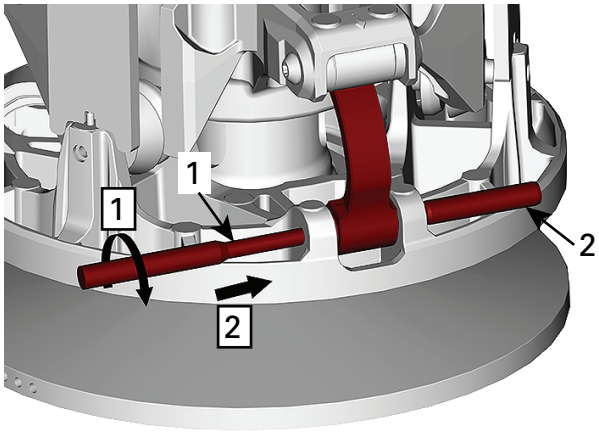

TYPICAL
1. Removing axle tool
2. Axle
Step 1. Screw the tool into the axle
Step 2. Push axle to the right side

4. Remove roller lever assembly.

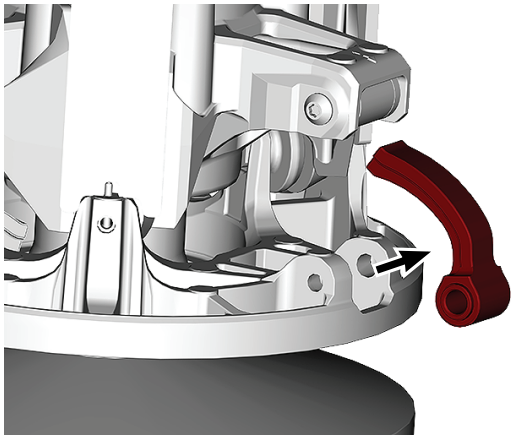

TYPICAL

Removing the Inner Roller and Outer Roller

1. Carefully pull out dowels by using a pliers, discard them.

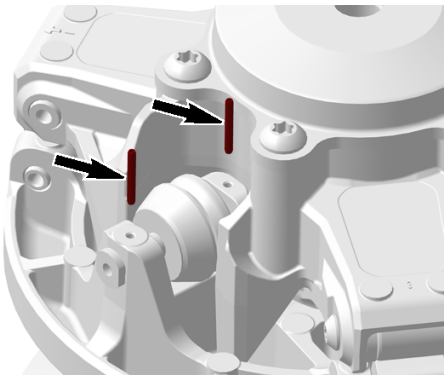

2. Screw in the roller axle puller and remove bearing sleeve, then remove inner and outer rollers.

Roller axle puller (P/N 529036557)	

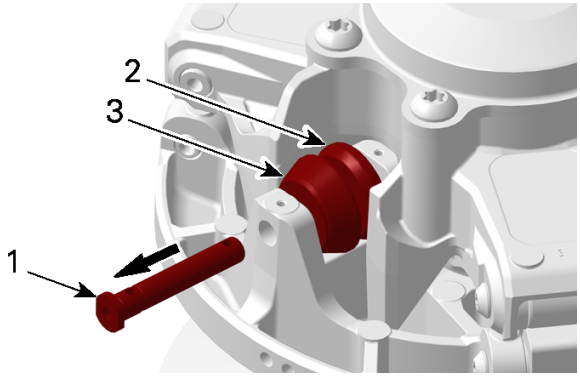

1. Bearing sleeve
2. Inner roller
3. Outer roller

Fixed Sheave

1. Remove following components from the fixed sheave.

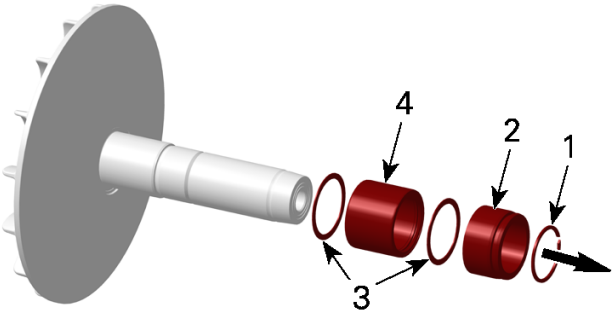

1. Snap ring
2. Stop sleeve
3. Washer
4. Hub bearing

Cleaning the Drive Pulley

NOTE: Parts must be at room temperature before cleaning.

1. Clean pulley sheaves and shaft with fine steel wool and dry cloth.
2. Using a paper towel and cleaner, clean the following components.

Clutch and pulley flange cleaner PRO S1

- Crankshaft tapered end
- Taper inside fixed sheave of drive pulley
- Crankshaft threads
- Retaining screw threads.

NOTICE
Avoid contact between cleaner and crankshaft seal because damage may occur.

3. Remove all hardened oil deposits that are baked on crankshaft and pulley tapered surfaces with coarse or medium steel wool and/or sand paper no. 600.

NOTICE
Do not use any other type of abrasive.

4. Reclean mounting surfaces with paper towel and cleaning solvent.
5. Wipe off the mounting surfaces with a clean, dry paper towel.

NOTICE
Mounting surfaces must be free of any oil, cleaner or towel residue.

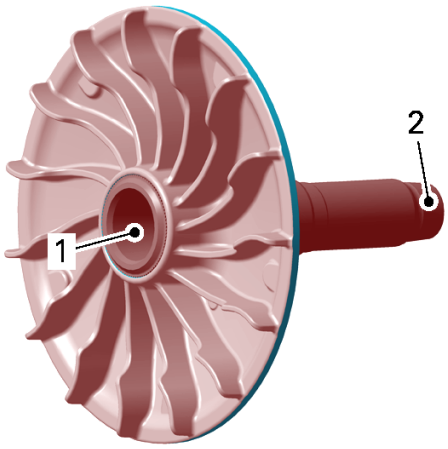

TYPICAL
1. Taper of fixed sheave, crankshaft side
2. Tapered end of fixed sheave shaft

6. Only use petrol base cleaner when cleaning bushings of sliding sheave.

NOTICE
Do not use acetone to clean bushings.

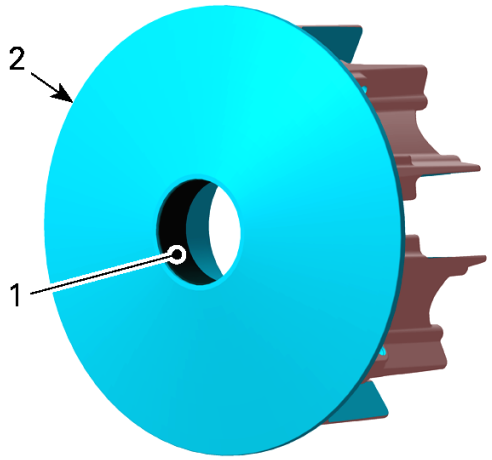

TYPICAL
1. *Bushing*
2. *Sliding sheave*

Inspecting the Drive Pulley

Governor Cup

1. Check governor cup for cracks or other visible damage. Replace if necessary.
2. Push out spring seat and spring support by hand.

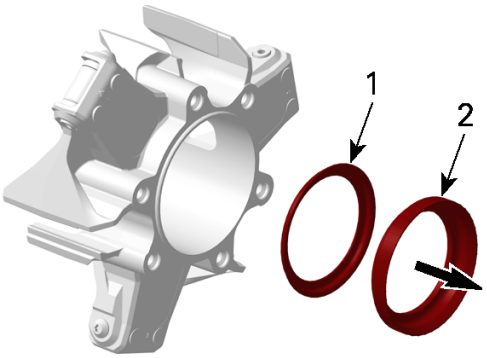

1. *Spring seat*
2. *Spring support*

3. Check spring seat and spring support for wear, cracks or other visible damage. Replace if necessary.
4. Reinstall spring seat and spring support by hand.

Thrust Roller Bearing Sleeve

1. Measure diameter of bearing sleeve in the area of the thrust roller running surface, replace if it is out of specification.

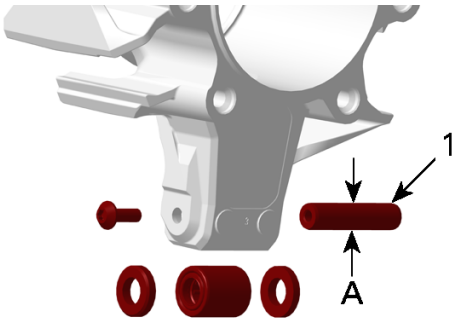

1. *Thrust roller bearing sleeve*
A. *Measure diameter here*

Thrust Roller Bearing Sleeve Diameter	
New	9.978 to 10.000 mm (.3928 to .3937 in)
Service limit	9.900 mm (.3898 in)

Thrust Roller

NOTICE
Whenever replacing thrust rollers, always replace all thrust rollers, thrust washers and bearing sleeves at the same time.

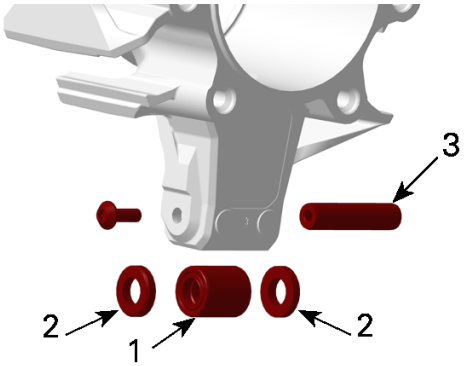

1. *Thrust roller assy.*
2. *Thrust washers*
3. *Bearing sleeve*

1. Check for:
   - Brittle, hard, worn or damaged oil seals
   - Wear or damages on the thrust roller
   - Flat spots or pittings on the needles.
2. If any of these damages appear, replace the thrust roller assy. as set if necessary.

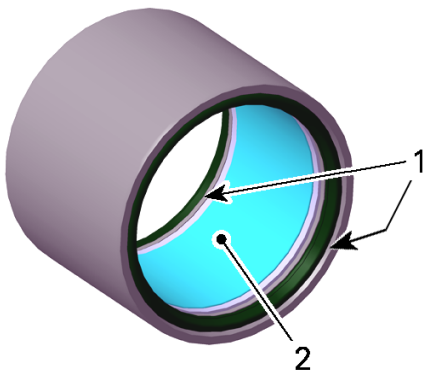

TYPICAL
1. *Oil seals*
2. *Needle bearing*

3. If necessary clean needle bearing, remove all the grease with a pulley cleaner or a brake cleaner and then renew lubrication.

Triple-guard grease	
Grease injector (P/N 529036376)	

NOTE: A threaded end is required on the grease gun for using the grease injector.

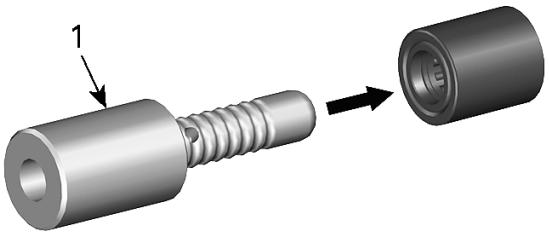

1. *Grease injector*

Roller Lever Bearing Sleeve

1. Measure diameter of bearing sleeve in the area of the roller lever running surface, replace if it is out of specification.

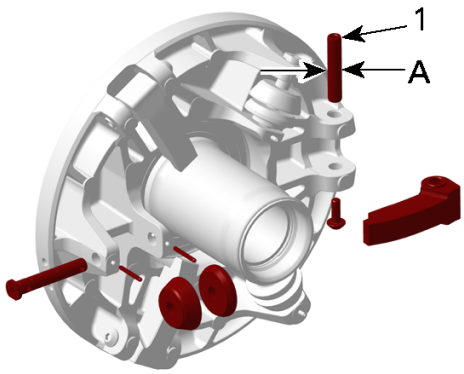

1. *Roller lever bearing sleeve*
A. *Measure diameter here*

Roller Lever Bearing Sleeve Diameter	
New	7.978 to 8.000 mm (.3141 to .315 in)
Service limit	7.900 mm (.311 in)

Roller Lever

1. Check bushing diameter in the centrifugal lever for wear. Replace centrifugal lever if necessary.

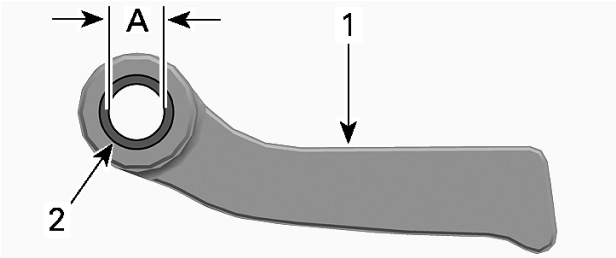

TYPICAL
1. *Roller lever*
2. *Bushing*
A. *Bushing inner diameter*

Roller Lever Bore Diameter	
New	8.02 to 8.08 mm (.3157 to .3181 in)
Service limit	8.20 mm (.323 in)

2. Replace roller levers together with bearing sleeves if the contact surfaces to thrust rollers and thrust surfaces to sliding sheave show heavy visible wear.

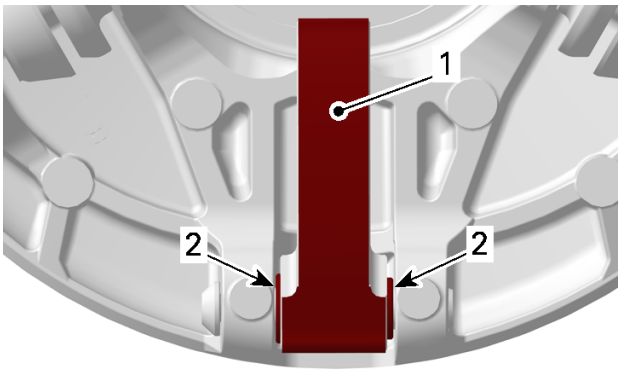

1. *Contact surface to thrust roller*
2. *Thrust surface to sliding sheave*

NOTICE

Whenever replacing roller levers, always replace all lever at the same time. Otherwise, unbalanced drive pulley will occur because of levers difference.

Roller Bearing Sleeve

1. Measure diameter of bearing sleeve in the area of the inner and outer roller running surface, replace if it is out of specification.

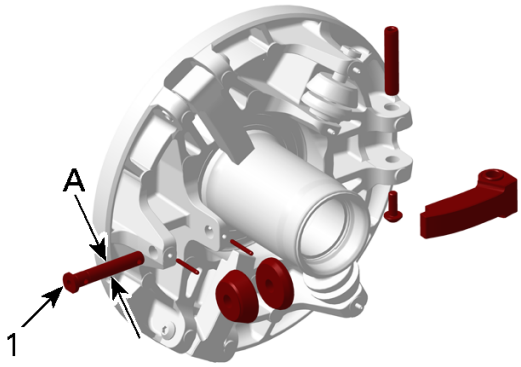

1. *Roller bearing sleeve*
A. *Measure diameter here*

Roller Bearing Sleeve Diameter	
New	7.978 to 8.000 mm (.3141 to .315 in)
Service limit	7.900 mm (.311 in)

Inner and Outer Roller

1. Check inner and outer rollers for cracks and excessive wear.

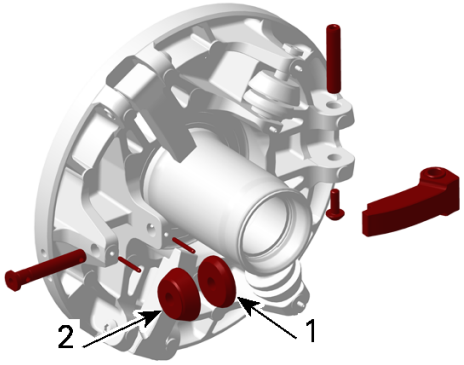

1. *Inner roller*
2. *Outer roller*

2. Check bore diameter of inner and outer roller for wear. Replace centrifugal lever if necessary.

NOTE: Worn bores are conical, measure for maximum bore diameter.

Inner Roller Bore Diameter	
New	8.01 to 8.03 mm (.3154 to .3161 in)
Service limit	8.15 mm (.3209 in)

Outer Roller Bore Diameter	
New	8.01 to 8.09 mm (.3154 to .3185 in)
Service limit	8.15 mm (.3209 in)

Sliding Sheave

1. Check sliding sheave for cracks and excessive wear. Replace sliding sheave if necessary.
2. Check dowel bores for wear. Replace sliding sheave if necessary.

NOTICE

The dowels must have a tight press fit in their bores in the sliding sheave, loosen dowels due to worn bores may cause severe CVT damage. Always replace dowels by new ones.

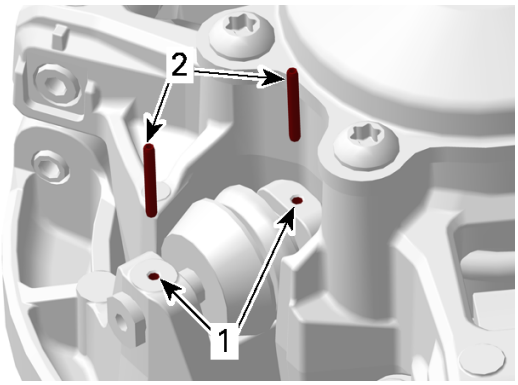

1. Dowel bores
2. Dowels

Dowel Bore Diameter	
New	2.38 to 2.46 mm (.0937 to .0969 in)
Service limit	2.50 mm (.0984 in)

3. Measure bushing diameters of sliding sheave.

Measuring Point
At least 5 mm (1/4 in) from bushing edge

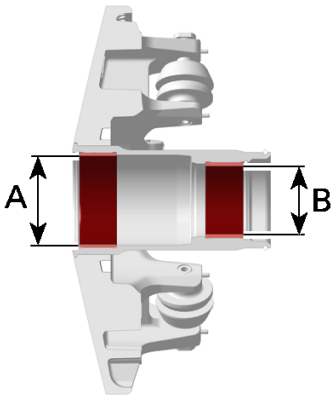

A. Sliding sheave large bushing
B. Sliding sheave small bushing

Sliding Sheave Large Bushing	
New	46.98 to 47.06 mm (1.8496 to 1.8528 in)
Service limit	47.09 mm (1.8539 in)

Sliding Sheave Small Bushing	
New	35.94 to 36.095 mm (1.415 to 1.4211 in)
Service limit	36.125 mm (1.4222 in)

4. Replace sliding sheave if one of the bushings is out of specification.

Spring, Spring Support, Spring Seat and Torque Flange

1. Check spring, spring support, spring seat and torque flange for wear, cracks or other visible damage. Replace if necessary.

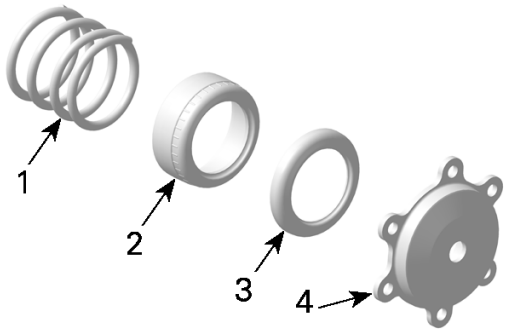

1. Spring
2. Spring support
3. Spring seat
4. Torque flange

Fixed Sheave

1. Check:
   - Fixed sheave contact surface to the torque flange for scratches or other damages
   - Fixed sheave plate for marks or scratches.
2. Replace fixed sheave if required.
3. Check fixed sheave contact surface with the hub for discoloration, polished area or pitting. If so, the hub needs to be replaced.

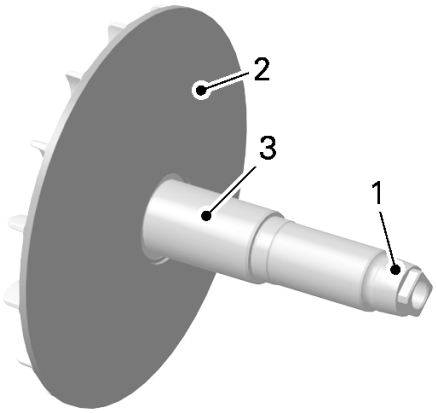

TYPICAL
1. Contact surface to torque flange
2. Sheave plate
3. Contact surface with hub bearing.

Hub Bearing

Physical Hub Bearing Inspection

1. Check for:
   - Brittle, hard or damaged seals
   - Discoloration on the edges of the bearing
   - Corrosion on the needles and/or the outer ring
   - Flat spots on the needles.
2. If any of these damages appear, replace the hub bearing.

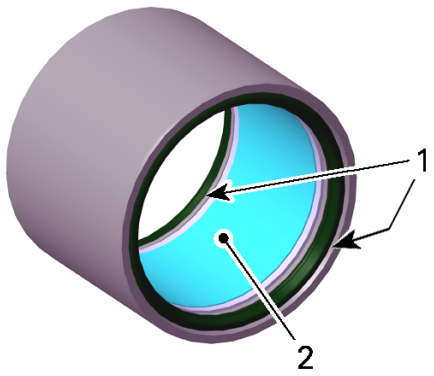

1. *Oil seals*
2. *Needle bearing*

Checking the Hub Bearing Operation

1. Bring engine to operating temperature.
2. Switch to 2WD.
3. Shift lever to “H”.
4. Stop engine.
5. Remove CVT cover.
6. Lift and support rear end of the vehicle so the wheels clear the ground.
7. Start engine and let run at idle speed.
8. Look at the driven pulley if it is turning or not.
   1. If turning, inspect drive pulley hub bearing. Refer to *Inspecting the Drive Pulley* in this subsection.
   2. If not turning, the hub bearing is ok.

Assembling the Drive Pulley

The assembly is the reverse of the disassembly procedure. However, pay attention to following.

Hub Bearing

1. Thoroughly clean the bearing. Remove all the grease with a pulley cleaner or a brake cleaner.

Clutch and pulley flange cleaner PRO S1

2. Dry the inside of the bearing with compressed air.
3. Apply grease in the middle of needles (1 g (.035 oz)).

Isoflex Grease Topas NB 5051

NOTICE
Do not use any other type of grease.

NOTE: All the content of the pouch is required.

Keep seals free of grease.

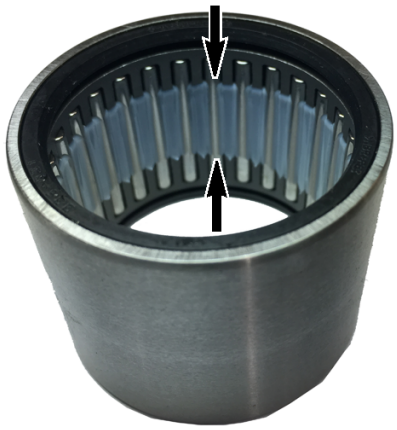

4. Spin the needles until grease is spread evenly.
5. Put the bearing back on the shaft.
6. Spray cleaner on a clean rag to wipe grease excess on the shaft and the pulley sheaves.

NOTE: New hub bearing comes with appropriate grease and quantity of grease.

When CVT is reassemble repeat step 1 to 7 from *Checking the Hub Bearing Operation* in *Maintenance* in this subsection.

1. If the driven pulley is turning, **replace** the hub bearing.
2. If the driven pulley is not turning, the hub bearing is ok.

Inner and Outer Rollers

1. Position rollers as illustrated.

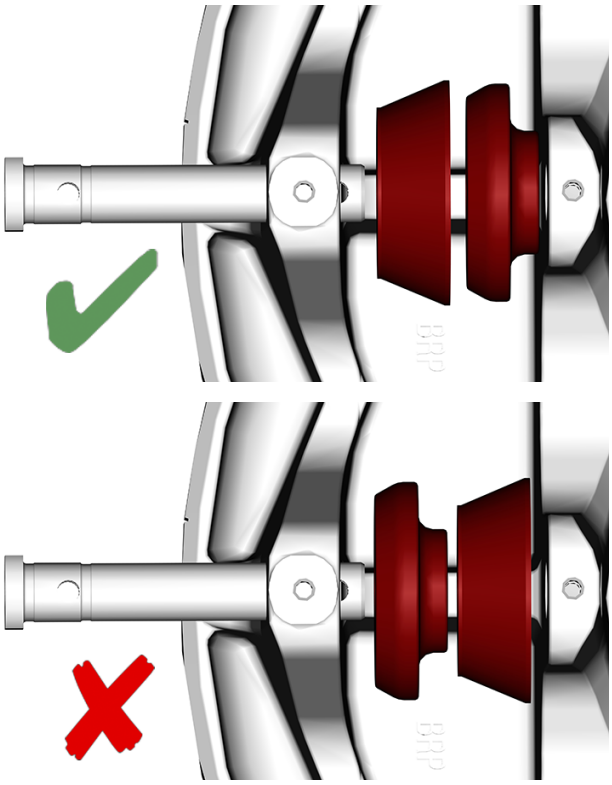

2. Position the flat sides of the bearing sleeve head vertically.
3. Use a C vise clamp to push the bearing sleeve back in place.
4. Install new dowels.

NOTICE
The dowels must have a tight press fit in their bores in the sliding sheave, loosen dowels due to worn bores may cause severe CVT damage. Always replace dowels by new ones.

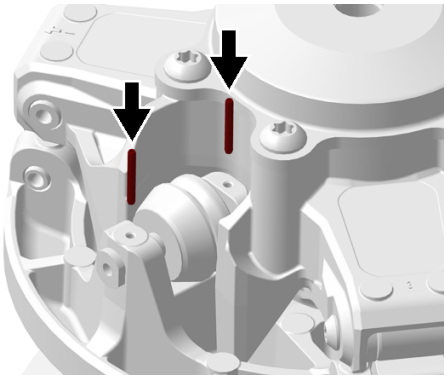

Roller Lever

1. Install the roller lever on the sliding sheave.

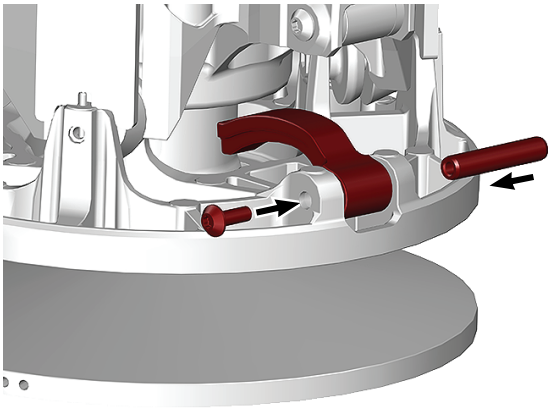

TYPICAL

2. Apply a drop of threadlocker on the threads of the bearing sleeve retaining screw.

Loctite 243 (blue)

3. Tighten the bearing sleeve retaining screw.

Tightening Torque	
Bearing sleeve retaining screw	5 ± 0.5 Nm (44 ± 4 lbf-in)

Thrust Roller

1. Lubricate the needle bearing if necessary, refer to *Thrust Roller* in this subsection.
2. Install thrust roller.

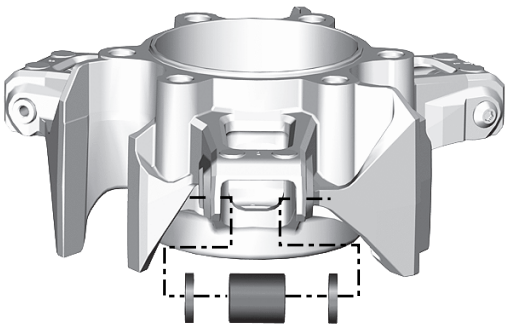

TYPICAL

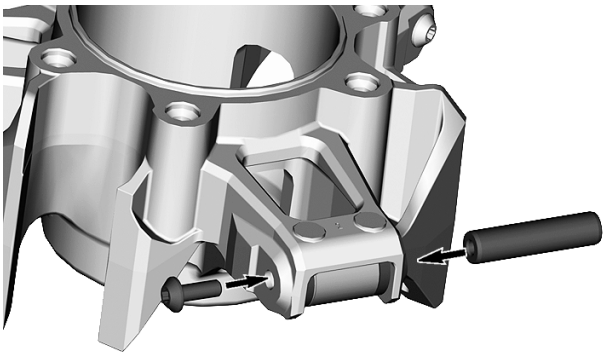

TYPICAL

3. Apply a drop of threadlocker on threads of the bearing sleeve retaining screw.

Loctite 243 (blue)

4. Tighten the bearing sleeve retaining screw to specification.

Tightening Torque	
Bearing sleeve retaining screw	5 ± 0.5 Nm (44 ± 4 lbf-in)

Governor Cup

1. Install the governor cup on the sliding sheave by aligning the indexing marks.
   - Governor cup- the arrow on the arms #1, just above the thrust roller.
   - Sliding sheave - the #1 below the roller lever.

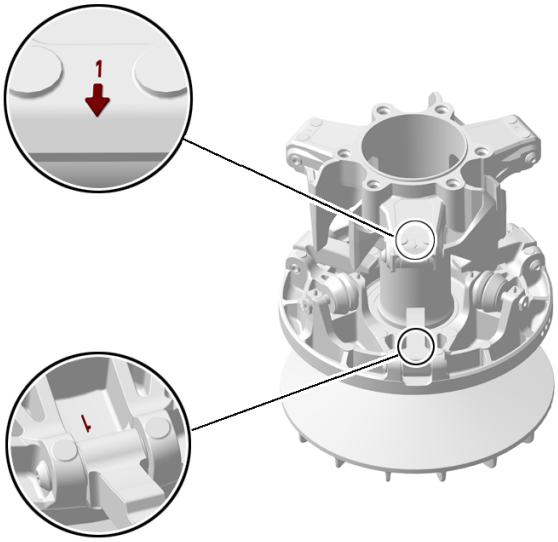

NOTICE

During installation of the governor cup, make sure to correctly position all inner and outer thrust rollers. Ensure the inner thrust rollers are positioned inside the sliding tracks of the governor cup.

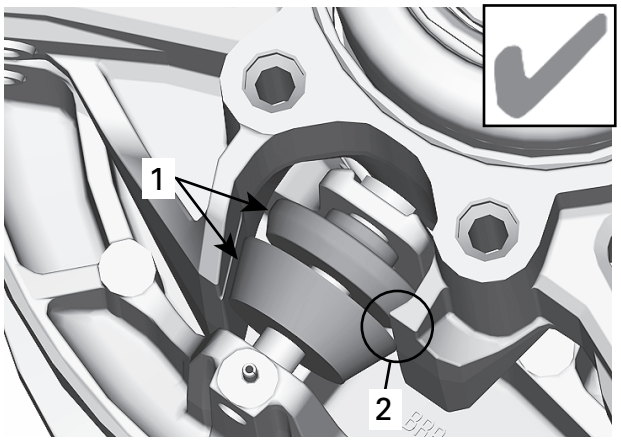

THRUST ROLLER - GOOD INSTALLATION
1. Thrust rollers
2. Inner thrust roller inside sliding track

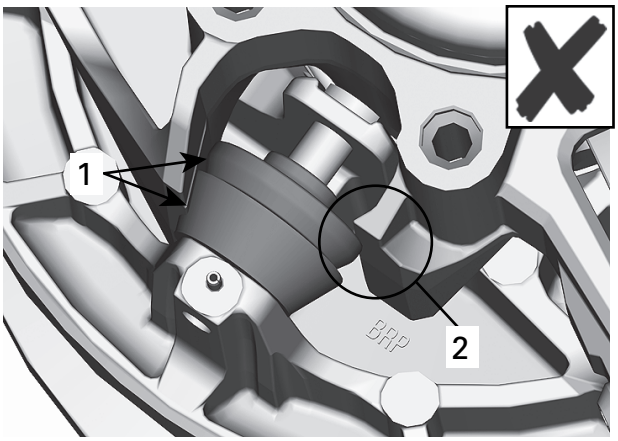

THRUST ROLLER - WRONG INSTALLATION
1. *Thrust rollers*
2. *Inner thrust roller outside sliding track*

NOTICE

Ensure the roller levers are correctly positioned inside the openings of the governor cup.

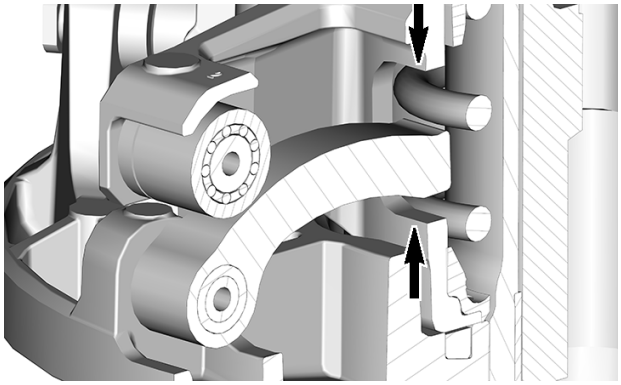

ROLLER LEVER POSITIONING

Torque Flange

1. Install torque flange and tighten retaining screws to following sequence and specification.

TYPICAL

2. Apply a drop of threadlocker on threads of the torque flange retaining screws.

Loctite 648 (green)

3. Tighten the torque flange retaining screws to specification.

Tightening Torque	
Torque flange retaining screws	32 ± 3 Nm (24 ± 2 lbf-ft)

Installing the Drive Pulley

The installation is the reverse of the removal procedure. However, pay attention to following.

1. Clean mounting surfaces, refer to *cleaning the drive pulley* above.

NOTICE

Do not apply antiseize or any lubricant on crankshaft and drive pulley tapers.

2. Install drive pulley on crankshaft end.
3. Install a **NEW** conical spring washer with its concave side towards drive pulley.
4. Install drive pulley bolt.

NOTICE

Always use BRP genuine parts for conical spring washer and bolt.

5. Secure the drive pulley with the clutch holder.

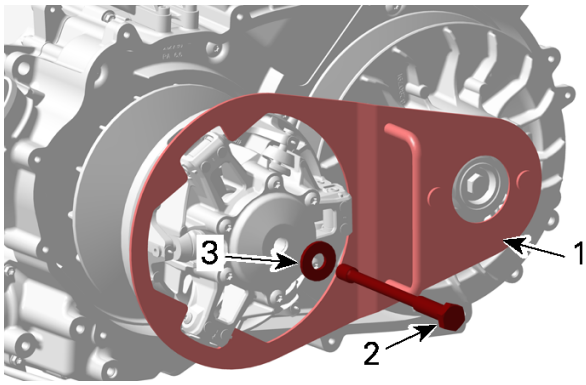

1. *Clutch holder*
2. *Drive pulley bolt*
3. *Conical spring washer*

6. Using a torque wrench, tighten the drive pulley bolt to specified torque.

Tightening Torque	
Drive pulley bolt	120 ± 8 Nm (89 ± 6 lbf-ft)

Driven Pulley

SERVICE TOOLS

Description	Part Number	Page
CIRCLIP TOOL	(P/N 529036542)	111
CLUTCH HOLDER	(P/N 529036559)	108–109, 125, 131
DDS DISASSEMBLY KIT	(P/N 529036548)	127, 129
DRIVE PULLEY OPENING TOOL	(P/N 529036378)	113
DRIVE PULLEY PULLER	(P/N 529000064)	108–109
DRIVE PULLEY SUPPORT	(P/N 529036371)	109, 113
GOVERNOR CUP REMOVER	(P/N 529036546)	110
GREASE INJECTOR	(P/N 529036376)	117
PULLER/LOCKING TOOL	(P/N 529036098)	106, 125
PULLEY SPRING COMPRESSOR TOOL	(P/N 529036545)	110, 113
REMOVING AXLE TOOL	(P/N 529036372)	112–114
ROLLER AXLE PULLER	(P/N 529036557)	115

SERVICE PRODUCTS

Description	Part Number	Page
CLUTCH AND PULLEY FLANGE CLEANER PRO S1		115, 120, 128
ISOFLEX GREASE TOPAS NB 5051		120
LOCTITE 243 (BLUE)		121–122, 127
LOCTITE 648 (GREEN)		123
TRIPLE-GUARD GREASE		117
XPS BRAKES AND PARTS CLEANER		131

Removing the Driven Pulley

1. Remove:
   - CVT cover
   - Drive belt.
2. Install the clutch holder.

Clutch Holder (P/N 529036559)	

3. Remove:
   - Driven pulley screw (discard it)
   - Collar washer.

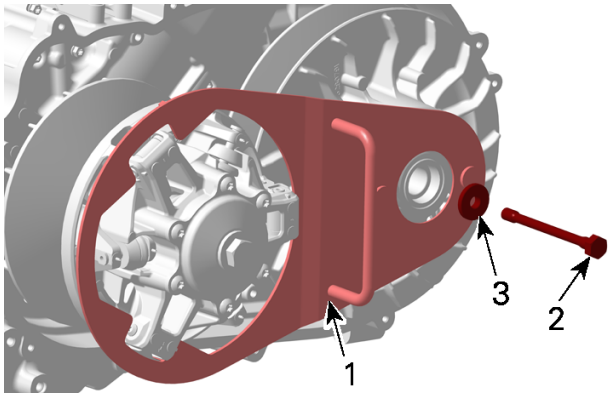

1. Clutch holder
2. Driven pulley screw (discard)
3. Collar washer

4. Install the puller/locking tool instead of the driven pulley screw.

Puller/locking tool (P/N 529036098)	

5. Tighten the puller to disengage the driven pulley.
6. Remove the clutch holder.

7. Pull the driven pulley out of the vehicle.

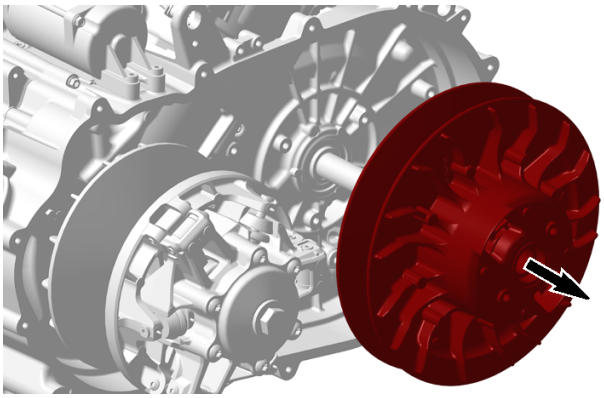

8. Remove distance ring with O-ring from countershaft, replace O-ring if brittle, hard or damaged.

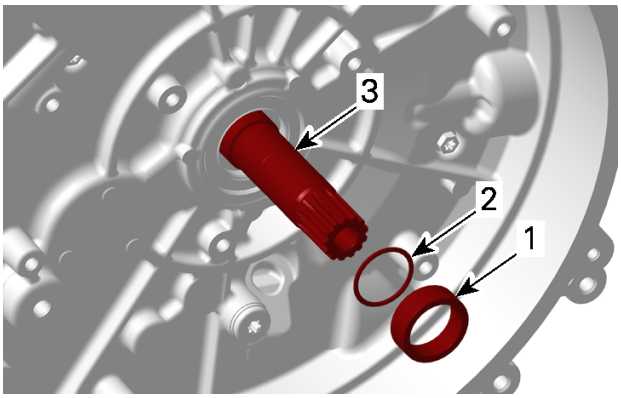

1. Distance ring
2. O-ring
3. Counter shaft

Slide Shoe

Inspecting the Slide Shoe

1. Check slide shoes for visible damage and measure for wear, replace slide shoes if their contact surfaces have reached half of the ring-shaped plateau on the top.

Ring-Shaped Plateau on Top of Slider Shoe	
New	0.8 mm (.031 in)
Service limit	0.4 mm (.016 in)

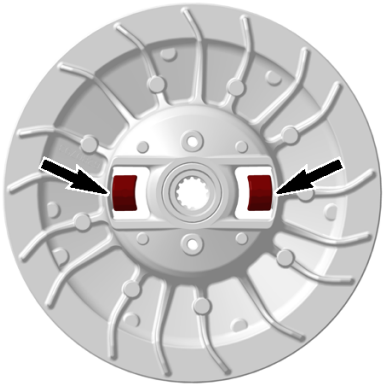

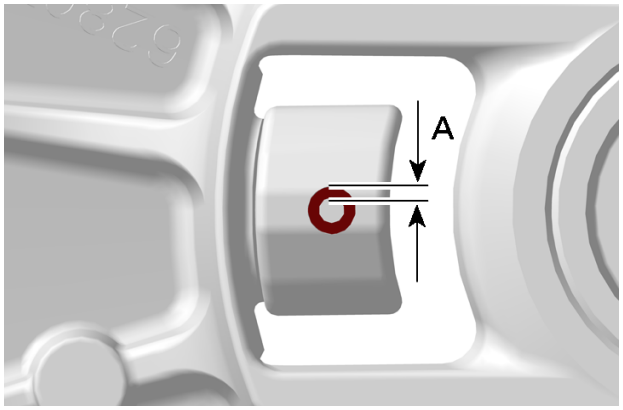

A. New ring-shaped plateau

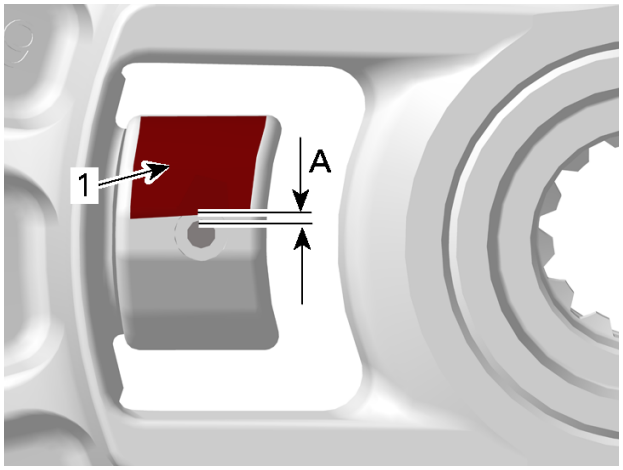

1. Wear on contact surface
A. Service limit - ring-shaped plateau

Removing the Slide Shoe

NOTICE

The driven pulley must not be disassembled for removing the slide shoes.

1. Remove slide shoe retaining screw and push out slide shoe from its seat in the fixed sheave.

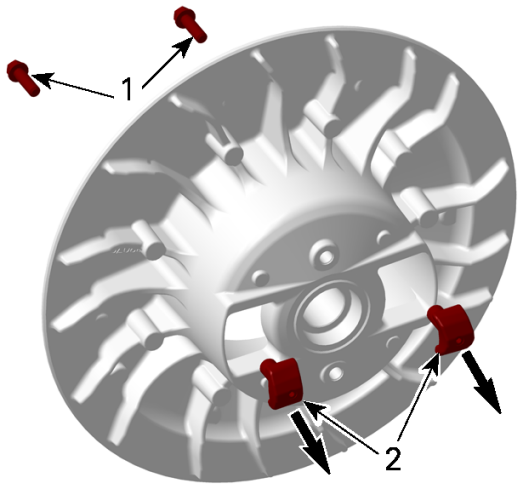

1. *Slide shoe retaining screws*
2. *Slide shoes*

NOTE: In single cases the slide shoe retaining screw cannot be removed if the slide shoe bushing is loose in the plastic slide piece. If so break off the plastic slide piece by using a chisel. Then hold the slide shoe bushing with a pliers while removing the slide shoe retaining screw.

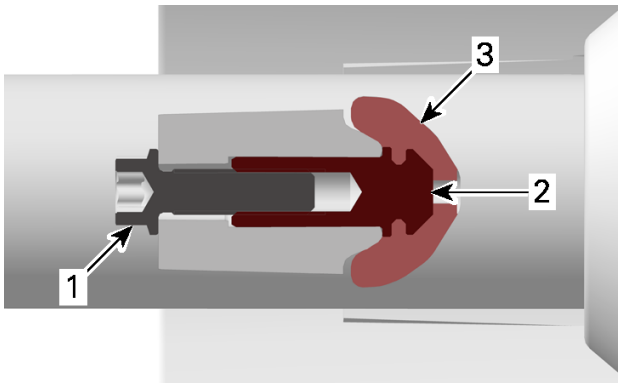

1. *Slide shoe retaining screw*
2. *Slide shoe bushing*
3. *Plastic slide piece*

Installing the Slide Shoe

1. Insert slide shoe into its bore in the fixed sheave with concave surface towards outside.

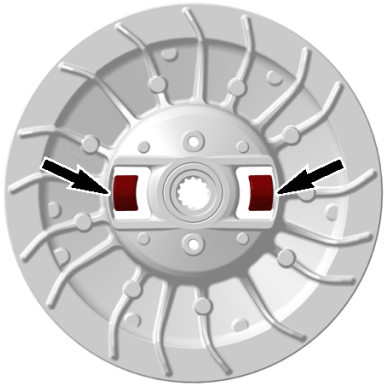

CONCAVE SURFACE TOWARDS OUTSIDE

2. Apply a drop of threadlocker on threads of the slide shoe retaining screw.

Loctite 243 (blue)

3. Tighten slide shoe retaining screw to specification.

Tightening Torque	
Slide shoe retaining screws	6 ± 0.6 Nm (53 ± 5 lbf-in)

Disassembling the Driven Pulley

Removing the Spring and Sheaves

To remove the spring, always use the following tools.

⚠ WARNING
The sheaves are under high clutch spring preload. Never attempt to remove the sheaves without the recommended tools.

1. Install the driven pulley on the spring compressor tool.

DDS Disassembly Kit (P/N 529036548)	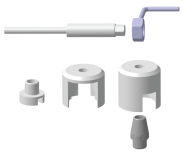

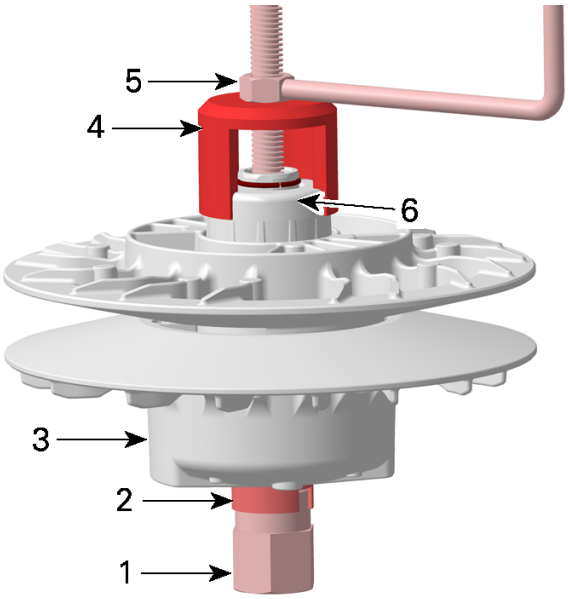

TYPICAL
1. *Pulley spring compressor tool*
2. *Driven pulley spacer*
3. *Driven pulley*
4. *Circlip remover*
5. *Handle*
6. *Spring seat*

   1. Secure the spring compressor tool rod in a vice.
   2. Install the driven pulley spacer, the driven pulley (with the fixed sheave towards the vice), the circlip remover and the handle.
   3. Screw in the handle until the spring seat is pushed down approx. 5 mm.
2. Remove the retaining ring by using an appropriate circlip pliers and screwdriver, discard the retaining ring.

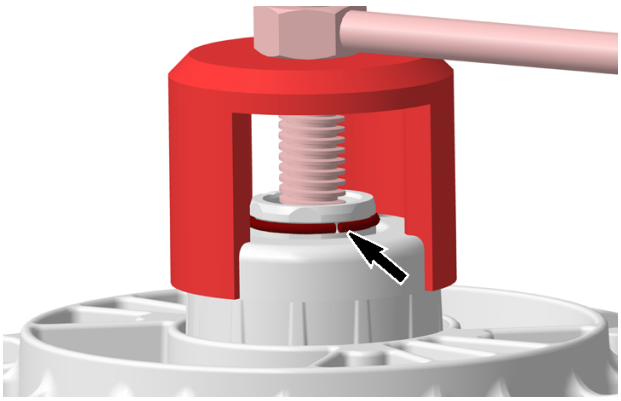

RETAINING RING (DISCARD IT)

3. Remove the handle and then remove all driven pulley parts from the spring compressor tool.

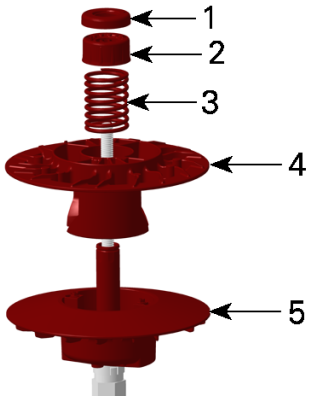

1. *Spring seat*
2. *Spring support*
3. *Spring*
4. *Sliding sheave*
5. *Fixed sheave*

Cleaning the Driven Pulley

1. Use cleaner and a clean rag to clean pulley sheaves and shaft.

Clutch and pulley flange cleaner PRO S1

2. Using a paper towel with cleaning solvent to clean counter shaft end and the inside of the shaft.

Inspecting the Driven Pulley

Sliding Sheave

1. Inspect pulley sheave for marks,, scratches or cracks.
2. Verify all contact surfaces of slide shoe for visible damages and wear.

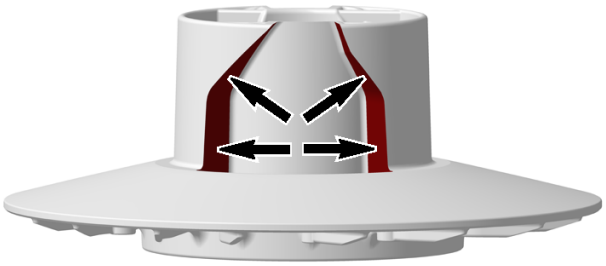

3. Check bushings for cracks, scratches and for free movement when assembled to fixed sheave.
4. Ensure circlips properly lock the inner bushings. Replace part if necessary.
5. Measure the inner diameter of sliding sheave bushing.

Measuring Point
At least 5 mm (1/4 in) from bushing edge

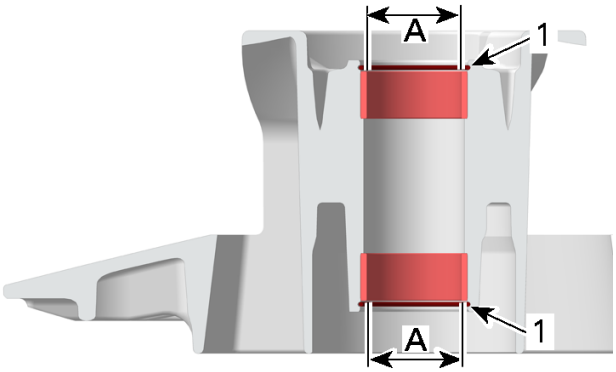

1. Circlip
A. Inner diameter of sliding sheave bushing

Driven Pulley Sliding Sheave Bushing	
New	30.01 to 30.135 mm (1.1815 to 1.1864 in)
Service limit	30.200 mm (1.189 in)

6. Replace the sliding sheave if the inner diameter of bushing is out of specification.

Fixed Sheave

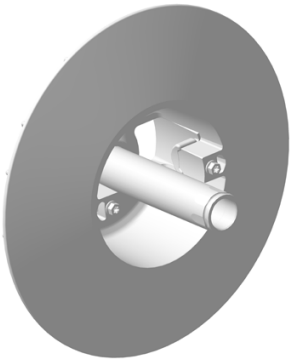

Inspect slide shoes, refer to *slide shoe* in this subsection.

1. Replace fixed sheave and counter shaft if one of the following problem is detected:
   - Marks or scratches on pulley sheave
   - Bent, twisted or otherwise damaged counter shaft
   - Defective splines and threads at the end of counter shaft.

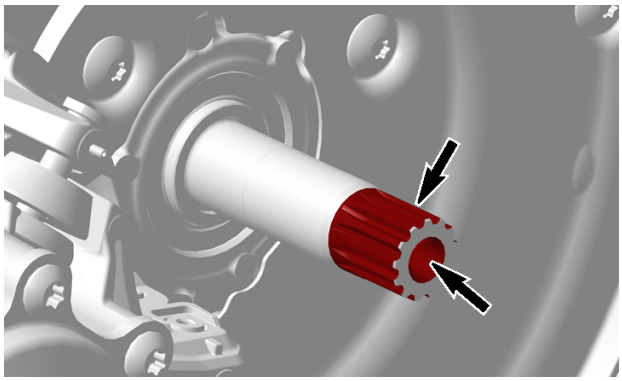

Spring, Spring Support and Spring Seat

1. Check spring, spring support and spring seat for wear, cracks or other visible damage. Replace if necessary.

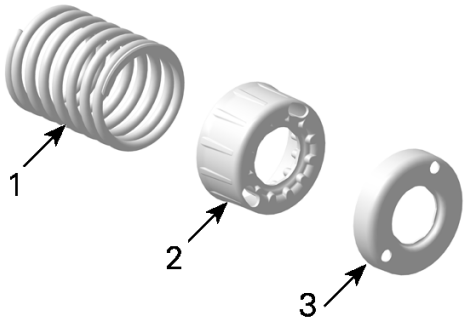

1. Spring
2. Spring support
3. Spring seat

Assembling the Driven Pulley

Assembling the Sheaves

For assembling the driven pulley always use the following tools.

⚠ WARNING
The sheaves are under high clutch spring preload. Never attempt to remove the sheaves without the recommended tools.

1. Secure the spring compressor tool rod in a vice and install the driven pulley spacer.

DDS Disassembly Kit (P/N 529036548)	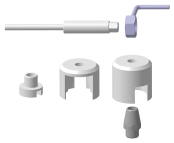

2. Install the fixed sheave and sliding sheave on the spring compressor tool.

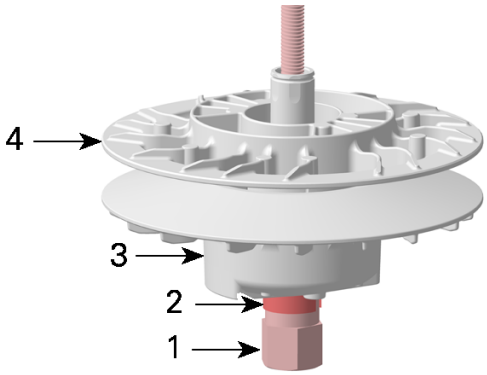

1. *Pulley spring compressor tool*
2. *Driven pulley spacer*
3. *Fixed sheave*
4. *Sliding sheave*

3. Center both holes of the spring seat with the long holes of the spring support while assembling the spring support into the spring seat

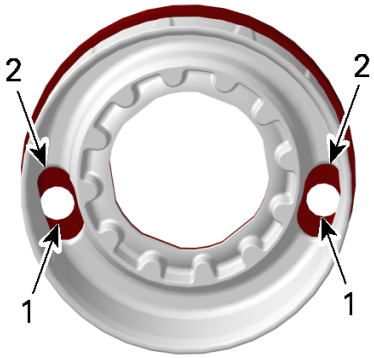

1. *Holes of spring seat*
2. *Long holes of spring support*

4. Insert the centering pin into the bore of the fixed sheave shaft, align the hexagon of the centering pin with the hexagon of the shaft.

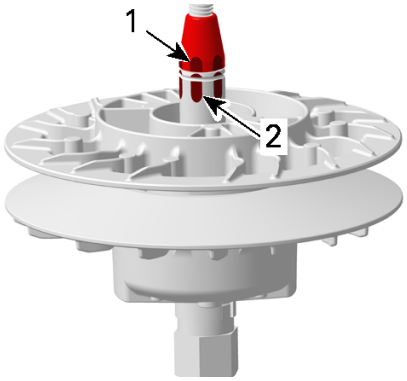

1. *Hexagon of centering pin*
2. *Hexagon of fixed sheave shaft*

5. Align the hexagon and install spring seat with spring support onto the fixed sheave shaft, mark the parts in-line and then remove them again.

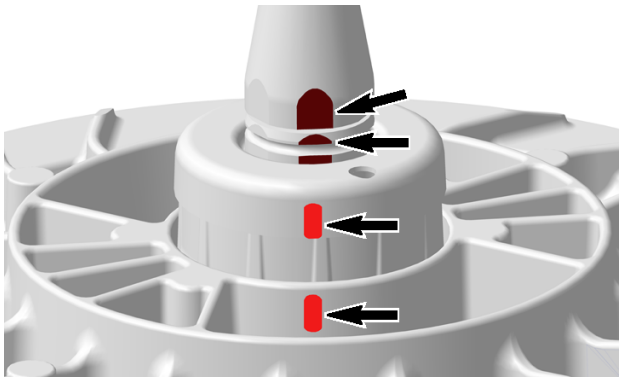

6. Install:
   - Spring
   - Spring seat with spring support
   - **NEW** retaining ring
   - Circlip installer
   - Handle.
7. Before tightening the handle, align the marks and align the open ends of the retaining ring with the marks.

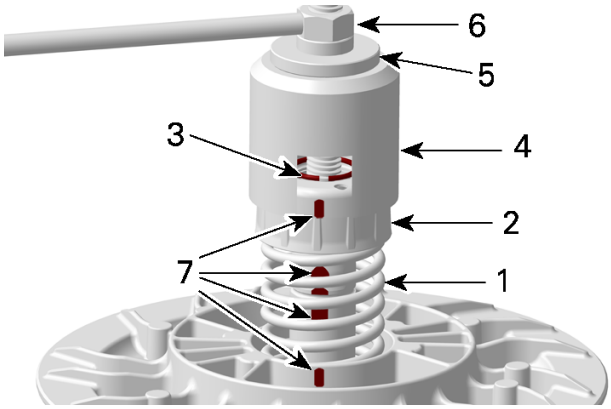

1. *Spring*
2. *Spring seat with spring support*
3. ***NEW** retaining ring, open ends aligned with marks*
4. *Circlip installer*
5. *Step washer*
6. *Handle*
7. *Align marks*

8. Tighten the handle until the retaining ring is completely inserted in its groove in the fixed sheave shaft.

NOTE: While turning the handle take care the marks remain aligned and the hexagon of the spring seat with spring support are aligned with the hexagon of the fixed sheave shaft.

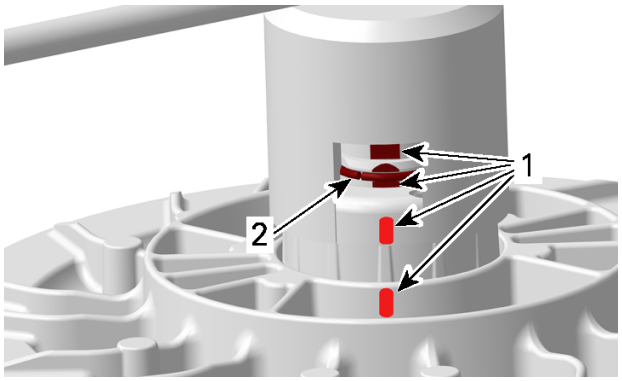

1. *Marks in-line*
2. *Retaining ring inserted in fixed sheave shaft groove*

9. Remove the driven pulley from the tool.

Installing the Driven Pulley

The installation is the reverse of the removal procedure. However, pay attention to the following.

NOTICE
This assembly uses a stretch screw. Always install a NEW screw.

1. Clean threads of gearbox counter shaft and **NEW** driven pulley screw.

XPS Brakes and Parts cleaner	

NOTICE
Threads must be free of oil and grease. Lubricants in threads will create too high preload to tightened driven pulley screw.

2. Place O-ring on counter shaft splines and move it with distance ring in end position.

NOTICE
Stepped side of the distance ring must face towards engine side.

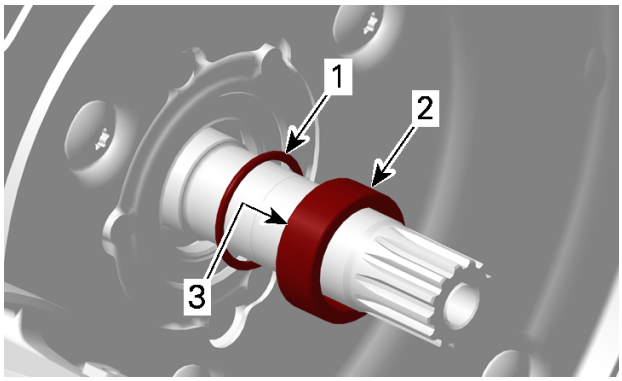

1. *O-ring*
2. *Distance ring*
3. *Stepped side of distance ring*

3. Install the driven pulley onto the counter shaft. Make sure to align splines.
4. Install driven pulley screw with thrust washer.

NOTICE
The step of the thrust washer must face towards engine side.

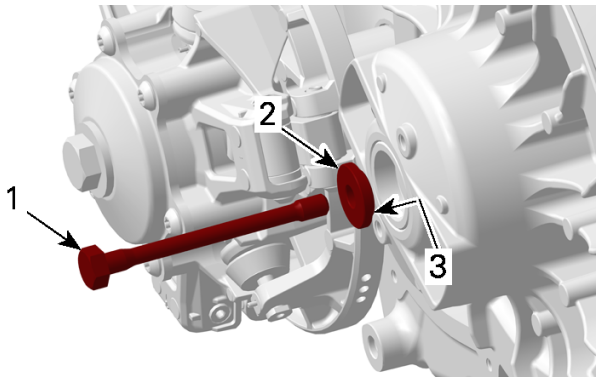

1. *Driven pulley screw*
2. *Thrust washer*
3. *Step of thrust washer*

5. Install the clutch holder.

Clutch Holder (P/N 529036559)	

6. Tighten driven pulley screw as specified.

Tightening Torque		
Driven pulley screw	STEP 1	20 ± 1 Nm (15 ± 1 lbf-ft)
	STEP 2	180 ± 5 ° (180 ± 5 °)

7. Remove the clutch holder.

8. Install drive belt, refer to *Drive Belt* in this subsection.

CVT Air Guide

Removing the CVT Air Guide

1. Remove:
   - *drive pulley*
   - *driven pulley*.
2. Unscrew the clamp retaining the CVT air hose.
3. Remove the retaining screws and CVT air guide.

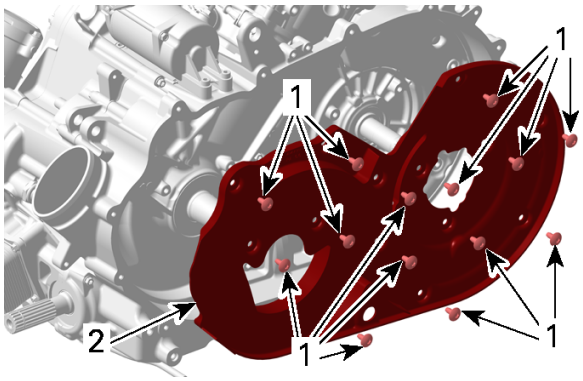

1. Retaining screws
2. CVT air guide

Inspecting the CVT Air Guide

1. Clean CVT air guide from contamination and check for cracks or other damages, replace if necessary.

Installing the CVT Air Guide

The installation is the reverse of the removal procedure. However, pay attention to the following.

1. Tighten the CVT air guide retaining screws as per following sequence and specification.

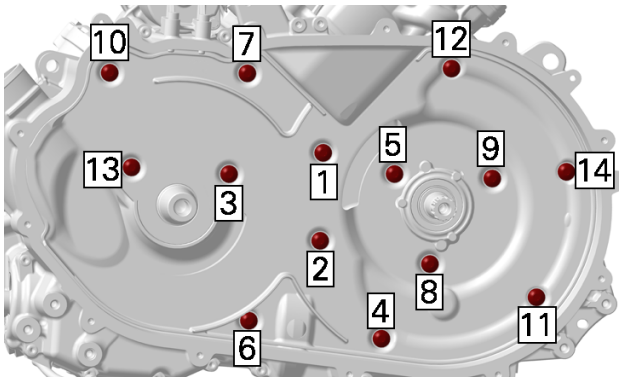

Tightening Torque		
CVT air guide retaining screws	New crankcase	12 ± 1 Nm (106 ± 9 lbf-in)
	Reused crankcase	10 ± 1 Nm (89 ± 9 lbf-in) + Loctite 243 (blue) (P/N 293 800 060)

Notes

Technician's Notes

Related Documents

Bulletins	

Instruction Sheets	

Other	

GEARBOX

03 Gearbox

Exploded Views

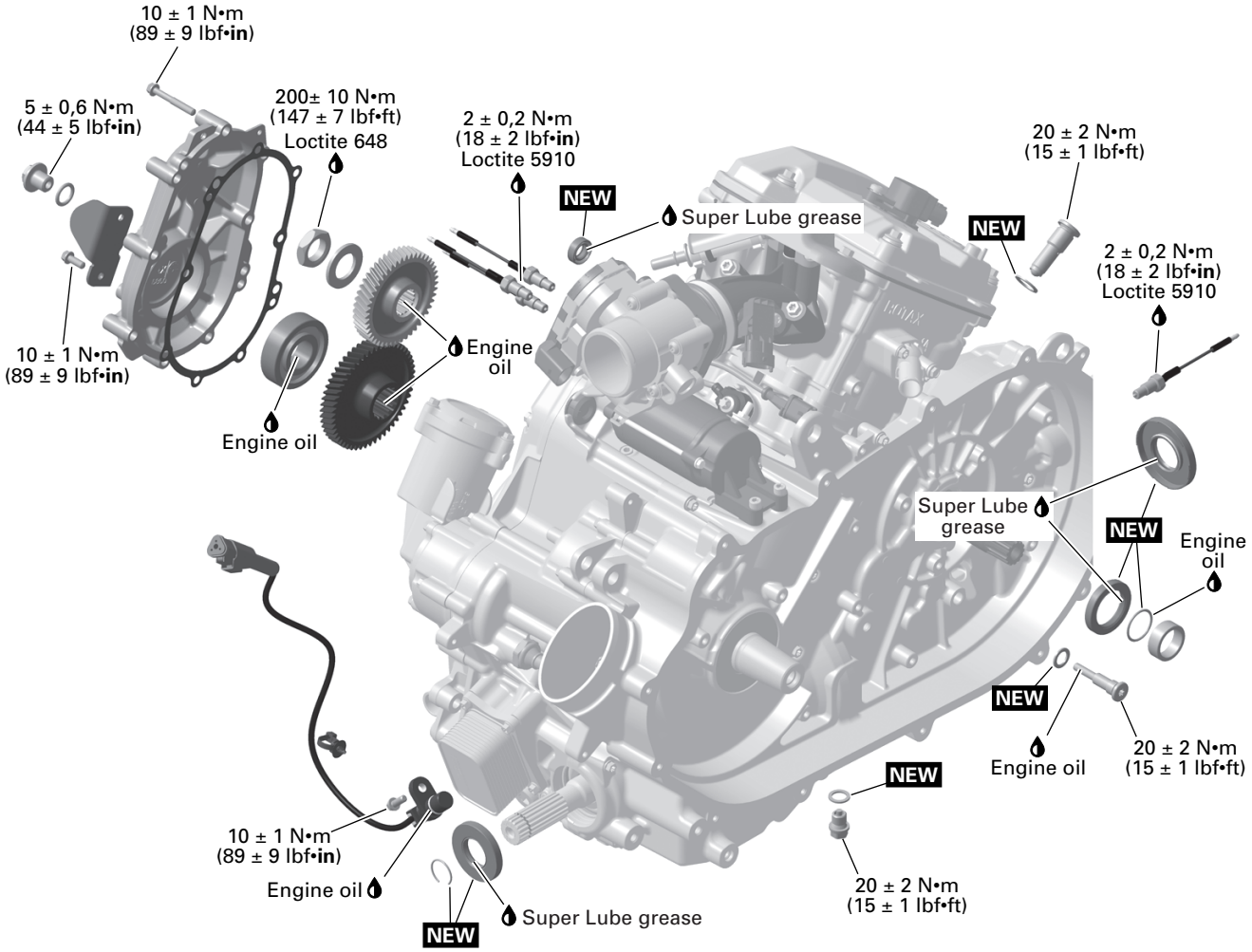

NEW = Component must be replaced when removed.

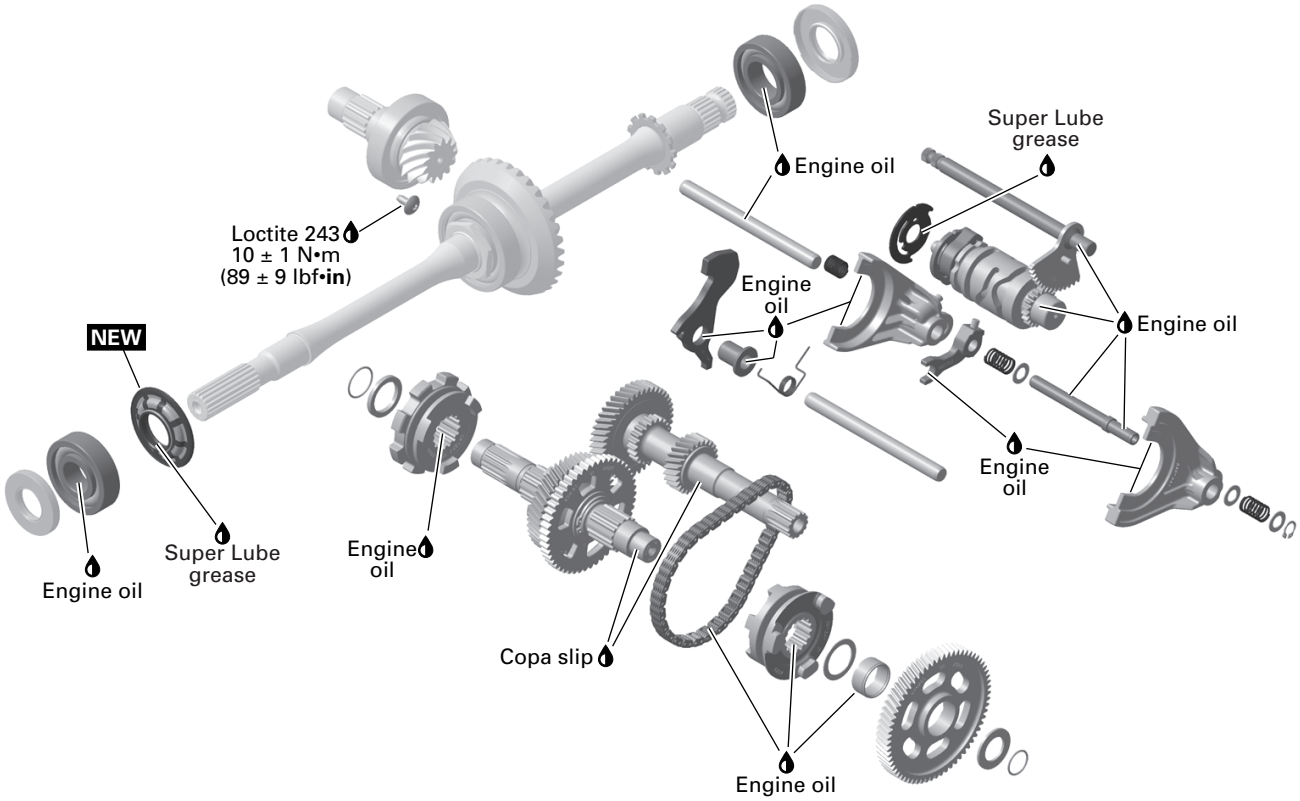

NEW = Component must be replaced when removed.

Gearbox Oil

Recommended Gearbox Oil

XPS Recommended Gearbox Oil
75W140 synthetic gear oil
Alternative if XPS product is not available
75W140 API GL-5 synthetic gear oil

NOTICE

Never use another type of oil when servicing.

The XPS oil is specially formulated to meet the lubrication requirements of this gearbox. BRP strongly recommends the use of its XPS oil.

Verifying the Gearbox Oil Level

1. Place the vehicle on a level surface.
2. ***All models except models with a HD7 engine***
3. Through the right rear wheel arch, remove the voltage/regulator support from the frame and move it aside to make room.

NOTE: The removal of the wheel is not necessary but its removal will create more room to work.

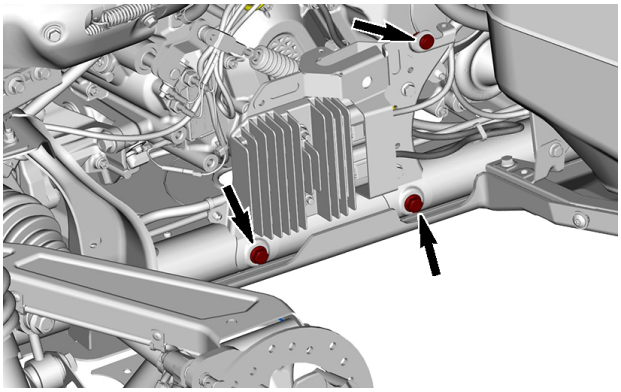

VOLTAGE/REGULATOR SUPPORT SCREWS

4. ***All models***
5. Remove the gearbox oil level plug.

   The oil should be in level with the bottom of the oil level hole.

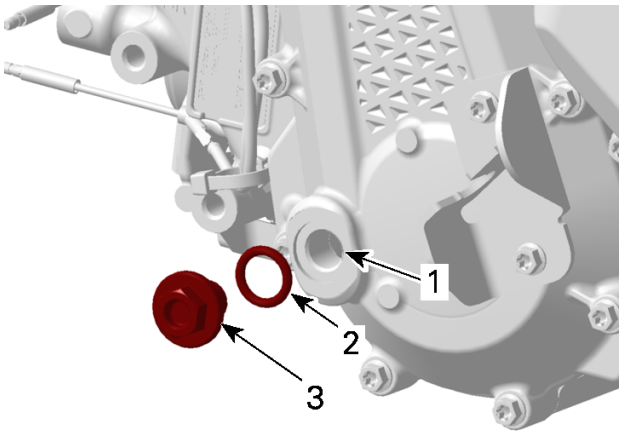

1. *Oil level hole*
2. *O-ring*
3. *Oil level plug*

NOTICE

Operating the gearbox with an improper oil level may severely damage gearbox.

6. Add recommended oil if required.
7. Install the oil level plug with O-ring. Tighten plug as per specification.

Tightening Torque	
Oil level plug	5 ± 0.6 Nm (44 ± 5 lbf-in)

Draining the Gearbox Oil

1. Start engine and operate vehicle to warm-up the gearbox oil.

NOTE: Running engine at idle is not sufficient, vehicle transmission must be operated.

2. Position vehicle on a level surface.
3. Place a drain pan under the gearbox drain plug area.
4. Clean drain plug area.
5. Remove oil level plug and O-ring.

⚠ WARNING

The gearbox oil can be very hot.

6. Remove magnetic drain plug and sealing washer. Discard sealing washer.

NOTE: Allow oil to completely flow out of gearbox.

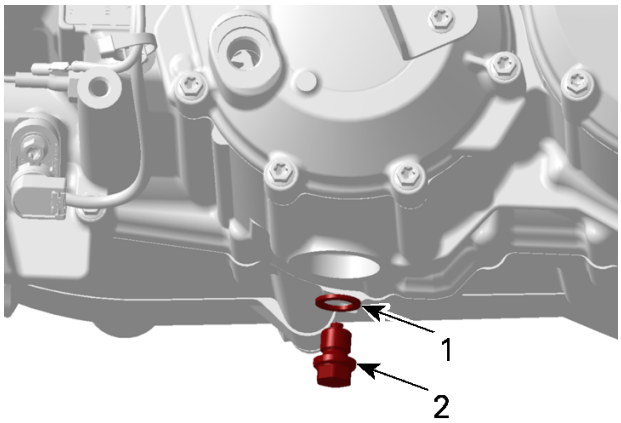

TYPICAL
1. Magnetic drain plug
2. Seal ring

7. Clean magnetic drain plug and pay attention to any debris present on drain plug.

NOTE: Presence of excessive debris provides an indication of a gearbox problem.

8. Remove and clean the VSS. Refer to *vehicle speed sensor (vss)* in this subsection.
9. Reinstall magnetic drain plug with a **NEW** sealing washer.

Tightening Torque	
Magnetic drain plug	20 ± 2 Nm (15 ± 1 lbf-ft)

10. Dispose gearbox oil as per your local environmental regulations.

Filling the Gearbox Oil

1. Fill the gearbox through the oil level hole until the oil reaches the bottom of the oil level hole.
2. Install the oil level plug with O-ring. Refer to *Verifying the Gearbox Oil Level* in this subsection.

Vehicle Speed Sensor (VSS)

SERVICE PRODUCTS

Description	Part Number	Page
BRAKE AND PARTS CLEANER PRO S2		151
COPASLIP		154
LOCTITE 243 (BLUE)		151
LOCTITE 5910		158
LOCTITE 648 (GREEN)		143
SUPER LUBE GREASE		141, 151

VSS Location

The vehicle speed sensor is located on the rear side of the engine, beside the intermediate drive.

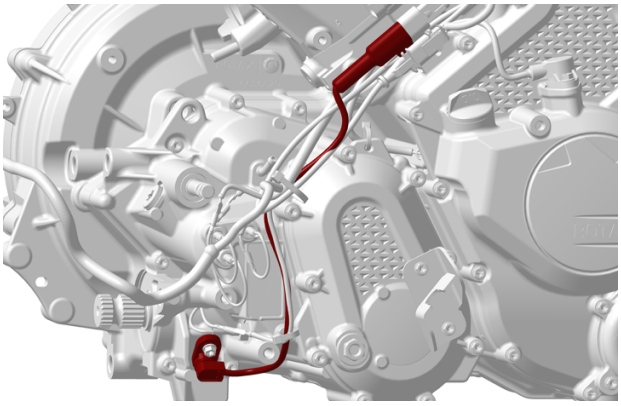

VSS Wire Identification

Function	Pin	Color Sensor Connector	Color Wiring Harness Connector
12-volt input from Injector fuse	A	RED	VIOLET/BLUE
Speed signal (to ECM E1)	B	WHITE	WHITE
Ground (to ECM D4)	C	BLACK	BLACK/ GREEN

VSS Circuit Protection

Condition	Circuit Protection
Supplied with main relay activated	Injector fuse (from the Main relay)

Testing the VSS Input Voltage

1. Remove VSS connector cover.
2. Set multimeter to Vdc.
3. Turn ignition switch ON.
4. Back-probe the VSS connector.

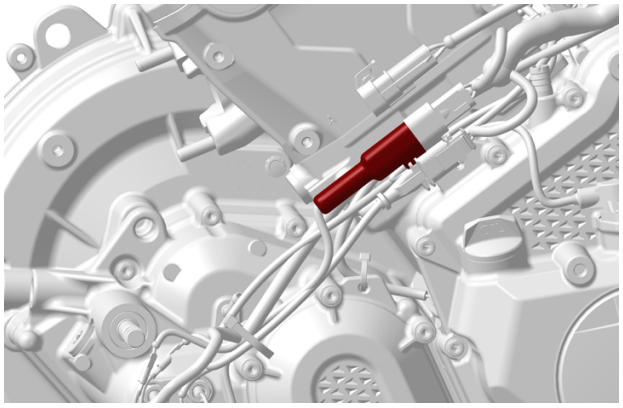

VSS CONNECTOR

5. Measure voltage as per following table.

Vehicle Speed Sensor Input Voltage Test		
TEST probes		Result (Key ON)
PIN A VIOLET/ BLUE wire	PIN C BLACK/ GREEN wire	Battery voltage

If voltage is not as specified, test positive and ground circuits separately.

Testing the VSS Signal

1. Lift rear of vehicle so that rear wheels are off the ground.
2. Set transmission to 2WD and to NEUTRAL.
3. Back-probe the VSS connector.
4. Turn ignition switch ON.
5. Set multimeter to Vdc.
6. Measure voltage while slowly rotating rear wheels by hand.

Vehicle Speed Sensor Signal Test		
TEST probes		**Result (while rotating wheels)**
PIN B WHITE wire	PIN C BLACK/ GREEN wire	Alternate reading between battery voltage and 0 Vdc

NOTE: Since we measure pulsating voltage, the numeric display will continuously change. The analog display may be easier to follow.

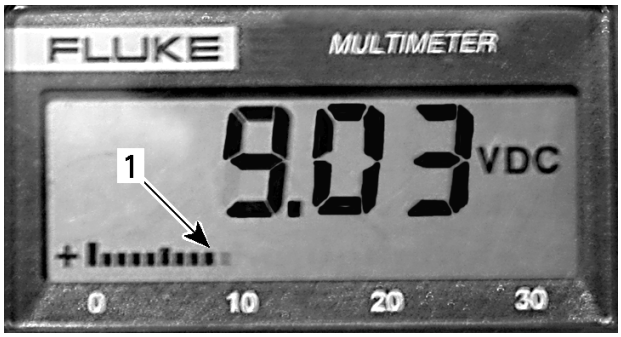

1. Analog display

Removing the VSS

1. Drain the gearbox, refer to *Draining the Gearbox Oil*.
2. Disconnect VSS sensor cable from the wring harness bracket.
3. Remove the VSS.

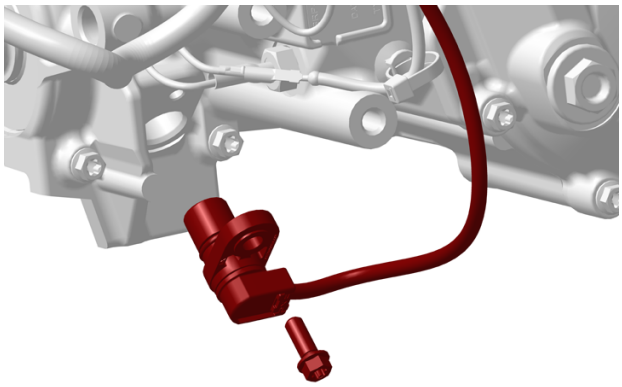

Cleaning the VSS

Remove all metal particles and oil from the VSS magnet.

NOTE: A dirty VSS will cause erratic speedometer readings.

Installing the VSS

The installation is the , reverse of the removal procedure. However, pay attention to the following.

1. Lubricate VSS O-ring.

Super Lube grease

2. Install the VSS.
3. Tighten VSS retaining screw to specification.

Tightening Torque	
VSS retaining screw	10 ± 1 Nm (89 ± 9 lbf-in)

4. Reconnect VSS connector.

Intermediate Drive

SERVICE PRODUCTS

Description	Part Number	Page
BRAKE AND PARTS CLEANER PRO S2		151
COPASLIP		154
LOCTITE 243 (BLUE)		151
LOCTITE 5910		158
LOCTITE 648 (GREEN)		143
SUPER LUBE GREASE		141, 151

Removing the Intermediate Drive

1. Set gearbox in P position.
2. Drain the gearbox, refer to *Draining the Gearbox Oil*.
3. Remove shifter, refer to *shifter* subsection.
4. Remove cover screws and pull cover straight from housing.
5. Remove gasket.

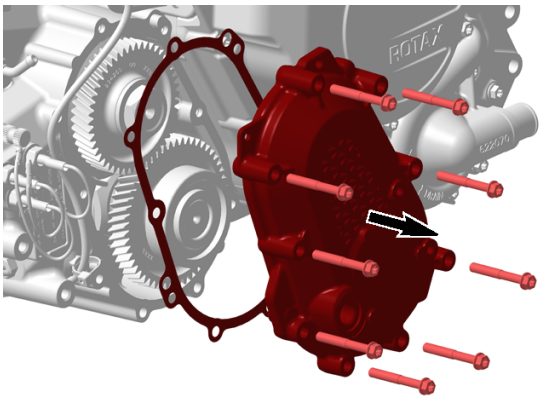

6. Remove main shaft nut.

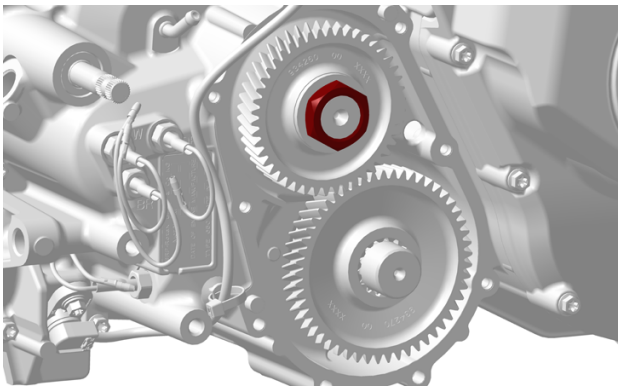

7. Pull gears off from the shafts.

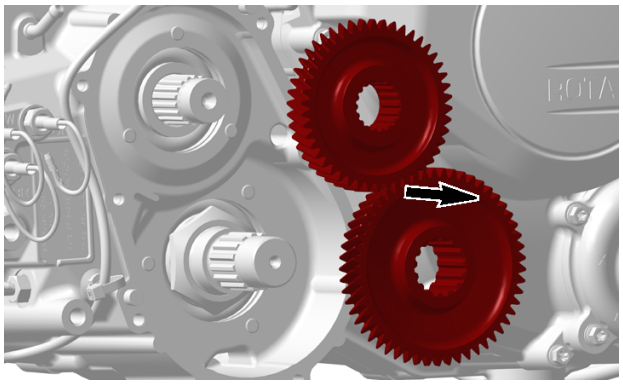

Inspecting the Intermediate Drive

1. Check bevel gear shaft ball bearing if turning freely and smoothly. Replace if necessary.
2. Inspect cover for any cracks or damages.
3. Inspect sealing surface of cover and housing for any damages.

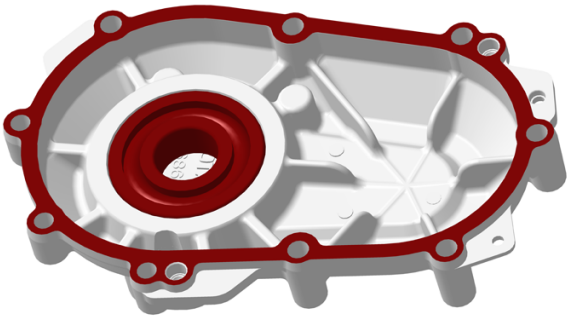

4. Inspect main shaft and bevel gear shaft for rounded engagement dogs, wear or any other damages.

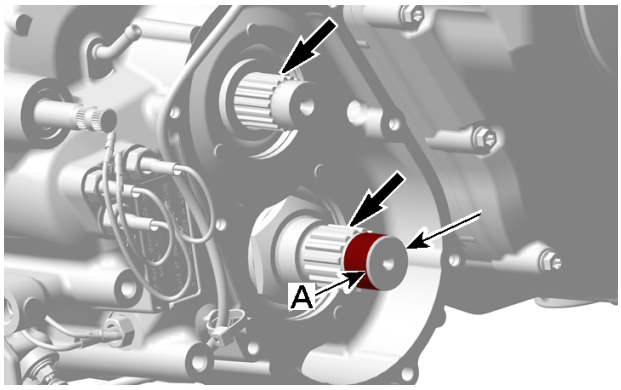

Bevel Gear Shaft Bearing Journal	
New	24.980 to 24.993 mm (.9835 to .984 in)
Service limit	24.960 mm (.9827 in)

NOTICE

If bevel gear components are out of specification, always replace crankcase with output shaft and bevel gear at the same time.

Assembling the Intermediate Drive

The assembly is the reverse of the disassembly procedure. However, pay attention to the following.

1. Install the gears of main shaft and bevel gear with marks facing outwards.
2. Apply a drop of threadlocker on threads of main shaft nut.

Loctite 648 (green)

3. Install thrust washer and tight the main shaft nut according to specification.

Tightening Torque	
Main shaft nut	200 ± 10 Nm (148 ± 7 lbf-ft)

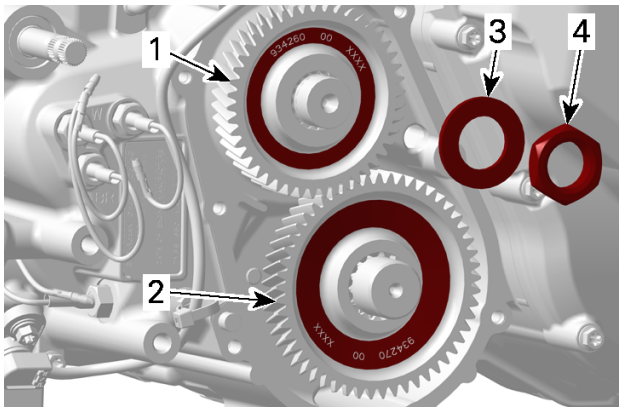

1. Bevel gear pinion
2. Main shaft pinion
3. Thrust washer
4. Main shaft nut

4. If removed, install ball bearing in cover by using a suitable installer.
5. Install gasket and cover with bearing and tighten as per following sequence.

Tightening Torque	
Intermediate cover retaining screws	10 ± 1 Nm (89 ± 9 lbf-in)

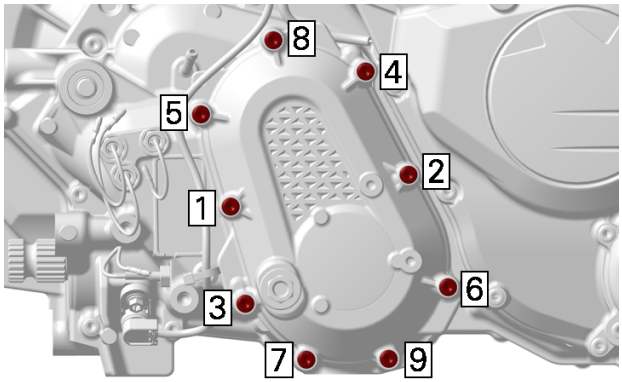

6. If removed install the shifter plate.

Tightening Torque	
Shiftier plate retaining screws	10 ± 1 Nm (89 ± 9 lbf-in)

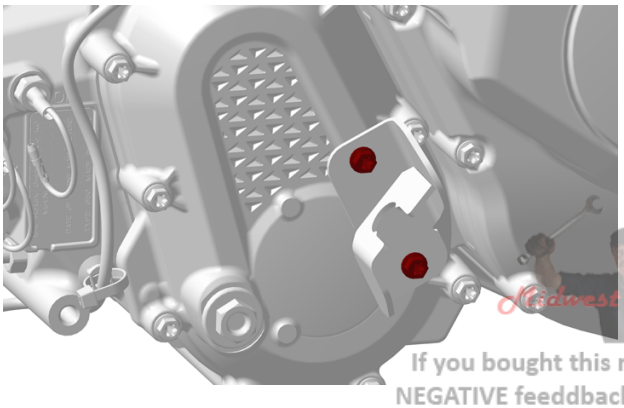

Midwest Manuals
Green Manuals
Paperless Manuals
For a Better Tomorrow
www.green-manuals.com
If you bought this manual from any other seller please leave them
NEGATIVE feeddback and notify me at bestshopmanuals@gmail.com

7. Install the shifter. Refer to *Shifter* subsection.

   Refill gearbox oil. Refer to *Filling the Gearbox Oil* in this subsection.

Gearbox and Shifting Mechanism

SERVICE PRODUCTS

Description	Part Number	Page
BRAKE AND PARTS CLEANER PRO S2		151
COPASLIP		154
LOCTITE 243 (BLUE)		151
LOCTITE 5910		158
LOCTITE 648 (GREEN)		143
SUPER LUBE GREASE		141, 151

Disassembling the Gearbox

1. Remove:
   - Engine from vehicle, refer to *Engine Removal and Installation* subsection.
   - Wiring harness, refer to *Engine Wiring Harness* subsection.
   - Intake manifold, refer to *Intake Manifold* subsection.
   - Magneto cover and rotor, refer to *Magneto and Starter* subsection.
   - Oil pump drive, refer to *Lubrication System* subsection.
   - Cylinder head and cylinder, refer to *Cylinder Head* subsection.
   - CVT drive and driven pulley, refer to *Continuously Variable Transmission (CVT)* subsection.
2. Remove Intermediate drive, refer to *Intermediate Drive* in this subsection.
3. Remove the index screw.
4. Discard the sealing ring.

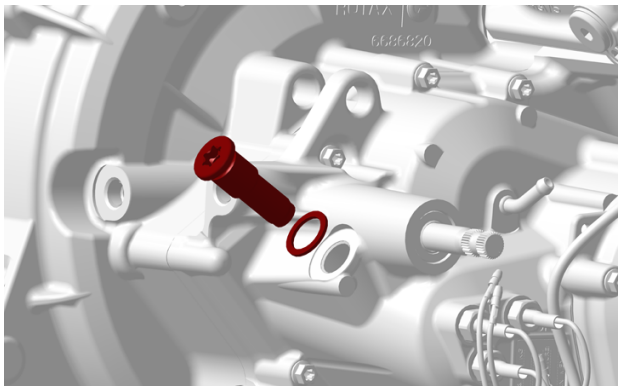

5. Separate crankcase. Refer to *Cylinder Block* subsection.
6. Remove output shaft. Refer to *Output Shaft* in this subsection.
7. Push retaining spring out of groove.

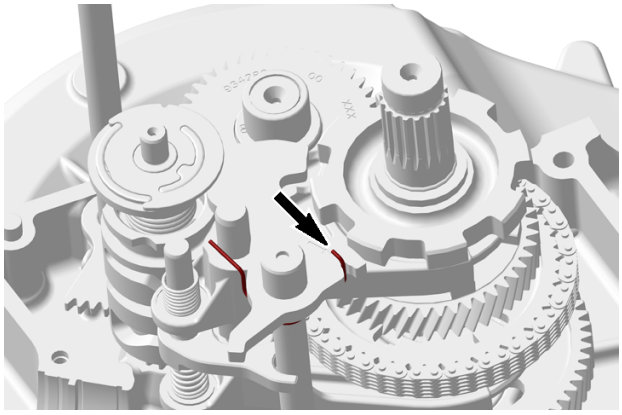

8. Remove
   - Parking lock lever
   - Center sleeve
   - Pin.

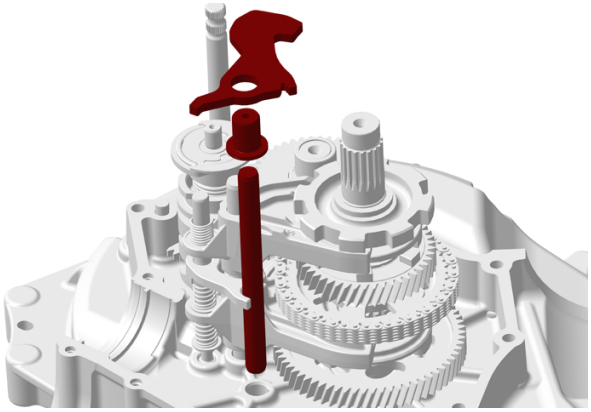

9. Unscrew bearing bolt which is located on the crankcase CVT side and discard sealing washer.

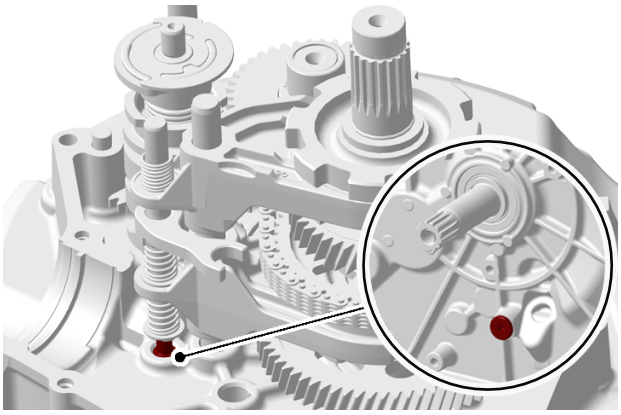

10. Pull out bearing pin until it disengage from bore hole.

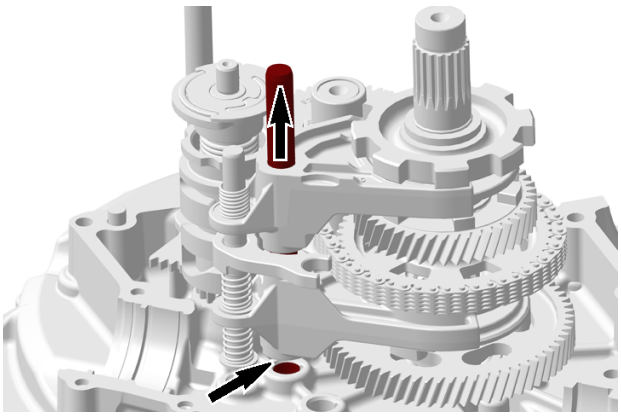

11. Move shifting fork unit aside and pull back to disengage from main shaft.

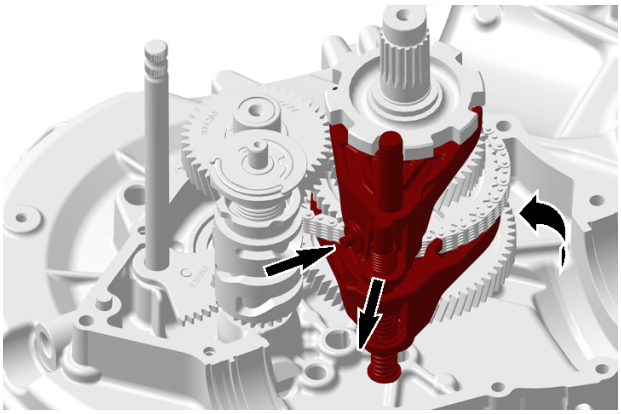

12. Disengage shift drum from shifting shaft and remove both parts.

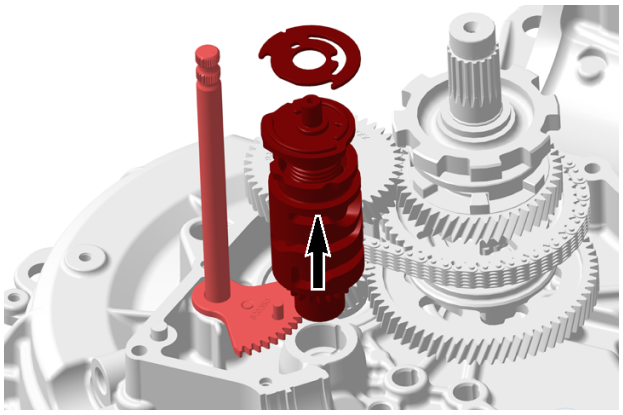

13. Remove from countershaft on engine CVT side:
    - Distance sleeve
    - O - Ring (discard it)

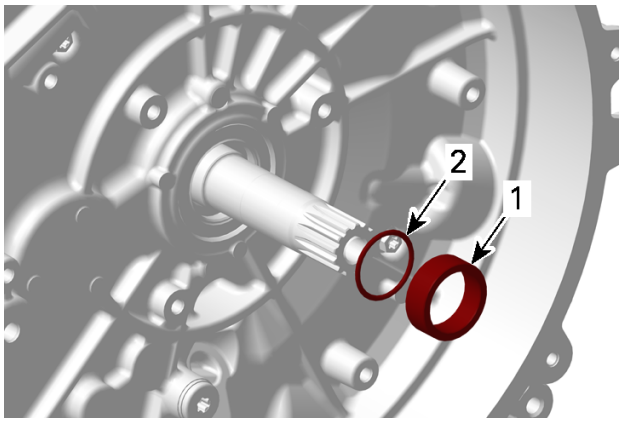

1. Distance sleeve
2. O-ring

14. Pull main shaft and countershaft out of the crankcase simultaneously.

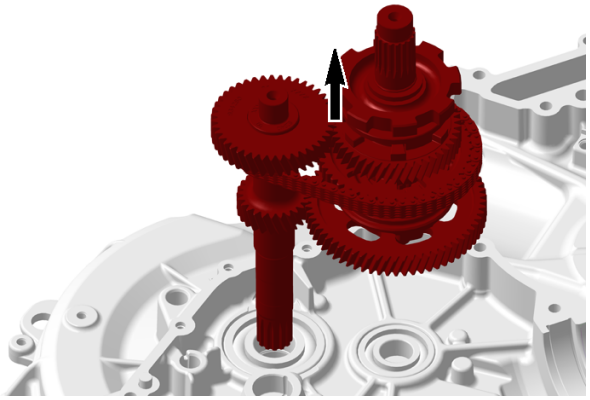

Main Shaft and Countershaft

Remove main shaft assembly together with

countershaft. Refer *Disassembling the Gearbox* in this subsection.

NOTE: Always disassemble and assemble main shaft and countershaft together with the reverse chain.

Disassembling the Main Shaft and Countershaft

1. Remove:
   - O-ring
   - Thrust washer
   - Low gear pinion
   - Needle bearing
   - Thrust washer
   - Shifting sleeve.

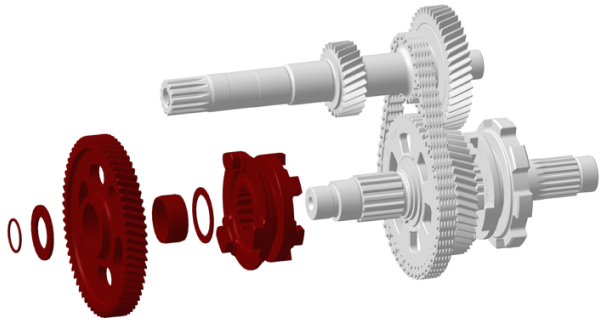

2. Pull the countershaft forward so that the reverse chain becomes loose.
3. Remove reverse chain.

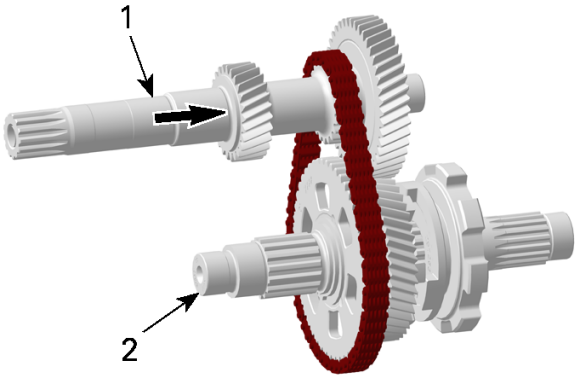

1. Countershaft
2. Main shaft

4. Remove:
   - Circlip
   - Thrust washer
   - Reverse gear pinion
   - Needle bearing.

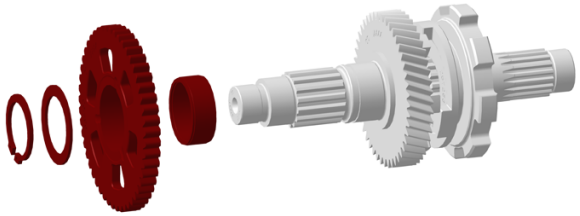

5. Remove
   - O-Ring
   - Thrust washer
   - Shifting sleeve.

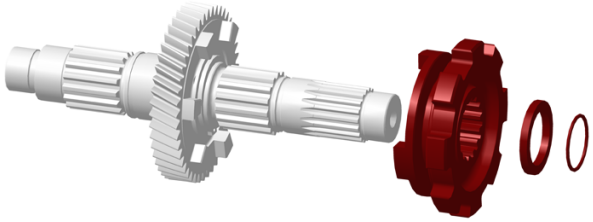

6. Remove:
   - Circlip
   - Thrust washer
   - High gear pinion
   - Needle bearing.

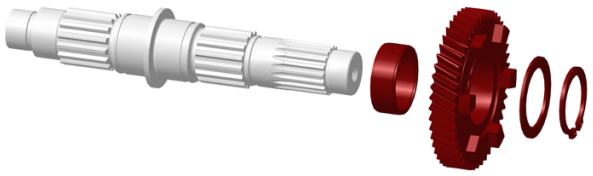

Assembling the Main Shaft and Countershaft

The assembly is the reverse of the disassembly procedure. However, pay attention to the following.

NOTE: Thrust washers have different sizes. Make sure you have the correct thrust washer for each position.

1. Lubricate needle bearing and shifting sleeve (at the inside) with engine oil before installation. Replace O-ring if it's hard, brittle or cracked.
2. Assemble HIGH gear side.

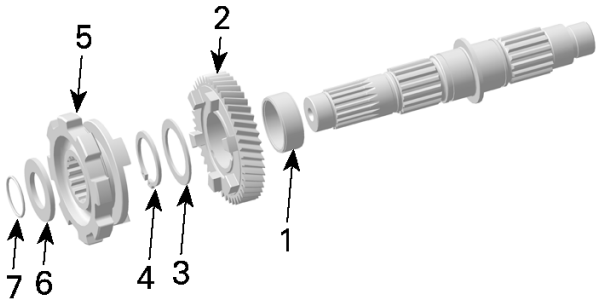

1. *Needle bearing*
2. *High gear pinion*
3. *Thrust washer*
4. *Circlip*
5. *Shifting sleeve*
6. *Thrust washer*
7. *O-ring*

3. Assemble reverse gear.

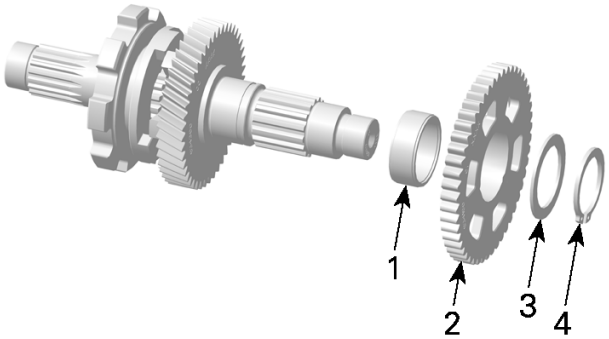

1. *Needle bearing*
2. *Reverse gear pinion*
3. *Thrust washer*
4. *Circlip*

4. Install countershaft with reverse chain on main shaft.

NOTE: Press main shaft and countershaft slightly against each other to ease assembly.

1. Install reverse chain on countershaft and position it incline beside main shaft.
2. Engage reverse chain in reverse gear, turn and lift countershaft so that gears interlock.

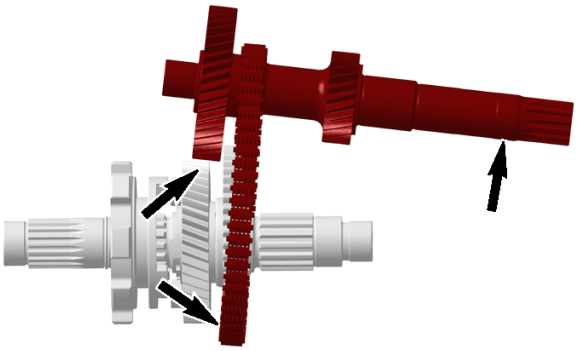

5. Install .
   - Shifting sleeve
   - Thrust washer
   - Needle bearing
   - Low gear pinon.
6. Push gear carefully in and ensure engagement in countershaft and main shaft.

NOTICE
Do not assembly the wrong side. The higher side must shows outwards.

7. Install
   - Thrust washer

– O-ring.

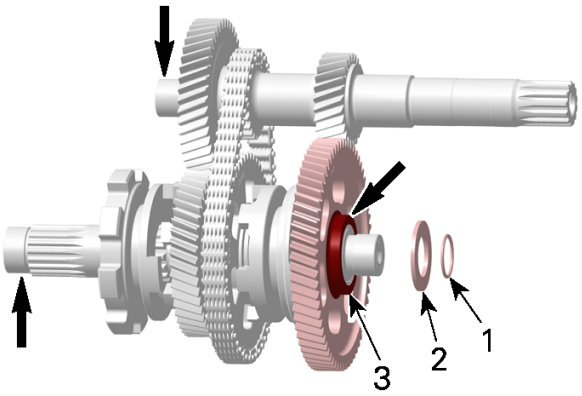

1. *O-ring*
2. *Thrust washer*
3. *Low gear - higher side*

Shifting Unit

Disassembling the Shifting Unit

NOTICE
Remove parts from the shifting unit using the following order.

1. Remove bearing pin.

2. Remove
   – Springs
   – Shifting fork
   – Shifting support
   – Thrust washers.

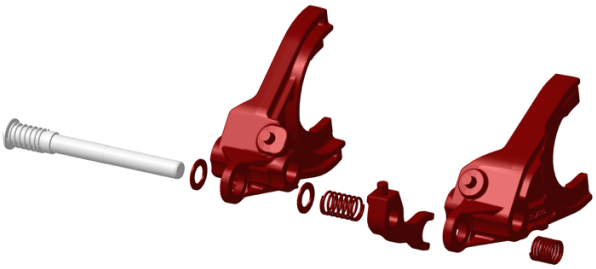

3. On the threaded hole side remove:
   – Circlip
   – Thrust washer
   – Spring.

Assembling the Shifting Unit

The assembly is the reverse of the disassembly procedure. However, pay attention to the following.

NOTICE
Do not assemble shifting forks and shifting support inverted.

Install:
– Snap rings
– Spring seats
– Springs
– Shifting support
– Shift forks.

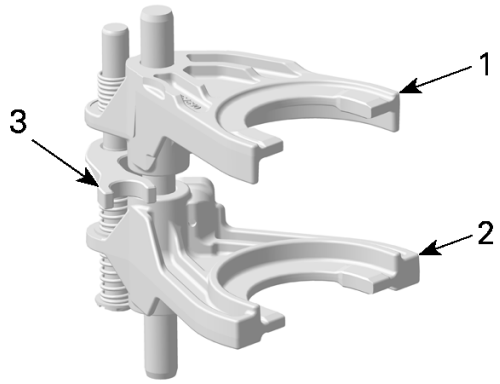

1. *Shifting fork high gear*
2. *Shifting fork low and revers gear*
3. *Shifting support*

Output Shaft and Bevel Gear

Disassembling the Output Shaft and Bevel Gear

1. Remove engine from the vehicle. Refer to *Engine Removal and Installation* subsection.

NOTICE

If output shaft or bevel gear components are out of specification, always replace crankcase with output shaft and bevel gear at the same time.

2. Refer to *Disassembling the Gearbox* in this subsection to get access to output shaft.
3. Use a soft hammer to remove output shaft with its bearings from housing.

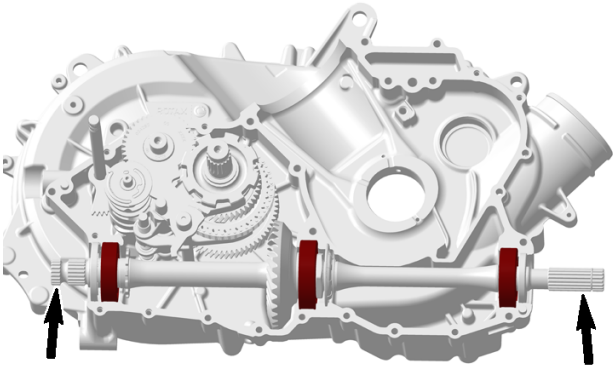

4. Remove and discard the circlip then the oil seals.

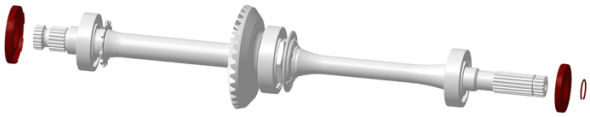

5. Remove ball bearings.
6. Check if ball bearings for turn freely and smoothly. Replace if necessary

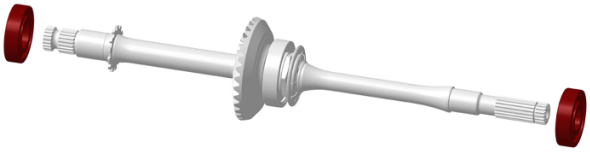

7. Remove and discard the oil seal.

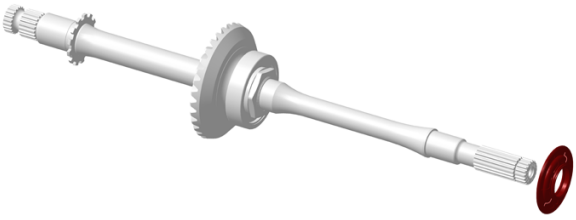

NOTICE

Never use a hammer for removal or install of the bevel gear. Only use a press to avoid damaging the bevel gear.

8. Remove bevel gear ball bearing retaining screws.

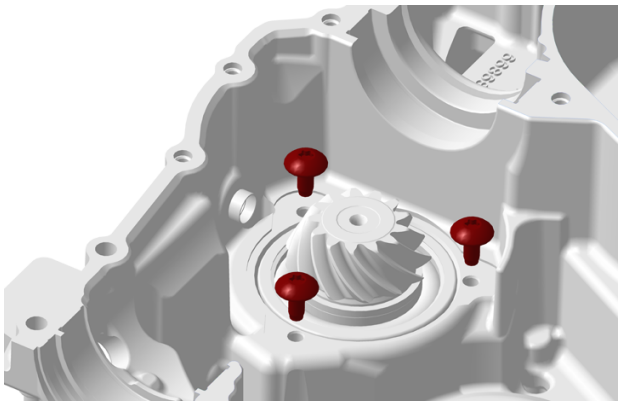

9. Carefully press the bevel gear out of the crankcase half - from the outside to the inside.

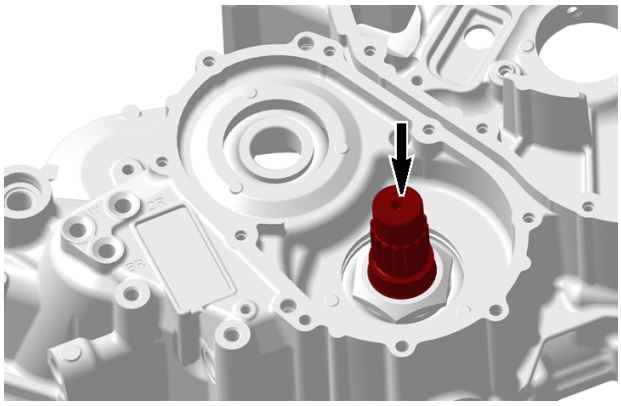

NOTE: Do not open the nuts of the output shaft or bevel gear.

Assembling the Output Shaft and Bevel Gear

The assembly is the revers of the disassembly procedure. However, pay attention to the following .

NOTICE

Never use a hammer for removal or install of the bevel gear. Only use a press to avoid damaging the bevel gear.

1. Clean bearing seat.

Brake and parts cleaner PRO S2

2. Carefully press bevel gear in to the crankcase half - from inside to the outside.
3. Apply a drop of threadlocker on the threads of the bearing screws.

Loctite 243 (blue)

4. Tighten ball bearing screws to specification.

Tightening Torque	
Bearing screws	10 ± 1 Nm (89 ± 9 lbf-in)

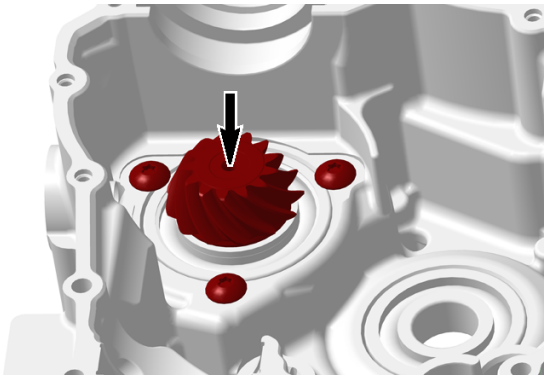

5. Lubricated room between sealing lips with an corresponding amount of grease and install **NEW** oil seal.

Super Lube grease

6. Install on output shaft.
   - **NEW** oil seal ring
   - Ball bearings
   - **NEW** oil seals
   - **NEW** circlip.

NOTICE

Outer sealing rings must be installed facing the closed side to the outside. Inner sealing ring must be installed facing the sealing lip to the oil seal front.

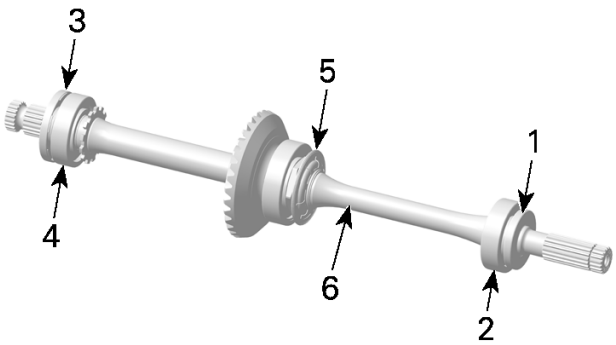

1. *Oil seal front*
2. *Ball bearing front*
3. *Oil seal rear*
4. *Ball bearing rear*
5. *Inner oil seal*
6. *Output shaft*

7. Install output shaft in crankcase CVT side by using a soft hammer.

NOTE: Ensure that ball bearings and sealing rings are installed in the correct position.

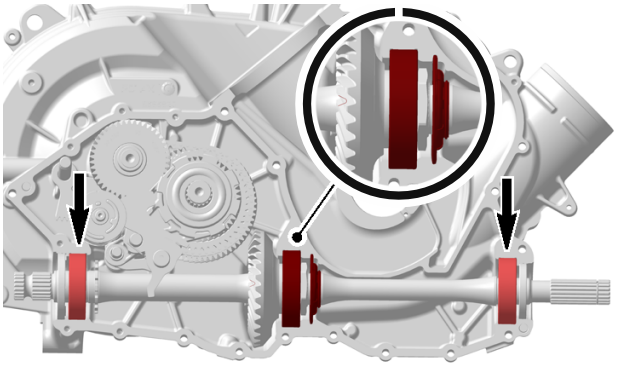

Inspecting the Gearbox

Always verify for the following when inspecting gearbox components:

- Gear teeth damage
- Worn or scored bearing surfaces
- Bent, worn or scored shift fork
- Worn shift fork engagement pins
- Bent, worn or scored shift fork shaft
- Rounded engagement dogs and slots of gears
- Worn grooves on shift drum
- Worn gear engagement groove
- Worn splines on shafts and gears.

Bearings

1. Check all ball bearings and needle bearings turn freely and smoothly. If rough or any excessive play is detected, replace bearing. Refer to *Cylinder Block* subsection.

Gears

1. Check tooth flanks of gears.

NOTE: Always replace circlips if damage and use special pliers to install them.

2. Check reverse chain for wear or any other damages.

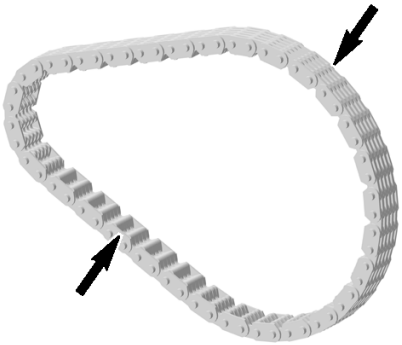

Levers

1. Check parking lever and sleeve for cracks or any other damages.
2. Check retaining spring for deformation or any other damages.

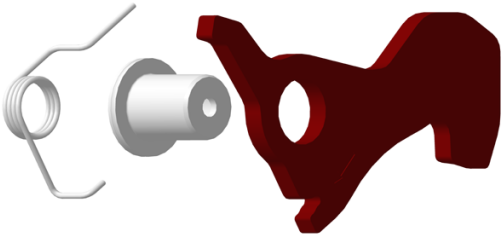

Shafts

1. Check taper grooves and annular grooves of shafts. Annular grooves must have sharp edges.
2. Check shift shaft for worn splines and gears.
3. Check countershaft for wear.

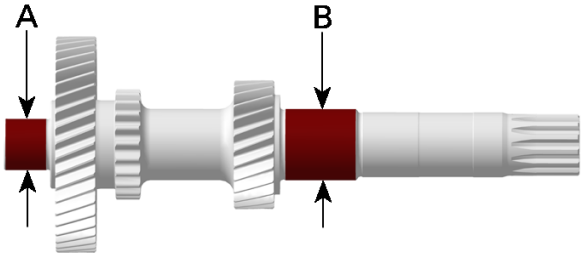

A. MAG side
B. Bearing journal CVT side

Countershaft Bearing Journals		
MAG Side	New	17.989 to 18.000 mm (.7082 to .7087 in)
	Service limit	17.980 mm (.7079 in)
CVT Side	New	24.977 to 24.990 mm (.9833 to .9839 in)
	Service limit	24.957 mm (.9826 in)

4. Check main shaft for wear.

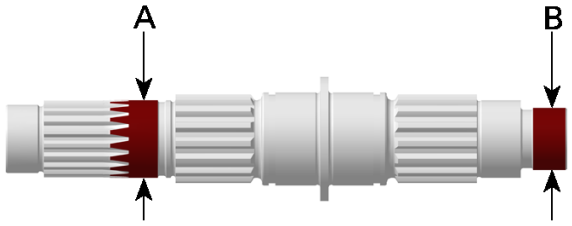

A. Bearing journal MAG side
B. Bearing journal CVT side

Main Shaft Bearing Journals		
MAG Side	New	24.980 to 24.993 mm (.9835 to .984 in)
	Service limit	24.960 mm (.9827 in)
CVT Side	New	19.980 to 19.993 mm (.7866 to .7871 in)
	Service limit	19.960 mm (.7858 in)

Shift Drum

NOTICE

Do not disassemble shift drum.

1. Check shift drum tracks for scouring or heavy wear, like rounded engagement slots.
2. Check index washer on shift drum for scoring or visible damages.
3. Replace isolating washer if there are signs of wear or visible damages.

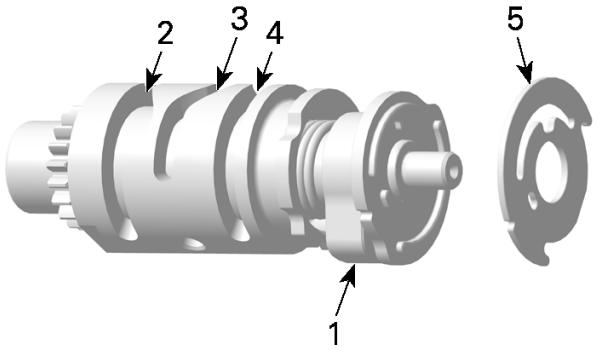

1. Shift drum assembly with pre selection
2. Track for the low/reverse gear shift fork
3. Track for the shifting support
4. Track for the high gear shift fork
5. Isolating washer

4. Check pre selection for easy movement.

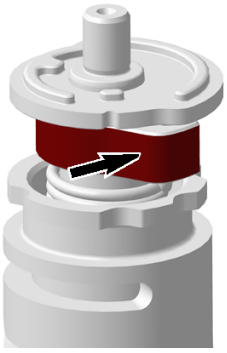

Shifting Sleeves

1. Check shifting sleeves for worn inner splines and rounded or damaged engagement dogs.

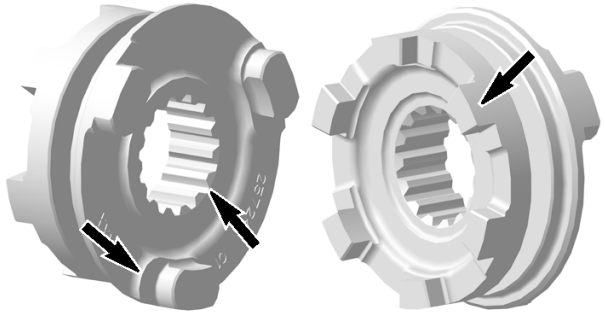

TYPICAL

2. Measure the width of shift fork engagement groove.

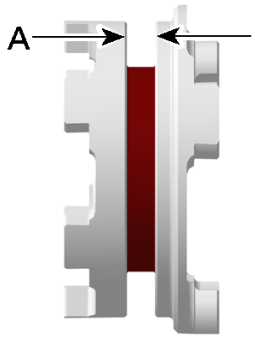

A. Width of shift fork engagement groove

Width of Shift Fork Engagement Groove	
New	6.15 to 6.25 mm (.242 to .246 in)
Service limit	6.35 mm (.25 in)

Shift Forks

1. Check both shift forks for visible damage, wear or bent shift fork claws.
2. Measure the shift fork claw thickness.

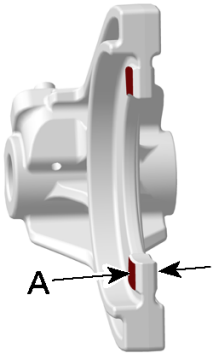

A. Shift fork claw thickness

Shift Fork Claw Thickness	
New	5.92 to 6.00 mm (.233 to .236 in)
Service limit	5.8 mm (.228 in)

Output Shaft and Bevel Gear

NOTICE

If any output shaft or bevel gear components is out of specification, always replace crankcase with output shaft and bevel gear at same time.

1. Check output shaft and bevel gear for wear or any other.
2. Check if bearings run smoothly.
3. Check output shaft bearing journals and oil seal running surface for wear, scratches or any other damages.

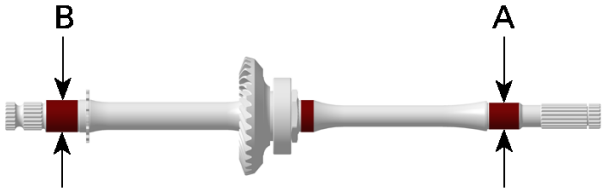

A. Bearing journal front
B. Bearing journal rear

Output Shaft Front Bearing Journals	
New	24.972 to 24.985 mm (.9831 to .9837 in)
Service limit	24.952 mm (.9824 in)
Output Shaft Rear Bearing Journals	
New	29.972 to 29.985 mm (1.18 to 1.1805 in)
Service limit	29.952 mm (1.1792 in)

Assembling the Gearbox

The assembly is the reverse of disassembly procedure. However, pay attention to the following.

1. Prior to assembly lubricate ball bearing seats of:

Copaslip

   – Main shaft
   – Countershaft.
2. Install main shaft together with countershaft. Refer to *Main Shaft and Countershaft* in this subsection.

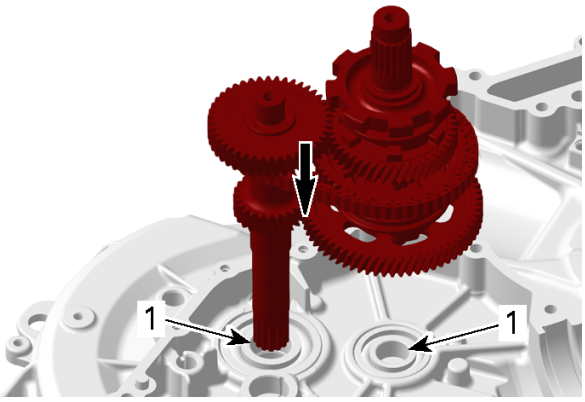

1. Apply lubricant here

3. Install shifting shaft together with shift drum.

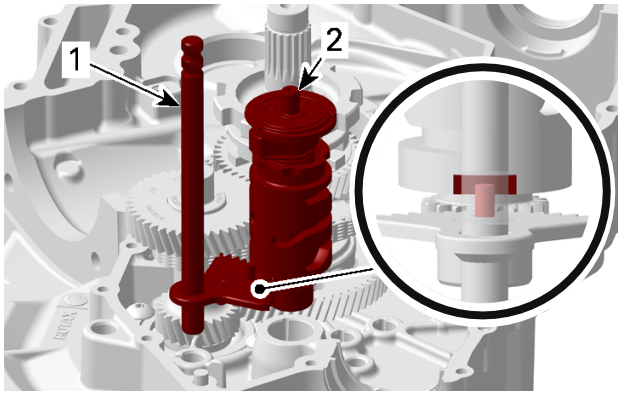

1. Shifting shaft
2. Shifting drum

   1. Lubricate shifting shaft journal and install in the proper position.
   2. Lubricated shifting drum journal and position the flat surface of the shift drum centered to the shifting shaft pin.
4. Install shifting unit.
   1. Align bearing pin with lower shifting fork.

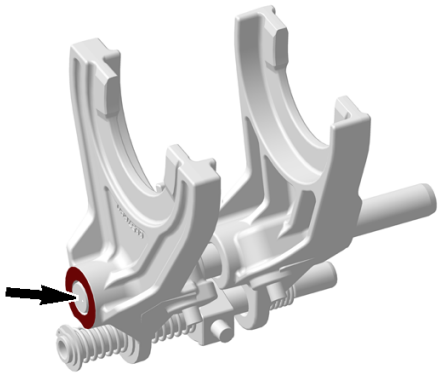

   2. Engage shifting forks with shifting sleeves.
   3. Turn shifting unit so that shift fork pins engages in the shifting drum.

NOTE: Additionally rotate shifting drum for easier engagement.

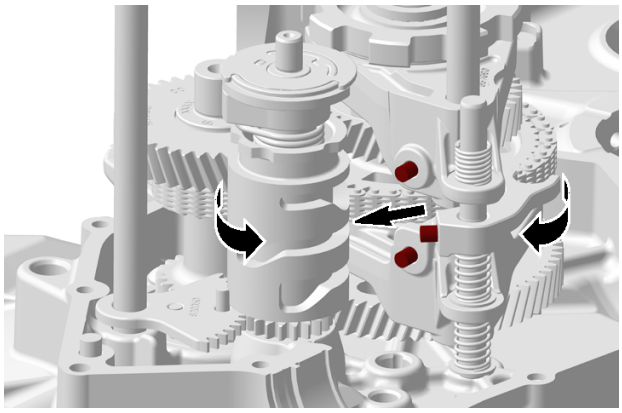

   4. Install
      – Bearing pins
      – Engage the shifting support.
   5. Tighten bearing bolt to specification.

Tightening Torque	
Bearing bolt	20 ± 2 Nm (15 ± 1 lbf-ft)

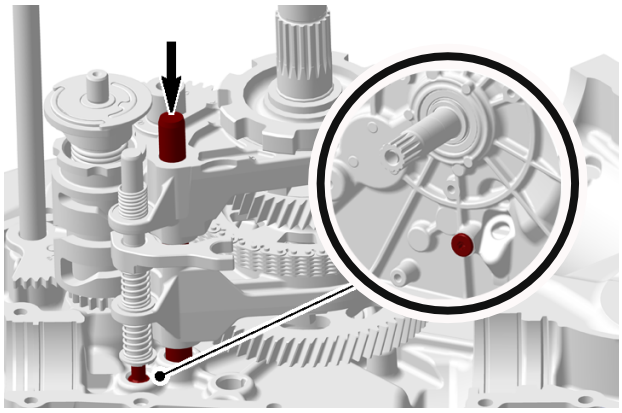

5. Install parking lever.

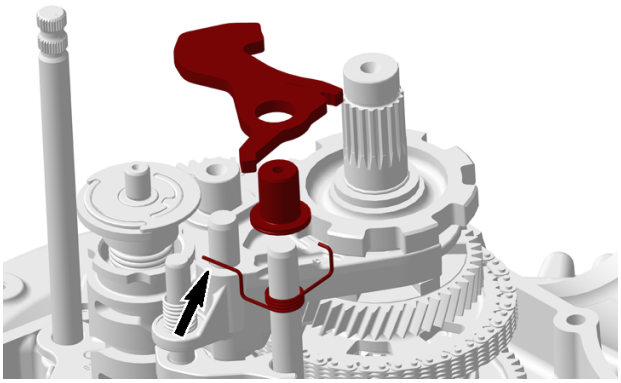

1. Center sleeve
2. Retaining spring
3. Parking lever.

6. Hook spring into the groove.

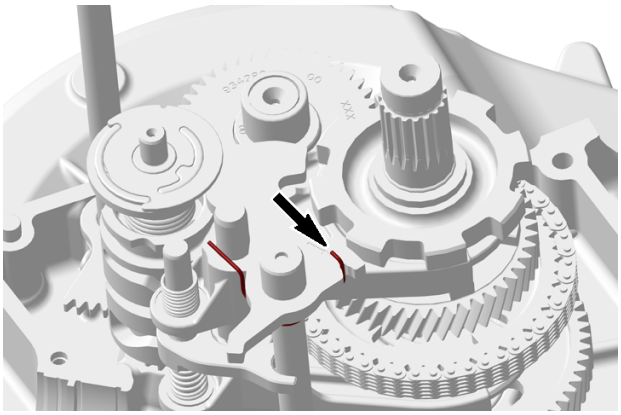

7. Install output shaft. Refer to *Output Shaft and Bevel Gear* in this subsection.
8. Run all gears as a final function check.
9. Install crankshaft and balancer shaft then close crankcase housings. Refer to *Cylinder Block* subsection.
10. Install **NEW** O-ring including distance sleeve on countershaft end CVT side.

NOTICE
Chamfered bore of distance sleeve has to face the engine.

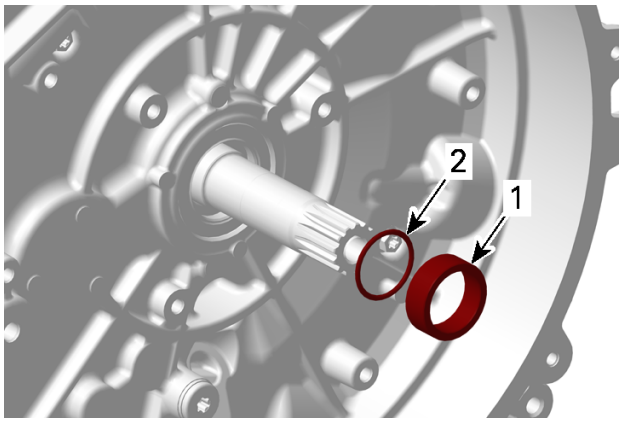

1. Distance sleeve
2. O-ring

11. Install intermediate drive, refer to *Intermediate Drive* in this subsection
12. Install the index screw using a **NEW** sealing ring.
13. Tighten the index screw to specification.

Tightening Torque	
Index Screw	20 ± 2 Nm (15 ± 1 lbf-ft)

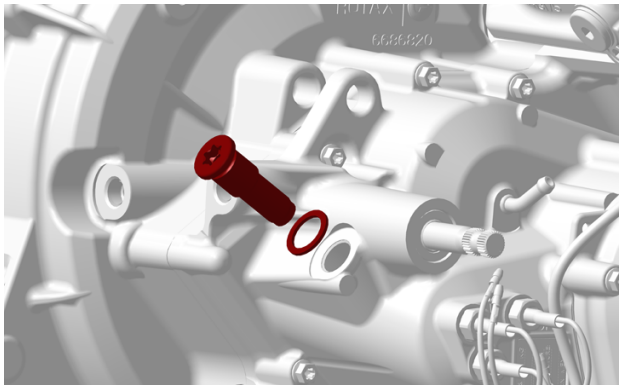

14. Install **NEW** shifting shaft oil seal, refer to *Cylinder Block* subsection.
15. Install all other removed parts.

Gearbox Position Indicator Switches

SERVICE PRODUCTS

Description	Part Number	Page
BRAKE AND PARTS CLEANER PRO S2		151
COPASLIP		154
LOCTITE 243 (BLUE)		151
LOCTITE 5910		158
LOCTITE 648 (GREEN)		143
SUPER LUBE GREASE		141, 151

NOTE: First ensure shifter link rod is properly adjusted, refer to *shifter* subsection.

The multifunction gauge uses one switch state (open or closed) for each P, N and R switch to determine the gearbox position.

Testing the Gearbox Position Indicator Switch Continuity

NOTICE

Before disconnecting the switch wires, take note of corresponding switch position and wire color.

1. Through the right rear wheel arch, disconnect indicator switch from engine wiring harness.

NOTE: The removal of the wheel is not necessary but its removal will create more room to work.

2. Remove insulating paint to obtain correct readings.
3. Using a multimeter, measure the resistance from the indicator switch to engine ground while selecting the gearbox to each position. Compare results with the logic table below.

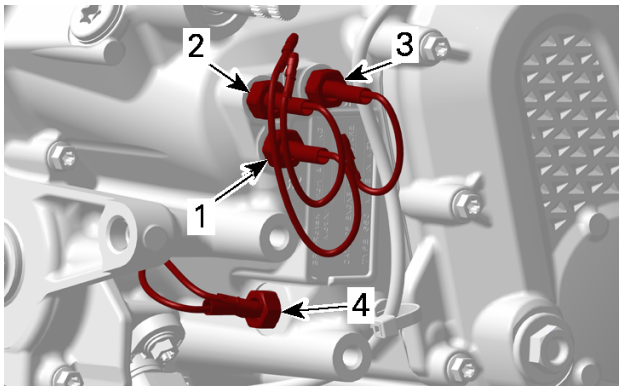

1. *Gearbox position indicator switch - position 1 BROWN/GREY wire*
2. *Gearbox position indicator switch - position 2 WHITE/RED wire*
3. *Gearbox position indicator switch - position 3 ORANGE/GREY wire*
4. *Gearbox position indicator switch - position 4 BLACK/WHITE wire*

Shifter position	Corresponding Switch			
	BROWN/ GREY	WHITE/ RED	OR ANGE/ GREY	BLACK/ WHITE
	Position 1	Position 2	Position 3	Position 4
L	Close to 0 Ω	O.L.	Close to 0 Ω	O.L.
H	O.L.	O.L.	Close to 0 Ω	O.L.
N	O.L.	Close to 0 Ω	Close to 0 Ω	O.L.
R	O.L.	Close to 0 Ω	O.L.	O.L.
P	Close to 0 Ω	Close to 0 Ω	O.L.	Close to 0 Ω

4. If the indicator switch is good, check the vehicle harness and/or indicator lights.

Removing the Gearbox Position Indicator Switch

1. Clean switches area to remove all dirt and any other contaminant.
2. Disconnect indicator switch from engine wiring harness.

NOTICE

Before disconnecting the switch wires, take note of corresponding switch position and wire color.

3. Remove gearbox position indicator switch(es).

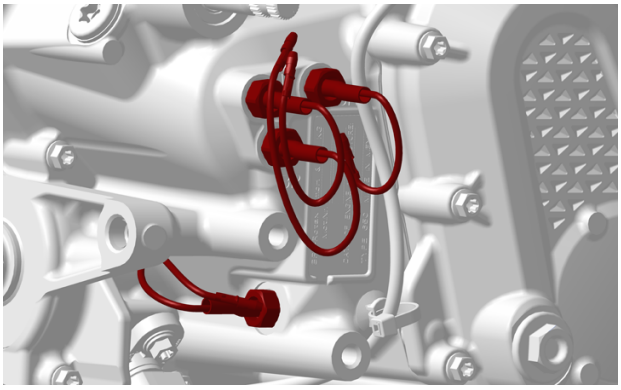

4. Unscrew switch.

Installing the Gearbox Position Indicator Switch

The installation is the reverse of the removal procedure. However, pay attention to the following.

Take care to avoid damaging threads in switch bores during installation.

1. Carefully apply some sealant on threads of shift indicator switches.

Loctite 5910

NOTICE

Do not apply sealant on switch plunger as it will lead to switch malfunction.

2. If all switches were removed, make sure to install at the correct position.

NOTE: Letter on the casting are indicating the correct position.

Tightening Torque	
Indicator switches	2 ± 0.2 Nm (18 ± 18 lbf-in)

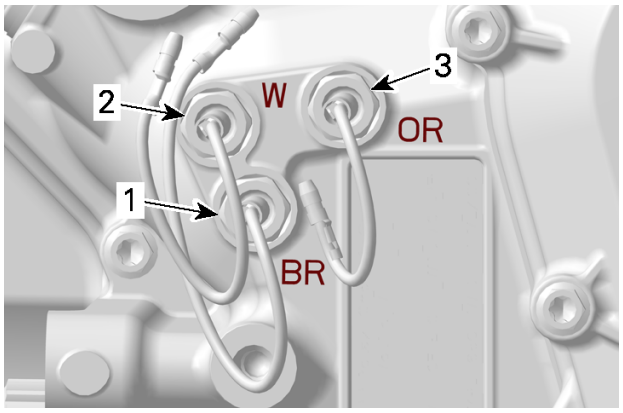

1. *Gearbox position indicator switch - position 1 BROWN/GREY wire*
2. *Gearbox position indicator switch - position 2 WHITE/RED wire*
3. *Gearbox position indicator switch - position 3 ORANGE/GREY wire*

04

ELECTRONIC MANAGEMENT SYSTEM

04 Electronic Management System

Electronic Control Module

SERVICE TOOLS

Description	Part Number	Page
ECM ADAPTER TOOL	(P/N 529 036 166)	161

General

All electrical tests should be performed at the room temperature. Measurement are give for a temperature of 20 °C (68 °F).

System Description

Electrical System

ECM (Engine Control Module)

From input signals, the ECM acknowledges driver demands and converts them to an engine torque requirement through calculation of several variables. Then, the ECM controls the iTC, the injection system and the ignition system to meet the torque requirement.

The ECM manages the engine torque requirements and controls engine operation to ensure it is delivering optimum performance and fuel economy. The ECM also controls idle RPM and limits maximum engine speed through the iTC system.

Troubleshooting

Diagnostic Tips

Electrical Related Problems

Electrical Connections

Pay particular attention to ensure that terminals and pins are not out of their connectors, corroded, or out of shape.

When probing terminals, pay attention not to deform the terminals as this could cause a loose or intermittent connection that would be difficult to troubleshoot.

Procedures

Engine Control Module (ECM)

As a first troubleshooting step, always check for applicable fault codes using the BRP diagnostic software (BUDS2).

Quick Test to Validate ECM Operation

1. Turn ignition key to ON.

NOTE: Setting the ignition switch to ON wakes up the ECM, which then turns on the following.

Quick indication that ECM is functioning (assuming the observed component is in good working order)
Gauge turns ON.
Fuel pump turns on for approx. 5 seconds.
Rear lights turn on.
Headlamps turn on (Lights switch position to LO or LO+HI).

ECM First Initialization

This procedure performs a reset of the following values in the ECM:

– TAS (Throttle Accelerator Sensor)
– TPS (Throttle Position sensor)

This reset **must** be carried out whenever the ECM has been replaced.

This reset **may** be carried out whenever any of the following components have been replaced instead of their respective reset procedures:

– Throttle body (for TPS)

1. Connect the vehicle to the BRP diagnostic software (BUDS2).

2. In BUDS2, select the following:
   - **Settings** page
   - **ECM** button
   - **ECM First Initialization**
3. In the **ECM first initialization** field, click on the **Reset** button.
4. Follow the instructions in the message boxes that appear.

   If the operation is successful, a message will be displayed stating that the reset was successful.

   If an error occurred or a component is out of range, a message may be displayed. Follow the instructions in the message and repeat the procedure.
5. Check for fault codes.

   If a fault code is generated, carry out the service actions, reset the fault and repeat the reset procedure.
6. Start engine and make sure it operates normally throughout its full engine RPM range.

ECM Location

The ECM is located behind the passenger backrest, on the bulkhead panel.

ECM Connector Identification

1. There are 2 connectors connected to the ECM:
   - Engine harness connected to ECM-A
   - Vehicle system control harness connected to ECM-B.

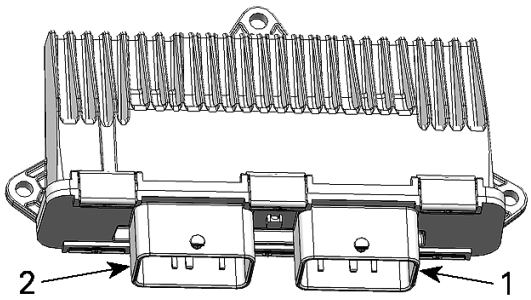

1. Connector A
2. Connector B

2. The ECM connectors have 48 pins.
3. For connector information, cleaning and probing, refer to *wiring harness and connectors* subsection.

Testing the ECM Power Supply

1. Disconnect the connector B from the ECM.
2. Install the connector on the ECM adapter tool.

ECM adapter tool (P/N 529 036 166)	

3. Install a jumper wire between B-H2 and B-M2 on the ECM adapter tool.
4. Turn the ignition switch to ON.
5. Set the multimeter to Vdc.
6. Check for voltage as follows.

ECM Power Supply Test		
ECM adapter	**Battery**	**Specification**
B-M4	Negative post	Battery voltage

7. If voltage is not measured, check the following:
   - Main relay
   - Wiring and connections, refer to the appropriate wiring diagram.

Testing the Continuity of ECM Ground Circuits

1. Disconnect the connector B from the ECM.
2. Install the connector on the ECM adapter tool.

ECM adapter tool (P/N 529 036 166)	

3. Set the multimeter to Ω.
4. Probe adapter terminals as per following table.

ECM Ground Circuit Test		
ECM adapter	**Battery**	**Specification**
Pins B-L1	Negative post	Close to 0 Ω (continuity)
B-M2		
B-M3		

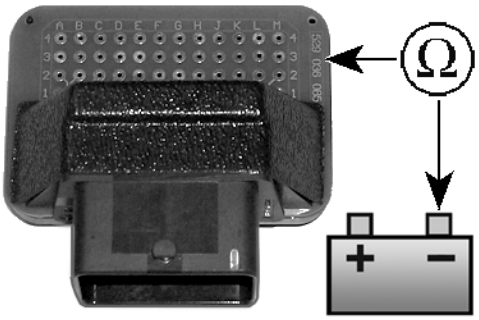

If any measurement is out of specification, refer to *Power Distribution* and check all grounds.

Replacing the ECM

Prior to replacing an ECM, ensure that all the recommendations in the general introduction of this section have been followed.

Proceed with an *ECM First Initialization* as it may resolve the problem.

If the ECM and the digital display are both to be replaced, always replace the digital display first.

Removing the ECM

NOTE: If a new ECM is to be installed, first read the procedures in *Replacing the ECM* in this subsection.

1. Disconnect battery cables.

NOTICE
Always disconnect the BLACK negative (–) battery cable first, then disconnect RED positive (+) cable.

2. Disconnect both ECM connectors from ECM.
3. Unscrew all retaining screws and pull out ECM.

Installing the ECM

The installation is the reverse of the removal procedure. However, pay attention to the following.

1. Secure the ECM to its support.

Tightening Torque	
ECM screws	6.5 ± 0.5 Nm (58 ± 4 lbf-in)

2. Reconnect ECM connectors.
3. Reconnect battery cables.

NOTICE
Always reconnect the RED positive (+) battery cable first, then reconnect BLACK negative (–) cable.

4. If a new ECM is installed, refer to *Replacing the ecm* in this subsection.

Programming the ECM

1. Connect the vehicle to the BRP diagnostic software (BUDS2).
2. In BUDS2, click the **Scan** button to read the new ECM.
3. Select:
   - **Summary** page
   - **ECM** button
   - **Health** tab
   - **Programing the ECM**.

   Follow the instructions.
4. Perform the *Throttle Position Sensor Initialization* procedure. Refer to *Throttle Position Sensor (TPS)* in this subsection.
5. Start the engine and ensure proper operation.
6. Reinstall removed parts.

05

FUEL SYSTEM

05 Fuel System

Electronic Fuel Injection (EFI)

SERVICE TOOLS

Description	Part Number	Page
ECM ADAPTER TOOL	(P/N 529 036 166)	166

General

⚠ WARNING

Fuel is flammable and explosive under certain conditions.
Ensure work area is well ventilated.
Do not smoke or allow open flames or sparks in the vicinity.
Fuel lines remain under pressure at all times.
Always proceed with care and use appropriate safety equipment when working on pressurized fuel system.
Wipe off any fuel spillage.
Do not allow fuel to spill on hot engine parts and/or on electrical connectors.
Replace any damaged, leaking or deteriorated fuel lines or connections.
Always, pressurize the fuel system if any fuel related component was disconnected or removed.
Proceed with care when removing/installing high pressure test equipment.

System Description

Refer to the *Engine Management System* subsection for a general layout of the various EFI system components.

The Electronic Fuel Injection system (EFI) is comprised of various sensors used for detecting ongoing operating conditions of the engine and vehicle, and includes all the components that perform the required adjustments to the engine.

Electrical System

EFI Sensors

The ECM reads the inputs from the sensors which it compares to predetermined parameters stored in the ECM, makes computations, and activates the outputs accordingly (injectors, ignition coils etc.).

Signals from sensors are used by the ECM to determine the injection and ignition parameters (referenced to fuel maps) as required to maintain the optimum air-fuel ratio.

To control the injection system, the engine management uses input signals from the following sensors:

- Crankshaft Position Sensor (CPS)
- Manifold Absolute Pressure and Temperature Sensor (MAPTS)
- Throttle Position Sensor (TPS) which is integrated to the Electronic Throttle Control (ETC) - commonly call throttle body)
- Throttle Accelerator Sensor (TAS).
- Coolant Temperature Sensor (CTS)

Air Intake System

Air Filter

Air, drawn into the air filter housing, first passes through an inlet duct.

After it passes through the air filter, an air duct (intake adapter) is used to channel the air to the throttle body.

Throttle Body

The throttle body is mounted on top of the intake manifold.

Air for combustion, drawn in by the engine, flows through the air intake system, then through the throttle body where it is regulated by the throttle plate.

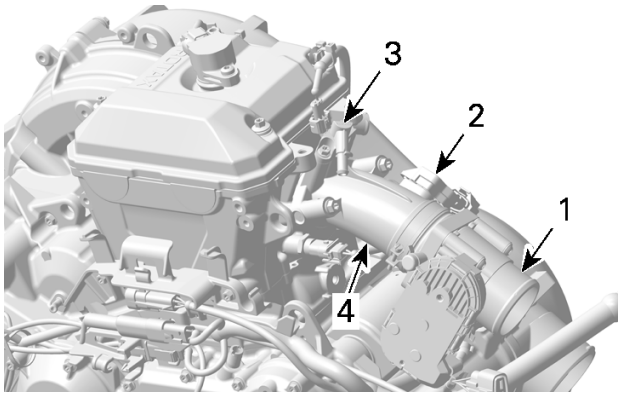

1. *Throttle body*
2. *MAPTS (Manifold Air Pressure Temperature Sensor)*
3. *Fuel Rail and Injector*
4. *Air intake manifold*

Fitted on the throttle body, an electronic throttle actuator (ETA) allows the ECM to electronically control the throttle plate opening which regulates the amount of air that enters the engine, and therefore engine torque.

There is no idle air control valve (IACV).

The TPS is also incorporated in the throttle body. It provides a signal to the ECM of the actual throttle plate position.

Fuel System

Fuel Rail

One fuel rail, on the injector is mounted on the intake manifold. The fuel rail, which is used to secure the injectors to the manifold, also provide to the injector the fuel pressure that they receive from the fuel pump.

The fuel pressure applied to the fuel rails is regulated by the fuel pressure regulator located in the fuel pump module.

Fuel Injector

The fuel injector is used to inject fuel into the intake port of the cylinder head.

Fuel Pump

An electric fuel pump with an integrated pressure regulator and fuel system filters is used. For more details on the fuel pump unit, refer to *Fuel Tank and Fuel Pump* subsection.

Idle Speed

Idle speed is not adjustable. The ECM controls the idle speed of the engine primarily through control of the throttle plate position.

The vehicle multifunction gauge can provide an accurate digital readout of the engine's idle speed.

The engine RPM may also be verified using the BRP diagnostic software (BUDS2).

In BUDS2, go to:

– **Measurements** page
– **ECM** button.

NOTE: The multifunction gauge and the BRP diagnostic software (BUDS2) use the same signal to provide the engine RPM indication.

Troubleshooting

Diagnostic Tips

Engine problems are not necessarily related to the fuel injection system.

It is important to ensure that the engine and propulsion system, fuel delivery and electrical systems are functioning normally.

For diagnostics purposes, use the BRP diagnostic software (BUDS2).

After a problem has been solved, be sure to clear the fault(s) in the ECM using the BRP diagnostic software.

NOTICE

Electrical actuators and electronic modules may be powered up as soon as the ignition switch is set to ON. Always disconnect the battery prior to disconnecting any electrical or electronic parts.

Never use a battery charger to temporarily substitute the battery as it may cause the ECM to function erratically, or not at all.

Check related-circuit fuse solidity and condition with an ohmmeter. A visual inspection could lead to a false diagnosis.

Electrical Related Problems

It is important to check the following in the electrical system:

– Battery voltage
– Fuses
– Ground connections
– Wiring and connectors.

Ensure that all electronic components are genuine OEM. Any modification to the wiring harness may lead to poor system operation or generate fault codes.

Electrical Connections

Pay particular attention to ensure that terminals and pins are not out of their connectors, corroded, or out of shape.

When probing terminals, pay attention not to deform the terminals as this could cause a loose or intermittent connection that would be difficult to troubleshoot.

Procedures

Fuel Injector

Testing the Fuel Injector Operation Using BUDS2 (Dynamic)

As a first troubleshooting step, always check for applicable fault codes using the BRP diagnostic software (BUDS2).

1.
2. Connect vehicle to BUDS2.
3. Turn key to the **ON** position.
4. Click the following:
   - **Functions** page
   - **ECM** button
   - **IO Controls - Activate Fuel Injectors**.

   You should hear the fuel injector "clic" when activating, if not, carry out *Testing the Fuel Injector Resistance*.

Testing the Fuel Injector Balance

NOTICE

After fuel injector activation using BUDS2, always crank engine in drowned mode to ventilate engine and prevent a potential backfire due to fuel accumulation in engine.

1. Install a fuel pressure gauge as described in *Fuel Pump Pressure Test* of *Fuel Tank and Fuel Pump* subsection.
2. Connect the vehicle to the BRP diagnostic software (BUDS2).
3. Turn the ignition key to ON.
4. In BUDS2, select the following:
   - **Functions** page
   - **ECM** button
   - **Activate Fuel Pump**.
5. Click on the **ACTIVATE** button to activate fuel pump.
6. Fuel pressure must be within specification. Refer to *Fuel Tank and Fuel Pump* subsection. Re-activate fuel pump as necessary.
7. In BUDS2, energize fuel injector .

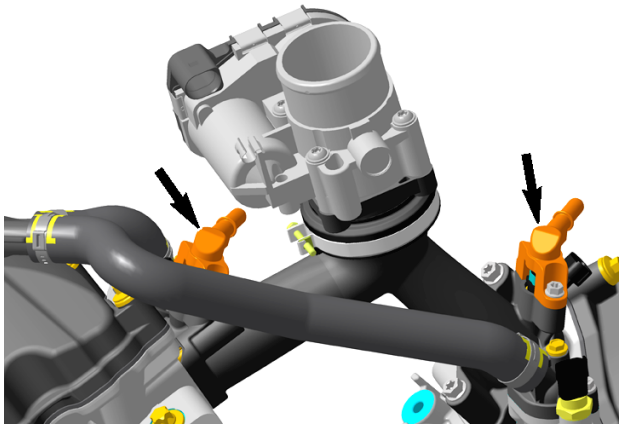

CLICK ON INJECTOR TO ACTIVATE

8. Record the fuel pressure drop for injector .
9. Re-activate fuel pump.
10. The maximum fuel pressure drop between injectors should not exceed the following specification:

10 kPa (1.5 lbf/in²)

11. If pressure drop of any fuel injector is greater than the specification, replace injector then repeat the test.
12. Using the valve on the fuel pressure gauge, release the pressure in the system (if so equipped).
13. Remove fuel pressure gauge and reinstall removed parts.

Testing for Fuel Injector Leaks

Carry out the *Testing the Fuel Pump Pressure* as detailed in the *Fuel Tank and Fuel Pump* subsection.

Testing the Fuel Injector Resistance

1. Disconnect the connector A from the ECM.
2. Install the connector on the ECM adapter tool.

ECM adapter tool (P/N 529 036 166)	

3. Disconnect the engine connector (HIC).
4. Check resistance value between terminals as follows.

Fuel Injector Resistance Test at HIC Connector		
HIC pin	**ECM adapter**	**Specification @ 20°C (68°F)**
D	A-K1	11.4 - 12.6 Ω

5. If resistance value obtained is incorrect, remove injector connector and check resistance value between injector pins as follows.

Fuel Injector Resistance Test at Injector		
Injector pin		**Specification @ 20°C (68°F)**
1	2	11.4 - 12.6 Ω

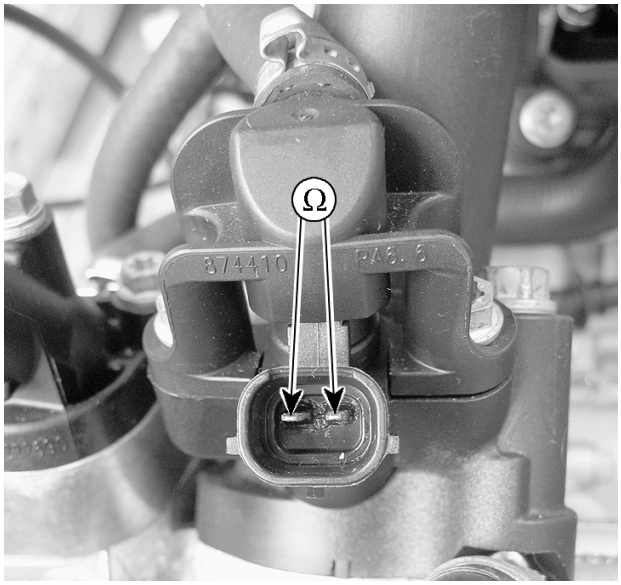

TYPICAL

6. If readings are out of specifications, replace injector.
7. If readings are good, carry out *Testing the Fuel Injector Input Voltage*.

Testing the Fuel Injector Input Voltage

1. Disconnect the fuel injector connector.

NOTE: If the connector is hard to unlock, gently use a screwdriver to release connector.

NOTE: It is not necessary to activate the injector since it is continuously powered when the ignition key is set to ON.

2. Turn ignition key in ON position or press briefly the Start/Stop button after installing the D.E.S.S. key.
3. Use a multimeter and set it to Vdc. Read voltage.

Inj pin	Battery	Specification
2	Negative post	Battery voltage

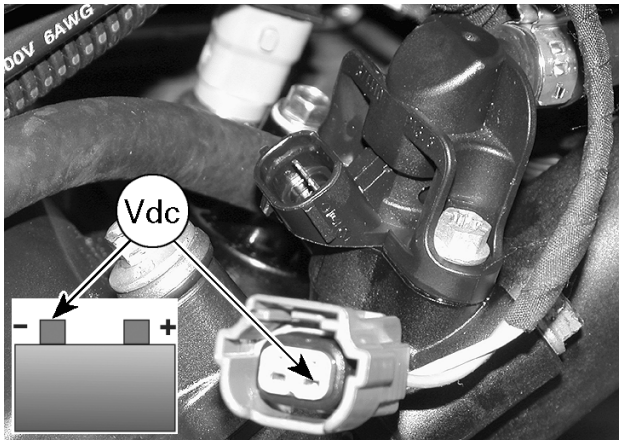

TYPICAL

4. If supply voltage is not good, check continuity between the injector fuse and the injector (see appropriate wiring diagram).

NOTE: Probe fuse exactly as shown. This validates fuse at the same time.

5. Set multimeter to Ω.

Inj pin	Fuse Box	Specification
2	Injector fuse as per wiring diagram	Close to 0 Ω

6. If continuity is good, check relay and wiring from battery.
7. If continuity is faulty, check fuse and if OK, repair or replace wiring going to injector.
8. If supply voltage is good, check ground circuit between injector and ECM (see appropriate wiring diagram).
   - If ground circuit is faulty, repair/replace wiring and connectors.
   - If ground circuit is good, refer to *Replacing the ECM*.

Removing the Fuel Injector

1. If the engine is equipped with a protection plate over the fuel injector, cut the cable tie and remove the protector plate.

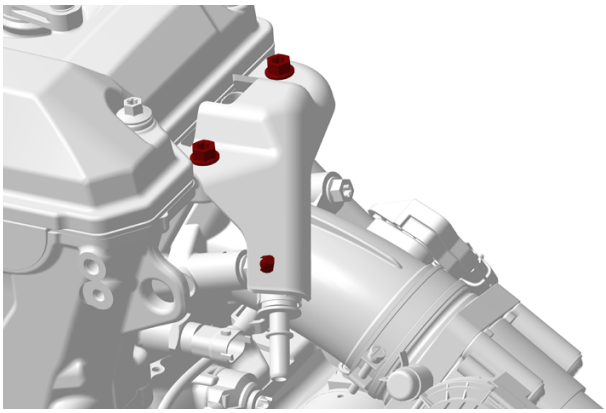

2. Remove the fuel rail, refer to *FUEL RAIL* for the procedure.

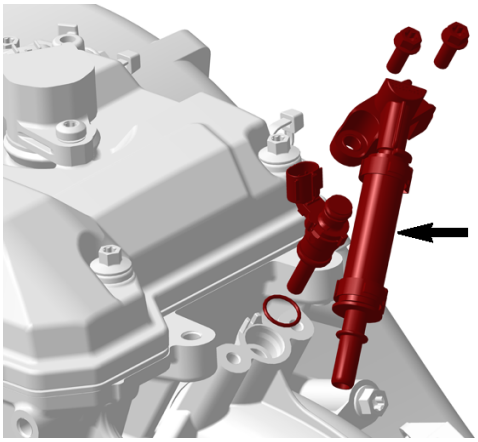

HD7 ENGINES

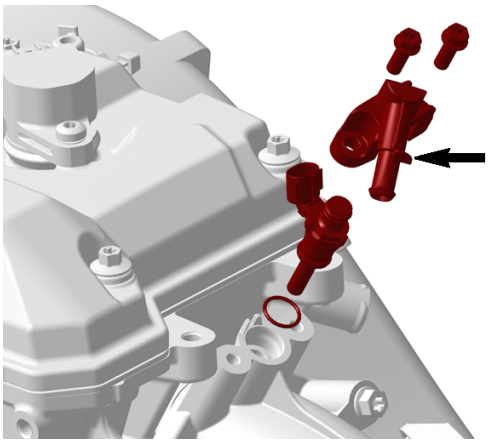

700 ENGINES

3. Then pull fuel injector out of the fuel rail.

Installing the Fuel Injector

The installation is the reverse of the removal procedure. However, pay attention to the following.

NOTICE

If installing the removed injector, always install NEW O-rings.

1. Lubricate **NEW** O-rings with engine oil to ease insertion in rail.
2. Install fuel injector with your hand. Do not use any tool.
3. Position the manifold O-ring on injector as in following illustration.

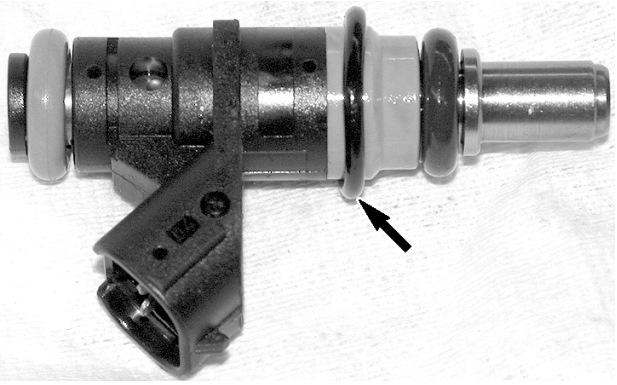

TYPICAL - MANIFOLD O-RING POSITION

4. Carefully insert injector in manifold paying attention to the manifold O-ring.

NOTICE

Gently push O-ring in evenly all around while inserting injector. O-ring must be completely inserted and not visible, before completing the insertion of the injector.

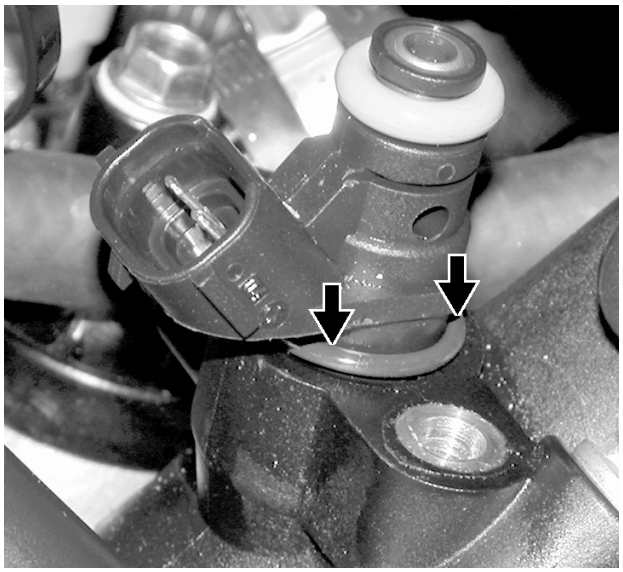

5. Firmly push injector until it bottoms out.
6. Reinstall fuel rail.

Fuel Rail

Removing the Fuel Rail

1. Connect the vehicle to the BRP diagnostic software (BUDS2).

2. Go to this location and follow the instructions:
   - **Functions** page
   - **ECM** button
   - **Execute Fuel Pressure Relief**.
3. Wrap a rag around the inlet hose and release the quick fitting.

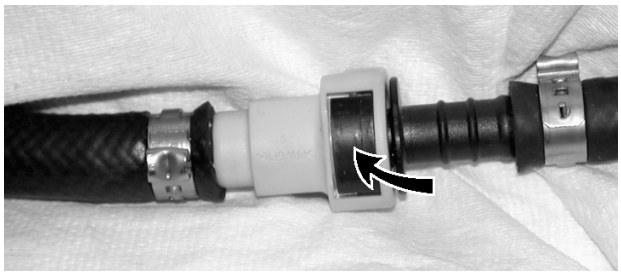

TYPICAL

4. If the engine is equipped with a protection plate over the fuel injector, cut the cable tie and remove the protector plate.
5. Unscrew rail retaining screws.
6. Gently pull rail off by hand.

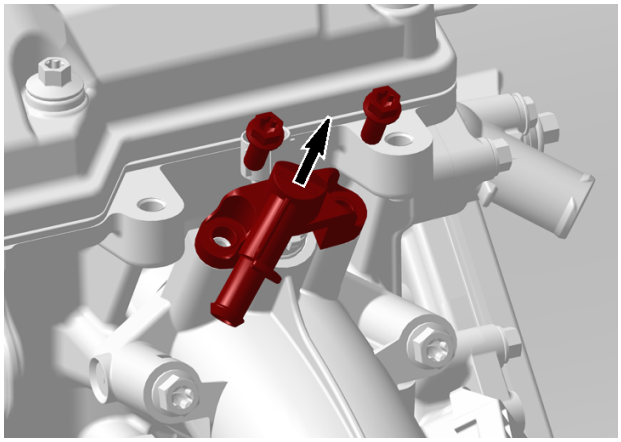

TYPICAL

To disconnect fuel rail from hose, cut clamp on fuel hose. Refer to *fuel tank and fuel pump* for clamp removal/installation procedures.

NOTE: If fuel rail is removed for access to fuel injector, it is not necessary to cut hose clamp. Only to replace fuel rail.

Installing the Fuel Rail

The installation is the reverse of the removal procedure. However, pay attention to the following.

1. Install new clamps using pliers as per removal if fuel rail was replaced.
2. Apply a thin film of engine oil to injector O-rings to ease insertion in rail.
3. Install fuel rail and evenly tighten screws a little at a time each side.

Tightening Torque	
Fuel rail screws	10 ± 1 Nm (89 ± 9 lbf-in)

4. If the engine was equipped with a protection plate, reinstall it, refer to *Intake Manifold* subsection.

⚠ WARNING

Perform a fuel pressure test and ensure that there is no leak. Refer to *Fuel Tank and Fuel Pump*. Run engine and check for leaks.

Throttle Body

Throttle Body Description

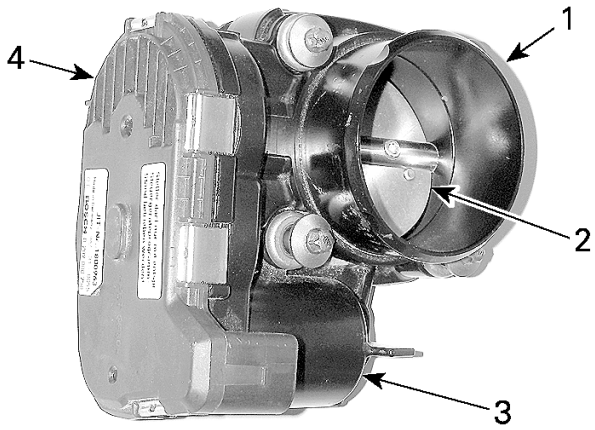

1. *Throttle body*
2. *Throttle plate*
3. *Electronic throttle actuator (electric motor inside)*
4. *Throttle position sensor (TPS) (inside)*

Throttle Body Location

The throttle body is mounted on top of the intake manifold

Lubricating the Throttle Body

No lubrication is required.

Cleaning the Throttle Body

1. Remove air inlet hose from throttle body.
2. Check throttle body cleanliness using a flashlight. Fully open throttle plate and verify:
   - Throttle body bore
   - Throttle plate edge.
3. Look for:
   - Dirt
   - Oily surfaces
   - Carbon and salt deposits on throttle plate and the surrounding bore.

4. If necessary, spray a good throttle body cleaner on the throttle body to clean it. Follow manufacturer's instructions.

NOTICE

Only use an appropriate throttle body cleaner that will not damage O-rings and EFI sensors.

5. To avoid getting dirt into engine, spray cleaner on a clean rag then rub rag against throttle plate and bore. A toothbrush may also be used.

⚠ CAUTION

Ensure key is removed so that nobody can activate the electrical system, otherwise the ECM would turn on and the throttle actuator (ETA) would cycle. This could cause serious finger injury as the throttle plate moves quickly.

6. Gently open throttle plate and hold fully open to reach all surfaces.
7. To remove residual dirt, spray cleaner on throttle plate and on bore.
8. Reinstall removed parts.

Removing the Throttle Body

1. Disconnect air inlet hose from throttle body.
2. Disconnect throttle body connector.

   To remove connector from throttle body, simultaneously press the end of both connector locking tabs illustrated.

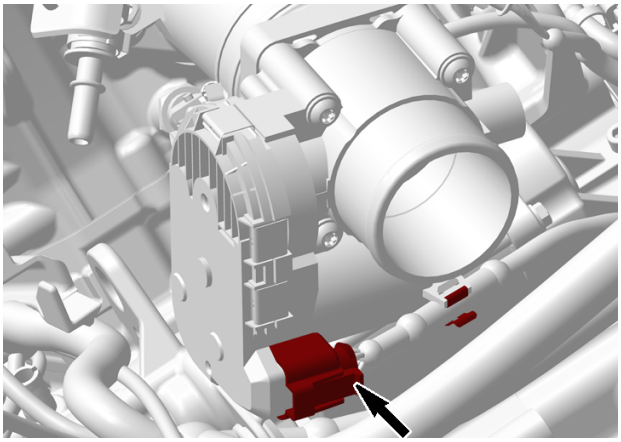

3. Remove screws retaining throttle body to intake socket.

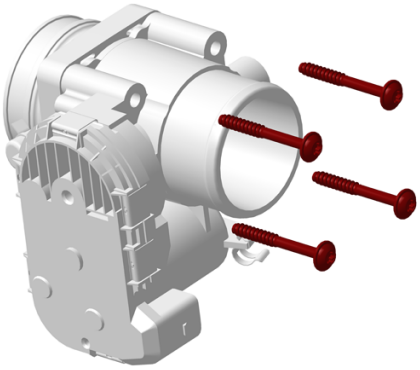

4. Pull throttle body off intake socket.

Installing the Throttle Body

The installation is the reverse of the removal procedure. However, pay attention to the following.

1. Tighten throttle body to the intake socket with the specified torque and tightening sequence.

Tightening Torque		
Screws (throttle body to intake socket)	Step A	5 Nm (44 lbf-in)
	Step B	9 ± 1 Nm (80 ± 9 lbf-in)

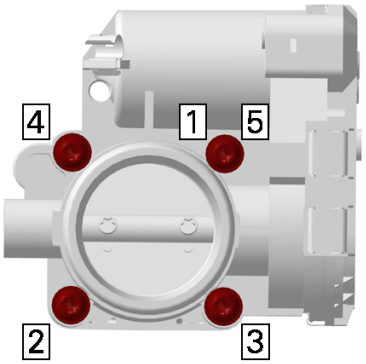

2. Install intake socket with throttle body on the intake manifold, refer to *Intake Manifold* subsection.
3. Perform the *TPS Initialization* reset procedure, refer to *Throttle Position Sensor (TPS)*.

Throttle Position Sensor (TPS)

TPS Description

The throttle position sensor (TPS) is a double

potentiometer that sends signals to the ECM that are proportional to the throttle plate angle.

NOTE: The TPS is part of the throttle body.

As a first troubleshooting step, always check for applicable fault codes using BUDS2 software.

Throttle Position Sensor Initialization

The TPS initialization procedure **must** be carried out whenever the throttle body is replaced, unless an ECM first initialization reset is carried out.

This operation performs a reset of the TPS basic values in the ECM. This reset is very important as the TPS values are part of the basic parameters for all fuel mapping calculations and control of several settings such as for idle speed, LIMP HOME mode and maximum RPM of the engine.

NOTICE

An improperly set TPS may lead to improper idle speed (too low or too high), poor engine performance, poor engine starting and engine stop on deceleration, fault codes and possible engine damage. Emission compliance may also be affected.

1. Connect vehicle to the BRP diagnostic software (BUDS2).
2. In BUDS2, select the following:
   - **Settings** page
   - **ECM** button
   - **Initialization - Reset TPS**
3. Follow display instructions.

   A message will be displayed if the operation is successful.

   If an error occurred or the TPS is not within the allowed range while resetting, the ECM will generate a fault code and will not accept the setting.
4. If a fault message is displayed, follow the instructions in the message(s).
5. Check for fault codes.
6. If a fault code is generated,
   - Carry out the service actions.
   - Reset the fault.
   - Repeat the reset procedure.
7. Start engine and make sure it operates normally throughout its full engine RPM range.

Testing the TPS Wear

1. With the engine turned off, slowly press on the accelerator pedal and pay attention for smooth operation without physical stops.
2. Activate the electrical system to wake up the ECM.
3. Connect the vehicle to the BRP diagnostic software (BUDS2).
4. In BUDS2, select the following:
   - **Measurements** page
   - **ECM** button.
5. Slowly and regularly move the accelerator pedal.
6. Observe the Throttle Opening indication movement in BUDS2

   The indication should move gradually and regularly as you move the accelerator pedal. If the TPS indication is erratic or suddenly drops off, it may indicate a worn TPS that needs to be replaced. An initial slight delay after the accelerator pedal is moved and before the indication starts to move is normal.

   If the indication behavior is not as expected, proceed with the following steps.
7. Manually move the throttle plate in the throttle body using a blunt tool (without sharp tip).

⚠ CAUTION

Do not move throttle plate with your fingers. Otherwise, if ECM should turn off, it would quickly close the throttle plate which could cause finger injury.

1. Push here

8. Check the indication movement again.
   - If the indication moves as expected, check the throttle accelerator sensor (TAS), refer

to *Throttle Accelerator Sensor (TAS)* in this subsection.
– If the indication does not move as expected, perform *Testing the TPS Resistance* in this subsection.

Testing the TPS Resistance

1. Ensure the throttle body connector is properly connected.
2. Disconnect the ECM-A connector from the ECM and install it on the ECM adapter tool.
3. Set multimeter to Ω.
4. Probe circuit as per following table while using your hand to manually move throttle plate.

ECM adapter		Fully closed throttle plate (1)		Fully open throttle plate	
		Specification @ 20°C (68°F)			
		RESISTANCE (Ω)			
PIN		MIN.	MAX.	MIN.	MAX.
A-A2	A-K4	1729	1911	1729	1911
A-A2	A-K3	2256	2494	778	860
A-A2	A-F3	961	1063	2342	2588
A-K3	A-K4	868	960	2280	2520
A-K3	A-F3	2907	3213	2907	3213
A-K4	A-F3	2347	2594	831	919

(1) To obtain the fully closed position, it is necessary to push against the throttle plate in the throttle body with your hand and hold it in this position for the measurement.

Throttle Body Resistance		
ECM adapter		Specification @ 20°C (68°F)
A-L1	A-L2	1.9 - 2.3 Ω

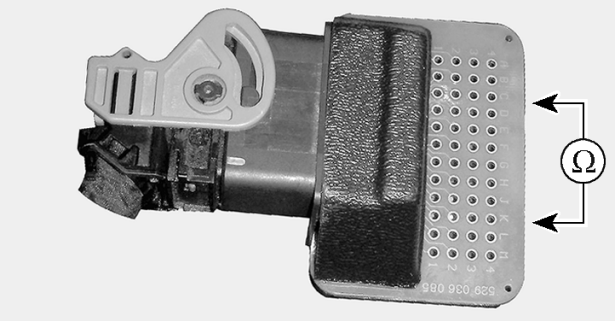

5. If any resistance value is incorrect, check wire continuity between the ECM and the throttle body before assuming the TPS is at fault. Refer to appropriate wiring diagram.

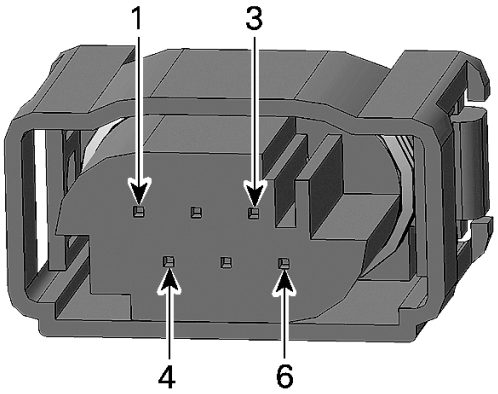

THROTTLE BODY CONNECTOR PIN-OUT

Replacing the TPS

1. The TPS cannot be replaced alone. It is part of the throttle body.
2. Carry out the *TPS Initialization* procedure as detailed in *Throttle Body*.

06

ELECTRICAL SYSTEM

06 Electrical System

Ignition Coil and Spark Plug

SERVICE TOOLS

Description	Part Number	Page
ECM ADAPTER TOOL	(P/N 529036166)	175

General

Cables and locking ties removed during a procedure must be reinstalled as per factory standards.

NOTICE

Never force a multimeter probe into an electrical terminal.

System description

The ignition system is a digital inductive type (IDI) system.

Ignition system parameters such as ignition timing, spark duration, and firing order, are controlled by the ECM in order to meet engine operational requirements.

When a ground signal is provided by the ECM to an ignition coil primary winding, a high voltage is induced in the ignition coil secondary winding that is used to produce a spark at the spark plug electrode.

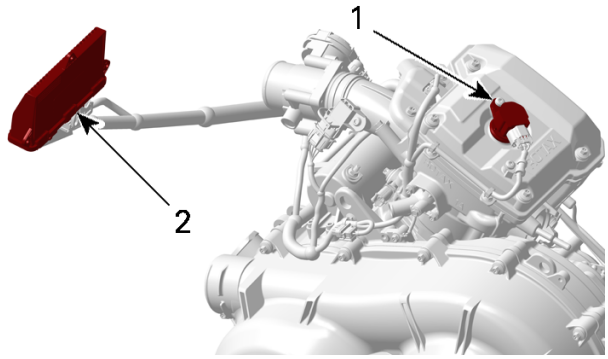

1. *Ignition coil*
2. *ECM*

Ignition Timing

Ignition timing is not adjustable.

The ECM is programmed with data (ignition mappings), used along with data received from a variety of sensors to establish optimum ignition timing under all engine operating conditions.

Troubleshooting

Ignition System Testing

The ECM controls the ignition system.

If a fault is detected by the ECM, the check engine light will turn on.

A check engine message will be displayed in the gauge digital display and a beep code will be emitted. Refer to *Diagnostic and Fault Codes* subsection for details.

The ECM can detect a problem on the primary winding or circuit of the ignition coils.

The secondary winding of the ignition coils is not monitored by the ECM.

Other sensors in relation with the ignition system are also monitored by the ECM.

Ignition System Testing Sequence

Check for fault codes using the BRP diagnostic software (BUDS2) as a first troubleshooting step.

Check the Ignition/Injector fuse. Refer to the appropriate Wiring diagram for proper position in the fuse box.

If a fuse is burnt, test for a short circuit or faulty component on that fuse circuit before replacing the fuse. Refer to *Power Distribution and Grounds* subsection.

Check ignition spark, refer to *Ignition Coil (Quick Test) Using BUDS2* in this subsection.

Procedures

Ignition Coils

Testing the Ignition Coil (Quick Test) using BUDS2

This test confirms the working condition of the ignition circuit and ignition coil .

1. Remove ignition coil, refer to *Removing the Ignition Coil* in this subsection.
2. Install a spark tester on the ignition coil.
3. Connect to vehicle to the BRP diagnostic software (BUDS2).
4. Energize the **ignition coil**by selecting it on the engine illustration.
5. If there is no spark, carry out the following tests.

Testing the Ignition Coil Input Voltage

1. Disconnect the ignition coil connector.
2. Set emergency engine stop switch to RUN.
3. Briefly press on START button to wake up ECM.
4. Measure voltage as per following table.

NOTE: Test is valid only if ECM is active (gauge will be on).

Ignition Coil Input Voltage Test		
Ignition coil connector	**Battery**	**Specification**
VIOLET/ BLUE wire	Negative post (-)	Battery voltage

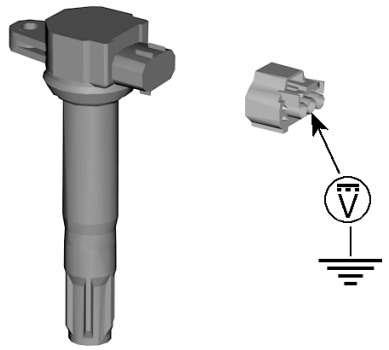

TYPICAL – IGNITION COIL INPUT VOLTAGE TEST

Test Result	Service Action
Battery voltage **is** read	Refer to *Testing the Ignition Coil Resistance*.
Battery voltage **NOT** read	Refer to *Testing the Ignition Coil Circuit Continuity*.

Testing the Ignition Coil Circuit Continuity

Power Input Wire (Ignition Coil)

1. Ensure emergency engine stop switch is set to STOP.
2. Locate and remove the ignition/injector fuse in the fuse box.
3. Disconnect the ignition coil connector.
4. Test continuity of the circuit as per the following table

Power Input Wire Continuity Test		
Ignition Coil Connector Wire	Fuse box contact	Specification
Violet/Blue	As per wiring diagram	Close to 0 Ω (continuity)

5. If continuity is not measured as specified, test the engine and the vehicle harnesses.

Ground Signal Wire (Ignition Coil)

1. Connect the ECM connector A to ECM adapter tool.

ECM adapter tool (P/N 529036166)	

2. Disconnect ignition coil connector.
3. Test for continuity of ignition coil ground signal circuit as per following table.

Ground Signal Wire Continuity Test		
Ignition Coil Connector Wire	**ECM adapter pin**	**Specification**
BROWN/ BLACK	M4	Close to 0 Ω (continuity)

If continuity is not measured as specified , repair the connector or replace the engine wiring harness.

Ground Wire (Wiring Harness)

1. Disconnect ignition coil connector.
2. Test for continuity of circuit as per following table.

Ground wire Continuity Test		
Ignition Coil Connector Wire	**Frame**	**Specification**
BLACK	GND	Close to 0 Ω

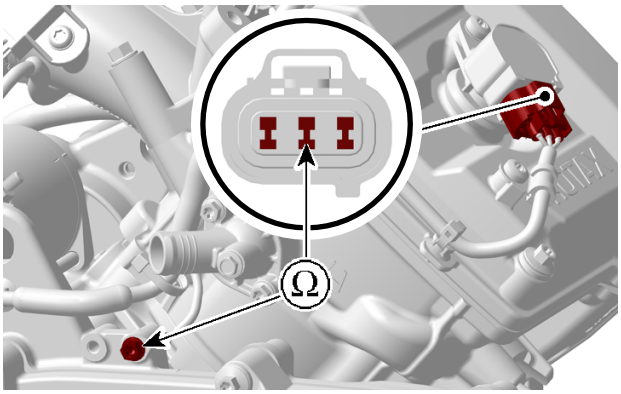

3. If continuity is not measured as specified, check GND wire for damages and correct assemble.
4. Repair the connector or replace the engine wiring harness.

Testing the Ignition Coil Resistance

An ignition coil with a good resistance measurement can still be faulty. Current leakage can occur at high voltage levels which is not detectable with an ohmmeter. Replacing the ignition coil may be necessary as a test.

Primary Winding

1. Remove ignition coil.
2. Set the multimeter to Ω and measure as specified.

Ignition Coil Resistance Test		
Ignition Coil Pin		**Specification @ 20 °C (68 °F)**
1	3	0.8 - 0.97 Ω
1	2	Open Loop (OL)
2	3	

If resistance is not within specification, replace ignition coil.

Secondary Winding

The secondary winding on this type of ignition coil cannot be tested.

Removing the Ignition Coil

1. Remove screw and ignition cable clamp.

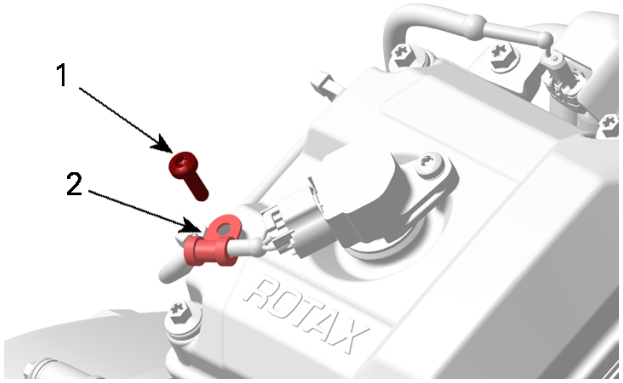

1. Cable clamp screw
2. Ignition cable clamp

2. Disconnect ignition coil connector.
3. Remove ignition coil retaining screw.

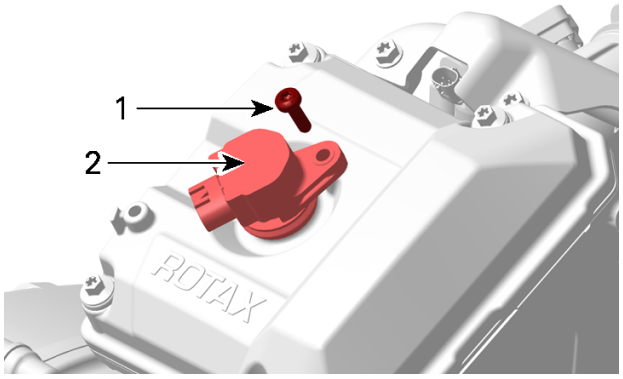

1. Ignition coil retaining screw
2. Ignition coil

NOTICE
Do not pry on ignition coil with a tool.

4. Remove ignition coil from spark plug by rotating coil side to side as you pull up.

Installing the Ignition Coil

NOTICE
Check GND connector on crankcase for tight fit.

1. Align the retaining screw hole of the ignition coil with the threaded hole on the valve cover.
2. Install the ignition coil on the spark plug and push it all the way down until it rests on the valve cover.
3. Install the ignition coil retaining screw an tighten to specification.
4. Install the cable clamp, connect the ignition coil connector and tighten to specification.

Tightening Torque	
Ignition coil retaining screw / cable clamp screw	9 ± 1 Nm (80 ± 9 lbf-in)

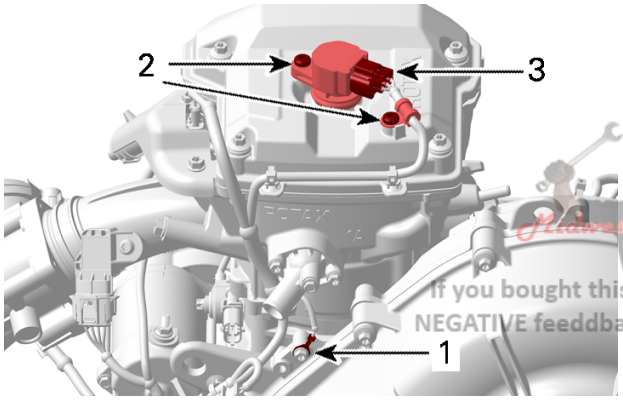

Midwest Manuals
Green Manuals
Paperless Manuals
For a Better Tomorrow
www.green-manuals.com
If you bought this manual from any other seller please leave them
NEGATIVE feeddback and notify me at bestshopmanuals@gmail.com

1. *GND connector*
2. *Ignition coil retaining screw / cable clamp screw*
3. *Ignition coil connector*

Spark Plug

Inspecting the Spark Plug

Using a feeler gauge, inspect electrode gap as specified.

Spark Plug	
Spark plug type	NGK LMAR8AI-8
Electrode gap	0.7 - 0.8 mm (.028 - .031 in)

Installing the Spark Plug

Install spark plug and tighten to specified torque.

Tightening Torque	
Spark plug	11 ± 1 Nm (97 ± 9 lbf-in)

Engine Wiring Harness

General

For connector replacement or wire repair procedures refer to *Wiring Harness and Connectors* subsection.

The adequate installation of the engine harness into the bracket is important to avoid electrical problems. The position of the wires, connectors and locking ties must be done as per the following illustrations.

Procedures

Removing the Engine Wiring Harness

1. Cut locking ties using suitable pliers.

NOTICE
Take care not damaging cables when cutting locking ties.

2. Disconnect connectors.
3. Check connectors for corrosion or any other damage. Replace as required.
4. Pry cable grommet out of the support. Check if it's brittle, hard or damaged. Replace as required.

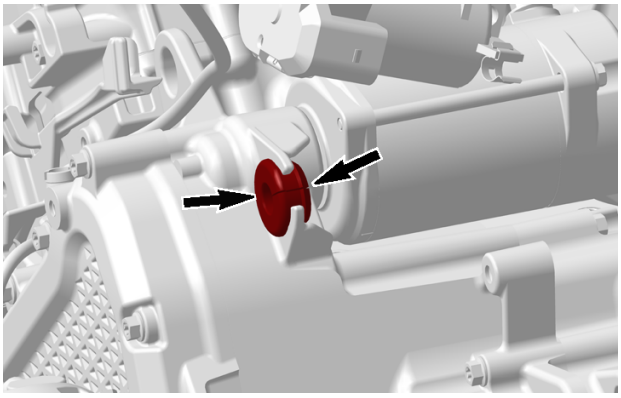

Engine Ground Cable

1. Remove ground cable screw.
2. Check ground cable and mounting surface for corrosion.
3. Clean surfaces with a brass brush. Replace connector as required.

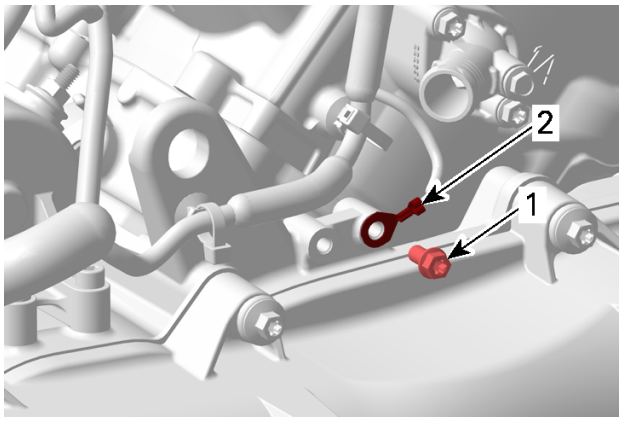

1. *Ground cable screw*
2. *Engine ground cable (GND)*

NOTICE
A corroded connection increases the resistance.

Installing the Engine Wiring Harness

NOTICE
Locking ties are installed on a NEW wiring harness. If replacing the wiring harness, install first the locking tie and then connect the connectors.

1. Position the engine harness on cylinder head and connect:
   - Ignition coil connector
   - Fuel injector connector.
2. Install ignition cable clamp, refer to *Ignition Coil and Spark Plug* subsection.
3. Route cables properly.
4. Install and secure locking ties.

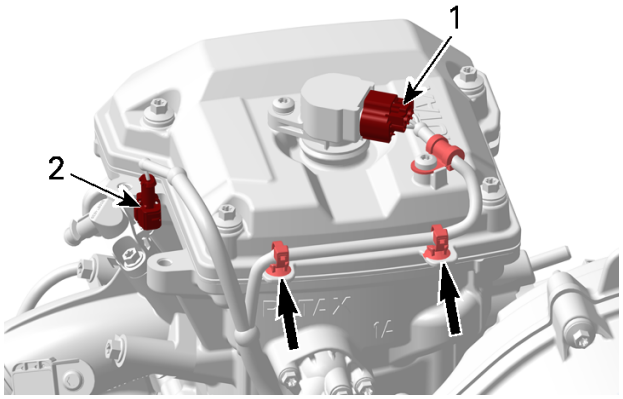

1. *Coil connector*
2. *Injector connector*

5. Route the engine wiring harness beside the electrical starter and connect:
   - CTS connector

- MAPTS connector
- ETC connector.

6. Position GND cable and tighten screw to specification.

Tightening Torque	
GND connector screw	10 ± 1 Nm (89 ± 9 lbf-in)

7. Route cables properly.
8. Install and secure locking ties.

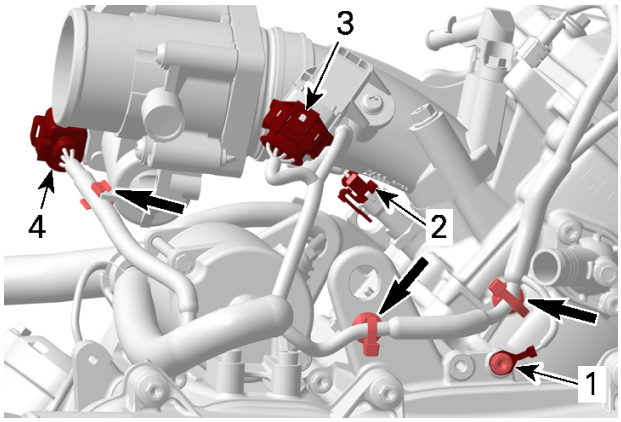

1. *Engine ground cable (GND)*
2. *Coolant temperature sensor (CTS)*
3. *Manifold absolute pressure and temperature sensor (MAPTS)*
4. *Electronic throttle body (ETC)*

9. Install locking ties at OPS connector and cable, but do not secure yet.
10. Connect OPS sensor connector.
11. Route cables properly.
12. Push the grommet in wiring harness support
13. Secure the locking ties.

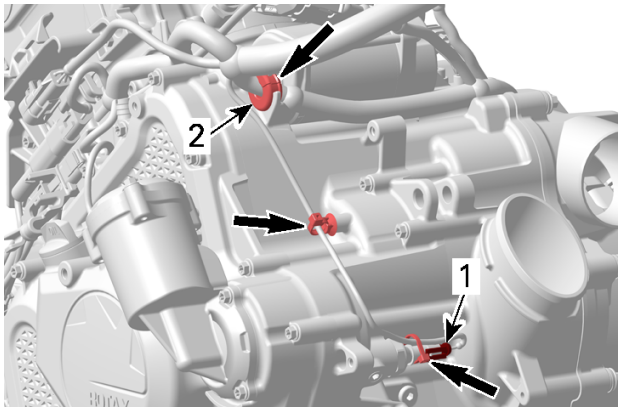

1. *Oil pressure switch (OPS)*
2. *Wiring harness grommet*

14. Install wiring harness bracket and route cable properly. Refer to *Installing the Engine Wiring Harness Bracket* in this subsection.

If removed, install VSS sensor. Refer to *Gearbox* subsection.

15. Route vehicle speed sensor properly.
16. Connect gear position indicator switch connectors. Refer to *Gearbox* subsection
17. Install and secure locking tie.

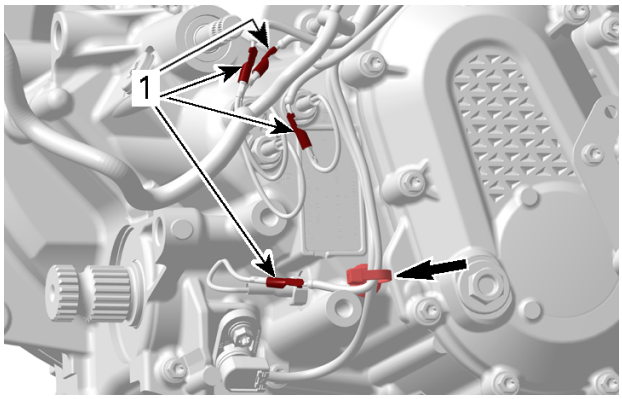

1. *Gearbox position indicator switch connector*

Installing the Engine Wiring Harness Bracket

1. Place wiring harness bracket on the engine MAG side.
2. Tighten the harness support retaining screws to specification.

Tightening Torque	
Wiring harness bracket retaining screws	10 ± 1 Nm (89 ± 9 lbf-in)

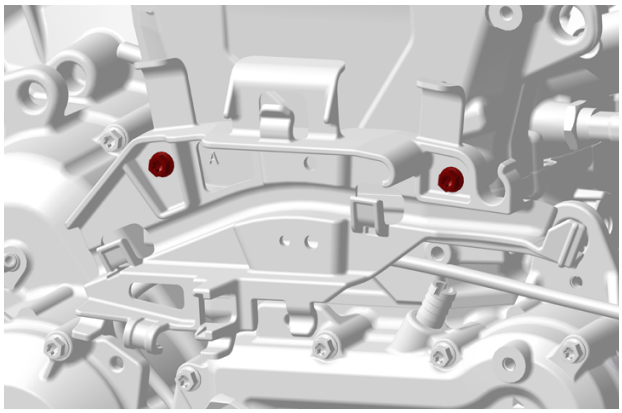

Installing the Engine Wiring Harness on Bracket.

1. Route wring harness through the bracket.
2. Engage harness in bracket support.

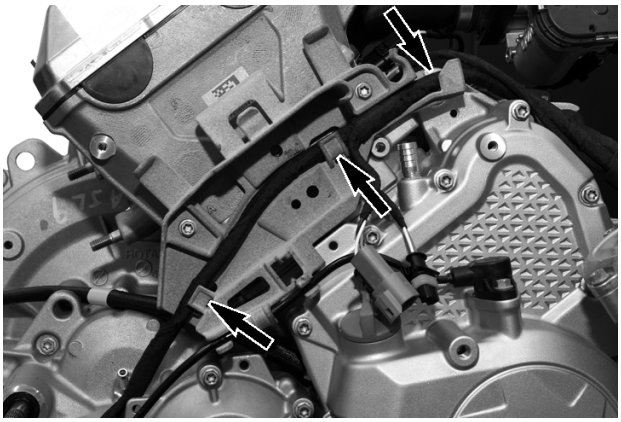

3. Push the O2 sensor into foreseen bracket hole.

4. Push the VSS connector into foreseen bracket hole.

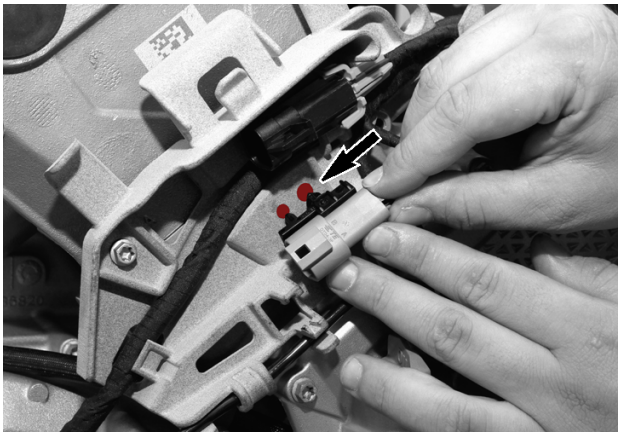

5. Connect vehicle speed sensor to harness connector and slide the protection cover over sensor connector.

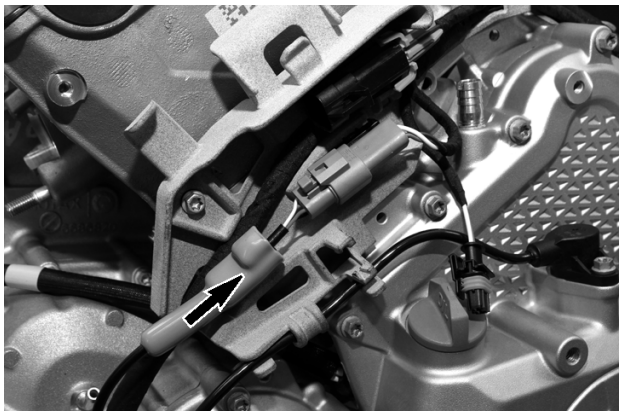

6. Connect crankshaft position sensor to harness connector.

7. Engage CPS sensor cable at the bracket.
8. Push CPS connector in bracket support

NOTICE

Ensure routing of CPS wire, free from tension and with free access to the oil dipstick.

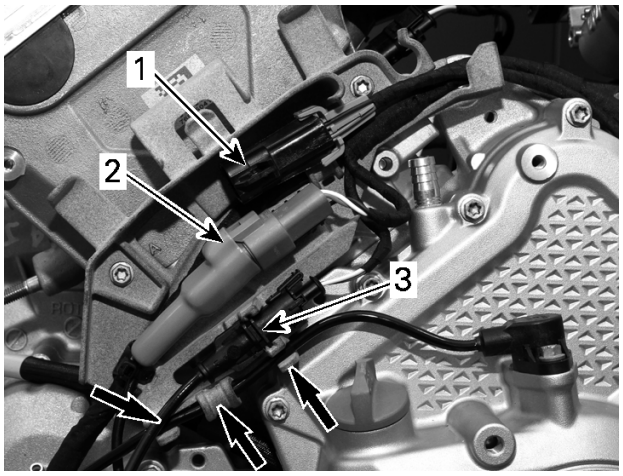

1. Oxygen sensor harness connector
2. Vehicle speed sensor
3. Crankshaft position sensor

9. Secure VSS sensor cable with locking tie to the bracket.

NOTICE
Ensure to install the locking tie in the groove of the bracket.

10. Route CPS cable in a loop.

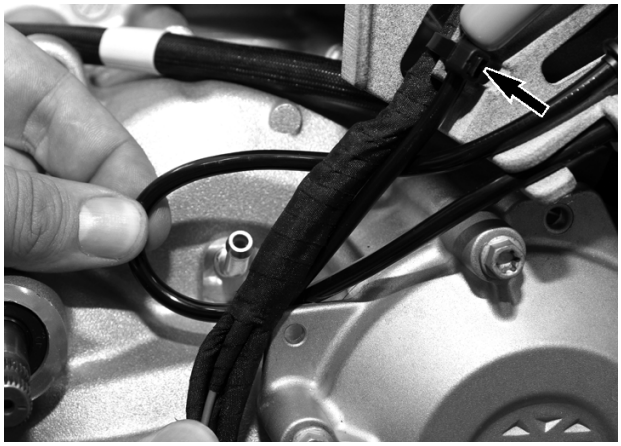

11. Secure complete wiring harness to the crankcase with a locking tie.

    Ensure the CPS cable is properly engaged.

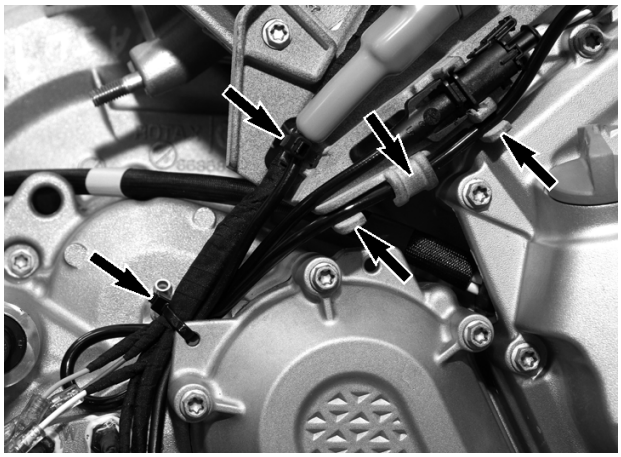

Notes

Technician's Notes

Related Documents

Bulletins	

Instruction Sheets	

Other	

07

TECHNICAL SPECIFICATIONS

07 Technical Specifications

Engine

Engine			
Engine type			ROTAX 4-stroke, Double Over Head Camshaft (DOHC), liquid cooled
Engine weight			77 kg (170 lb) (incl. engine oil and gearbox oil)
Number of cylinder			1
Number of valves			4 valves (mechanical adjustment)
Bore			97 mm (3.82 in)
Stroke			88 mm (3.46 in)
Displacement			650.3 cm³ (39.68 in³)
Compression ratio			10.8:1
Maximum HP RPM			6750
Intake valve opening			5° ATDC
Intake valve closing			53° ABDC
Exhaust valve opening			45° BBDC
Exhaust valve closing			10° ATDC
Valve clearance	Intake		0.11 to 0.19 mm (.0043 to .0075 in)
	Exhaust		0.31 to 0.39 mm (.012 to .015 in)
Valve stem diameter	Intake	New	5.471 to 5.486 mm (.2154 to .216 in)
		Service limit	5.450 mm (.2146 in)
	Exhaust	New	5.462 to 5.476 mm (.215 to .2156 in)
		Service limit	5.440 mm (.2142 in)
Valve out of round	Intake and Exhaust	New	0.005 mm (.0002 in)
		Service limit	0.060 mm (.0024 in)

Midwest Manuals
Green Manuals
Paperless Manuals
For a Better Tomorrow
www.green-manuals.com
If you bought this manual from any other seller please leave them
NEGATIVE feeddback and notify me at bestshopmanuals@gmail.com

Engine			
Valve guide diameter	Intake and Exhaust	New	5.500 to 5.512 mm (.2165 to .217 in)
		Service limit	5.568 mm (.2192 in)
Valve spring free length		New	40.30 mm (1.587 in)
		Service limit	39.00 mm (1.535 in)
Valve seat contact width	Intake	New	1.300 to 1.550 mm (.0512 to .061 in)
		Service limit	1.800 mm (.0709 in)
	Exhaust	New	1.500 to 1.750 mm (.0591 to .0689 in)
		Service limit	1.900 mm (.0748 in)
Piston measurement		New	96.932 to 96.982 mm (3.8162 to 3.8182 in)
		Service limit	96.810 mm (3.8114 in)
Piston/cylinder clearance		New	0.011 to 0.075 mm (.0004 to .003 in)
		Service limit	0.100 mm (.0039 in)
Piston ring type		1st	Upper compression ring, rectangular
		2nd	Lower compression ring, taper-face
		3rd	Oil scraper ring, standard

Engine			
Piston ring end gap	Upper compression ring	New	0.20 to 0.35 mm (.008 to .014 in)
	Lower compression ring		0.900 to 1.050 mm (.0354 to .0413 in)
	Oil scraper ring		0.20 to 0.70 mm (.008 to .028 in)
	Upper compression ring	Service limit	0.60 mm (.024 in)
	Lower compression ring		1.300 mm (.0512 in)
	Oil scraper ring		1.00 mm (.039 in)
Ring/piston groove clearance	Upper compression ring	New	0.030 to 0.060 mm (.0012 to .0024 in)
	Lower compression ring		0.030 to 0.060 mm (.0012 to .0024 in)
	Oil scraper ring		0.040 to 0.120 mm (.0016 to .0047 in)
	Upper compression ring	Service limit	0.150 mm (.0059 in)
	Lower compression ring		0.150 mm (.0059 in)
	Oil scraper ring		0.250 mm (.0098 in)
Cylinder bore		Nominal new	96.993 to 97.007 mm (3.8186 to 3.8192 in)
Cylinder taper		Maximum new	0.038 mm (.0015 in)
		Service limit	0.090 mm (.0035 in)

Engine			
Cylinder out of round		Maximum new	0.015 mm (.0006 in)
		Service limit	0.020 mm (.0008 in)
Camshaft main journal	MAG side	New	28.947 to 28.960 mm (1.1396 to 1.1402 in)
		Service limit	28.920 mm (1.139 in)
	CVT side	New	23.947 to 23.960 mm (.9428 to .9433 in)
		Service limit	23.920 mm (.9417 in)
Camshaft main bearing journal bore	MAG side	New	29.000 to 29.021 mm (1.1417 to 1.1426 in)
		Service limit	29.050 mm (1.1437 in)
	CVT side	New	24.000 to 24.021 mm (.9449 to .9457 in)
		Service limit	24.050 mm (.9469 in)
Camshaft lobe	Intake	New	41.40 to 41.60 mm (1.6299 to 1.6378 in)
		Service limit	41.37 mm (1.6287 in)
	Exhaust	New	41.90 to 42.10 mm (1.6496 to 1.6575 in)
		Service limit	41.87 mm (1.6484 in)
Valve lifter bucket diameter		New	33.977 to 33.987 mm (1.338 to 1.338 in)
		Service limit	33.963 mm (1.3371 in)
Balancer shaft axial clearance		New	0.1 to 0.2 mm (.004 to .008 in)
Crankshaft axial clearance		New	0.1 to 0.4 mm (.004 to .016 in)
		Service limit	0.6 mm (.024 in)

Engine			
Crankshaft deflection	MAG/PTO side	New	0.05 mm (.002 in)
Crankshaft pin diameter		New	41.982 to 41.994 mm (1.6528 to 1.6533 in)
		Service limit	41.960 mm (1.652 in)
Crankshaft main journal diameter	MAG side	New	45.972 to 45.996 mm (1.8099 to 1.8109 in)
		Service limit	45.960 mm (1.8094 in)
	CVT side	New	54.971 to 54.996 mm (2.1642 to 2.1652 in)
		Service limit	54.950 mm (2.163 in)
Crankcase plain bearing diameter	MAG side	Service limit	46.100 mm (1.81 in)
	CVT side	Service limit	55.100 mm (2.17 in)
Crankshaft radial play	MAG side	Service limit	0.09 mm (.004 in)
	CVT side	Service limit	0.1 mm (.004 in)
Connecting rod big end diameter		Service limit	42.090 mm (1.6571 in)
Connecting rod big end radial play		Service limit	0.94 mm (.037 in)
Connecting rod big end axial play		New	0.100 to 0.452 mm (.004 to .018 in)
		Service limit	0.500 mm (.02 in)
Connecting rod small end diameter		New	20.010 to 20.020 mm (.7878 to .7882 in)
		Service limit	20.050 mm (.7894 in)
Piston pin diameter		New	19.996 to 20.000 mm (.7872 to .7874 in)
		Service limit	19.980 mm (.7866 in)

Engine		
Connecting rod/piston pin clearance	Service limit	0.070 mm (.0028 in)

Lubrication System			
Lubrication	Type		Wet sump with replaceable oil filter
	Oil filter		Replaceable cartridge
	Engine oil pressure	Minimum	320 kPa (46.41 lbf/in²) at 7000 RPM
	Engine oil	Capacity (oil change with filter)	2.3 l (2.4 qt (liq.,US))
		Capacity (dry fill)	2.7 l (2.9 qt (liq.,US))
		Recommended XPS oil	4T 5W40 Synthetic blend oil or 4T 10W50 Synthetic oil or 4T 0W40 Synthetic oil
		If the recommended oil is not available	Use a 5W40 or 10W50 motor oil that meets the requirements for API service classification SJ, SL, SM or SN
Oil pressure regulator compression spring free length		New nominal	39 mm (1.535 in)
		Service limit	37 mm (1.457 in)
Oil pump inner and outer rotor clearance		Service limit	0.25 mm (.0098 in)
Oil pump axial clearance		Service limit	0.20 mm (.0079 in)

Transmission		
Type		CVT (Continuously Variable Transmission)
Engagement RPM		1950 ± 100 RPM
Drive belt width	Service limit	34.7 mm (1.366 in)
pDrive pulley sliding shieve large bushing	New	46.98 to 47.06 mm (1.8496 to 1.8528 in)
	Service limit	47.09 mm (1.8539 in)

Transmission		
pDrive pulley sliding sheave small bushing	New	35.94 to 36.095 mm (1.415 to 1.4211 in)
	Service limit	36.125 mm (1.4222 in)
Thrust roller bearing sleeve diameter	New	9.978 to 10.000 mm (.3928 to .3937 in)
	Service limit	9.900 mm (.3898 in)
Roller bearing sleeve diameter	New	7.978 to 8.000 mm (.3141 to .315 in)
	Service limit	7.900 mm (.311 in)
Roller lever bore diameter	New	8.02 to 8.08 mm (.3157 to .3181 in)
	Service limit	8.20 mm (.323 in)
Roller lever bearing sleeve diameter	New	7.978 to 8.000 mm (.3141 to .315 in)
	Service limit	7.900 mm (.311 in)
Inner roller bore diameter	New	8.01 to 8.03 mm (.3154 to .3161 in)
	Service limit	8.15 mm (.3209 in)
Outer roller bore diameter	New	8.01 to 8.09 mm (.3154 to .3185 in)
	Service limit	8.15 mm (.3209 in)
Driven pulley sliding sheave bushing	New	30.01 to 30.135 mm (1.1815 to 1.1864 in)
	Service limit	30.200 mm (1.189 in)
Slider shoes wear limit	New	0.8 mm (.031 in)
	Service limit	0.4 mm (.016 in)

Gearbox			
Type			Dual range (HI-LO) with park, neutral and reverse
Gearbox oil		Capacity	500 ml (.53 qt (liq.,US)) (Oil must be level with the oil level hole)
		Recommended XPS oil	XPS 75W140 synthetic gear oil
		If recommended oil is not available	Use a 75W140 API GL-5 synthetic gearbox oil
Output shaft bearing	Front	New	24.972 to 24.985 mm (.9831 to .9837 in)
		Service limit	24.952 mm (.9824 in)
	Rear	New	29.972 to 29.985 mm (1.18 to 1.1805 in)
		Service limit	29.952 mm (1.1792 in)
Counter shaft	MAG side	New	17.989 to 18.000 mm (.7082 to .7087 in)
		Service limit	17.980 mm (.7079 in)
	CVT side	New	24.977 to 24.990 mm (.9833 to .9839 in)
		Service limit	24.957 mm (.9826 in)
Main shaft	MAG side	New	24.980 to 24.993 mm (.9835 to .984 in)
		Service limit	24.960 mm (.9827 in)
	CVT side	New	19.980 to 19.993 mm (.7866 to .7871 in)
		Service limit	19.960 mm (.7858 in)
Bevel gear shaft bearing journal	MAG side	New	24.980 to 24.993 mm (.9835 to .984 in)
		Service limit	24.960 mm (.9827 in)

Gearbox		
Width of shift fork engagement groove	New	6.15 to 6.25 mm (.242 to .246 in)
	Service limit	6.35 mm (.25 in)
Shift fork claw thickness	New	5.92 to 6.00 mm (.233 to .236 in)
	Service limit	5.8 mm (.228 in)
Gear ratios	Angle drive	32/13 = 2.462
	Intermediate	53/46 = 1.152
	High	45/43 = 1.046
	Low	65/25 = 2.6
	Reverse	49/21 = 2.333
Overall gear ratio	High	2.968
	Low	7.374
	Reverse	6.618

Electrical system		
Magneto generator output		650 W @ 6000 RPM
Electric starter		12 V - 1 kW
Ignition system type		IDI (Inductive Discharge Ignition)
Ignition timing		Not adjustable
Spark plug	Quantity	1
	Make and type	NGK LMAR8AI-8
	Gap	0.7 - 0.8 mm (.028 - .031 in)
Engine RPM limiter setting	Forward	7500 rpm
	Reverse	15 km/h (9 mi/h) without Override) (TBD)

Fuel System		
Fuel delivery	Type	Electronic Fuel Injection (EFI), 46 mm throttle body, 1 injector
Idle speed		1200 rpm ± 100 (not adjustable)

Fuel System			
Fuel	Type		Regular unleaded gasoline
	Minimum octane rating	Inside North America	87 (R+M)/2 or higher
		Outside North America	92 RON or higher

ROTAX®

Engine Service Manual

HD9 and 900 Engines

Midwest Manuals

Green Manuals
Paperless Manuals
For a Better Tomorrow
www.green-manuals.com

If you bought this manual from any other seller please leave them
NEGATIVE feeddback and notify me at bestshopmanuals@gmail.com

Version A

All links below fully clickable

Click here for the Vehicle engine manual

TABLE OF CONTENTS

01 ENGINE 1
INTAKE MANIFOLD 2
PROCEDURES 4
MANIFOLD AIR PRESSURE AND TEMPERATURE SENSOR (MAPTS) 4
PLENUM 6
LUBRICATION SYSTEM 9
MAINTENANCE 12
RECOMMENDED ENGINE OIL 12
VERIFYING THE ENGINE OIL LEVEL 12
CHANGING THE ENGINE OIL 12
REPLACING THE ENGINE OIL FILTER 13
INSPECTION 14
ENGINE OIL PRESSURE 14
TROUBLESHOOTING 15
TROUBLESHOOTING 15
PROCEDURES 15
OIL COOLER 15
OIL PRESSURE SWITCH (OPS) 16
ENGINE OIL PRESSURE REGULATOR 17
OIL PUMP 17
ENGINE OIL STRAINER 20
REED VALVE 20
OIL NOZZLES 20
COOLING SYSTEM - ENGINE COMPONENTS 22
GENERAL 24
INSPECTION 24
INSPECTING THE ENGINE COOLING SYSTEM 24
PROCEDURES 24
COOLANT TEMPERATURE SENSOR (CTS) 24
WATER PUMP HOUSING 25
WATER PUMP IMPELLER 25
WATER PUMP SHAFT AND SEEALS 26
WATER PUMP GEARS 32
MAGNETO AND STARTER 35
PROCEDURES 37
CRANKSHAFT POSITION SENSOR (CPS) 37
MAGNETO COVER 38
STATOR 39
ROTOR 40
SPRAG CLUTCH 42
SPRAG CLUTCH GEAR 43
STARTER DRIVE GEARS 43
ELECTRIC STARTER 44
TIMING CHAIN 46
GENERAL 48
TROUBLESHOOTING 48
TROUBLESHOOTING 48
PROCEDURES 48
TIMING CHAIN TENSIONER 48
CAMSHAFT TIMING GEAR 50
TIMING CHAIN 54
TIMING CHAIN GUIDE (TENSIONER SIDE) 56
CYLINDER HEAD 57
GENERAL 61

INSPECTION 61
LEAK TEST 61
PROCEDURES 63
VALVE COVER 63
ROCKER ARM 64
CAMSHAFT 66
CYLINDER HEAD 68
VALVE SPRINGS 70
VALVES 72
VALVE GUIDE 74
CYLINDER 75
PISTON 76
PISTON RINGS 80
CYLINDER BLOCK 82
GENERAL 86
PROCEDURES 86
ENGINE DRIVE SHAFT 86
ENGINE DRIVE SHAFT OIL SEAL - FRONT 89
ENGINE DRIVE SHAFT OIL SEAL - REAR 89
PTO COVER OIL SEAL 90
PTO COVER 90
DRIVE GEARS 94
CRANKCASE 95
CRANKSHAFT 99

02 CONTINUOUSLY VARIABLE TRANSMISSION 105
EXPLODED VIEW AND GENERAL WARNINGS 106
CVT AIR FILTER 108
REMOVING THE CVT AIR FILTER 108
CLEANING THE CVT AIR FILTER 108
INSTALLING THE CVT AIR FILTER 108
CVT COVER 109
DRAINING THE CVT COVER 109
REMOVING THE CVT COVER 109
INSPECTING THE CVT COVER 109
CLEANING THE CVT AIR INLET/OUTLET 109
INSTALLING THE CVT COVER 110
DRIVE BELT 111
REMOVING THE DRIVE BELT 111
INSPECTING THE DRIVE BELT 111
INSTALLING THE DRIVE BELT 112
DRIVE PULLEY 113
REMOVING THE DRIVE PULLEY 113
DISASSEMBLING THE DRIVE PULLEY 114
DRIVE PULLEY - GOVERNOR CUP WITHOUT THREADED HOLES 114
DRIVE PULLEY - GOVERNOR CUP WITH THREADED HOLES 114
GOVERNOR CUP 115
SLIDING SHEAVE 116
FIXED SHEAVE 117
CLEANING THE DRIVE PULLEY 118
INSPECTING THE DRIVE PULLEY 119
BUSHINGS 119
GOVERNOR CUP 119
ROUND TYPE ROLLER 119
HEXAGONAL TYPE ROLLER 119

SLIDING SHEAVE AND SLIDER SHOES 119
CENTRIFUGAL LEVER PIVOT BOLT 120
CENTRIFUGAL LEVER 120
SLIDING SHEAVE AND SPRING COVER 121
FIXED SHEAVE 122
HUB BEARING 122
ASSEMBLING THE DRIVE PULLEY 122
HUB BEARING 122
SLIDING SHEAVE 123
GOVERNOR CUP 123
INSTALLING THE DRIVE PULLEY 124
DRIVEN PULLEY 125
REMOVING THE DRIVEN PULLEY 125
DISASSEMBLING THE DRIVEN PULLEY 126
REMOVING CAM AND SPRING 126
REMOVING THE DRIVEN PULLEY ROLLER 126
INSPECTING THE DRIVEN PULLEY 127
CAM 127
SLIDING SHEAVE 128
FIXED SHEAVE 128
DRIVEN PULLEY ROLLER 128
CLEANING THE DRIVEN PULLEY 129
CAM AND SPRING 129
ASSEMBLING THE DRIVEN PULLEY 129
INSTALLING THE DRIVEN PULLEY ROLLER 129
ASSEMBLING THE SHEAVES AND CAM 129
INSTALLING THE DRIVEN PULLEY 130
CVT AIR GUIDE 132
REMOVING THE CVT AIR GUIDE 132
INSPECTING THE CVT AIR GUIDE 132
INSTALLING THE CVT AIR GUIDE 132

03 GEARBOX AND 4X4 COUPLING UNIT WITHOUT LOCKABLE REAR DIFFERENTIAL 133
EXPLODED VIEWS 134
GEARBOX OVERVIEW 136
TROUBLESHOOTING 137
TROUBLESHOOTING 137
GEARBOX OIL 138
RECOMMENDED GEARBOX OIL 138
VERIFYING THE GEARBOX OIL LEVEL 138
CHANGING THE GEARBOX OIL 139
INSPECTING THE GEARBOX OIL 139
VEHICLE SPEED SENSOR (VSS) 140
VSS LOCATION 140
VSS WIRE IDENTIFICATION 140
VSS CIRCUIT PROTECTION 140
TESTING THE VSS INPUT VOLTAGE 140
TESTING THE VSS SIGNAL 140
REMOVING THE VSS 141
CLEANING THE VEHICLE SPEED SENSOR (VSS) 141
INSTALLING THE VSS 141
GEARBOX POSITION SENSOR (GBPS) 142
GBPS RESET 142
TESTING THE GBPS INPUT VOLTAGE 142

TESTING THE GBPS COMMUNICATION LINK CONTINUITY 143
REMOVING THE GBPS 143
INSTALLING THE GBPS 143
4WD INDICATOR SWITCH 144
TESTING THE 4WD INDICATOR SWITCH 144
REMOVING THE 4WD INDICATOR SWITCH 144
INSTALLING THE 4WD INDICATOR SWITCH 144
4WD ACTUATOR 145
TESTING THE 4WD ACTUATOR 145
REMOVING THE 4WD ACTUATOR 145
INSTALLING THE 4WD ACTUATOR 145
GEARBOX OIL SEALS 147
REPLACING THE GEARBOX OIL SEAL 147
LUBRICATING THE OIL SEAL 147
COUNTERSHAFT OIL SEAL 147
SHIFT SHAFT OIL SEAL 148
SHIFT DRUM SHAFT OIL SEAL 148
DRIVE GEAR OIL SEALS 149
GEARBOX ASSEMBLY 150
REMOVING THE GEARBOX ASSEMBLY 150
INSTALLING THE GEARBOX 150
GEARBOX HOUSING 151
DISASSEMBLING THE GEARBOX HOUSING 151
INSPECTING THE GEARBOX HOUSING 153
REPLACING THE BEARING 153
ASSEMBLING THE GEARBOX HOUSING 154
GEARBOX AND SHIFTING MECHANISM 158
DISASSEMBLING THE GEARBOX AND SHIFTING MECHANISM 158
INDEX LEVER, INDEX WASHER AND PARKING LOCK LEVER 158
SHIFT SHAFT ASSEMBLY AND SHIFT DRUM 159
PINION DRIVE SHAFT AND INTERMEDIATE SHAFT 159
MAIN SHAFT, SHIFT FORK SHAFT ASSEMBLY AND COUNTERSHAFT 160
DISASSEMBLING THE SHIFT FORK SHAFT ASSEMBLY 160
INSPECTING THE GEARBOX AND SHIFTING MECHANISM 160
BEARINGS 161
SHIFTING SLEEVES 161
SHAFTS 161
SHIFT SHAFT 162
SHIFT DRUM 162
SHIFT FORKS 162
SHIFT FORK SHAFT 162
INDEX LEVER AND PARKING LEVER 162
ASSEMBLING THE GEARBOX AND SHIFTING MECHANISM 162
ASSEMBLING THE SHIFT FORK SHAFT ASSEMBLY 163
MAIN SHAFT, SHIFT FORK SHAFT ASSEMBLY AND COUNTERSHAFT 163
PINION DRIVE SHAFT AND INTERMEDIATE SHAFT 163
SHIFT SHAFT ASSEMBLY AND SHIFT DRUM 164
INDEX LEVER, INDEX WASHER AND PARKING LOCK LEVER 164
OUTPUT SHAFT AND 4X4 COUPLING MECHANISM 167
REMOVING THE OUTPUT SHAFT AND 4X4 COUPLING MECHANISM 167
INSPECTING THE OUTPUT SHAFT AND 4X4 COUPLING MECHANISM 167
OUTPUT SHAFT 167
4X4 COUPLING SLEEVE 167
COUPLING FORK 168
INSTALLING THE OUTPUT SHAFT AND 4X4 COUPLING MECHANISM 168
DRIVE GEAR 169

REMOVING THE DRIVE GEAR 169
INSTALLING THE DRIVE GEAR 169

04 GEARBOX AND 4X4 COUPLING UNIT WITH LOCKABLE REAR DIFFERENTIAL 171
EXPLODED VIEWS – LOCKABLE REAR DIFFERENTIAL 173
GEARBOX OVERVIEW 175
TROUBLESHOOTING 176
TROUBLESHOOTING 176
GEARBOX OIL 177
RECOMMENDED GEARBOX OIL 177
VERIFYING THE GEARBOX OIL LEVEL 177
CHANGING THE GEARBOX OIL 178
INSPECTING THE GEARBOX OIL 178
VEHICLE SPEED SENSOR (VSS) 179
VSS LOCATION 179
VSS WIRE IDENTIFICATION 179
VSS CIRCUIT PROTECTION 179
TESTING THE VSS INPUT VOLTAGE 179
TESTING THE VSS SIGNAL 179
REMOVING THE VSS 180
CLEANING THE VEHICLE SPEED SENSOR (VSS) 180
INSTALLING THE VSS 180
GEARBOX POSITION SENSOR (GBPS) AND MAGNET 181
GBPS RESET 181
TESTING THE GBPS INPUT VOLTAGE 181
TESTING THE GBPS COMMUNICATION LINK CONTINUITY 182
REMOVING THE GBPS AND MAGNET 182
INSTALLING THE GBPS AND MAGNET 182
4WD ACTUATOR 184
TESTING THE ACTUATOR POWER INPUT 184
TESTING THE 4WD CIRCUIT CONTINUITY 184
REMOVING THE 4WD ACTUATOR 184
INSTALLING THE 4WD ACTUATOR 184
DIFFERENTIAL LOCKING ACTUATOR 186
TESTING THE DIFFERENTIAL LOCKING ACTUATOR FUNCTION 186
TESTING THE DIFFERENTIAL LOCKING ACTUATOR RESISTANCE 186
REMOVING THE DIFFERENTIAL LOCKING ACTUATOR 187
INSTALLING THE DIFFERENTIAL LOCKING ACTUATOR 187
GEARBOX OIL SEALS 189
REPLACING THE GEARBOX OIL SEAL 189
LUBRICATING THE OIL SEAL 189
COUNTERSHAFT OIL SEAL 189
SHIFT SHAFT OIL SEAL 190
OUTPUT SHAFT OIL SEALS 190
GEARBOX ASSEMBLY 192
REMOVING THE GEARBOX ASSEMBLY 192
INSTALLING THE GEARBOX 192
GEARBOX HOUSING 193
DISASSEMBLING THE GEARBOX HOUSING 193
INSPECTING THE GEARBOX HOUSING 195
REPLACING THE BEARING 195
ASSEMBLING THE GEARBOX HOUSING 196
GEARBOX AND SHIFTING MECHANISM 200
DISASSEMBLING THE GEARBOX AND SHIFTING MECHANISM 200

INDEX LEVER, INDEX WASHER AND PARKING LOCK LEVER 200
SHIFT SHAFT ASSEMBLY AND SHIFT DRUM 201
PINION DRIVE SHAFT AND INTERMEDIATE SHAFT 201
MAIN SHAFT, SHIFT FORK SHAFT ASSEMBLY AND COUNTERSHAFT 202
DISASSEMBLING THE SHIFT FORK SHAFT ASSEMBLY 202
INSPECTING THE GEARBOX AND SHIFTING MECHANISM 202
BEARINGS 203
SHIFTING SLEEVES 203
SHAFTS 203
SHIFT SHAFT 204
SHIFT DRUM 204
SHIFT FORKS 204
SHIFT FORK SHAFT 204
INDEX LEVER AND PARKING LEVER 204
ASSEMBLING THE GEARBOX AND SHIFTING MECHANISM 204
ASSEMBLING THE SHIFT FORK SHAFT ASSEMBLY 205
MAIN SHAFT, SHIFT FORK SHAFT ASSEMBLY AND COUNTERSHAFT 205
PINION DRIVE SHAFT AND INTERMEDIATE SHAFT 205
SHIFT SHAFT ASSEMBLY AND SHIFT DRUM 206
INDEX LEVER, INDEX WASHER AND PARKING LOCK LEVER 206
OUTPUT SHAFT AND 4X4 COUPLING MECHANISM 209
REMOVING THE OUTPUT SHAFT AND 4X4 COUPLING MECHANISM 209
INSPECTING THE OUTPUT SHAFT AND 4X4 COUPLING MECHANISM 209
OUTPUT SHAFT 209
4X4 COUPLING SLEEVE 209
COUPLING FORK 210
INSTALLING THE OUTPUT SHAFT AND 4X4 COUPLING MECHANISM 210
REAR DIFFERENTIAL AND LOCKING MECHANISM 211
REMOVING THE REAR DIFFERENTIAL AND LOCKING MECHANISM 211
INSPECTING THE REAR DIFFERENTIAL 211
INSTALLING THE REAR DIFFERENTIAL AND LOCKING MECHANISM 211

05 ELECTRONIC MANAGEMENT SYSTEM 213
ELECTRONIC CONTROL MODULE 214
GENERAL 214
SYSTEM DESCRIPTION 214
TROUBLESHOOTING 214
DIAGNOSTIC TIPS 214
PROCEDURES 214
ENGINE CONTROL MODULE (ECM) 214

06 FUEL SYSTEM 217
ELECTRONIC FUEL INJECTION (EFI) 218
GENERAL 218
SYSTEM DESCRIPTION 218
IDLE SPEED 219
TROUBLESHOOTING 219
DIAGNOSTIC TIPS 219
PROCEDURES 219
FUEL INJECTOR 219
FUEL RAIL 222
THROTTLE BODY 223
THROTTLE POSITION SENSOR (TPS) 224

07 TECHNICAL SPECIFICATIONS 227
ENGINE 228

Bearing pin extractor
(P/N 529036458)

Page:127

Camshaft timing tool
(P/N 529036268)

Page:51

Clutch holder
(P/N 529036496)

Page:113, 125, 130

Cover Washer installer
(P/N 529036271)

Page:88

Crankcase support MAG/PTO
(P/N 529036031)

Page:97

Crankshaft locking bolt
(P/N 529035617)

Page:40, 76, 100

Crankshaft protector
(P/N 529036034)

Page:40

Crankshaft TDC position tool
(P/N 529036529)

Page:54

Disconnect tool
(P/N 529035714)

Page:14

Drive pulley puller
(P/N 529000064)

Page:113

Drive shaft oil seal installer
(P/N 529036028)

Page:89

Drive shaft oil seal protector
(P/N 529036029)

Page:88

Driven pulley adapter
(P/N 708200720)

Page:111, 125

Driven pulley spacer
(P/N 529036351)

Page:126

ECM adapter tool
(P/N 529036166)

Page:4–5, 24, 37, 143, 182, 187, 215, 220, 225

Engine leak down test kit
(P/N 529035661)

Page:62

Governor cup puller
(P/N 529036350)

Page:114

Handle
(P/N 420877650)

Page:31, 148, 190

M34 socket
(P/N 529036388)

Page:151, 156, 193, 198

Magneto puller
(P/N 529035748)

Page:40

Oil pressure hose
(P/N 529036394)

Page:14

Oil seal installer (countershaft)
(P/N 529036391)

Page:148, 190

Oil seal installer (differential output)
(P/N 529036456)

Page:149, 191

Oil seal installer (gearbox)
(P/N 529035758)

Page:148, 190

Oil seal pusher
(P/N 529035757)

Page:31

Piston circlip installer
(P/N 529036153)

Page:79

Piston ring compressor
(P/N 529035919)

Page:76

Plain bearing remover/installer
(P/N 529035917)

Page:97

Plain bearing remover/installer
(P/N 529036032)

Page:92–93

Pressure gauge
(P/N 529036395)

Page:14

PTO cover oil seal installer
(P/N 529036033)

Page:90

Puller/locking tool
(P/N 529000088)

Page:111, 125

Pulley spring compressor tool
(P/N 529036012)

Page:117, 126

Rotary seal pusher plate
(P/N 529036130)

Page:29

Seal pusher
(P/N 529035766)

Page:29, 31

Sleeve installer
(P/N 529036455)

Page:149, 154, 169, 191, 196, 211

Splines socket 1/2"
(P/N 529036389)

Page:151, 156, 193, 198

TDC dial indicator
(P/N 414104700)

Page:62

Valve guide installer
(P/N 529036140)

Page:74

Valve guide remover 5 mm
(P/N 529035924)

Page:74

Valve spring compressor cup
(P/N 529035764)

Page:70

Valve spring compressor
(P/N 529035724)

Page:70

Black neoprene paint
Page:45

Clutch and pulley flange cleaner PRO S1
Page:41–42, 118, 122, 129

Copaslip
Page:162, 204

Dielectric grease
Page:45

Dow Corning 111
Page:31

Drei Bond sealing compound
Page:38

Isoflex Grease Topas NB 5051
Page:123

Loctite 243 (blue)
Page:6, 16, 20, 40, 52, 56, 88, 132, 150, 154, 165, 168, 192, 196, 207, 210

Loctite 5910
Page:87, 144, 155, 157, 197, 199

Loctite 648 (green)
Page:42–43, 156, 165, 198, 207

Loctite 767 (anti-seize lubricant)
Page:44, 74

Loctite chisel (gasket remover)
Page:38, 87, 154, 196

Petamo grease Ghy 133n
Page:147, 189

Super Lube grease
Page:139, 141, 145, 178, 180, 183–184, 187

XPS Brakes and Parts cleaner
Page:130

XPS synthetic grease
Page:37

ENGINE

01 Engine

Intake Manifold

SERVICE TOOLS

Description	Part Number	Page
ECM ADAPTER TOOL	(P/N 529036166)	4–5

SERVICE PRODUCTS

Description	Part Number	Page
LOCTITE 243 (BLUE)		6

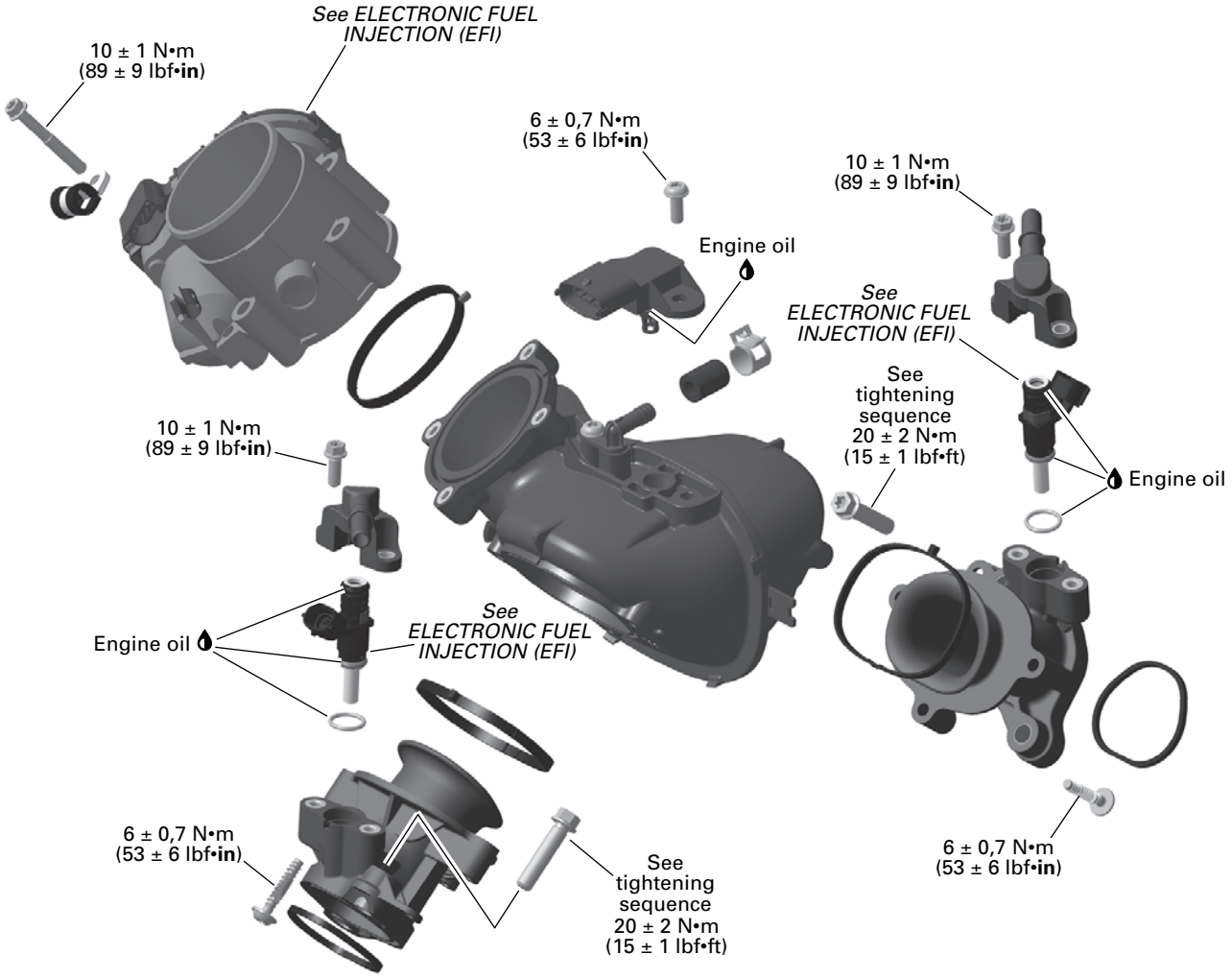

NEW = Component must be replaced when removed.

Procedures

Manifold Air Pressure and Temperature Sensor (MAPTS)

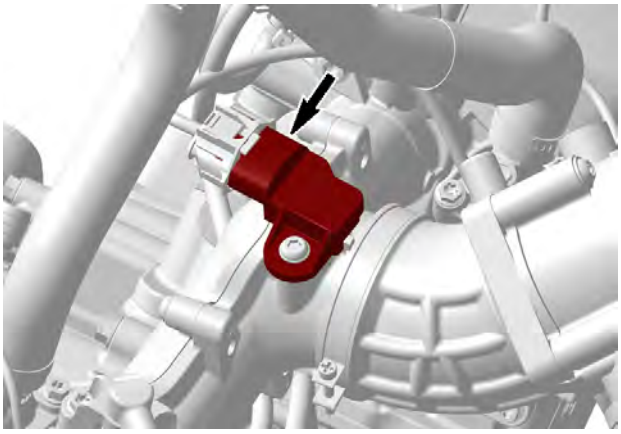

MAPTS Pressure Function

Before the engine is started, when power is applied to the system, the sensor measures the ambient air atmospheric pressure. The ambient pressure is, at that moment, stored in the ECM. Thereafter, once the engine is started, it measures the air pressure in the inlet end of the intake manifold at operating RPMs.

The sensor must be correctly installed on intake manifold. Otherwise, the MAPTS could generate a fault code for an unexpected sensor range at idle when it reads the atmospheric pressure. If this is the case, remove sensor and check for oil or dirt on its end and if problem persists, check throttle plate condition/position and the wiring harness. Perform the following tests.

Testing the MAPTS (Pressure Function)

1. Connect vehicle to the BRP diagnostic software (BUDS2).
2. In BUDS2, select the following:
   - Measurements page
   - ECM button
   - Custom tab
   - Manifold Pressure With Altitude Correction.
3. Look for and take note of the MAPTS pressure reading while the engine is stopped.
4. Perform the same test with a new MAPTS and compare both readings.

   Values have to be within ± 3.4 kPa (.5 lbf/in²).

Testing the MAPTS Pressure Function			
Result	Service Action		
No reading	Circuit Continuity Test of MAPTS Pressure Function	MAPTS Input Voltage Test	Repair or replace wiring
Value is out of range	Replace MAPTS		

Testing the MAPTS Input Voltage

Check the voltage output from ECM to the pressure sensor.

1. Turn ignition key ON.
2. Remove electrical connector from MAPTS.
3. Measure input voltage as per following table.

MAPTS connector		Measurement
Pin		Voltage
1	3	5 Vdc

If voltage test is good, replace the MAPTS.

If voltage test is not good, carry out *Testing the MAPTS Circuit Continuity (Pressure Function)*.

Testing the MAPTS Circuit Continuity (Pressure Function)

1. Disconnect the connector A from the ECM.
2. Install the connector on the ECM adapter tool.

ECM adapter tool (P/N 529036166)	

3. Check continuity of the following circuits.

MAPTS Circuit Continuity Test (Pressure Function)		
ECM adapter pin	**MAPTS Connector Pin**	**Measurement**
B4	3	Close to 0 Ω
G4	4	
H2	1	

If resistance is not within specification, repair or replace the wiring harness between the ECM connector and the MAPTS.

MAPTS Temperature Function

The sensor monitors the temperature in the inlet of the intake manifold.

Testing the MAPTS (Temperature Function)

1. Connect the vehicle to the BRP diagnostic software (BUDS2).
2. In BUDS2, select the following:
   - Measurements page
   - ECM button
   - Custom tab.
3. Look for the Intake Temperature reading while the engine is stopped.
4. Perform the same test with a new MAPTS and compare both readings.
5. If the engine's MAPTS temperature reading is significantly different than the new MAPTS, replace it.

NOTE: Both sensors must measure the same ambient air temperature.

6. If there is no reading, carry out a *Testing the MAPTS Resistance (Temperature Function)*.

Testing the MAPTS Resistance (Temperature Function)

1. Disconnect the connector from the MAPTS.
2. Check the resistance of the sensor itself as shown.

MAPTS Resistance Test		
MAPTS pin		**Measurement @ 20 °C (68 °F)**
1	2	2280 - 2740 Ω

3. If resistance is not within specification, replace the MAPTS.
4. If resistance tests good, reconnect the MAPTS and disconnect the connector A from the ECM.
5. Install the connector A on the ECM adapter tool.

ECM adapter tool (P/N 529036166)	

6. Using a multimeter, recheck resistance value as per following table.

MAPTS Resistance Test at ECM Connector		
ECM adapter pin		**Measurement @ 20 °C (68 °F)**
A-H2	A-H3	2280 - 2740 Ω

MAPTS Temperature Sensor Test Results			
Result	Service Action		
No reading	Circuit Continuity Test of MAPTS Tempera ture Function	MAPTS Input Voltage Test	Repair or replace wiring
Incorrect resistance value	Replace MAPTS		

Testing the MAPTS Circuit Continuity (Temperature Function)

MAPTS Circuit Continuity Test (Temperature Function)		
ECM adapter pin	**MAPTS connector pin**	**Measurement**
A-H2	1	Close to 0 Ω
A-H3	2	

Replacing the MAPTS

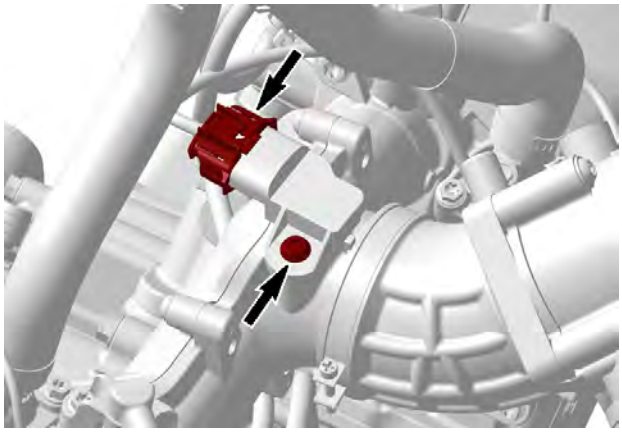

1. Disconnect MAPTS connector and remove the MAPTS from the intake manifold.
2. Apply a drop of threadlocker on MAPTS screw threads.

Loctite 243 (blue)

3. Secure the MAPTS.

Tightening Torque	
MAPTS retaining screw	6 ± 0.7 Nm (53 ± 6 lbf-in)

4. Connect the MAPTS connector.

Plenum

Removing the Plenum

1. Unplug the fuel pump connector.
2. Release fuel pressure by running engine until it runs out of gas.
3. Disconnect the air filter housing hose from throttle body.

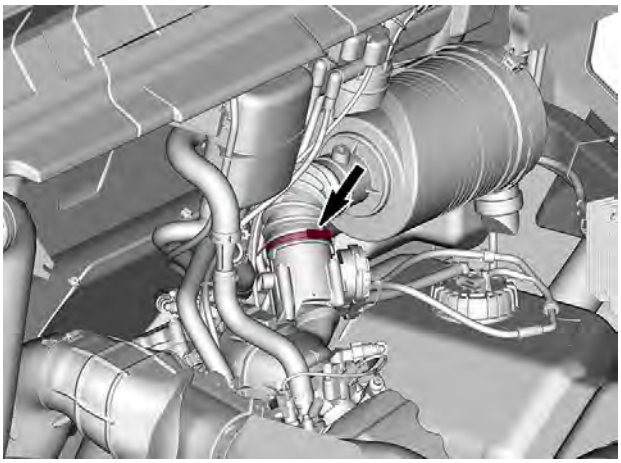

4. Disconnect the fuel hoses at the fuel injectors, refer to *Electronic Fuel Injection (EFI).*

⚠ CAUTION
The fuel hose may still be under pressure.

5. Disconnect fuel injectors connectors.
6. Disconnect MAPTS connector.

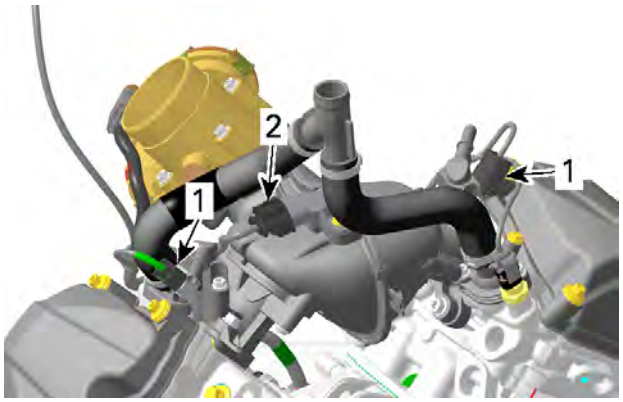

1. Fuel injectors connectors
2. MAPTS connector

7. Remove plenum retaining screws.

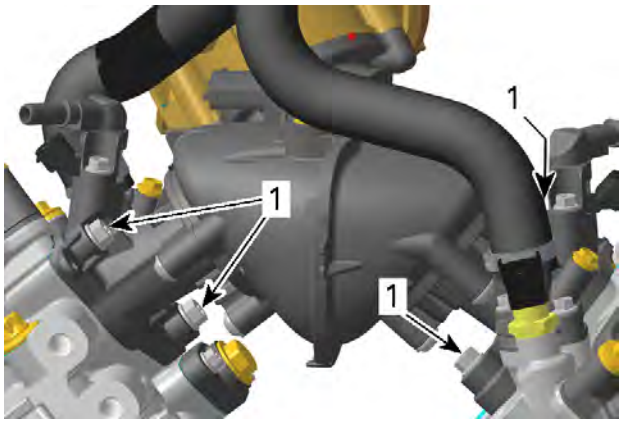

1. Plenum retaining screws

8. Remove plenum with throttle body from engine.

1. Plenum
2. Throttle body

9. Disassemble the following parts only if required. Refer to *Electronic Fuel Injection (EFI).* or this subsection for completed procedure.
   - Intake sockets
   - MAPTS.
   - Throttle body
   - Fuel injectors

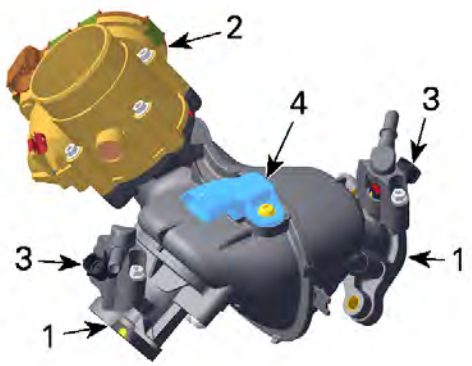

1. *Intake sockets*
2. *Throttle body*
3. *Fuel injectors*
4. *MAPTS*

Inspecting the Plenum

1. Check intake manifold for cracks, warping at flanges or any other damage. Replace if necessary.

Installing the Plenum

The installation is the reverse of the removal procedure. However, pay attention to the following.

1. Install gaskets with tab properly inserted into notch.

1. *Gasket*
2. *Tab*
3. *Notch*

2. Tighten intake socket screws to specification.

Tightening Torque	
Intake socket screws	6 ± 0.7 Nm (53 ± 6 lbf-in)

3. To prevent air leakage check if gaskets of the intake sockets are exactly in groove.

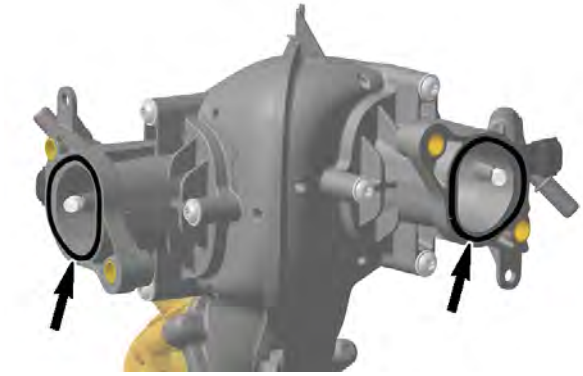

4. Tighten plenum retaining screws as per following sequence.

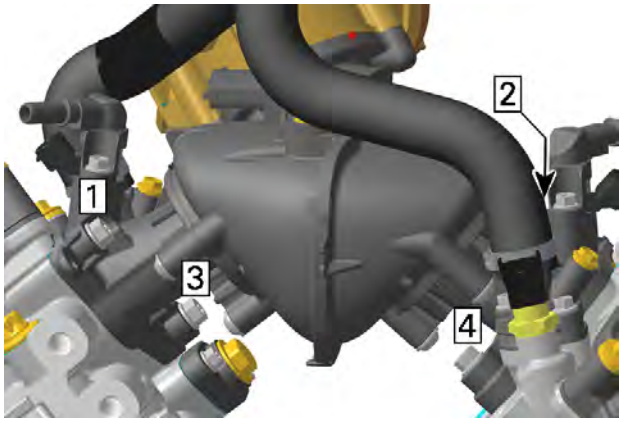

Tightening Torque	
Plenum retaining screws	20 ± 2.5 Nm (15 ± 2 lbf-ft)

5. If equipped, ensure that cap and clamp are assembled.

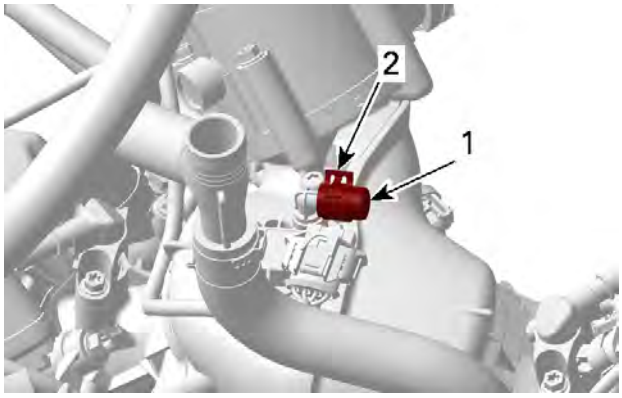

1. *Closure Cap*
2. *Spring Clamp*

6. Install the following components. Refer to the appropriate sections for procedures:
   – MAPTS

- Throttle body
- Fuel rail with injectors.

7. Tighten air filter housing hose clamp to specification.

Tightening Torque	
Air filter housing clamp	2.5 ± 0.5 Nm (22 ± 4 lbf-in)

8. Connect the fuel pump connector.

Lubrication System

SERVICE TOOLS

Description	Part Number	Page
DISCONNECT TOOL	(P/N 529035714)	14
OIL PRESSURE HOSE	(P/N 529036394)	14
PRESSURE GAUGE	(P/N 529036395)	14

SERVICE PRODUCTS

Description	Part Number	Page
LOCTITE 243 (BLUE)		16, 20

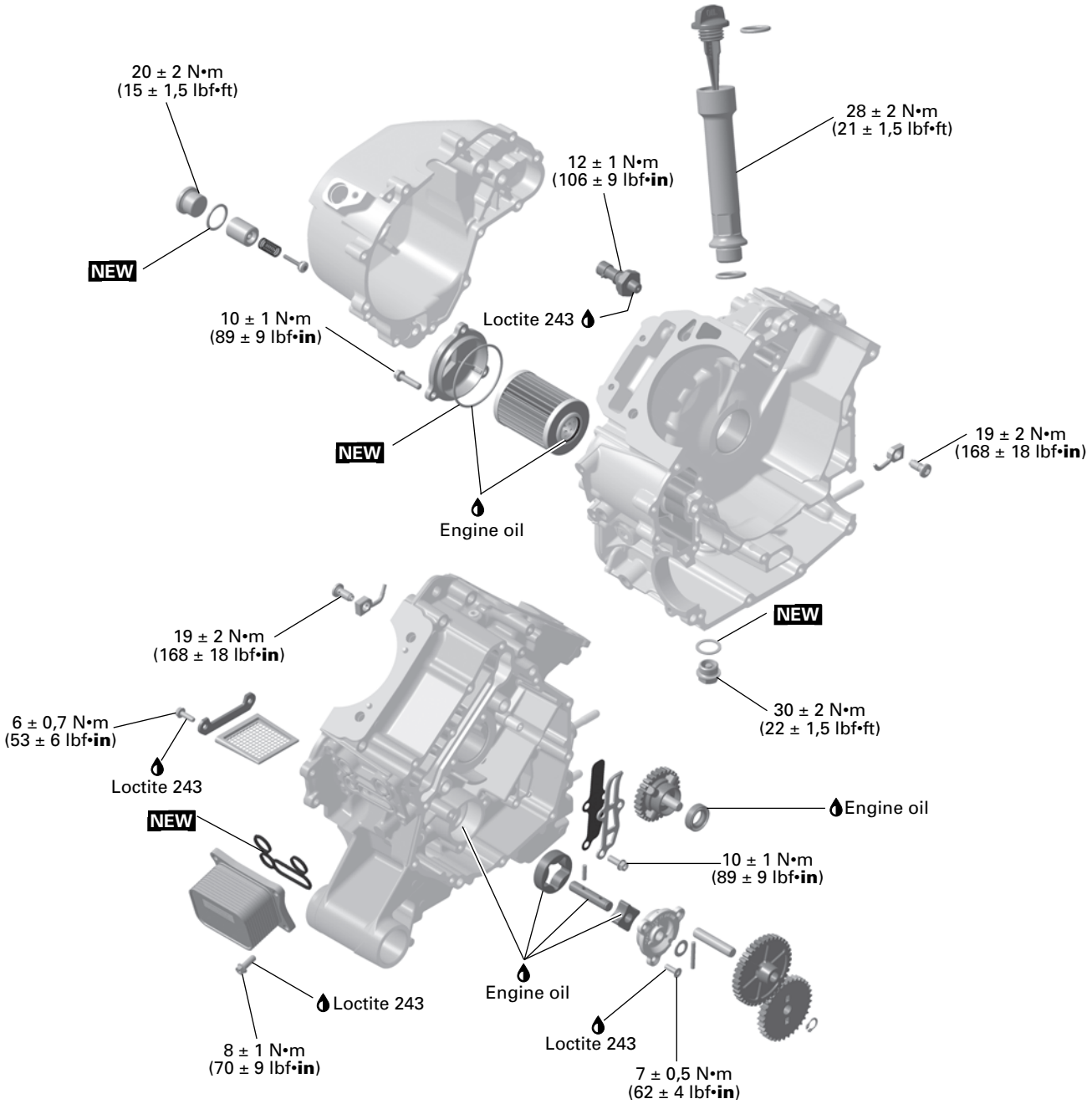

NEW = Component must be replaced when removed.

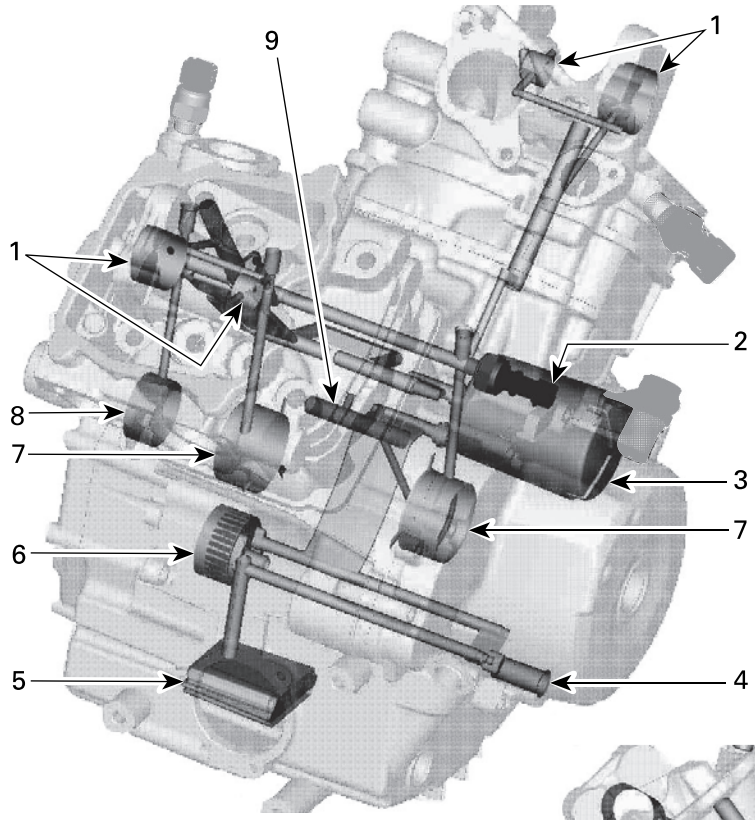

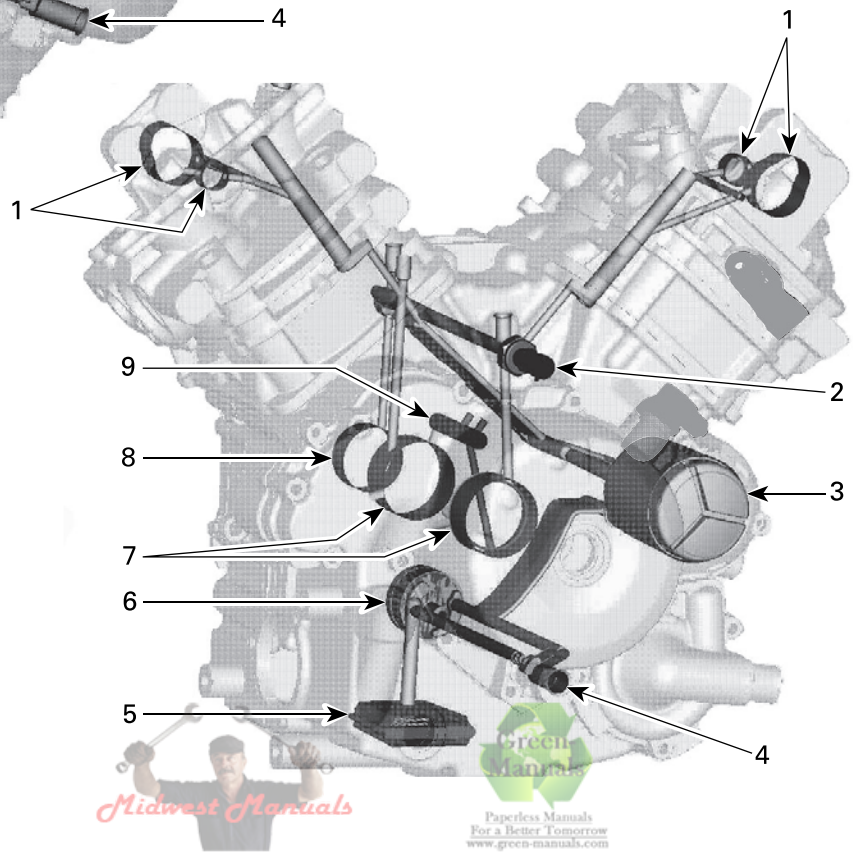

ENGINE LUBRICATION CIRCUIT

1. Camshaft bearings
2. Oil pressure switch
3. Oil filter
4. Oil pressure regulator valve
5. Oil strainer
6. Oil pump
7. Crankshaft main bearings
8. Crankshaft support bearing
9. Connecting rod bearings

Midwest Manuals
Green Manuals
Paperless Manuals
For a Better Tomorrow
www.green-manuals.com
If you bought this manual from any other seller please leave them
NEGATIVE feeddback and notify me at bestshopmanuals@gmail.com

Maintenance

Recommended Engine Oil

Rotax® engines were developed and validated using the XPS™ oil. BRP recommends the use of its XPS engine oil or an equivalent at all time. Damages caused by the use of an oil not suitable for the engine may not be covered by the BRP Limited Warranty.

XPS Recommended Engine Oil	
General purpose	4T 5W40 Synthetic blend oil (P/N 779133)
Cold temperature	4T 0W40 Synthetic oil (P/N 779139)
Warm temperature	4T 10W50 Synthetic oil (P/N 779234)
If the recommended XPS product is not Available	
Use a 4-stroke SAE engine oil meeting or exceeding the following lubricant industry specifications. Always check the API service label certification on the oil container, it must contain at least one of the indicated standards. – API service classification SJ, SL, SM or SN	

Verifying the Engine Oil Level

NOTICE

Operating the engine with an improper level may severely damage engine.

With vehicle on a level surface and engine cold, check the oil level as follows:

1. Remove dipstick and wipe it clean.

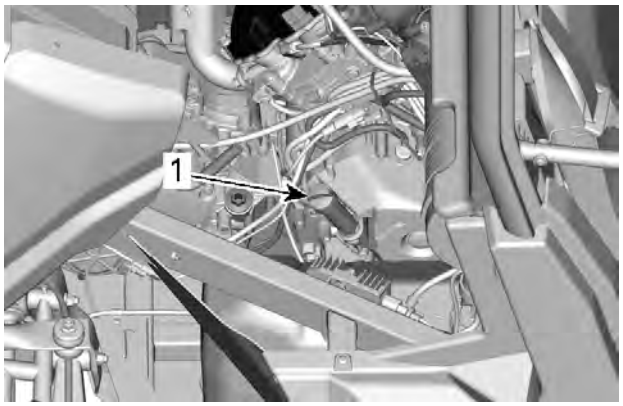

1. Dipstick

2. Reinstall dipstick, screw in it completely.
3. Remove dipstick and check oil level. It should be near or equal to the upper mark.

Midwest Manuals
Green Manuals
Paperless Manuals For a Better Tomorrow www.green-manuals.com
If you bought this manual from any other seller please leave t
NEGATIVE feeddback and notify me at bestshopmanuals@gma

TYPICAL
1. MIN.
2. MAX.
3. Operating range

To add oil, remove the dipstick. Place a funnel into the dipstick tube.

Add a small amount of recommended oil and recheck oil level.

Repeat the above procedures until oil level reaches the dipstick's upper mark.

NOTE: Do not overfill. Wipe off any spillage.

Properly tighten dipstick.

Close cargo box.

Changing the Engine Oil

NOTICE

Engine oil and oil filter must be replaced at the same time.

Oil change and oil filter replacement should be done with a warm engine.

⚠ CAUTION

The engine oil can be very hot. Wait until engine oil is warm.

1. Ensure vehicle is on a level surface.

2. Remove dipstick.
3. Place a drain pan under the engine drain plug area.
4. Clean the drain plug area.
5. Unscrew magnetic drain plug and discard the gasket ring.

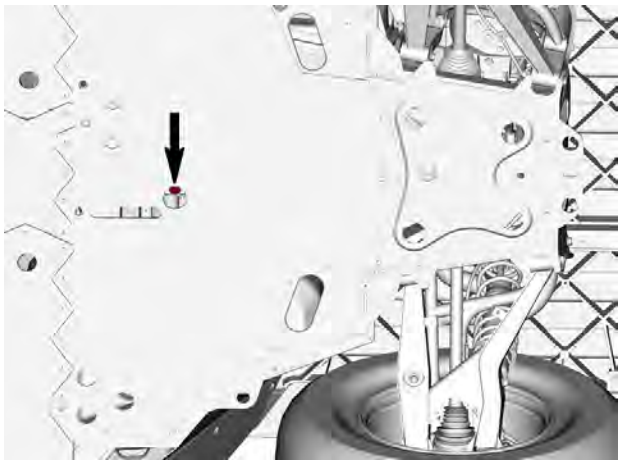

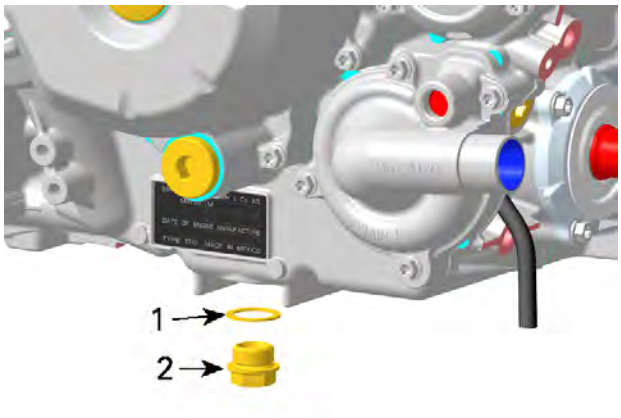

1. Gasket ring
2. Magnetic drain plug

6. Allow oil to drain completely from the crankcase.
7. Clean the magnetic drain plug from metal shavings and residue. Presence of debris gives an indication of internal engine damage.
8. Install a **NEW** gasket ring on the magnetic drain plug.

NOTICE

Never use the gasket ring a second time. Always replace by a NEW one.

9. Tighten magnetic drain plug to the specification.

Tightening Toruqe	
Magnetic drain plug	30 ± 2 Nm (22 ± 1 lbf-ft)

10. Replace oil filter. Refer to *Replacing the Engine Oil Filter*.
11. Refill engine with recommended engine oil.
12. After filling, check the oil level, refer to *Verifying the Engine Oil Level*.
13. Start engine and let it idle for a few minutes.
14. Ensure oil filter and drain plug areas are not leaking.
15. Stop engine.
16. Wait a while to allow oil to flow down to crankcase, then check oil level again.
17. Dispose oil and filter as per your local environmental regulations.

Replacing the Engine Oil Filter

Removing the Oil Filter

1. Clean oil filter cover area.
2. Remove the oil filter cove.
3. Remove the oil filter.

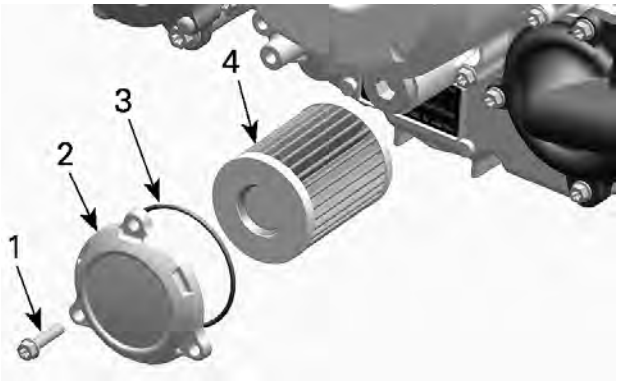

1. Oil filter cover screw
2. Oil filter cover
3. O-ring
4. Oil filter

Installing the Oil Filter

1. Check and clean the oil filter inlet and outlet area for dirt and other contaminations.

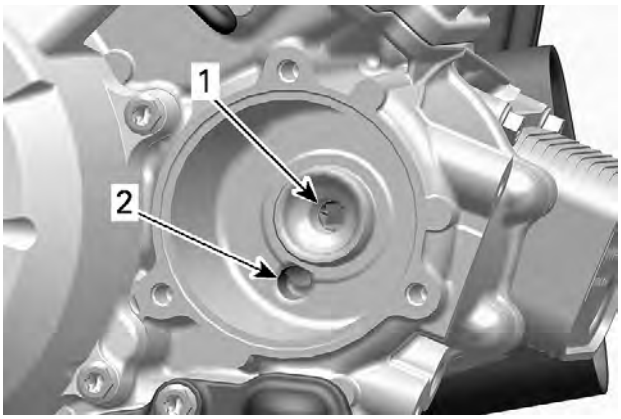

1. Outlet bore to the engine oil providing system
2. Inlet bore from the oil pump to the oil filter

2. Install a **NEW** O-ring on oil filter cover.
3. Install the new filter into the cover.
4. Apply engine oil on O-ring and on the oil filter seal.

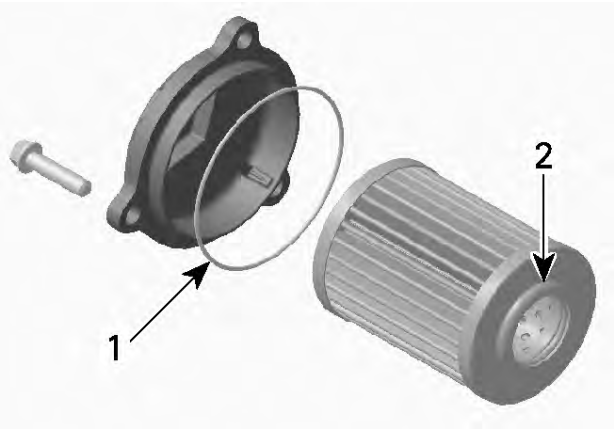

1. Slightly oil
2. Slightly oil

NOTICE
Pay attention to avoid pinching the O-ring during filter and cover installation.

5. Install the cover on the engine.
6. Tighten oil filter cover screws to specification.

Tightening Torque	
Oil filter cover screws	10 ± 1 Nm (89 ± 9 lbf-in)

7. Wipe off any oil spillage on engine.

Inspection

Engine Oil Pressure

NOTE: The engine oil pressure test should be done with a warm engine 100 °C (212 °F) and the recommended oil.

1. Remove the oil pressure switch, refer to *Oil Pressure Switch (OPS)*..
2. Use the pressure gauge with the proper adapter hose.

Pressure gauge (P/N 529036395)	
Oil pressure hose (P/N 529036394)	

The engine oil pressure should be within the following values.

Oil Pressure	1250 RPM	6000 RPM
MINIMAL	70 kPa (10 lbf/in²)	300 kPa (44 lbf/in²)
NOMINAL	150 kPa (22 lbf/in²)	350 kPa (51 lbf/in²)
MAXIMAL	250 kPa (36 lbf/in²)	450 kPa (65 lbf/in²)

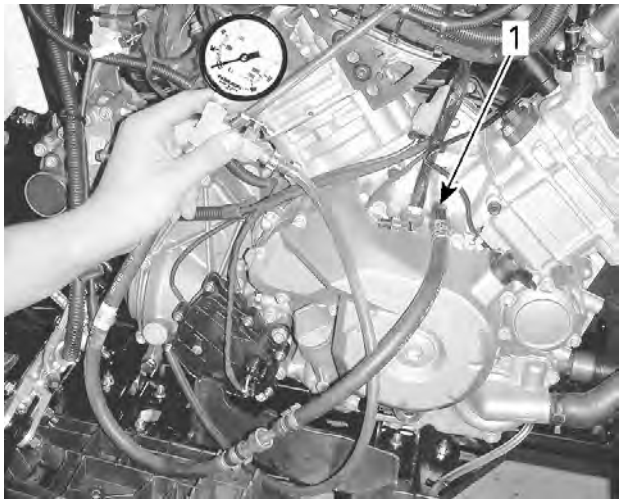

3. If the engine oil pressure is out of specifications, check the points described in *Troubleshooting*.
4. Remove oil pressure gauge and adapter hose.

Disconnect tool (P/N 529035714)	

NOTE: To remove adapter hose from oil pressure gauge, use the disconnect tool.

5. Reinstall the oil pressure switch.

Troubleshooting

Troubleshooting

1. LOW OR NO OIL PRESSURE

Oil level is too low.

– *Refill engine with recommended engine oil. Refer to Verifying the Oil Level in this subsection.*

– *Check for high oil consumption, refer to High oil consumption in this troubleshooting.*

– *Check for engine oil leaks. For leak indicator hole location, refer to Inspecting the cooling system . Repair if necessary.*

Use of unsuitable engine oil type.

– *Replace engine oil by the recommended engine oil.*

Clogged oil filter.

– *Replace oil and oil filter at the same time.*

Defective oil pressure switch.

– *Test oil pressure switch, see procedure in this subsection.*

Defective or worn oil pump.

– *Check oil pump, see procedure in this subsection.*

Defective engine oil pressure regulator.

– *Check engine oil pressure regulator, see procedure in this subsection.*

Worn plain bearings in crankcase.

– *Check plain bearings clearance, refer to cylinder block subsection.*

Clogged engine oil strainer.

– *Clean engine oil strainer, see procedure in this subsection.*

2. OIL CONTAMINATION

Defective water pump seal ring or rotary seal.

– *Check for oil or coolant leak from indicator hole near water pump, refer to Inspecting the COOLING SYSTEM inspection. Replace seal if necessary.*

Cylinder head or cylinder base gasket leak.

– *Retighten cylinder head to specified torque, refer to cylinder head subsection. Replace gasket if tightening does not solve the problem.*

Engine internal damage.

– *Repair engine.*

Oil cooler gasket leak.

– *Replace oil cooler gasket and change engine oil.*

3. HIGH OIL CONSUMPTION

Leaking breather oil seal.

– *Check if the oil seal of the breather is brittle, hard or damaged. Refer to cylinder block subsection.*

Valve stem seals worn or damaged.

– *Replace valve stem seals.*

Worn piston rings (blue exhaust smoke).

– *Replace piston rings.*

Procedures

Oil Cooler

Oil Cooler Location

The oil cooler is located on the front of the engine.

When engine is in the vehicle, the removal of the fuel tank is required.

Removing the Oil Cooler

1. Drain the engine oil.
2. Drain the engine coolant.
3. Remove oil cooler retaining screws.

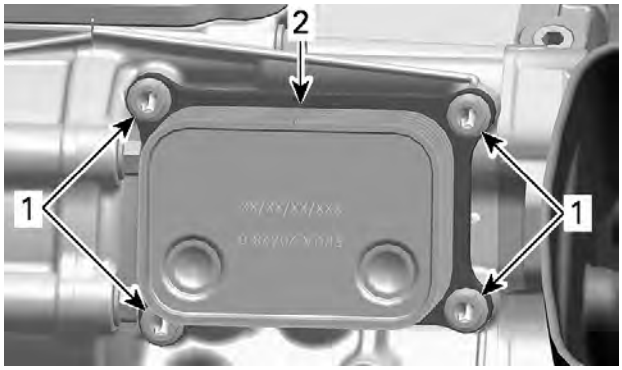

1. Retaining screws
2. Oil cooler

4. Place rags or towels under oil cooler to catch remaining oil and coolant.
5. Remove oil cooler and discard gasket.

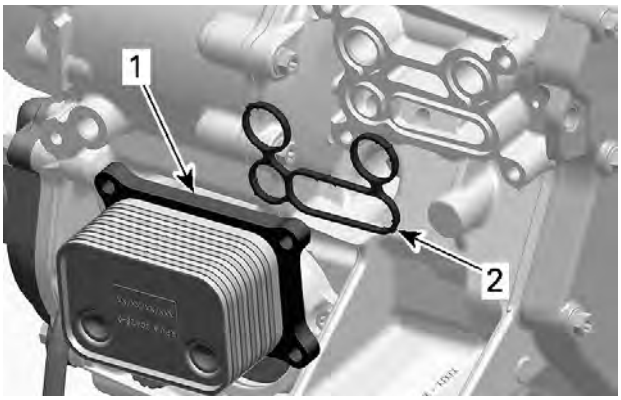

1. *Oil cooler*
2. *Gasket*

Inspecting the Oil Cooler

1. Check oil cooler for cracks or other damage.
2. Replace if necessary.

Installing the Oil Cooler

The installation is the reverse of the removal procedure. However, pay attention to the following details.

1. Wipe off any oil and coolant spillage.
2. Install a **NEW** gasket.
3. Refill engine oil with recommended oil and at the proper oil lever.
4. Refill and bleed cooling system.

Oil Pressure Switch (OPS)

Oil Pressure Switch Location

The oil pressure switch is located at engine MAG side above the magneto cover.

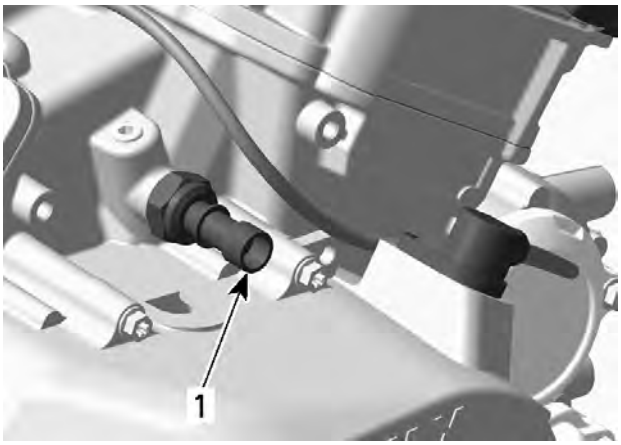

1. *Oil pressure switch*

Oil Pressure Switch Activation

1. The oil pressure switch activates when the engine oil pressure is lower than following specified pressure range.

Oil pressure switch operating pressure
30 ± 10 kPa (4.35 ± 1.45 lbf/in²)

2. To check the function of the oil pressure switch, an oil pressure test has to be performed, refer to *Engine Oil Pressure*.
3. If the engine oil pressure is good perform the oil pressure switch resistance test.

Testing the Oil Pressure Switch Resistance

1. Disconnect the connector from the oil pressure switch.
2. Check the OPS resistance.

OPS connector		Engine not running	Engine running
Pin		Resistance (Ω)	
1	Engine ground	Close to 0 Ω (normally closed switch)	Infinite (open) when pressure reaches 30 ± 10 kPa (4.35 ± 1.45 lbf/in²)

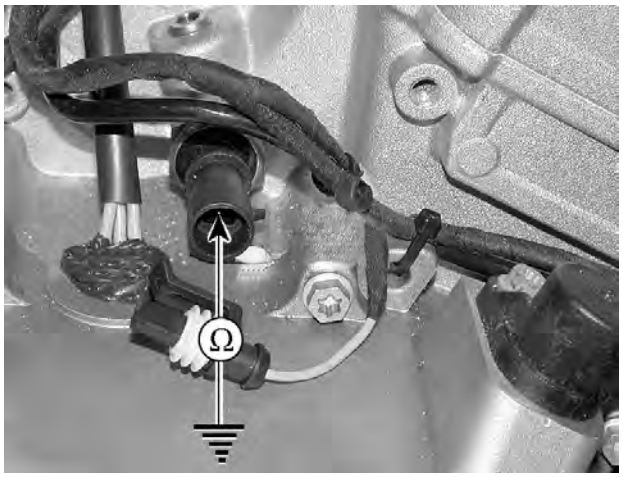

3. If resistance values are incorrect, replace the oil pressure switch.
4. If the values are correct, check wiring.

Removing the Oil Pressure Switch

1. Unplug the oil pressure switch connector.
2. Unscrew and remove oil pressure switch.

Installing the Oil Pressure Switch

1. Apply a drop of threadlocker on OPS threads.

Loctite 243 (blue)

2. Tighten oil pressure switch to specified torque.

Tightening Torque	
Oil pressure switch	12 ± 1 Nm (106 ± 9 lbf-in)

Engine Oil Pressure Regulator

Oil Pressure Regulator Location

The oil pressure regulator is located on the engine magneto side (inside magneto cover).

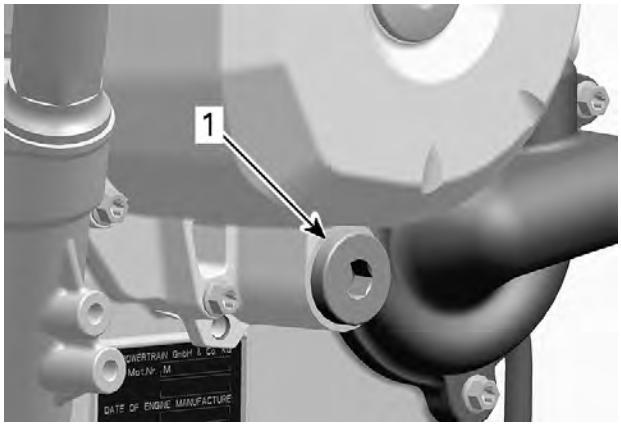

1. Engine oil pressure regulator

NOTE: The oil pressure regulator system works when the oil pressure exceeds 400 kPa (58 lbf/in²).

Removing the Oil Pressure Regulator

1. Remove plug screw and pull oil pressure regulator out.

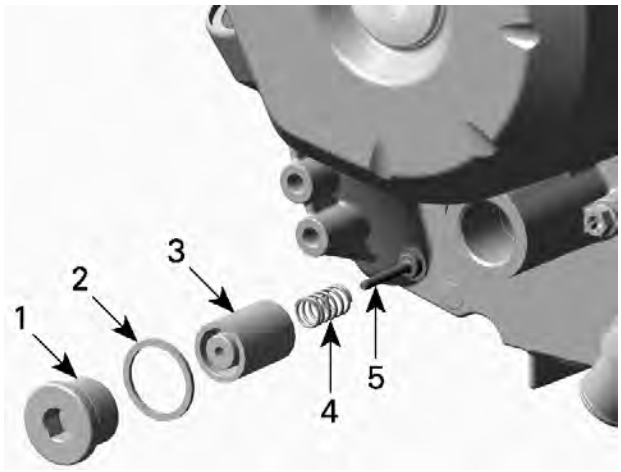

1. Plug screw
2. Gasket ring
3. Pressure regulator housing
4. Spring
5. Pressure regulator valve

Inspecting the Oil Pressure Regulator

1. Inspect pressure regulator housing and valve for scoring or other damages.
2. Check spring for free length.

Spring Free Length	
New	39 mm (1.535 in)
Service limit	37 mm (1.457 in)

NOTE: Replace worn or damaged components.

3. Clean bore and thread in the magneto housing from metal shavings and other contaminations.

Installing the Oil Pressure Regulator

The installation is the reverse of the removal procedure. However, pay attention to the following.

1. At installation always replace the gasket ring of the plug screw by a new one.

Oil Pump

Oil Pump Location

The oil pump is located on the engine PTO side (behind PTO cover).

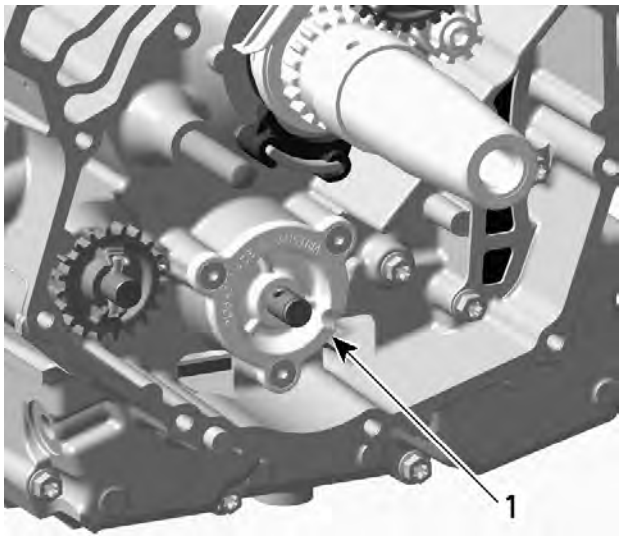

1. Oil pump

Removing the Oil Pump

1. Remove the PTO cover. Refer to *PTO cover* in the *cylinder block* subsection.
2. Remove the oil pump gear.

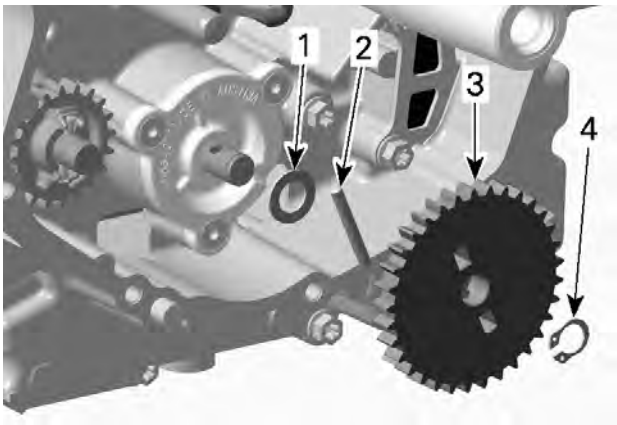

1. *Thrust washer*
2. *Needle pin*
3. *Oil pump gear*
4. *Retaining ring*

3. Remove oil pump cover.

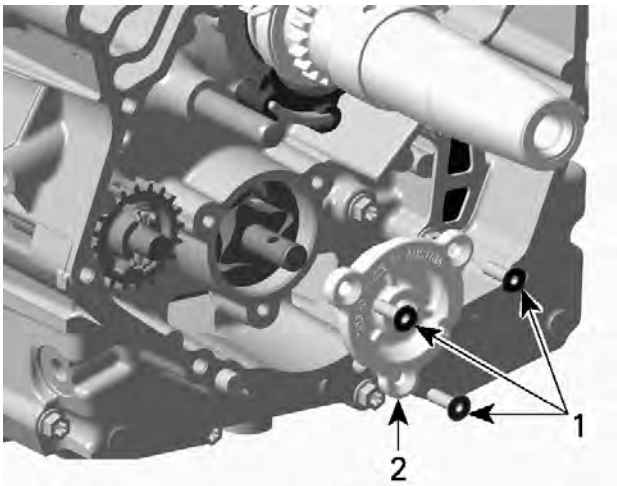

1. *Retaining screws*
2. *Oil pump cover*

4. Remove oil pump shaft with needle pin and inner rotor.
5. Remove outer rotor.

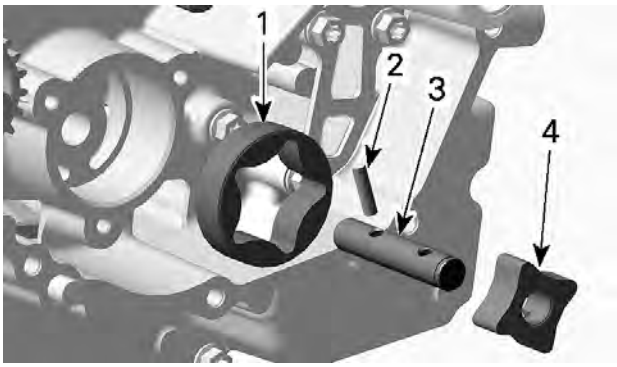

1. *Outer rotor*
2. *Needle pin*
3. *Oil pump shaft*
4. *Inner rotor*

Inspecting the Oil Pump

1. Inspect oil pump and oil pump cover bore for marks, scratches or other damages. Check for scratches in crankcase between outer rotor and oil pump bore. If so, replace damaged parts.
2. Check oil pump cover for damages and for surface straightness with a straightedge.

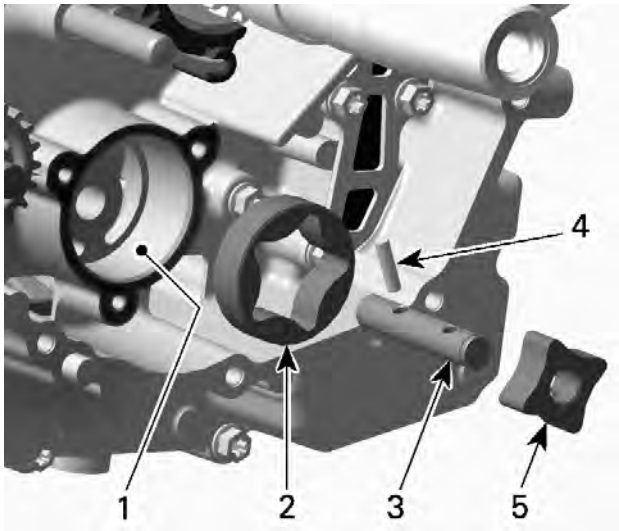

1. *Oil pump bore*
2. *Outer rotor*
3. *Oil pump shaft*
4. *Needle pin*
5. *Inner rotor*

3. Check inner rotor for corrosion pin holes or other damages. If so, replace oil pump shaft assembly.

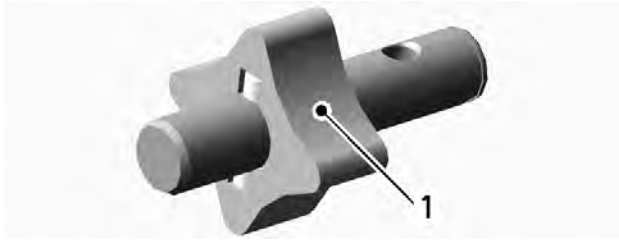

1. *Pittings on the teeth*

Inner and Outer Rotor Clearance

1. Using a feeler gauge, measure the clearance of inner and outer rotors as shown.

Clearance of Inner and Outer Rotor	
Service limit	0.25 mm (.0098 in)

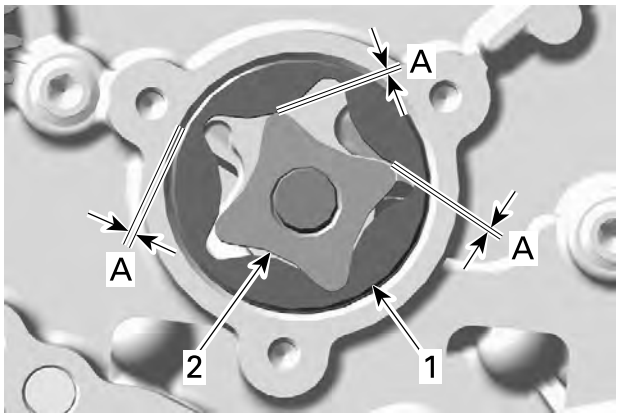

1. Outer rotor
2. Inner rotor
A. 0.25 mm (.0098 in)

2. If clearance of inner and outer rotors exceeds the tolerance, replace oil pump rotors. Ensure to also check oil pump cover. If damaged, replace the complete oil pump assembly.
3. If clearance between outer rotor and its bore in crankcase exceeds the tolerance, replace the complete oil pump rotors and/or the crankcase.

Oil Pump Axial Clearance

1. Using a depth gauge, measure the axial clearance of the oil pump as shown.

OIL PUMP — MEASUREMENT "A"

OIL PUMP COVER — MEASUREMENT "B"

2. Substract measurement "B" from measurement "A" to obtain axial clearance.

Oil Pump Axial Clearance	
Service limit	0.20 mm (.0079 in)

NOTE: When the axial clearance of the oil pump shaft assembly increases, the oil pressure decreases.

Installing the Oil Pump

The installation is the reverse of the removal procedure. However, pay attention to the following.

1. When installing the oil pump rotors, make sure both markings are on the outer side.

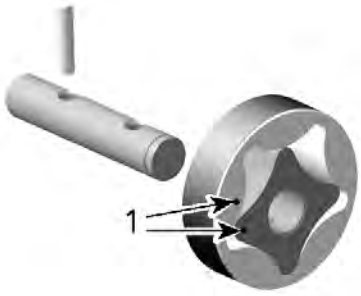

1. Markings

2. After reinstallation of the remaining parts, check for smooth operation of the oil pump assembly.

Testing the Oil Pump Function

1. After engine is completely reassembled, start engine and make sure oil pressure is within specifications (refer to *Engine Oil Pressure*).

Engine Oil Strainer

Oil Strainer Location

The engine oil strainer is located between both crankcase halves.

Removing the Oil Strainer

1. Separate crankcase halves, refer to *Cylinder Block* subsection.
2. Remove the engine oil strainer.

1. *Engine oil strainer*
2. *Retaining plate*
3. *Screws*

Cleaning and Inspecting the Oil Strainer

1. Clean engine oil strainer with a part cleaner then use an air gun to dry it.
2. Check engine oil strainer for cracks or other damage. Replace if damaged.

Installing the Oil Strainer

The installation is the reverse of the removal procedure.

1. Apply a drop of threadlocker on the oil strainer screw threads.

Loctite 243 (blue)

2. Tighten oil strainer screws to specification.

Tightening Torque	
Oil strainer retaining screws	6 ± 0.7 Nm (53 ± 6 lbf-in)

Reed Valve

The engine is equipped with a reed valve which prevents accumulation of larger oil quantities in the crankcase. The reed valve is fitted into the crankcase.

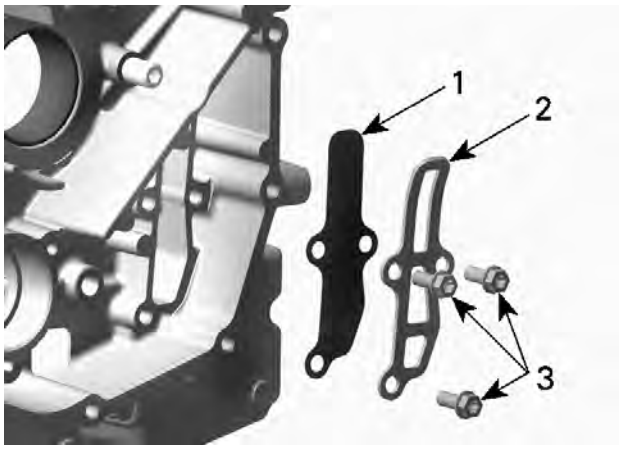

1. *Reed valve*
2. *Stopper*
3. *Screws*

Removing the Reed Valve

1. Remove the PTO cove, refer to *PTO Cover* in the *Cylinder Block*.
2. Remove stopper plate and reed valve.

Inspecting the Reed Valve

1. Check reed valve for cracks or other damage.
2. Replace reed valve if damaged.

Installing the Reed Valve

The installation is the reverse of the removal procedure.

1. Tighten the reed valve to specification.

Tightening Torque	
Reed valve retaining screws	10 ± 1 Nm (89 ± 9 lbf-in)

Oil Nozzles

Oil Nozzle Location

The oil nozzles are located inside the crankcase, MAG and PTO side.

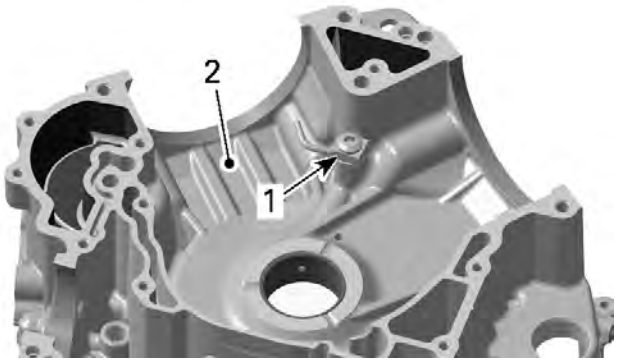

1. *Oil nozzle*
2. *Crankcase MAG side*

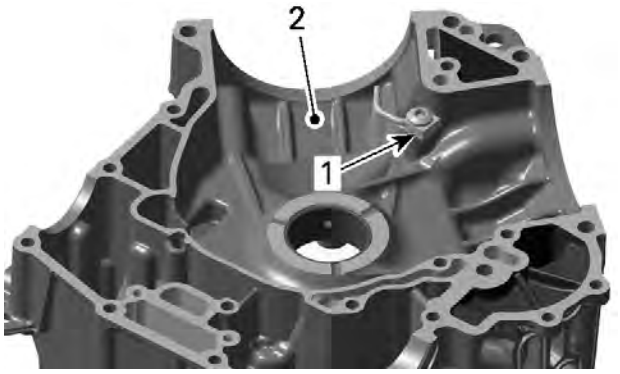

1. *Oil nozzle*
2. *Crankcase PTO side*

NOTE: If the engine has to be dismantled within the scope of repair work, take this opportunity to clean the oil nozzles.

Removing the Oil Nozzle

1. Separate crankcase halves, refer to *Cylinder Block*.
2. Remove banjo bolt retaining the oil nozzle to crankcase.

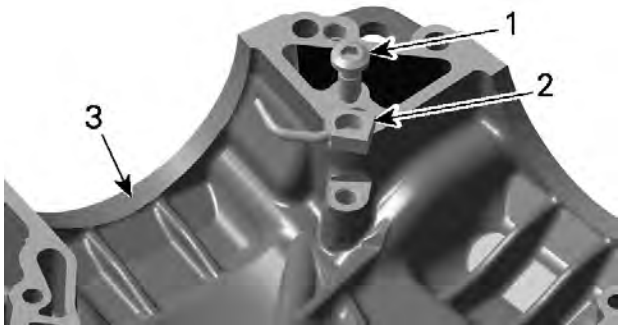

1. *Banjo bolt*
2. *Oil nozzle*
3. *Crankcase*

Cleaning and Inspecting the Oil Nozzle

1. Clean oil nozzle with a parts cleaner, then use an air gun and dry the parts.
2. If the oil nozzles are damaged or bent during work in the crankcase, they must be replaced immediately.
3. Check if ball inside Banjo bolt moves freely.

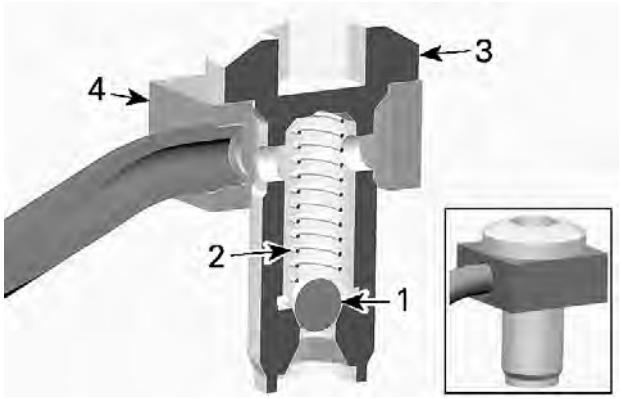

1. *Ball*
2. *Spring*
3. *Banjo bolt*
4. *Oil nozzle*

Installing the Oil Nozzle

⚠ CAUTION

At assembly make sure the contact surface of the oil nozzles are well fitted onto the crankcase. If this is not ensured, the oil spray direction will change, causing potential engine damage.

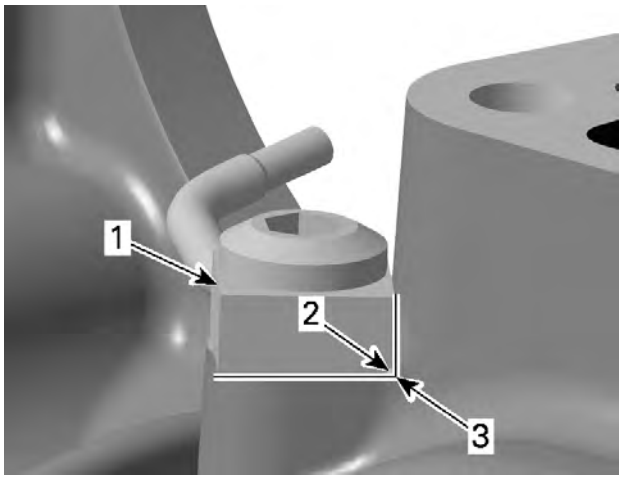

1. *Oil nozzle*
2. *Chamfer on oil nozzle body*
3. *Corner in crankcase*

1. Tighten banjo bolts to the specified torque.

Tightening Torque	
Banjo bolt	19 ± 2 Nm (168 ± 18 lbf-in)

Cooling System - Engine Components

SERVICE TOOLS

Description	Part Number	Page
ECM ADAPTER TOOL	(P/N 529036166)	24
HANDLE	(P/N 420877650)	31
OIL SEAL PUSHER	(P/N 529035757)	31
ROTARY SEAL PUSHER PLATE	(P/N 529036130)	29
SEAL PUSHER	(P/N 529035766)	29, 31

SERVICE PRODUCTS

Description	Part Number	Page
DOW CORNING 111		31

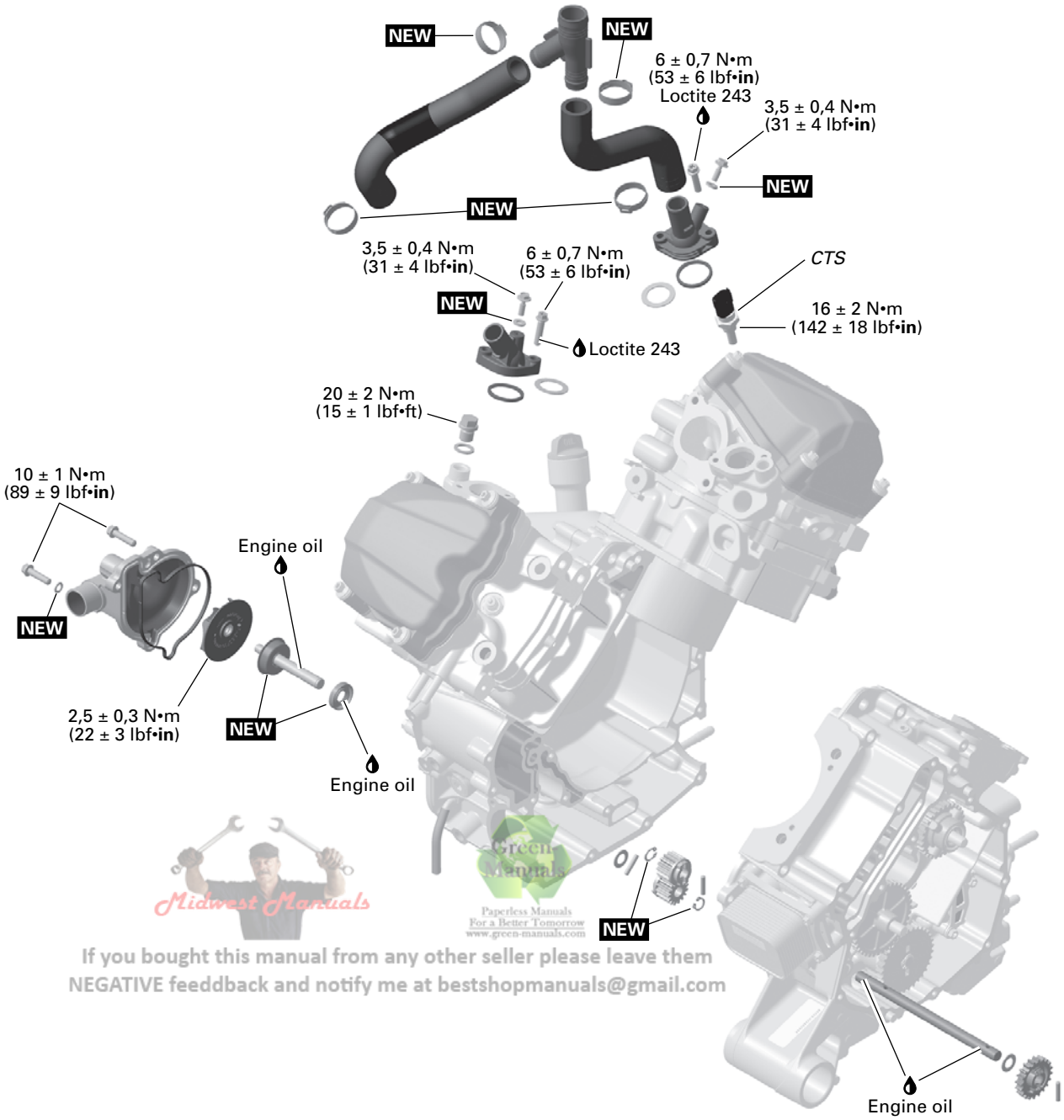

Midwest Manuals
Green Manuals
Paperless Manuals
For a Better Tomorrow
www.green-manuals.com
If you bought this manual from any other seller please leave them
NEGATIVE feeddback and notify me at bestshopmanuals@gmail.com

NEW = Component must be replaced when removed.

General

NOTICE

Never start engine without coolant. Some engine parts such as the rotary seal on the water pump shaft can be damaged.

Inspection

Inspecting the Engine cooling system

Check the leak indicator hose for oil or coolant.

NOTE: Leaking coolant indicates a defective rotary seal. Leaking oil indicates a defective oil seal. If either seal is leaking, both seals must be replaced at the same time. Refer to *Water Pump Shaft and Seals*.

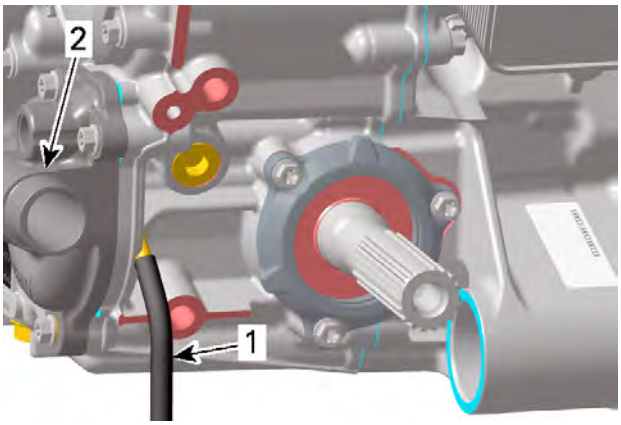

1. *Leak indicator hose*
2. *Water pump cover*

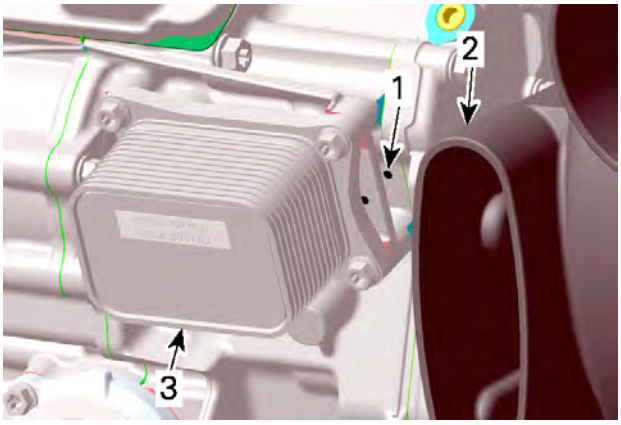

1. *Leak indicator hose*
2. *CVT air outlet*
3. *Oil cooler (HD10 engine only)*

For vehicle cooling system inspection, refer to the appropriate vehicle service manual.

Procedures

Coolant Temperature Sensor (CTS)

CTS Location

The CTS is located on the LH of the engine rear cylinder.

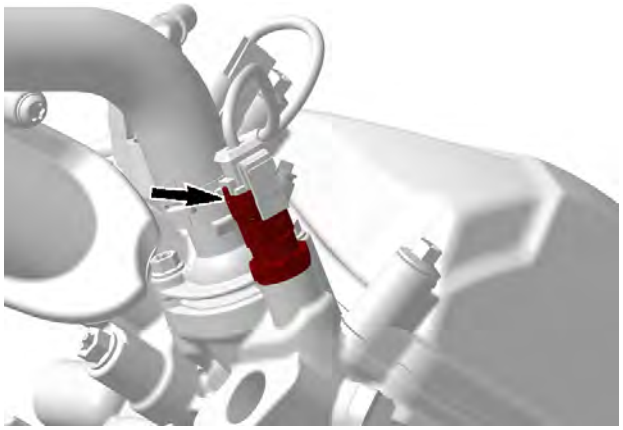

Testing the CTS Resistance

1. Disconnect the plug connector from the CTS and check the resistance of the sensor itself.

CTS Resistance Test		
CTS pin		Measurement @ 20 °C (68 °F)
1	2	2280 - 2740 Ω

If resistance is out of specification, replace the CTS.

If resistance test is good, reconnect the CTS and disconnect the connector A from the ECM.

2. Install the connector on the ECM adapter tool.

ECM adapter tool (P/N 529036166)	

3. Using a multimeter, recheck resistance from the ECM connector as per table.

CTS Resistance Test at ECM Adapter		
ECM adapter pin		Measurement @ 20 °C (68 °F)
A-A1	A-J2	2280 - 2740 Ω

If resistance value is correct, refer to *Replacing the ECM*.

If resistance value is incorrect, repair the connectors or replace the wiring harness between ECM connector and the CTS.

Replacing the CTS

1. Disconnect the CTS connector and remove the CTS.
2. Install the new CTS and torque as specified.

Tightening Torque	
CTS	16 ± 2 Nm (142 ± 18 lbf-in)

3. Reinstall remaining removed parts.
4. Refill and bleed the cooling system.

Water Pump Housing

Water Pump Housing Location

The water pump housing is located on the engine MAG side (RH side of engine).

Removing the Water Pump Housing

⚠ CAUTION

To avoid potential burns, do not remove the radiator cap or loosen the coolant drain plug if the engine is hot.

1. Drain cooling system.
2. Remove radiator outlet hose from water pump housing.
3. Remove screws retaining water pump housing.

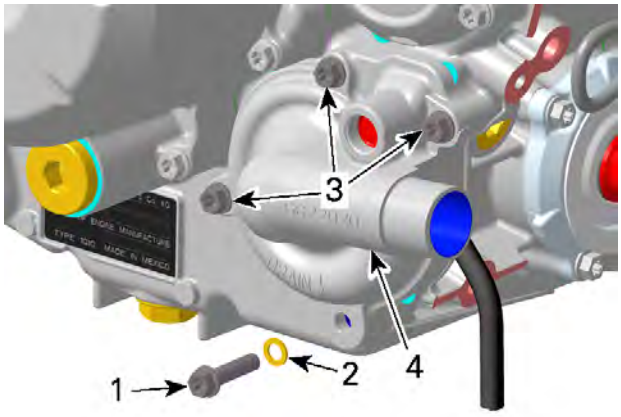

1. *Coolant drain plug*
2. *Sealing ring*
3. *Screws*
4. *Water pump housing*

4. Pull water pump housing to remove it.

Inspecting the Water Pump Housing

1. Check if gasket is brittle, hard or damaged and replace as necessary.

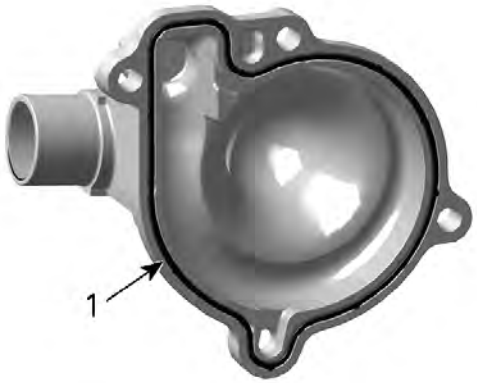

1. *Gasket*

Installing the Water Pump Housing

The installation is the opposite of the removal procedure.

NOTICE

To prevent leaking, take care that the gasket is exactly in groove when you reinstall the water pump housing.

1. Tighten screws of water pump housing in a criss cross sequence to specification.

Tightening Torque	
Water pump housing screws	10 ± 1 Nm (89 ± 9 lbf-in)

Water Pump Impeller

Removing the Water Pump Impeller

1. Remove water pump housing.
2. Unscrew impeller.

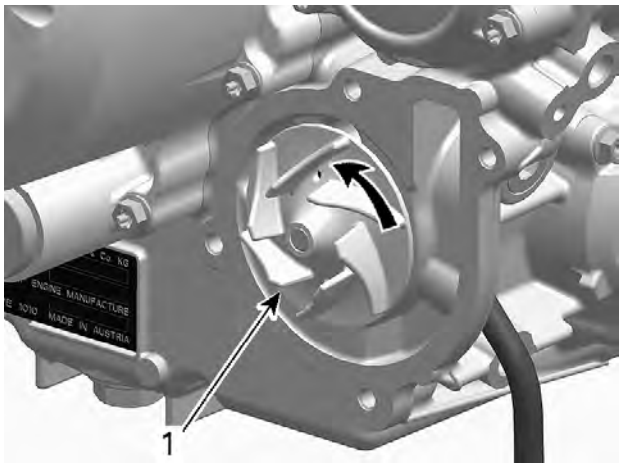

1. *Turn counterclockwise to unscrew*

Inspecting the Water Pump Impeller

1. Check impeller for cracks or other damage. Replace impeller if damaged.

Installing the Water Pump Impeller

1. The installation is the reverse of the removal procedure.

NOTICE

Be careful not to damage impeller fins during installation.

Water Pump Shaft and Seeals

Use these guidelines to service these parts.

Defective parts	Action
Rotary seal	Replace: – Rotary seal – Oil seal (assembled engine)
Oil seal	Replace: – Rotary seal – Oil seal (assembled engine)
Water pump shaft	Replace: – Water pump shaft assembly (including rotary seal) – Oil seal (assembled engine)

NOTICE

Rotary seal must be replaced if water pump shaft is to be replaced.

Replacing the Water Pump Seals (Assembled Engine)

NOTICE

Read and thoroughly understand the entire procedure before starting it.

Removing the Seals

1. Remove the water pump impeller.
2. Carefully pry out inner part of the rotary seal using 2 screwdrivers.

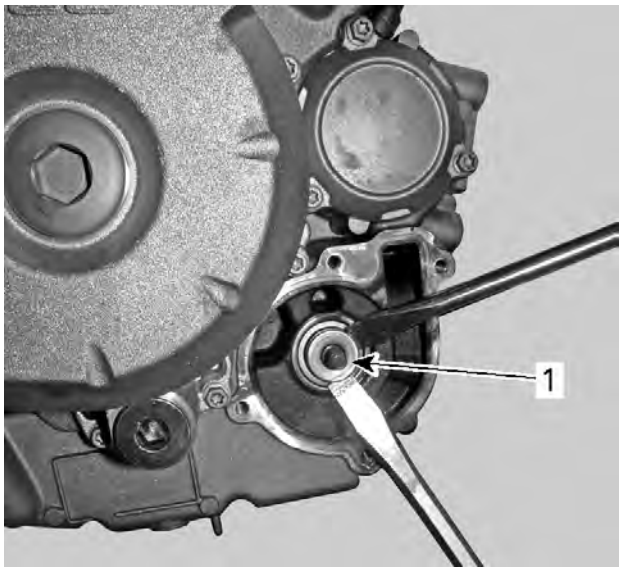

1. Inner part of rotary seal

TYPICAL - INNER PART OF ROTARY SEAL REMOVED

3. Carefully bend down the outer part of rotary seal lip using a small chisel.

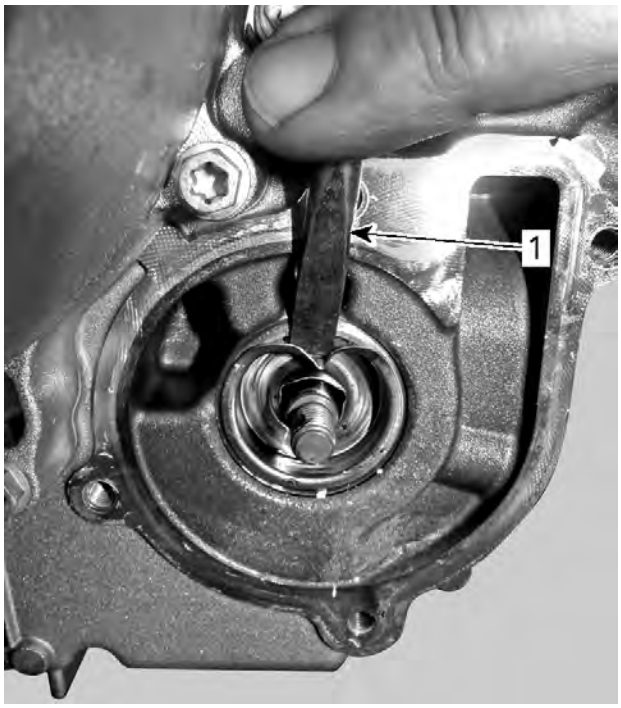

1. Small chisel

4. Use 2 screwdrivers and carefully remove the outer part of the rotary seal.

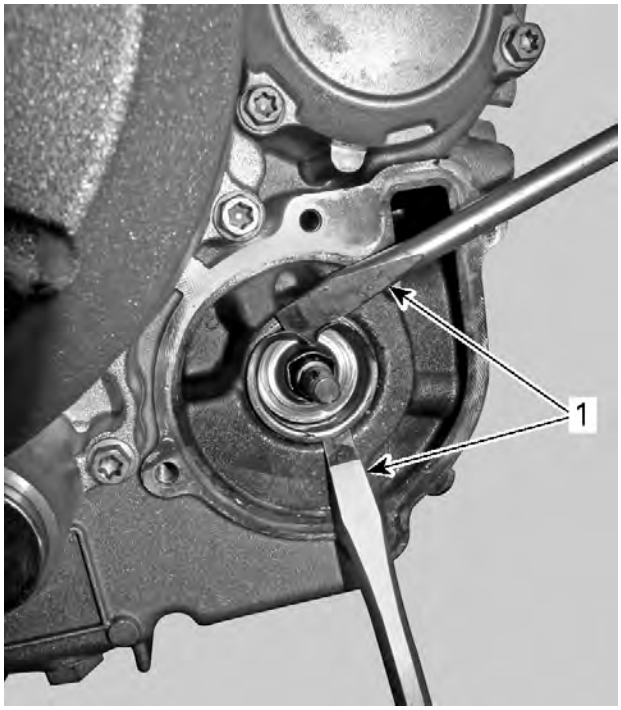

1. Screwdrivers

NOTICE

Be careful not to damage the crankcase while removing outer part of the rotary seal.

5. Thoroughly remove carefully sealing residue and burr of rotary seal using a scraper.

NOTICE

Be careful not to damage water pump shaft.

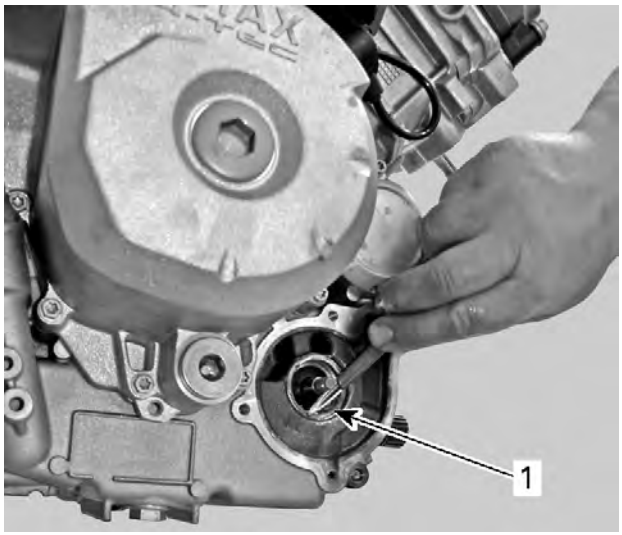

1. Scraper

6. Install 2 wooden screws in the seal.

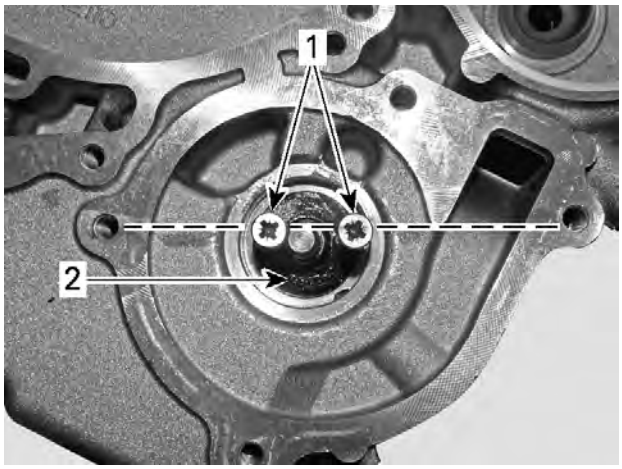

1. Wooden screws
2. Oil seal

7. Remove oil seal from crankcase by pulling screws with pliers.

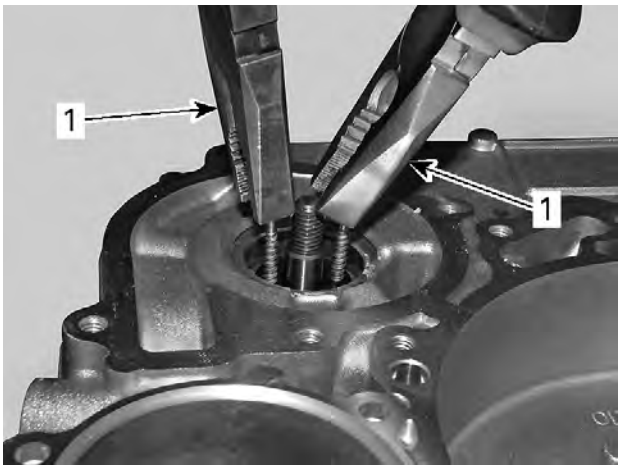

1. Pull on screws to remove seal

8. Check water pump shaft axial play. If not adequate, engine must be disassembled to replace the water pump shaft.
9. Clean oil seal seat.

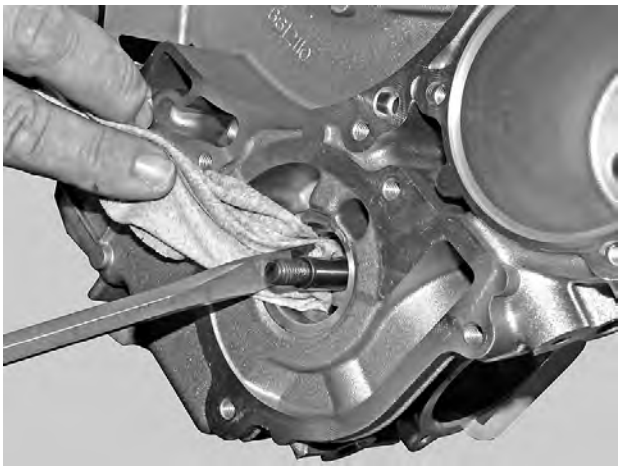

Installing the Seals

1. Apply engine oil on water pump shaft.
2. Apply grease to the lips of the oil seal.
3. Carefully install the oil seal over the water pump shaft.
4. Push the oil seal into the water pump cavity using a deep socket.

17 MM (11/16 IN) DEEP SOCKET

5. Ensure that the oil seal is properly seated in water pump cavity.

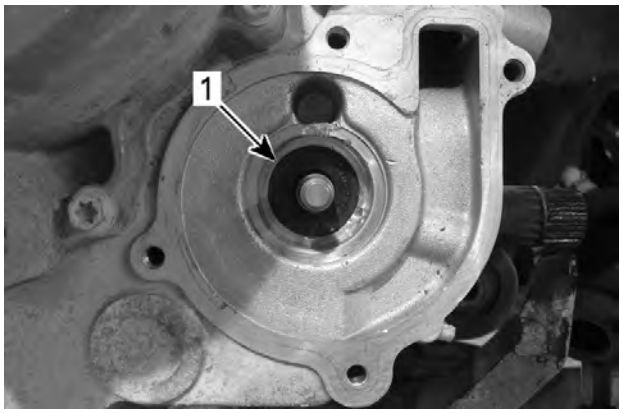

TYPICAL
1. Oil seal properly seated

6. Apply engine oil on water pump shaft.
7. Place rotary seal onto water pump shaft and pull out water pump shaft by hand.

NOTICE

Do not install the rotary seal completely into the crankcase to prevent the water pump shaft plastic gear from breaking. Push it partially in, then pull the shaft.

8. Place a robust M8 flat washer (P/N 420227935) onto water pump shaft.
9. Install a M8 x 1.25 nut (P/N 233281414) onto water pump shaft by hand.
10. Then thread nut **1-1/2 turns** to pull the shaft into rotary seal.

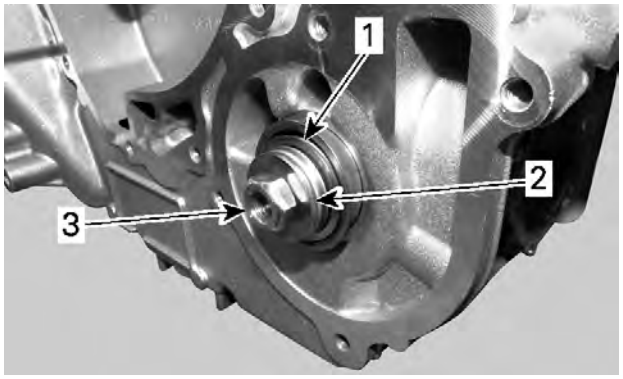

1. Rotary seal
2. M8 robust flat washer (P/N 420227935)
3. M8 x 1.25 nut (P/N 233281414)

11. Remove M8 nut.

NOTE: The robust M8 flat washer remains on water pump shaft.

12. Install rotary seal installation tools on crankcase as follows.

Rotary seal pusher plate (P/N 529036130)	
Seal pusher (P/N 529035766)	

Locally purchased items:
4x tubes 70 mm (2.75 in)
4x M6 x 85 screws (P/N 420440347)

NOTE: Make sure pusher bolt has a plane surface.

1. Apply a little grease at the end of tool pusher bolt.
2. Ensure that pusher bolt is completely unscrewed.
3. Install rotary seal pusher plate on crankcase by tightening M6 screws.

NOTICE

Do not use pneumatic or electric tools for tightening screws.

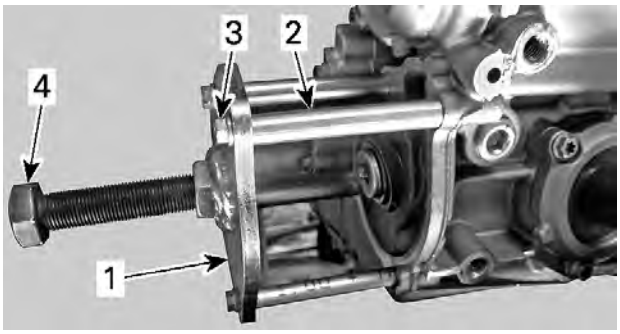

ROTARY SEAL PUSHER PLATE INSTALLATION

i. Rotary seal pusher plate
ii. Tube (70 mm (2.75 in) length)
iii. M6 x 85 screw
iv. Pusher bolt

4. Install seal pusher between rotary seal pusher plate and water pump shaft.

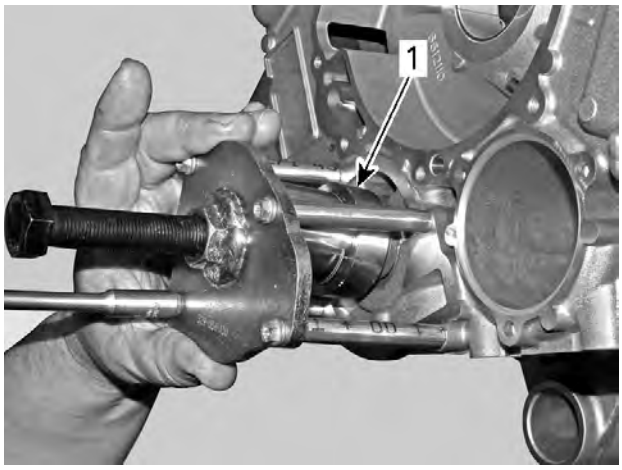

SEAL PUSHER INSTALLATION

i. Seal pusher aligned with pusher bolt

5. Tighten the pusher bolt by hand until it stops against the seal pusher.

13. Carefully thread the pusher bolt **1-1/2 turns**.
14. Ensure that the rotary seal is going straight into crankcase.
15. Remove rotary seal installation tools from crankcase.
16. Repeat the steps 9 to 15 until rotary seal is completely seated in the crankcase.
17. Remove tools from crankcase.

ROTARY SEAL PROPERLY SEATED ON CRANKCASE

18. Carry out the final adjustment of the water pump shaft as follows.
    1. Install M8 x 1.25 nut (P/N 233281414) onto water pump shaft.
    2. Carefully thread M8 nut until the rotary seal is flush with the end of water pump shaft threads.

WATER PUMP SHAFT PROPERLY ADJUSTED WITH ROTARY SEAL

NOTICE

The water pump shaft must be properly adjusted with rotary seal. The water pump shaft must move freely while pushing it toward the crankcase.

19. Install all removed parts.

Water Pump Shaft and Seals Replacement (Disassembled Engine)

Removing the Water Pump Shaft and Seals

1. Remove the water pump gears.
2. Push out water pump shaft with inner portion of rotary seal from inside of crankcase MAG side.

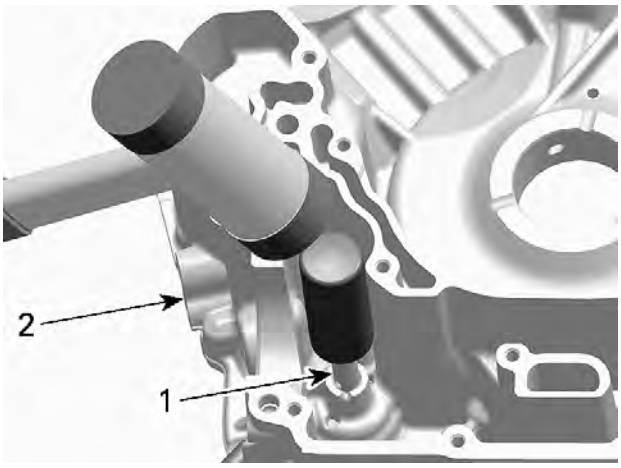

1. *Water pump shaft*
2. *Crankcase MAG side*

3. Using a blind hole puller, remove outer part of rotary seal.
4. Install expander snugly against outer part of rotary seal and pull seal out.

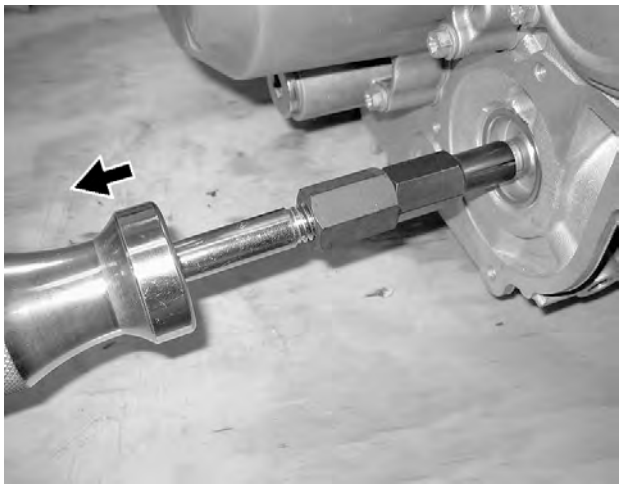

TYPICAL

5. Remove oil seal from inside of crankcase MAG side using a pusher tool.

NOTICE

Be careful not to damage the rotary seal surface in crankcase.

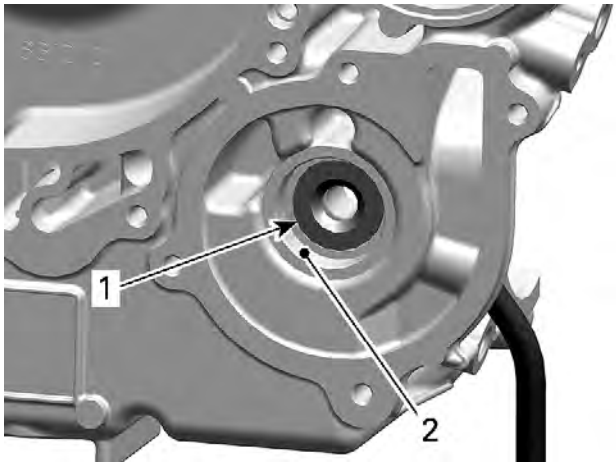

1. *Oil seal*
2. *Machined surface for rotary seal*

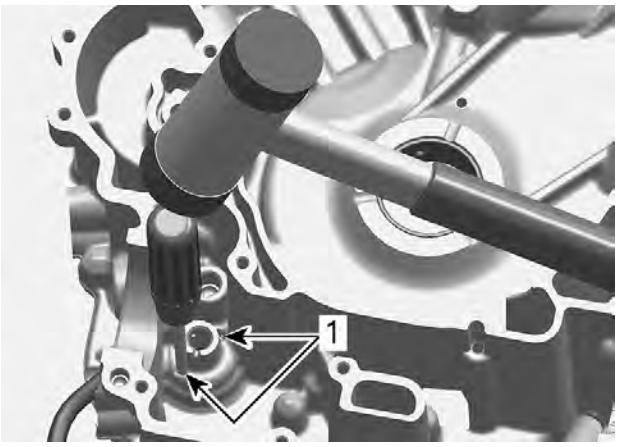

OIL SEAL REMOVAL - VIEW FROM INSIDE CRANKCASE MAG SIDE
1. Orifices for oil seal removal

Installing the Water Pump Shaft and Seals

The installation is the reverse of the removal procedure. However, pay attention to the following.

1. Use tightening torque values specified in the exploded view.

NOTE: Never apply oil on the press fit area of the oil seal and rotary seal.

2. Clean rotary seal surface of any old sealant.
3. Install oil seal.

Oil seal pusher (P/N 529035757)	
Handle (P/N 420877650)	

4. When installing the oil seal on the pusher, make sure the sealing lip points outwards.
5. Push NEW oil seal in place.

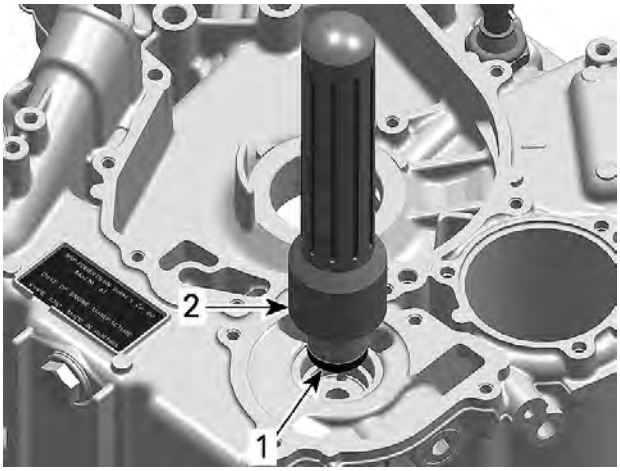

1. Oil seal
2. Installer handle with oil seal pusher

6. Lubricate sealing lip of the oil seal.

Dow Corning 111

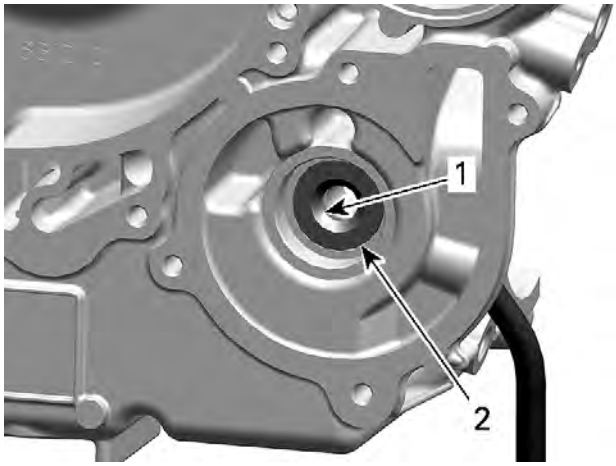

1. Sealing lip
2. Oil seal properly installed

7. Apply engine oil on the water pump shaft and intermediate shaft.
8. Slide NEW water pump shaft assembly into crankcase.

Seal pusher (P/N 529035766)	

1. Surface where rotary seal is pushed by tool

Assembling the Water Pump Shaft

NOTICE
Never use a hammer for rotary seal installation. Only use a press to avoid damaging the ceramic component.

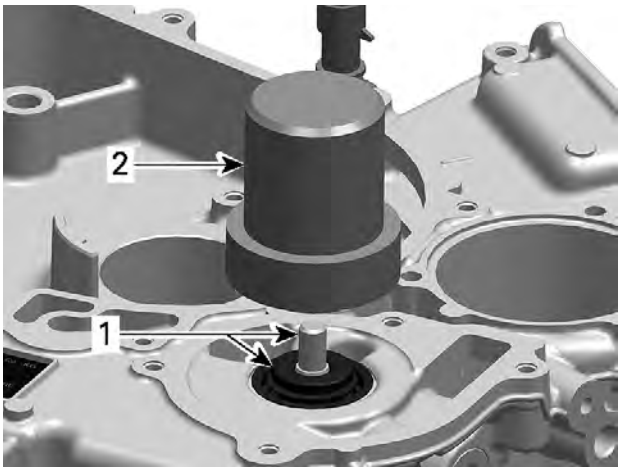

1. *Water pump shaft with rotary seal*
2. *Water pump seal installer*

NOTICE

After installation, water pump shaft with rotary seal must rotate freely.

Water Pump Gears

Water Pump Gears Identification

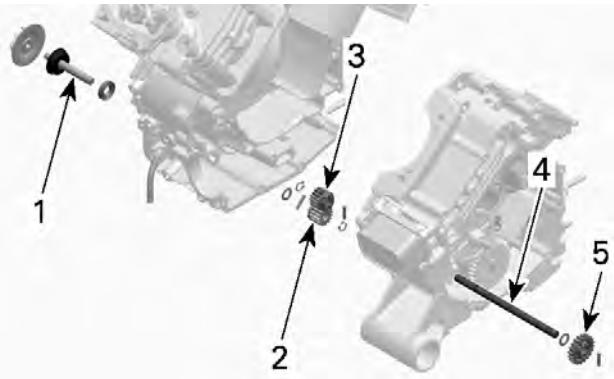

TYPICAL
1. *Water pump shaft*
2. *Water pump gear*
3. *Water pump **intermediate drive** gear*
4. *Water pump **intermediate** shaft*
5. *Water pump **drive** gear (See Cylinder block subsection)*

Inspecting the Water Pump Gears

Water Pump Gear

1. Inspect water pump gear for wear and damage on the snap mechanism to the needle pin. Replace if damaged.

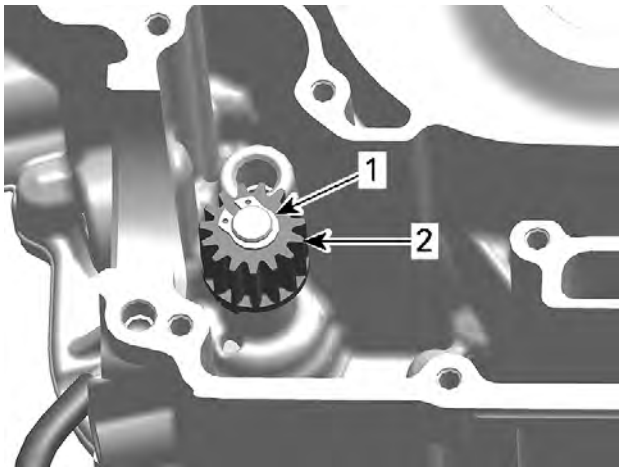

CRANKCASE MAG SIDE
1. *Circlip*
2. *Water pump gear*

Water Pump Intermediate Drive Gear

1. Check water pump intermediate drive gear for wear or broken teeth. Replace if damaged.

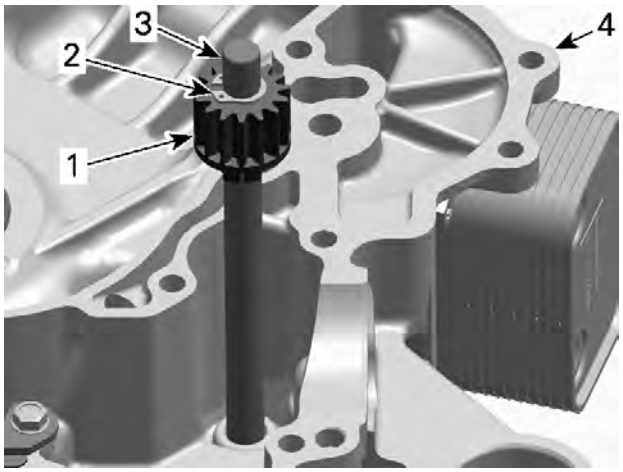

CRANKCASE PTO SIDE
1. *Water pump intermediate drive gear*
2. *Circlip*
3. *Water pump intermediate shaft*
4. *Crankcase PTO side*

Water Pump Drive Gear

See *Cylinder Block* subsection.

Removing the Water Pump Gears

Water Pump Gear

1. Remove circlip retaining water pump gear and discard it.

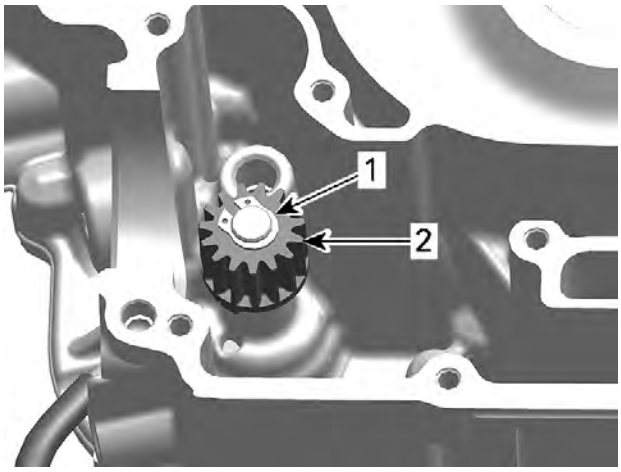

CRANKCASE MAG SIDE
1. *Circlip*
2. *Water pump gear*

2. Remove the water pump gear and the thrust washer.

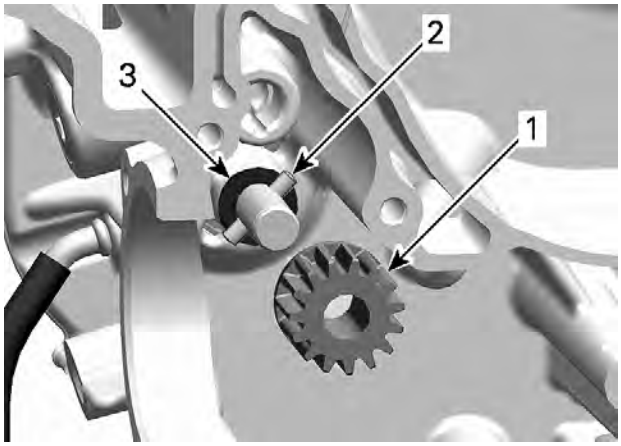

CRANKCASE MAG SIDE
1. *Water pump gear*
2. *Needle pin*
3. *Thrust washer*

Water Pump Intermediate Drive Gear

1. Remove circlip retaining water pump intermediate drive gear and discard it.

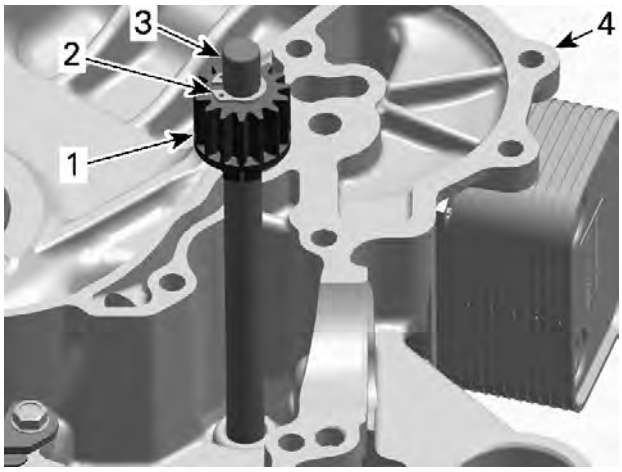

CRANKCASE PTO SIDE
1. *Water pump intermediate drive gear*
2. *Circlip*
3. *Water pump intermediate shaft*
4. *Crankcase PTO side*

2. Remove the following parts:
   - Water pump intermediate drive gear
   - Needle pin.

Water Pump Drive Gear

See *Cylinder Block* subsection.

Installing the Water Pump Gears

Water Pump Gear

1. Install the water pump gear.

NOTICE

A missing thrust washer will cause a leaking rotary seal.

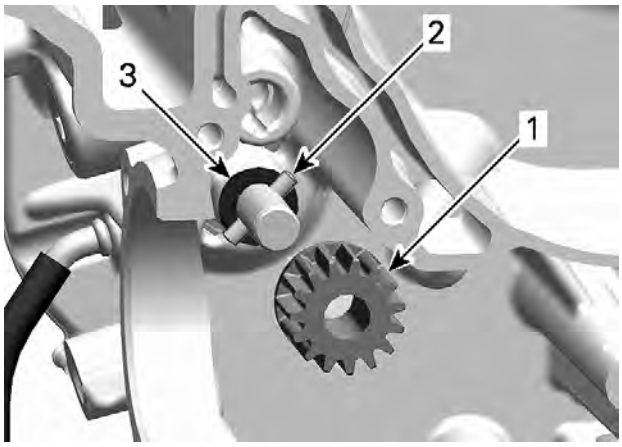

1. *Water pump gear*
2. *Needle pin*
3. *Thrust washer*

NOTE: Ensure water pump gear snaps properly onto needle pin.

2. Install **NEW** circlip to retain water pump gear.

NOTICE
Never use the circlip a second time. Always install a NEW one.

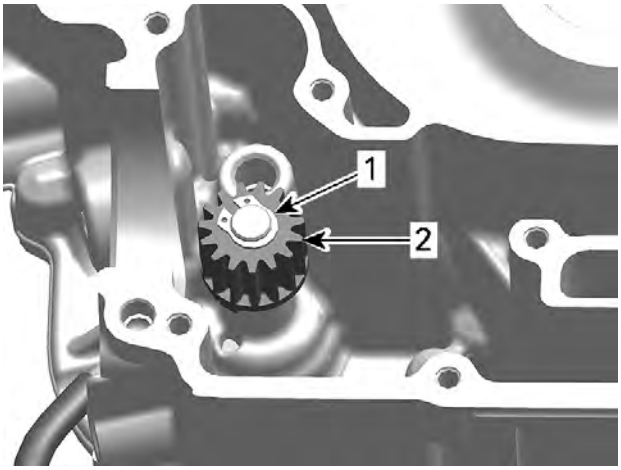

1. Circlip
2. Water pump gear

Water Pump Intermediate Drive Gear

1. Install the following parts on water pump intermediate shaft.
   - Needle pin
   - Water pump intermediate drive gear.
2. Install **NEW** circlip to retain water pump intermediate drive gear.

NOTICE
Never use the circlip a second time. Always install a NEW one.

Water Pump Drive Gear

See *Cylinder Block* subsection.

Magneto and Starter

SERVICE TOOLS

Description	Part Number	Page
CRANKSHAFT LOCKING BOLT	(P/N 529035617)	40
CRANKSHAFT PROTECTOR	(P/N 529036034)	40
ECM ADAPTER TOOL	(P/N 529036166)	37
MAGNETO PULLER	(P/N 529035748)	40

SERVICE PRODUCTS

Description	Part Number	Page
BLACK NEOPRENE PAINT		45
CLUTCH AND PULLEY FLANGE CLEANER PRO S1		41–42
DIELECTRIC GREASE		45
DREI BOND SEALING COMPOUND		38
LOCTITE 243 (BLUE)		40
LOCTITE 648 (GREEN)		42–43
LOCTITE 767 (ANTI-SEIZE LUBRICANT)		44
LOCTITE CHISEL (GASKET REMOVER)		38
XPS SYNTHETIC GREASE		37

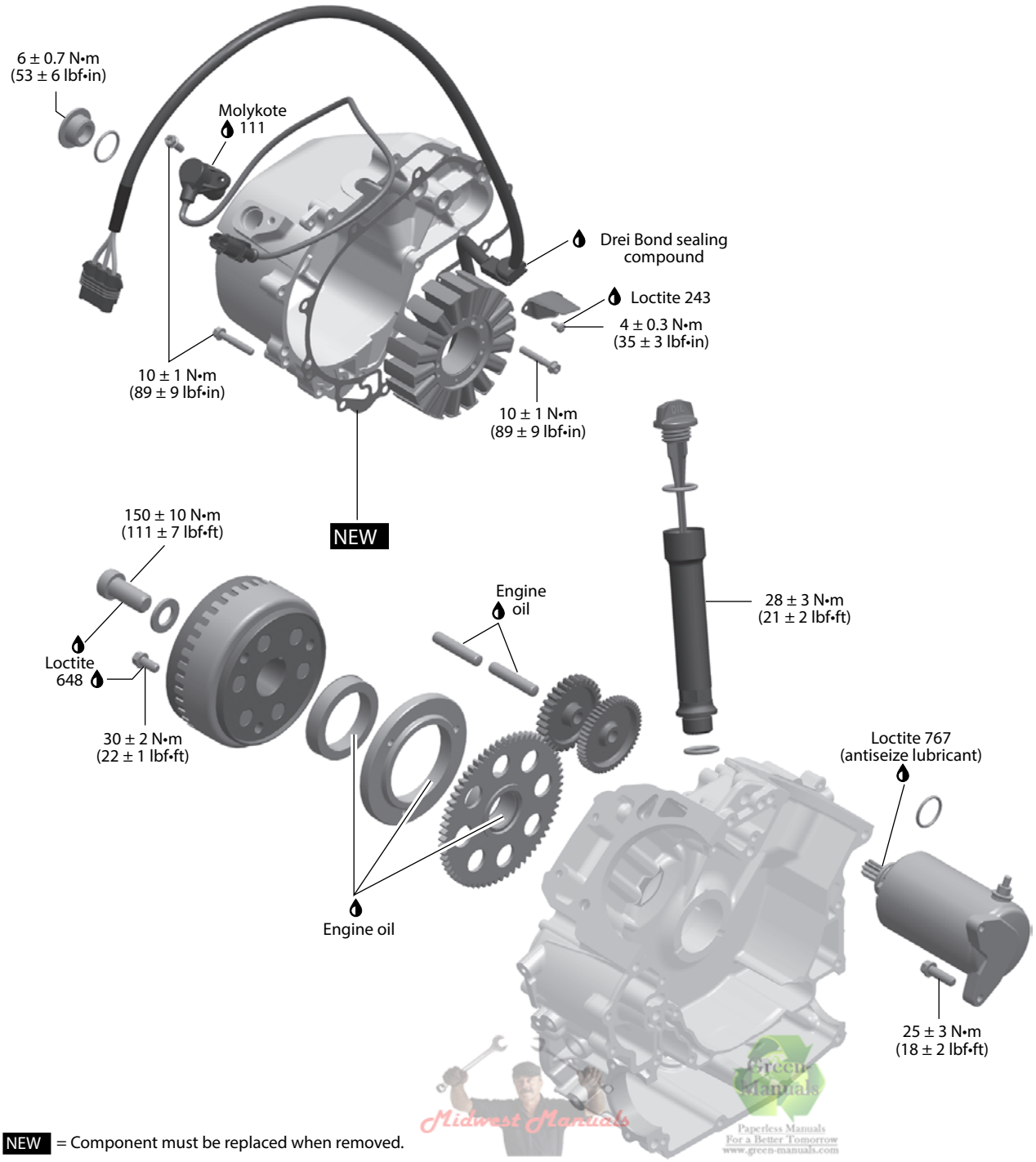

NEW = Component must be replaced when removed.

If you bought this manual from any other seller please leave them
NEGATIVE feeddback and notify me at bestshopmanuals@gmail.com

Procedures

Crankshaft Position Sensor (CPS)

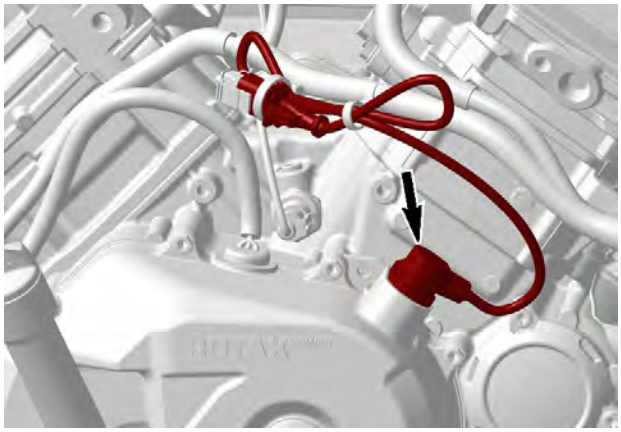

Take into account that a CPS fault can be triggered by bent or missing encoder wheel teeth. First check fault codes using the BRP diagnostic software (BUDS2), then check the encoder wheel teeth condition if necessary (refer to *MAGNETO and starter* subsection).

Testing the CPS Resistance

1. Disconnect CPS wiring harness connector.

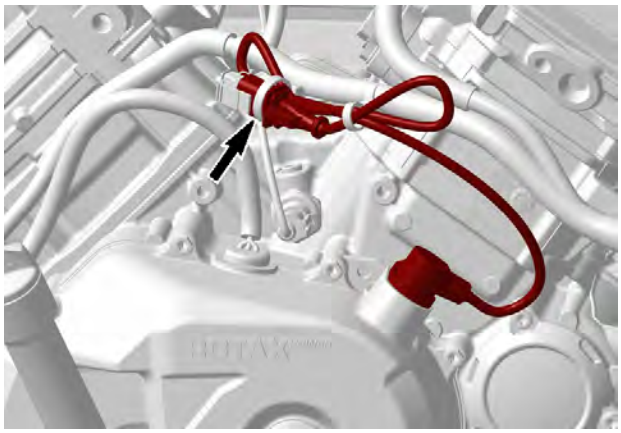

2. Probe terminals as per following table.

CPS Resistance Test		
CPS pin		**Measurement @ 20 °C (68 °F)**
1	2	700 - 900 Ω

3. If resistance is not within specifications, replace the CPS.
4. If resistance tests good, reconnect the CPS connector and disconnect the connector A from the ECM.
5. Install the connector on the ECM adapter tool.

ECM adapter tool (P/N 529036166)	

6. Using a multimeter, recheck resistance as per table.

CPS Resistance Test at ECM Connector		
ECM adapter pin		**Measurement @ 20 °C (68 °F)**
A-H1	A-K2	700 - 900 Ω

7. If resistance value is correct, refer to *Replacing the CPS*.
8. If resistance value is incorrect, repair the connectors or replace the wiring harness between the ECM-A connector and the CPS.

Replacing the CPS

1. Disconnect CPS connector and cut harness locking tie.
2. Remove CPS retaining screw and pull up on CPS to remove it.

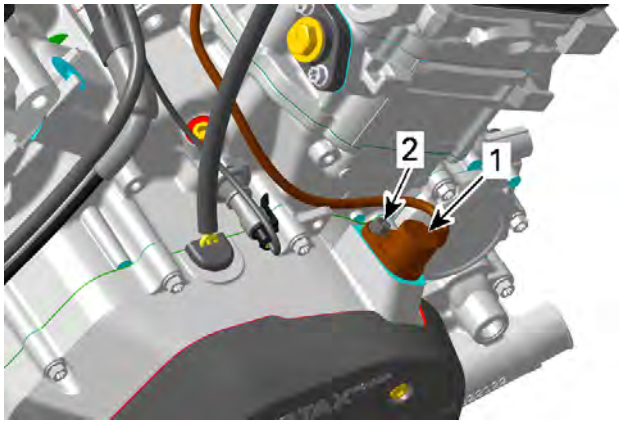

1. *CPS*
2. *Retaining screw*

3. Lubricate O-ring of CPS.

XPS synthetic grease

4. Install new CPS and secure harness with a new locking tie.

Tightening Torque	
CPS retaining screw	10 ± 1 Nm (89 ± 9 lbf-in)

Magneto Cover

Removing the Magneto Cover

1. When engine is still in the vehicle, the fuel tank must be removed to reach the magneto cover.
2. Drain engine oil.
3. Remove crankshaft position sensor (CPS) and cut tie raps.
4. Remove dipstick and oil level tube with O-rings.
5. Disconnect oil pressure switch (OPS) connector.

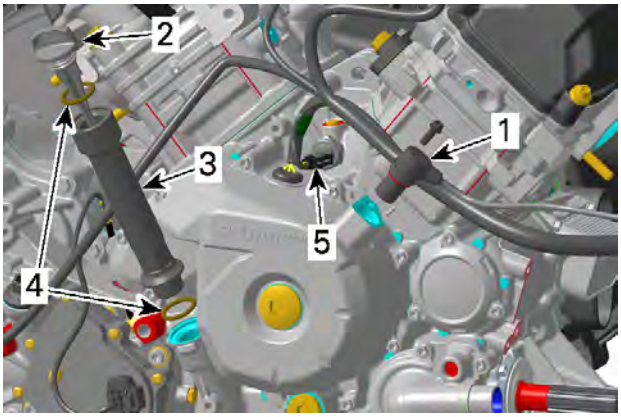

1. *Crank position sensor (CPS)*
2. *Dipstick*
3. *Oil level tube*
4. *O-rings*
5. *Oil pressure switch (OPS) connector*

6. Disconnect stator connector from voltage regulator / rectifier.
7. Remove magneto cover retaining screws.

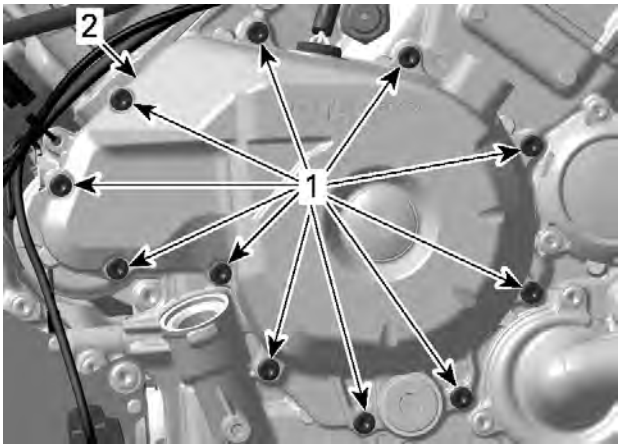

1. *Retaining screws*
2. *Magneto cover*

8. Pull out magneto cover.
9. Discard the gasket.

NOTE: If required, remove stator and harness from magneto cover.

Inspecting and Cleaning the Magneto Cover

1. Check magneto cover for cracks or other damage. Replace if necessary.
2. Clean all metal components in a non- ferrous metal cleaner.

Loctite chisel (gasket remover)

Installing the Magneto Cover

The installation is the reverse the removal procedure. However, pay attention to the following.

1. Install a **NEW** magneto cover gasket.
2. Apply sealant on stator cable grommet as shown in next illustration.

Drei Bond sealing compound

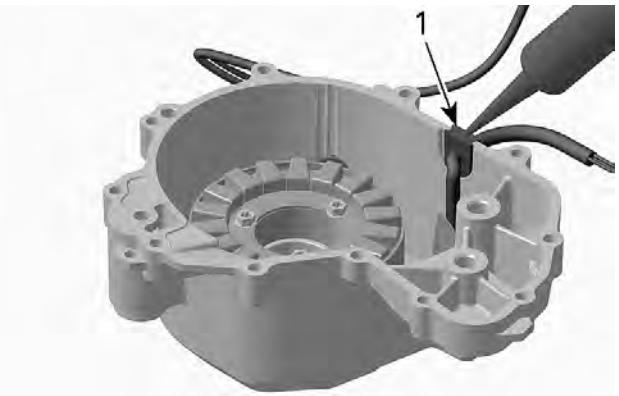

1. *Stator cable grommet (apply Drei Bond sealing compound)*

3. Tighten screws using the following sequence.

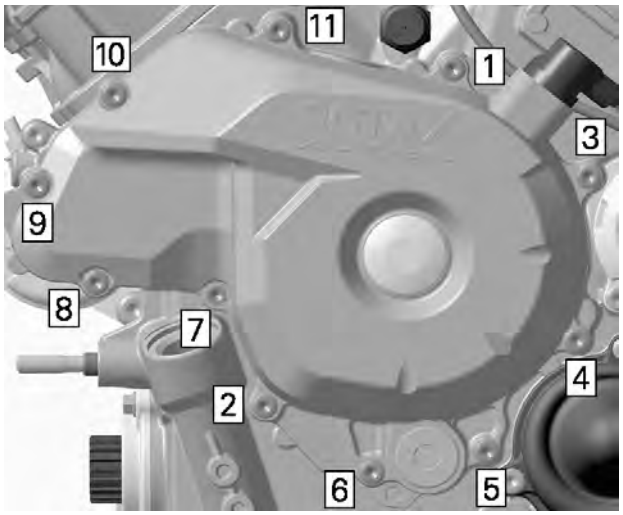

TIGHTENING SEQUENCE

Tightening Torque	
Magneto cover screws	10 ± 1 Nm (89 ± 9 lbf-in)

4. Refill engine with recommended oil.

Stator

Stator Connector Access

The stator is directly connected to the voltage regulator/rectifier.

Testing the Stator Continuity

1. Disconnect the stator connector from the voltage regulator/rectifier.
2. Check resistance between YELLOW wires.

Terminal	Resistance @ 20 °C (68 °F)
1 and 2	0.15 - 0.30 Ω
1 and 3	
2 and 3	

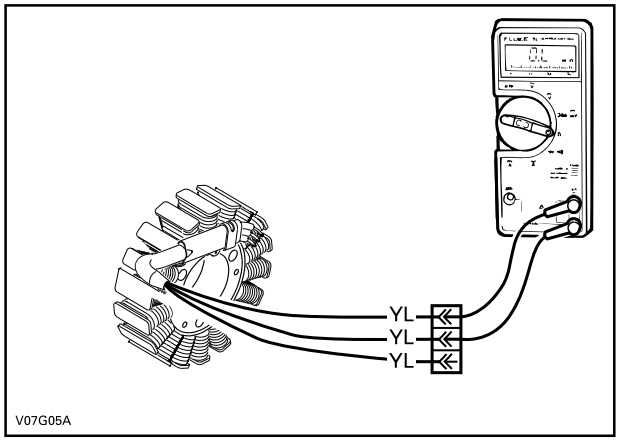

TYPICAL

3. If any reading is out of specification, replace stator.
4. Re-plug connectors properly.

Testing the Stator Static Insulation

1. Disconnect the stator connector from the voltage regulator/rectifier.
2. Connect multimeter between any YELLOW wire (on stator connector) and engine ground.

NOTICE

Never insert a multimeter probe into a terminal as it would ruin the terminal. Probe terminals only by touching.

Test probes	Resistance @ 20 °C (68 °F)
Any YELLOW wire and engine ground	Infinite (open circuit)

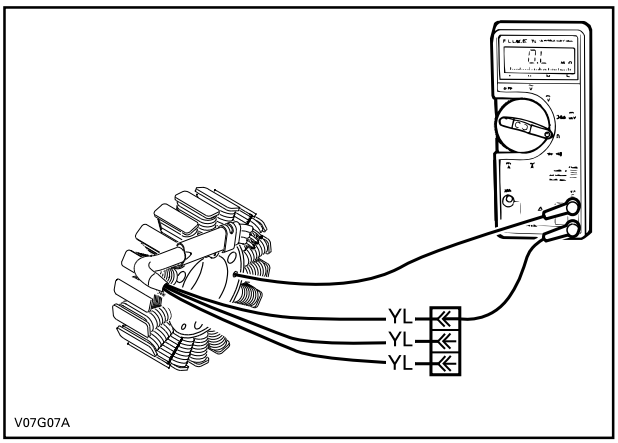

TYPICAL

3. If there is a resistance or continuity, the stator coils and/or the wiring is shorted to ground and needs to be repaired or replaced.
4. Re-plug connectors properly.

Removing the Stator

1. Remove the magneto cover.
2. Remove the stator.

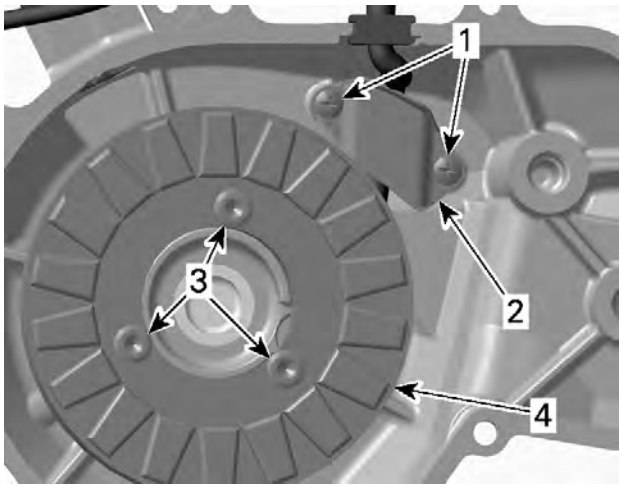

1. *Holding strip screws*
2. *Wire holding strip*
3. *Stator retaining screws*
4. *Stator*

Inspecting the Stator

1. Check stator windings and insulation for cracks or other damages. If damaged replace it.
2. Check if stator wires are brittle, hard or otherwise damaged.

Installing the Stator

The installation is the reverse of the removal procedure. However, pay attention to the following.

NOTICE
When installing the stator take care to route wires properly and install retaining strip.

1. Align the stator with the notch in the magneto housing cover.

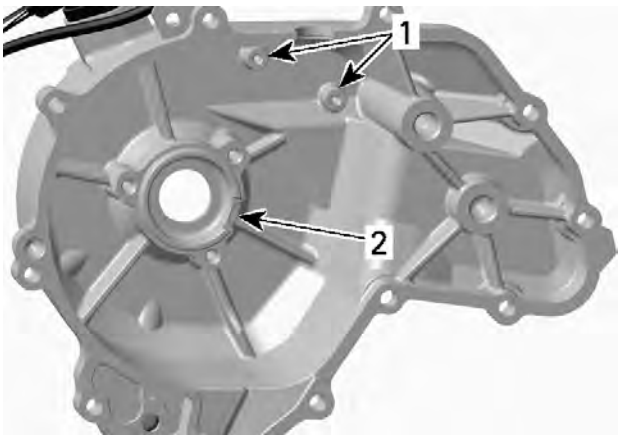

1. Threads for cable holding strip
2. Notch for stator

2. Apply a drop of threadlocker on holding strip screw threads

Loctite 243 (blue)

3. Tighten the holding strip screws to specification.

Tightening Torque	
Holding strip screws	4 ± 0.3 Nm (35 ± 3 lbf-in)

4. Tighten the stator screws to specification.

Tightening Torque	
Stator retaining screws	10 ± 1 Nm (89 ± 9 lbf-in)

Rotor

Removing the Rotor

1. Remove the magneto cover.
2. Lock crankshaft, refer to *Crankshaft Locking Procedure* in *Cylinder Block*.

Crankshaft locking bolt (P/N 529035617)	

3. Heat screw in order to break the threadlocker.
4. Remove screw and washer securing rotor to crankshaft.

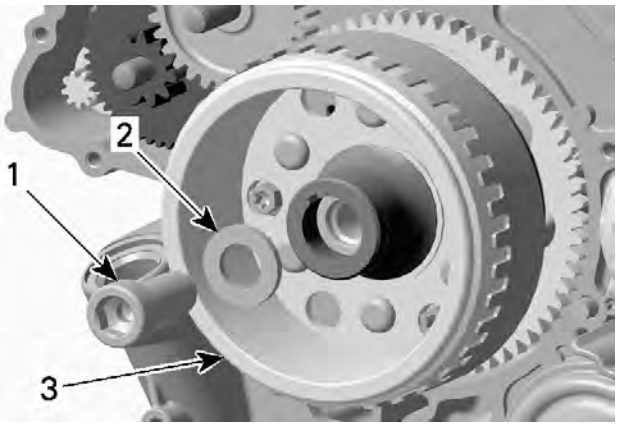

1. Screw M16
2. Washer
3. Rotor

5. Install tools to remove the rotor.

Magneto puller (P/N 529035748)	
Crankshaft protector (P/N 529036034)	

NOTE: Use grease to place protector on crankshaft end prior to screw on the magneto puller.

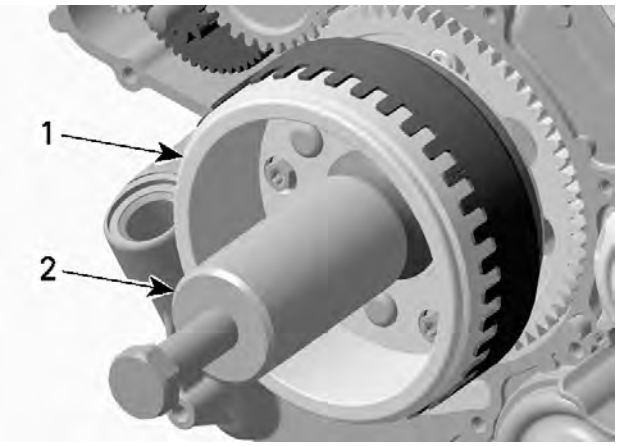

1. Rotor
2. Magneto puller

6. Screw magneto puller bolt to remove rotor.

Inspecting the Rotor

1. Check inner side of rotor for scratches or other damage.
2. Blow pressurized air in the rotor oil bore and make sure it is not clogged.

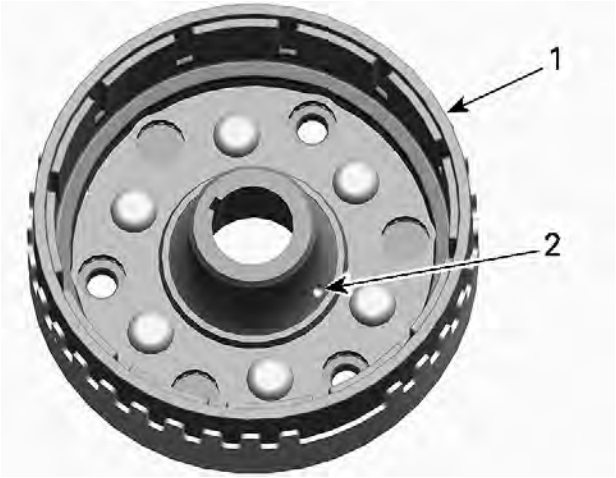

1. Rotor
2. Oil bore

3. Check keyway of the rotor for wear or damages.
4. Check if trigger wheel teeth are bent or otherwise damaged.
5. Check woodruff key and keyway on the crankshaft for wear or damages.
6. Replace parts as necessary.

Installing the Rotor

The installation is the reverse of the removal procedure. However, pay attention to the following.

1. Clean these components:

Clutch and pulley flange cleaner PRO S1

- Crankshaft taper
- Oil passage in crankshaft taper
- Thread in crankshaft
- Rotor taper
- Oil bore in rotor.

NOTICE
Taper on crankshaft and rotor must be free of grease.

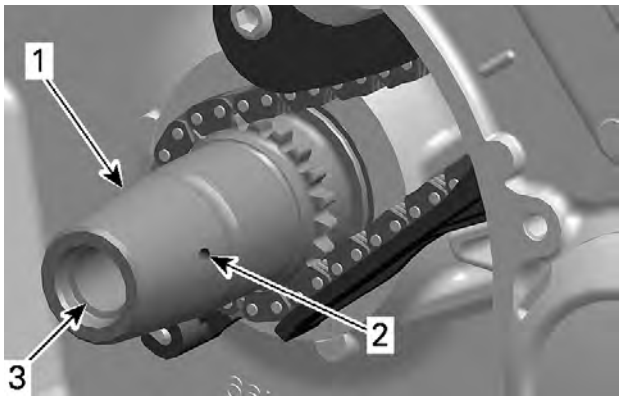

1. Crankshaft (MAG side)
2. Oil passage
3. Threads

2. Oil sprag clutch and install sprag clutch gear.

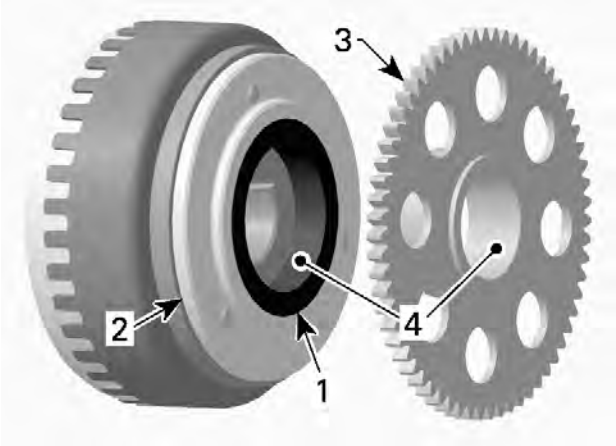

1. Sprag clutch
2. Sprag clutch housing
3. Sprag clutch gear
4. Apply engine oil here

3. Slide rotor onto crankshaft. The woodruff key and the keyway must be aligned.
4. Rotate starter double gear counterclockwise to align intermediate gear teeth with sprag clutch gear.

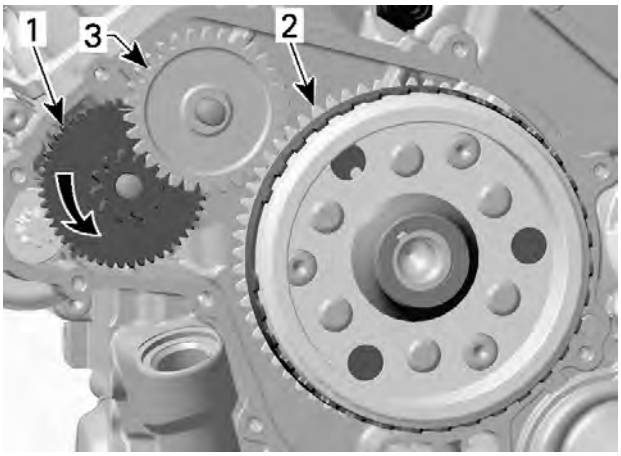

1. *Starter double gear*
2. *Sprag clutch gear*
3. *Intermediate gear*

5. Apply a drop of threadlocker on rotor screw threads.

Loctite 648 (green)

6. Tighten the rotor screw to specification.

Tightening Torque	
Rotor retaining screw	150 ± 10 Nm (111 ± 7 lbf-ft)

Sprag Clutch

Removing the Sprag Clutch

1. Remove the magneto cover.
2. Heat sprag clutch housing screws in order to break the threadlocker.
3. Loosen screws.

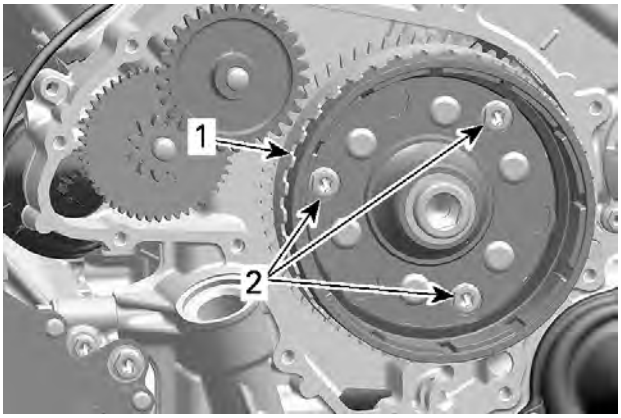

1. *Rotor*
2. *Sprag clutch housing screws*

4. Remove the rotor.
5. Remove sprag clutch gear.
6. Remove sprag clutch housing screws and sprag clutch housing.

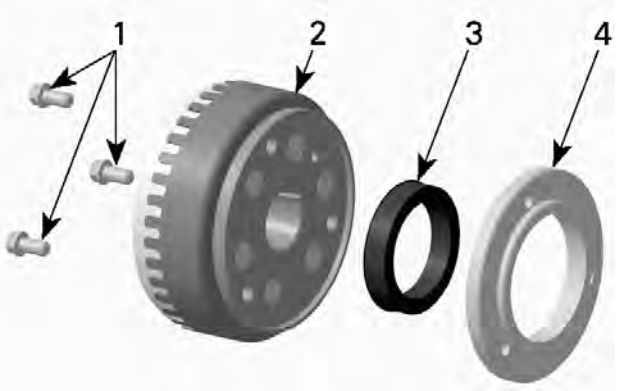

1. *Sprag clutch housing screws*
2. *Rotor*
3. *Sprag clutch*
4. *Sprag clutch housing*

Inspecting the Sprag Clutch

1. Inspect sprag clutch and sprag clutch housing for wear and damage.
2. Also check the collar of the sprag clutch gear.
3. Rotate sprag clutch gear in sprag clutch. Sprag clutch must lock in counterclockwise direction.

SPRAG CLUTCH FUNCTIONAL TEST
1. *Lock*

4. Sprag clutch, housing and gear must be replaced at the same time, if damaged.

Installing the Sprag Clutch

The installation is the reverse of the removal procedure. Pay attention to the following details.

1. Clean the following:

Clutch and pulley flange cleaner PRO S1

   – Threads in sprag clutch housing
   – Threads of sprag clutch housing screws.

2. Apply threadlocker on threads of sprag clutch housing screws.

Loctite 648 (green)

3. Install screws but do not torque yet.
4. Apply engine oil on sprag clutch and sprag clutch gear needle bearing.

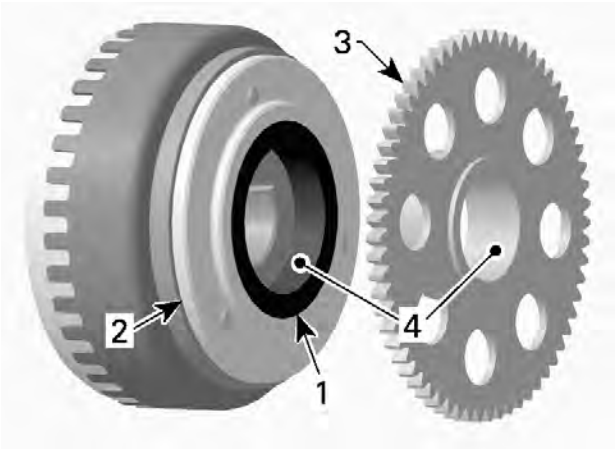

1. *Sprag clutch*
2. *Sprag clutch housing*
3. *Sprag clutch gear*
4. *Apply engine oil here*

5. Install rotor.
6. Tighten sprag clutch housing screws to specification.

Tightening Torque	
Sprag clutch housing screws	30 ± 2 Nm (22 ± 1 lbf-ft)

Sprag Clutch Gear

Removing the Sprag Clutch Gear

1. Remove the rotor.
2. Pull sprag clutch gear out of the rotor.

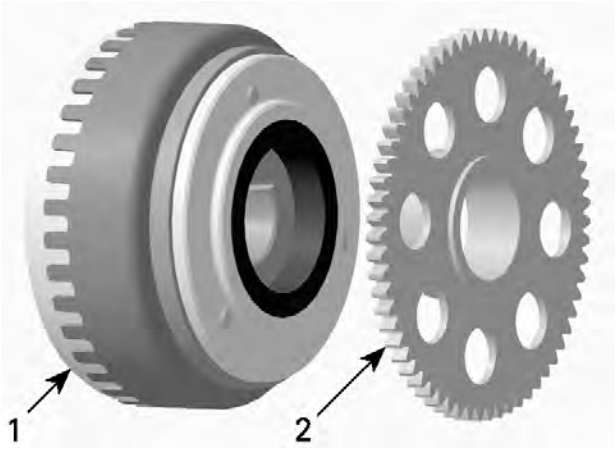

1. *Rotor*
2. *Sprag clutch gear*

Inspecting the Sprag Clutch Gear

1. Inspect gear, especially teeth and sprag clutch collar, for wear and other damage.
2. Check needle bearing condition. Replace sprag clutch gear if necessary.

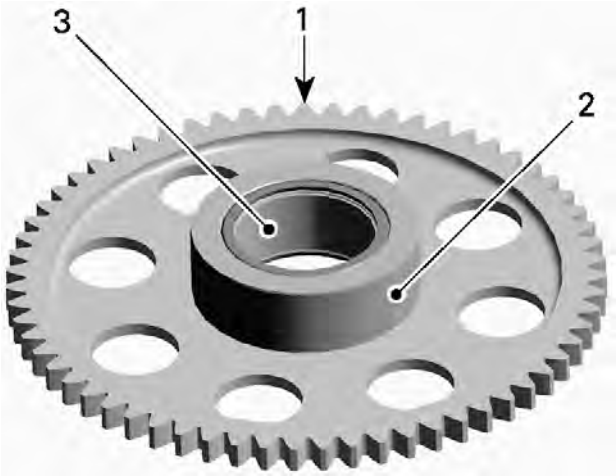

INSPECT
1. *Teeth*
2. *Collar*
3. *Needle bearing*

Installing the Sprag Clutch Gear

The installation is the reverse of the removal procedure.

1. Apply engine oil on needle bearing and collar of sprag clutch gear.

Starter Drive Gears

Starter Drive Gear Location

The starter drive gears are located on the engine MAG side behind the magneto cover.

Removing the Starter Drive Gear

1. Remove the magneto cover.
2. Remove location pins, starter double gear and intermediate gear.

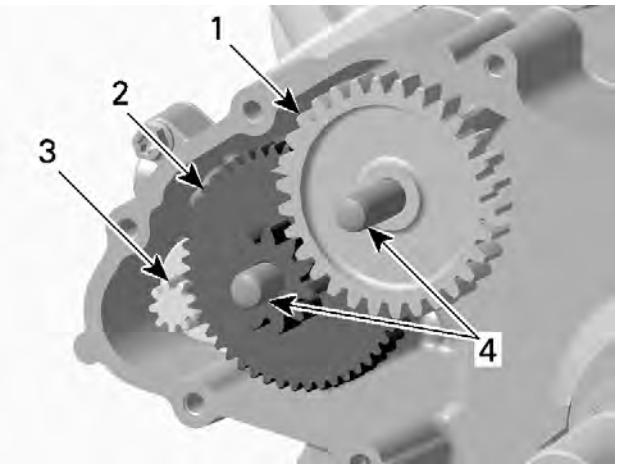

1. *Intermediate gear*
2. *Starter double gear*
3. *Starter gear*
4. *Location pins*

Inspecting the Starter Drive Gear

1. Inspect gears and location pins for wear and damage.
2. Replace parts as necessary.

Installing the Starter Drive Gear

The installation is the reverse of the removal procedure. Pay attention to the following details.

1. Apply an antiseize lubricant on starter gear before installing the starter double gear.

Loctite 767 (anti-seize lubricant)

2. Apply engine oil on location pins.

Electric Starter

Starter Location

Starter is located under rear cylinder.

Testing the Starter Operation

1. Ensure the starter power cable is properly connect from the starter solenoid to the starter terminal (clean, tight, no corrosion).
2. Using booster cables, carefully supply current from a 12 volt battery directly to the starter. First connect the BLACK (-) cable to the engine ground. Then, momentarily connect the remaining jumper cable from the battery to the starter terminal on the starter solenoid.
3. If starter turns, test other starting system components.

Removing the Starter

1. Disconnect the battery.
2. Refer to *Continuously Variable Transmission (CVT)* subsection and remove:
   - CVT cover
   - Drive pulley
   - Driven pulley
   - CVT air guide.
3. Clean starter area.
4. Remove starter retaining screw.

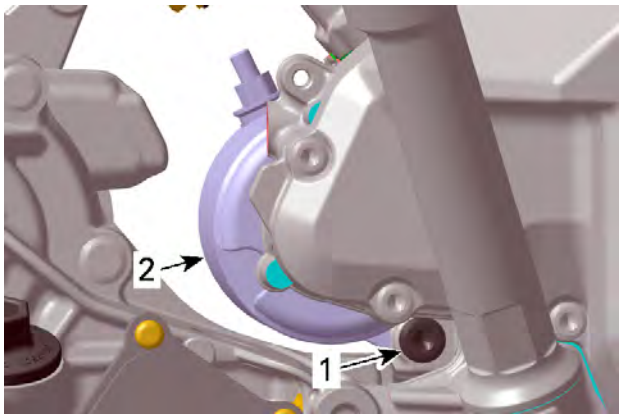

1. *Starter retaining screw*
2. *Starter*

5. Carefully pry starter out of the crankcase.

Installing the Starter

The installation is the reverse of the removal procedure. However, pay particular attention to the following.

1. Make sure that starter and engine mating surfaces are free of debris. Serious problem may arise if the starter is not properly aligned.
2. Bring starter close to its location. Rotate it so that its mounting ear allows installation in engine crankcase.
3. Push starter in place and align mounting ear to install screw.
4. Tighten starter mounting screws to specification.

Tightening Torque	
Starter mounting screw	25 ± 3 Nm (18 ± 2 lbf-ft)

5. Connect the RED (+) cable to the starter, tighten nut to specification.

Tightening Torque	
Starter cable nut	6 ± 0.7 Nm (53 ± 6 lbf-in)

6. Apply one of the following lubricant over the starter cable nut to protect it against rust.

Dielectric grease
Black neoprene paint

7. Connect the battery.
8. Test starter operation.

Timing Chain

SERVICE TOOLS

Description	Part Number	Page
CAMSHAFT TIMING TOOL	(P/N 529036268)	51
CRANKSHAFT TDC POSITION TOOL	(P/N 529036529)	54

SERVICE PRODUCTS

Description	Part Number	Page
LOCTITE 243 (BLUE)		52, 56

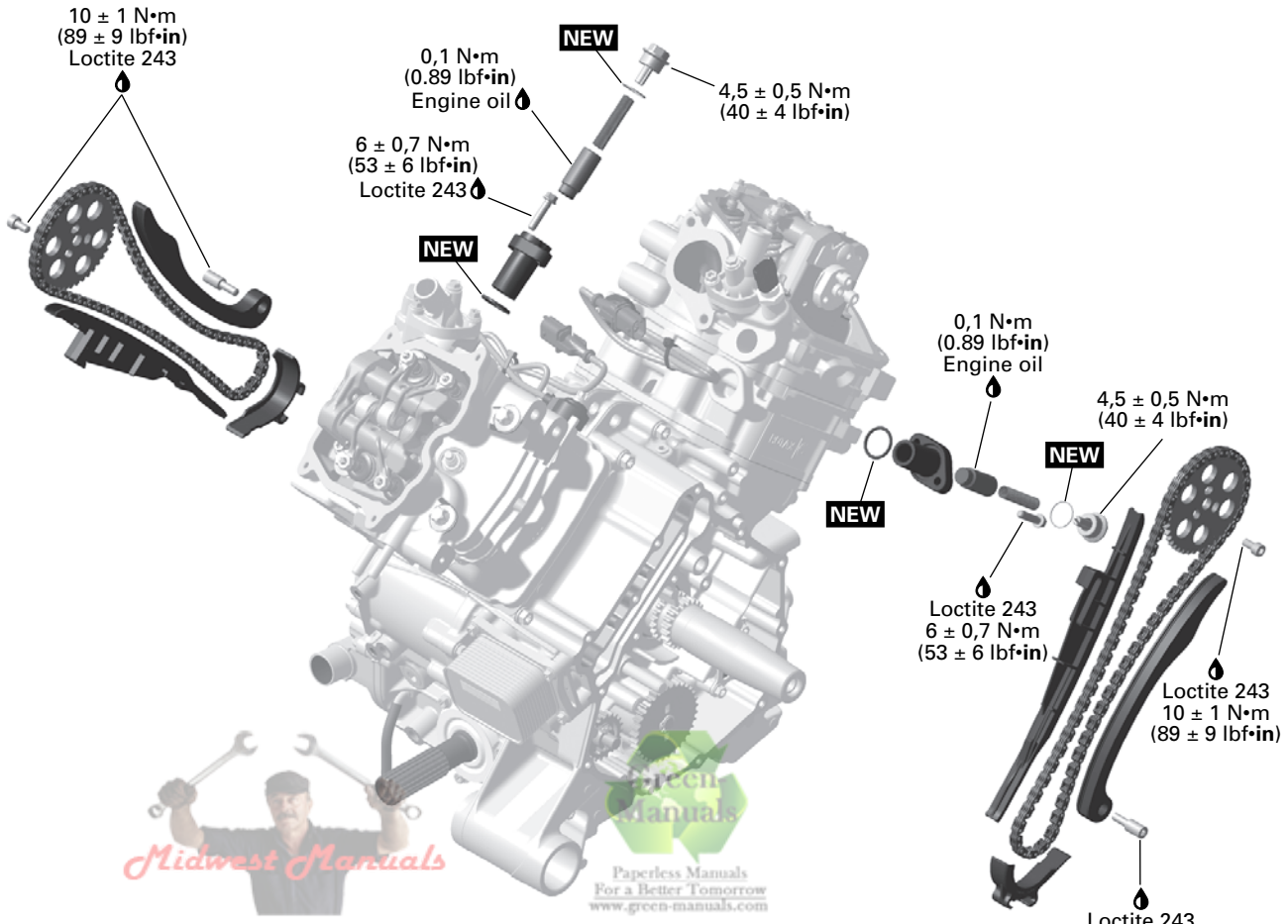

Midwest Manuals
Green Manuals
Paperless Manuals
For a Better Tomorrow
www.green-manuals.com
If you bought this manual from any other seller please leave them
NEGATIVE feeddback and notify me at bestshopmanuals@gmail.com

NEW = Component must be replaced when removed.

General

IMPORTANT: Note position of parts on disassembly. This may help to find the root cause of a problem. A component that is not replaced should be reinstalled in the same position as originally mounted.

Troubleshooting

Troubleshooting

1. UNUSUAL ENGINE NOISE OR VIBRATION

IMPROPER VALVE CLEARANCE ADJUSTMENT AND/OR WORN OUT ROCKER ARM(S)

– *Readjust valve clearance and/or replace defective part(s), refer to Cylinder Head subsection.*

DEFECTIVE CHAIN TENSIONER

– *Replace chain tensioner.*

WORN OUT TIMING CHAIN GUIDE(S)

– *Replace timing chain guide(s).*

STRETCHED TIMING CHAIN OR WORN OUT TIMING GEARS

– *Replace timing chain and timing gears.*

LOOSE TIMING GEAR RETAINING SCREWS

– *Retighten screws to recommended torque.*

INCORRECT CAMSHAFT TIMING

– *Replace damaged components and readjust camshaft timing.*

2. ENGINE LACKS ACCELERATION OR POWER

INCORRECT CAMSHAFT TIMING

– *Replace damaged components and readjust camshaft timing.*

Procedures

Timing Chain Tensioner

Timing Chain Tensioner Location

The timing chain tensioner is located in the cylinder.

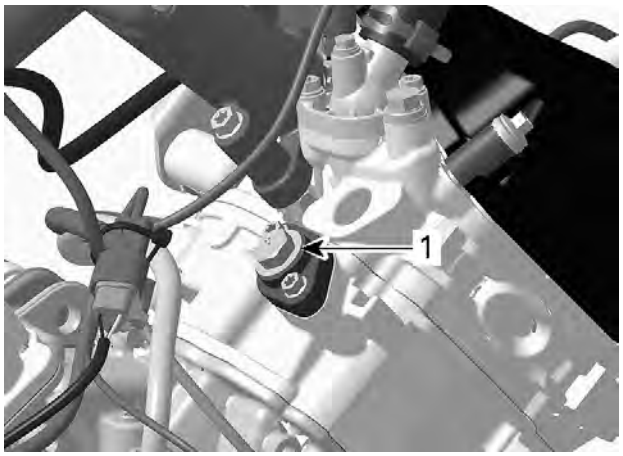

FRONT CYLINDER
1. Timing chain tensioner

Removing the Timing Chain Tensioner

1. Make sure the respective cylinder is set to TDC ignition, refer to *Camshaft Timing Gears*.
2. Carefully unscrew chain tensioner plug and release spring tension.

⚠ CAUTION
Tensioner is spring loaded.

3. Remove the chain tensioner plunger.
4. Discard the O-ring.

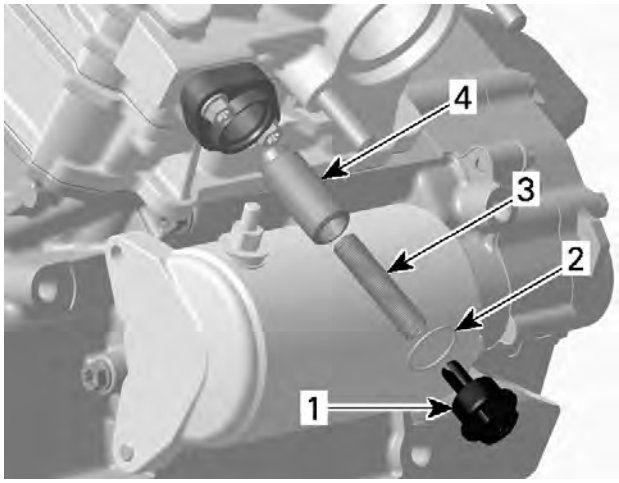

1. Chain tensioner plug
2. O-ring (discard it)
3. Spring
4. Chain tensioner plunger

5. Remove the chain tensioner housing.
6. Discard the O-ring.

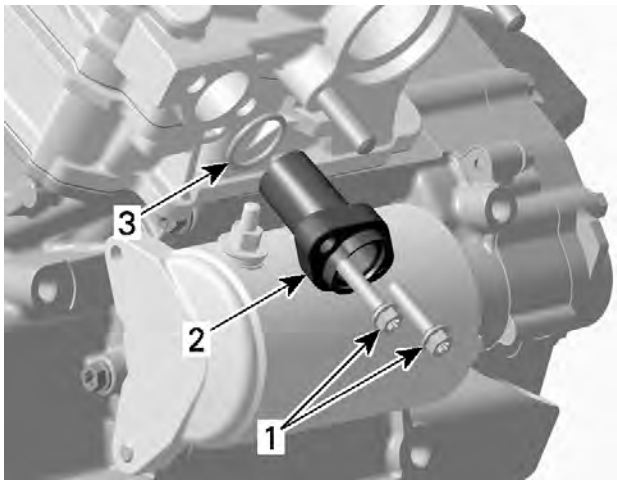

1. *Screws*
2. *Chain tensioner housing*
3. *O-ring (discard it)*

Inspecting the Timing Chain Tensioner

1. Check the chain tensioner housing and plug for cracks or other damages. Replace if necessary.
2. Check chain tensioner plunger for free movement and/or scoring.
3. Check spring condition. Replace if bent, broken or worn.
4. Always install **NEW** O-rings.

Installing the Timing Chain Tensioner

For installation, reverse the removal procedure. However, pay attention to the following.

1. Before installing the chain tensioner make sure, that the camshaft timing gear can be moved back and forth.

NOTICE
Do not loosen or remove camshaft timing gear screws. Otherwise the camshaft timing procedure must be performed.

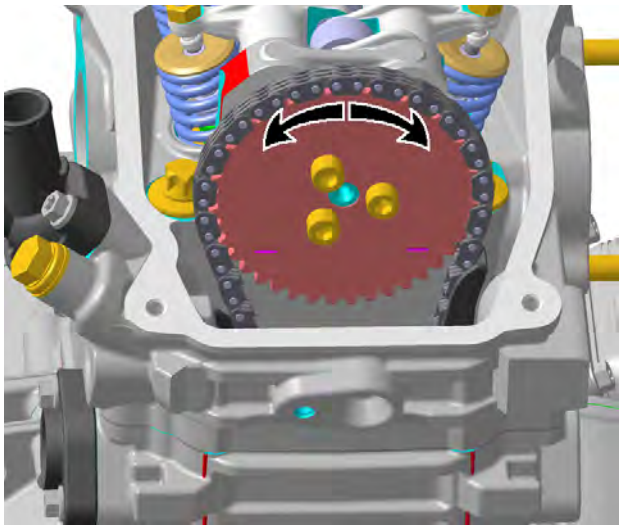

MOVE GEAR BACK AND FORTH

2. Apply engine oil on the plunger before installation.
3. Slightly turn the camshaft timing gear in order to get the timing chain play on the tensioner side.
4. Slightly screw the plunger in until the timing chain allows no more back and forth movement of the camshaft timing gear.
5. Screw the plunger in an additional 1/8 turn to reach the required specified torque.

Timing Chain Tensioner Adjustment Torque
0.1 Nm (.9 lbf-in)

NOTICE
Improper adjustment of the timing chain will lead to severe engine damage.

6. Install a **NEW** O-ring on chain tensioner screw plug.
7. Fit the spring on one side into the slot of the plug.

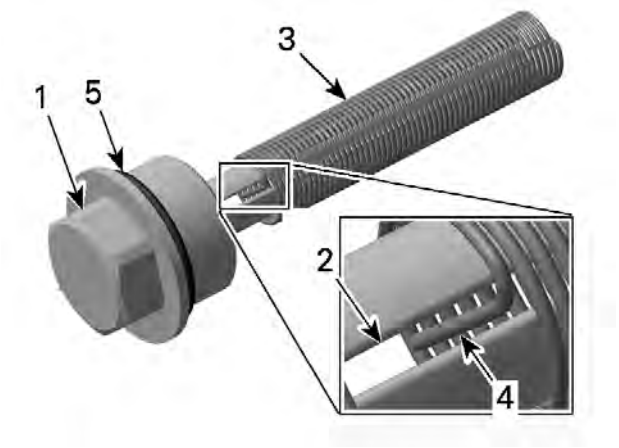

1. *Plug*
2. *Slot*
3. *Spring*
4. *Spring end*
5. *O-ring*

8. Fit the spring on the other side into the plunger.

NOTE: Turn spring only clockwise in order to fit the spring end into the notch of the plunger to avoid loosening the plunger during spring installation. Do not preload the spring.

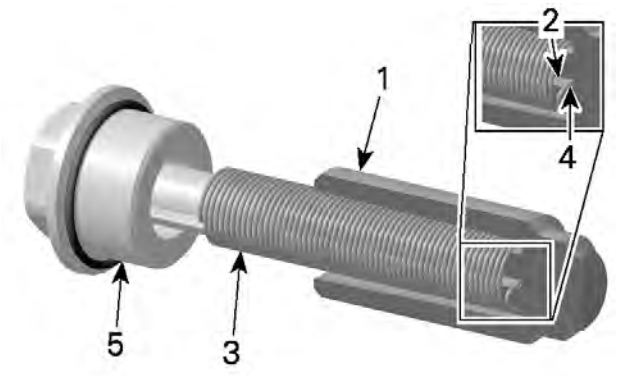

1. *Plunger*
2. *Notch*
3. *Spring*
4. *Spring end*
5. *Plug with O-ring*

9. Then compress the spring and screw the plug in.

NOTE: To avoid overstressed timing chain, the plug must engage into threads within the first full turn.

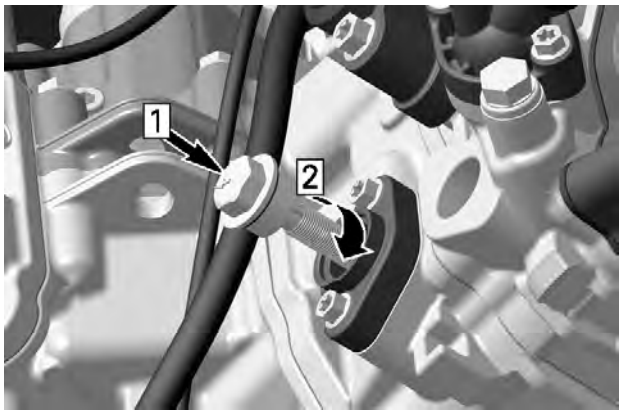

Step 1. Compress spring
Step 2. Screw in plug

10. Remove locking tool and install all other removed parts.
11. Finally, tighten the plug.

Tightening Torque	
Chain tensioner plug	4.5 ± 0.5 Nm (40 ± 4 lbf-in)

Camshaft Timing Gear

Removing the Camshaft Timing Gear

1. Remove the valve cover, refer to *Cylinder Head* subsection.
2. Turn crankshaft to TDC ignition of the respective cylinder and lock magneto flywheel, see *Camshaft Timing*.
3. Unscrew timing chain tensioner.
4. Remove camshaft timing gear screws.

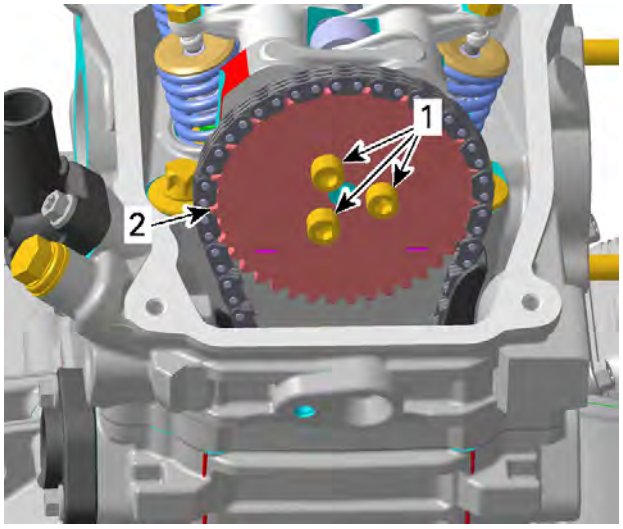

1. *Camshaft timing gear screws*
2. *Camshaft timing gear*

5. Remove the camshaft timing gear.
6. Secure timing chain with a piece of wire.

Inspecting the Camshaft Timing Gear

1. Check camshaft timing gear for wear or deterioration.
2. If gear is worn or damaged, replace it as a set with the timing chain.
3. For crankshaft gear, refer to *Crankshaft* in *Cylinder Block*.

Installing the Camshaft Timing Gear

For installation, reverse the removal procedure. Pay attention to the following details.

1. Clean mating surface and threads of camshaft prior installing camshaft timing gear.

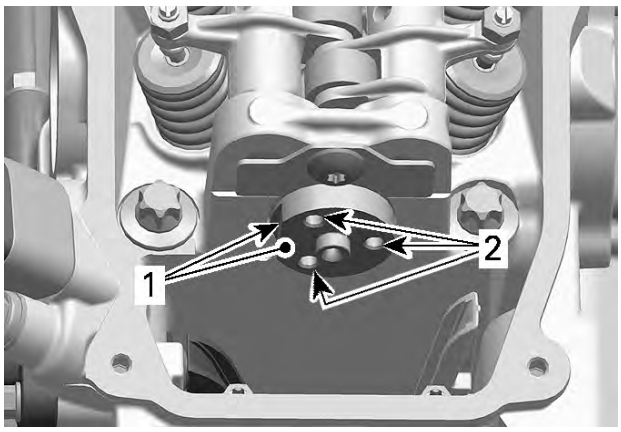

1. Mating surface on camshaft
2. Threads for camshaft screws

2. Crankshaft must be set to TDC ignition position before installing the timing chain, refer to *Camshaft Timing*.
3. Install the camshaft timing tool on the cylinder head.

Camshaft timing tool (P/N 529036268)	

4. Align tube of camshaft adjustment tool properly with machined radius on cylinder head.

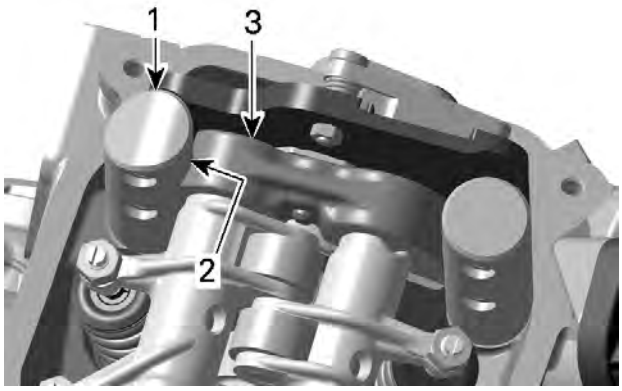

1. Tube (camshaft adjustment tool)
2. Machined radius (camshaft adjustment tool)
3. Cylinder head

5. Set camshaft to TDC ignition position by aligning the camshaft flange flat spot with the tool lever.
6. In addition, to ensure proper camshaft timing, press camshaft adjustment tool lever downwards.

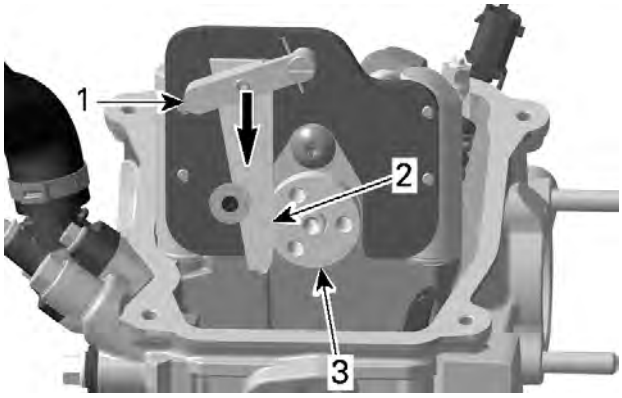

PRESS TOOL LEVER DOWN
1. Lever
2. Flat spot
3. Camshaft

NOTICE

Crankshaft and camshaft must be locked at TDC ignition position to place camshaft timing gear and timing chain in the proper position.

7. Place camshaft timing gear along with the timing chain on the camshaft.

NOTE: The printed marks on the camshaft timing gear must be parallel to the cylinder head base.

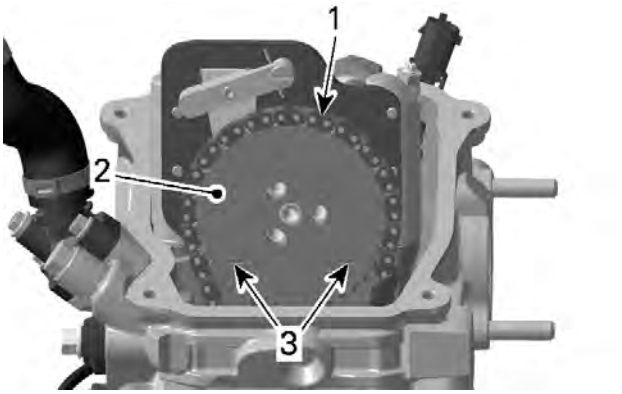

1. *Timing chain*
2. *Camshaft timing gear*
3. *Printed marks on camshaft timing gear*

8. Install and adjust timing chain tensioner, refer to *Timing Chain Tensioner*.
9. Apply a drop of threadlocker on camshaft timing gear screws threads.

Loctite 243 (blue)

10. Install and tighten camshaft timing gear screws to specification.

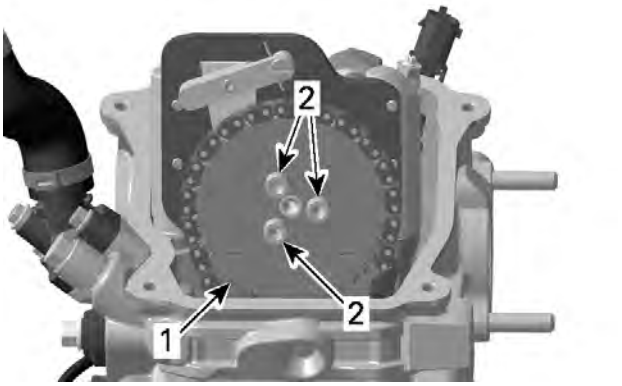

1. *Camshaft timing gear*
2. *Camshaft timing gear screws*

Tightening Torque	
Camshaft timing gear screws	10 ± 1 Nm (89 ± 9 lbf-in)

11. Remove the camshaft timing tool.

Camshaft Timing

If a piston (of cylinder 1 or 2) is set to TDC ignition, the camshaft timing gear of the opposite cylinder must be in the following position.

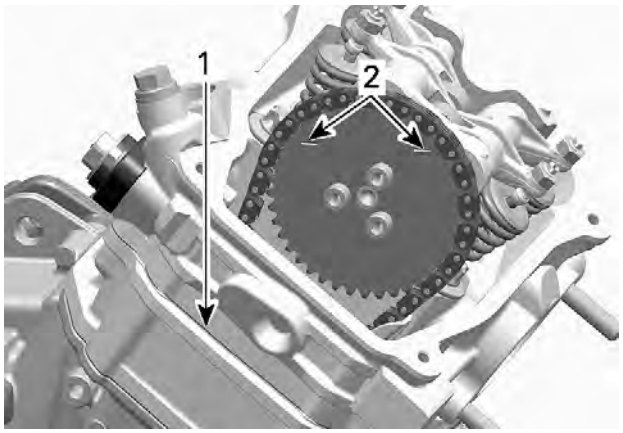

TYPICAL
1. *Cylinder head base*
2. *Marks on timing gear of the opposite cylinder*

Camshaft Timing Piston No. 2 (Rear)

1. Remove spark plugs of both cylinders.
2. Remove valve covers of both cylinders.
3. Remove the plug and O-ring of magneto cover.

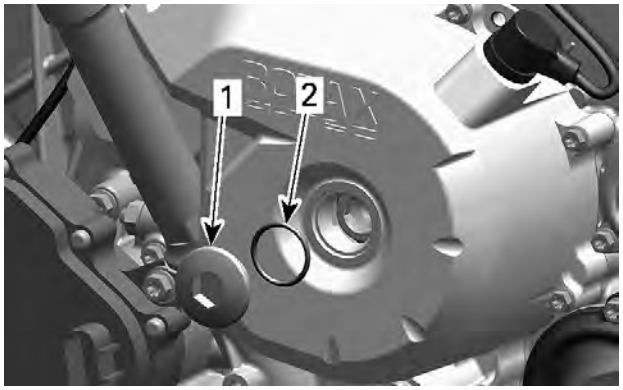

1. *Plug*
2. *O-ring*

4. Remove the crankshaft position sensor (CPS).

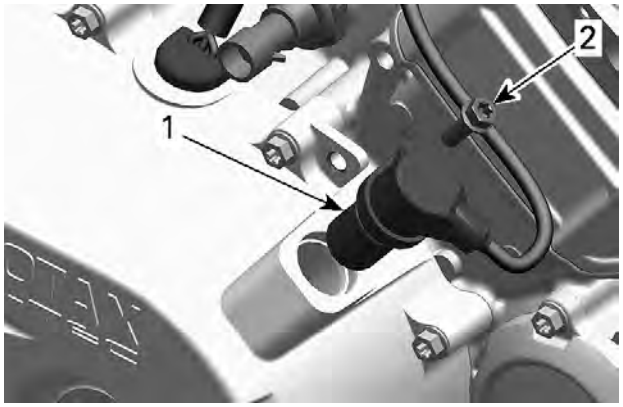

1. *CPS*
2. *Screw*

5. Set piston no. 2 to TDC ignition by turning the crankshaft.

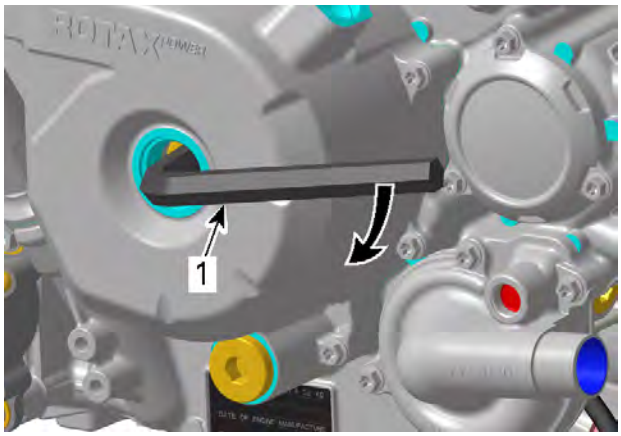

1. Allen key 14 mm

1. The rear piston is at TDC when it's index mark on the magneto flywheel is aligned with notch in the magneto cover.

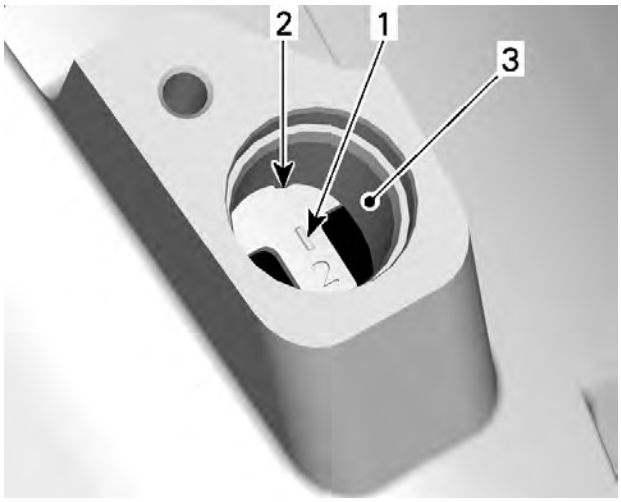

PISTON NO. 2 AT TDC

i. Mark "2" on magneto flywheel
ii. Notch on magneto cover
iii. Crankshaft position sensor location

2. Confirm printed marks on the camshaft timing gear are parallel to cylinder head base, in the lower position.

NOTE: If printed marks on camshaft timing gear are not as specified, turn crankshaft 360°.

In this position the piston is set to TDC ignition.

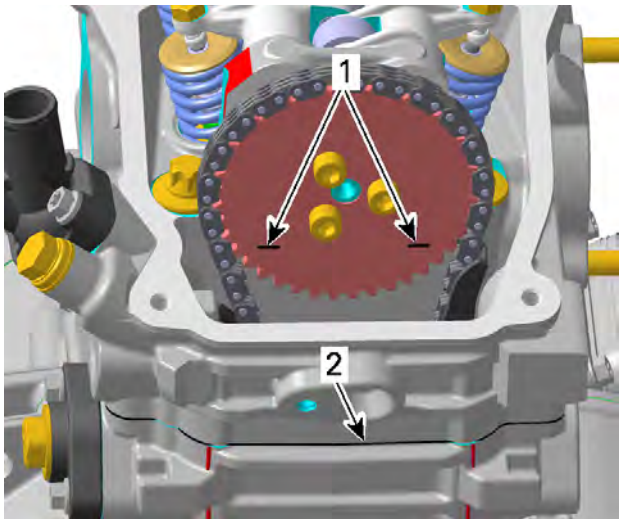

PISTON AT TDC IGNITION

i. Printed marks on camshaft timing gear
ii. Cylinder head base

6. Install the crankshaft TDC position tool to lock crankshaft in position, refer to *Crankshaft TDC Position Tool Installation*.

Camshaft Timing Piston No. 1 (Front)

1. Set piston no. 2 (rear) to TDC ignition, see *Camshaft Timing Piston No. 2 (Rear)*.
2. Remove crankshaft TDC position tool.
3. To set front piston no. 1 to **TDC ignition** turn crankshaft 280° counterclockwise.

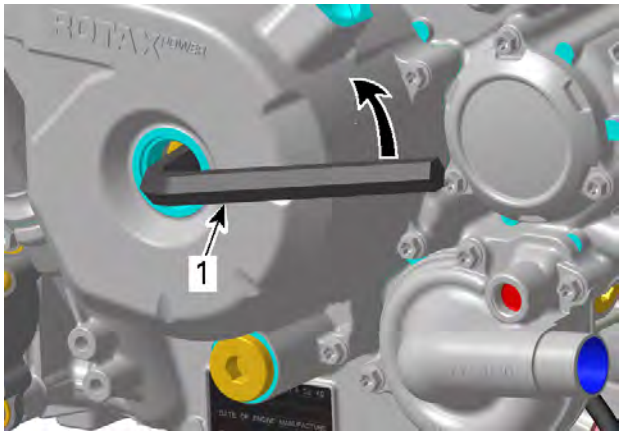

TURN CRANKSHAFT 280° COUNTERCLOCKWISE

1. Allen key 14 mm

1. The front piston is at TDC when it's index mark on the magneto flywheel is aligned with the notch in the magneto cover.

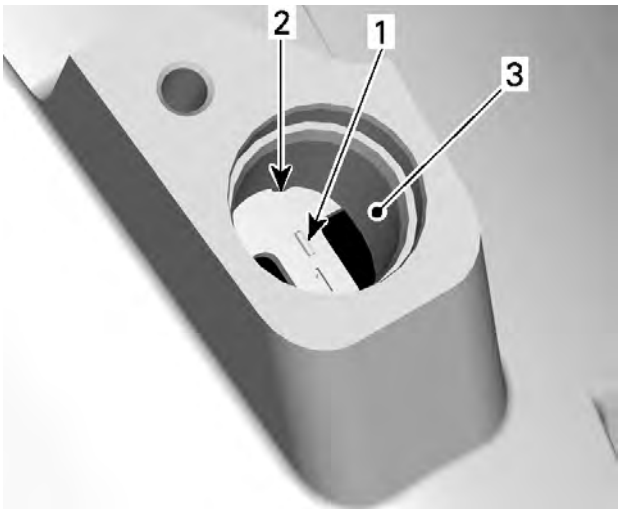

CYLINDER 1 AT TDC IGNITION

i. Mark "1" on magneto flywheel
ii. Notch on magneto cover
iii. Location of crankshaft position sensor

2. Confirm printed marks on the camshaft timing gear are parallel with cylinder head base, in the lowest position.

NOTE: In this position the piston is set to TDC ignition.

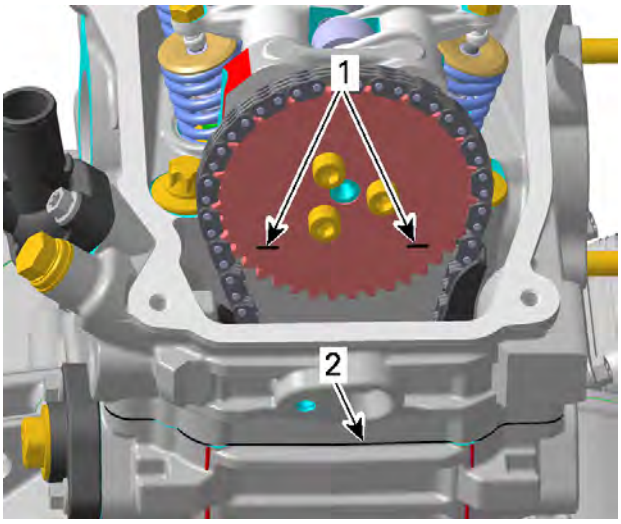

PISTON AT TDC IGNITION

i. Printed marks on camshaft timing gear
ii. Cylinder head base

Crankshaft TDC Position Tool Installation

NOTICE

Never use crankshaft TDC position tool to remove or tighten drive CVT screw or rotor retaining screw. Damage to the teeth of the trigger wheel on the rotor will occur.

1. Install tool in magneto cover CPS bore.

Crankshaft TDC position tool (P/N 529036529)	

2. Make sure to match the teeth on the crankshaft TDC position tool with the magneto rotor.

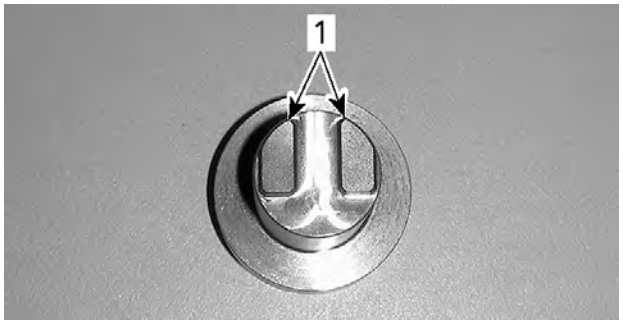

1. Crankshaft TDC position tool teeth (end view)

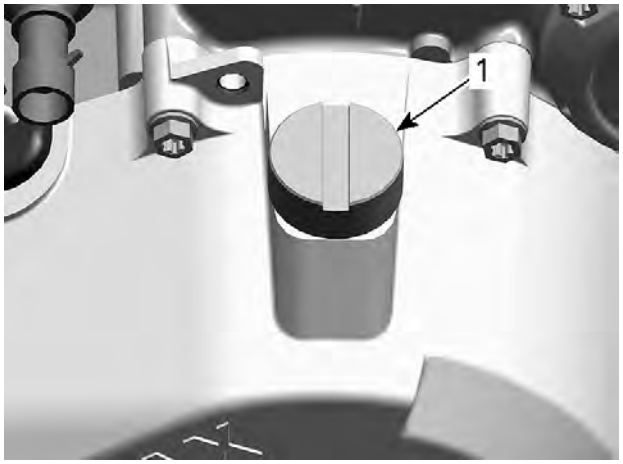

MAGNETO COVER

1. Crankshaft TDC position tool installed in CPS bore

NOTICE

Tool must be fully inserted.

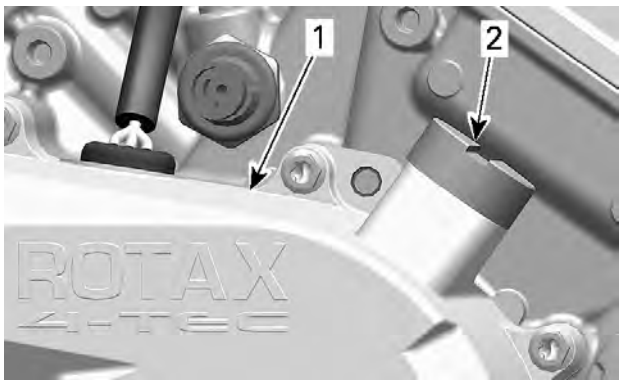

1. Magneto cover
2. TDC position tool

Timing Chain

The engine is equipped with two timing chains.

– MAG side timing chain is located behind the magneto cover.
– PTO side timing chain is located behind the PTO cover.

Removing the Timing Chain (MAG Side)

NOTE: Mark the operating direction of the timing chain and check for excessive radial play before removal. Refer to *Inspecting the Timing Chain*.

1. Remove the rotor and the sprag clutch gear, refer to *Magneto and Starter*.
2. Remove the valve cover, refer to *Cylinder Head*.
3. Remove the camshaft timing gear.
4. Remove timing chain guide (tensioner side) and lower timing chain guide.

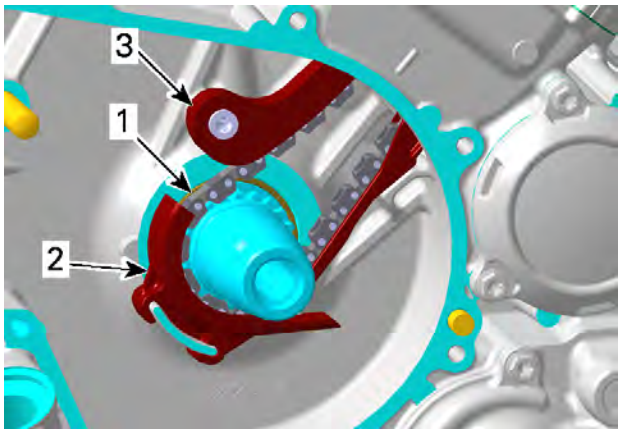

1. Timing chain
2. Lower timing chain guide
3. Timing chain guide (tensioner side)

5. Carefully pull the timing chain downwards and sideways, then out of the crankcase.

Removing the Timing Chain (PTO Side)

NOTE: Mark the operating direction of the timing chain and check for excessive radial play before removal. Refer to *Inspecting the Timing Chain*.

1. Remove the breather gear and the intermediate gear, refer to *Cylinder Block*.
2. Remove the valve cover, refer to *Cylinder Head*.
3. Remove the camshaft timing gear.
4. Remove timing chain guide (tensioner side) and lower timing chain guide.

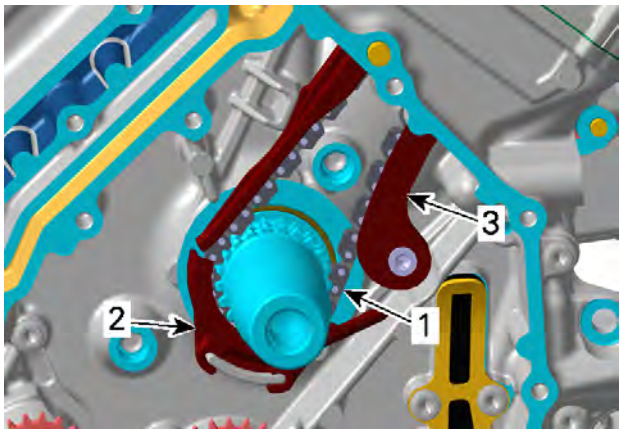

1. Timing chain
2. Lower timing chain guide
3. Timing chain guide (tensioner side)

5. Carefully pull the timing chain sideward and down from the crankcase.

Inspecting the Timing Chain

1. Inspection is the same for both timing chains.
2. Check timing chain on camshaft timing gear for excessive radial play.

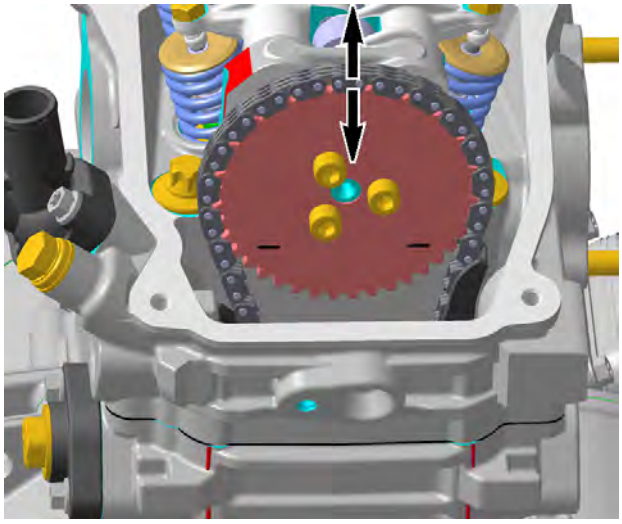

3. Check chain condition for wear and teeth condition.

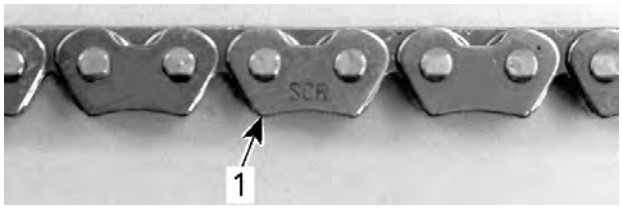

1. Timing chain

4. If chain is excessively worn or damaged, replace it as a set (camshaft timing gear and timing chain).

5. Check timing chain guides for wear, cracks or deforming. Replace as required.
6. Check also the timing chain guide (tensioner side).
7. Check if crankshaft timing gears are excessively worn or damaged. Replace if necessary.

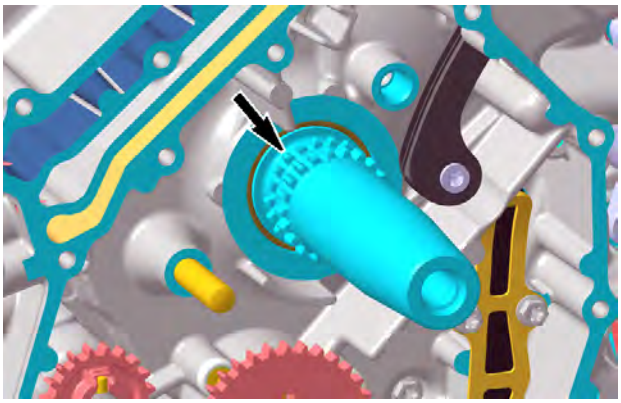

Installing the Timing Chain

The installation is essentially the reverse of the removal procedure, but pay attention to the following details.

NOTE: Installation is the same for both timing chains.

1. Install the lower timing chain guide in the right position.

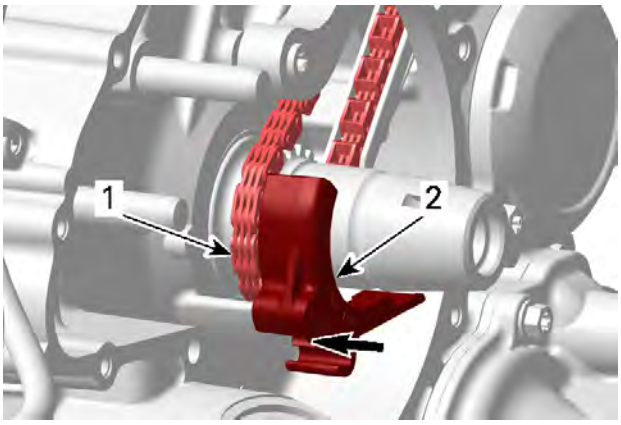

1. Timing chain
2. Lower timing chain guide

2. The higher lip must show to the cover site.
3. Install timing chain with camshaft timing gear.
4. Ensure to carry out proper valve timing, refer to *Camshaft Timing Gears*.

NOTICE
Improper valve timing will damage engine components.

Timing Chain Guide (Tensioner Side)

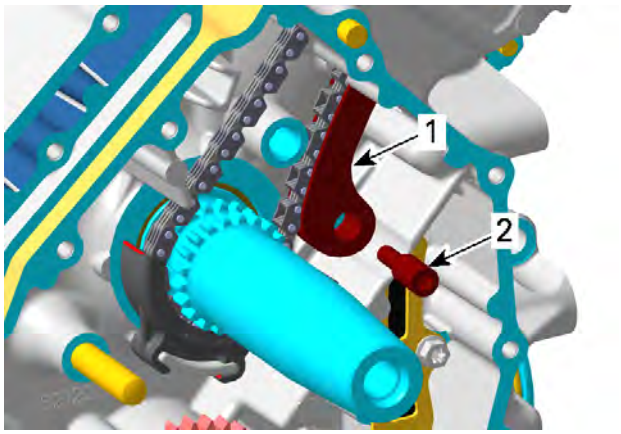

1. Timing chain guide (tensioner side)
2. Bearing screw

Removing the Timing Chain Guide (Tensioner Side)

1. Refer to *Timing Chain*.

Inspecting the Timing Chain Guide (Tensioner Side)

1. Check timing chain guide for wear, cracks or deforming. Replace if necessary.

Installing the Timing Chain Guide (Tensioner Side)

The installation is the reverse of the removal procedure.

1. Apply a drop of threadlocker on threads of the timing chain guide bearing screw.

Loctite 243 (blue)

2. Tighten the timing chain guide bearing screw to specification.

Tightening Torque	
Timing chain guide bearing screw	10 ± 1 Nm (89 ± 9 lbf-in)

Cylinder Head

SERVICE TOOLS

Description	Part Number	Page
CRANKSHAFT LOCKING BOLT	(P/N 529035617)	76
ENGINE LEAK DOWN TEST KIT	(P/N 529035661)	62
PISTON CIRCLIP INSTALLER	(P/N 529036153)	79
PISTON RING COMPRESSOR	(P/N 529035919)	76
TDC DIAL INDICATOR	(P/N 414104700)	62
VALVE GUIDE INSTALLER	(P/N 529036140)	74
VALVE GUIDE REMOVER 5 MM	(P/N 529035924)	74
VALVE SPRING COMPRESSOR CUP	(P/N 529035764)	70
VALVE SPRING COMPRESSOR	(P/N 529035724)	70

SERVICE PRODUCTS

Description	Part Number	Page
LOCTITE 767 (ANTI-SEIZE LUBRICANT)		74

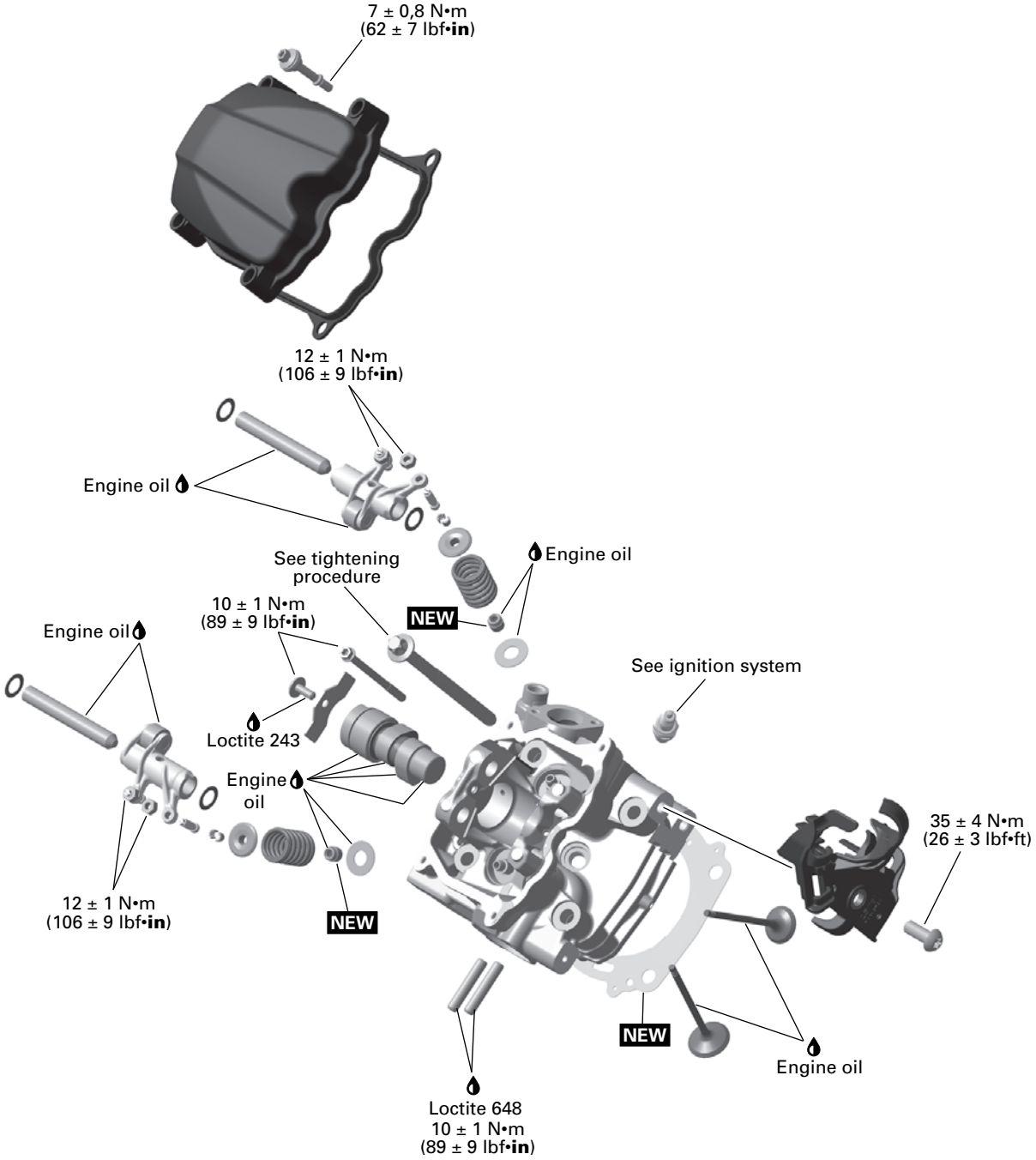

NEW = Component must be replaced when removed.

CYLINDER HEAD NO. 1

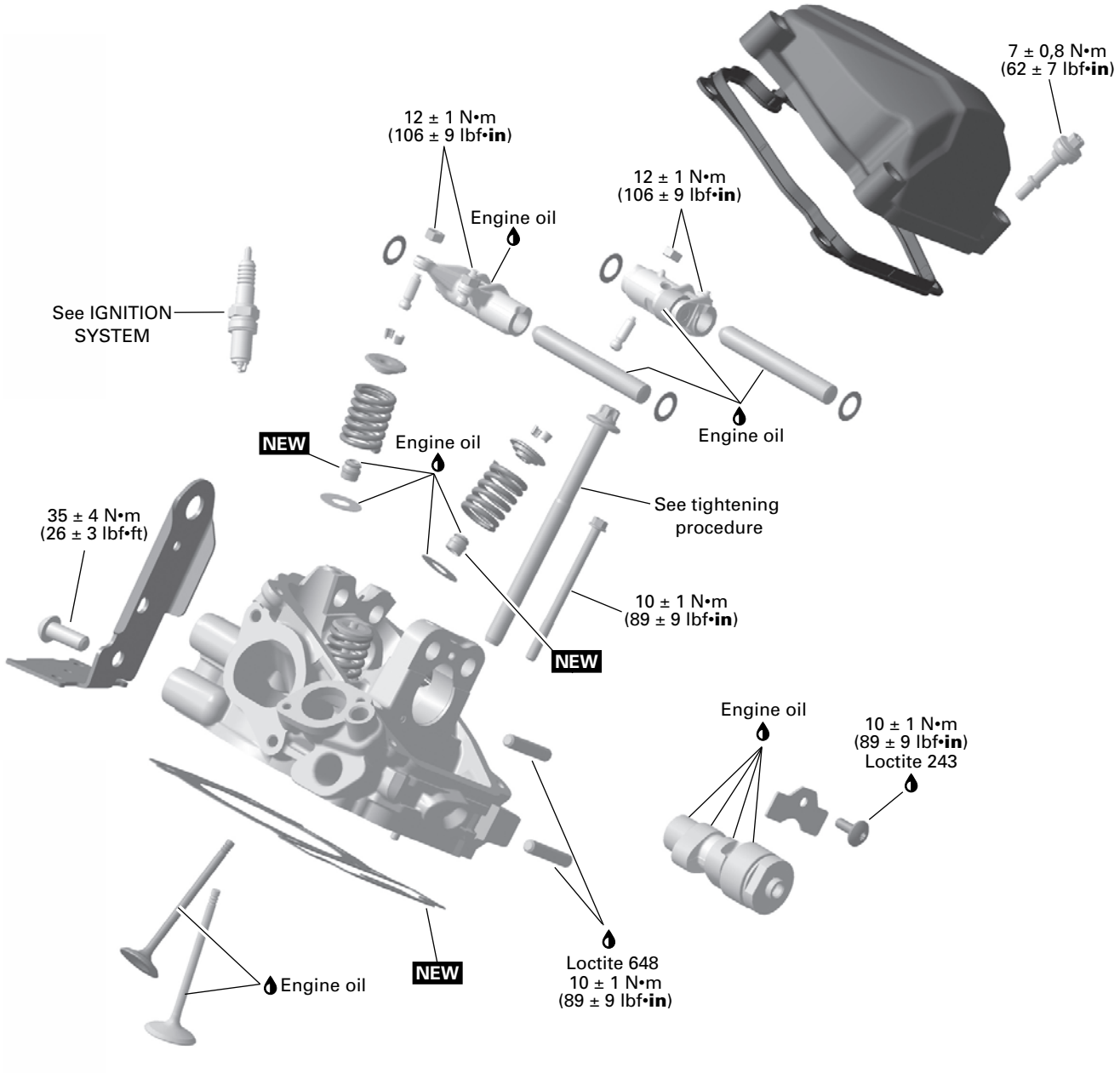

NEW = Component must be replaced when removed.

CYLINDER HEAD NO. 2

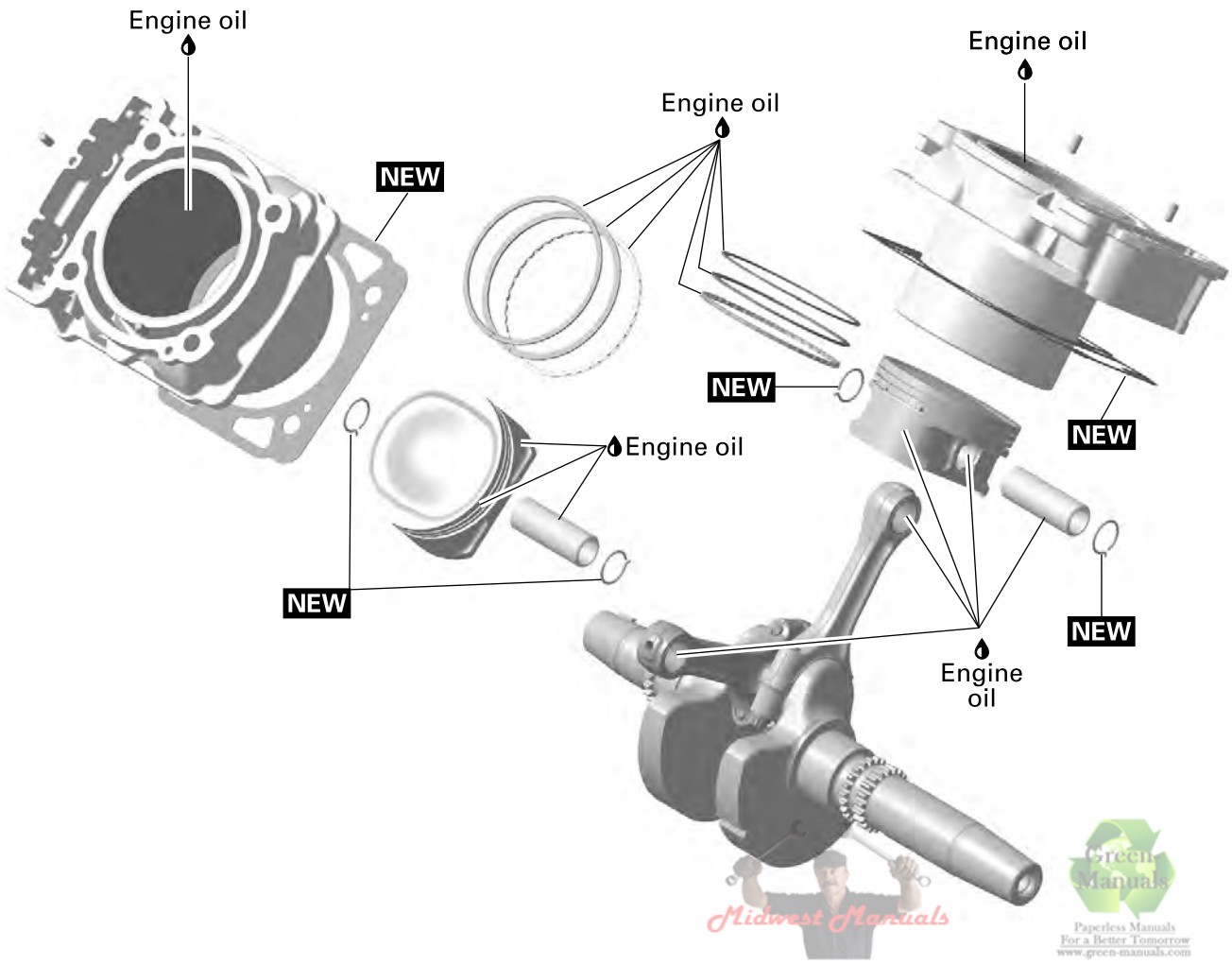

If you bought this manual from any other seller please leave them
NEGATIVE feeddback and notify me at bestshopmanuals@gmail.com

CYLINDERS AND PISTONS

General

Special reference are made in the text for procedures which are different for cylinder no. 1 and cylinder no. 2.

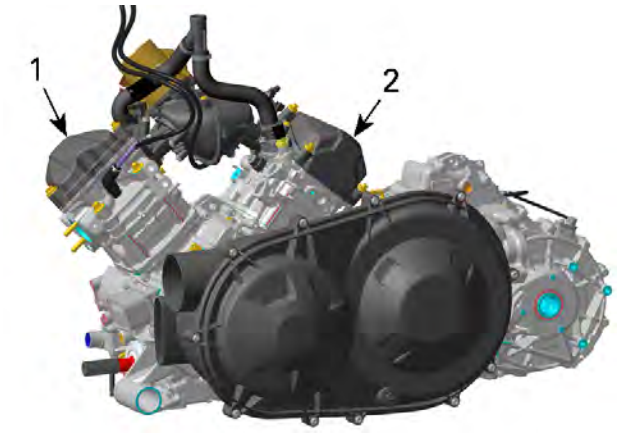

1. Cylinder 1 (front)
2. Cylinder 2 (rear)

When diagnosing an engine problem, always perform a cylinder leak test.

NOTE: Even though the following procedures do not require the engine removal, many illustrations show the engine out of the vehicle for more clarity.

IMPORTANT: Note position of parts on disassembly. This may help to find the root cause of a problem. A component that is not replaced should be reinstalled in the same position as originally mounted.

Inspection

Leak Test

1. Before performing the cylinder leak test, verify the following:
   - Clamp(s) tightness
   - Radiator and hoses.

NOTE: For best accuracy, the leak test should be done with the engine at normal operating temperature.

⚠ CAUTION
Prevent burning yourself on hot engine parts.

Preparation

1. Disconnect battery.

NOTICE
Always respect this order for disassembly; disconnect BLACK (-) cable first.

2. Remove radiator cap.

⚠ WARNING
To burn, wait until engine cools down.

3. Pull of corrugated tube from the conductor holder.

NOTICE
Corrugated tube can not be removed from ignition cables.

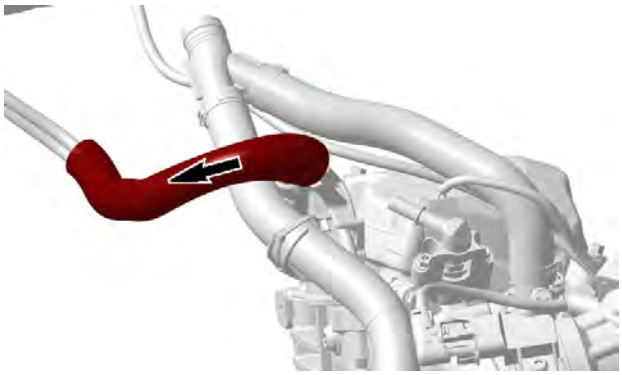

4. Unplug spark plug connector.
5. Clean spark plug area and remove spark plug from cylinder head.

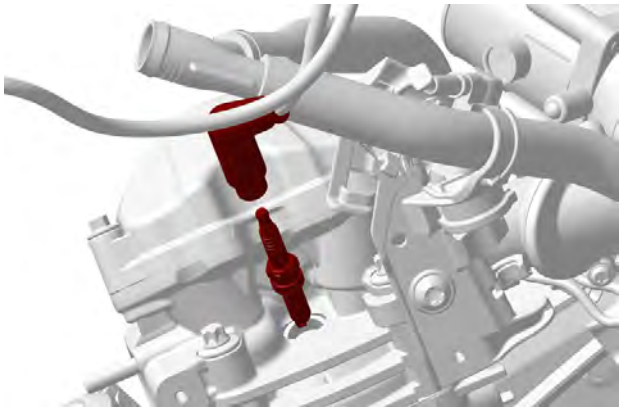

6. Remove screw retaining the conductor holder.

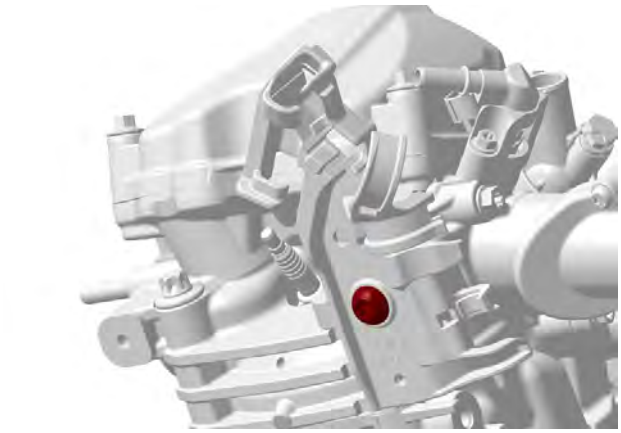

7. Move conductor holder with ignition cables aside.
8. Remove valve cover.

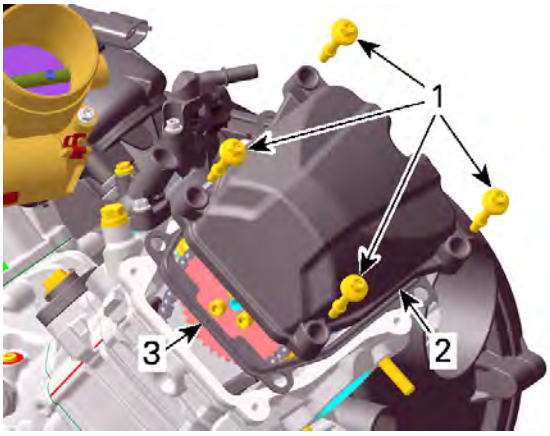

1. *Valve cover screws*
2. *Valve cover*
3. *Gasket*

9. Rotate crankshaft until piston is at ignition TDC.
10. To turn crankshaft, there are two possible procedures.

First Procedure

1. Turn the drive pulley.

Second Procedure

1. Remove plug screw with O-ring from magneto cover.
2. Use a 14 mm Allen key and turn crankshaft.

TDC dial indicator (P/N 414104700)	

NOTICE
Turn only clockwise to avoid loosening of magneto flywheel Allen screw.

Set the piston to precisely ignition TDC.

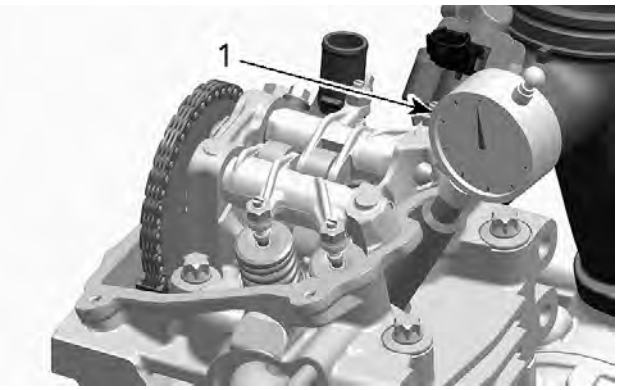

1. *Dial gauge*

NOTE: If a dial gauge is not available, use a screwdriver or another similarly suitable tool.

NOTICE
Do not scratch or damage piston/ cylinder surface.

NOTE: At ignition TDC the marks on the camshaft timing gear have to be parallel to cylinder head base as per following illustration.

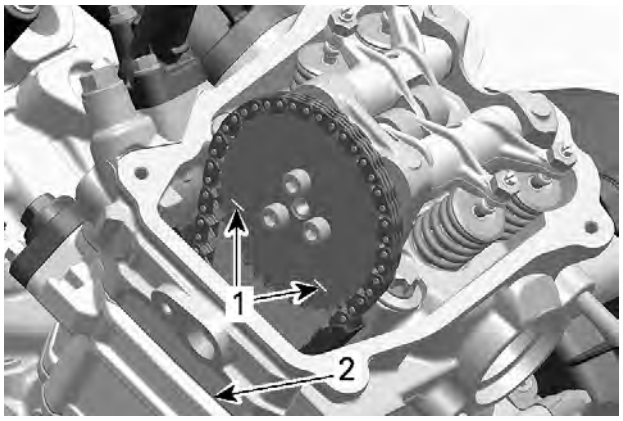

1. *Marks on camshaft timing gear*
2. *Cylinder head base*

Leak Test

1. Connect leak tester to adequate air supply.

Engine leak down test kit (P/N 529035661)	

2. Set needle of measuring gauge to zero.

NOTE: All testers have specific instructions on gauge operation and required pressure.

3. Install gauge adapter into previously cleaned spark plug hole.
4. Supply combustion chamber with air pressure.

TYPICAL
1. Leak tester
2. Air supply hose

5. Note the amount or percentage of leakage (depending on tester).

Leakage Percentage	Engine Condition
0% to 15%	Excellent condition
16% to 25%	Good condition
26% to 40%	Fair condition; reduced engine performance
41% and higher	Poor condition, diagnose and repair engine

NOTE: To make sure there is no false reading due to a valves not perfectly seated, tap each valve adjustment screw (on the rocker) using a soft hammer.

Diagnosis

1. Listen for air leaks.
   - Air escaping in intake port/throttle body means leaking intake valve(s).
   - Air escaping in exhaust port means leaking exhaust valve(s).
   - Air bubbles in the coolant (radiator) means leaking cylinder head gasket.
   - Air/coolant escaping from cylinder/head means damaged gasket(s) and/or loosened screws.
   - Air escaping into crankcase area means excessively worn cylinder and/or broken piston rings.
   - Air/oil escaping from crankcase means damaged gasket and/or loosened screws (refer to *bottom end* subsection).
2. For all the checkpoints mentioned above, see the appropriate engine section to diagnose and repair the engine.

Assembly

1. Reverse the preparation procedure. Ensure to respect torque values and use of appropriate products or lubricants.
2. Ensure proper routing of the ignition cables.

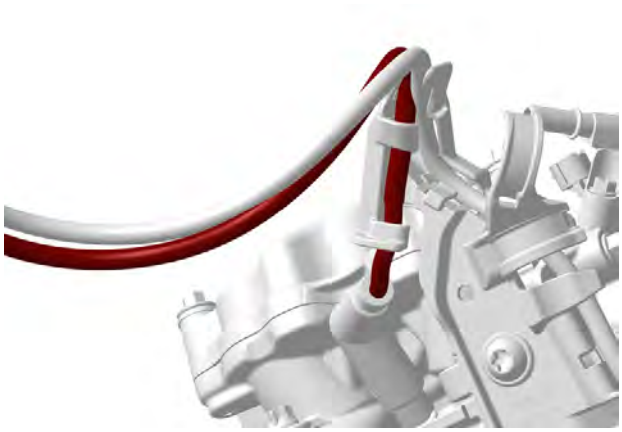

CYLINDER 1 (FRONT)

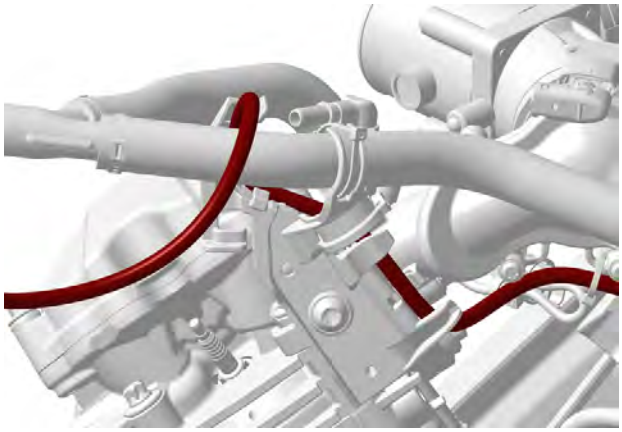

CYLINDER 2 (REAR)

3. Tighten conductor holder screw to specification.

Tightening Torque	
Conductor holder screw	35 ± 4 Nm (26 ± 3 lbf-ft)

Procedures

Valve Cover

Removing the Valve Cover

1. Remove:
   - Valve cover screws
   - Valve cover
   - Gasket.

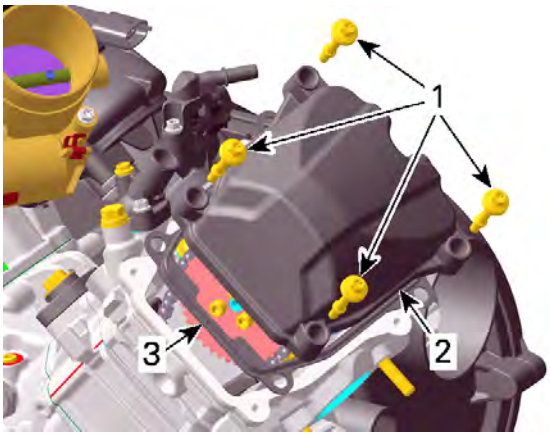

1. *Valve cover screws*
2. *Valve cover*
3. *Gasket*

2. Repeat the procedure for the other valve cover if required.

Inspecting the Valve Cover

1. Check the gasket on the valve cover if it is brittle, cracked or hard. If so, replace the gasket.

Installing the Valve Cover

The installation is the reverse of the removal procedure.

1. Tighten valve cover retaining screws to specification in a criss-cross sequence.

Tightening Torque	
Valve cover screws	7 ± 0.8 Nm (62 ± 7 lbf-in)

Rocker Arm

Removing the Rocker Arm

1. Remove the valve cover.
2. Remove the camshaft timing gear, refer to *Timing Chain*.
3. Remove pan head screw and camshaft retaining plate.

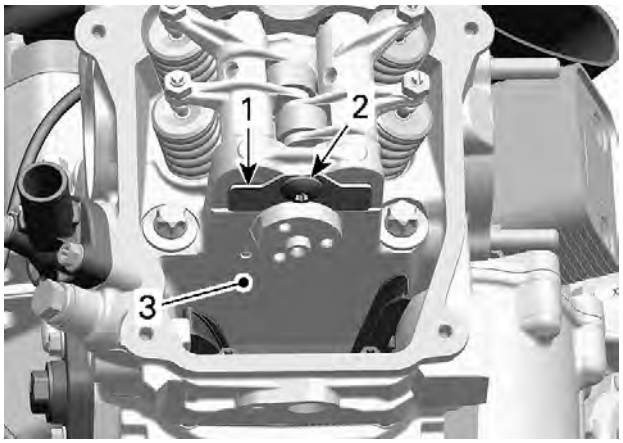

1. *Camshaft retaining plate*
2. *Pan head screw*
3. *Cylinder head*

4. Remove rocker arm shafts.

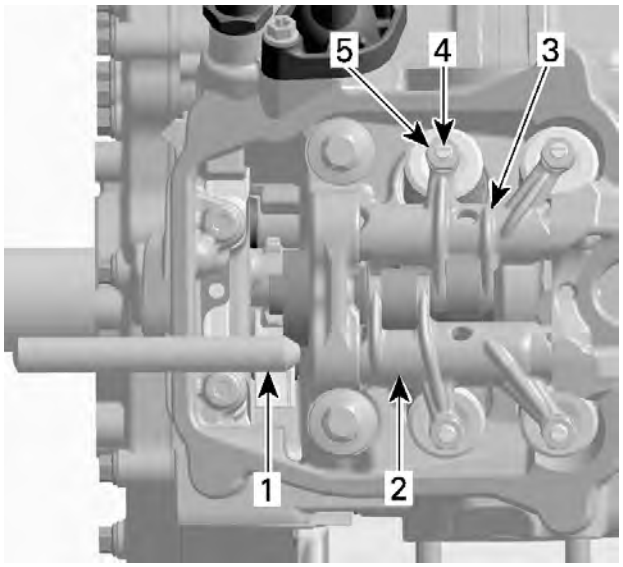

1. *Rocker arm shaft*
2. *Rocker arm (exhaust side)*
3. *Rocker arm (intake side)*
4. *Adjustment screw*
5. *Lock nut*

5. Remove rocker arm assembly (exhaust side and intake side) with adjustment screws and lock nuts.
6. Remove thrust washers.

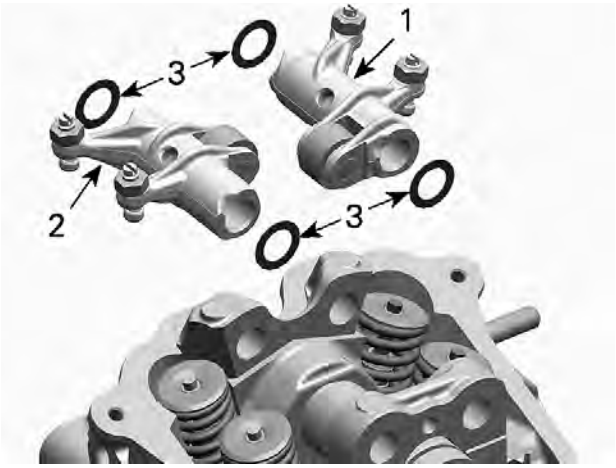

1. *Rocker arm (exhaust side)*
2. *Rocker arm (intake side)*
3. *Thrust washers*

NOTICE

Pay attention not to lose thrust washers or drop them into the timing chain compartment.

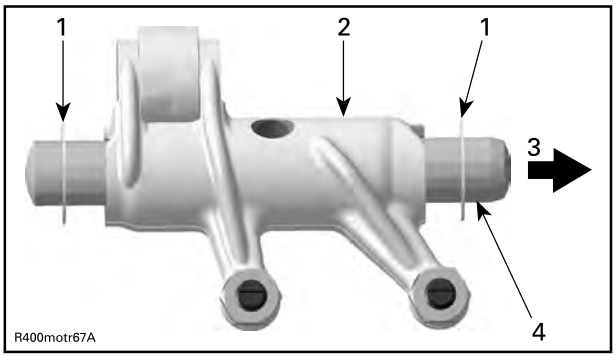

1. *2 thrust washers*
2. *Rocker arm (exhaust side)*
3. *Cylinder head (spark plug side)*
4. *Big taper to spark plug side*

Inspecting the Rocker Arm

1. Inspect each rocker arm for cracks and scored friction surfaces. If so, replace rocker arm assembly.
2. Check the rocker arm rollers for free movement, wear and excessive radial play. Replace rocker arm assembly if necessary.

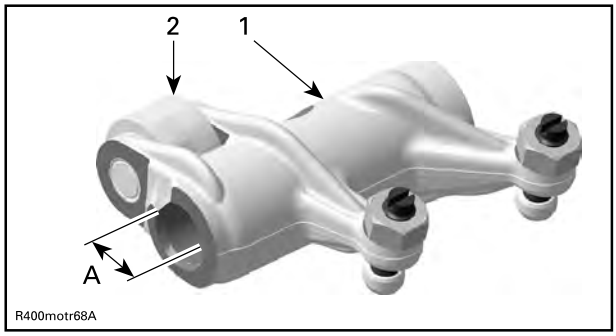

1. *Rocker arm (exhaust side)*
2. *Roller*

A. *Bore for rocker arm shaft*

3. Measure rocker arm bore diameter. If diameter is out of specification, change the rocker arm assembly.

Rocker Arm Bore Diameter	
New	12.036 to 12.050 mm (.4739 to .4744 in)
Service limit	12.060 mm (.4748 in)

4. Check adjustment screws for free movement, cracks and/or excessive play.

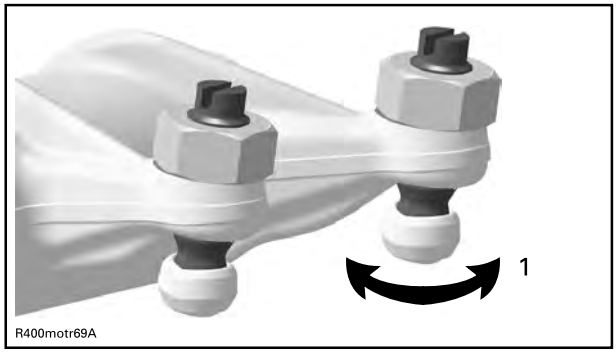

1. *Free movement of adjustment screw top*

Rocker Arm Shaft Inspection

1. Check for scored friction surfaces; if so, replace parts.
2. Measure rocker arm shaft diameter.

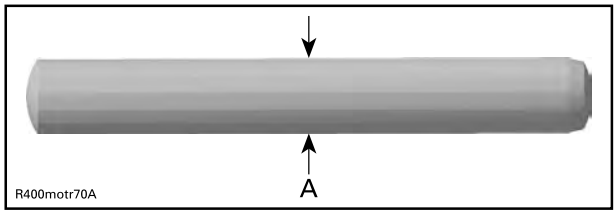

A. *Measure rocker arm shaft diameter here*

Rocker Arm Shaft Diameter	
New	12.000 to 12.018 mm (.4724 to .4731 in)
Service limit	11.990 mm (.472 in)

3. Any area worn excessively will require parts replacement.

Installing the Rocker Arm

Use the same procedure for exhaust and intake rocker arm.

1. Apply engine oil on rocker arm shaft.
2. Insert a rocker arm shaft with the chamfered edge first through rocker arm pin bore.
3. Install a thrust washer at timing chain side, then the proper rocker arm (exhaust side or intake side).
4. Push in rocker arm shaft until its chamfer reaches the end of rocker arm bore.

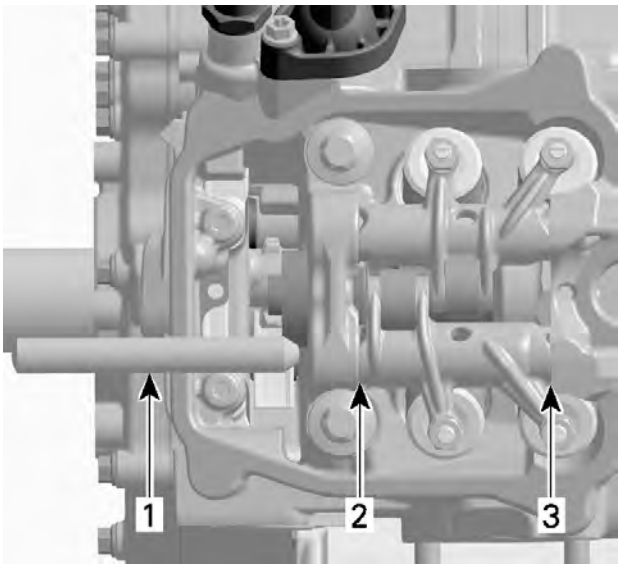

1. Rocker arm shaft
2. Thrust washer (timing chain side)
3. Thrust washer (spark plug side)

5. Place the other thrust washer and push rocker arm shaft to end position.
6. Install the camshaft retaining plate.
7. Adjust valve clearance.

Camshaft

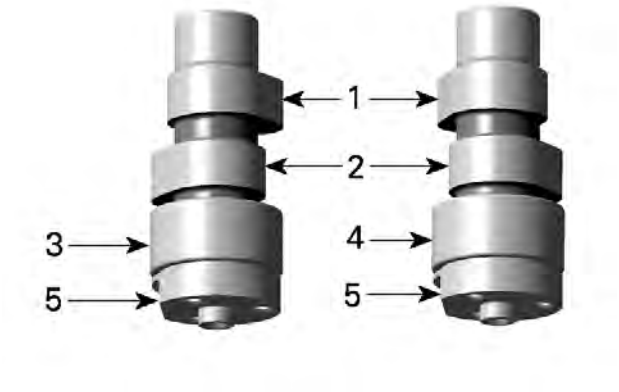

1. Intake cam
2. Exhaust cam
3. Camshaft of cylinder 1
4. Camshaft of cylinder 2
5. Flat spot

NOTICE

The engine is equipped with two different camshafts.

Removing the Camshaft

The removal procedure is the same for both camshafts.

NOTICE

Each camshaft is different in design. Thus, it is important not to mix up any parts of the camshaft assembly with that of the other cylinder. Keep parts as a group.

1. Remove valve cover.
2. Remove the camshaft timing gear, refer to *Timing Chain*.
3. Remove the camshaft retaining plate.

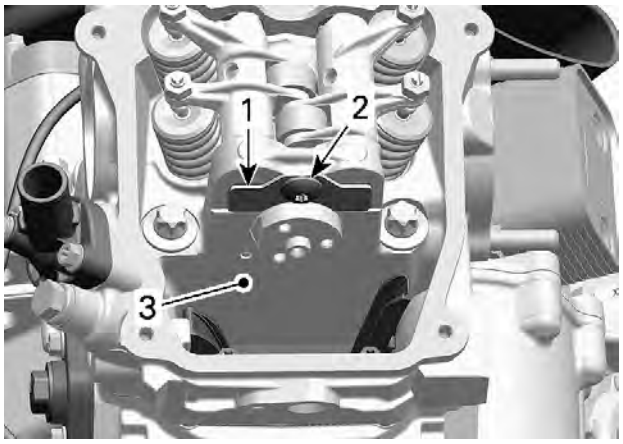

1. Camshaft retaining plate
2. Pan head screw
3. Cylinder head

4. Remove rocker arms.
5. Remove the camshaft by rotating it so that intake/exhaust lobe shows to upper side of cylinder head.

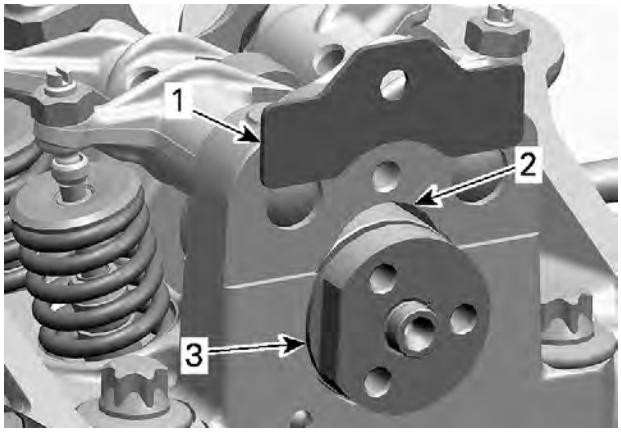

1. Camshaft retaining plate
2. Area for camshaft lobes
3. Camshaft

Inspecting the Camshaft

Inspecting the Camshaft Lobe

1. Check each lobe for scoring, scuffing, cracks or other signs of wear.
2. Measure camshaft lobe height using a micrometer.

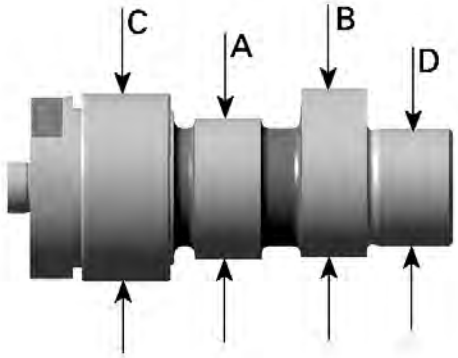

A. Camshaft lobe (exhaust valves)
B. Camshaft lobe (intake valves)
C. Camshaft journal (timing chain side)
D. Camshaft journal (spark plug side)

Camshaft Lobe (EXHAUST)	
New	32.950 to 33.150 mm (1.2972 to 1.3051 in)
Service limit	32.930 mm (1.2965 in)

Camshaft Lobe (intake)	
New	32.960 to 33.160 mm (1.298 to 1.306 in)
Service limit	32.940 mm (1.297 in)

Measure camshaft bearing in cylinder head, refer to *Inspecting the Cylinder Head*.

Inspecting the Camshaft Journal

1. Check each journal for scoring, scuffing, cracks or other signs of wear.
2. Measure camshaft journal using a micrometer.

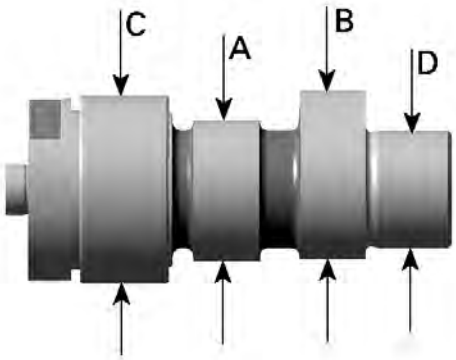

A. Camshaft lobe (exhaust valves)
B. Camshaft lobe (intake valves)
C. Camshaft journal (timing chain side)
D. Camshaft journal (spark plug side)

Camshaft Journal (Timing Chain Side)	
New	34.959 to 34.975 mm (1.3763 to 1.377 in)
Service limit	34.950 mm (1.376 in)

Camshaft Journal (Spark Plug Side)	
New	21.959 to 21.980 mm (.8645 to .8654 in)
Service limit	21.950 mm (.8642 in)

Installing the Camshaft

The installation is the reverse of the removal procedure. Pay attention to the following details.

NOTICE

The camshafts are not identical in design. Do not invert the camshafts during assembly. Any mix-up of the components will lead to engine damage.

1. Install the camshaft.
2. Place the camshaft retaining plate in the slot of the camshaft.

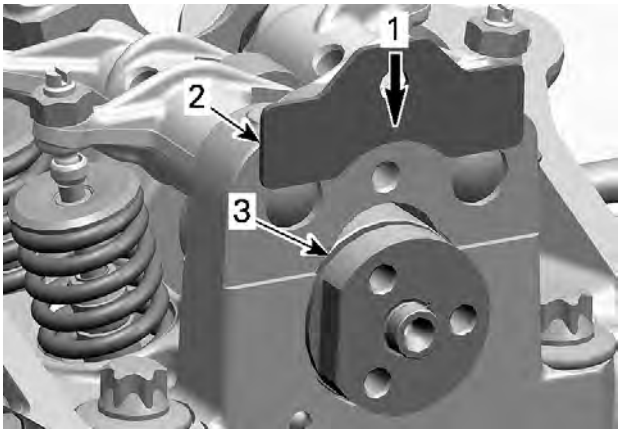

1. Direction of movement
2. Camshaft retaining plate
3. Slot retaining camshaft

3. For other parts, refer to proper installation procedure.

Cylinder Head

Removing the Cylinder Head

1. If engine is still in the vehicle, drain coolant system.
2. Disconnect the spark plug wire.
3. Disconnect the CTS connector, located at rear cylinder head.
4. Remove the valve cover and its gasket.
5. Remove the camshaft timing gear, refer to *Timing Chain*.
6. First remove the M6 cylinder head screws, then the M10 cylinder head screws.

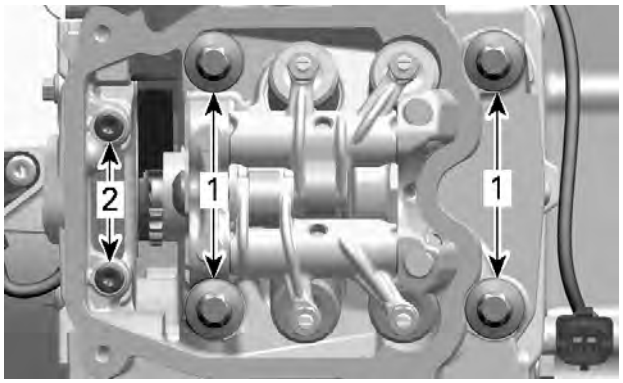

1. Cylinder head screws M10
2. Cylinder head screws M6

7. Before removing cylinder head, blow out remaining coolant by air pressure. During cylinder head removal, the remaining coolant in cylinder head could overflow into the engine and a little quantity of coolant could drop into the engine. In this case, the engine oil will be contaminated.
8. Pull up cylinder head.
9. Remove timing chain guide (fixed).
10. Remove and discard the cylinder head gasket.

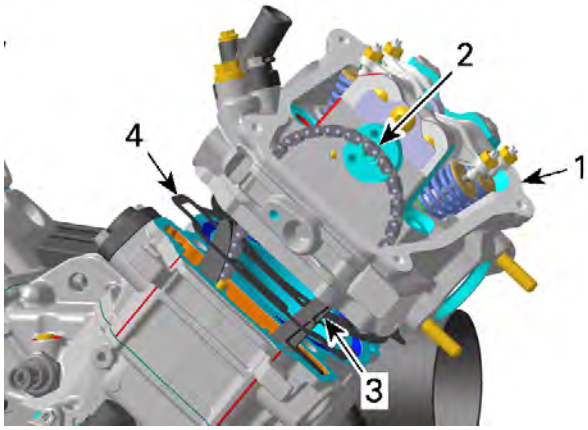

1. Cylinder head
2. Timing chain
3. Chain guide (fixed)
4. Cylinder head gasket

Inspecting the Cylinder Head

1. Inspect timing chain guide (fixed) for wear, cracks or other damages. Replace if necessary.
2. Check for cracks between valve seats, if so, replace cylinder head.
3. Check mating surface between cylinder and cylinder head for contamination. If so, clean both surfaces.
4. Clean oil support through the cylinder head from contamination.

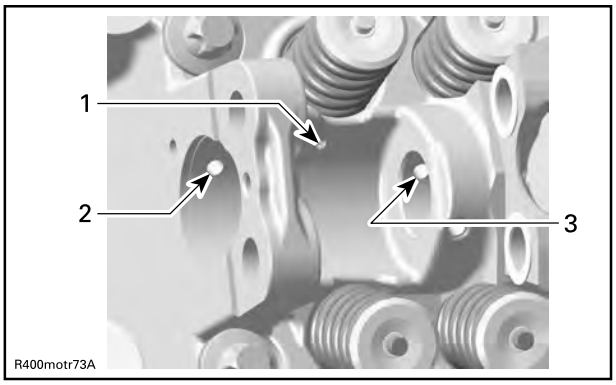

1. Oil port to lubricate camshaft lobes intake/exhaust
2. Oil supply to camshaft bearing journal (timing chain side)
3. Oil supply to camshaft bearing journal (spark plug side)

Inspecting the Cylinder Head Camshaft Bearing

1. Measure camshaft bearing in cylinder head.

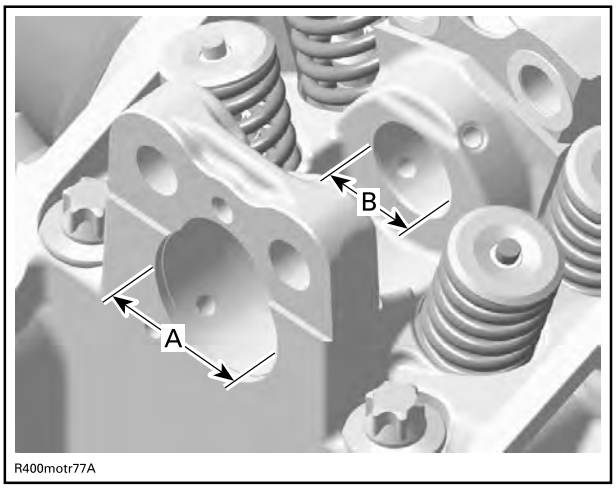

A. Camshaft bearing (timing chain side)
B. Camshaft bearing (spark plug side)

Camshaft Bearing (Timing Chain Side)	
New	35.000 to 35.025 mm (1.378 to 1.3789 in)
Service limit	35.040 mm (1.3795 in)

Camshaft Bearing (Spark Plug Side)	
New	22.000 to 22.021 mm (.8661 to .867 in)
Service limit	22.040 mm (.8677 in)

Installing the Cylinder Head

The installation is the reverse of the removal procedure. Pay attention to the following details.

1. Ensure dowel pins are in place.
2. Install timing chain guide.

NOTICE

Timing chain guide (fixed) has to be fixed between cylinder and cylinder head.

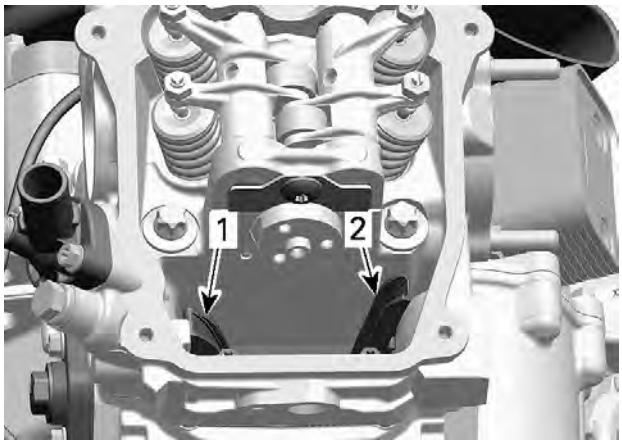

TYPICAL
1. Timing chain guide (tensioner side) mounted in crankcase
2. Timing chain guide (fixed) between cylinder and cylinder head

3. Install a NEW cylinder head gasket.
4. Install cylinder head screws in correct position.

NOTICE

Cylinder head screws have different sizes and lengths.

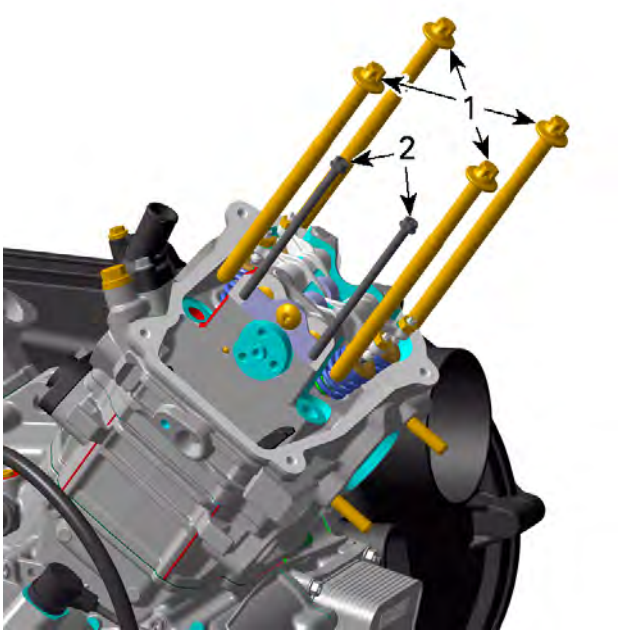

1. *Location no. 1*
2. *Location no. 2*

Cylinder Head Screw Identification	
Location no. 1	M10 x 159
Location no. 2	M6 x 105

5. Tighten M10 cylinder head screws FIRST as per following specifications.

NOTE: Always perform one step on all M10 cylinder head screws before going to the next step.

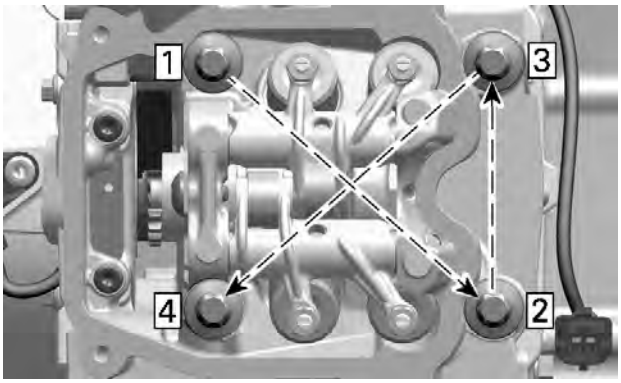

TIGHTENING SEQUENCE - M10 CYLINDER HEAD SCREWS

Tightening Torque		
M10 Cylinder head screws	Step A	20 ± 1 Nm (15 ± 1 lbf-ft)
	Step B	180° +/- 5°

6. Tighten M6 cylinder head screws as per following specification.

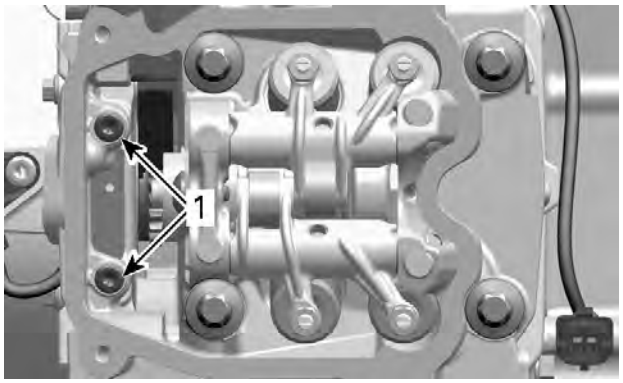

1. *M6 Screws*

Tightening Torque	
M6 Cylinder head screws	10 ± 1 Nm (89 ± 9 lbf-in)

7. Check timing chain guide (tensioner side) for movement.
8. On cylinder 1, install the plenum bracket, refer to *Intake Manifold*.

Valve Springs

Removing the Valve Spring

1. Remove the cylinder head.
2. Compress valve spring.

Valve spring compressor (P/N 529035724)	
Valve spring compressor cup (P/N 529035764)	

⚠ CAUTION
Be careful when unlocking valves. Components could fly away because of the strong spring preload.

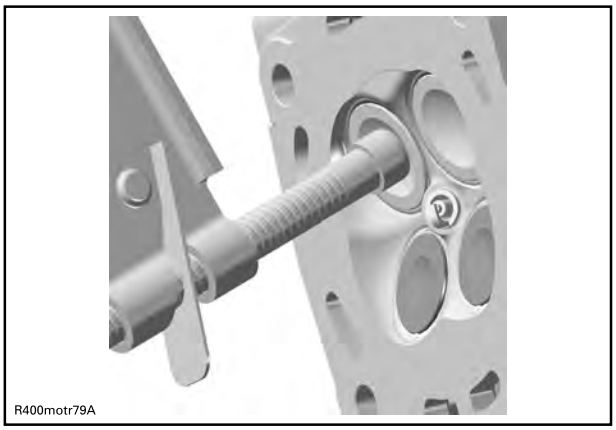

LOCATE VALVE SPRING COMPRESSOR CLAMP IN CENTER OF THE VALVE

3. Remove valve cotters.

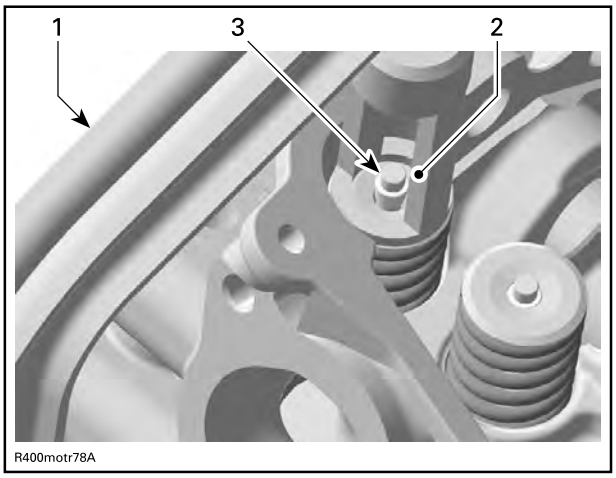

1. Valve spring compressor clamp
2. Valve spring compressor cup
3. Valve cotter

4. Remove tools and withdraw valve spring retainer and valve spring.

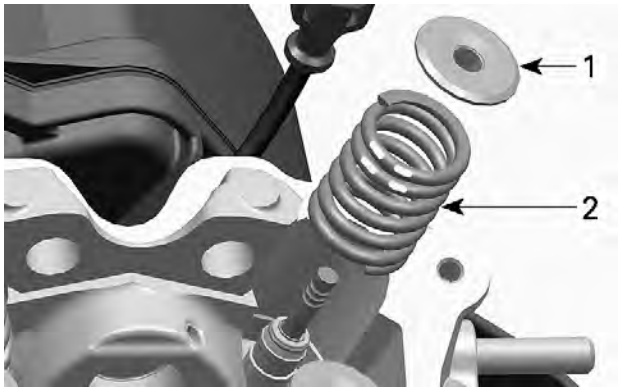

1. Valve spring retainer
2. Valve spring

Inspecting the Valve Spring

1. Check valve spring for visible damage. If so, replace valve spring.
2. Check valve spring for free length and straightness.

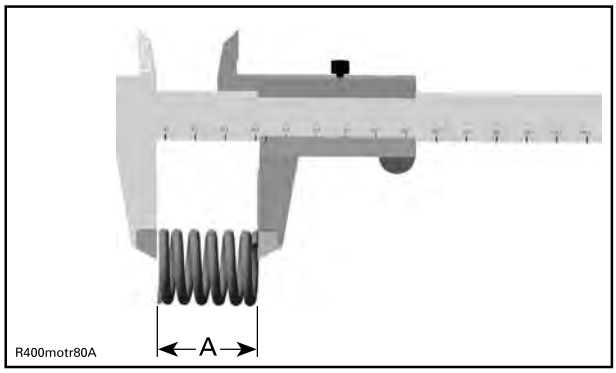

A. Valve spring length

Valve Spring Free Length	
New	40.81 mm (1.607 in)
Service limit	39.00 mm (1.535 in)

3. Replace valve springs if not within specifications.

Installing the Valve Spring

The installation is the reverse of the removal procedure. Pay attention to the following details.

1. Colored area of the valve spring must be placed on top.
2. To ease installation of cotters, apply oil or grease on them so that they remain in place while releasing the spring.

NOTE: Valve cotter must be properly engaged in valve stem grooves.

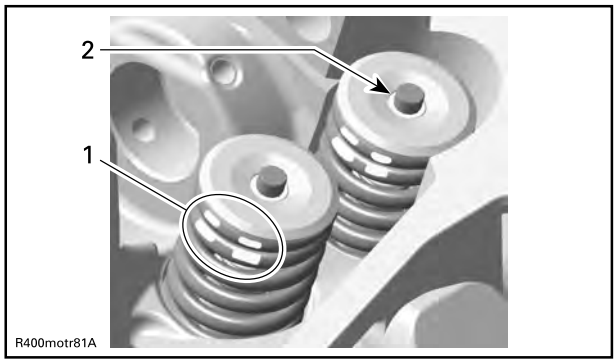

1. Position of the valve spring
2. Valve cotter

3. After spring is installed, ensure it is properly locked by tapping on valve stem end with a soft hammer so that valve opens and closes a few times.

NOTICE

An improperly locked valve spring will cause engine damage.

Valves

Removing the Valve

1. Remove valve spring.
2. Push valve stem, then pull valves (intake and exhaust) out of valve guide.

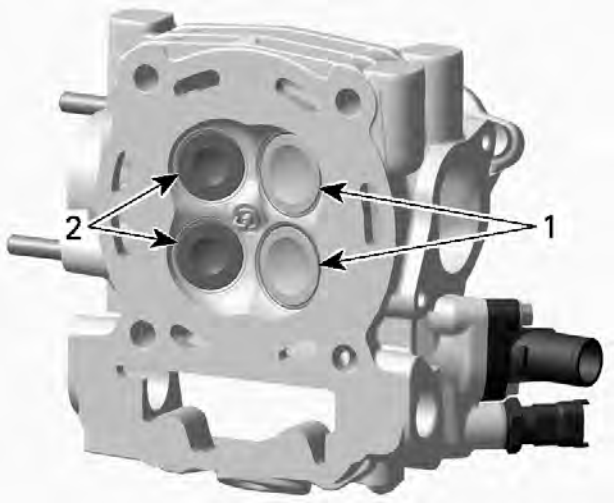

1. Intake valves 31 mm
2. Exhaust valves 27 mm

3. Remove valve stem seal and discard it.

Inspecting the Valve

1. Whenever valves are removed always inspect valve guides, refer to *Valve Guides*.

Valve Stem Seal

1. Always install **NEW** seals whenever valves are removed.

Valve

1. Inspect valve surface, check for abnormal stem wear and bending. If out of specification, replace by a new one.

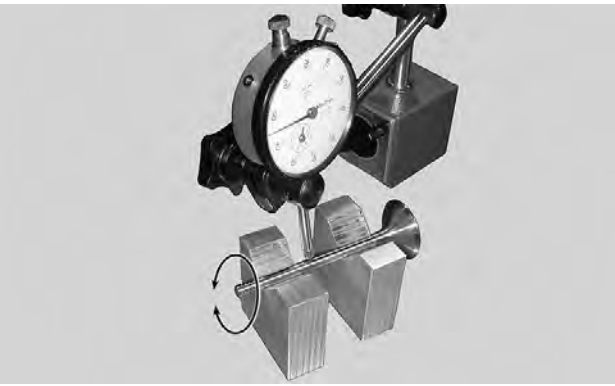

Valve out of round (intake and exhaust valves)	
New	0.005 mm (.0002 in)
Service limit	0.06 mm (.0024 in)

Valve Stem

1. Measure valve stem in three places using a micrometer.
2. Replace valve if valve stem is out of specification or has other damages such as wear or friction surface.

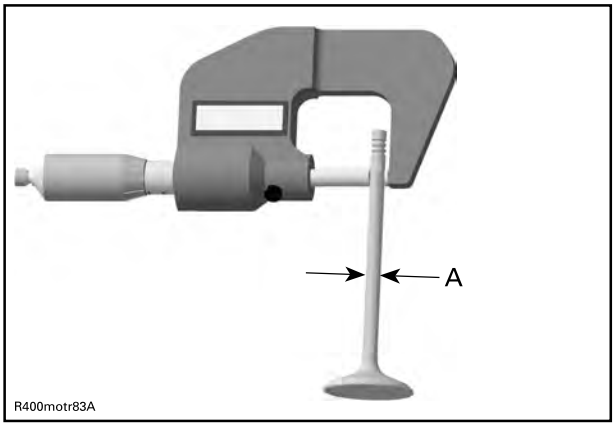

A. Valve stem diameter

Valve Stem Diameter (Exhaust Valve)	
New	4.956 to 4.970 mm (.1951 to .1957 in)
Service limit	4.930 mm (.1941 in)

Valve Stem Diameter (Intake Valve)	
New	4.966 to 4.980 mm (.1955 to .1961 in)
Service limit	4.930 mm (.1941 in)

Valve Face and Seat

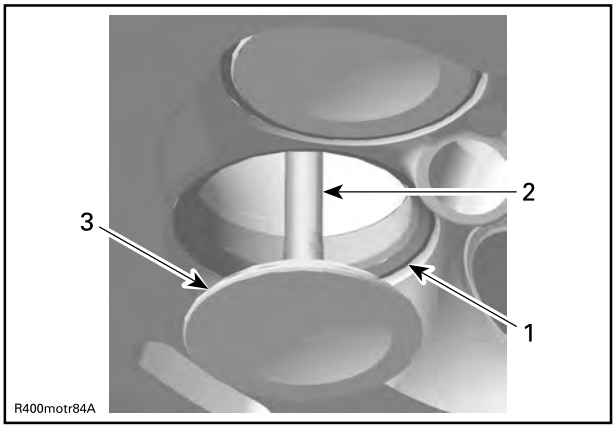

1. Valve seat
2. Exhaust valve contaminated area
3. Valve face (contact surface to valve seat)

1. Check valve face and seat for burning or pittings and replace valve or cylinder head if there are signs of damage.
2. Ensure to seat valves properly. Apply some lapping compound to valve face and work valve on its seat with a lapping tool (see *Valve Guides* in this subsection).
3. Measure valve face contact width.

NOTE: The location of contact area should be in center of valve seat.

4. Measure valve seat width using a caliper.

Valve Seat Contact Width (Exhaust Valve)	
New	1.25 to 1.55 mm (.049 to .061 in)
Service limit	2.00 mm (.079 in)

Valve Seat Contact Width (Intake Valve)	
New	1.05 to 1.35 mm (.041 to .053 in)
Service limit	1.80 mm (.071 in)

5. If valve seat contact width is too wide or has dark spots, replace the cylinder head.

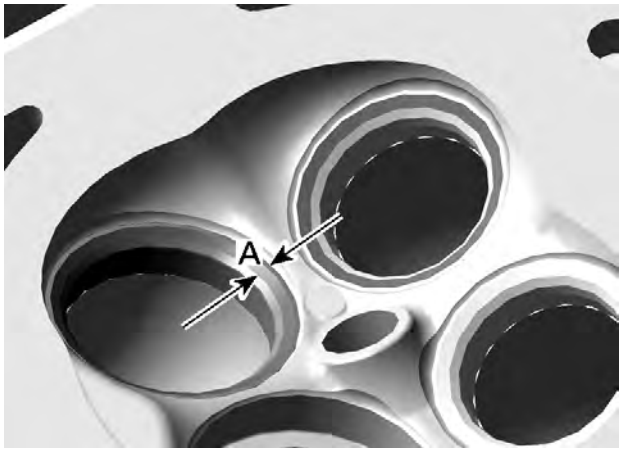

A. Valve face contact width

Installing the Valve

The installation is the reverse of the removal procedure. Pay attention to the following details.

1. Install a NEW valve stem seal. Make sure thrust washer is installed before installing seal.
2. Apply engine oil on valve stem and install it.

NOTICE

Be careful when valve stem is passed through sealing lips of valve stem seal.

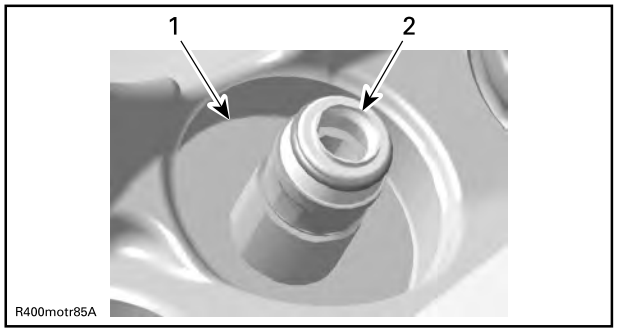

1. Thrust washer
2. Sealing lips of valve stem seal

3. To ease installation of cotters, apply oil or grease on them so that they remain in place while releasing the spring.

4. After spring is installed, ensure it is properly locked by tapping on valve stem end with a soft hammer so that valve opens and closes a few times.

NOTICE

An improperly locked valve spring will cause engine damage.

Valve Guide

Inspecting the Valve Guide

1. Always replace valve stem seals whenever valve guides are removed.
2. Measure valve guide in three places using a small bore gauge.

NOTE: Clean valve guide to remove carbon deposits before measuring.

3. Replace valve guide if it is out of specification or has other damages such as wear or friction surface.

Valve Guide Diameter (Intake and Exhaust Valves)	
New	4.998 to 5.018 mm (.1968 to .1976 in)
Service limit	5.050 mm (.1988 in)

Removing the Valve Guide

1. Remove valves.
2. Clean valve guide area from contamination.
3. Drive the valve guide out of cylinder head.

Valve guide remover 5 mm (P/N 529035924)	

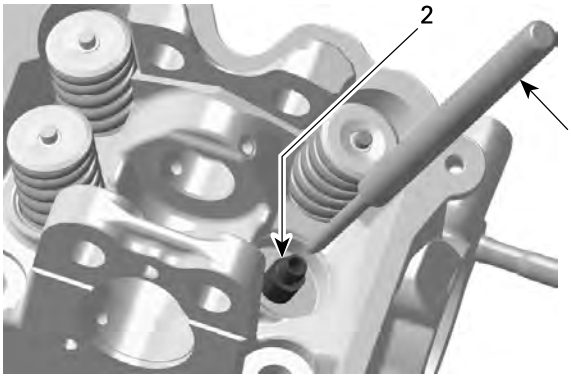

1. Valve guide remover
2. Valve guide

Installing the Valve Guide

The installation is the reverse of the removal procedure. Pay attention to the following details.

1. Clean the valve guide bore before reinstalling the valve guide into cylinder head.
2. Install valve guide.

Valve guide installer (P/N 529036140)	

Loctite 767 (anti-seize lubricant)

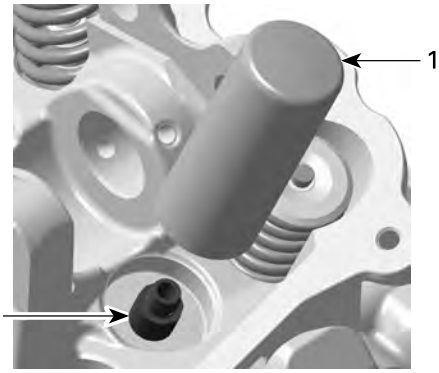

1. Valve guide installer
2. Valve guide

NOTE: Apply an anti-seize lubricant on valve guide prior to install it into the cylinder head.

NOTICE

Push valve guide in the cold cylinder head as per following illustration.

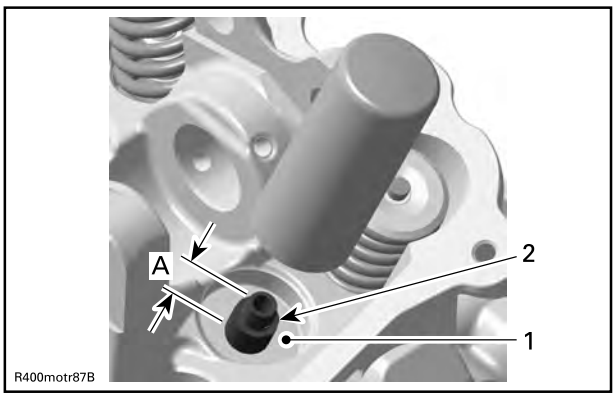

1. Thrust surface of cylinder head
2. Valve guide
A. Measurement from thrust surface to valve guide top

Valve Guide (Measurement "A")	
New	14.00 to 14.40 mm (.5512 to .5669 in)

3. Apply some lapping compound to valve face and work valve on its seat with a lapping tool.

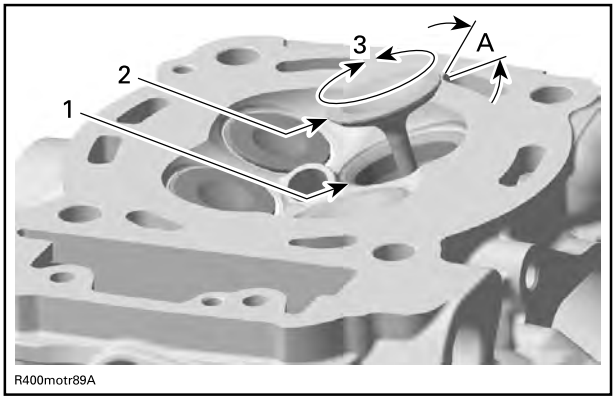

1. Valve seat
2. Valve face (contact surface to valve seat)
3. Turn valve while pushing against cylinder head
A. Valve seat angle 45°

NOTE: Ensure to seat valves properly. Apply marking paste to ease checking contact pattern.

4. Repeat procedure until valve seat/valve face fits together.

Cylinder

Removing the Cylinder

1. Remove the camshaft timing gear, refer to *Timing Chain*.
2. Remove the cylinder head.
3. Pull cylinder.
4. Discard cylinder base gaskets.

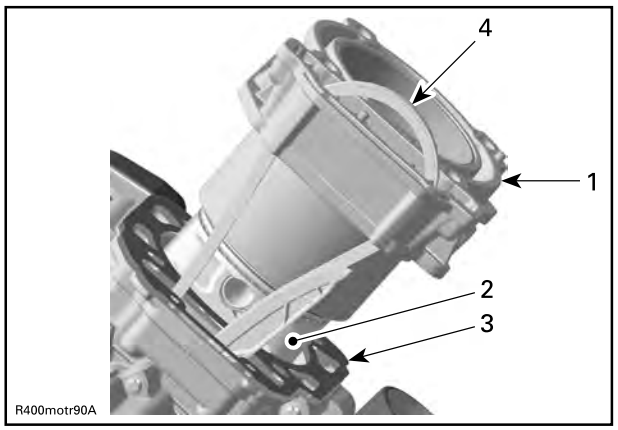

1. Cylinder
2. Piston assembly
3. Cylinder base gasket
4. Camshaft timing chain

Inspecting the Cylinder

1. Check cylinder for cracks, scoring and wear ridges on the top and bottom of the cylinder. If so, replace cylinder.

Cylinder Taper

1. Measure cylinder bore at 3 recommended positions.

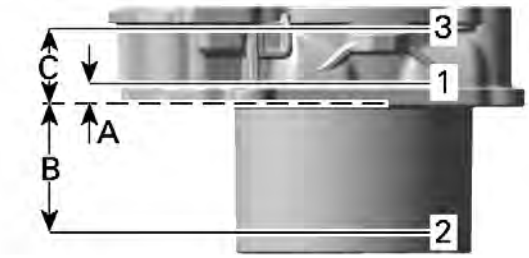

A. First measurement (from cylinder bottom)
B. Second measurement
C. Third measurement

Cylinder Taper Measurement	
A	5 mm (.197 in)
B	53 mm (2.087 in)
C	57 mm (2.244 in)

Cylinder Taper	
New (maximum)	0.038 mm (.0015 in)
Service limit	0.090 mm (.0035 in)

2. Distance between measurements should not exceed the service limit mentioned above. Otherwise, replace cylinder and piston rings.

Cylinder Out of Round

1. Measure cylinder diameter:
   - in piston axis
   - perpendicular to piston pin axis.

NOTE: Use the same measuring points as described in *Cylinder Taper*.

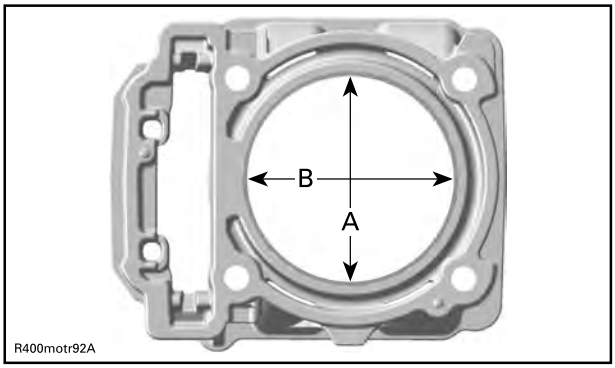

A. Perpendicular to crankshaft axis
B. Parallel to crankshaft axis

Cylinder Out of Round	
New (maximum)	0.015 mm (.0006 in)
Service limit	0.020 mm (.0008 in)

Installing the Cylinder

The installation is the reverse of the removal procedure. Pay attention to the following details.

NOTICE

Always replace cylinder base gasket before installing the cylinder.

NOTE: Make sure piston rings are properly spaced, refer to *Piston rings*.

1. Apply engine oil:
   - In the bottom area of the cylinder bore
   - On the piston rings
   - On the compressor tool.
2. Compress piston rings.

Piston ring compressor (P/N 529035919)	

3. First mount cylinder 2.

NOTE: The cylinder can not be pushed fully over the piston unless the piston is located at TDC.

4. Then remove the crankshaft locking bolt.

Crankshaft locking bolt (P/N 529035617)	

5. Crank the engine further and position piston 1 at TDC.
6. Mount cylinder 1.
7. Put timing chain through the chain pit then put the cylinder in place.

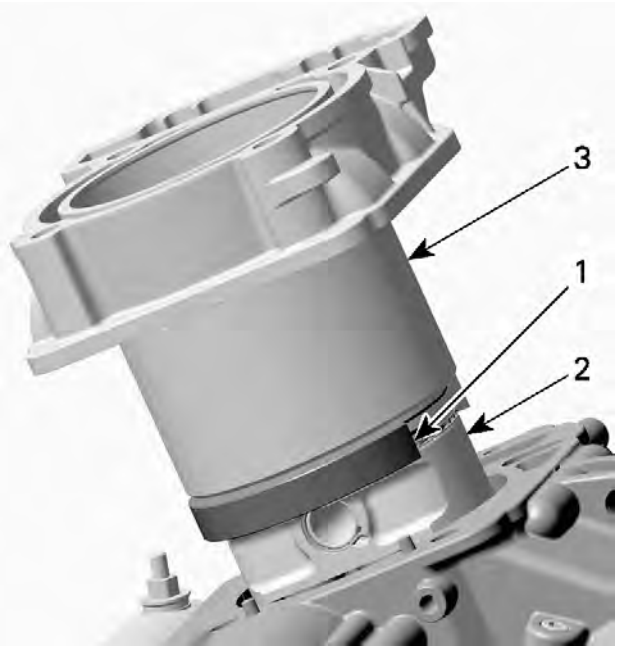

1. Piston ring compressor tool
2. Piston
3. Cylinder

NOTICE

Chain guide has to be fixed between cylinder and cylinder head.

8. After both cylinders are installed, turn crankshaft until piston of cylinder 2 is at TDC and lock crankshaft.
9. Install cylinder head and the other parts in accordance with the proper installation procedures.

Piston

Removing the Piston

1. Remove the cylinder.
2. Place a rag under piston and in the area of timing chain compartment.

⚠ CAUTION
Piston circlips are spring loaded.

3. Remove one piston circlip and discard it.

NOTE: The removal of both piston circlips is not necessary to remove piston pin.

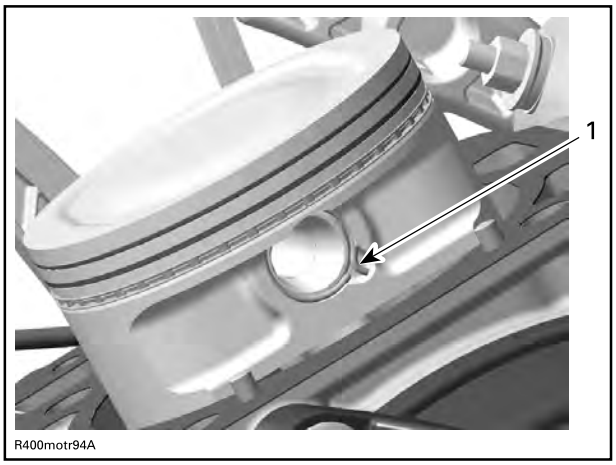

1. Piston circlip

4. Push piston pin out of piston.

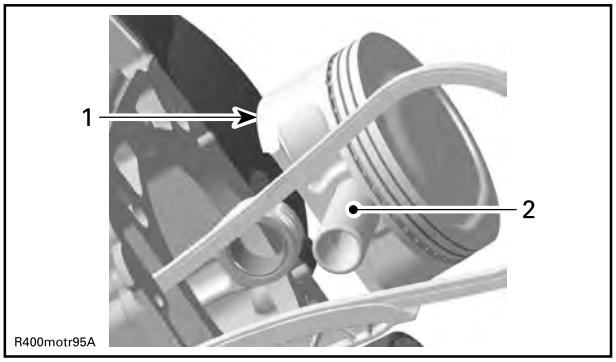

1. Piston
2. Piston pin

5. Detach piston from connecting rod.

Inspecting the Piston

1. Inspect piston for scoring, cracking or other damages. Replace piston and piston rings if necessary.
2. Using a micrometer, measure piston at 8 mm (.315 in) perpendicularly (90°) to piston pin.

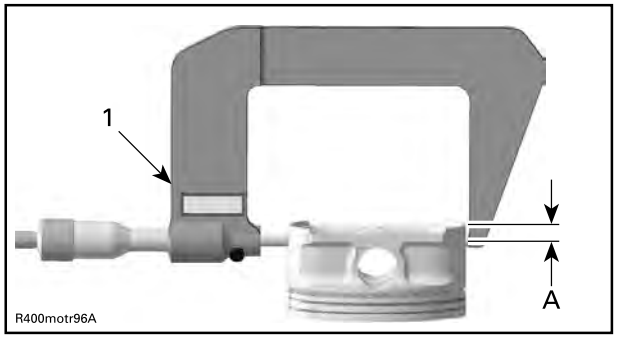

1. Measuring perpendicularly (90°) to piston pin
A. 8 mm (.315 in)

3. The measured dimension should be as described in the following tables. If not, replace piston.

Piston Measurement	
New	90.950 to 90.966 mm (3.5807 to 3.5813 in)
Service limit	90.850 mm (3.577 in)

Piston/Cylinder Clearance

1. Adjust and lock a micrometer to the piston dimension.

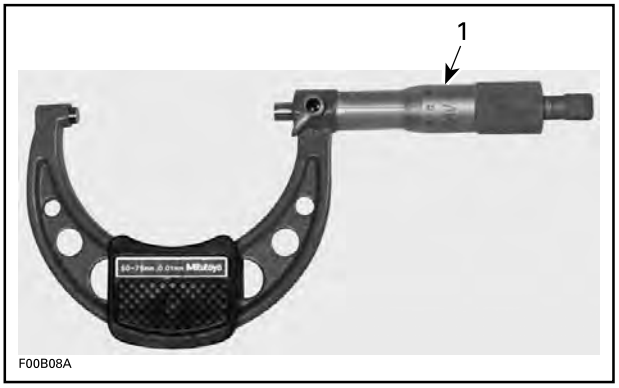

1. Micrometer set to the piston dimension

2. With the micrometer set to the dimension, adjust a cylinder bore gauge to the micrometer dimension and set the indicator to 0 (zero).

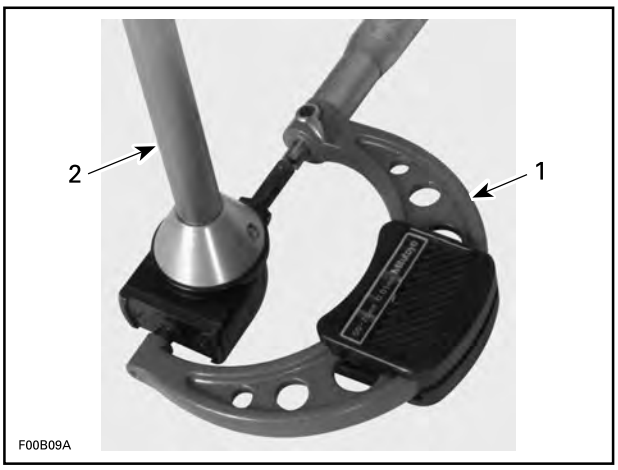

1. Use the micrometer to set the cylinder bore gauge
2. Dial bore gauge

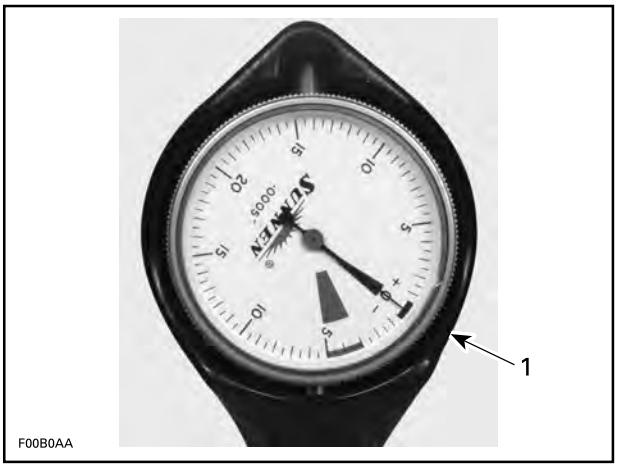

TYPICAL
1. Indicator set to 0 (zero)

3. Position the dial bore gauge 20 mm (.787 in) above cylinder base, measuring perpendicularly (90°) to piston pin axis.
4. Read the measurement on the cylinder bore gauge. The result is the exact piston/cylinder wall clearance.

Piston/Cylinder Clearance	
New	0.027 to 0.057 mm (.0011 to .0022 in)
Service limit	0.100 mm (.0039 in)

NOTICE

Make sure used piston is not worn.

5. If clearance exceeds specified tolerance, replace piston by a new one and measure piston/cylinder clearance again.

NOTE: Make sure the cylinder bore gauge indicator is set exactly at the same position as with the micrometer, otherwise the reading will be false.

Connecting Rod/Piston Pin Clearance

1. Using synthetic abrasive woven, clean piston pin from deposits.
2. Inspect piston pin for scoring, cracking or other damages.
3. Measure piston pin. See the following illustration for the proper measurement positions.

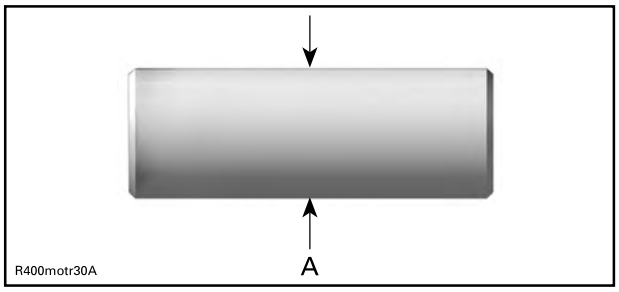

A. Piston pin diameter

Piston Pin Diameter	
New	21.996 to 22.000 mm (.866 to .8661 in)
Service limit	21.980 mm (.8654 in)

4. Replace piston pin if diameter is out of specifications.
5. Measure inside diameter of connecting rod small end bushing.

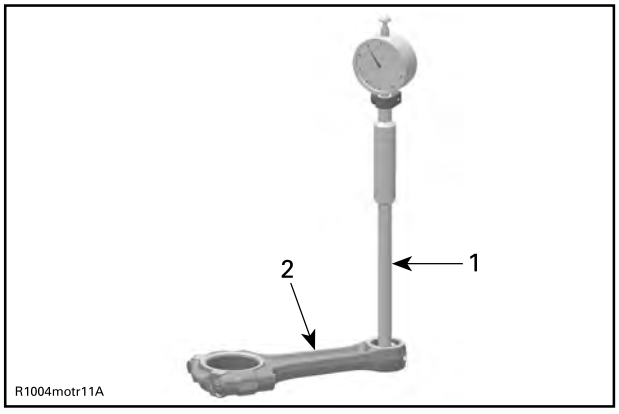

1. Bore gauge
2. Connecting rod

Connecting Rod Small End Diameter	
New	22.010 to 22.020 mm (.8665 to .8669 in)
Service limit	22.050 mm (.8681 in)

6. Replace connecting rod if diameter of connecting rod small end is out of specifications. Refer to *BOTTOM END* subsection for removal procedure.
7. Compare measurements to obtain the connecting rod/piston pin clearance.

Connecting Rod/Piston Pin Clearance	
Service limit	0.080 mm (.0031 in)

Installing the Piston

The installation is the reverse of the removal procedure. Pay attention to the following details.

1. Apply engine oil on the piston pin.
2. Insert piston pin into piston and connecting rod.
3. For each cylinder, install piston with the punched arrow on piston dome is pointing toward the rear side of the engine.

Front cylinder:	Mark on top of piston must show to intake side.
Rear cylinder:	Mark on top of piston must show to exhaust side.

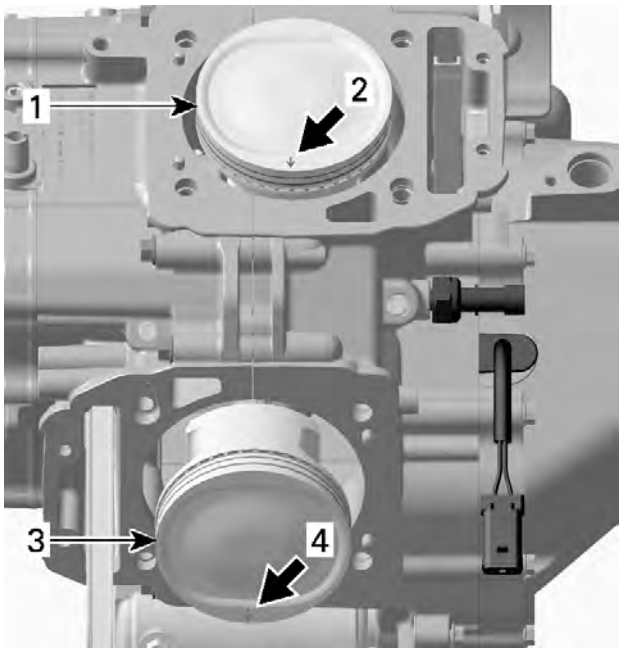

1. *Piston of cylinder 1*
2. *Mark on piston must show to intake side of cylinder 1*
3. *Piston of cylinder 2*
4. *Mark on piston must show to exhaust side of cylinder 2*

4. Use the piston appropriate circlip installer to assemble the **NEW** piston circlip as per following procedure:

Piston circlip installer (P/N 529036153)	

NOTICE

Always replace disassembled piston circlip (s) by NEW ones. Place a rag on cylinder base to avoid dropping the circlip inside the engine.

5. Place circlip in sleeve as per following illustration.

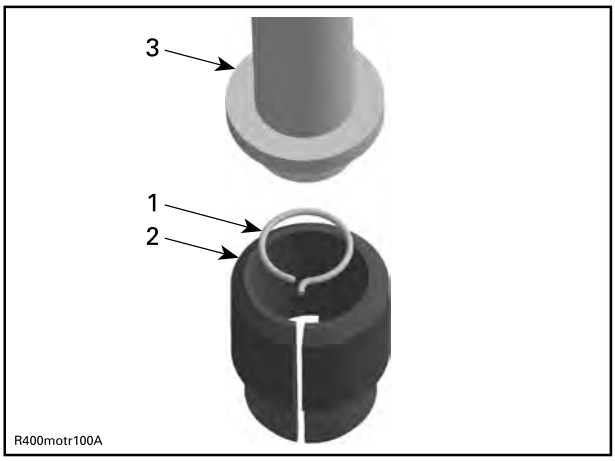

1. *Circlip*
2. *Sleeve*
3. *Assembly jig from piston clip installer*

6. Push taper side of assembly jig until circlip reaches middle of sleeve.
7. Align sleeve with piston pin axis and push assembly jig until circlip engages in piston.

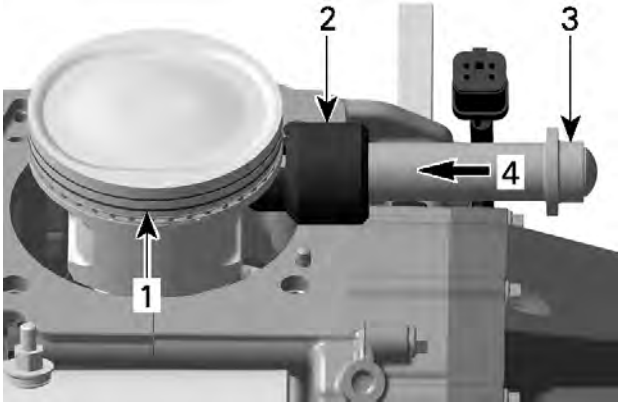

1. *Hold piston while pushing circlip in place*
2. *Sleeve*
3. *Assembly jig*
4. *Direction to push circlip*

NOTICE

Take care that the hook of the piston circlip is positioned properly.

CORRECT POSITION OF THE PISTON CIRCLIP

Piston Rings

Removing the Ring

1. Remove the piston.

Inspecting the Ring

Ring/Piston Groove Clearance

1. Using a feeler gauge measure each ring/piston groove clearance. If the clearance is too large, the piston and the piston rings should be replaced.

Ring/Piston Groove Clearance		
Upper compression ring	New	0.03 to 0.07 mm (.0012 to .0028 in)
	Service limit	0.150 mm (.0059 in)
Lower compression ring	New	0.02 to 0.06 mm (.0008 to .0024 in)
	Service limit	0.150 mm (.0059 in)
Oil scrapper ring	New	0.01 to 0.18 mm (.0004 to .0071 in)
	Service limit	0.250 mm (.0098 in)

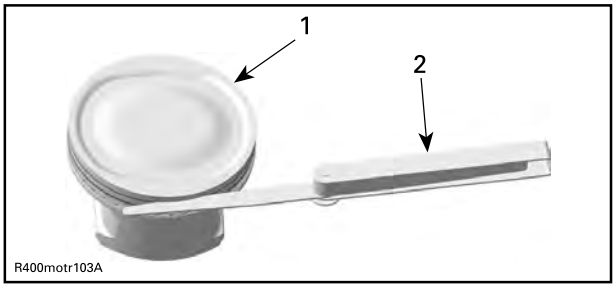

1. Piston
2. Feeler gauge

Ring End Gap

1. To measure the ring end gap place the ring in the cylinder in the area of 8 to 16 mm (5/16 to 5/8 in) from top of cylinder.

NOTE: In order to correctly position the ring in the cylinder, use piston as a pusher.

2. Using a feeler gauge, check ring end gap. Replace ring if gap exceeds above described specified tolerance.

Ring End Gap		
Upper compression ring	New	0.20 to 0.40 mm (.008 to .016 in)
	Service limit	0.60 mm (.024 in)
Lower compression ring	New	0.20 to 0.40 mm (.008 to .016 in)
	Service limit	0.70 mm (.028 in)
Oil scrapper ring	New	0.20 to 0.70 mm (.008 to .028 in)
	Service limit	1.00 mm (.039 in)

Installing the Ring

The installation is the reverse of the removal procedure. Pay attention to the following details.

1. Use a ring expander to prevent breakage during installation. The oil ring must be installed by hand.
2. Install the oil scraper ring first, then the lower compression ring with the word “N and TOP “ facing up, then the upper compression ring with the word “N and TOP“ facing up.

NOTE: First install spring and then rings of oil scraper ring.

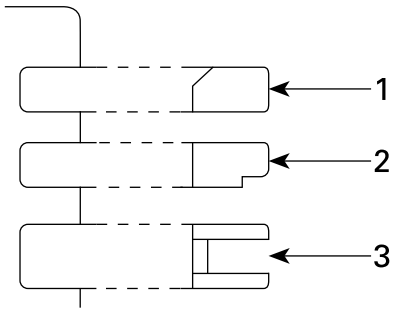

1. Upper compression ring
2. Lower compression ring
3. Oil scraper ring

NOTICE

Ensure that top and second rings are not interchanged.

3. Check that rings rotate smoothly after installation.
4. Space the piston ring end gaps 120° apart and do not align the gaps with the piston pin bore or the thrust side axis.

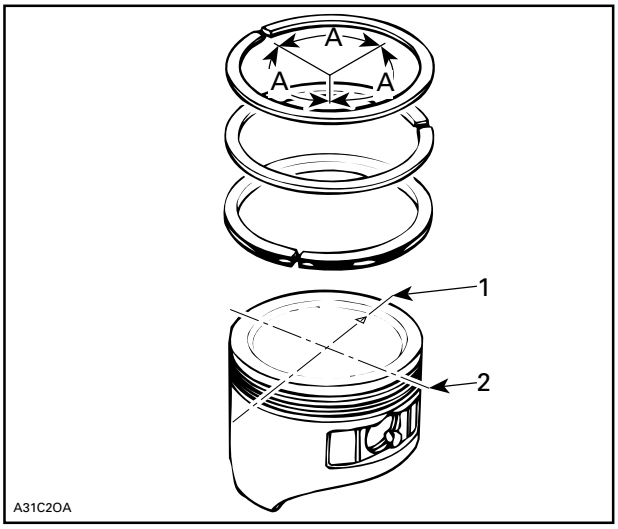

1. DO NOT align ring gap with piston thrust side axis
2. DO NOT align ring gap with piston pin bore axis
A. 120°

Cylinder Block

SERVICE TOOLS

Description	Part Number	Page
COVER WASHER INSTALLER	(P/N 529036271)	88
CRANKCASE SUPPORT MAG/PTO	(P/N 529036031)	97
CRANKSHAFT LOCKING BOLT	(P/N 529035617)	100
DRIVE SHAFT OIL SEAL INSTALLER	(P/N 529036028)	89
DRIVE SHAFT OIL SEAL PROTECTOR	(P/N 529036029)	88
PLAIN BEARING REMOVER/INSTALLER	(P/N 529035917)	97
PLAIN BEARING REMOVER/INSTALLER	(P/N 529036032)	92–93
PTO COVER OIL SEAL INSTALLER	(P/N 529036033)	90

SERVICE PRODUCTS

Description	Part Number	Page
LOCTITE 243 (BLUE)		88
LOCTITE 5910		87
LOCTITE CHISEL (GASKET REMOVER)		87

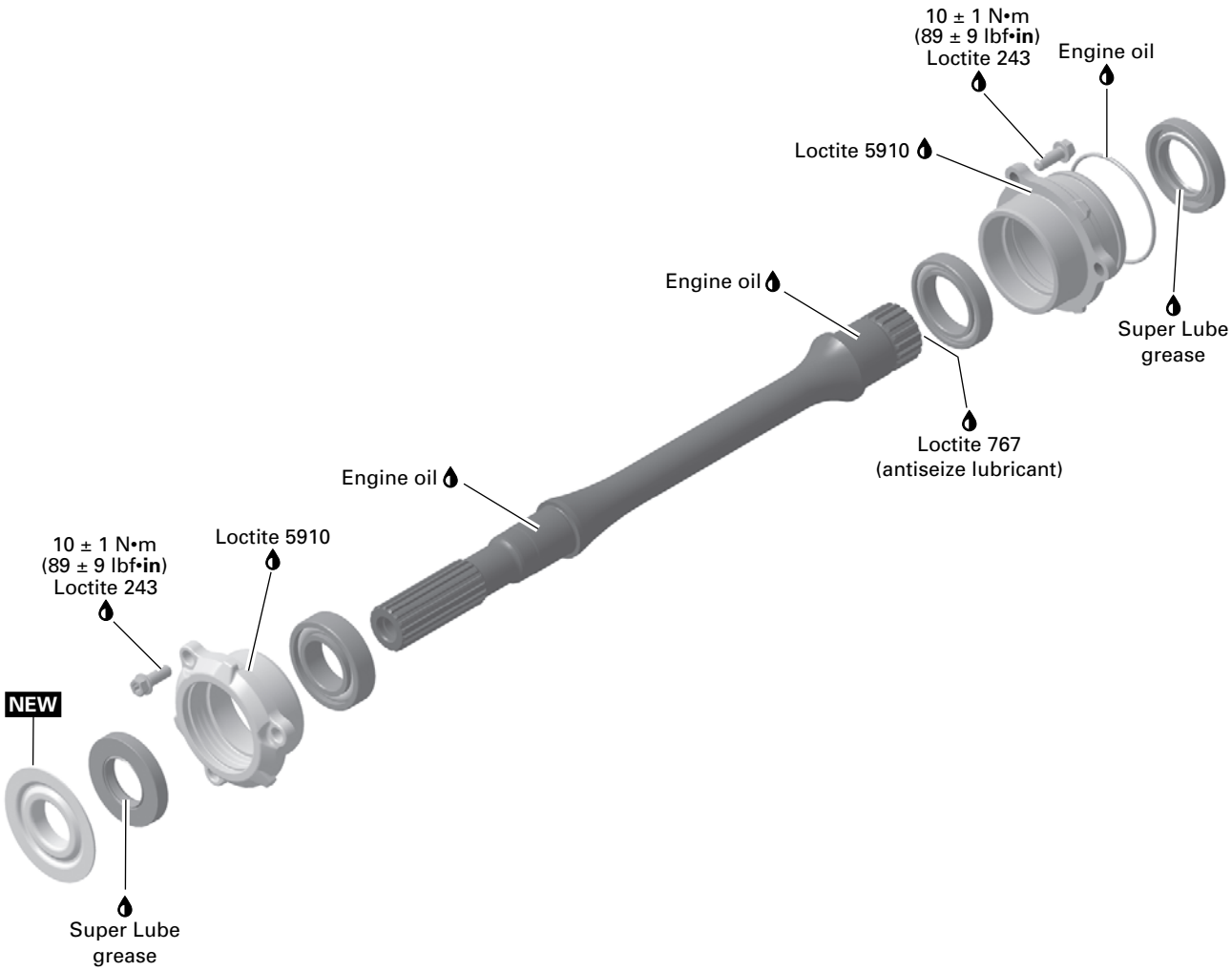

NEW = Component must be replaced when removed.

ENGINE DRIVE SHAFT

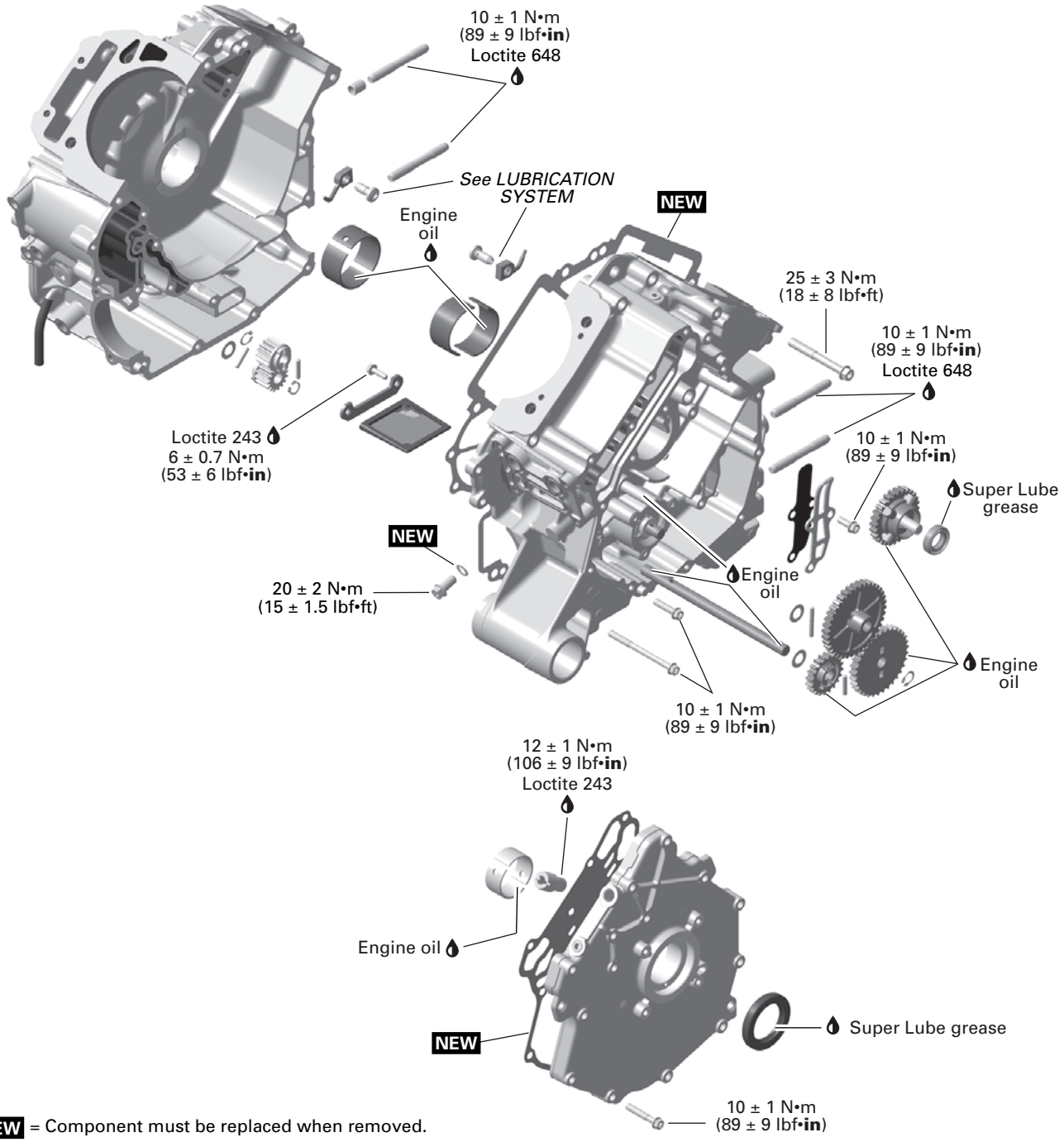

NEW = Component must be replaced when removed.

CRANKCASE AND PTO COVER

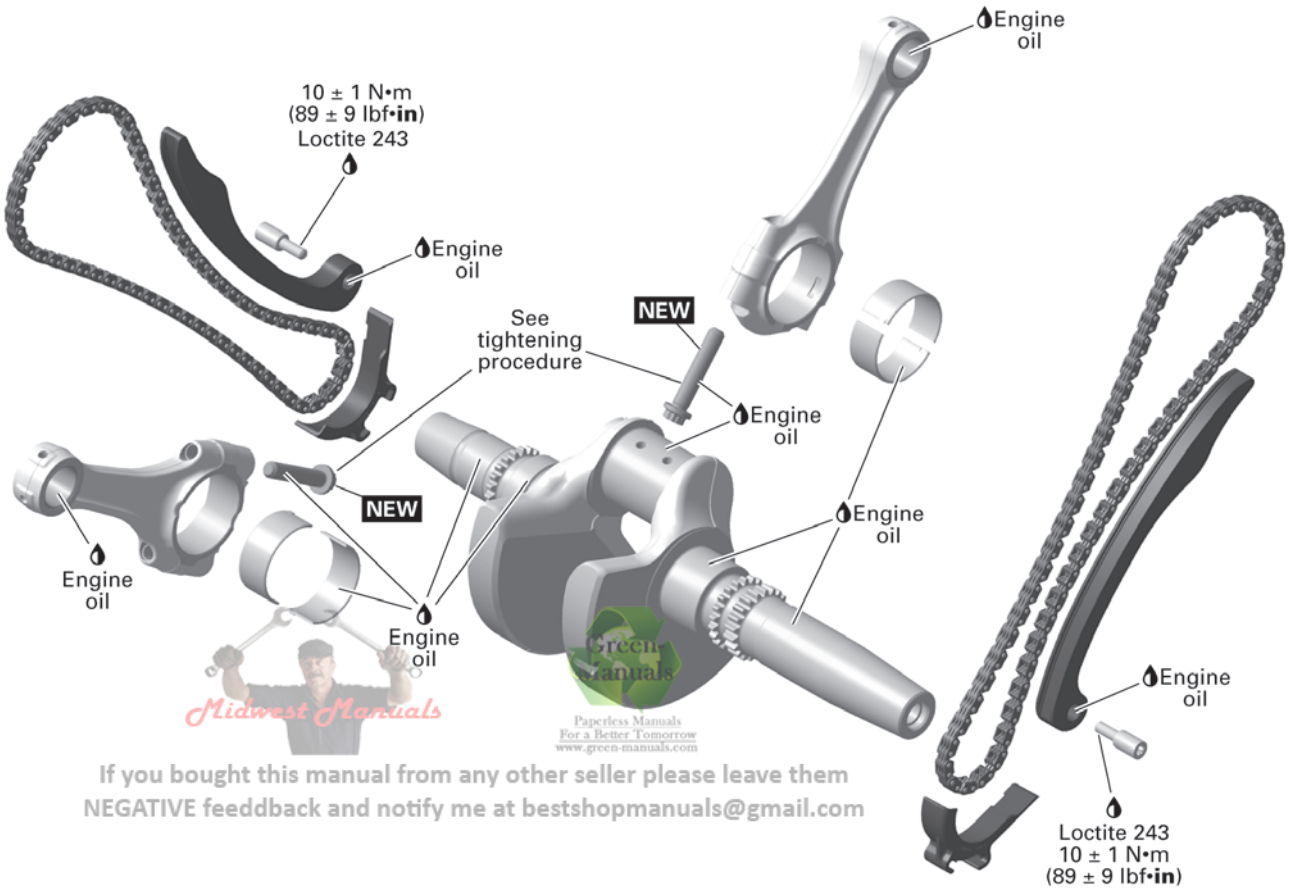

Midwest Manuals
Green Manuals
Paperless Manuals
For a Better Tomorrow
www.green-manuals.com
If you bought this manual from any other seller please leave them
NEGATIVE feeddback and notify me at bestshopmanuals@gmail.com

NEW = Component must be replaced when removed.

CRANKSHAFT

General

IMPORTANT: Note position of parts on disassembly. This may help to find the root cause of a problem. A component that is not replaced should be reinstalled in the same position as originally mounted.

Procedures

Engine Drive Shaft

The engine drive shaft transmits the power from the gearbox to the front differential and is located inside the crankcase.

Removing the Engine Drive Shaft

Removing the Rear Bearing Cover

1. Detach gearbox from engine, refer to the appropriate *Gearbox and 4x4 Coupling Unit* subsection.
2. Remove the bearing cover and its O-ring.

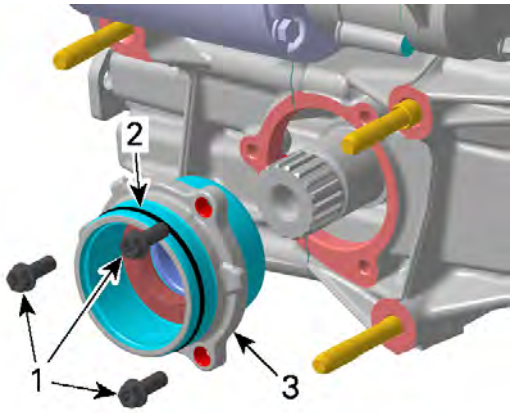

1. *Bearing cover screws*
2. *O-ring*
3. *Bearing cover*

Removing the Front Bearing Cover

NOTE: The front bearing cover can be replaced with the engine installed.

1. Lift and support vehicle.
2. Remove the front drive shaft. Refer to the appropriate vehicle service manual.
3. Remove cover washer from drive shaft using 2 screwdrivers.

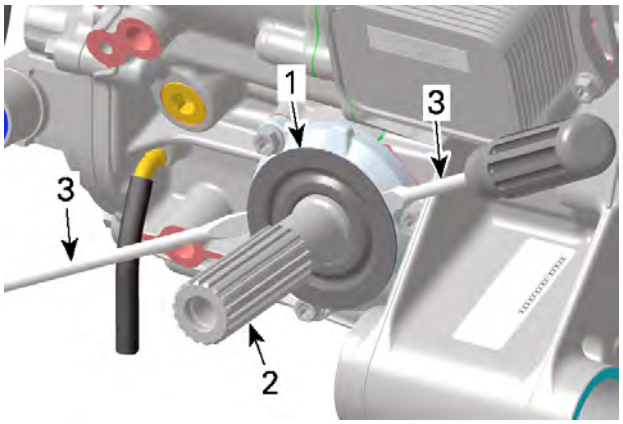

1. *Cover washer*
2. *Drive shaft*
3. *Screwdrivers*

4. Remove the bearing cover.

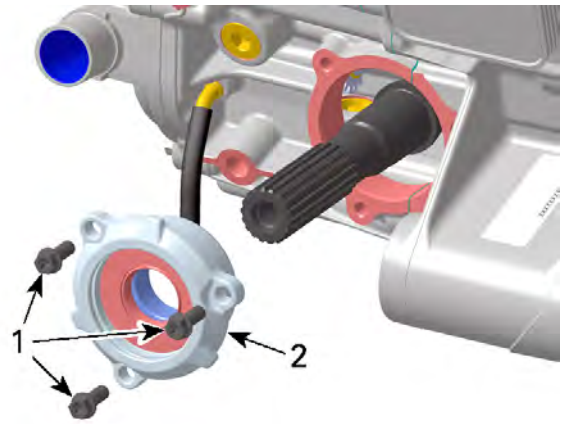

1. *Bearing cover screws*
2. *Bearing cover*

Removing the Engine Drive Shaft

1. Split crankcase, refer to *Crankcase*.
2. Remove engine drive shaft from the crankcase.

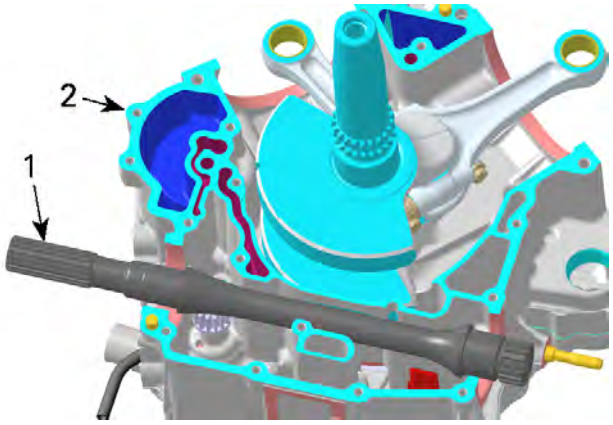

1. *Engine drive shaft*
2. *Crankcase MAG side*

Inspecting the Engine Drive Shaft

1. Replace oil seals and/or O-ring (bearing cover gearbox side) if they are brittle, hard or damaged.
2. Check drive shaft bearings for contamination and/or metal shavings. Check if bearings turn freely and smoothly. Replace if necessary.

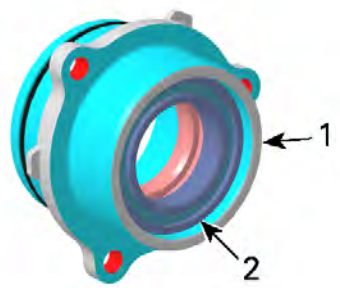

1. Rear bearing cover
2. Drive shaft bearing

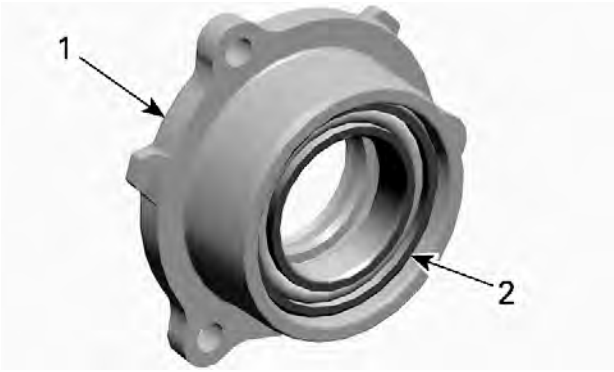

1. Front bearing cover
2. Drive shaft bearing

3. Check drive shaft for cracks, bend, pitting or other visible damages.
4. Check drive shaft splines for wear or damages.
5. Check oil seal running surface of the drive shaft for scratches. Replace if necessary.

Installing the Engine Drive Shaft

The installation is the reverse of the removal procedure. Pay attention to the following details.

1. Clean all metal components in solvent.
2. Crankcase surfaces and bearing covers are best cleaned using a combination of a gasket remover and a brass brush. Brush a first pass in one direction then make the final brushing perpendicularly (90°) to the first pass.

Loctite chisel (gasket remover)

NOTICE

Do not wipe with rags. Use a new clean hand towel only.

3. Use a suitable installer for installing bearings.
4. Apply sealant on mating surfaces.

Loctite 5910

NOTICE

When beginning the application of the bearing cover sealant, the assembly and the first torquing should be done within 10 minutes. It is suggested to have all you need on hand to save time.

5. Use a plexiglass plate and apply some sealant on it. Use a soft rubber roller 50 - 75 mm (2 - 3 in), available in arts products suppliers for printing, and roll the sealant to get a thin uniform coat on the plate (spread as necessary). When ready, apply the sealant on bearing cover surfaces.

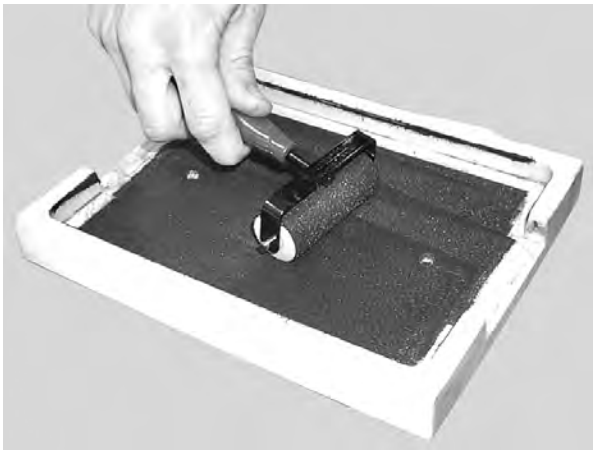

F12R17A

6. Do not apply in excess as it will spread out inside crankcase.

NOTE: It is recommended to apply this specific sealant as described here to get a uniform application without lumps. If you do not use the roller method, you may use your finger to uniformly distribute the sealant (using a finger will not affect the adhesion).

Installing the Rear Bearing Cover

1. Check O-ring on bearing cover if brittle, hard or damaged. Replace if necessary.
2. Lubricate O-ring with engine oil.

1. *O-ring*
2. *Bearing cover*

3. For bearing cover installation on gearbox side, protect the oil seal to avoid damaging the sealing lip.

Drive shaft oil seal protector (P/N 529036029)	

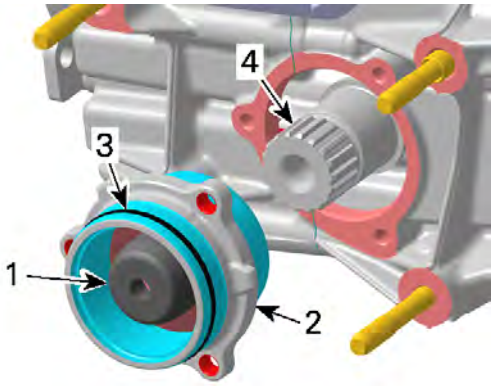

1. *Protection sleeve*
2. *Bearing cover*
3. *O-ring*
4. *Drive shaft*

4. Apply a drop of threadlocker on the rear bearing cover screw threads.

Loctite 243 (blue)

5. Tighten the rear bearing cover screws to specification.

Tightening Torque	
Rear bearing cover screws	10 ± 1 Nm (89 ± 9 lbf-in)

Installing the Front Bearing Cover

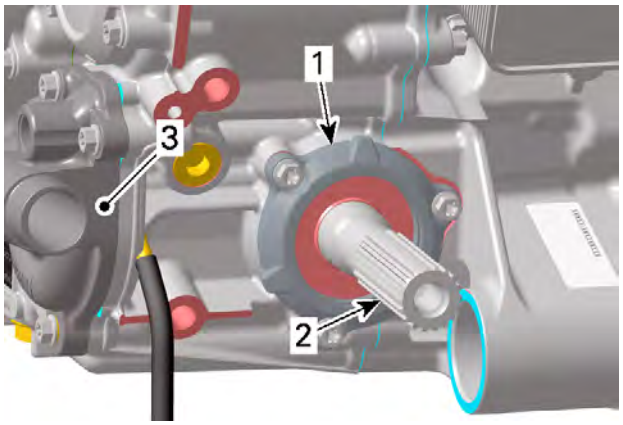

1. *Bearing cover*
2. *Drive shaft*
3. *Water pump cover*

1. Apply a drop of threadlocker on the front bearing cover screw threads.

Loctite 243 (blue)

2. Position the front bearing cover.
3. Tighten the rear bearing cover screws to specification.

Tightening Torque	
Front bearing cover screws	10 ± 1 Nm (89 ± 9 lbf-in)

4. Place **NEW** cover washer on drive shaft.

NOTE: Groove must face outwards the engine

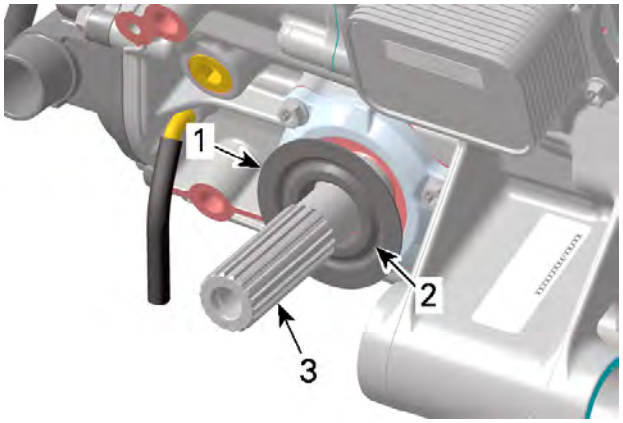

1. *Cover washer*
2. *Groove*
3. *Drive shaft*

5. Press cover washer on drive shaft.

Cover Washer installer (P/N 529036271)	

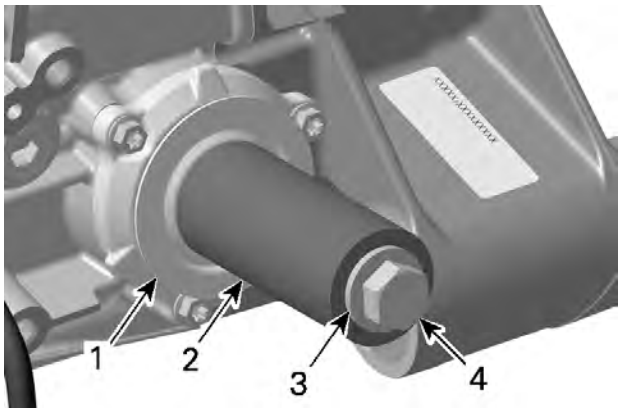

1. *Cover washer*
2. *Cover washer installer 529 036 271*
3. *Flat washer 250200102*
4. *M12 x 1.25 x 35 hexagonal screw*

Installing the Engine Drive Shaft

1. Finally check for axial play of the drive shaft.

Engine Drive shaft Oil Seal - Front

Replacing the Engine Drive shaft Oil Seal - Front

1. Remove front propeller shaft. Refer to the appropriate vehicle service manual.
2. Remove the front bearing cover, refer to *Engine Drive Shaft*.
3. Remove drive shaft seal from bearing cover.

1. *Bearing cover*
2. *Oil seal*

4. Install drive shaft oil seal.

Drive shaft oil seal installer (P/N 529036028)	

1. *Bearing cover*
2. *Oil seal*
3. *Oil seal installer*

5. Reinstall remaining parts in the reverse order of removal.

Engine Drive shaft Oil Seal - Rear

Replacing the Engine Drive shaft Oil Seal - Rear

1. Remove rear bearing cover, refer to *Engine Drive Shaft*.
2. Remove drive shaft seal from bearing cover.

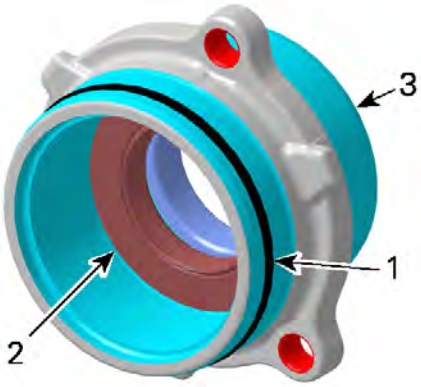

1. *O-ring*
2. *Oil seal*
3. *Bearing cover*

3. Install drive shaft oil seal.

Drive shaft oil seal installer (P/N 529036028)	

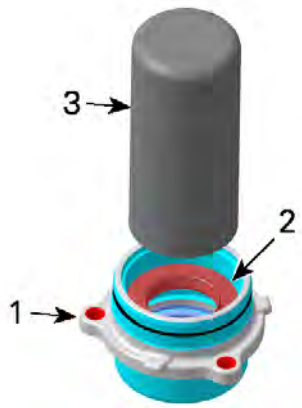

1. *Bearing cover*
2. *Oil seal*
3. *Oil seal installer*

4. Reinstall remaining parts in the reverse order of removal.

PTO Cover Oil Seal

To replace oil seal it is not necessary to remove engine from vehicle.

Removing the PTO Oil Seal

1. Refer to *Continuously Variable Transmission (CVT)* to remove the following parts:
   - CVT cover
   - Drive pulley
   - Driven pulley
   - CVT air guide.
2. Remove oil seal with a small flat screwdriver.

NOTICE

Avoid scoring surfaces with tool.

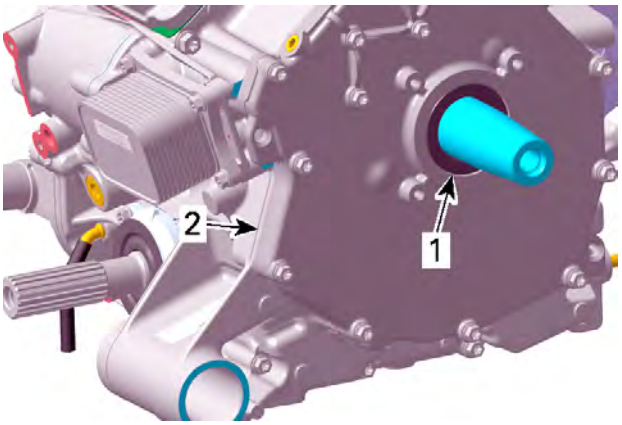

1. *Oil seal*
2. *PTO cover*

Inspecting the PTO Oil Seal

1. Check oil seal running surface of crankshaft PTO side for grooves. Replace if necessary.

Installing the PTO Oil Seal

The installation is the reverse of the removal procedure. However, pay attention to the following details.

NOTICE

Oil seal must be installed with sealing lip toward the engine.

1. Push oil seal in place.

PTO cover oil seal installer (P/N 529036033)	

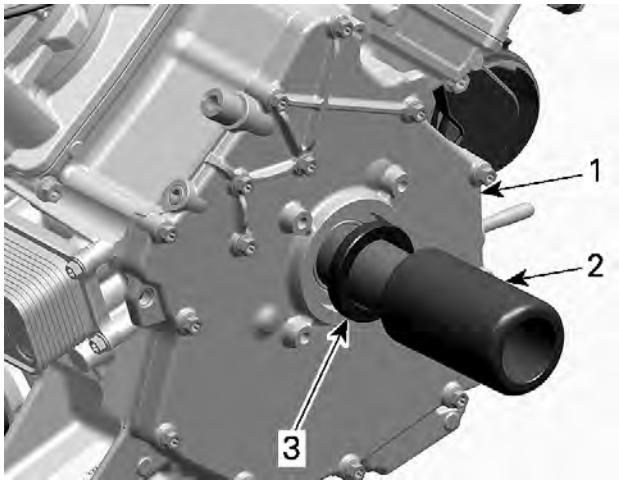

1. *PTO cover*
2. *Oil seal installer*
3. *Oil seal*

PTO Cover

Removing the PTO Cover

1. Refer to *Continuously Variable Transmission (CVT)* to remove the following parts:
   - CVT cover
   - Drive pulley
   - Driven pulley
   - CVT air guide.
2. Disconnect vent hose.
3. Remove PTO cover screws and pull PTO cover.

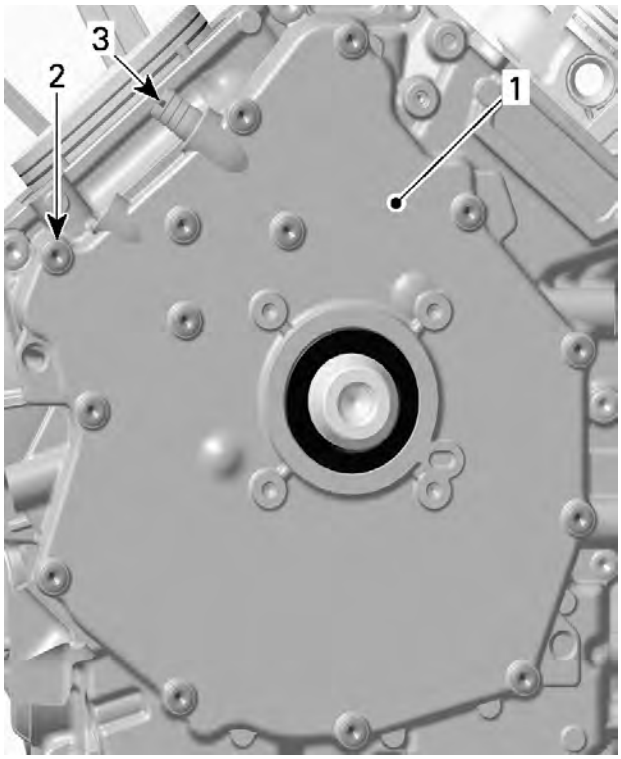

1. PTO cover
2. PTO cover screws
3. Vent hose nipple

4. Disconnect vent hose.
5. Remove PTO cover screws and pull PTO cover.

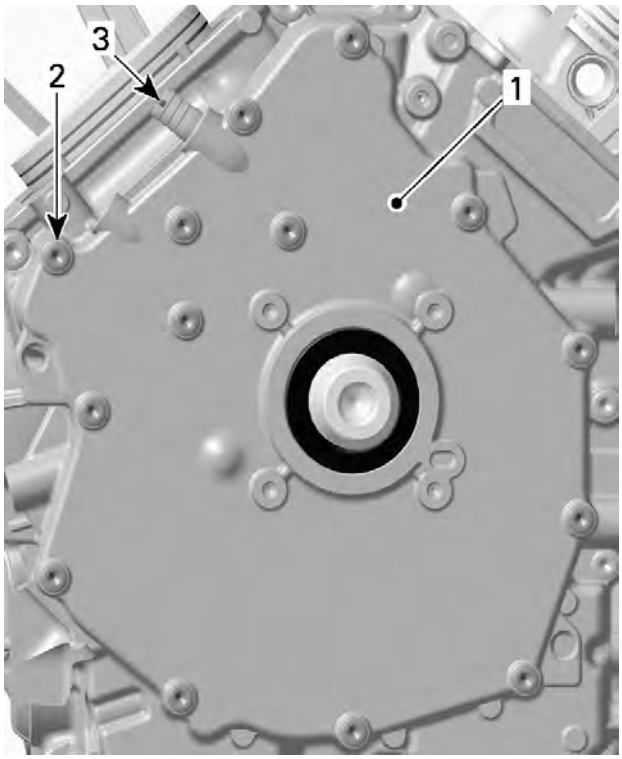

1. PTO cover
2. PTO cover screws
3. Vent hose nipple

6. Disconnect vent hose.
7. Remove PTO cover screws and pull PTO cover.

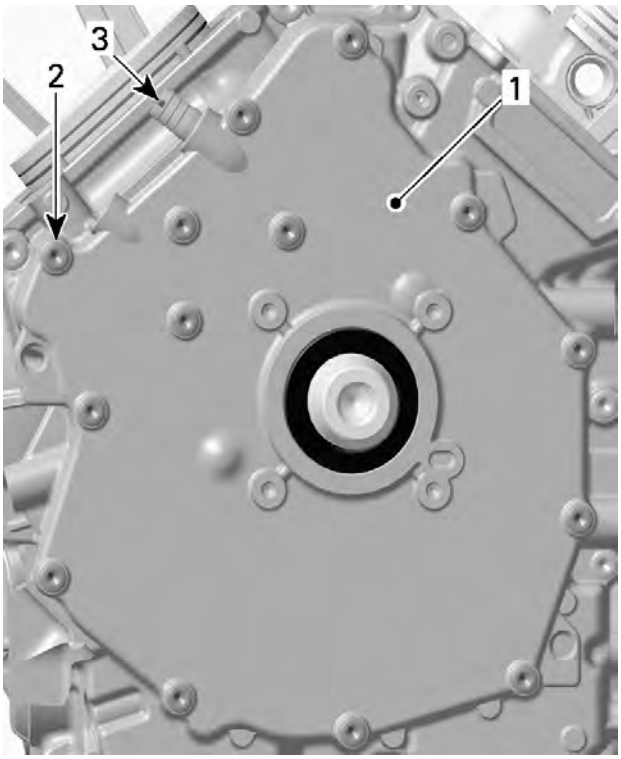

1. *PTO cover*
2. *PTO cover screws*
3. *Vent hose nipple*

Inspecting the PTO Cover

1. Check the PTO cover for cracks or other damage.
2. Replace PTO cover if damaged.
3. Clean oil breather bore in PTO cover from contaminations with part cleaner then use pressurized air to dry it.
4. Check surface of sealing sleeve for wear or other damages. Replace PTO cover if damaged.

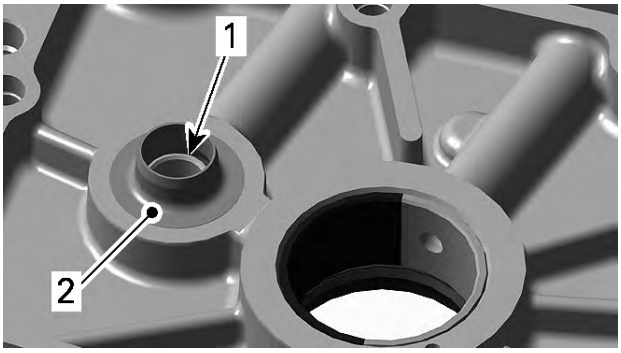

1. *Oil breather bore*
2. *Surface of sealing sleeve*

5. Check plain bearings for scorings or other damages.
6. Measure plain bearing inside diameter (PTO cover) and compare to crankshaft journal diameter (PTO cover bearing), refer to *Crankshaft*. Replace if the measurement is out of specification.

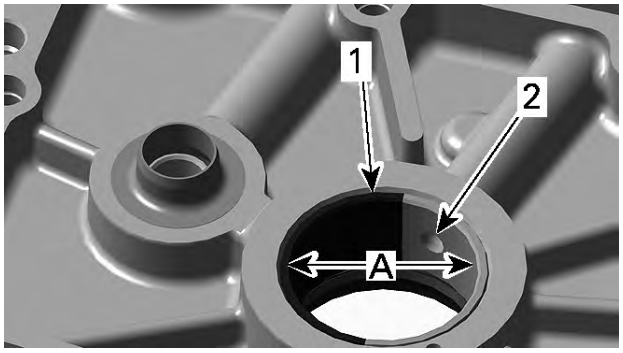

1. *Plain bearing*
2. *Oil bore*

A. *Measure plain bearing inside diameter*

Plain Bearing Inside Diameter (PTO Cover)	
Service limit	34.120 mm (1.3433 in)

Plain Bearing Replacement (PTO Cover)

Removing the Plain Bearing

NOTICE

Unless otherwise instructed, never use a hammer to install plain bearings. Use a press only.

1. Carefully remove the PTO oil seal with a screwdriver, without damaging the PTO cover.
2. Press out the plain bearings from the outside towards the inside.

Plain bearing remover/installer (P/N 529036032)	

3. The PTO cover has to be supported from below with suitable support with straight surface, in order to prevent damage of the sealing surface.

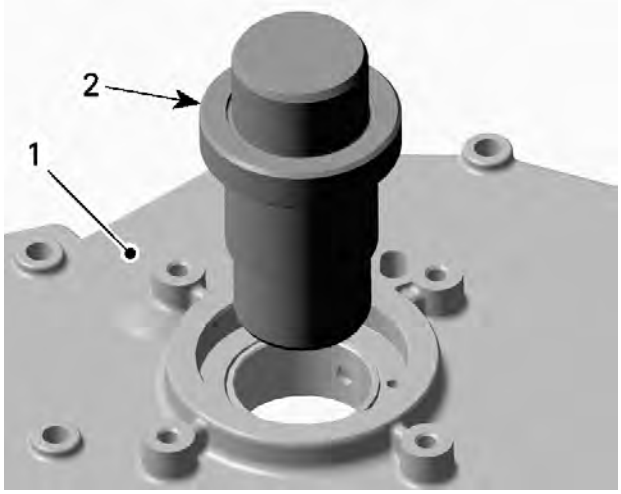

1. *PTO cover*
2. *Plain bearing remover/installer*

Installing the Plain Bearing

NOTICE

Do not lubricate plain bearings and/or PTO cover for installation.

1. Install plain bearings in a cool PTO cover.

Plain bearing remover/installer (P/N 529036032)	

NOTICE

Mark position of oil bore on PTO cover and on plain bearing remover/installer. Align mark on plain bearing remover/installer with mark on PTO cover.

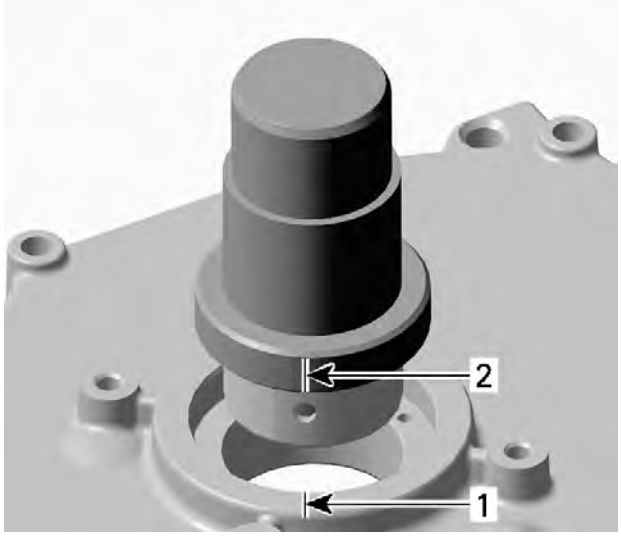

1. *Mark position of oil bore on PTO cover*
2. *Mark position of oil bore on plain bearing remover/installer*

2. Carefully press-in the plain bearings in the same direction as during disassembly, from the outside towards the inside. Support PTO cover with suitable support with straight surface, in order to prevent damage of the sealing surface.

NOTICE

Wrong oil bore position will stop oil supply to plain bearings and will damage the engine.

NOTICE

The partition of the plain bearings must be positioned near to oil bore in counterclockwise direction.

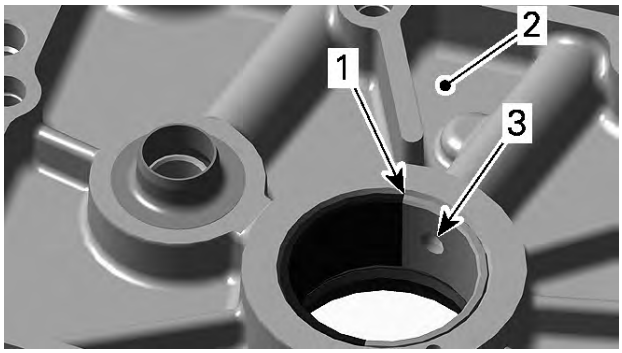

1. *Partition*
2. *PTO cover (inside)*
3. *Oil bore*

Installing the PTO Cover

The installation is the reverse of the removal procedure. However, pay attention to the following.

NOTICE

At installation, replace PTO cover gasket and oil seal.

1. Tighten PTO cover screws following the illustrated sequence.

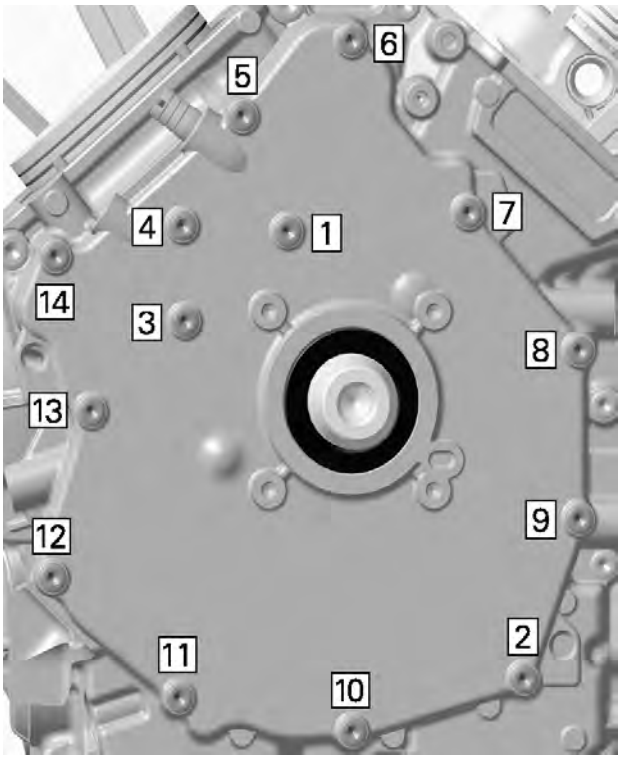

TIGHTENING SEQUENCE

Tightening Torque	
PTO cover screws	10 ± 1 Nm (89 ± 9 lbf-in)

Drive Gears

Drive Gears Location

The engine is equipped with a breather gear which prevents engine oil coming out through the breathing system into the air intake system.

The drive gears are located on the engine PTO side behind the PTO cover.

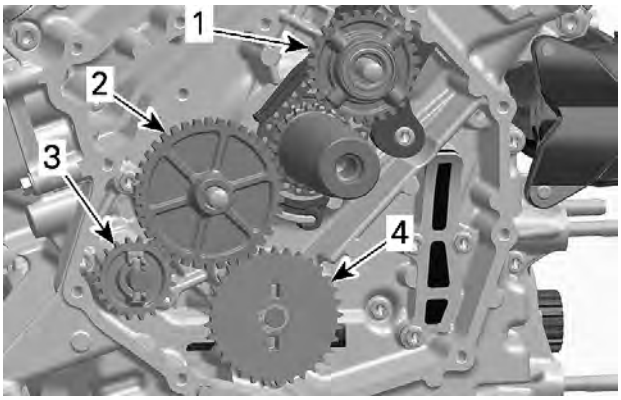

1. *Breather gear*
2. *Intermediate gear*
3. *Water pump drive gear*
4. *Oil pump drive gear*

Removing the Drive Gears

1. Remove the PTO cover, refer to *PTO COVER*.
2. Withdraw intermediate gear and breather gear.
3. Remove the oil pump drive gear, refer to *Oil Pump* in *Lubrication System*.
4. Remove the water pump drive gear by pulling the shaft assembly a bit out and turn it about one teeth until it stays out.
5. Then push water pump drive gear in.

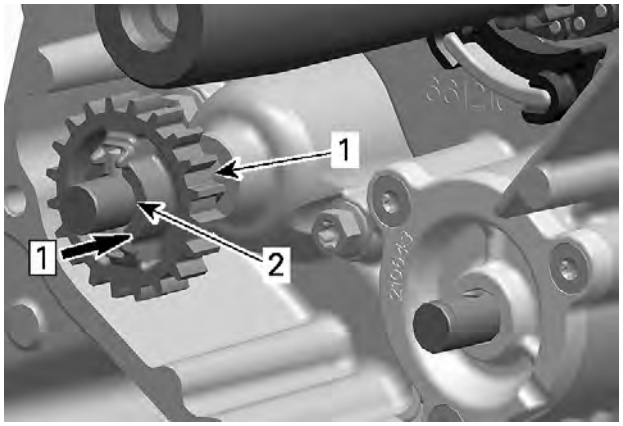

Step 1. Push gear in
1. *Water pump drive gear*
2. *Intermediate shaft*

6. Remove needle pin and pull water pump drive gear out.
7. Remove thrust washer from intermediate shaft.

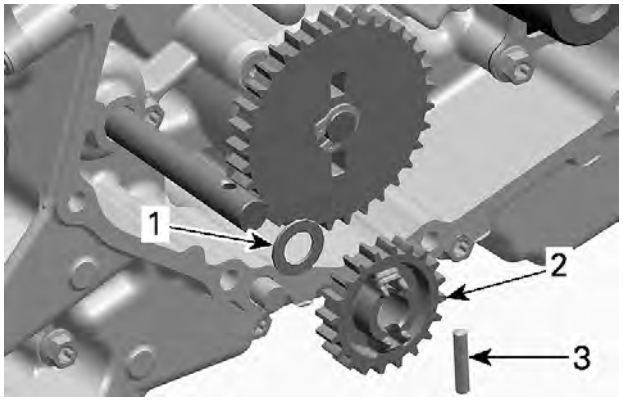

1. *Thrust washer*
2. *Water pump drive gear*
3. *Needle pin*

Inspecting the Drive Gears

Intermediate Gear/Oil Pump Drive Gear/Water Pump Drive Gear

1. Inspect gears for wear or other damage. Replace if damaged.

Breather Gear

1. Check if oil seal is brittle, hard or damaged. Replace if necessary.

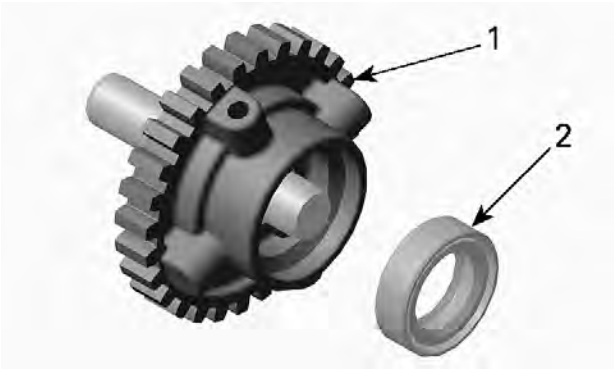

1. Breather gear
2. Oil seal

2. Inspect gear for wear or other damage.
3. Check ball bearing for excessive play and smooth operation. Replace breather gear assembly if necessary.

Installing the Drive Gears

The installation is the reverse of the removal procedure.

1. Adequately oil the ball bearing of the breather gear.

Crankcase

Disassembling the Crankcase

1. Lock the crankshaft, refer to *Crankshaft Locking Procedure*.
2. Refer to *Continuously Variable Transmission (CVT)* to remove following parts:
   - CVT cover
   - Drive pulley
   - Driven pulley
   - CVT air guide.
3. Detach the gearbox from the engine, refer to the appropriate *Gearbox and 4x4 Coupling Unit*.
4. Refer to *Magneto and Starter* to remove the following parts:
   - Magneto cover
   - Rotor with sprag clutch gear
   - Starter drive gears.
5. Remove the PTO cover.
6. Remove the drive gears.
7. Remove the bearing covers of engine drive shaft.
8. Remove timing chain and its guides, refer to *Timing Chain*.
9. Remove cylinders, refer to *Cylinder Head*.
10. Remove the water pump housing, refer to *Cooling System - Engine Components*.
11. Refer to *Lubrication System* to remove following parts:
    - Oil filter
    - Oil cooler (if equipped)
    - Oil pump drive gear.

NOTE: Oil pump removal from crankcase is not necessary, but recommended to see condition of oil pump.

12. Remove the electric starter.

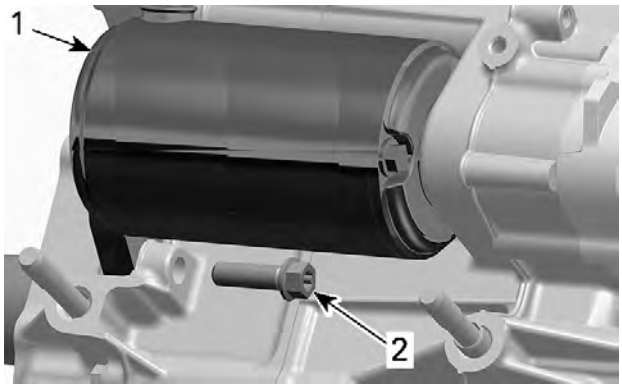

1. Electric starter
2. Screw

13. Before splitting the crankcase, measure crankshaft axial play, refer to *Crankshaft*.
14. Remove all crankcase screws.

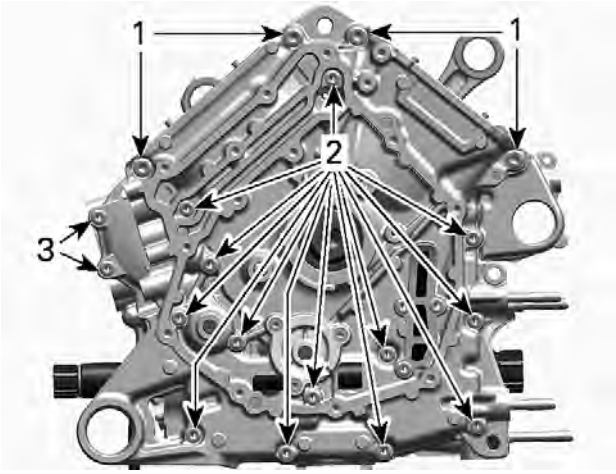

1. 4 screws M8 x 65
2. 13 screws M6 x 75
3. 2 screws M6 x 25

15. Carefully split crankcase halves.

NOTICE
During disassembly, pay attention to avoid damage the sealing surfaces of the crankcase halves.

16. Pull crankshaft out of crankcase.

17. Remove the water pump intermediate shaft.

1. Water pump intermediate shaft

18. Remove and inspect the engine oil strainer.

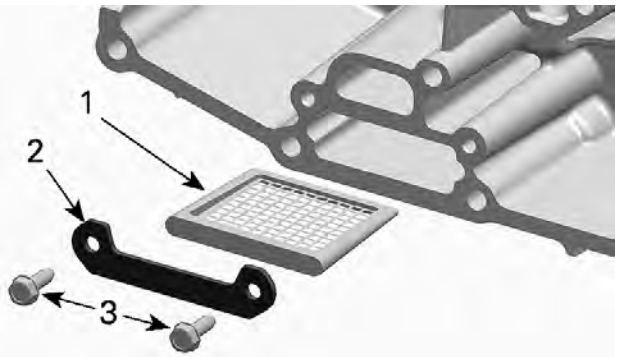

1. Engine oil strainer
2. Retaining plate
3. Screws

Cleaning the Crankcase

1. Clean crankcase using a part cleaner.
2. Dry crankcase using compressed air.
3. Blow the oil supply lines.
4. Clean and inspect oil nozzles, refer to *Lubrication System*.

Inspecting the Crankcase

1. Check crankcase halves for cracks or other damage. Replace if damaged.
2. Check MAG and PTO plain bearings in for scoring or other damages.

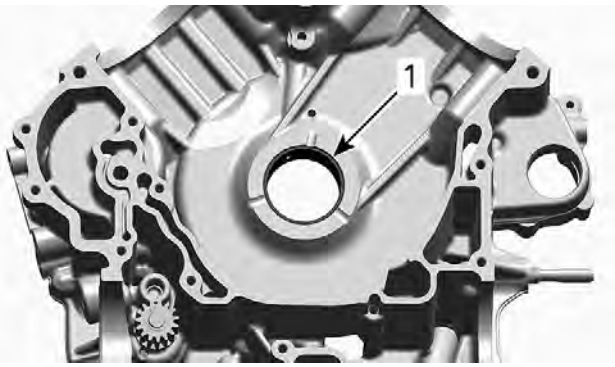

1. Plain bearing

3. Measure plain bearing inside diameter and compare to PTO/MAG main journal diameters of crankshaft. Replace if the measurements are out of specification.

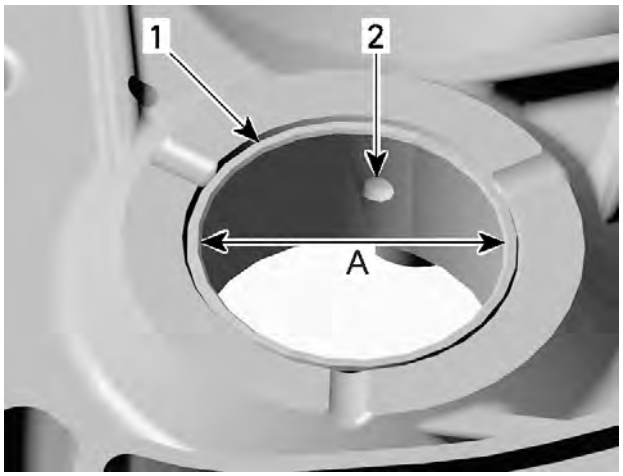

1. Plain bearing
2. Oil bore
A. Measure plain bearing inside diameter

Main Bearing Inside Diameter (PTO/MAG)	
Service limit	42.100 mm (1.6575 in)

Plain Bearing Replacement (Main)
Removing the Plain Bearing

NOTICE

Always support crankcase halves properly when plain bearings are removed. Damages to crankcase halves may occur if this procedure is not performed correctly.

NOTE: Always use a press for removal of plain bearings.

1. Carefully press the plain bearings out, from the crankcase half inside towards the outside.

Crankcase support MAG/PTO (P/N 529036031)	
Plain bearing remover/installer (P/N 529035917)	

2. During disassembly, make sure not to damage the sealing surfaces of the crankcase halves.

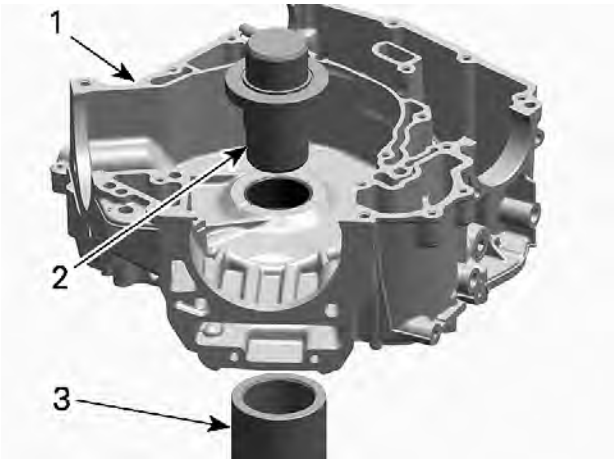

PUSH PLAIN BEARINGS OUTSIDE
1. *Crankcase half*
2. *Plain bearing remover/installer*
3. *Crankcase support sleeve 529 036 031*

Installing the Plain Bearing (Main)

NOTICE

Unless otherwise instructed, never use hammer to install plain bearings. Use press only. During reassembly, make sure not to damage the sealing surfaces of the crankcase halves. Install plain bearings in a cold crankcase. Do not lubricate plain bearings and/or crankcase for installation.

NOTE: Place the proper crankcase support sleeve under crankcase halves before installing the plain bearings.

1. Carefully press in the plain bearings in the same direction as during disassembly, from the crankcase inside towards the outside.

Plain bearing remover/installer (P/N 529035917)	

2. Use an O-ring (Ø 42 x 1 to 1.5 mm (.04 to .06 in) thickness) to hold plain bearings in place during installation. The O-ring will disappear in the groove of the plain bearing remover/installer.
3. Mark position of plain bearing oil bore on plain bearing remover/installer.
4. Mark position of oil bore on crankcase half.
5. Align mark on plain bearing remover/installer with mark on crankcase half.

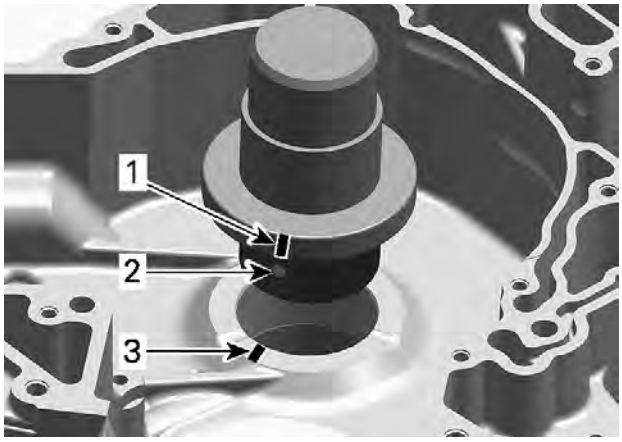

1. *Oil bore position marked on plain bearing remover/installer*
2. *Plain bearing oil bore*
3. *Oil bore position marked on crankcase*

NOTICE

Misalignment of the plain bearing and crankcase oil bores will prevent proper oil supply to plain bearings.

6. Carefully press in the plain bearings from inside the crankcase towards the outside.

NOTICE

The partition of the plain bearings in crankcase half MAG side must be positioned near to oil bore in clockwise direction.

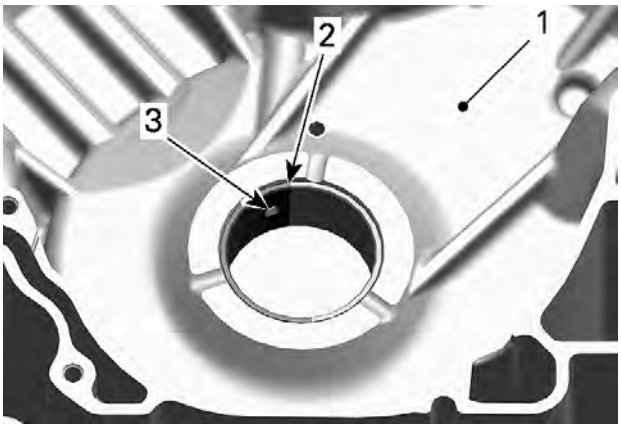

1. *Crankcase half MAG (inside surface)*
2. *Partition*
3. *Oil bore*

NOTICE

The partition of the plain bearings in crankcase half PTO side must be positioned near to oil bore in counterclockwise direction.

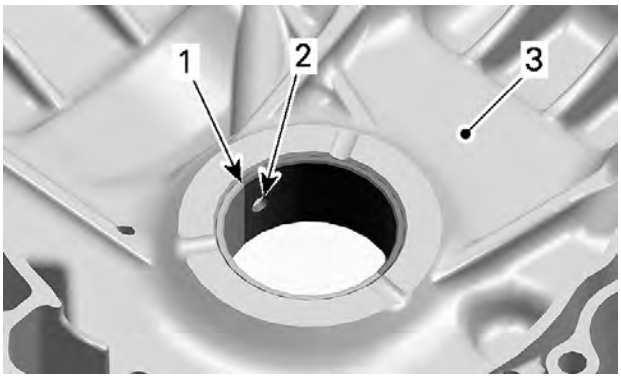

1. *Partition*
2. *Oil bore*
3. *Crankcase half PTO (inside)*

Assembling the Crankcase

The assembly of crankcase is essentially the reverse of removal procedure. However, pay attention to the following details.

1. Install a **NEW** crankcase gasket.
2. Oil the plain bearings before mounting the crankshaft.
3. Install the crankshaft.
4. Install the engine oil strainer and screws.
5. Install the water pump intermediate shaft and gears.
6. Tighten the crankcase screws as per the following sequence.

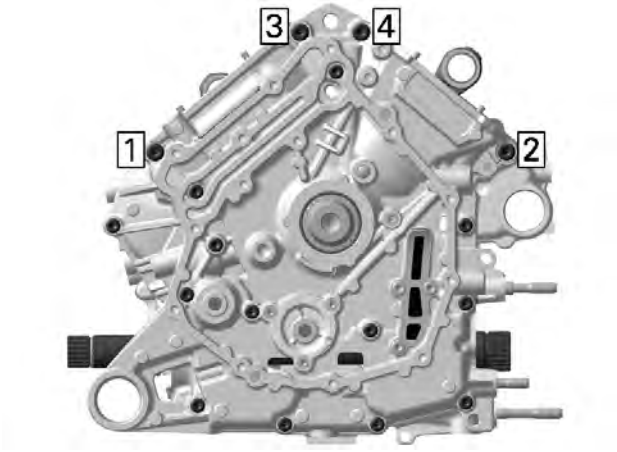

M8 SCREWS TIGHTENING SEQUENCE

Tightening Torque	
M8 crankcase screws	25 ± 3 Nm (18 ± 2 lbf-ft)

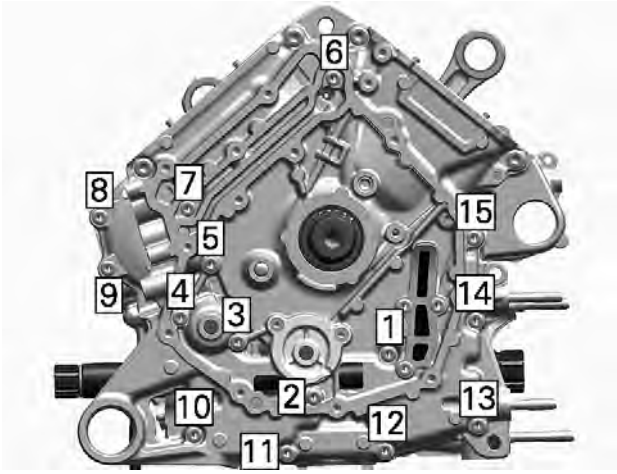

M6 SCREWS TIGHTENING SEQUENCE

Tightening Torque	
M6 crankcase screws	10 ± 1 Nm (89 ± 9 lbf-in)

Crankshaft

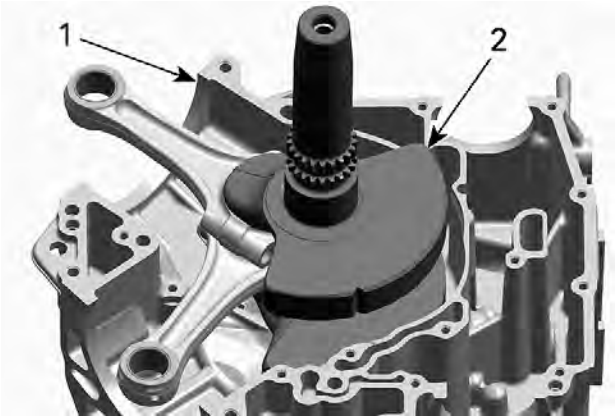

1. *Crankcase MAG*
2. *Crankshaft*

Crankshaft Locking Procedure

NOTE: When crankshaft is locked, the rear piston no. 2 is at TDC. Crankshaft can not be locked at piston no.1 TDC.

NOTICE
To see if the rear piston no. 2 is at TDC ignition refer to *Camshaft Timing Gears* in *Timing Chain*.

1. Remove spark plug cables and spark plugs of both cylinders.
2. Remove parts to get access to the MAG-side crankshaft bolt.
3. Remove the magneto cover plug screw and its O-ring.

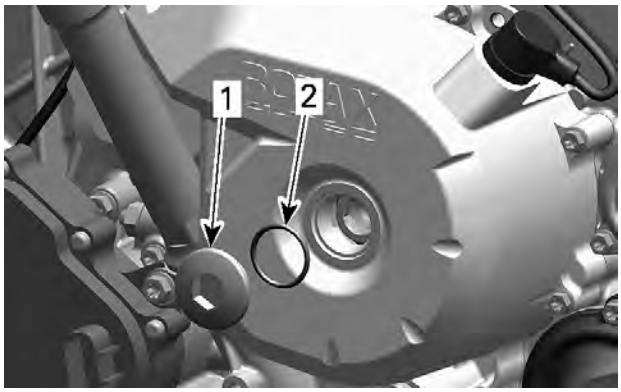

1. *Plug screw*
2. *O-ring*

4. Remove the crankshaft position sensor.

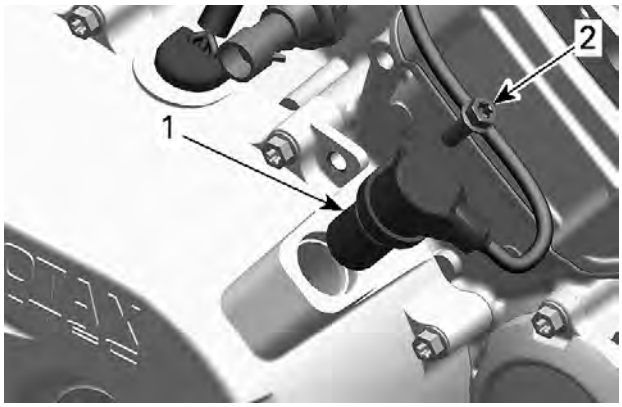

TYPICAL
1. *Crankshaft position sensor*
2. *Screw*

5. Remove the plug screw located under the oil cooler and discard the sealing ring.

1. *Sealing ring*
2. *Plug screw*
3. *Crankcase PTO side, front side*

6. Turn crankshaft until piston no. 2 is at TDC.

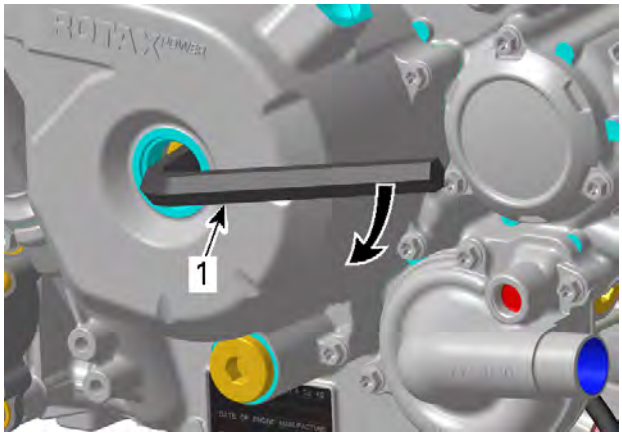

1. *Allen key 14 mm*

7. When rear piston is at TDC marks on magneto flywheel “2” and on the magneto cover are aligned.

1. *Mark "2" on magneto flywheel*
2. *Notch on magneto cover*
3. *Crankshaft position sensor location*

8. Use a screwdriver to check if the groove in the crankshaft is aligned with the hole.

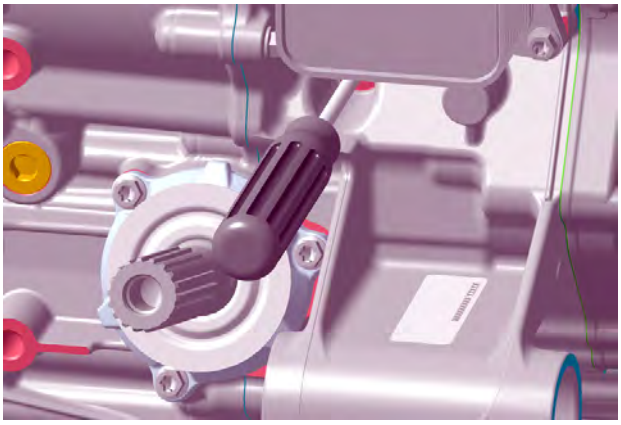

9. Lock crankshaft.

Crankshaft locking bolt (P/N 529035617)	

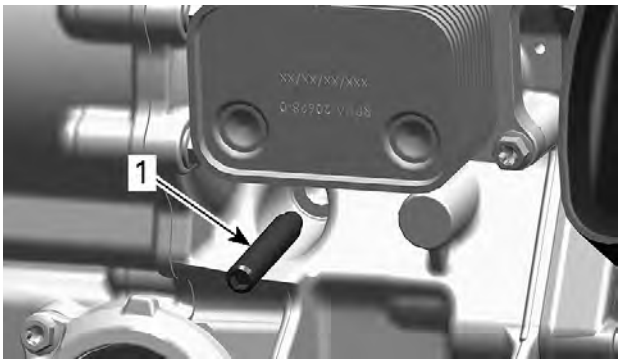

1. *Crankshaft locking bolt*

10. Gradually insert the tool in the crankshaft groove. Make sure that the tool tip enters the groove and does not jam on the crankshaft balancer surface.

Removing the Crankshaft

1. Refer to *Crankcase*.

Inspecting the Crankshaft

1. Check each bearing journal of crankshaft for scoring, scuffing, cracks or other signs of wear.
2. Replace crankshaft if the gears are worn or otherwise damaged.

NOTICE

Components out of specifications always have to be replaced. If this is not observed, severe damage may be caused to the engine.

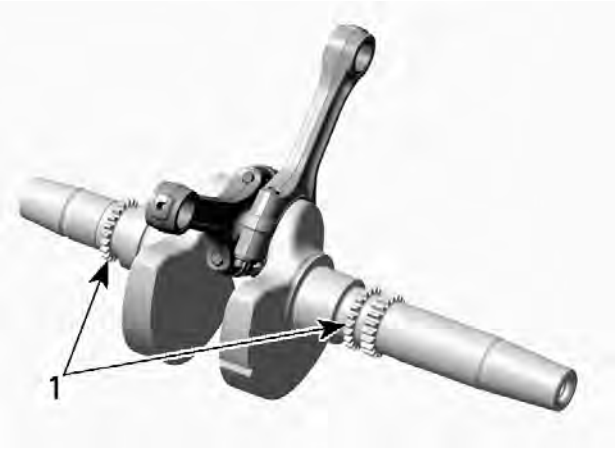

1. *Crankshaft timing gears*

Crankshaft Axial Play

NOTE: Axial play needs to be measured before splitting the crankcase.

1. Measure play on PTO end, using a dial indicator.

Crankshaft Axial Play	
New	0.200 to 0.500 mm (.008 to .02 in)
Service limit	0.600 mm (.024 in)

2. If play is out of specification, replace crankcase and/or crankshaft.

Connecting Rod Big End Axial Play

1. Using a feeler gauge, measure distance between butting face of connecting rods and crankshaft counterweight. If the distance exceeds specified tolerance, replace the crankshaft.

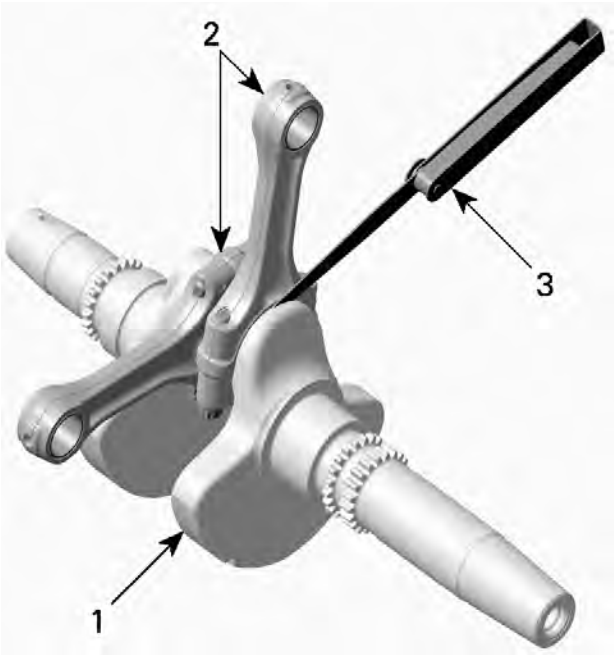

1. *Crankshaft*
2. *Connecting rods*
3. *Feeler gauge*

Connecting Rod Big End Axial; Play	
New	0.250 to 0.550 mm (.01 to .022 in)
Service limit	0.600 mm (.024 in)

Connecting Rod/Piston Pin Clearance

1. Refer to *Cylinder Head*.

Connecting Rod Big End Radial Play

1. Prior to remove connecting rod from the crankshaft, mark big end halves together to ensure a correct reinstallation (cracked surface fits in only one position).
2. Remove connecting rods from crankshaft.

NOTICE

Connecting rod screws are not reusable. Always discard screws and replace by NEW ones. It is recommended to install new plain bearings when reinstalling connecting rods.

1. *Connecting rod screws*

3. Measure crankpin. Compare to inside diameter of connecting rod big end.

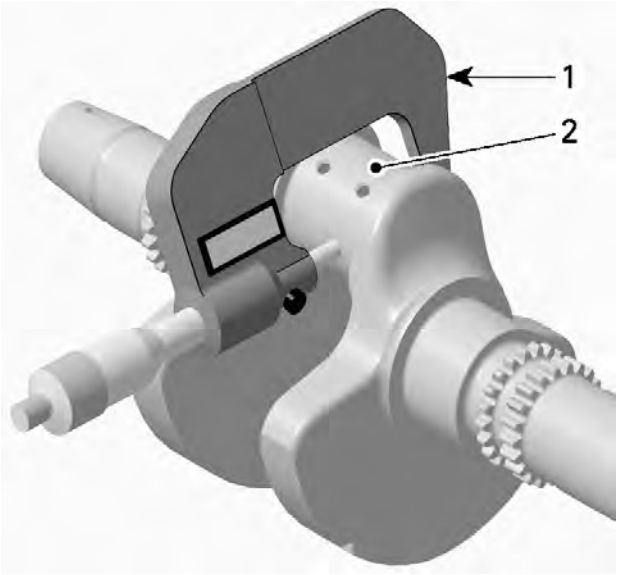

1. *Micrometer*
2. *Crankpin area for plain bearing*

Crankpin Diameter	
New	41.986 to 42.010 mm (1.653 to 1.6539 in)
Service limit	41.967 mm (1.6522 in)

4. If the crank pin diameter is out of specification, replace crankshaft.
5. Install the OLD plain bearings in the connecting rod as they were mounted initially.
6. Using the OLD connecting rod screws, assemble the connecting rod.

MEASURE AT 3 DIFFERENT POSITIONS

Connecting Rod Big End Diameter	
Service limit	42.100 mm (1.6575 in)

7. If connecting rod big end diameter is out of specification, replace plain bearings and recheck.

Connecting Rod Big End Radial Clearance	
Service limit	0.09 mm (.0035 in)

8. If connecting rod big end radial clearance is out of specification, replace plain bearings and recheck.

Crankshaft Radial Play MAG/PTO Side

1. Measure crankshaft on MAG/PTO side.
2. Compare to inside diameter of MAG/PTO plain bearing, refer to *Crankcase*).

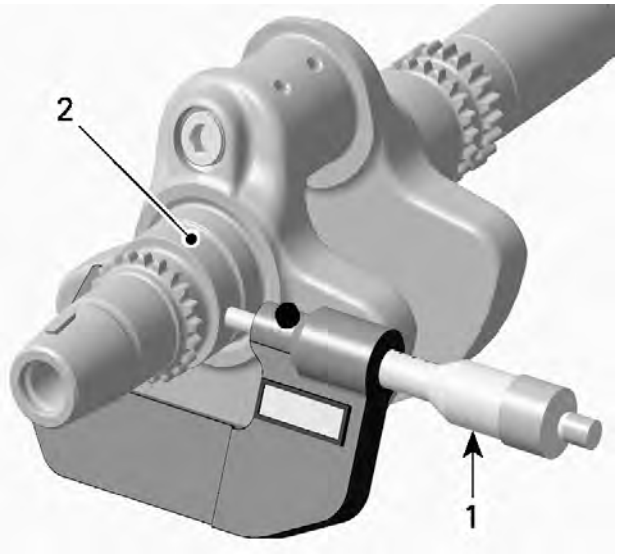

1. Micrometer
2. Crankshaft area for MAG plain bearing

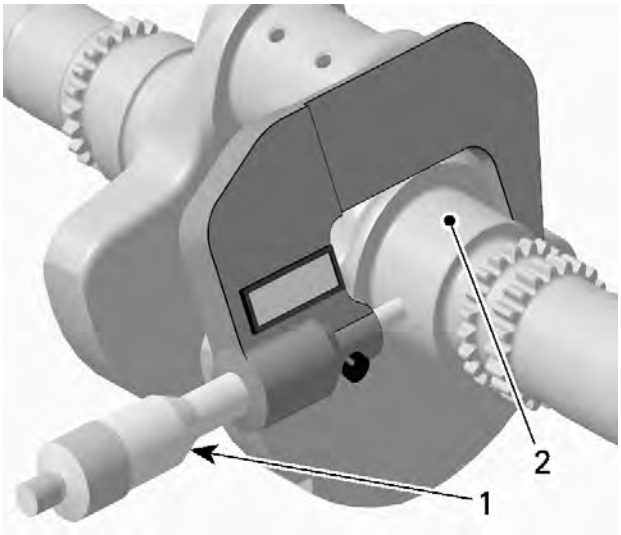

1. Micrometer
2. Crankshaft area for PTO plain bearing

Crankshaft Main Bearing Journal Diameter (MAG and PTO)	
New	42.016 to 42.040 mm (1.6542 to 1.6551 in)
Service limit	42.000 mm (1.6535 in)

Crankshaft Radial Play ('AG and PTO)	
Service limit	0.07 mm (.0028 in)

Crankshaft Radial Play (PTO Cover Bearing)

1. Measure crankshaft journal diameter (PTO cover bearing).
2. Compare to plain bearing inside diameter (PTO cover), refer to *PTO Cover*.

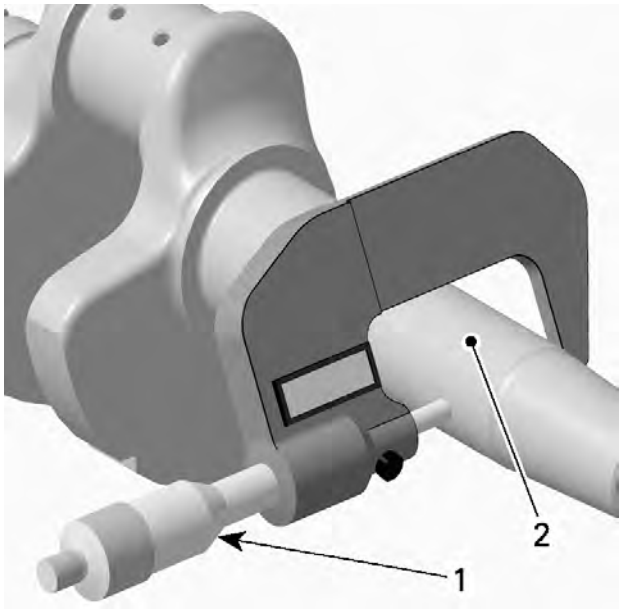

1. Micrometer
2. Crankshaft journal (PTO support bearing)

Crankshaft Journal Diameter (PTO Cover Bearing)	
New	34.004 to 34.020 mm (1.3387 to 1.3394 in)
Service limit	33.998 mm (1.3385 in)

Crankshaft Radial Play (PTO Cover Bearing)	
Service limit	0.10 mm (.0039 in)

3. If crankshaft journal diameter is out of specification, replace crankshaft.

4. If crankshaft radial play (PTO cover bearing) out of specification, replace plain bearings and recheck.

Assembling the Crankshaft

The assembly is the reverse of the disassembly procedure. However, pay attention to following details.

NOTICE

Strictly adhere following instructions:

- **Do not apply any threadlocker.**
- **The running direction of the big end bearings and of the piston pins must not change.**
- **Always perform each step on both connecting rod screws before going to the next step.**
- **Failure to strictly follow procedure may cause connecting rod screws to loosen and lead to severe engine damage.**

1. Clean the split surface on both sides (cracked area) carefully with compressed air.
2. Put plain bearings correctly in place.

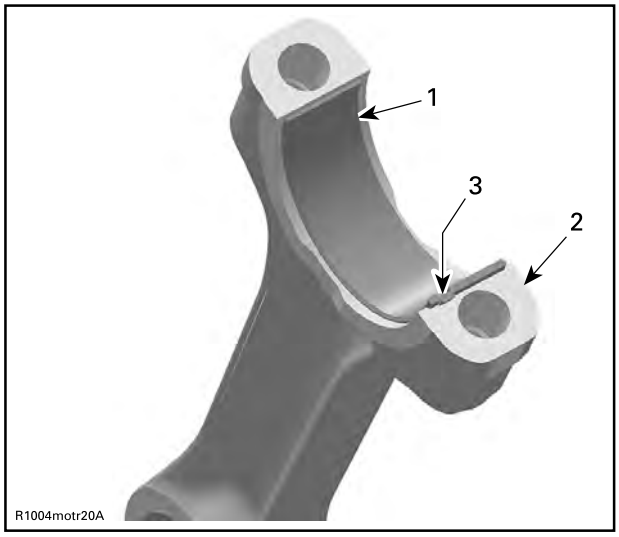

1. Half plain bearing of connecting rod big end
2. Split surface of the connecting rod
3. Nose of plain bearing in line with connecting rod groove

3. Oil the plain bearing surface of the connecting rod and crank pin before installation.

NOTICE

Lower cap and rod must match together since there is a cracked surface.

4. Oil **NEW** connecting rod screws.

NOTICE

Always use NEW connecting rod screws at final assembly. They are not reusable.

5. Thread screws in the connecting rods, then tighten as per following procedure.

NOTE: NEW connecting rods can be installed either way.

Tightening Torque Sequence	
1.	Tighten to 1/2 of specified torque
2.	Tighten to 20 ± 2 Nm (15 ± 1 lbf-ft)
3.	Torque by an additional 60 ± 5° turn using an angle torque wrench

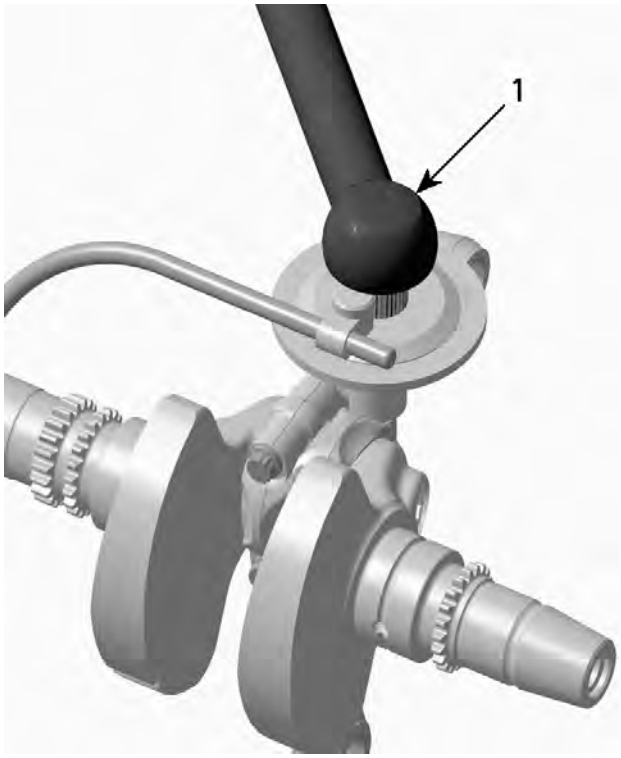

1. Angle torque wrench

Installing the Crankshaft

The installation is the reverse of the removal procedure. However, pay attention to the following.

1. Do not mix up the connecting rods of cylinders 1 and 2 during installation.

NOTICE

Observe the correct installation position when fitting the crankshaft with the connecting rods. The connecting rod MAG side has to face cylinder no. 1.

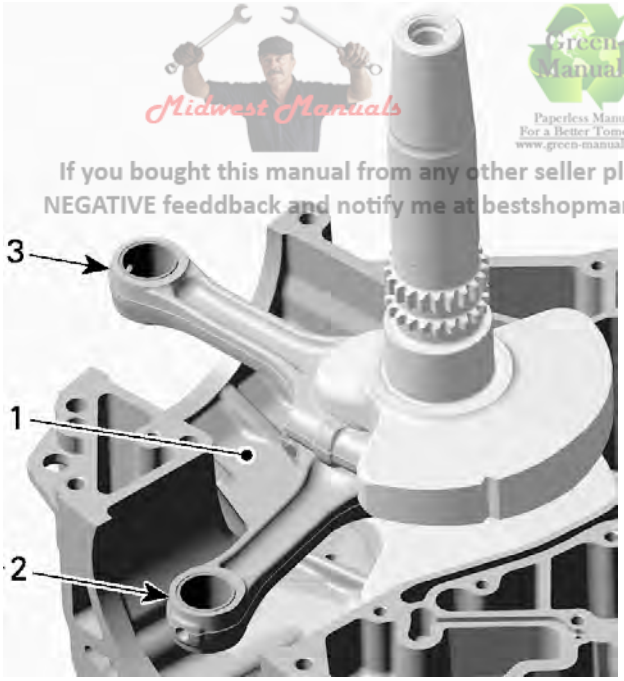

Midwest Manuals
Green Manuals
Paperless Manuals
For a Better Tomorrow
www.green-manuals.com
If you bought this manual from any other seller please leave them
NEGATIVE feeddback and notify me at bestshopmanuals@gmail.com

1. *Crankcase half MAG side*
2. *Connecting rod cylinder 1*
3. *Connecting rod cylinder 2*

CONTINUOUSLY VARIABLE TRANSMISSION

02 Continuously Variable Transmission

Exploded View and General Warnings

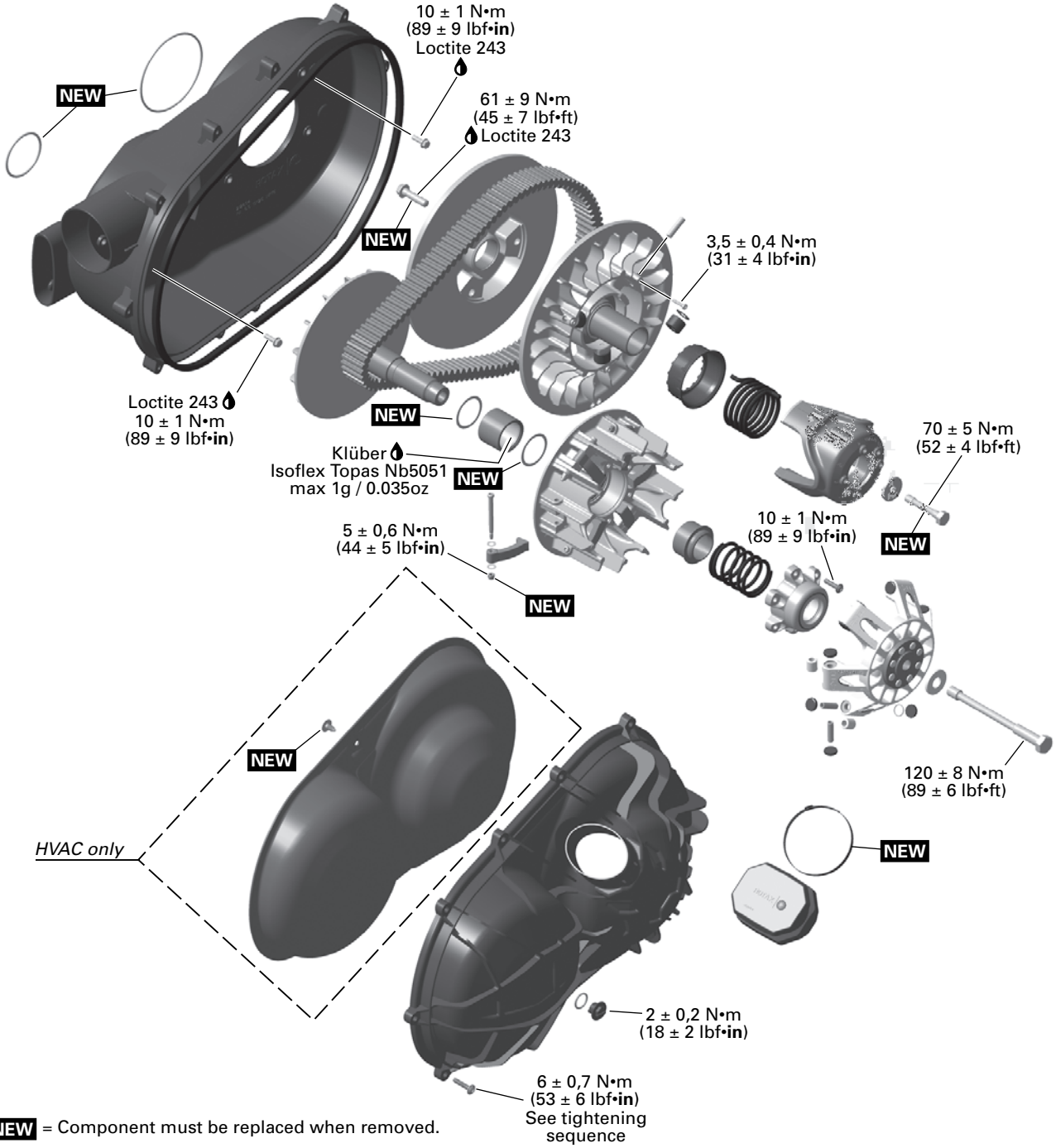

NEW = Component must be replaced when removed.

For a better understanding, the following illustrations are taken with engine out of vehicle. To perform the following instructions, it is not necessary to remove engine.

This CVT is lubrication free. Never lubricate any components except drive pulley hub.

⚠ WARNING

Never touch CVT while engine is running. Never drive vehicle when CVT cover is removed.

⚠ WARNING

Any drive pulley repairs must be performed by an authorized Can-Am dealer. Subcomponent installation and assembly tolerances require strict adherence to procedures detailed.

⚠ WARNING

The clutch assembly is a precisely balanced unit. Never replace parts with used parts from another clutch assembly.

CVT Air Filter

CVT air filter inspection and cleaning frequency should be adjusted according to riding conditions as it is critical to ensure proper engine performance and life span.

CVT Air filter inspection and cleaning frequency must be increased for the following severe riding conditions:

– Riding on dry sand.
– Riding on dry dirt covered surfaces.
– Riding on dry gravel trails or similar conditions.
– Riding in areas with high concentration of seeds or crop husks.
– Riding in severe snow conditions.

NOTE: Riding in a group in these conditions would increase even more the air filter replacement requirement.

Removing the CVT Air Filter

1. Tilt the cargo box.
2. Press the filter tabs to release it.

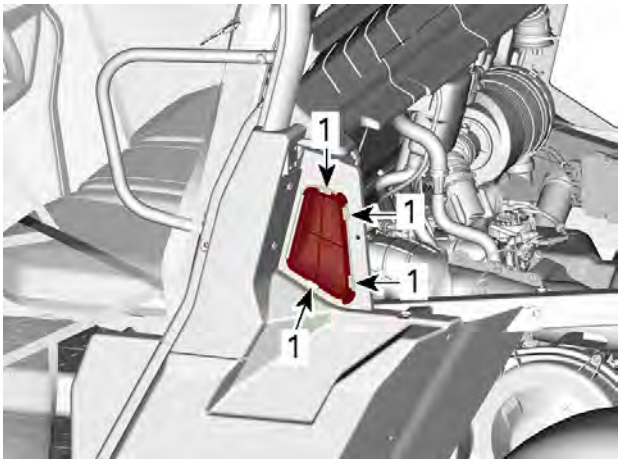

1. Press here

Cleaning the CVT Air Filter

1. Inspect filter and replace if damaged.
2. Gently clean using a solution of soft soap and water, then rinse filter.
3. Gently shake off excess water and allow filter to dry at room temperature.
4. Clean inside the CVT air inlet end.

Installing the CVT Air Filter

1. The installation is the reverse of the removal procedure.

CVT Cover

Draining the CVT Cover

NOTICE

If any debris entered the CVT cover, CVT must be cleaned and inspected.

1. Turn bayonet cap 90° counterclockwise to open it.
2. Remove bayonet cap and O-ring.

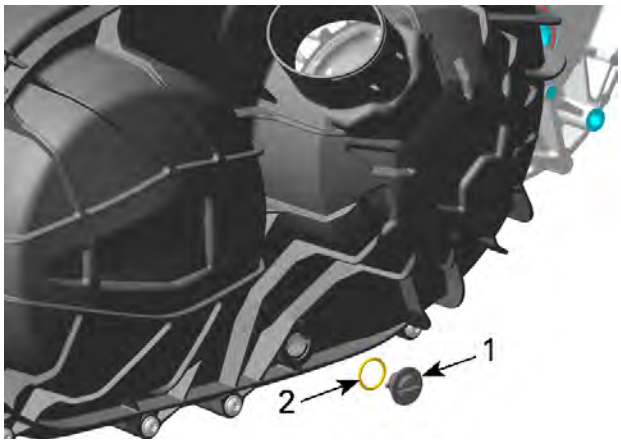

1. Bayonet cap
2. O-ring

3. Let water drain from CVT cover.
4. Reinstall bayonet cap and O-ring.

Tightening Torque	
Bayonet cap	2 ± 0.2 Nm (18 ± 2 lbf-in)

Removing the CVT Cover

1. Detach CVT inlet and outlet tubes from the CVT cover.
2. Remove CVT cover screws. Remove the center top screw last to support the cover during removal.

NOTICE

Do not use and impact tool to remove CVT cover screws.

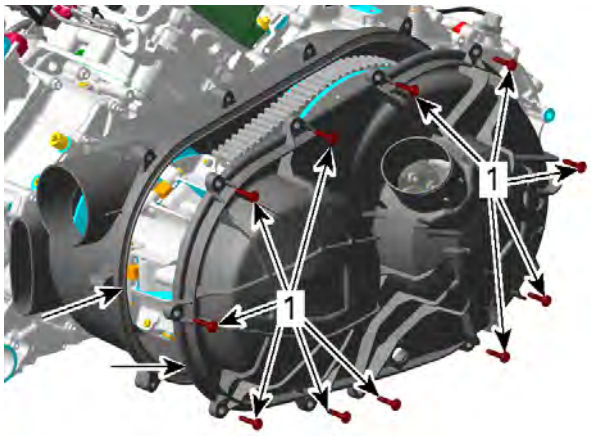

1. Retaining screws
2. CVT cover
3. Gasket

3. Pull out the cover.

Inspecting the CVT Cover

1. Check if sound absorber mat is damaged. Replace if necessary.

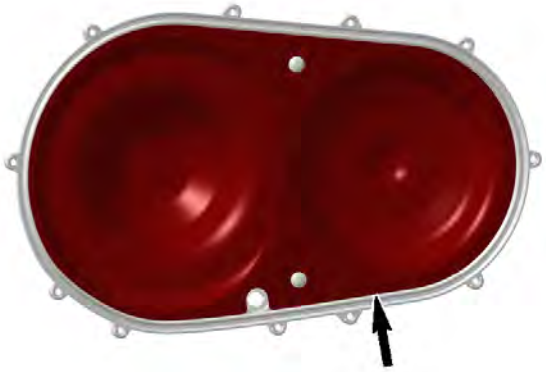

Cleaning the CVT Air Inlet/Outlet

1. Remove CVT cover, refer to procedure in this subsection.
2. Inspect and clean the air inlet and outlet openings from inside the CVT air guide.

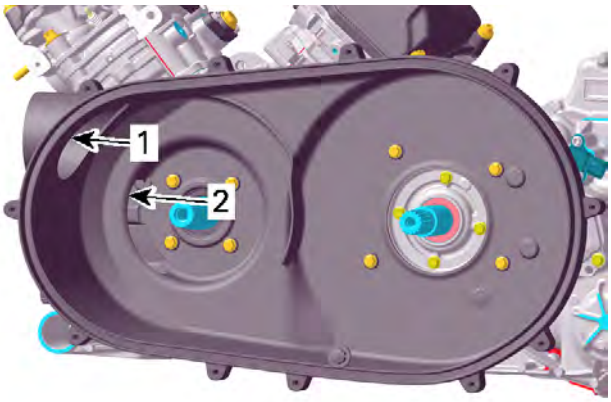

1. *CVT air inlet*
2. *CVT air outlet*

3. Remove CVT air filter, refer to *Removing CVT Air Filter*.
4. Inspect and clean the CVT air inlet end.

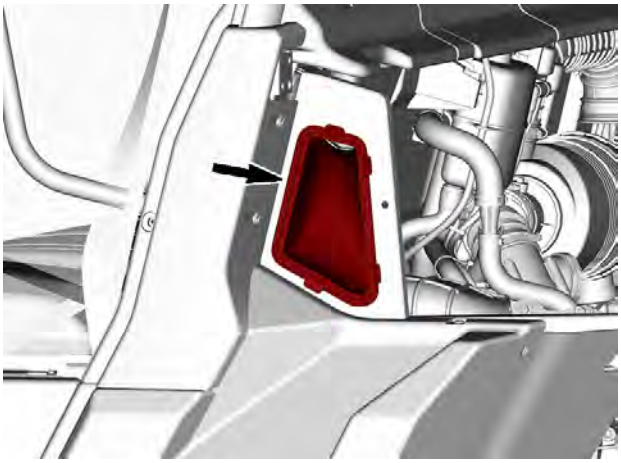

NOTE: If a lot of debris or grime are found in the CVT system, it may be necessary to remove the ducts and thoroughly clean them.

5. Install air inlet baffle.
6. Install CVT air filter, refer to *Installing CVT Air Filter*.
7. Install CVT cover, refer to *Continuously Variable Transmission (CVT)* subsection.

Installing the CVT Cover

1. Install the center top screw of first.
2. Tighten the CVT cover retaining screws as per following sequence.

Tightening Torque	
CVT cover retaining screws	6 ± 0.7 Nm (53 ± 6 lbf-in)

3. Install CVT inlet and outlet tubes.

Drive Belt

SERVICE TOOLS

Description	Part Number	Page
BEARING PIN EXTRACTOR	(P/N 529036458)	127
CLUTCH HOLDER	(P/N 529036496)	113, 125, 130
DRIVE PULLEY PULLER	(P/N 529000064)	113
DRIVEN PULLEY ADAPTER	(P/N 708200720)	111, 125
DRIVEN PULLEY SPACER	(P/N 529036351)	126
GOVERNOR CUP PULLER	(P/N 529036350)	114
PULLER/LOCKING TOOL	(P/N 529000088)	111, 125
PULLEY SPRING COMPRESSOR TOOL	(P/N 529036012)	117, 126

Removing the Drive Belt

NOTICE

In case of a drive belt failure, the CVT, cover and air outlet must be cleaned.

1. Remove the CVT cover.
2. Screw in the driven pulley adapter into the driven pulley shaft.

Driven pulley adapter (P/N 708200720)	

3. Screw in the puller/locking tool into the threaded offset hole of the adapter.

Puller/locking tool (P/N 529000088)	

4. Tighten the puller/locking tool to open the pulley.

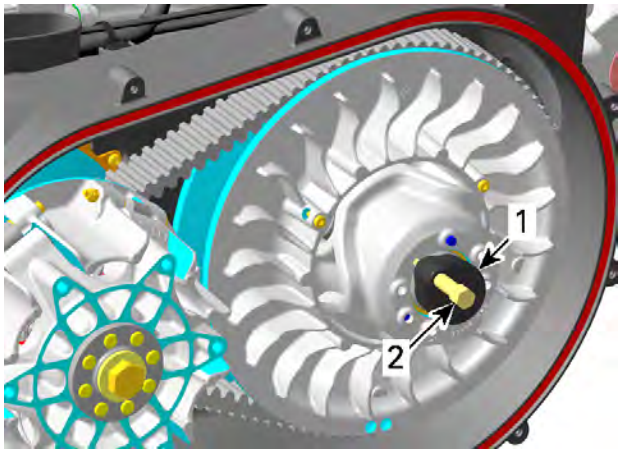

1. Driven pulley adapter
2. Puller/locking tool

5. To remove belt, slip the belt over the top edge of fixed sheave, as shown.

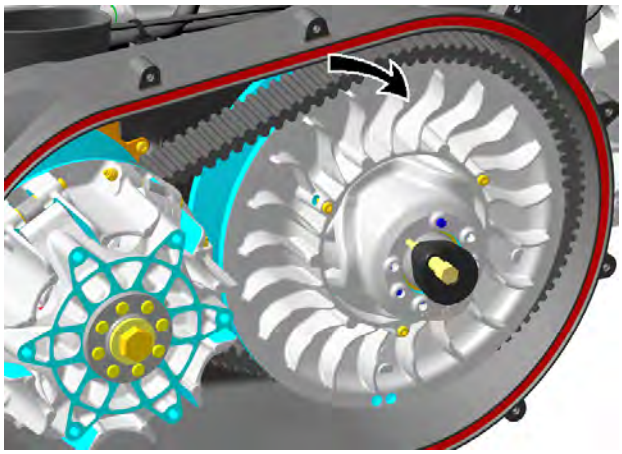

Inspecting the Drive Belt

1. Remove drive belt, refer to procedure in this subsection.
2. Inspect belt for cracks, fraying or abnormal wear. Replace if necessary.
3. Check drive belt width at cord level. Replace if it is out of specification.

Drive Belt Width	
Service limit	34.8 mm (1.37 in)

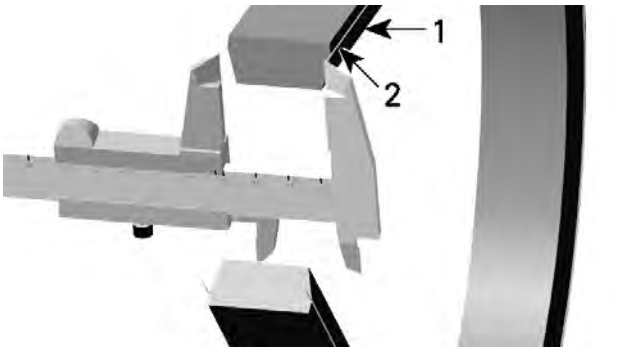

1. Drive belt
2. Cord in drive belt

Installing the Drive Belt

For installation, reverse the removal procedure. Pay attention to following details.

1. The maximum drive belt life span is obtained when the drive belt has the proper rotation direction. Install it so that the arrow printed on belt is pointing towards front of the vehicle, viewed from top.

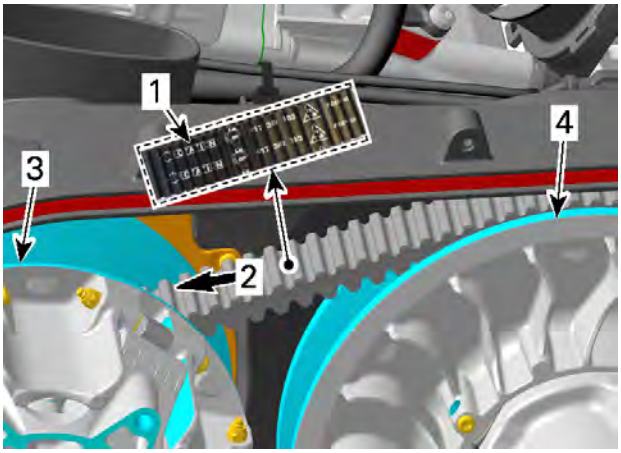

1. Arrow printed on belt
2. Rotation direction
3. Drive pulley (front)
4. Driven pulley (rear)

Drive Pulley

SERVICE TOOLS

Description	Part Number	Page
BEARING PIN EXTRACTOR	(P/N 529036458)	127
CLUTCH HOLDER	(P/N 529036496)	113, 125, 130
DRIVE PULLEY PULLER	(P/N 529000064)	113
DRIVEN PULLEY ADAPTER	(P/N 708200720)	111, 125
DRIVEN PULLEY SPACER	(P/N 529036351)	126
GOVERNOR CUP PULLER	(P/N 529036350)	114
PULLER/LOCKING TOOL	(P/N 529000088)	111, 125
PULLEY SPRING COMPRESSOR TOOL	(P/N 529036012)	117, 126

SERVICE PRODUCTS

Description	Part Number	Page
CLUTCH AND PULLEY FLANGE CLEANER PRO S1		118, 122, 129
ISOFLEX GREASE TOPAS NB 5051		123
LOCTITE 243 (BLUE)		132
XPS BRAKES AND PARTS CLEANER		130

Removing the Drive Pulley

1. Remove the drive belt.
2. Prior to removing the drive pulley, mark sliding sheave and governor cup to ensure correct indexation at reinstallation.

1. Mark on drive pulley sliding sheave
2. Mark on governor cup

3. Lock the drive pulley.

Clutch holder (P/N 529036496)	

4. Loosen the drive pulley screw.

NOTICE

Never use any type of impact wrench for drive pulley removal.

NOTE: Do not unscrew the drive pulley screw completely.

5. Remove the clutch holder tool.
6. Press and hold the governor cup in place while replacing the drive pulley screw and its washer with the drive pulley puller.

Drive pulley puller (P/N 529000064)	

NOTICE

Use only this tool recommended tool.

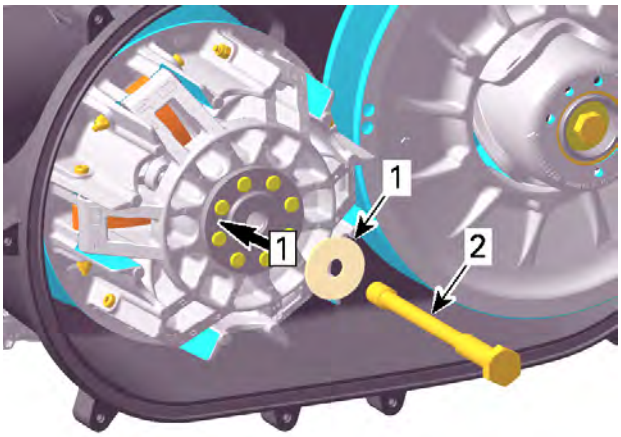

Step 1. Push
1. Spring washer
2. Drive pulley screw

7. Screw in the drive pulley puller to disengage the drive pulley.
8. Remove the drive pulley by pulling on it.

Disassembling the Drive Pulley

Drive Pulley - Governor Cup without Threaded Holes

1. Screw clutch puller into fixed sheave shaft about 63 mm (2-1/2 in).
2. Raise drive pulley by the sliding sheave while knocking on the puller head to disengage fixed sheave.

NOTICE

Never tap directly on the governor cup.

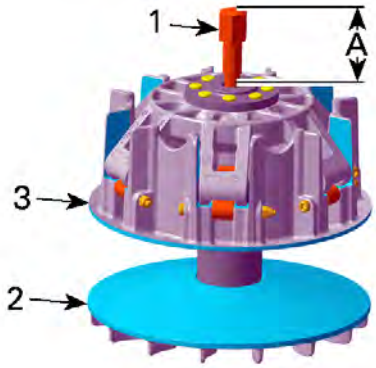

A. Maximum protrusion of 63 mm (2-1/2 in)
1. Clutch puller
2. Fixed sheave
3. Sliding sheave

Drive Pulley - Governor Cup with Threaded Holes

1. Screw clutch puller into fixed sheave shaft (maximum protrusion of 63 mm (2-1/2 in)).

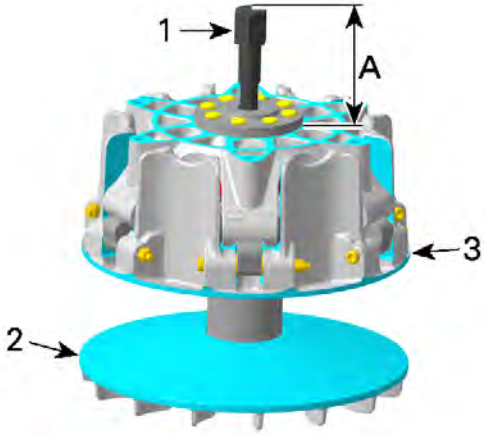

A. Maximum protrusion of 63 mm (2-1/2 in)
1. Clutch puller
2. Fixed sheave
3. Sliding sheave

2. Place the governor cup puller on governor cup.

Governor cup puller (P/N 529036350)	

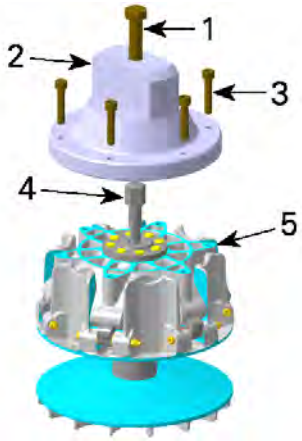

1. M16 x 80 puller screw
2. Governor cup puller
3. M8 x 35 puller retaining screws
4. Clutch puller
5. Governor cup

NOTICE

Ensure that the hexagonal head of the clutch puller engages in the slot of the governor cup puller.

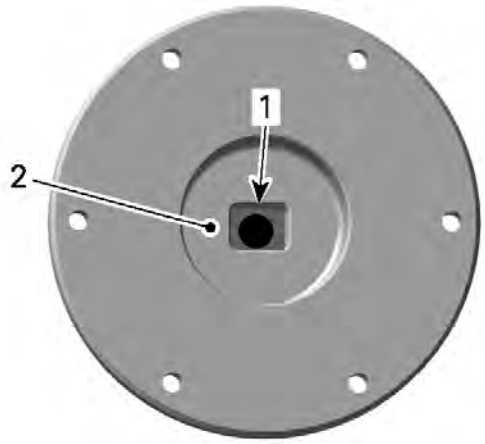

1. *Slot*
2. *Inner side of puller*

3. Tighten M8 x 35 puller retaining screws.

Tightening Torque	
M8 x 35 puller retaining screws	20 ± 2 Nm (15 ± 1 lbf-ft)

4. Put the governor cup puller into a vice and screw in the M16 x 80 puller screw.

SCREW IN M16 X 80 PULLER SCREW

⚠ CAUTION
The fixed sheave will bounce up.

5. Remove the governor cup puller from the drive pulley.

Governor Cup

1. Carefully lift governor cup until slider shoes come at their highest position into guides.

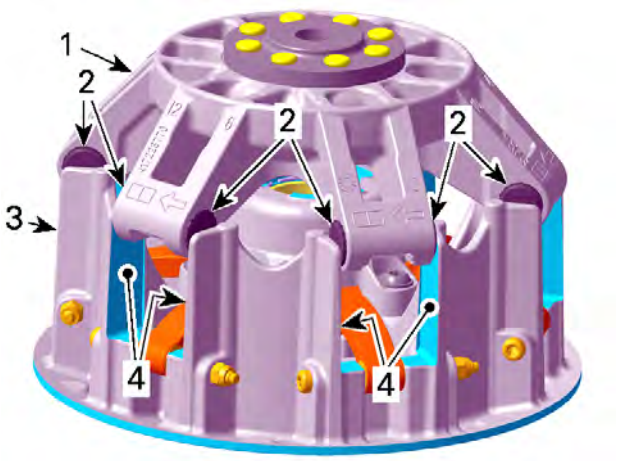

1. *Governor cup*
2. *Slider shoes*
3. *Sliding sheave*
4. *Guides*

NOTE: The following procedure is not necessary except if roller must be removed, refer to *Inspecting the Drive Pulley* before proceeding.

2. Remove slider shoes out of each bearing sleeve. Use a flat screwdriver if necessary.

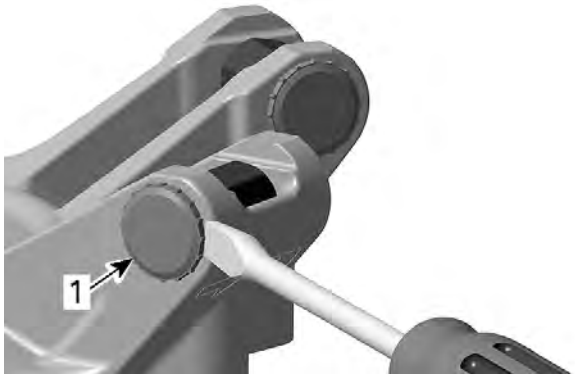

1. *Slider shoe*

3. Put governor cup on a vice to push out bearing sleeve of roller in the foreseen direction (against arrow). Use an appropriate punch (diameter of punch must be smaller than the bearing sleeve diameter).

NOTICE

Do not clamp the governor cup in the vice to push out bearing sleeve. Governor cup will be damaged.

NOTE: Use protection plates to avoid marks and/or damages to the governor cup.

NOTICE

Always replace all rollers at the same time. Partly worn rollers may cause damage to the CVT system.

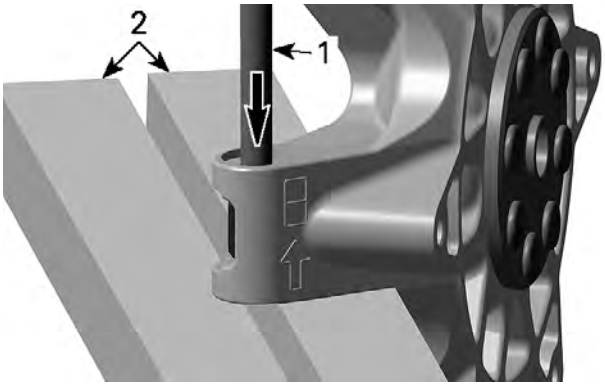

1. *Punch*
2. *Vice*

1. *Removal direction*
2. *Assembly direction*

4. Whenever replacing the roller sleeves, make a mark in the box on the governor arm using a punch.

NOTICE

Do not tap too hard. Severe damage to the governor cup may appear.

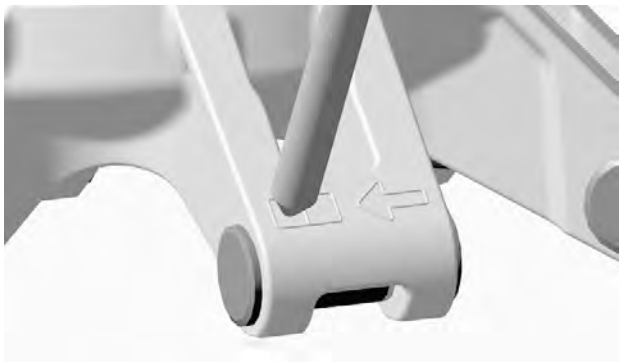

5. Whenever removing a governor cup with already two marked boxes replace it by a **NEW** one.

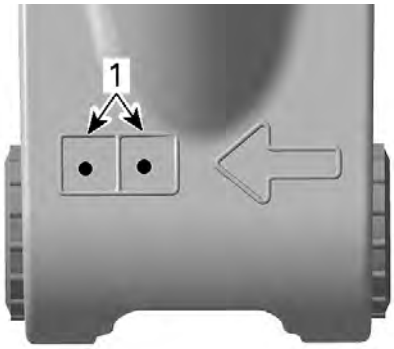

1. *Marked boxes*

Sliding Sheave

NOTE: The following procedure is not necessary except if centrifugal lever and/or sliding plates (if applicable) must be removed. Refer to *INSPECTION* before proceeding.

1. Remove:
   - Lock nut
   - Centrifugal lever pivot bolt
   - Centrifugal lever
   - Thrust washers.

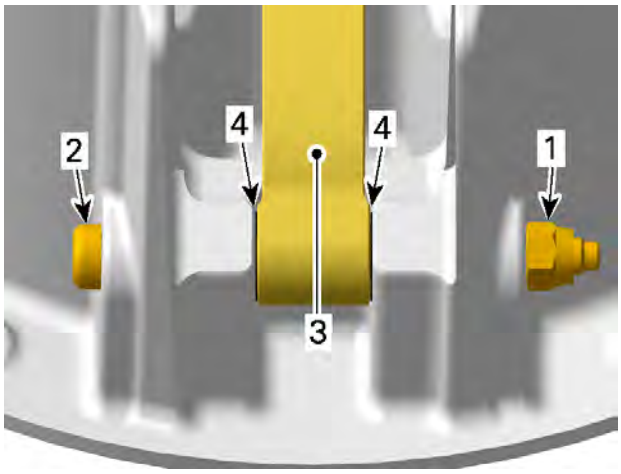

1. *Lock nut*
2. *Centrifugal lever pivot bolt*
3. *Centrifugal lever*
4. *Thrust washers*

2. Remove spring cover.

Pulley spring compressor tool (P/N 529036012)	

⚠ CAUTION

Spring cover is under high clutch spring preload. Never attempt to remove spring cover without the recommended tools.

3. Install support guide of spring compressor in a vice.

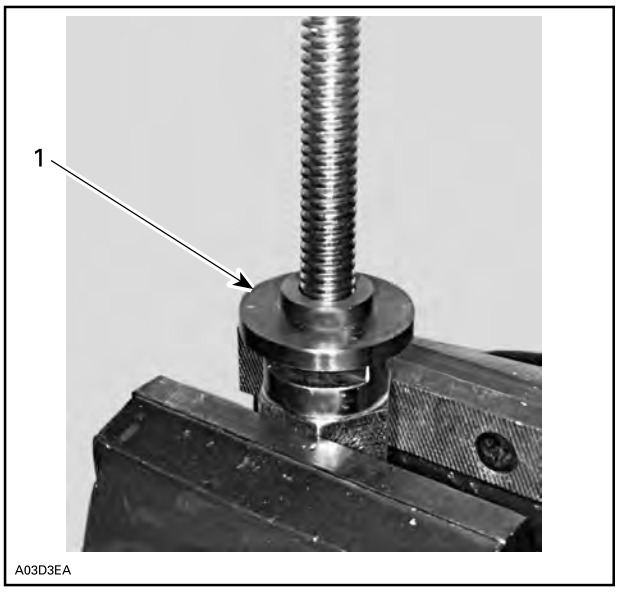

NOTE: The support guide will prevent bushing damage.

4. Place sliding sheave on support guide.
5. Place support cup over spring cover and tighten nut.
6. Remove spring cover screws.

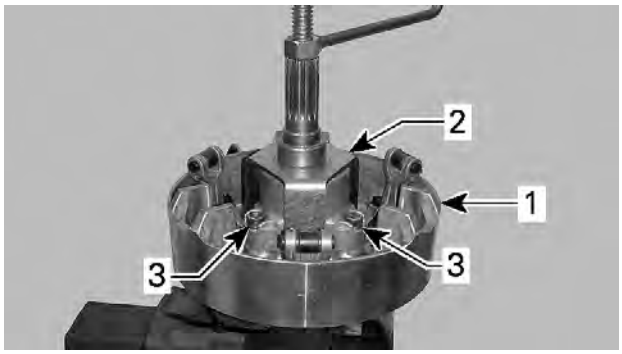

TYPICAL
1. *Sliding sheave*
2. *Support cup*
3. *Spring cover screws*

7. Remove service tool.
8. Remove the following components from the sliding sheave.

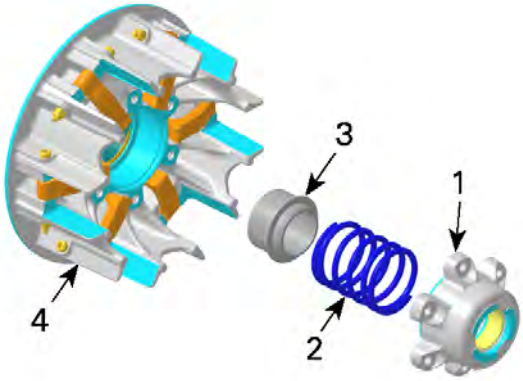

1. *Spring cover*
2. *Spring*
3. *Spring seat*
4. *Sliding sheave*

Fixed Sheave

1. Remove the following components from the fixed sheave.

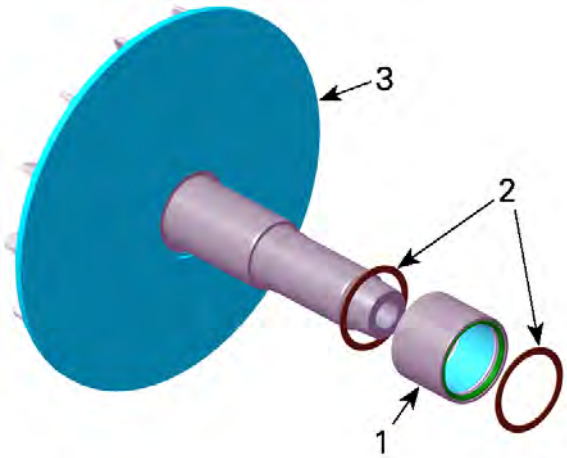

1. *Hub*
2. *Thrust washers*
3. *Fixed sheave*

Cleaning the Drive Pulley

1. Clean pulley faces and shaft with fine steel wool and dry cloth.

Clutch and pulley flange cleaner PRO S1

2. Using a paper towel with cleaning solvent, clean:
   - Crankshaft tapered end
   - Crankshaft threads
   - Taper on the fixed sheave
   - Threads of drive pulley screw.

NOTICE
Avoid contact between cleaner and crankshaft seal because damage may occur.

3. Remove all hardened oil deposits that have baked on crankshaft and pulley tapered surfaces with coarse or medium steel wool and/or sand paper no. 600.

NOTICE
Do not use any other type of abrasive.

4. Reclean mounting surfaces with paper towel and cleaning solvent.
5. Wipe off the mounting surfaces with a clean, dry paper towel.

NOTICE
Mounting surfaces must be free of any oil, cleaner or towel residue.

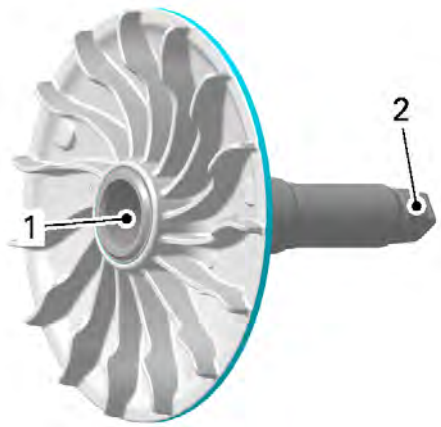

1. *Taper of fixed sheave, crankshaft side*
2. *Tapered end of fixed sheave shaft*

6. Only use petrol base cleaner when cleaning bushings of sliding sheave.

NOTICE
Do not use acetone to clean bushing.

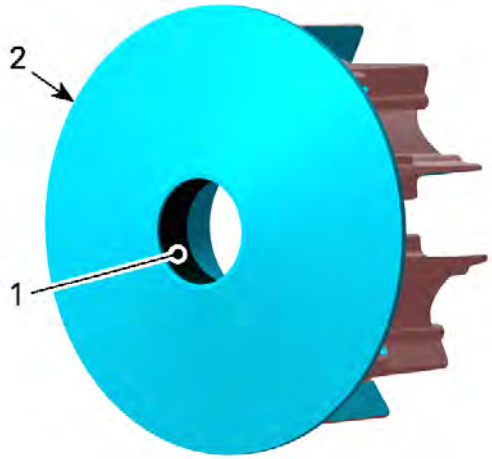

1. *Bushing*
2. *Sliding sheave*

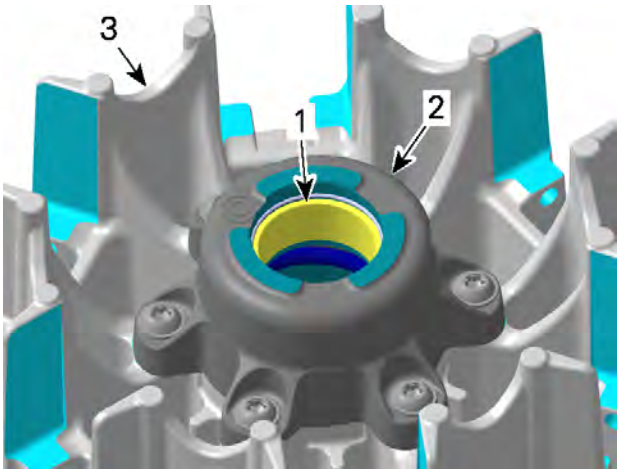

1. *Bushing*
2. *Spring cover*
3. *Sliding sheave*

Inspecting the Drive Pulley

Bushings

1. For bushing inspection, refer to *Sliding Sheave and Spring Cover*.

Governor Cup

1. Check governor cup for cracks or other visible damage. Replace if necessary.

Round Type Roller

NOTICE

When replacing rollers, always replace all rollers and all slider shoes at the same time.

1. Check if rollers move freely.
2. Check roller outer width and inner diameter, replace if it is out of specification.

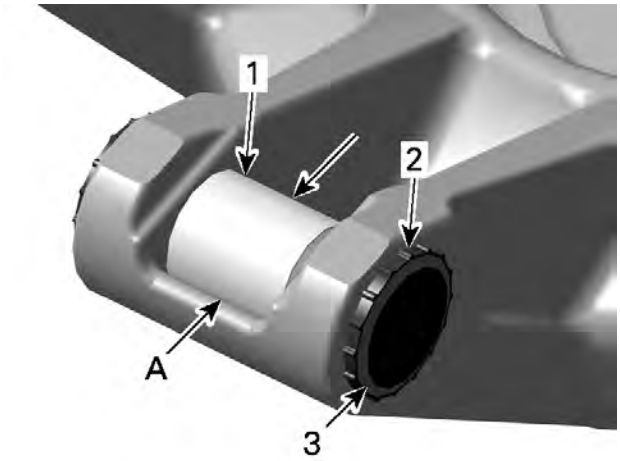

1. *Roller*
2. *Slider shoe*
3. *Chamfer*

A. *Roller outer diameter*

Roller Outer Diameter	
New	13.80 to 14.00 mm (.543 to .551 in)
Service limit	13.20 mm (.52 in)

Roller Inner Diameter	
New	8.025 to 8.175 mm (.3159 to .3219 in)
Service limit	9.000 mm (.3543 in)

Hexagonal Type Roller

NOTICE

When replacing rollers, always replace all rollers and all slider shoes at the same time.

1. Check if rollers move freely.
2. Check roller outer width and inner diameter, replace if it is out of specification.

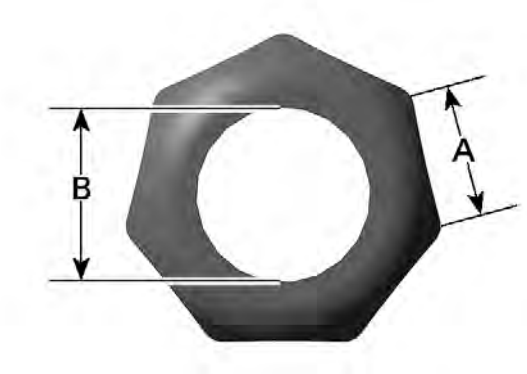

A. *Roller flat spot width*
B. *Roller inner diameter*

Roller Flat Spot Width	
Service limit	8.50 mm (.335 in)

Roller Inner Diameter	
New	8.025 to 8.175 mm (.3159 to .3219 in)
Service limit	9.000 mm (.3543 in)

Sliding Sheave and Slider Shoes

NOTICE

Always replace all slider shoes and O-rings at the same time.

1. Check slider shoes for visible wear. If chamfer is worn out, replace slider shoes and O-rings.

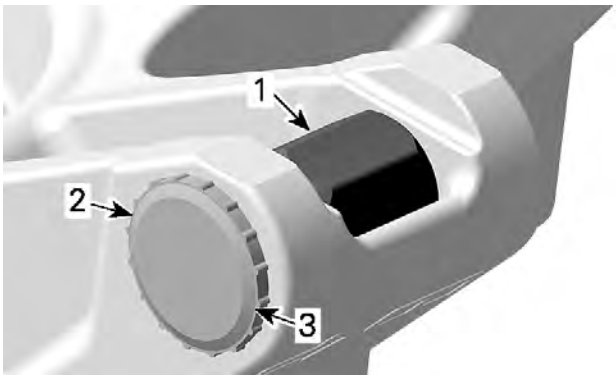

1. Roller
2. Slider shoe
3. Chamfer

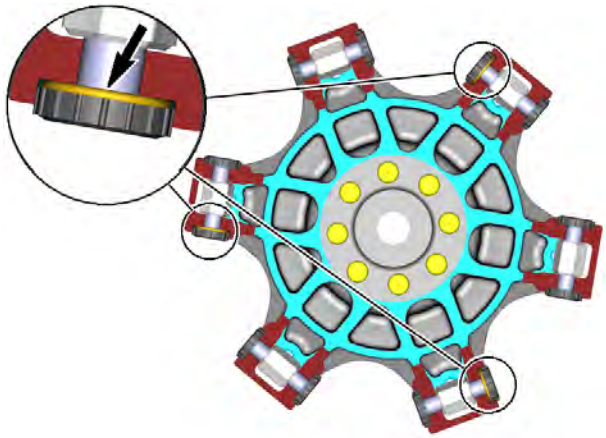

3 O-RINGS AT 120°

2. Measure the gap between slider shoes and guides with slider shoe at their lowest position into guides

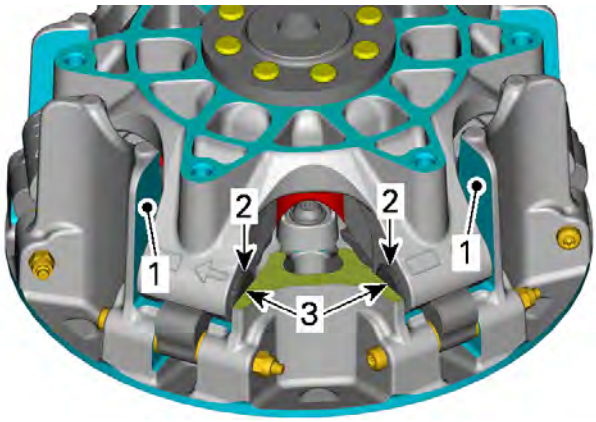

SLIDER SHOES AT LOWEST POSITION
1. Guides
2. Slider shoes
3. Measure here

Gap Between Slider Shoes and Guides	
Up to 0.2 mm (.0079 in)	Inspect occasionally
0.2 to 0.35 mm (.0079 to .0138 in) with old slider shoes	Replace slider shoes
Over 0.35 mm (.0138 in) with new slider shoes	Replace governor cup and sliding sheave

Centrifugal Lever Pivot Bolt

1. Measure diameter of centrifugal lever pivot bolt, replace if it is out of specification.

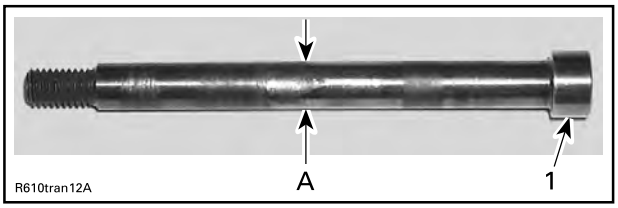

1. Centrifugal lever pivot bolt
A. Measure diameter here

Centrifugal Lever Pivot Bolt Diameter	
New	6.063 to 6.091 mm (.2387 to .2398 in)
Service limit	6.000 mm (.2362 in)

Centrifugal Lever

1. Check bushing diameter in the centrifugal lever for wear. Replace centrifugal lever if necessary.

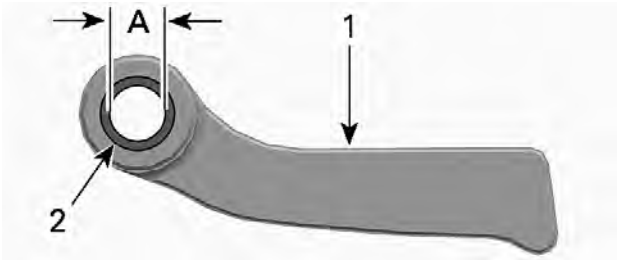

TYPICAL
1. Centrifugal lever
2. Bushing
A. Bushing inner diameter

Centrifugal Lever Bore Diameter	
New	6.000 to 6.120 mm (.236 to .241 in)
Service limit	6.200 mm (.244 in)

2. Replace centrifugal lever, thrust washers, centrifugal lever pivot bolts and lock nuts if the contact surfaces show heavy visible wear.

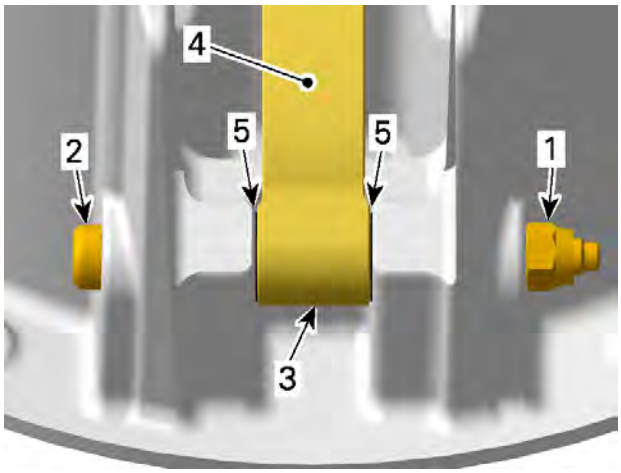

1. *Lock nut*
2. *Centrifugal lever pivot bolt*
3. *Centrifugal lever*
4. *Contact surface to the roller*
5. *Thrust washers*

NOTICE

Whenever replacing centrifugal levers, always replace all lever at the same time. Otherwise, unbalanced drive pulley will occur because of levers difference.

Sliding Sheave and Spring Cover

1. Check sliding sheave for cracks and sliding contact surface for excessive wear. Replace sliding sheave if necessary.
2. Measure centrifugal lever pivot bolt bores. Replace sliding sheave if bores are out of specification or otherwise damaged.

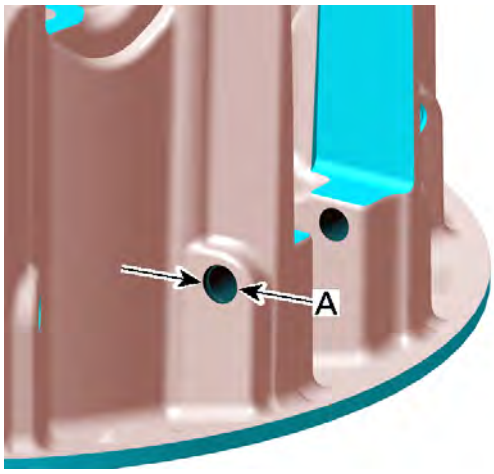

A. Centrifugal lever pivot bolt bore diameter

Centrifugal Lever Pivot Bolt Bore Diameter	
New	6.113 to 6.171 mm (.241 to .243 in)
Service limit	6.300 mm (.248 in)

3. Measure bushing diameters of sliding sheave.

Measuring Point
At least 5 mm (1/4 in) from bushing edge

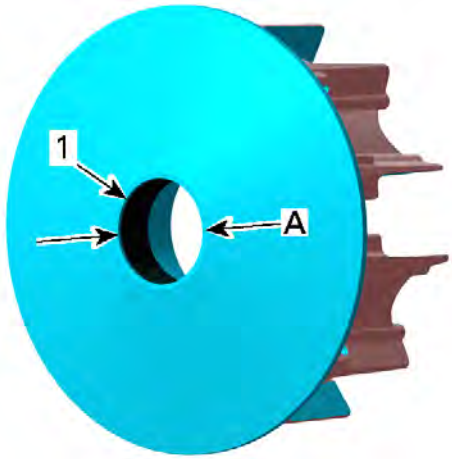

1. *Bushing on fixed sheave side*

A. Bore diameter of bushing

Sliding Sheave Large Bushing	
New	46.950 to 47.130 mm (1.848 to 1.856 in)
Service limit	47.160 mm (1.857 in)

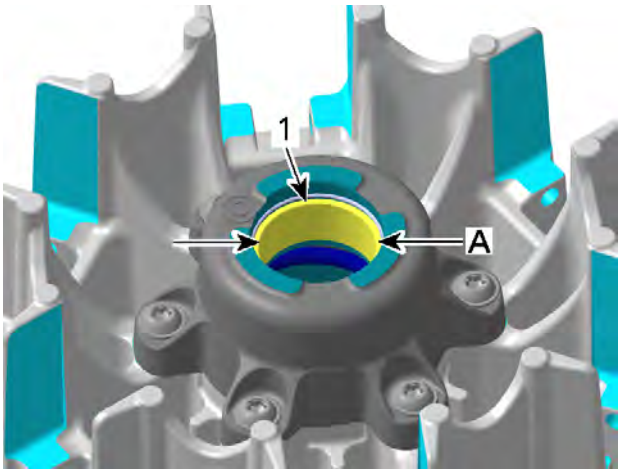

1. Bushing on governor cup side
A. Bore diameter of bushing

Sliding Sheave Small Bushing	
New	32.010 to 32.135 mm (1.26 to 1.265 in)
Service limit	32.200 mm (1.268 in)

4. Replace sliding sheave if one of the bushings is out of specification. Visually inspect coatings.

Fixed Sheave

1. Check:
   - Fixed sheave contact surface to the governor cup for scratches or other damages
   - Fixed sheave plate for marks or scratches.
2. Replace fixed sheave if required.
3. Check fixed sheave contact surface with the hub for discoloration, polished area or pitting. If so, the hub needs to be replaced.

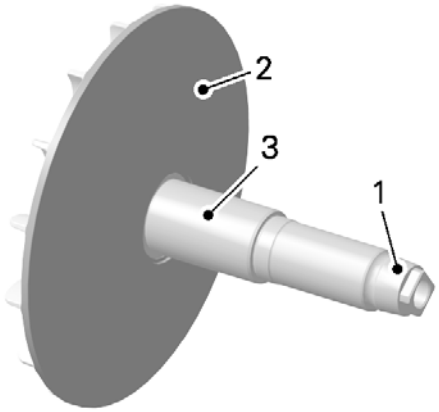

1. Contact surface to governor cup
2. Sheave plate
3. Contact surface with hub.

Hub Bearing

Physical Hub Bearing Inspection

1. Check for:
   - Brittle, hard or damaged seals
   - Discoloration on the edges of the bearing
   - Corrosion on the needles and/or the outer ring
   - Flat spots on the needles.
2. If any of these damages appear, replace the hub bearing.

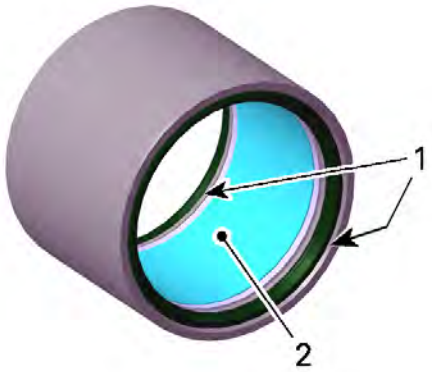

1. Oil seals
2. Needle bearing

Checking the Hub Bearing Operation

1. Bring engine to operating temperature.
2. Switch to 2WD.
3. Shift lever to “H”.
4. Stop engine.
5. Remove CVT Cover. Refer to appropriate shop manual.
6. Lift and support rear end of the vehicle so the wheels clear the ground.
7. Start engine and let run at idle speed.
8. Look at the driven pulley if it is turning or not.
   1. If turning, inspect drive pulley hub bearing. Refer to *Inspecting the Drive Pulley* in this subsection.
   2. If not turning, the hub bearing is ok.

Assembling the Drive Pulley

The assembly is the reverse of the disassembly procedure. However, pay attention to following.

Hub Bearing

1. Thoroughly clean the bearing. Remove all the grease with a pulley cleaner or a brake cleaner.

Clutch and pulley flange cleaner PRO S1

2. Dry the inside of the bearing with compressed air.
3. Apply a complete pouch of grease in the middle of needles.

Isoflex Grease Topas NB 5051

NOTICE
Do not use any other type of grease.

NOTICE
Keep seals free of grease.

4. Spin the needles until grease is spread evenly.
5. Put the bearing back on the shaft.
6. Spray cleaner on a clean rag to wipe grease excess on the shaft and the pulley sheaves.

NOTE: New hub bearing comes with appropriate grease and quantity of grease.

7. When CVT is reassemble repeat step 1 to 7 from *Checking the Hub Bearing Operation*.
   1. If the driven pulley is turning, **replace** the hub bearing.
   2. If the driven pulley is not turning, the hub bearing is ok.

Sliding Sheave

1. Install centrifugal levers with their thrust washers.
2. Install **NEW** lock nuts and tighten them to specification.

Tightening Torque	
Centrifugal lever lock nuts	5 ± 0.6 Nm (44 ± 5 lbf-in)

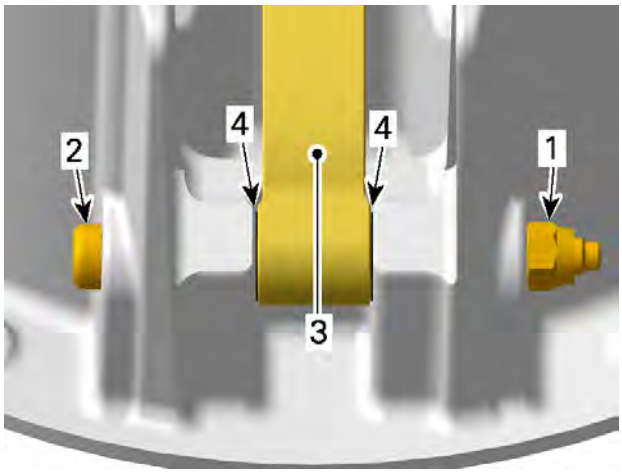

1. *Lock Nut*
2. *Centrifugal lever pivot screw*
3. *Centrifugal lever*
4. *Thrust washer*

NOTICE
Centrifugal levers must move easily after installation.

Governor Cup

1. Rebuild governor cup with new bearing sleeves, rollers and slider shoes.

NOTICE
Final position has to be aligned with the contact surface of the slider shoes (no protrusion).

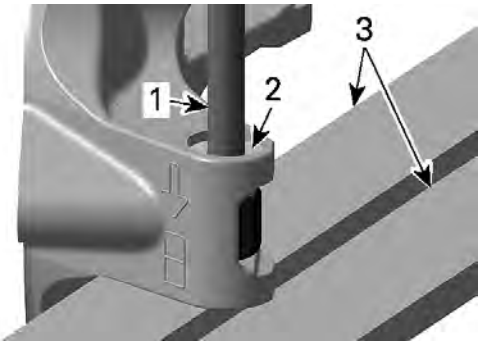

1. *Punch*
2. *Mating surface of slider shoes*
3. *Vice*

2. Each time when replacing the bearing sleeves sign the foreseen box with a punch.

NOTICE
Do not tap too hard. Violent damage of the governor cup may appear.

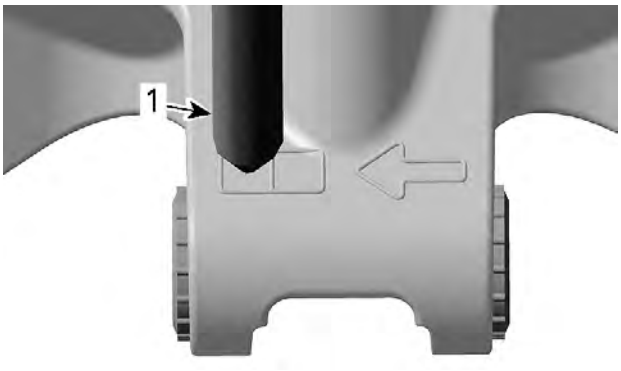

1. Punch

NOTICE

Rollers must move easily after installation.

3. Insert slider shoes into governor cup to properly slide in guides.

Installing the Drive Pulley

The installation is the reverse of the removal procedure. However, pay attention to the following.

NOTICE

Do not apply antiseize or any lubricant on crankshaft and drive pulley tapers.

NOTICE

Never use any type of impact wrench at drive pulley removal and installation.

1. Clean mounting surfaces as described in the *Cleaning*.
2. Install drive pulley on crankshaft extension.
3. Install conical spring washer with its concave side towards drive pulley then install drive pulley screw.

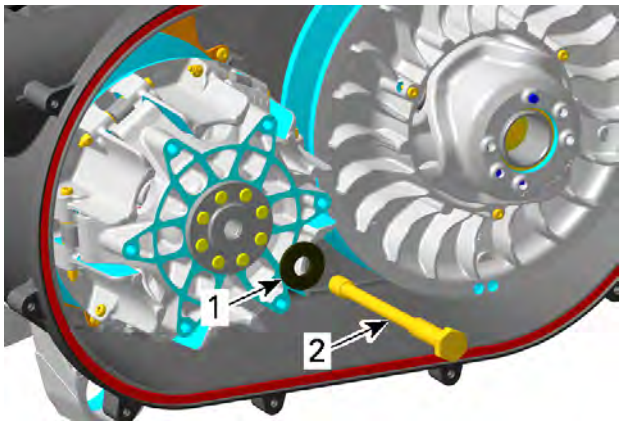

1. Conical spring washer
2. Drive pulley screw

NOTICE

Never substitute conical spring washer and/or screw with jobber ones. Always use BRP genuine parts for this particular case.

4. Lock the drive pulley as per removal procedure.
5. Tighten drive pulley screw to specified torque.

NOTICE

Never use any type of impact wrench for drive pulley installation.

Tightening Torque	
Drive pulley screw	120 ± 8 Nm (89 ± 6 lbf-ft)

Driven Pulley

SERVICE TOOLS

Description	Part Number	Page
BEARING PIN EXTRACTOR	(P/N 529036458)	127
CLUTCH HOLDER	(P/N 529036496)	113, 125, 130
DRIVE PULLEY PULLER	(P/N 529000064)	113
DRIVEN PULLEY ADAPTER	(P/N 708200720)	111, 125
DRIVEN PULLEY SPACER	(P/N 529036351)	126
GOVERNOR CUP PULLER	(P/N 529036350)	114
PULLER/LOCKING TOOL	(P/N 529000088)	111, 125
PULLEY SPRING COMPRESSOR TOOL	(P/N 529036012)	117, 126

SERVICE PRODUCTS

Description	Part Number	Page
CLUTCH AND PULLEY FLANGE CLEANER PRO S1		118, 122, 129
ISOFLEX GREASE TOPAS NB 5051		123
LOCTITE 243 (BLUE)		132
XPS BRAKES AND PARTS CLEANER		130

Removing the Driven Pulley

1. Remove the drive belt.
2. Install the clutch holder.

Clutch holder (P/N 529036496)	

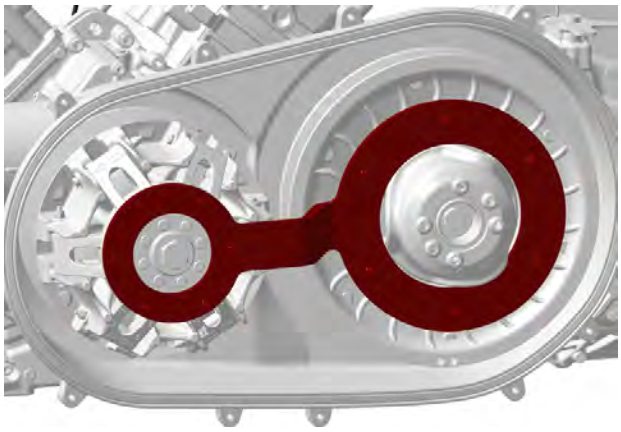

3. Remove the driven pulley screw . and its washer.
4. Discard the driven pulley screw.
5. Remove the clutch holder.
6. Install the driven pulley adapter.

Driven pulley adapter (P/N 708200720)	

7. Screw in the puller/locking tool in the **center hole** of the driven pulley adapter.

Puller/locking tool (P/N 529000088)	

8. Tighten the puller/locking tool until driven pulley is free.

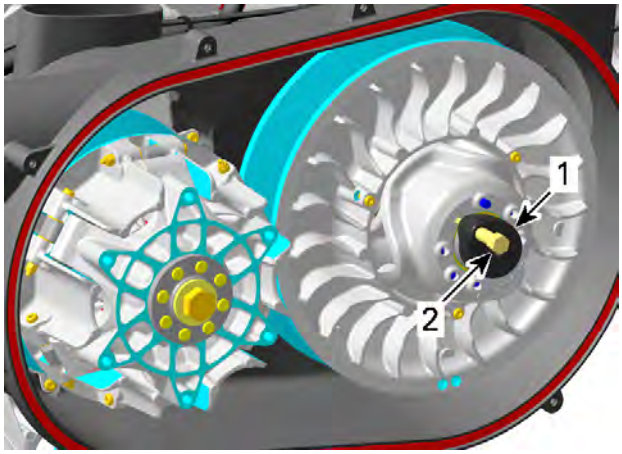

1. Driven pulley adapter
2. Driven pulley extractor

9. Remove the driven pulley from the engine.

10. Remove tools from the driven pulley.

Disassembling the Driven Pulley

Removing Cam and Spring

⚠ CAUTION
Cam is under high clutch spring preload. Never attempt to remove the cam without the recommended tools.

1. Secure the spring compressor tool rod in a vice.

Pulley spring compressor tool (P/N 529036012)	

2. Install the support cup, the driven pulley spacer, the driven pulley (with the cam towards the vice), the support guide and the handle.

Driven pulley spacer (P/N 529036351)	

3. Screw in the handle to remove all play.

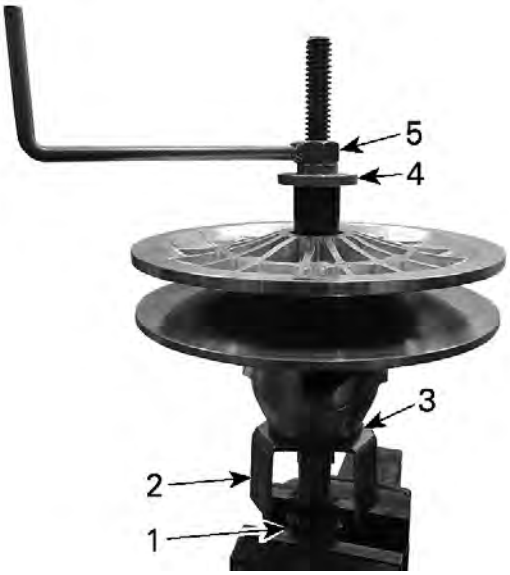

TYPICAL
1. *Pulley spring compressor tool*
2. *Support cup*
3. *Driven pulley spacer*
4. *Support guide*
5. *Handle*

4. Remove and discard the cam retaining screws.

5. Remove the driven pulley assembly from the spring compressor tool.
6. Separate driven pulley parts.

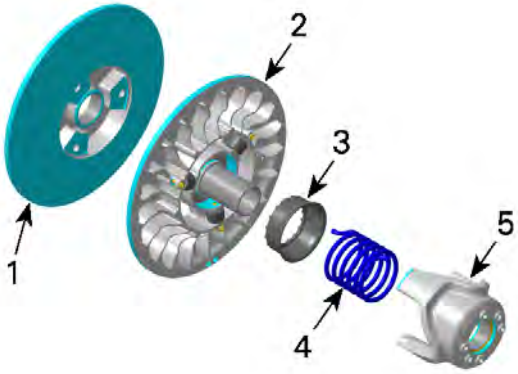

1. *Fixed sheave*
2. *Sliding sheave*
3. *Spring support*
4. *Spring*
5. *Cam*

Removing the Driven Pulley Roller

1. Remove screw locking the bearing pin.

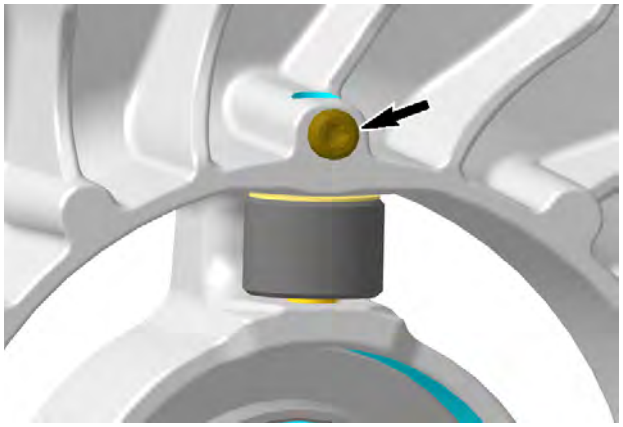

2. Using the bearing pin extractor, remove the bearing pin.

Bearing pin extractor (P/N 529036458)	

1. *Hammer*
2. *Bearing pin extractor*

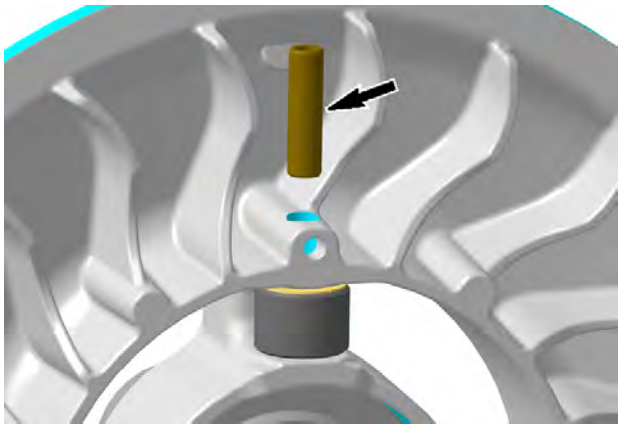

3. Remove:
   - Thrust washer
   - Roller.

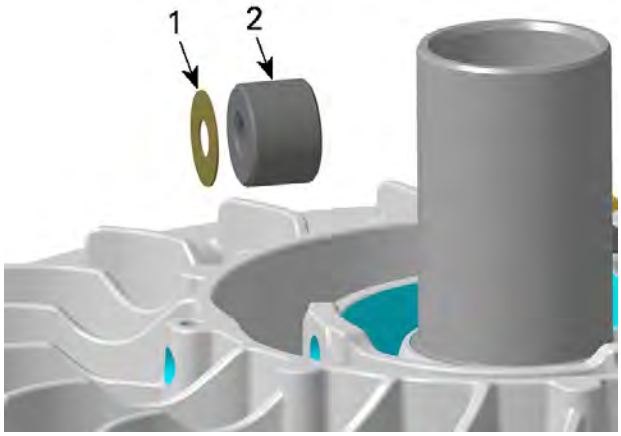

1. *Thrust washer*
2. *Roller*

4. Proceed with removal of other roller.

Inspecting the Driven Pulley

Cam

1. Verify all contact surfaces of cam for visible damages.

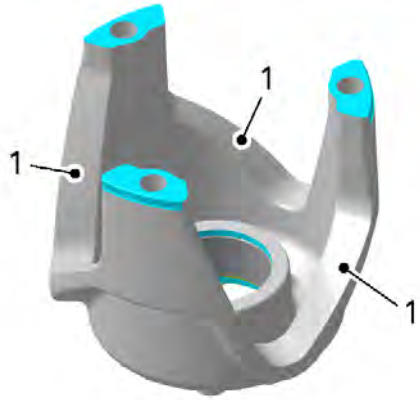

1. *Contact surfaces*

2. Ensure circlip properly locks the inner bushing. Replace part if necessary.

3. Measure the inner diameter of cam bushing.

Measuring Point
At least 5 mm (1/4 in) from bushing edge

A. *Inner diameter of cam bushing*

Cam Bushing Inner Diameter	
New	41.278 to 41.363 mm (1.625 to 1.628 in)
Service limit	41.420 mm (1.631 in)

4. Replace the cam if the inner diameter of bushing is out of specification.

Sliding Sheave

1. Inspect pulley sheave for marks or scratches.
2. Ensure circlip properly locks the inner bushing. Replace part if necessary.
3. Measure the inner diameter of sliding sheave bushing.

Measuring Point
At least 5 mm (1/4 in) from bushing edge

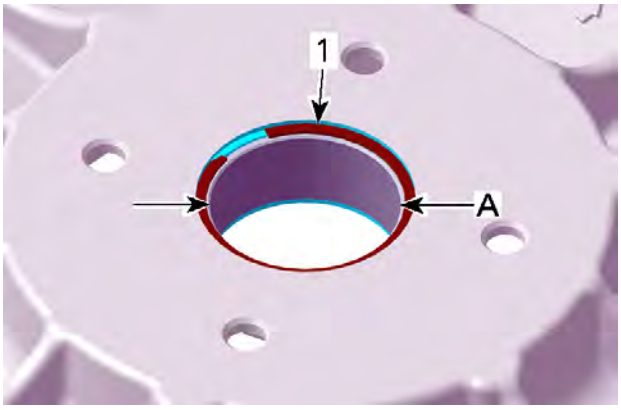

1. Circlip
A. Inner diameter of sliding sheave bushing

Driven Pulley Inner Half Bushing	
New	41.278 to 41.363 mm (1.625 to 1.628 in)
Service limit	41.420 mm (1.631 in)

4. Replace the sliding sheave if the inner diameter of bushing is out of specification.

Fixed Sheave

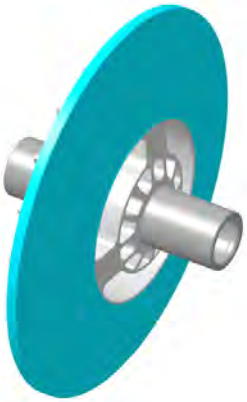

1. Replace fixed sheave and countershaft if one of the following problem is detected:
   - Marks or scratches on pulley sheave
   - Bent, twisted or otherwise damaged countershaft
   - Defective splines and threads at the end of countershaft.

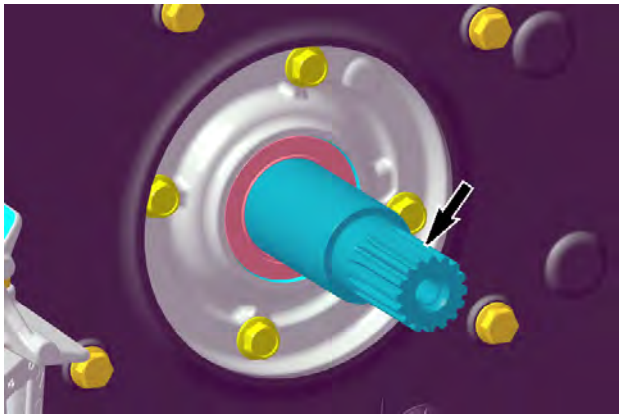

Driven Pulley Roller

1. Check the rollers for flat spots, cracks or other visible damages. Replace if necessary (as a set).
2. Measure inner and outer diameter of rollers.

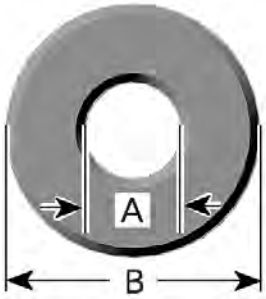

A. Inner diameter
B. Outer diameter

Roller Inner Diameter	
New	8.20 to 8.35 mm (.323 to .329 in)
Service limit	8.50 mm (.335 in)

Roller Outer Diameter	
New	21.80 to 22.20 mm (.858 to .874 in)
Service limit	21.50 mm (.846 in)

3. Measure the roller thickness.

A. Thickness of roller

Roller Thickness	
New	15.10 to 15.50 mm (.594 to .61 in)
Service limit	14.75 mm (.581 in)

4. If a roller is out of specifications, replace all rollers at the same time.

Cleaning the Driven Pulley

1. Use cleaner and a clean rag to clean pulley sheaves.

Clutch and pulley flange cleaner PRO S1

Cam and Spring

1. During break-in period, teflon from bushing moves to cam or countershaft surface. A teflon over teflon running condition occurs, leading to low friction. So it is normal to see gray teflon deposit on cam or countershaft. Do not remove this deposit.
2. When a dust deposit has to be removed from the cam or the countershaft, use dry cloth to avoid removing transferred teflon.

Assembling the Driven Pulley

Installing the Driven Pulley Roller

1. Using a hand wire brush, clean locking screw threads.
2. Insert:
   - Roller
   - Thrust washer.
3. Install spring pin.

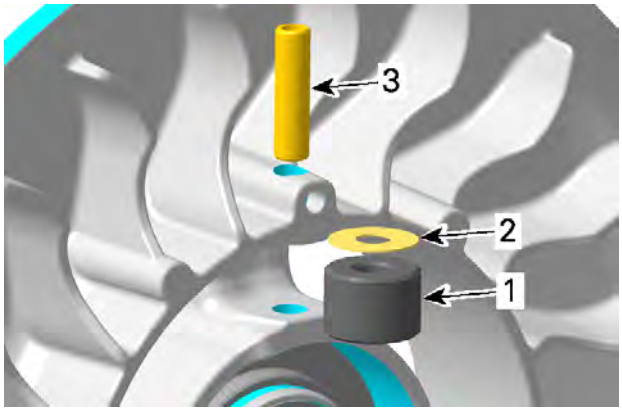

1. Roller
2. Thrust washer
3. Spring pin

4. Tighten locking screw as specified.

Tightening Torque	
Locking screws	3.5 ± 0.4 Nm (31 ± 4 lbf-in)

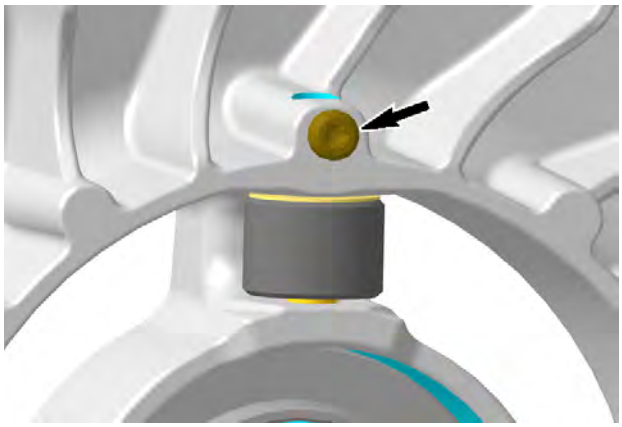

5. Install spring pin and tighten as specified.

Assembling the Sheaves and Cam

1. Install the cam on the spring compressor tool, over the support cup and the clutch shim.
2. Install the spring into the cam then the fixed sheave and the sliding sheave.

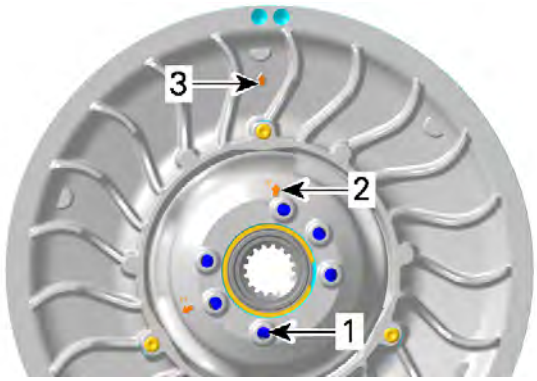

1. *Spring end*
2. *Arrow A*
3. *Arrow on Outer Half Assy.*

3. Complete with the support guide and the handle.
4. Before tightening the handle, align the arrows on cam and the sliding sheave with the one on the fixed sheave.
5. Tighten the handle until the cam is completely pressed against the sliding sheave.

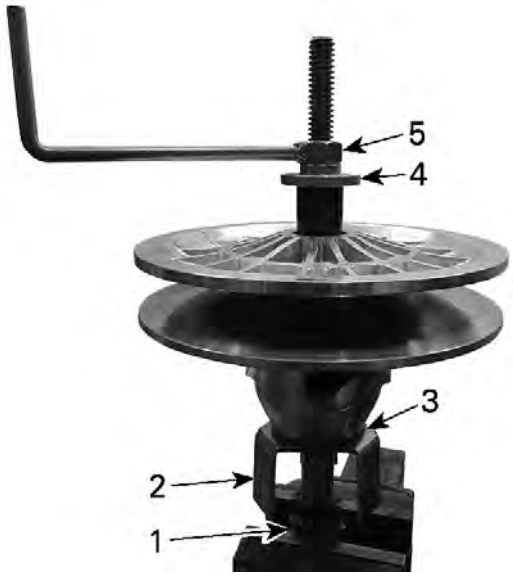

1. *Pulley spring compressor tool*
2. *Support cup*
3. *Driven pulley spacer*
4. *Support guide*
5. *Handle*

6. From the back of the sliding sheave, install three (3) **NEW** cam screws.

Tightening Torque	
Cam screw	61 ± 6 Nm (45 ± 4 lbf-ft)

7. Remove the driven pulley from the tool.

Installing the Driven Pulley

For installation, reverse the removal procedure. Pay attention to the following details.

NOTICE

This assembly uses a stretch screw. Always install a NEW screw.

1. Clean threads of gearbox countershaft and **NEW** driven pulley screw.

XPS Brakes and Parts cleaner

NOTICE

Threads must be free of oil and grease. Lubricants in threads will create too high preload to tightened driven pulley screw.

2. Install the driven pulley onto the countershaft. Make sure to align splines.
3. Install driven pulley screw with collar washer.

NOTICE

Make sure to position the large diameter of the thrust washer against the conical side of the spring washer.

4. Install the clutch holder.

Clutch holder (P/N 529036496)	

5. Tighten driven pulley screw as specified.

Tightening Torque	
Driven pulley screw	70 ± 5 Nm (52 ± 4 lbf-ft)

6. Remove the clutch holder.
7. Install drive belt.

NOTICE
After the repair procedure is finished, allow vehicle to sit for 6 hours for threadlocker curing.

CVT Air Guide

SERVICE PRODUCTS

Description	Part Number	Page
CLUTCH AND PULLEY FLANGE CLEANER PRO S1		118, 122, 129
ISOFLEX GREASE TOPAS NB 5051		123
LOCTITE 243 (BLUE)		132
XPS BRAKES AND PARTS CLEANER		130

Removing the CVT Air Guide

1. Remove the drive and the driven pulleys.
2. Unscrew the clamps retaining the CVT air hoses.
3. Remove CVT air guide.
4. Remove and discard O-rings.

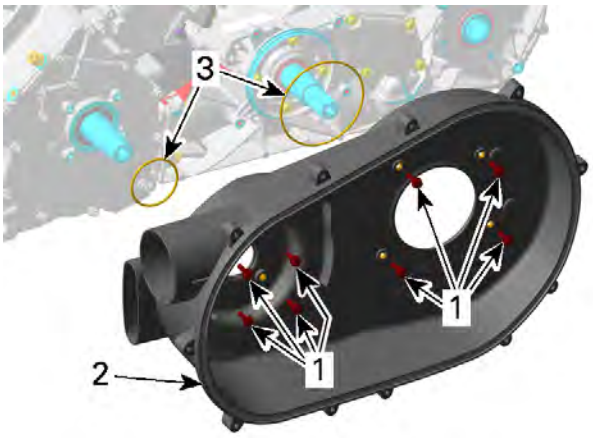

1. Retaining screws
2. CVT air guide
3. O-rings

Inspecting the CVT Air Guide

1. Clean CVT air guide from contamination

Installing the CVT Air Guide

The installation is the reverse of the removal procedure. However, pay attention to the following.

1. Install **NEW** O-rings.

2. Apply a drop of threadlocker on CVT air guide screws threads.

Loctite 243 (blue)

Tightening Torque	
CVT air guide retaining screws	10 ± 1 Nm (89 ± 9 lbf-in)

GEARBOX AND 4X4 COUPLING UNIT WITHOUT LOCKABLE REAR DIFFERENTIAL

03 Gearbox and 4x4 Coupling Unit Without Lockable Rear Differential

Exploded Views

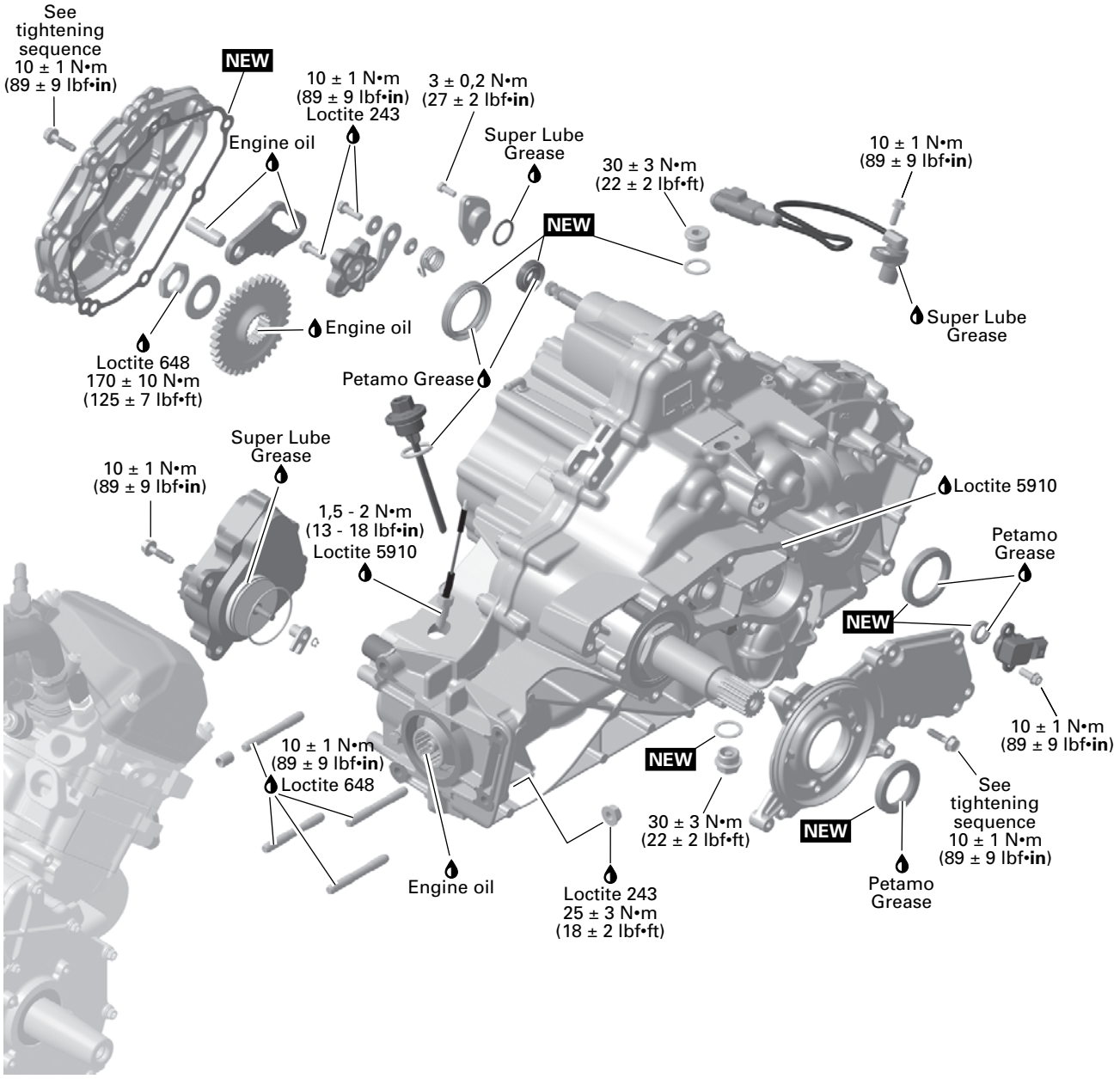

NEW = Component must be replaced when removed.

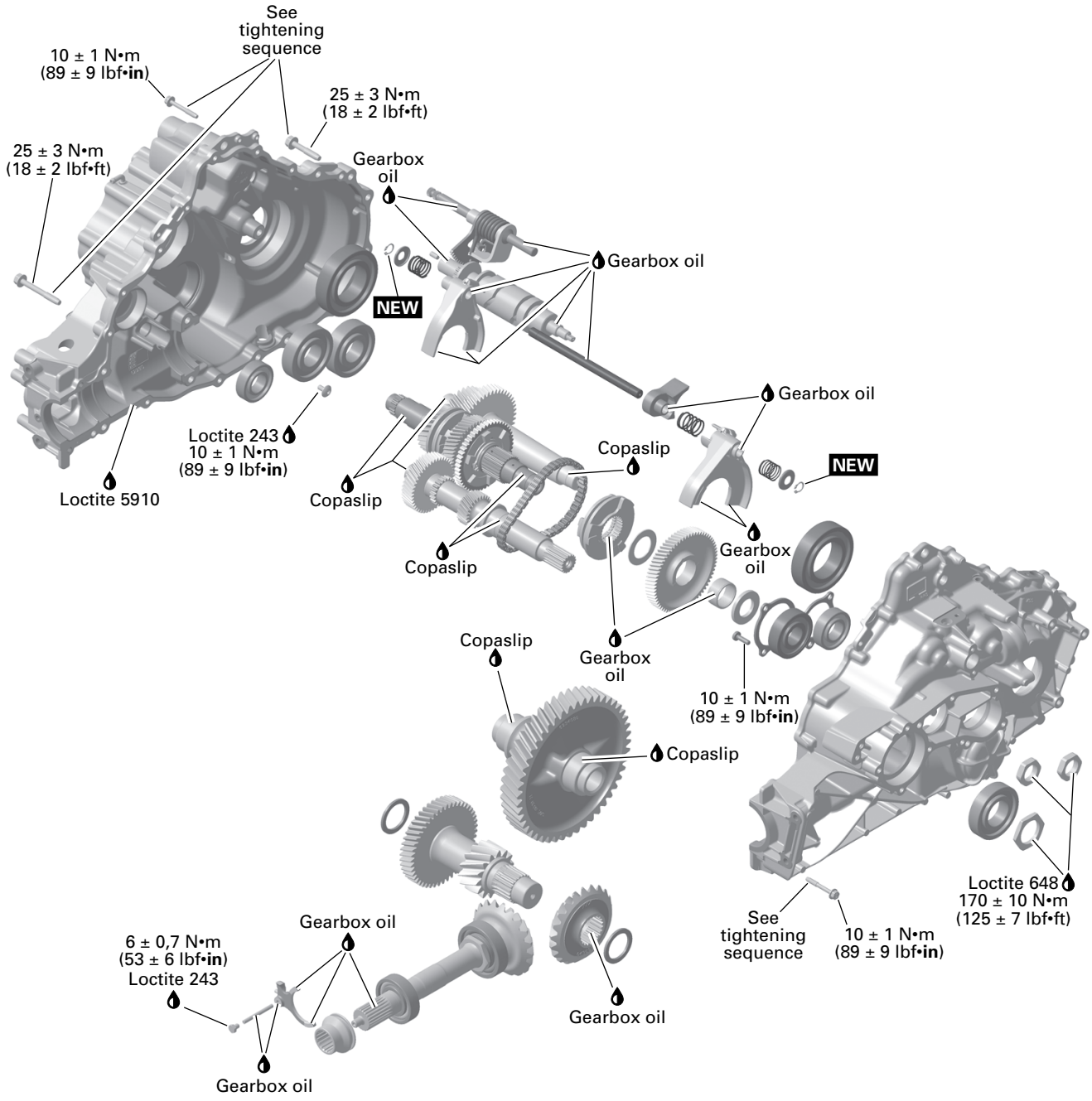

NEW = Component must be replaced when removed.

Gearbox Overview

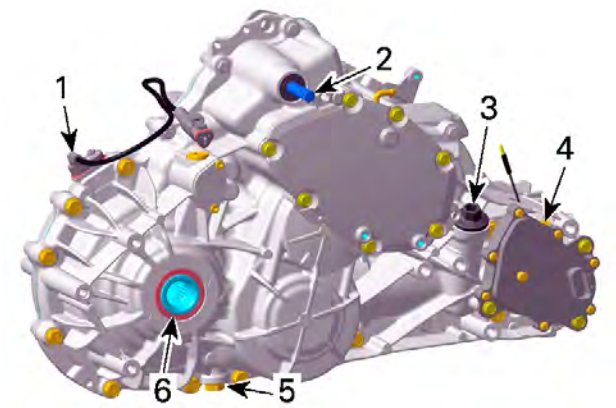

1. *Vehicle speed sensor (VSS)*
2. *Shift shaft*
3. *Gearbox oil dipstick*
4. *4WD actuator*
5. *Magnetic drain plug*
6. *Drive gear*

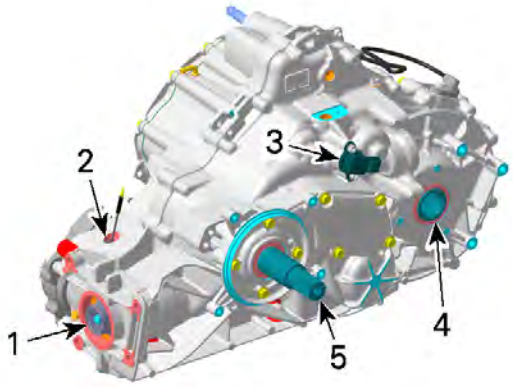

1. *4WD coupling sleeve*
2. *4WD indicator switch*
3. *Gearbox position senesor (GBPS)*
4. *Drive gear*
5. *Countershaft*

Troubleshooting

Troubleshooting

1. UNUSUAL GEARBOX NOISE AND/OR VIBRATIONS

Low oil level in gearbox.

– *Oil leakage from gearbox. Replace damaged gasket(s) and/or oil seal(s).*

Defective bearings.

– *Bearing(s) do(es) not turn smoothly. Replace bearing(s).*

Damaged or worn gears.

– *Inspect gears for damages or missing teeth. Replace respective gears.*

2. GEAR INDICATION FAILS

Defective gearbox position sensor (GBPS).

– *Perform a gearbox position sensor test.*

– *Damaged wires. Repair as required.*

3. GEAR(S) IS (ARE) HARD TO SHIFT

Incorrect shifter cable adjustment.

– *Adjust shifter cable (refer to Shifter Cable in Shifter subsection.*

4. 4 WHEEL DRIVE INDICATION FAILS

4WD indicator switch failure.

– *Test 4WD indicator switch. Replace as required.*

– *Bad contact. Check for corrosion or loose connector.*

– *Damaged wires. Repair as required.*

5. 4 WHEEL DRIVE DOES NOT ENGAGE OR DISENGAGE

Defective 4WD switch.

– *Check 4WD switch operation.*

Defective 4WD actuator.

– *Test 4WD actuator.*

Damaged or worn shifting fork or sleeve.

– *Remove 4WD actuator and inspect shifting fork and sleeve.*

Gearbox Oil

SERVICE PRODUCTS

Description	Part Number	Page
COPASLIP		162
LOCTITE 243 (BLUE)		150, 154, 165, 168
LOCTITE 5910		144, 155, 157
LOCTITE 648 (GREEN)		156, 165
LOCTITE CHISEL (GASKET REMOVER)		154
PETAMO GREASE GHY 133N		147
SUPER LUBE GREASE		139, 141, 145

Recommended Gearbox Oil

XPS Recommended Gearbox Oil
75W140 synthetic gear oil
Alternative if XPS product is not available
75W140 API GL-5 synthetic gear oil

NOTICE

Never use another type of oil when servicing.

The XPS oil is specially formulated to meet the lubrication requirements of this gearbox. BRP strongly recommends the use of its XPS oil.

Verifying the Gearbox Oil Level

1. Place the vehicle on a level surface.
2. Select PARK position.
3. Clean the dipstick area.
4. Remove the gearbox oil dipstick.
5. Wipe and reinstall the dipstick.

NOTICE

Pay attention not to loose O-ring on oil dipstick.

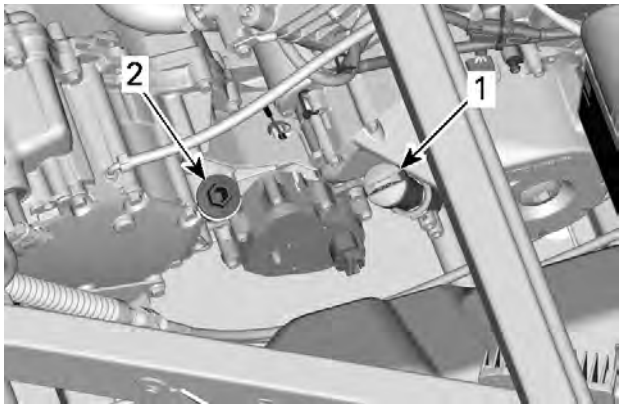

1. *Engine oil dipstick*
2. *Gearbox oil dipstick*

6. Remove dipstick again and check oil level. It should be near or equal to the upper mark.

1. *MIN.*
2. *MAX.*
3. *Operating range*

7. Add oil (if required):

NOTICE

Operating the gearbox with lower or higher oil level may severely damage gearbox.

   1. Place a funnel into the dipstick hole.
   2. Add a small amount of recommended oil.
   3. Recheck oil level often.
   4. Repeat the above steps until oil level reaches the dipstick's upper mark
8. Properly tighten dipstick.

Changing the Gearbox Oil

1. Place the vehicle on a level surface.
2. Place a drain pan underneath the oil drain plug area.

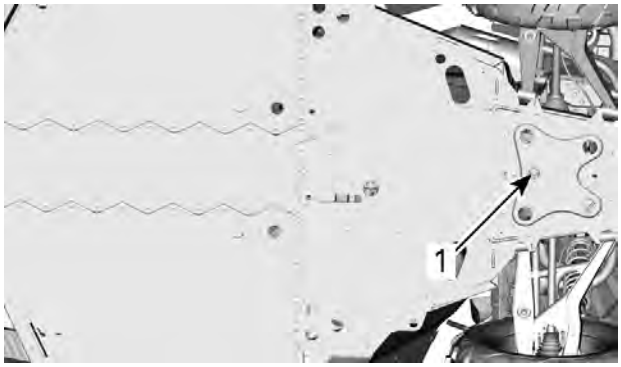

1. Gearbox drain plug area

3. Clean the following areas.
   - Drain plug area
   - Vehicle speed sensor (VSS) area
   - Dipstick area.
4. Remove the dipstick.
5. Remove the drain plug.
6. Let oil completely drain from gearbox.
7. Clean drain plug from any metallic particles.
8. Install the drain plug.

Tightening Torque	
Drain plug	20 ± 2 Nm (15 ± 1 lbf-ft)

9. Remove the VSS and clean it with a clean rag.

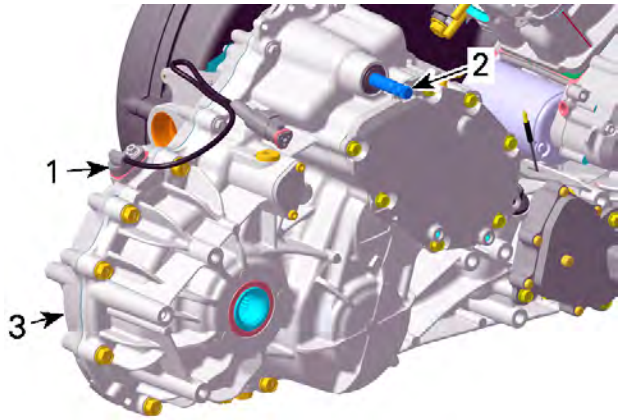

1. VSS (Vehicle Speed Sensor)
2. Shift shaft
3. Left housing of gearbox

10. Lubricate the VSS O-ring.

Super Lube grease

11. Install the VSS.

Tightening Torque	
VSS screw	10 ± 1 Nm (89 ± 9 lbf-in)

12. Refill the gearbox by the dipstick hole, refer to *Verifying the Gearbox Oil Level* to determine the proper level.
13. Reinstall the dipstick.
14. Wipe off any spillage.

Inspecting the Gearbox Oil

Oil condition gives information about the teeth condition inside the gearbox. See *Troubleshooting*.

1. Clean the magnetic drain plug from metal shavings and dirt. Presence of debris gives an indication of failure inside the gearbox. Check gearbox to correct the problem.
2. Replace O-ring of oil filler screw if brittle, hard or otherwise damaged.

Vehicle Speed Sensor (VSS)

SERVICE PRODUCTS

Description	Part Number	Page
COPASLIP		162
LOCTITE 243 (BLUE)		150, 154, 165, 168
LOCTITE 5910		144, 155, 157
LOCTITE 648 (GREEN)		156, 165
LOCTITE CHISEL (GASKET REMOVER)		154
PETAMO GREASE GHY 133N		147
SUPER LUBE GREASE		139, 141, 145

VSS Location

The vehicle speed sensor is located on the rear top side of the left gearbox housing.

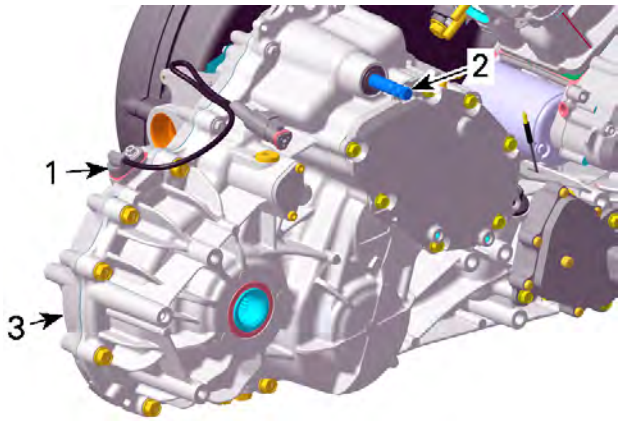

1. VSS (Vehicle Speed Sensor)
2. Shift shaft
3. Left housing of gearbox

VSS Wire Identification

Function	Pin
12-volt input from VSS fuse	A
Speed signal (to ECM-A E1)	B
Ground (to ECM-A D4)	C

VSS Circuit Protection

Cndition	Circuit Protection
Supplied with main relay activated	VSS fuse from main relay R2)

Testing the VSS Input Voltage

1. Turn ignition switch ON.
2. Back-probe the VSS connector and measure voltage.

VSS Input Voltage Test		
Test probes		Result (Key ON)
Pin A	Pin C	Battery voltage

3. If voltage is not as specified, test positive and ground separately.

Testing the VSS Signal

1. Lift rear of vehicle so that rear wheels are off the ground.
2. Set transmission to 2WD and to Neutral.
3. Turn ignition switch ON.
4. Back-probe the VSS connector and measure voltage while slowly rotating rear wheels by hand.

VSS Signal Test		
Test Probes		Result (while rotating wheels)
Pin B	Pin C	Alternate reading between battery voltage and 0 Vdc

NOTE: Since we measure pulsating voltage, the numeric display will continuously change. The analog display may be easier to follow.

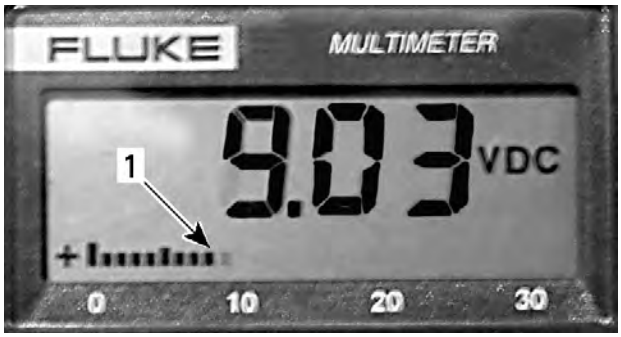

1. Analog display

Removing the VSS

1. Disconnect VSS connector.
2. Remove screw retaining the VSS.
3. Using a long screwdriver, pull out the VSS.

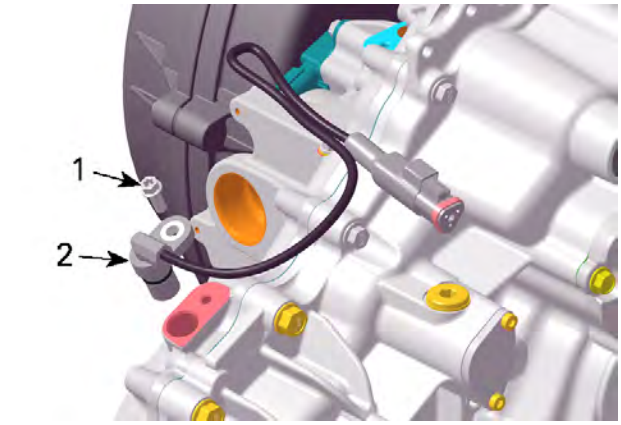

SEVERAL PARTS REMOVED FOR CLARITY
1. Screw
2. VSS

Cleaning the Vehicle Speed Sensor (VSS)

1. Remove all metal particles and oil from the VSS magnet.

NOTE: A dirty VSS will cause erratic speedometer readings.

Installing the VSS

The installation is the reverse of the removal procedure. However, pay attention to the following.

1. Lubricate VSS O-ring.

Super Lube grease

2. Tighten retaining screw to specification.

Tightening Torque	
VSS screw	10 ± 1 Nm (89 ± 9 lbf-in)

Gearbox Position Sensor (GBPS)

SERVICE TOOLS

Description	Part Number	Page
ECM ADAPTER TOOL	(P/N 529036166)	143
HANDLE	(P/N 420877650)	148
M34 SOCKET	(P/N 529036388)	151, 156
OIL SEAL INSTALLER (COUNTERSHAFT)	(P/N 529036391)	148
OIL SEAL INSTALLER (DIFFERENTIAL OUTPUT)	(P/N 529036456)	149
OIL SEAL INSTALLER (GEARBOX)	(P/N 529035758)	148
SLEEVE INSTALLER	(P/N 529036455)	149, 154, 169
SPLINES SOCKET 1/2"	(P/N 529036389)	151, 156

GBPS Reset

When replacing the gearbox position sensor (GBPS), it is required to reset (re-zero) its values for proper operation.

A reset must be carried out each time any of the following parts has been replaced:

- Gearbox assembly
- Shift drum
- GBPS
- ECM.

1. Connect the vehicle to the BRP diagnostic software (BUDS2).
2. In BUDS2, select the following:
   - **Settings** page
   - **ECM** tab
   - **Reset Gear Position Sensor**.
3. Follow instructions display in the screen.

   If an error occurred or the GBPS is not within the allowed range while resetting, the ECM will generate a fault code and will not accept the setting.
4. If a fault message is displayed, follow the instructions in the message(s).
5. Check for fault codes.
6. If a fault code is generated:
   - Carry out the service action.
   - Reset the fault code.
   - Repeat the reset procedure.
7. Close and disconnect BUDS2.

NOTE: Do not turn ignition key OFF.

8. Verify gears engagement.
   1. With the vehicle on ground and in NEUTRAL position, start engine.
   2. During 4-5 seconds, rev engine to 2500 ± 200 RPM.
   3. Let engine returns to idle.
   4. Select an other position (P, R, H or L). Repeat substeps 8.2 and 8.3 until all position are verified.

NOTE: The vehicle must be in movement to complete the procedure on R, H and L position.

Testing the GBPS Input Voltage

1. Prior to conduct testing, check fault codes in BUDS2.
2. Set shift lever in NEUTRAL position.
3. Back-probe the GBPS connector.
4. Test as follow:

Multimeter Probe Positions	Voltage
PIN 2 and PIN 3 of the GBPS connector 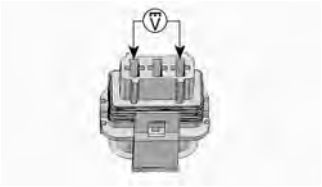	5 volts

5. If voltage is adequate, check GBPS signal wire.
6. If there is no voltage, check each GBPS input as follows.

Multimeter Probe Positions	Voltage
GBPS connector (pin 3) and battery ground 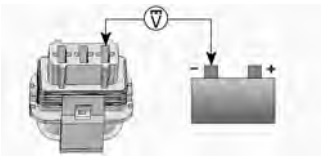	5 volts
GBPS connector (pin 2) and battery + terminal 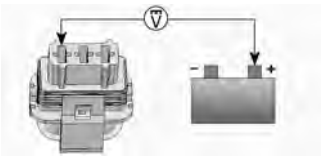	Battery voltage

7. If there is no voltage, check wires and connector pins. Replace or repair defective parts and reset fault codes.

Testing the GBPS Communication Link Continuity

1. Disconnect the connector A from the ECM.
2. Install the connector on the ECM adapter tool.

ECM adapter tool (P/N 529036166)	

Multimeter Probe Positions	Resistance @ 20 °C (68 °F)
GBPS connector (pin 1) and ECM adapter tool (pin F4) 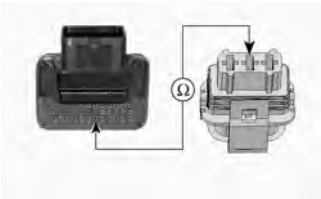	Below 1 Ω

3. If resistance is out of specification, check wires and connectors. Repair and reset fault codes.
4. If resistance is good and the other tests succeeded, replace the GBPS and reset fault codes.

NOTE: The GBPS must be reset.

Removing the GBPS

1. Set shift lever in NEUTRAL position.
2. Unplug GBPS connector.
3. Remove screws and withdraw GBPS.

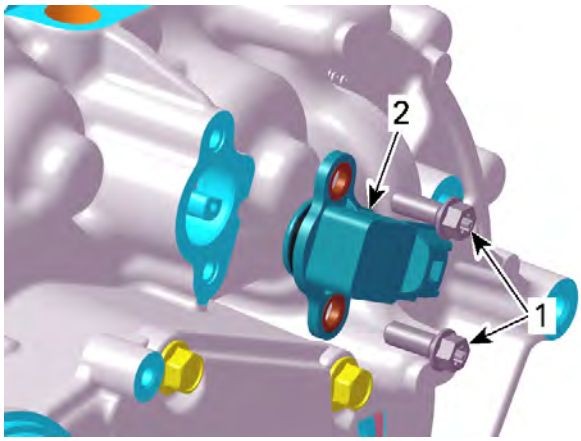

1. Screws
2. Gearbox Position Sensor (GBPS)

Installing the GBPS

The installation is the reverse of the removal procedure. However, pay attention to the following details.

1. Shift lever must be in the NEUTRAL position.
2. Align GBPS with the flat on the shift drum shaft.

NOTE: Do not force to install GBPS if shaft flat is not properly aligned. If alignment is incorrect, check shift rod adjustment.

3. Reset the GBPS..

4WD Indicator Switch

SERVICE PRODUCTS

Description	Part Number	Page
COPASLIP		162
LOCTITE 243 (BLUE)		150, 154, 165, 168
LOCTITE 5910		144, 155, 157
LOCTITE 648 (GREEN)		156, 165
LOCTITE CHISEL (GASKET REMOVER)		154
PETAMO GREASE GHY 133N		147
SUPER LUBE GREASE		139, 141, 145

Testing the 4WD Indicator Switch

1. Disconnect 4WD indicator switch connector.

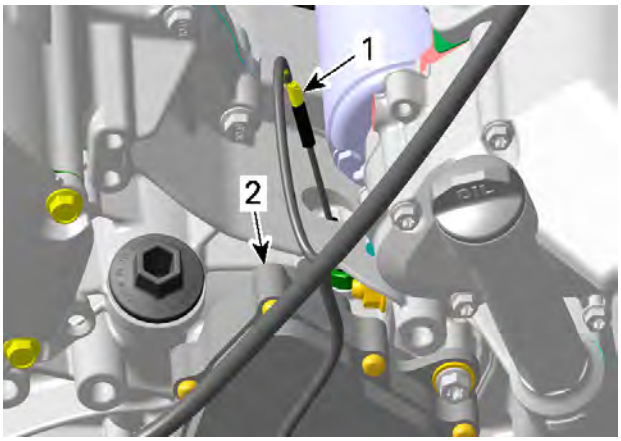

1. 4WD indicator switch
2. 4WD actuator

2. Measure switch resistance as follows.

Switch position	Switch wire		Resistance
2WD	BLACK/ BEIGE	Engine ground	Infinite (OL)

3. If the resistance is out of specification, replace the 4WD indicator switch.

Removing the 4WD Indicator Switch

1. Disconnect 4WD indicator switch connector.
2. Unscrew 4WD indicator switch.

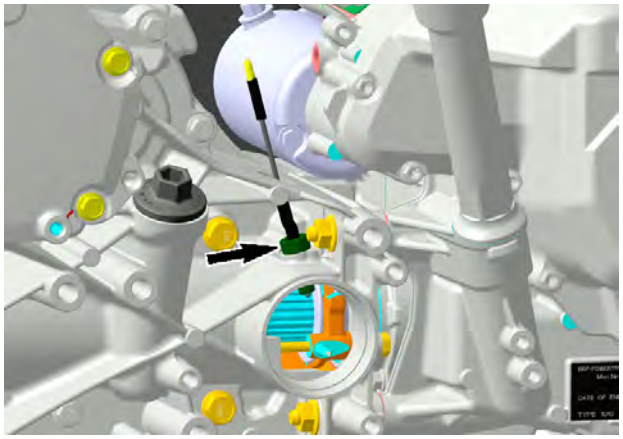

Installing the 4WD Indicator Switch

The installation is the reverse of the removal procedure. However, pay attention to the following details.

1. Take care do not damage indicator switch threads during installation.
2. Apply carefully some sealant on threads of indicator switch.

Loctite 5910

NOTICE

Do not apply Loctite 5910 on switch plunger, as it will lead to switch malfunction.

3. Tighten the switch to specification.

Tightening Torque	
4WD indicator switch	1.5 to 2 Nm (13 to 18 lbf-in)

4WD Actuator

SERVICE PRODUCTS

Description	Part Number	Page
COPASLIP		162
LOCTITE 243 (BLUE)		150, 154, 165, 168
LOCTITE 5910		144, 155, 157
LOCTITE 648 (GREEN)		156, 165
LOCTITE CHISEL (GASKET REMOVER)		154
PETAMO GREASE GHY 133N		147
SUPER LUBE GREASE		139, 141, 145

Testing the 4WD Actuator

1. Check if the 2WD/4WD selector works properly.
2. Unplug 4WD actuator connector.
3. Turn ignition key ON.
4. Measure voltage as follows.

Switch position	Switch wire		Voltage
2WD	WHITE	WHITE/ BLUE	Battery voltage
4WD			

5. If the selector is out of specifications, check wires, connectors and replace the selector if necessary.
6. If the selector is good, check the vehicle harness.
7. If the vehicle harness is good, replace the 4WD actuator.

Removing the 4WD Actuator

1. Before beginning any servicing on the 4WD actuator, make sure the vehicle is in 4WD position. No need to remove engine from vehicle.
2. Place a drain pan under 4WD actuator.
3. Remove the actuator.

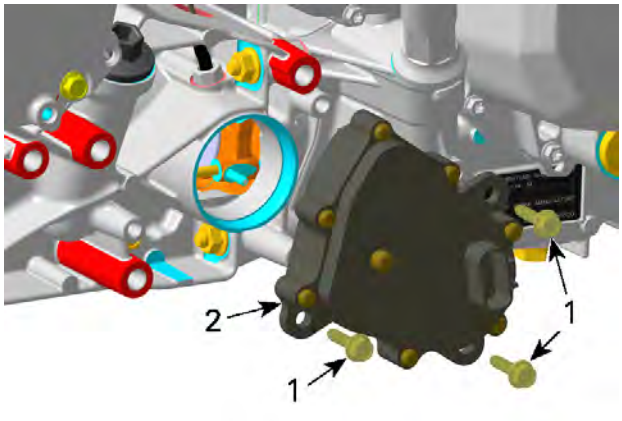

1. Screws
2. 4WD actuator

Installing the 4WD Actuator

1. Lubricate the actuator O-ring.

Super Lube grease

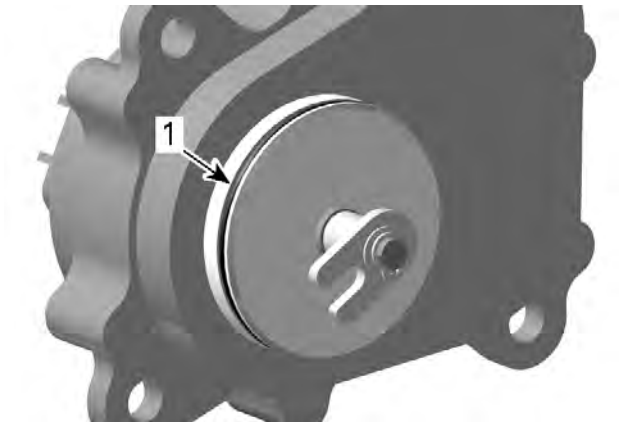

1. 4WD actuator O-ring

2. Ensure coupling fork is in 4WD position (toward the front of vehicle).

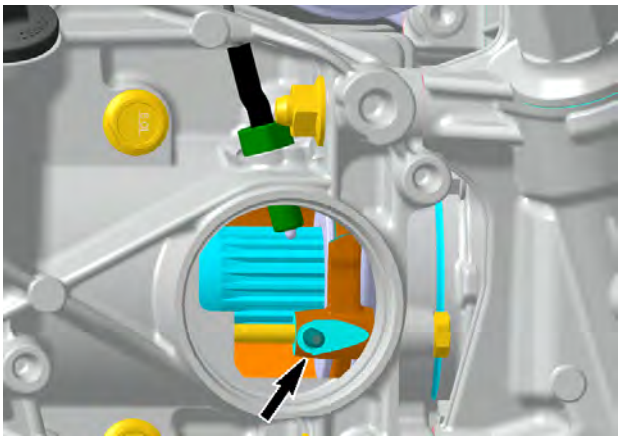

1. Coupling fork in 4WD position

3. Align the 4WD actuator fork with the pin on coupling fork then push the 4WD actuator in the housing. See the following illustration to position the 4WD actuator correctly.

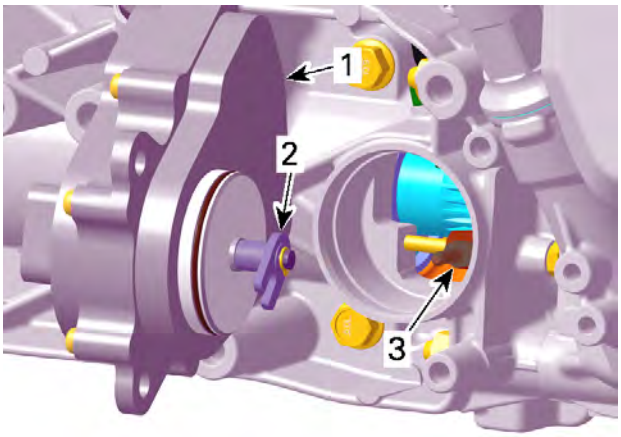

1. 4WD actuator
2. 4WD actuator fork
3. Coupling fork

4. Rotate the 4WD actuator counterclockwise until it orients itself to mounting position.

NOTICE
Do not cut or break the 4WD actuator O-ring.

5. Install all 4WD actuator screws and tighten them.

Tightening Torque	
4WD actuator screws	10 ± 1 Nm (89 ± 9 lbf-in)

6. Connect 4WD actuator.
7. Set gearbox to PARK position.
8. Lift the front of vehicle.
9. Turn front wheels. The front propeller shaft should not turn.
10. If the front propeller shaft turns, the 4WD actuator is not installed correctly. Remove 4WD actuator and reinstall it.
11. Place ignition switch to ON position and select the 2WD position.
12. Turn front wheel again. The front propeller shaft should turn easily.
13. If the front propeller shaft does not turn, the 4WD actuator is not installed correctly. Remove 4WD actuator and reinstall it.
14. Refill the gearbox to proper level with recommended oil.
15. Install all other removed parts.

Gearbox Oil Seals

SERVICE TOOLS

Description	Part Number	Page
ECM ADAPTER TOOL	(P/N 529036166)	143
HANDLE	(P/N 420877650)	148
M34 SOCKET	(P/N 529036388)	151, 156
OIL SEAL INSTALLER (COUNTERSHAFT)	(P/N 529036391)	148
OIL SEAL INSTALLER (DIFFERENTIAL OUTPUT)	(P/N 529036456)	149
OIL SEAL INSTALLER (GEARBOX)	(P/N 529035758)	148
SLEEVE INSTALLER	(P/N 529036455)	149, 154, 169
SPLINES SOCKET 1/2"	(P/N 529036389)	151, 156

SERVICE PRODUCTS

Description	Part Number	Page
COPASLIP		162
LOCTITE 243 (BLUE)		150, 154, 165, 168
LOCTITE 5910		144, 155, 157
LOCTITE 648 (GREEN)		156, 165
LOCTITE CHISEL (GASKET REMOVER)		154
PETAMO GREASE GHY 133N		147
SUPER LUBE GREASE		139, 141, 145

Replacing the Gearbox Oil Seal

1. Replace oil seals if they are brittle, hard or damaged.
2. A small flat screwdriver can be used to remove most of these oil seals.

NOTICE

Avoid scoring parts during oil seal removal.

3. When replacing an oil seal, take this opportunity to inspect the following:
   - Check bearings behind each oil seal for contamination and/or metal shavings.
   - Check oil seal running surfaces for scratches.

Lubricating the Oil Seal

1. Lubricate sealing lips all around.
2. Fill up the room between sealing lips halfway around the perimeter.

Petamo grease Ghy 133n

1. Sealing lips
2. Room between sealing lips

Countershaft Oil Seal

1. To replace the countershaft oil seal, remove:
   - Drive and driven pulleys
   - CVT air guide.

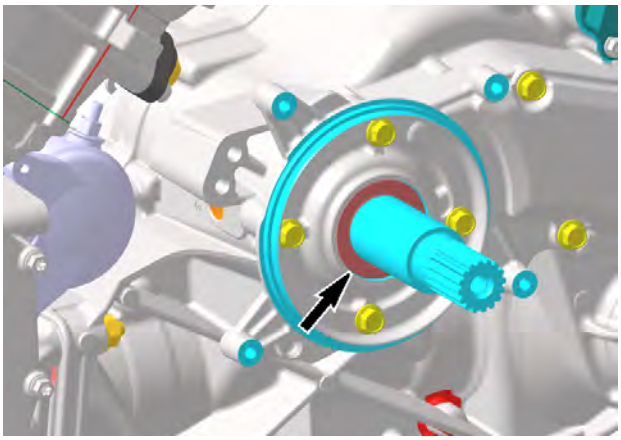

2. Install countershaft oil seal.

Oil seal installer (countershaft) (P/N 529036391)	

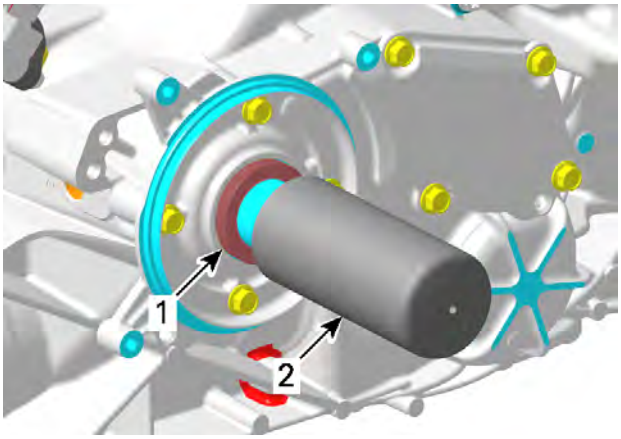

1. Countershaft oil seal
2. Oil seal installer

Shift Shaft Oil Seal

1. Remove the shift plate, refer to *Shifter*.
2. The shift shaft oil seal can be removed without removing the gearbox from the vehicle.

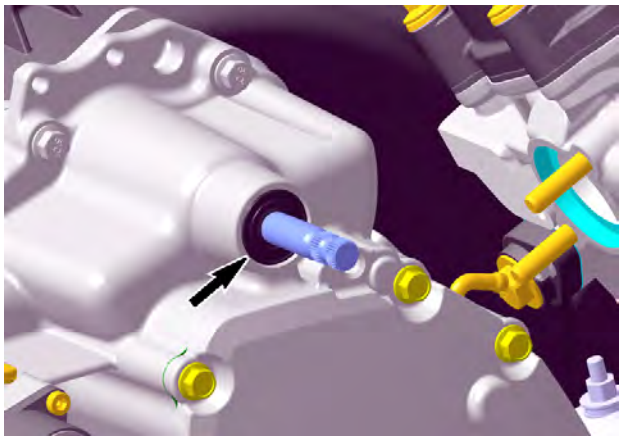

3. Use a suitable tube with the proper diameter to install the oil seal.
4. If gearbox housing is apart, use following tools for shift shaft oil seal installation.

Oil seal installer (gearbox) (P/N 529035758)	
Handle (P/N 420877650)	

NOTICE

Oil seal must be installed with sealing lip toward gearbox.

Shift Drum Shaft Oil Seal

1. To replace the shift drum shaft oil seal, remove the GBPS.

2. Use a suitable tube with the proper diameter to install the oil seal.

NOTICE

Oil seal must be installed with sealing lip toward gearbox.

Drive Gear Oil Seals

1. Remove the appropriate drive shaft.
2. Punch a sharp screwdriver through oil seal for removal.

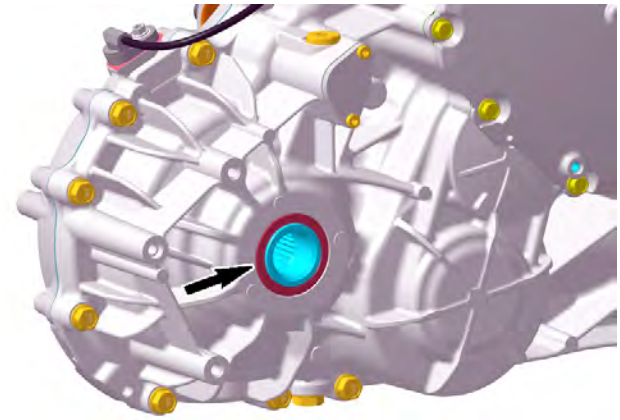

RIGHT SIDE

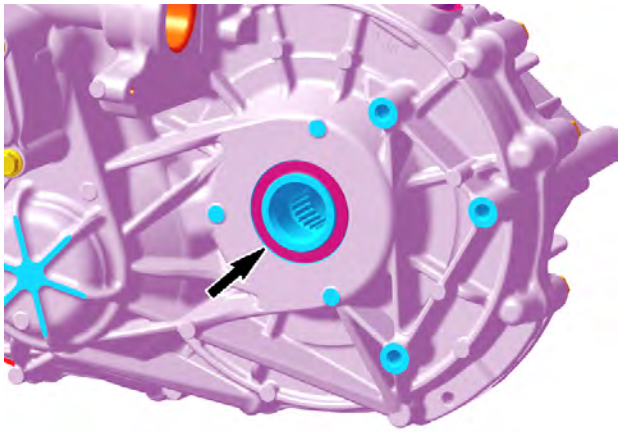

LEFT SIDE

3. Place oil seal on output shaft and install it using the following tools.

Sleeve installer (P/N 529036455)	
Oil seal installer (differential output) (P/N 529036456)	

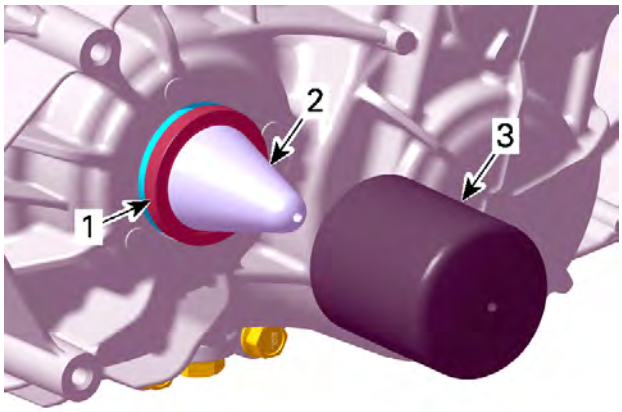

1. *Output shaft oil seal*
2. *Sleeve installer*
3. *Oil seal installer*

Gearbox Assembly

SERVICE PRODUCTS

Description	Part Number	Page
COPASLIP		162
LOCTITE 243 (BLUE)		150, 154, 165, 168
LOCTITE 5910		144, 155, 157
LOCTITE 648 (GREEN)		156, 165
LOCTITE CHISEL (GASKET REMOVER)		154
PETAMO GREASE GHY 133N		147
SUPER LUBE GREASE		139, 141, 145

Removing the Gearbox Assembly

1. Remove engine from vehicle, refer to the appropriate vehicle service manual.
2. Remove the CVT air guide, refer to *Continuously Variable Transmission (CVT)*.
3. Drain gearbox oil.
4. Remove the 4WD actuator.
5. Unscrew the gearbox retaining nuts.

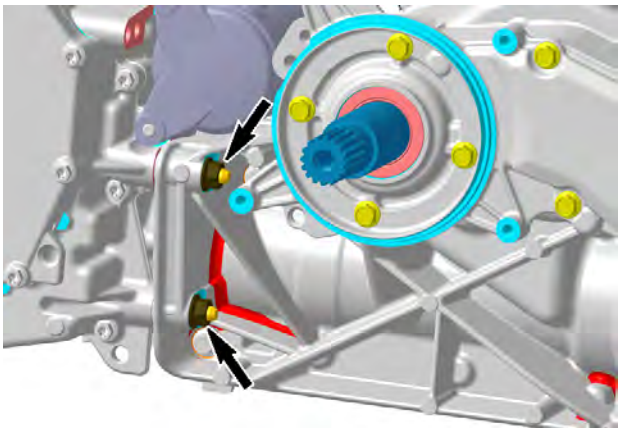

LH SIDE OF ENGINE

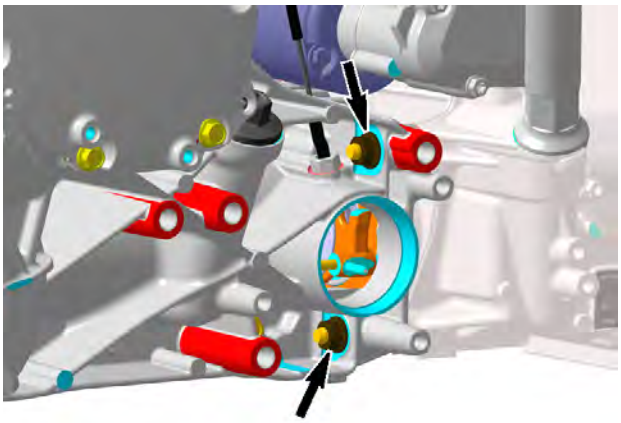

RH SIDE OF ENGINE

6. Pull gearbox to separate it from engine.

Installing the Gearbox

The installation is the reverse of the removal procedure. However, pay attention to following.

1. Before gearbox installation check O-ring on bearing cover if brittle, hard or damaged. Replace if necessary.
2. Lubricate O-ring on rear bearing cover with engine oil.

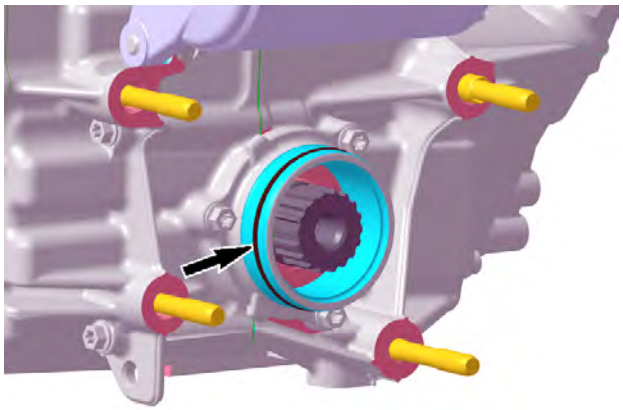

3. Apply a drop of threadlocker on threads of gearbox nuts

Loctite 243 (blue)

4. Tighten gearbox retaining nuts to specification.

Tightening Torque	
Gearbox retaining nuts	25 ± 3 Nm (18 ± 2 lbf-ft)

5. After installation refill gearbox oil.

Gearbox Housing

SERVICE TOOLS

Description	Part Number	Page
ECM ADAPTER TOOL	(P/N 529036166)	143
HANDLE	(P/N 420877650)	148
M34 SOCKET	(P/N 529036388)	151, 156
OIL SEAL INSTALLER (COUNTERSHAFT)	(P/N 529036391)	148
OIL SEAL INSTALLER (DIFFERENTIAL OUTPUT)	(P/N 529036456)	149
OIL SEAL INSTALLER (GEARBOX)	(P/N 529035758)	148
SLEEVE INSTALLER	(P/N 529036455)	149, 154, 169
SPLINES SOCKET 1/2"	(P/N 529036389)	151, 156

SERVICE PRODUCTS

Description	Part Number	Page
COPASLIP		162
LOCTITE 243 (BLUE)		150, 154, 165, 168
LOCTITE 5910		144, 155, 157
LOCTITE 648 (GREEN)		156, 165
LOCTITE CHISEL (GASKET REMOVER)		154
PETAMO GREASE GHY 133N		147
SUPER LUBE GREASE		139, 141, 145

Disassembling the Gearbox Housing

1. Remove the gearbox assembly.
2. Set gearbox to PARK position.
3. Remove the 4WD actuator.
4. Remove the GBPS.
5. Remove bearing cover.

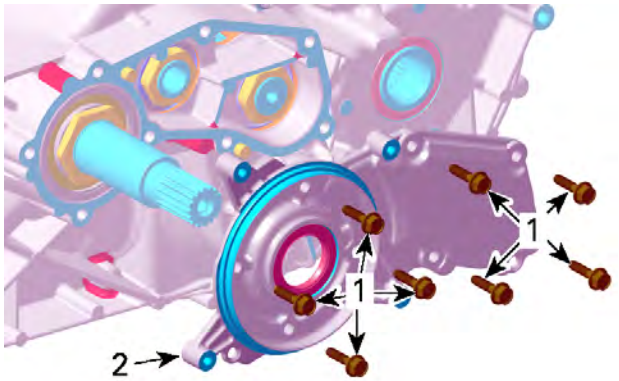

1. Retaining screws
2. Bearing cover

6. Heat up nut with a heat gun to break threadlocker.
7. Remove the countershaft nut.

M34 socket (P/N 529036388)	
Splines socket 1/2" (P/N 529036389)	

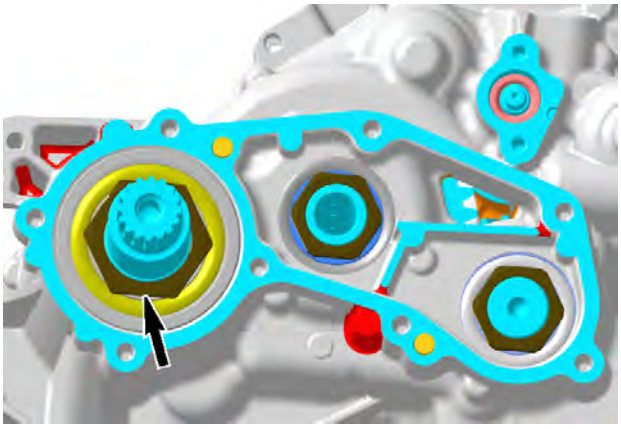

8. Install 4 screws to retain the M34 socket and tighten them to specification.

Tightening Torque	
M34 socket retaining screws	10 ± 1 Nm (89 ± 9 lbf-in)

NOTICE

Turn spline socket clockwise to loosen the nut.

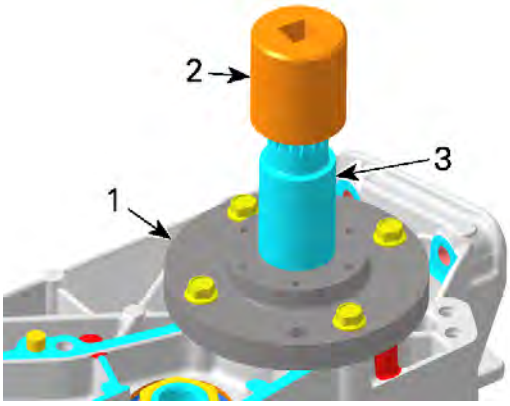

1. M34 socket
2. Spline socket
3. Countershaft

9. Remove nuts of main shaft and intermediate shaft.

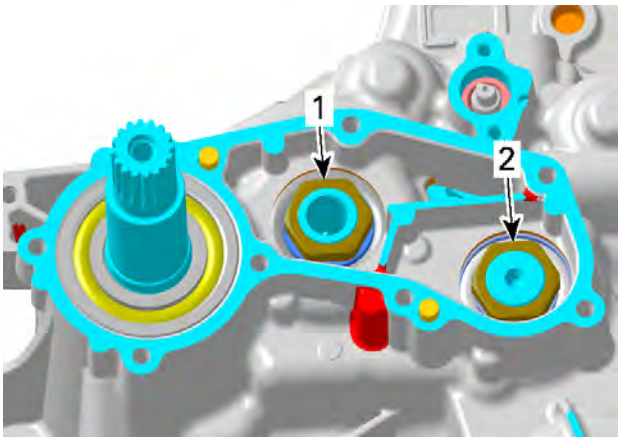

1. Main shaft nut
2. Intermediate shaft nut

10. Remove the parking lock gear and the index washer.
11. Remove all gearbox housing screws:
    1. Start removing the M6 screws.
    2. Then remove the M8 screws.

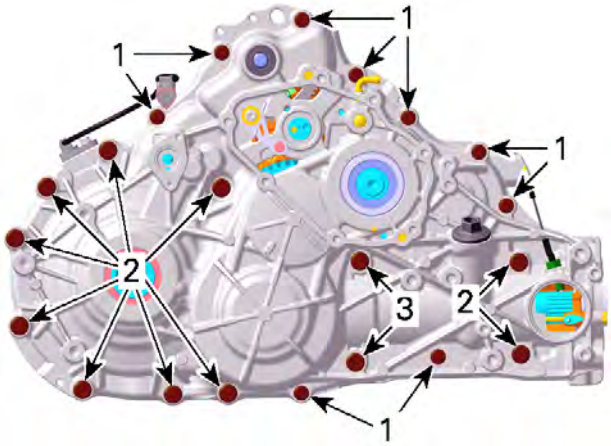

1. 11 screws M6 x 45
2. 10 screws M8 x 45
3. 2 screws M8 x 65

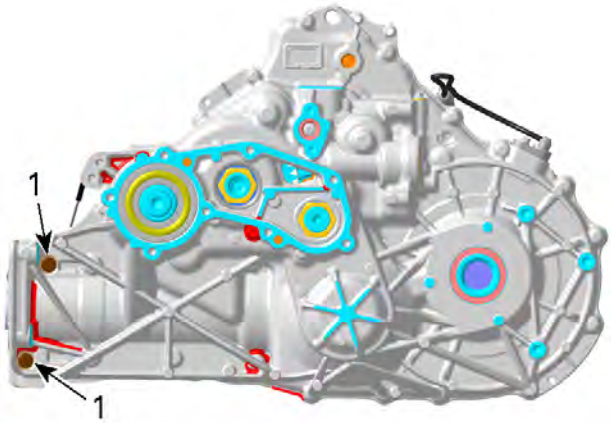

1. 2 screws M6 x 45

12. Separate gearbox housing, use 2 big screwdrivers.

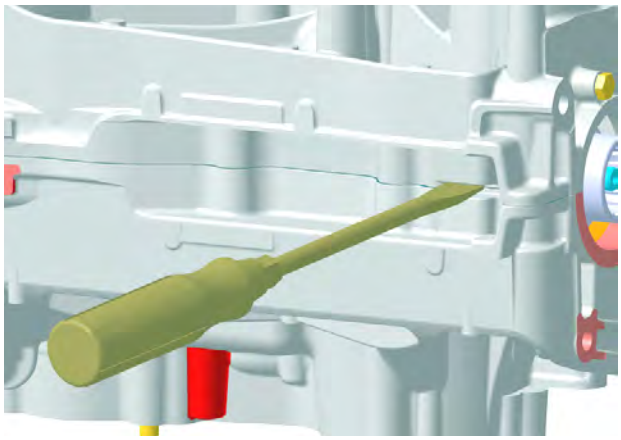

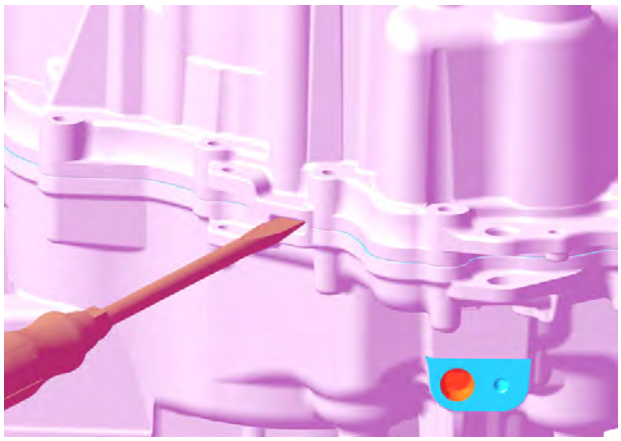

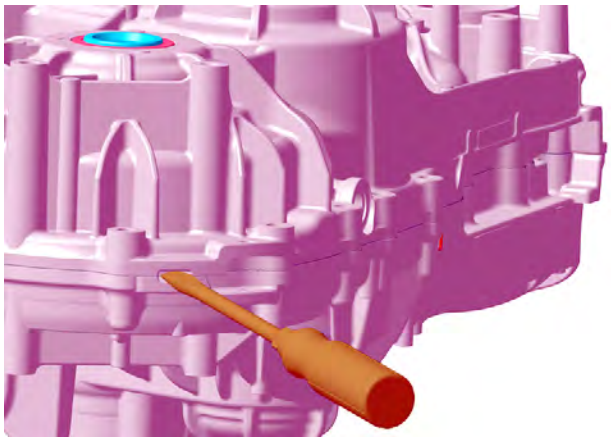

13. If necessary, remove all other components still installed on the housing.

Inspecting the Gearbox Housing

1. Check gearbox ball bearings for: contamination and/or metal shavings.
2. Check if ball bearings turn freely and smoothly. Replace if necessary.

Replacing the Bearing

1. If necessary heat housing up to 100 °C (212 °F) before removing ball bearings.

⚠ WARNING

Clean oil, outside and inside, from housing before heating.

NOTICE

Always support gearbox housings properly when ball bearings are removed. Housing damages may occur if this procedure is not performed correctly.

03

2. Use a blind hole bearing puller to remove ball bearings of:
   - Countershaft (right cover)
   - Intermediate shaft (right cover).
3. Remove retaining plate securing the main shaft and intermediate shaft bearings in the left housing.
4. Remove screw securing the main shaft bearing in the right cover.
5. Use a suitable puller to remove ball bearings of:.
   - Main shaft (right and left cover)
   - Countershaft (left cover)
   - Intermediate shaft (left cover)
   - Drive gear ball bearings (right and left cover).

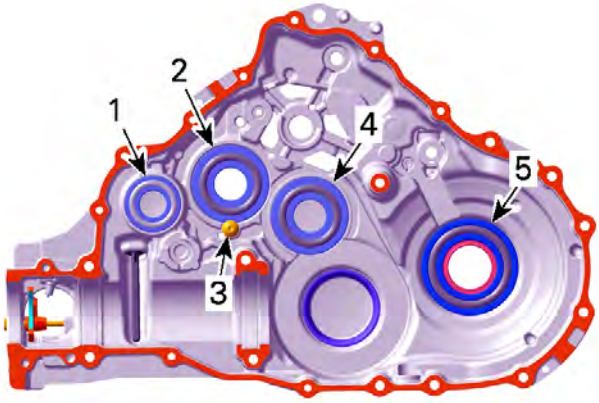

RIGHT GEARBOX HOUSING
1. Ball bearing countershaft
2. Ball bearing main shaft
3. Screw
4. Ball bearing intermediate shaft
5. Ball bearing drive gear

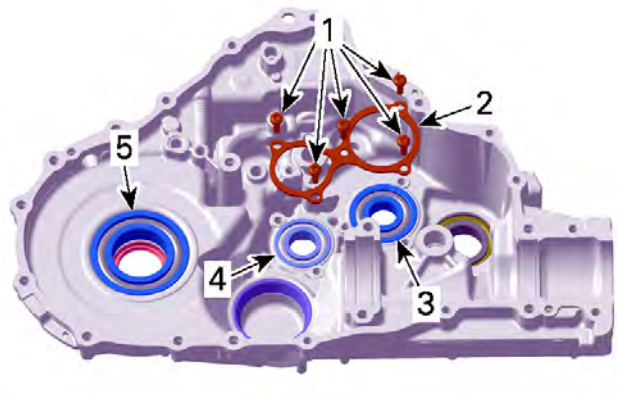

LEFT GEARBOX HOUSING
1. *Screws*
2. *Retaining plate*
3. *Ball bearing main shaft*
4. *Ball bearing intermediate shaft*
5. *Ball bearing drive gear*

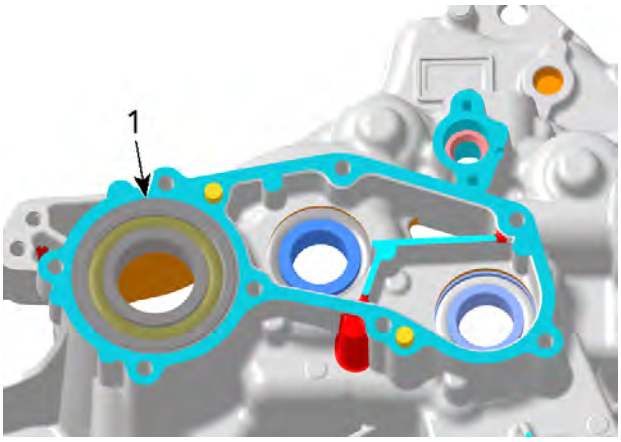

LEFT GEARBOX HOUSING
1. *Ball bearing countershaft*

6. Unless otherwise instructed, never use hammer to install ball bearings. Use press machine only.
7. If necessary heat housings up to 100 °C (212 ° F) before installing ball bearings.

⚠ WARNING
Clean oil, outside and inside, from housing before heating.

8. Place new bearing in freezer for 10 minutes before installation.
9. Use a suitable installer for installing ball bearings of countershaft, main shaft and intermediate shaft.

NOTE: Place gearbox housings on a wood stand before installing ball bearings.

Tightening Torque	
Retaining plate screws	10 ± 1 Nm (89 ± 9 lbf-in)

10. Apply a drop of threadlocker on main shaft bearing screw threads.

Loctite 243 (blue)

Tightening Torque	
Retaining screw main shaft bearing (right cover)	10 ± 1 Nm (89 ± 9 lbf-in)

11. Install new oil seals with the proper installer.

Assembling the Gearbox Housing

1. Clean all metal components in a solvent.
2. Gearbox housing mating surfaces are best cleaned using a combination of a gasket remover and a brass brush. Brush a first pass in one direction then make the final brushing perpendicularly (90°) to the first pass.

Loctite chisel (gasket remover)

NOTICE
Do not wipe with rags. Use a new clean hand towel only.

3. **IMPORTANT:** When beginning the application of the gear housing sealant, the assembly and the first torquing should be done within 10 minutes. It is suggested to have all you need on hand to save time.
4. Place sleeve installer on drive gear.

Sleeve installer (P/N 529036455)	

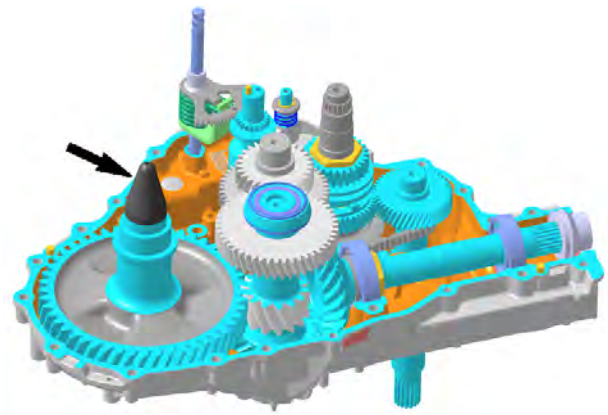

5. Apply sealant on mating surface.

Loctite 5910

6. Do not apply in excess as it will spread out inside gearbox housing.

NOTE: It is recommended to apply this specific sealant as described here to get a uniform application without lumps.

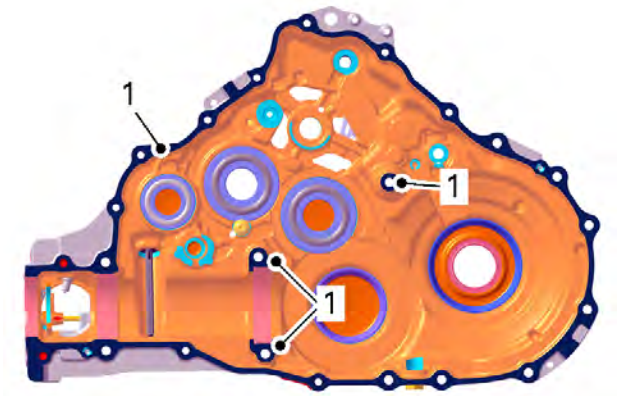

1. Apply sealant here

7. During installation of the right gearbox housing align the coupling fork with the groove in the coupling sleeve.

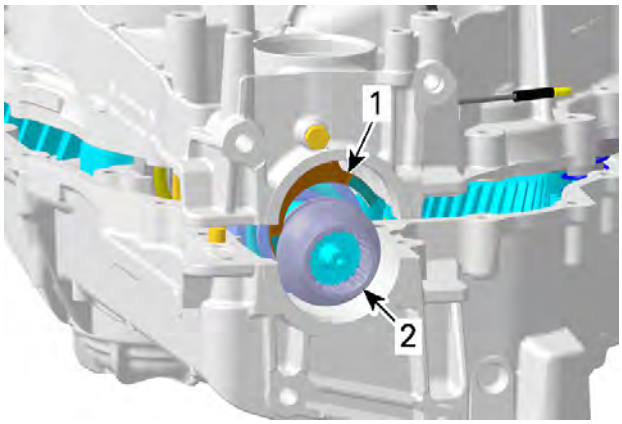

1. Coupling fork
2. Coupling sleeve

8. Install all gearbox housing screws.
9. Tighten M8 gearbox housing screws as per following sequence.

Tightening Torque	
M8 gearbox housing screws	25 ± 3 Nm (18 ± 2 lbf-ft)

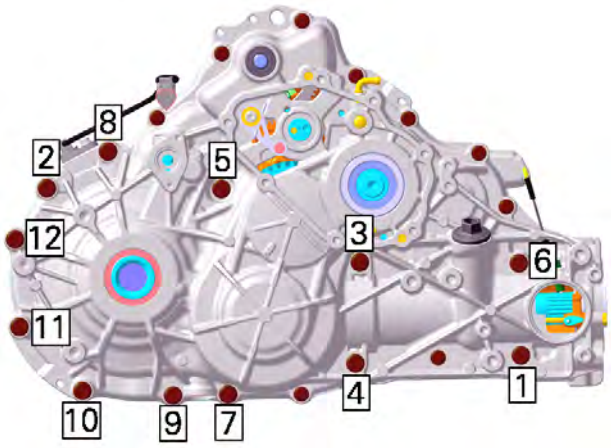

10. Tighten M6 gearbox housing screws as per following sequence.

Tightening Torque	
M6 gearbox housing screws	10 ± 1 Nm (89 ± 9 lbf-in)

11. Refer to *Gearbox and Shifting Mechanism* to install:
    - Index lever
    - Index washer
    - Parking lock gear
    - Parking lock lever.
12. Set gearbox to PARK position.
13. Apply a drop of threadlocker on main shaft and intermediate shaft nuts threads.

Loctite 648 (green)

14. Tighten main shaft and intermediate shaft nuts to specification.

Tightening torque	
Main shaft and intermediate shaft nuts	170 ± 10 Nm (125 ± 7 lbf-ft)

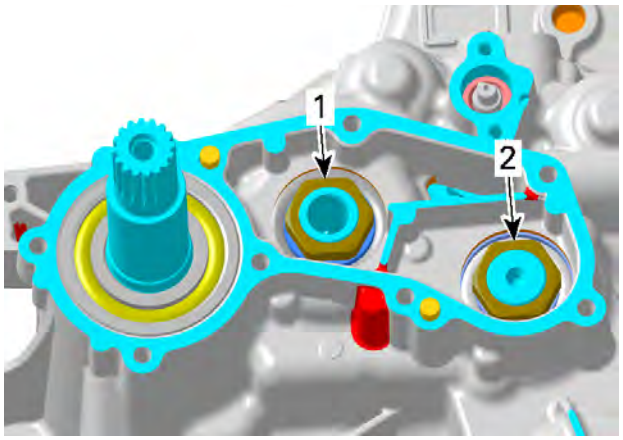

1. Main shaft nut
2. Intermediate shaft nut

15. Apply a drop of threadlocker on threads of the countershaft nut threads.

Loctite 648 (green)

16. Tighten countershaft nut to specification.

M34 socket (P/N 529036388)	
Splines socket 1/2" (P/N 529036389)	

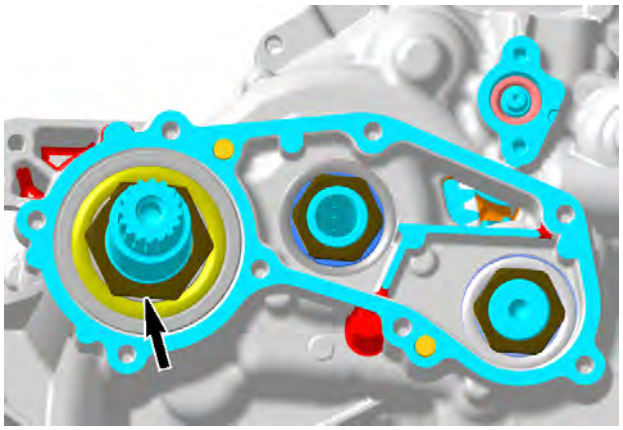

Tightening Torque	
Countershaft nut	170 ± 10 Nm (125 ± 7 lbf-ft)

17. Install 4 screws to retain the M34 socket and tighten them to specification.

Tightening Torque	
M34 socket retaining screws	10 ± 1 Nm (89 ± 9 lbf-in)

NOTICE
Turn spline socket counterclockwise to tighten the nut.

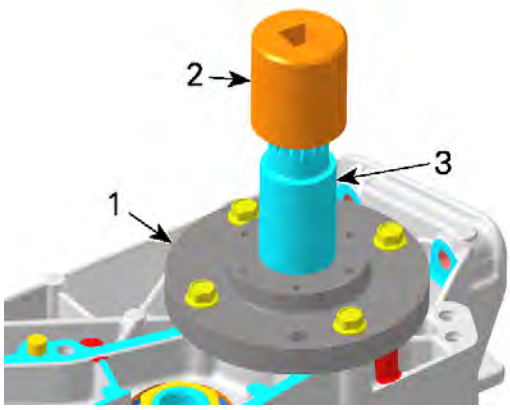

1. *M34 socket*
2. *Spline socket*
3. *Countershaft*

18. Apply sealant on mating surface of bearing housing.

Loctite 5910

19. Install bearing housing screws and tighten them as per following sequence.

Tightening Torque	
Bearing housing screws	10 ± 1 Nm (89 ± 9 lbf-in)

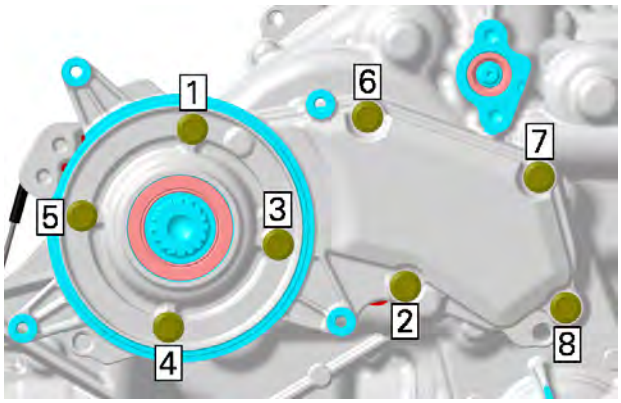

Gearbox and Shifting Mechanism

SERVICE PRODUCTS

Description	Part Number	Page
COPASLIP		162
LOCTITE 243 (BLUE)		150, 154, 165, 168
LOCTITE 5910		144, 155, 157
LOCTITE 648 (GREEN)		156, 165
LOCTITE CHISEL (GASKET REMOVER)		154
PETAMO GREASE GHY 133N		147
SUPER LUBE GREASE		139, 141, 145

Disassembling the Gearbox and Shifting Mechanism

1. During gearbox and shifting mechanism disassembly, inspect the condition of each part closely.

Index Lever, Index Washer and Parking Lock Lever

1. Set gearbox to PARK position.
2. Remove the gearbox cover.

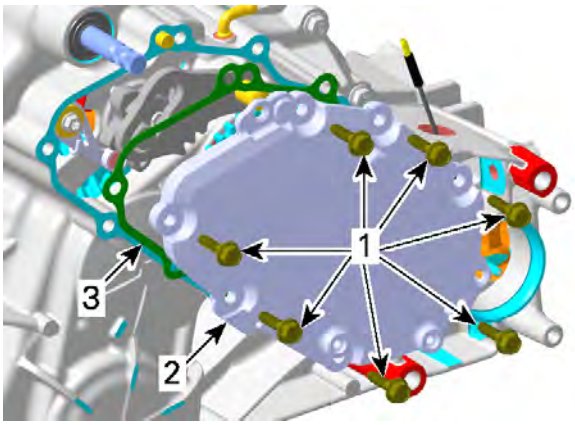

1. Retaining screws
2. Gearbox cover
3. Gasket (discard it)

3. Remove the park locking gear.

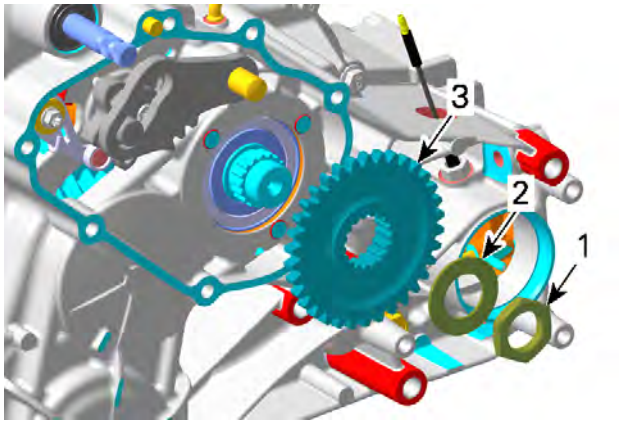

1. Nut
2. Spring washer
3. Park locking gear

4. Remove the parking locking lever.

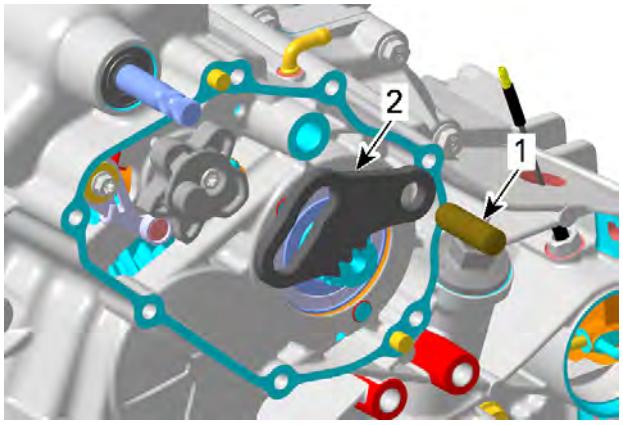

1. Pin
2. Park locking lever

5. Remove screw retaining the index washer to the shift drum.

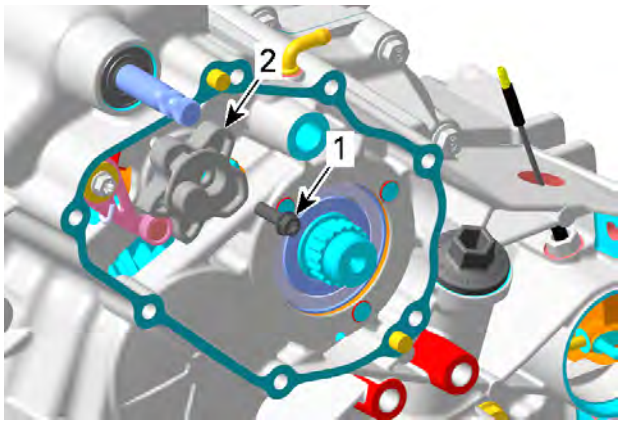

1. *Screw*
2. *Index washer*

6. Insert a flat screwdriver in the slot of index lever. Turn screwdriver clockwise and remove index washer.

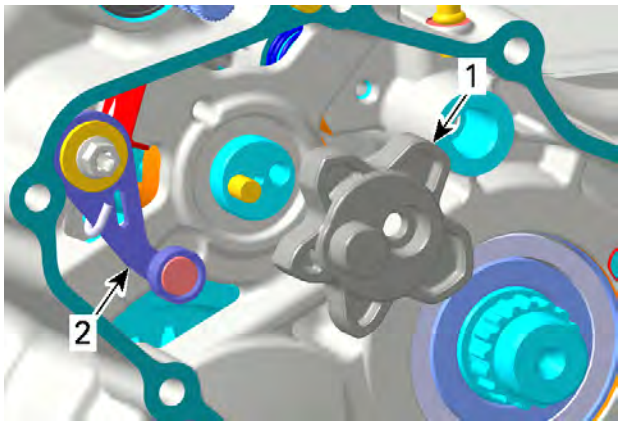

1. *Index washer*
2. *Index lever*

7. Remove the index lever with washer, step ring and spring.

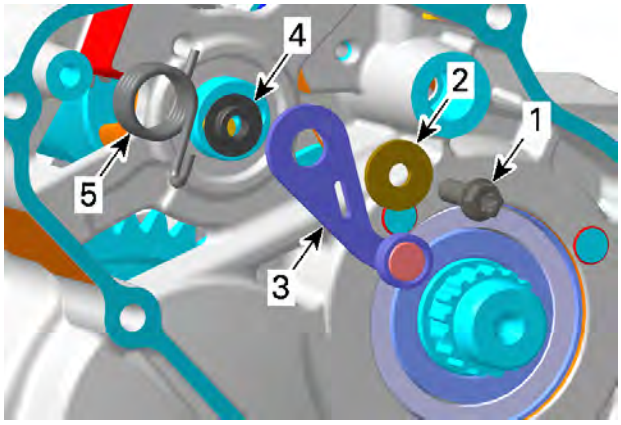

1. *Screw*
2. *Washer*
3. *Index lever*
4. *Step ring*
5. *Index spring*

Shift Shaft Assembly and Shift Drum

1. Separate gearbox housing.
2. Withdraw shift shaft assembly.

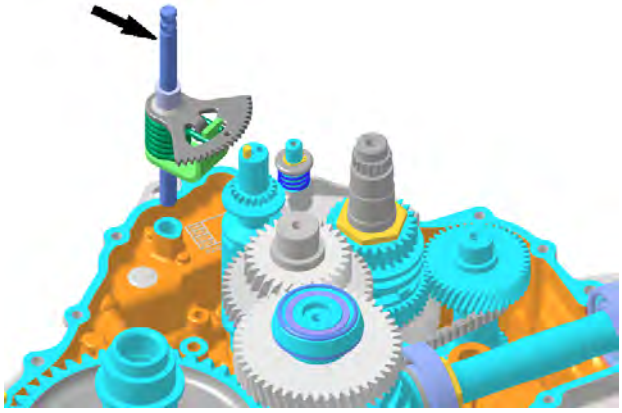

3. Lift shift fork shaft assembly and move it aside to disengage shift forks from shift drum.

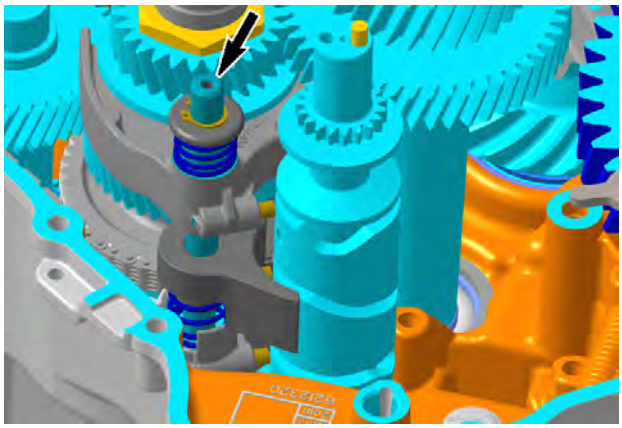

4. Withdraw shift drum.

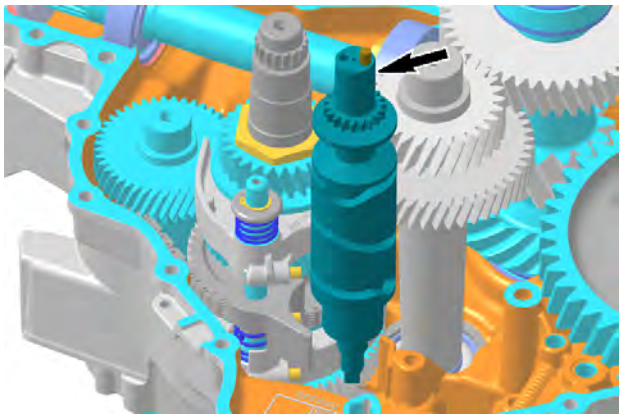

Pinion Drive Shaft and Intermediate Shaft

1. Separate gearbox housing.
2. Remove:
   1. Pinion drive shaft

2. Intermediate shaft.

NOTE: Bevel gear and distance shim remain in gearbox housing.

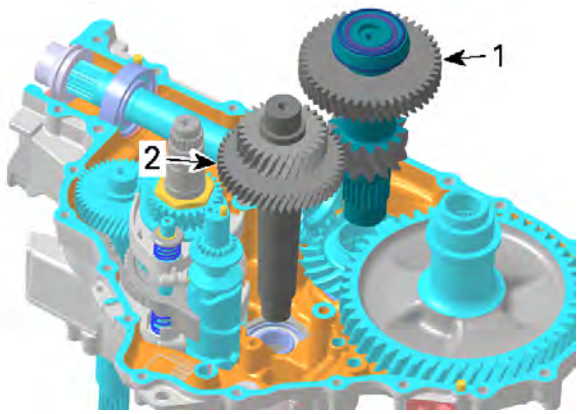

1. *Pinion drive shaft*
2. *Intermediate shaft*

Main Shaft, Shift Fork Shaft Assembly and Countershaft

1. Separate gearbox housing.
2. See procedures in this subsection to remove:
   - Pinion drive shaft
   - Intermediate shaft
   - Shift fork shaft assembly
   - Shift drum.
3. Remove main shaft assembly together with shift fork shaft assembly and countershaft.

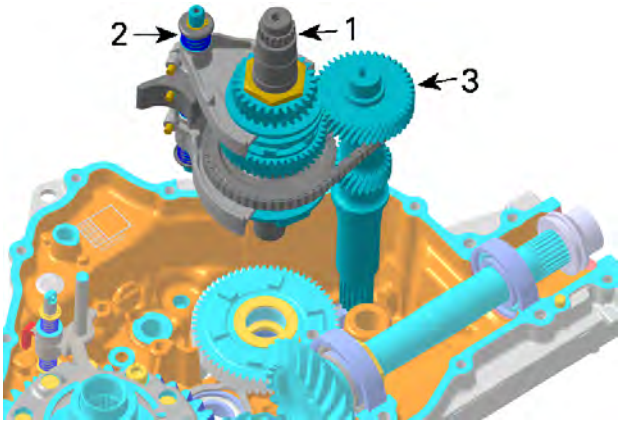

1. *Main shaft assembly*
2. *Shift fork shaft assembly*
3. *Countershaft*

4. Remove:
   - LOW range gear
   - Needle bearing
   - Thrust washers.

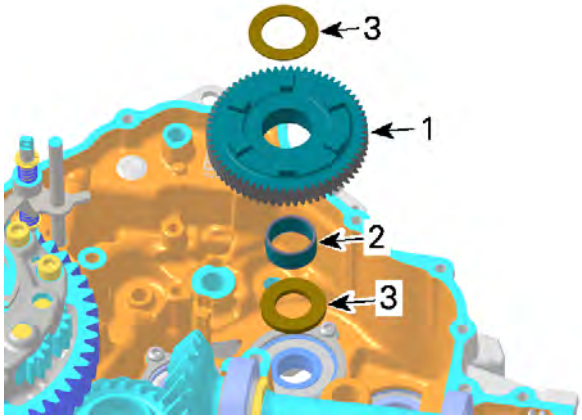

1. *Free pinion LOW range gear*
2. *Needle bearing*
3. *Thrust washer*

Disassembling the Shift Fork Shaft Assembly

NOTICE

Springs are not identical. Mark them to reinstall them in their original position.

1. Remove the following parts from the shift fork shaft.

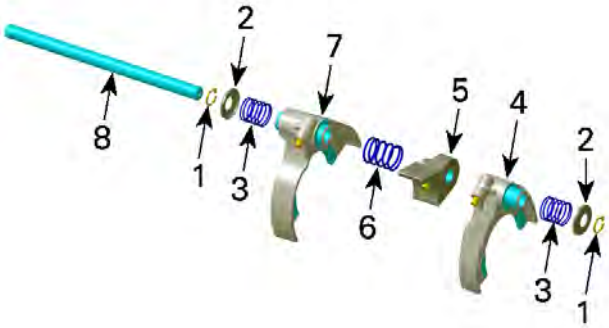

1. *Snap rings*
2. *Spring seat*
3. *Outer springs*
4. *Shift fork HIGH*
5. *Shifting block*
6. *Center spring*
7. *Shift fork LOW/REVERSE*
8. *Shift fork shaft*

Inspecting the Gearbox and Shifting Mechanism

1. Always verify for the following when inspecting gearbox components:
   - Gear teeth damage
   - Worn or scoured bearing surfaces
   - Rounded engagement dogs and slots
   - Worn shift fork engagement groove
   - Worn splines on shafts and shifting sleeves.

Bearings

1. When gearbox is removed check gearbox ball bearings for contamination and/or metal shavings.
2. Check if ball bearings turn freely and smoothly. Replace if necessary, refer to *gearbox housing* in this subsection.

Shifting Sleeves

1. Check shifting sleeves for worn inner splines and rounded or damaged engagement dogs.

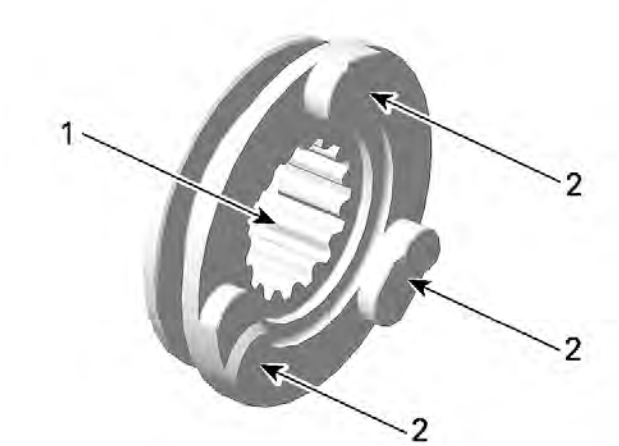

TYPICAL
1. Inner splines
2. Engagement dogs

2. Measure the width of shift fork engagement groove.

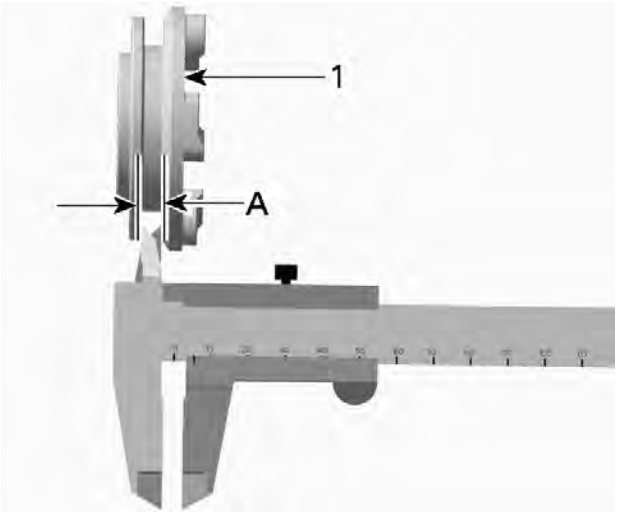

TYPICAL
1. Shifting sleeve
A. Width of shift fork engagement groove

Width of Shift Fork Engagement Groove	
New	5.30 to 5.40 mm (.209 to .213 in)
Service limit	5.50 mm (.217 in)

Shafts

1. Check countershaft bearing journals for wear.

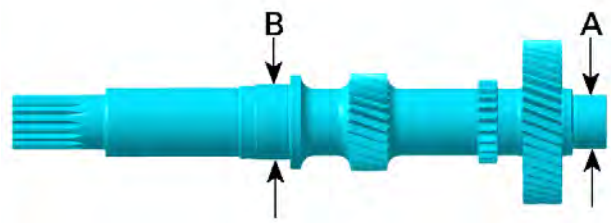

A. MAG side
B. Bearing journal CVT side

Countershaft Bearing Journals		
Mag side	New	19.977 to 19.990 mm (.786 to .787 in)
	Service limit	19.973 mm (.786 in)
CVT side	New	24.977 to 24.990 mm (.983 to .984 in)
	Service limit	24.970 mm (.983 in)

2. Check main shaft for wear.

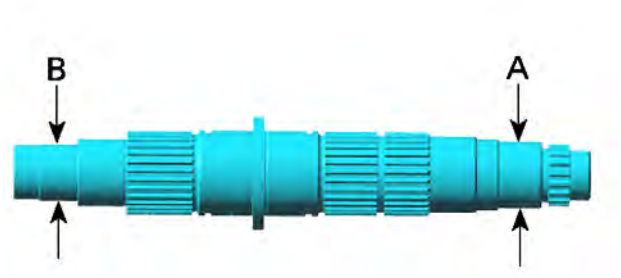

A. Bearing journal MAG side
B. Bearing journal CVT side

Main Shaft Bearing Journal CVT/MAG Side	
New	16.980 to 16.991 mm (.669 to .669 in)
Service limit	16.976 mm (.668 in)

Shift Shaft

1. Check shift shaft for worn splines and gears.
2. Check shift shaft spring for damages.

Shift Drum

NOTICE
Do not disassemble shift drum.

1. Check shift drum tracks for scouring or heavy wear, like rounded engagement slots.

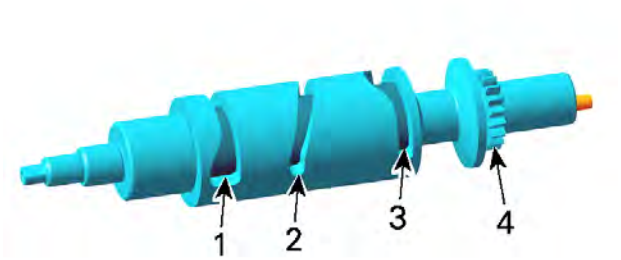

1. Track for the low/reverse range gear shift fork
2. Track for the shifting block
3. Track for the high range gear shift fork
4. Shift drum gear

Shift Forks

1. Check both shift forks for visible damage, wear or bent shift fork claws.
2. Check engagement rollers for wear and smooth movement.
3. Measure the shift fork claw thickness.

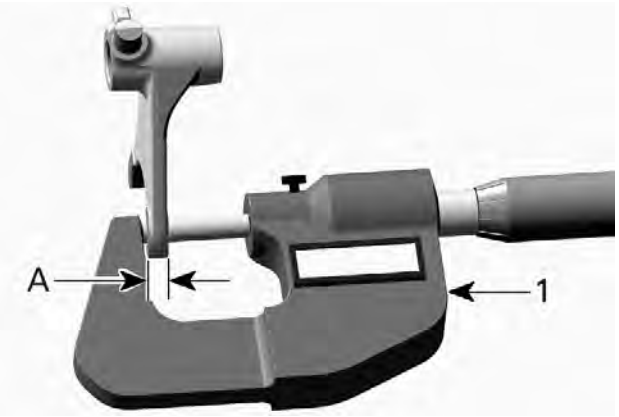

TYPICAL
1. Micrometer
A. Shift fork claw thickness

Shift Fork Claw Thickness	
New	5.10 to 5.20 mm (.201 to .205 in)
Service limit	5.00 mm (.197 in)

Shift Fork Shaft

1. Check shift fork shaft for visible damage or wear.
2. Check if shift fork shaft is straight.

Index Lever and Parking Lever

1. Index lever with roller must move freely.
2. Check parking lever for cracks or other damages.

Assembling the Gearbox and Shifting Mechanism

The assembly of gearbox is essentially the reverse of disassembly procedure. However, pay attention to the following details.

1. Prior to assembly lubricate ball bearing seats of:

Copaslip

- Main shaft
- Countershaft
- Intermediate shaft.

Assembling the Shift Fork Shaft Assembly

NOTICE
Springs are not identical.

1. Install:
   - **NEW** snap rings
   - Spring seats
   - Springs
   - Shift forks
   - Shifting block.

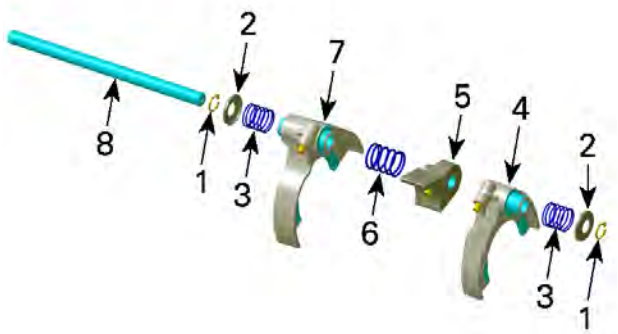

1. *Snap rings*
2. *Spring seat*
3. *Outer springs*
4. *Shift fork HIGH*
5. *Shifting block*
6. *Center spring*
7. *Shift fork LOW/REVERSE*
8. *Shift fork shaft*

Main Shaft, Shift Fork Shaft Assembly and Countershaft

1. Install shifting sleeve, thrust washer and LOW gear pinion on main shaft assembly.
2. Check if shifting sleeve engages correctly in reverse gear.

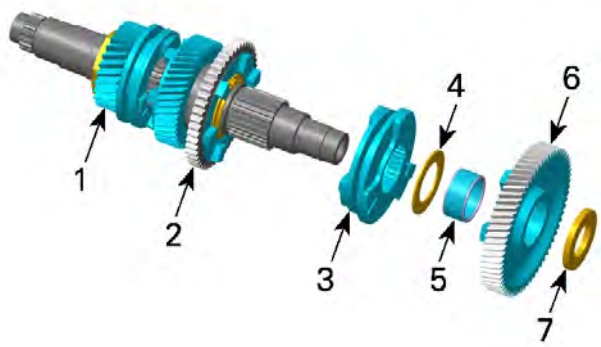

1. *Main shaft assembly*
2. *Reverse gear*
3. *Shifting sleeve*
4. *Thrust washer*
5. *Needle bearing*
6. *LOW gear pinion*
7. *Thrust washer*

3. Install shift fork shaft assembly, countershaft and main shaft assembly together into gearbox housing.

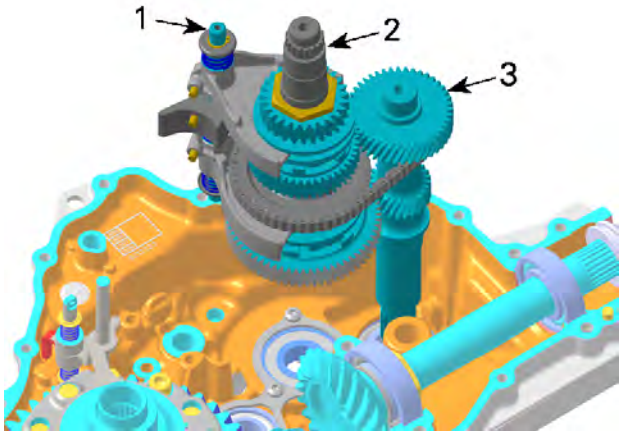

1. *Main shaft assembly*
2. *Shift fork shaft assembly*
3. *Countershaft*

Pinion Drive Shaft and Intermediate Shaft

1. Ensure distance shim and bevel gear are placed on the pinion drive shaft bearing in gearbox housing.

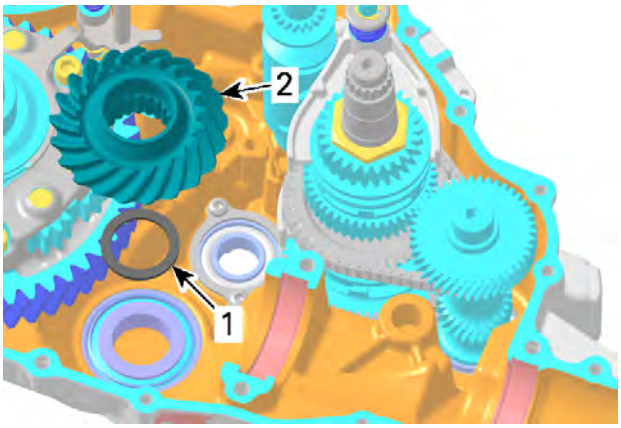

1. *Distance shim*
2. *Bevel gear*

2. Install:
   1. Intermediate shaft
   2. Pinion drive shaft.
3. Carefully fit pinion drive shaft into inner splines of bevel gear.

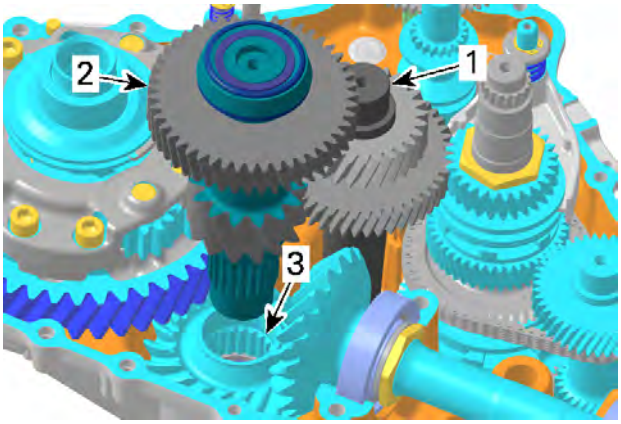

1. *Intermediate shaft*
2. *Pinion drive shaft*
3. *Bevel gear splines*

Shift Shaft Assembly and Shift Drum

1. Install:
   - Shift drum
   - Shift shaft assembly.
2. Align mark on shift shaft with marks on shift drum gear.

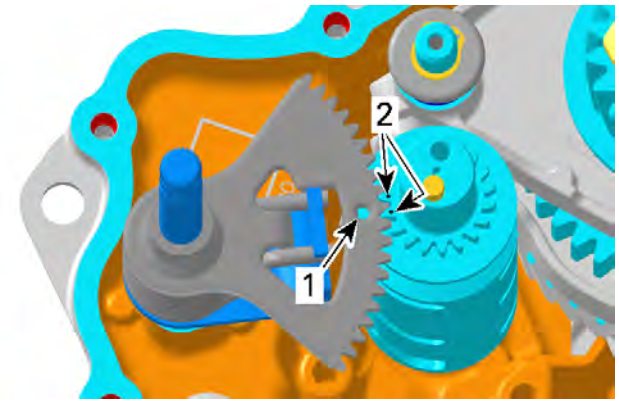

1. *Mark on shift shaft*
2. *Marks on shift drum gear*

3. Engage shift fork pins into shift drum gates and install shift fork shaft:
   1. Lift shift fork HIGH
   2. Press shifting block down
   3. Move shift fork shaft sidewards.

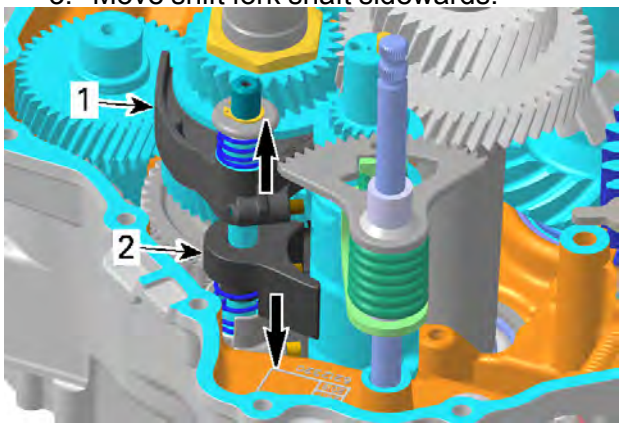

1. *Shift fork HIGH*
2. *Shifting block*

Index Lever, Index Washer and Parking Lock Lever

1. Fit step ring into index lever.

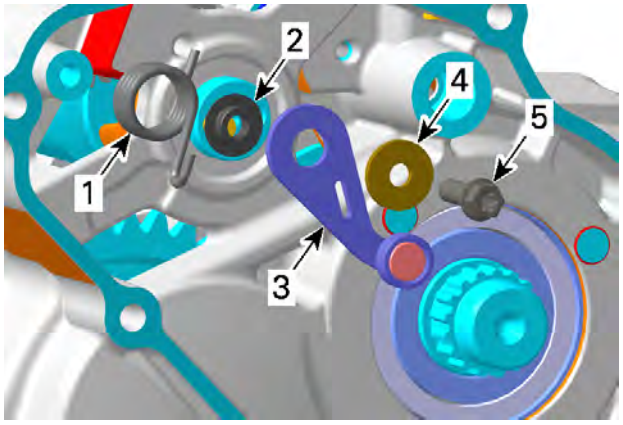

1. *Index spring*
2. *Step ring*
3. *Index lever*
4. *Washer*
5. *Screw*

2. Apply a drop of threadlocker on index lever screw threads.

Loctite 243 (blue)

3. Tighten the index lever screw to specification.

Tightening Torque	
Index lever retaining screw	10 ± 1 Nm (89 ± 9 lbf-in)

4. Install index washer on shift drum.
5. Insert a flat screwdriver in the slot of the index lever, turn screwdriver clockwise and engage lever in index washer in NEUTRAL position as per following illustration.

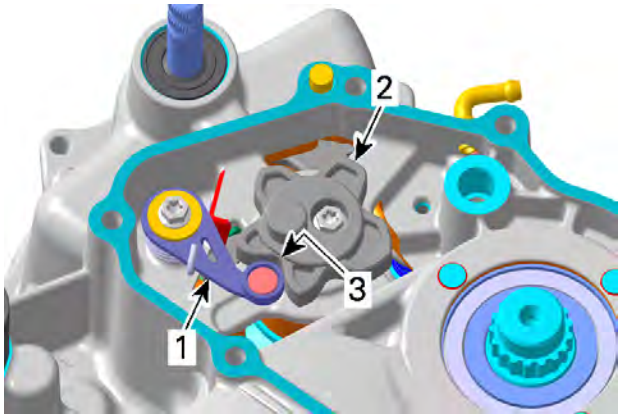

1. *Index lever*
2. *Index washer*
3. *Neutral position*

6. Apply a drop of threadlocker on index washer screw threads.

Loctite 243 (blue)

7. Install screw retaining the index washer to the shift drum.

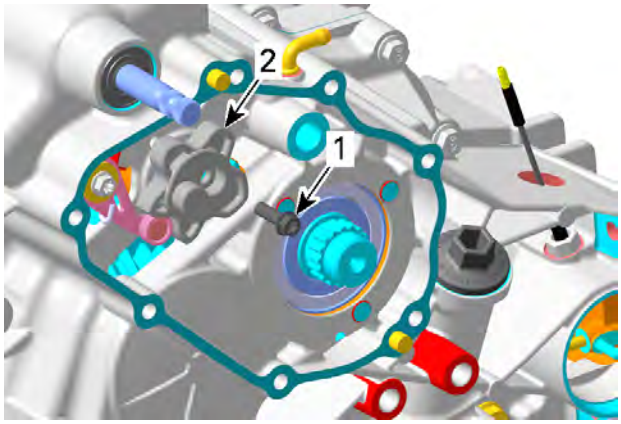

1. *Screw*
2. *Index washer*

Tightening Torque	
Index washer retaining screw	10 ± 1 Nm (89 ± 9 lbf-in)

8. Install:
   - Park locking gear
   - Spring washer
   - Nut
   - Pin
   - Park locking lever.
9. Set gearbox to PARK position.

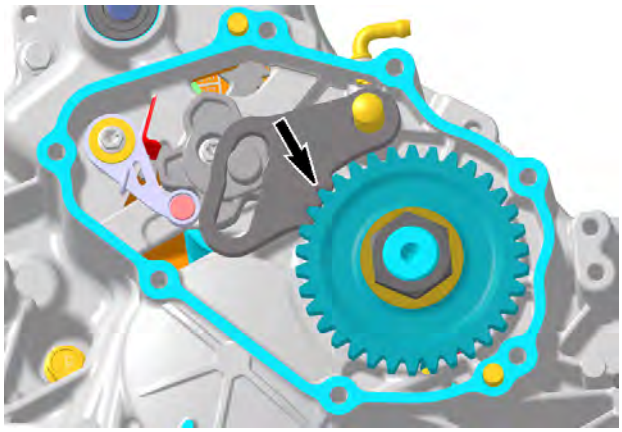

PARK LOCKING LEVER ENGAGED

10. Apply a drop of threadlocker on park locking gear nut threads.

Loctite 648 (green)

11. Tighten nut to specification.

Tightening Torque	
Park locking gear nut	170 ± 10 Nm (125 ± 7 lbf-ft)

12. Install gearbox cover with **NEW** gasket.
13. Tighten gearbox cover screws as per following sequence.

Tightening Torque	
Gearbox cover screws	10 ± 1 Nm (89 ± 9 lbf-in)

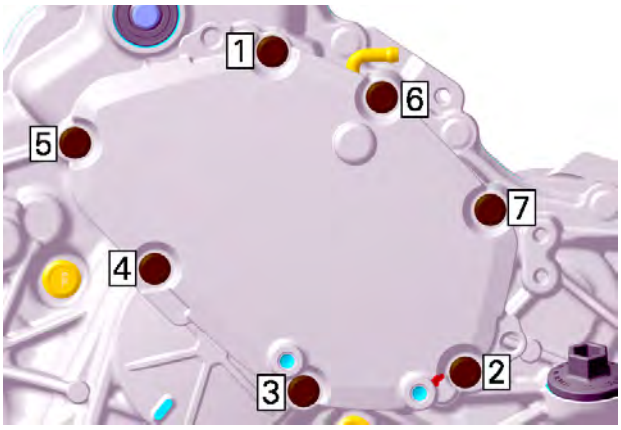
1
6
5
7
4
2
3

Output Shaft and 4x4 Coupling Mechanism

SERVICE PRODUCTS

Description	Part Number	Page
COPASLIP		162
LOCTITE 243 (BLUE)		150, 154, 165, 168
LOCTITE 5910		144, 155, 157
LOCTITE 648 (GREEN)		156, 165
LOCTITE CHISEL (GASKET REMOVER)		154
PETAMO GREASE GHY 133N		147
SUPER LUBE GREASE		139, 141, 145

Removing the Output Shaft and 4X4 Coupling Mechanism

1. Drain gearbox oil.
2. Remove the 4WD actuator.
3. Detach the gearbox from the engine.
4. Remove the coupling fork.

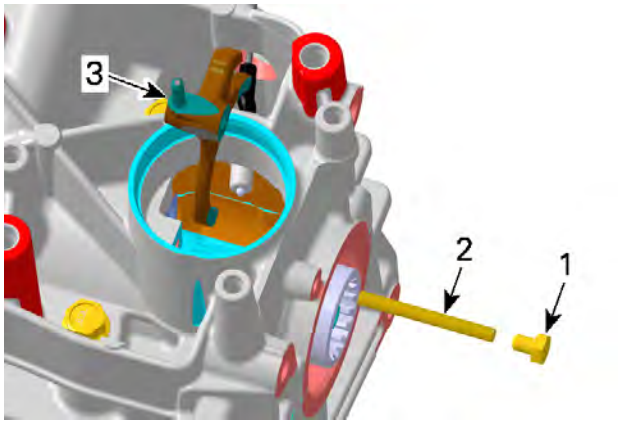

1. *Screw*
2. *Coupling fork shaft*
3. *Coupling fork*

5. Pull out 4X4 coupling sleeve.

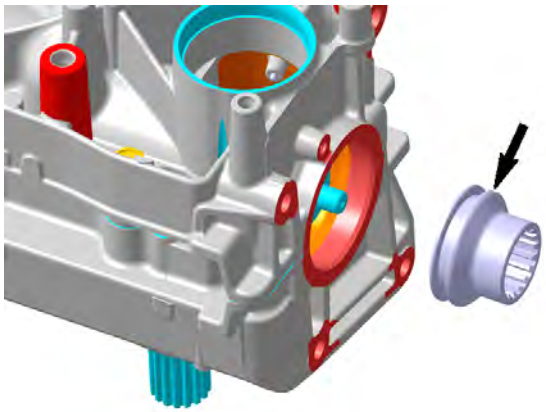

Inspecting the Output Shaft and 4X4 Coupling Mechanism

Output Shaft

1. Check output shaft and its gear for cracks, bend, pitting or other visible damages.
2. Check output shaft splines for wear or other damages.
3. Check if the output shaft bearings turn freely and smoothly.
4. Replace oil seal if brittle, hard or damaged.

4X4 Coupling Sleeve

1. Check splines of coupling sleeve for wear or other damages.

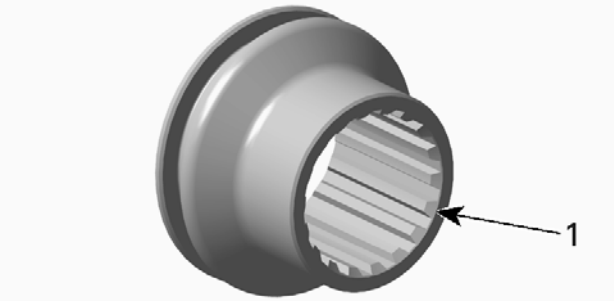

1. Inspect splines

2. Measure the coupling sleeve groove width.

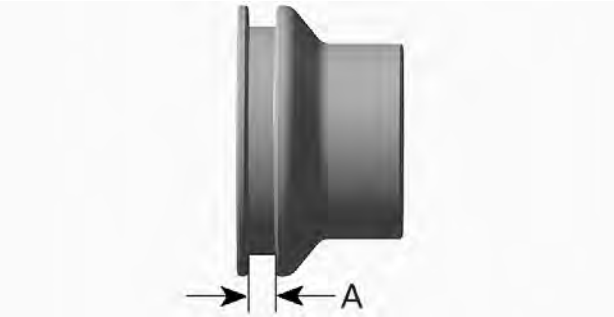

A. Groove width

Coupling Sleeve Groove Width	
New	5.25 to 5.35 mm (.207 to .211 in)
Service limit	5.50 mm (.217 in)

Coupling Fork

1. Check coupling fork for visible damage, wear or bent coupling fork claws.
2. Check coupling fork claw thickness.

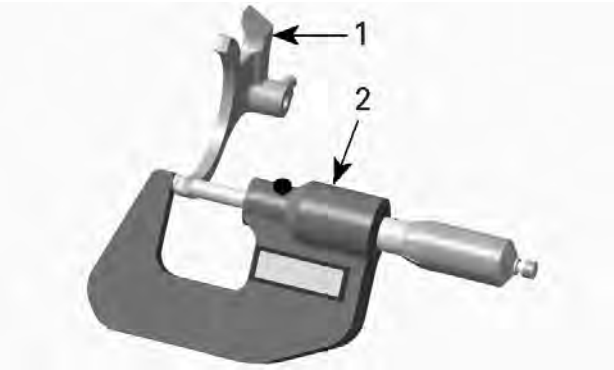

1. Coupling fork
2. Micrometer

Coupling Fork Claw Thickness	
New	4.95 to 5.05 mm (.195 to .199 in)
Service limit	4.80 mm (.189 in)

Installing the Output Shaft and 4X4 Coupling Mechanism

1. Install coupling sleeve onto the output shaft.
2. Install the coupling fork.
3. Ensure that coupling fork engages into the coupling sleeve groove.

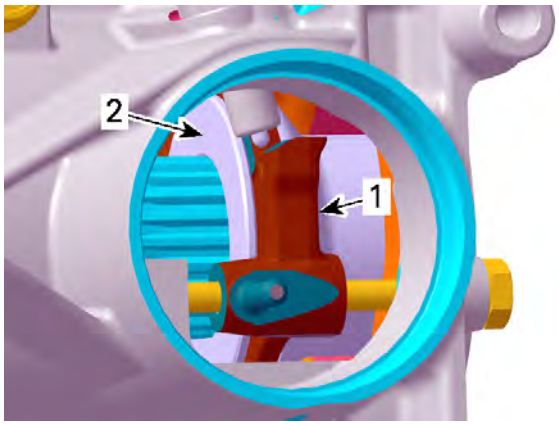

1. Coupling fork
2. Coupling sleeve

4. Apply a drop of threadlocker on coupling fork shaft screw threads.

Loctite 243 (blue)

5. Tighten the coupling fork shaft screw to specification.

Tightening Torque	
Coupling fork shaft screw	6 ± 0.7 Nm (53 ± 6 lbf-in)

Drive Gear

SERVICE TOOLS

Description	Part Number	Page
ECM ADAPTER TOOL	(P/N 529036166)	143
HANDLE	(P/N 420877650)	148
M34 SOCKET	(P/N 529036388)	151, 156
OIL SEAL INSTALLER (COUNTERSHAFT)	(P/N 529036391)	148
OIL SEAL INSTALLER (DIFFERENTIAL OUTPUT)	(P/N 529036456)	149
OIL SEAL INSTALLER (GEARBOX)	(P/N 529035758)	148
SLEEVE INSTALLER	(P/N 529036455)	149, 154, 169
SPLINES SOCKET 1/2"	(P/N 529036389)	151, 156

Removing the Drive Gear

1. Separate gearbox housing.
2. Remove drive gear.

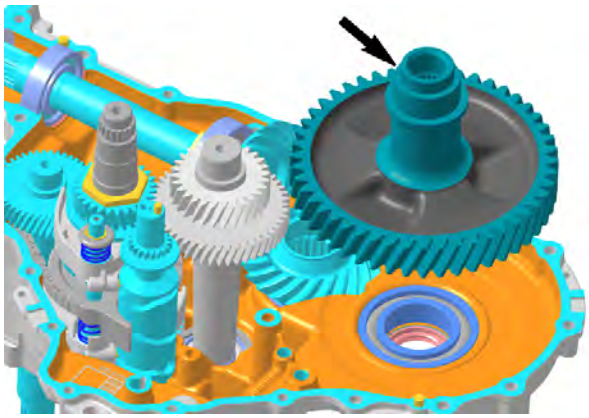

Installing the Drive Gear

1. Install drive gear.

Sleeve installer (P/N 529036455)	

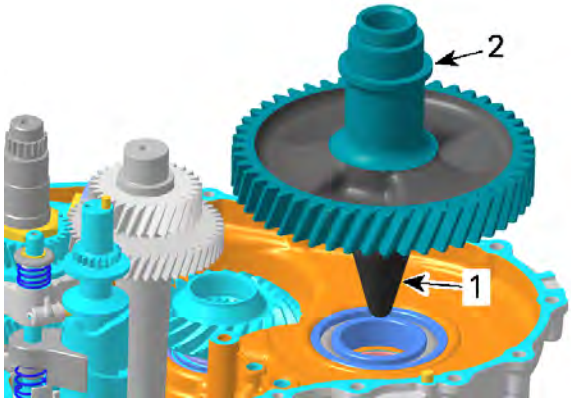

1. Sleeve installer
2. Drive gear

Notes

Technician's Notes

Related Documents

Bulletins	

Instruction Sheets	

Other	

04

GEARBOX AND 4X4 COUPLING UNIT WITH LOCKABLE REAR DIFFERENTIAL

04 Gearbox and 4x4 Coupling Unit With Lockable Rear Differential

Exploded Views – Lockable Rear Differential

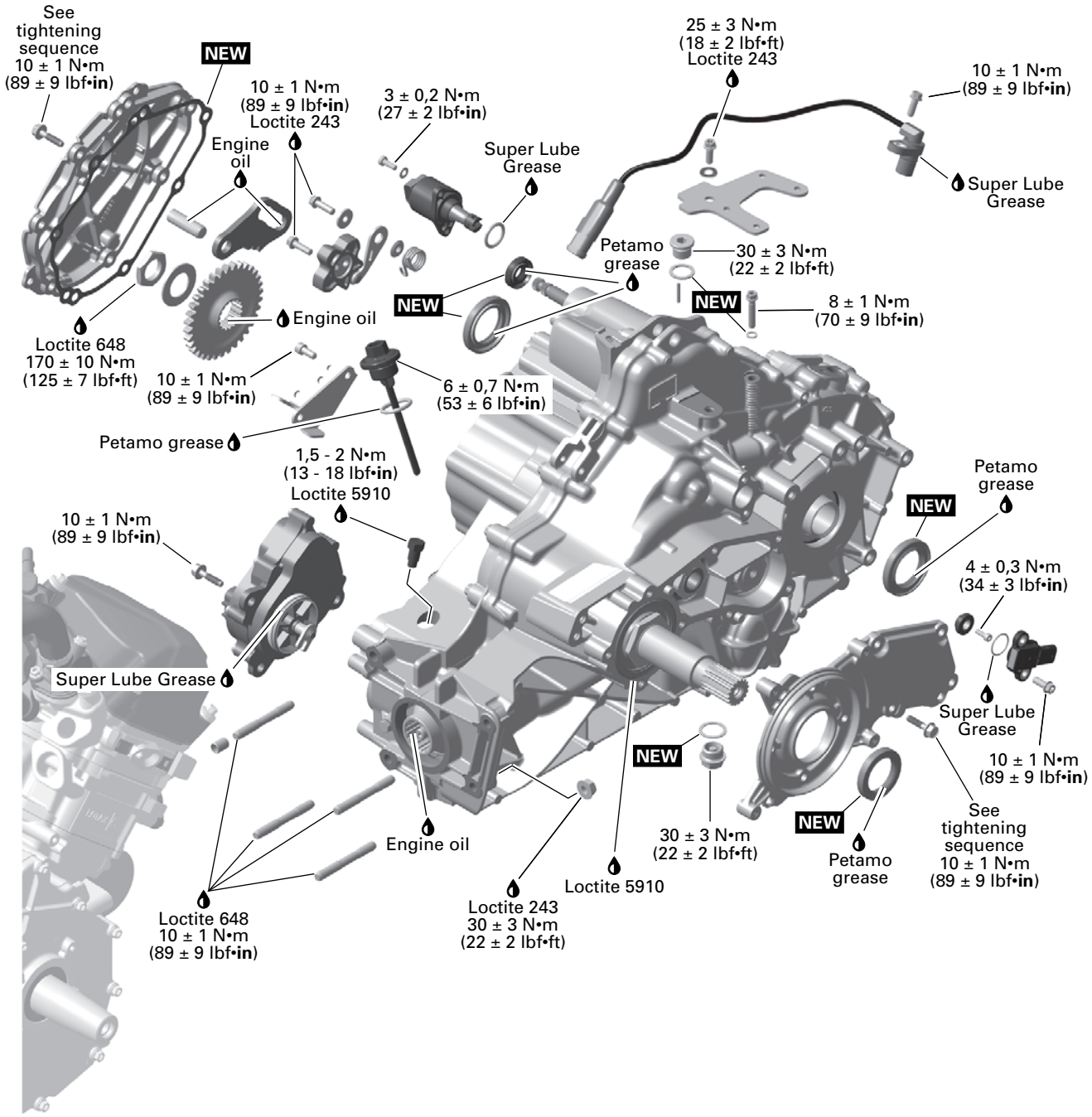

NEW = Component must be replaced when removed.

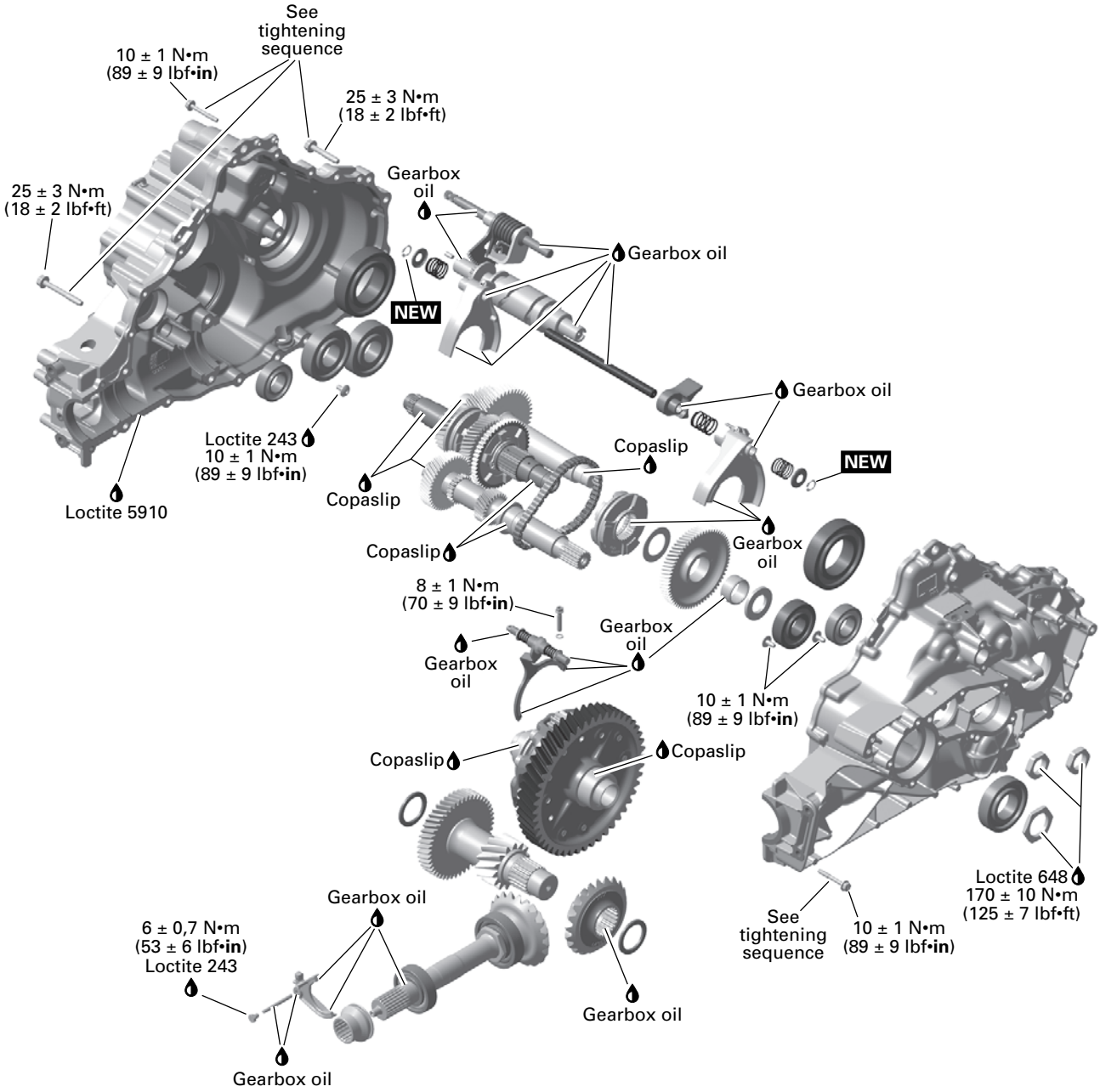

NEW = Component must be replaced when removed.

Gearbox Overview

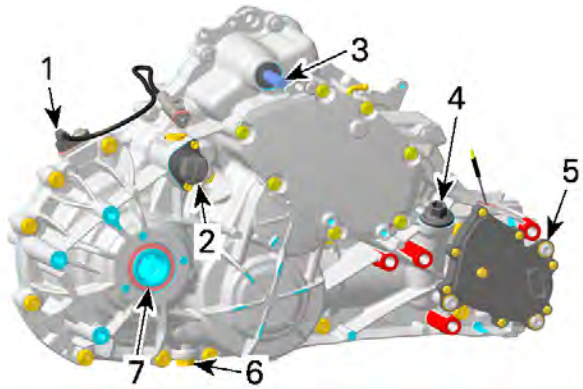

1. *Vehicle speed sensor (VSS)*
2. *Differential locking actuator*
3. *Shift shaft*
4. *Gearbox oil dipstick*
5. *4WD actuator*
6. *Magnetic drain plug*
7. *Rear differential output shaft*

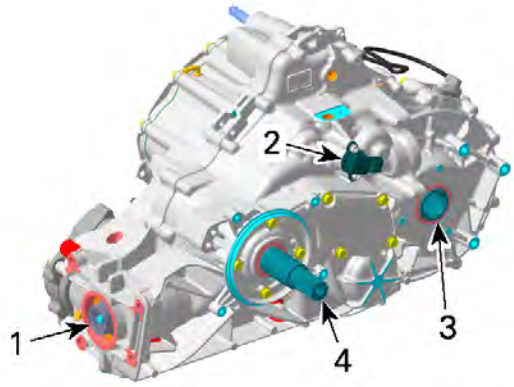

1. *4WD coupling sleeve*
2. *Gearbox position sensor (GBPS)*
3. *Rear differential output shaft*
4. *Countershaft*

Troubleshooting

Troubleshooting

1. UNUSUAL GEARBOX NOISE AND/OR VIBRATIONS

Low oil level in gearbox.

– *Oil leakage from gearbox. Replace damaged gasket(s) and/or oil seal(s).*

Defective bearings.

– *Bearing(s) do(es) not turn smoothly. Replace bearing(s).*

Damaged or worn gears.

– *Inspect gears for damages or missing teeth. Replace respective gears.*

2. GEAR INDICATION FAILS

Defective gearbox position sensor (GBPS).

– *Perform a gearbox position sensor test (refer to procedure in this subsection).*

– *Damaged wires. Repair as required.*

3. GEAR(S) IS (ARE) HARD TO SHIFT

Incorrect shifter cable adjustment.

– *Adjust shifter cable (refer to Shifter Cable in Shifter subsection.*

4. 4 WHEEL DRIVE INDICATION FAILS

4WD indicator failure.

– *Test 4WD actuator.*

– *Bad contact. Check for corrosion or loose connector.*

– *Damaged wires. Repair as required.*

5. 4 WHEEL DRIVE DOES NOT ENGAGE OR DISENGAGE

Defective 4WD actuator.

– *Test 4WD actuator.*

Damaged or worn shifting fork or sleeve.

– *Remove 4WD actuator and inspect shifting fork and sleeve.*

6. REAR DIFFERENTIAL LOCKING MECHANISM DOES NOT ENGAGE OR DISENGAGE

Locking mechanism braced.

NOTICE

Lifting the rear of the vehicle increases the stress to the rear differential.

– *Ride vehicle and fully turn to the left and right to release stressed locking mechanism.*

Defective differential locking actuator.

– *Press differential switch and listen or feel if actuator works.*

– *Test the Differential Locking actuator.*

Gearbox Oil

SERVICE PRODUCTS

Description	Part Number	Page
COPASLIP		204
LOCTITE 243 (BLUE)		192, 196, 207, 210
LOCTITE 5910		197, 199
LOCTITE 648 (GREEN)		198, 207
LOCTITE CHISEL (GASKET REMOVER)		196
PETAMO GREASE GHY 133N		189
SUPER LUBE GREASE		178, 180, 183–184, 187

Recommended Gearbox Oil

XPS Recommended Gearbox Oil
75W140 synthetic gear oil
Alternative if XPS product is not available
75W140 API GL-5 synthetic gear oil

NOTICE

Never use another type of oil when servicing.

The XPS oil is specially formulated to meet the lubrication requirements of this gearbox. BRP strongly recommends the use of its XPS oil.

Verifying the Gearbox Oil Level

1. Place the vehicle on a level surface.
2. Select PARK position.
3. Clean the dipstick area.
4. Remove the gearbox oil dipstick.
5. Wipe and reinstall the dipstick.

NOTICE

Pay attention not to loose O-ring on oil dipstick.

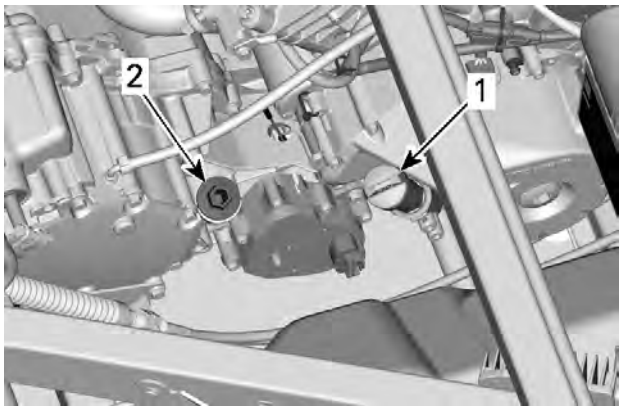

1. Engine oil dipstick
2. Gearbox oil dipstick

6. Remove dipstick again and check oil level. It should be near or equal to the upper mark.

1. MIN.
2. MAX.
3. Operating range

7. Add oil (if required):

NOTICE

Operating the gearbox with lower or higher oil level may severely damage gearbox.

   1. Place a funnel into the dipstick hole.
   2. Add a small amount of recommended oil.
   3. Recheck oil level often.
   4. Repeat the above steps until oil level reaches the dipstick's upper mark
8. Properly tighten dipstick.

Changing the Gearbox Oil

1. Place the vehicle on a level surface.
2. Place a drain pan underneath the oil drain plug area.

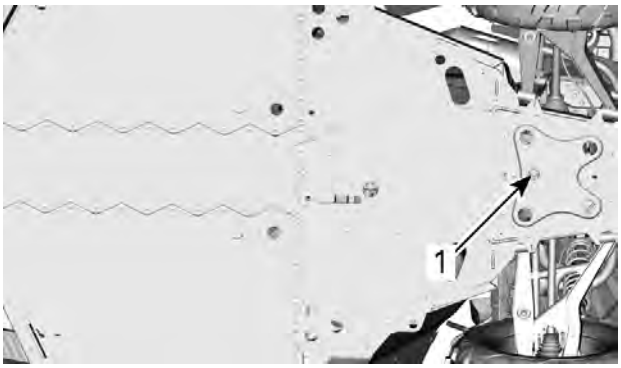

1. Gearbox drain plug area

3. Clean the following areas.
   - Drain plug area
   - Vehicle speed sensor (VSS) area
   - Dipstick area.
4. Remove the dipstick.
5. Remove the drain plug.
6. Let oil completely drain from gearbox.
7. Clean drain plug from any metallic particles.
8. Install the drain plug.

Tightening Torque	
Drain plug	20 ± 2 Nm (15 ± 1 lbf-ft)

9. Remove the VSS and clean it with a clean rag.

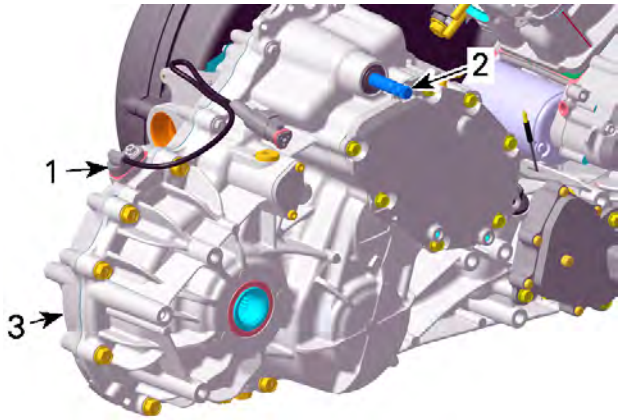

1. VSS (Vehicle Speed Sensor)
2. Shift shaft
3. Left housing of gearbox

10. Lubricate the VSS O-ring.

Super Lube grease

11. Install the VSS.

Tightening Torque	
VSS screw	10 ± 1 Nm (89 ± 9 lbf-in)

12. Refill the gearbox by the dipstick hole, refer to *Verifying the Gearbox Oil Level* to determine the proper level.
13. Reinstall the dipstick.
14. Wipe off any spillage.

Inspecting the Gearbox Oil

Oil condition gives information about the teeth condition inside the gearbox. See *Troubleshooting* in this subsection.

1. Clean the magnetic drain plug from metal shavings and dirt. Presence of debris gives an indication of failure inside the gearbox. Check gearbox to correct the problem.
2. Replace O-ring of oil filler screw if brittle, hard or otherwise damaged.

Vehicle Speed Sensor (VSS)

SERVICE PRODUCTS

Description	Part Number	Page
COPASLIP		204
LOCTITE 243 (BLUE)		192, 196, 207, 210
LOCTITE 5910		197, 199
LOCTITE 648 (GREEN)		198, 207
LOCTITE CHISEL (GASKET REMOVER)		196
PETAMO GREASE GHY 133N		189
SUPER LUBE GREASE		178, 180, 183–184, 187

VSS Location

The vehicle speed sensor is located on the rear top side of the left gearbox housing.

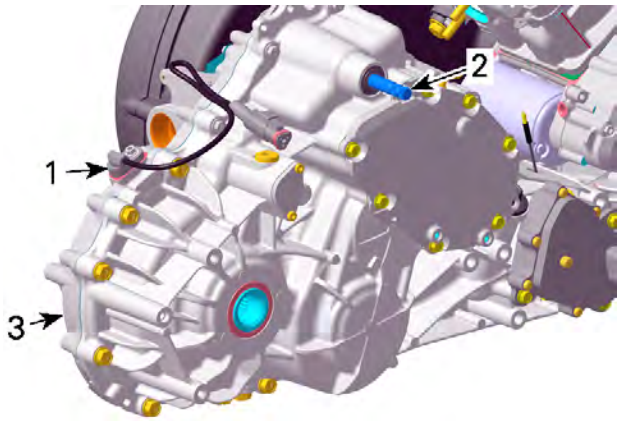

1. *VSS (Vehicle Speed Sensor)*
2. *Shift shaft*
3. *Left housing of gearbox*

VSS Wire Identification

Function	Pin
12-volt input from VSS fuse	A
Speed signal (to ECM-A E1)	B
Ground (to ECM-A D4)	C

VSS Circuit Protection

Condition	Circuit Protection
Supplied with main relay activated	VSS fuse from main relay R2)

Testing the VSS Input Voltage

1. Turn ignition switch ON.
2. Back-probe the VSS connector and measure voltage.

VSS Input Voltage Test		
Test probes		Result (Key ON)
Pin A	Pin C	Battery voltage

3. If voltage is not as specified, test positive and ground separately.

Testing the VSS Signal

1. Lift rear of vehicle so that rear wheels are off the ground.
2. Set transmission to 2WD and to Neutral.
3. Turn ignition switch ON.
4. Back-probe the VSS connector and measure voltage while slowly rotating rear wheels by hand.

VSS Signal Test		
Test probes		Result (while rotating wheels)
Pin B	Pin C	Alternate reading between battery voltage and 0 Vdc

NOTE: Since we measure pulsating voltage, the numeric display will continuously change. The analog display may be easier to follow.

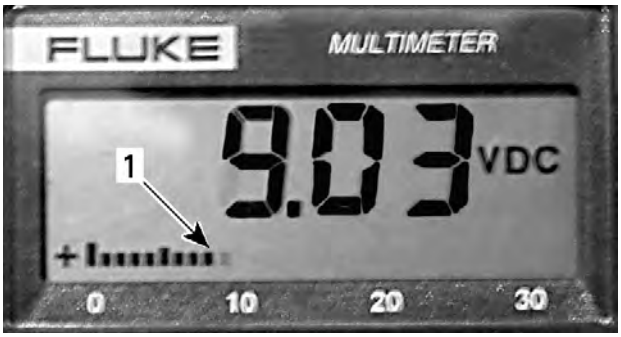

1. Analog display

Removing the VSS

1. Disconnect VSS connector.
2. Remove screw retaining the VSS.
3. Using a long screwdriver, pull out the VSS.

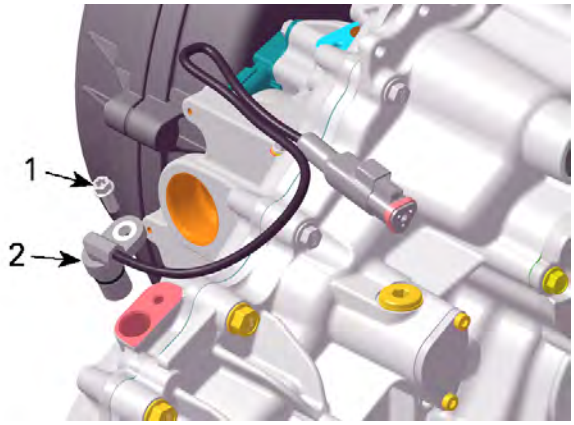

SEVERAL PARTS REMOVED FOR CLARITY
1. Screw
2. VSS

Cleaning the Vehicle Speed Sensor (VSS)

1. Remove all metal particles and oil from the VSS magnet.

NOTE: A dirty VSS will cause erratic speedometer readings.

Installing the VSS

For installation, reverse the removal procedure. However, pay attention to the following.

1. Lubricate VSS O-ring.

Super Lube grease

2. Tighten retaining screw to specification.

Tightening Torque	
VSS screw	10 ± 1 Nm (89 ± 9 lbf-in)

Gearbox Position Sensor (GBPS) and Magnet

SERVICE TOOLS

Description	Part Number	Page
ECM ADAPTER TOOL	(P/N 529036166)	182, 187
HANDLE	(P/N 420877650)	190
M34 SOCKET	(P/N 529036388)	193, 198
OIL SEAL INSTALLER (COUNTERSHAFT)	(P/N 529036391)	190
OIL SEAL INSTALLER (DIFFERENTIAL OUTPUT)	(P/N 529036456)	191
OIL SEAL INSTALLER (GEARBOX)	(P/N 529035758)	190
SLEEVE INSTALLER	(P/N 529036455)	191, 196, 211
SPLINES SOCKET 1/2"	(P/N 529036389)	193, 198

SERVICE PRODUCTS

Description	Part Number	Page
COPASLIP		204
LOCTITE 243 (BLUE)		192, 196, 207, 210
LOCTITE 5910		197, 199
LOCTITE 648 (GREEN)		198, 207
LOCTITE CHISEL (GASKET REMOVER)		196
PETAMO GREASE GHY 133N		189
SUPER LUBE GREASE		178, 180, 183–184, 187

GBPS Reset

When replacing the gearbox position sensor (GBPS), it is required to reset (re-zero) its values for proper operation.

A reset must be carried out each time any of the following parts has been replaced:

- Gearbox assembly
- Shift drum
- GBPS
- ECM.

1. Connect the vehicle to the BRP diagnostic software (BUDS2).
2. In BUDS2, select the following:
   - **Settings** page
   - **ECM** tab
   - **Initialization - Reset Gear Position Sensor**.
3. Follow instructions display in the screen.

   If an error occurred or the GBPS is not within the allowed range while resetting, the ECM will generate a fault code and will not accept the setting.
4. If a fault message is displayed, follow the instructions in the message(s).
5. Check for fault codes.
6. If a fault code is generated:
   - Carry out the service action.
   - Reset the fault code.
   - Repeat the reset procedure.
7. Close and disconnect BUDS2.

NOTE: Do not turn ignition key OFF.

8. Verify gears engagement.
   1. With the vehicle on ground and in NEUTRAL position, start engine.
   2. During 4-5 seconds, rev engine to 2500 ± 200 RPM.
   3. Let engine returns to idle.
   4. Select an other position (P, R, H or L). Repeat substeps 8.2 and 8.3 until all position are verified.

NOTE: The vehicle must be in movement to complete the procedure on R, H and L position.

Testing the GBPS Input Voltage

1. Prior to conduct testing, check fault codes in BUDS2.
2. Set shift lever in NEUTRAL position.

3. Back-probe the GBPS connector.
4. Test as follow:

GBPS input voltage test		
GBPS Connector Pin		Measurement
1	2	5 volts

5. If voltage is adequate, check GBPS signal wire.
6. If there is no voltage, check each GBPS input as follows.

GBPS Input Voltage Test		
GBPS connector pPin	Battery	Measurement
1	Negative (-) post	5 volts
2	Positive (+) post	Battery voltage

7. If there is no voltage, check wires and connector pins. Replace or repair defective parts and reset fault codes.

Testing the GBPS Communication Link Continuity

1. Disconnect the connector A from the ECM.
2. Install the connector on the ECM adapter tool.

ECM adapter tool (P/N 529036166)	

GBPS Communication Link Continuity test		
GBPS connector pin	ECM adapter pin	Measurement @ 20 °C (68 °F)
3	A-F4	Below 1 Ω

3. If resistance is out of specification, check wires and connectors. Repair and reset fault codes.
4. If resistance is good and the other tests succeeded, replace the GBPS and reset fault codes.

NOTE: The GBPS must be reset.

Removing the GBPS and Magnet

1. Set shift lever in NEUTRAL position.
2. Unplug GBPS connector.
3. Remove the GBPS.

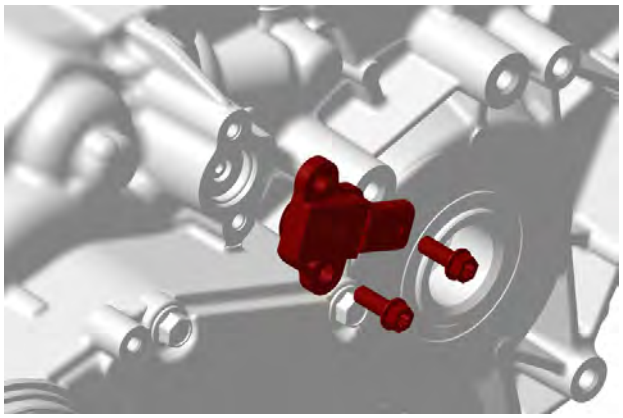

4. Remove the magnet.

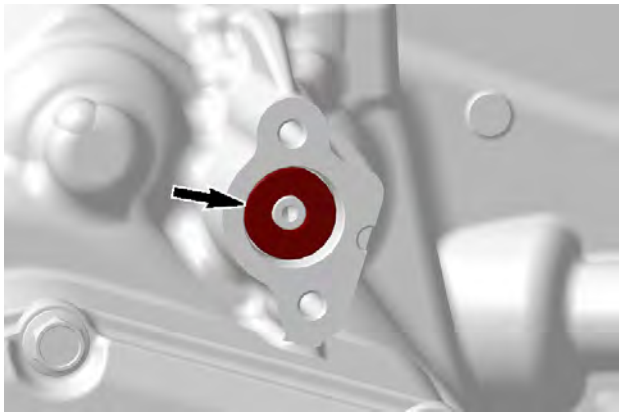

Installing the GBPS and Magnet

The installation is the reverse of the removal procedure. However, pay attention to the following details.

1. Shift lever must be in the NEUTRAL position.
2. Align nose on the backside of the magnet with the notch in the shift drum.
3. Tighten magnet retaining screw to specification.

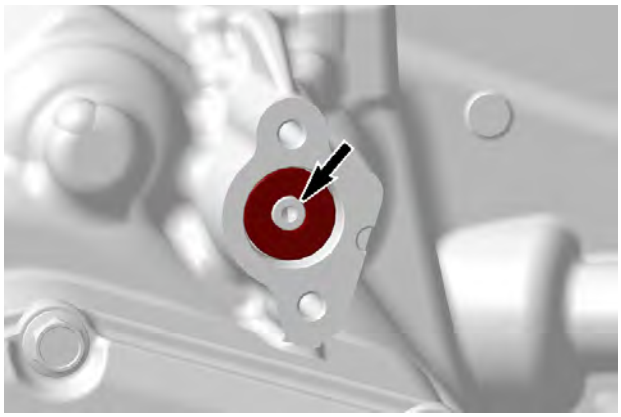

Tightening Torque	
Magnet retaining screw	4 ± 0.3 Nm (35 ± 3 lbf-in)

4. Lubricate GBPS O-ring.

Super Lube grease

5. Tighten GBPS retaining screws to specification.

Tightening Torque	
GBPS retaining screws	10 ± 1 Nm (89 ± 9 lbf-in)

6. Reset the GBPS.

4WD Actuator

SERVICE PRODUCTS

Description	Part Number	Page
COPASLIP		204
LOCTITE 243 (BLUE)		192, 196, 207, 210
LOCTITE 5910		197, 199
LOCTITE 648 (GREEN)		198, 207
LOCTITE CHISEL (GASKET REMOVER)		196
PETAMO GREASE GHY 133N		189
SUPER LUBE GREASE		178, 180, 183–184, 187

Testing the Actuator Power Input

1. Unplug 4WD actuator connector.
2. Turn ignition key ON.
3. Measure voltage as follows.

Actuator Input Voltage Test		
GBPS Connector Pin		Measurement
1	2	Battery voltage

4. If the result is out of specifications, check power input circuit. Refer to wiring diagram.
5. If the result is good, check the 4WD circuit continuity.

Testing the 4WD Circuit Continuity

1. Turn ignition switch OFF.
2. Unplug:
   - Right steering switch (RSS)
   - 4WD Actuator connector
   - HIC connector.
3. Measure continuity.

Actuator Circuit Continuity Test		
Vehicle harness connector		Measurement
RSS 3	HIC B	Close to 0 Ω
RSS 2	Frame (ground)	
CL 6	HIC H	

Actuator Circuit Continuity Test		
Actuator connector pin	HIC pin	Measurement
3	H	Close to 0 Ω
4	B	

4. If continuity is good, replace 4WD actuator.
5. If continuity is out of specification repair wires and / or connectors, or replace actuator switch.

Removing the 4WD Actuator

1. Before beginning any servicing on the 4WD actuator, make sure the vehicle is in 4WD position. No need to remove engine from vehicle.
2. Drain gearbox oil.
3. Remove the 4WD actuator.

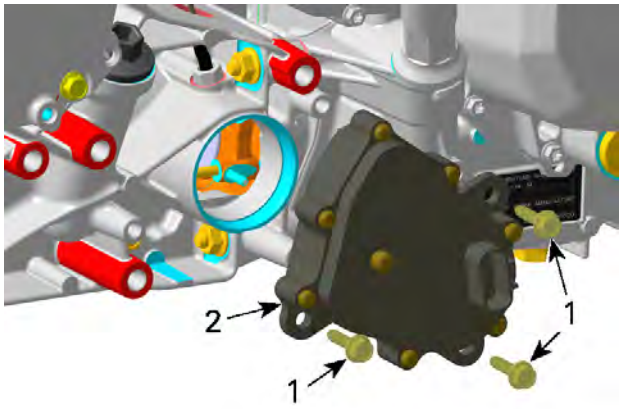

1. Screws
2. 4WD actuator

Installing the 4WD Actuator

1. Lubricate 4WD actuator O-ring.

Super Lube grease

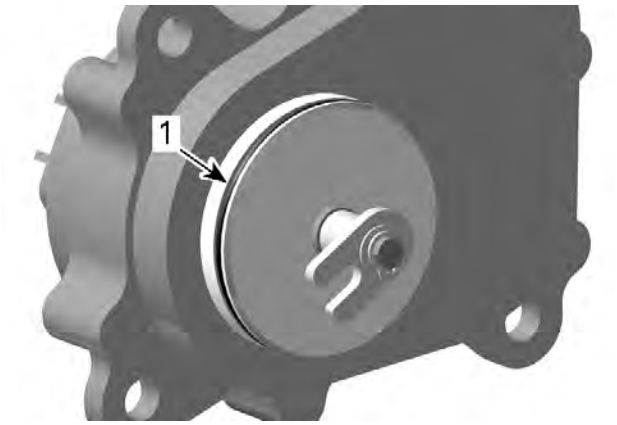

1. 4WD actuator O-ring

2. Ensure coupling fork is in 4WD position (toward the front of vehicle).

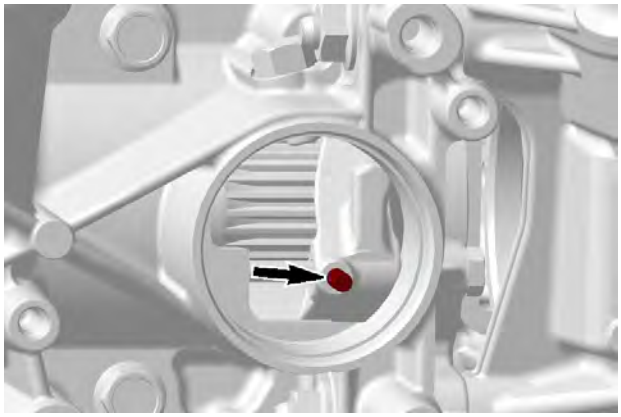

3. Align the 4WD actuator fork with the pin on coupling fork then push the 4WD actuator in the housing. See the following illustration to position the 4WD actuator correctly.

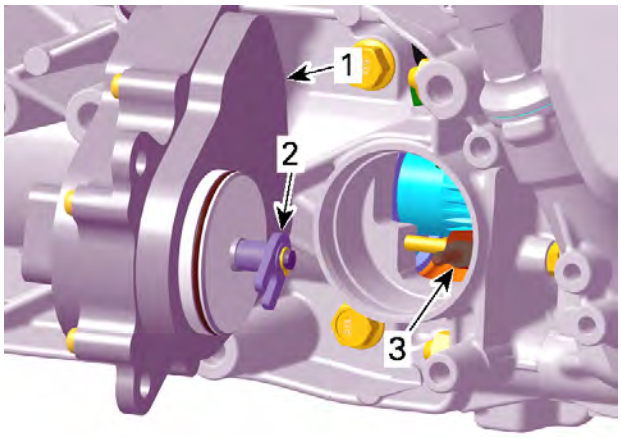

1. 4WD actuator
2. 4WD actuator fork
3. Coupling fork

4. Rotate the 4WD actuator counterclockwise until it orients itself to mounting position.

NOTICE
Do not cut or break the 4WD actuator O-ring.

5. Install all 4WD actuator screws and tighten them.

Tightening Torque	
4WD actuator screws	10 ± 1 Nm (89 ± 9 lbf-in)

6. Connect the 4WD actuator.
7. Set gearbox to PARK position.
8. Lift the front of vehicle.
9. Turn front wheels. The front propeller shaft should not turn.
10. If the front propeller shaft turns, the 4WD actuator is not installed correctly. Remove 4WD actuator and reinstall it.
11. Power up the vehicle and select the 2WD position.
12. Turn front wheel again. The front propeller shaft should turn easily.
13. If the front propeller shaft does not turn, the 4WD actuator is not installed correctly. Remove 4WD actuator and reinstall it.
14. Refill the gearbox to proper level with recommended oil.
15. Install all other removed parts.

Differential Locking Actuator

SERVICE TOOLS

Description	Part Number	Page
ECM ADAPTER TOOL	(P/N 529036166)	182, 187
HANDLE	(P/N 420877650)	190
M34 SOCKET	(P/N 529036388)	193, 198
OIL SEAL INSTALLER (COUNTERSHAFT)	(P/N 529036391)	190
OIL SEAL INSTALLER (DIFFERENTIAL OUTPUT)	(P/N 529036456)	191
OIL SEAL INSTALLER (GEARBOX)	(P/N 529035758)	190
SLEEVE INSTALLER	(P/N 529036455)	191, 196, 211
SPLINES SOCKET 1/2"	(P/N 529036389)	193, 198

SERVICE PRODUCTS

Description	Part Number	Page
COPASLIP		204
LOCTITE 243 (BLUE)		192, 196, 207, 210
LOCTITE 5910		197, 199
LOCTITE 648 (GREEN)		198, 207
LOCTITE CHISEL (GASKET REMOVER)		196
PETAMO GREASE GHY 133N		189
SUPER LUBE GREASE		178, 180, 183–184, 187

Testing the Differential Locking Actuator Function

1. Set shift lever on NEUTRAL.
2. Turn ignition switch to ON. Do not start the engine.
3. Place the rear differential switch in LOCK position.

NOTE: The rear differential is locked when the switch is pushed upwards.

4. Lift the rear of the vehicle until rear wheels are off the ground.
5. Turn a rear wheel.
   - If both wheels turn, the actuator is in LOCK position. Continue with step 6
   - If only one wheel turns, check the switch position and turn the wheel again. If the result is the same, carry out *Testing the Differential Locking Actuator Resistance*.
6. Move the rear differential switch in UNLOCK position.

NOTE: The rear differential is unlocked when the switch is pushed downwards.

7. Turn a rear wheel.
   - If only one wheel turns the actuator and its electrical system work properly.
   - If both wheels turn, check the switch position and turn the wheel again. If the result is same, carry out *Testing the Differential Locking Actuator Resistance*.

Testing the Differential Locking Actuator Resistance

1. Disconnect differential locking actuator connector.
2. Set multimeter to Ω.
3. Probe terminals as per following table.

Differential Actuator Resistance Test		
Actuator pin		Measurement @ 20 °C (68 °F)
A	D	28 - 34 Ω
B	C	

4. If resistance is not within specifications, replace the actuator.
5. If resistance tests good, **reconnect** the actuator connector.
6. Disconnect the connector A from the ECM.
7. Install the connector on the ECM adapter tool.

ECM adapter tool (P/N 529036166)	

8. Recheck resistance as per table.

Differential Actuator Resistance Test		
ECM adaptor pin		Measurement @ 20 °C (68 °F)
A-C2	A-C1	28 - 34 Ω
A-B2	A-A4	

9. If resistance value is correct replace ECM, refer to *Electronic control Module* in *Electronic Management System*.
10. If resistance value is incorrect, repair the connectors or replace the wiring harness between ECM connector and the actuator.

Removing the Differential Locking Actuator

1. Remove plug screw and pin.

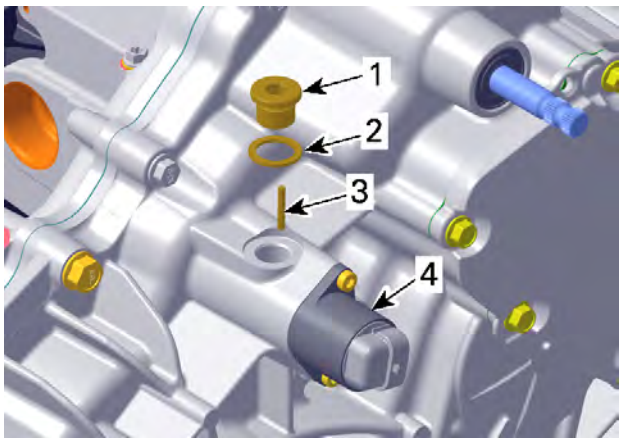

1. *Plug screw*
2. *Sealing ring (discard it)*
3. *Pin*
4. *Differential locking actuator*

2. Remove the differential actuator.

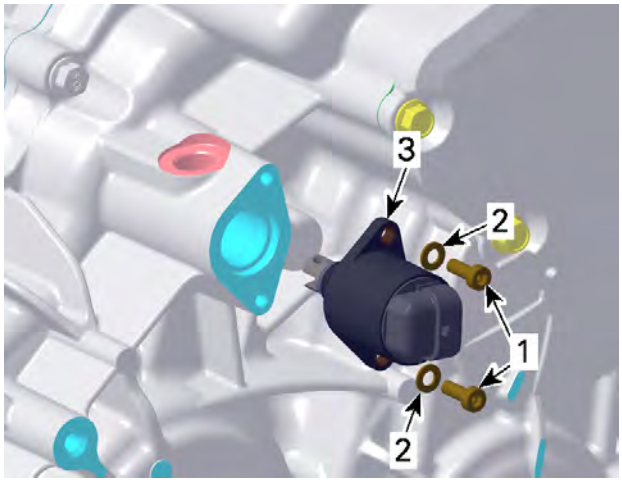

1. *Retaining screws*
2. *Washers*
3. *Differential locking actuator*

Installing the Differential Locking Actuator

1. Lubricate actuator O-ring.

Super Lube grease

2. Tighten retaining screws to specification.

Tightening Torque	
Differential locking actuator retaining screws	3 ± 0.2 Nm (27 ± 2 lbf-in)

3. Install a **NEW** sealing ring and tighten plug screw to specification.

Tightening Torque	
Plug screw	30 ± 3 Nm (22 ± 2 lbf-ft)

Gearbox Oil Seals

SERVICE TOOLS

Description	Part Number	Page
ECM ADAPTER TOOL	(P/N 529036166)	182, 187
HANDLE	(P/N 420877650)	190
M34 SOCKET	(P/N 529036388)	193, 198
OIL SEAL INSTALLER (COUNTERSHAFT)	(P/N 529036391)	190
OIL SEAL INSTALLER (DIFFERENTIAL OUTPUT)	(P/N 529036456)	191
OIL SEAL INSTALLER (GEARBOX)	(P/N 529035758)	190
SLEEVE INSTALLER	(P/N 529036455)	191, 196, 211
SPLINES SOCKET 1/2"	(P/N 529036389)	193, 198

SERVICE PRODUCTS

Description	Part Number	Page
COPASLIP		204
LOCTITE 243 (BLUE)		192, 196, 207, 210
LOCTITE 5910		197, 199
LOCTITE 648 (GREEN)		198, 207
LOCTITE CHISEL (GASKET REMOVER)		196
PETAMO GREASE GHY 133N		189
SUPER LUBE GREASE		178, 180, 183–184, 187

Replacing the Gearbox Oil Seal

1. Replace oil seals if they are brittle, hard or damaged.
2. A small flat screwdriver can be used to remove most of these oil seals.

NOTICE

Avoid scoring parts during oil seal removal.

3. When replacing an oil seal, take this opportunity to inspect the following:
   - Check bearings behind each oil seal for contamination and/or metal shavings.
   - Check oil seal running surfaces for scratches.

Lubricating the Oil Seal

1. Lubricate sealing lips all around.
2. Fill up the room between sealing lips halfway around the perimeter.

Petamo grease Ghy 133n

1. Sealing lips
2. Room between sealing lips

Countershaft Oil Seal

1. Remove the CVT air guide.
2. Remove the countershaft oil seal.

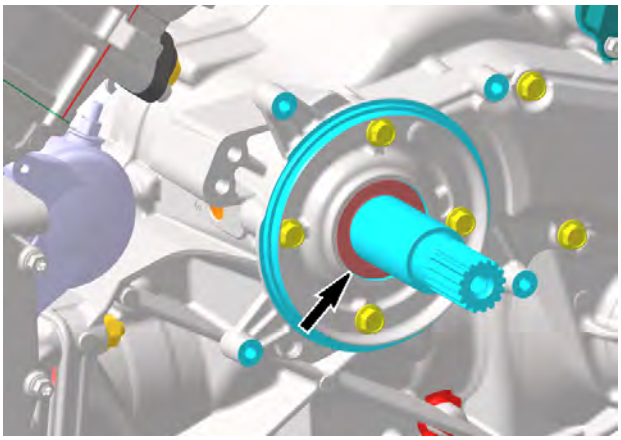

3. Install the NEW countershaft oil seal.

Oil seal installer (countershaft) (P/N 529036391)	

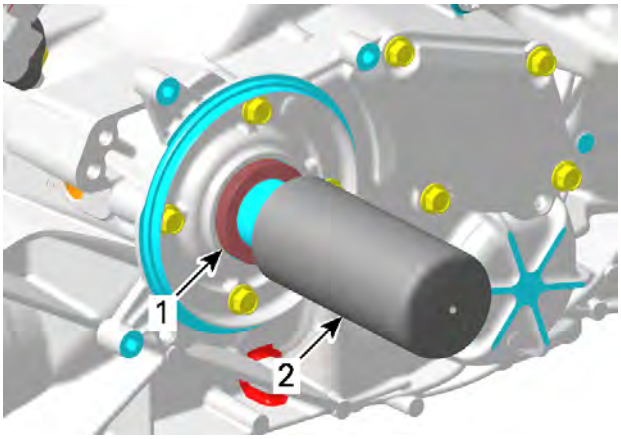

1. Countershaft oil seal
2. Oil seal installer

Shift Shaft Oil Seal

The shift shaft oil seal can be removed without removing the gearbox from the vehicle.

1. Remove the shift plate, refer to *Shifter*.
2. Remove the shifter oil seal.

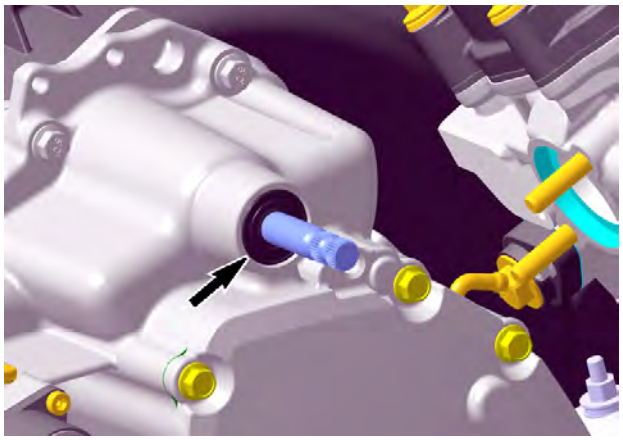

3. Use a suitable tube with the proper diameter to install the oil seal.
4. If gearbox housing is apart, use following tools for shift shaft oil seal installation.

Oil seal installer (gearbox) (P/N 529035758)	
Handle (P/N 420877650)	

NOTICE

Oil seal must be installed with sealing lip toward gearbox.

Output Shaft Oil Seals

1. Remove the appropriate drive shaft.
2. Punch a sharp screwdriver through oil seal for removal.

RIGHT SIDE

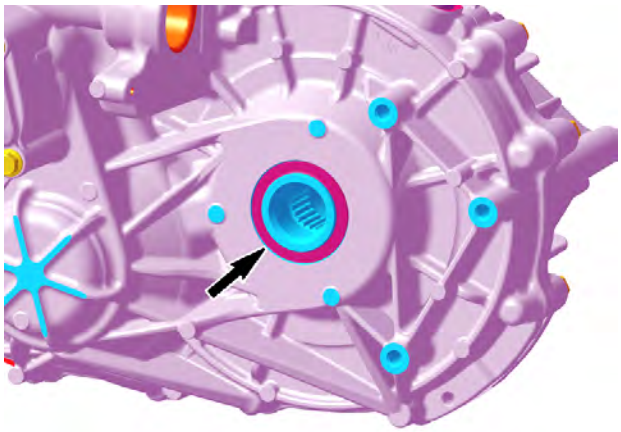

LEFT SIDE

3. Place oil seal on output shaft and install it using the following tools.

Sleeve installer (P/N 529036455)	
Oil seal installer (differential output) (P/N 529036456)	

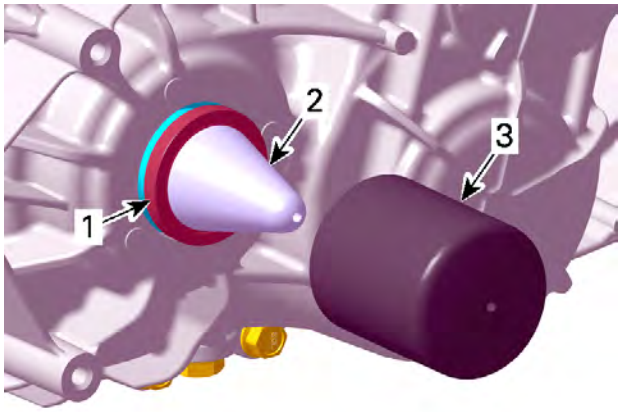

1. *Output shaft oil seal*
2. *Sleeve installer*
3. *Oil seal installer*

Gearbox Assembly

SERVICE PRODUCTS

Description	Part Number	Page
COPASLIP		204
LOCTITE 243 (BLUE)		192, 196, 207, 210
LOCTITE 5910		197, 199
LOCTITE 648 (GREEN)		198, 207
LOCTITE CHISEL (GASKET REMOVER)		196
PETAMO GREASE GHY 133N		189
SUPER LUBE GREASE		178, 180, 183–184, 187

Removing the Gearbox Assembly

1. Remove engine from vehicle, refer to the appropriate vehicle service manual.
2. Remove the CVT air guide, refer to *Continuously Variable Transmission (CVT)*.
3. Drain gearbox oil.
4. Remove the 4WD actuator.
5. Unscrew the gearbox retaining nuts.

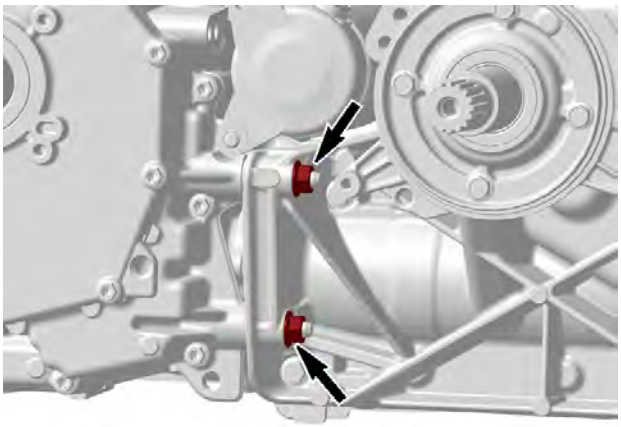

LH SIDE OF ENGINE

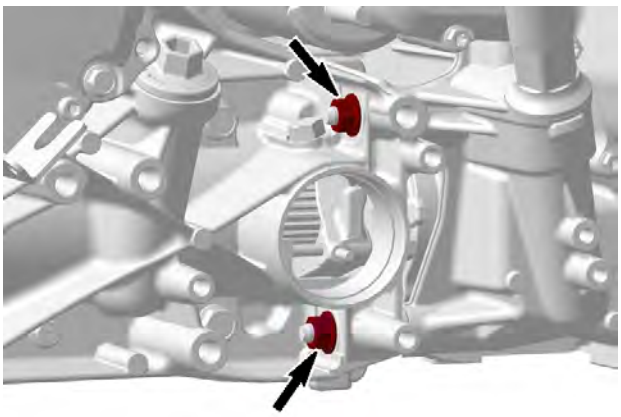

RH SIDE OF ENGINE

6. Pull gearbox to separate it from engine.

Installing the Gearbox

The installation is the reverse of the removal procedure. However, pay attention to following.

1. Before gearbox installation check O-ring on bearing cover if brittle, hard or damaged. Replace if necessary.
2. Lubricate O-ring on rear bearing cover with engine oil.

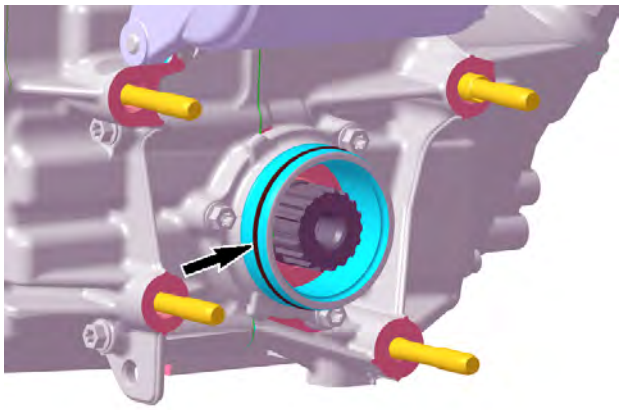

3. Apply a drop of threadlocker on threads of gearbox nuts

Loctite 243 (blue)

4. Tighten gearbox retaining nuts to specification.

Tightening Torque	
Gearbox retaining nuts	25 ± 3 Nm (18 ± 2 lbf-ft)

5. After installation refill gearbox oil.

Gearbox Housing

SERVICE TOOLS

Description	Part Number	Page
ECM ADAPTER TOOL	(P/N 529036166)	182, 187
HANDLE	(P/N 420877650)	190
M34 SOCKET	(P/N 529036388)	193, 198
OIL SEAL INSTALLER (COUNTERSHAFT)	(P/N 529036391)	190
OIL SEAL INSTALLER (DIFFERENTIAL OUTPUT)	(P/N 529036456)	191
OIL SEAL INSTALLER (GEARBOX)	(P/N 529035758)	190
SLEEVE INSTALLER	(P/N 529036455)	191, 196, 211
SPLINES SOCKET 1/2"	(P/N 529036389)	193, 198

SERVICE PRODUCTS

Description	Part Number	Page
COPASLIP		204
LOCTITE 243 (BLUE)		192, 196, 207, 210
LOCTITE 5910		197, 199
LOCTITE 648 (GREEN)		198, 207
LOCTITE CHISEL (GASKET REMOVER)		196
PETAMO GREASE GHY 133N		189
SUPER LUBE GREASE		178, 180, 183–184, 187

Disassembling the Gearbox Housing

1. Remove the gearbox assembly.
2. Set gearbox to PARK position.
3. Remove the 4WD actuator.
4. Remove the GBPS.
5. Remove the differential locking actuator.
6. Remove bearing cover.

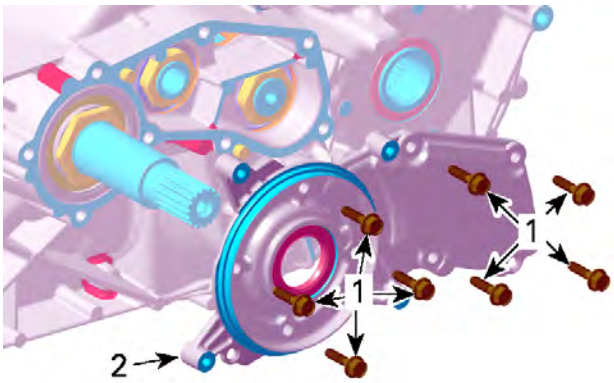

1. Retaining screws
2. Bearing cover

7. Heat up nut with a heat gun to break threadlocker.
8. Remove the countershaft nut.

M34 socket (P/N 529036388)	
Splines socket 1/2" (P/N 529036389)	

9. Install 4 screws to retain the M34 socket and tighten them to specification.

Tightening Torque	
M34 socket retaining screws	10 ± 1 Nm (89 ± 9 lbf-in)

NOTICE

Turn spline socket clockwise to loosen the nut.

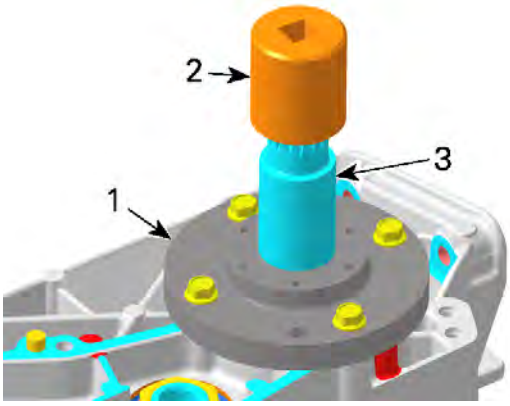

1. M34 socket
2. Spline socket
3. Countershaft

10. Remove nuts of main shaft and intermediate shaft.

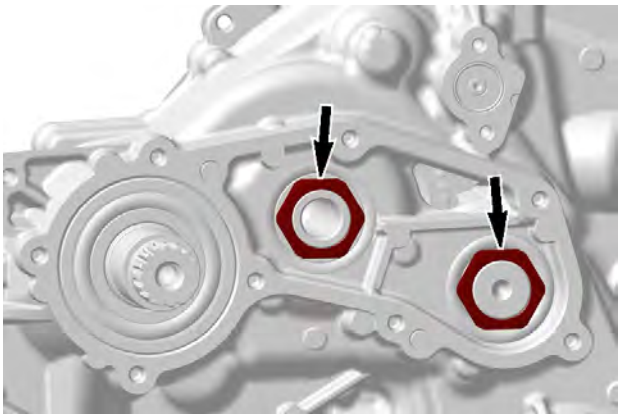

11. Remove the parking lock gear and the index washer.
12. Remove all gearbox housing screws:
    1. Start removing the M6 screws.
    2. Then remove the M8 screws.

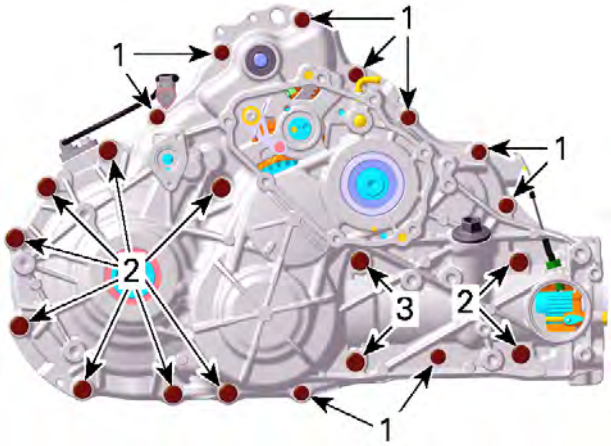

1. 11 screws M6 x 45
2. 10 screws M8 x 45
3. 2 screws M8 x 65

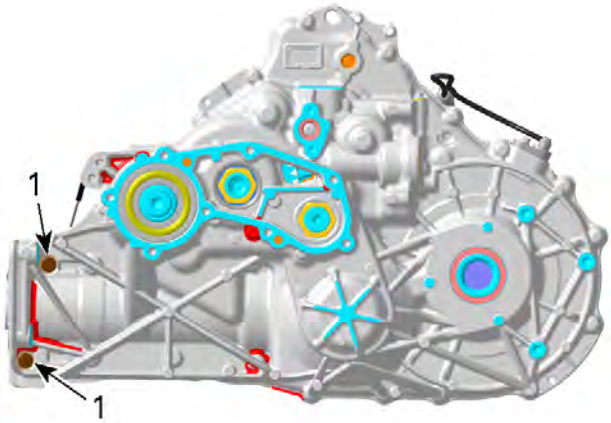

1. 2 screws M6 x 45

13. Separate gearbox housing, use 2 big screwdrivers.

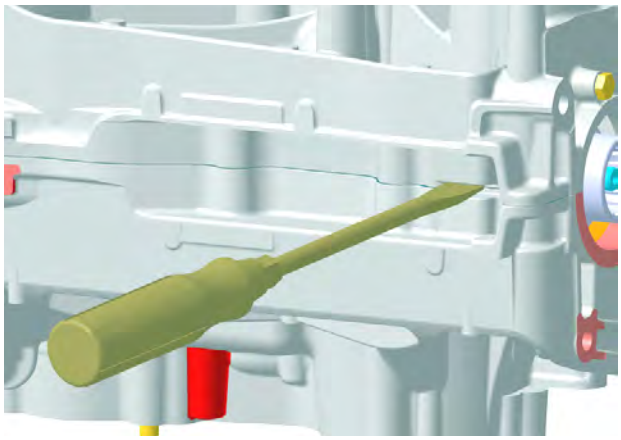

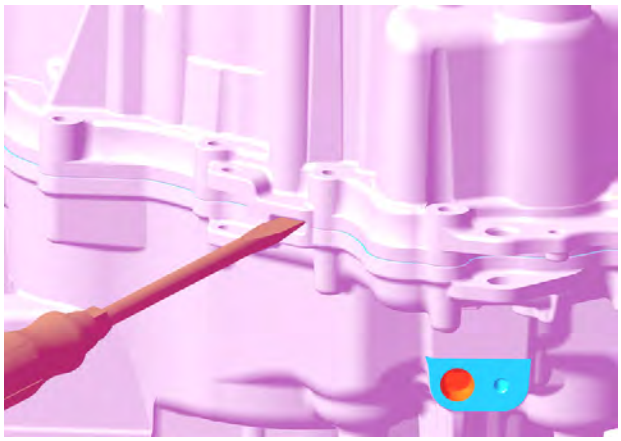

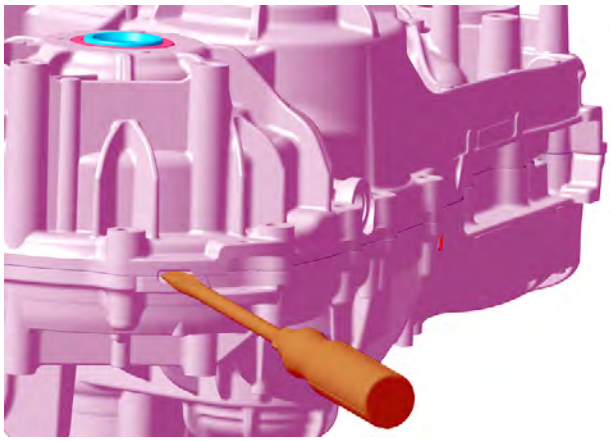

14. If necessary, remove all other components still installed on the housing.

Inspecting the Gearbox Housing

1. Check gearbox ball bearings for: contamination and/or metal shavings.
2. Check if ball bearings turn freely and smoothly. Replace if necessary.

Replacing the Bearing

1. If necessary heat housing up to 100 °C (212 °F) before removing ball bearings.

⚠ WARNING

Clean oil, outside and inside, from housing before heating.

NOTICE

Always support gearbox housings properly when ball bearings are removed. Housing damages may occur if this procedure is not performed correctly.

2. Use a blind hole bearing puller to remove ball bearings of:
   - Countershaft (right cover)
   - Intermediate shaft (right cover).
3. Remove retaining plate securing the main shaft and intermediate shaft bearings in the left housing.
4. Remove screw securing the main shaft bearing in the right cover.
5. Use a suitable puller to remove ball bearings of:
   - Main shaft (right and left cover)
   - Countershaft (left cover)
   - Intermediate shaft (left cover)
   - Differential ball bearings (right and left cover).

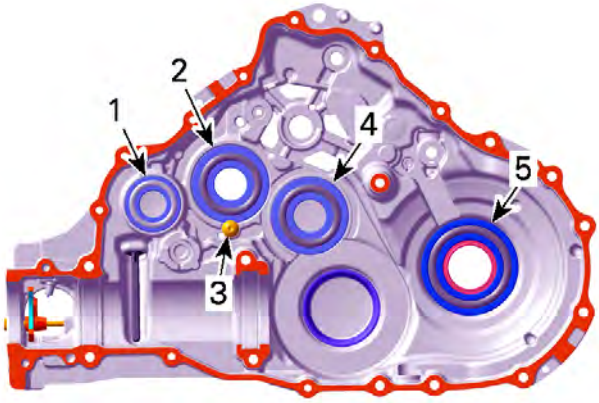

RIGHT GEARBOX HOUSING
1. Ball bearing countershaft
2. Ball bearing main shaft
3. Screw
4. Ball bearing intermediate shaft
5. Ball bearing differential

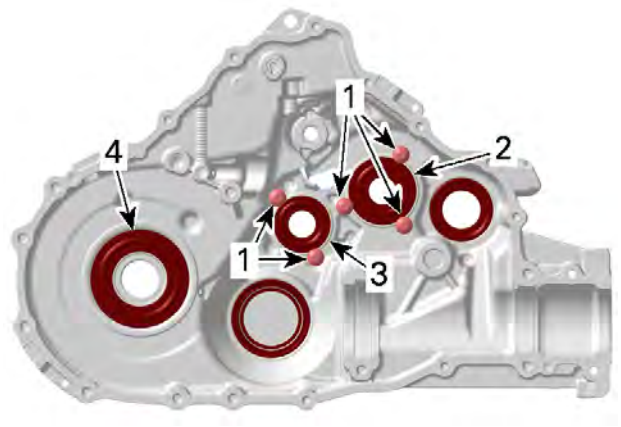

LEFT GEARBOX HOUSING
1. *Screws*
2. *Ball bearing main shaft*
3. *Ball bearing intermediate shaft*
4. *Ball bearing differential*

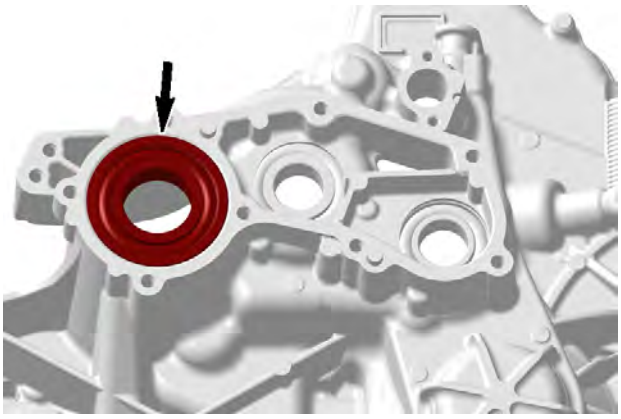

LEFT GEARBOX HOUSING - BALL BEARING COUNTERSHAFT

6. Unless otherwise instructed, never use hammer to install ball bearings. Use press machine only.
7. If necessary heat housings up to 100 °C (212 ° F) before installing ball bearings.

⚠ WARNING

Clean oil, outside and inside, from housing before heating.

8. Place new bearing in freezer for 10 minutes before installation.
9. Use a suitable installer for installing ball bearings of countershaft, main shaft and intermediate shaft.

NOTE: Place gearbox housings on a wood stand before installing ball bearings.

Tightening Torque	
Retaining plate screws	10 ± 1 Nm (89 ± 9 lbf-in)

10. Apply a drop of threadlocker on main shaft bearing screw threads.

Loctite 243 (blue)

Tightening Torque	
Retaining screw main shaft bearing (right cover)	10 ± 1 Nm (89 ± 9 lbf-in)

11. Install new oil seals with the proper installer.

Assembling the Gearbox Housing

1. Clean all metal components in a solvent.
2. Gearbox housing mating surfaces are best cleaned using a combination of a gasket remover and a brass brush. Brush a first pass in one direction then make the final brushing perpendicularly (90°) to the first pass.

Loctite chisel (gasket remover)

NOTICE

Do not wipe with rags. Use a new clean hand towel only.

3. **IMPORTANT:** When beginning the application of the gear housing sealant, the assembly and the first torquing should be done within 10 minutes. It is suggested to have all you need on hand to save time.
4. Place sleeve installer on rear differential.

Sleeve installer (P/N 529036455)	

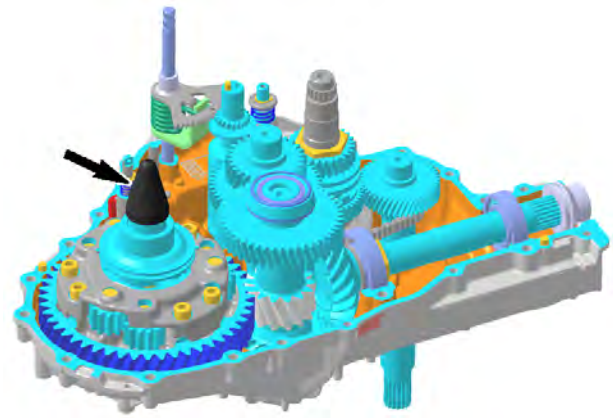

5. Apply sealant on mating surface.

Loctite 5910

6. Do not apply in excess as it will spread out inside gearbox housing.

NOTE: It is recommended to apply this specific sealant as described here to get a uniform application without lumps.

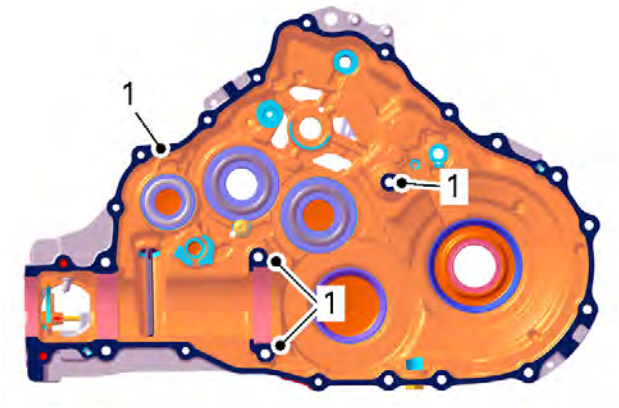

1. Apply sealant here

7. During installation of the right gearbox housing align the coupling fork with the groove in the coupling sleeve.

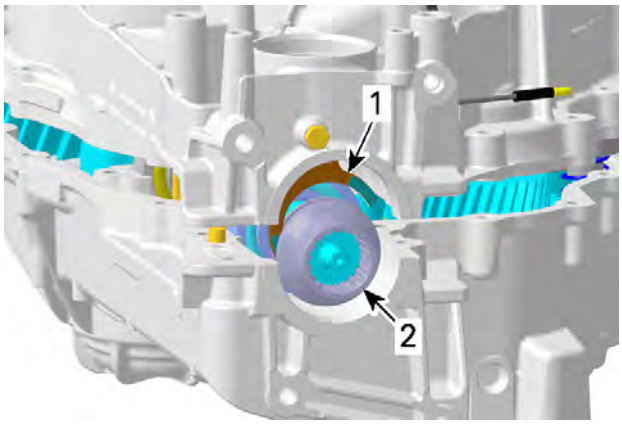

1. Coupling fork
2. Coupling sleeve

8. Install all gearbox housing screws.
9. Tighten M8 gearbox housing screws as per following sequence.

Tightening Torque	
M8 gearbox housing screws	25 ± 3 Nm (18 ± 2 lbf-ft)

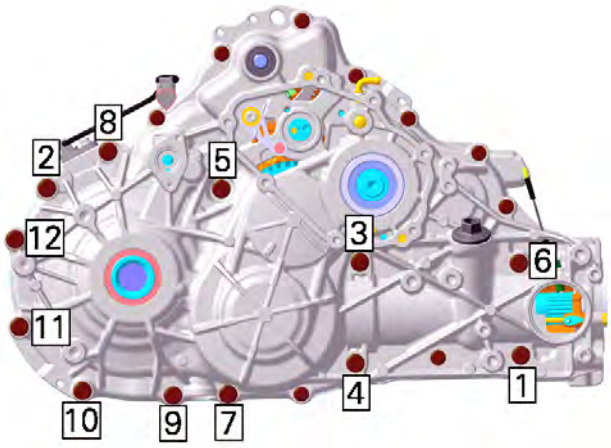

10. Tighten M6 gearbox housing screws as per following sequence.

Tightening Torque	
M6 gearbox housing screws	10 ± 1 Nm (89 ± 9 lbf-in)

11. Refer to *Gearbox and Shifting Mechanism* to install:
    - Index lever
    - Index washer
    - Parking lock gear
    - Parking lock lever.
12. Set gearbox to PARK position.
13. Apply a drop of threadlocker on main shaft and intermediate shaft nuts threads.

Loctite 648 (green)

14. Tighten main shaft and intermediate shaft nuts to specification.

Tightening Torque	
Main shaft and intermediate shaft nuts	170 ± 10 Nm (125 ± 7 lbf-ft)

15. Apply a drop of threadlocker on threads of the countershaft nut threads.

Loctite 648 (green)

16. Tighten countershaft nut to specification.

M34 socket (P/N 529036388)	
Splines socket 1/2" (P/N 529036389)	

Tightening Torque	
Countershaft nut	170 ± 10 Nm (125 ± 7 lbf-ft)

17. Install 4 screws to retain the M34 socket and tighten them to specification.

Tightening Torque	
M34 socket retaining screws	10 ± 1 Nm (89 ± 9 lbf-in)

NOTICE

Turn spline socket counterclockwise to tighten the nut.

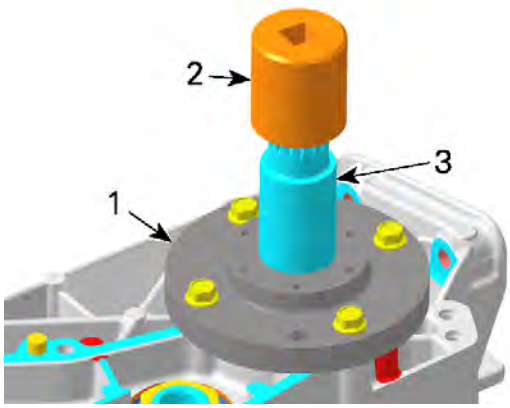

1. *M34 socket*
2. *Spline socket*
3. *Countershaft*

18. Apply sealant on mating surface of bearing housing.

Loctite 5910

19. Install bearing housing screws and tighten them as per following sequence.

Tightening Torque	
Bearing housing screws	10 ± 1 Nm (89 ± 9 lbf-in)

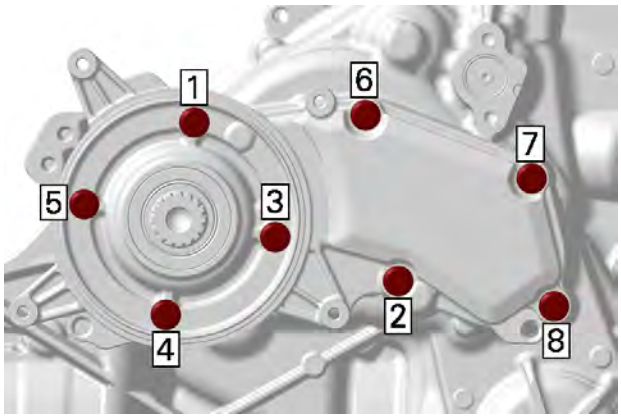

Gearbox and Shifting Mechanism

SERVICE PRODUCTS

Description	Part Number	Page
COPASLIP		204
LOCTITE 243 (BLUE)		192, 196, 207, 210
LOCTITE 5910		197, 199
LOCTITE 648 (GREEN)		198, 207
LOCTITE CHISEL (GASKET REMOVER)		196
PETAMO GREASE GHY 133N		189
SUPER LUBE GREASE		178, 180, 183–184, 187

Disassembling the Gearbox and Shifting Mechanism

1. During gearbox and shifting mechanism disassembly, inspect the condition of each part closely.

Index Lever, Index Washer and Parking Lock Lever

1. Set gearbox to PARK position.
2. Remove the gearbox cover.

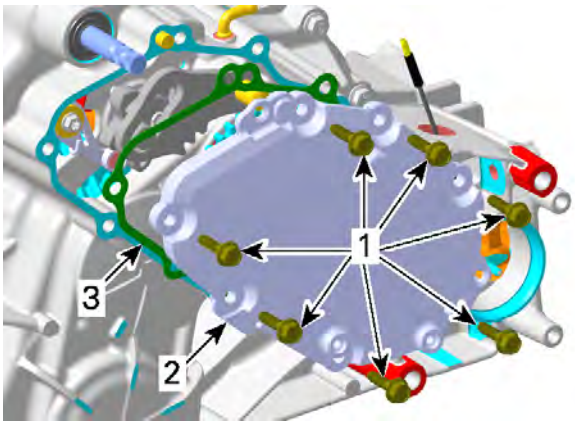

1. Retaining screws
2. Gearbox cover
3. Gasket (discard it)

3. Remove the park locking gear.

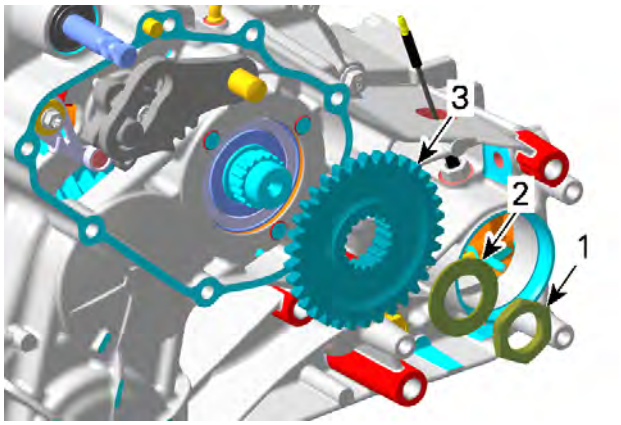

1. Nut
2. Spring washer
3. Park locking gear

4. Remove the parking locking lever.

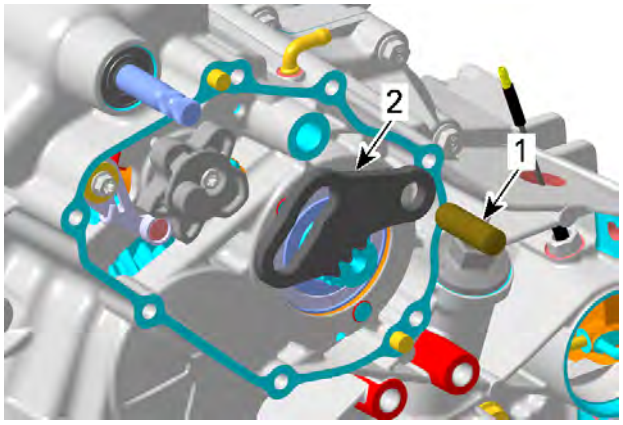

1. Pin
2. Park locking lever

5. Remove screw retaining the index washer to the shift drum.

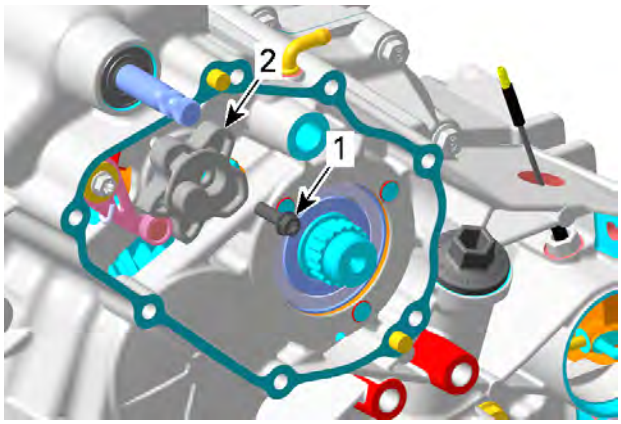

1. *Screw*
2. *Index washer*

6. Insert a flat screwdriver in the slot of index lever. Turn screwdriver clockwise and remove index washer.

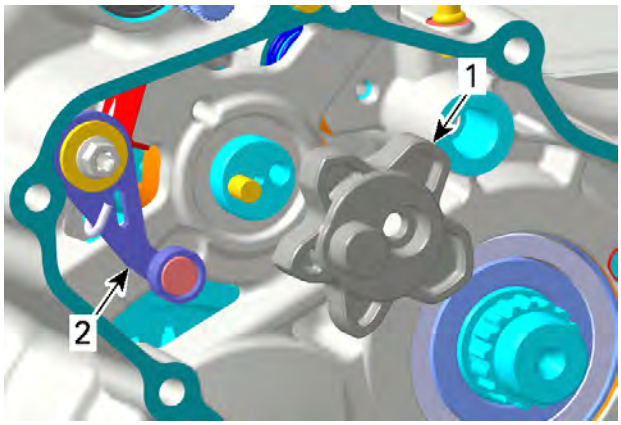

1. *Index washer*
2. *Index lever*

7. Remove the index lever with washer, step ring and spring.

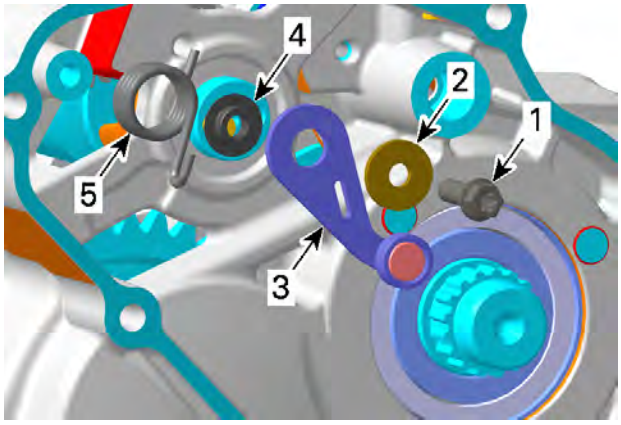

1. *Screw*
2. *Washer*
3. *Index lever*
4. *Step ring*
5. *Index spring*

Shift Shaft Assembly and Shift Drum

1. Separate gearbox housing.
2. Withdraw shift shaft assembly.

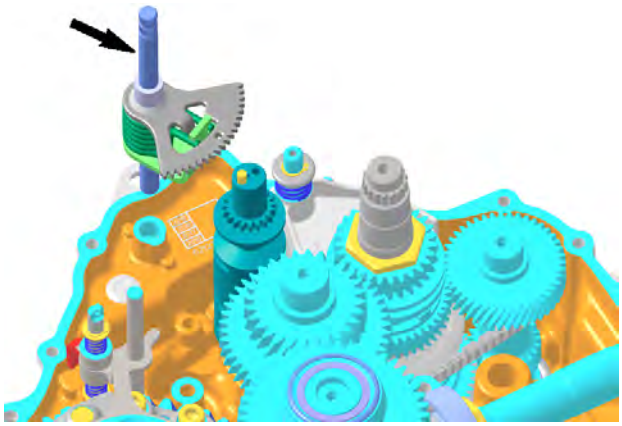

3. Lift shift fork shaft assembly and move it aside to disengage shift forks from shift drum.

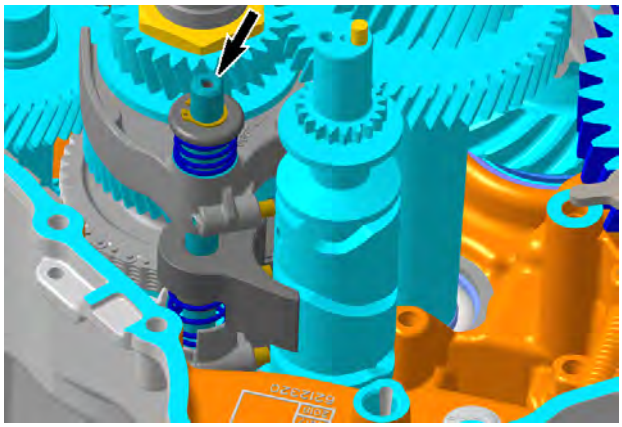

4. Withdraw shift drum.

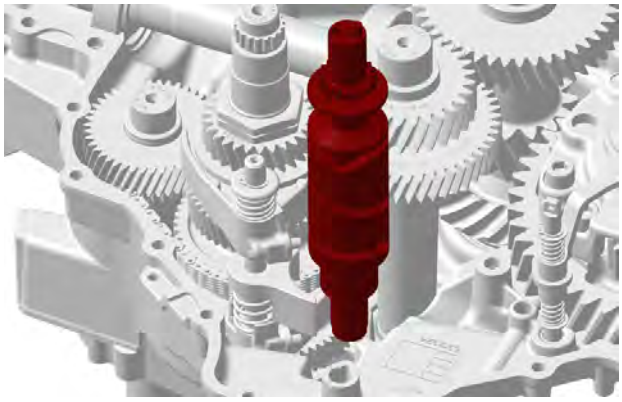

Pinion Drive Shaft and Intermediate Shaft

1. Separate gearbox housing.
2. Remove:
   1. Pinion drive shaft

2. Intermediate shaft.

NOTE: Bevel gear and distance shim remain in gearbox housing.

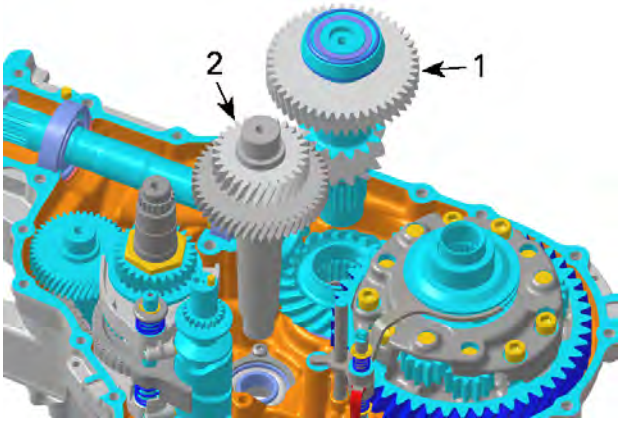

1. *Pinion drive shaft*
2. *Intermediate shaft*

Main Shaft, Shift Fork Shaft Assembly and Countershaft

1. Separate gearbox housing.
2. See procedures in this subsection to remove:
   - Pinion drive shaft
   - Intermediate shaft
   - Shift fork shaft assembly
   - Shift drum.
3. Remove main shaft assembly together with shift fork shaft assembly and countershaft.

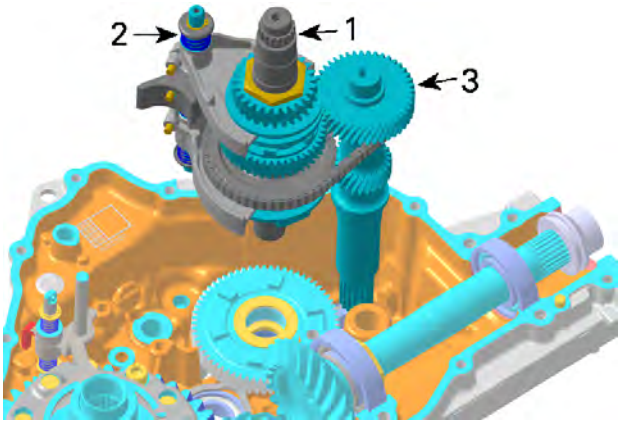

1. *Main shaft assembly*
2. *Shift fork shaft assembly*
3. *Countershaft*

4. Remove:
   - LOW range gear
   - Needle bearing
   - Thrust washers.

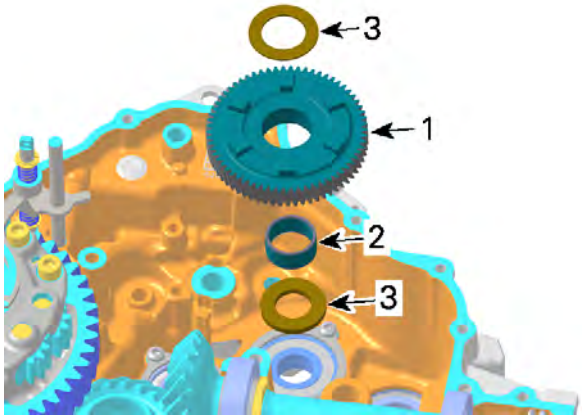

1. *Free pinion LOW range gear*
2. *Needle bearing*
3. *Thrust washer*

Disassembling the Shift Fork Shaft Assembly

NOTICE
Springs are not identical. Mark them to reinstall them in their original position.

1. Remove the following parts from the shift fork shaft.

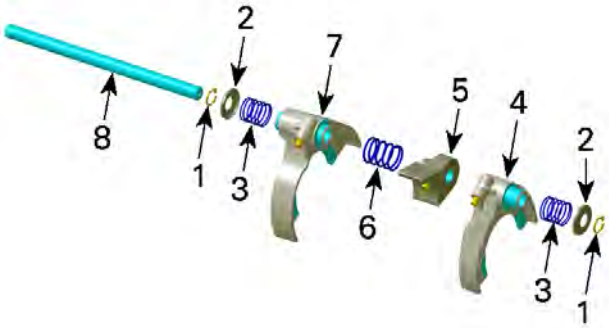

1. *Snap rings*
2. *Spring seat*
3. *Outer springs*
4. *Shift fork HIGH*
5. *Shifting block*
6. *Center spring*
7. *Shift fork LOW/REVERSE*
8. *Shift fork shaft*

Inspecting the Gearbox and Shifting Mechanism

1. Always verify for the following when inspecting gearbox components:
   - Gear teeth damage
   - Worn or scoured bearing surfaces
   - Rounded engagement dogs and slots
   - Worn shift fork engagement groove
   - Worn splines on shafts and shifting sleeves.

Bearings

1. When gearbox is removed check gearbox ball bearings for contamination and/or metal shavings.
2. Check if ball bearings turn freely and smoothly. Replace if necessary, refer to *gearbox housing* in this subsection.

Shifting Sleeves

1. Check shifting sleeves for worn inner splines and rounded or damaged engagement dogs.

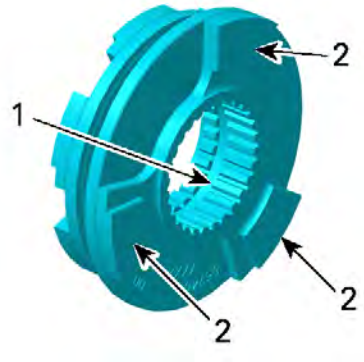

TYPICAL
1. Inner splines
2. Engagement dogs

2. Measure the width of shift fork engagement groove.

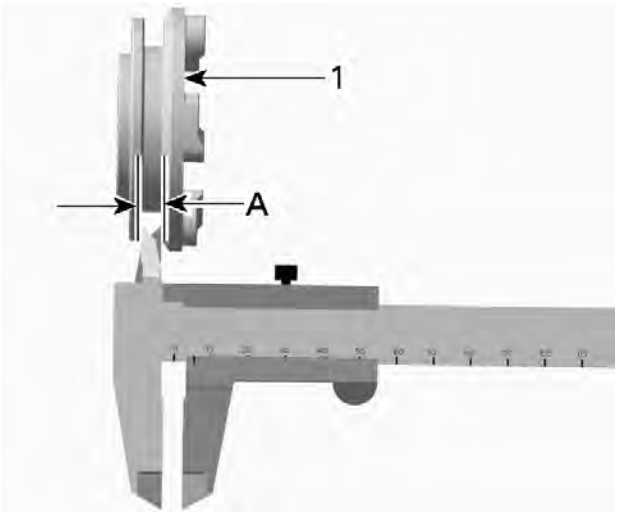

TYPICAL
1. Shifting sleeve
A. Width of shift fork engagement groove

Width of Shift Fork Engagement Groove	
New	6.10 to 6.25 mm (.24 to .246 in)
Service limit	6.30 mm (.248 in)

Shafts

1. Check countershaft bearing journals for wear.

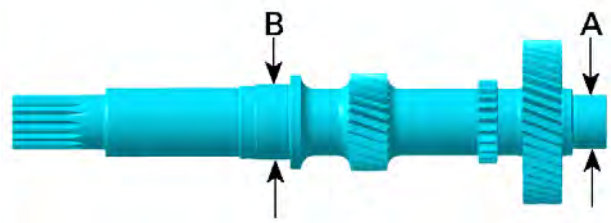

A. MAG side
B. Bearing journal CVT side

Countershaft Bearing Journals		
Mag side	New	19.977 to 19.990 mm (.786 to .787 in)
	Service limit	19.973 mm (.786 in)
CVT side	New	24.977 to 24.990 mm (.983 to .984 in)
	Service limit	24.970 mm (.983 in)

2. Check main shaft for wear.

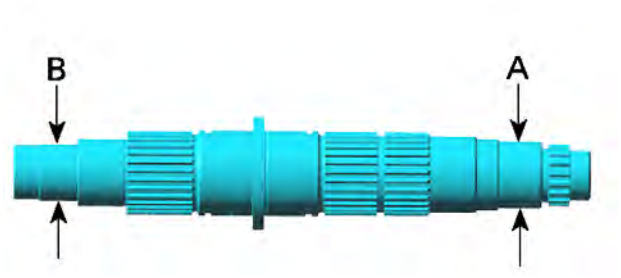

A. Bearing journal MAG side
B. Bearing journal CVT side

Main Shaft Bearing Journal CVT/MAG Side	
New	16.980 to 16.991 mm (.669 to .669 in)
Service limit	16.976 mm (.668 in)

Shift Shaft

1. Check shift shaft for worn splines and gears.
2. Check shift shaft spring for damages.

Shift Drum

NOTICE
Do not disassemble shift drum.

Remove GBPS magnet only if necessary.

1. Check shift drum tracks for scouring or heavy wear, like rounded engagement slots.

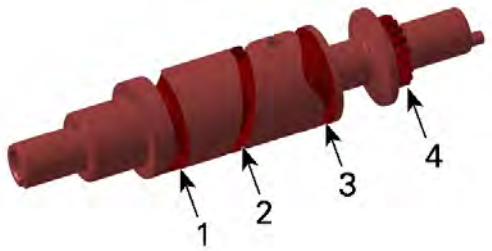

1. Track for the low/reverse range gear shift fork
2. Track for the shifting block
3. Track for the high range gear shift fork
4. Shift drum gear

Shift Forks

1. Check both shift forks for visible damage, wear or bent shift fork claws.
2. Check engagement rollers for wear and smooth movement.
3. Measure the shift fork claw thickness.

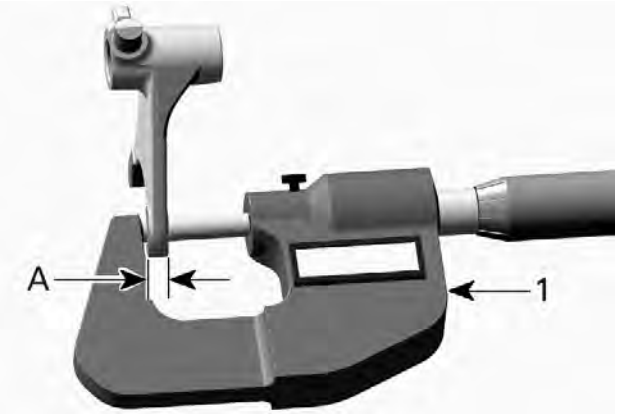

TYPICAL
1. Micrometer
A. Shift fork claw thickness

Shift Fork Claw Thickness	
New	5.92 to 6.00 mm (.233 to .236 in)
Service limit	5.80 mm (.228 in)

Shift Fork Shaft

1. Check shift fork shaft for visible damage or wear.
2. Check if shift fork shaft is straight.

Index Lever and Parking Lever

1. Index lever with roller must move freely.
2. Check parking lever for cracks or other damages.

Assembling the Gearbox and Shifting Mechanism

The assembly of gearbox is essentially the reverse of disassembly procedure. However, pay attention to the following details.

1. Prior to assembly lubricate ball bearing seats of:

Copaslip

- Main shaft
- Countershaft
- Intermediate shaft.

Assembling the Shift Fork Shaft Assembly

NOTICE
Springs are not identical.

1. Install:
   - **NEW** snap rings
   - Spring seats
   - Springs
   - Shift forks
   - Shifting block.

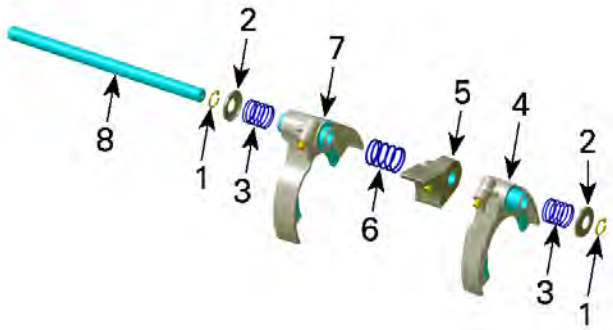

1. *Snap rings*
2. *Spring seat*
3. *Outer springs*
4. *Shift fork HIGH*
5. *Shifting block*
6. *Center spring*
7. *Shift fork LOW/REVERSE*
8. *Shift fork shaft*

Main Shaft, Shift Fork Shaft Assembly and Countershaft

1. Install shifting sleeve, thrust washer and LOW gear pinion on main shaft assembly.
2. Check if shifting sleeve engages correctly in reverse gear.

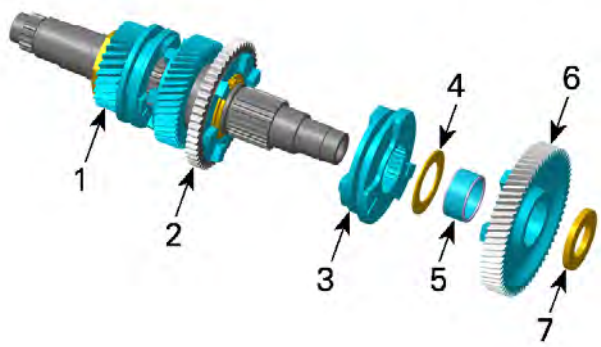

1. *Main shaft assembly*
2. *Reverse gear*
3. *Shifting sleeve*
4. *Thrust washer*
5. *Needle bearing*
6. *LOW gear pinion*
7. *Thrust washer*

3. Install shift fork shaft assembly, countershaft and main shaft assembly together into gearbox housing.

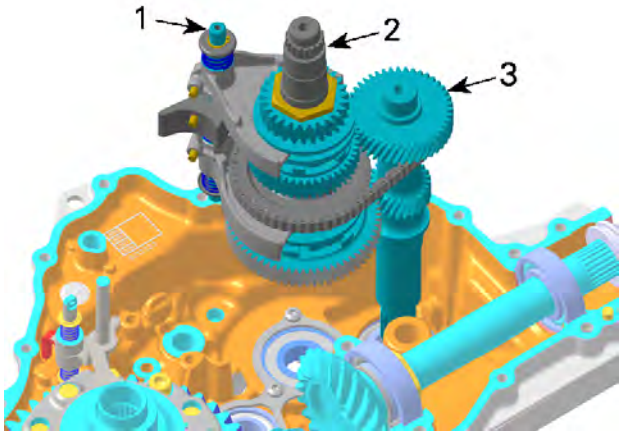

1. *Main shaft assembly*
2. *Shift fork shaft assembly*
3. *Countershaft*

Pinion Drive Shaft and Intermediate Shaft

1. Ensure distance shim and bevel gear are placed on the pinion drive shaft bearing in gearbox housing.

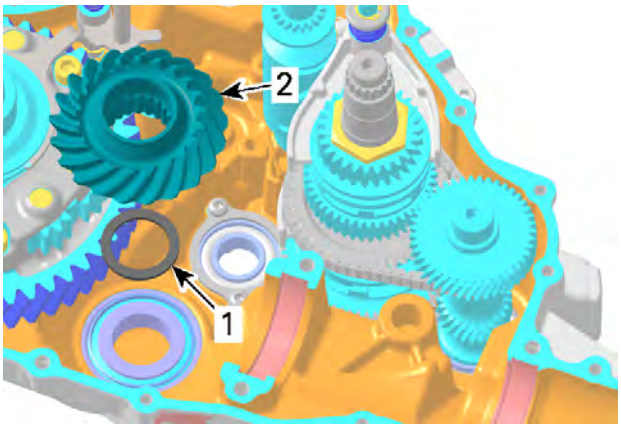

1. *Distance shim*
2. *Bevel gear*

2. Install:
   1. Intermediate shaft
   2. Pinion drive shaft.
3. Carefully fit pinion drive shaft into inner splines of bevel gear.

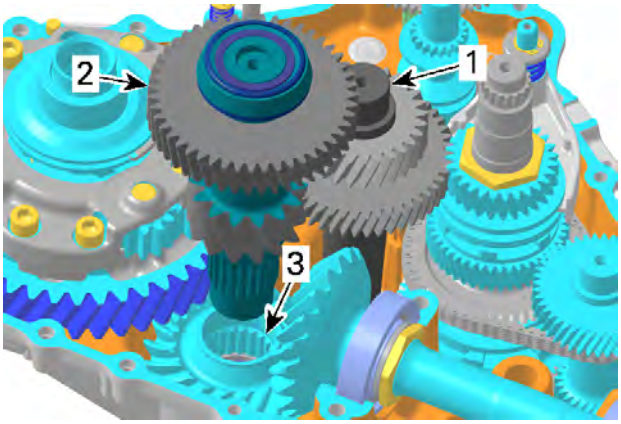

1. *Intermediate shaft*
2. *Pinion drive shaft*
3. *Bevel gear splines*

Shift Shaft Assembly and Shift Drum

1. Install:
   - Shift drum
   - Shift shaft assembly.
2. Align mark on shift shaft with marks on shift drum gear.

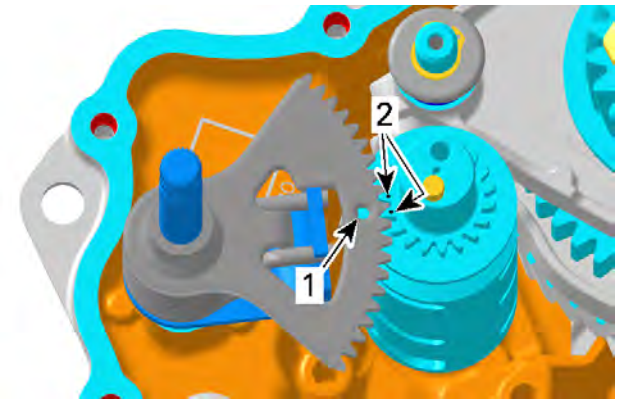

1. *Mark on shift shaft*
2. *Marks on shift drum gear*

3. Engage shift fork pins into shift drum gates and install shift fork shaft:
   1. Lift shift fork HIGH
   2. Press shifting block down
   3. Move shift fork shaft sidewards.

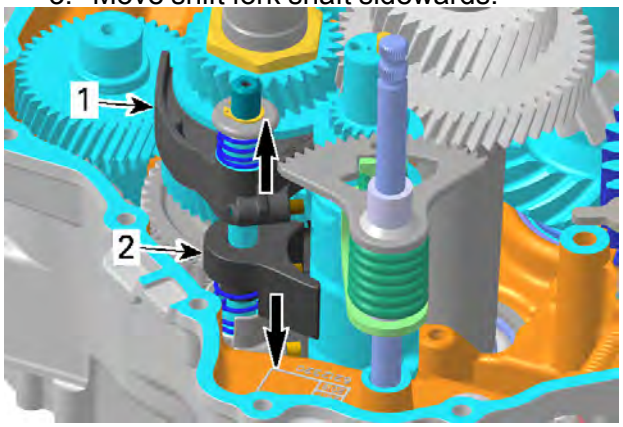

1. *Shift fork HIGH*
2. *Shifting block*

Index Lever, Index Washer and Parking Lock Lever

1. Fit step ring into index lever.

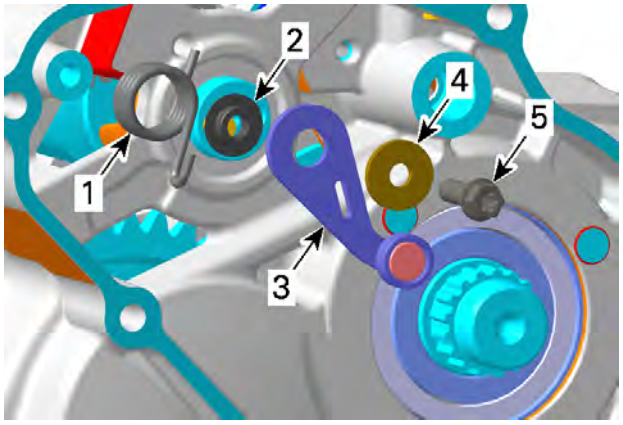

1. *Index spring*
2. *Step ring*
3. *Index lever*
4. *Washer*
5. *Screw*

2. Apply a drop of threadlocker on index lever screw threads.

Loctite 243 (blue)

3. Tighten the index lever screw to specification.

Tightening Torque	
Index lever retaining screw	10 ± 1 Nm (89 ± 9 lbf-in)

4. Install index washer on shift drum.
5. Insert a flat screwdriver in the slot of the index lever, turn screwdriver clockwise and engage lever in index washer in NEUTRAL position as per following illustration.

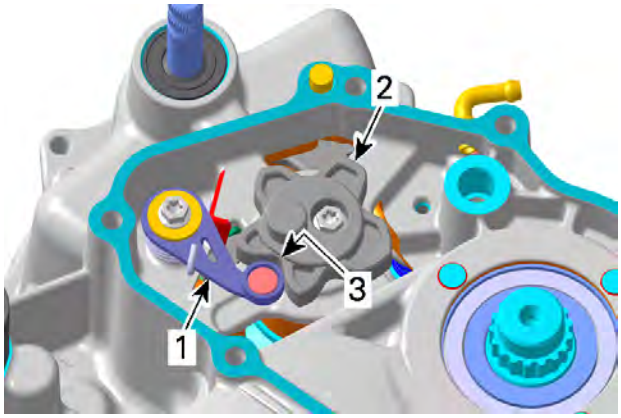

1. *Index lever*
2. *Index washer*
3. *Neutral position*

6. Apply a drop of threadlocker on index washer screw threads.

Loctite 243 (blue)

7. Install screw retaining the index washer to the shift drum.

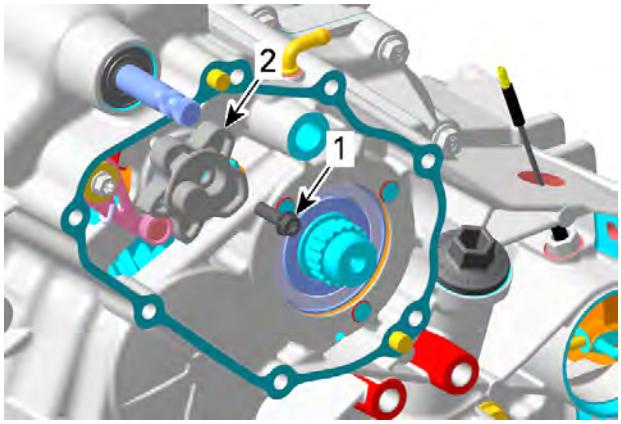

1. *Screw*
2. *Index washer*

Tightening Torque	
Index washer retaining screw	10 ± 1 Nm (89 ± 9 lbf-in)

8. Install:
   - Park locking gear
   - Spring washer
   - Nut
   - Pin
   - Park locking lever.
9. Set gearbox to PARK position.

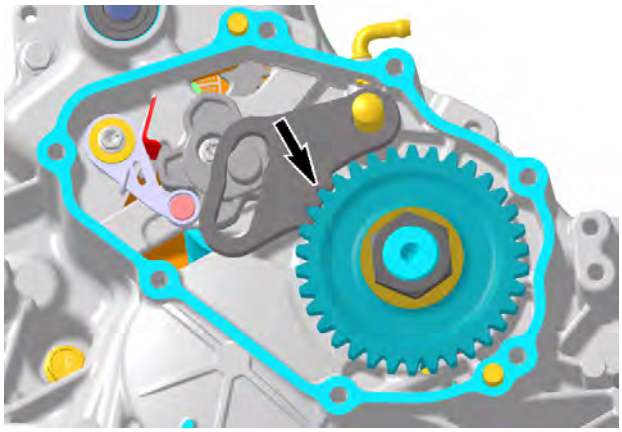

PARK LOCKING LEVER ENGAGED

10. Apply a drop of threadlocker on park locking gear nut threads.

Loctite 648 (green)

11. Tighten nut to specification.

Tightening Torque	
Park locking gear nut	170 ± 10 Nm (125 ± 7 lbf-ft)

12. Install gearbox cover with **NEW** gasket.
13. Tighten gearbox cover screws as per following sequence.

Tightening Torque	
Gearbox cover screws	10 ± 1 Nm (89 ± 9 lbf-in)

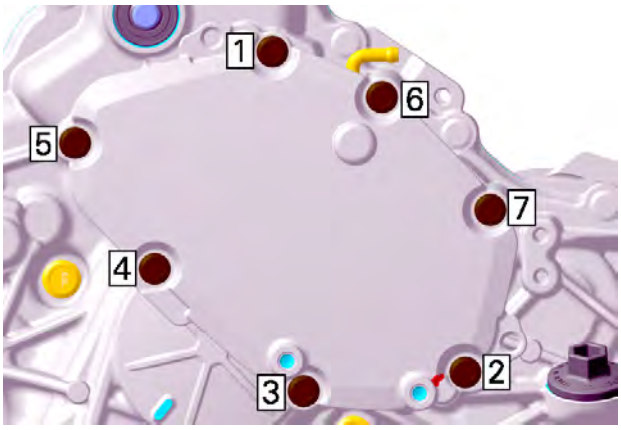
1
6
5
7
4
2
3

Output Shaft and 4x4 Coupling Mechanism

SERVICE PRODUCTS

Description	Part Number	Page
COPASLIP		204
LOCTITE 243 (BLUE)		192, 196, 207, 210
LOCTITE 5910		197, 199
LOCTITE 648 (GREEN)		198, 207
LOCTITE CHISEL (GASKET REMOVER)		196
PETAMO GREASE GHY 133N		189
SUPER LUBE GREASE		178, 180, 183–184, 187

Removing the Output Shaft and 4X4 Coupling Mechanism

1. Drain gearbox oil.
2. Remove the 4WD actuator.
3. Detach the gearbox from the engine.
4. Remove the coupling fork.

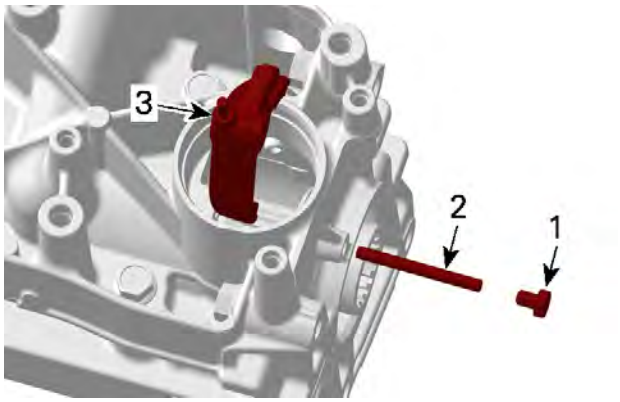

1. *Screw*
2. *Coupling fork shaft*
3. *Coupling fork*

5. Pull out 4X4 coupling sleeve.

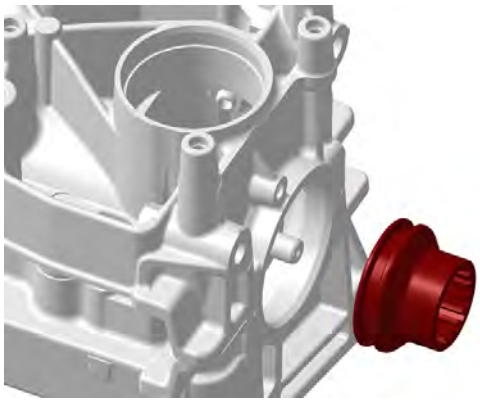

Inspecting the Output Shaft and 4X4 Coupling Mechanism

Output Shaft

1. Check output shaft and its gear for cracks, bend, pitting or other visible damages.
2. Check output shaft splines for wear or other damages.
3. Check if the output shaft bearings turn freely and smoothly.
4. Replace oil seal if brittle, hard or damaged.

4X4 Coupling Sleeve

1. Check splines of coupling sleeve for wear or other damages.

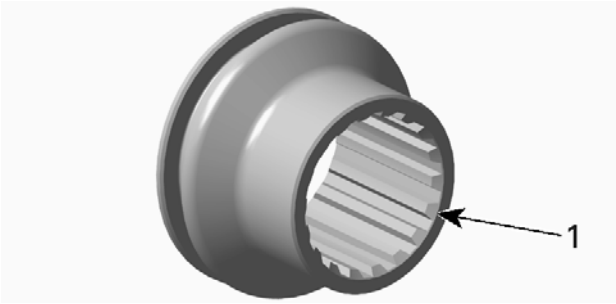

1. *Inspect splines*

2. Measure the coupling sleeve groove width.

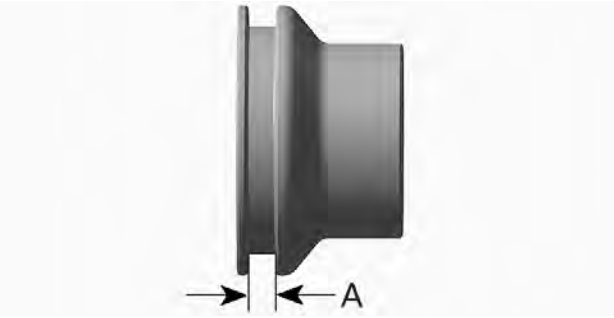

A. Groove width

Coupling Sleeve Groove Width	
New	5.25 to 5.35 mm (.207 to .211 in)
Service limit	5.50 mm (.217 in)

Coupling Fork

1. Check coupling fork for visible damage, wear or bent coupling fork claws.
2. Check coupling fork claw thickness.

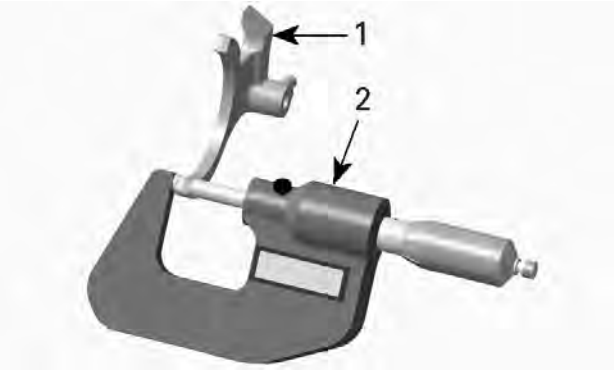

1. Coupling fork
2. Micrometer

Coupling Fork Claw Thickness	
New	4.95 to 5.05 mm (.195 to .199 in)
Service limit	4.80 mm (.189 in)

Installing the Output Shaft and 4X4 Coupling Mechanism

1. Install coupling sleeve onto the output shaft.
2. Install the coupling fork.
3. Ensure that coupling fork engages into the coupling sleeve groove.

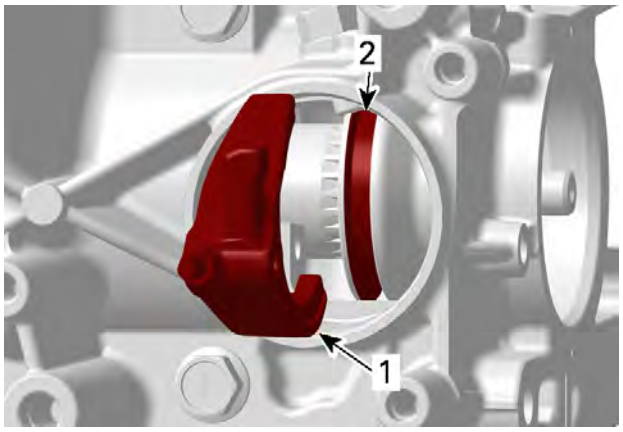

1. Coupling fork
2. Coupling sleeve groove

4. Apply a drop of threadlocker on coupling fork shaft screw threads.

Loctite 243 (blue)

5. Tighten the coupling fork shaft screw to specification.

Tightening Torque	
Coupling fork shaft screw	6 ± 0.7 Nm (53 ± 6 lbf-in)

Rear Differential and Locking Mechanism

SERVICE TOOLS

Description	Part Number	Page
ECM ADAPTER TOOL	(P/N 529036166)	182, 187
HANDLE	(P/N 420877650)	190
M34 SOCKET	(P/N 529036388)	193, 198
OIL SEAL INSTALLER (COUNTERSHAFT)	(P/N 529036391)	190
OIL SEAL INSTALLER (DIFFERENTIAL OUTPUT)	(P/N 529036456)	191
OIL SEAL INSTALLER (GEARBOX)	(P/N 529035758)	190
SLEEVE INSTALLER	(P/N 529036455)	191, 196, 211
SPLINES SOCKET 1/2"	(P/N 529036389)	193, 198

Removing the Rear Differential and Locking Mechanism

1. Separate gearbox housing.
2. Remove rear differential together with locking mechanism.
3. Take care not losing the distance shim underneath tapered roller bearing.

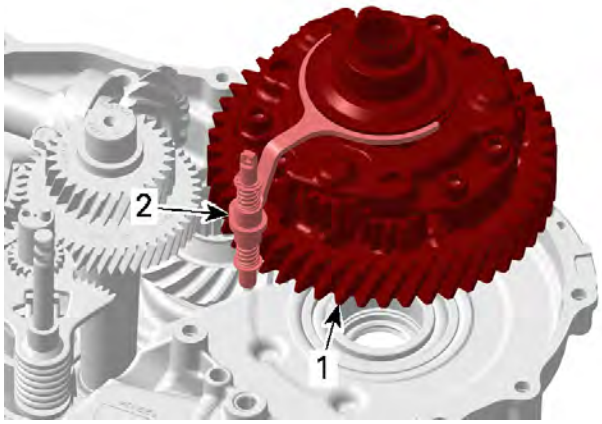

1. Rear differential
2. Locking mechanism

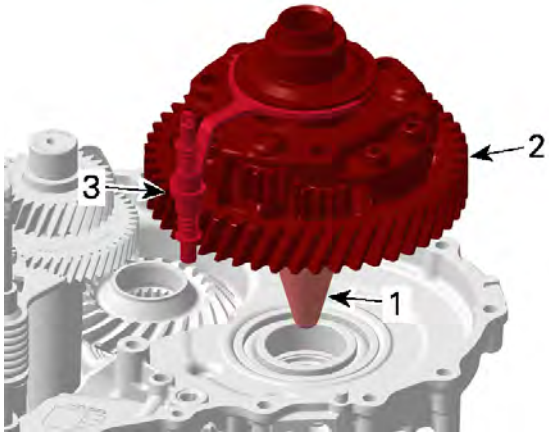

1. Sleeve installer
2. Rear differential
3. Locking mechanism

Inspecting the Rear Differential

1. Turn differential output shafts and check if differential gears turn smoothly. Replace rear differential if necessary.

Installing the Rear Differential and Locking Mechanism

1. Install rear differential and the locking mechanism.

Sleeve installer (P/N 529036455)	

Notes

Technician's Notes

Related Documents

Bulletins	

Instruction Sheets	

Other	

05

ELECTRONIC MANAGEMENT SYSTEM

05 ELECTRONIC MANAGEMENT SYSTEM

Electronic Control Module

SERVICE TOOLS

Description	Part Number	Page
ECM ADAPTER TOOL	(P/N 529036166)	215

General

System Description

Engine Control Module (ECM)

From input signals, the ECM acknowledges driver demands and converts them to an engine torque requirement through calculation of several variables. Then, the ECM controls the iTC, the injection system and the ignition system to meet the torque requirement.

The ECM manages the engine torque requirements and controls engine operation to ensure it is delivering optimum performance and fuel economy. The ECM also controls idle RPM and limits maximum engine speed through the iTC system.

Troubleshooting

Diagnostic Tips

Electrical Related Problems

Pay particular attention to ensure that terminals and pins are not out of their connectors, corroded, or out of shape.

When probing terminals, pay attention not to deform the terminals as this could cause a loose or intermittent connection that would be difficult to troubleshoot.

Procedures

Engine Control Module (ECM)

As a first troubleshooting step, always check for applicable fault codes using the BRP diagnostic software (BUDS2).

Quick Test to Validate ECM Operation

Turn ignition key to ON.

NOTE: Setting the ignition switch to ON wakes up the ECM, which then turns on the following.

Quick Indication that ECM is Functioning (Assuming the Observed Component is in Good Working Order)
Gauge turns ON.
Fuel pump turns on for approx. 5 seconds.
Rear lights turn on.
Headlamps turn on (Lights switch position to LO or LO+HI).

ECM First Initialization

This procedure performs a reset of the following values in the ECM:

- TAS (Throttle Accelerator Sensor)
- TPS (Throttle Position sensor)
- GBPS (Gearbox Position Sensor).

This reset **must** be carried out whenever the ECM has been replaced.

This reset **may** be carried out whenever any of the following components have been replaced instead of their respective reset procedures:

- Throttle body (for TPS)
- Gearbox position sensor (GBPS).

1. Connect the vehicle to the BRP diagnostic software (BUDS2).
2. In BUDS2, select the following:
   - **Settings** page
   - **ECM** button
   - **ECM First Initialization**
3. In the **ECM first initialization** field, click on the **Reset** button.
4. Follow the instructions in the message boxes that appear.

If the operation is successful, a message will be displayed stating that the reset was successful.

If an error occurred or a component is out of range, a message may be displayed. Follow the instructions in the message and repeat the procedure.

5. Check for fault codes.

   If a fault code is generated, carry out the service actions, reset the fault and repeat the reset procedure.
6. Start engine and make sure it operates normally throughout its full engine RPM range.

ECM Connector Identification

1. There are 2 connectors connected to the ECM:
   - Engine harness connected to connector A
   - Vehicle system control harness connected to connector B.

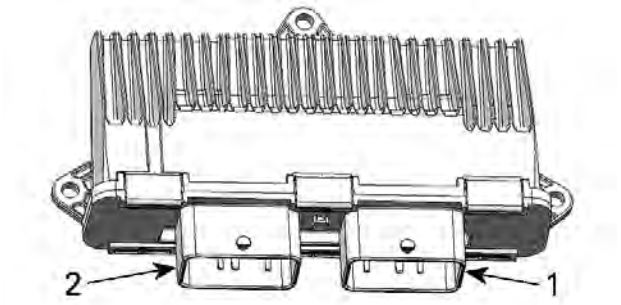

1. Connector A
2. Connector B

2. The ECM connectors have 48 pins.
3. For connector information, cleaning and probing, refer to *Wiring Harness and Connectors* subsection.

ECM Testing Tool

1. Install the ECM adaptor tool to test and probe the ECM connector terminals.

ECM adapter tool (P/N 529036166)	

NOTICE

The ECM replacement will be required if connectors or terminals are damaged.

Testing the ECM Power Supply

1. Disconnect the connector B from the ECM.
2. Install the connector on the ECM adapter tool.
3. Install a jumper wire between B-H2 and B-M2 on the ECM adapter tool.
4. Turn the ignition switch to ON or install the D. E.S.S. key on its post.
5. Set the multimeter to Vdc.
6. Check for voltage as follows.

ECM Power Supply Test		
ECM adapter	**Battery**	**Measurement**
B-M4	Negative post	Battery voltage

If voltage is not measured, check the following:
- Main relay
- Wiring and connections.

Testing the Continuity of ECM Ground Circuits

1. Disconnect the connector B from the ECM.
2. Install the connector on the ECM adapter tool.
3. Set the multimeter to Ω.
4. Probe adapter terminals as per following table.

ECM Ground Circuit Test		
ECM adapter	**Battery**	**Measurement**
Pins B-L1, B-M2 and B-M3	Negative post	Close to 0 Ω (continuity)

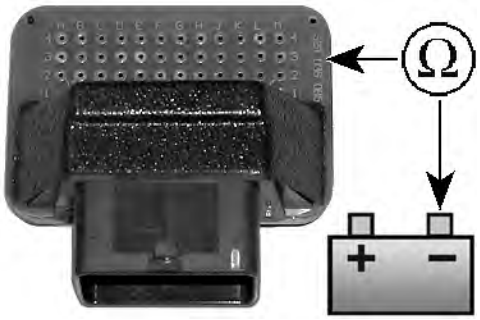

If any measurement is out of specification, refer to *Power Distribution* and check all grounds.

Replacing the ECM

Prior to replacing an ECM, ensure that all the recommendations in the general introduction of this section have been followed.

NOTE: Proceed with an *ECM First Initialization* as it may resolve the problem.

If the ECM and the digital display are both to be replaced, always replace the digital display first.

Removing the ECM

NOTE: If a new ECM is to be installed, first read the procedures in *Replacing the ECM*.

1. Disconnect battery cables.

NOTICE
Always disconnect the BLACK negative (–) battery cable first, then disconnect RED positive (+) cable.

2. Disconnect both ECM connectors from ECM.
3. Unscrew all retaining screws and pull out ECM.

Installing the ECM

The installation is the reverse of the removal procedure. However, pay attention to the following.

Tightening Torque	
ECM screws	6.5 ± 0.5 Nm (58 ± 4 lbf-in)

1. Reconnect ECM connectors.
2. Reconnect battery cables.

NOTICE
Always reconnect the RED positive (+) battery cable first, then reconnect BLACK negative (–) cable.

3. If a new ECM is installed, refer to *Replacing the ECM*.

Programming the ECM

1. Connect the vehicle to the BRP diagnostic software (BUDS2).
2. In BUDS2, click the **Scan** button to read the new ECM.
3. Select:
   - **Summary** page
   - **ECM** button
   - **Health** tab
   - **Programing the ECM**.

   Follow the instructions.
4. Perform the *Throttle Position Sensor Initialization* procedure. Refer to *Throttle Position Sensor (TPS)*.
5. Start the engine and ensure proper operation.
6. Reinstall removed parts.

06

FUEL SYSTEM

06 FUEL SYSTEM

Electronic Fuel Injection (EFI)

SERVICE TOOLS

Description	Part Number	Page
ECM ADAPTER TOOL	(P/N 529036166)	220, 225

General

⚠ WARNING

Fuel is flammable and explosive under certain conditions.
Ensure work area is well ventilated.
Do not smoke or allow open flames or sparks in the vicinity.
Fuel lines remain under pressure at all times.
Always proceed with care and use appropriate safety equipment when working on pressurized fuel system.
Wipe off any fuel spillage.
Do not allow fuel to spill on hot engine parts and/or on electrical connectors.
Replace any damaged, leaking or deteriorated fuel lines or connections.
Always, pressurize the fuel system if any fuel related component was disconnected or removed.
Proceed with care when removing/installing high pressure test equipment.

System Description

Refer to the *Engine Management system* subsection for a general layout of the various EFI system components.

The electronic fuel injection system (EFI) is comprised of various sensors used for detecting ongoing operating conditions of the engine and vehicle, and includes all the components that perform the required adjustments to the engine.

Electrical System

EFI Sensors

The ECM reads the inputs from the sensors which it compares to predetermined parameters stored in the ECM, makes computations, and activates the outputs accordingly (injectors, ignition coils etc.).

Signals from sensors are used by the ECM to determine the injection and ignition parameters (referenced to fuel maps) as required to maintain the optimum air-fuel ratio.

Air Intake System

Air Filter

Air, drawn into the air filter housing, first passes through an inlet duct.

After it passes through the air filter, an air duct (intake adapter) is used to channel the air to the throttle body.

Throttle Body

The throttle body is mounted on top of the intake manifold.

Air for combustion, drawn in by the engine, flows through the air intake system, then through the throttle body where it is regulated by the throttle plate.

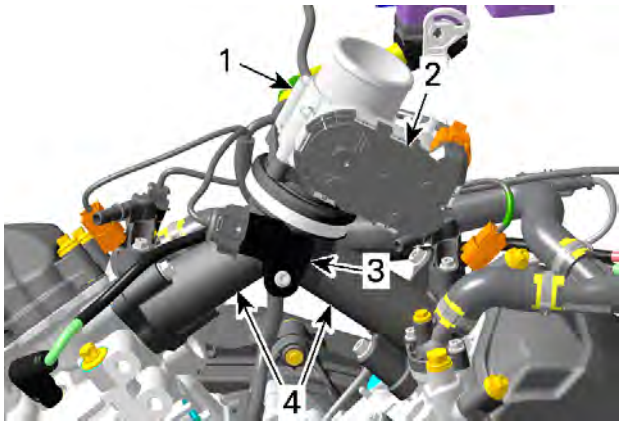

1. *Throttle body*
2. *ETA and TPS*
3. *MAPTS (Manifold Air Pressure Temperature Sensor)*
4. *Air intake manifold*

Fitted on the throttle body, an electronic throttle actuator (ETA) allows the ECM to electronically control the throttle plate opening which regulates the amount of air that enters the engine, and therefore engine torque.

There is no idle air control valve (IACV).

The TPS is also incorporated in the throttle body. It provides a signal to the ECM of the actual throttle plate position.

Fuel System

Fuel Rail

Two fuel rails, one for each injector, are mounted on the intake manifold. The fuel rails, which are used to secure the injectors to the manifold, also provide to the injectors the fuel pressure that they receive from the fuel pump.

The fuel pressure applied to the fuel rails is regulated by the fuel pressure regulator located in the fuel pump module.

Fuel Injectors

The fuel injectors are used to inject fuel into the intake ports of the cylinder head. One injector is used per cylinder.

Fuel Pump

An electric fuel pump with an integrated pressure regulator and fuel system filters is used. For more details on the fuel pump unit, refer to *Fuel Tank and Fuel Pump* subsection.

Idle Speed

Idle speed is not adjustable. The ECM controls the idle speed of the engine primarily through control of the throttle plate position.

The vehicle multifunction gauge can provide an accurate digital readout of the engine's idle speed.

The engine RPM may also be verified using the BRP diagnostic software (BUDS2).

In BUDS2, go to:

– **Measurements** page
– **ECM** button.

NOTE: The multifunction gauge and the BRP diagnostic software (BUDS2) use the same signal to provide the engine RPM indication.

Troubleshooting

Diagnostic Tips

Engine problems are not necessarily related to the fuel injection system.

It is important to ensure that the engine and propulsion system, fuel delivery and electrical systems are functioning normally.

For diagnostics purposes, use the BRP diagnostic software (BUDS2).

After a problem has been solved, be sure to clear the fault(s) in the ECM using the BRP diagnostic software.

NOTICE

Electrical actuators and electronic modules may be powered up as soon as the ignition switch is set to ON. Always disconnect the battery prior to disconnecting any electrical or electronic parts.

Never use a battery charger to temporarily substitute the battery as it may cause the ECM to function erratically, or not at all.

Check related-circuit fuse solidity and condition with an ohmmeter. A visual inspection could lead to a false diagnosis.

Electrical Related Problems

It is important to check the following in the electrical system:

– Battery voltage
– Fuses
– Ground connections
– Wiring and connectors.

Ensure that all electronic components are genuine OEM. Any modification to the wiring harness may lead to poor system operation or generate fault codes.

Electrical Connections

Pay particular attention to ensure that terminals and pins are not out of their connectors, corroded, or out of shape.

When probing terminals, pay attention not to deform the terminals as this could cause a loose or intermittent connection that would be difficult to troubleshoot.

Procedures

Fuel Injector

Testing the Fuel Injector Operation Using BUDS2 (Dynamic)

NOTE: As a first troubleshooting step, always check for applicable fault codes using the BRP diagnostic software (BUDS2).

1. Connect vehicle to BUDS2.
2. Turn key to the **ON** position.
3. Click the following:
   - **Functions** page
   - **ECM** button
   - **IO Controls - Activate Fuel Injectors**.

   You should hear the fuel injector "clic" when activating, if not, carry out *Testing the Fuel Injector Resistance*.

Testing the Fuel Injector Balance Using BUDS2

NOTICE

After fuel injector activation using BUDS2, always crank engine in drowned mode to ventilate engine and prevent a potential backfire due to fuel accumulation in engine.

1. Install a fuel pressure gauge as described in *Testing the Fuel Pump Pressure* of *Fuel Tank and Fuel Pump* subsection.
2. Connect the vehicle to the BRP diagnostic software (BUDS2).
3. Turn the ignition key to ON.
4. In BUDS2, select the following:
   - **Functions** page
   - **ECM** button
   - **Activate Fuel Pump**.
5. Click on the **ACTIVATE** button to activate fuel pump.
6. Fuel pressure must be within specification. Refer to *Fuel Tank and Fuel Pump* subsection. Re-activate fuel pump as necessary.
7. In BUDS2, energize fuel injector 1.

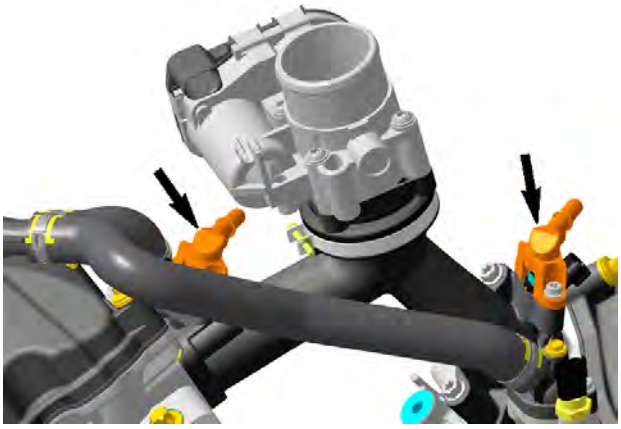

CLICK ON INJECTOR TO ACTIVATE

8. Record the fuel pressure drop for injector 1.
9. Re-activate fuel pump.
10. Repeat the procedure for fuel injector 2 and record the pressure drop.
11. The maximum fuel pressure drop between injectors should not exceed the following specification:

Maximum Fuel Pressure Drop Allowed Between Fuel Injectors
10 kPa (1.5 lbf/in²)

If pressure drop of any fuel injector is greater than the specification, replace injector then repeat the test.

12. Using the valve on the fuel pressure gauge, release the pressure in the system (if so equipped).
13. Remove fuel pressure gauge and reinstall removed parts.

Testing for Fuel Injector Leaks

1. Carry out the *Testing the Fuel Pump Pressure* as detailed in the *Fuel Tank and Fuel Pump* subsection.

Testing the Fuel Injector Resistance

1. Disconnect the A connector from the ECM.
2. Install the connector on the ECM adapter tool.

ECM adapter tool (P/N 529036166)	

3. Disconnect the engine connector (HIC).
4. Check resistance value between terminals as follows.

Fuel injector resistance test at hic connector			
INJ	**HIC pin**	**ECM adapter**	**Measurement @ 20°C (68°F)**
Front	D	A-J1	11.4 - 12.6 Ω
Rear		A-K1	

5. If resistance value obtained is incorrect, remove injector connector and check resistance value between injector pins as follows.

Fuel injector resistance test at injector			
INJ	Injector pin		Measurement @ 20°C (68°F)
Front	1	2	11.4 - 12.6 Ω
Rear			

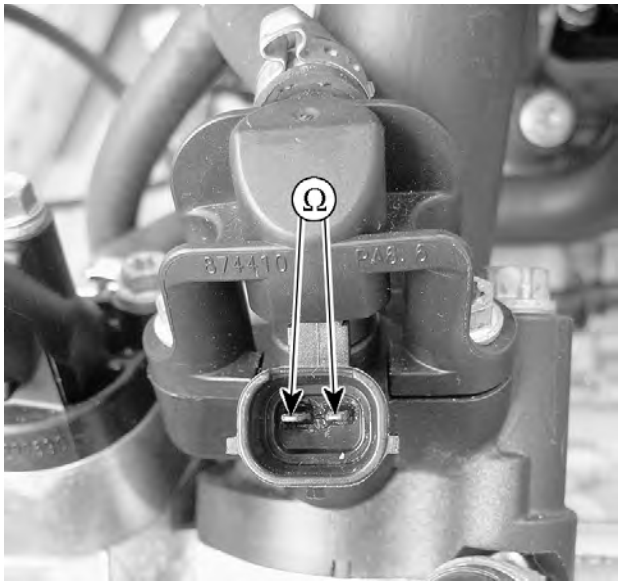

TYPICAL

6. If readings are out of specifications, replace injector.
7. If readings are good, carry out *Testing the Fuel Injector Input Voltage*.

Testing the Fuel Injector Input Voltage

1. Disconnect the fuel injector connector.

NOTE: If the connector is hard to unlock, gently use a screwdriver to release connector.

TYPICAL

2. Activate the electric system..
3. Set the multimeter to Vdc. Read voltage.

Injector Input Voltage Test			
Inj	Inj pin	Battery	Measurement
Front	2	Negative post	Battery voltage
Rear			

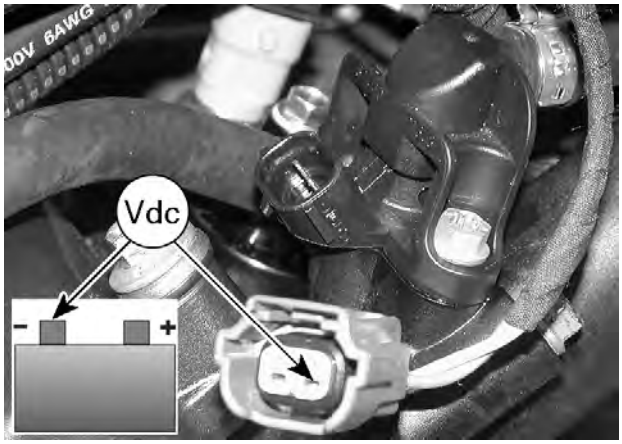

TYPICAL

4. If supply voltage is not good, check continuity between the injector fuse and the injector.

NOTE: Probe fuse exactly as shown. This validates fuse at the same time.

5. Set multimeter to Ω.

Injector Resistance Test			
Inj	Inj pin	Fuse box	Measurement
Front	2	Injector fuse	Close to 0 Ω
Rear			

6. If continuity is good, check relay and wiring from battery.
7. If continuity is faulty, check fuse and if OK, repair or replace wiring going to injector.
8. If supply voltage is good, check ground circuit between injector and ECM (refer to the appropriate wiring diagram).
   - If ground circuit is faulty, repair/replace wiring and connectors.
   - If ground circuit is good, refer to *Replacing the ECM*.

Removing the Fuel Injector

1. Remove the fuel rail, refer to *Fuel Rail* for the procedure.

1. *Fuel rail*
2. *Fuel injector*
3. *Injector top O-ring*
4. *Injector bottom O-ring*
5. *Manifold O-ring*

2. Then pull fuel injector out of the fuel rail.

Installing the Fuel Injector

The installation is the reverse of the removal procedure. However, pay attention to the following.

NOTICE

If installing the removed injector(s), always install NEW O-rings.

1. Lubricate O-rings with engine oil to ease insertion in rail.
2. Install fuel injector with your hand. Do not use any tool.
3. Position the manifold O-ring on injector as in following illustration.

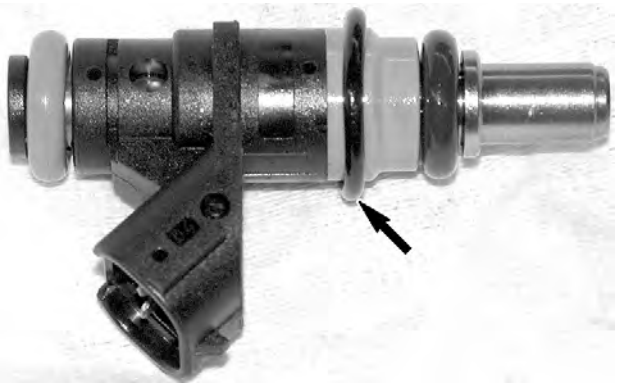

TYPICAL - MANIFOLD O-RING POSITION

4. Carefully insert injector in manifold paying attention to the manifold O-ring.

NOTICE

Gently push O-ring in evenly all around while inserting injector. O-ring must be completely inserted and not visible, before completing the insertion of the injector.

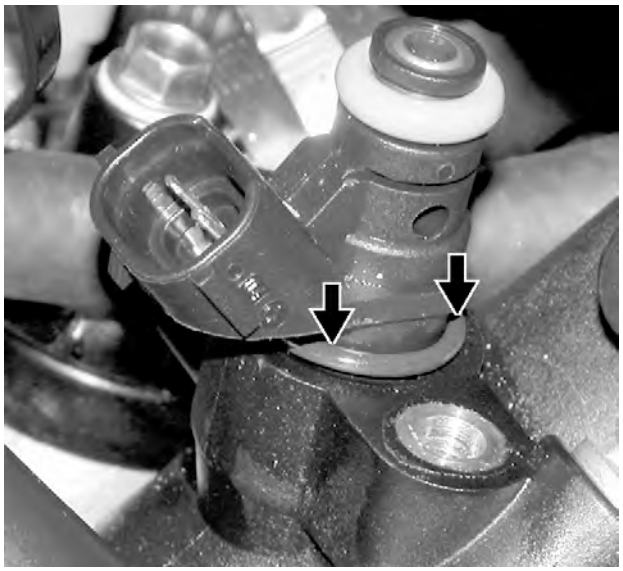

5. Firmly push injector until it bottoms out.
6. Reinstall fuel rail.

Fuel Rail

Removing the Fuel Rail

1. Connect the vehicle to the BRP diagnostic software (BUDS2).
2. Go to this location and follow the instructions:
   - **Functions** page
   - **ECM** button
   - **Execute Fuel Pressure Relief**.
3. Wrap a rag around the inlet hose and release the quick fitting.

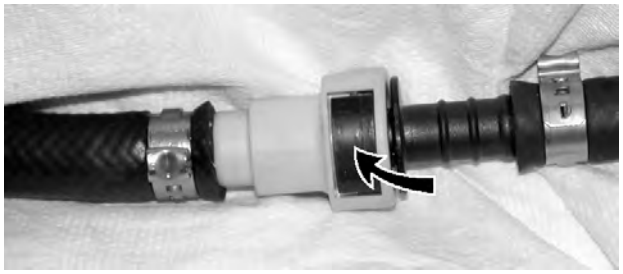

TYPICAL

4. Unscrew rail retaining screws.
5. Gently pull rail off by hand.

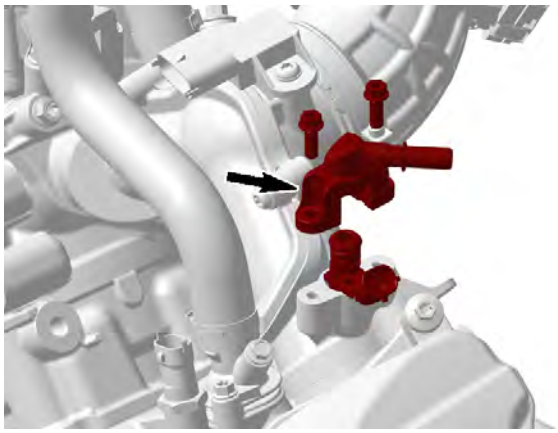

6. To disconnect fuel rail from hose, cut clamp on fuel hose. Refer to *Fuel Tank and Fuel Pump* for clamp removal/installation procedures.

NOTE: If fuel rail is removed for access to fuel injector, it is not necessary to cut hose clamp. Only to replace fuel rail.

Installing the Fuel Rail

The installation is the reverse of the removal procedure. However, pay attention to the following.

1. Install new clamps using pliers as per removal if fuel rail was replaced.
2. Apply a thin film of engine oil to injector O-rings to ease insertion in rail.
3. Install fuel rail and evenly tighten screws a little at a time each side.

Tightening Torque	
Fuel rail screws	10 ± 1 Nm (89 ± 9 lbf-in)

⚠ WARNING

Perform a fuel pressure test and ensure that there is no leak. Refer to *Fuel Tank and Fuel Pump*. Run engine and check for leaks.

Throttle Body

Throttle Body Description

1. *Throttle body*
2. *Throttle plate*
3. *Electronic throttle actuator (electric motor inside)*
4. *Throttle position sensor (TPS) (inside)*

Throttle Body Location

The throttle body is mounted on top of the intake manifold

Lubricating the Throttle Body

No lubrication is required.

Cleaning the Throttle Body

1. Remove air inlet hose from throttle body.
2. Check throttle body cleanliness using a flashlight. Fully open throttle plate and verify:
   - Throttle body bore
   - Throttle plate edge.

   Look for:
   - Dirt
   - Oily surfaces
   - Carbon and salt deposits on throttle plate and the surrounding bore.
3. Clean the throttle body using a good throttle body cleaner safes for O-rings and EFI sensors. Follow manufacturer's instructions.
4. To avoid getting dirt into engine, spray cleaner on a clean rag then rub rag against throttle plate and bore. A toothbrush may also be used.

⚠ CAUTION

Ensure key is removed so that nobody can activate the electrical system, otherwise the ECM would turn on and the throttle actuator (ETA) would cycle. This could cause serious finger injury as the throttle plate moves quickly.

5. Gently open throttle plate and hold fully open to reach all surfaces.
6. To remove residual dirt, spray cleaner on throttle plate and on bore.
7. Reinstall removed parts.

Removing the Throttle Body

1. Disconnect air inlet hose from throttle body.
2. Disconnect throttle body connector.

   To remove connector from throttle body, simultaneously press the end of both connector locking tabs illustrated.

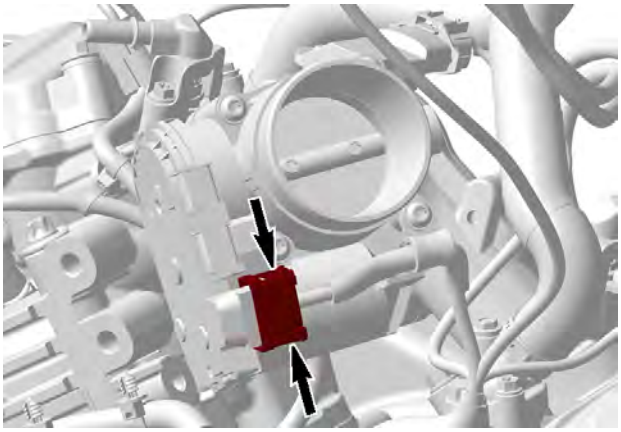

3. Remove screws retaining throttle body to intake socket.

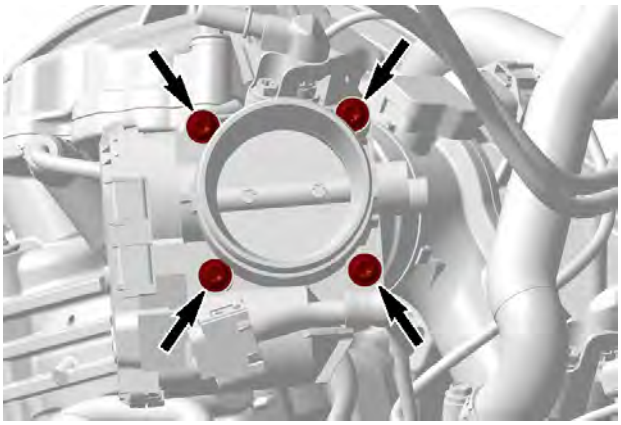

4. Pull throttle body off intake socket.

Installing the Throttle Body

The installation is the reverse of the removal procedure. However, pay attention to the following.

Tightening Torque	
Throttle body screws	7.5 ± 0.5 Nm (66 ± 4 lbf-in)

1. Perform the *Throttle Position Sensor Initialization* reset procedure. Refer to *Throttle Position Sensor (TPS)*.

Throttle Position Sensor (TPS)

TPS Description

NOTE: The TPS is part of the throttle body.

The throttle position sensor (TPS) is a double potentiometer that sends signals to the ECM that are proportional to the throttle plate angle.

NOTE: As a first troubleshooting step, always check for applicable fault codes using BUDS2 software.

Throttle Position Sensor Initialization

The TPS initialization procedure **must** be carried out whenever the throttle body is replaced, unless an ECM first initialization reset is carried out.

This operation performs a reset of the TPS basic values in the ECM. This reset is very important as the TPS values are part of the basic parameters for all fuel mapping calculations and control of several settings such as for idle speed, LIMP HOME mode and maximum RPM of the engine.

NOTICE

An improperly set TPS may lead to improper idle speed (too low or too high), poor engine performance, poor engine starting and engine stop on deceleration, fault codes and possible engine damage. Emission compliance may also be affected.

1. Connect vehicle to the BRP diagnostic software (BUDS2).
2. In BUDS2, select the following:
   - **Settings** page
   - **ECM** button
   - **Initialization - Reset TPS**
3. Follow display instructions.

   A message will be displayed if the operation is successful.

   If an error occurred or the TPS is not within the allowed range while resetting, the ECM will generate a fault code and will not accept the setting.
4. If a fault message is displayed, follow the instructions in the message(s).
5. Check for fault codes.
6. If a fault code is generated,

- Carry out the service actions.
- Reset the fault.
- Repeat the reset procedure.

7. Start engine and make sure it operates normally throughout its full engine RPM range.

Testing the TPS Wear

1. With the engine turned off, slowly press on the accelerator pedal and pay attention for smooth operation without physical stops.
2. Activate the electrical system to wake up the ECM.
3. Connect the vehicle to the BRP diagnostic software (BUDS2).
4. In BUDS2, select the following:
   - **Measurements** page
   - **ECM** button.
5. Slowly and regularly move the accelerator pedal.
6. Observe the Throttle Opening indication movement in BUDS2

   The indication should move gradually and regularly as you move the accelerator pedal. If the TPS indication is erratic or suddenly drops off, it may indicate a worn TPS that needs to be replaced. An initial slight delay after the accelerator pedal is moved and before the indication starts to move is normal.

   If the indication behavior is not as expected, proceed with the following steps.
7. Manually move the throttle plate in the throttle body using a blunt tool (without sharp tip).

⚠ CAUTION
Do not move throttle plate with your fingers. Otherwise, if ECM should turn off, it would quickly close the throttle plate which could cause finger injury.

1. Push here

8. Check the indication movement again.
   - If the indication moves as expected, check the throttle accelerator sensor (TAS). Refer to *Throttle Accelerator Sensor (TAS)*.
   - If the indication does not move as expected, perform *Testing the TPS Resistance*.

Testing the TPS Resistance

1. Ensure the throttle body connector is properly connected.
2. Disconnect the A connector from the ECM.
3. Install the connector on the ECM adapter tool.

ECM adapter tool (P/N 529036166)	

4. Set multimeter to Ω.
5. Probe circuit as per following table while using your hand to manually move throttle plate.

ECM adapter		Fully closed throttle plate (1)		Fully open throttle plate	
		RESISTANCE (Ω)			
PIN		MIN.	MAX.	MIN.	MAX.
A-A2	A-K4	875	1625	875	1625
A-A2	A-K3	954	1934	228	585
A-A2	A-F3	254	634	980	1983
A-K3	A-K4	228	585	954	1934
A-K3	A-F3	1385	2315	1385	2315
A-K4	A-F3	980	1983	254	634

(1) To obtain the fully closed position, it is necessary to push against the throttle plate in the throttle body with your hand and hold it in this position for the measurement.

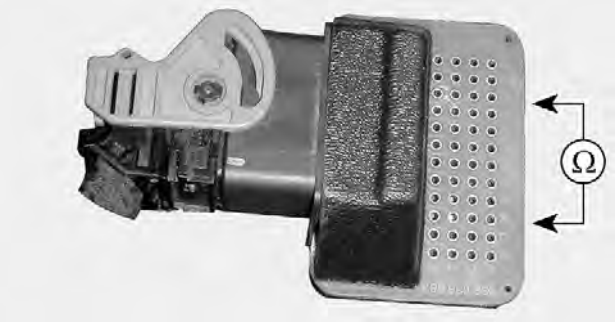

If any resistance value is incorrect, check wire continuity between the ECM and the throttle body before assuming the TPS is at fault.

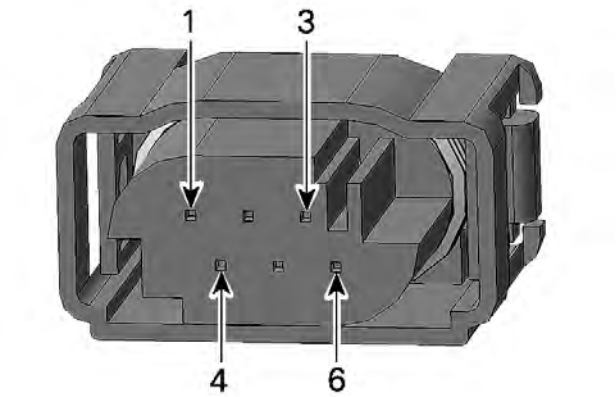

THROTTLE BODY CONNECTOR PIN-OUT

Replacing the TPS

The TPS cannot be replaced alone. It is part of the throttle body.

1. Carry out the *Throttle Position sensor Initialization* procedure as detailed in *Throttle Body*.

07

TECHNICAL SPECIFICATIONS

07 TECHNICAL SPECIFICATIONS

Engine

ENGINE			
Engine type			ROTAX®4-stroke, 2 cylinders (V-twin), liquid cooled
Valve train			4 valves/cylinder (mechanical adjustment), Single Over Head Camshaft (SOHC) with timing chain
Bore			91 mm (3.58 in)
Stroke			75 mm (2.95 in)
Displacement			976 cm³ (59.6 in³)
Compression ratio			11:1
Maximum HP RPM			6500 RPM
Air filter			Synthetic paper filter
Intake valve opening			5° BTDC
Intake valve closing			60° ABDC
Exhaust valve opening			50° BBDC
Exhaust valve closing			0° ATDC
Valve clearance		Intake	0.06 to 0.14 mm (.0024 to .0055 in)
		Exhaust	0.11 to 0.19 mm (.0043 to .0075 in)
Valve stem diameter	Intake	New	5.472 to 5.486 mm (.215 to .216 in)
		Service limit	5.450 mm (.2146 in)
	Exhaust	New	5.461 to 5.476 mm (.215 to .2156 in)
		Service limit	5.440 mm (.2142 in)

Midwest Manuals
Green Manuals
Paperless Manuals For a Better Tomorrow www.green-manuals.com
If you bought this manual from any other seller please leave them NEGATIVE feeddback and notify me at bestshopmanuals@gmail.com

ENGINE			
Valve out of round		New	0.005 mm (.0002 in)
		Service limit	0.060 mm (.0024 in)
Valve guide diameter		New	5.506 to 5.518 mm (.2168 to .2172 in)
		Service limit	5.568 mm (.2192 in)
Valve spring free length		New	40.41 mm (1.591 in)
		Service limit	39.00 mm (1.535 in)
Valve seat contact width	Intake	New	1.05 to 1.35 mm (.041 to .053 in)
		Service limit	2.20 mm (.087 in)
	Exhaust	New	1.25 to 1.55 mm (.049 to .061 in)
		Service limit	2.50 mm (.098 in)
Rocker arm bore diameter		New	12.036 to 12.050 mm (.4739 to .4744 in)
		Service limit	12.060 mm (.4748 in)
Rocker arm shaft diameter		New	12.000 to 12.018 mm (.4724 to .4731 in)
		Service limit	11.990 mm (.472 in)
Piston diameter		New	90.950 to 90.966 mm (3.5807 to 3.5813 in)
		Service limit	90.850 mm (3.5768 in)
Piston/cylinder clearance		New	0.027 to 0.057 mm (.0011 to .0022 in)
		Service limit	0.100 mm (.0039 in)

ENGINE			
Piston ring type		1st	Upper compression ring, rectangular
		2nd	Lower compression ring, tapered face
		3rd	Oil scraper ring
Ring end gap	Rectangular	New	0.20 to 0.40 mm (.008 to .016 in)
	Tapered face		0.20 to 0.40 mm (.008 to .016 in)
	Oil scraper ring		0.20 to 0.70 mm (.008 to .028 in)
	Rectangular	Service limit	0.60 mm (.024 in)
	Tapered face		0.70 mm (.028 in)
	Oil scraper ring		1.00 mm (.039 in)
Ring/piston groove clearance	Rectangular	New	0.03 to 0.07 mm (.0012 to .0028 in)
	Tapered face		0.02 to 0.06 mm (.0008 to .0024 in)
	Oil scraper ring		0.01 to 0.18 mm (.0004 to .0071 in)
	Rectangular	Service limit	0.15 mm (.0059 in)
	Tapered face		0.15 mm (.0059 in)
	Oil scraper ring		0.25 mm (.0098 in)
Cylinder bore		New	90.993 to 91.007 mm (3.5824 to 3.583 in)
Cylinder taper		Maximum New	0.038 mm (.0015 in)
		Service limit	0.090 mm (.0035 in)
Cylinder out of round		Maximum New	0.015 mm (.0006 in)
		Service limit	0.020 mm (.0008 in)

ENGINE			
Camshaft main bearing journal	Timing chain side	New	34.959 to 34.975 mm (1.3763 to 1.377 in)
		Service limit	34.950 mm (1.376 in)
	Spark plug side	New	21.959 to 21.980 mm (.8645 to .8654 in)
		Service limit	21.950 mm (.8642 in)
Camshaft main bearing journal bore	Timing chain side	New	35.000 to 35.025 mm (1.378 to 1.3789 in)
		Service limit	35.040 mm (1.3795 in)
	Spark plug side	New	22.000 to 22.021 mm (.8661 to .867 in)
		Wear limit	22.040 mm (.8677 in)
Camshaft lobe	Intake valve	New	32.890 to 33.090 mm (1.2949 to 1.3028 in)
		Service limit	32.870 mm (1.2941 in)
	Exhaust valve	New	32.950 to 33.150 mm (1.2972 to 1.3051 in)
		Service limit	32.930 mm (1.2965 in)
Crankshaft main bearing journal diameter (MAG/PTO side)		New	42.016 to 42.040 mm (1.6542 to 1.6551 in)
		Service limit	42.000 mm (1.6535 in)
Crankshaft radial play (MAG/PTO side)		Service limit	0.07 mm (.0028 in)
Crankshaft bearing journal diameter (in PTO cover)		New	34.004 to 34.020 mm (1.3387 to 1.3394 in)
		Service limit	33.998 mm (1.3385 in)
Crankshaft radial play (PTO cover bearing)		Service limit	0.10 mm (.0039 in)

ENGINE			
Crankshaft axial play		New	0.200 to 0.500 mm (.0079 to .0197 in)
		Service limit	0.600 mm (.0236 in)
Crankshaft pin diameter		New	41.986 to 42.010 mm (1.653 to 1.6539 in)
		Service limit	41.967 mm (1.6522 in)
Crankshaft deflection	MAG/ PTO side	New	0.050 mm (.002 in)
Crankcase plain bearing	MAG/ PTO side	Service limit	42.100 mm (1.6575 in)
PTO cover plain bearing		Service limit	34.120 mm (1.3433 in)
Connecting rod big end diameter		Service limit	42.100 mm (1.6575 in)
Connecting rod big end radial play		Service limit	0.09 mm (.0035 in)
Connecting rod big end axial play		New	0.250 to 0.550 mm (.0098 to .0217 in)
		Service limit	0.600 mm (.024 in)
Connecting rod small end diameter		New	22.010 to 22.020 mm (.8665 to .8669 in)
		Service limit	22.050 mm (.8681 in)
Piston pin diameter		New	21.996 to 22.000 mm (865.984 to 866.142 in)
		Service limit	21.980 mm (.8654 in)
Connecting rod/piston pin clearance (radial play)		Service limit	0.080 mm (.0031 in)

LUBRICATION SYSTEM	
Type	Wet sump. Replaceable cartridge oil filter
Oil filter	BRP Rotax paper type, replaceable
Engine oil pressure (minimum)	300 kPa (44 lbf/in²) at 6000 RPM

LUBRICATION SYSTEM			
Engine oil	Capacity (oil change with filter)		2 l (2.11 qt (liq.,US))
	XPS recommended oil	General purpose	4T 5W40 Synthetic blend oil
		Cold temperature	4T 0W40 Synthetic oil
		Warm temperature	4T 10W50 Synthetic oil
	If XPS product is not available		Use a 4-stroke SAE engine oil meeting or exceeding the following lubricant industry specification:API service classification SJ, SL,SM or SN
Oil pressure regulator spring free length	New		39 mm (1.535 in)
	Service limit		37 mm (1.457 in)
Clearance of inner and outer oil pump rotor	Service limit		0.25 mm (.0098 in)
Oil pump axial clearance	Service limit		0.20 mm (.0079 in)

TRANSMISSION		
Type		CVT (Continuously Variable Transmission)
Engagement RPM		1750 ± 100 RPM
Drive belt width	Service limit	34.8 mm (1.37 in)
Governor cup round roller outer diameter	New	13.80 to 14.00 mm (.543 to .551 in)
	Service limit	13.20 mm (.52 in)
Governor cup hexagonal roller - flat spot width	Service limit	8.50 mm (.335 in)
Governor cup roller inner diameter	New	8.025 to 8.175 mm (.3159 to .3219 in)
	Service limit	9.000 mm (.3543 in)

TRANSMISSION		
Centrifugal lever pivot bolt diameter	New	6.063 to 6.091 mm (.2387 to .2398 in)
	Service limit	6.000 mm (.2362 in)
Centrifugal lever bore diameter	New	6.000 to 6.120 mm (.236 to .241 in)
	Service limit	6.200 mm (.244 in)
Drive pulley sliding half centrifugal lever pivot bolt bore diameter	New	6.113 to 6.171 mm (.241 to .243 in)
	Service limit	6.300 mm (.248 in)
Drive pulley sliding half large bushing	New	46.950 to 47.130 mm (1.848 to 1.856 in)
	Service limit	47.160 mm (1.857 in)
Drive pulley sliding half small bushing	New	32.010 to 32.135 mm (1.26 to 1.265 in)
	Service limit	32.200 mm (1.268 in)
Driven pulley inner half bushing	New	41.278 to 41.363 mm (1.6251 to 1.6285 in)
	Service limit	41.420 mm (1.6307 in)
Cam bushing inner diameter	New	41.278 to 41.363 mm (1.6251 to 1.6285 in)
	Service limit	41.420 mm (1.6307 in)

TRANSMISSION			
Driven pulley roller	Inner diameter	New	8.20 to 8.35 mm (.323 to .329 in)
		Service limit	8.50 mm (.335 in)
	Outer diameter	New	21.80 to 22.20 mm (.858 to .874 in)
		Service limit	21.50 mm (.846 in)
	Thickness	New	15.10 to 15.50 mm (.594 to .61 in)
		Service limit	14.75 mm (.581 in)

GEARBOX		
Type		Dual range (HI-LO) with park, neutral and reverse
Gear ratios	Angle drive sub-transmission	20/21 = 0.952
	Intermediate 1	48/27 = 1.778
	Intermediate 2	47/28 = 1.679
	High	45/43 = 1.047
	Low	65/25=2,6
	Reverse	49/21 = 2.333
	Rear differential	48/14 = 3.429
Overall gear ratios	High	10.70
	Low	26.60
	Reverse	23,88
Gearbox oil	Capacity	1.25 l (42.27 fl oz (US))
	XPS recommended oil	XPS 75W140 synthetic gear oil
	If XPS product is not available	75W140 API GL-5 synthetic gearbox oil
Coupling sleeve groove width	New	5.25 to 5.35 mm (.207 to .211 in)
	Service limit	5.50 mm (.217 in)

GEARBOX			
Coupling fork claw thickness		New	4.95 to 5.05 mm (.195 to .199 in)
		Service limit	4.80 mm (.189 in)
Shift fork claw thickness (high, low and reverse gear shift fork)		New	5.92 to 6.00 mm (.233 to .236 in)
		Service limit	5.80 mm (.228 in)
Width of shift fork engagement groove		New	6.10 to 6.25 mm (.24 to .246 in)
		Service limit	6.30 mm (.248 in)
Countershaft	MAG side	New	19.977 to 19.990 mm (.7865 to .787 in)
		Service limit	19.973 mm (.7863 in)
	CVT side	New	24.977 to 24.990 mm (.9833 to .9839 in)
		Service limit	24.970 mm (.9831 in)
Main shaft	Bearing journal MAG/CVT side	New	16.980 to 16.991 mm (.6685 to .6689 in)
		Service limit	16.976 mm (.6683 in)

ELECTRICAL SYSTEM		
Magneto generator output		650 W @ 6000 RPM
Ignition system type		IDI (Inductive Discharge Ignition)
Ignition timing		Not adjustable
Spark plug	Quantity	2
	Make and type	NGK LMAR8C-9
	Gap	0.8 to 0.9 mm (.031 to .035 in)
Engine RPM limiter setting	Forward	8000 RPM
	Reverse	20 to 25 km/h (12 to 16 MPH) (8000 RPM with Override)

FUEL SYSTEM	
Fuel delivery	Electronic Fuel Injection (EFI) with iTC (Intelligent Throttle Control), 1 injector per cylinder
Throttle body	54 mm with ETA
Idle speed	1250 RPM ± 50 (not adjustable)
High idle	1500 ± 50 RPM (not adjustable)

can-am

SSV MAVERICK, COMMANDER & DEFENDER MY22 – Technical Presentation

CLUB BRP 2022

MAVERICK SPORT/TRAIL

Package

Exhaust

Body

Cab Interior

Electrical

Suspension

Overall Impact on Systems

*excluding mono engine

DPS

(* 700 models without doors)

System	Change Level
Body	Low
Cab	Low
Exhaust	Low
Electrical	Low
Engine	Low
Intake	Low
Suspension	Low
Cargo	None
Brake	None
Cooling	None
Decal	None
Drivetrain	None
Frame	None
Fuel	None
Seat	None
Steering	None

Change	Models
New Models	Motor 700 available on Trail Base and DPS
Discontinued	Motor 800

Muffler for 1000R

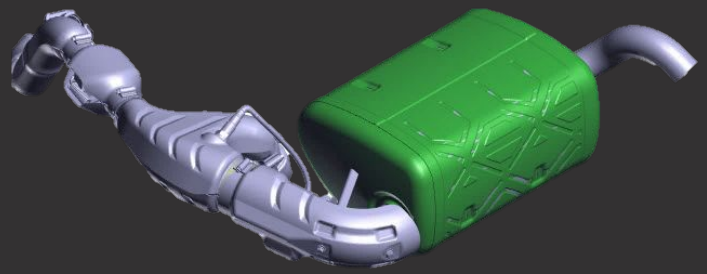

Muffler for 1000

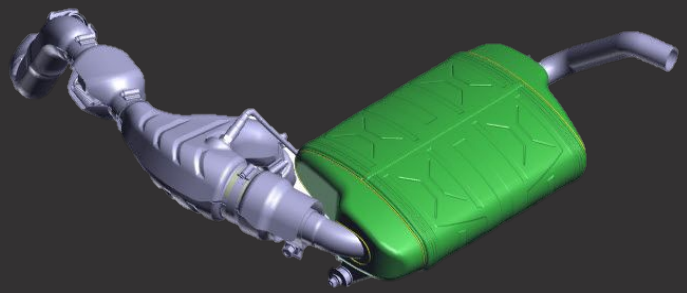

Change	Description	Retrofit
New Muffler on Maverick 1000R	Muffler Commander MY21 adapted on Maverick Sport 1000R Better sound quality, muffler oversize and double wall with wool in-between for thermal isolation and vibration reduction.	Yes as a kit
New Muffler on Maverick 1000	Muffler Defender MY21 adapted on Maverick Trail and Sport 1000	No

Package

Exhaust

Body

Cab Interior

Electrical

Suspension

2021 Heat Shield

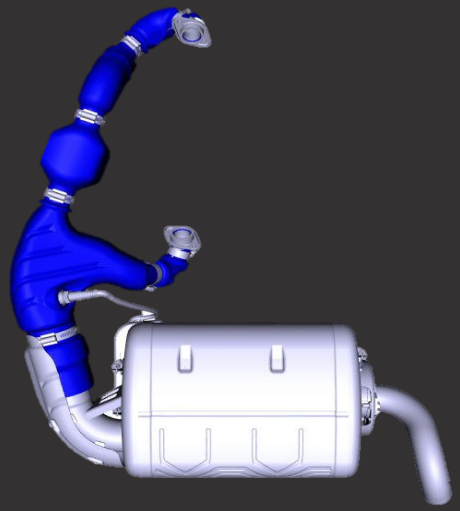

2022 Heat Shield

Change	Description	Retrofit
New Multilayer Heat Shield for 1000 and 1000R	New multilayer heat shield, was previously in stainless steel. This will help to reduce the noise from the exhaust.	Yes

Package

Exhaust

Body

Cab Interior

Electrical

Suspension

2021

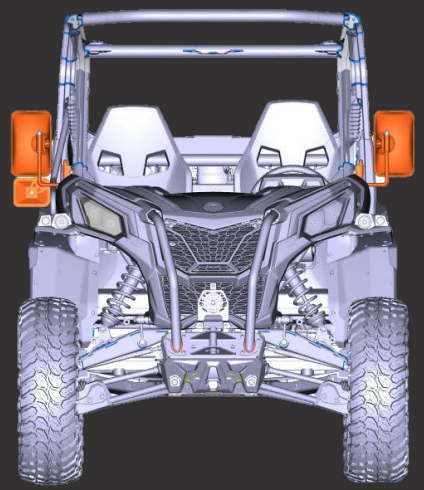

2022

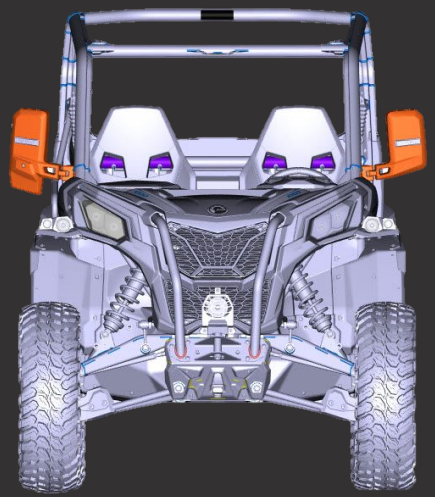

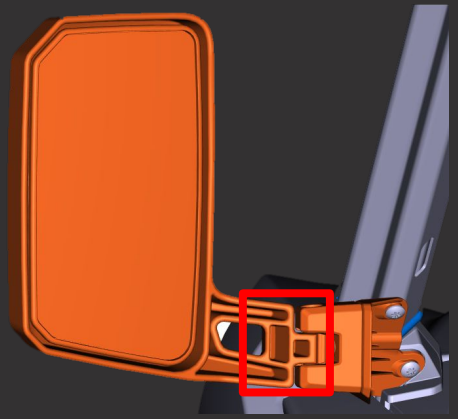

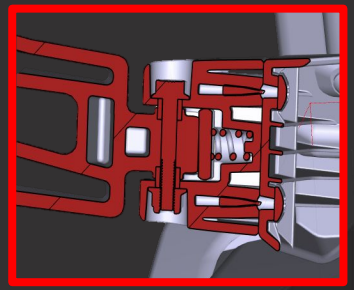

Change	Description	Retrofit
New Mirrors T-Cat	Better design, more robust	Yes as Kit

MY21 and prior (4 positions)

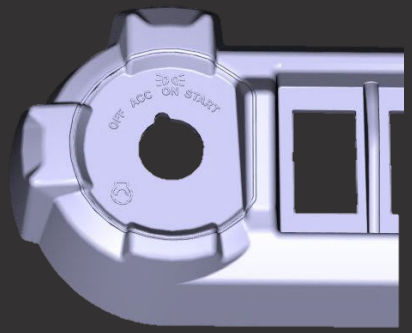

MY22 (3 positions)

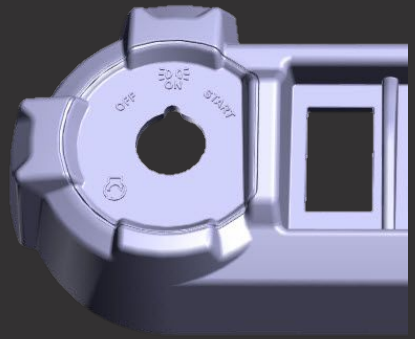

Change	Description	Retrofit
New Key Support	Better sealing, 3 positions switch OFF/ON/START	No

Package

Exhaust

Body

Cab Interior

Electrical

Suspension

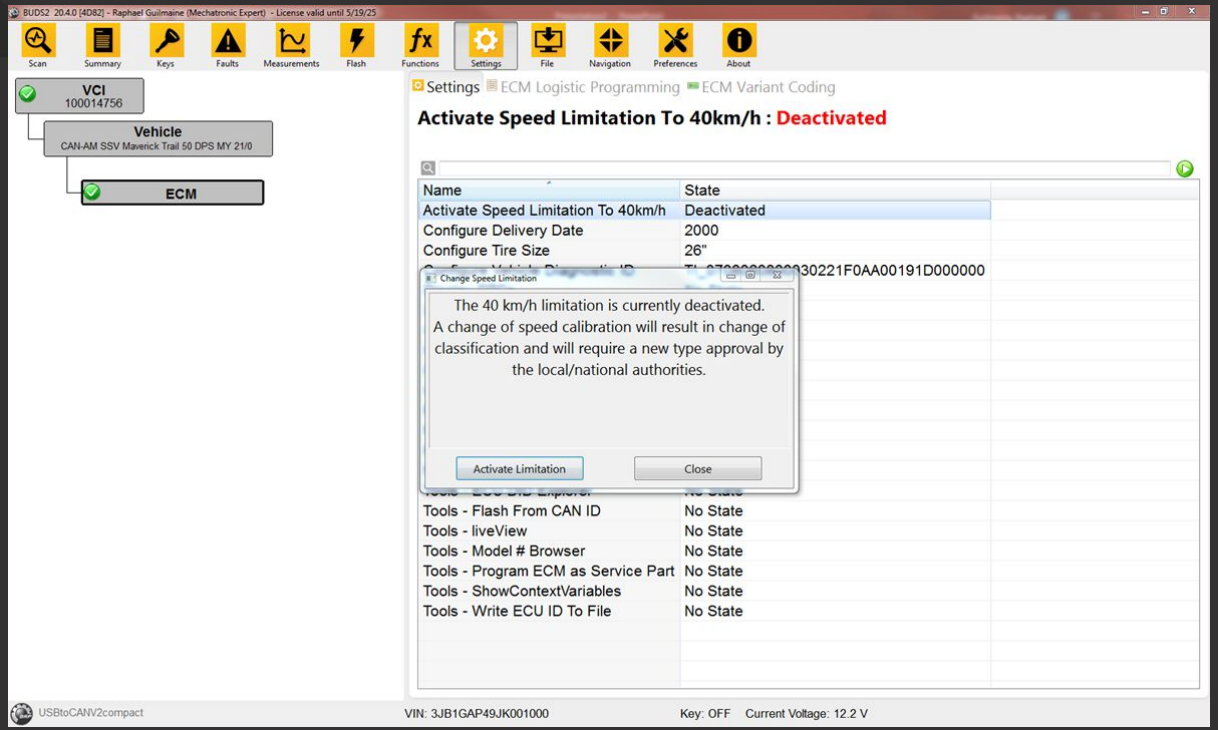

Change	Description	Retrofit
File T1a for Scandinavia	On Defender, Maverick Trail possibility to limit vehicle speed at 40 Km/h to change its certification. Activation of the limitation is done within the BUDS2 software Available on Defender with HD7, HD9 and HD10 engines, Maverick Trail with 700 engine	No

Package

Exhaust

Body

Cab Interior

Electrical

Suspension

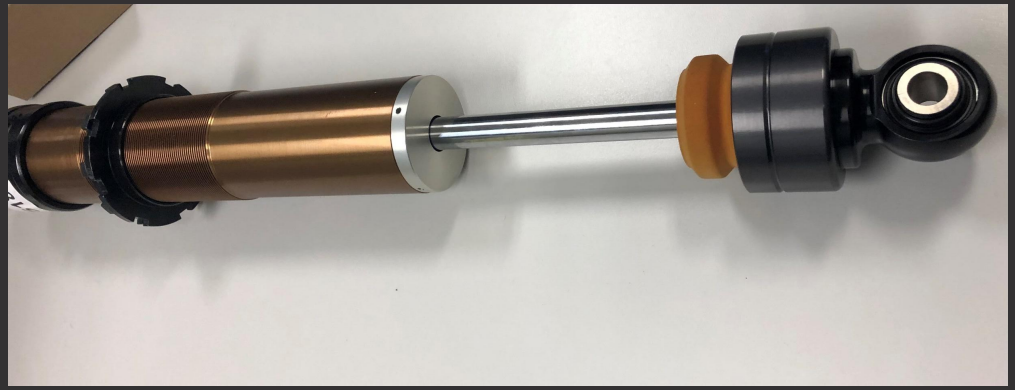

Change	Description	Retrofit
SHOWA Shocks	New supplier. Shocks installed on Sport Base and DPS 60” and DPS MAX models. MAX models no longer with piggyback.	Yes

COMMANDER

Package

X-MR

Body

Electrical

Crate

Overall Impact on Systems

*excluding mono engine

System	Change Level
Body	Low
Brake	Low
Cab	Low
Drivetrain	Low
Electrical	Low
Engine	Low
Intake	Low
Suspension	Low
Cargo	None
Cooling	None
Decal	None
Exhaust	None
Frame	None
Fuel	None
Seat	None
Steering	None

Package

X-MR

Body

Crate

Change	Description
New Tires	30 x 9/11-14 XPS Swamp Force
New Mudguards	Mudguard and extension specific to the X-MR package
New HD bumper	New HD bumper only available on the X-MR package
Air intake	Sknorkel kit identical to Maverick Sport X-MR
Lighting	Same as Commander XT-P (LED lights signature, LED Headlights, LED tail lights)
Front differential	Smart-Lok with MUD + TRAIL modes. Same as Maverick Sport X-MR

Package

X-MR

Body

Crate

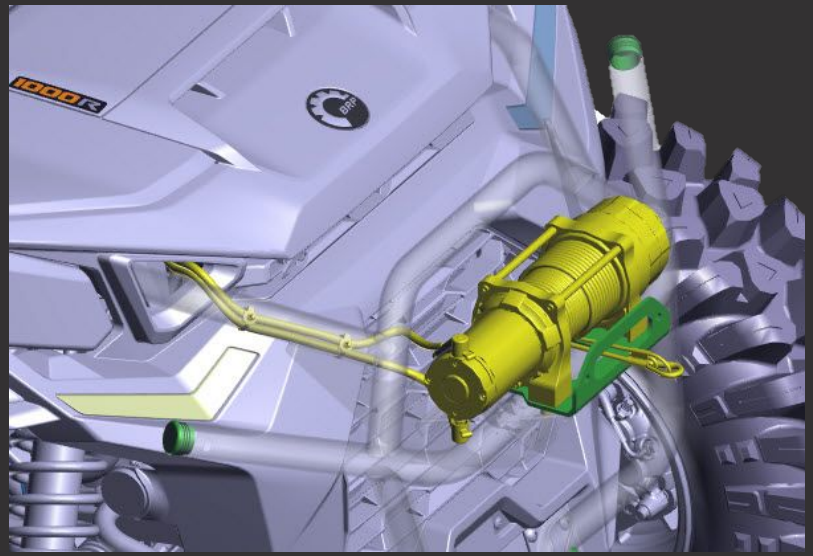

Change	Description	Retrofit
New Harness for X-MR	New harness integrated on X-MR for upper front winch	No
New on winch	Relocated Can-Am HD 4,500 lbs with synthetic rope	

Package

X-MR

Body

Crate

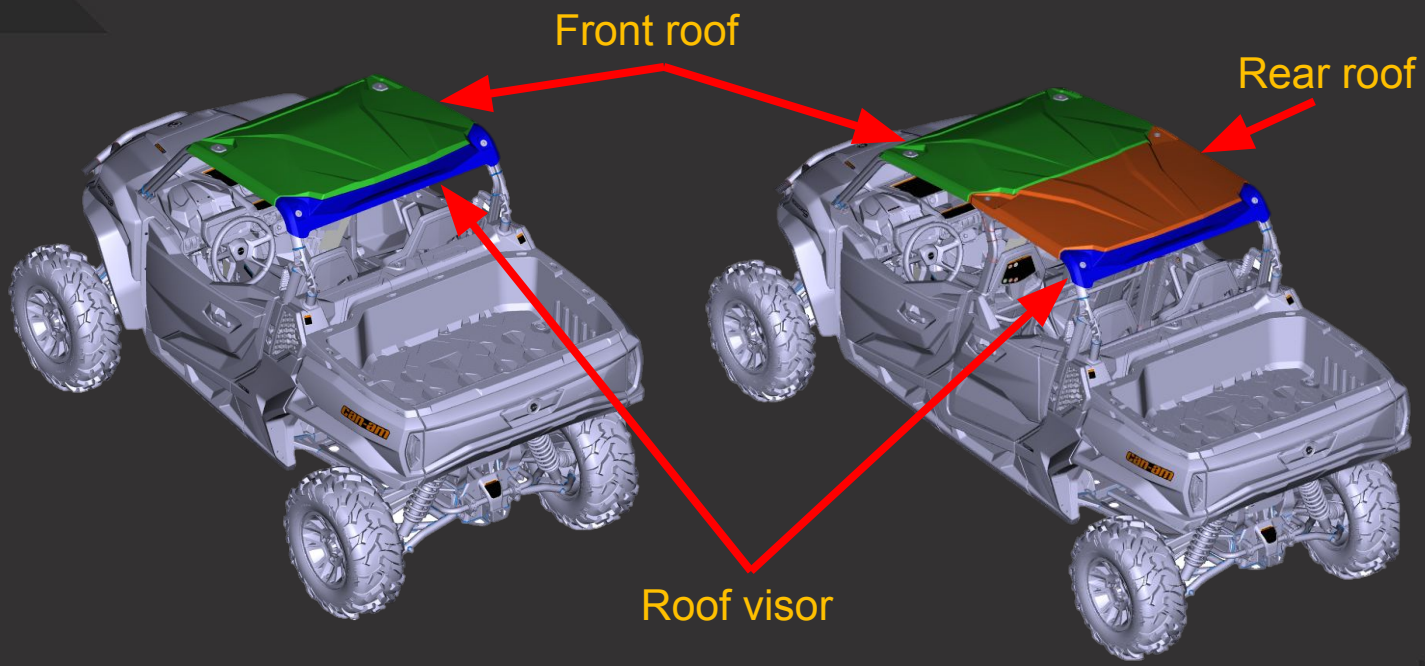

Change	Description	Retrofit
Commander XT and XTP Roof	2 pieces roof instead of single piece roof. Rigid roof up top with a visor behind.	Yes
Commander XT MAX and XTP MAX Roofs	MAX XT and XTP now have a 3 pieces roof. The front and the visor have the same part numbers as the 3-UP vehicle roof.	Yes

Package

X-MR

Body

Crate

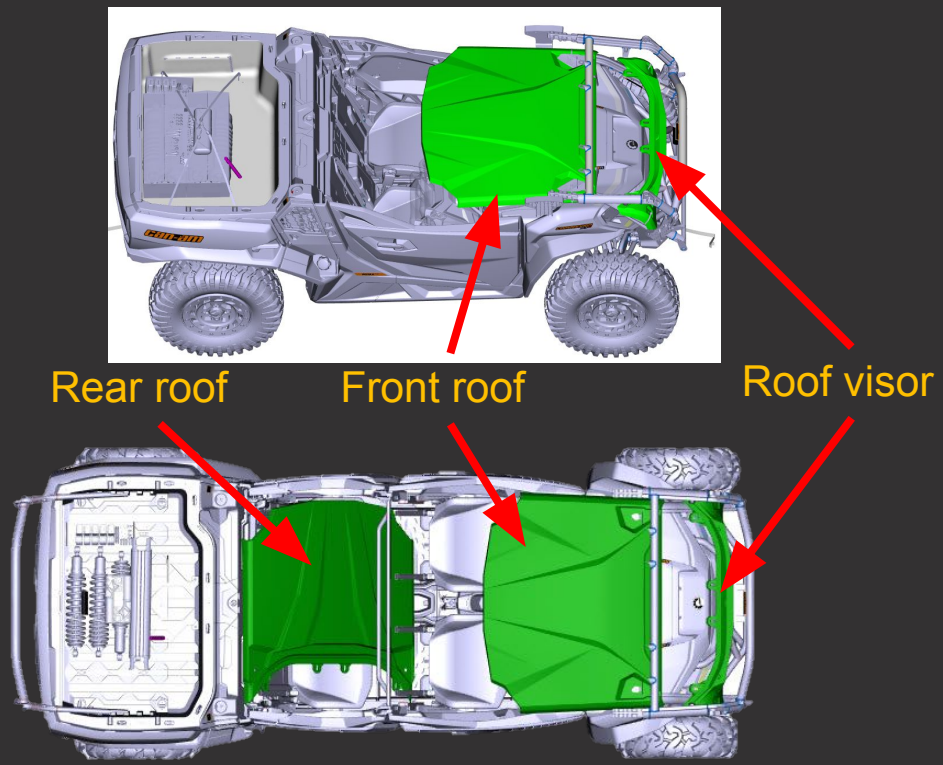

Change	Description	Retrofit
New Way to Attach the Commander Roof	Front roof and roof visor are fixed on the crating bar and the rear roof is positioned over the back seats. Already in position for roll-on and roll-off. (No more roof delivered separately from the unit)	N/A

MONO HD7 / 700 ENGINE

- **Engine**
- Air Intake
- Cooling
- Exhaust
- Electrical
- Drivetrain
- Brake

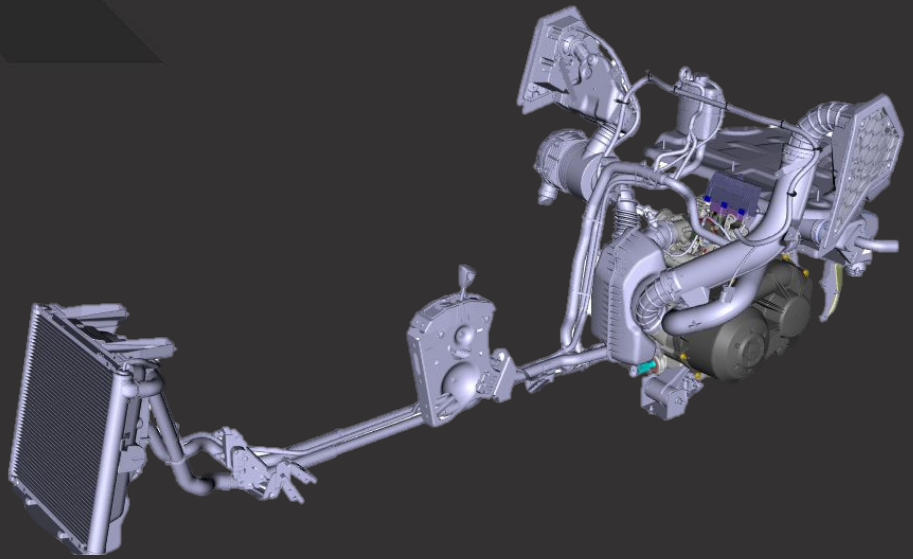

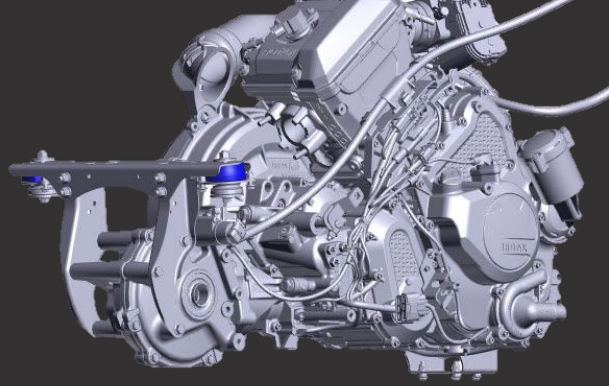

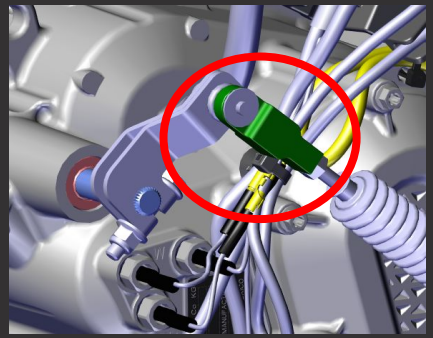

Change	Description
Mono HD7 / 700 Engine	New mono cylinder engine (52 HP) , all powerpack from intake to exhaust. Comes with new drivetrain.
Engine Mount	Different rubber duro between Defender and Maverick Trail / Commander.
Shifting Cable Adjustment	Adjustment of the shifting cable is done by unpinning its end from the shifting lever and turning it on the threaded rod.

Engine

Air Intake

Cooling

Exhaust

Electrical

Drivetrain

Brake

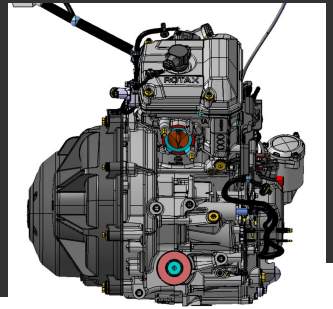

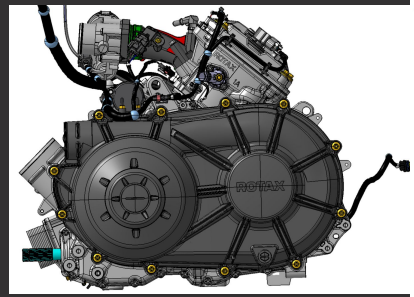

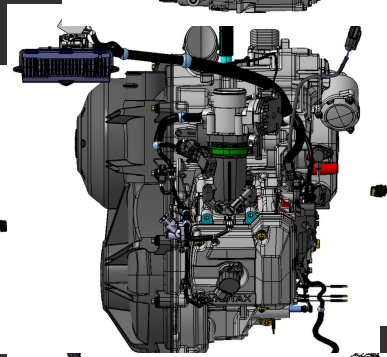

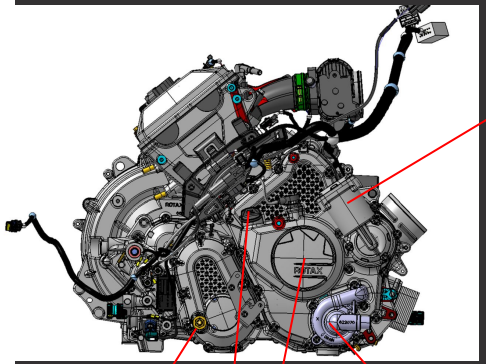

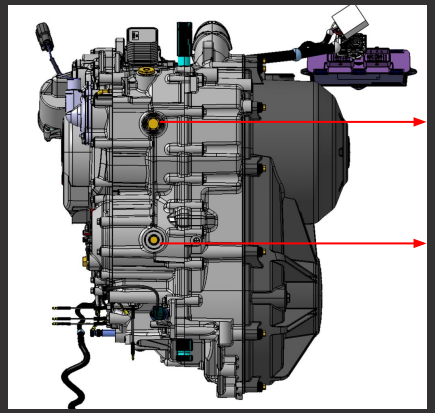

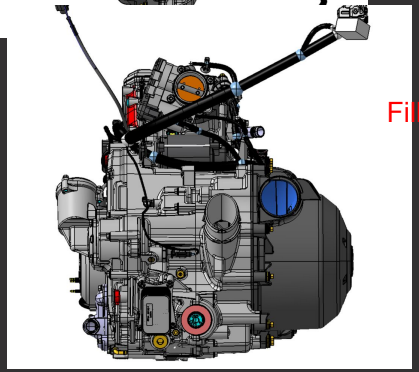

Engine

Air Intake

Cooling

Exhaust

Electrical

Drivetrain

Brake

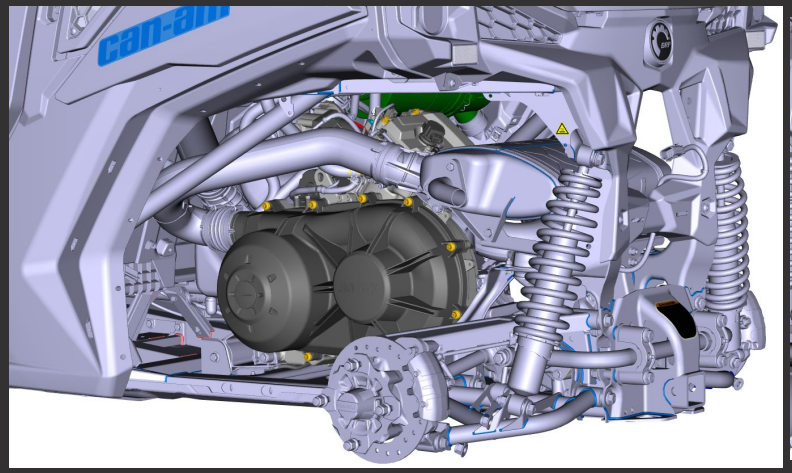

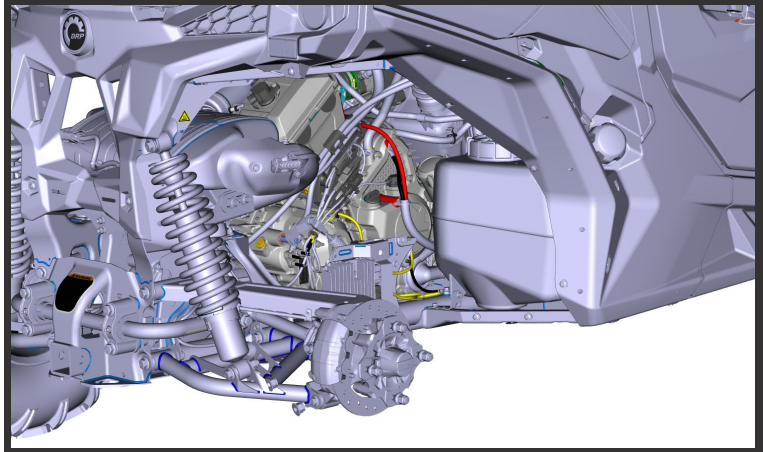

700 / HD7 Engine Specifications

- **Engine**
- Air Intake
- Cooling
- Exhaust
- Electrical
- Drivetrain
- Brake

Engine type	ROTAX 650, 4-stroke, double over head camshaft (DOHC), liquid cooled
Number of cylinder	1
Number of valves	4 valves (mechanical adjustment)
Bore	97mm (3,82in)
Stroke	88mm (3,46in)
Displacement	650.3 cm^3 (39,68in^3)
Compression ratio	10.8 : 1
Magnetor generator output	650W
Idle speed	1200±100 rpm
Fuel delivery	Electronic fuel injection (EFI), 46mm throttle body, 1 injector
Minimum octane rating	NA: 87 or higher Outside NA : 92 RON or higher

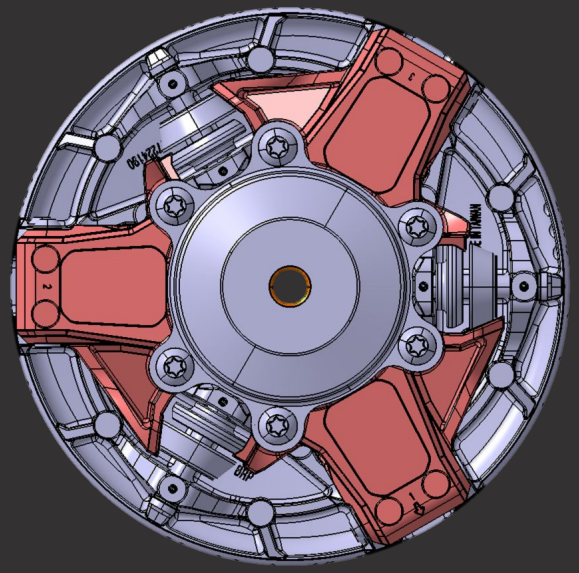

Change	Description
P-Drive for Mono Engine	CVT drive adapted to Can-Am Vehicle with self-adjusting torque transfer rollers system. Smoother and faster, more RPM sensitive upshift and backshift, stronger acceleration and improvement in reliability. Increase CVT ratio range.

Engine

Air Intake

Cooling

Exhaust

Electrical

Drivetrain

Brake

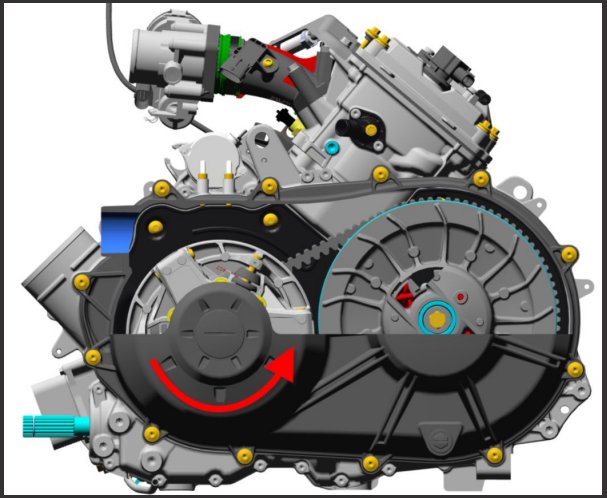

Change	Description
Power Output @ speed	38,5kW at 6750 ±200 rpm
Max Torque Output @ speed	55,5 Nm at 5750 ±200 rpm
Crankshaft rotation	Anticlockwise

Seal level calibration

Drive :

- Spring : 420638133
- Lever : 420248728(HD7 & Commander) or 420248727 (Maverick Trail)
- Rollers : 420629224
- Belt : 420280225

Driven :

- Spring : 420238176 - Orange
- Cam : 420280787 Acceleration 48˚ Engine Brake : 55˚/70˚

High altitude calibration :

Drive :

- Lever : 3x 707003077

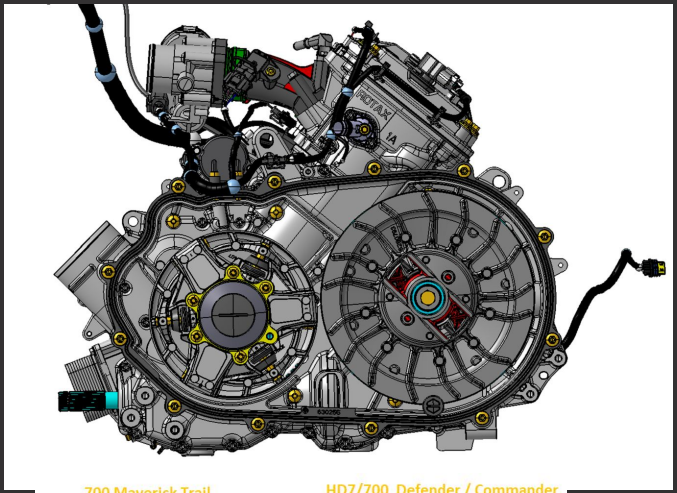

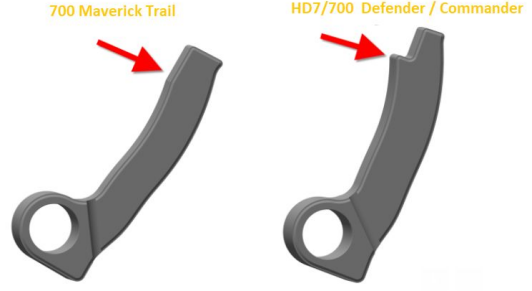

Change	Description
CVT calibration	2 different sea level calibration 1) Commander & HD7 2) Maverick Trail 1 high altitude calibration for all mono engine

- **Engine**
- Air Intake
- Cooling
- Exhaust
- Electrical
- Drivetrain
- Brake

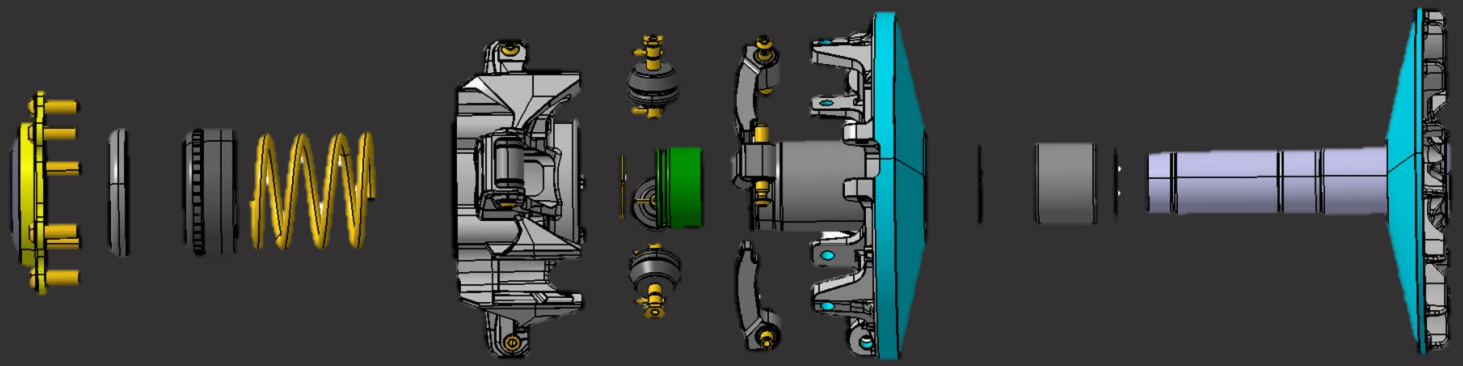

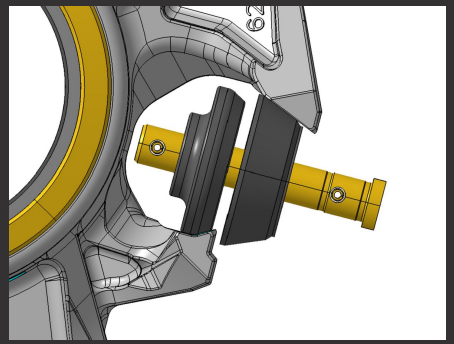

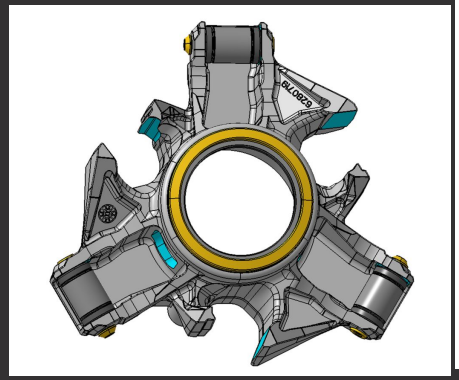

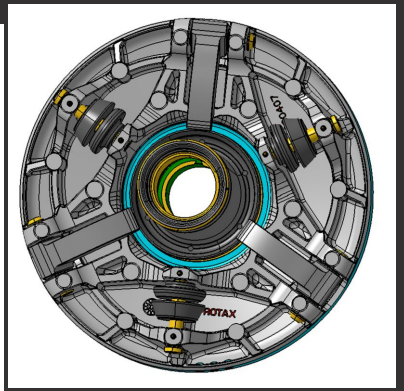

- **Engine**
- Air Intake
- Cooling
- Exhaust
- Electrical
- Drivetrain
- Brake

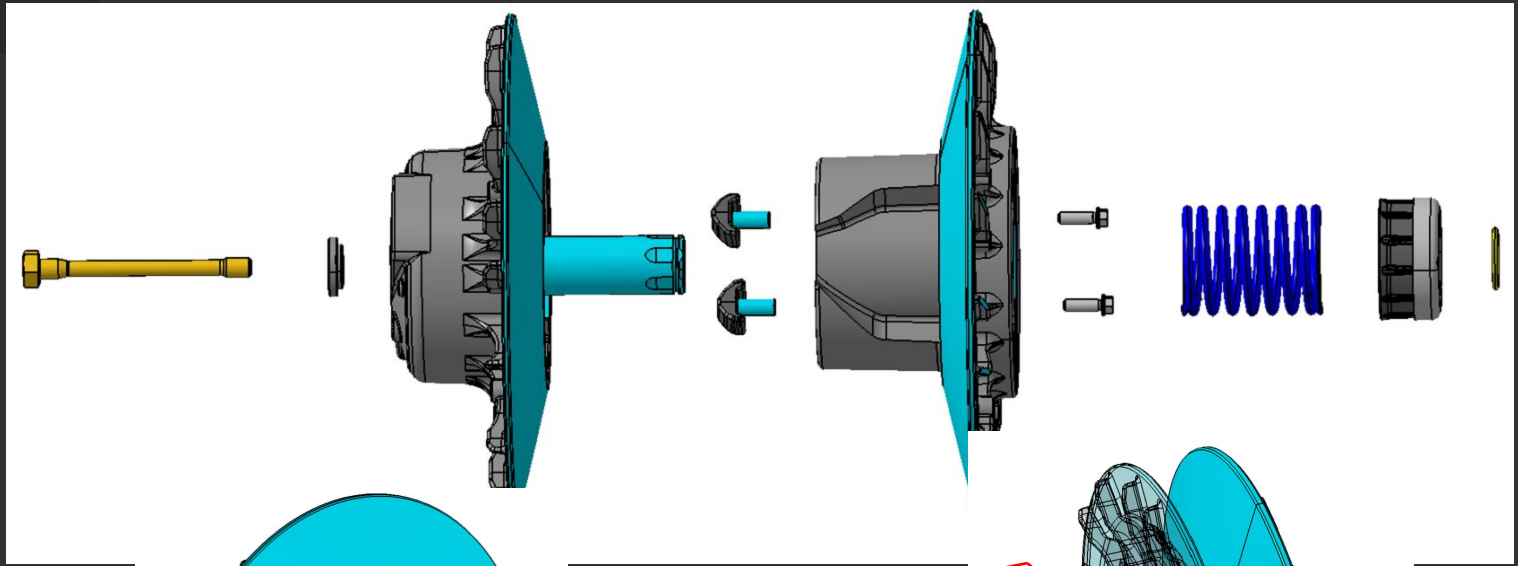

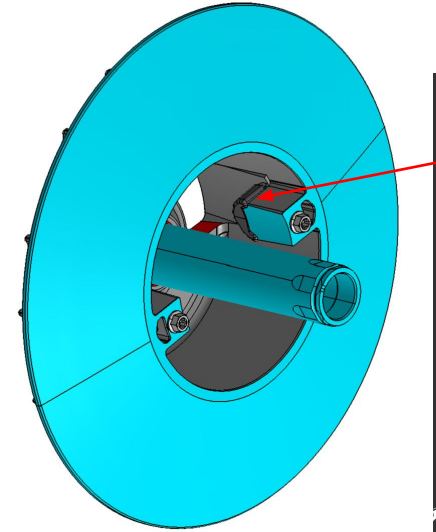

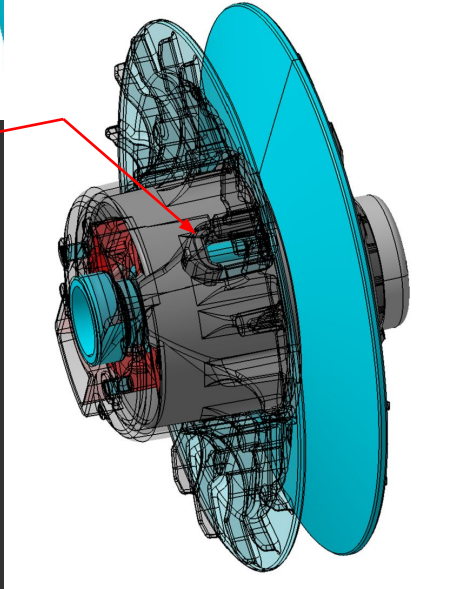

- **Engine**
- Air Intake
- Cooling
- Exhaust
- Electrical
- Drivetrain
- Brake

700

HD7

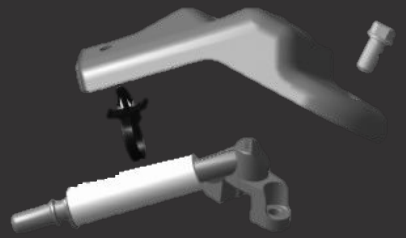

Change	Description
Fuel rail 700 vs HD7	The fuel rail is different between the 700 & the HD7

- Engine
- **Air Intake**
- Cooling
- Exhaust
- Electrical
- Drivetrain
- Brake

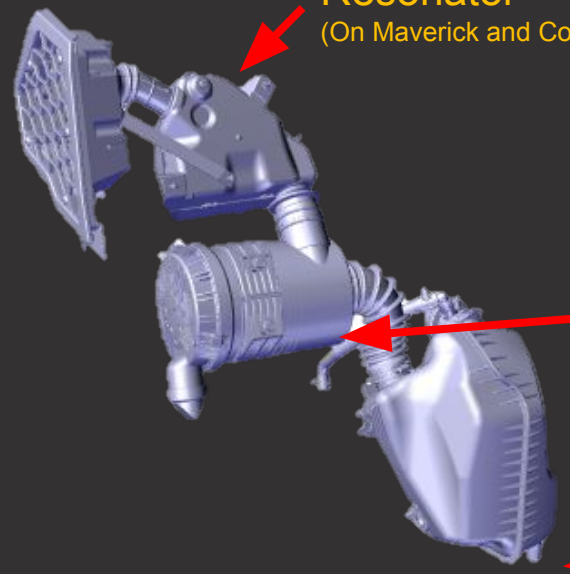

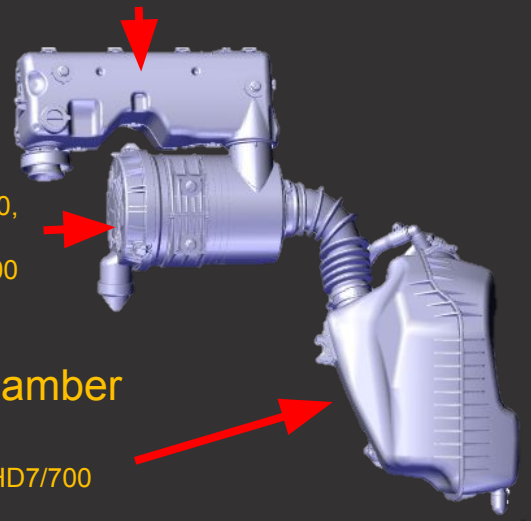

Change	Description
New Intake for 700 / HD7 Engine	Plenum installed in the vacuum part of the assembly between the throttle body and the air box that contains the air filter. Engine performance increased and less noise.

HD7

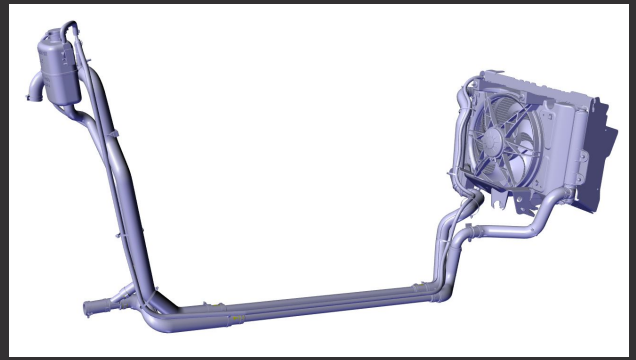

HD7

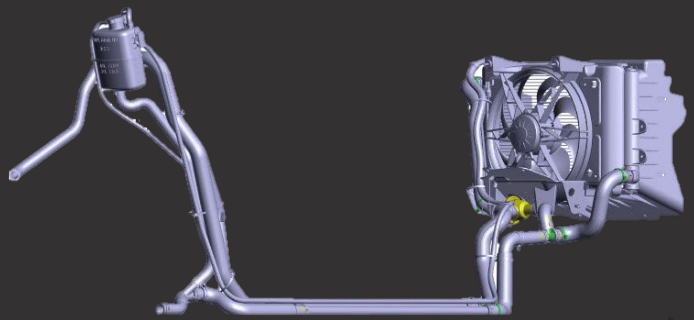

Change	Description
New 700 / HD7 Engine cooling system	New cooling hose for 700 / HD7 models.

- Engine
- Air Intake
- Cooling
- **Exhaust**
- Electrical
- Drivetrain
- Brake

North America

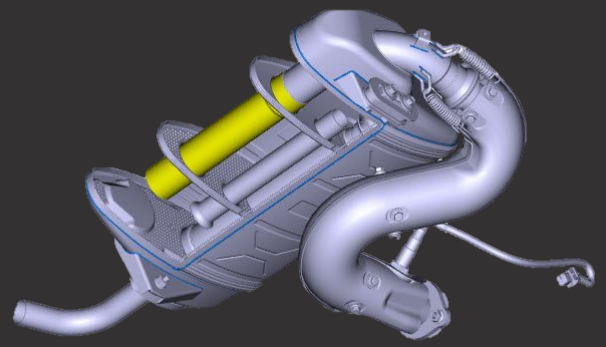

Europe

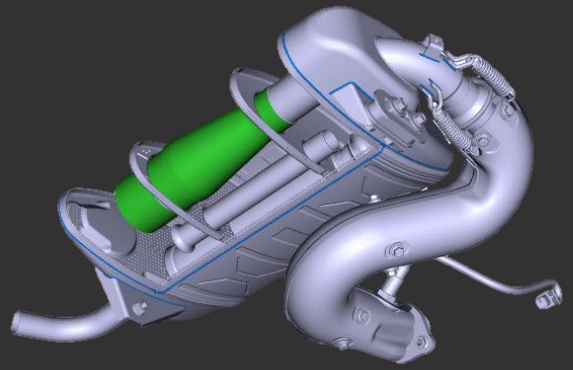

Change	Description
New Exhaust for 700 / HD7 Engine	New exhaust system for 700 / HD7 models. Without catalyst for North America and with catalyst for Europe.

Engine

Air Intake

Cooling

Exhaust

Electrical

Drivetrain

Brake

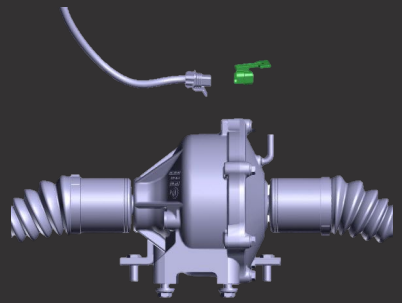

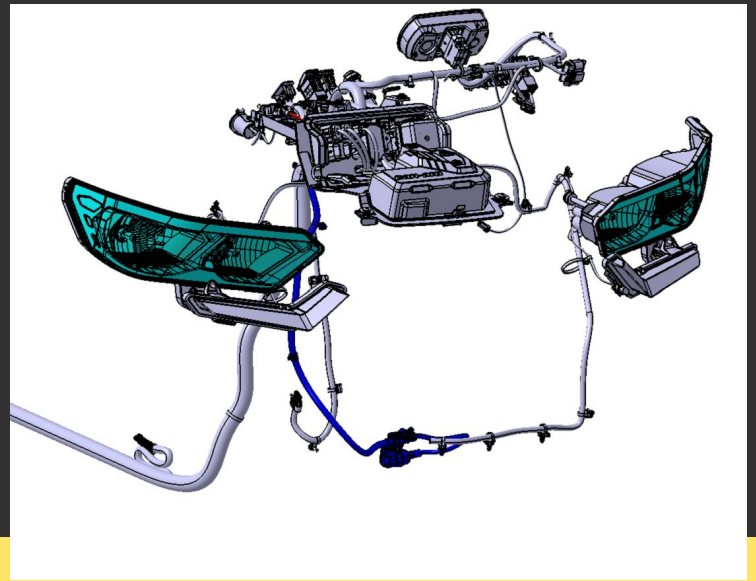

Change	Description	
Harness for Front Differential	Front main harness standardise as much as possible	No
Connector Cap for Front Differential	For packages that don’t have the mono engine currently installed. Cap is put on the unused connector. Only units with Smart lok diff or HVAC that don’t have the front harness & cap	No

HD7 Power harness (in Blue)

- Engine
- Air Intake
- Cooling
- Exhaust
- **Electrical**
- Drivetrain
- Brake

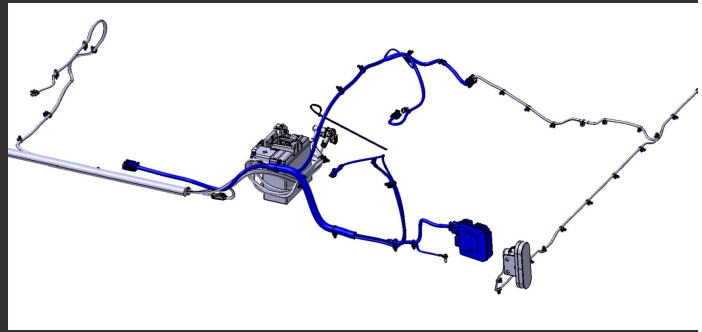

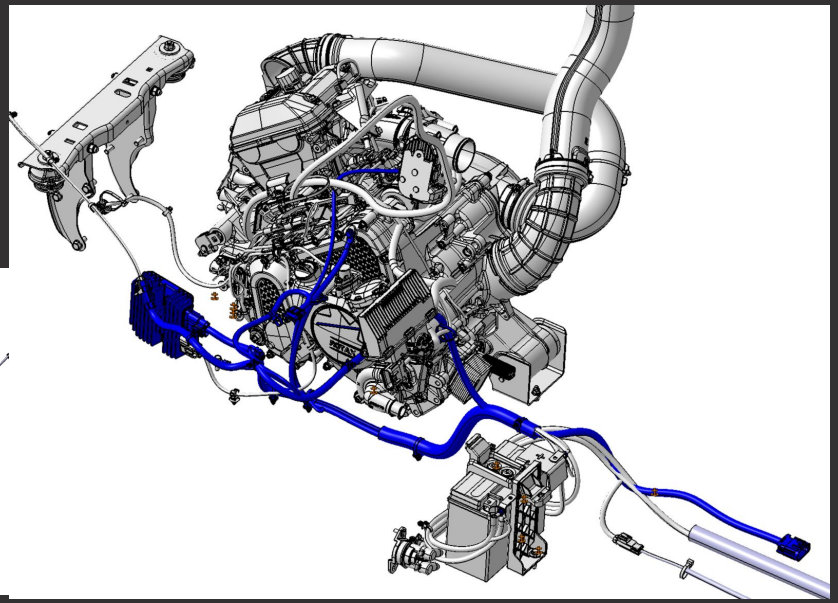

Change	Description	Retrofit
Power Harness for New Mono Engine	New power harness adapted for the HD7 engine	No

Engine harness (in Blue)

- Engine
- Air Intake
- Cooling
- Exhaust
- **Electrical**
- Drivetrain
- Brake

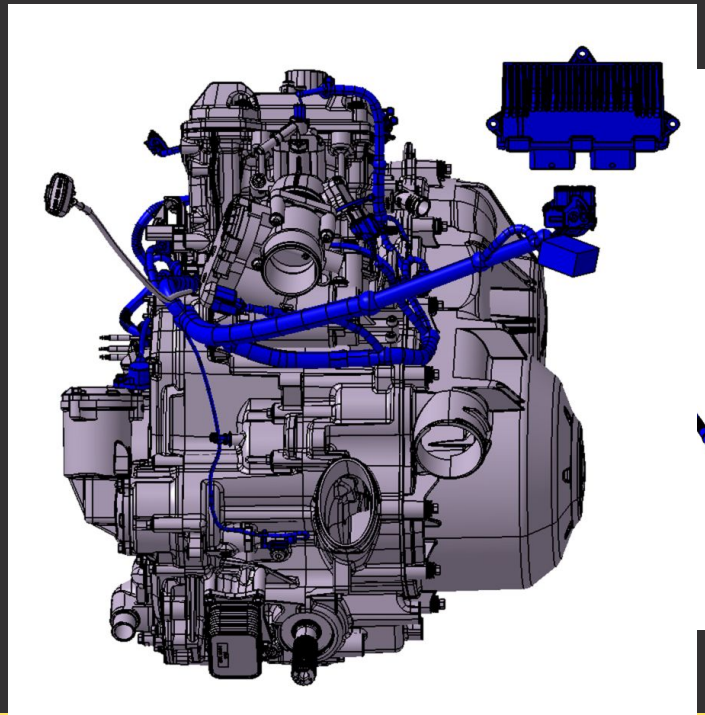

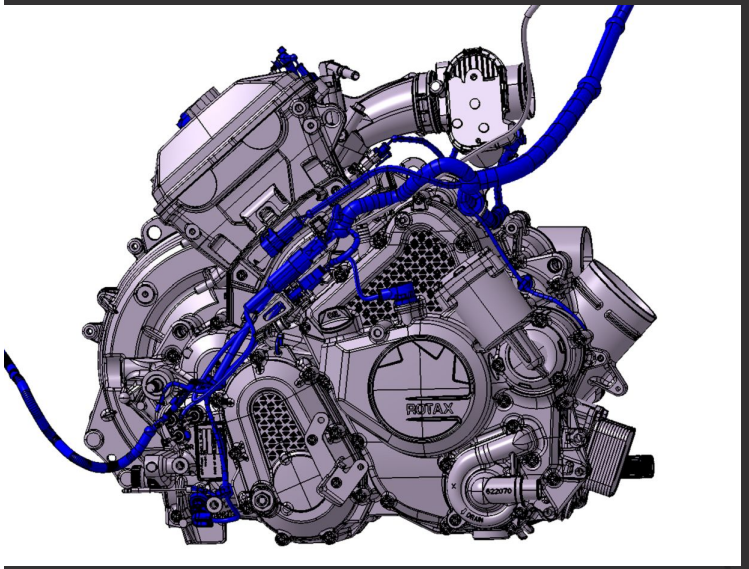

Change	Description	Retrofit
Engine Harness for New Mono Engine	New engine harness for the mono engine	No

Engine

Air Intake

Cooling

Exhaust

Electrical

Drivetrain

Brake

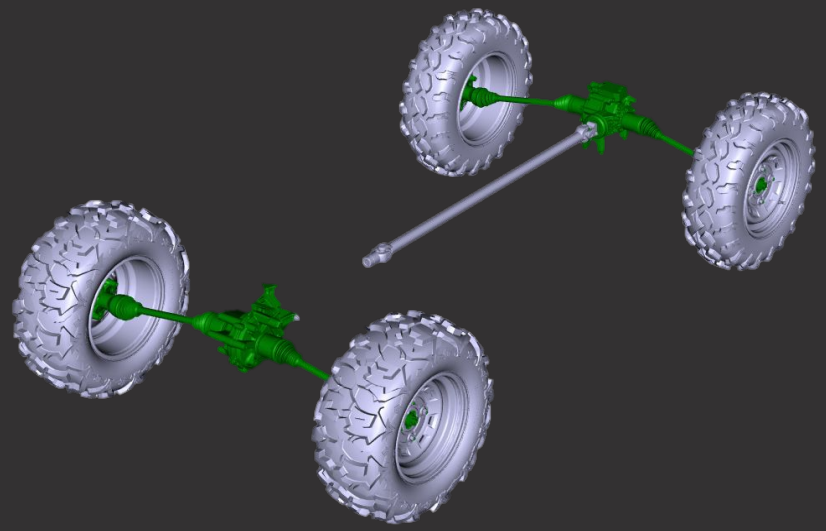

Change	Description
New rear half-shaft for HD7/700 engine	Maverick Trail and Commander have same half-shafts on V-twin and Mono engine. Same part number as previous MY. Defender has new half-shafts that fit on V-twin and Mono, as previous MY part couldn't fit on both.
New front half-shaft for new differential	For new differential on all HD7/700 models. Specific half-shafts for each models – Commander, Maverick Trail, Maverick Trail ABS and Defender

Engine

Air Intake

Cooling

Exhaust

Electrical

Drivetrain

Brake

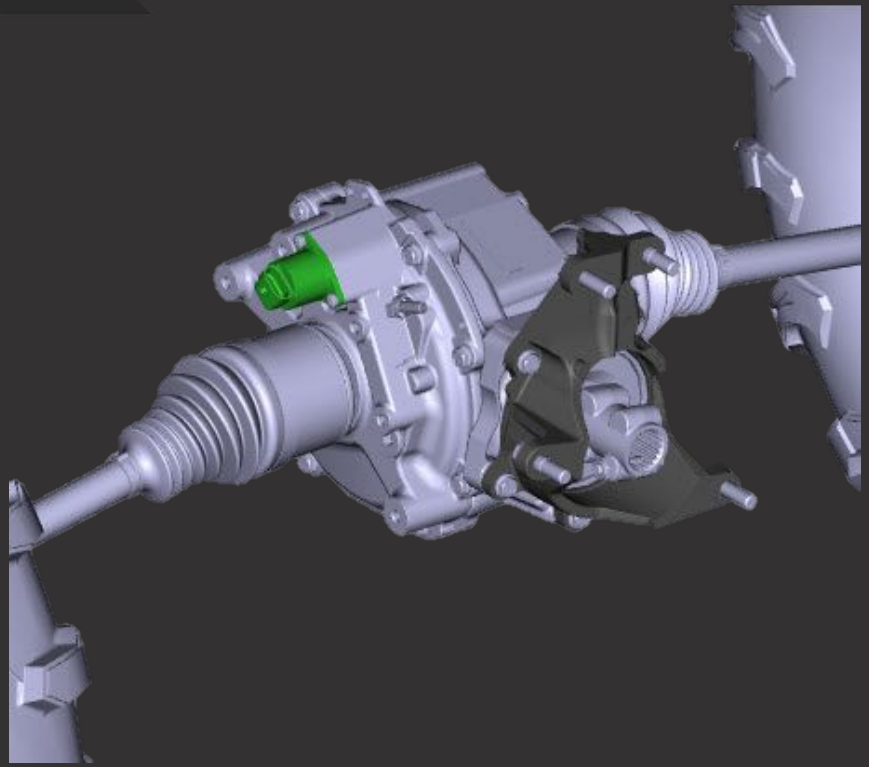

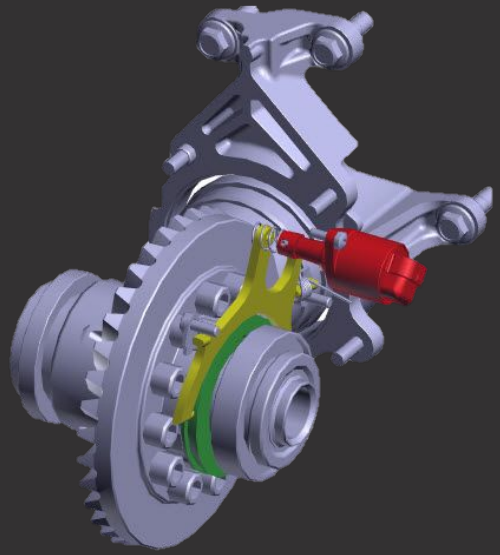

Change	Description
Rear differential integration HD7/700 engine	Spool on Maverick Trail (except ABS models) Open-lockable on Commander, Defender and Maverick Trail ABS

- Engine
- Air Intake
- Cooling
- Exhaust
- Electrical
- **Drivetrain**
- Brake

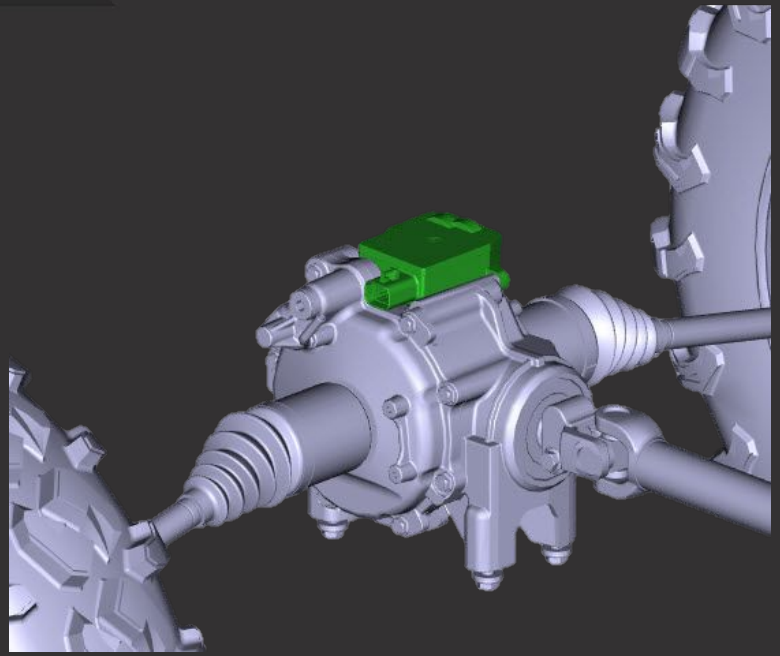

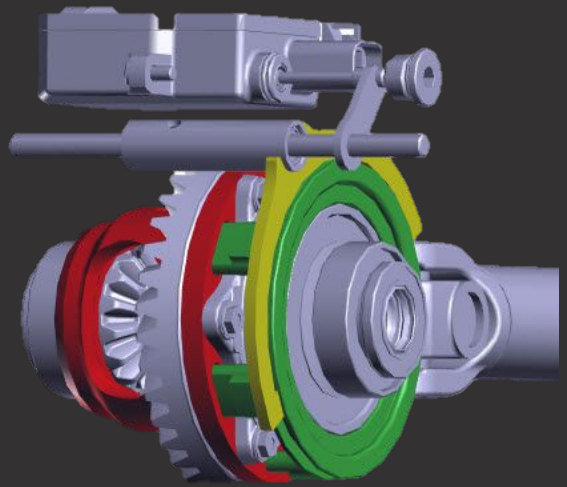

Change	Description
Front differential integration HD7/700 engine	Visco-Lock QE on Maverick Trail and Commander with DPS Visco-Lock 6-10 CIP for models without DPS Full open for ABS models

4WD clutch unit inside the differential.

Engine

Air Intake

Cooling

Exhaust

Electrical

Drivetrain

Brake

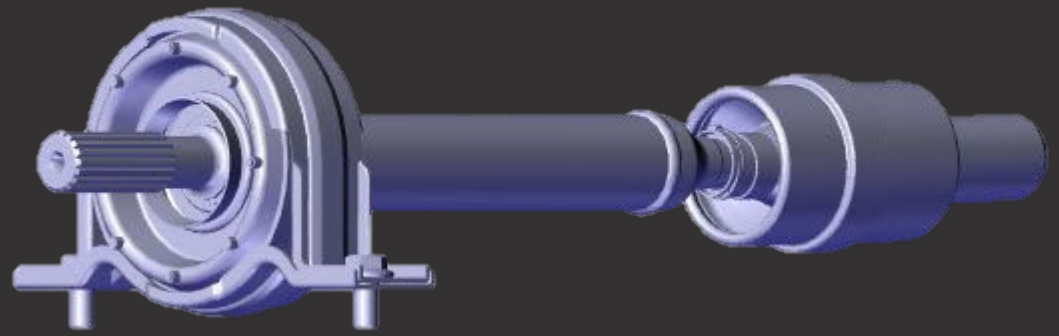

Change	Description
New Propshaft on 700 engine	Tripod instead of slip-yoke to reduce vibration on Commander and Maverick Slip-yoke on Defender - Same technology as previous models

- Engine
- Air Intake
- Cooling
- Exhaust
- Electrical
- **Drivetrain**
- Brake

Circlip

Boot that covers the tripod

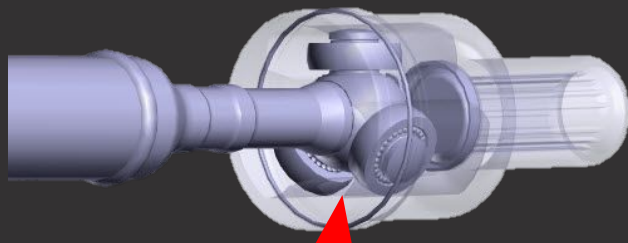

Tripod

Change	Description
Propshaft installation 700 engine	New method of installation for Commander and Maverick with circlip.

Engine

Air Intake

Cooling

Exhaust

Electrical

Drivetrain

Brake

HD5 MY21 and prior

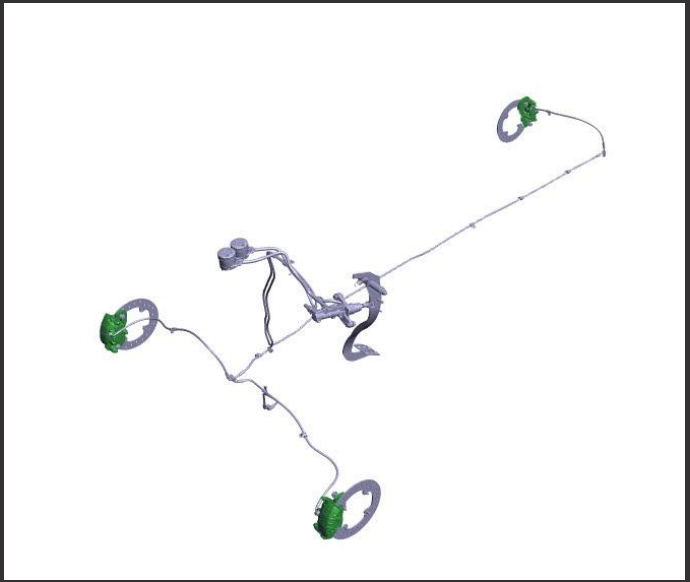

HD7 MY22

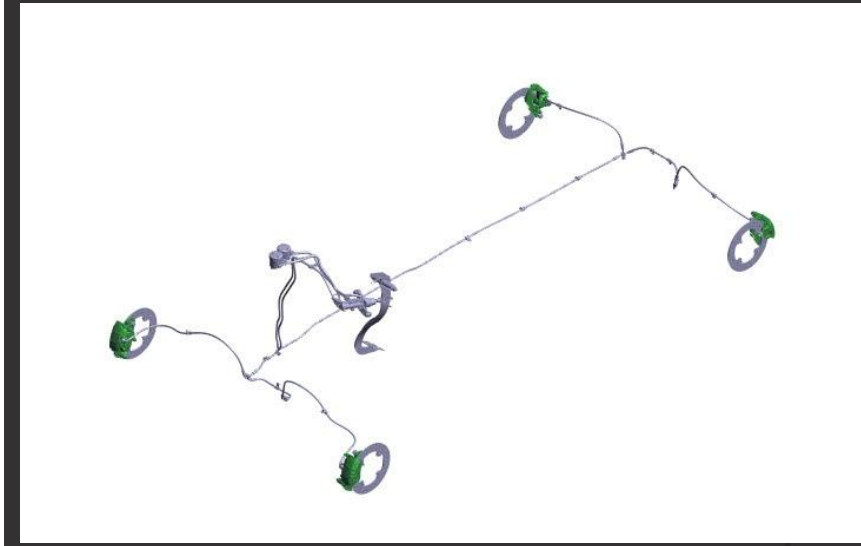

Change	Description
HD7 Comes With 4 Calipers	HD7 will have 4 calipers same as HD9 (HD7 had only 3 calipers)

Maintenance specifications (700 / HD7)

- Engine oil & Filter :
  - Capacity (oil change with filter) – 2,3 L
  - Oil type – 4T 5W40 synthetic blend oil or 4T 10W50 synthetic oil or 4T 0W40 synthetic oil
  - Filter - 420256188
- Valve Clearance:
  - Intake - 0.15mm ± 0,04mm
  - Exhaust – 0.35mm ± 0,04mm
- Gearbox oil:
  - Capacity 0,5 L
  - XPS 75W140 synthetic gear oil
- Front Differential :
  - All models: Visco-Lok & Visco-Lok QE
    - Capacity – 350ml ± 10ml
  - Oil type - 75W90 Synthetic gear oil
- Rear Differential :
  - 705402098 (Open-lockable): 500 ml ± 30ml
  - 705402097 (Spool) : 575ml± 30ml

DEFENDER

Package

Cab Enclosure

Cab Interior

Body

Electrical

Engine

Frame

Intake

Suspension

Cooling

Drivetrain

Exhaust

Fuel

Steering

Brake

Overall Impact on Systems

*excluding mono engine

System	Change Level
Cab	Medium
Body	Medium
Electrical	Medium
Engine	Medium
Frame	Medium
Intake	Medium
Suspension	Medium
Cargo	Low
Cooling	Low
Decal	Low
Drivetrain	Low
Exhaust	Low
Fuel	Low
Steering	Low
Brake	T Cat ABS
Seat	None

MY21 and prior

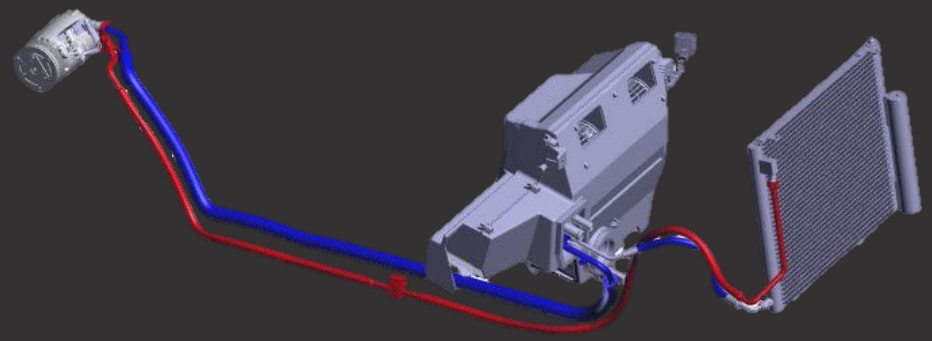

MY22

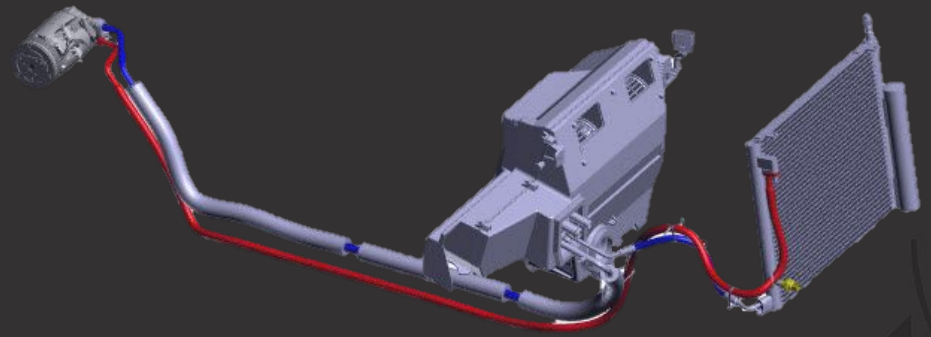

Change	Description	Retrofit
AC Hose Improvements	Full length hoses from compressor to condenser and block valve. Hose is a different part number for 3UP and MAX	No

MY21 and prior

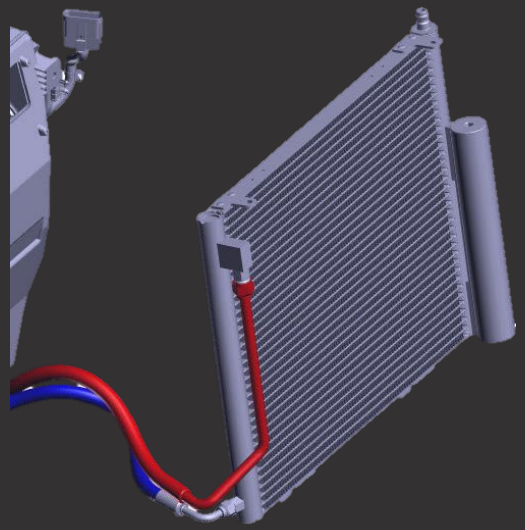

MY22

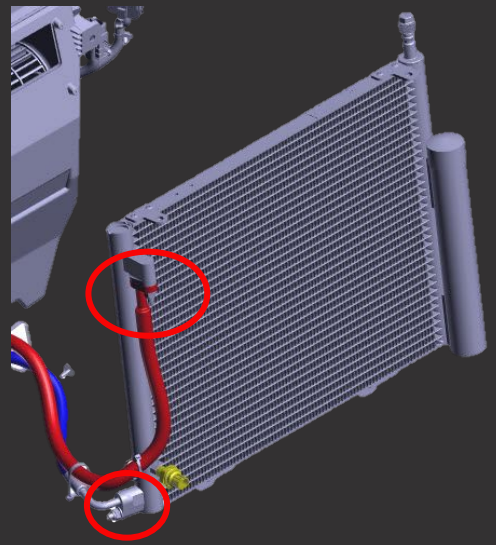

Change	Description	Retrofit
New Condenser	2 new fittings to facilitate the assembly, allow for an electric tool	No

MY21 and prior

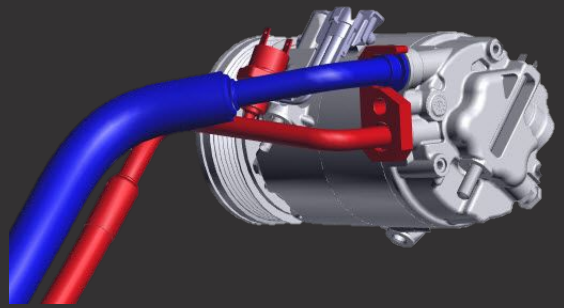

MY22

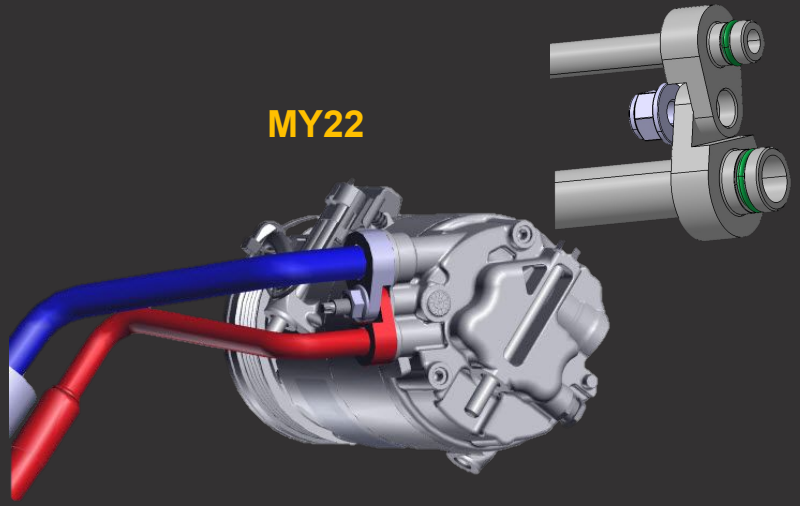

Change	Description	Retrofit
AC sealing Improvements	Seal washers replaced by O-ring for better seal, no longer tightness dependent	No
AC compressor chamfer	New chamfer to fit with the new O-Ring Design	No

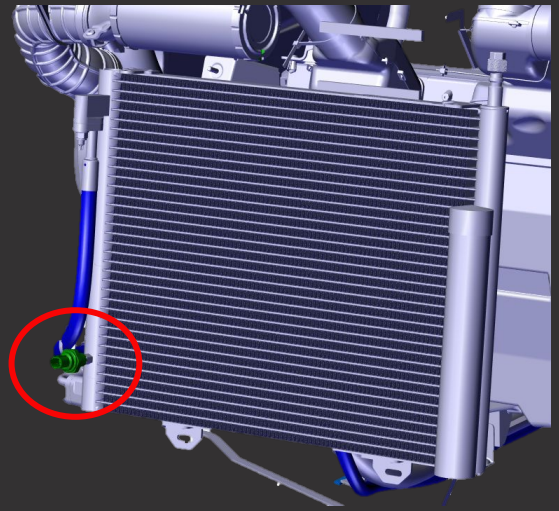

Change	Description	Retrofit
Pressure Switch Relocation	To solve issues on the field, was on the engine so a lot of vibrations, now on the condenser	No

MY21 and prior

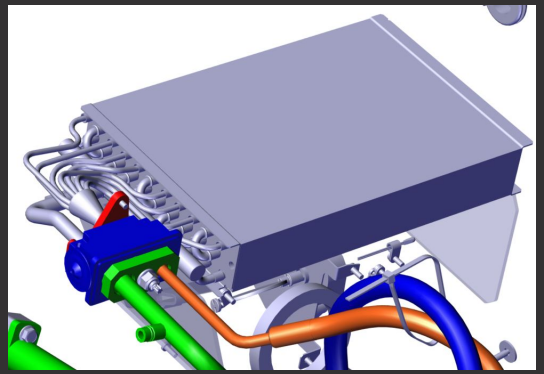

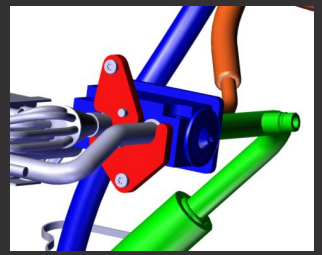

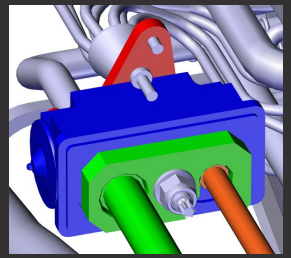

MY22

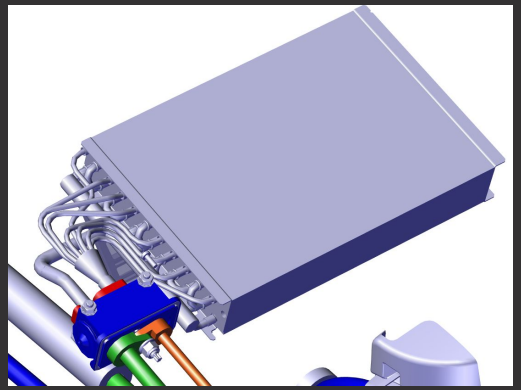

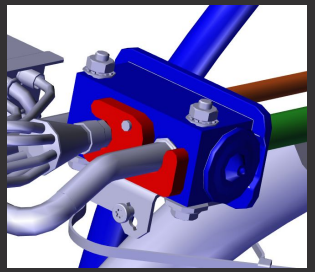

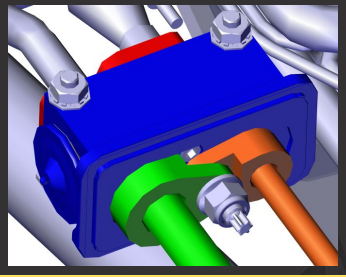

Change	Description	Retrofit
New HVAC Unit	New block valve, improved sealing and performance (cross charge type)	No

MY21 and prior

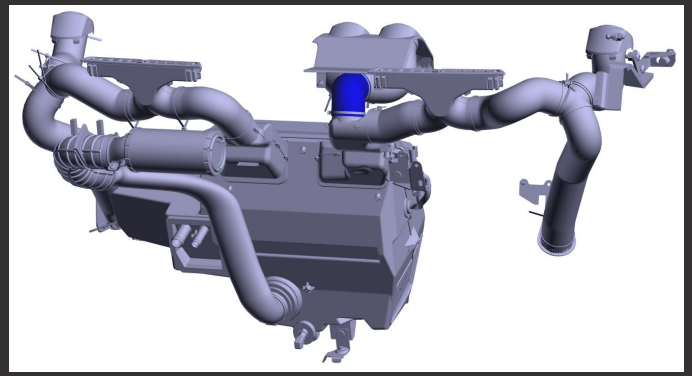

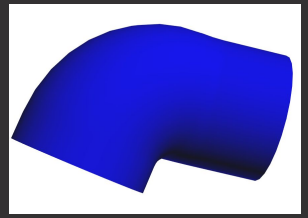

MY21 running change & MY22

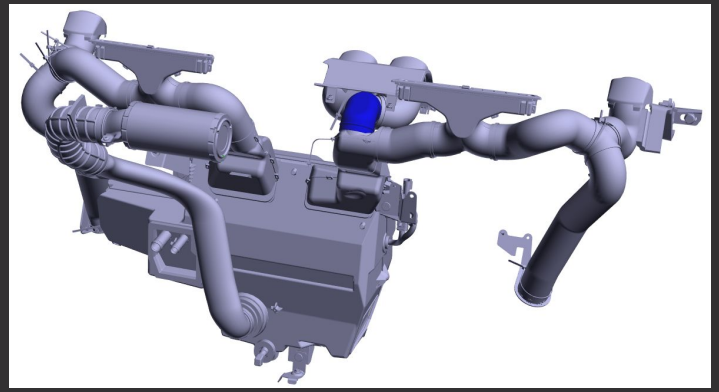

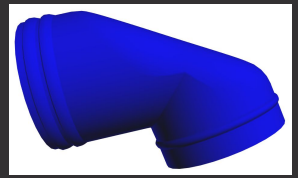

Change	Description	Retrofit
New HVAC Manifold	New air manifold to improve the airflow from air vent. Material changed from a flexible PVC to a plastic injection part.	Yes

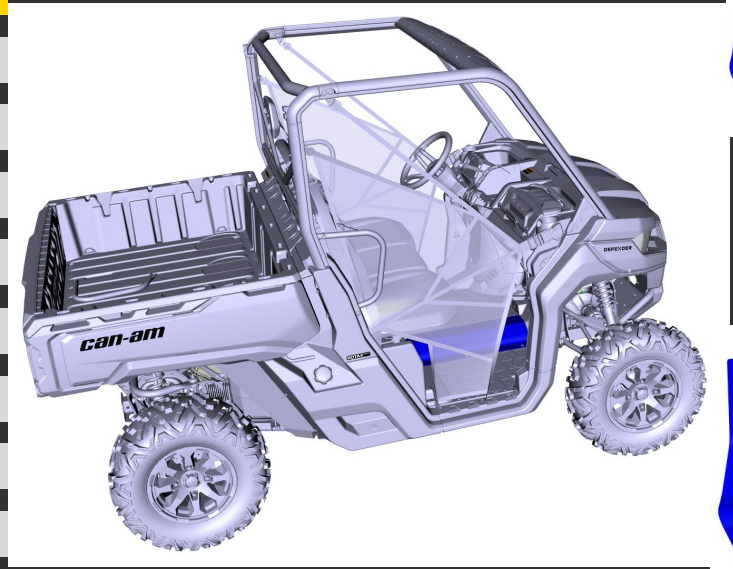

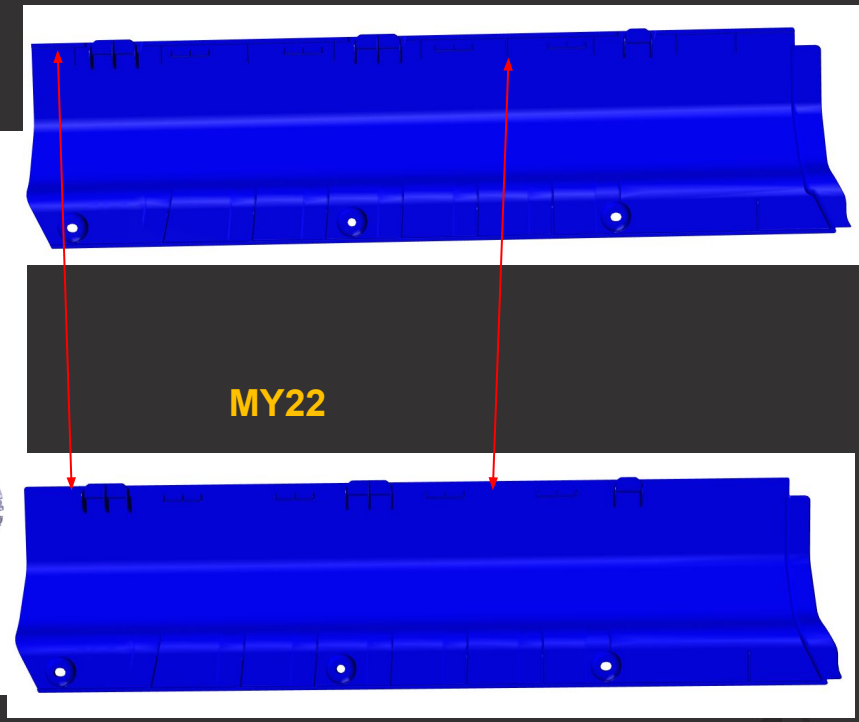

Change	Description	Retrofit
Floor panel improvement	Ribs were removed from the mold to improvement fitment	Yes

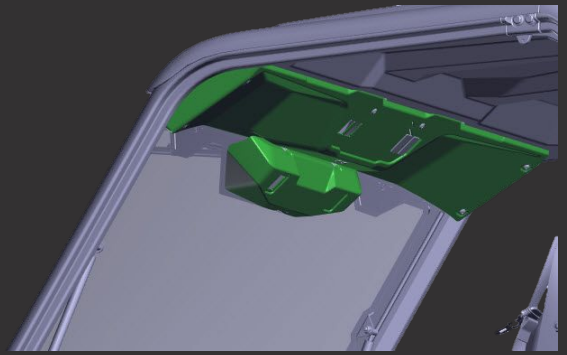

MY21 and prior

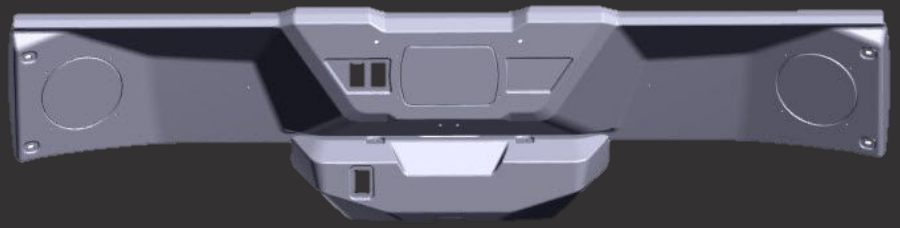

MY22

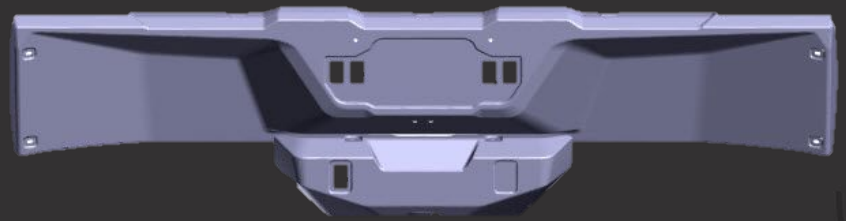

Change	Description	Retrofit
Process Change	wiper motor cover and radio support got their manufacturing process changed from thermoforming to plastic injection New part numbers.	Yes

MY21

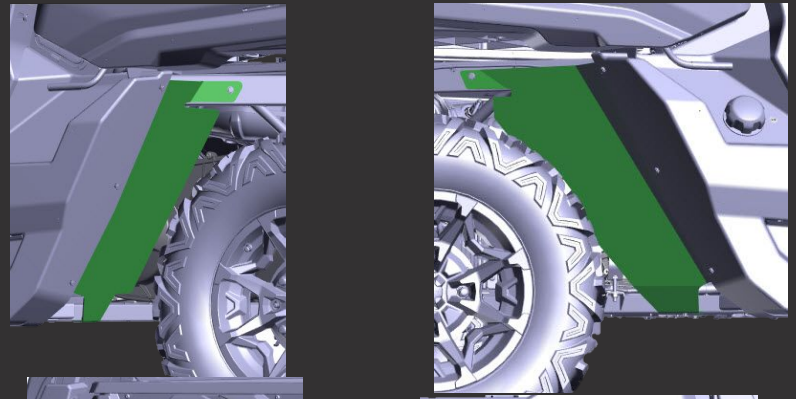

MY22

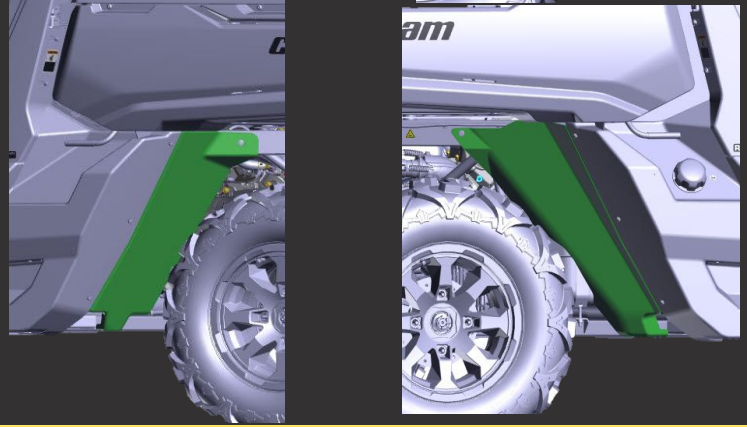

Change	Description	Retrofit
Process Change – Rear deflectors	Left and right rear deflectors got their manufacturing process changed from thermoforming to plastic injection. New part numbers.	Yes

MY21 and prior

MY22

Change	Description	Retrofit
New Mirrors T-Cat	Better design, less expensive, more robust	Yes as Kit

MY21 and prior

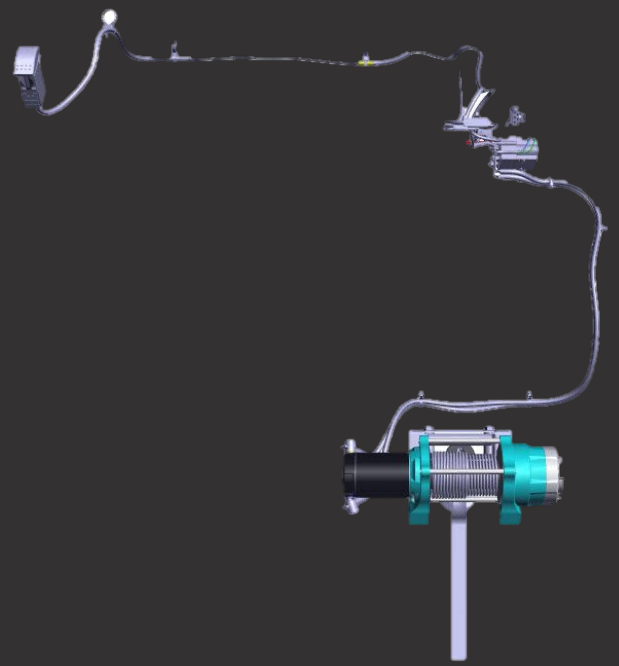

MY22

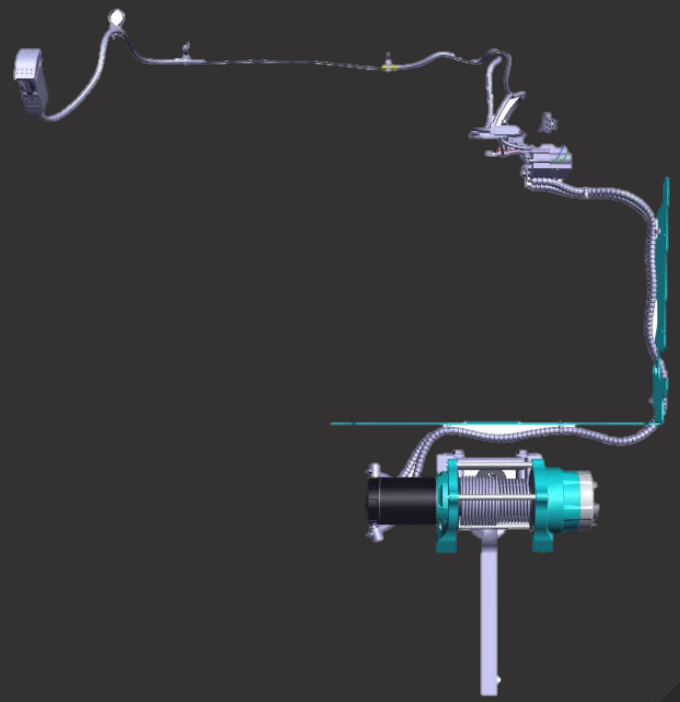

Change	Description	Retrofit
New Electrical Harness for Winch	New rooting, now compatible for all packages even for those with X-MR deflector	Yes

HD9

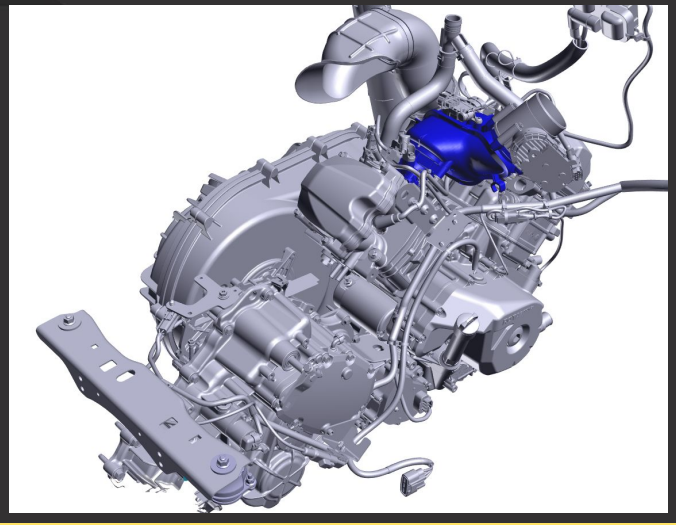

HD10

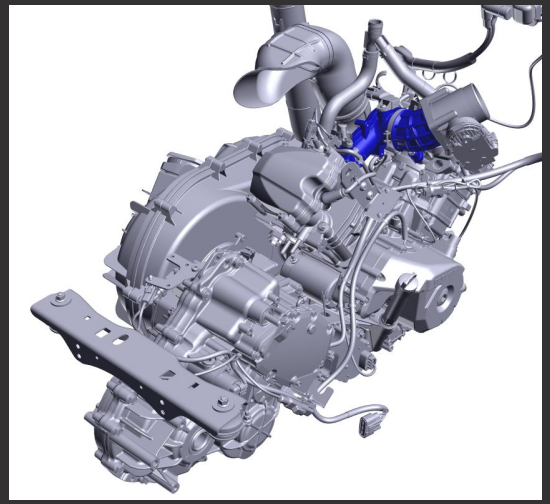

Change	Description	Retrofit
HD9 Engine	HD10 MY19 engine with new calibration file. Engine power : 65 hp (48,5kW) @ 5800 RPM Maximum torque : 59 lbf-ft (80Nm) @ 5500 RPM MY20-21 exhaust and intake systems HD9 will be available on : Defender 3UP : Base, DPS, DPS CAB, XT & XU Traxter 3UP : Base, DPS, XU Defender Max : Base, DPS, XT Traxter Max : DPS	No

HD7

LH

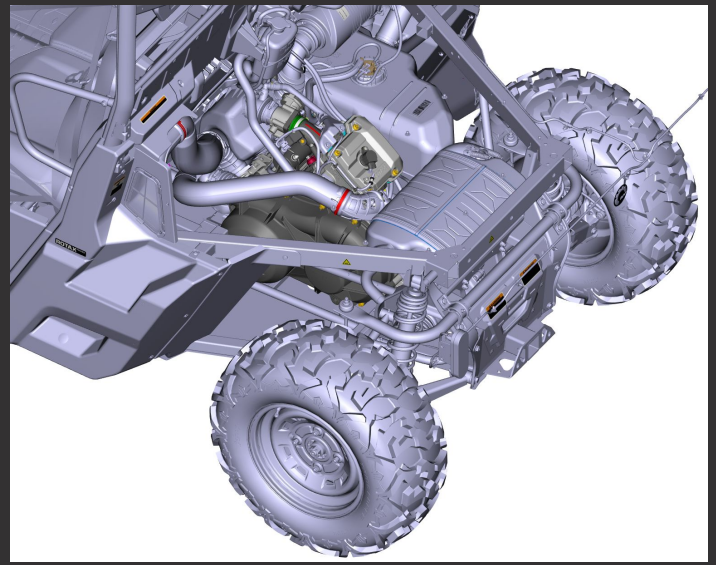

RH

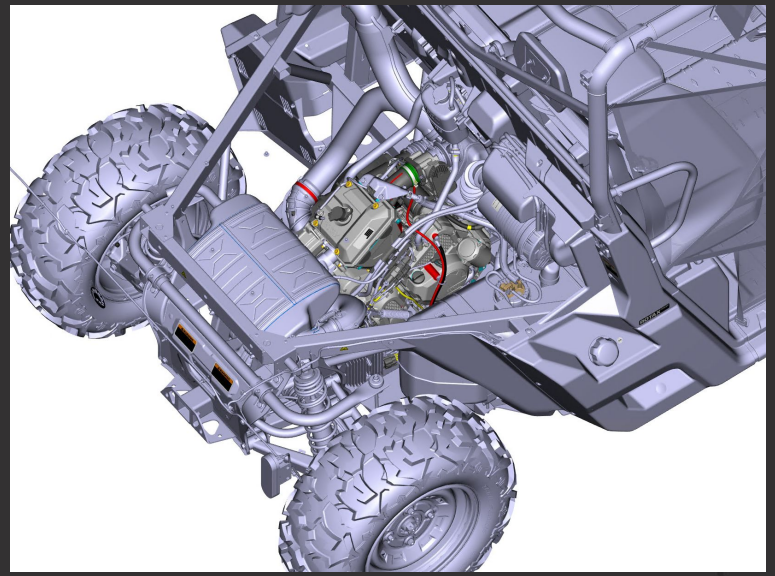

Change	Description	Retrofit
HD7 Engine	HD7 will be available on 3-UP models Base T, DPS, XU T and on MAX Base	No

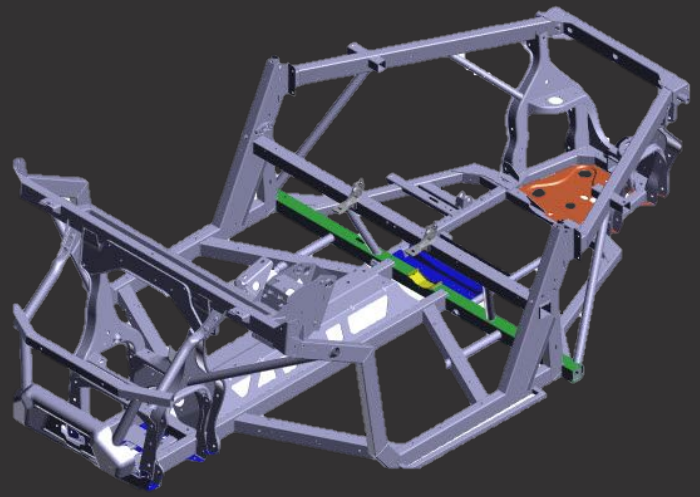

Change	Description
Clearance for Propshaft	
New Drain Hole for Rear HD7 Differential	All changes are covered in details in following slides. This picture is to help you position the following information on the frame
HD7 Front Engine Support	
Plow Ready Mount Plate	

MY21

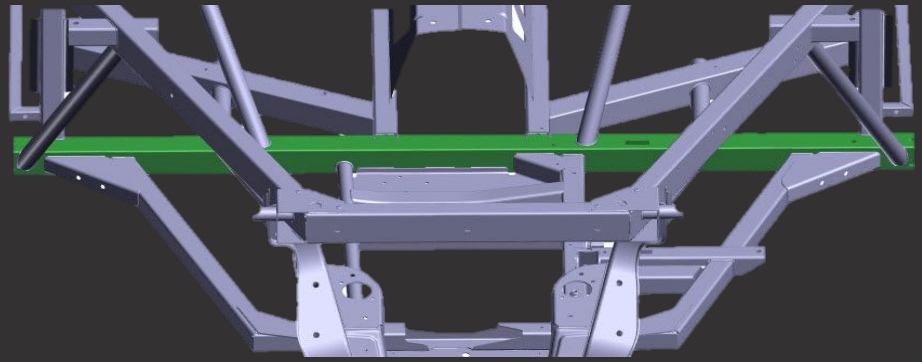

MY22

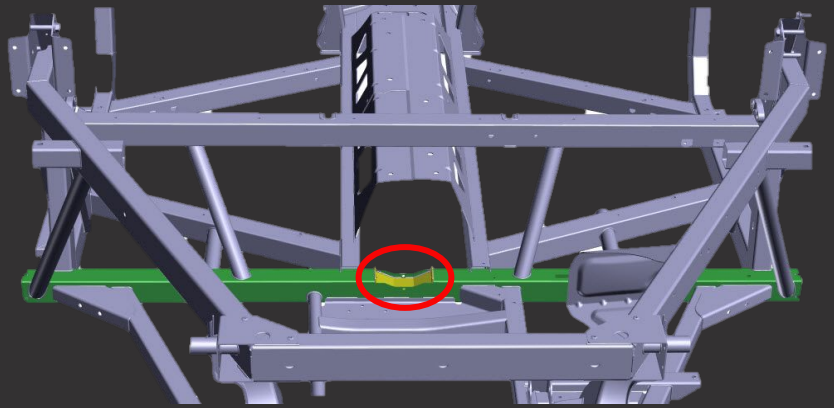

Change	Description	Retrofit
Clearance for Propshaft	New clearance for propshaft. Plate also use on Maverick Trail MY22.	Yes

MY21

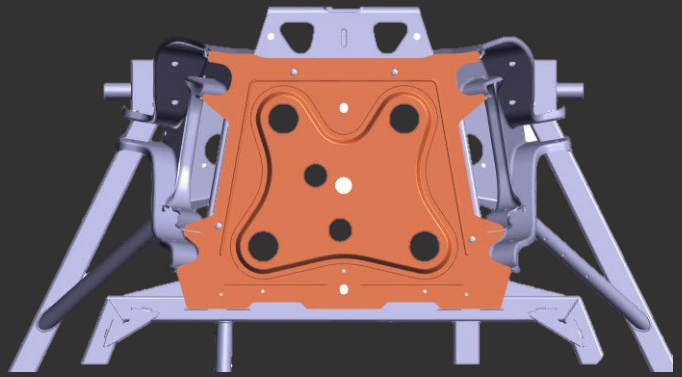

MY22

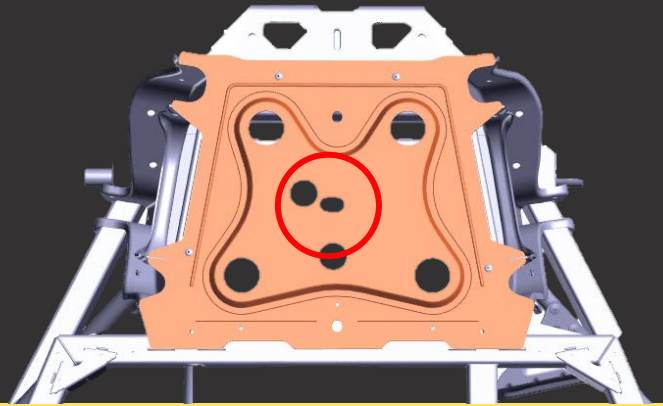

Change	Description	Retrofit
New Drain Hole for Rear HD7 Differential	New hole on rear skid plate.	Yes

MY21

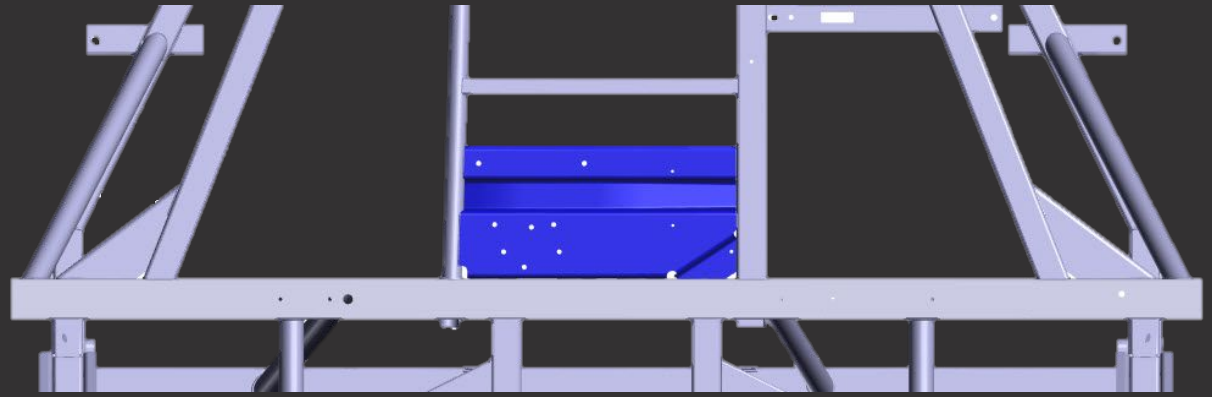

MY22

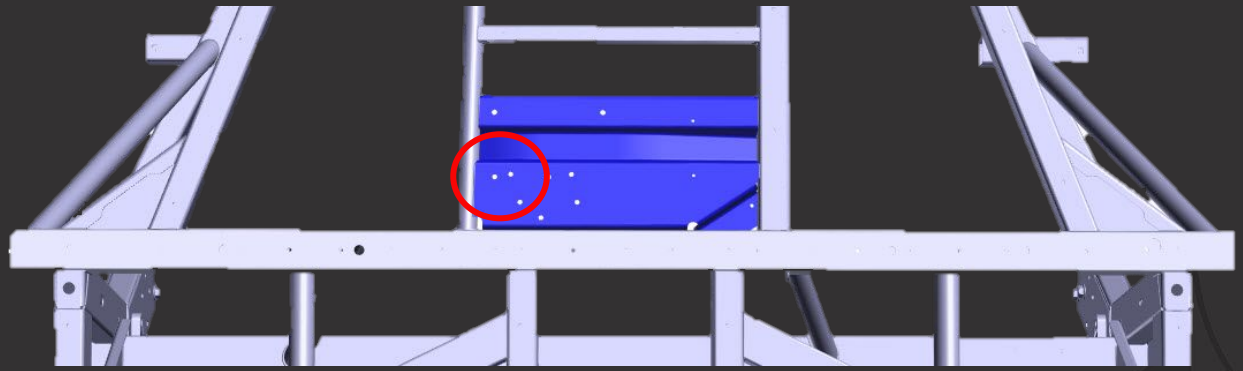

Change	Description	Retrofit
HD7 Front Engine Support	New hole added on front engine support plate	Yes

MY21

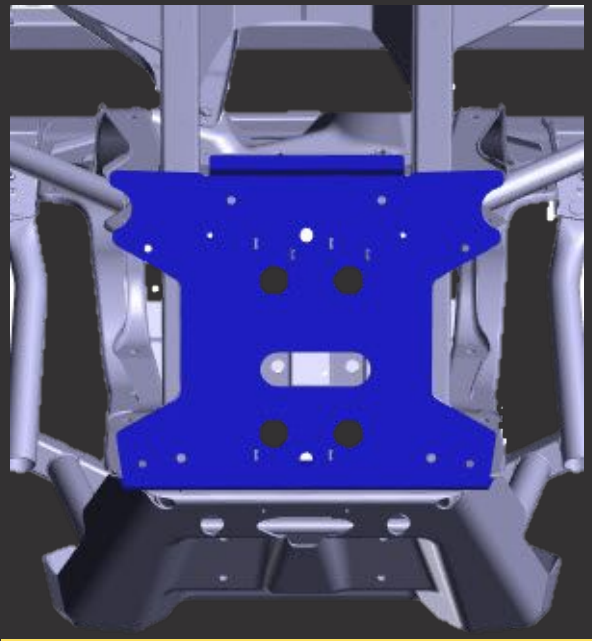

MY22

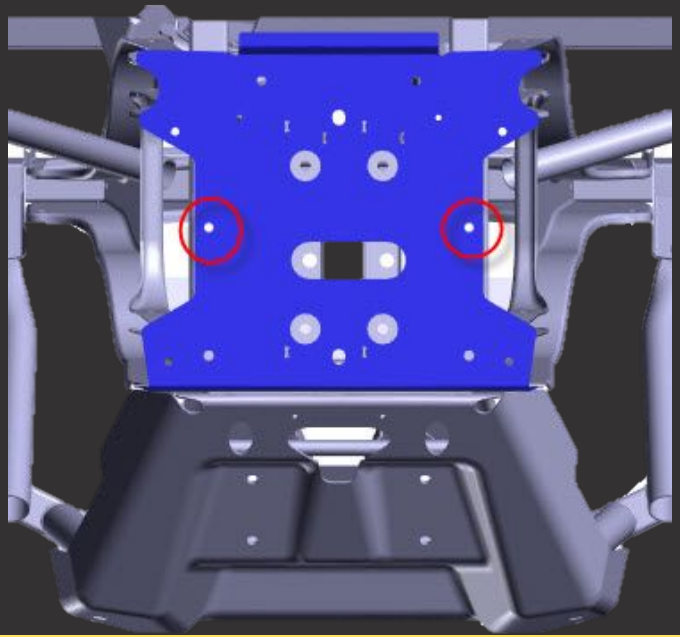

Change	Description	Retrofit
Plow Ready Mount Plate	Larger skid plate with new holes to attach plow accessory on front skid plate	Yes

MY21

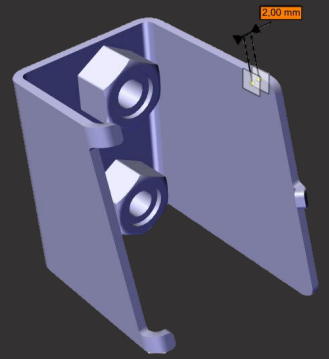

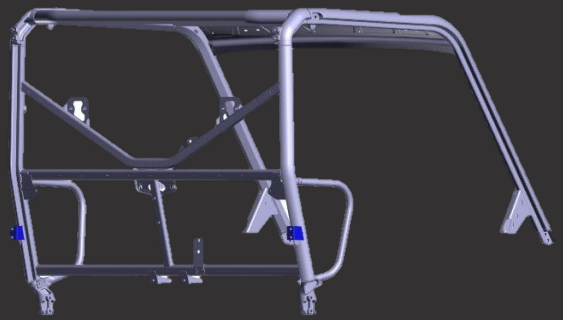

MY22

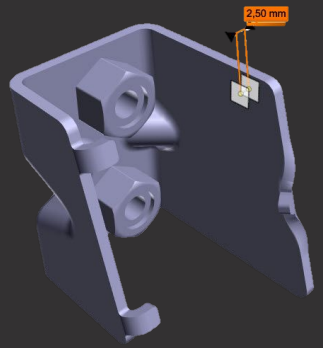

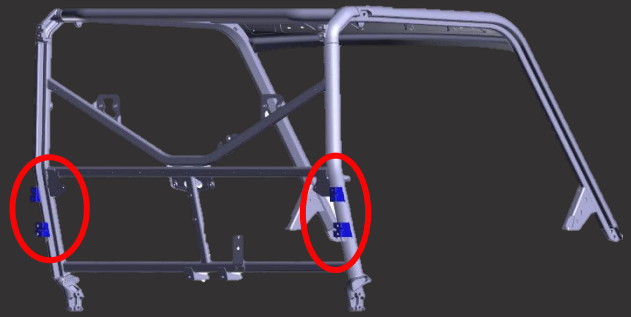

Change	Description	Retrofit
New Bottom Door Hinges	Increased thickness on bottom hinge for more rigidity	Complete roll cage Yes
New Upper Door Hinges	For PAC needs	

HD9 not EVAP

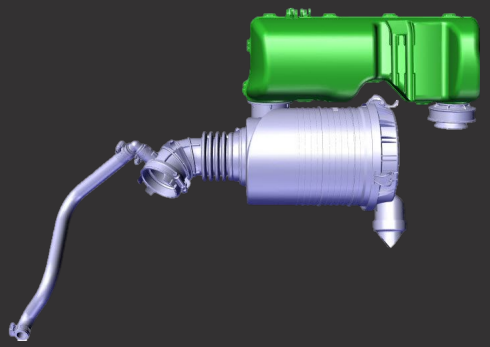

HD9 EVAP

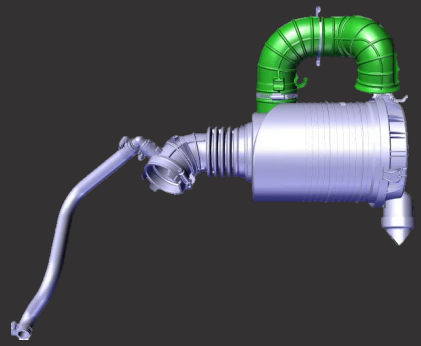

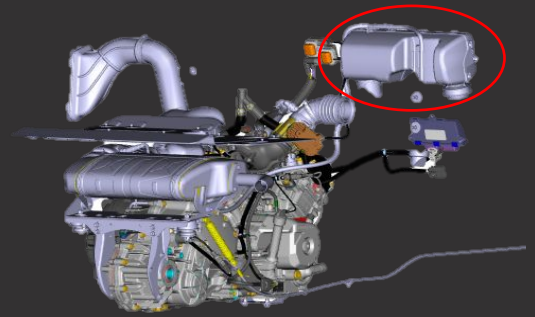

Change	Description	Retrofit
HD9 Intake Resonator	On models that do not have EVAP system, new on package HD9 It allows the engine to run more quietly and more efficiently.	N/A

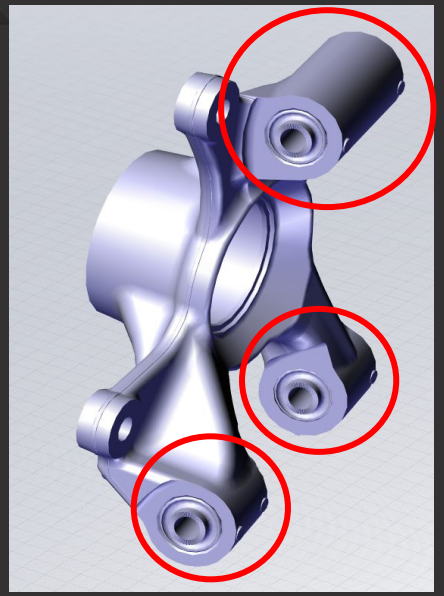

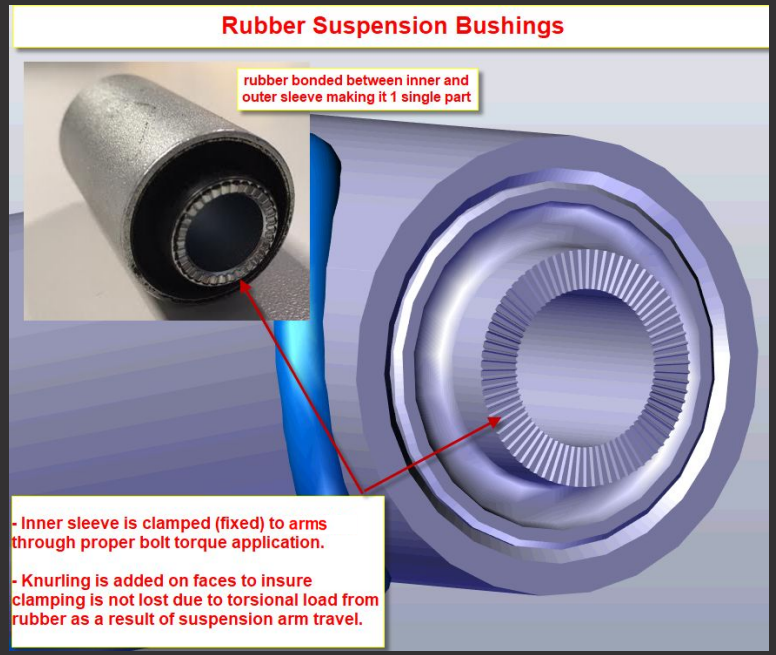

Service On	Description
Rubber suspension Bushings	Service parts will come with an instruction sheet stating to torque all rear knuckles bolts at Ride Height. Maintenance: every 3000km (1500km severe riding) the torque of all rear knuckle bolts needs to be checked and re torqued to spec if below spec and this must be done with the vehicle at Ride Height.

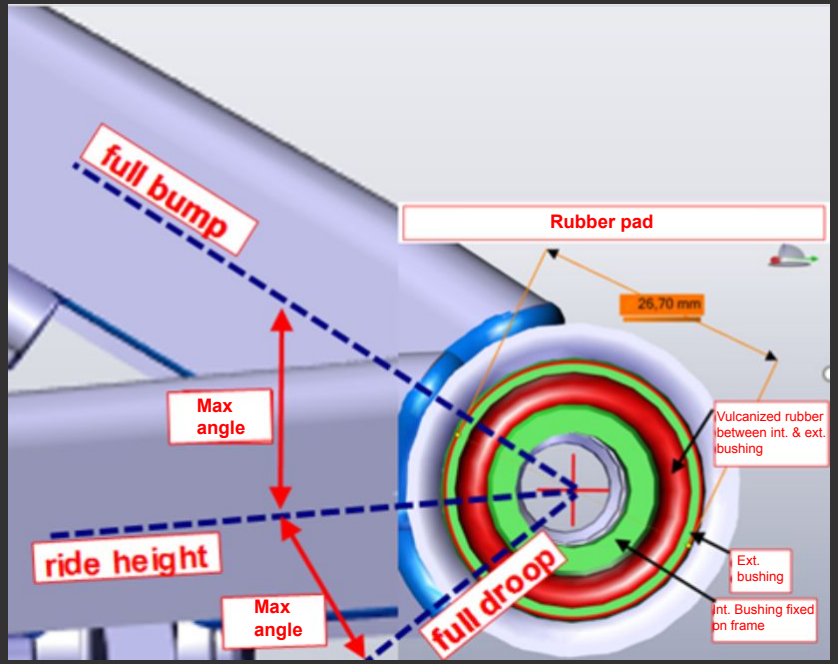

Service On	Description
Rubber suspension Bushings	• Why do we need to torque it at **Ride Height**? It is to avoid damaging the rubber within the bushing which is made to reach full bump & full droop angle once torques at ride height.

MY21

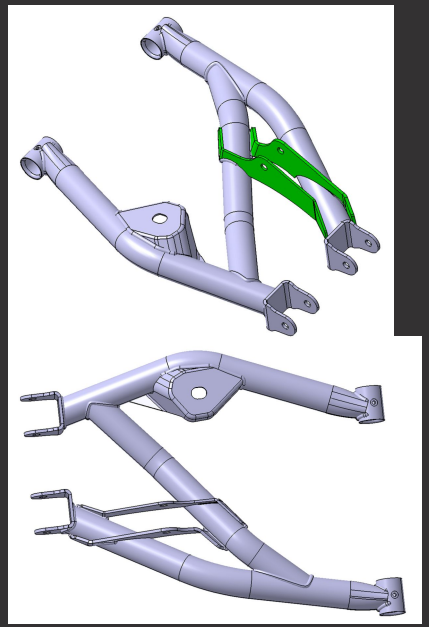

MY22

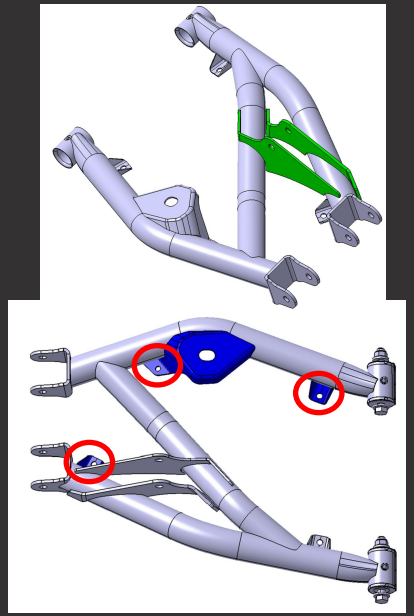

Change	Description	Retrofit
Rear Lower A-Arm improvement on 67”	Stronger rear lower arm for 67” with new attach for skid plate. (Bracket weld on the A-arms)	Yes

MY21

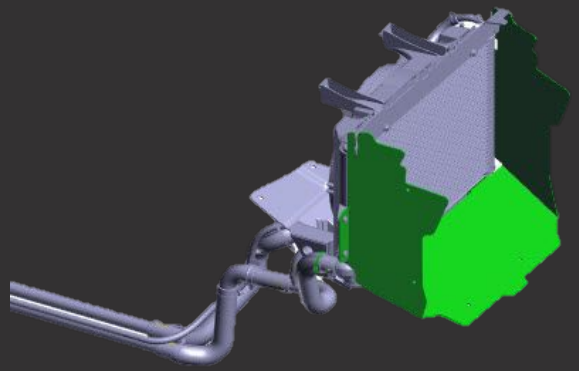

MY22

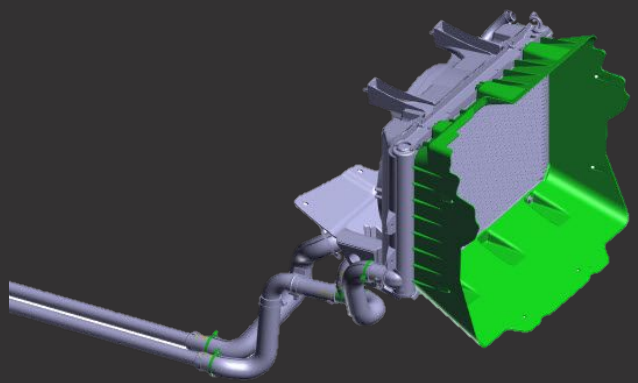

Change	Description	Retrofit
Process Change – Air Deflector	Air deflector got its manufacturing process changed from thermoforming to plastic injection. (all models except LTD because of incompatibility) New part number.	Yes (except LTD)

MY21

MY22

Change	Description	Retrofit
XPS Tires	New 27” tire from Commander. XPS Trail Force on certain configuration of models for the BASE, DPS, XT & LTD.	Yes as a kit
Steel Wheels 14” on BASE and DPS	Before was 12” steel wheels¸ now 14” with better load capacity	Yes as a kit

MY22

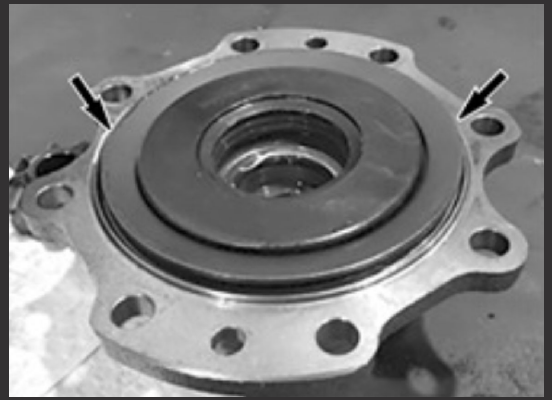

Change	Description	Retrofit
Visco-Lok QE modification on CAB models	All CAB models will be coming from factory with the spacer & the belleville washer	Yes

MY21

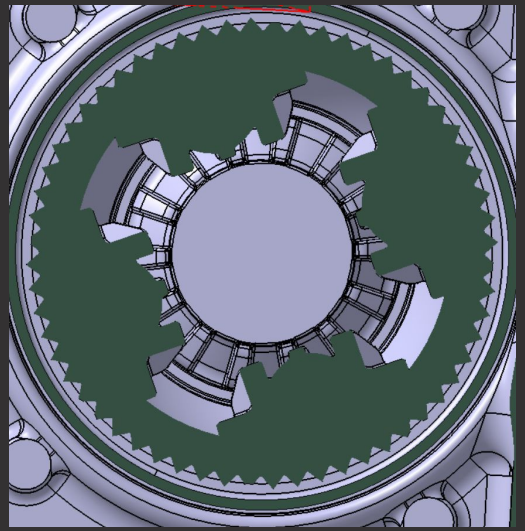

MY22

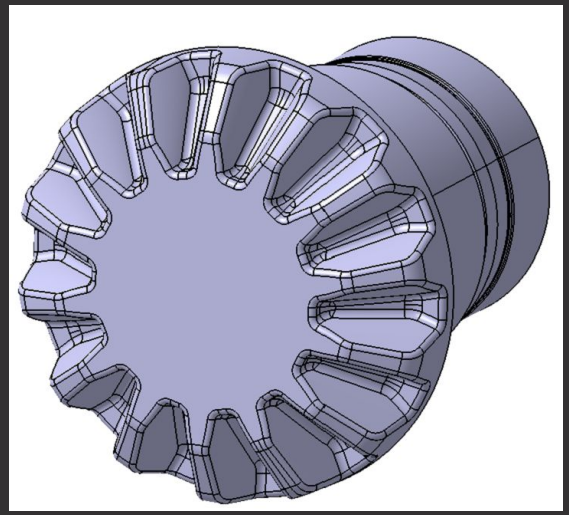

Change	Description	Retrofit
Smart-lock side gears improvement	New side gears with increased external diameter (from 22mm to 27,7mm) and change in teeth profile	Yes

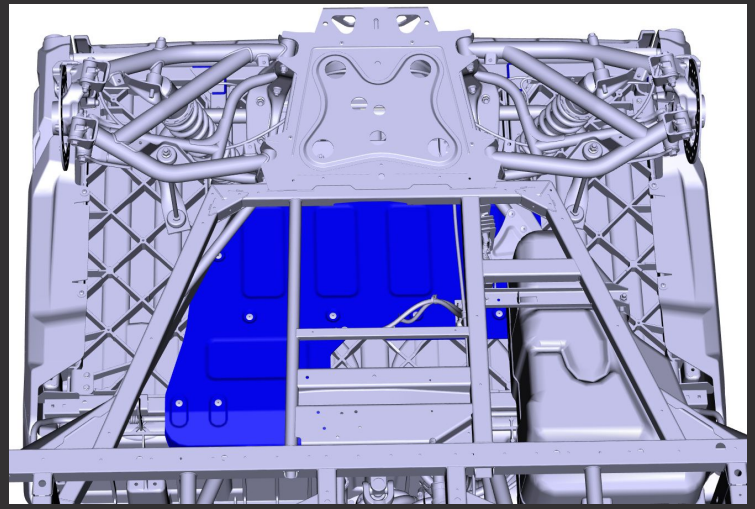

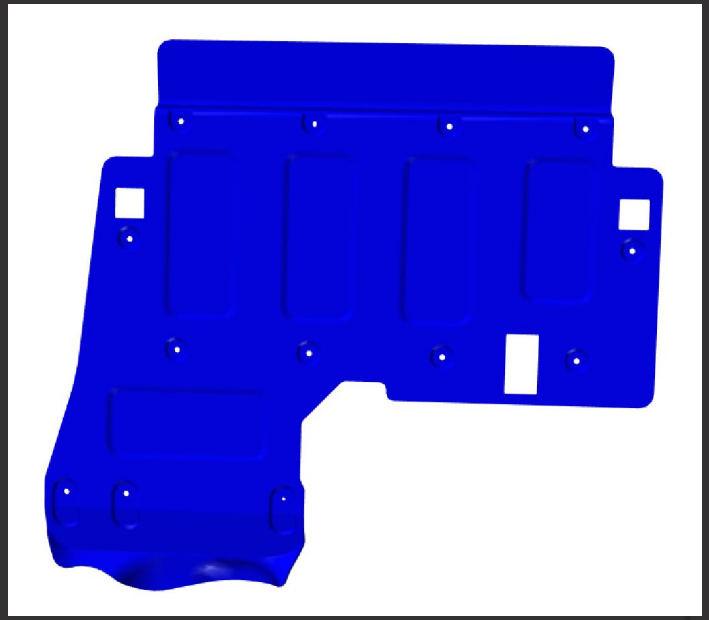

Change	Description	Retrofit
Heat shield 3-UP & MAX & 6X6	4 aluminium layers instead of 6, same geometry as MY21 but new part number	Yes on MY21

Previous model

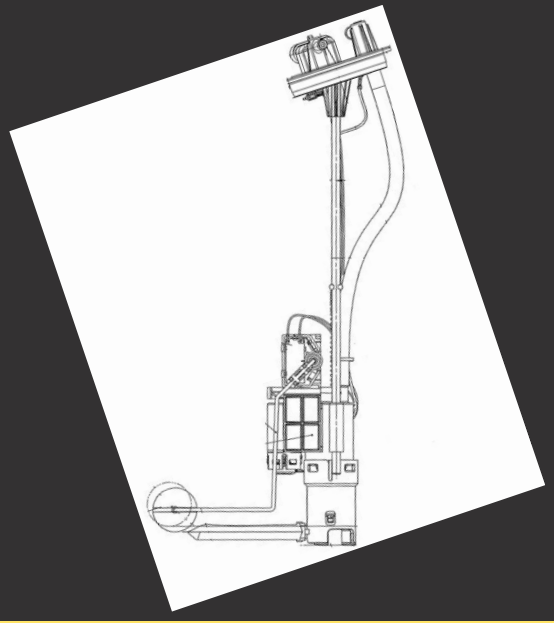

New model

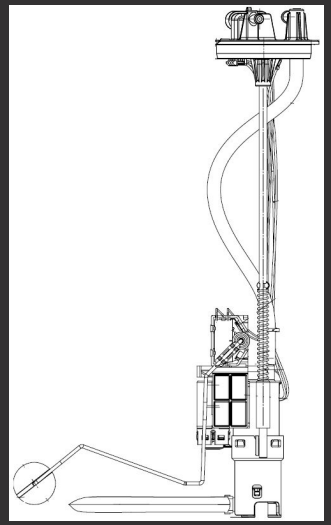

Change	Description	Retrofit
Fuel Pump and Tank Modification	Bigger prefilter, can absorb more debris and is more durable. Lateral pump support added to avoid level sensor getting stuck. (Running change MY21)	Yes for MY20 and MY21

MY21

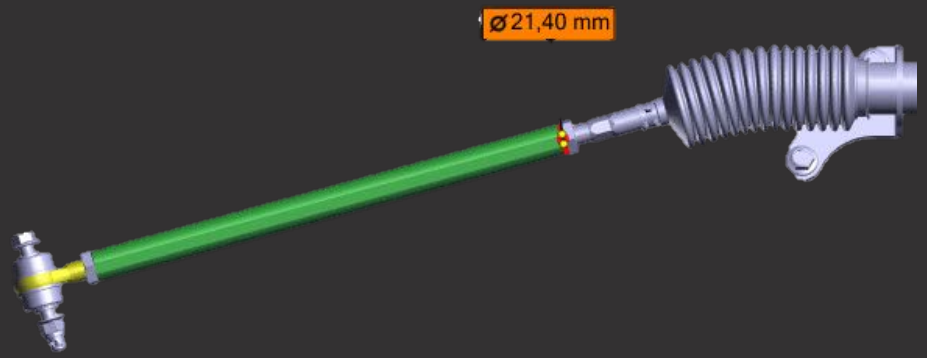

MY22

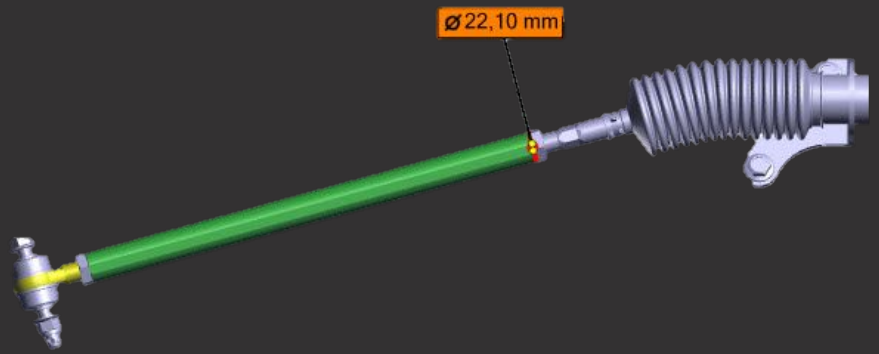

Change	Description	Retrofit
Bigger Tie-Rod on 67”	Tie-Rod with bigger diameter on 67” vehicle (+21% buckling resistance)	Yes

New: ABS/Dynamic control - Traxter T category (Europe)

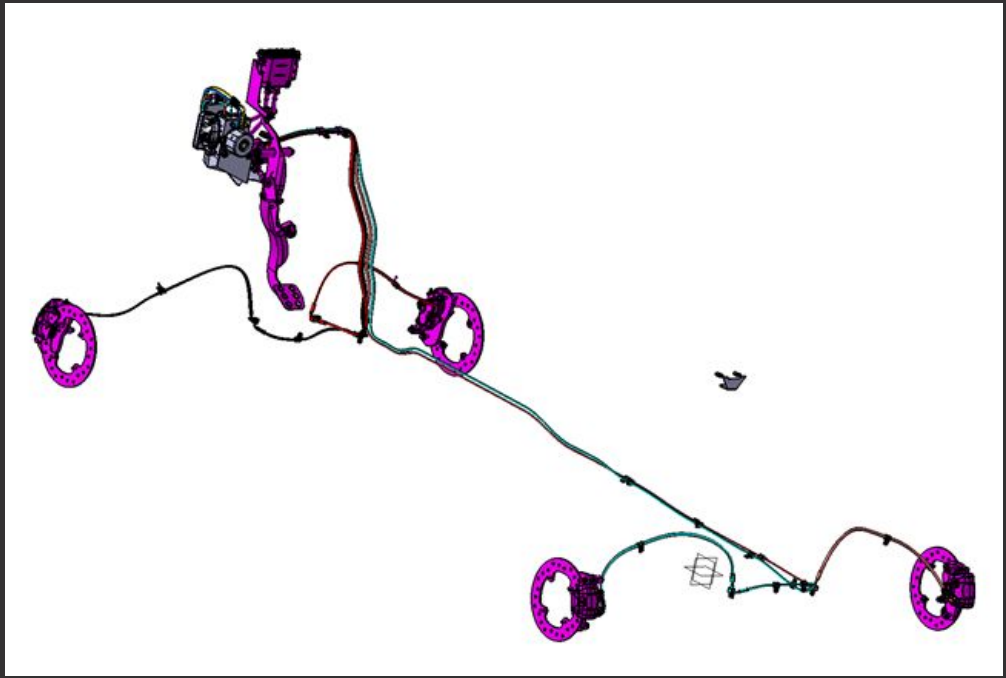

Change	Description	Retrofit
ABS System	ABS Module, brake hoses and sensors	No

ABS and Dynamic Control features

	Traxter			
	XU HD9 T	XU HD10 T	MAX DPS HD10 T	PRO DPS HD10 T
Anti-lock Braking System (ABS)	✓	✓	✓	✓
Hill Hold Control (HHC)	✓	✓	✓	✓
Hill Descent Control (HDC)	✓	✓	✓	✓
Front Torque Control (FTC)	✓	✓	✓	✓
Drag Torque Control (DTC)	✓	✓	✓	✓
Traction Control System (TCS)	X	X	X	X
New Rear Torque Control (RTC)	✓	✓	✓	✓
Maximum speed	101 km/h	101 km/h	101 km/h	101 km/h

Dynamic Traction Control	
Front & Rear Torque Control (FTC & RTC)	Automatically transfers torque to the front & rear wheel providing better traction
Drag Torque Control (DTC)	Detects engine braking on slippery surfaces and modulates engine braking to prevent wheels from locking up

*Traxter T category Europe only

Drag Torque Control Logic*

- Drag Torque Control (DTC) is used to limit slip at the driven wheel because of engine braking or engine inertia when releasing throttle by applying the proper amount of positive engine torque
- The lowest ratio of friction for DTC is ice, where the DTC should prevent the vehicle to oversteer when the unit is driven on a steady radius with constant throttle until the throttle is released sharply
- When the brakes are applied with too much pressure by the driver and the wheels lock, DTC should, in the shortest time as possible and with minimal overshoot, apply the proper amount of positive engine torque to limit slip as soon as the driver releases the brakes.

*Traxter T category Europe only

Front Torque Control Logic*

- Once the ABS system detects a wheel slipping, it will progressively apply brake pressure specifically to this wheel to transfert the torque to the other wheel. Same logic is used at the rear.
- FTC is disable in 2WD drivetrain configuration
- The front axle brake torque control remain active no matter the state of the rear differential
- The intervention of the brake torque control must not be too aggressive when the inner front wheel normal force is reduced during a cornering.

*Traxter T category Europe only

Rear Torque Control Logic*

- Once the ABS system detects a wheel slipping, it will progressively apply brake pressure specifically to this wheel to transfert the torque to the other wheel.
- The rear axle brake torque control should be activated when the rear differential is open
- The rear axle torque control should be deactivated when the rear differential is locked
- The rear axle torque control should be activated in both 2WD and 4WD drivetrain configurations
- Brake torque control (front & rear) must not cause unjustified interventions when running at low speed with high steering angles.

*Traxter T category Europe only

MAVERICK X3

Package

Engine

Frame

Suspension

Drivetrain

Exhaust

Intake

Steering

Overall Impact on Systems

*excluding mono engine

System	Change Level
Engine	High
Frame	High
Suspension	High
Front Drivetrain	Medium
Body	Low
Brake	Low
Decal	Low
Rear Drivetrain	Low
Electrical	Low
Exhaust	Low
Intake	Low
Steering	Low
Cargo	None
Cockpit	None
Cooling	None
Fuel	None
Seat	None

Package

Engine

Frame

Suspension

Drivetrain

Exhaust

Intake

Steering

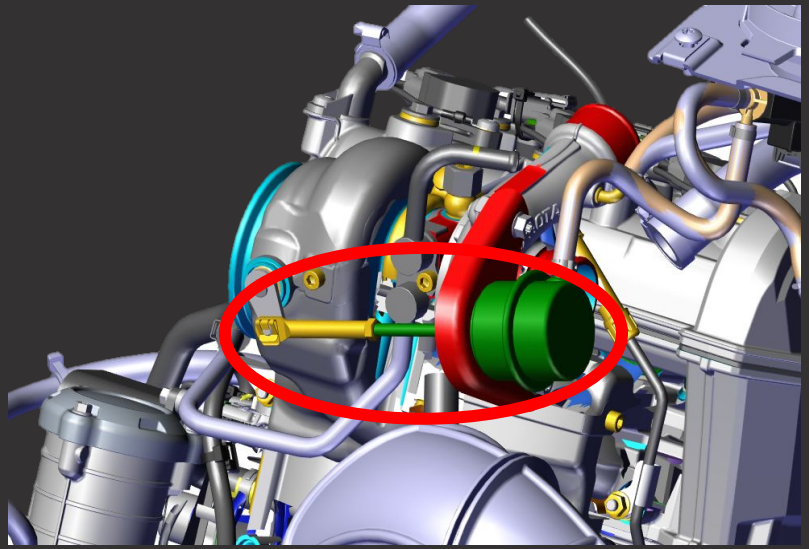

Change	Description	Retrofit
New spring in Wastegate Actuator for Turbo RR	The new spring will increase long term robustness The assembly can be retrofit on earlier models. No need to change the engine file because the spring rate is the same.	Yes

Sea level calibration

Drive :

- Spring : 420638133
- Lever : 420248720
- Rollers : 420629231
- Belt : 422280652

Driven :

- Spring : 420638126 – green with ergot
- Cam : 420280846 Acceleration 48˚/ 52˚ & Engine Brake : 70˚

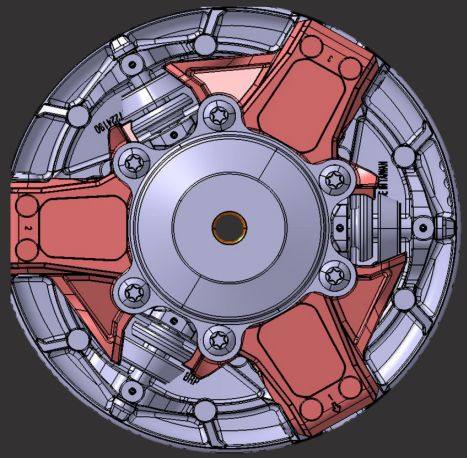

High altitude calibration :

Drive :

- Lever : 3x 707003076

Change	Description	Retrofit
P-Drive Turbo RR	The P-Drive is identical to the mono engine Drive with only a difference on the calibration side.	No

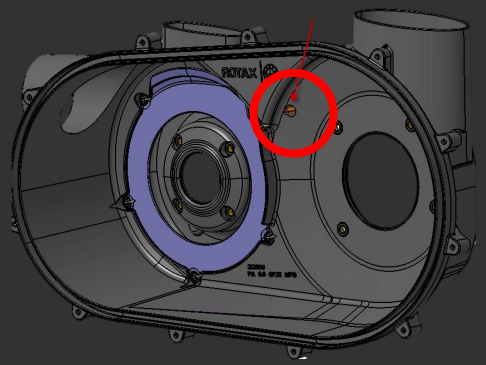

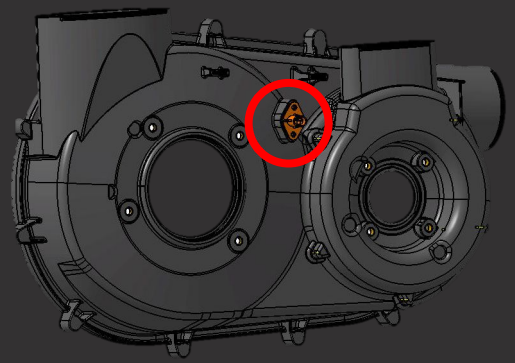

Change	Description	Retrofit
Belt Temperature Sensor for Turbo RR	New system. The sensor measures the ambient temperature inside the CVT box which correlates with the belt temperature. This temperature may be display in the cluster.	No

Package

Engine

Frame

Suspension

Drivetrain

Exhaust

Intake

Steering

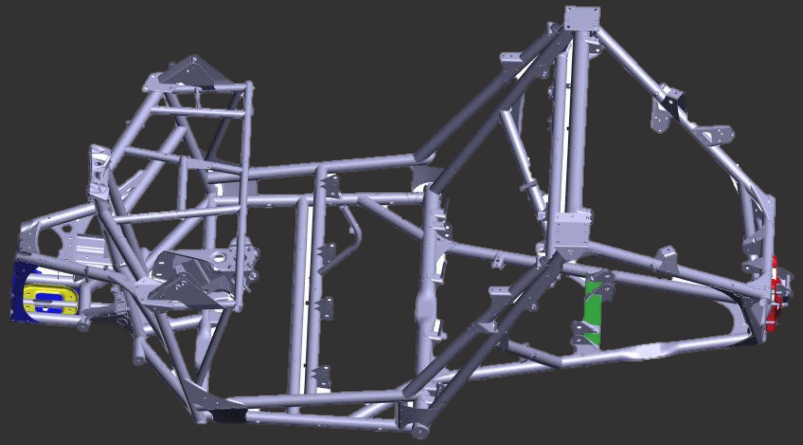

Change	Description
Frame Reinforcement	All round tubes with external diameter of 46.9 mm. Thickness is increased from 1.4 mm to 1.8 mm.
Engine Support Tube and Mount	All changes are covered in details in following slides. This picture is to help you position the following information on the frame
Rear toe plate bolted to frame	

MY21

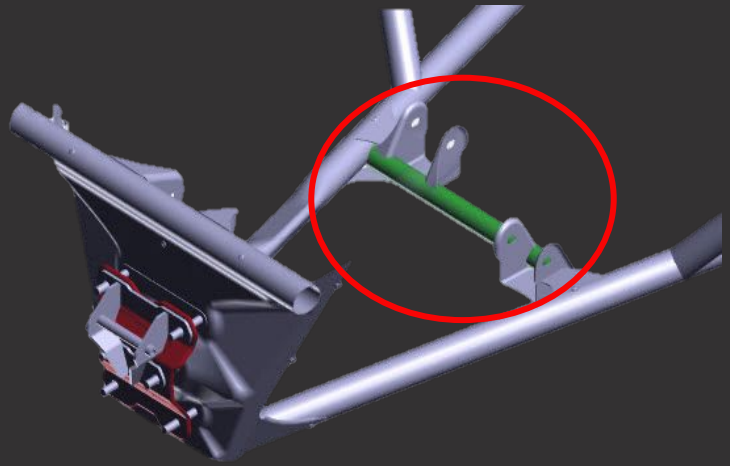

MY22

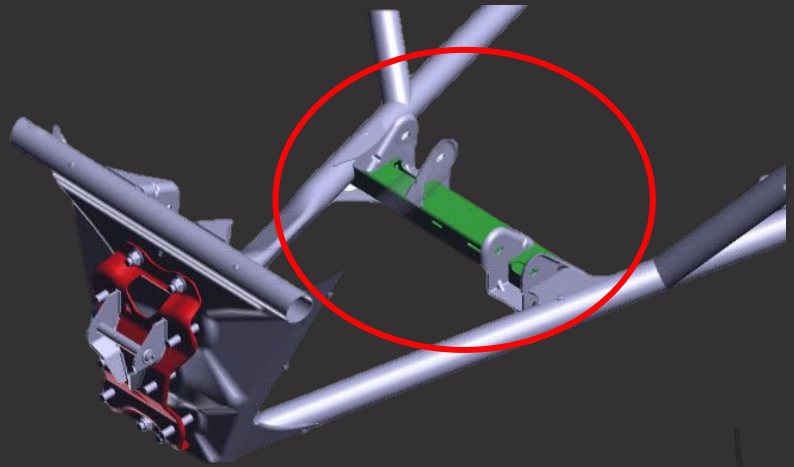

Change	Description	Retrofit
Engine Support Tube and Mount	Tube has now a square profile and mounting brackets are thicker.	Yes

MY21

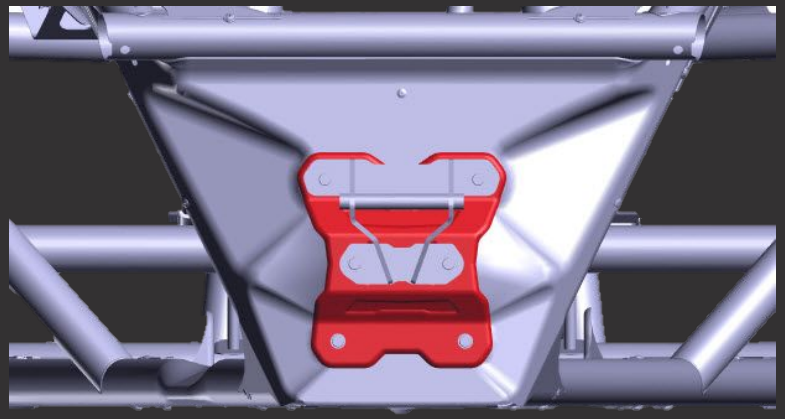

MY22

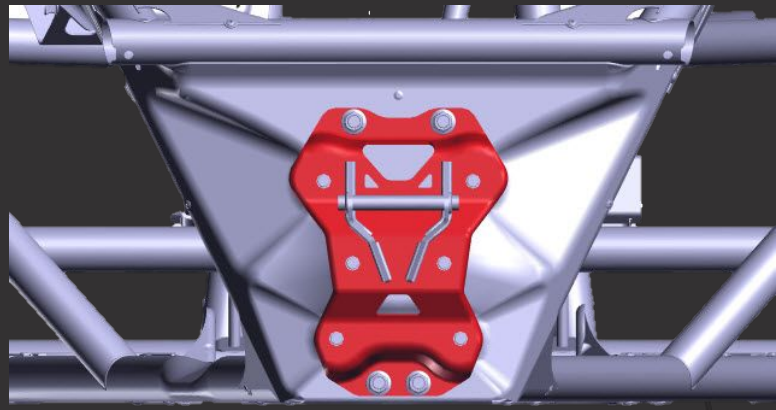

Change	Description	Retrofit
Rear toe plate bolted to frame	Thicker toe plate (3.2mm instead of 1.4mm). 4 new mounting holes on rear master plate	Yes

Package

Engine

Frame

Suspension

Drivetrain

Exhaust

Intake

Steering

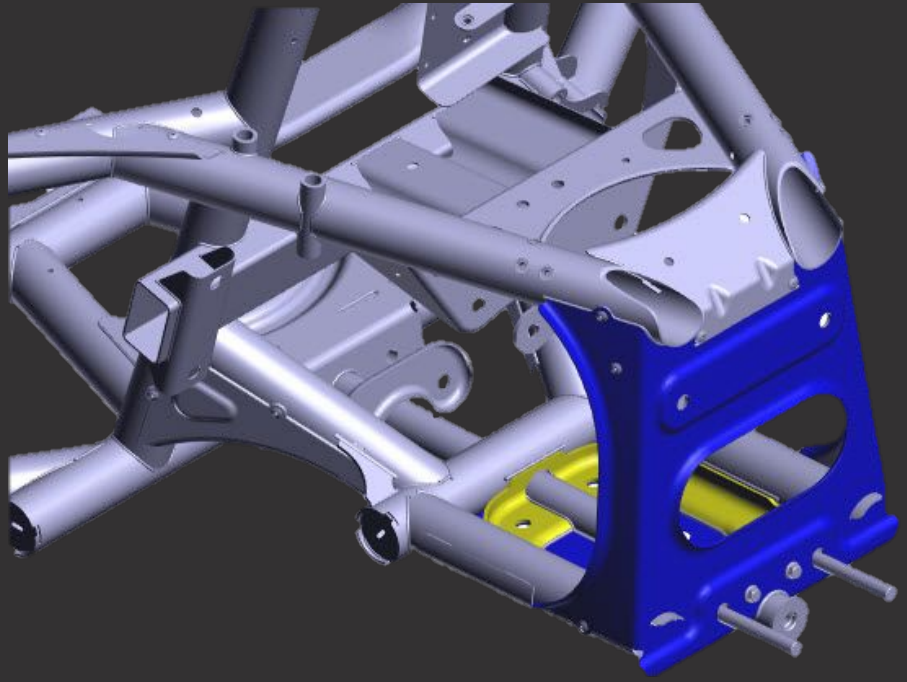

Change	Description	Retrofit
Frame Reinforcement	Front differential support plate is thicker. New reinforcement plates and modifications done on existing plate to make them more resistant. Multiple plates are welded on the frame instead of bolted in place.	Yes

Package

Engine

Frame

Suspension

Drivetrain

Exhaust

Intake

Steering

64” Width Suspension

Removed

MY21

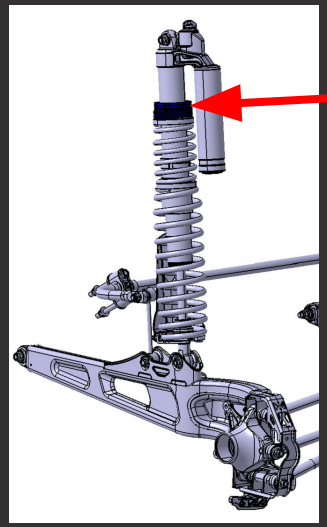

MY22

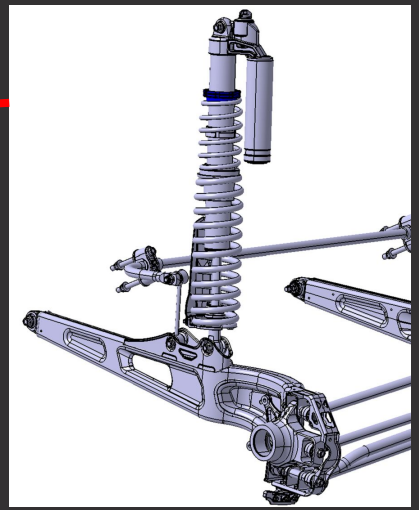

Change	Description
14’’ Ground Clearance	+1’’ over MY21 (Allowed by New Rack & Pinion Ratio)
Removed Rear Helper Springs on all packages (Except XMR)	Reduced Suspension Noise

72” Width Suspension
(X-RS)

Change	Description
16’’ Ground Clearance	+1’’ over MY21. Tires from 30” to 32”.

Package

Engine

Frame

Suspension

Drivetrain

Exhaust

Intake

Steering

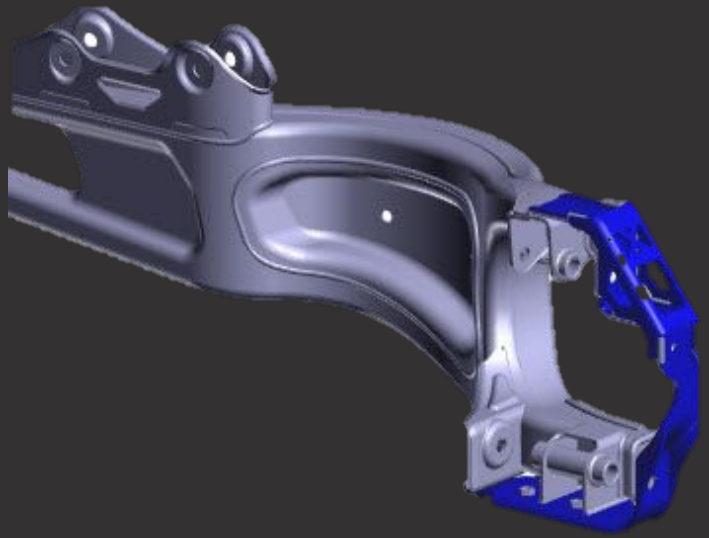

Change	Description	Retrofit
Rear Trailing Arm Reinforcement	Thicker rear plate of the trailing arm.	Yes

MY21

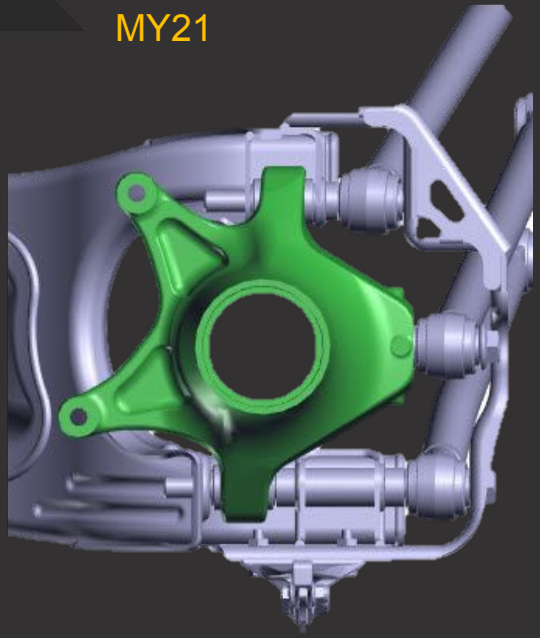

MY22

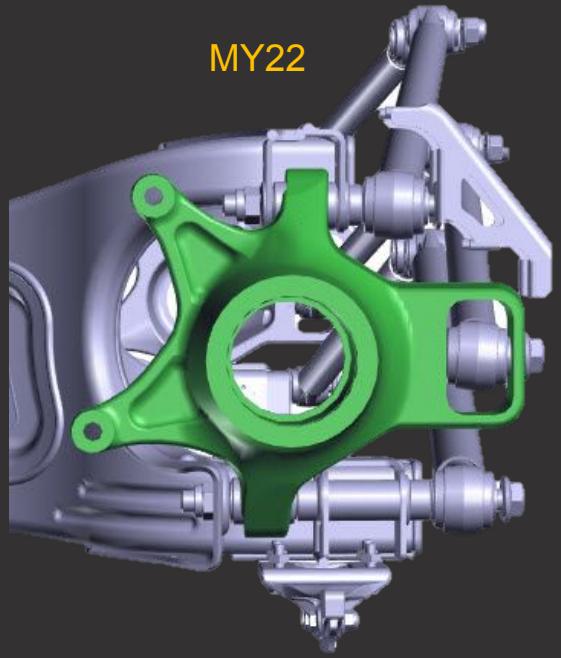

Change	Description	Retrofit
Knuckle Improvement	Knuckle toe link is now double shear. Bigger section of the bearing seat.	No, only compatible with new trailing arms
More Robust Snap-ring	Grooves and snap rings are now the same as on racing vehicles.	No, new knuckle only

Package

Engine

Frame

Suspension

Drivetrain

Exhaust

Intake

Steering

MY21

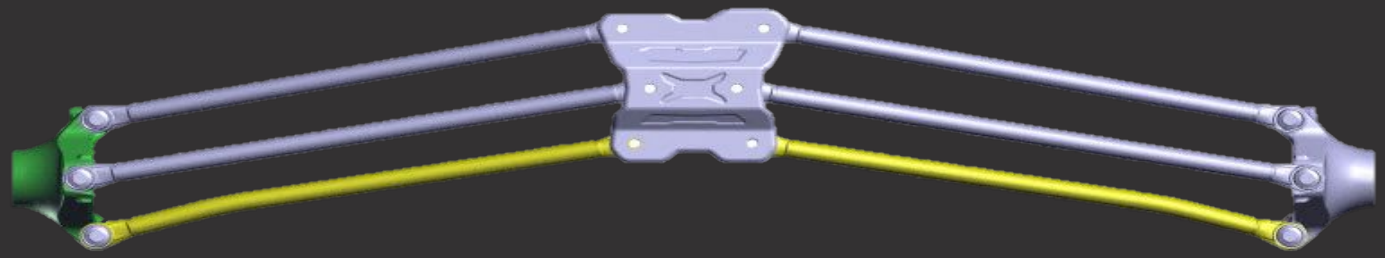

MY22

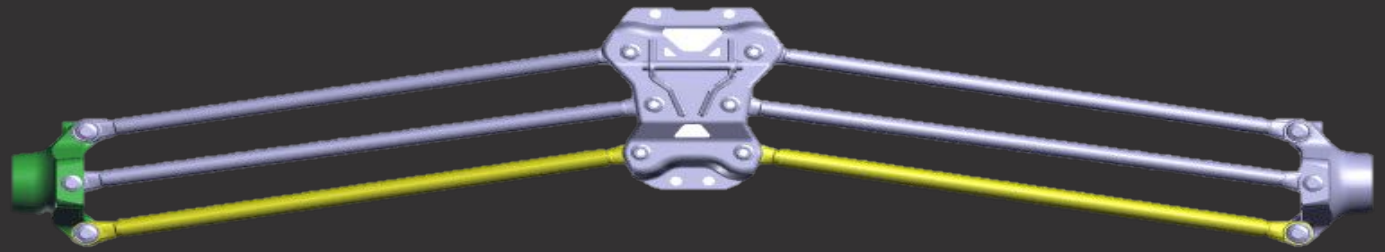

Change	Description	Retrofit
Straight Lower Link	On 64” and 72”, buckling capacity of the lower link is increased. X-MR and X-RC still have the curved lower link to allow more ground clearance.	No

Front suspension

MY21

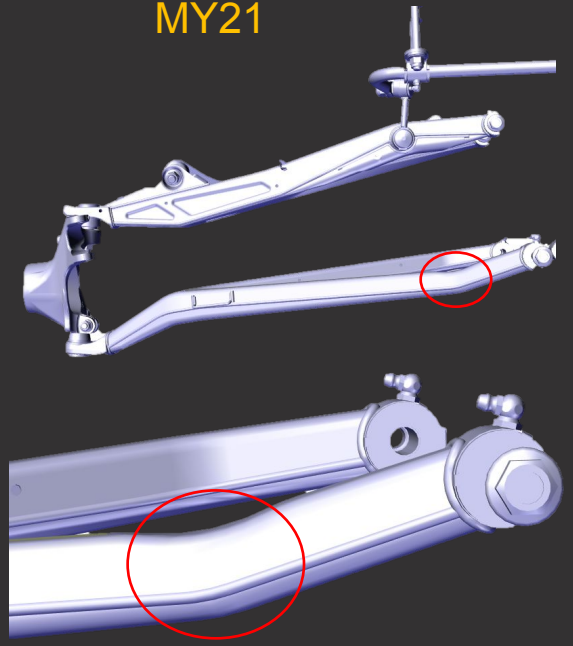

MY22

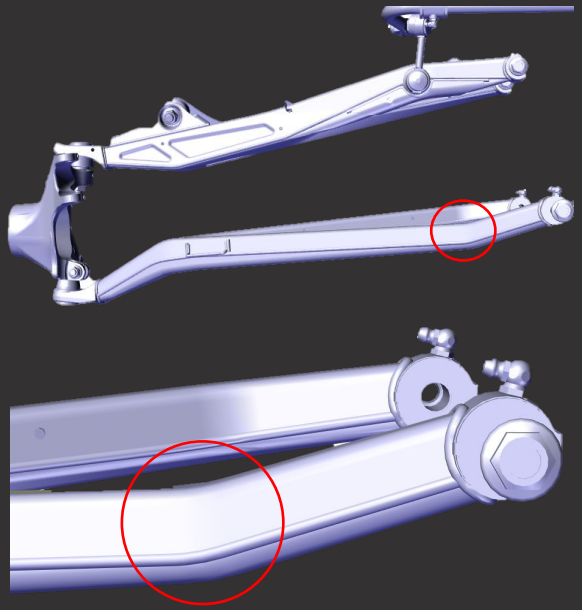

Change	Description	Retrofit
Lower A-Arm 72” Without Emboss	Buckling capacity of the a-arm is increased	No

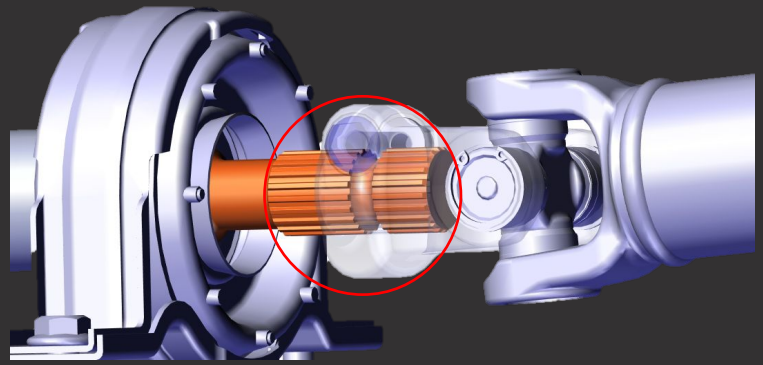

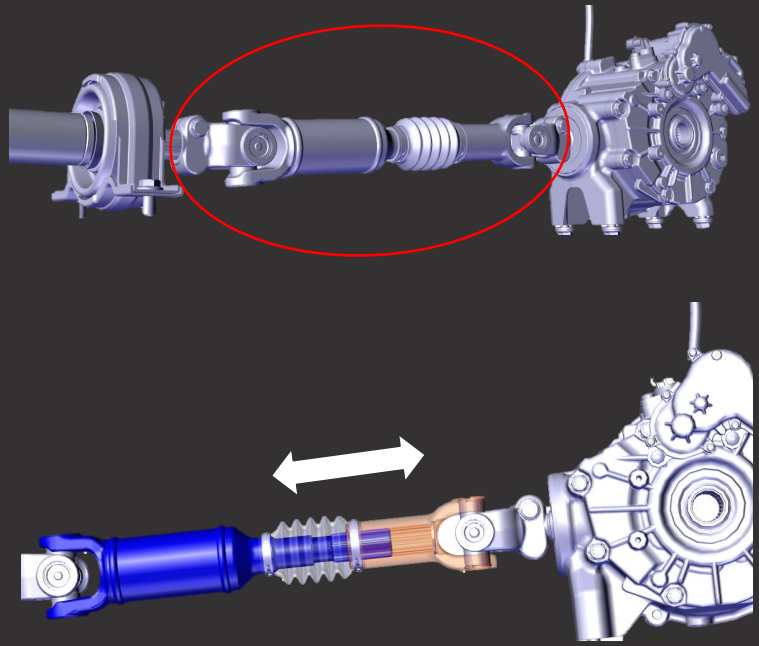

Change	Description	Retrofit
Front Collapsing Propshaft	Propshaft can slide to allow an easier assembly.	Yes as kit
Rear Propshaft with Grooved Spline	Change caused by the collapsing propshaft introduction.	Yes as kit

Package

Engine

Frame

Suspension

Drivetrain

Exhaust

Intake

Steering

	MY21 Tire – Maxxis Bighorn 2.0	MY22 Tire – Maxxis Carnivore
DS	28X9R14 Front / 28X11R14 Rear	30X10R14 Front & Rear
X-DS	29X9R14 Front / 29X11R14 Rear	30X10R14 Front & Rear
RS	29X9R14 Front / 29X11R14 Rear	30X10R14 Front & Rear
X-RS	30X9R14 Front / 30X11R14 Rear	32X10R14 Front & Rear

Package

Engine

Frame

Suspension

Drivetrain

Exhaust

Intake

Steering

MY22

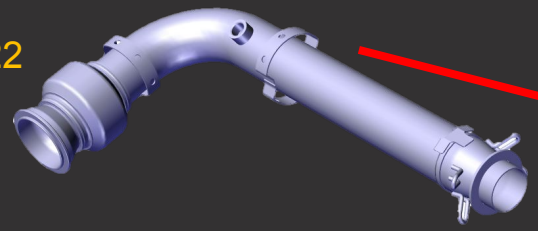

Change	Description	Retrofit
MY22 120hp ONLY 900 ACE Turbo	All MY22 900 ACE Turbo 120hp vehicles come without a catalyst on the exhaust pipe in North America (CU and CARB).	No

Package

Engine

Frame

Suspension

Drivetrain

Exhaust

Intake

Steering

MY21

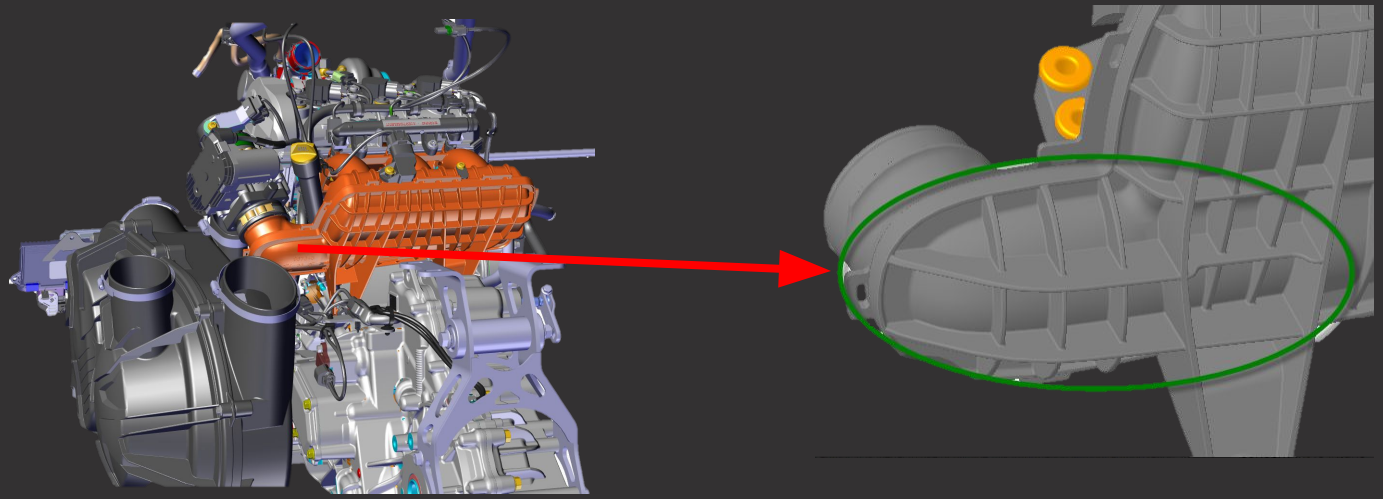

Change	Description	Retrofit
Plenum reinforcement (Running change in MY22)	Extruded ribs to increase burst pressure	Yes

Package

Engine

Frame

Suspension

Drivetrain

Exhaust

Intake

Steering

64” Width Suspension

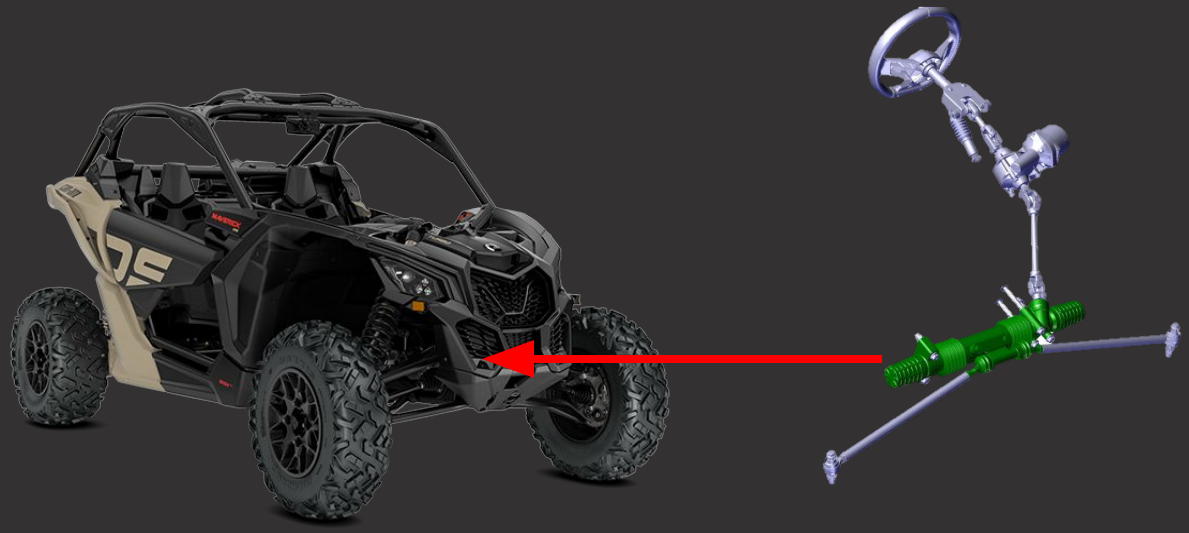

Change	Description
2.0 Turns Lock to Lock Rack & Pinion	Improved Stability, Introduced for Higher Ground Clearance vs ROHVA (64’’ Models) Same Ratio as 72” MY21

2022 Maintenance chart changes

New Maintenance Charts / Checklists

- Simplified viewing chart of maintenance tasks
  - Categorized intervals
    - A+ : Applies to severe duty and deep mud / water and provides specific tasks for these usage types
    - A : Previously known as the yearly interval
    - B : Previously known as the every 2nd year interval

REGULAR DUTY	A	B
A = Adjust C = Clean I = Inspect L = Lubricate R = Replace T = Torque	Every year or 200 hours or 3000 km (2000 mi)	Every 2 years or 400 hours or 6000 km (4000 mi)
Air and Fuel Delivery		
Engine air filter	I,C,R	
Fuel tank vent filter	R	
Canister vent pre-filter (CARB and EVAP models)		R
Fuel components and function*		I
Fuel pump pressure		I
Body and Chassis		
Cage fasteners	T	

SEVERE DUTY	A+	A	B
A = Adjust C = Clean I = Inspect L = Lubricate R = Replace T = Torque	6 months or 100 hours or 1500 km (1000 mi)	Every year or 200 hours or 3000 km (2000 mi)	Every 2 years or 400 hours or 6000 km (4000 mi)
Air and Fuel Delivery			
Engine air filter	I,C	R	
Fuel tank vent filter		R	
Canister vent pre-filter (CARB and EVAP models)			R
Fuel components and function*			I
Fuel pump pressure			I
Body and Chassis			
Cage fasteners		T	

DEEP MUD / WATER	A+	A	B
A = Adjust C = Clean I = Inspect L = Lubricate R = Replace T = Torque	6 months or 100 hours or 1500 km (1000 mi)	Every year or 200 hours or 3000 km (2000 mi)	Every 2 years or 400 hours or 6000 km (4000 mi)
Air and Fuel Delivery			
Engine air filter	I,C,R		
Fuel tank vent filter		R	
Canister vent pre-filter (CARB and EVAP models)			R
Fuel components and function*			I
Fuel pump pressure			I
Body and Chassis			
Cage fasteners		T	

New Maintenance Charts / Checklists

Usage type specific maintenance tasks

Regular Duty

If the vehicle is used for recreational or occasional utility purposes

Severe Duty

Higher than the average utility or commercial use requires more frequent fluid and wear component replacement than trail, recreational, or occasional utility purposes.

Deep Mud / Water Duty

Whether the vehicle is a X mr model or was accessorized for deep mud / water use, this type of usage requires more frequent maintenance and inspections to ensure debris has not infiltrated mechanical components.

REGULAR DUTY	A	B
A = Adjust C = Clean I = Inspect L = Lubricate R = Replace T = Torque	Every year or 200 hours or 3000 km (2000 mi)	Every 2 years or 400 hours or 6000 km (4000 mi)
Air and Fuel Delivery		
Engine air filter	I,C,R	
Fuel tank vent filter	R	
Canister vent pre-filter (CARB and EVAP models)		R
Fuel components and function*		I
Fuel pump pressure		I
Body and Chassis		
Cage fasteners	T	

SEVERE DUTY	A+	A	B
A = Adjust C = Clean I = Inspect L = Lubricate R = Replace T = Torque	6 months or 100 hours or 1500 km (1000 mi)	Every year or 200 hours or 3000 km (2000 mi)	Every 2 years or 400 hours or 6000 km (4000 mi)
Air and Fuel Delivery			
Engine air filter	I,C	R	
Fuel tank vent filter		R	
Canister vent pre-filter (CARB and EVAP models)			R
Fuel components and function*			I
Fuel pump pressure			I
Body and Chassis			
Cage fasteners		T	

DEEP MUD / WATER	A+	A	B
A = Adjust C = Clean I = Inspect L = Lubricate R = Replace T = Torque	6 months or 100 hours or 1500 km (1000 mi)	Every year or 200 hours or 3000 km (2000 mi)	Every 2 years or 400 hours or 6000 km (4000 mi)
Air and Fuel Delivery			
Engine air filter	I,C,R		
Fuel tank vent filter		R	
Canister vent pre-filter (CARB and EVAP models)			R
Fuel components and function*			I
Fuel pump pressure			I
Body and Chassis			
Cage fasteners		T	

New Maintenance Charts / Checklists

Better understanding of the maintenance intervals.

Whether based on calendar time, vehicle hours, or odometer reading, you will be better equipped to recommend the correct interval according to your customer's usage of the vehicle.

Your customers driving habits determines the factors to adhere too. For example:
– Someone who uses their vehicle every other weekend trail riding with friends would most likely follow the odometer reading to determine the maintenance interval.

– Someone who uses their vehicle seldomly over the year or only on a few occasions (hunting, camping) would most likely follow the calendar time to determine the maintenance interval.

– Someone who uses their vehicle daily / weekly for long periods of time such as agricultural / work would most likely follow the vehicle hours to determine the maintenance interval.

SEVERE DUTY	A+	A	B
A = Adjust C = Clean I = Inspect L = Lubricate R = Replace T = Torque	6 months or 100 hours or 1500 km (1000 mi)	Every year or 200 hours or 3000 km (2000 mi)	Every 2 years or 400 hours or 6000 km (4000 mi)

Don’t forget to subscribe to the Product Specialist blog post

- By doing so you will be sure to be kept up to date of all the most critical communication for your products.

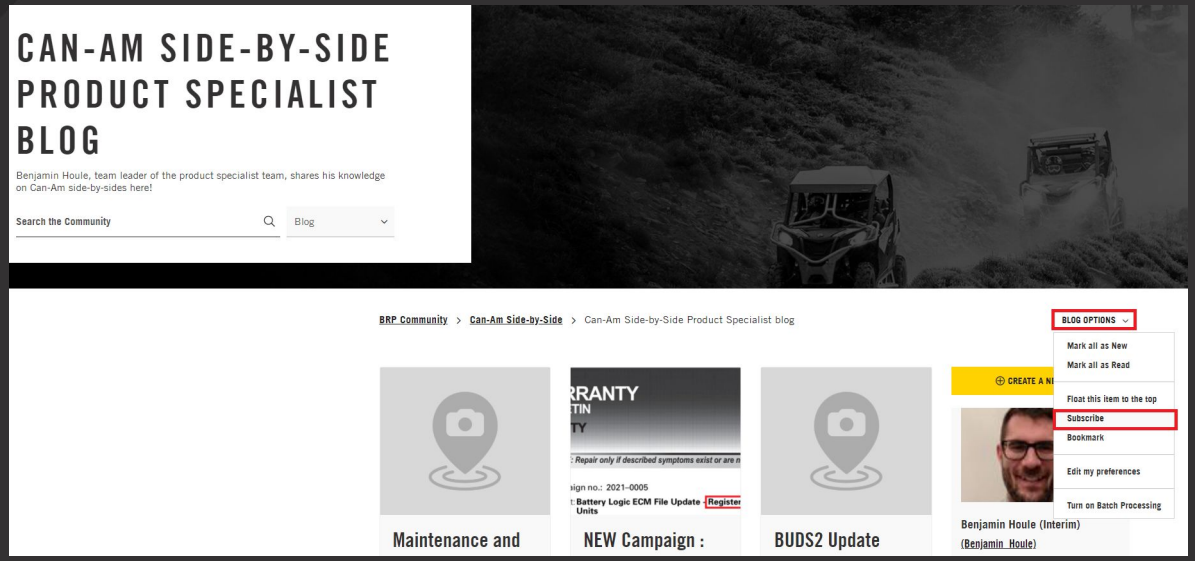

CLUB BRP 2022

can-am

Defender Series (excluding European Union and United Kingdom)
Traxter Series

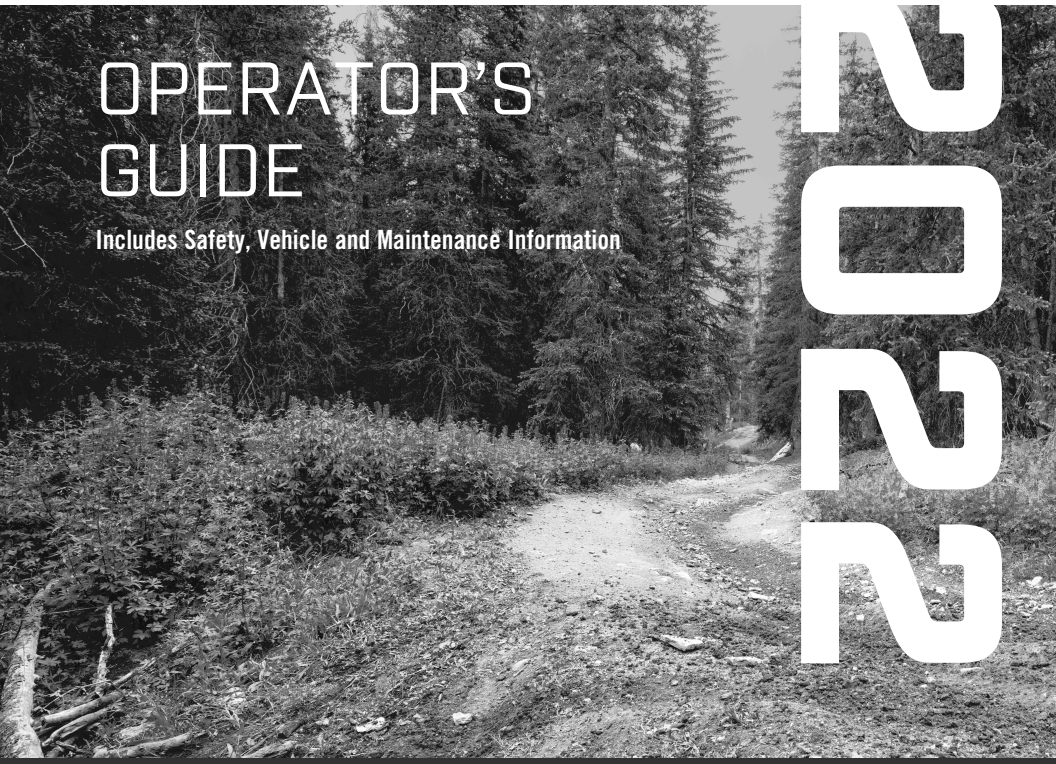

OPERATOR'S GUIDE

Includes Safety, Vehicle and Maintenance Information

2022

⚠ WARNING

Read this operator's guide thoroughly. It contains important safety information.
Minimum recommended operator age: 16 or older with a valid driver's license. Keep this operator's guide with the vehicle at all times.
The removal or modification of evaporative emission-related parts on this OHRV is illegal. Violators may be subject to civil and/or criminal penalties under California and federal law.

219002237

Original Instructions

⚠ WARNING

YOUR VEHICLE CAN BE HAZARDOUS TO OPERATE. A collision or roll-over can occur quickly, if you fail to take proper precautions, even during routine maneuvers such as turning and driving on hills or over obstacles. For your safety, understand and follow all the warnings contained in this operator's guide and on the labels on your vehicle. Failure to follow these warnings can result in SEVERE INJURY OR DEATH.
Keep this operator's guide with the vehicle at all times.

⚠ WARNING

Disregarding any of the safety precautions and instructions contained in the operator's guide, SAFETY VIDEO and on-product safety labels could cause injury including the possibility of death.

⚠ WARNING

This vehicle may exceed the performance of other vehicles you may have ridden in the past. Take time to familiarize yourself with your new vehicle.

CALIFORNIA PROPOSITION 65 WARNING

⚠ WARNING

Operating, servicing and maintaining an off-road vehicle can expose you to chemicals including engine exhaust, carbon monoxide, phthalates, and lead, which are known to the State of California to cause cancer and birth defects or other reproductive harm. To minimize exposure, avoid breathing exhaust, do not idle the engine except as necessary, service your vehicle in a well-ventilated area and wear gloves or wash your hands frequently when servicing your vehicle. For more information go to www.p65warnings.ca.gov/products/passenger-vehicle.

™® Trademarks of BRP or its affiliates.
This is a non-exhaustive list of trademarks that are the property of Bombardier Recreational Products Inc. or its affiliates:

Can-Am®	D.E.S.S.™	DPS™
ROTAX®	TTI™	XPS™

Deutsch	Dieses Handbuch ist möglicherweise in Ihrer Landessprache verfügbar. Bitte wenden Sie sich an Ihren Händler oder besuchen Sie: **www.operatorsguides.brp.com**
English	This guide may be available in your language. Check with your dealer or go to: **www.operatorsguides.brp.com**
Español	Es posible que este manual esté disponible en su idioma. Consulte a su distribuidor o visite: **www.operatorsguides.brp.com**
Français	Ce guide peut être disponible dans votre langue. Vérifier avec votre concessionnaire ou aller à: **www.operatorsguides.brp.com**
Italiano	Questa guida potrebbe essere disponibile nella propria lingua. Contattare il concessionario o consultare: **www.operatorsguides.brp.com**
中文	本手册可能有您的语种的翻译版本。请向经销商问询，或者登录 **www.operatorsguides.brp.com** 查询。
日本語	このガイドは、言語によって翻訳版が用意されています。. ディーラーに問い合わせるか、次のアドレスでご確認ください： **www.operatorsguides.brp.com**
Nederlands	Deze handleiding kan beschikbaar zijn in uw taal. Vraag het aan uw dealer of ga naar: **www.operatorsguides.brp.com**
Norsk	Denne boken kan finnes tilgjengelig på ditt eget språk. Kontakt din forhandler eller gå til: **www.operatorsguides.brp.com**
Português	Este manual pode estar disponível em seu idioma. Fale com sua concessionária ou visite o site: **www.operatorsguides.brp.com**
Русский	Воспользуйтесь руководством на вашем языке. Узнайте о его наличии у дилера или на странице по адресу **www.operatorsguides.brp.com**
Suomi	Käyttöohjekirja voi olla saatavissa omalla kielelläsi. Tarkista jälleenmyyjältä tai käy osoitteessa: **www.operatorsguides.brp.com**
Svenska	Denna bok kan finnas tillgänglig på ditt språk. Kontakta din återförsäljare eller gå till: **www.operatorsguides.brp.com**

Covered Models	
Defender HD7 Defender DPS HD7	Traxter HD7 Traxter XU HD7
Defender HD9 Defender DPS HD9 Defender DPS HD9 (with CAB) Defender XT HD9 Defender XU HD9	Traxter HD9 Traxter DPS HD9 Traxter XU HD9
Defender DPS HD10 Defender Limited HD10 Defender XT HD10	Traxter XT HD10 Traxter XU HD10

In Canada, products are distributed and serviced by Bombardier Recreational Products Inc. (BRP).

In the USA, products are distributed and serviced by BRP US Inc.

In the European Economic Area (which is comprised of the member states of the European Union plus the United Kingdom, Norway, Iceland and Liechtenstein), the Commonwealth of the Independent States (including Ukraine and Turkmenistan) and Turkey, products are distributed and serviced by BRP European Distribution S.A. and other affiliates or subsidiaries of BRP.

For all other countries, products are distributed and serviced by Bombardier Recreational Products Inc. (BRP) or its affiliates.

TABLE OF CONTENTS

GENERAL INFORMATION

GENERAL INFORMATION 10
Know Before you Go 10
Safety Messages 10
About this Operator's Guide 10

SAFETY INFORMATION

GENERAL PRECAUTIONS 14
Avoid Carbon Monoxide Poisoning 14
Avoid Gasoline Fires and Other Hazards 14
Avoid Burns from Hot Parts 14
Accessories and Modifications 14
SAFE OPERATION - RESPONSIBILITIES 16
Owner - Be Responsible 16
Operator - Be Qualified and Responsible 16
Riding Carefully 17
Occupant Restraint System 18
Terrain Condition 18
PRE-RIDE INSPECTION 19
Pre-Ride Inspection Check List 19
PREPARE TO RIDE 22
Before you Ride 22
Riding Gear 22
AVOID ACCIDENTS 25
Avoid Rollovers and Tipovers 25
Avoid Collisions 26
RIDING YOUR VEHICLE 27
Practice Exercises 27
Off-Road Operation 28
General Riding Techniques 28
MOVING LOADS AND DOING WORK 34
Working with Your Vehicle 34
Carrying Loads 34
Hauling a Load 37
Pulling a Trailer 37
IMPORTANT ON-PRODUCT LABELS (CANADA/UNITED STATES) 39
Safety Hang Tag 39
Safety Labels 40
Molded Safety Pictogram 53
Compliance HangTag 54
IMPORTANT ON-PRODUCT LABELS (ALL COUNTRIES EXCEPT CANADA/UNITED STATES) 55
Safety Labels 55
Molded Safety Pictogram 67

REPORTING SAFETY DEFECTS 68

VEHICLE INFORMATION

PRIMARY CONTROLS 70
Steering Wheel 71
Accelerator Pedal 71
Brake Pedal 71
Shift Lever 71
SECONDARY CONTROLS 73
Ignition Switch and Keys 75
2WD/4WD Switch 76
Rear Differential Lock Switch 76
Keypad 77
Climate Controls 77
Horn Switch (On applicable models) 77
Winch Switch 78
Headlight Dimmer Switch 78
Power Window Switches 78
Wiper / Windshield Washer Switch 79
EQUIPMENT 80
Tilt Steering 80
Cup Holders 80
Passengers Handhold 81
Storage Compartments 81
Tool Kit 83
Footrests 83
Side Nets 83
Shoulder Guards 84
Seat Belts 84
Driver's Seat 85
Passenger Seats 85
Fuel Reservoir Cap 85
Winch 86
Cargo Box 86
Cargo Box Tilt Release Handles 86
Anchoring Hooks 87
Tailgate 87
Trailer Hitch 87
12-Volt Power Outlets 87
USB Power Outlet 88
Rock Sliders 88
Front Bumper 88
Brake Holding Mechanism 88
Full Doors With Electric Windows 89
Windshield with Wiper 90
Climate Control System 91
Rear Deflector 94
4.5” DIGITAL DISPLAY 95
Multifunction Display 95
Warning Lamps and Indicators 96
Settings 97

7.6" DIGITAL DISPLAY (KEYPAD) 99
Basic Functions 99
Settings 101
FUEL 103
Fuel Requirements 103
Vehicle Fueling Procedure 103
BREAK-IN PERIOD 105
Operation During Break-In 105
BASIC PROCEDURES 106
Starting the Engine 106
Operating the Shift Lever 106
Choosing the Correct Range (Low or High) 106
Stopping the Engine and Parking the Vehicle 107
Tips for Maximizing Drive Belt Durability 107
SPECIAL PROCEDURES 108
Fuel Flooded Engine 108
What to do if Water is Suspected to be in the CVT 108
What to do if Battery is Drained Out 108
What to Do if Vehicle Rolled Over 108
What to do if Vehicle is Submerged 109
TUNE YOUR RIDE 110
Suspension Adjustment 110
DPS Function (If equipped) 110
TRANSPORTING THE VEHICLE 111
Using Vehicle Power to Climb Onto Trailering Equipment 112
Using a Winch to Pull Vehicle Onto Trailering Equipment 112
Securing Vehicle for Transport 113
Getting Vehicle Out of Trailer 113
LIFTING AND SUPPORTING THE VEHICLE 114
Front of Vehicle 114
Rear of Vehicle 114

MAINTENANCE

MAINTENANCE SCHEDULE 116
EPA Regulation - Canadian and USA Vehicles 116
Air Filter Maintenance Guideline 116
Severe Duty Use 117
Deep Mud / Water Use 118
Maintenance Schedule 118
MAINTENANCE PROCEDURES 132
Engine Air Filter 132
CVT Air Filter 133
Evaporative Emission System Pre-Filter (If Equipped) 134
Engine Oil 134
Oil Filter 138
Radiator 139
Engine Coolant 140
Heating/Air Conditioning Air Filter (if equipped) 142
Air Conditioning Compressor Belt 144
Muffler and Spark Arrester 144
Gearbox 145

Front Differential 148
Rear Final Drive (Mono Cylinder Models Only) 150
CVT Cover 151
Drive Belt 152
Drive and Driven Pulleys 153
Spark Plugs 154
Battery 154
Fuses and Fusible Links 155
Lights 158
Drive Shaft Bellow and Protector 158
Wheel Bearing 159
Wheels and Tires 159
Suspensions 160
Brakes 161
Seat Belts 162
Doors 162
Cage 162
VEHICLE CARE 164
Post-Operation Care 164
Vehicle Cleaning and Protection 164
STORAGE AND PRESEASON PREPARATION 165

TECHNICAL INFORMATION

VEHICLE IDENTIFICATION 168
Vehicle Identification Number 168
Engine Identification Number (EIN) 168
Technical Information Hang Tag 169
Technical Information Label 170
Compliance Label 171
EVAPORATIVE EMISSION CONTROL SYSTEM 173
NOISE EMISSION CONTROL SYSTEM REGULATION 174
NOISE EMISSION AND VIBRATION VALUES (MACHINERY DIRECTIVE 2006/42/EC COMPLIANCE MODELS) 175
EU - DECLARATION OF CONFORMITY 176
UK – DECLARATION OF CONFORMITY 177
EAC DECLARATION OF CONFORMITY 178

TECHNICAL SPECIFICATIONS

TECHNICAL SPECIFICATIONS 180

TROUBLESHOOTING

TROUBLESHOOTING GUIDELINES 192
CVT Belt Is Slipping 192
“–” Is Displayed On the Gearbox Position Display 192
Engine Does Not Turn 192
Engine Turns Over But Fails To Start 192
Engine Lacks Acceleration or Power 193
Engine Overheats 194

Engine Misfire 194
The RPM Increases But the Vehicle Does Not Move 194
Partial or No Response From the Accelerator Pedal - Check Engine Is ON and PPS Fault Message Is Displayed 195
AUDIO SYSTEM – TROUBLESHOOTINGA 196
Unit Does Not Turn On 196
System Will Not Power On 196
Amps Not Turning On 196
No Audio Will Play 196
No Sound or Low Sound from a Specific Zone or All Zones 196
Speakers Are Malfunctioning 196
Volume Knob Malfunctioning 196
DIGITAL DISPLAY MESSAGES 197

WARRANTY

BRP LIMITED WARRANTY USA AND CANADA: 2022 CAN-AM® SSV .. 200
1) SCOPE OF THE LIMITED WARRANTY 200
2) LIMITATIONS OF LIABILITY 200
3) EXCLUSIONS – ARE NOT WARRANTED 200
4) Warranty Coverage Period 201
5) CONDITIONS TO HAVE WARRANTY COVERAGE 201
6) WHAT TO DO TO OBTAIN WARRANTY COVERAGE 202
7) WHAT BRP WILL DO 202
8) ADDITIONAL SUPPLIER WARRANTIES 202
9) TRANSFER 202
10) CONSUMER ASSISTANCE 202
US EPA EMISSION - RELATED WARRANTY 203
Emission-Related Warranty Period 203
Components Covered 203
Limited Applicability 204
CALIFORNIA EVAPORATIVE EMISSIONS CONTROL WARRANTY STATEMENT 206
Your Warranty Rights And Obligations 207
OHRV Manufacturer's Warranty Coverage 207
Owner's Warranty Responsibilities 208
BRP INTERNATIONAL LIMITED WARRANTY: 2022 CAN-AM® SSV 209
1) SCOPE OF THE LIMITED WARRANTY 209
2) LIMITATIONS OF LIABILITY 209
3) EXCLUSIONS ARE NOT WARRANTED 209
4) Warranty Coverage Period 210
5) CONDITIONS TO HAVE WARRANTY COVERAGE 211
6) WHAT TO DO TO OBTAIN WARRANTY COVERAGE 212
7) WHAT BRP WILL DO 212
8) TRANSFER 212
9) CONSUMER ASSISTANCE 212
BRP LIMITED WARRANTY FOR THE EUROPEAN ECONOMIC AREA, THE COMMONWEALTH OF THE INDEPENDENT STATES AND TURKEY: 2022 CAN-AM® SSV 213
1) SCOPE OF THE LIMITED WARRANTY 213
2) LIMITATIONS OF LIABILITY 213
3) EXCLUSIONS – ARE NOT WARRANTED 214

4) WARRANTY COVERAGE PERIOD 214
5) CONDITIONS TO HAVE WARRANTY COVERAGE 215
6) WHAT TO DO TO OBTAIN WARRANTY COVERAGE 215
7) WHAT BRP WILL DO 215
8) TRANSFER 216
9) CONSUMER ASSISTANCE 216
MAINTENANCE RECORDS 218

CUSTOMER INFORMATION

PRIVACY INFORMATION 224
CHANGE OF ADDRESS AND OWNERSHIP 226

GENERAL INFORMATION

GENERAL INFORMATION

Congratulations on your purchase of a new Can-Am® side-by-side vehicle. It's backed by the BRP limited warranty and a network of authorized Can-Am Off-road dealers ready to provide the parts, accessories or service you may require.

At delivery, you were informed of the warranty coverage and signed the Pre-delivery Check List to ensure your new vehicle was prepared to your entire satisfaction.

Your dealer is committed to your satisfaction. If you need more information, please ask your dealer.

Know Before you Go

To learn how to reduce the risk of accident for you or bystanders, read this Operator's Guide before you operate the vehicle.

Also, read all safety labels on your vehicle and watch the *Safety Video* located at:

https://can-am. brp. com/off road/ safety

Or use the following QR code.

This vehicle is for off-road use only. It is mainly for general recreational use but it may also be used for utility purposes.

Failure to follow the warnings contained in this Operator's Guide can result in SERIOUS INJURY or DEATH.

Safety Messages

The types of safety messages, what they look like and how they are used in this guide are explained as follows:

The safety alert symbol ⚠ indicates a potential injury hazard.

⚠ WARNING
Indicates a potential hazard which, if not avoided, could result in serious injury or death.

⚠ CAUTION
Indicates a hazardous situation which, if not avoided, could result in minor or moderate injury.

NOTICE
Indicates an instruction which, if not followed, could result in severely damaged vehicle components or other property.

About this Operator’s Guide

This Operator's Guide has been prepared to acquaint the owner/operator of a new vehicle with the various vehicle controls, maintenance and safe operating instructions. It is indispensable for the proper use of the product.

Keep this Operator's Guide in the vehicle as you can refer to it for things such as maintenance, troubleshooting and instructing others.

Note that this guide is available in several languages. In the event of any discrepancy, the English version shall prevail.

If you want to view and/or print an extra copy of your Operator's Guide, simply visit the following website:

www.operatorsguides.brp.com

The information contained in this document is correct at the time of

publication. BRP, however, maintains a policy of continuous improvement of its products without imposing upon itself any obligation to install them on products previously manufactured. Due to late changes, some differences between the manufactured product and the descriptions and/or specifications in this guide may occur. BRP reserves the right at any time to discontinue or change specifications, designs, features, models or equipment without incurring any obligation upon itself.

This Operator's Guide should remain with the vehicle when it is sold.

This page is intentionally blank

SAFETY INFORMATION

GENERAL PRECAUTIONS

Avoid Carbon Monoxide Poisoning

All engine exhaust contains carbon monoxide, a deadly gas. Breathing carbon monoxide can cause headaches, dizziness, drowsiness, nausea, confusion and eventually death.

Carbon monoxide is a colorless, odorless, tasteless gas that may be present even if you do not see or smell any engine exhaust. Deadly levels of carbon monoxide can collect rapidly, and you can quickly be overcome and unable to save yourself. Also, deadly levels of carbon monoxide can linger for hours or days in enclosed or poorly ventilated areas. If you experience any symptoms of carbon monoxide poisoning, leave the area immediately, get fresh air and seek medical treatment.

To prevent serious injury or death from carbon monoxide:

– Never run the vehicle in poorly ventilated or partially enclosed areas such as garages, carports or barns. Even if you try to ventilate engine exhaust with fans or open windows and doors, carbon monoxide can rapidly reach dangerous levels.
– Never run the vehicle outdoors where engine exhaust can be drawn into a building through openings such as windows and doors.

Avoid Gasoline Fires and Other Hazards

Gasoline is extremely flammable and highly explosive. Fuel vapors can spread and be ignited by a spark or flame many feet away from the engine. To reduce the risk of fire or explosion, follow these instructions:

– Use only an approved gasoline container to store fuel.
– Never fill the gasoline container in the vehicle cargo box or on the vehicle - an electrical static discharge may ignite the fuel.
– Strictly adhere to instructions in *Vehicle fueling procedure*.
– Never start or operate the engine if the fuel cap is not properly installed.

Gasoline is poisonous and can cause injury or death.

– Never siphon gasoline by mouth.
– If you swallow gasoline, get any in your eye(s), or inhale gasoline vapor, see a doctor immediately.

If gasoline spills on you, wash with soap and water and change your clothes.

Avoid Burns from Hot Parts

Certain components like brake rotors and exhaust components become hot during operation. Avoid contact with those parts during and shortly after operation to avoid burn wounds.

Accessories and Modifications

Any modifications or addition of accessories approved by BRP may affect the handling of your vehicle. It is important to take the time to get familiar with the vehicle once modifications are made to understand how to adapt your driving behavior accordingly.

Avoid installing equipment not specifically approved by BRP for the vehicle and avoid unauthorized modifications. These modifications and equipment have not been tested by BRP and may create hazards. For example, they could:

– Create a loss of control and increase risk of crash
– Cause overheating or short circuits increasing the risk of fire or burn injuries
– Affect the protection features provided by the vehicle.

Your vehicle may also become illegal to ride.

As an example, installing an additional GPS or cell phone support may prevent the driving capabilities of the vehicle and increase the risk of a loss of control.

Ask your authorized BRP dealer for suitable available accessories for your vehicle.

SAFE OPERATION - RESPONSIBILITIES

This is a high performance off-road vehicle. Operators must be responsible and use care to avoid rollovers, tipovers, collisions, and other accidents. Even with vehicle safety features (such as protective structure, seat belts, side nets, doors) and protective gear (such as a helmet), there is always a risk of injury or death in these accidents. To reduce the risk of serious injury or death, follow the rules in this section.

Owner - Be Responsible

Read this Operator's Guide and watch the *Safety Video*. Refer to the link at the beginning of the Operator's Guide.

Always inspect and confirm the safe operating condition of your vehicle prior to ride. Always follow the maintenance schedule described in this Operator's Guide.

Never allow anyone to operate your vehicle unless they are responsible and can be trusted with a high performance vehicle. Consider supervising new or young operators and setting rules and limits (e.g., whether they can carry passengers, what they may do with the vehicle, where they may ride, etc.) for anyone using your vehicle.

If equipped with optional D.E.S.S. keys, select the appropriate key (see *Ignition Switch and Keys*) based on the operator's experience, vehicle use and environment.

Discuss the safety information with anyone who will be using the vehicle. Be sure that all operators and passengers meet the qualifications below and agree to follow the safety information. Help users become familiar with the vehicle.

We encourage you to have an Annual Safety Inspection of your vehicle. Please contact an authorized BRP dealer for further details. Though not required, it is recommended that an authorized BRP dealer performs the preseason preparation of your vehicle. Each visit to your authorized BRP dealer is a great opportunity for your dealer to verify if your vehicle is included in any safety campaign. We also urge you to visit your authorized BRP dealer in a timely manner if you become aware of any safety related campaigns.

See an authorized BRP dealer for available accessories you may require.

Operator - Be Qualified and Responsible

Read this Operator's Guide and watch the *SAFETY video*. Refer to the link at the beginning of the Operator's Guide.

Become completely familiar with the operational controls and the general operation of the vehicle.

Take a training course if available (contact an authorized Can-Am dealer to find out about training course availability as well as on the internet at http://www.rohva.org/), and perform the practice exercises in *Practice Exercises* section. Practice driving in a suitable area free of hazards and feel the response of each control. Drive at low speeds. Higher speeds require greater experience, knowledge and suitable riding conditions.

Be at least 16 years of age.

Be tall enough to be properly seated: back against the backrest with the seat belt fastened, to hold the steering wheel with both hands and still be able to reach the full stroke of brake and accelerator pedals with the right foot and to firmly plant left foot on the footrest.

Have a proper driver's license in accordance with local laws.

Never use this vehicle with drugs or alcohol, or if tired or ill. These slow reaction time and impair judgment.

Carrying Passengers

Only carry a maximum of two (2) passengers. The passengers must be properly seated in the cockpit.

The passengers must be tall enough to always be properly seated: back against the backrest with seat belt fastened, holding the handhold, and feet firmly planted - for the RH passenger, with right foot on the footrest and the left foot on the vehicle floor and for the central passenger, with both feet firmly planted on the floor.

Never carry passengers who have used drugs or alcohol, or are tired or ill. These slow reaction time and impair judgment.

Instruct the passengers to read the vehicle’s safety labels.

Never carry passengers if you judge their ability or judgement insufficient to concentrate on the terrain conditions and adapt accordingly. More specifically for side-by-side vehicles, the passenger must also pay constant attention to the terrain ahead and be able to brace for bumps.

Riding Carefully

– This vehicle handles differently from other vehicles. A collision or rollover can occur quickly, during abrupt maneuvers such as doing sharp turns, acceleration or deceleration and driving on hills or over obstacles, if you fail to take proper precautions.
– Never operate at excessive speeds. Always go at a speed that is proper for the terrain, visibility, and operating conditions, and your experience.
– Never attempt jumps, side slides, donuts or any other stunts.
– Never attempt rapid acceleration or deceleration when performing a sharp turn. This may result in a roll over.
– Never attempt skidding or sliding. If vehicle starts to skid or slide, counter steer in the direction of skidding or sliding. On extremely slippery surfaces, such as ice, go slowly and be very cautious in order to reduce the chance of skidding out of control.
– Always be sure there are no obstacles or people behind the vehicle when you operate in reverse. Pay attention to blind spots. When it is safe to proceed in reverse, go slowly.
– Never exceed the stated load limits for this vehicle. Cargo must be properly secured. Reduce speed, allow for greater braking distance and follow other instructions in *Moving Loads and Doing Work*.
– Always remember that this vehicle is heavy! Its pure weight alone may entrap you should it tip or rollover.

Occupant Restraint System

– This vehicle is designed to carry one (1) driver and up to two (2) passengers, all wearing proper protective gears (refer to *Riding Gear* in this section).
– Doors or side nets must be latches and the seat belts buckled at all times when vehicle is moving.

Terrain Condition

– This vehicle is not designed to ride on paved surfaces; if you must shortly use the vehicle on such surfaces, avoid abrupt inputs to steering wheel, accelerator and brake pedals.
– Always go slowly and be extra careful when operating on unfamiliar terrain. Always be alert to changing terrain conditions when operating this vehicle. Take the time to learn how the vehicle performs in different environments.
– Never operate on excessively rough, slippery or loose terrain until you have learned and practiced the skills necessary to control this vehicle on such terrain. Always be especially cautious on these kinds of terrain.
– Never operate this vehicle on hills too steep for the vehicle or your abilities. Practice on small inclines.
– Always follow proper procedures for climbing or going down hills as described in *Riding Your Vehicle*. Check the terrain carefully before you start up or down any hill. Never climb or descend hills with excessively slippery or loose surfaces. Never go over the top of any hill at high speed.
– Never attempt steep hills or side hilling when pulling a trailer.
– Always check for obstacles before operating in a new area. Always follow proper procedures when operating over obstacles as described in *Riding Your Vehicle*.
– Never operate this vehicle in fast flowing water or in water deeper than specified in *Riding Your Vehicle*. Remember that wet brakes may have reduced stopping ability. Test your brakes after leaving water. If necessary, apply them several times to let friction dry out the brakes.
– Always ensure to properly park the vehicle on the flattest terrain section available. Put shift lever in PARK, stop engine and remove key before leaving the vehicle.
– If parking on a slope is inevitable, Placing a large rock or similar object behind a wheel to block it from moving is recommended.
– Never assume that the vehicle will go everywhere safely. Sudden changes in terrain caused by holes, depressions, banks, softer or harder “ground” or other irregularities may cause the vehicle to topple or become unstable. To avoid this, slow down and always observe the terrain ahead. If the vehicle does begin to topple or rollover, the best advice is to immediately steer in the direction of the rollover! Never attempt to prevent a rollover with your arms or legs. You should keep your limbs inside the cage or ROPS (rollover protective structure).

PRE-RIDE INSPECTION

Always inspect and confirm the safe operating condition of your vehicle prior to ride.

Always follow the maintenance schedule described in this Operator's Guide.

⚠ WARNING
Perform a pre-ride inspection before each ride to detect any potential problem that could occur during operation. The pre-ride inspection can help you monitor component wear and deterioration before they become a problem. Correct any problem that you discover to reduce the risk of a breakdown or crash.

Before using this vehicle, the operator should always perform the following pre--ride inspection check list.

Refer to *Maintenance Procedures* for details.

Pre-Ride Inspection Check List

What to Do Before Starting the Engine (Key OFF)

Items to Be Inspected	Inspection to Perform	✓
Tires	Check tire pressure and condition. Refer to *Technical Specifications* and adjust according to load.	
Wheels	Check wheels for damage and for abnormal play. Make sure that lug nuts are tightened. Refer to *Wheels and Tires* in *Maintenance Procedures* for torque specification.	
Cargo and load	**Cargo Load:** If you transport a cargo, respect the maximum loading capacity. Refer to *Loading the Cargo Box*. Ensure cargo is properly secured to the rear cargo box. **Vehicle Load:** Ensure that total load on the vehicle (including operator, passengers, cargo, tongue weight and added accessories) does not exceed specifications. Refer to *Carrying Loads*.	
Rear cargo box	Check if the cargo box is properly latched.	
	Check if tailgate is properly latched.	
Radiator	Check cleanliness of the radiator.	
Front grille	Inspect front grille for cleanliness.	
Engine oil	Check engine oil level.	
Coolant	Check coolant level.	

Items to Be Inspected	Inspection to Perform	✓
Brake fluid	Check brake fluid level.	
Engine air filter	Inspect the engine air filter, clean or replace if needed (service more often when riding in dusty conditions).	
CVT air filter	Inspect and clean the CVT air filter (when riding in dusty conditions).	
Drive shaft bellows	Check drive shaft bellows and protectors condition.	
Chassis and suspension	Check underneath vehicle for any debris on chassis or suspension and clean them properly.	
Brake holding mechanism (If equipped)	Apply brake holding mechanism and check if it operates properly.	
Heater air filters (if equipped)	Inspect heater air filters, clean if needed (service more often when riding in dusty conditions).	
Hitch	If you are pulling a trailer or another equipment: – Check hitch and trailer ball condition. – Respect the tongue capacity and towing capacity as indicated on the label affixed to the hitch or refer to *Technical specifications*. – Ensure trailer is properly secured to hitch.	

What to Do Before Starting the Engine (Key ON)

Items to Be Inspected	Inspection to Perform	✓
Gauge	Check operation of indicator lamps in gauge (during first few seconds of key ON).	
	Check for messages in gauge.	
Lights	Check operation and cleanliness of headlights and taillights.	
	Check operation of high and low beam.	
	Check operation of brake lights.	
Accelerator pedal	Press on the accelerator pedal a few times to ensure it operates freely and it returns to the rest position when released.	

Items to Be Inspected	Inspection to Perform	✓
Brake pedal	Press down on the brake pedal and make sure you feel firm resistance and that it fully returns to position when released.	
Fuel level	Check the fuel level.	
Seats, side nets and seat belts	Check if seats are properly latched.	
	Check side nets for any damage. Have the nets replaced if any damage is found. Fasten both side nets and confirm that they latch securely. Use the adjustment strap to tighten the net as required.	
	Check seat belts for any damage. Fasten seat belts and confirm that they latch securely.	
Mirror(s)	Adjust mirror(s) to your preferences.	
Horn	Check horn operation.	
Heater fan (if equipped)	Check operation of heater fan. Check air flows out of every louver (dash-mounted and heater-mounted).	

What to Do After the Engine is Started

Items to Be Inspected	Inspection to Perform	✓
Steering	Check if steering wheel operates freely by completely turning it from side to side.	
Ignition switch	Turn the ignition switch to OFF to verify if engine will shut down. Restart engine.	
Shift lever	Check operation of shift lever (P, R, N, H and L).	
2WD/4WD selector	Check operation of 2WD/4WD selector.	
Brakes	Drive forward slowly a few feet and apply brakes. The brake pedal must feel firm when applied. The pedal must return to rest position when released. The brakes must respond adequately to the driver's input.	
Winch (if equipped)	Check operation of winch.	

PREPARE TO RIDE

Before you Ride

Perform pre-ride inspection to confirm the safe operating condition of your vehicle. Refer to *Pre-Ride Inspection*.

Driver and passengers must:

– Be properly seated.
– Latch nets or doors.
– Fasten seat belt.
– Wear appropriate riding gear. Refer to *Riding Gear*.

Riding Gear

It is important that the operator and passengers always wears appropriate protective clothing and apparel, including:

– An approved helmet
– Eye protection
– Boots
– Gloves
– A long sleeved shirt or jacket
– Long pants.

Depending on conditions, anti-fogging goggles may be required.

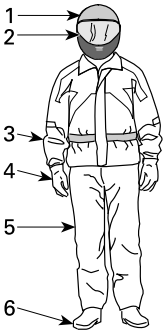

RIDING GEAR

1. *Approved helmet*
2. *Eye and face protection*
3. *Long sleeves shirt or jacket*
4. *Gloves*
5. *Long pants*
6. *Boots (over-the-ankle footwear)*

Weather conditions should help you decide how to dress. To maximize comfort and avoid frostbites in winter, dress for the coldest weather expected. Thermal underwear next to the skin also provides good insulation.

Never wear any loose clothing that may get entangled in the vehicle or on tree branches and shrubs.

Helmets and Eye Protection

Helmets protect the head and brain from injury. Even with the vehicle's cage and side nets, objects can enter the cockpit and strike the head, or the head can strike the cage itself or objects outside the vehicle. Even the best helmet is no guarantee against injury, but statistics indicate that helmet use significantly reduces the risk of brain injury. So, be safe and always wear a helmet while riding.

Choosing a Helmet

Helmets should be manufactured to meet the appropriate standard in your state, province or country and should fit properly.

A helmet with face protection is a better choice as it protects also against frontal impacts. It can also protect against debris, stones, insects, the elements, etc.

An open-face helmet does not offer the same protection for the face and chin. If you wear an open-face helmet, you should use a snap-on face shield and/or a pair of goggles. Ordinary glasses or sunglasses are not sufficient eye protection for riders. They can shatter or fly off, and they allow wind and airborne objects to reach the eyes.

For winter riding conditions, a stocking type cap, balaclava and face mask should always be carried or worn.

Use tinted face shields or goggles in the daytime only; do not use them at night or in poor illumination. Do not use them if they impair your ability to discern color.

Other Riding Gear

Footwear

Always wear closed toe footwear. Sturdy over-the-ankle boots with non-slip soles offer more protection and allow you to plant your foot properly on footrest.

Avoid long shoelaces that can be tangled in the accelerator or brake pedals.

For winter riding conditions, rubber soled boots with either a nylon or leather uppers, with removable felt liners are best suited.

Avoid rubber boots. Rubber boots may get trapped behind or between pedals, impairing the proper operation of brake and accelerator pedals.

Gloves

Full-fingered gloves protect hands from the wind, sun, heat, cold and flying objects. Gloves that fit snugly will improve grip on the steering wheel and help reduce hand fatigue. Sturdy, reinforced motorcycle or ATV gloves help protect hands better in the event of an accident or a rollover. If gloves are too bulky, it may be difficult to operate the controls.

For winter riding conditions, hands should be protected by a pair of snowmobile gloves which have sufficient insulation and allow use of thumbs and fingers for operation of controls.

Jackets, Pants and Riding Suits

Wear a jacket or a long sleeved shirt and long pants, or a full riding suit. Quality ATV-type protective gear will provide comfort, and it can help you avoid being

distracted by adverse environmental elements. In case of a crash, good quality protective gear made of sturdy material may prevent or reduce injury.

In cool-weather riding, protect yourself against hypothermia. Hypothermia, a condition of low body temperature, can cause loss of concentration, slowed reactions and loss of smooth, precise muscle movement. In cool conditions, proper protective gear like a windproof jacket and insulated layers of clothing are essential. Even while riding at moderate temperatures, you can feel very cold due to the wind.

Protective gear that is appropriate for cold-weather riding may be too hot when stopped. Dress in layers so that clothing can be removed as desired. Topping the protective gear with a windproof outer layer can prevent cold air from reaching the skin.

Rain Gear

If you must ride in wet weather, a rain suit or a waterproof riding suit is recommended. On long rides, it is a good idea to carry rain gear. A dry rider will be much more comfortable and alert.

Hearing Protection

Long-term exposure to wind and engine noise when riding can cause permanent hearing loss. Properly worn hearing protective devices such as earplugs can help prevent hearing loss. Check local laws before using any hearing protective devices.

AVOID ACCIDENTS

Avoid Rollovers and Tipovers

Side-by-side vehicles handle differently from other vehicles. Side-by-side vehicles are designed to handle off-road terrain (for example, their wheel base and track width, ground clearance, suspension, drivetrain, tires, etc.), and, as a result, can overturn in situations where vehicles designed for use primarily on paved or smooth terrain may not.

A rollover or other accident can occur quickly during abrupt maneuvers such as sharp turns or hard acceleration or deceleration when turning, or when driving on hills or over obstacles. Abrupt maneuvers or aggressive driving can cause rollovers or loss of control even in flat open areas. If the vehicle rolls over, any part of your body (such as arms, legs, or head) outside of the cockpit can be crushed and trapped by the cage or ROPS or other parts of the vehicle. You can also be injured by impact with the ground, cockpit or other objects.

To reduce the risk of rollovers:

- Use care when turning.
  - Do not turn the steering wheel too far or too fast for your speed and environment. Adjust steering inputs according to your speed and environment.
  - Slow down before entering a turn. Avoid hard braking during a turn.
  - Avoid sudden or hard acceleration when turning, even from a stop or low speed.
- Never attempt donuts, skids, slides, fishtails, jumps, or other stunts. If vehicle starts to skid or slide, steer in the direction of the skid or slide. Never slam the brakes and lock the wheels.
- Avoid paved surfaces. This vehicle is not designed to operate on paved surfaces and is more likely to roll over. If you must drive on pavement, turn gradually, go slowly, and avoid abrupt acceleration and braking.

This vehicle can roll over sideways or tip over forward or backwards on slopes or uneven terrain.

- Avoid side hilling (driving along the slope rather than up or down a hill). When possible, drive straight up and down inclines rather than across them. If you must side hill, use extreme caution and avoid slippery surfaces, objects, or depressions. If you feel the vehicle start to rollover or slide sideways, steer downhill if possible.
- Avoid steep hills and follow procedures in this guide for climbing and descending hills.
- Sudden changes in terrain such as holes, depressions, banks, softer or harder ground or other irregularities may cause the vehicle to tip or become unstable. Observe the terrain ahead and slow down in areas of uneven terrain.

This vehicle will handle differently when carrying or pulling a load.

- Reduce speed and follow instructions in this manual for carrying cargo or pulling a trailer.
- Avoid hills and rough terrain.
- Allow more distance to stop.

Be Prepared in Case of Rollover

- Fasten side nets and fasten seat belt to help you avoid sticking out arms or legs.

– Never grab the cage or ROPS while riding. Hands can be crushed between the cage or ROPS and the ground in a rollover. Keep hands on the steering wheel or handholds.
– Never try to stop a rollover using your arms or legs. If you think that the vehicle may tip or roll, the driver should keep both hands on the steering wheel and the left foot firmly planted on the footrest. The passengers should keep both hands on the handhold and both feet firmly planted on the floor.

Avoid Collisions

This vehicle can reach high speeds. At higher speeds, there is an increased risk of losing control, particularly in challenging off-road conditions, and the risk of injury in a collision is greater. Never operate at excessive speeds. Always go at a speed that is proper for the terrain, visibility, and operating conditions, and your experience. Consider reserving use of the performance key for situations in which full speed and acceleration capability are appropriate.

Never operate this vehicle on any public street, road or highway, even dirt or gravel ones. Riding your vehicle on roads or highways could result in a collision with another vehicle. This vehicle is not designed for operation on roads. For example, it does not meet motor vehicle safety standards that apply to automobiles. In many jurisdictions it is not legal to operate this vehicle on public roads.

This vehicle does not have the same kind of protection for collisions as a car; for example, there are no air bags, the cockpit is not fully enclosed, and it is not designed for collisions with other vehicles. Therefore, it is particularly important to fasten seat belts and side nets and wear an approved helmet.

RIDING YOUR VEHICLE

Practice Exercises

Before you go out for a ride, it is very important to familiarize yourself with the handling of your vehicle by practicing in a controlled environment. If possible, it is also a very good idea to take a more formal training course to sharpen your skills and increase your knowledge of the vehicle.

Find a suitable area to practice and perform the following exercises. It should be at least 45 m150 ft by 45 m150 ft free of obstacles like trees and rocks. Once you've selected a suitable permitted location, proceed with the following exercises.

Turning Exercises

Turning is one of the most frequent causes of accidents. It is easier for the vehicle to lose traction or rollover if you turn too sharply, or go too fast. Slow down when you approach a turn.

- First learn how to perform slight right turns at very low speeds. Release the throttle before turning and slowly reapply the throttle when turning.
- Repeat turning exercise but this time maintain the throttle at the level while turning.
- Finally, repeat turning exercise while accelerating slowly.
- Practice exercises turning on the other side.

Note how your vehicle reacts in these different exercises. We recommend releasing the throttle before entering a turn to help initiate directional change. You will feel the lateral force increasing with the speed and with your steering input. The lateral force should be maintained as low as possible to make sure it does not cause the vehicle to roll over.

U Turn Exercises

Practice doing U turns.

- Accelerate slowly and while remaining at low speed, then gradually turn the steering wheel to the right until you have completed the U turn.
- Repeat U turn exercise with different steering inputs and always at a very low speed.
- Repeat U turn exercise on the other side.

As mentioned before in this guide, do not ride on paved surfaces as the vehicle behavior will not be the same, increasing the risk of rollover.

Braking Exercises

Practice braking to get familiar with the brake response.

- Do it at low speed first, then increase the speed.
- Practice braking in straight line at different speeds and different braking force.
- Practice emergency braking; optimal braking is obtained in straight line, with high force applied, without locking the wheels.

Remember, braking distance depends on vehicle speed, load and the type of surface. Also, the tires and brakes conditions play a major role.

Reverse Exercises

The next step involves using the reverse.

– Install 1 cone marker on both sides of the vehicle beside each rear wheel. Move the vehicle forward until you can see the cone markers, then stop the vehicle. Acknowledge the distance required to see obstacles behind you.
– Learn how the vehicle handles itself in reverse and reacts with steering inputs.
– Always perform this reverse exercise at slow speeds.

Emergency Engine Stopping Exercise

Learn how to stop your engine quickly in an emergency situation.

– While running at low speed, simply turn the key to the off position.

This is to familiarize you with the vehicle's reaction when the engine is turned off while driving and to develop this reflex.

It is also important to be able to stop and exit the vehicle quickly.

– Immobilize the vehicle.
– Detach the seat belt and the net to exit the vehicle.

Off-Road Operation

The very nature of off-road operation is dangerous. Any terrain, which has not been specially prepared to carry vehicles, presents an inherent danger where terrain substance, shape and steepness are unpredictable. The terrain itself presents a continual element of danger, which must be knowingly accepted by anyone venturing over it.

An operator who takes a vehicle off-road should always exercise the utmost care in selecting the safest path and keeping close watch on the terrain ahead of him. The vehicle should never be operated by anyone who is not completely familiar with the driving instructions applicable to the vehicle, nor should it be operated on steep or treacherous terrain.

General Riding Techniques

General Driving Tips

Care, caution, experience and driving skill are the best precautions against the hazards of vehicle operation.

Whenever there is the slightest doubt that the vehicle can safely negotiate an obstacle or a particular piece of terrain, always choose an alternate route.

In off-road operation, power and traction, not speed, are important. Never drive faster than visibility and your own ability to select a safe route permit. Always go slowly and be extra careful when operating on unfamiliar terrain. Always be alert to changing terrain conditions when operating this vehicle. Be especially cautious on excessively rough, slippery, icy or loose terrain.

Constantly watch the terrain ahead for sudden changes in slopes or obstacles, such as rocks or stumps, that may cause loss of stability, resulting in tip over or rollover.

Never operate the vehicle if the controls do not function normally. See an authorized Can-Am Off-road dealer.

To maintain proper control it is strongly advised that you keep your hands on the steering wheel and within easy reach of all controls. The same holds true for your feet. To minimize the possibility of any leg or foot injury, keep your left foot on the footrest and right foot on the floor at all times. Staying completely within the cockpit will also help keep you from striking objects outside the vehicle.

Watch for and avoid branches and other objects that could enter the passenger compartment and strike you or your passengers.

Operating in Reverse

When operating in reverse, check that the path behind the vehicle is free of people or obstacles. Pay attention to blind spots. When it is safe to proceed in reverse, go slowly and avoid sharp turns.

⚠ WARNING

Steering inputs in reverse operation increase the risk of rollover.

NOTE:
In reverse operation, the engine RPM is limited thus limiting the vehicle reverse speed.

⚠ WARNING

When driving downhill in reverse, gravity can increase the vehicle speed above safe reverse speed.

Crossing Roads

If you have to cross a road, ensure to have complete visibility on both sides for incoming traffic and decide on exit point on other side of road. Drive in a straight line toward that point. Do not make sharp direction changes or abrupt accelerations as it may result in a rollover situation. Do not travel on sidewalks or bicycle trails as they are designated specifically for those uses.

Riding on Paved Surfaces

Avoid paved surfaces. This vehicle is not designed to operate on paved surfaces and is more likely to roll over. If you must drive on pavement, turn gradually, go slowly, and avoid abrupt acceleration and braking.

Shallow Water Crossing

Water can be a unique hazard. If it is too deep the vehicle may “float” and topple. Check the water depth and current before you attempt to cross any water. Water depth should not exceed the center of the wheels for vehicle to safely cross the obstacle. Beware of slippery surfaces such as rocks, grass, logs, etc., both in the water and on its banks. A loss of traction may occur. Do not attempt to enter the water at high speed.

Water will affect the braking ability of your vehicle. Make sure you dry the brakes by applying them several times after the vehicle leaves the water.

Mud or marsh lands may be encountered near water. Be prepared for sudden “holes” or changes in depth. Similarly so, be watchful of hazards such as rocks, logs, etc., partially covered by vegetation.

Riding on Snow or Ice

When performing pre-ride inspection, pay special attention to locations on the vehicle where snow and/or ice accumulations may obstruct visibility of the tail lamp, clog ventilation openings, block the radiator and fan, and interfere with the movement of controls. Before starting with your vehicle, check the steering, accelerator and brake pedals for interference free operation.

Whenever this vehicle is ridden on a snow covered drive path, the tire grip is generally reduced causing the vehicle to react differently to control inputs from the operator. On low grip surfaces, the steering responses are not as crisp and precise, stopping distances are lengthened and acceleration is also affected. Slow down and do not "gun" the accelerator. This will only result in spinning of the tires and possibly in an over steering slide of the vehicle. Avoid hard braking. This will possibly result in a straight line slide of the vehicle. Again, the best advice is to safely reduce speed in anticipation of a maneuver to give yourself time and distance in order to keep control of the vehicle.

As you drive your vehicle over a loose snow covered surface, snow dust will be picked up in the wake turbulence of the moving vehicle and transported to contact and accumulate or melt on some exposed components including rotating parts like brake discs. Water, snow or ice may affect the response time of the brake system of your vehicle. Even when not required to reduce vehicle speed apply brakes frequently to prevent ice or snow accumulation and to dry brake pads and discs. While doing so in low risk driving situations you will test for grip level and keep yourself alerted to how the vehicle reacts to your control inputs. Always keep brake and accelerator pedals and floor boards free of snow and ice. Frequently wipe snow off seat, steering wheel, headlights and tail lamps.

The depth of the snow cover may hide rocks, tree stumps or other objects and if it is wet may totally impede the drivability as the vehicle becomes bogged down or completely looses traction in slushy snow. Look far ahead and always be watchful of any visible clues that might indicate the presence of such obstacles. In doubt steer clear. Avoid driving on any frozen waterways before checking that the ice will safely support the vehicle, its riders and its load of cargo.

At the end of each ride it is a good practice to clean the vehicle and all moving components (brakes, steering components, drivelines, controls, radiator fan etc.) from any snow or ice accumulations. Wet snow will turn to ice during the shut down period and become more difficult to remove at the next pre-ride inspection.

Riding on Sand

Sand and riding on sand dunes is another unique experience but there are some basic precautions that should be observed. Wet, deep or fine sand may create a loss of traction and cause the vehicle to slide, drop off or become “bogged” down. If this occurs look for a firmer base. Again, the best advice is to slow down and be watchful of the conditions.

When riding in sand dunes it is advisable to equip the vehicle with an antenna type safety flag. This will help make your location more visible to others over the next sand dune. Proceed carefully should you see another safety flag ahead.

Riding on Gravel, Loose Stones or Other Slippery Surfaces

Riding on loose stones or gravel is very similar to riding on ice. They will affect the steering of vehicle, possibly causing it to slide and tip over especially at high speeds. In addition, braking distance may be affected. Remember that “gunning” the throttle or sliding may cause loose stones to be ejected rearwards into the path of another rider's way. Never do it deliberately.

If you do get into a slide or skid, it may help to turn the steering wheel into the direction of the skid until you regain control. Never jam the brakes and lock the wheels.

Crossing Obstacles

Use the low range (L) for crossing obstacles.

Obstacles on the “trail” should be traversed with caution. This includes rocks, fallen trees, and depressions. You should avoid them whenever possible. Remember that some obstacles are too large or dangerous to cross and should be avoided. As a guideline, never attempt to cross an obstacle higher than the ground clearance of the vehicle. Small rocks or small fallen trees may be safely crossed - approach obstacle at low speed and as much as possible at a right angle. Adjust speed without losing momentum and do not accelerate abruptly. Passengers must grasp handhold firmly and brace feet on the floor. Hold steering firmly without closing your fists around it and proceed. Be aware that the obstacle may be slippery or may move while crossing.

Hill Driving Conditions

When driving on hills or slopes, two things are highly important: be prepared for slippery surfaces or terrain variations and obstacles and brace yourself properly inside vehicle. If you climb or descend a hill that is too slippery or has too loose a surface, you can lose control. If you go over the top of a hill at high speed, you may not have time to prepare for the terrain on the other side. Avoid parking on a slope. Always put the shift lever in PARK when stopped or parked, especially on an incline, to avoid rolling. If you must park on a steep incline, block the wheels using rocks or bricks.

Uphill Driving

Use the low range (L) for uphill driving.

Due to its configuration, this vehicle has very good traction even while climbing, so much so that tip over is possible before traction is lost. For example, it is common to encounter terrain situations where the top of the hill has eroded to a point that the hill peak rises very sharply. This vehicle is not designed to negotiate such a condition. Take an alternate route.

It is also wise to know the terrain condition on the other side of the hill or bank. All too often there exists a sharp drop-off that is impossible to negotiate or descend.

If you feel that the slope is getting too steep to climb, apply brakes to immobilize vehicle. Put shift lever in reverse (R), and back down the hill, barely releasing brakes to remain at low speed. Do not attempt to turn around. Never coast down hill while vehicle is in neutral. Do not perform hard braking as it increases the risk of tipover.

Downhill Driving

This vehicle can climb steeper slopes than it can descend safely. Therefore, it is essential to assure that a safe route exists to descend a slope before you climb it.

Decelerating while negotiating a slippery downhill slope could “toboggan” the vehicle, causing it to slide. Maintain steady speed and/or accelerate slightly to regain control. Never slam brakes and lock the wheels.

Side Hilling

Whenever possible, side hilling (driving across a slope rather than up or down it) should be avoided. If necessary, do so with extreme caution. Side hilling on steep inclines could result in rollover. In addition, slippery or unfirm surfaces could result in uncontrollable side sliding. Avoid all objects or depressions that will intensify the raising of one side of the vehicle higher than the other, thus causing rollover. If you feel the vehicle start to rollover or slide sideways, steer downhill if possible.

⚠ WARNING

Be careful when loading and transporting liquid reservoirs. They can affect vehicle stability when side hilling by pulling downhill and increasing the risk of a roll over.

Drop-Offs

This vehicle is not designed to negotiate drop-offs. It will “bottom-out” and usually stop if either the front or rear wheels are driven over a drop-off. If the drop is sharp or deep, the vehicle will nose dive and tip over.

Avoid negotiating drop-offs. Reverse and select an alternate route.

Recreational, Group and Distance Riding

Respect the rights and limitations of others. Stay away from areas designated for other types of off road use. This includes snowmobile trails, equestrian trails, cross country ski trails, mountain bike trails, etc. Never assume there are no other users on the trail. Always stay to the right of the trail and do not zig zag to one side of the trail then the other. Be prepared to stop or pull off to the side if another trail user appears in front of you.

Join a local side-by-side vehicle club. It will provide you with a map and advice or inform you where you can ride. If a club does not exist in your area, help to start one. Group riding and club activities provide a pleasurable, social experience. Never use this vehicle with drugs or alcohol, or tired or ill.

Always keep a safe distance from other riders. Your judgment of speed, terrain conditions, weather, mechanical condition of your vehicle and the “trust in

judgment" you have in others around you will help you make a better choice of appropriate safe distance. This vehicle, like any other motorized vehicle, cannot stop "on a dime".

Before you ride, tell someone where you are planning to travel and your expected time of return.

Depending on the length of your ride, carry additional tools or emergency equipment. Find out where you can get additional gasoline. Be prepared for the possible conditions you may encounter. An emergency first aid kit should always be a consideration.

Environment

One of the benefits of this vehicle is that it can take you off the beaten path away from most communities. However, you should always respect nature and the rights of others to enjoy it. Do not ride in environmentally sensitive areas. Do not drive over forest crops or shrubs, nor cut down trees or take down fencing, nor spin your wheels and destroy the terrain. "Tread Lightly".

This vehicle can cause OHV wildfires if debris builds up near the exhaust or other engine hot spots and ignites then falls off into dry grass. Avoid riding in wet areas, through muskeg or tall grass, where debris can build up. Should you ride in those areas, inspect and remove all debris from your engine and hot spots. Refer to *vehicle care* for details.

Chasing wildlife is in many areas illegal. Wildlife can die of exhaustion after being chased by a motorized vehicle. If you encounter animals on the trail, stop and observe quietly and with caution. It will be one of the better memories of your life.

Observe the rule "what you take in, carry out". Do not litter. Do not start campfires unless you have permission to do so, and then only away from dry areas. The hazards you may create on the trail may cause injury to others or yourself, even at a later date.

Respect farm lands. Always obtain the permission of the landowner before riding on private land. Respect crops, farm animals and property lines.

Finally, do not pollute streams, lakes or rivers and do not modify the engine or exhaust system, or remove any of its components as it will alter the vehicle emissions.

MOVING LOADS AND DOING WORK

Working with Your Vehicle

Your vehicle can help you perform a number of different LIGHT tasks ranging from snow removal to pulling wood or carrying cargo. A variety of accessories are available from your authorized Can-Am Off-road dealer. To prevent possible injury, follow the instructions and warnings that accompany the accessory. Always respect the load limits of the vehicle. Overloading the vehicle can overstress the components and cause failure. Avoid overexerting yourself if you lift or pull heavy loads or manually push the vehicle.

⚠ WARNING
Mounted machinery must be lowered on the ground before leaving the tractor.

Carrying Loads

Any load carried on the vehicle will affect the handling, stability and braking distance of the vehicle. Do not exceed the load limits of the vehicle, including the weight of operator, passengers, cargo, accessories and trailer tongue weight.

Always be aware that the “load” may slide or fall off and cause an accident.

Must use low gear if total payload is greater than 227 kg (500 lb).

Maximum Load Limit of the Vehicle		
Californian models	545 kg (1,200 lb)	Includes occupants, cargo, tongue weight and added accessories
All other models	680 kg (1,500 lb)	

The following is an example of suitable total vehicle load distribution:

Example of suitable loads Models with a 680 kg (1,500 lb) load limit, adjust according to your model load limit.				
Operator and Passengers	Cargo Box Load	Accessories	Tongue Weight	Total Vehicle Load
226 kg (500 lb)	346 kg (762 lb)	40 kg (88 lb)	68 kg (150 lb)	680 kg (1,500 lb)

To reduce the risk to lose control or the load carried, follow these recommendations.

Vehicle Settings When Carrying Load

When carrying heavy loads or passengers, readjust suspension accordingly.

When carrying heavy loads in cargo box or pulling a loaded trailer, operate with the shift lever in L (low range).

⚠ WARNING

Must use LOW GEAR if total payload is greater than 226 kg (500 lb).

Loading the Cargo Box

NOTICE

When loading or unloading, do not exceed the maximum cargo capacity on tailgate. Always close tailgate before operating to reduce the risk of loss of load.

Load cargo as low as possible – a higher load can raise the vehicle's center of gravity, which can reduce stability. Position cargo toward the front and center of the cargo box and as evenly distributed as possible.

Secure the load to the tie down hooks inside cargo box. Use only the tie down hooks on the bottom of the cargo box; do not secure cargo to the cage or other part of the vehicle. If it is not properly secured, a load may slide or fall off, possibly striking occupants or bystanders; or it may shift during riding, affecting the handling of the vehicle.

Objects that are higher than the walls of the cargo bed may affect visibility for the driver and may act as projectiles in case of an accident. Loads that protrude sideways can get snagged or caught in bush, branches or other obstacles. Avoid covering and obstructing the brake lights with the cargo. Ensure no cargo protrudes outside the box and that cargo will not interfere with your visibility or control of the vehicle.

Do not overload cargo box.

Close tailgate before operating.

⚠ WARNING

Never operate the vehicle with an open tailgate.

Model	Maximum Cargo Load		
Californian models	Cargo box	272 kg (600 lb)	Evenly distributed and safely secured. Loaded as low as possible to reduce height of center of gravity.
All other models		454 kg (1,000 lb)	
All models	Tailgate	113 kg (250 lb)	Only while loading cargo into cargo box. Never operate with tailgate open.

Operating While Carrying a Load

Reduce your speed when carrying cargo and turn gradually. Avoid hills and rough terrain. Allow more distance for braking. This vehicle may require additional stopping distance if carrying heavy loads, especially on inclined surfaces.

Tilting the Cargo Box

The cargo box can be tilted to ease unloading. Use release handles on either side of cargo box.

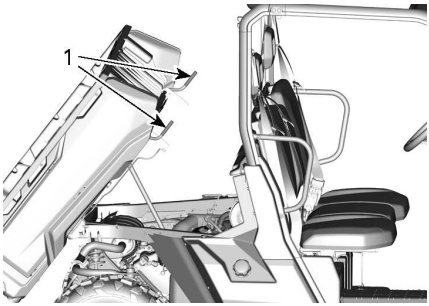

VIEWED FROM RH SIDE OF VEHICLE

1. Release handles

NOTICE

Always turn off engine when tilting the cargo box.

⚠ WARNING

- **Always ensure no one is standing behind the cargo box before you actuate the release handle.**
- **The load weight may affect the operation of the cargo box tilting feature (tilting or lowering).**
- **Some accessories assembled on the cargo box may affect his behavior during the opening and closure. Always pay attention during this operation.**

Be very careful with the operation of the tailgate and the cargo box as the load may have moved during transport.

To lower the cargo box, simply push it down into place.

⚠ WARNING

- **Keep yourself and others clear of the cargo box and vehicle frame junction when lowering cargo box.**
- **Ensure to properly latch the cargo box and the tailgate before riding.**
- **Make sure you do not leave objects between lifted cargo box and vehicle frame to ensure proper latching of the cargo box when lowered.**

Hauling a Load

NOTICE

A BRP approved rear hitch must be properly installed on the vehicle for hauling trailers.

Never pull a load by attaching it to the cage or any other accessories; this can cause the vehicle to tip over. Use only the trailer hitch (if installed) or winch (if installed) to pull a load.

In an emergency situation, use the recovery hook to recover a stuck vehicle.

When pulling loads with a chain or cable, ensure that there is no slack before starting and maintain tension while pulling.

When pulling loads with a chain or cable, be sure to brake progressively. The inertia of the load could lead to an impact.

When hauling a load, respect the maximum hauling capacity. See *Pulling a Trailer* below.

⚠ WARNING

A slack in the chain or cable can cause it to break and snap back.

When pulling another vehicle, be sure that someone is controlling the pulled vehicle. They must brake and steer to prevent the vehicle from going out of control.

Before pulling loads with a winch, refer to the winch manufacturer's instructions.

Reduce your speed when hauling a load and turn gradually. Avoid hills and rough terrain. Never attempt steep hills. Allow more distance for braking, especially on inclined surfaces and when a passenger is on board. Be careful not to skid or slide.

Pulling a Trailer

NOTICE

A BRP approved rear hitch must be properly installed on the vehicle for hauling trailers.

Riding this vehicle with a trailer substantially increases the risk of toppling, especially on inclined slopes. If a trailer is used behind the vehicle make sure that its hitch is compatible with the one on the vehicle. Make sure the trailer is horizontal with the vehicle. (In some instances a special extension may have to be installed on the vehicle hitch). Use security chains or cables to secure the trailer with the vehicle.

Reduce your speed when pulling a trailer and turn gradually. Avoid hills and rough terrain. Never attempt steep hills. Allow more distance for braking, especially on inclined surfaces and when a passenger is on board. Be careful not to skid or slide.

Improperly loading a trailer may cause loss of control.

Always make sure load is evenly distributed and safely secured on the trailer; an evenly balanced trailer is easier to control.

Always put the shift lever to L (low range) for hauling a trailer – in addition to providing more torque, operating in low range helps account for the increased load on the rear tires.

When stopped or parked, block the vehicle and trailer wheels from possible movement.

Use caution when disconnecting a loaded trailer; it or its load may topple on you or others.

When hauling a trailer, respect the maximum tongue weight and towing capacity indicated on the label affixed to the hitch.

Make sure there is at least some weight on the tongue.

IMPORTANT ON-PRODUCT LABELS (CANADA/ UNITED STATES)

Safety Hang Tag

This vehicle comes with a hang tag and labels containing important safety information.

Any person who rides this vehicle should read and understand this information before riding.

WARNING

THIS VEHICLE IS INTENDED FOR RECREATIONAL USE AND SECONDARY GENERAL UTILITY APPLICATIONS
NO OPERATOR UNDER AGE 16

TRAINING COURSES TO TEACH ROV DRIVING ARE AVAILABLE. FOR INFORMATION CONTACT YOUR DEALER.
Read the Operator's Guide and Safety Labels and Watch the Safety Video.
Follow All Instructions and Warnings.

CHECK WITH YOUR DEALER TO FIND OUT ABOUT STATE OR LOCAL LAWS REGARDING ROV OPERATION.

Improper Use of Off-Highway Vehicles Can Cause Severe Injury or Death

Be Prepared
- Fasten seat belts and make sure nets or doors are securely latched in place.
- Wear an approved helmet and protective gear.
- Each rider must be able to sit with back against seat, foot flat on the floor or on footrest, and hands on steering wheel or handholds. Stay completely inside the vehicle.

Drive Responsibly
Avoid loss of control and rollovers:
- Avoid abrupt maneuvers, sideways sliding, skidding or fishtailing, and never do donuts.
- Avoid hard acceleration when turning, even from a stop.
- Slow down before entering a turn.
- Plan for hills, rough terrain, ruts, and other changes in traction and terrain. Avoid paved surfaces.
- Avoid side hilling (riding across slopes).

Rollovers have caused severe injuries and death, even on flat, open areas.

Be Sure Riders Pay Attention and Plan Ahead
If you think or feel the vehicle may tip or roll, reduce your risk of injury :
- Keep a firm grip on the steering wheel or handholds and brace yourself.
- Do not put any part of your body outside of the vehicle for any reason.

Require Proper Use of Your Vehicle
– Do your part to prevent injuries:
- Do not allow careless or reckless driving.
- Make sure operators are 16 or older with a valid driver's license.
- Do not let people drive or ride after using alcohol or drugs.
- Do not allow operation on public roads (unless designated for off-highway vehicle access) – collisions with cars and trucks can occur.
- Do not exceed seating capacity: see information on back side of this card

DRIVER UNDER 16

THIS HANG TAG CAN'T BE REMOVED BEFORE SALE.

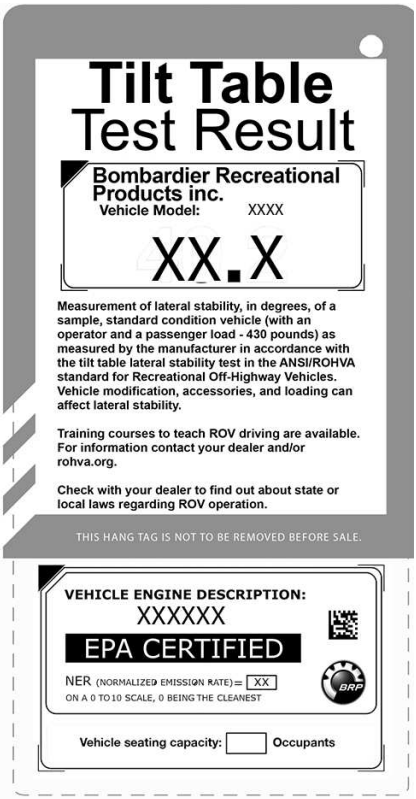

Tilt Table Test Result

Bombardier Recreational Products inc.
Vehicle Model: XXXX

XX.X

Measurement of lateral stability, in degrees, of a sample, standard condition vehicle (with an operator and a passenger load - 430 pounds) as measured by the manufacturer in accordance with the tilt table lateral stability test in the ANSI/ROHVA standard for Recreational Off-Highway Vehicles. Vehicle modification, accessories, and loading can affect lateral stability.

Training courses to teach ROV driving are available. For information contact your dealer and/or rohva.org.

Check with your dealer to find out about state or local laws regarding ROV operation.

THIS HANG TAG IS NOT TO BE REMOVED BEFORE SALE.

VEHICLE ENGINE DESCRIPTION:
XXXXXX

EPA CERTIFIED

NER (NORMALIZED EMISSION RATE) = XX
ON A 0 TO 10 SCALE, 0 BEING THE CLEANEST

BRP

Vehicle seating capacity: ☐ **Occupants**

Safety Labels

Read and understand all the safety labels on your vehicle.

These labels are affixed to the vehicle for the safety of the operator, passengers or bystanders.

The following labels are on your vehicle, and they should be considered permanent parts of the vehicle. They need to be clean and visible at all times. If missing or damaged, they need to be replaced. Safety labels are free of charge. See an authorized Can-Am Off-road dealer.

Upon replacement of parts that have warnings on them, make sure to order (free of charge) the applicable safety warnings if not already installed on the replacement part.

NOTE:
In the event of any discrepancy between this guide and the vehicle, the safety labels on the vehicle have precedence over the labels in this guide.

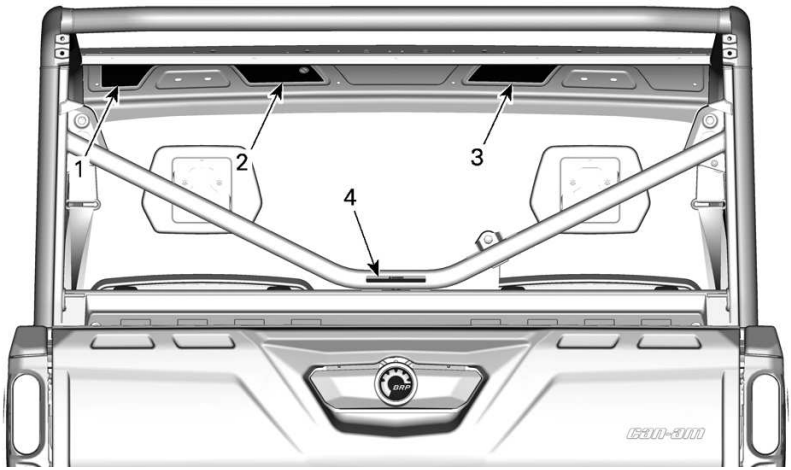

TYPICAL

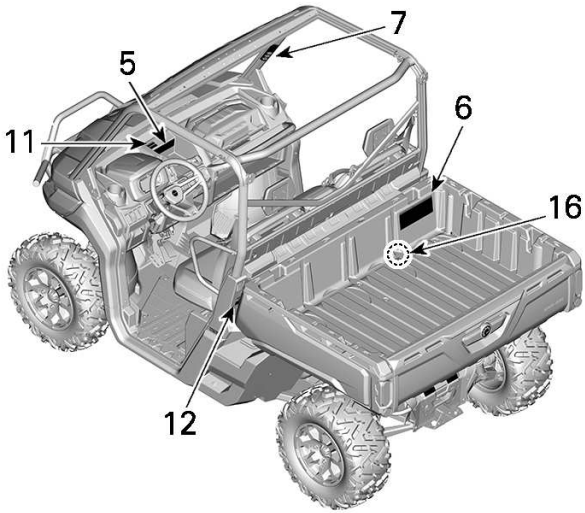

TYPICAL

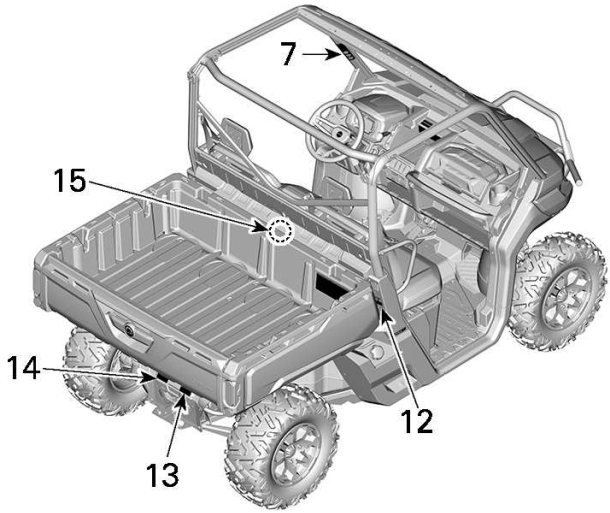

TYPICAL

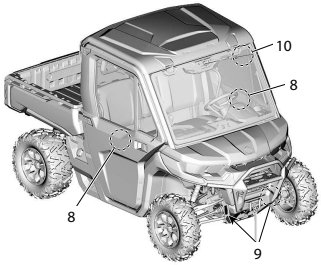

TYPICAL

1. General warning
2. General operating warning
3. Passenger warning
4. Pulling a load using the cage
5. 2WD/4WD selection
6. Tire pressure and maximum load
7. Rollover
8. Door warning
9. Winch installation
10. Vehicle transport and tow
11. Off-road usage
12. Cargo box pinch point
13. Pulling a trailer
14. Towing and tongue weight
15. Coolant hot
16. Exhaust

General Warning Label

Models Without CAB

Models With CAB

General Operating Warning Label

Models Without CAB

Models With CAB

Passenger Warning Label

Models Without CAB

Models With CAB

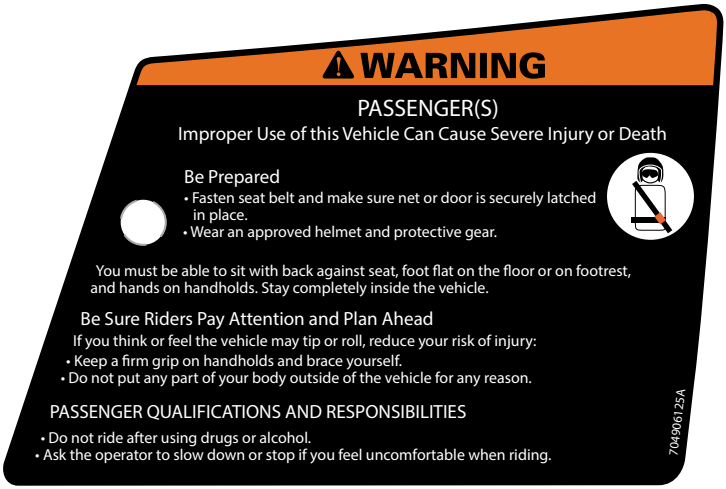

Rollover — Warning Labels

LH side	RH Side

2WD/4WD Selection — Warning Label

⚠ WARNING

P R N H L

Put the Shift Lever to PARK (P) before exiting vehicle. The vehicle can roll if not in PARK.

Stop the vehicle and apply the Brake before using the Shift Lever, the 2WD/4WD Switch and the Rear Diff Lock Switch.

Must use Low Gear if total payload is greater than 226 kg (500 lb).

Total payload includes weight of operator, passenger, cargo, accessories and trailer tongue weight if applicable.

8124

Tire Pressure and Maximum Load — Warning Label

⚠ WARNING

NEVER carry passenger in cargo box or on gate.
NEVER place gasoline container inside cargo box when filling it. This can lead to an explosion.
NEVER exceed the vehicle load capacity (see table), including weight of operator, passenger, cargo, accessories and trailer tongue weight if applicable.
NEVER exceed REAR LOAD CAPACITY (Refer to label below), evenly distributed (including trailer tongue weight if applicable).
ALWAYS secure the load.

Improper tire pressure or overloading can cause loss of control. Loss of control can result in severe injury or death.

- An underinflated tire can come off the rim.

To reduce the risk of loss of control or loss of load:

When loading cargo:
- Position cargo towards front and center ans as low as possible.
- Latch tail gate.

When carrying a load:
- Reduce your speed and turn gradually.
- Avoid hills and rough terrain.
- Allow more distance to stop.

			3 OCCUPANTS		6 OCCUPANTS		
		PACKAGE	XMR	OTHERS	XMR	LONESTAR	OTHERS
		DOORS	NO	NO	NO	HALF	NO
	COLD TIRE PRESSURE	FRONT: kPa (psi)	97 (14)	97 (14)	152 (22)		
		REAR: kPa (psi)	179 (26)	124 (18)	165 (24)		
CALIFORNIA	MAX LOAD CAPACITY:	kg (lb)	545 (1200)		612 (1350)		
	MAXIMUM CARGO LOAD:	kg (lb)	272 (600)		272 (600)		
OTHERS	MAX LOAD CAPACITY:	kg (lb)	680 (1500)		739 (1630)	785 (1730)	794 (1750)
	MAXIMUM CARGO LOAD:	kg (lb)	454 (1000)		454 (1000)		

Refer to your Operator's Guide for more information about cargo box use.

8852

Pulling a Load Using the Cage – Warning Label

⚠ WARNING

NEVER attach to the cage to pull a load.This can cause the vehicle to tip over. Use only the trailer hitch to pull a load.

8188

Vehicle Transport and Tow– Warning Label

Door Warning Label - (Two windows doors)

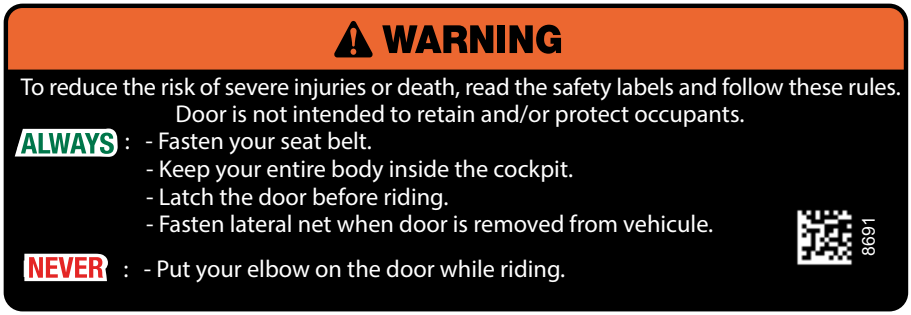

Door Warning Label - (Three windows doors)

⚠ WARNING

Do NOT put your arm outside of the vehicle, there is a risk of SEVERE INJURY.

LH Side	RH Side

Door Warning Label - (Half doors)

⚠ WARNING

Do NOT put your arm outside of the vehicle, there is a risk of SEVERE INJURY.

LH Side	RH Side

Off–Road Usage – Warning Label

WARNING

This vehicle is an off road vehicle not intended for use on public roads

AVERTISSEMENT

Ce véhicule est conçu pour un usage hors route et n'est pas destiné aux voies publiques

7881

Cargo Box Pinch Point - Warning Label

WARNING

Pinch point. Keep clear when lowering cargo box.

8688

Towing and Tongue Weight - Warning Label

WARNING

Improperly loading a trailer may cause loss of control. Evenly balance the load.

MAXIMUM TOWING WEIGHT:	1134 kg	2500 lb
MAXIMUM TONGUE WEIGHT:	114 kg	250 lb

7049075 60

Pulling a Trailer – Warning Label

WARNING

When pulling a trailer:

- Set the shift lever to low gear range (L).
- Reduce your speed and turn gradually.
- Avoid hills and rough terrain.
- Allow more distance to stop.

8689

Winch Installation - Warning Label

WARNING

Always use the battery post to ground the winch. Doing otherwise may induce an undesired power steering signal resulting in an unintended steering input. In certain circumstances, some unintended steering input could lead to a loss of vehicle control increasing the risk of a crash.

8273

Coolant Hot - Warning Label

⚠ WARNING

Do not open when HOT.

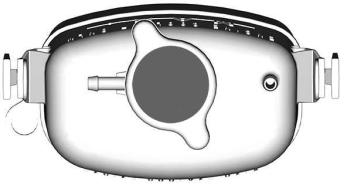

Exhaust — Hot Part Pictogram

⚠ CAUTION

Do not touch when hot.

Molded Safety Pictogram

Molded Tailgate Pictogram

⚠ WARNING

Never carry passengers in cargo box or on tailgate. Max weight on tailgate during loading is 113 kg (250 lb)

MAX

113 kg / 250 lb

Compliance HangTag

California Proposition 65 Warning - Hang Tag

Applicable for all models in Canada and United States of America or everywhere except Canada and United States of America when equivalent to a model certified to US EPA Standards.

⚠ **WARNING**. Operating, servicing and maintaining an off-road vehicle can expose you to chemicals including engine exhaust, carbon monoxide, phthalates, and lead, which are known to the State of California to cause cancer and birth defects or other reproductive harm.
To minimize exposure, avoid breathing exhaust, do not idle the engine except as necessary, service your vehicle in a well-ventilated area and wear gloves or wash your hands frequently when servicing your vehicle.

For more information go to www.P65Warnings.ca.gov/products/passenger-vehicle

704906872

IMPORTANT ON-PRODUCT LABELS (ALL COUNTRIES EXCEPT CANADA/UNITED STATES)

Safety Labels

Read and understand all the safety labels on your vehicle.

These labels are affixed to the vehicle for the safety of the operator, passengers or bystanders.

The following labels are on your vehicle, and they should be considered permanent parts of the vehicle. They need to be clean and visible at all times. If missing or damaged, they need to be replaced. Safety labels are free of charge. See an authorized Can-Am Off-road dealer.

Upon replacement of parts that have warnings on them, make sure to order (free of charge) the applicable safety warnings if not already installed on the replacement part.

NOTE:
In the event of any discrepancy between this guide and the vehicle, the safety labels on the vehicle have precedence over the labels in this guide.

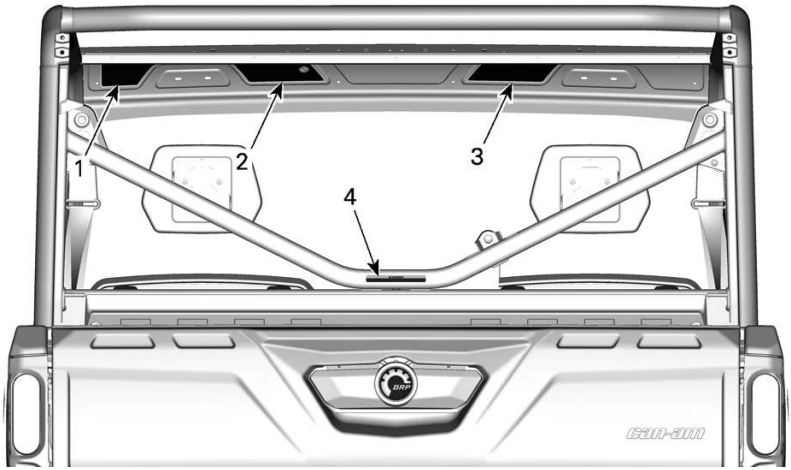

TYPICAL

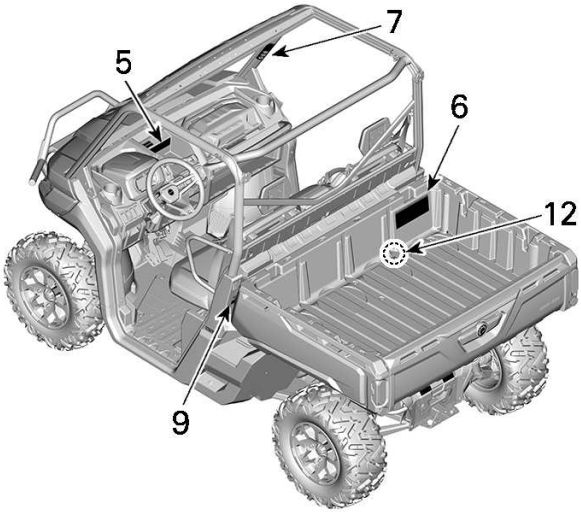
7
5
6
12
9

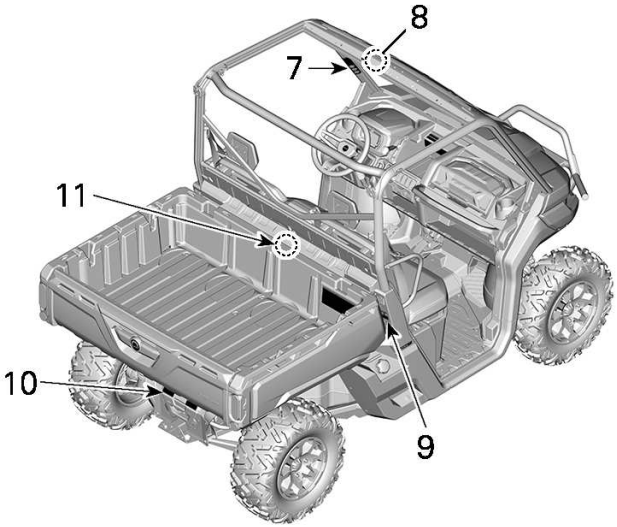
8
7
11
10
9

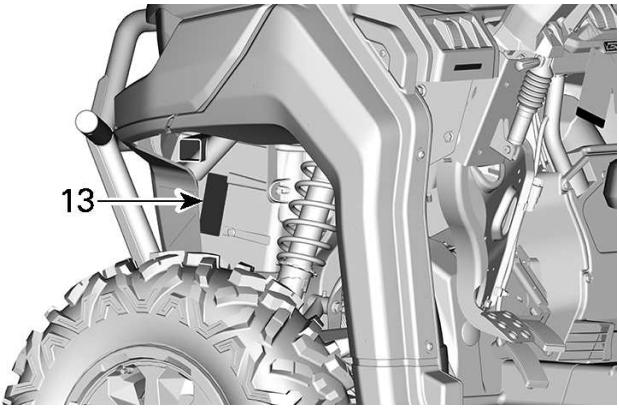

1. General warning
2. General operating warning
3. Passenger warning
4. Pulling a load using the cage
5. 2WD/4WD selection
6. Tire pressure and maximum load
7. Rollover
8. Vehicle transport and tow
9. Cargo box pinch point
10. Towing and tongue weight
11. Coolant hot
12. Exhaust
13. Winch installation

Operator Warning Label

⚠ WARNING

- **Read and understand all safety labels, locate and read operator's guide.**
- **Always wear an approved helmet and protective gear.**
- **Fasten seat belts and make sure net or door is securely latched in place.**
- **Always wear ear protection.**
- **Each rider must be able to sit with back against seat, feet flat on the floor or on footrest, and hands on steering wheel or handholds.**
- **If you think or feel the vehicle may tip or roll, reduce your risk of injury : Keep a firm grip on the steering wheel or handholds and brace yourself. Do not put any part of your body outside of the vehicle for any reason.**
- **Always stay completely inside the vehicle.**

General Warning Label

⚠ WARNING

- **Make sure operators are 16 or older with a valid driver's license.**
- **Do not exceed seating capacity: 3 occupants.**
- **Do not let people drive or ride after using alcohol or drugs.**
- **Avoid loss of control and rollovers:**
  - **Avoid abrupt maneuvers, sideways sliding, skidding or fishtailing, and never do donuts.**
  - **Avoid hard acceleration when turning, even from a stop.**
  - **Slow down before entering a turn.**
  - **Plan for hills, rough terrain, ruts, and other changes in traction and terrain.**
  - **Avoid paved surfaces.**
  - **Avoid side hilling (riding across slopes).**
- **Rollovers have caused severe injuries and death, even on flat, open areas.**
- **Do not allow operation on public roads (unless designated for off--highway vehicle access) – collisions with cars and trucks can occur.**
- **Watch the safety video using the QR code link or visit Can-am web site before operation.**

Passenger Warning Label

⚠ WARNING

- **Always wear an approved helmet and protective gear.**
- **Always wear ear protection.**
- **Fasten seat belts, and make sure net or door is securely latched in place.**
- **Each rider must be able to sit with back against seat, feet flat on the floor or on footrest, and hands on handholds.**
- **If you think or feel the vehicle may tip or roll, reduce your risk of injury:**
  - **Keep a firm grip on the steering wheel or handholds and brace yourself.**
  - **Do not put any part of your body outside of the vehicle for any reason.**
- **Always stay completely inside the vehicle.**
- **Do not let people drive or ride after using alcohol or drugs.**

Tire Pressure and Maximum Load – Warning Pictogram

⚠ WARNING

- **Locate and read operator's guide. Improper tire pressure or overloading can cause loss of control, resulting in SEVERE INJURY or DEATH.**
- **Always maintain proper tire pressure as shown.**
- **NEVER exceed the vehicle load capacity, including weight of operator, passenger, cargo, accessories and trailer tongue weight if applicable.**
- **Do not overload cargo box.**
- **NEVER place gasoline container inside cargo box when filling it. This can lead to an explosion.**
- **NEVER carry passenger in cargo box or on tailgate.**

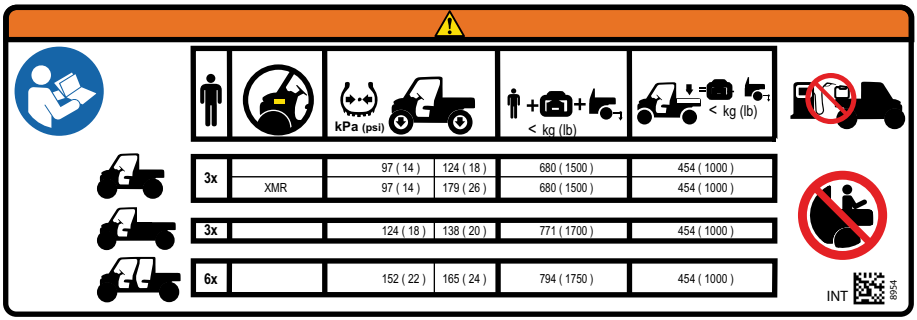

3x		97 (14)	124 (18)	680 (1500)	454 (1000)
	XMR	97 (14)	179 (26)	680 (1500)	454 (1000)
3x		124 (18)	138 (20)	771 (1700)	454 (1000)
6x		152 (22)	165 (24)	794 (1750)	454 (1000)

Rollover – Warning Labels

⚠ WARNING

- **Never try to stop a rollover using your arm or leg.**
- **Never hold the cage while riding.**
- **Fasten seat belts and make sure net or door is securely latched in place.**

LH side

RH Side

2WD/4WD Selection – Warning Label

⚠ WARNING

- **Stop the vehicle and apply the brake before using the shift lever and the 2WD/4WD switch.**
- **When the weight of occupant(s), cargo and tongue is above 225 kg (500 lb), set the shift lever to low gear range (L).**
- **Put the shift lever to PARK (P) before exiting vehicle. The vehicle can roll if not in PARK.**

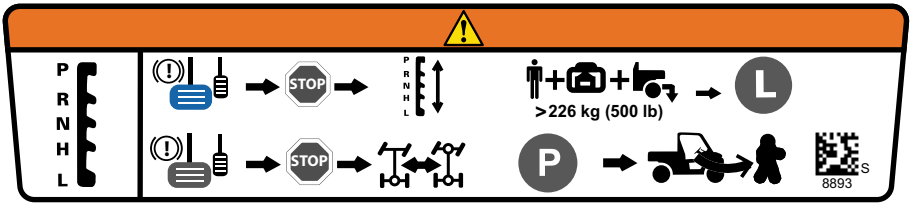

Towing and Tongue Weight - Warning Pictogram

⚠ WARNING

- **MAXIMUM towing capacity: 1134 kg (2500 lb)**
- **MAXIMUM tongue weight: 114 kg (250 lb)**
- **When pulling a trailer, set the shift lever to low gear range (L).**
- **Reduce your speed and turn gradually.**
- **Avoid hills and rough terrain.**
- **Allow more distance to stop.**

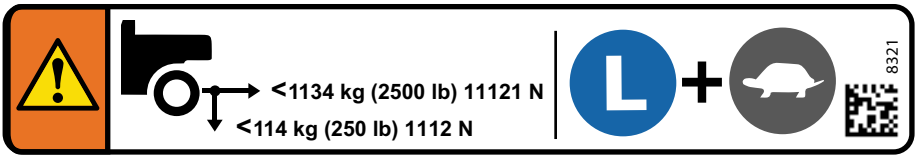

Cargo Box Pinch Point - Warning Label

⚠ WARNING

- **Pinch point. Keep clear when lowering cargo box.**

Pulling a Load Using the Cage – Warning Label

⚠ WARNING

- **NEVER attach to the cage to pull a load. This can cause the vehicle to tip over. Use only the trailer hitch or recovery hook to pull a load.**

Vehicle Transport and Tow– Warning Label

⚠ WARNING

- **Never tow this vehicle backwards with a windshield in place. Windshield could break away.**
- **Tow this vehicle facing forward.**

Winch Installation - Warning Label

⚠ WARNING

- **Never use the frame near this location to ground any electrical component such as a winch.**
- **When in use, the electrical component may induce an undesired power steering signal resulting in an unintended steering input.**
- **In certain circumstances, some unintended steering input could lead to a loss of vehicle control increasing the risk of serious INJURY or DEATH.**

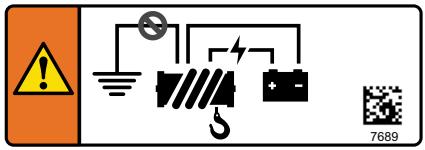

Coolant Hot - Warning Label

⚠ WARNING

Do not open when HOT.

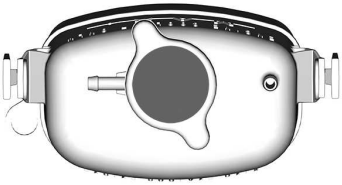

Cool Starting - Warning Label

This label is located in the front service compartment.

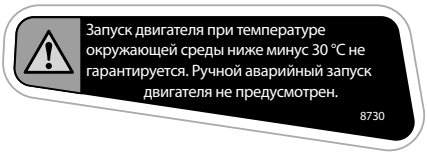

IN EURASIAN UNION ONLY

Exhaust – Hot Part Pictogram

⚠ CAUTION
Do not touch when hot.

Molded Safety Pictogram

Molded Tailgate Pictogram

⚠ WARNING

Never carry passengers in cargo box or on tailgate. Max weight on tailgate during loading is 113 kg (250 lb)

MAX

113 kg / 250 lb

REPORTING SAFETY DEFECTS

In Canada, if you believe that your vehicle has a defect which could cause a crash or could cause injury or death, you should immediately inform Transport Canada in addition to notifying Bombardier Recreational Products Inc.

If Transport Canada receives similar complaints, it may open an investigation, and if it finds that a safety defect exists in a group of vehicles, it may order a recall and remedy campaign. However, Transport Canada cannot become involved in any individual problems between you, your dealer or Bombardier Recreational Products Inc.

To contact Transport Canada:

819-994-3328 (Gatineau-Ottawa area or internationally)
Toll free : 1 800-333-0510 (in Canada)

Transport Canada - ASFAD
330 Sparks Street
Ottawa, ON
K1A 0N5

https://www.tc.gc.ca/recalls

VEHICLE INFORMATION

PRIMARY CONTROLS

It is important to know the location and operation of all controls, and to develop and practice smooth and coordinated use of them.

NOTE:
Some vehicle safety labels are not shown on illustrations. For information on vehicle safety labels, refer to *Important on-product labels*.

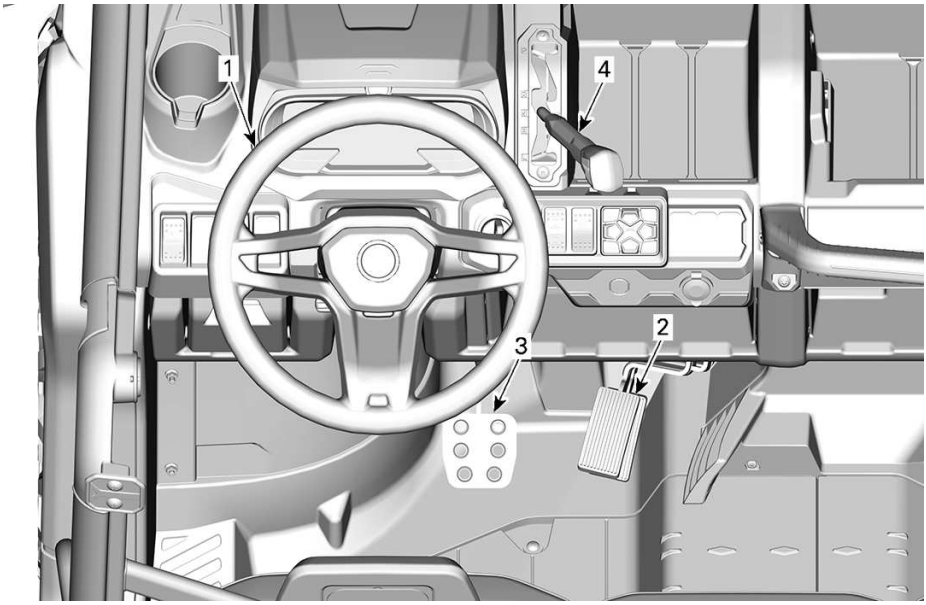

1. Steering wheel
2. Accelerator pedal
3. Brake pedal
4. Shifter

Steering Wheel

The steering wheel is located in front of the driver's seat.

The steering wheel steers the vehicle to the left or right.

Turn the steering wheel in the direction you want to go.

Grip the steering wheel with both hands, without having thumbs rolled around the steering wheel.

⚠ CAUTION

Under rough trail conditions or when crossing an obstacle, the steering wheel could suddenly jerk on one side, causing hand or wrist injuries if the thumbs are rolled around the steering wheel.

A dynamic power steering (DPS) reduces the effort to turn the steering wheel.

Accelerator Pedal

The accelerator pedal is located on the right side of the brake pedal.

The accelerator pedal controls the engine speed.

To increase or maintain vehicle speed, press on the accelerator pedal with your right foot.

To decrease vehicle speed, release the accelerator pedal.

The accelerator pedal is spring loaded and should return to rest position (idle) when not pressed.

Brake Pedal

The brake pedal is located on the left side of the accelerator pedal.

The brake pedal function is to slow down or stop the vehicle.

To decrease vehicle speed or to stop vehicle, press down the brake pedal with your right foot.

The brake pedal is spring loaded and should return to rest position when not pressed.

Shift Lever

The shift lever is located on the upper console to the right of steering wheel.

The shift lever is used to change the gearbox position.

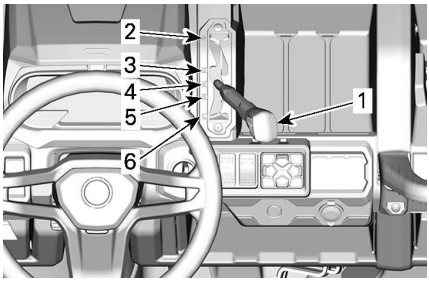

TYPICAL

1. *Shift lever*
2. *Park*
3. *Reverse*
4. *Neutral*
5. *High range (forward)*
6. *Low range (forward)*

The vehicle must be stopped and brakes applied prior to selecting any gear.

⚠ WARNING

This gearbox is not designed to shift while vehicle is moving.

Park

The park position locks the gearbox to help prevent vehicle movement.

⚠ WARNING

Always use the PARK (P) position when the vehicle is not in operation. The vehicle can roll if the shift lever is not set to P (PARK).

Reverse

The reverse position allows the vehicle to go backwards.

Depending upon your particular vehicle configuration, a back-up alarm may be equipped on the vehicle. It goes on automatically when the reverse gear is selected.

NOTE:
In reverse operation, the engine RPM is limited thus limiting the vehicle reverse speed.

⚠ WARNING

When driving downhill in reverse, gravity can increase the vehicle speed above safe reverse speed.

Neutral

The neutral position disengages the gearbox.

High Range (Forward)

This position selects the high speed range of the gearbox. It is the normal driving speed range. It allows the vehicle to reach its maximum speed.

Low Range (Forward)

This position selects the low speed range of the gearbox. It allows the vehicle to move slowly with maximum torque at the wheels.

NOTICE

Use the low speed range to pull a trailer, carry heavy cargo, go over obstacles or drive uphill and downhill.

SECONDARY CONTROLS

Some features may not apply to your model or could be optional.

Some vehicle safety labels are not shown on illustrations.

For information on vehicle safety labels, refer to *Important On-Product labels*.

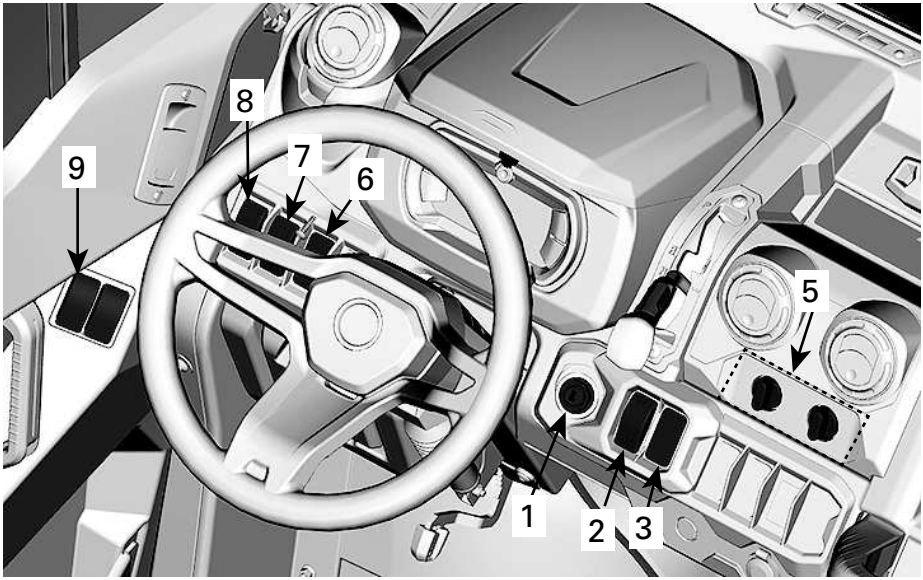

TYPICAL - CAB MODEL WITH HEATING SYSTEM SHOWN

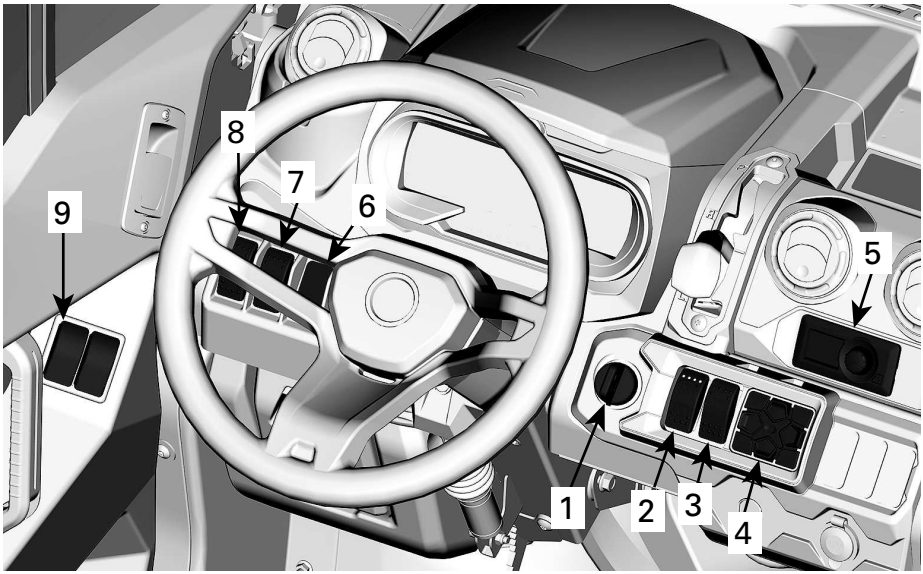

TYPICAL - CAB MODEL WITH HEATING AND A/C SHOWN

1. Ignition switch
2. 2WD/4WD Switch
3. Rear differential switch
4. Keypad (use with 7.6” digital display)
5. Climate control
6. Horn switch (on applicable models)
7. Winch switch
8. Headlight dimmer switch
9. Power window switches

Ignition Switch and Keys

The ignition switch is located on the upper console area.

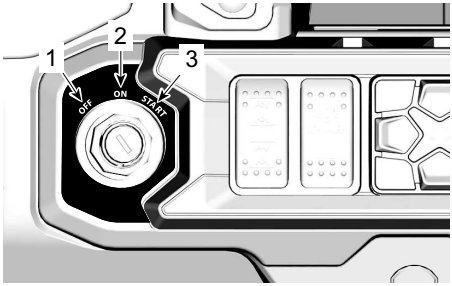

1. *OFF*
2. *ON*
3. *START*

OFF

The key can be inserted or removed in this position only.

In OFF position, the electrical system of the vehicle is disabled.

The engine is shut down by turning the ignition switch to OFF position.

ON

When the key is turned in this position, the electrical system of the vehicle is activated.

The gauge should wake-up.

The vehicle lights are turned on.

The engine can be started.

START

This position starts the engine.

NOTE:
If the ignition switch is left ON for more than 30 minutes, engine will not start unless ignition switch is turned OFF, then ON again.

Keys

Basic Key

The vehicle is delivered with 2 basic key.

Those 2 mechanical keys do not have speed or torque restrictions.

D.E.S.S. Key (Available as an option)

For all D.E.S.S. related option, see an authorized Can-Am Off-road dealer for information.

Digitally Encoded Security System (D.E.S.S.)

The ignition keys contain an electronic circuit that gives it a unique electronic serial number.

The D. E. S. S. system reads the key code and allows engine starting for keys it recognizes.

This vehicle can be operated using 3 different types of key programming:

– Work
– Normal
– Performance

Refer to your dealer for complete information.

NOTE:
Additional keys are available from your dealer as an accessory.

⚠ WARNING

Rollovers, tipovers, collisions and loss of control resulting in serious injury or death are possible with the performance or normal key. Using the normal key is not a substitute for the operator being prepared, qualified, and operating with care.

Performance Key

The performance key allows the user to access the full torque of the engine as well as the top speed of the vehicle.

This may be useful for riders who prefer crisper throttle response, and for environments where higher speeds and greater acceleration are appropriate. For example, in wide-open straight trails, operators may prefer the performance key.

Normal Key

The normal key limits the vehicle speed to 70 km/h (43 MPH) and 10% torque reduction.

Work key

The work key allows for usage of 100% of maximum engine torque but limits vehicle speed to 40 km/h (25 MPH).

⚠ WARNING

On steep downhills, the engine speed limiter may not prevent the vehicle from accelerating beyond this speed.

This key may be useful for riders who prefer more gradual acceleration, or for riding in environments where full speed and high acceleration are not desirable. For example, in narrow, winding trails, operators may prefer a normal key.

D.E.S.S. Flexibility

The D. E. S. S. of your vehicle can be programmed by your authorized Can--Am Off-road dealer to accept up to 8 different keys.

If you have more than one D. E. S. S. equipped your vehicle, each can be programmed by your authorized Can--Am Off-road dealer to accept the other vehicle D.E.S.S. keys.

2WD/4WD Switch

Models without Smart-Lok

The 2WD/4WD switch is located on the upper console.

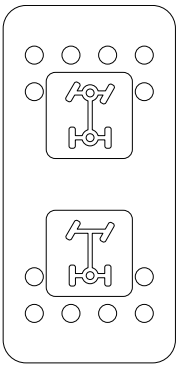

This switch selects 2 wheel drive, or 4 wheel drive mode when the vehicle is stopped.

NOTICE

The vehicle must be stopped to engage or disengage 2WD/4WD switch.
Mechanical damage may occur if switch is engaged or disengaged while driving.

The 4WD mode is engaged when the switch is pushed upwards.

The 2WD mode is engaged when the switch is pushed downwards. The vehicle is then rear wheel drive only.

Rear Differential Lock Switch

The rear differential lock switch is located on the upper console.

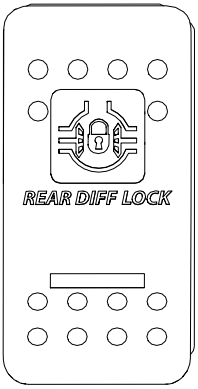

This switch enables locking of rear differential.

NOTICE

The vehicle must be stopped to engage or disengage the differential switch.
Mechanical damage may occur if switch is engaged or disengaged while driving.

The rear differential is locked when the switch is pushed upwards and unlocked when the switch is pushed downwards.

Keypad

The keypad is used to navigate through various menus and options when the *7.6" Digital Display* is installed.

The keypad is located on the upper console.

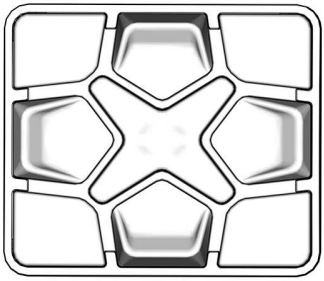

Climate Controls

CAB Models Only

The climate controls unit are located in center of the upper console.

They control the flow and the temperature of the air circulated in the vehicle.

Refer to *Climate Control System* in *EQUIPMENT (PAGE 80) EQUIPMENT* for operation instructions.

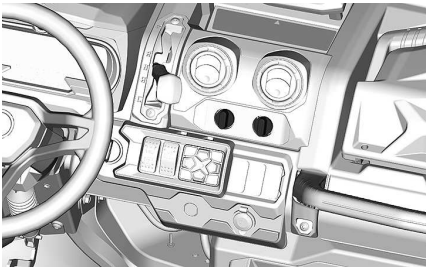

MODELS WITHOUT A/C

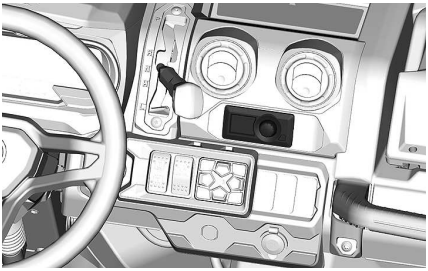

A/C EQUIPPED MODELS

NOTICE

The climate control module installed in the Limited models is not waterproof nor water resistant.

Horn Switch (On applicable models)

To activate the horn, push on the switch.

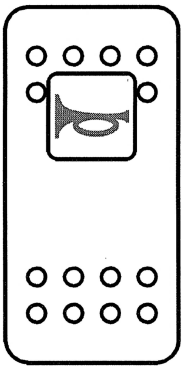

Winch Switch

The winch can be controlled from inside and outside the vehicle with the winch control switch located in the upper console.

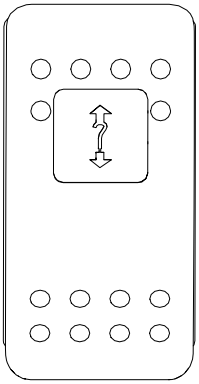

Refer to your *Winch Guide* included with your vehicle for proper winch operation.

Headlight Dimmer Switch

The headlight dimmer switch is located on the upper console.

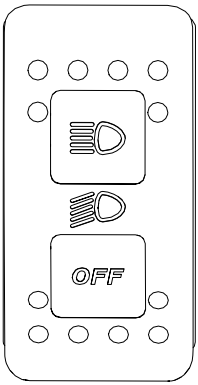

This switch is used to select either the headlights OFF position, low or high beams.

Power Window Switches

The power window switches are located on the door panel. Two switches on the driver side and one on the passenger side.

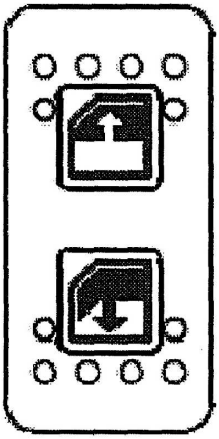

1. Press the switch to open the window.
2. Lift the switch to close the window.

Wiper / Windshield Washer Switch

The wiper / windshield washer switch is located overhead, to the left of the central mirror.

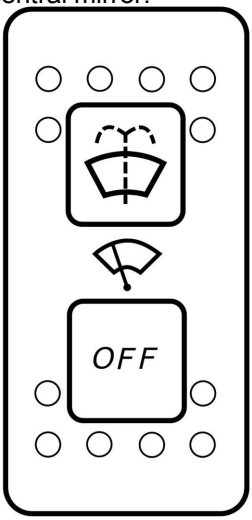

This switch is used to select either the OFF, wipe or wash-and-wipe positions.

EQUIPMENT

Some features may not apply to your model or could be optional.

Some on-product labels are not shown on illustrations.

For information concerning the safety labels, refer to *Important On-Product Labels*.

Tilt Steering

The steering wheel height is adjustable.

Adjust the steering wheel height to face your chest, not your head.

To adjust steering wheel height:

1. Unlock steering by pulling the tilt lever toward you.
2. Move steering wheel to the desired position.
3. Release tilt lever to lock steering wheel in position.

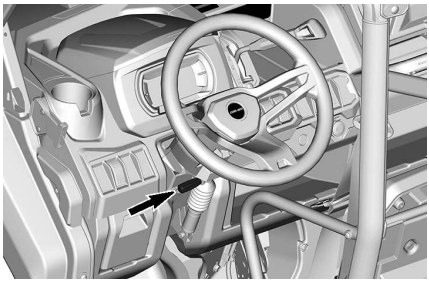

⚠ WARNING

Never adjust the steering wheel height while riding. You may lose control.

Cup Holders

CAB models

Two cup holders are located on the central console.

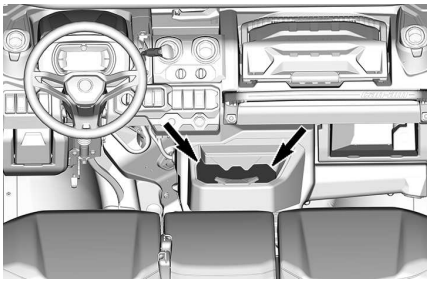

All except CAB models

Two cup holders are located on each side of the dash near the side nets attachment points.

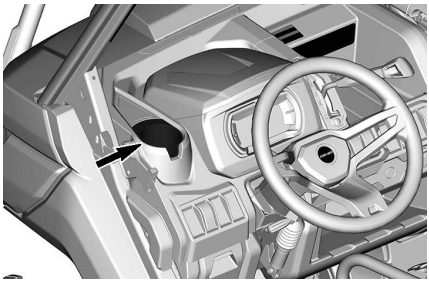

All models

Two additional cup holders are available on the back of the central passengers seat backrest.

To access them, lower the seat backrest.

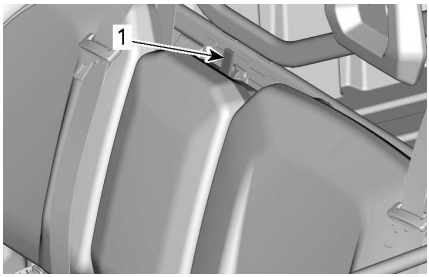

TYPICAL

1. Backrest clip locking mechanism

TYPICAL

1. *Central passenger backrest cup holder*

NOTE:
Do not use cup holders while riding in rough conditions.

Passengers Handhold

The passengers have access to a front handhold located in front of their seats.

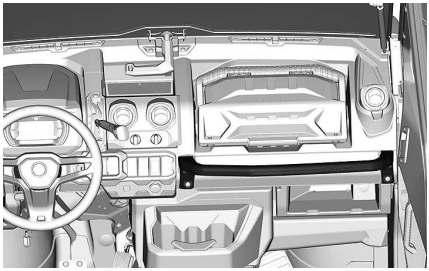

Adjust the seat position in order to get a solid and comfortable grip on the handholds. Refer to *Passenger's Seat* for adjustment procedure.

Holding the handhold helps the passengers brace against the movement of the vehicle and helps keep hands and body inside the cockpit in the event of a rollover.

⚠ WARNING

Never use any part of vehicle cage as handholds. Hands can be struck by objects outside the cockpit or crushed in a rollover.

Storage Compartments

The vehicle is equipped with storage compartments designed to carry light objects.

Multifunction Gauge Storage Compartment

A storage compartment is available above the multifunction gauge.

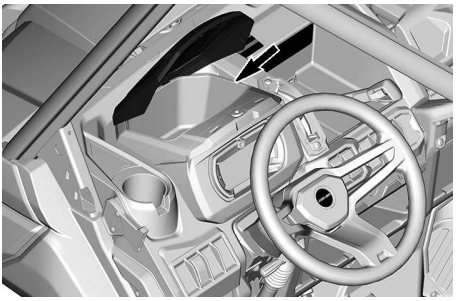

Driver Storage Compartment

A small storage compartment is available on the driver side.

Pull on handle to rotate it open.

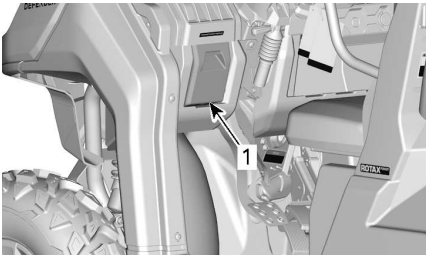

TYPICAL

1. *Driver storage compartment*

Removable Tool Box

A removable tool box is located on the upper console in front of the passenger's seat..

Opening the Tool Box Lid

⚠ WARNING

Before riding, always make sure tool box is secured to vehicle and lid is locked.

1. Push the lock downwards and lift the lid.

2. To close the lid, lower it and push the lock upwards.

Removing and Securing the Tool Box

⚠ WARNING

Before riding, always make sure tool box is secured to vehicle and lid is locked.

1. To remove the tool box from the vehicle, lift its transport handle.
2. To secure the tool box in place, position it carefully and lower the transport handle.

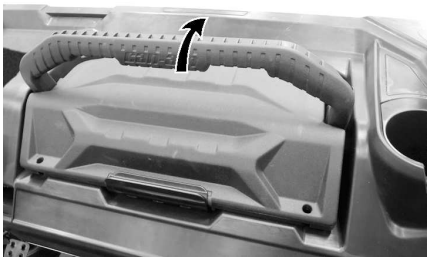

SECURING TOOL BOX IN PLACE

Under Seat Storage Box

A convenient removable under seat storage box is available.

TYPICAL

1. Under seat storage box

To remove under seat storage box, lift RH passenger seat and remove under seat storage box by pulling it upwards.

TYPICAL

NOTE:
When reinstalling under seat storage box, make sure to align it properly with seat tubes and floor emboss so it fits properly under the seat.

Open Storage Compartments

Multiple open storage compartments are available in the console.

⚠ WARNING

When riding vehicle, make sure no object stored in open storage compartments could cause harm in the event of a roll over.

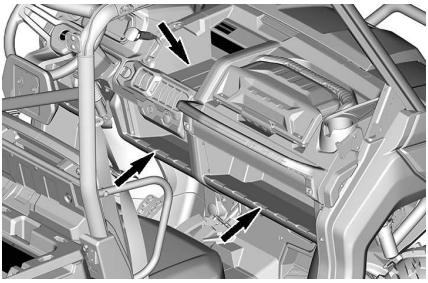

ALL EXCEPT BASE

Central Passenger Backrest Storage Area

When central passenger seat backrest is pulled down a storage area is available.

NOTE:
Always empty storage area before putting central passenger backrest up.

TYPICAL

1. *Central passenger backrest storage area*

Tool Kit

A tool kit with basic tools is provided. It is located in the front service center.

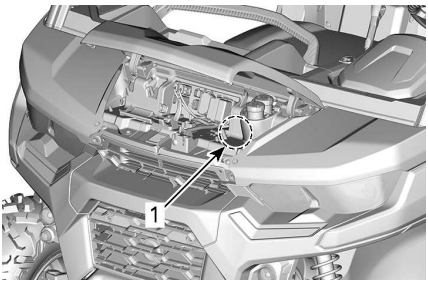

1. *Tool kit*

Footrests

The vehicle is equipped with driver and RH passenger footrests to allow firmly planting feet on vehicle floor, which helps to maintain proper body position while riding.

The footrests help minimize the risk of leg or foot injury.

Always wear appropriate footwear. See *Riding Gear*.

Side Nets

A side net is provided on each side of the cockpit to help arms, legs or shoulders stay inside the vehicle, thus reducing the risk of injuries. Side nets may also keep bushes or other debris out of the cockpit.

⚠ WARNING

Never operate the vehicle unless both side nets are in place and buckled.

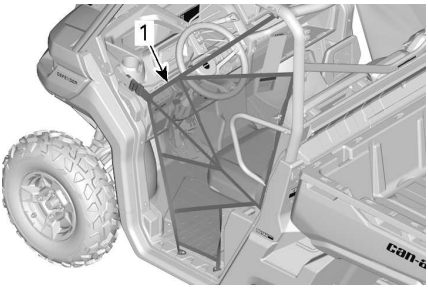

1. *Side net*

Side nets are adjustable and must be kept as tight as possible.

To adjust side nets proceed as follows:

1. Secure side net with buckle.
2. Pull on four adjustment straps to tighten.

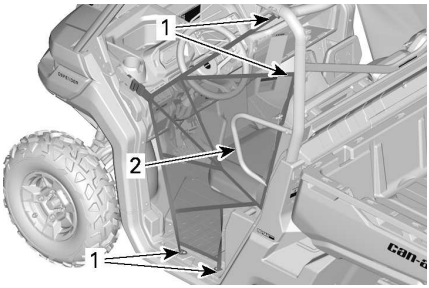

1. *Side net adjustment locations*
2. *Shoulder guard*

Shoulder Guards

The vehicle is equipped with shoulder guards to help restrain the entire body of driver and passengers inside vehicle.

Seat Belts

This vehicle is equipped with 3 points seat belts to help protect driver and passenger in the event of a collision, rollover, or tipover. The seat belts can help keep occupants stay in the passenger compartment.

⚠ WARNING

Wear seat belts properly at all times.
Seat belts reduce the risk of injury in case of a crash and help to keep limbs inside the cockpit during a rollover or any accidents.

If driver's seat belt is not fastened when:

- The ignition is turn ON
  - The seat belt indicator lamp will be turned ON.
  - The multifunction gauge will display the message: SEAT BELT.
- The engine is started and shift lever is moved out of PARK, vehicle speed will be limited to a maximum of approximately 20 km/h (12 MPH) on flat ground.

⚠ WARNING

The vehicle may reach higher or lower speed depending on inclines.

⚠ WARNING

There is no indicator light or message for the passengers seat belt. The driver is responsible for the passenger safety and should ensure the passenger buckles its seat belt.

Fastening and Adjusting the Seat Belt

The seat belt is equipped with a semi--cinching tab that lock the lap belt when the webbing is under tension.

TYPICAL

1. *Semi-cinching tab*

To fasten the seat belt, insert the latch plate into the buckle, then pull the belt to ensure it is properly fastened.

Adjust the seat belt tightly against your body by pulling the shoulder belt upwards.

TYPICAL

⚠ WARNING

Wear seat belt properly. Make sure it remains securely fastened and tightened against the body. Make sure it is not twisted or defective.

To release the seat belt, push on the red button on the seat belt buckle.

Driver's Seat

On applicable models, the driver's seat can be adjusted forward and backward.

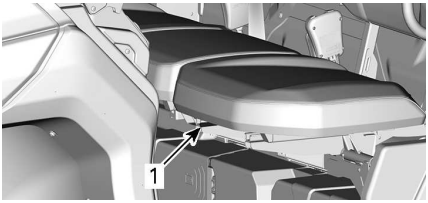

TYPICAL

1. *Adjustment lever*

To adjust seat, move the seat lever to unlock the seat. Release the lever to lock the seat into desired position.

⚠ WARNING

Never adjust the seat position while driving.

Passenger Seats

The passenger seats are not adjustable.

The central passenger seat backrest can be tilted forward for access to cup holders by releasing the latch located on top of the backrest.

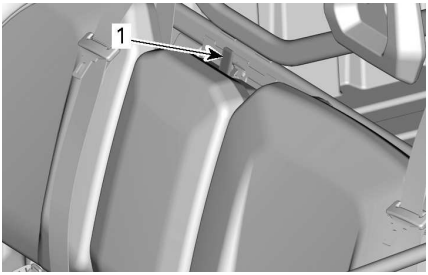

TYPICAL

1. *Backrest clip locking mechanism*

On applicable models, the seats can be lifted to allow access to removable under seat storage compartment.

To lift seat, pull on front of seat to un-clip it and lift until it "clips" in the upper position.

Fuel Reservoir Cap

The fuel reservoir cap is located on the right hand side of the vehicle cargo box release handle.

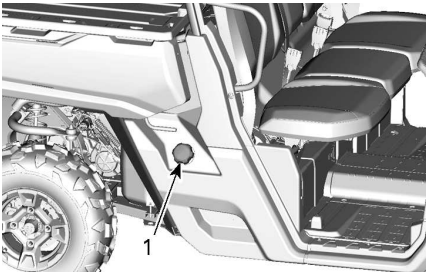

TYPICAL

1. *Fuel reservoir cap*

Refer to *Fuel* section for information on fueling procedure and fuel requirements.

Winch

⚠ WARNING

To avoid severe injury or death or important components damages.

- **Never use the winch cable/ rope to retain a vehicle during trailering.**
- **Never ride with the winch cable/rope attached to a load or another vehicle.**
- **Only use the winch to help a stuck vehicle (snow, mud, etc.).**
- **Always refer to the winch manufacturer's instruction before pulling loads.**

Refer to your winch guide included with your vehicle for proper winch operation.

The winch can be actuated inside the vehicle using the winch control switch on the upper console.

NOTICE

Using the winch intensively over a long period of time may discharge the battery.

Intensive use of the winch may cause the built-in circuit breakers to momentarily turn OFF. In such a case, wait a moment, then continue winching. the breakers automatically turn ON once they cooled down.

The following tips will help to reduce the risk of discharging the battery:

- Always unreel manually: Unlock the cable using the handle then pull on the hook strap to unreel.
- Let the vehicle run while winching. Do not stop vehicle immediately after winching to let battery recharge.
- Also, when winching for more than 30 seconds, it is recommended to increase engine RPM in the range of 3000 RPM to increase charging power to the battery.

⚠ WARNING

Make sure vehicle is in NEUTRAL (N) and before increasing engine RPM.

Cargo Box

The vehicle is equipped with a an inclinable cargo box. The cargo box may be used for various types of cargo.

⚠ WARNING

To reduce the risk of loss of control or loss of load, use the cargo box only in accordance with *Carrying Loads* in the *Safety Information* section.

Cargo Box Separations

Cargo box can be easily separated into smaller storage compartments to prevent cargo loads from mixing.

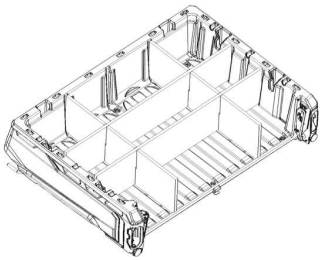

EXAMPLE OF CARGO BOX SEPARATIONS

Cargo Box Tilt Release Handles

The latching mechanism of the cargo box can be actuated from either side of the vehicle through a release handle.

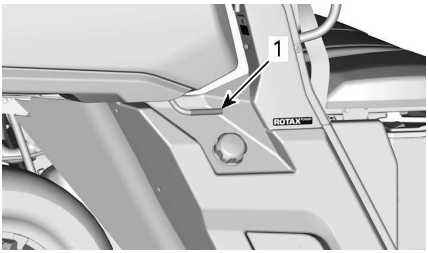

1. *Cargo box release handle*

Anchoring Hooks

To provide anchoring point in order to secure cargo inside the cargo box, 4 anchoring hooks are located inside the cargo area.

NOTICE

Never lift vehicle using anchoring hooks.

Tailgate

The cargo box can be closed with a tailgate.

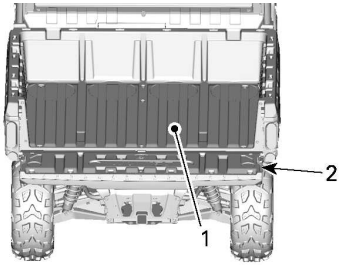

1. *Cargo box*
2. *Tailgate*

NOTICE

Do not exceed 113 kg (250 lb) of weight on the tailgate during loading or unloading. Always close tailgate before operating to reduce the risk of loss of load.

Removing the Tailgate

Open tailgate and remove retaining cables.

Position tailgate so as to remove it from pivot points.

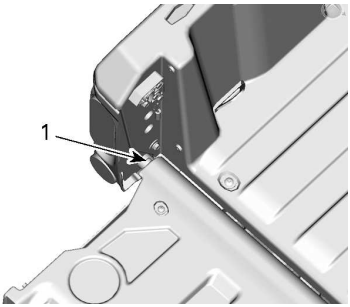

1. *Tailgate pivot point*

Trailer Hitch

The vehicle comes equipped with a 50.8 x 50.8 mm (2 x 2 in) standard receiver hitch.

For the proper usage of the hitch support, refer to *Moving Loads and Doing Work*.

⚠ WARNING

To reduce the risk of loss of control or loss of load, always respect the maximum hauling capacity.

12-Volt Power Outlets

Convenient for handheld spotlight or other portable equipment.

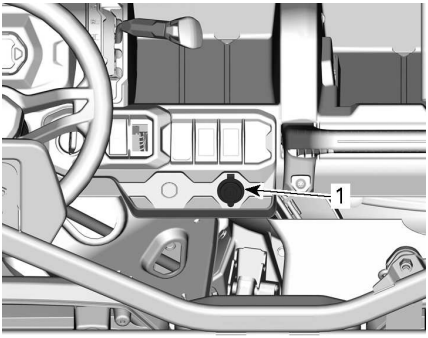

ALL MODELS

1. *12 V power outlets*

Remove protective cap to use. Always reinstall it after use to protect against weather.

USB Power Outlet

Some models are equipped with a USB port used for charging.

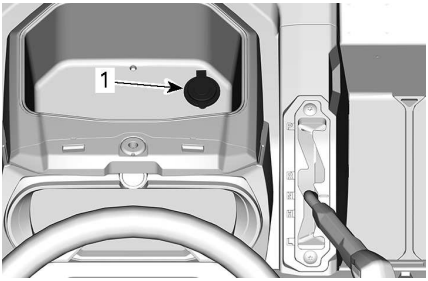

1. USB charging port

Rock Sliders

Aluminium rock sliders for additional lower body protection.

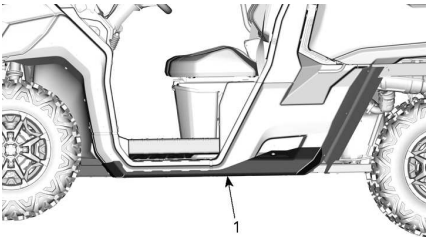

1. Rock slider

Front Bumper

Steel bumper for additional front body protection.

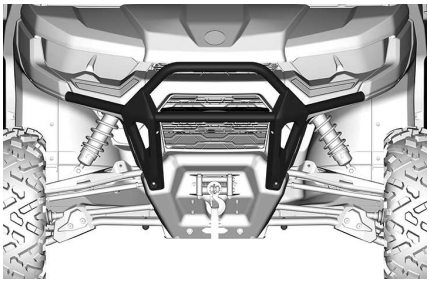

Brake Holding Mechanism

The brake holding mechanism lever is located on the LH side of the steering wheel, above the brake pedal.

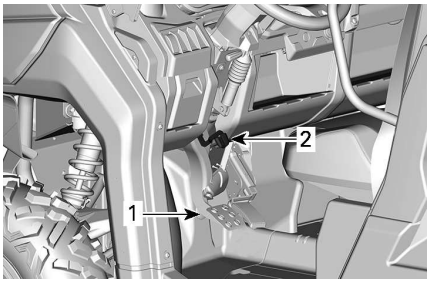

TYPICAL

1. Brake pedal
2. Brake holding mechanism lever

The brake holding mechanism function is to maintain brakes to all wheels while shift lever is set to Park.

To engage the brake holding mechanism, proceed as follow:

1. Immobilize vehicle,
2. Apply and hold the brakes,
3. Put shift lever in **Park**,
4. While holding the brakes, lift lever toward the steering wheel,
5. Remove foot from brake pedal, the pedal should stay lowered.

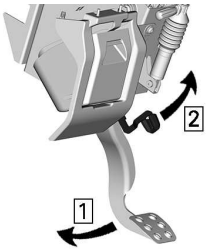

Step 1. Apply and hold brake pedal
Step 2. Lift lever

NOTE:
The brake holding mechanism lever can be set to several positions.

⚠ WARNING

When the brake holding mechanism is applied, make sure the vehicle stays securely in place. ALWAYS put the shift lever in PARK when using the brake holding mechanism.

To release the brake holding mechanism, simply apply and hold the brake pedal, put shift lever in gear then release brake pedal. When released it should return to the rest position.

Safe usage of the brake holding mechanism requires the shift lever to be set to the Park position. It is not recommended to use the brake holding mechanism on its own.

⚠ WARNING

Make sure brake holding mechanism is released before operating the vehicle. If the brake holding mechanism is left ON while riding, it may cause damage to the brake system and lead to loss of braking capacity and/or fire.

Full Doors With Electric Windows

Some vehicles come equipped with full doors and electric windows.

Doors can be removed from the vehicle. See an authorized Can-Am Off--road dealer for information.

⚠ WARNING

Always install safety nets and shoulder bars whenever removing full doors from vehicle. See an authorized Can-Am Off-road dealer for installation instructions.

Two-Window Doors

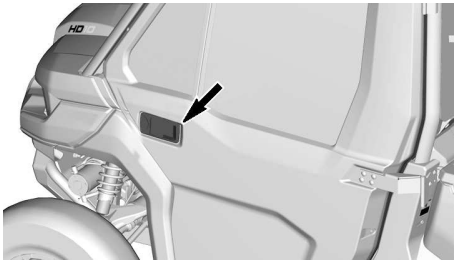

OUTER DOOR HANDLE

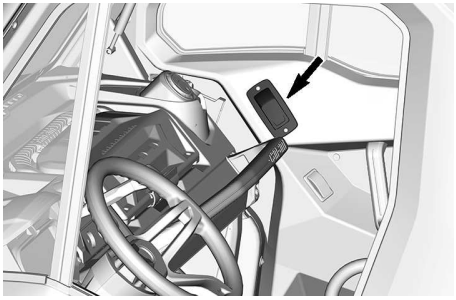

INNER DOOR HANDLE

Three-Window Doors

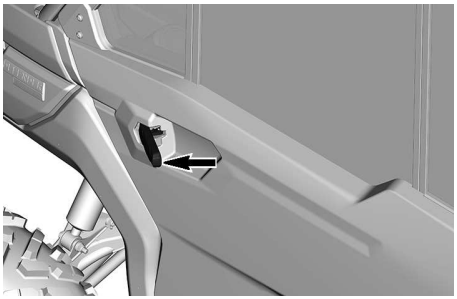

OUTER DOOR HANDLE

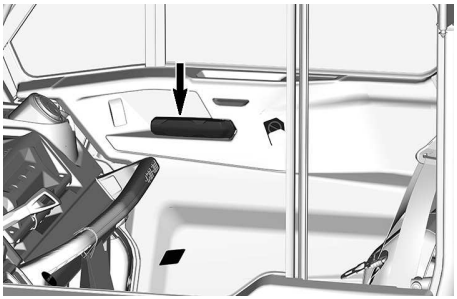

INNER DOOR HANDLE

Windshield with Wiper

Some vehicles are equipped with a full glass windshield and a wiper.

To activate wiper, press activation switch. The switch is located on the central panel at the top of the windshield.

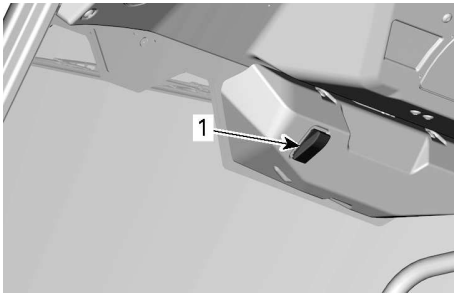

1. Wiper activation switch

To activate windshield washer, hold activation switch up.

Full glass windshield with wiper can be removed from vehicle. See an authorized Can-Am Off-road dealer for information.

Windshield Position

Windshield can be set to 3 different positions.

– Closed
– Partially opened (second position on the handle)
– Fully opened (handle is released)

NOTE:
When riding the vehicle with the windshield in one of the open position, adjust your speed to the terrain. The glass windshield is not as strong when not seated in its closed position.

To close windshield, pull on handle until it closes.

Filling up Windshield Washer

Open cargo box.

Lift service cover and remove windshield washer bottle cap.

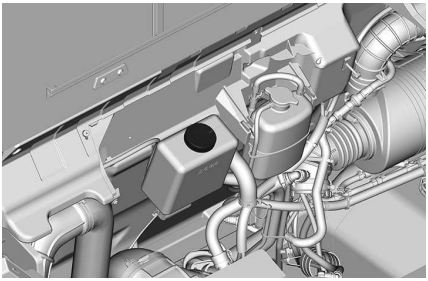

Fill windshield washer bottle.

Climate Control System

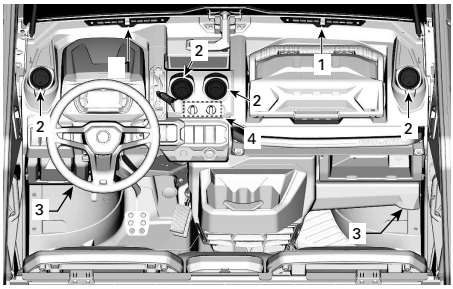

MODELS WITHOUT A/C

1. *Windshield air vents*
2. *Central air vents*
3. *Footwell air vents*
4. *Climate control*

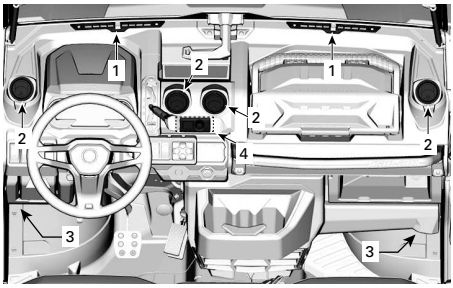

MODELS WITH A/C

1. *Windshield air vents*
2. *Central air vents*
3. *Footwell air vents*
4. *Climate control*

Windshield Air Vents

Located on the top of the dash, they allow distribute the air flow on the windshield.

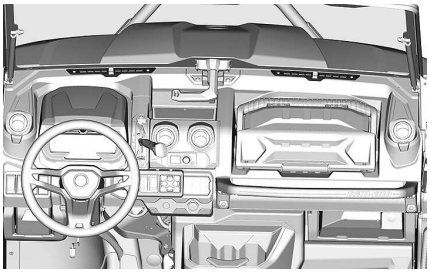

The air flow may be adjusted using the central knob.

– Push the knob toward the windshield to close the vent.
– Pull it to open the vent.

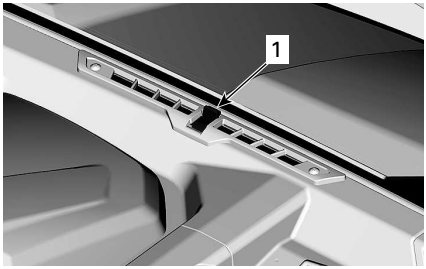

CLOSED POSITION SHOWN

1. *Central knob*

Console Air Vents

Located on the center of the console, they allow distribute the air flow inside the cockpit.

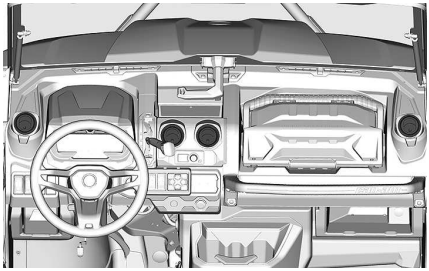

Push on the molded dot to open the vent.

Push on vent tabs to close.

Rotate the external ring of the vent to orient the air flow in the cockpit.

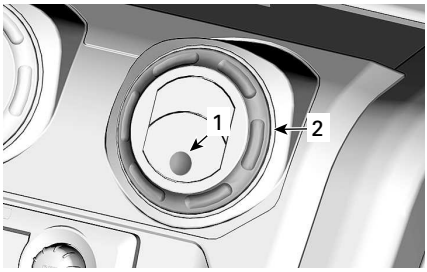

1. *Molded dot*
2. *External ring*

Footwell Air Vents

Located underneath the dash, each side of the vehicle, they allow distribute the air flow at the bottom of the cockpit.

Push on the molded dot to open the vent.

Push on vent tabs to close.

Climate Control - Without A/C

This vehicle is equipped with an heating system.

This system is controlled by two knobs.

– Fan speed control
– Temperature control

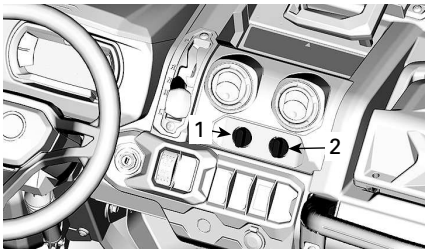

1. *Fan speed control*
2. *Temperature control*

Fan Speed Control

Controls the flow of air circulated in the vehicle.

Turn to select the desired fan speed or to switch it off.

NOTE:
If the fan is switched off, the windshield may fog up.

Temperature Control

Controls the temperature of the air circulated in the vehicle.

Turn to select the desired temperature.

Climate Control - With A/C

This vehicle is equipped with an heating/air conditioning system.

This system is controlled by a multifunction module. This module gives access to the following functions:

– Temperature
– Temperature mode
– Fan speed
– Settings

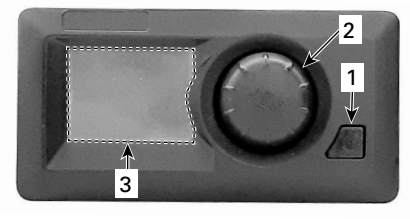

1. *Power switch*
2. *Selector knob*
3. *Display*

For an optimal efficiency of the system, the supply control of the outside air is determine automatically by the climate control module. No operator's action is required.

Temperature

To adjust the temperature, turn the selector knob to select the desired temperature.

The temperature can be set between 13 °C and 28 °C (56 °F and 82 °F) in 1 degree increments.

In position T ° MIN, the system switches to continuous cooling.

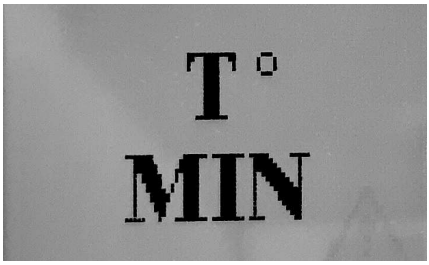

In T ° MAX, the system switches to continuous heating.

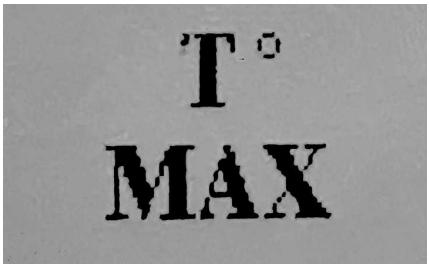

NOTE:
In either T ° MIN or T ° MAX position, the system can not regulate a stable temperature.

Temperature Mode

1. To select the temperature mode, press the selector knob until one of the following icon appear.

2. Turn the selector knob to change the mode.

NOTE:
After 5 seconds, the module saves your selection and returns automatically to the temperature display.

In AUTO mode, the system automatically adjusts to heat or cool the cockpit to obtain the selected temperature as quickly as possible by adjusting the fan speed automatically.

If an other fan speed is selected while in AUTO mode, the system will fall in cool or heat mode depending the ambient conditions.

Fan Speed

To adjust the fan speed, press the selector knob until the fan icon appears then turn the knob to select the desired speed.

3 settings are available for fan speed:

- LOW
- MED
- HIGH

NOTE:
After 5 seconds, the module saves your selection and returns automatically to the temperature display.

Setting

The following settings can be modified by the operator.

- Contrast (0% to 100%)
- Brightness (0% to 100%)
- Unit (°C or °F)

To modify a setting, press the selector knob 2 time to reach the Fan Speed page.

NOTE:
Each next action must be performed within 10 seconds, otherwise the module will come back to the temperature display.

Press and hold the power button while turning the selector knob clockwise for at least 3 clicks.

To change the **CONTRAST**: turn the selector knob until the desired level is reached.

To change the **BRIGHTNESS**: press the selector knob 1 time, then turn the knob until the desired level is reached.

To select **°C or °F**: press the selector knob 2 times, and turn the knob to change the unit.

Rear Deflector

Clear rear deflector to protect from back draft of dust or rain in harsh environments. Sliding quick mount for easy installation.

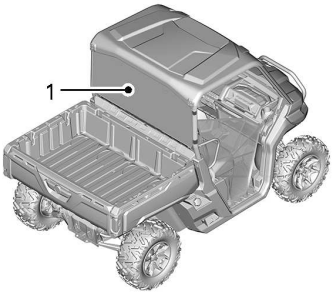

1. Rear deflector

Removing the Rear Deflector

To remove the rear deflector, slide clamp toward the unlock icon.

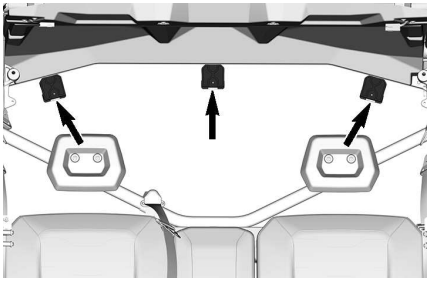

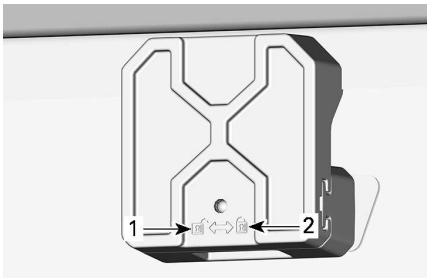

CLAMP

1. Unlock icon
2. Lock icon

Tilt toward the rear and lift.

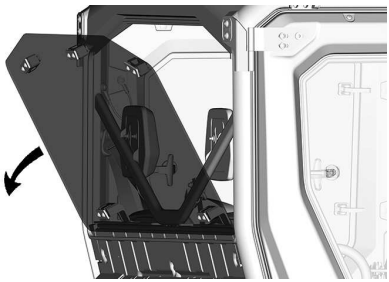

4.5” DIGITAL DISPLAY

Multifunction Display

General View

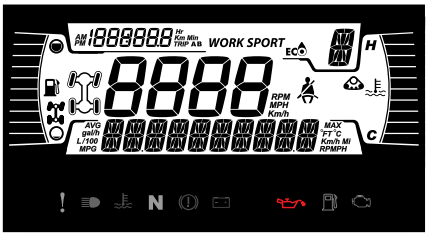

Lower Display

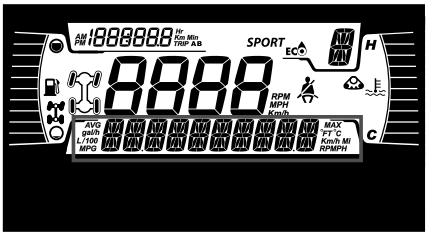

May display the following:

- RPM
- Speed statistics
- Engine Temperature
- Battery Voltage
- Settings
- Messages

Use LOWER button to change the displayed information.

Left Lateral Display

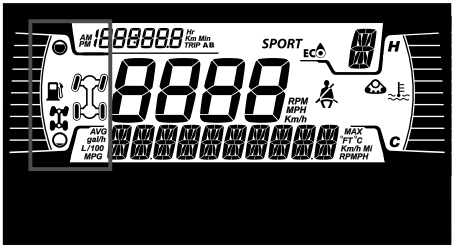

The left lateral display includes:

- Fuel level indicator
- 2X4 / 4X4 telltale
- Rear diff lock

Icon	Country
	For European community countries
	For all other countries

Right Lateral Display

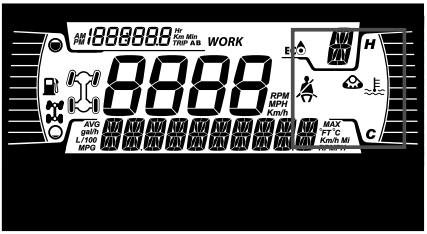

The right lateral display includes:

- Engine Temperature
- Track Kit Telltale
- Seat belt reminder

When a track kit is installed, a message will scroll in the lower display.

Central Display

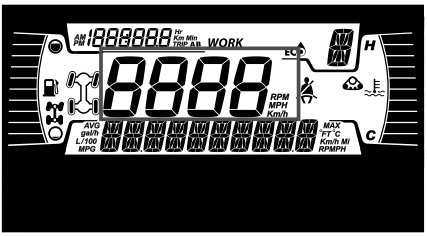

Display the vehicle speed in km/h or MPH.

Transmission Position Display

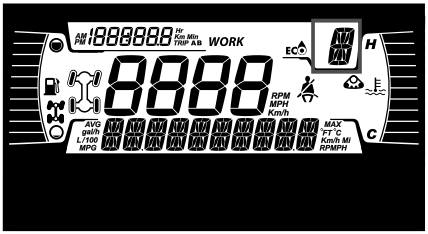

This display shows gear position of gearbox:

– P (Park)
– R (Reverse)
– N (Neutral)
– H (High Range)
– L (Low Range)
– – (Invalid Range)

MODE Display

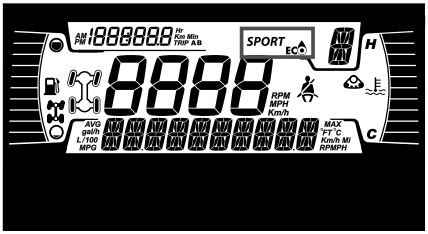

The MODE display indicates the selected mode of operation:

– ECO
– WORK

To change between modes, hold LOWER button and short press LOWER button to cycle through available modes.

Drive Mode	Message at Activation
WORK	WORK MODE
ECO	ECO MODE

Trip Display

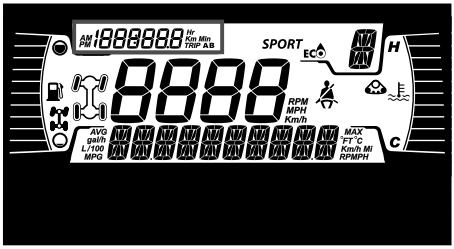

This display shows trip information:

– Cumulative distance odometer
– Trip A
– Trip B
– Vehicle hour meter
– Clock

Use UPPER button to change the displayed information.

Hold UPPER button to reset Trip A/B meters.

Warning Lamps and Indicators

The following indicator lamps will alert you to a vehicle condition that may become serious. Some lamps will illuminate when starting the vehicle to make sure they work. If any lamps remain on after starting the vehicle, refer to the respective system warning lamp for further information.

NOTE:
Some warning indicators appear in the display of the multifunction gauge and function the same as an indicator lamp but do not display when starting the vehicle.

Telltale Lights - Lower Bar

Warning and Telltale Lights	
!	ORANGE - Vehicle Malfunction
	BLUE - High Beam
	RED - The engine temperature is too high.
N	GREEN - Neutral
	RED - (Blinking) Accelerator pedal and the brake are activated simultaneously for a certain time (a torque limitation is active)
– +	RED - Low battery.
	RED - Low oil pressure (Normally ON at engine OFF)
	ORANGE - Low fuel level
	ORANGE - Check engine

Icons and Indicators - Multifunction Display

Icons and Indicators	
WORK	Denotes WORK mode is selected.
ECO	Denotes ECO mode is selected.

Icons and Indicators	
	When lit, seat belt not buckled with vehicle immobilized. Flashing when vehicle is moving.
	Track kit active (If Equipped)

Settings

The buttons to navigate through menus are located on the left side of the LCD display.

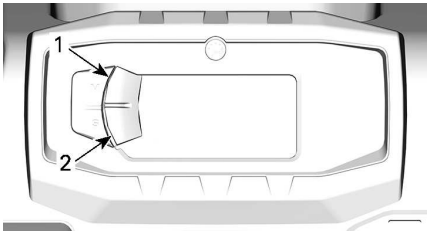

TYPICAL

1. *Upper button*
2. *Lower button*

Setup

Using LOWER button, select **SETTINGS** and hold to enter setting menu.

Maintenance Reset

NOTE:
Only when the maintenance icon is displayed.

Using LOWER button, select **RES MAINT** and hold to reset maintenance.

Fault Codes

Available only when at least one code is activated.

Using LOWER button, select **CODES** and hold to see actives fault codes.

Fault codes will be scrolled on the Lower Display.

Reset Stats

Using LOWER button, select **RESET STAT** and hold to reset.

Unit Selection

This multifunction gauge is factory preset in Imperial units but it is possible to change it to Metric units.

Using LOWER button, select **UNITS** and hold button to change units.

Setting Clock

All of the following action must be performed using the LOWER button.

1. Select **CLOCK** and hold to adjust clock.
2. Press the button to select clock display.
3. Push and hold the button for 1 second.
4. Press the button to select 12:00 AM PM or 24:00 time base.
5. Push and hold the button to acknowledge selection.
6. Press the button to change hours (hours flash).
7. Push and hold the button to acknowledge hour selection.
8. Press the button to switch to minutes (minutes flash).
9. Push and hold the button to acknowledge minutes selection.

Setting Language

The gauge display language can be changed.

Refer to an authorized Can-Am Off--road dealer for language availability and to setup the gauge to your preference.

Setting Brightness

The brightness of the LCD display can be adjusted.

Using LOWER button, select **BRIGHTNESS** and hold button to change brightness.

Using LOWER button, adjust brightness then push and hold the button to acknowledge selection.

7.6" DIGITAL DISPLAY (KEYPAD)

Basic Functions

Multifunction Gauge Description

⚠ WARNING

Do not adjust the display while riding, you could lose control.

General View

Lower Display

May display the following:

- RPM
- Speed statistics
- Engine Temperature
- Battery Voltage
- Settings
- Messages
- Active DPS mode (Maverick models only)
- CVT Belt Temperature (On applicable models)

The SPEED STAT display shows the maximum and the average speed. Hold MENU or OK button for 1 second to reset.

Left Lateral Display

The left lateral display includes:

- Fuel level indicator
- Tripmeter (A - B)
- Odometer
- Vehicle Hour meter
- DPS indicator

Right Lateral Display

The right lateral display includes:

- Engine Temperature
- Clock
- Speed indicator

The speed indicator in this display is activated when the central display shows information other than the speed. Otherwise it is blank.

Central Display

May display the following:

- RPM
- Vehicle speed

Transmission Position Display

This display shows gears position of gearbox:

- P (Park)

– R (Reverse)
– N (Neutral)
– H (High range)
– L (Low range)
– – (Invalid gear)

MODE Display

The MODE display indicates the selected mode of operation:

– WORK
– ECO

To change between modes, press DRIVE MODE button on keypad to cycle through available modes.

A message of the selected mode will be displayed on the lower display at activation and deactivation as follow:

Drive Mode	Message at Activation
WORK	WORK MODE
ECO	ECO MODE

Middle Right Display

The middle right display indicates the selected mode of operation:

– 2X4
– 4X4
– Active tracks

Icon	Country
	For European community countries
	For all other countries

Middle Left Display

The middle left lateral display includes:

– Seat belt reminder
– Maintenance reminder

Indicator Lamps

Warning and Telltale Lights

Warning and Telltale Lights	
	RED - The engine temperature is too high.
	RED - Low battery. (Normally ON at key ON engine OFF)
	RED - Low oil pressure
	ORANGE - Low fuel level
	ORANGE - Check engine
!	ORANGE - Vehicle Malfunction

Warning and Telltale Lights	
	RED - (Blinking) Accelerator pedal and the brake are activated simultaneously for a certain time (a torque limitation is active)
	BLUE - High Beam
N	GREEN - Neutral

Icons and Indicators

Icons and Indicators	
WORK	Denotes WORK mode is selected.
ECO	Denotes ECO mode is selected.
	When lit, seat belt not buckled with vehicle immobilized. Flashing when vehicle is moving.
	When lit, indicates that a maintenance is required. See your authorized Can-Am dealer or person of your own choosing for the maintenance.
	Track kit active (If Equipped)

Settings

Setup

Using MENU button on the keypad, select **SETTINGS** and hold to enter setting menu.

OK button can be pressed instead of holding MENU button.

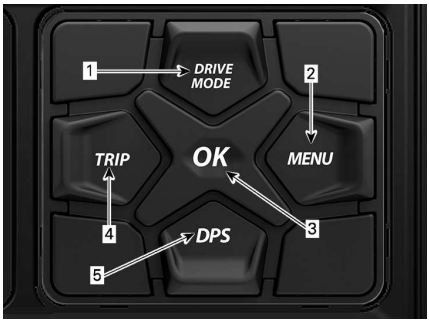

5 BUTTONS KEYPAD

1. *DRIVE MODE button*
2. *MENU button*
3. *OK button*
4. *TRIP button*
5. *DPS button*

Maintenance Reset

NOTE:
Only when the maintenance icon is displayed.

Using MENU button, select **RES MAINT** and hold to reset maintenance.

Fault Codes

Available only when at least one code is activated.

Using MENU button, select **CODES** and hold to see active fault codes.

Fault codes will be scrolled on the Lower Display.

Reset Stats

Using MENU button, select **RESET STAT** and hold to reset.

Unit Selection

This multifunction gauge is factory preset in Imperial units but it is possible to change it to Metric units.

Using MENU button, select **UNITS** and hold button to change units.

Speed/RPM

The speed and RPM display can be swapped.

Using MENU button, select **SPEED/ RPM** and hold button to invert speed and RPM display.

Setting Clock

All of the following action must be performed using the MENU button.

1. Select **CLOCK** and hold to change time.
2. Press the button to select clock display.
3. Push and hold the button for 1 second.
4. Press the button to select 12:00 AM PM or 24:00 time base.
5. Push and hold the button or OK button to acknowledge selection.
6. Press the button to change hours (hours flash).
7. Push and hold the button or OK button to acknowledge hour selection
8. Push the button to switch to minutes (minutes flash).
9. Push and hold the button to acknowledge minutes selection.

Setting Brightness

The brightness of the LCD display can be adjusted.

Using MENU button, select **BRIGHTNESS** and hold MENU button to select the brightness setting.

Using MENU button, adjust brightness then push and hold MENU button to acknowledge selection.

Setting Language

The gauge display language can be changed.

Refer to an authorized Can-Am Off--road dealer for language availability and to setup the gauge to your preference.

DPS Modes

The lower display can show which DPS mode is active. Refer to *Tune Your ride*.

FUEL

Fuel Requirements

NOTICE

Always use fresh gasoline. Gasoline will oxidize; the result is loss of octane, volatile compounds, and the production of gum and varnish deposits which can damage the fuel system.

Alcohol fuel blending varies by country and region. Your vehicle has been designed to operate using the recommended fuels, however, be aware of the following:

- Use of fuel containing alcohol above the percentage specified by government regulations is not recommended and can result in the following problems in the fuel system components:
  - Starting and operating difficulties.
  - Deterioration of rubber or plastic parts.
  - Corrosion of metal parts.
  - Damage to internal engine parts.
- Inspect frequently for the presence of fuel leaks or other fuel system abnormalities if you suspect the presence of alcohol in gasoline exceeds the current government regulations.
- Alcohol blended fuels attract and hold moisture which may lead to fuel phase separation and can result in engine performance problems or engine damage.

Recommended Fuel

The gasoline must have the following minimum octane requirements:

Regular unleaded gasoline with an AKI (R+M)/2 octane rating of 87, or an RON octane rating of 91

Use unleaded gasoline containing MAXIMUM 10% ethanol.

E10

NOTICE

Never experiment with other fuels. Engine or fuel system damages may occur with the use of an inadequate fuel.

NOTICE

Do NOT use fuel from fuel pumps labeled E85.

Use of fuel labeled E15 is prohibited by U.S. EPA Regulations.

Vehicle Fueling Procedure

⚠ WARNING

- **Fuel is flammable and explosive under certain conditions.**
- **Never use an open flame to check fuel level.**
- **Never smoke or allow flame or spark in vicinity.**
- **Always work in a well-ventilated area.**
- **Vehicle must be on a level surface to perform fueling.**

1. Place vehicle on a level surface.
2. Stop engine.

⚠ WARNING

Always stop engine before refueling.

3. Have occupants get out of vehicle.

⚠ WARNING

Do not allow anyone to remain in the vehicle while fueling. If there is a fire or explosion during fueling, a vehicle occupant could be unable to quickly leave the area.

4. Slowly unscrew the fuel reservoir cap counterclockwise to remove it.

⚠ WARNING

If a differential pressure condition is noticed (whistling sound heard when loosening fuel reservoir cap) have vehicle inspected and/or repaired before further operation.

5. Insert the spout into the filler neck.
6. Pour fuel slowly so that air can escape from the tank and prevent fuel flow back. Be careful not to spill fuel.
7. Stop filling when the fuel reaches the bottom of filler neck. **Do not overfill.**

⚠ WARNING

Never top up the fuel tank before placing the vehicle in a warm area. As temperature increases, fuel expands and may overflow.

8. Fully tighten fuel reservoir cap clockwise until you hear a clicking noise.

NOTICE

Always wipe off any fuel spillage from the vehicle.

BREAK-IN PERIOD

Operation During Break-In

A break-in period of 10 operating hours or 300 km (200 mi) is required for the vehicle.

Engine

During the break-in period:

– Avoid full throttle operation.
– Avoid pressing accelerator pedal more than 3/4 of the stroke.
– Avoid sustained accelerations.
– Avoid prolonged cruising speeds.
– Avoid engine overheating.

However, brief accelerations and speed variations contribute to a good break-in.

Brakes

⚠ WARNING

New brakes will not operate at their maximum efficiency until their break-in is completed. Braking performance may be reduced, so use extra caution.

Belt

A new belt requires a break in period of 50 km (30 mi).

During the break-in period:

– Avoid strong acceleration and deceleration.
– Avoid pulling a load.
– Avoid high speed cruising.

Starting the Engine

Press the brake pedal.

Insert key in ignition switch and turn to the ON position.

NOTE:
If shift lever is not set to PARK (P) or (N) NEUTRAL, the brake pedal must be pressed to allow engine starting.

Turn the key to the start position and hold until the engine starts.

NOTE:
Do not press the accelerator pedal. If the accelerator pedal is pressed at least 50%, the engine will not start.

Release the engine start position immediately when the engine has started.

NOTICE
If engine does not start after a few seconds, do not hold the start position more than 10 seconds. Refer to *Troubleshooting*.

Operating the Shift Lever

Apply brakes and select the desired shift lever position.

Release brakes.

NOTICE
When changing gear selection, always completely stop the vehicle and apply the brakes prior to shifting. Damage to the gearbox may occur.

Choosing the Correct Range (Low or High)

It is important to limit situations known to make the drive belt slip excessively. The main reason the drive belt will slip is if the gearbox is in high range when it should be in low range.

Pay attention to the following:

Low range

Low range should be used whenever:

- Pulling
- Pushing
- Hauling a load
- 4x4 applications
- Mud holes
- Water holes
- Crossing obstacles
- Climbing onto trailer
- Hill climbing

It is also recommended to use low range if driving for prolonged periods at speeds under 24 km/h
(15 MPH).

Please refer to *Break-in Period* for drive belt break-in information.

High range

High is the default riding range.

Electronic Drive Belt Protection (if available and activated on your model)

Some vehicles have the electronic drive belt protection function activated.

Refer to your authorized Can-Am Off--road dealer for availability and possible activation.

This function is activated when riding at too slow speed for the **high range**, such as in the following situations:

- Pulling
- Pushing
- Hauling a load
- 4x4 applications
- Mud holes
- Water holes
- Crossing obstacles
- Climbing onto trailer
- Hill climbing

In the above mentioned situations the electronic drive belt protection will help protect the CVT drive belt from

being damaged by activating the engine torque limiter. The gauge will also scroll a LOW GEAR message, suggesting the operator to immobilize the vehicle and set to LOW GEAR.

Whenever the electronic drive belt protection is activated, you MUST shift in LOW range. Refer to *Operating the Shift Lever*.

Stopping the Engine and Parking the Vehicle

⚠ WARNING

Avoid parking on steep slope as the vehicle may roll away.

⚠ WARNING

Always put the vehicle in PARK when stopped or parked to prevent rolling.

⚠ WARNING

Avoid parking in places where hot parts can start a fire.

When stopped or parked always bring shift lever to park position. This is especially important when parking on a slope. On very steep inclines or if the vehicle is carrying a cargo, the wheels should be blocked using rocks or bricks.

Select the flattest terrain available for parking.

Release accelerator pedal and use brakes to completely stop the vehicle.

Set shift lever in PARK position.

Turn key in ignition switch to OFF position.

Remove key from ignition switch.

Tips for Maximizing Drive Belt Durability

Riding style and conditions have a direct impact on drive belt durability. Your vehicle features a CVT system design that is optimized to offer the best performance. The CVT and drive belt have successfully endured thousands of miles of durability tests. However, to maximize drive belt durability and to prevent premature failures, it is important that the operator understands the limits of a belt driven CVT system and adapts their riding style and speed accordingly.

If riding in any of the conditions listed below, BRP highly recommends not to constantly hold the throttle wide open (WOT) for more than five (5) minutes.

- High ambient temperatures (above 30 °C (86 °F)
- Heavy loads: Passengers / Heavy cargo
- Heavy drag: Soft sand / Hill climbing / Mud / Using a track kit.

After a few minutes at WOT, partially release the accelerator and allow the CVT to cool down.

For more tips for maximizing the drive belt durability, refer to *Choosing the Correct Range (Low or High)*.

NOTE:
Component failures resulting from these events are not covered by warranty.

Fuel Flooded Engine

If the engine does not start and it is fuel-flooded, the drowned mode can be activated to prevent fuel injection and to cut ignition while cranking. Proceed as follows:

1. Move shift lever in park position.
2. Turn the ignition key in ON position.
3. Press completely and HOLD accelerator pedal.
4. Turn the ignition key to the START position and hold in this position for 10 seconds.
5. Release the ignition key.
6. Release accelerator pedal completely.
7. Turn the ignition key to START position again to allow starting.

If it does not work:

1. Remove the spark plugs. Refer to *Spark Plugs* in *Maintenance Procedures* section.
2. Crank engine several times.
3. Install new spark plugs if possible or clean and dry spark plugs.

If engine does not start, see an authorized Can-Am Off-road dealer, a repair shop, or a person of your own choosing for maintenance, repair, or replacement.

Please refer to the *US EPA Emission-Related Warranty* contained herein for information about warranty claims.

What to do if Water is Suspected to be in the CVT

If water is present in the CVT, the engine will accelerate but the vehicle will remain still.

NOTICE

Stop the engine and drain the water to avoid damage to the CVT.

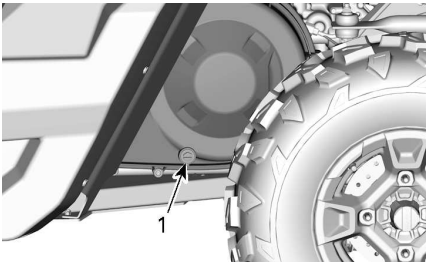

TYPICAL - LEFT SIDE OF VEHICLE UNDER CARGO BOX

1. CVT drain

See an authorized Can-Am dealer , a repair shop or person of your choosing to have the CVT inspected and cleaned.

What to do if Battery is Drained Out

The vehicle can be jump started by using the RED (+) cable to the battery positive pole and the BLACK (-) cable to the vehicle chassis.

NOTICE

Do not connect any electrical source to the steering column or components which are in contact with DPS.

What to Do if Vehicle Rolled Over

Abrupt maneuvers, sharp turns, side hilling or accident may cause vehicle to rollover.

Should the vehicle be rolled over, it will be necessary to have it transported to an authorized Can-Am Off--road dealer for inspection as soon as possible. **NEVER START THE ENGINE!**

Points to be verified, including but not limited to:

- All fluid levels
- Seat belts, including retractors, buckles and semi-cinching tabs
- Cage and its attachment points
- Steering system
- Suspension and its attachment points.

What to do if Vehicle is Submerged

Should the vehicle become immersed, it will be necessary to have it transported to an authorized Can-Am Off--road dealer as soon as possible.

NOTICE

Never start the engine as immersion of the vehicle can cause serious damage to the engine if the correct restart procedure is not followed.

Suspension Adjustment

Suspension adjustment and loading can have an effect on your vehicle handling and comfort.

Choice of suspension adjustments vary with driver's weight, personal preference, riding speed and field condition.

NOTE:
Factory settings are suitable for almost all conditions. Take into consideration that an increase in ground clearance can affect the handling of the vehicle.

Front Suspension Preload Factory Settings	
Model	Factory setting
All	Cam position 1 (soft)

Rear Suspension Preload Factory Settings	
Model	Factory setting
All	Cam position 1 (soft)

Spring Preload Adjustment

⚠ WARNING

The left and right shock adjustment on front or rear suspension must always be set to the same position.
Never adjust one shock only. Uneven adjustment can cause poor handling and loss of stability, which could lead to an accident.

Shorten the springs for a firmer ride and rough conditions.

Lengthen the springs for a softer ride and smooth conditions.

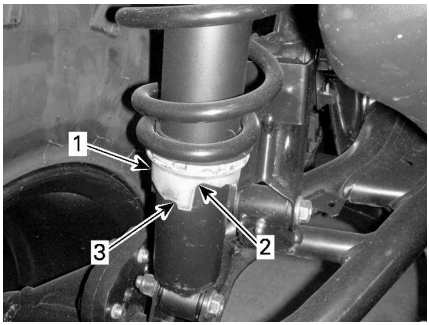

TYPICAL

1. *Adjustment cam*
2. *Softer adjustment*
3. *Firmer adjustment*

DPS Function (If equipped)

The Dynamic Power Steering (DPS) provides a computer controlled, variable power assist, achieved by an electric motor to optimize the amount of steering input required by the rider.

TRANSPORTING THE VEHICLE

When contacting a towing or transporting service, be sure to ask if they have a flatbed trailer, loading ramp or power ramp to safely lift the vehicle and tie-down straps. Ensure the vehicle is properly transported as specified in this section.

NOTICE

Do not tow this vehicle — towing can seriously damage the vehicle's drive system.

NOTICE

Avoid using chains to tie the vehicle — they may damage the surface finish or plastic components.

⚠ WARNING

To avoid severe injury or death or important components damages.

- **Never use the winch cable/ rope to retain a vehicle during trailering.**
- **Never ride with the winch cable/rope attached to a load or another vehicle.**
- **Only use the winch to help a stuck vehicle (snow, mud, etc.).**
- **Always refer to the winch manufacturer's instruction before pulling loads.**

⚠ WARNING

Make sure no loose objects are present inside vehicle during vehicle transportation.

⚠ WARNING

Always transport the vehicle facing forward to avoid damaging the windshield or other components. Parts may detach during transport.

⚠ WARNING

Before attempting to mount vehicle onto a platform or a trailer, make sure to respect the following safety precautions.

Safety Precautions	
Carrying equipment	The carrying item (platform or trailer or flat bed) must be of appropriate dimensions and capacity to safely support and transport the vehicle.
Hauling vehicle	Do not exceed vehicle hauling capacity and specifications. Ensure the trailer or platform is properly secured to the hauling vehicle hitch.
Visibility	Ensure you have a good visibility during the entire maneuver.
Terrain	The hauling vehicle and trailer must be on a leveled surface. Use wheel chocks on trailer and hauling vehicle to avoid any movement.
Ramps	Use ramps with proper rating and secure ramps to the trailer or platform. Avoid steep ramps.
Bystanders	Always make sure bystanders are not close to the vehicle or the trailering equipment while climbing up.

Using Vehicle Power to Climb Onto Trailering Equipment

When vehicle can climb on its own power, proceed as follows;

1. Wear protective gear.
2. Fasten seat belt.
3. Use low gear only (if equipped).
4. If vehicle has 4WD option, use it.
5. When driving remain seated at all times.
6. Ensure proper alignment on rails or platform.
7. Start from a sufficient distance from the trailer to align the vehicle in a straight line with the ramps. Never attempt to turn while getting closer to the ramp. Rear wheels might not be aligned once you get to the ramp and vehicle may fall off.
8. Slowly climb the front wheels onto the ramp to verify alignment.
9. Back off the vehicle, verify ramps are still secure, then proceed at proper speed.
10. Carefully drive vehicle onto platform or trailer. Use sufficient speed to climb without spinning or abruptly accelerating. Avoid acceleration while on ramps to prevent ramps movement.
11. If trailer is inclined towards front, simply let vehicle roll in without acceleration.
12. Once vehicle is climbed, put shift lever to Park. Apply brake locking mechanism (if equipped).

When vehicle cannot move on its own power, or in case overshooting is a risk or if any dangerous condition prevents for embarking on its own power, proceed using a winch;

Using a Winch to Pull Vehicle Onto Trailering Equipment

When vehicle cannot climb on its own power, proceed as follows;

⚠ WARNING

Have the help of an assistant. One person should be in vehicle to have access to vehicle steering, brakes and winch switch, while the other person controls the environment and safety of the maneuver.

⚠ WARNING

Ensure the winch hook can be safely attached to a proper anchoring point. Use proper rigging.

NOTE:
If vehicle can be started safely, let engine idle during winching to avoid draining the battery.

1. Place shift lever to NEUTRAL (N).
2. If the vehicle is equipped with a winch, use the winch to roll the vehicle on the platform.
3. If the vehicle is not equipped with a winch, proceed as follows:
   1. Attach strap to lower front bumper anchor.
   2. Attach the strap to the winch cable of the towing vehicle.
   3. Pull the vehicle on the flatbed trailer with the winch.
4. Put shift lever to Park. Apply brake locking mechanism (if equipped).

Securing Vehicle for Transport

⚠ WARNING

To avoid severe injury or death or important components damages.

- **Never use the winch cable/ rope to retain a vehicle during trailering.**
- **Never ride with the winch cable/rope attached to a load or another vehicle.**
- **Only use the winch to help a stuck vehicle (snow, mud, etc.).**
- **Always refer to the winch manufacturer's instruction before pulling loads.**

1. Remove the key from the vehicle.
2. At rear, secure the vehicle on both sides using a strap around the suspension arm as close to the wheel as possible.
3. At front, secure the vehicle on both sides using a strap around the upper suspension arm as close to the wheel as possible and away from the brake line.

1. Front upper suspension arm

⚠ WARNING

Ensure the brake hose is away from the strap.
A pinched brake hose may reduce the braking performance of the vehicle.

4. Strap the rear tires by using tire towing straps.
5. Firmly attach the rear suspension tie-down straps to both sides of the rear of the trailer with ratchets.
6. Ensure that both the front and rear wheels are firmly attached to the trailer.

Getting Vehicle Out of Trailer

⚠ WARNING

Vehicle may have moved during transport. Ensure vehicle is properly aligned with ramps before proceeding.

⚠ WARNING

Visibility will be greatly reduced when backing off from the trailer. Have the help of an assistant to ensure proper alignment and safe environment.

LIFTING AND SUPPORTING THE VEHICLE

Front of Vehicle

1. Place vehicle on a flat non slippery ground.
2. Ensure vehicle shift lever is set to PARK.
3. Install an hydraulic jack under the front skid plate.
4. Lift front of vehicle and install a jack stand on each side under frame section.

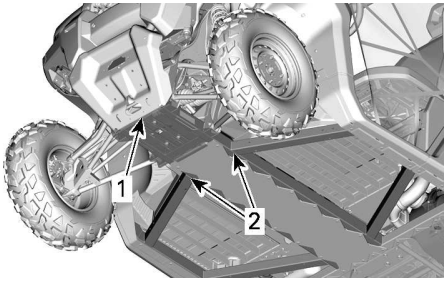

1. Front of vehicle
2. Frame section

5. Lower hydraulic lift and ensure vehicle is supported safely onto both jack stands.

Rear of Vehicle

1. Place vehicle on a flat non slippery ground.
2. Activate 4WD mode.
3. Ensure vehicle shift lever is set to PARK.
4. Install an hydraulic jack under the skid plate.
5. Lift rear of vehicle and install a jack stand on each side under frame section in front of rear wheel.

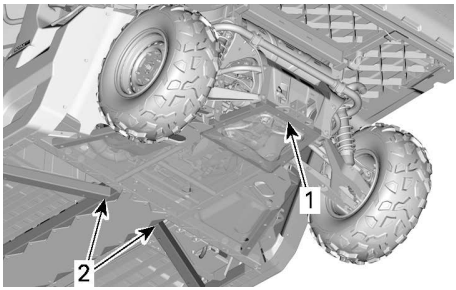

1. Lifting location under skid plate
2. Frame section to install jack stands

6. Lower hydraulic lift and ensure vehicle is supported safely onto both jack stands.

MAINTENANCE

MAINTENANCE SCHEDULE

Maintenance is very important to keep your vehicle in safe operating condition. The vehicle should be serviced as per the maintenance schedule.

Proper maintenance is the owner's responsibility. A warranty claim may be denied if, among other things, the owner or operator caused the problem through improper maintenance or use.

Perform periodic checks and follow the maintenance schedule. **The maintenance schedule does not exempt the pre-ride inspection**.

Verifying fault codes, as first maintenance step, is a good practice and is highly recommended.

⚠ WARNING
Failure to properly maintain the vehicle according to the maintenance schedule and procedures can make it unsafe to operate.

EPA Regulation - Canadian and USA Vehicles

A repair shop or person of the owner's choosing may maintain, replace, or repair emission control devices and systems. These instructions do not require components or service by BRP or authorized Can-Am Off-road dealers.

Although an authorized Can-Am Off-road dealer has an in-depth technical knowledge and tools to service your vehicle, the emission-related warranty is not conditioned on the use of an authorized Can-Am Off-road dealer or any other establishment with which BRP has a commercial relationship.

Proper maintenance is the owner's responsibility. A warranty claim may be denied if, among other things, the owner or operator caused the problem through improper maintenance or use.

For emission-related warranty claims, BRP is limiting the diagnosis and repair of emission-related parts to the authorized Can-Am Off-road dealers. For more information, please refer to the *US EPA Emission-Related Warranty* contained in the *Warranty* section.

You must follow the instructions for fuel requirements in the fueling section of this manual. Even if gasoline containing greater than ten volume percent ethanol is readily available, the US EPA issued a prohibition against the use of gasoline containing greater than 10 vol% ethanol that applies to this vehicle. The use of gasoline containing greater than 10 vol% ethanol with this engine may harm the emission control system.

Air Filter Maintenance Guideline

Air filter maintenance should be adjusted according to riding conditions.

Air filter maintenance must be increased in frequency when riding on snow, dry sand, dirt, gravel or similar conditions which have a high dust or particle dispersion.

Riding in a group in these conditions will require increasing the air filter maintenance frequency further.

NOTE:
Accessory filters and pre-filter are available for such conditions. Contact an authorized Can-Am off-road dealer for details.

Severe Duty Use

If your vehicle is used in the following conditions, refer to the *Severe Duty* section of the maintenance schedule.

- Repeated hauling of loads at more than 75% the maximum capacity.
  - The increase workload applied to the drive system accelerates the differentials, gearbox/transmission, and engine oil life. This reduces internal component longevity if not replaced more frequently.
- Driving at excessive speeds for prolonged amount of time.

Higher than the average utility or commercial use requires more frequent fluid and wear component replacement than trail, recreational, or occasional utility purposes.

Extreme Cold Condition

An engine that is frequently operated at or below an ambient temperature of -25 ° C (-13 °F) will require an increase in service and maintenance schedule.

Any combustion engine operated at these low ambient temperature will collect an increased amount of condensation at every startup/warm-up.

Since the engine is not reaching operating temperatures for extended periods of time, the oil is starting to be strongly diluted with water and gas residue (more water content).

An engine needs to reach operating temperature, in order to be able to evaporate condensate out of the oil.

If daily usage (work or leisure driving cycle) is similar to those mentioned below, BRP strongly recommends changing the oil at least once a month.

Parameters of an increase in service and maintenance schedule:

- Engine not reaching the proper operating temperature during normal daily usage
- Multiple starts and stops without reaching operating temperature
- Short idle periods
- Low RPM driving cycle in short distances without reaching operating temperature.

NOTE:
BRP strongly recommends the installation of a block heater to help warm up the liquids, this will also help to extend the oil lifetime.

Deep Mud / Water Use

Whether your vehicle is a X mr model or was accessorized for deep mud / water use, this type of usage requires more frequent maintenance and inspections to ensure debris has not infiltrated mechanical components.

If you regularly ride in deep mud or water, refer to the ***Deep Mud / Water*** section of the maintenance schedule.

After every ride, be sure to perform the ***Post Operation Care for Deep Mud / Water Environment*** .

Post Operation Care for Deep Mud / Water Environment

– Rinse the vehicle and its components with fresh water.
– Clean the CVT air filters.
– Drain the CVT compartment and clean if any water or mud is found.
– Inspect and clean engine air filters and engine air filter housing.
– Clean radiator.
– Visually inspect for any water accumulation in the vent hoses (fuel tank, gearbox, front differential and rear final drive). If there is water, bring the vehicle to your nearest authorized Can-Am off-road dealer for inspection and servicing of main components related to the vents.
– Clean front and rear shock absorbers to prevent seal from damage by dust or dirt.
– Clean drive shaft bellows and the propeller shaft yokes or boots.

Maintenance Schedule

Make sure to perform proper maintenance at recommended intervals as indicated in the tables.

The maintenance chart intervals are based on 3 factors:

– Calendar time
– Vehicle hours
– Odometer reading.

Take in account whichever comes first to determine the maintenance threshold.

Your driving habits determines the factors you shall adhere too. For example:

– Someone who uses their vehicle every other weekend trail riding with friends would most likely follow the **odometer reading** to determine the maintenance interval.
– Someone who uses their vehicle seldomly over the year or only on a few occasions (hunting, camping) would most likely follow the **calendar time** to determine the maintenance interval.
– Someone who uses their vehicle daily / weekly for long periods of time such as agricultural / work would most likely follow the **vehicle hours** to determine the maintenance interval.

IMPORTANT: The following tables show the appropriate maintenance application for the first 3 years. For subsequent years, repeat the same pattern alternatively.

Regular Maintenance Overview			
Calendar Years	Vehicle Hours	Odometer	Regular Duty
1	200	3000 km (2000 mi)	**A**
2	400	6000 km (4000 mi)	**A** and **B**
3	600	9000 km (6000 mi)	**A**

Severe Duty and Mud/Water Maintenance Overview			
Calendar Years	Vehicle Hours	Odometer	Severe Duty and Deep Mud / Water
0.5	100	1500 km (1000 mi)	**A+**
1	200	3000 km (2000 mi)	**A+** and **A**
1.5	300	4500 km (3000 mi)	**A+**
2	400	6000 km (4000 mi)	**A+** and **A** and **B**
2.5	500	7500 km (5000 mi)	**A+**
3	600	9000 km (6000 mi)	**A+** and **A**

Models Without CAB

REGULAR DUTY	A	B
A = Adjust **C = Clean** **I = Inspect** **L = Lubricate** **R = Replace** **T = Torque**	**Every year or 200 hours or 3000 km (2000 mi)**	**Every 2 years or 400 hours or 6000 km (4000 mi)**
Air and Fuel Delivery		
Engine air filter	**I, C**	
Fuel tank vent filter	**R**	
Canister vent pre-filter (CARB and EVAP models)		**R**
Fuel components (fuel cap, hoses, clamps and tank fixation) and function*		**I**
Fuel pump pressure		**I**
Body and Chassis		
Cage fasteners	**T**	
Seat belts retractors, buckles and semi-cinching	**I, C**	
Engine and Cooling		
Engine oil and filter	**R**	
Valve clearance	**A** (V-twin engines)	**A** (Mono cyl. engines)
Coolant level and concentration	**I, A**	
Coolant	**R** Every 5 years or 12 000 km (8000 mi)	
Spark plugs		**R**
Exhaust and Emissions		
Exhaust components (gaskets, pipes and muffler) and function*	**I, C**	
Spark arrester	**C**	
Brake		
Brake components and function*	**I, C**	
Brake fluid	**R** Every 2 years	
Drive		
Gearbox oil	Replace at first 3000 km (2000 mi) and at 6000 km (4000 mi), then follow the regular schedule	

REGULAR DUTY	A	B
A = Adjust **C = Clean** **I = Inspect** **L = Lubricate** **R = Replace** **T = Torque**	**Every year or 200 hours or 3000 km (2000 mi)**	**Every 2 years or 400 hours or 6000 km (4000 mi)**
Gearbox oil	**I**	**R**
Drive components and function*	**I**	
Beadlock screws (if equipped)	**T**	
Front differential oil	**I**	**R**
Rear final drive oil (Mono-cyl. engine)	**I**	**R**
Continuously Variable Transmission (CVT)		
CVT components and function*	**I, C, L**	
Electrical		
Various controls, switches, lights, module updates, fault codes, battery condition*	**I**	
Vehicle speed sensor (VSS)		**C**
Steering		
Steering components and function*	**I**	
Suspension		
Suspension components and function*	**I, L, T**	

*For an extensive list of maintenance actions to be performed, refer to your local dealership.

SEVERE DUTY	A+	A	B
A = Adjust **C = Clean** **I = Inspect** **L = Lubricate** **R = Replace** **T = Torque**	**Every 6 months or 100 hours or 1500 km (1000 mi)**	**Every year or 200 hours or 3000 km (2000 mi)**	**Every 2 years or 400 hours or 6000 km (4000 mi)**
Air and Fuel Delivery			
Engine air filter	**I, C**	**R**	
Fuel tank vent filter		**R**	
Canister vent pre-filter (CARB and EVAP models)			**R**
Fuel components (fuel cap, hoses, clamps and tank fixation) and function*			**I**
Fuel pump pressure			**I**
Body and Chassis			
Cage fasteners		**T**	
Seat belts retractors, buckles and semi-cinching		**I, C**	
Engine and Cooling			
Engine oil and filter	**R**		
Valve clearance		**A** (V-twin engines)	**A** (Mono cyl. engines)
Coolant level and concentration		**I,A**	
Coolant	**R** Every 5 years or 12 000 km (8000 mi)		
Spark plugs			**R**
Exhaust and Emissions			
Exhaust components (gaskets, pipes and muffler) and function*		**I, C**	
Spark arrester	**C**		
Brake			
Brake components and function*		**I, C**	
Brake fluid	**R** Every 2 years		
Drive			
Gearbox oil	Replace at first 1500 km (1000 mi) and at 3000 km (2000 mi), then follow the regular schedule		

SEVERE DUTY	A+	A	B
A = Adjust **C = Clean** **I = Inspect** **L = Lubricate** **R = Replace** **T = Torque**	**Every 6 months or 100 hours or 1500 km (1000 mi)**	**Every year or 200 hours or 3000 km (2000 mi)**	**Every 2 years or 400 hours or 6000 km (4000 mi)**
Gearbox oil		**R**	
Drive components and function*		**I**	
Beadlock screws (if equipped)		**T**	
Front differential oil		**R**	
Rear final drive oil (Mono-cyl. engine)		**R**	
Continuously Variable Transmission (CVT)			
CVT components and function*		**I, C, L**	
Electrical			
Various controls, switches, lights, module updates, fault codes, battery condition*		**I**	
Vehicle speed sensor (VSS)			**C**
Steering			
Steering components and function*		**I**	
Suspension			
Suspension components and function*		**I, L, T**	

*For an extensive list of maintenance actions to be performed, refer to your local dealership.

DEEP MUD / WATER	A+	A	B
A = Adjust **C = Clean** **I = Inspect** **L = Lubricate** **R = Replace** **T = Torque**	**Every 6 months or 100 hours or 1500 km (1000 mi)**	**Every year or 200 hours or 3000 km (2000 mi)**	**Every 2 years or 400 hours or 6000 km (4000 mi)**
Air and Fuel Delivery			
Engine air filter	**I, C**		
Fuel tank vent filter		**R**	
Canister vent pre-filter (CARB and EVAP models)			**R**
Fuel components (fuel cap, hoses, clamps and tank fixation) and function*			**I**
Fuel pump pressure			**I**
Body and Chassis			
Cage fasteners		**T**	
Seat belts retractors, buckles and semi-cinching		**I, C**	
Engine and Cooling			
Engine oil and filter	**I**	**R**	
Valve clearance		**A** (V-twin engines)	**A** (Mono cyl. engines)
Coolant level and concentration		**I, A**	
Coolant	**R** Every 5 years or 12 000 km (8000 mi)		
Spark plugs			**R**
Exhaust and Emissions			
Exhaust components (gaskets, pipes and muffler) and function*	**I,C**		
Spark arrester	**C**		
Brake			
Brake components and function*	**I,C**		
Brake fluid	**R** Every 2 years		
Drive			
Gearbox oil	Replace at first 1500 km (1000 mi) and at 3000 km (2000 mi), then follow the regular schedule		

DEEP MUD / WATER	A+	A	B
A = Adjust **C = Clean** **I = Inspect** **L = Lubricate** **R = Replace** **T = Torque**	**Every 6 months or 100 hours or 1500 km (1000 mi)**	**Every year or 200 hours or 3000 km (2000 mi)**	**Every 2 years or 400 hours or 6000 km (4000 mi)**
Gearbox oil	**I**		**R**
Drive components and function*	**I**		
Beadlock screws (if equipped)		**T**	
Front differential oil	**I**		**R**
Rear final drive oil (Mono-cyl. engine)	**I**		**R**
Continuously Variable Transmission (CVT)			
CVT components and function*		**I, C, L**	
Electrical			
Various controls, switches, lights, module updates, fault codes, battery condition*		**I**	
Vehicle speed sensor (VSS)			**C**
Steering			
Steering components and function*	**I**		
Suspension			
Suspension components and function*	**I, L**	**T**	

*For an extensive list of maintenance actions to be performed, refer to your local dealership.

Models With CAB

REGULAR DUTY	A	B
A = Adjust **C = Clean** **I = Inspect** **L = Lubricate** **R = Replace** **T = Torque**	**Every year or 200 hours or 3000 km (2000 mi)**	**Every 2 years or 400 hours or 6000 km (4000 mi)**
Air and Fuel Delivery		
Engine air filter	**I, C**	
Fuel tank vent filter	**R**	
Canister vent pre-filter (CARB and EVAP models)		**R**
Fuel components (fuel cap, hoses, clamps and tank fixation) and function*		**I**
Fuel pump pressure		**I**
Body and Chassis		
Cage fasteners	**T**	
Seat belts retractors, buckles and semi-cinching	**I, C**	
Doors hinges	**L, T**	
Doors latch	**L**	
Windshield hinges	**T**	
Engine and Cooling		
Engine oil and filter	**R**	
Valve clearance	**A**	
Coolant level and concentration	**I, A**	
Coolant	**R** Every 5 years or 12 000 km (8000 mi)	
Spark plugs		**R**
Exhaust and Emissions		
Exhaust components (gaskets, pipes and muffler) and function*	**I, C**	
Spark arrester	**C**	
HVAC		
Air filters	**I, C**	
HVAC components and function*	**I, C**	
Air conditioning compressor belt		**I**
Brake		

REGULAR DUTY	A	B
A = Adjust **C = Clean** **I = Inspect** **L = Lubricate** **R = Replace** **T = Torque**	**Every year or 200 hours or 3000 km (2000 mi)**	**Every 2 years or 400 hours or 6000 km (4000 mi)**
Brake components and function*	**I, C**	
Brake fluid	**R** Every 2 years	
Drive		
Gearbox oil	Replace at first 3000 km (2000 mi) and at 6000 km (4000 mi), then follow the regular schedule	
Gearbox oil	**I**	**R**
Drive components and function*	**I**	
Beadlock screws (if equipped)	**T**	
Front differential oil	**I**	**R**
Continuously Variable Transmission (CVT)		
CVT components and function*	**I, C, L**	
Electrical		
Various controls, switches, lights, module updates, fault codes, battery condition*	**I**	
Vehicle speed sensor (VSS)		**C**
Steering		
Steering components and function*	**I**	
Suspension		
Suspension components and function*	**I, L, T**	

*For an extensive list of maintenance actions to be performed, refer to your local dealership.

SEVERE DUTY	A+	A	B
A = Adjust **C = Clean** **I = Inspect** **L = Lubricate** **R = Replace** **T = Torque**	**Every 6 months or 100 hours or 1500 km (1000 mi)**	**Every year or 200 hours or 3000 km (2000 mi)**	**Every 2 years or 400 hours or 6000 km (4000 mi)**
Air and Fuel Delivery			
Engine air filter	**I, C**	**R**	
Fuel tank vent filter		**R**	
Canister vent pre-filter (CARB and EVAP models)			**R**
Fuel components (fuel cap, hoses, clamps and tank fixation) and function*			**I**
Fuel pump pressure			**I**
Body and Chassis			
Cage fasteners		**T**	
Seat belts retractors, buckles and semi-cinching		**I, C**	
Doors hinges	**L, T**		
Doors latch	**L**		
Windshield hinges	**T**		
Engine and Cooling			
Engine oil and filter	**R**		
Valve clearance		**A**	
Coolant level and concentration		**I, A**	
Coolant	**R** Every 5 years or 12 000 km (8000 mi)		
Spark plugs			**R**
Exhaust and Emissions			
Exhaust components (gaskets, pipes and muffler) and function*		**I, C**	
Spark arrester	**C**		
HVAC			
Air filters	**I, C**		
HVAC components and function*		**I, C**	
Air conditioning compressor belt			**I**
Brake			

SEVERE DUTY	A+	A	B
A = Adjust **C = Clean** **I = Inspect** **L = Lubricate** **R = Replace** **T = Torque**	**Every 6 months or 100 hours or 1500 km (1000 mi)**	**Every year or 200 hours or 3000 km (2000 mi)**	**Every 2 years or 400 hours or 6000 km (4000 mi)**
Brake components and function*		**I, C**	
Brake fluid	**R** Every 2 years		
Drive			
Gearbox oil	Replace at first 1500 km (1000 mi) and at 3000 km (2000 mi), then follow the regular schedule		
Gearbox oil		**R**	
Drive components and function*		**I**	
Beadlock screws (if equipped)		**T**	
Front differential oil		**R**	
Continuously Variable Transmission (CVT)			
CVT components and function*		**I, C, L**	
Electrical			
Various controls, switches, lights, module updates, fault codes, battery condition*		**I**	
Vehicle speed sensor (VSS)			**C**
Steering			
Steering components and function*		**I**	
Suspension			
Suspension components and function*	**I, L**	**T**	

*For an extensive list of maintenance actions to be performed, refer to your local dealership.

DEEP MUD / WATER	A+	A	B
A = Adjust **C = Clean** **I = Inspect** **L = Lubricate** **R = Replace** **T = Torque**	**Every 6 months or 100 hours or 1500 km (1000 mi)**	**Every year or 200 hours or 3000 km (2000 mi)**	**Every 2 years or 400 hours or 6000 km (4000 mi)**
Air and Fuel Delivery			
Engine air filter	**I, C**		
Fuel tank vent filter		**R**	
Canister vent pre-filter (CARB and EVAP models)			**R**
Fuel components (fuel cap, hoses, clamps and tank fixation) and function*			**I**
Fuel pump pressure			**I**
Body and Chassis			
Cage fasteners		**T**	
Seat belts retractors, buckles and semi-cinching		**I, C**	
Doors hinges		**L, T**	
Doors latch		**L**	
Windshield hinges		**T**	
Engine and Cooling			
Engine oil and filter	**I**	**R**	
Valve clearance		**A**	
Coolant level and concentration		**I, A**	
Coolant	**R** Every 5 years or 12 000 km (8000 mi)		
Spark plugs			**R**
Exhaust and Emissions			
Exhaust components (gaskets, pipes and muffler) and function*	**I, C**		
Spark arrester	**C**		
HVAC			
Air filters	**I, C**		
HVAC components and function*		**I, C**	
Air conditioning compressor belt	**I**		
Brake			

DEEP MUD / WATER	A+	A	B
A = Adjust **C = Clean** **I = Inspect** **L = Lubricate** **R = Replace** **T = Torque**	**Every 6 months or 100 hours or 1500 km (1000 mi)**	**Every year or 200 hours or 3000 km (2000 mi)**	**Every 2 years or 400 hours or 6000 km (4000 mi)**
Brake components and function*	**I, C**		
Brake fluid	**R** Every 2 years		
Drive			
Gearbox oil	Replace at first 1500 km (1000 mi) and at 3000 km (2000 mi), then follow the regular schedule		
Gearbox oil	**I**		**R**
Drive components and function*	**I**		
Beadlock screws (if equipped)		**T**	
Front differential oil	**I**		**R**
Rear final drive oil (Mono-cyl. engine)	**I**		**R**
Continuously Variable Transmission (CVT)			
CVT components and function*		**I, C, L**	
Electrical			
Various controls, switches, lights, module updates, fault codes, battery condition*		**I**	
Vehicle speed sensor (VSS)			**C**
Steering			
Steering components and function*	**I**		
Suspension			
Suspension components and function*	**I, L**	**T**	

*For an extensive list of maintenance actions to be performed, refer to your local dealership.

MAINTENANCE PROCEDURES

This section includes instructions for basic maintenance procedures.

Due to the complexity of some of the maintenance procedures, good mechanical skills are required. If you are not comfortable with these procedures, do not hesitate to contact an authorized Can-Am off-road dealer, repair shop or person of your own choosing.

⚠ WARNING

Unless otherwise indicated, always turn ignition switch to the OFF position before performing any maintenance and remove key.

⚠ WARNING

Should removal of a locking device be required (e.g. lock tab, self-locking fastener, etc.) , always replace it with a new one.

Engine Air Filter

NOTICE

Never modify the air intake system. Otherwise, engine performance degradation or damage can occur. The engine is calibrated to operate specifically with these components.

Engine Air Filter Replacement Guideline

Engine air filter inspection and replacement frequency should be adjusted according to riding conditions as it is critical to ensure proper engine performance and life span.

Engine air filter inspection and replacement frequency must be increased for the following severe riding conditions:

- Riding on dry sand.
- Riding on dry dirt covered surfaces.
- Riding on dry gravel trails or similar conditions.
- Riding in areas with high concentration of seeds or crop husks.
- Riding in severe snow conditions.

NOTICE

When riding in dusty conditions or sand, the air box needs to be cleaned before every ride.

NOTE:
Riding in a group, under these conditions, increases the frequency of the air filter maintenance.

Removing the Engine Air Filter

Tilt the cargo box.

Unlatch air filter cover and remove air filter.

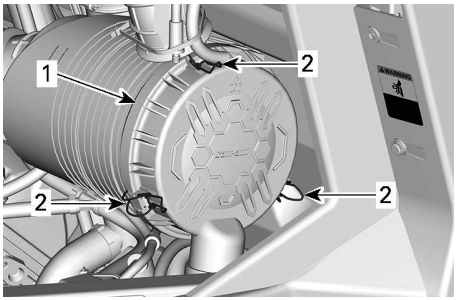

1. Air filter cover
2. Latches

The filter fits tightly over the outlet tube and there will be some initial resistance. Gently move the end of the filter back and forth to break the seal, then rotate while pulling straight out. Avoid knocking the filter against the housing.

Cleaning the Engine Air Filter

1. Inspect the filter for any signs of leaks. A streak of dust on the clean side of the filter is a telltale sign. Replace filter if there is any damages. Eliminate any source of air leaks before installing a new filter.

2. Clean engine air filter by tapping out heavy dust from paper element, this will allow dirt and dust to get out of the paper filter.

NOTICE

It is not recommended to blow compressed air on the paper element; this could damage the paper fibers and reduce its filtration ability when used in dusty environments. If engine air filter is too dirty and cannot be cleaned following the recommended procedure, it should be replaced.

3. Use a clean damp cloth to wipe both the filter sealing surface and the inside of the outlet tube. Ensure that the outlet tube sealing area is undamaged.
4. Inspect air filter housing for cleanliness.

Duckbill Valve Cleaning

Visually check and physically squeeze the duckbill valve.

NOTICE

Make sure the duckbill valve is flexible and not inverted, damaged or plugged.

Installing the Engine Air Filter

1. Insert the filter carefully.
2. Seat the filter by hand, making certain it is inserted completely into the air cleaner housing.
3. Apply pressure by hand at the outer rim of the filter, not the flexible center.
4. Inspect and carefully clean gasket in the groove of the cover. Replace if damaged.
5. Secure air filter cover with latches.

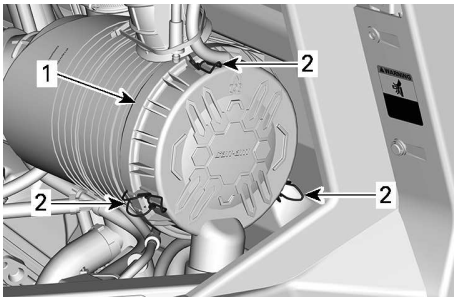

1. Air filter cover
2. Latches

6. Install the air filter access door back in place and secure it with the quarter-turn screw.

CVT Air Filter

CVT Air Filter Replacement Guideline

CVT air filter inspection and replacement frequency should be adjusted according to riding conditions as it is critical to ensure proper engine performance and life span.

Under the following severe riding conditions, the inspection and replacement frequency must be increased:

– Riding on dry sand.
– Riding on dry dirt covered surfaces.
– Riding on dry gravel trails or similar conditions.
– Riding in muddy conditions.
– Riding in areas with high concentration of seeds or crop husks.
– Riding in severe snow conditions.

NOTICE

When riding in dusty conditions or sand, the air box needs to be cleaned before every ride.

NOTE:
Riding in a group, under these conditions, increases the frequency of the air filter maintenance.

Removing the CVT Air Filter

1. Tilt the cargo box.
2. Press the filter tabs to release it.

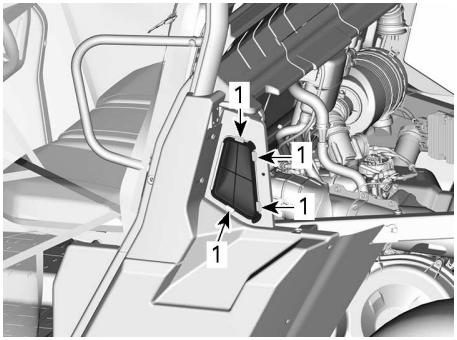

1. Press here

3. Remove the CVT air filter.

Inspecting and Cleaning the CVT Air Filter

1. Inspect filter and replace if damaged.
2. Clean filter using a solution of soft soap and water, then rinse.
3. Gently shake off excess water and allow filter to dry at room temperature.
4. Clean inside the CVT air inlet with a vacuum cleaner.

Installing the CVT Air Filter

1. Reinstall CVT air filter.
2. Lower and lock the cargo box.

Evaporative Emission System Pre-Filter (If Equipped)

Evaporative Emission System Pre-Filter Replacement

1. Tilt the cargo box.
2. Remove the hose clamps.
3. Remove the retaining screws.
4. Remove the pre-filter assembly.

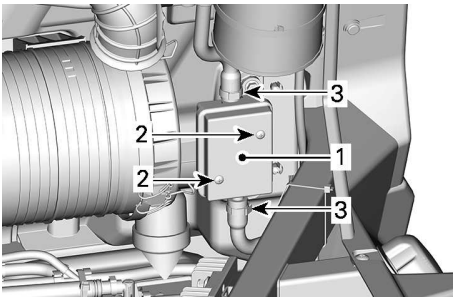

1. Pre-Filter
2. Retaining screw
3. Clamps

5. Install a new pre-filter assembly.

Tightening Torque	
Pre-filter retaining screw	2.5 ± 0.5 Nm (22 ± 4 lbf-in)

6. Secure hoses with clamps.
7. Install all other removed parts.

Engine Oil

Recommended Engine Oil

Rotax® engines were developed and validated using the XPS™ oil.

BRP recommends the use of its XPS engine oil or an equivalent at all time.

Damages caused by the use of an oil not suitable for the engine may not be covered by the BRP Limited Warranty.

1. XPS recommended engine oil

General purpose	XPS 4T 5W40 synthetic blend oil
Cold temperature	XPS 4T 0W40 synthetic oil
Warm temperature	XPS 4T 10W50 synthetic oil

If the recommended XPS engine oil is not available:

- Use a 4-stroke SAE engine oil meeting or exceeding the following lubricant industry specifications.
- Always check the API service label certification on the oil container, it must contain at least one of the indicated standards.
  - **API service classification SJ, SL, SM or SN**

Mono Cylinder Engines

Verifying the Engine Oil Level (Mono Cylinder)

NOTICE

Operating the engine with an improper level may severely damage engine.

NOTICE

Check the oil level when the engine is hot.

1. Start and let the engine run at idle for 60 seconds.
2. Stop engine.
3. Place vehicle on a level surface.
4. Clean around dipstick to avoid foreign particles falling down the tube.

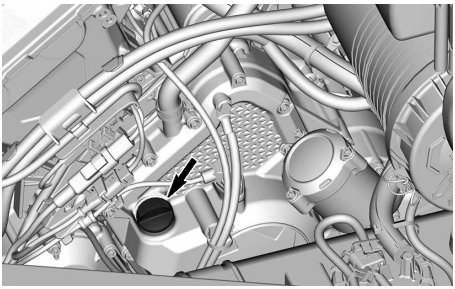

5. Unscrew dipstick then remove it and wipe clean.
6. Reinstall dipstick, screw in it completely.
7. Remove dipstick and check oil level. It should be near or equal to the upper mark.

1. *MIN*
2. *MAX*

If the level is between marks, reinstall the dipstick.

If the level is below the lower mark, add oil as follow:

- Place a funnel into the dipstick hole.
- Add a small amount of recommended oil and recheck oil level.
- Continue to add oil until the level reaches the upper mark.

NOTICE

Do not overfill. Wipe off any spillage.

Changing the Engine Oil

NOTICE

Engine oil and oil filter must be replaced at the same time.

Oil change and oil filter replacement should be done with a warm engine.

⚠ CAUTION

The engine oil can be very hot. Wait until engine oil is warm.

1. Place the vehicle on a level surface.
2. Clean the dipstick area.
3. Remove the dipstick.
4. Place a drain pan under the engine drain plug area.
5. Clean the drain plug area.

6. Unscrew drain plug and discard the gasket ring.

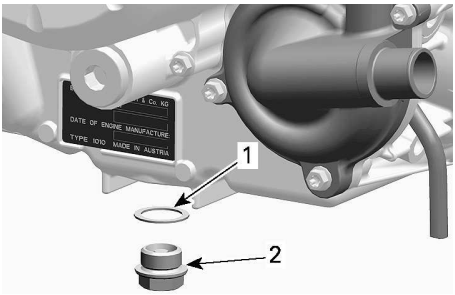

1. *Gasket ring (discard)*
2. *Drain plug*

7. Allow oil to drain completely from the crankcase.
8. Clean the drain plug.
9. Install a NEW gasket ring on the drain plug.

NOTICE

Never use the gasket ring a second time. Always replace by a new one.

10. Install and tighten drain plug to the recommended specification.

Tightening Torque	
Drain plug	30 ± 2 Nm (22 ± 1 lbf-ft)

11. Replace oil filter. Refer to *Oil Filter*.
12. Refill engine, refer to *Recommended Engine Oil*.

NOTE: For engine oil capacity, refer to *Technical Specifications*.

13. Start engine and let it idle for a 60 seconds.
14. Stop engine.
15. Check the oil level immediately, refer to *Verifying the Engine Oil Level*.
16. Refill as necessary.
17. Ensure oil filter and drain plug areas are not leaking.
18. Dispose oil and filter as per your local environmental regulations.

Twin Cylinders Engines

Verifying the Engine Oil Level (V-Twin)

NOTICE

Operating the engine with an improper level may severely damage engine.

NOTICE

Check the oil level when the engine is cold.

1. Place vehicle on a level surface.
2. Clean around dipstick to avoid foreign particles falling down the tube.

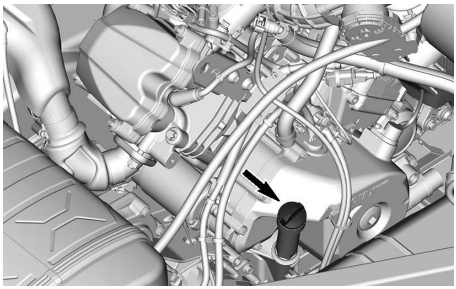

3. Unscrew dipstick then remove it and wipe clean.
4. Reinstall dipstick, screw in it completely.
5. Remove dipstick and check oil level. It should be near or equal to the upper mark.

1. *MIN*
2. *MAX*

If the level is between marks, reinstall the dipstick.

If the level is below the lower mark, add oil as follow:

- Place a funnel into the dipstick hole.
- Add a small amount of recommended oil and recheck oil level.
- Continue to add oil until the level reaches the upper mark.

NOTICE

Do not overfill. Wipe off any spillage.

Changing the Engine Oil

NOTICE

Engine oil and oil filter must be replaced at the same time.

Oil change and oil filter replacement should be done with a warm engine.

⚠ CAUTION

The engine oil can be very hot. Wait until engine oil is warm.

1. Place the vehicle on a level surface.
2. Clean the dipstick area.
3. Remove the dipstick.
4. Place a drain pan under the engine drain plug area.
5. Clean the drain plug area.
6. Unscrew drain plug and discard the gasket ring.

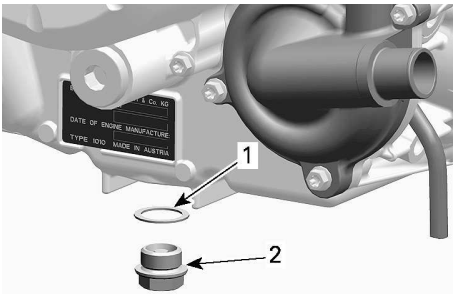

1. *Gasket ring (discard)*
2. *Drain plug*

7. Allow oil to drain completely from the crankcase.
8. Clean the magnetic drain plug from metal shavings and residue.

NOTE: Presence of debris gives an indication of internal engine damage.

9. Install a NEW gasket ring on the drain plug.

NOTICE

Never use the gasket ring a second time. Always replace by a new one.

10. Install and tighten drain plug to the recommended specification.

Tightening Torque	
Drain plug	30 ± 2 Nm (22 ± 1 lbf-ft)

11. Replace oil filter. Refer to *Oil Filter*.
12. Refill engine, refer to *Recommended Engine Oil*.

NOTE: For engine oil capacity, refer to *Technical Specifications*.

13. Start engine and let it idle for a 60 seconds.
14. Stop engine.
15. Check the oil level immediately, refer to *Verifying the Engine Oil Level*.

16. Refill as necessary.
17. Ensure oil filter and drain plug areas are not leaking.
18. Dispose oil and filter as per your local environmental regulations.

Oil Filter

Mono Cylinder Engines

Removing the Oil Filter

1. Clean oil filter area.
2. Remove the oil filter cover and the O-ring.

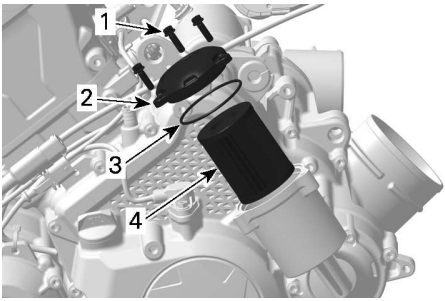

1. *Oil filter screw*
2. *Oil filter cover*
3. *O-ring*
4. *Oil filter*

3. Remove and discard oil filter.

Installing the Oil Filter

1. Check and clean the oil filter inlet and outlet area for dirt and other contaminations.

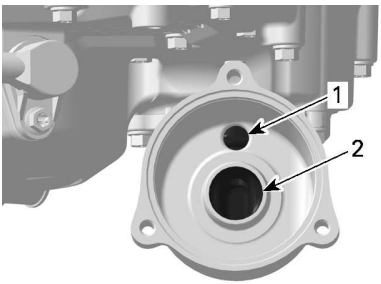

1. *Inlet bore from the oil pump to the oil filter*
2. *Outlet bore to the engine oil providing system*

2. Wet a NEW O-ring with engine oil and slip onto oil filter cover.
3. Install the new filter into the cover.
4. Apply engine oil to the seal on the open end of the oil filter.

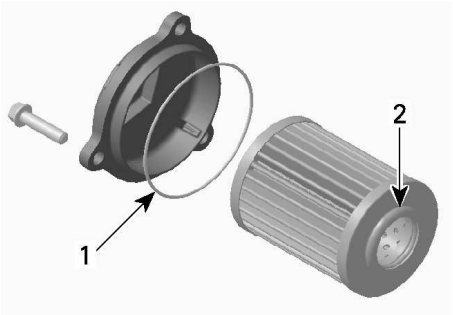

1. *Slightly oil*
2. *Slightly oil*

NOTICE
Pay attention to avoid pinching the O-ring during filter and cover installation.

5. Install the cover on the oil filter housing.
6. Tighten oil filter cover screws to specification.

Tightening Torque	
Oil filter cover screws	10 ± 1 Nm (89 ± 9 lbf-in)

7. Wipe off any oil spillage on engine.

Twin Cylinders Engines

Removing the Oil Filter

1. Remove the engine service cover.
2. Clean oil filter area.

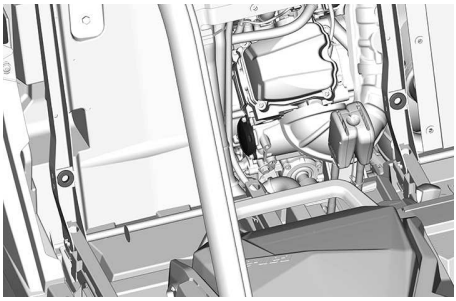

3. Remove oil filter cover.
4. Remove and discard oil filter.

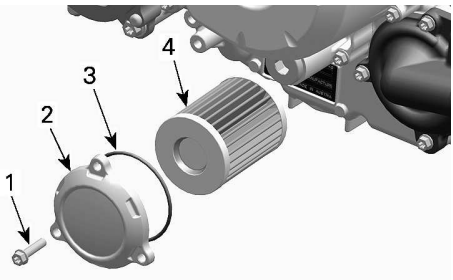

TYPICAL

1. *Oil filter screw*
2. *Oil filter cover*
3. *O-ring*
4. *Oil filter*

Installing the Oil Filter

1. Check and clean the oil filter inlet and outlet area for dirt and other contaminations.

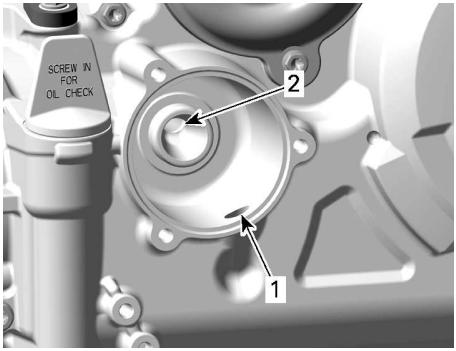

1. *Inlet bore from the oil pump to the oil filter*
2. *Outlet bore to the engine oil providing system*

2. Wet a NEW O-ring with engine oil and slip onto oil filter cover.
3. Install the new filter into the cover.
4. Apply engine oil to the seal on the open end of the oil filter.

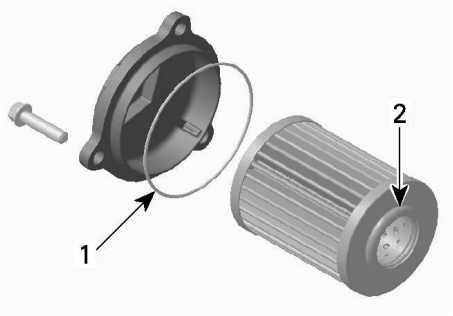

1. *Slightly oil*
2. *Slightly oil*

NOTICE
Pay attention to avoid pinching the O-ring during filter and cover installation.

5. Install the cover on the engine.
6. Tighten oil filter cover screws to recommended specification.

Tightening Torque	
Oil filter cover screws	10 ± 1 Nm (89 ± 9 lbf-in)

7. Wipe off any oil spillage on engine.

Radiator

Inspecting and Cleaning the Radiator

Periodically check the radiator area for cleanliness.

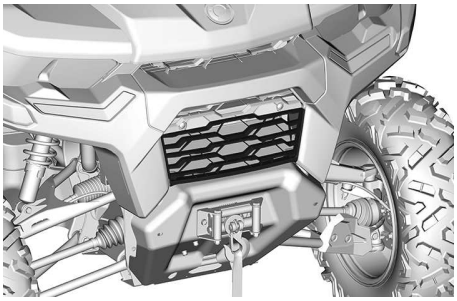

1. To access radiator, pull the lower part of the front grille and slide it down.
2. Inspect radiator and hoses for leaks or any damage.
3. Inspect radiating fins. They must be clean, free of mud, dirt, leaves and any other deposit that would prevent the radiator to cool properly.

   If available, use a garden hose to rinse the radiating fins.

⚠ CAUTION

Never clean radiator with your hands when it is hot. Let the radiator cool down before cleaning.

NOTICE

Be careful not to damage the radiating fins when cleaning. Do not use any object/tool that could damage the fins. When hosing, use low pressure only. Never use a HIGH PRESSURE washer.

4. To install the front grille, insert the upper tabs first and push bottom of grille in the front fascia.

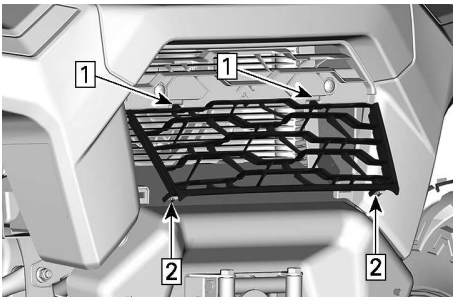

1. Insert upper tabs
2. Push and lock lower tabs in fascia

Engine Coolant

Recommended Engine Coolant

1. XPS recommended coolant

XPS Extended life pre-mixed coolant

Alternative, or if the XPS product is not available.

– Distilled water and antifreeze solution (50% distilled water, 50% antifreeze)

NOTICE

Always use ethylene-glycol antifreeze containing corrosion inhibitors specifically for internal combustion aluminum engines.

Verifying the Engine Coolant Level

NOTICE

Check coolant level with engine cold.

1. Place vehicle on a level surface.
2. Open the cargo box.
3. Remove the pressure cap

⚠ WARNING

In order to avoid potential burns, do not remove the pressure cap or loosen the coolant drain plug if the engine is hot.

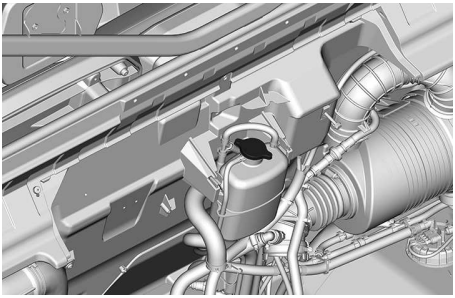

4. Ensure cooling system is full up to the Max line.

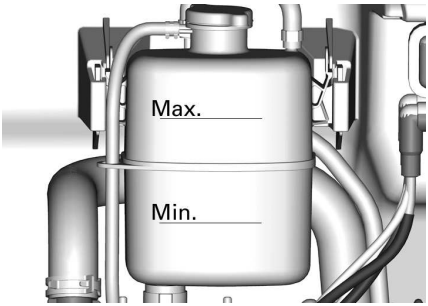

Adding Coolant

1. Remove the coolant tank pressure cap.
2. Using a funnel to avoid spillage, add coolant in system as necessary. **Do not overfill**.
3. Properly reinstall pressure cap on cooling tank.
4. Close the cargo box.

NOTE:
A cooling system that frequently requires addition of coolant is an indication of leaks or engine problems.

Replacing the Engine Coolant

⚠ WARNING

In order to avoid potential burns, do not remove the pressure cap or loosen the coolant drain plug if the engine is hot.

1. Remove the cooling system pressure cap.
2. Unscrew coolant drain plug partially to drain the coolant into a suitable container.

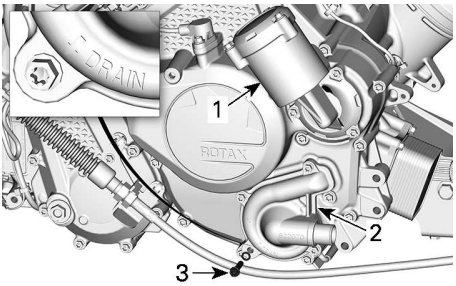

MONO CYLINDER ENGINE

1. Oil filter housing
2. Water pump cover
3. Coolant drain plug

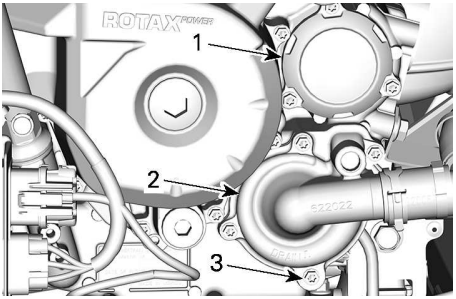

V-TWIN ENGINE

1. Oil filter cover
2. Water pump cover
3. Coolant drain plug

3. Disconnect the lower radiator hose from the water pump cover and drain the remaining coolant into a suitable container.
4. Tighten the coolant drain plug to specification.

Tightening Torque	
Coolant drain plug	10 ± 1 Nm (89 ± 9 lbf-in)

5. Reinstall radiator hose.
6. Fill cooling system with coolant, refer to *Bleeding the Cooling System* procedure.

Bleeding the Cooling System

1. **On models equipped with heater or HVAC:** Put the fan speed to MAX and raise the temperature control to the maximum.
2. Remove the pressure cap.
3. Fill coolant system until it is full up to the Max line on the coolant tank.

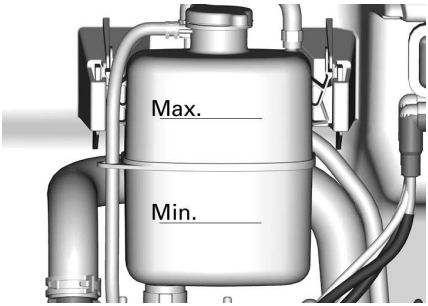

4. Install pressure cap.
5. Run engine at idle with the pressure cap **ON** until the cooling fan cycles on for a second time.
6. Stop the engine and let it cool down.

⚠ WARNING

In order to avoid potential burns, do not remove the pressure cap if the engine is hot.

7. When the engine is cool, remove pressure cap and add coolant if required.
8. Install pressure cap.
9. After the next ride, following this procedure, check coolant level. Add coolant as required. Refer to *Verifying the Engine Coolant Level*.

Heating/Air Conditioning Air Filter (if equipped)

NOTICE

The cleaning of the filters must be performed more often than recommended when riding in dusty conditions or sand.

Fresh Air Filter

Open hood to access fresh air filter.

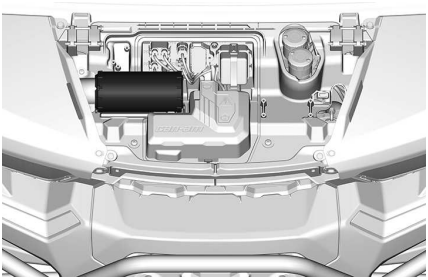

Lift and slide filter to remove.

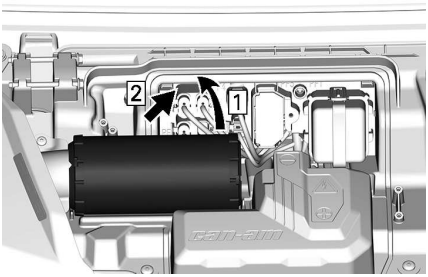

1. *Lift*
2. *Slide*

Inspect the filter for any signs of leaks. A streak of dust on the clean side of the filter is a telltale sign. Replace filter if there is any damages. Eliminate any source of air leaks before installing a new filter.

Clean air filter by tapping out heavy dust from paper element, this will allow dirt and dust to get out of the paper filter.

NOTICE

It is not recommended to blow compressed air on the paper element; this could damage the paper fibers and reduce its filtration ability when used in dusty environments. If air filter is too dirty and cannot be cleaned following the recommended procedure, it should be replaced.

Use a clean damp cloth to wipe both the filter sealing surface and the inside of the outlet tube. Ensure that the outlet tube sealing area is undamaged.

The installation is the reverse of the removal procedure.

Cockpit Air filters

Cockpit air filters are located at the bottom of the center console. There are 3 filters:

– One at the front of the unit
– One on each side of the unit.

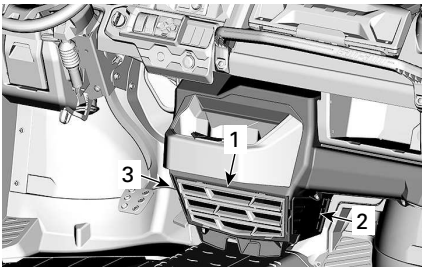

1. *Front cockpit air filter*
2. *Lateral cockpit air filter - passenger side*
3. *Lateral cockpit air filter - driver side*

Front Cockpit Air Filter

To remove this filter, lift the grille tabs and pull up.

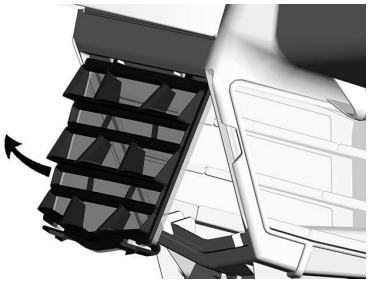

Clean air filter by washing it in lukewarm water with mild soap. Remove excess water and air dry before installation.

Before installing the filter, clean the inside of the heating/air conditioning unit and the evaporator coil using vacuum and a soft brush.

NOTICE

Be careful when brushing to avoid damaging the evaporator coil fins.

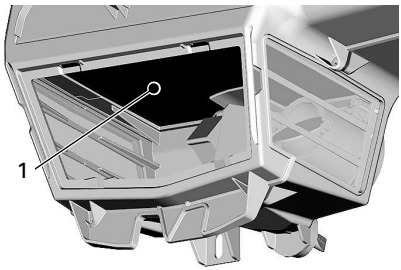

1. *Evaporator*

The installation is the reverse of the removal procedure.

Lateral Cockpit Air Filters

To remove these filters, grab the grille tab and pull.

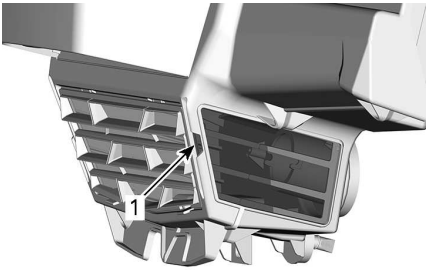

1. Grille tab

Clean air filters by washing them in lukewarm water with mild soap. Remove excess water and air dry before installation.

The installation is the reverse of the removal procedure.

Air Conditioning Compressor Belt

Visually inspect the compressor belt for wear.

Hairline cracks do not require the replacement of the belt, but must be monitored closely. Damage to the center of the belt will eventually require belt replacement, but when cracks extend to the edge of the belt, the belt failure is imminent.

The compressor belt tension verification and belt replacement should be performed by an authorized Can-Am Off-Road dealer according to the *Maintenance Schedule*.

Muffler and Spark Arrester

Inspecting and Cleaning the Muffler Spark Arrester

⚠ CAUTION

Never perform this operation immediately after the engine has been running as exhaust system is very hot.

1. Remove and discard the tail pipe retaining screws.

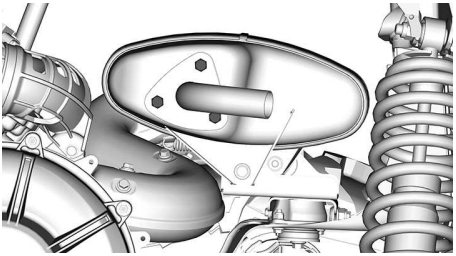

MONO CYLINDER ENGINE CONFIGURATION

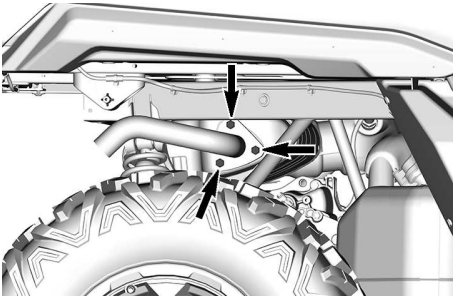

V-TWIN ENGINE CONFIGURATION

2. Remove exhaust tail pipe, gasket (discard) and spark arrester.

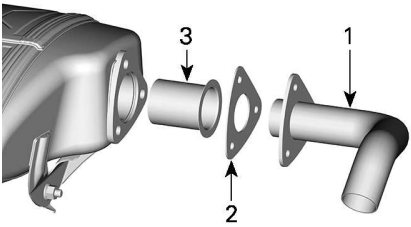

TYPICAL

1. *Tail pipe*
2. *Gasket (discard)*
3. *Spark arrester*

3. Remove carbon deposits from the spark arrester using a brush.

NOTICE
Use a metallic soft brush and be careful to avoid damaging spark arrester mesh.

4. Inspect mesh of spark arrester for any damage. Replace as required.
5. Inspect spark arrester chamber in muffler. Remove any debris as required.
6. Reinstall the muffler spark arrester in the reverse of the removal procedure. However pay attention to the following.

   Tighten to specification.

Tightening Torque	
Tail pipe retaining screw	32 ± 2 Nm (24 ± 1 lbf-ft)

Gearbox

Recommended Gearbox Oil

XPS Recommended Gearbox Oil
75W140 Synthetic gear oil
Alternative, or if not available
75W 140 API GL-5 Synthetic gear oil

NOTE:
The XPS oil is specially formulated to meet the lubrication requirements of this gearbox. BRP strongly recommends the use of its XPS oil. However, if the XPS synthetic gear oil is not available, use the following lubricant:

NOTICE
Do not use another type of oil when servicing.

Mono Cylinder Engines

Verifying the Gearbox Oil Level (Mono Cylinder)

1. Through the right rear wheel arch., remove the voltage/regulator support from the frame and move it aside to create room.

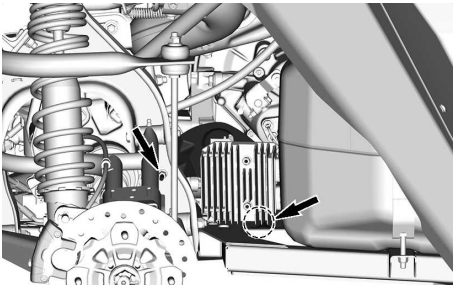

VOLTAGE/REGULATOR SUPPORT FASTENERS LOCATION

2. Remove the gearbox oil level plug.

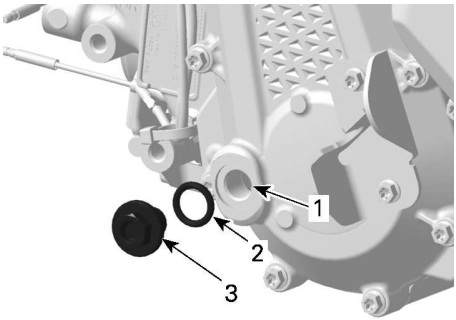

1. *Oil level hole*
2. *O-ring*
3. *Oil level plug*

3. Check oil level.

   The oil should be level with the bottom of the oil level hole.

NOTICE

Operating the gearbox with an improper oil level may severely damage gearbox.

4. Install the oil level plug with O-ring. Tighten plug as per specification.

Tightening Torque	
Oil level plug	5 ± 0.6 Nm (44 ± 5lbf-in)

Changing the Gearbox Oil

1. Start engine and operate vehicle to warm-up the gearbox oil.

NOTICE

Running engine at idle is not sufficient, vehicle transmission must be operated.

2. Position vehicle on a level surface.
3. Place a drain pan under the gearbox drain plug area.
4. Clean drain plug area.
5. Remove drain plug and sealing washer. Discard sealing washer.

⚠ CAUTION

The gearbox oil can be very hot.

6. Remove oil level plug and O-ring and allow oil to completely flow out of gearbox.

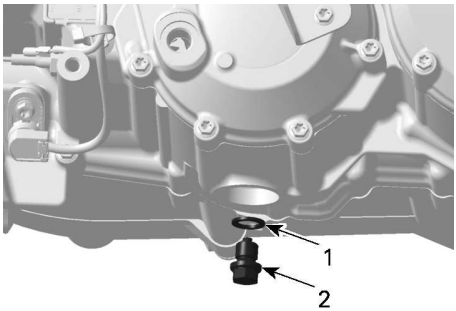

1. *Drain plug*
2. *Seal ring*

7. Clean drain plug, pay attention to any debris present on drain plug.

NOTICE

Presence of excessive debris provides an indication of a gearbox problem.

8. Reinstall drain plug with a NEW sealing washer.

Tightening Torque	
Drain plug	20 ± 2 Nm (15 ± 1 lbf-ft)

9. Remove the vehicle speed sensor (VSS).

10. Clean VSS using a clean rag.
11. Install the VSS and tighten screw to specification.

Tightening Torque	
VSS retaining screw	10 ± 1 Nm (89 ± 9 lbf-in)

12. Fill the gearbox through the oil level hole until the oil reaches the bottom of the oil level hole.

Capacity
0.5 l (0.53 qt (liq.,US))

13. Install the oil level plug with its O-ring. Tighten to specification.

Tightening Torque	
Oil level plug	5 ± 0.6 Nm (44 ± 5 lbf-in)

14. Wipe off any spillage.
15. Dispose gearbox oil as per your local environmental regulations.

Twin Cylinders Engines

Verifying the Gearbox Oil Level (V-Twin)

1. Place the vehicle on a level surface.
2. Select PARK position.
3. Clean dipstick area.
4. Remove the gearbox oil dipstick.

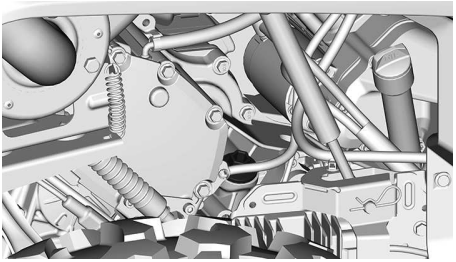

5. Wipe and reinstall the dipstick.
6. Remove dipstick again and check oil level. It should be near or equal to the upper mark.

1. *MIN.*
2. *MAX.*
3. *Operating range*

7. Add oil (if required):
   1. Place a funnel into the dipstick hole.
   2. Add a small amount of recommended oil.
   3. Recheck oil level often.
   4. Repeat the above procedures until oil level reaches the dipstick's upper mark.

NOTICE
Operating the gearbox with an improper oil level may severely damage gearbox.

NOTE:
Do not overfill. Wipe off any spillage.

8. Properly tighten oil dipstick.

Changing the Gearbox Oil

1. Place the vehicle on a level surface.

2. Place a drain pan underneath the oil drain plug area.

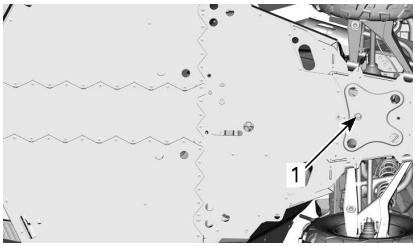

1. Gearbox drain plug area

3. Clean the following areas.
   - Drain plug area
   - Vehicle speed sensor (VSS) area
   - Dipstick area.
4. Remove the dipstick.
5. Remove the drain plug.
6. Let oil completely drain from gearbox.
7. Clean drain plug from any metallic particles.
8. Install the drain plug.

Tightening Torque	
Drain plug	20 ± 2 Nm (15 ± 1 lbf-ft)

9. Remove the VSS and clean it with a clean rag.

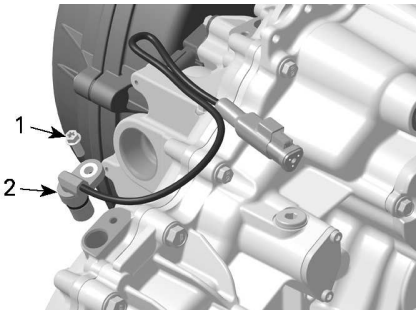

1. VSS screw
2. VSS

10. Refill gearbox.

NOTE: The oil should be level with the bottom of the oil level orifice.

NOTICE
Use ONLY the recommended type of oil.

11. Reinstall dipstick.
12. Lubricate the VSS O-ring.

Super Lube Grease

13. Install the VSS.

Tightening Torque	
VSS screw	10 ± 1 Nm (89 ± 9 lbf-in)

14. Wipe off any spillage.

Front Differential

Verifying the Front Differential Oil Level

1. Place the vehicle on a level surface.
2. Clean filler plug area prior to checking oil level.

   The drain plug is located on the right side of the front differential.

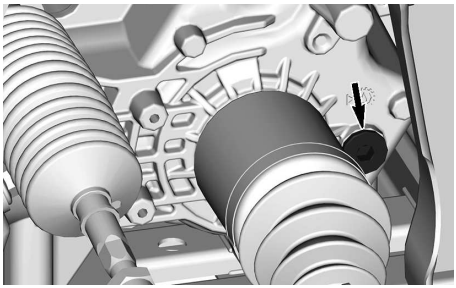

MONO CYLINDER ENGINE

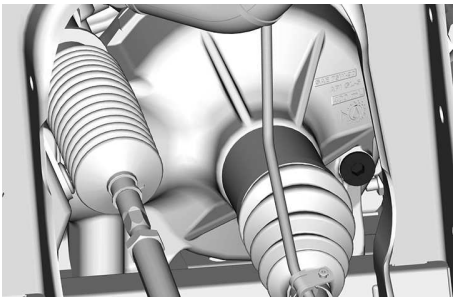

V-TWIN ENGINE

3. Remove the filler plug.
4. Check oil level. The oil should reach the lower edge.
5. Reinstall the filler plug.

Tightening Torque	
Filler plug	16.5 ± 2.5 Nm (146 ± 22 lbf-in)

Recommended Front Differential Oil

XPS Recommended Front Differential Oil
75W90 Synthetic gear oil
Alternative if XPS Product is not Available
75W90 (API GL-5) synthetic gear oil

The XPS oil is specially formulated to meet the lubrication requirements of this differential. BRP strongly recommends the use of its XPS oil.

NOTICE
Do not use another type of oil when servicing.

Changing the Front Differential Oil

1. Place vehicle on a level surface.
2. Set gearbox in park position.
3. From underneath the vehicle, clean the drain plug area.

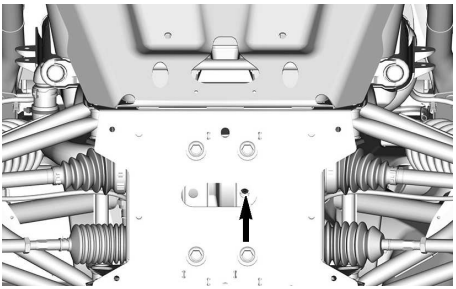

4. Place a drain pan under the rear differential.
5. Remove drain plug.
6. Unscrew filler plug.

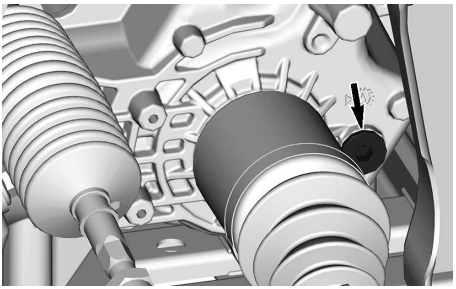

MONO CYLINDER ENGINE

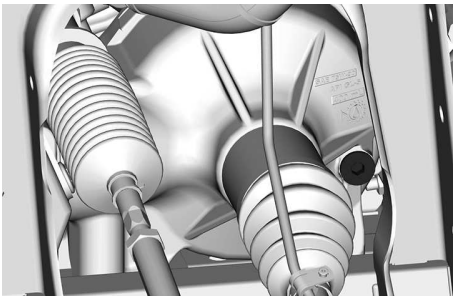

V-TWIN ENGINE

7. Let oil drip completely.
8. Install drain plug.

Tightening Torque	
Drain plug	2.5 ± 0.5 Nm (24 ± 4 lbf-in)

9. Refill differential with recommended oil for optimal performance.

10. For the differential oil capacity, refer to *Technical Specifications*.
11. Reinstall filler plug.

Tightening Torque	
Filler plug	16.5 ± 2.5 Nm (146 ± 22 lbf-in)

Rear Final Drive (Mono Cylinder Models Only)

Verifying the Rear Final Drive Oil Level

1. Place the vehicle on a level surface.
2. Remove the rear wheel on the right side of the vehicle.
3. Clean filler plug area prior to checking oil level.

   The filler plug is located behind the voltage/regulator.

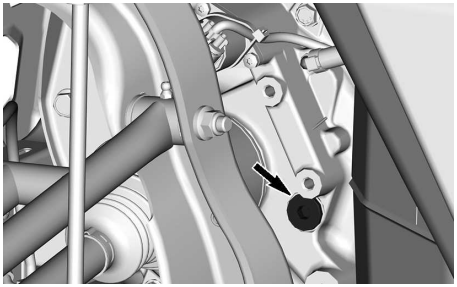

4. Remove the filler plug.
5. Check oil level. The oil should reach the lower edge.
6. Reinstall the filler plug.

Tightening Torque	
Filler plug	16.5 ± 2.5 Nm (146 ± 22 lbf-in)

Recommended Rear Final Drive Oil

XPS Recommended Final Drive Oil
75W90 Synthetic gear oil
Alternative if XPS Product is not Available
75W90 (API GL-5) synthetic gear oil

NOTE:
The XPS oil is specially formulated to meet the lubrication requirements of this gearbox. BRP strongly recommends the use of its XPS oil. However, if the XPS synthetic gear oil is not available, use the following lubricant:

NOTICE
Do not use another type of oil when servicing.

Changing the Rear Final Drive Oil

1. Place vehicle on a level surface.
2. Set gearbox in park position.
3. From underneath the vehicle, clean the drain plug area.

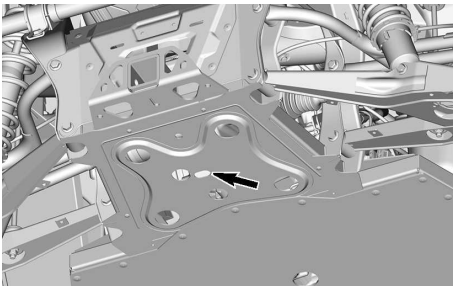

DRAIN PLUG ACCESS HOLE

4. Place a drain pan under the rear final drive.
5. Remove drain plug.
6. Unscrew filler plug.

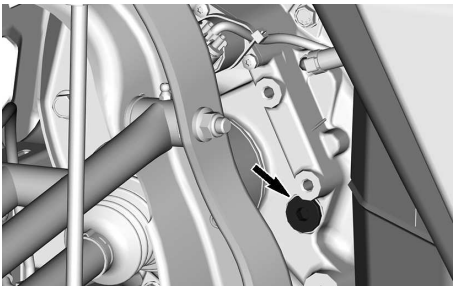

7. Let oil drip completely.
8. Install drain plug.

Tightening Torque	
Drain plug	2.5 ± 0.5 Nm (24 ± 4 lbf-in)

9. Refill final drive with recommended oil for optimal performance.
10. For the oil capacity, refer to *Technical Specifications*.
11. Reinstall filler plug.

Tightening Torque	
Filler plug	16.5 ± 2.5 Nm (146 ± 22 lbf-in)

CVT Cover

For a better understanding, some illustrations are taken with engine out of vehicle. To perform the following instructions, it is not necessary to remove engine.

⚠ WARNING

Never touch CVT while engine is running.
Never drive vehicle when CVT cover is removed.

⚠ CAUTION

Engine must be cool before cover is removed.

NOTICE

This CVT is lubrication free. Never lubricate any components except drive pulley bearing.

Accessing the CVT Cover

1. Tilt the cargo box.
2. Remove the LH rear deflector by removing the plastic rivets.

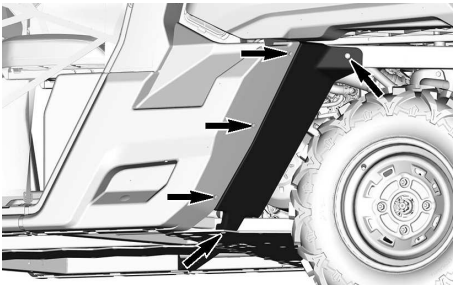

Removing the CVT Cover

1. Place the vehicle on a level surface.
2. Detach all CVT cooling ducts from the CVT cover.
3. Manually, remove all CVT cover retaining screws.

NOTICE

Do not use an impact tool to remove CVT cover screws.

NOTE:
Remove the center top screw last to support the cover during removal.

4. Remove the CVT cover and its gasket.

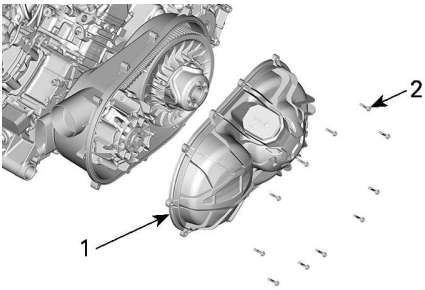

1. *CVT cover*
2. *CVT cover screws*

Installing the CVT Cover

1. Install the center top screw of first.
2. Tighten the CVT cover screws as per following sequence.

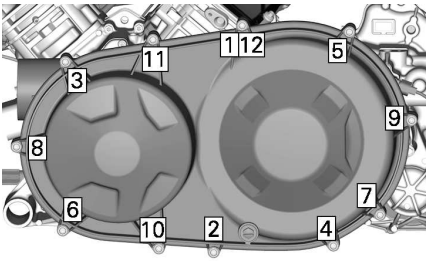

Tightening Torque	
CVT cover screws	7 ± 0.8 Nm (62 ± 7 lbf-in)

3. Reconnect all CVT cooling ducts.

Drive Belt

Removing the Drive Belt (Mono Cylinder Engine)

NOTICE
In case of a drive belt failure, the CVT, cover and air outlet must be cleaned.

Please refer to *Tips for Maximizing Drive Belt Durability* in *Basic Procedures* for some important information.

1. Remove the *CVT Cover*.
2. Install the puller/locking tool in the threaded hole of the driven pulley.

Puller/locking tool **(P/N 529036098)**	

3. Tighten to open the pulley.
4. To remove belt, slip the belt over the top edge of fixed sheave.

Removing the Drive Belt (Twin Cylinder Engine)

NOTICE
In case of a drive belt failure, the CVT, cover and air outlet must be cleaned.

Please refer to *Tips for Maximizing Drive Belt Durability* in *Basic Procedures* for some important information.

1. Remove the *CVT Cover*.
2. Install the adaptor in the threaded hole of the driven pulley.

Driven pulley adapter **(P/N 708200720)**	

3. Screw the puller/locking tool in the threaded hole of the adaptor.

Puller/locking tool **(P/N 529000088)**	

4. Tighten to open the pulley.

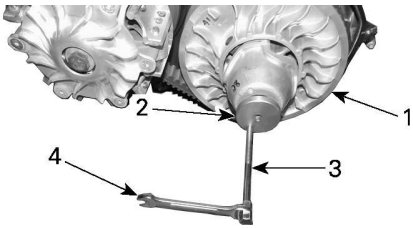

1. *Fixed sheave of driven pulley*
2. *Adaptor*
3. *Puller/locking tool*
4. *Wrench*

5. To remove belt, slip the belt over the top edge of fixed sheave, as shown.

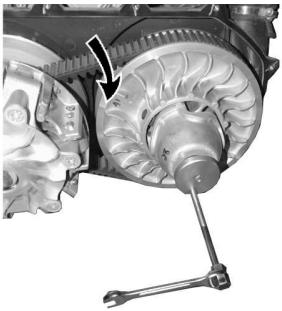

Installing the Drive Belt

For installation, reverse the removal procedure. Pay attention to following details.

The maximum drive belt life span is obtained when the drive belt has the proper rotation direction.

1. Install it so that the arrow printed on belt is pointing towards front of the vehicle, viewed from top.

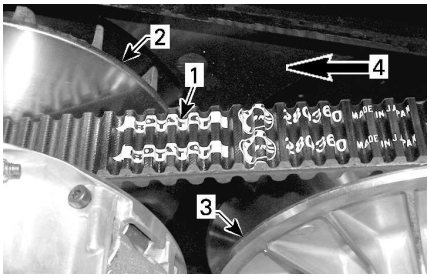

1. *Arrow printed on belt*
2. *Drive pulley (front)*
3. *Driven pulley (rear)*
4. *Rotation direction*

2. Turn the driven pulley until the lowest portion of the cogs on the external surface of the drive belt is even with the driven pulley edge.

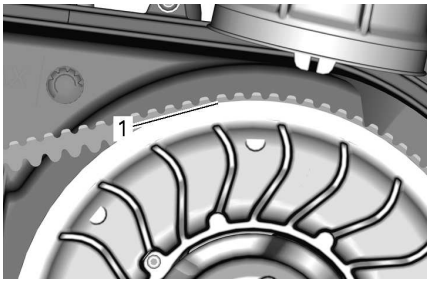

1. *Lowest portion of cogs even with driven pulley edge*

Drive and Driven Pulleys

Inspecting Drive and Driven Pulleys

This inspection must be performed by an authorized Can-Am Off-road dealer, repair shop, or person of your own choosing for maintenance, repair, or replacement.

Drive Pulley

Inspect the bushings and rollers of the sliding sheave of the drive pulley, replace worn parts.

Driven Pulley

Inspect the bushings of the cam and of the sliding sheave of the driven pulley, replace worn parts.

Inspect sliders on fixed sheave.

Spark Plugs

Removing the Spark Plug

1. Unplug spark plug cable.
2. Clean spark plug area with pressurized air before removing spark plug.
3. Unscrew spark plug completely using a spark plug socket, then remove it.

Installing the Spark Plugs

1. Prior to installation make sure that the contact surface of cylinder head and spark plug is free of grime.
2. Using a feeler gauge, set the spark plug gap.

Spark Plug Gap	
Mono cylinder	0.7 to 0.8 mm (.028 to .031 in)
Twin cylinders	0.8 to 0.9 mm (.031 to .035 in)

3. Coat spark plug threads with the following anti-seize lubricant.

Service Product
Cooper-based anti-seize lubricant

4. Screw spark plug into cylinder heads by hand and tighten with a torque wrench and a proper socket.

NOTICE

Do not overtighten spark plugs, engine damage can occur.

Tightening Torque	
Spark plug	11 Nm (97 lbf-in)

Battery

Battery Maintenance

NOTICE

Never charge a battery while installed in vehicle.

These vehicles are equipped with a VRLA battery (Valve Regulated Lead Acid). It is a maintenance-free type battery, there is no need to add water to adjust electrolyte level.

NOTICE

Never remove the battery sealing cap.

Removing the Battery

1. Remove under seat storage compartment if equipped.
2. Remove battery cover by unscrewing the two 1/4 turn fasteners.

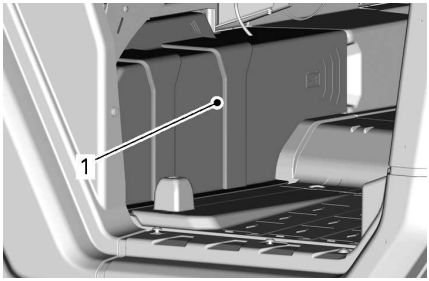

1. Battery cover

3. Disconnect BLACK (-) cable first then RED (+) cable.

NOTICE

Always respect this order for disassembly; disconnect BLACK (-) cable first.

4. Remove battery holder retaining screw(s).

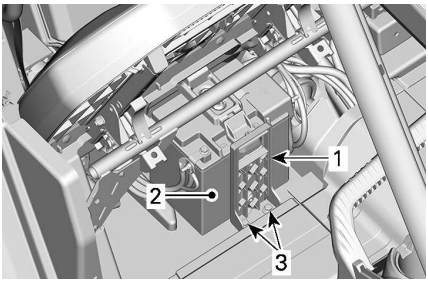

1. *Battery holder*
2. *Battery*
3. *Battery holder retaining screw(s)*

5. Remove battery holder.
6. Remove battery.

Installing the Battery

Battery installation is the reverse of the removal procedure.

NOTICE

Improper orientation of the battery cables (reverse polarity) will result in damage to the voltage regulator.

NOTICE

Always connect RED (+) cable first then BLACK (-) cable.

Fuses and Fusible Links

Fuse Replacement

If a fuse is burnt, replace it by one of the same rating.

NOTICE

Do not use a higher rated fuse as this can cause severe damage.

Fuse Box Location

The vehicle is equipped with multiple fuse boxes. Several are located inside the front service center and another one under the right passenger seat, near the battery.

Two fuse links inside the electric harness complete the system protection.

An additional 50A fuse to protect the voltage regulator is located near the battery.

To open front service cover, pull on front edges of service cover to unlock mechanism

PULLING ON FRONT SERVICE COVER EDGE.

Lift service cover.

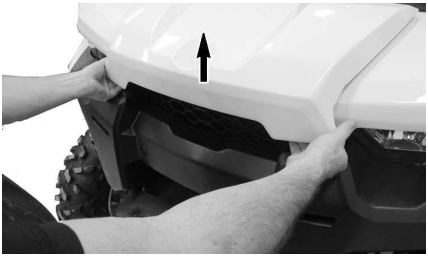

LIFTING FRONT SERVICE COVER EDGE.

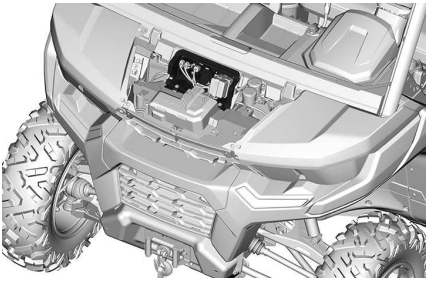

FUSE BOX SUPPORT

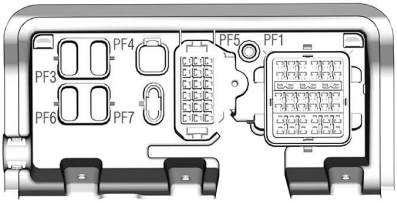

FUSE BOX SUPPORT

Remove the battery cover to access the rear secondary fuse box.

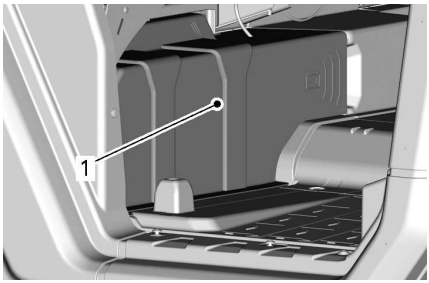

1. Battery cover

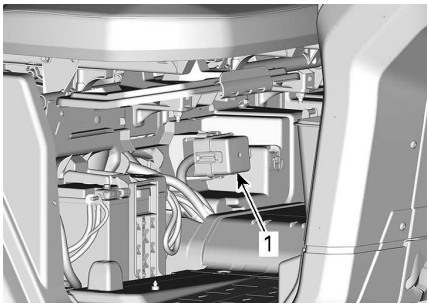

1. Rear secondary fuse box

Fuse Box Description

Fuses – Inside Front Service Center

Inside the front storage center, the fuse box number is molded in the support.

Inside Front Service Center		
No	**Description**	**Rating**
PF1	Master fuse box	—
PF3	DPS	40 A
PF4	Accessories	40 A
PF5	Air Conditioning (if equipped)	—
PF7	Smart-Lok™ (if equipped)	20 A

Master Fuse Box (PF1)– Inside Front Service Center

CAB Models		
No	**Description**	**Rating**
F11	Headlamps	20 A
F12	DC1/DC3/ 12V accessory outlet 1	10 A
F14	12 V Accessory outlet 2	10 A
F16	Tail lamps	10 A
F18	Power-tilt bed (if equipped)	20 A
R3	ECM/ Accessory 12V	—
R8	Brake lights	—

CAB Models		
No	**Description**	**Rating**
R9	Accessory post 12V/ outlet 2	—
R10	A/C clutch	—

All Other Models		
No	**Description**	**Rating**
F11	Headlamps	20 A
F12	DC1/DC3/ 12V accessory outlet 1	10 A
F14	12 V Accessory outlet 2	10 A
F16	Tail lamps	10 A
F17	Heater (if equipped)	5A
F18	Power-tilt bed (if equipped)	20 A
R3	ECM/ Accessory 12V	—
R8	Brake lights	—
R9	Accessory post 12V/ outlet 2	—

Secondary Fuse Box (PF2)– Under passenger seat

Secondary Fuse Box (Under passenger seat)		
No	**Descrip tion**	**Rating**
F4	Cluster/ relays	10 A
F5	Ignition/ injection/ fuel pump	10 A
F6	Engine Control Module (ECM)	10 A
F7	Wheel drive actuator	10 A
F8	Ignition switch Clock	10 A
F9	Cooling fan	25 A
F18	Oxygen sensor Emission control	10 A
F28	Rear outlet	10 A
R1	Cooling fan	—
R2	Main	—

Fuse Links

Fuse link	Descrip tion	Rating
1	Main	18 awg
2	Accessory post	14 awg

Regulator Fuse

No	Descrip tion	Rating
—	Regulator	50 A

Lights

Headlight Bulb Replacement

NOTICE

Never touch glass portion of a halogen bulb with bare fingers, it shortens its operating life. If glass is touched, clean it with isopropyl alcohol which will not leave a film on the bulb.

Unplug connector from bulb.

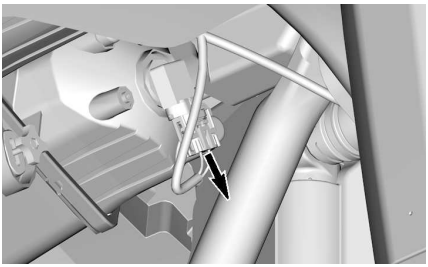

TYPICAL

Rotate bulb.

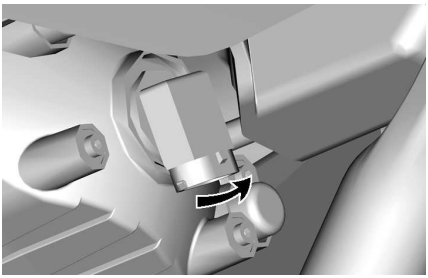

TYPICAL

Pull out bulb.

Properly reinstall removed parts in the reverse order of their removal.

Validate headlights operation.

Headlight Beam Aiming

Turn adjustment screw to adjust beam height to your convenience.

NOTE:
Adjust headlights evenly.

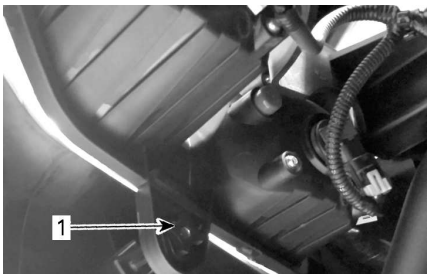

1. Adjustment screw

Taillight Bulbs Replacement

The taillights are built with LEDs (light emitting diode) and this technology proved to be reliable. In the unlikely event they do not work, have them checked by an authorized Can-Am dealer, a repair shop or person of your choosing.

Drive Shaft Bellow and Protector

Inspecting Drive Shaft Bellows and Protector

1. Visually inspect drive shaft protectors and bellows condition.
2. Check protectors for damage or rubbing against shafts.
3. Check bellows for cracks, tears, leaking grease, etc.
4. Repair or replace damaged parts as necessary.

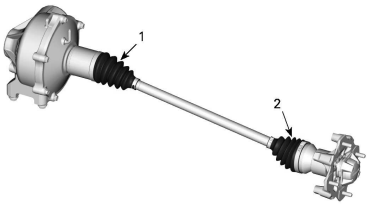

1. *Drive shaft bellow - differential side*
2. *Drive shaft bellow - wheel side*

Wheel Bearing

Inspecting a Wheel Bearing

1. Lift and support vehicle. Refer to *Lifting and Supporting the Vehicle*.
2. Push and pull the wheels from the upper edge to feel the play.
3. See an authorized Can-Am Off--road dealer, a repair shop or a person of your choosing if there is excessive play.

TYPICAL

Wheels and Tires

Removing a Wheel

1. Place the vehicle on a level surface.
2. Place shift lever on PARK position.
3. Loosen the wheel lug nuts.
4. Lift and support vehicle. Refer to *Lifting and Supporting Vehicle* section
5. Remove lug nuts and wheel.

Installing a Wheel

1. Inspect studs threads and lug nuts. Replace if needed.
2. Install the wheel.

NOTE: The tires are unidirectional and their rotation must be kept in a specific direction for proper operation.

3. Install all lug nuts by hand.

NOTICE
Always use the recommended wheel lug nuts for the type of wheel. Using a different lug nut could cause damages to the rim or studs.

4. Tighten wheel lug nuts in accordance with the following illustration.

Tightening Torque	
Wheel lug nuts	100 ± 10 Nm (74 ± 7 lbf-ft)

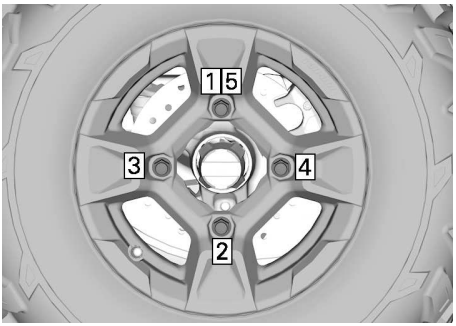

TIGHTENING SEQUENCE

Tire Pressure

⚠ WARNING

Tire pressure greatly affects vehicle handling and stability. Insufficient pressure may cause tire to deflate and rotate on wheel. Overpressure may burst the tire. Always follow recommended pressure.
NEVER set tire pressure below minimum. It could cause the tire to dislodge from the rim.

Check pressure when tires are **cold** before using the vehicle. Tire pressure changes with temperature and altitude. Recheck pressure if one of these conditions has changed.

Refer to the *Tires Pressure and Maximum Load Label* on your vehicle for applicable pressure.

NOTE:
Although the tires are specifically designed for off-road use, a flat may still occur. Therefore, it is recommended to carry a tire gauge, tire pump and a repair kit.

Tire Inspection

Check tire for damage and wear. Replace if necessary.

⚠ WARNING

Do not rotate tires. The front and rear tires have a different size. The left and right tires have different unidirectional tread patterns.

Tire Replacement

Tire replacement should be performed by an authorized Can-Am Off-road dealer, a repair shop or a person of your choosing.

⚠ WARNING

Replace tires only with the same type and size as original tires. For unidirectional tread pattern, ensure that the tires are installed in the correct direction of rotation. Tires should be replaced, by an experienced person, in accordance with tire industry standards and tools.

Suspensions

Lubricating the Front Suspension

Lubricate front arms and stabilizer bar bushings (if equipped).

XPS synthetic suspension grease

There are two grease fittings on each arm oriented upwards.

There is one grease fitting on each stabilizer bar pivot bushing.

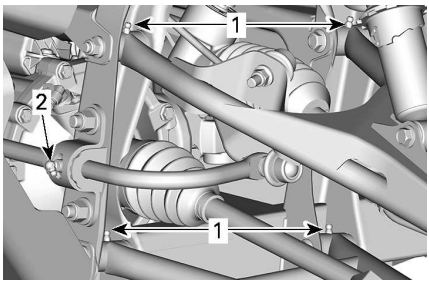

1. *A-arm grease fittings*
2. *Stabilizer bar bushings grease fittings (if equipped)*

Lubricating the Rear Suspension

Lubricate rear suspension arms (two grease fittings on each arm) and rear stabilizer bar bushing.

XPS synthetic suspension grease

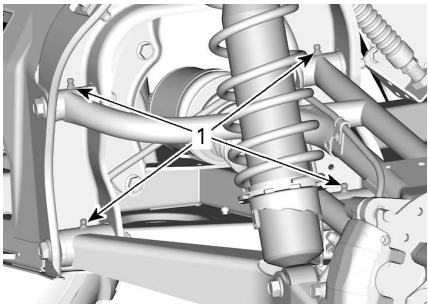

TYPICAL

1. *Rear suspension arm grease fittings*

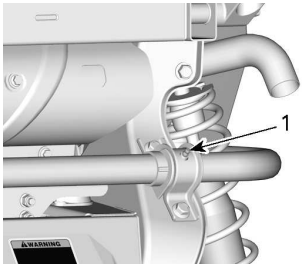

TYPICAL

1. *Rear stabilizer bar bushing grease fitting*

Suspension Inspection

See an authorized Can-Am Off-road dealer, a repair shop or person of your choosing if any problem is detected.

Shock Absorbers

Inspect shock absorber for leaks, bump stop wear out or other damages. Verify fasteners are still well tightened.

Front Suspension Arms

Check suspension arms for cracks, bending or other damages.

Rear Suspension Arms

Check suspension arms for distortion, cracks or bending.

Brakes

Brake Fluid Reservoir Level Verification

With vehicle on a level surface, check brake fluid in reservoir for proper level. Brake fluid level should be between MIN. and MAX. marks.

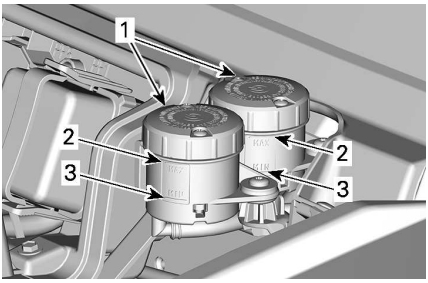

1. *Brake fluid reservoirs*
2. *MAX*
3. *MIN*

NOTE:
A low level may indicate leaks or worn brake pads.

Adding Brake Fluid

1. Clean both reservoir covers and the surrounding area.
2. Add enough new brake fluid to increase the level near the MAX mark.

NOTICE
Do not overfill.

⚠ WARNING
Ensure diaphragm is pushed back inside the cover before installing it.

Recommended Brake Fluid

Always use brake fluid meeting the specification DOT 4 only.

NOTICE

To avoid serious damage to the braking system, do not use fluids other than the recommended one, nor mix different fluids for topping up.

Inspecting Brake System

The brake inspection, maintenance and repair should be performed by an authorized Can-Am dealer, a repair shop or person of your choosing.

However, verify the following between visits to your dealer:

– Brake fluid level
– Brake system for fluid leaks
– Brake pad wear
– Brake cleanliness

⚠ WARNING

The brake fluid replacement or brake system maintenance and repairs should be performed by an authorized Can-Am dealer.

Seat Belts

Cleaning Seat Belt

To clean dirt and debris from the seat belts, sponge the straps with mild soap and water.

⚠ WARNING

To avoid damaging the seat belt components, never use a pressure washer to clean them.

NOTICE

Do not use bleach, dye, or household detergents.

Doors

Lubricating Door Latch Mechanism

1. Lubricate door latch mechanisms (lock and hinges) periodically using a silicone based lubricant.

NOTICE

Never apply any type of grease on door lock mechanism.

Cage

Cage Fasteners

Remove trim to get access to the fasteners.

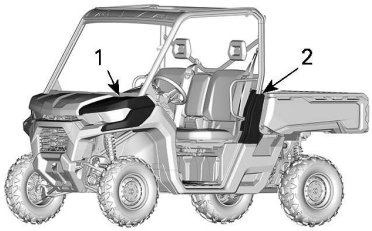

TYPICAL

1. *Front fender*
2. *Side cage cover*

Tighten cage fasteners to specification periodically.

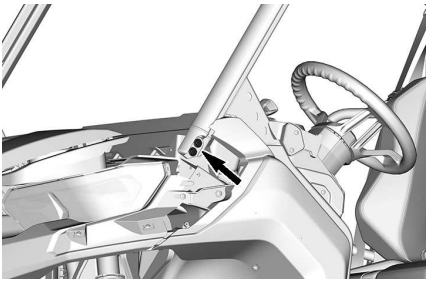

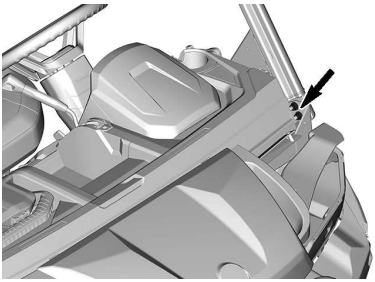

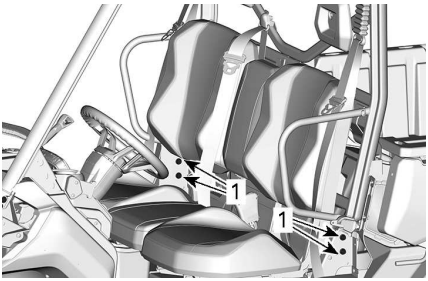

1. *Lower cage fasteners*

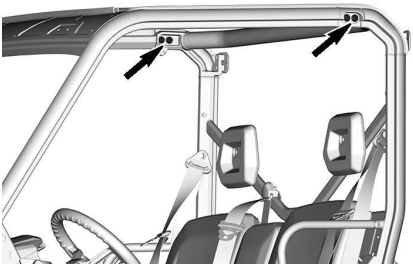

Tightening Torque	
Cage fasteners	67.5 ± 2.5 Nm (50 ± 2 lbf-ft)

Post-Operation Care

When vehicle is used in salt-water environment rinsing the vehicle with fresh water is necessary to preserve vehicle and its components.

Metallic parts lubrication is highly recommended.

This must be performed at the end of each operating day.

Use anti-corrosive lubricant or an equivalent.

Service Product
Lubricant and anti-corrosive

When vehicle is operated in muddy conditions, rinsing the vehicle is recommended to preserve vehicle and its components.

Vehicle Cleaning and Protection

NOTICE

Never use a high pressure washer to clean the vehicle. USE LOW PRESSURE ONLY (like a garden hose).
High pressure can cause damage to electrical or mechanical components.

Pay attention to certain areas where mud or debris can accumulate and potentially cause wear, interferences or promote corrosion.

This list includes but is not limited to:

- Around exhaust system and between muffler and muffler cover
- Under and around the fuel tank
- Radiator
- Shock absorbers
- Around front and rear differentials
- Around and underneath engine and gearbox
- Inside wheels
- On top of skid plates.

Painted parts which are damaged should be properly repainted to prevent rust.

When required, wash the body with warm water and soap (only use mild detergent). Apply non-abrasive wax.

NOTICE

Never clean plastic parts with strong detergent, degreasing agent, paint thinner, acetone, etc.

Protect the vehicle with a cover to prevent dust accumulation during storage.

NOTICE

The vehicle has to be stored in a cool and dry place and covered with an opaque tarpaulin. This will prevent sun rays and grime from affecting plastic components and vehicle finish.

STORAGE AND PRESEASON PREPARATION

When a vehicle is not in use for more than 4 months, proper storage is a necessity.

If the vehicle is to be remain inactive for more than 21 days, disconnect the BLACK (-) cable of the battery.

The use of a low amperage trickle charger is recommended to keep battery fully charged.

Before using your vehicle after storage, a preparation is required.

See an authorized Can-Am Off-road dealer, a repair shop, or a person of your own choosing to have your vehicle prepared properly.

This page is intentionally blank

TECHNICAL INFORMATION

VEHICLE IDENTIFICATION

The main components of your vehicle (engine and frame) are identified by different serial numbers. It may sometimes become necessary to locate these numbers for warranty purposes or to trace your vehicle in the event of loss. These numbers are required by the authorized Can-Am Off-road dealer to complete warranty claims properly. We strongly recommend that you take note of all the serial numbers on your vehicle and supply them to your insurance company.

Vehicle Identification Number

TYPICAL - VIN LABEL

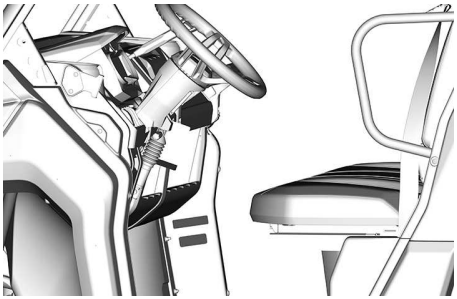

TYPICAL - VIN LABEL LOCATION

Engine Identification Number (EIN)

Mono Cylinder Engine

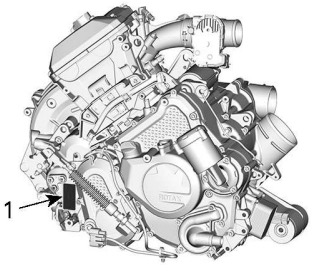

TYPICAL

1. *EIN (Engine Identification Number)*

Twin Cylinder Engine

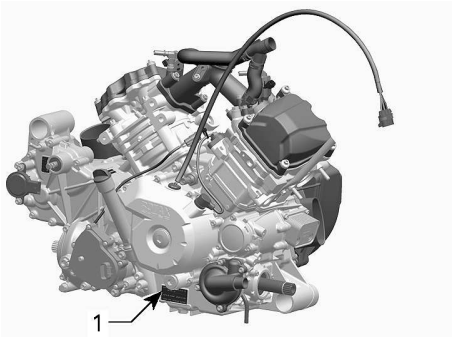

TYPICAL

1. *EIN (Engine Identification Number)*

Technical Information Hang Tag

North American Models

NOTICE

Remember to always return your key to OFF position for a complete electrical shutdown.

Leaving the key in ACC position will drain the battery and the vehicle may not restart.

THIS HANG TAG CANNOT BE REMOVED BEFORE SALE.

AVIS

Ne pas oublier de toujours remettre votre clé en position OFF afin d'assurer un arrêt complet du système électrique.

Laisser la clé en position ACC peut décharger la batterie et empêcher le véhicule de démarrer.

Ne pas retirer cette étiquette avant la vente.

Models Outside North America

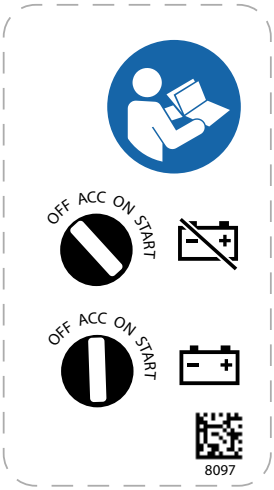

Technical Information Label

Middle Seat Opening Pictogram

This pictogram is located near the locking tab of the middle seat.

HVAC Information Label

This decal is located on the inner side of the front service cover.

READ THE REPAIR MANUAL BEFORE SERVICING

Type of refrigerant: R-134A
Refrigerant filling capacity: 520 g (18 oz)
Oil type: PAG
Safety Standards for Motor Vehicle Refrigerant Vapor Compressions Systems: SAE J639

Air Filter Maintenance Label

North American Models

AIR FILTER MAINTENANCE
MAINTENANCE MUST BE PERFOMED AS SPECIFIED IN THE OPERATOR'S GUIDE. AIR FILTER MAINTENANCE SHOULD INCREASE IN FREQUENCY IN MORE SEVERE (DUSTY) CONDITIONS.

ENTRETIEN DU FILTRE À AIR
L'ENTRETIEN DOIT ÊTRE EFFECTUÉ TEL QUE SPÉCIFIÉ DANS LE GUIDE DU CONDUCTEUR.ENTRETENIR LE FILTRE À AIR PLUS SOUVENT DANS DES CONDITIONS PLUS EXTRÊMES (MILIEUX POUSSIÉREUX). 707800373

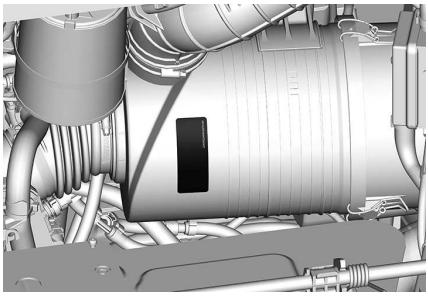

Models Outside North America

NOTICE

To replace the air filter, refer to the operator's guide for the procedure.

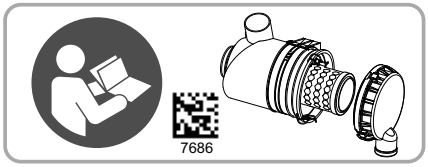

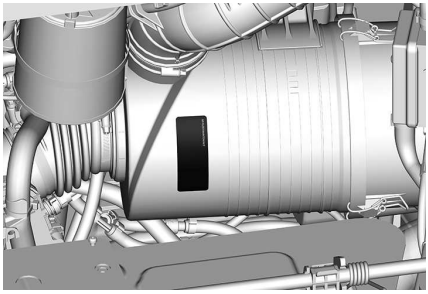

Compliance Label

Regulation (EU) 2016/1628 Applicable for Non-Road Mobile Machineries

Vehicles who comply to Regulation (EU) 2016/1628 (NRMM) are identified on the engine valve cover as well as on the vehicle, near the VIN label.

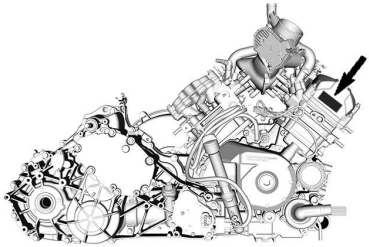

TYPICAL

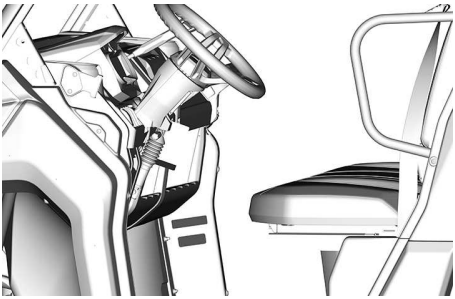

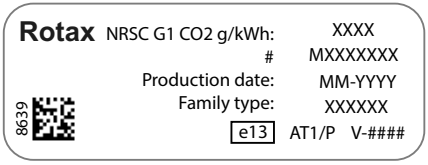

TYPICAL - NRMM IDENTIFICATION LABEL

NOTE:
Tampering with the engine or its components voids the EU type-approval of that particular engine.

ROHVA Compliance Label

This label is located inside the cockpit, on the longitudinal cage tube, above the driver seat.

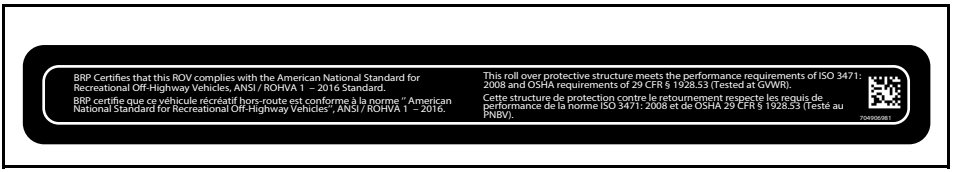

EPA Label

This label is located inside the cockpit, on the LH panel under the dash.

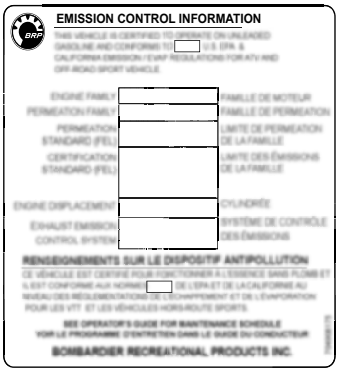

WHEN APPLICABLE

Ethanol Compliance Pictogram

This label is always located near the fuel cap.

EVAPORATIVE EMISSION CONTROL SYSTEM

California Models with Evaporative Emission Control System

Beginning with the 2018 model-year vehicles, some California models are certified to meet the CARB (California Air Resources Board) TP-933. These models are equipped with an evaporative emission control system consisting of a low permeation fuel tank (LPFT), low permeation fuel lines (LPFL) and an actively purged carbon canister.

The following statement is required by the CCR (California Code of Regulation): An add-on or modified part must be compliant with applicable ARB evaporative emission control standards. A violation of this requirement is punishable by civil and/or criminal punishment.

NOISE EMISSION CONTROL SYSTEM REGULATION

USA and Canada Only

Tampering with Noise Control System Is Prohibited!

U. S. Federal law and Canadian provincial laws may prohibit the following acts or the causing there of:

1. The removal or rendering inoperative by any person other than for purposes of maintenance, repair or replacement of any device or element of design incorporated into any new vehicle for the purpose of noise control prior to its sale or delivery to the ultimate purchaser or while it is in use or
2. The use of the vehicle after such device or element of design has been removed or rendered inoperative by any person.

Among those Acts Presumed to Constitute Tampering Are the Acts Listed Below:

1. Removal or alteration or the puncturing of the muffler or any engine component which conducts removal of engine exhaust gases.
2. Removal or alteration or the puncturing of any part of the intake system.
3. Replacing any moving parts of the vehicle or parts of the exhaust or intake system, with parts other than those specified by the manufacturer.
4. Lack of proper maintenance.

NOISE EMISSION AND VIBRATION VALUES (MACHINERY DIRECTIVE 2006/42/EC COMPLIANCE MODELS)

Noise emission and vibration values are measured in accordance with Machinery Directive 2006/42/EC on a paved surface, at neutral or without belt.

ENGINE		HD9	HD10
Noise	Sound Pressure Level (L_{pA})	66 dB (A) (Uncertainty (K_{pA}) 3dB)	82 dB (A) (Uncertainty (K_{pA}) 3dB)
	Sound Power Level (L_{wA})	Not Applicable	96 dB (A) (Uncertainty (K_{wA}) 3dB)
Vibra tion	Hand-arm system	Less than 2.5 m/s^2	
	Whole body at seat	Less than 0.5 m/s^2	

565 de la Montagne Street
Valcourt (Québec) J0E 2L0
Canada

www.brp.com

ADVENTURE BY DESIGN

EU Declaration of Conformity

Authorized Representative: BRP Europe N.V., Skaldenstraat 125, Gent, Belgium, 9042

This declaration of conformity is issued under the sole responsibility of the manufacturer.

The undersigned, representing the manufacturer, hereby declares that model year **2022 Side by Side Vehicles** marked with the CE mark and a 17-character vehicle identification number (VIN) structured as **3JBxxxxxxNxxxxxxx** under commercial names **Can-Am Traxter**, **Can-Am Maverick Sport** and **Can-Am Maverick** comply with all the relevant provisions of the following Directives and Regulations:

Machinery (MD) Directive 2006/42/EC as amended up to and including Regulation (EU) 2019/1243	ISO 12100:2010 & EN 16990:2020
Non-Road Mobile Machinery (NRMM) Regulation (EU) 2016/1628 on gaseous pollutants as amended up to and including Regulation (EU) 2020/1040	Category ATS, Stage V emission limits
Electromagnetic Compatibility (EMC) Directive 2014/30/EU as amended up to and including Regulation (EU) 2018/1139	CISPR 12:2007/A1:2009 & IEC 61000-6-1:2016 or UN R10.04 or later version
Battery Directive 2006/66/EC as amended up to and including Directive (EU) 2018/849 and, Regulation (EU) 1103/2010 on battery capacity labelling	EN 50342-7:2015
Radio Equipment (RED) Directive 2014/53/EU as amended up to and including Regulation (EU) 2018/1139 (If fitted with radio frequency (RF) D.E.S.S. key)	Art. 3.1a: IEC 62368-1:2014 Art. 3.1b: CISPR 25:2016 & ISO 11452-2:2004 Art. 3.2: ETSI EN 300 330 V2.1.1:2017

Luc Bouchard, Eng.
Director, Product Development, Can-Am SSV
Bombardier Recreational Products Inc.

Valcourt, QC, Canada

March 5, 2021

ski-doo LYNX SEA-DOO EVINRUDE ROTAX can-am

565 de la Montagne Street
Valcourt (Québec) J0E 2L0
Canada

www.brp.com

ADVENTURE BY DESIGN

UK Declaration of Conformity

Authorized Representative: BRP Recreational Products UK Ltd.,
Castle Chambers, 43 Castle Street, Liverpool, L2 9SH

This declaration of conformity is issued under the sole responsibility of the manufacturer.

The undersigned, representing the manufacturer, hereby declares that model year **2022 Side by Side Vehicles** marked with the UK CA mark and a 17-character vehicle identification number (VIN) structured as **3JBxxxxxxNxxxxxxx** under commercial names **Can-Am Traxter**, **Can-Am Maverick Sport** and **Can-Am Maverick** comply with all the relevant provisions of the following Statutory Instruments :

Supply of Machinery (Safety) Regulations 2008, UK SI 2008/1597 as amended up to and including SI 2020/1112	ISO 12100:2010 & EN 16990:2020
Non-Road Mobile Machinery (Type-Approval and Emission of Gaseous and Particulate Pollutants) Regulations 2018, UK SI 2018/764 as amended up to and including SI 2020/1393	Category ATS, Stage V emission limits
Electromagnetic Compatibility Regulations 2016, UK SI 2016/1091 as amended up to and including SI 2020/1112	CISPR 12:2007/A1:2009 & IEC 61000-6-1:2016 or UN R10.04 or later version
Batteries and Accumulators (Placing on the Market) Regulations 2008, UK SI 2008/2164 as amended up to and including UK SI 2020/904	EN 50342-7:2015
Radio Equipment Regulations 2017, UK SI 2017/1206 as amended up to and including SI 2020/1112 (If fitted with radio frequency (RF) D.E.S.S. key)	Art. 3.1a: IEC 62368-1:2014 Art. 3.1b: CISPR 25:2016 & ISO 11452-2:2004 Art. 3.2: ETSI EN 300 330 V2.1.1:2017

Luc Bouchard, Eng.
Director, Product Development, Can-Am SSV
Bombardier Recreational Products Inc.

Valcourt, QC, Canada

March 5, 2021

ski-doo LYNX SEA-DOO EVINRUDE ROTAX can-am

EAC DECLARATION OF CONFORMITY

Left blank for Eurasian Conformity

mark where applicable

TECHNICAL SPECIFICATIONS

TECHNICAL SPECIFICATIONS

Engine		
Engine type	HD7	ROTAX® Mono cylinder. 4-stroke, Double Over Head Camshaft (DOHC), liquid cooled
	HD9 HD10	ROTAX Twin cylinder. 4-stroke, Single Over Head Camshaft (SOHC), liquid cooled
Number of cylinders	HD7	1
	HD9 HD10	2
Number of valves	HD7	4 valves (mechanical adjustment)
	HD9 HD10	8 valves (mechanical adjustment)
Intake valve clearance	HD7	0.11 mm to 0.19 mm (.0043 in to .0074 in)
	HD9 HD10	0.08 to 0.12 mm (.0031 to .0047 in)
Exhaust valve clearance	HD7	0.31 mm to 0.39 mm (.0122 in to .0153 in)
	HD9 HD10	0.13 to 0.17 mm (.0051 to .0067 in)
Bore	HD7	97 mm (3.82 in)
	HD9 HD10	91 mm (3.58 in)
Stroke	HD7	88 mm (3.46 in)
	HD9 HD10	75 mm (2.95 in)
Displacement	HD7	650 cm^3 (39.7 in^3)
	HD9 HD10	976 cm^3 (59.56 in^3)

Engine	
Exhaust system	Spark arrestor approved by USDA Forest Service Catalyst on NRMM models
Air filter	Synthetic paper filter

Lubrication System			
Type			Wet sump
Oil filter			Replaceable cartridge oil filter (paper type)
Engine oil	Capacity	HD7	2.7 l (2.85 qt (liq.,US))
		HD9 HD10 (models without heather or HVAC)	2 l (2.1 qt (liq.,US))
		HD9 HD10 (models with heather or HVAC)	2.1 l (2.22 qt (liq.,US))
	Recom mended XPS oil	General purpose	XPS 5W40 Synthetic blend oil
		Cold tempera ture	XPS 0W40 Synthetic oil
		Warm tempera ture	XPS 10W50 Synthetic oil
	Alternate oil if XPS products are not available		If not available, use a 5W40 or 10W50 motor oil that meets the requirements for API service classification SJ, SL, SM or SN. Refer to *Recommended Engine Oil*

Cooling System			
Coolant	Recommended XPS coolant		Extended life pre-mixed coolant
	Alternate oil if XPS products is not available		Ethyl glycol / water mix (50%/50%). or coolant specifically designed for aluminum engines
	Capacity	HD7	5.5 l (1.46 gal (liq.,US))
		HD9 HD10 (models without heather or HVAC)	6 l (1.59 gal (liq.,US))
		HD9 HD10 (models with heather or HVAC)	6.9 l (1.82 gal(liq.,US))

Transmission		
Type		CVT (Continuously Variable Transmission)
Engagement	HD7	1950 ± 100 RPM
	HD9 HD10	2000 ± 100 RPM

Gearbox			
Type			Dual range (HI-LO) with PARK, neutral and reverse
Gearbox oil	Capacity	HD7	0.5 l (0.53 qt (liq.,US))
		HD9 HD10	1.25 l (1.321 qt (liq.,US))
	Recommended XPS gearbox oil		XPS 75W140 Synthetic gear oil

Gearbox		
	Alternate oil if XPS products is not available	75W 140 API GL-5

Electrical System			
Magneto generator output		HVAC models	850 W @ 6000 RPM
		All other models	650 W @ 6000 RPM
Ignition system type			IDI (Inductive Discharge Ignition)
Spark plug	Quantity	HD7	1
		HD9 HD10	2
	Make and type	HD7	NGK LMAR8A-8
		HD9 HD10	NGK LMAR8C-9
	Gap	HD7	0.7 to 0.8 mm (.028 to .031 in)
		HD9 HD10	0.8 to 0.9 mm (.031 to .035 in)
Battery	Type		Maintenance free —SLA (Sealed Lead Acid)
	Voltage		12 volts
	Nominal rating	Base DPS	18 A•h
		All other models	30 A•h
	Power starter output		0.7 kW
Headlight			4 x 35W (H8)
Taillight			2.3/3.5 W
Fuses			Refer to *Fuses* in the *Maintenance* section

Fuel System			
Fuel delivery			Electronic fuel injection (EFI) with iTC
Throttle body		HD7	46 mm with ETA
		HD9 HD10	54 mm with ETA
Fuel pump			Electric (in fuel tank)
Idle speed			1350 ± 100 RPM (1500 ± 100 RPM when HVAC is ON)
Fuel	Type		Regular unleaded gasoline
	Minimum Octane rating	North America	87 AKI (R+M)/2
		Outside North America	91 RON
Fuel tank capacity			± 38 l (10 gal (liq.,US))
Fuel remaining when low fuel light turns ON			± 8.5 l (2.2 gal (liq.,US))

Drive System			
Drive system type			Selectable 2WD/4WD
Front differential oil	Capacity		400 ml (14 fl oz (US))
	Recommended XPS differential oil		XPS 75W90 Synthetic gear oil
	Alternate oil if XPS products is not available		Synthetic gear oil 75W90 API GL-5
Front drive			Selectable 2WD / 4WD with Visco-Lok auto-locking front differential, spiral gears
Front drive ratio			3.6:1
Rear drive			Lockable differential
Rear drive ratio		HD7	3.6:1

Drive System		
	HD9 HD10	3.43:1
CV joint grease		XPS CV joint grease
Spline's propeller shaft grease (grease applied to spline connections)		XPS Propeller shaft grease or equivalent

Steering	
Type	Rack and pinion
Steering wheel	Adjustable tilt steering

Front Suspension		
Suspension type	DPS HD10 XT HD10	Arched double suspension arms
	DPS CAB Limited	Double arched suspension arms with stabilizer bar
	All other models	Double suspension arms
Suspension travel	DPS HD10 XT HD10	279 mm (11 in)
	All other models	254 mm (10 in)
Shock absorber	Quantity	2
	Type	Gas charged
Preload adjustment		5 positions cam

Rear Suspension		
Suspension type	DPS CAB DPS HD10 XT HD10 Limited	Arched TTA with stabilizer bar
	All other models	TTA with stabilizer bar
Suspension travel	DPS HD10 XT HD10	279 mm (11 in)

Rear Suspension		
	All other models	254 mm (10 in)
Shock absorber	Quantity	2
	Type	Gas charged
Preload adjustment		5 positions cam

Brakes		
Front brake	Qty	2
	Type	220 mm (8.7 in) ventilated brake disc with hydraulic twin-pistons calipers
Rear brake	Qty	2
	Type	220 mm (8.7 in) ventilated brake disc with hydraulic single-pistons caliper
Brake fluid	Type	DOT 4
	Capacity	Approximately 310 ml (10.5 fl oz (US))
Caliper		Floating
Brake pad material		Metallic
Minimum brake pad thickness		0.5 mm (.02 in)
Minimum brake disc thickness		4 mm (.157 in)
Maximum brake disc warpage		0.2 mm (.01 in)

Tires		
Pressure		Recommended tire inflation pressure is found on the Tire Label. Refer to appropriate *Important On-Product Labels* section for its location.
Tire size	Front	686 x 229 x 356 mm (27 x 9 x 14 in)
	Rear	686 x 279 x 356 mm (27 x 11 x 14 in)
Minimum tire thread depth		3 mm (.118 in)

Wheels		
Type	Base	Steel
	All other models	Cast aluminum
Rim size	Front	35.6 x 18 cm (14 x 7 in)
	Rear	35.6 x 21.6 cm (14 x 8.5 in)
Wheel lug nuts torque		100 ± 10 Nm (74 ± 7 lbf-ft)
Wheel Offset	Front	41.2 mm (1.6 in)
	Rear	51 mm (2 in)

Chassis	
Cage type	Profiled tube section, high strength steel, ISO 3471 certified

Dimensions		
Overall length	Limited XT	320 cm (126 in)
	All other models	305 cm (120 in)

Dimensions			
Overall width		DPS CAB HD9 DPS CAB Limited HD10	165.1 cm (65 in)
		DPS HD10 XT HD10	162.5 cm (64 in)
		All other models	157.5 cm (62 in)
Overall height		DPS CAB HD9 DPS CAB Limited HD10	201 cm (79 in)
		DPS HD10 XT HD9	198 cm (78 in)
		XT HD10	203 cm (80 in)
		All other models	193 cm (76 in)
Wheelbase			211.5 cm (83 in)
Wheel track	Front	DPS CAB HD9 DPS CAB Limited HD10	147 cm (58 in)
		DPS HD10 XT HD10	136.3 cm (53.7 in)
		All other models	131 cm (51.6 in)
	Rear	DPS CAB HD9 DPS CAB Limited HD10	140 cm (55 in)
		DPS HD10 XT HD10	130.4 cm (51.3 in)
		All other models	126 cm (49.5 in)

Dimensions		
Ground clearance	DPS CAB Limited	30.5 cm (12 in)
	DPS HD10 XT HD10	33 cm (13 in)
	All other models	28 cm (11 in)

Loading Capacity and Weight		
Dry weight	Base HD7	669 kg (1475 lb)
	BASE HD9	671 kg (1479 lb)
	DPS HD7	662 kg (1460 lb)
	DPS HD9	699 kg (1541 lb)
	DPS HD10	688 kg (1518 lb)
	DPS CAB	825.5 kg (1820 lb)
	Limited	877 kg (1934 lb)
	XT HD9	728.5 kg (1606 lb)
	XT HD10	718 kg (1583 lb)
	XU	736 kg (1623 lb)
Weight distribution (front/rear)	Limited	47/53
	XT	44/56
	All other models	42/58
Cargo box capacity	Californian models	272 kg (600 lb)
	All other models	454 kg (1,000 lb)
Tailgate capacity		113 kg (250 lb)
Total vehicle load allowed (including driver, passengers, all other loads and added accessories)	Californian models	545 kg (1,200 lb)
	All other models	680 kg (1,500 lb)

Loading Capacity and Weight		
Gross vehicle weight rating	Base HD7	1391 kg (3068 lb)
	BASE HD9	1393 kg (3071 lb)
	DPS HD7	1385 kg (3052 lb)
	DPS HD9	1421 kg (3133 lb)
	DPS HD10	1411 kg (3110 lb)
	DPS CAB HD9	1413 kg (3144 lb)
	CAB Limited HD10	1464 kg (3228 lb)
	XT HD9	1451 kg (3198 lb)
	XT HD10	1440 kg (3176 lb)
	XU	1458 kg (3215 lb)
Towing capacity		1134 kg (2500 lb)
Tongue capacity		114 kg (250 lb)
Receiver Hitch		50.8 x 50.8 mm (2 x 2 in)

TROUBLESHOOTING

CVT Belt Is Slipping

1. Water has entered in the CVT.

– *Refer to Special Procedures.*

"–" Is Displayed On the Gearbox Position Display

1. Shift lever is between 2 positions.

– *Properly position the shift lever in the desired position.*

2. Shift lever is not properly adjusted.

– *Contact an authorized Can-Am Off-road dealer.*

3. Electrical communication error.

– *Contact an authorized Can-Am Off-road dealer.*

Engine Does Not Turn

1. D.E.S.S. key is not installed on D.E.S.S. post.

– *Securely install key to D.E.S.S. post.*

2. D.E.S.S. key not recognized is displayed in the multifunction gauge.

– *Clean D.E.S.S. key. If message still displayed after cleaning, see an authorized Can-Am Off-road dealer.*

3. Shift lever is not set on PARK.

– *Set shift lever to either in PARK or press the brake pedal.*

4. Burnt fuse.

– *Check fuses.*

5. Weak battery or loose connections.

– *Check charging system fuse.*
– *Check fault message in cluster.*
– *Check battery connections and terminals condition.*
– *Have the battery checked by an authorized Can-Am Off-road dealer.*

6. Defective engine start button.

– *Contact an authorized Can-Am Off-road dealer.*

7. Defective starter solenoid.

– *Contact an authorized Can-Am Off-road dealer.*

Engine Turns Over But Fails To Start

1. Flooded engine

– *Active the drowned mode to start the engine. Refer to Flooded Engine in Special Procedures section.*

2. No fuel to the engine (spark plug dry when removed).

– *Check fuel tank level.*
– *Check fuel pump fuse.*
– *Obstructed fuel pump pre-filter or fuel pump failure.*

See an authorized Can-Am Off-road dealer, a repair shop, or a person of your own choosing for maintenance, repair, or replacement.

Please refer to the US EPA Emission-Related Warranty contained herein for information about warranty claims.

3. Spark plug/ignition (no spark).

– *Check ignition fuse.*
– *Remove spark plug then reconnect to ignition coil.*
– *Start engine with spark plug grounded to the engine away from spark plug hole. If no spark appears, replace spark plug.*

If trouble persists, see an authorized Can-Am Off-road dealer, a repair shop, or a person of your own choosing for maintenance, repair, or replacement.

Please refer to the US EPA Emission-Related Warranty contained herein for information about warranty claims.

Engine Lacks Acceleration or Power

1. Seat belt not buckled properly. Check cluster message.

– *Buckle up seat belt.*

2. Fouled or damaged spark plug.

– *Replace spark plugs.*

3. Engine air filter plugged or dirty.

– *Check air filter and replace if necessary.*
– *Check deposits in engine air filter housing.*

4. Water in CVT

– *Drain water from CVT. Refer to Special Procedures section.*

5. CVT dirty or worn-out.

– *Contact an authorized Can-Am Off-road dealer.*

6. Lack of fuel

– *Dirty or clogged fuel pump pre-filter. See an authorized Can-Am Off-road dealer, a repair shop, or a person of your own choosing for maintenance, repair, or replacement. Please refer to the US EPA Emission-Related Warranty contained herein for information about warranty claims.*

7. Engine is in Torque Limitation mode (if equipped).

– *Engine torque is gradually limited for protection when coolant temperature is too high. Check multifunction gauge display for engine temperature.*
– *Let engine cool down.*

8. Engine is in limp home mode.

– *Multifunction gauge CHECK ENGINE indicator lamp is on and display shows LIMP HOME. See an authorized Can-Am Off-road dealer, a repair shop, or a person of your own choosing for maintenance, repair, or replacement. Please refer to the US EPA Emission-Related Warranty contained herein for information about warranty claims.*

Engine Overheats

1. Low coolant level in cooling system.

– *Check coolant level and refill. See Maintenance Procedures. Seek service from an authorized Can-Am Off-road dealer, a repair shop, or a person of your own choosing for maintenance, repair, or replacement. Please refer to the US EPA Emission-related warranty contained herein for information about warranty claims.*

2. Cooling fan is not working.

– *Ensure cooling fan is not jammed and working properly.*
– *Check fan fuse. See Fuses and Fusible Links in the Maintenance Procedures.*

3. Dirty radiators fins.

– *Check and clean radiator fins. See Maintenance Procedures.*

Engine Misfire

1. Fouled/damaged/worn spark plug.

– *Replace spark plugs as required.*

2. Water in fuel.

– *Drain fuel system and refill with fresh fuel.*

The RPM Increases But the Vehicle Does Not Move

1. Water in the CVT.

– *Drain water from CVT. See Special Procedures section.*

2. CVT dirty or worn-out or belt failure.

– *Contact an authorized Can-Am Off-road dealer.*

Partial or No Response From the Accelerator Pedal - Check Engine Is ON and PPS Fault Message Is Displayed

1. Partial failure of the accelerator pedal sensors (PPS).

– *Contact an authorized Can-Am Off-road dealer.*

2. Total failure of the accelerator pedal sensors (PPS).

– *Contact an authorized Can-Am Off-road dealer.*

AUDIO SYSTEM – TROUBLESHOOTINGA

Unit Does Not Turn On

1. Faulty fuse.

– *Remove the fuse and check with a continuity meter. Replace if necessary.*

2. Poor connection integrity.

– *Check “Ground” and “+12VDC” connections for pinched wires; ensure tight connections.*

System Will Not Power On

1. Blown fuse

– *Remove amplifier and check amplifier fuses.*
– *Remove head unit and check head unit fuse.*

2. Bad connection to battery posts

– *Inspect radio main power fuse.*
– *Check connections in vehicle.*

Amps Not Turning On

1. Poor connection integrity

– *Check “Amp Turn-On” connections for pinched wires; ensure tight connections.*

No Audio Will Play

1. RCA cables are not connected

– *Remove head unit and make sure RCA cables are fully seated. If necessary, secure with duct tape.*
– *Remove amplifier and make sure all connectors are fully seated.*

2. Amplifier main harness is not fully connected

– *Remove amplifier and verify that amplifier harness is fully seated.*

No Sound or Low Sound from a Specific Zone or All Zones

1. Mute or Pause is on

– *Press “Play” or “Pause”, or press and hold the VOL/SEL knob from the Audio Zone Levels screen to verify that Mute is not on.*

2. Volume or zone level is turned down or disabled

– *Check Audio Zone Levels screen or Audio Zone Setup menu settings.*

Speakers Are Malfunctioning

1. RCA cables are improperly connected

– *Remove head unit (refer to instruction sheet) and make sure RCA cables are fully seated. If necessary, secure with duct tape.*
– *Remove speaker and make sure connectors are fully seated. If necessary, pinch connectors with pliers to make them tighter.*

2. Speaker is defective.

– *Replace speaker. Contact an authorized Can-Am Off-road dealer.*

Volume Knob Malfunctioning

1. Bad head unit

– *Replace head unit. Contact an authorized Can-Am Off-road dealer.*

DIGITAL DISPLAY MESSAGES

If an abnormal engine condition occurs, the following messages can be combined with a pilot lamp.

Message	Description
D.E.S.S. KEY NOT RECOGNIZED	D.E.S.S. key requires cleaning. If message still displayed after cleaning, See an authorized Can-Am Off-road dealer.
BAD KEY	Indicates that you have used the wrong D.E.S.S. key, use the proper key for this vehicle.
CHECK ENGINE	All active or previously activated faults that require attention. No engine limitation engaged.
LIMP HOME	Critical faults requiring diagnostic as soon as possible. An engine limitation is engaged and/or the engine behavior is modified.
TPS FAULT	Throttle body fault, generally followed by a Limp Home message.
BRAKE SWITCH FAULT	Brake signal fault.
CHECK DPS	Check engine pilot light on. Indicates that the DPS (Dynamic Power Steering) does not work properly. See an authorized Can-Am Off-road dealer.
PPS FAULT	Faulty Pedal Position Sensor(s) (PPS). See an authorized Can-Am Off-road dealer.
FUEL SENSOR FAULT	When the fuel sender resistor value is out of range the digital display module will detect it and display the message.
CHECK SMART-LOK	Check engine pilot light on. Indicates that the Smart-Lok does not work properly. See an authorized Can-Am Off-road dealer.

This page is intentionally blank

WARRANTY

BRP LIMITED WARRANTY USA AND CANADA: 2022 CAN-AM® SSV

1) SCOPE OF THE LIMITED WARRANTY

Bombardier Recreational Products Inc. (“BRP”) warrants its 2022 Can-Am side--by-side vehicles (“SSV”) sold by authorized Can-Am SSV dealers (as hereinafter defined) in the United States of America (“USA”) and in Canada from defects in material or workmanship for the period and under the conditions described below. This limited warranty will become null and void if:

1. The SSV was used for racing or any other competitive activity, at any point, even by a previous owner; or
2. The SSV has been altered or modified in such a way so as to adversely affect its operation, performance or durability, or has been altered or modified to change its intended use.

Non-factory installed parts and accessories are not covered under this limited warranty. Please refer to the applicable parts and accessories limited warranty text.

2) LIMITATIONS OF LIABILITY

THIS WARRANTY IS EXPRESSLY GIVEN AND ACCEPTED IN LIEU OF ANY AND ALL OTHER WARRANTIES, EXPRESSED OR IMPLIED, INCLUDING WITHOUT LIMITATION ANY WARRANTY OF MERCHANTABILITY OR FITNESS FOR A PARTICULAR PURPOSE. TO THE EXTENT THAT THEY CANNOT BE DISCLAIMED, THE IMPLIED WARRANTIES ARE LIMITED IN DURATION TO THE LIFE OF THE EXPRESS WARRANTY. INCIDENTAL AND CONSEQUENTIAL DAMAGES ARE EXCLUDED FROM COVERAGE UNDER THIS WARRANTY. SOME STATES/PROVINCES DO NOT ALLOW FOR THE DISCLAIMERS, LIMITATIONS AND EXCLUSIONS IDENTIFIED ABOVE, AS A RESULT, THEY MAY NOT APPLY TO YOU. THIS WARRANTY GIVES YOU SPECIFIC RIGHTS, AND YOU MAY ALSO HAVE OTHER LEGAL RIGHTS WHICH MAY VARY FROM STATE TO STATE, OR PROVINCE TO PROVINCE.

Neither the distributor, any BRP dealer nor any other person has been authorized to make any affirmation, representation or warranty regarding the product, other than those contained in this limited warranty, and if made, shall not be enforceable against BRP. BRP reserves the right to modify this limited warranty at any time, being understood that such modification will not alter the warranty conditions applicable to the products sold while this warranty is in effect.

3) EXCLUSIONS – ARE NOT WARRANTED

The following are not warranted under any circumstances:

- Normal wear and tear;
- Routine maintenance items, tune ups, adjustments;
- Damage caused by failure to provide proper maintenance and/or storage, as described in the Operator's Guide;
- Damage resulting from removal of parts, improper repairs, service, maintenance, modifications or use of parts not manufactured or approved by BRP or resulting from repairs done by a person that is not an authorized servicing Can-Am SSV dealer;

- Damage caused by abuse, abnormal use, neglect or operation of the product in a manner inconsistent with the recommended operation described in the Can-Am SSV Operator's Guide;
- Damage resulting from accident, submersion, fire, theft, vandalism or any act of God;
- Operation with fuels, oils or lubricants which are not suitable for use with the product (see the Operator's Guide);
- Damages from rust, corrosion or exposure to the elements;
- Damage resulting from water or snow ingestion;
- Incidental or consequential damages, or damages of any kind including without limitation towing, storage, telephone, rental, taxi, inconvenience, insurance coverage, loan payments, loss of time, loss of income.

4) Warranty Coverage Period

This limited warranty will be in effect from (1) the date of delivery to the first retail consumer or (2) the date the product is first put into use, whichever occurs first and for the following period:

- Twelve (12) CONSECUTIVE MONTHS, for private use, commercial use or governmental use owners.
- For emission-related components; please also refer to the *US EPA EMISSION- RELATED WARRANTY* contained herein
- For evaporative emission-related components of California models equipped with evaporative emission control system produced by BRP for sale in the State of California that are originally sold to a resident or subsequently warranty registered to a resident in the State of California, please also refer to the *California Evaporative Emission Control Warranty Statement* contained herein.

The repair or replacement of parts or the performance of service under this warranty does not extend the life of this warranty beyond its original expiration date.

5) CONDITIONS TO HAVE WARRANTY COVERAGE

This warranty coverage is available **only** if **each** of the following conditions has been fulfilled:

- The 2022 Can-Am SSV must be purchased as new and unused by its first owner from a Can-Am SSV dealer authorized to distribute Can-Am SSV's in the country in which the sale occurred ("Can-Am SSV dealer");
- The BRP specified pre-delivery inspection process must be completed and documented and signed by the purchaser;
- The 2022 Can-Am SSV must have undergone proper registration by an authorized Can-Am SSV dealer;
- The 2022 Can-Am SSV must be purchased in the country in which the purchaser resides;
- Routine maintenance outlined in the Operator's Guide must be timely performed in order to maintain warranty coverage. BRP reserves the right to make warranty coverage contingent upon proof of proper maintenance.

BRP will not honor this limited warranty to any private use owner or commercial use owner if one of the preceding conditions has not been met. Such limitations are necessary in order to allow BRP to preserve both the safety of its products, and also that of its consumers and the general public.

6) WHAT TO DO TO OBTAIN WARRANTY COVERAGE

The customer must cease using the SSV upon the appearance of an anomaly. The customer must notify a servicing BRP dealer within three (3) days of the appearance of a defect, and provide it with reasonable access to the product and reasonable opportunity to repair it. The customer must also present to the authorized BRP dealer, proof of purchase of the product and must sign the repair/work order prior to starting the repair in order to validate the warranty repair. All parts replaced under this limited warranty become the property of BRP.

7) WHAT BRP WILL DO

BRP’s obligations under this warranty are limited to, at its sole discretion, repairing parts found defective under normal use, maintenance and service, or replacing such parts with new genuine Can-Am SSV parts without charge for parts and labor, at any authorized BRP dealer during the warranty coverage period under the conditions described herein. BRP's responsibility is limited to making the required repairs or replacements of parts. No claim of breach of warranty shall be cause for cancellation or rescission of the sale of the SSV to the owner.

In the event that service is required outside of the country of original sale, the owner will bear responsibility for any additional charges due to local practices and conditions, such as, but not limited to, freight, insurance, taxes, license fees, import duties, and any and all other financial charges, including those levied by governments, states, territories and their respective agencies.

BRP reserves the right to improve or modify products from time to time without assuming any obligation to modify products previously manufactured.

8) ADDITIONAL SUPPLIER WARRANTIES

A GPS receiver may be supplied by BRP as standard equipment on certain 2022 Can-Am SSV. The GPS receiver is covered under BRP’s limited warranty policy. Additional warranty coverage if offered by the GPS receiver “supplier” that is longer than BRP's limited warranty is to be dealt by the dealer or consumer directly with the GPS receiver “supplier”.

9) TRANSFER

If the ownership of a product is transferred during the warranty coverage period, this limited warranty, subject to its terms and conditions, shall also be transferred and be valid for the remaining coverage period provided BRP or an authorized Can-Am SSV Distributor/Dealer receives a proof that the former owner agreed to the transfer of ownership, in addition to the co-ordinates of the new owner.

10) CONSUMER ASSISTANCE

In the event of a controversy or a dispute in connection with this limited warranty, BRP suggests that you try to resolve the issue at the dealership level. We recommend discussing the issue with the authorized dealer's service manager or owner.

If the matter still remains unresolved, contact BRP by filling out the customer contact form at www.brp.com or contact BRP by mail at one of the addresses listed under the *Contact Us* in *Customer Information*.

US EPA EMISSION - RELATED WARRANTY

Bombardier Recreational Products Inc. (“BRP”) warrants to the ultimate purchaser and each subsequent purchaser that this new vehicle, including all parts of its exhaust emission control system and its evaporative emission control system, meets two conditions:

1. It is designed, built, and equipped so it conforms at the time of sale to the ultimate purchaser with the requirements of 40 CFR 1051 and 40 CFR 1060.
2. It is free from defects in materials and workmanship that may keep it from meeting the requirements of 40 CFR 1051 and 40 CFR 1060.

Where a warrantable condition exists, BRP will repair or replace, as it elects, any part or component with a defect in materials or workmanship that would increase the engine’s emissions of any regulated pollutant within the stated warranty period at no cost to the owner, including expenses related to diagnosing and repairing or replacing emission-related parts. All defective parts replaced under this warranty become the property of BRP.

For all emission-related warranty claims, BRP is limiting the diagnosis and repair of emission-related parts to the authorized Can-Am dealers, unless for emergency repairs as required by item 2 of the following list.

As a certifying manufacturer, BRP will not deny emission-related warranty claims based on any of the following:

1. Maintenance or other service BRP or BRP's authorized facilities performed.
2. Engine/equipment repair work that an operator performed to correct an unsafe, emergency condition attributable to BRP as long as the operator tries to restore the engine/equipment to its proper configuration as soon as possible.
3. Any action or inaction by the operator unrelated to the warranty claim.
4. Maintenance that was performed more frequently than BRP specify.
5. Anything that is BRP fault or responsibility.
6. The use of any fuel that is commonly available where the equipment operates unless BRP written maintenance instructions state that this fuel would harm the equipment’s emission control system and operators can readily find the proper fuel. See maintenance information section and fuel requirements of fueling section.

Emission-Related Warranty Period

The emission-related warranty is valid for the following period whichever comes

	HOURS	MONTHS	KILOMETERS
Exhaust emission-related components	500	30	5000
Evaporative emission-related components	N/A	24	N/A

Components Covered

The emission-related warranty covers all components whose failure would increase an engine’s emissions of any regulated pollutant, including the following listed components:

1. For exhaust emissions, emission-related components include any engine parts related to the following systems:
   - Air-induction system
   - Fuel system
   - Ignition system
   - Exhaust gas recirculation systems.
2. The following parts are also considered emission-related components for exhaust emissions:
   - After treatment devices
   - Crankcase ventilation valves
   - Sensors
   - Electronic control units.
3. The following parts are considered emission-related components for evaporative emissions:
   - Fuel tank
   - Fuel cap
   - Fuel line
   - Fuel line fittings
   - Clamps*
   - Pressure relief valves*
   - Control valves*
   - Control solenoids*
   - Electronic controls*
   - Vacuum control diaphragms*
   - Control cables*
   - Control linkages*
   - Purge valves
   - Vapor hoses
   - Liquid/vapor separator
   - Carbon canister
   - Canister mounting brackets
   - Carburetor purge port connector.

NOTE: *As related to the evaporative emission control system.

4. Emission-related components also include any other part whose only purpose is to reduce emissions or whose failure will increase emissions without significantly degrading engine/equipment performance.

Limited Applicability

As a certifying manufacturer, BRP may deny emission-related warranty claims for failures that have been caused by the owner's or operator's improper maintenance or use, by accidents for which the manufacturer has no responsibility, or by acts of God. For example, an emission-related warranty claim need not be honored for failures that have been directly caused by the operator's abuse of the engine/equipment or the operator's use of the engine/equipment in a manner for which it was not designed and are not attributable to the manufacturer in anyway.

If you have any question regarding your warranty rights and responsibility or for the name and location of the nearest authorized BRP dealer, you should contact BRP by filling out the customer contact form at **www.brp.com** or contact BRP by mail at one of the addresses listed under the CONTACT US section of this guide, or call at 1-888-272-9222.

CALIFORNIA EVAPORATIVE EMISSIONS CONTROL WARRANTY STATEMENT

The warranty periods begin on the date the new Off-Highway Recreational Vehicle (“OHRV”) is delivered to an ultimate purchaser.

Bombardier Recreational Products Inc. (“BRP”) warrants to the ultimate purchaser and each subsequent purchaser that the OHRV is:

1. Designed, built, and equipped so as to conform, at the time of sale, with all applicable laws, rules and regulations; and
2. Free from defects in materials and workmanship that may cause the failure of a warranted part. All replacement parts must be identical in all material respects to that part as described in BRP’s Executive Order of Certification application.

The warranty on emissions-related parts function as follows:

1. Repair or replacement of any warranted part must be performed at no charge to the OHRV owner, at a warranty station, except in the case of a temporary repair when a warranted part or a warranty station is not reasonably available to the OHRV owner. In the event a temporary repair is permitted, repairs may be performed at any available service establishment, or by the owner, using any replacement part. BRP must reimburse the owner for his or her expenses including diagnostic charges for such temporary repair or replacement, not to exceed BRP's suggested retail price for all warranted parts replaced and labor charges based on BRP's recommended time allowance for the warranty repair and the geographically appropriate hourly labor rate.
2. The lack of availability of warranted parts or the incompleteness of repairs within a reasonable time period, not to exceed 30 days from the time the OHRV is initially presented to the warranty station for repair, will qualify the need for a temporary repair.
3. Any warranted part which is not scheduled for replacement as part of maintenance in the written instructions must be warranted for the warranty period defined below. If any such part fails during the warranty period, it must be repaired or replaced by BRP. Any such part repaired or replaced under warranty must be fully warranted.
4. Any warranted part which is scheduled only for regular inspection in the written instructions must be warranted for the warranty period defined below. A statement in such written instructions to the effect of “repair or replace as necessary” does not reduce the period of warranty coverage. Any such part repaired or replaced under warranty is warranted for the remaining warranty period.
5. Any warranted part which is scheduled for replacement as part of maintenance in the written instructions is warranted for the period of time prior to the first scheduled replacement point for that part. If the part fails before the first scheduled replacement point, the part will be repaired or replaced by BRP. Any such part repaired or replaced under warranty is warranted for the remainder of the period prior to the first scheduled replacement point for the part.
6. Warranty services or repairs are provided at all manufacturer dealerships that are owned by the manufacturer or franchised to service the subject OHRVs.
7. The OHRV owner will not be charged for diagnostic labor which leads to the determination that a warranted part is, in fact, defective, provided that such diagnostic work is performed at a warranty station.

8. BRP is liable for damages to other vehicle components proximately caused by a failure, under warranty, of any warranted part.
9. Any replacement part designated by BRP may be used in warranty repairs provided without charge to the OHRV owner. Such use will not reduce the warranty obligations of BRP, except that BRP will not be liable for repair or replacement of any replacement part which is not a warranted part.
10. Any add-on or modified part exempted by the Air Resources Board from the prohibitions of section 27156 of the California Vehicle Code may be used on an OHRV. Such use, in and of itself, will not be grounds for disallowing a warranty claim. BRP is not liable to warrant failures of warranted parts caused by the use of an add-on or modified part (s) unless such part (s) are also warranted.

Conditions and exclusions:

– BRP may deny you warranty coverage if your OHRV or a part has failed directly due to abuse, neglect, improper maintenance or unapproved modifications.

Your Warranty Rights And Obligations

The California Air Resources Board is pleased to explain the evaporative emissions control system warranty on your 2022 Off-Road Sport Vehicle. In California, new off-highway recreational vehicles must be designed, built, and equipped to meet the State's stringent anti-smog standards. BRP must warrant the evaporative emissions control system on your Off-Road Sport Vehicle for the periods of time listed below provided there has been no abuse, neglect, improper maintenance, or unapproved modification of your Off-Road Sport Vehicle.

Your evaporative emissions control system may include parts such as the carburetor or fuel-injection system, fuel tank, fuel hoses, carbon canister, and engine computer. Also included may be hoses, belts, connectors and other evaporative emissions-related assemblies. Where a warrantable condition exists, Bombardier Recreational Products Inc. will repair your Off-Road Sport Vehicle at no cost to you including diagnosis, parts and labor.

OHRV Manufacturer's Warranty Coverage

The warranty period for this OHRV is 60 months, or 5000 miles, or 500 hours, whichever comes first.

Parts covered:

1. Canister Mounting Bracket(s)
2. Carbon Canister
3. Purge Port Connector
4. Clamp(s)*
5. Electronic Control*
6. Fuel Cap
7. Filler Neck
8. Filler Neck Hose
9. Fuel Line(s)
10. Fuel Line Fitting(s)
11. Fuel Tank
12. Pressure Relief Valve(s)*

13. Purge Valve(s)
14. Check Valve(s)*
15. Vapor Hose(s)
16. Flow Reducer
17. Filter(s)*
18. All other parts not listed that may affect the evaporative emissions control system

NOTE: *As related to the evaporative emission control system.

If any evaporative emissions-related part on your Off-Road Sport Vehicle is defective the part will be repaired or replaced by Bombardier Recreational Products Inc.

Owner's Warranty Responsibilities

As the Off-Road Sport Vehicle owner you are responsible for the performance of the required maintenance listed in your owner's manual. Bombardier Recreational Products Inc. recommends that you retain all receipts covering maintenance on your Off-Road Sport Vehicle, but Bombardier Recreational Products Inc. cannot deny warranty solely for the lack of receipts or for failure to ensure the performance of a scheduled maintenance.

As an owner you are responsible for presenting your Off-Road Sport Vehicle to a Bombardier Recreational Products Inc. dealer as soon as a problem exists. The warranty repairs should be completed in a reasonable time, not to exceed 30 days.

As an Off-Road Sport Vehicle owner, you should also be aware that Bombardier Recreational Products Inc. may deny you warranty coverage if your Off-Road Sport Vehicle or a part has failed due to abuse, neglect, improper maintenance or unapproved modifications.

If you have any questions regarding your warranty rights and responsibilities, you should contact:

– Bombardier Recreational Products Inc. at 1-888-272-9222, or
– The California Air Resources Board at 9528 Telstar Avenue, El Monte, CA 91731.

BRP INTERNATIONAL LIMITED WARRANTY: 2022 CAN-AM® SSV

1) SCOPE OF THE LIMITED WARRANTY

Bombardier Recreational Products Inc. (“BRP”) warrants its 2022 Can-Am SSV sold by Can-Am SSV distributors or dealers authorized by BRP to distribute Can-Am SSVs ("Can-Am SSV Distributor/Dealer") outside of the fifty United States, Canada, member states of the European Economic Area (which is comprised of the member states of the European Union plus the United Kingdom, Norway, Iceland and Liechtenstein) (“EEA”), member states of the Commonwealth of the Independent States (including Ukraine and Turkmenistan) (“CIS”) and Turkey, from defects in material or workmanship for the period and under the conditions described below.

Non-factory installed parts and accessories are not covered under this limited warranty. Please refer to the applicable parts and accessories limited warranty text.

This limited warranty will become null and void if:

1. The SSV was used for racing or any other competitive activity, at any point, even by a previous owner; or
2. The SSV has been altered or modified in such a way so as to adversely affect its operation, performance or durability, or has been altered or modified to change its intended use.

2) LIMITATIONS OF LIABILITY

TO THE EXTENT PERMITTED BY LAW, THIS WARRANTY IS EXPRESSLY GIVEN AND ACCEPTED IN LIEU OF ANY AND ALL OTHER WARRANTIES, EXPRESSED OR IMPLIED, INCLUDING WITHOUT LIMITATION ANY WARRANTY OF MERCHANTABILITY OR FITNESS FOR A PARTICULAR PURPOSE. TO THE EXTENT THAT THEY CANNOT BE DISCLAIMED, THE IMPLIED WARRANTIES ARE LIMITED IN DURATION TO THE LIFE OF THE EXPRESS WARRANTY. INCIDENTAL AND CONSEQUENTIAL DAMAGES ARE EXCLUDED FROM COVERAGE UNDER THIS WARRANTY. SOME JURISDICTIONS DO NOT ALLOW FOR THE DISCLAIMERS, LIMITATIONS AND EXCLUSIONS IDENTIFIED ABOVE, AS A RESULT, THEY MAY NOT APPLY TO YOU. THIS WARRANTY GIVES YOU SPECIFIC RIGHTS, AND YOU MAY ALSO HAVE OTHER LEGAL RIGHTS WHICH MAY VARY FROM COUNTRY TO COUNTRY. (FOR PRODUCTS PURCHASED IN AUSTRALIA SEE CLAUSE 4 BELOW).

Neither the Can-Am SSV Distributor/Dealer nor any other person has been authorized to make any affirmation, representation or warranty regarding the product, other than those contained in this limited warranty, and if made, shall not be enforceable against BRP.

BRP reserves the right to modify this warranty at any time, being understood that such modification will not alter the warranty conditions applicable to the products sold while this warranty is in effect.

3) EXCLUSIONS ARE NOT WARRANTED

The following are not warranted under this limited warranty under any circumstances:

- Normal wear and tear;
- Routine maintenance items, tune ups, adjustments (parts and labor);
- Damage caused by negligence or failure to provide proper maintenance and/ or storage, as described in the Operator's Guide;
- Damage resulting from removal of parts, improper repairs, service, maintenance, modifications or use of parts not manufactured or approved by BRP or resulting from repairs done by a person that is not an authorized servicing Can-Am SSV Distributor/Dealer;
- Damage caused by abuse, abnormal use, neglect or operation of the product in a manner inconsistent with the recommended operation described in the Operator’s Guide;
- Damage resulting from accident, submersion, fire, theft, vandalism or any act of God;
- Operation with fuels, oils or lubricants which are not suitable for use with the product (see the Operator’s Guide);
- Damage resulting from rust, corrosion or exposure to the elements;
- Damage resulting from water or snow ingestion;
- Incidental or consequential damages, or damages of any kind including without limitation towing, transportation expenses, storage, telephone, rental, taxi, inconvenience, insurance coverage, loan payments, loss of time, loss of income or time missed for downtime experience due to service work.

The following list includes, without limitation, items that are considered wear items and that are not covered under BRP's limited warranty unless failure is a direct result of a defect in material or workmanship:

- Batteries
- Brake pads
- Brake disks and drums
- Clutch plates / pads
- Clutch sliders
- Clutch springs
- Clutch replaceable bushings
- Drive belts
- Filters
- Finished and unfinished surfaces
- Fuses
- Light bulbs / sealed
- Lubricants
- Spark plugs
- Suspension bushings
- Suspension slider shoes
- Suspension springs
- Tires

4) Warranty Coverage Period

This warranty will be in effect from:

1. The date of delivery to the first retail consumer, or
2. The date the product is first put into use,

whichever occurs first and for a period of:

- SIX (6) CONSECUTIVE MONTHS for private use or commercial use.

In AUSTRALIA and NEW-ZEALAND only, this warranty will be in effect from:

1. The date of delivery to the first retail consumer, or
2. The date the product is first put into use,

whichever occurs first and for a period of:

– TWENTY-FOUR (24) CONSECUTIVE MONTHS, or
– A total use of FIFTEEN THOUSAND (15 000) kilometers,

whichever occurs first, for private use or commercial use.

The repair or replacement of parts or the performance of service under this warranty does not extend the life of this warranty beyond its original expiration date.

FOR PRODUCTS SOLD IN AUSTRALIA ONLY

Nothing in these Warranty terms and conditions should be taken to exclude, restrict or modify the application of any condition, warranty, guarantee, right or remedy conferred or implied under the Competition and Consumer Act 2010 (Cth), including the Australian Consumer Law or any other law, where to do so would contravene that law, or cause any part of these terms and conditions to be void. The benefits given to you under this limited warranty hereto are in addition to other rights and remedies that you have under Australian law.

Our goods come with guarantees that cannot be excluded under the Australian Consumer Law. You are entitled to a replacement or refund for a major failure and for compensation for any other reasonably foreseeable loss or damage. You are also entitled to have the goods repaired or replaced if the goods fail to be of acceptable quality and the failure does not amount to a major failure.

5) CONDITIONS TO HAVE WARRANTY COVERAGE

This warranty coverage is available **only** if **each** of the following conditions has been fulfilled:

– The 2022 Can-Am SSV must be purchased as new and unused by its first owner from a Can-Am SSV Distributor/Dealer authorized to distribute Can--Am SSVs in the country in which the sale occurred;
– The BRP specified pre-delivery inspection process must be completed and documented;
– The product must have undergone proper registration by an authorized Can--Am SSV Distributor/Dealer;
– The 2022 Can-Am SSV must be purchased in the country or union of countries in which the purchaser resides; and
– Routine maintenance outlined in the Operator’s Guide must be timely performed in order to maintain warranty coverage. BRP reserves the right to make warranty coverage contingent upon proof of proper maintenance.

BRP will not honor this limited warranty to any private use owner or commercial use owner if one of the preceding conditions has not been met. Such limitations are necessary in order to allow BRP to preserve both the safety of its products, and also that of its consumers and the general public.

6) WHAT TO DO TO OBTAIN WARRANTY COVERAGE

The customer must cease using the SSV upon the appearance of an anomaly. The customer must notify a servicing Can-Am SSV Distributor/Dealer within two (2) days of the appearance of a defect, and provide it with reasonable access to the product and reasonable opportunity to repair it. The customer must also present to the authorized Can-Am SSV Distributor/Dealer proof of purchase of the product and must sign the repair/work order prior to starting the repair in order to validate the warranty repair. All parts replaced under this limited warranty become the property of BRP.

Note that the notification period is subject to the applicable national or local legislation in customer's country.

7) WHAT BRP WILL DO

To the extent permitted by law, BRP’s obligations under this warranty are limited to, at its sole discretion, repairing parts found defective under normal use, maintenance and service; or replacing such parts with new genuine Can-Am SSV parts without charge for parts and labour, at any authorized Can-Am SSV Distributor/ Dealer during the warranty coverage period under the conditions described herein. BRP's responsibility is limited to making the required repairs or replacements of parts. No claim of breach of warranty shall be cause for cancellation or rescission of the sale of the Can-Am SSV to the owner. You may have other legal rights which may vary from country to country.

In the event that service is required outside of the country of original sale, the owner will bear responsibility for any additional charges due to local practices and conditions, such as, but not limited to, freight, insurance, taxes, license fees, import duties, and any and all other financial charges, including those levied by governments, states, territories and their respective agencies.

BRP reserves the right to improve or modify products from time to time without assuming any obligation to modify products previously manufactured.

8) TRANSFER

If the ownership of a product is transferred during the warranty coverage period, this limited warranty, subject to its terms and conditions, shall also be transferred and be valid for the remaining coverage period provided BRP or an authorized Can-Am SSV Distributor/Dealer receives a proof that the former owner agreed to the transfer of ownership, in addition to the coordinates of the new owner.

9) CONSUMER ASSISTANCE

In the event of a controversy or a dispute in connection with this limited warranty, BRP suggests that you try to resolve the issue at the Can-Am SSV Distributor/ Dealer level. We recommend discussing the issue with the authorized Can-Am SSV Distributor/Dealer's service manager or owner.

If the matter still remains unresolved, contact BRP by filling out the customer contact form at www.brp.com or contact BRP by mail at one of the addresses listed under the *Contact Us* section of this guide.

BRP LIMITED WARRANTY FOR THE EUROPEAN ECONOMIC AREA, THE COMMONWEALTH OF THE INDEPENDENT STATES AND TURKEY: 2022 CAN-AM® SSV

1) SCOPE OF THE LIMITED WARRANTY

Bombardier Recreational Products Inc. (“BRP”) warrants its 2022 Can-Am SSVs sold by Can-Am SSV distributors or dealers authorized by BRP to distribute Can-Am SSVs (“Can-Am SSV Distributor/Dealer”) in member states of the European Economic Area (which is comprised of the member states of the European Union plus the United Kingdom, Norway, Iceland and Liechtenstein) (“EEA”), in member states of the Commonwealth of the Independent States (including Ukraine and Turkmenistan) (“CIS”) and Turkey from defects in material or workmanship for the period and under the conditions described below.

Non-factory installed parts and accessories are not covered under this limited warranty. Please refer to the applicable parts and accessories limited warranty text.

This limited warranty will become null and void if:

1. The SSV was used for racing or any other competitive activity, at any point, even by a previous owner; or
2. The SSV has been altered or modified in such a way so as to adversely affect its operation, performance or durability, or has been altered or modified to change its intended use.

2) LIMITATIONS OF LIABILITY

TO THE EXTENT PERMITTED BY LAW, THIS WARRANTY IS EXPRESSLY GIVEN AND ACCEPTED IN LIEU OF ANY AND ALL OTHER WARRANTIES, EXPRESSED OR IMPLIED, INCLUDING WITHOUT LIMITATION ANY WARRANTY OF MERCHANTABILITY OR FITNESS FOR A PARTICULAR PURPOSE. TO THE EXTENT THAT THEY CANNOT BE DISCLAIMED, THE IMPLIED WARRANTIES ARE LIMITED IN DURATION TO THE LIFE OF THE EXPRESS WARRANTY. INCIDENTAL AND CONSEQUENTIAL DAMAGES ARE EXCLUDED FROM COVERAGE UNDER THIS WARRANTY. SOME JURISDICTIONS DO NOT ALLOW FOR THE DISCLAIMERS, LIMITATIONS AND EXCLUSIONS IDENTIFIED ABOVE, AS A RESULT, THEY MAY NOT APPLY TO YOU. THIS WARRANTY GIVES YOU SPECIFIC RIGHTS, AND YOU MAY ALSO HAVE OTHER LEGAL RIGHTS WHICH MAY VARY FROM COUNTRY TO COUNTRY.

Neither the Can-Am SSV Distributor/Dealer nor any other person has been authorized to make any affirmation, representation or warranty regarding the product, other than those contained in this limited warranty, and if made, shall not be enforceable against BRP.

BRP reserves the right to modify this warranty at any time, being understood that such modification will not alter the warranty conditions applicable to the products sold while this warranty is in effect.

3) EXCLUSIONS – ARE NOT WARRANTED

The following are not warranted under this limited warranty under any circumstances:

- Normal wear and tear;
- Routine maintenance items, tune ups, adjustments (parts and labor);
- Damage caused by negligence or failure to provide proper maintenance and/or storage, as described in the Operator's Guide;
- Damage resulting from removal of parts, improper repairs, service, maintenance, modifications or use of parts not manufactured or approved by BRP or resulting from repairs done by a person that is not an authorized servicing Can-Am SSV Distributor/Dealer;
- Damage caused by abuse, abnormal use, neglect or operation of the product in a manner inconsistent with the recommended operation described in the Operator’s Guide;
- Damage resulting from accident, submersion, fire, snow or water ingestion, theft, vandalism or any act of God;
- Operation with fuels, oils or lubricants which are not suitable for use with the product (see the Operator’s Guide);
- Damage resulting from rust, corrosion or exposure to the elements;
- Incidental or consequential damages, or damages of any kind including without limitation towing, transportation expenses, storage, telephone, rental, taxi, inconvenience, insurance coverage, loan payments, loss of time, loss of income or time missed for downtime experience due to service work.

The following list includes, without limitation, items that are considered wear items and that are not covered under BRP's limited warranty unless failure is a direct result of a defect in material or workmanship:

- Batteries
- Brake pads
- Brake disks and drums
- Clutch plates / pads
- Clutch sliders
- Clutch springs
- Clutch replaceable bushings
- Drive belts
- Filters
- Finished and unfinished surfaces
- Fuses
- Light bulbs / sealed
- Lubricants
- Spark plugs
- Suspension bushings
- Suspension slider shoes
- Suspension springs
- Tires

4) WARRANTY COVERAGE PERIOD

This warranty will be in effect from (1) the date of delivery to the first retail consumer or (2) the date the product is first put into use, whichever occurs first and for a period of:

– TWENTY-FOUR (24) CONSECUTIVE MONTHS for private use.
– SIX (6) CONSECUTIVE MONTHS for commercial use or rental use.

The product is used commercially when it is used in connection with any work or employment that generates income during any part of the warranty period. The product is also used commercially when, at any point during the warranty period, it is licensed for commercial use.

The repair or replacement of parts or the performance of service under this warranty does not extend the life of this warranty beyond its original expiration date.

Note that the duration and any other modalities of the warranty coverage are subject to the applicable national or local legislation in your country.

5) CONDITIONS TO HAVE WARRANTY COVERAGE

This warranty coverage is available **only** if **each** of the following conditions has been fulfilled:

– The 2022 Can-Am SSV must be purchased as new and unused by its first owner from a Can-Am SSV Distributor/Dealer authorized to distribute Can--Am SSVs in the country in which the sale occurred;
– The BRP specified pre-delivery inspection process must be completed and documented;
– The product must have undergone proper registration by an authorized Can--Am SSV Distributor/Dealer;
– The 2022 Can-Am SSV must be purchased in the country or union of countries in which the purchaser resides; and
– Routine maintenance outlined in the Operator’s Guide must be timely performed in order to maintain warranty coverage. BRP reserves the right to make warranty coverage contingent upon proof of proper maintenance.

BRP will not honor this limited warranty to any private use owner or commercial use owner if one of the preceding conditions has not been met. Such limitations are necessary in order to allow BRP to preserve both the safety of its products, and also that of its consumers and the general public.

6) WHAT TO DO TO OBTAIN WARRANTY COVERAGE

The customer must cease using the SSV upon the appearance of an anomaly. The customer must notify a servicing Can-Am SSV Distributor/Dealer within two (2) months of the appearance of a defect and provide it with reasonable access to the product and reasonable opportunity to repair it. The customer must also present to the authorized Can-Am SSV Distributor/Dealer, proof of purchase of the product and must sign the repair/work order prior to starting the repair in order to validate the warranty repair. All parts replaced under this limited warranty become the property of BRP.

Note that the notification period is subject to the applicable national or local legislation in your country.

7) WHAT BRP WILL DO

To the extent permitted by law, BRP’s obligations under this warranty are limited to, at its sole discretion, repairing parts found defective under normal use,

maintenance and service, or replacing such parts with new genuine Can-Am SSV parts without charge for parts and labor, at any authorized Can-Am SSV Distributor/ Dealer during the warranty coverage period under the conditions described herein. BRP's responsibility is limited to making the required repairs or replacements of parts. No claim of breach of warranty shall be cause for cancellation or rescission of the sale of the Can-Am SSV to the owner. You may have other legal rights which may vary from country to country.

In the event that service is required outside of the EEA, the owner will bear responsibility for any additional charges due to local practices and conditions, such as, but not limited to, freight, insurance, taxes, license fees, import duties, and any and all other financial charges, including those levied by governments, states, territories and their respective agencies.

BRP reserves the right to improve or modify products from time to time without assuming any obligation to modify products previously manufactured.

8) TRANSFER

If the ownership of a product is transferred during the warranty coverage period, this warranty shall also be transferred and be valid for the remaining coverage period provided BRP or an authorized Can-Am SSV Distributor/Dealer receives a proof that the former owner agreed to the transfer of ownership, in addition to the co-ordinates of the new owner.

9) CONSUMER ASSISTANCE

In the event of a controversy or a dispute in connection with this limited warranty, BRP suggests that you try to resolve the issue at the Can-Am SSV Distributor/ Dealer level. We recommend discussing the issue with the authorized Can-Am SSV Distributor/Dealer's service manager or owner.

If the matter still remains unresolved, contact BRP by filling out the customer contact form at www.brp.com or contact BRP by mail at one of the addresses listed under the *Contact Us* section of this guide.

ADDITIONAL TERMS AND CONDITIONS FOR FRANCE ONLY

The following terms and conditions are applicable to products sold in France only:

The seller shall deliver goods that are complying with the contract and shall be responsible for defects existing upon delivery. The seller shall also be responsible for defects resulting from packaging, assembling instructions or the installation when it is its responsibility per the contract or if accomplished under its responsibility. To be compliant with the contract, the good shall:

1. Be fit for normal use for goods similar thereto and, if applicable:
   - Correspond to the description provided by the seller and have the qualities presented to the buyer though sample or model;
   - Have the qualities that a buyer may legitimately expect considering the public declarations of the seller, the manufacturer of its representative, including in advertising or labeling; or
2. Have the characteristics mutually agreed upon as between the parties or be fit for the specific use intended by the buyer and brought to the attention of the seller and which accepted.

The action for failure to comply is prescribed after two years after delivery of the goods. The seller is responsible for the warranty for hidden defects of the goods sold if such hidden defects are rendering the good unfit for the intended use, or if they diminish its use in such a way that the buyer would not have acquired the good or would have given a lesser price, had he known. The action for such hidden defects shall be taken by the buyer within 2 years of the discovery of the defect.

MAINTENANCE RECORDS

Send photocopy of maintenance record to BRP if needed.

Pre-delivery	
Serial number: _____ Mileage / km: _____ Hours: _____ Date: _____ Dealer no: _____ Notes: _____	Signature/Print:
Refer to vehicle Pre-Delivery Bulletin for detailed installation procedures	

FIRST inspection	
Mileage / km: _____ Hours: _____ Date: _____ Dealer no: _____ Notes: _____	Signature/Print:
For maintenance schedule refer to Maintenance Information section of this operator's guide	

Service	
Mileage / km: _____ Hours: _____ Date: _____ Dealer no: _____ Notes: _____	Signature/Print:
For maintenance schedule refer to Maintenance Information section of this operator's guide	

Service	
Mileage / km:	Signature/Print:
Hours:	
Date:	
Dealer no:	
Notes:	
For maintenance schedule refer to Maintenance Information section of this operator's guide	

Service	
Mileage / km:	Signature/Print:
Hours:	
Date:	
Dealer no:	
Notes:	
For maintenance schedule refer to Maintenance Information section of this operator's guide	

Service	
Mileage / km:	Signature/Print:
Hours:	
Date:	
Dealer no:	
Notes:	
For maintenance schedule refer to Maintenance Information section of this operator's guide	

Service	
Mileage / km: _____ Hours: _____ Date: _____ Dealer no: _____ Notes: _____	Signature/Print:
For maintenance schedule refer to Maintenance Information section of this operator's guide	

Service	
Mileage / km: _____ Hours: _____ Date: _____ Dealer no: _____ Notes: _____	Signature/Print:
For maintenance schedule refer to Maintenance Information section of this operator's guide	

Service	
Mileage / km: _____ Hours: _____ Date: _____ Dealer no: _____ Notes: _____	Signature/Print:
For maintenance schedule refer to Maintenance Information section of this operator's guide	

Service	
Mileage / km:	Signature/Print:
Hours:	
Date:	
Dealer no:	
Notes:	
For maintenance schedule refer to Maintenance Information section of this operator's guide	

Service	
Mileage / km:	Signature/Print:
Hours:	
Date:	
Dealer no:	
Notes:	
For maintenance schedule refer to Maintenance Information section of this operator's guide	

Service	
Mileage / km:	Signature/Print:
Hours:	
Date:	
Dealer no:	
Notes:	
For maintenance schedule refer to Maintenance Information section of this operator's guide	

Service	
Mileage / km: _____ Hours: _____ Date: _____ Dealer no: _____ Notes: _____	Signature/Print:
For maintenance schedule refer to Maintenance Information section of this operator's guide	

Service	
Mileage / km: _____ Hours: _____ Date: _____ Dealer no: _____ Notes: _____	Signature/Print:
For maintenance schedule refer to Maintenance Information section of this operator's guide	

Service	
Mileage / km: _____ Hours: _____ Date: _____ Dealer no: _____ Notes: _____	Signature/Print:
For maintenance schedule refer to Maintenance Information section of this operator's guide	

CUSTOMER INFORMATION

PRIVACY INFORMATION

The protection of your personal information is a priority for BRP. Our data privacy practices are described in our Privacy Policy, which you can review at any time. https://brp.com/en/privacy-policy.html

BRP wishes to inform you that, for your safety, your personal information can be used for security and warranty related purposes. Furthermore, BRP and its affiliates may use your personal information to distribute marketing and promotional information about BRP and related products. We do this with your consent (where required by applicable law) or in accordance with any other applicable legal basis.

To exercise your rights provided under data privacy laws, such as your right to access or correct your data, or to be removed from the addressee-list for direct marketing, please contact BRP.

CHANGE OF ADDRESS AND OWNERSHIP

If your address has changed or if you are the new owner of the vehicle, be sure to notify BRP.

In case of change of ownership, please join a proof that the former owner agreed to the transfer.

Notifying BRP, even after the expiration of the limited warranty, is very important as it enables BRP to reach the vehicle owner if necessary, like when safety recalls are initiated. It is the owner's responsibility to notify BRP.

STOLEN UNITS: If your personal vehicle is stolen, you should notify BRP or an authorized Can-Am dealer. We will ask you to provide your name, address, phone number, the vehicle identification number and the date it was stolen.

CHANGE OF ADDRESS ❑ CHANGE OF OWNERSHIP ❑

VEHICLE IDENTIFICATION NUMBER

Model Number Vehicle Identification Number (V.I.N.)

OLD ADDRESS OR PREVIOUS OWNER:

NAME

NO. STREET APT

CITY STATE/PROVINCE ZIP/POSTAL CODE

COUNTRY TELEPHONE

NEW ADDRESS OR NEW OWNER:

NAME

NO. STREET APT

CITY STATE/PROVINCE ZIP/POSTAL CODE

COUNTRY TELEPHONE

E-MAIL ADDRESS

CHANGE OF ADDRESS ❑ CHANGE OF OWNERSHIP ❑

VEHICLE IDENTIFICATION NUMBER

Model Number Vehicle Identification Number (V.I.N.)

OLD ADDRESS OR PREVIOUS OWNER:

NAME

NO. STREET APT

CITY STATE/PROVINCE ZIP/POSTAL CODE

COUNTRY TELEPHONE

NEW ADDRESS OR NEW OWNER:

NAME

NO. STREET APT

CITY STATE/PROVINCE ZIP/POSTAL CODE

COUNTRY TELEPHONE

E-MAIL ADDRESS

This page is intentionally blank

CHANGE OF ADDRESS ❑ CHANGE OF OWNERSHIP ❑

VEHICLE IDENTIFICATION NUMBER

Model Number Vehicle Identification Number (V.I.N.)

OLD ADDRESS OR PREVIOUS OWNER:

NAME

NO. STREET APT

CITY STATE/PROVINCE ZIP/POSTAL CODE

COUNTRY TELEPHONE

NEW ADDRESS OR NEW OWNER:

NAME

NO. STREET APT

CITY STATE/PROVINCE ZIP/POSTAL CODE

COUNTRY TELEPHONE

E-MAIL ADDRESS

CHANGE OF ADDRESS ❑ CHANGE OF OWNERSHIP ❑

VEHICLE IDENTIFICATION NUMBER

Model Number Vehicle Identification Number (V.I.N.)

OLD ADDRESS OR PREVIOUS OWNER:

NAME

NO. STREET APT

CITY STATE/PROVINCE ZIP/POSTAL CODE

COUNTRY TELEPHONE

NEW ADDRESS OR NEW OWNER:

NAME

NO. STREET APT

CITY STATE/PROVINCE ZIP/POSTAL CODE

COUNTRY TELEPHONE

E-MAIL ADDRESS

This page is intentionally blank

NOTE:

NOTE:

NOTE:

NOTE:

NOTE:

NOTE:

Model No. _____

VEHICLE
IDENTIFICATION NUMBER (V.I.N.) _____

ENGINE
IDENTIFICATION NUMBER (E.I.N.) _____

Owner: _____
NAME

_____
No. STREET APT

_____
CITY STATE/PROVINCE ZIP/POSTAL CODE

Purchase Date _____ | _____ | _____ | _____ | _____
YEAR MONTH DAY

Warranty Expiry Date _____ | _____ | _____ | _____ | _____
YEAR MONTH DAY

To be completed by the dealer at the time of the sale.

DEALER IMPRINT AREA

⚠ WARNING

TO REDUCE RISK OF SERIOUS INJURY OR DEATH,

- Read this operator's guide and safety labels
- Watch the safety video.

BE PREPARED

- Fasten seat belts and make sure nets and/or doors are securely latched in place.
- Wear an approved helmet and protective gear.
- Each rider must be able to sit with back against seat, foot flat on the floor or on footrest, and hands on steering wheel or handholds. Stay completely inside the vehicle.

DRIVE RESPONSIBLY

- Avoid loss of control and rollovers.
- Avoid abrupt maneuvers, sideways sliding, skidding or fishtailing and never do donuts.
- Avoid hard acceleration when turning, even from a stop.
- Slow down before entering a turn.
- Plan for hills, rough terrain, ruts and other changes in traction and terrain.
- Avoid paved surfaces.
- Avoid side hilling (riding across slopes).

BE QUALIFIED AND RESPONSIBLE

- Do not allow careless or reckless driving.
- Driver must be at least 16 years old with a valid driver's license.
- Do not operate after using drugs or alcohol.
- Do not allow operation on public roads (unless designated for off-highway vehicle access) – collisions with cars and trucks can occur.
- Do not exceed vehicle seating capacity.

www.brp.com

219002237

can-am

Defender MAX Series (excluding European Union and United Kingdom)
Traxter MAX Series

OPERATOR'S GUIDE

Includes Safety, Vehicle and Maintenance Information

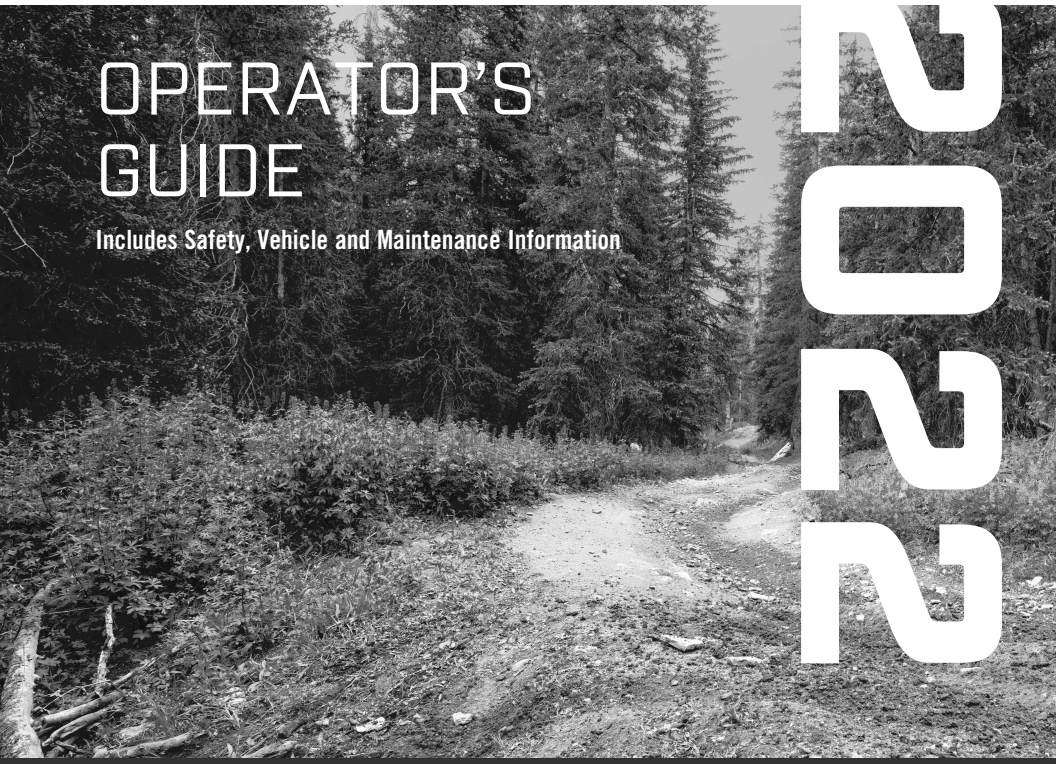

2022

⚠ WARNING

Read this operator's guide thoroughly. It contains important safety information.
Minimum recommended operator age: 16 or older with a valid driver's license. Keep this operator's guide with the vehicle at all times.
The removal or modification of evaporative emission-related parts on this OHRV is illegal. Violators may be subject to civil and/or criminal penalties under California and federal law.

219002234

Original Instructions

⚠ WARNING

YOUR VEHICLE CAN BE HAZARDOUS TO OPERATE. A collision or roll-over can occur quickly, if you fail to take proper precautions, even during routine maneuvers such as turning and driving on hills or over obstacles. For your safety, understand and follow all the warnings contained in this operator's guide and on the labels on your vehicle. Failure to follow these warnings can result in SEVERE INJURY OR DEATH.
Keep this operator's guide with the vehicle at all times.

⚠ WARNING

Disregarding any of the safety precautions and instructions contained in the operator's guide, SAFETY VIDEO and on-product safety labels could cause injury including the possibility of death.

⚠ WARNING

This vehicle may exceed the performance of other vehicles you may have ridden in the past. Take time to familiarize yourself with your new vehicle.

CALIFORNIA PROPOSITION 65 WARNING

⚠ WARNING

Operating, servicing and maintaining an off-road vehicle can expose you to chemicals including engine exhaust, carbon monoxide, phthalates, and lead, which are known to the State of California to cause cancer and birth defects or other reproductive harm. To minimize exposure, avoid breathing exhaust, do not idle the engine except as necessary, service your vehicle in a well-ventilated area and wear gloves or wash your hands frequently when servicing your vehicle. For more information go to www.p65warnings.ca.gov/products/passenger-vehicle.

™® Trademarks of BRP or its affiliates.
This is a non-exhaustive list of trademarks that are the property of Bombardier Recreational Products Inc. or its affiliates:

Can-Am®	D.E.S.S.™	DPS™
ROTAX®	TTI™	XPS™

Deutsch	Dieses Handbuch ist möglicherweise in Ihrer Landessprache verfügbar. Bitte wenden Sie sich an Ihren Händler oder besuchen Sie: **www.operatorsguides.brp.com**
English	This guide may be available in your language. Check with your dealer or go to: **www.operatorsguides.brp.com**
Español	Es posible que este manual esté disponible en su idioma. Consulte a su distribuidor o visite: **www.operatorsguides.brp.com**
Français	Ce guide peut être disponible dans votre langue. Vérifier avec votre concessionnaire ou aller à: **www.operatorsguides.brp.com**
Italiano	Questa guida potrebbe essere disponibile nella propria lingua. Contattare il concessionario o consultare: **www.operatorsguides.brp.com**
中文	本手册可能有您的语种的翻译版本。请向经销商问询，或者登录 **www.operatorsguides.brp.com** 查询。
日本語	このガイドは、言語によって翻訳版が用意されています。. ディーラーに問い合わせるか、次のアドレスでご確認ください： **www.operatorsguides.brp.com**
Nederlands	Deze handleiding kan beschikbaar zijn in uw taal. Vraag het aan uw dealer of ga naar: **www.operatorsguides.brp.com**
Norsk	Denne boken kan finnes tilgjengelig på ditt eget språk. Kontakt din forhandler eller gå til: **www.operatorsguides.brp.com**
Português	Este manual pode estar disponível em seu idioma. Fale com sua concessionária ou visite o site: **www.operatorsguides.brp.com**
Русский	Воспользуйтесь руководством на вашем языке. Узнайте о его наличии у дилера или на странице по адресу **www.operatorsguides.brp.com**
Suomi	Käyttöohjekirja voi olla saatavissa omalla kielelläsi. Tarkista jälleenmyyjältä tai käy osoitteessa: **www.operatorsguides.brp.com**
Svenska	Denna bok kan finnas tillgänglig på ditt språk. Kontakta din återförsäljare eller gå till: **www.operatorsguides.brp.com**

Covered Models
Defender MAX HD7
Defender MAX HD9 Defender MAX DPS HD9 Defender MAX XT HD9
Defender MAX DPS HD10 Defender MAX Limited HD10 Defender MAX Lone Star HD10 Defender MAX Lone Star CAB HD10 Defender MAX XT HD10
Traxter MAX DPS HD9

In Canada, products are distributed and serviced by Bombardier Recreational Products Inc. (BRP).

In the USA, products are distributed and serviced by BRP US Inc.

In the European Economic Area (which is comprised of the member states of the European Union plus the United Kingdom, Norway, Iceland and Liechtenstein), the Commonwealth of the Independent States (including Ukraine and Turkmenistan) and Turkey, products are distributed and serviced by BRP European Distribution S.A. and other affiliates or subsidiaries of BRP.

For all other countries, products are distributed and serviced by Bombardier Recreational Products Inc. (BRP) or its affiliates.

TABLE OF CONTENTS

GENERAL INFORMATION

GENERAL INFORMATION 10
Know Before you Go 10
Safety Messages 10
About this Operator's Guide 10

SAFETY INFORMATION

GENERAL PRECAUTIONS 14
Avoid Carbon Monoxide Poisoning 14
Avoid Gasoline Fires and Other Hazards 14
Avoid Burns from Hot Parts 14
Accessories and Modifications 14
SAFE OPERATION - RESPONSIBILITIES 16
Owner - Be Responsible 16
Operator - Be Qualified and Responsible 16
Riding Carefully 17
Occupant Restraint System 18
Terrain Condition 18
PRE-RIDE INSPECTION 19
Pre-Ride Inspection Check List 19
PREPARE TO RIDE 22
Before you Ride 22
Riding Gear 22
AVOID ACCIDENTS 25
Avoid Rollovers and Tipovers 25
Avoid Collisions 26
RIDING YOUR VEHICLE 27
Practice Exercises 27
Off-Road Operation 28
General Riding Techniques 28
MOVING LOADS AND DOING WORK 34
Working with Your Vehicle 34
Carrying Loads 34
Hauling a Load 37
Pulling a Trailer 38
IMPORTANT ON-PRODUCT LABELS (CANADA/UNITED STATES) 39
Safety Hang Tag 39
Safety Labels 40
Molded Safety Pictogram 54
Compliance HangTag 55
IMPORTANT ON-PRODUCT LABELS (ALL COUNTRIES EXCEPT CANADA/UNITED STATES) 56
Safety Pictogram 56
Molded Safety Pictogram 68

REPORTING SAFETY DEFECTS **69**

VEHICLE INFORMATION

PRIMARY CONTROLS **72**
Steering Wheel 73
Accelerator Pedal 73
Brake Pedal 73
Shift Lever 73
SECONDARY CONTROLS **75**
Ignition Switch and Keys 77
2WD/4WD Switch 78
Rear Differential Lock Switch 78
Keypad 79
Climate Controls 79
Horn Switch (On applicable models) 79
Winch Switch 80
Headlight Dimmer Switch 80
Power Window Switches 80
Wiper / Windshield Washer Switch 81
Audio ON/OFF Switch 81
EQUIPMENT **82**
Tilt Steering 82
Cup Holders 82
Passengers Handhold 83
Storage Compartments 83
Tool Kit 85
Footrests 85
Side Nets 85
Shoulder Guards 86
Seat Belts 86
Driver's Seat 87
Passenger Seats 87
Fuel Reservoir Cap 87
Winch 88
Cargo Box 88
Cargo Box Tilt 88
Anchoring Hooks 89
Tailgate 89
Trailer Hitch 89
12-Volt Power Outlets 90
USB Power Outlet 90
Rock Sliders 90
Front Bumper 90
Brake Holding Mechanism 90
Full Doors With Electric Windows 91
Windshield with Wiper 92
Climate Control System 93
Rear Deflector 96
Audio System 96
4.5” DIGITAL DISPLAY **100**
Multifunction Display 100

Warning Lamps and Indicators 101
Settings 102
7.6" DIGITAL DISPLAY (KEYPAD) 104
Basic Functions 104
Settings 106
FUEL 108
Fuel Requirements 108
Vehicle Fueling Procedure 108
BREAK-IN PERIOD 110
Operation During Break-In 110
BASIC PROCEDURES 111
Starting the Engine 111
Operating the Shift Lever 111
Choosing the Correct Range (Low or High) 111
Stopping the Engine and Parking the Vehicle 112
Tips for Maximizing Drive Belt Durability 112
SPECIAL PROCEDURES 113
Fuel Flooded Engine 113
What to do if Water is Suspected to be in the CVT 113
What to do if Battery is Drained Out 113
What to Do if Vehicle Rolled Over 113
What to do if Vehicle is Submerged 114
TUNE YOUR RIDE 115
Suspension Adjustment 115
DPS Function (If equipped) 115
TRANSPORTING THE VEHICLE 116
Using Vehicle Power to Climb Onto Trailering Equipment 117
Using a Winch to Pull Vehicle Onto Trailering Equipment 117
Securing Vehicle for Transport 118
Getting Vehicle Out of Trailer 118
LIFTING AND SUPPORTING THE VEHICLE 119
Front of Vehicle 119
Rear of Vehicle 119

MAINTENANCE

MAINTENANCE SCHEDULE 122
EPA Regulation - Canadian and USA Vehicles 122
Air Filter Maintenance Guideline 122
Severe Duty Use 123
Deep Mud / Water Use 124
Maintenance Schedule 124
MAINTENANCE PROCEDURES 132
Engine Air Filter 132
CVT Air Filter 133
Evaporative Emission System Pre-Filter (If Equipped) 134
Engine Oil 134
Oil Filter 137
Radiator 139
Engine Coolant 140
Heating/Air Conditioning Air Filter (if equipped) 142
Air Conditioning Compressor Belt 144

Muffler and Spark Arrester 144
Gearbox 145
Front Differential 148
Rear Final Drive (Mono Cylinder Models Only) 149
CVT Cover 150
Drive Belt 151
Drive and Driven Pulleys 153
Spark Plugs 153
Battery 154
Fuses and Fusible Links 154
Lights 157
Drive Shaft Bellow and Protector 158
Wheel Bearing 158
Wheels and Tires 158
Suspensions 160
Brakes 161
Seat Belts 161
Doors 162
Cage 162
VEHICLE CARE 164
Post-Operation Care 164
Vehicle Cleaning and Protection 164
STORAGE AND PRESEASON PREPARATION 165

TECHNICAL INFORMATION

VEHICLE IDENTIFICATION 168
Vehicle Identification Number 168
Engine Identification Number (EIN) 168
Technical Information Hang Tag 169
Technical Information Label 170
Compliance Label 171
EVAPORATIVE EMISSION CONTROL SYSTEM 172
NOISE EMISSION CONTROL SYSTEM REGULATION 173
NOISE EMISSION AND VIBRATION VALUES (MACHINERY DIRECTIVE 2006/42/EC COMPLIANCE MODELS) 174
EU - DECLARATION OF CONFORMITY 175
UK – DECLARATION OF CONFORMITY 176
EAC DECLARATION OF CONFORMITY 177

TECHNICAL SPECIFICATIONS

TECHNICAL SPECIFICATIONS 180

TROUBLESHOOTING

TROUBLESHOOTING GUIDELINES 194
CVT Belt Is Slipping 194
“–” Is Displayed On the Gearbox Position Display 194
Engine Does Not Turn 194
Engine Turns Over But Fails To Start 194

Engine Lacks Acceleration or Power 195
Engine Overheats 196
Engine Misfire 196
The RPM Increases But the Vehicle Does Not Move 196
Partial or No Response From the Accelerator Pedal - Check Engine Is ON and PPS Fault Message Is Displayed 197
AUDIO SYSTEM – TROUBLESHOOTINGA 198
Unit Does Not Turn On 198
System Will Not Power On 198
Amps Not Turning On 198
No Audio Will Play 198
No Sound or Low Sound from a Specific Zone or All Zones 198
Speakers Are Malfunctioning 198
Volume Knob Malfunctioning 198
DIGITAL DISPLAY MESSAGES 199

WARRANTY

BRP LIMITED WARRANTY USA AND CANADA: 2022 CAN-AM® SSV .. 202
1) SCOPE OF THE LIMITED WARRANTY 202
2) LIMITATIONS OF LIABILITY 202
3) EXCLUSIONS – ARE NOT WARRANTED 202
4) Warranty Coverage Period 203
5) CONDITIONS TO HAVE WARRANTY COVERAGE 203
6) WHAT TO DO TO OBTAIN WARRANTY COVERAGE 204
7) WHAT BRP WILL DO 204
8) ADDITIONAL SUPPLIER WARRANTIES 204
9) TRANSFER 204
10) CONSUMER ASSISTANCE 204
US EPA EMISSION - RELATED WARRANTY 205
Emission-Related Warranty Period 205
Components Covered 205
Limited Applicability 206
CALIFORNIA EVAPORATIVE EMISSIONS CONTROL WARRANTY STATEMENT 208
Your Warranty Rights And Obligations 209
OHRV Manufacturer's Warranty Coverage 209
Owner's Warranty Responsibilities 210
BRP INTERNATIONAL LIMITED WARRANTY: 2022 CAN-AM® SSV 211
1) SCOPE OF THE LIMITED WARRANTY 211
2) LIMITATIONS OF LIABILITY 211
3) EXCLUSIONS ARE NOT WARRANTED 211
4) Warranty Coverage Period 212
5) CONDITIONS TO HAVE WARRANTY COVERAGE 213
6) WHAT TO DO TO OBTAIN WARRANTY COVERAGE 214
7) WHAT BRP WILL DO 214
8) TRANSFER 214
9) CONSUMER ASSISTANCE 214
BRP LIMITED WARRANTY FOR THE EUROPEAN ECONOMIC AREA, THE COMMONWEALTH OF THE INDEPENDENT STATES AND TURKEY: 2022 CAN-AM® SSV 215
1) SCOPE OF THE LIMITED WARRANTY 215

2) LIMITATIONS OF LIABILITY 215
3) EXCLUSIONS – ARE NOT WARRANTED 216
4) WARRANTY COVERAGE PERIOD 216
5) CONDITIONS TO HAVE WARRANTY COVERAGE 217
6) WHAT TO DO TO OBTAIN WARRANTY COVERAGE 217
7) WHAT BRP WILL DO 217
8) TRANSFER 218
9) CONSUMER ASSISTANCE 218
MAINTENANCE RECORDS 220

CUSTOMER INFORMATION

PRIVACY INFORMATION 226
CONTACT US 227
CHANGE OF ADDRESS AND OWNERSHIP 228

GENERAL INFORMATION

GENERAL INFORMATION

Congratulations on your purchase of a new Can-Am® side-by-side vehicle. It's backed by the BRP limited warranty and a network of authorized Can-Am Off-road dealers ready to provide the parts, accessories or service you may require.

At delivery, you were informed of the warranty coverage and signed the Pre-delivery Check List to ensure your new vehicle was prepared to your entire satisfaction.

Your dealer is committed to your satisfaction. If you need more information, please ask your dealer.

Know Before you Go

To learn how to reduce the risk of accident for you or bystanders, read this Operator's Guide before you operate the vehicle.

Also, read all safety labels on your vehicle and watch the *Safety Video* located at:

https://can-am. brp. com/off road/ safety

Or use the following QR code.

This vehicle is for off-road use only. It is mainly for general recreational use but it may also be used for utility purposes.

Failure to follow the warnings contained in this Operator's Guide can result in SERIOUS INJURY or DEATH.

Safety Messages

The types of safety messages, what they look like and how they are used in this guide are explained as follows:

The safety alert symbol ⚠ indicates a potential injury hazard.

⚠ WARNING
Indicates a potential hazard which, if not avoided, could result in serious injury or death.

⚠ CAUTION
Indicates a hazardous situation which, if not avoided, could result in minor or moderate injury.

NOTICE
Indicates an instruction which, if not followed, could result in severely damaged vehicle components or other property.

About this Operator’s Guide

This Operator's Guide has been prepared to acquaint the owner/operator of a new vehicle with the various vehicle controls, maintenance and safe operating instructions. It is indispensable for the proper use of the product.

Keep this Operator's Guide in the vehicle as you can refer to it for things such as maintenance, troubleshooting and instructing others.

Note that this guide is available in several languages. In the event of any discrepancy, the English version shall prevail.

If you want to view and/or print an extra copy of your Operator's Guide, simply visit the following website:

www.operatorsguides.brp.com

The information contained in this document is correct at the time of

publication. BRP, however, maintains a policy of continuous improvement of its products without imposing upon itself any obligation to install them on products previously manufactured. Due to late changes, some differences between the manufactured product and the descriptions and/or specifications in this guide may occur. BRP reserves the right at any time to discontinue or change specifications, designs, features, models or equipment without incurring any obligation upon itself.

This Operator's Guide should remain with the vehicle when it is sold.

This page is intentionally blank

SAFETY INFORMATION

GENERAL PRECAUTIONS

Avoid Carbon Monoxide Poisoning

All engine exhaust contains carbon monoxide, a deadly gas. Breathing carbon monoxide can cause headaches, dizziness, drowsiness, nausea, confusion and eventually death.

Carbon monoxide is a colorless, odorless, tasteless gas that may be present even if you do not see or smell any engine exhaust. Deadly levels of carbon monoxide can collect rapidly, and you can quickly be overcome and unable to save yourself. Also, deadly levels of carbon monoxide can linger for hours or days in enclosed or poorly ventilated areas. If you experience any symptoms of carbon monoxide poisoning, leave the area immediately, get fresh air and seek medical treatment.

To prevent serious injury or death from carbon monoxide:

– Never run the vehicle in poorly ventilated or partially enclosed areas such as garages, carports or barns. Even if you try to ventilate engine exhaust with fans or open windows and doors, carbon monoxide can rapidly reach dangerous levels.
– Never run the vehicle outdoors where engine exhaust can be drawn into a building through openings such as windows and doors.

Avoid Gasoline Fires and Other Hazards

Gasoline is extremely flammable and highly explosive. Fuel vapors can spread and be ignited by a spark or flame many feet away from the engine. To reduce the risk of fire or explosion, follow these instructions:

– Use only an approved gasoline container to store fuel.
– Never fill the gasoline container in the vehicle cargo box or on the vehicle - an electrical static discharge may ignite the fuel.
– Strictly adhere to instructions in *Vehicle fueling procedure*.
– Never start or operate the engine if the fuel cap is not properly installed.

Gasoline is poisonous and can cause injury or death.

– Never siphon gasoline by mouth.
– If you swallow gasoline, get any in your eye(s), or inhale gasoline vapor, see a doctor immediately.

If gasoline spills on you, wash with soap and water and change your clothes.

Avoid Burns from Hot Parts

Certain components like brake rotors and exhaust components become hot during operation. Avoid contact with those parts during and shortly after operation to avoid burn wounds.

Accessories and Modifications

Any modifications or addition of accessories approved by BRP may affect the handling of your vehicle. It is important to take the time to get familiar with the vehicle once modifications are made to understand how to adapt your driving behavior accordingly.

Avoid installing equipment not specifically approved by BRP for the vehicle and avoid unauthorized modifications. These modifications and equipment have not been tested by BRP and may create hazards. For example, they could:

– Create a loss of control and increase risk of crash
– Cause overheating or short circuits increasing the risk of fire or burn injuries
– Affect the protection features provided by the vehicle.

Your vehicle may also become illegal to ride.

As an example, installing an additional GPS or cell phone support may prevent the driving capabilities of the vehicle and increase the risk of a loss of control.

Ask your authorized BRP dealer for suitable available accessories for your vehicle.

SAFE OPERATION - RESPONSIBILITIES

This is a high performance off-road vehicle. Operators must be responsible and use care to avoid rollovers, tipovers, collisions, and other accidents. Even with vehicle safety features (such as protective structure, seat belts, side nets, doors) and protective gear (such as a helmet), there is always a risk of injury or death in these accidents. To reduce the risk of serious injury or death, follow the rules in this section.

Owner - Be Responsible

Read this Operator's Guide and watch the *Safety Video*. Refer to the link at the beginning of the Operator's Guide.

Always inspect and confirm the safe operating condition of your vehicle prior to ride. Always follow the maintenance schedule described in this Operator's Guide.

Never allow anyone to operate your vehicle unless they are responsible and can be trusted with a high performance vehicle. Consider supervising new or young operators and setting rules and limits (e.g., whether they can carry passengers, what they may do with the vehicle, where they may ride, etc.) for anyone using your vehicle.

If equipped with optional D.E.S.S. keys, select the appropriate key (see *Ignition Switch and Keys*) based on the operator's experience, vehicle use and environment.

Discuss the safety information with anyone who will be using the vehicle. Be sure that all operators and passengers meet the qualifications below and agree to follow the safety information. Help users become familiar with the vehicle.

We encourage you to have an Annual Safety Inspection of your vehicle. Please contact an authorized BRP dealer for further details. Though not required, it is recommended that an authorized BRP dealer performs the preseason preparation of your vehicle. Each visit to your authorized BRP dealer is a great opportunity for your dealer to verify if your vehicle is included in any safety campaign. We also urge you to visit your authorized BRP dealer in a timely manner if you become aware of any safety related campaigns.

See an authorized BRP dealer for available accessories you may require.

Operator - Be Qualified and Responsible

Read this Operator's Guide and watch the *SAFETY video*. Refer to the link at the beginning of the Operator's Guide.

Become completely familiar with the operational controls and the general operation of the vehicle.

Take a training course if available (contact an authorized Can-Am dealer to find out about training course availability as well as on the internet at http://www.rohva.org/), and perform the practice exercises in *Practice Exercises* section. Practice driving in a suitable area free of hazards and feel the response of each control. Drive at low speeds. Higher speeds require greater experience, knowledge and suitable riding conditions.

Be at least 16 years of age.

Be tall enough to be properly seated: back against the backrest with the seat belt fastened, to hold the steering wheel with both hands and still be able to reach the full stroke of brake and accelerator pedals with the right foot and to firmly plant left foot on the footrest.

Have a proper driver's license in accordance with local laws.

Never use this vehicle with drugs or alcohol, or if tired or ill. These slow reaction time and impair judgment.

Carrying Passengers

Only carry a maximum of five (5) passengers. The passengers must be properly seated in the cockpit.

The passengers must be tall enough to always be properly seated: back against the backrest with seat belt fastened, holding the handhold, and feet firmly planted - for the front RH passenger, with right foot on the footrest and the left foot on the vehicle floor, for the central passenger and the three rear passengers, with both feet firmly planted on the floor.

Never carry passengers who have used drugs or alcohol, or are tired or ill. These slow reaction time and impair judgment.

Instruct the passengers to read the vehicle’s safety labels.

Never carry passengers if you judge their ability or judgement insufficient to concentrate on the terrain conditions and adapt accordingly. More specifically for side-by-side vehicles, the passenger must also pay constant attention to the terrain ahead and be able to brace for bumps.

Riding Carefully

- This vehicle handles differently from other vehicles. A collision or rollover can occur quickly, during abrupt maneuvers such as doing sharp turns, acceleration or deceleration and driving on hills or over obstacles, if you fail to take proper precautions.
- Never operate at excessive speeds. Always go at a speed that is proper for the terrain, visibility, and operating conditions, and your experience.
- Never attempt jumps, side slides, donuts or any other stunts.
- Never attempt rapid acceleration or deceleration when performing a sharp turn. This may result in a roll over.
- Never attempt skidding or sliding. If vehicle starts to skid or slide, counter steer in the direction of skidding or sliding. On extremely slippery surfaces, such as ice, go slowly and be very cautious in order to reduce the chance of skidding out of control.
- Always be sure there are no obstacles or people behind the vehicle when you operate in reverse. Pay attention to blind spots. When it is safe to proceed in reverse, go slowly.
- Never exceed the stated load limits for this vehicle. Cargo must be properly secured. Reduce speed, allow for greater braking distance and follow other instructions in *Moving Loads and Doing Work*.
- Always remember that this vehicle is heavy! Its pure weight alone may entrap you should it tip or rollover.

Occupant Restraint System

– This vehicle is designed to carry one driver and up to five (5) passengers, all wearing proper protective gears (refer to *Riding Gear* in this section).
– All occupants must latch the doors or the side nets and wear the seat belts at all times when riding.

Terrain Condition

– This vehicle is not designed to ride on paved surfaces; if you must shortly use the vehicle on such surfaces, avoid abrupt inputs to steering wheel, accelerator and brake pedals.
– Always go slowly and be extra careful when operating on unfamiliar terrain. Always be alert to changing terrain conditions when operating this vehicle. Take the time to learn how the vehicle performs in different environments.
– Never operate on excessively rough, slippery or loose terrain until you have learned and practiced the skills necessary to control this vehicle on such terrain. Always be especially cautious on these kinds of terrain.
– Never operate this vehicle on hills too steep for the vehicle or your abilities. Practice on small inclines.
– Always follow proper procedures for climbing or going down hills as described in *Riding Your Vehicle*. Check the terrain carefully before you start up or down any hill. Never climb or descend hills with excessively slippery or loose surfaces. Never go over the top of any hill at high speed.
– Never attempt steep hills or side hilling when pulling a trailer.
– Always check for obstacles before operating in a new area. Always follow proper procedures when operating over obstacles as described in *Riding Your Vehicle*.
– Never operate this vehicle in fast flowing water or in water deeper than specified in *Riding Your Vehicle*. Remember that wet brakes may have reduced stopping ability. Test your brakes after leaving water. If necessary, apply them several times to let friction dry out the brakes.
– Always ensure to properly park the vehicle on the flattest terrain section available. Put shift lever in PARK, stop engine and remove key before leaving the vehicle.
– If parking on a slope is inevitable, Placing a large rock or similar object behind a wheel to block it from moving is recommended.
– Never assume that the vehicle will go everywhere safely. Sudden changes in terrain caused by holes, depressions, banks, softer or harder “ground” or other irregularities may cause the vehicle to topple or become unstable. To avoid this, slow down and always observe the terrain ahead. If the vehicle does begin to topple or rollover, the best advice is to immediately steer in the direction of the rollover! Never attempt to prevent a rollover with your arms or legs. You should keep your limbs inside the cage or ROPS (rollover protective structure).

PRE-RIDE INSPECTION

Always inspect and confirm the safe operating condition of your vehicle prior to ride.

Always follow the maintenance schedule described in this Operator's Guide.

⚠ WARNING
Perform a pre-ride inspection before each ride to detect any potential problem that could occur during operation. The pre-ride inspection can help you monitor component wear and deterioration before they become a problem. Correct any problem that you discover to reduce the risk of a breakdown or crash.

Before using this vehicle, the operator should always perform the following pre--ride inspection check list.

Refer to *Maintenance Procedures* for details.

Pre-Ride Inspection Check List

What to Do Before Starting the Engine (Key OFF)

Items to Be Inspected	Inspection to Perform	✓
Tires	Check tire pressure and condition. Refer to *Technical Specifications* and adjust according to load.	
Wheels	Check wheels for damage and for abnormal play. Make sure that lug nuts are tightened. Refer to *Wheels and Tires* in *Maintenance Procedures* for torque specification.	
Cargo and load	**Cargo Load:** If you transport a cargo, respect the maximum loading capacity. Refer to *Loading the Cargo Box*. Ensure cargo is properly secured to the rear cargo box. **Vehicle Load:** Ensure that total load on the vehicle (including operator, passengers, cargo, tongue weight and added accessories) does not exceed specifications. Refer to *Carrying Loads*.	
Rear cargo box	Check if the cargo box is properly latched.	
	Check if tailgate is properly latched.	
Radiator	Check cleanliness of the radiator.	
Front grille	Inspect front grille for cleanliness.	
Engine oil	Check engine oil level.	
Coolant	Check coolant level.	

Items to Be Inspected	Inspection to Perform	✓
Brake fluid	Check brake fluid level.	
Engine air filter	Inspect the engine air filter, clean or replace if needed (service more often when riding in dusty conditions).	
CVT air filter	Inspect and clean the CVT air filter (when riding in dusty conditions).	
Drive shaft bellows	Check drive shaft bellows and protectors condition.	
Chassis and suspension	Check underneath vehicle for any debris on chassis or suspension and clean them properly.	
Brake holding mechanism (If equipped)	Apply brake holding mechanism and check if it operates properly.	
Heater air filters (if equipped)	Inspect heater air filters, clean if needed (service more often when riding in dusty conditions).	
Hitch	If you are pulling a trailer or another equipment: – Check hitch and trailer ball condition. – Respect the tongue capacity and towing capacity as indicated on the label affixed to the hitch or refer to *Technical speccifications*. – Ensure trailer is properly secured to hitch.	

What to Do Before Starting the Engine (Key ON)

Items to Be Inspected	Inspection to Perform	✓
Gauge	Check operation of indicator lamps in gauge (during first few seconds of key ON).	
	Check for messages in gauge.	
Lights	Check operation and cleanliness of headlights and taillights.	
	Check operation of high and low beam.	
	Check operation of brake lights.	
Accelerator pedal	Press on the accelerator pedal a few times to ensure it operates freely and it returns to the rest position when released.	

Items to Be Inspected	Inspection to Perform	✓
Brake pedal	Press down on the brake pedal and make sure you feel firm resistance and that it fully returns to position when released.	
Fuel level	Check the fuel level.	
Seats, side nets and seat belts	Check if seats are properly latched.	
	Check side nets for any damage. Have the nets replaced if any damage is found. Fasten both side nets and confirm that they latch securely. Use the adjustment strap to tighten the net as required.	
	Check seat belts for any damage. Fasten seat belts and confirm that they latch securely.	
Mirror(s)	Adjust mirror(s) to your preferences.	
Horn	Check horn operation.	
Heater fan (if equipped)	Check operation of heater fan. Check air flows out of every louver (dash-mounted and heater-mounted).	

What to Do After the Engine is Started

Items to Be Inspected	Inspection to Perform	✓
Steering	Check if steering wheel operates freely by completely turning it from side to side.	
Ignition switch	Turn the ignition switch to OFF to verify if engine will shut down. Restart engine.	
Shift lever	Check operation of shift lever (P, R, N, H and L).	
2WD/4WD selector	Check operation of 2WD/4WD selector.	
Brakes	Drive forward slowly a few feet and apply brakes. The brake pedal must feel firm when applied. The pedal must return to rest position when released. The brakes must respond adequately to the driver's input.	
Winch (if equipped)	Check operation of winch.	

PREPARE TO RIDE

Before you Ride

Perform pre-ride inspection to confirm the safe operating condition of your vehicle. Refer to *Pre-Ride Inspection*.

Driver and passengers must:

– Be properly seated.
– Latch nets or doors.
– Fasten seat belt.
– Wear appropriate riding gear. Refer to *Riding Gear*.

Riding Gear

It is important that the operator and passengers always wears appropriate protective clothing and apparel, including:

– An approved helmet
– Eye protection
– Boots
– Gloves
– A long sleeved shirt or jacket
– Long pants.

Depending on conditions, anti-fogging goggles may be required.

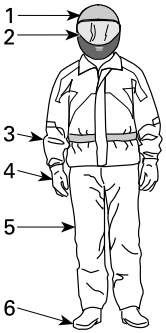

RIDING GEAR

1. *Approved helmet*
2. *Eye and face protection*
3. *Long sleeves shirt or jacket*
4. *Gloves*
5. *Long pants*
6. *Boots (over-the-ankle footwear)*

Weather conditions should help you decide how to dress. To maximize comfort and avoid frostbites in winter, dress for the coldest weather expected. Thermal underwear next to the skin also provides good insulation.

Never wear any loose clothing that may get entangled in the vehicle or on tree branches and shrubs.

Helmets and Eye Protection

Helmets protect the head and brain from injury. Even with the vehicle's cage and side nets, objects can enter the cockpit and strike the head, or the head can strike the cage itself or objects outside the vehicle. Even the best helmet is no guarantee against injury, but statistics indicate that helmet use significantly reduces the risk of brain injury. So, be safe and always wear a helmet while riding.

Choosing a Helmet

Helmets should be manufactured to meet the appropriate standard in your state, province or country and should fit properly.

A helmet with face protection is a better choice as it protects also against frontal impacts. It can also protect against debris, stones, insects, the elements, etc.

An open-face helmet does not offer the same protection for the face and chin. If you wear an open-face helmet, you should use a snap-on face shield and/or a pair of goggles. Ordinary glasses or sunglasses are not sufficient eye protection for riders. They can shatter or fly off, and they allow wind and airborne objects to reach the eyes.

For winter riding conditions, a stocking type cap, balaclava and face mask should always be carried or worn.

Use tinted face shields or goggles in the daytime only; do not use them at night or in poor illumination. Do not use them if they impair your ability to discern color.

Other Riding Gear

Footwear

Always wear closed toe footwear. Sturdy over-the-ankle boots with non-slip soles offer more protection and allow you to plant your foot properly on footrest.

Avoid long shoelaces that can be tangled in the accelerator or brake pedals.

For winter riding conditions, rubber soled boots with either a nylon or leather uppers, with removable felt liners are best suited.

Avoid rubber boots. Rubber boots may get trapped behind or between pedals, impairing the proper operation of brake and accelerator pedals.

Gloves

Full-fingered gloves protect hands from the wind, sun, heat, cold and flying objects. Gloves that fit snugly will improve grip on the steering wheel and help reduce hand fatigue. Sturdy, reinforced motorcycle or ATV gloves help protect hands better in the event of an accident or a rollover. If gloves are too bulky, it may be difficult to operate the controls.

For winter riding conditions, hands should be protected by a pair of snowmobile gloves which have sufficient insulation and allow use of thumbs and fingers for operation of controls.

Jackets, Pants and Riding Suits

Wear a jacket or a long sleeved shirt and long pants, or a full riding suit. Quality ATV-type protective gear will provide comfort, and it can help you avoid being

distracted by adverse environmental elements. In case of a crash, good quality protective gear made of sturdy material may prevent or reduce injury.

In cool-weather riding, protect yourself against hypothermia. Hypothermia, a condition of low body temperature, can cause loss of concentration, slowed reactions and loss of smooth, precise muscle movement. In cool conditions, proper protective gear like a windproof jacket and insulated layers of clothing are essential. Even while riding at moderate temperatures, you can feel very cold due to the wind.

Protective gear that is appropriate for cold-weather riding may be too hot when stopped. Dress in layers so that clothing can be removed as desired. Topping the protective gear with a windproof outer layer can prevent cold air from reaching the skin.

Rain Gear

If you must ride in wet weather, a rain suit or a waterproof riding suit is recommended. On long rides, it is a good idea to carry rain gear. A dry rider will be much more comfortable and alert.

Hearing Protection

Long-term exposure to wind and engine noise when riding can cause permanent hearing loss. Properly worn hearing protective devices such as earplugs can help prevent hearing loss. Check local laws before using any hearing protective devices.

AVOID ACCIDENTS

Avoid Rollovers and Tipovers

Side-by-side vehicles handle differently from other vehicles. Side-by-side vehicles are designed to handle off-road terrain (for example, their wheel base and track width, ground clearance, suspension, drivetrain, tires, etc.), and, as a result, can overturn in situations where vehicles designed for use primarily on paved or smooth terrain may not.

A rollover or other accident can occur quickly during abrupt maneuvers such as sharp turns or hard acceleration or deceleration when turning, or when driving on hills or over obstacles. Abrupt maneuvers or aggressive driving can cause rollovers or loss of control even in flat open areas. If the vehicle rolls over, any part of your body (such as arms, legs, or head) outside of the cockpit can be crushed and trapped by the cage or ROPS or other parts of the vehicle. You can also be injured by impact with the ground, cockpit or other objects.

To reduce the risk of rollovers:

- Use care when turning.
  - Do not turn the steering wheel too far or too fast for your speed and environment. Adjust steering inputs according to your speed and environment.
  - Slow down before entering a turn. Avoid hard braking during a turn.
  - Avoid sudden or hard acceleration when turning, even from a stop or low speed.
- Never attempt donuts, skids, slides, fishtails, jumps, or other stunts. If vehicle starts to skid or slide, steer in the direction of the skid or slide. Never slam the brakes and lock the wheels.
- Avoid paved surfaces. This vehicle is not designed to operate on paved surfaces and is more likely to roll over. If you must drive on pavement, turn gradually, go slowly, and avoid abrupt acceleration and braking.

This vehicle can roll over sideways or tip over forward or backwards on slopes or uneven terrain.

- Avoid side hilling (driving along the slope rather than up or down a hill). When possible, drive straight up and down inclines rather than across them. If you must side hill, use extreme caution and avoid slippery surfaces, objects, or depressions. If you feel the vehicle start to rollover or slide sideways, steer downhill if possible.
- Avoid steep hills and follow procedures in this guide for climbing and descending hills.
- Sudden changes in terrain such as holes, depressions, banks, softer or harder ground or other irregularities may cause the vehicle to tip or become unstable. Observe the terrain ahead and slow down in areas of uneven terrain.

This vehicle will handle differently when carrying or pulling a load.

- Reduce speed and follow instructions in this manual for carrying cargo or pulling a trailer.
- Avoid hills and rough terrain.
- Allow more distance to stop.

Be Prepared in Case of Rollover

- Fasten side nets and fasten seat belt to help you avoid sticking out arms or legs.

– Never grab the cage or ROPS while riding. Hands can be crushed between the cage or ROPS and the ground in a rollover. Keep hands on the steering wheel or handholds.
– Never try to stop a rollover using your arms or legs. If you think that the vehicle may tip or roll, the driver should keep both hands on the steering wheel and the left foot firmly planted on the footrest. The passengers should keep both hands on the handhold and both feet firmly planted on the floor.

Avoid Collisions

This vehicle can reach high speeds. At higher speeds, there is an increased risk of losing control, particularly in challenging off-road conditions, and the risk of injury in a collision is greater. Never operate at excessive speeds. Always go at a speed that is proper for the terrain, visibility, and operating conditions, and your experience. Consider reserving use of the performance key for situations in which full speed and acceleration capability are appropriate.

Never operate this vehicle on any public street, road or highway, even dirt or gravel ones. Riding your vehicle on roads or highways could result in a collision with another vehicle. This vehicle is not designed for operation on roads. For example, it does not meet motor vehicle safety standards that apply to automobiles. In many jurisdictions it is not legal to operate this vehicle on public roads.

This vehicle does not have the same kind of protection for collisions as a car; for example, there are no air bags, the cockpit is not fully enclosed, and it is not designed for collisions with other vehicles. Therefore, it is particularly important to fasten seat belts and side nets and wear an approved helmet.

RIDING YOUR VEHICLE

Practice Exercises

Before you go out for a ride, it is very important to familiarize yourself with the handling of your vehicle by practicing in a controlled environment. If possible, it is also a very good idea to take a more formal training course to sharpen your skills and increase your knowledge of the vehicle.

Find a suitable area to practice and perform the following exercises. It should be at least 45 m150 ft by 45 m150 ft free of obstacles like trees and rocks. Once you've selected a suitable permitted location, proceed with the following exercises.

Turning Exercises

Turning is one of the most frequent causes of accidents. It is easier for the vehicle to lose traction or rollover if you turn too sharply, or go too fast. Slow down when you approach a turn.

- First learn how to perform slight right turns at very low speeds. Release the throttle before turning and slowly reapply the throttle when turning.
- Repeat turning exercise but this time maintain the throttle at the level while turning.
- Finally, repeat turning exercise while accelerating slowly.
- Practice exercises turning on the other side.

Note how your vehicle reacts in these different exercises. We recommend releasing the throttle before entering a turn to help initiate directional change. You will feel the lateral force increasing with the speed and with your steering input. The lateral force should be maintained as low as possible to make sure it does not cause the vehicle to roll over.

U Turn Exercises

Practice doing U turns.

- Accelerate slowly and while remaining at low speed, then gradually turn the steering wheel to the right until you have completed the U turn.
- Repeat U turn exercise with different steering inputs and always at a very low speed.
- Repeat U turn exercise on the other side.

As mentioned before in this guide, do not ride on paved surfaces as the vehicle behavior will not be the same, increasing the risk of rollover.

Braking Exercises

Practice braking to get familiar with the brake response.

- Do it at low speed first, then increase the speed.
- Practice braking in straight line at different speeds and different braking force.
- Practice emergency braking; optimal braking is obtained in straight line, with high force applied, without locking the wheels.

Remember, braking distance depends on vehicle speed, load and the type of surface. Also, the tires and brakes conditions play a major role.

Reverse Exercises

The next step involves using the reverse.

– Install 1 cone marker on both sides of the vehicle beside each rear wheel. Move the vehicle forward until you can see the cone markers, then stop the vehicle. Acknowledge the distance required to see obstacles behind you.
– Learn how the vehicle handles itself in reverse and reacts with steering inputs.
– Always perform this reverse exercise at slow speeds.

Emergency Engine Stopping Exercise

Learn how to stop your engine quickly in an emergency situation.

– While running at low speed, simply turn the key to the off position.

This is to familiarize you with the vehicle's reaction when the engine is turned off while driving and to develop this reflex.

It is also important to be able to stop and exit the vehicle quickly.

– Immobilize the vehicle.
– Detach the seat belt and the net to exit the vehicle.

Off-Road Operation

The very nature of off-road operation is dangerous. Any terrain, which has not been specially prepared to carry vehicles, presents an inherent danger where terrain substance, shape and steepness are unpredictable. The terrain itself presents a continual element of danger, which must be knowingly accepted by anyone venturing over it.

An operator who takes a vehicle off-road should always exercise the utmost care in selecting the safest path and keeping close watch on the terrain ahead of him. The vehicle should never be operated by anyone who is not completely familiar with the driving instructions applicable to the vehicle, nor should it be operated on steep or treacherous terrain.

General Riding Techniques

General Driving Tips

Care, caution, experience and driving skill are the best precautions against the hazards of vehicle operation.

Whenever there is the slightest doubt that the vehicle can safely negotiate an obstacle or a particular piece of terrain, always choose an alternate route.

In off-road operation, power and traction, not speed, are important. Never drive faster than visibility and your own ability to select a safe route permit. Always go slowly and be extra careful when operating on unfamiliar terrain. Always be alert to changing terrain conditions when operating this vehicle. Be especially cautious on excessively rough, slippery, icy or loose terrain.

Constantly watch the terrain ahead for sudden changes in slopes or obstacles, such as rocks or stumps, that may cause loss of stability, resulting in tip over or rollover.

Never operate the vehicle if the controls do not function normally. See an authorized Can-Am Off-road dealer.

To maintain proper control it is strongly advised that you keep your hands on the steering wheel and within easy reach of all controls. The same holds true for your feet. To minimize the possibility of any leg or foot injury, keep your left foot on the footrest and right foot on the floor at all times. Staying completely within the cockpit will also help keep you from striking objects outside the vehicle.

Watch for and avoid branches and other objects that could enter the passenger compartment and strike you or your passengers.

Operating in Reverse

When operating in reverse, check that the path behind the vehicle is free of people or obstacles. Pay attention to blind spots. When it is safe to proceed in reverse, go slowly and avoid sharp turns.

⚠ WARNING

Steering inputs in reverse operation increase the risk of rollover.

NOTE:
In reverse operation, the engine RPM is limited thus limiting the vehicle reverse speed.

⚠ WARNING

When driving downhill in reverse, gravity can increase the vehicle speed above safe reverse speed.

Crossing Roads

If you have to cross a road, ensure to have complete visibility on both sides for incoming traffic and decide on exit point on other side of road. Drive in a straight line toward that point. Do not make sharp direction changes or abrupt accelerations as it may result in a rollover situation. Do not travel on sidewalks or bicycle trails as they are designated specifically for those uses.

Riding on Paved Surfaces

Avoid paved surfaces. This vehicle is not designed to operate on paved surfaces and is more likely to roll over. If you must drive on pavement, turn gradually, go slowly, and avoid abrupt acceleration and braking.

Shallow Water Crossing

Water can be a unique hazard. If it is too deep the vehicle may “float” and topple. Check the water depth and current before you attempt to cross any water. Water depth should not exceed the center of the wheels for vehicle to safely cross the obstacle. Beware of slippery surfaces such as rocks, grass, logs, etc., both in the water and on its banks. A loss of traction may occur. Do not attempt to enter the water at high speed.

Water will affect the braking ability of your vehicle. Make sure you dry the brakes by applying them several times after the vehicle leaves the water.

Mud or marsh lands may be encountered near water. Be prepared for sudden “holes” or changes in depth. Similarly so, be watchful of hazards such as rocks, logs, etc., partially covered by vegetation.

Riding on Snow or Ice

When performing pre-ride inspection, pay special attention to locations on the vehicle where snow and/or ice accumulations may obstruct visibility of the tail lamp, clog ventilation openings, block the radiator and fan, and interfere with the movement of controls. Before starting with your vehicle, check the steering, accelerator and brake pedals for interference free operation.

Whenever this vehicle is ridden on a snow covered drive path, the tire grip is generally reduced causing the vehicle to react differently to control inputs from the operator. On low grip surfaces, the steering responses are not as crisp and precise, stopping distances are lengthened and acceleration is also affected. Slow down and do not "gun" the accelerator. This will only result in spinning of the tires and possibly in an over steering slide of the vehicle. Avoid hard braking. This will possibly result in a straight line slide of the vehicle. Again, the best advice is to safely reduce speed in anticipation of a maneuver to give yourself time and distance in order to keep control of the vehicle.

As you drive your vehicle over a loose snow covered surface, snow dust will be picked up in the wake turbulence of the moving vehicle and transported to contact and accumulate or melt on some exposed components including rotating parts like brake discs. Water, snow or ice may affect the response time of the brake system of your vehicle. Even when not required to reduce vehicle speed apply brakes frequently to prevent ice or snow accumulation and to dry brake pads and discs. While doing so in low risk driving situations you will test for grip level and keep yourself alerted to how the vehicle reacts to your control inputs. Always keep brake and accelerator pedals and floor boards free of snow and ice. Frequently wipe snow off seat, steering wheel, headlights and tail lamps.

The depth of the snow cover may hide rocks, tree stumps or other objects and if it is wet may totally impede the drivability as the vehicle becomes bogged down or completely looses traction in slushy snow. Look far ahead and always be watchful of any visible clues that might indicate the presence of such obstacles. In doubt steer clear. Avoid driving on any frozen waterways before checking that the ice will safely support the vehicle, its riders and its load of cargo.

At the end of each ride it is a good practice to clean the vehicle and all moving components (brakes, steering components, drivelines, controls, radiator fan etc.) from any snow or ice accumulations. Wet snow will turn to ice during the shut down period and become more difficult to remove at the next pre-ride inspection.

Riding on Sand

Sand and riding on sand dunes is another unique experience but there are some basic precautions that should be observed. Wet, deep or fine sand may create a loss of traction and cause the vehicle to slide, drop off or become “bogged” down. If this occurs look for a firmer base. Again, the best advice is to slow down and be watchful of the conditions.

When riding in sand dunes it is advisable to equip the vehicle with an antenna type safety flag. This will help make your location more visible to others over the next sand dune. Proceed carefully should you see another safety flag ahead.

Riding on Gravel, Loose Stones or Other Slippery Surfaces

Riding on loose stones or gravel is very similar to riding on ice. They will affect the steering of vehicle, possibly causing it to slide and tip over especially at high speeds. In addition, braking distance may be affected. Remember that “gunning” the throttle or sliding may cause loose stones to be ejected rearwards into the path of another rider's way. Never do it deliberately.

If you do get into a slide or skid, it may help to turn the steering wheel into the direction of the skid until you regain control. Never jam the brakes and lock the wheels.

Crossing Obstacles

Use the low range (L) for crossing obstacles.

Obstacles on the “trail” should be traversed with caution. This includes rocks, fallen trees, and depressions. You should avoid them whenever possible. Remember that some obstacles are too large or dangerous to cross and should be avoided. As a guideline, never attempt to cross an obstacle higher than the ground clearance of the vehicle. Small rocks or small fallen trees may be safely crossed - approach obstacle at low speed and as much as possible at a right angle. Adjust speed without losing momentum and do not accelerate abruptly. Passengers must grasp handhold firmly and brace feet on the floor. Hold steering firmly without closing your fists around it and proceed. Be aware that the obstacle may be slippery or may move while crossing.

Hill Driving Conditions

When driving on hills or slopes, two things are highly important: be prepared for slippery surfaces or terrain variations and obstacles and brace yourself properly inside vehicle. If you climb or descend a hill that is too slippery or has too loose a surface, you can lose control. If you go over the top of a hill at high speed, you may not have time to prepare for the terrain on the other side. Avoid parking on a slope. Always put the shift lever in PARK when stopped or parked, especially on an incline, to avoid rolling. If you must park on a steep incline, block the wheels using rocks or bricks.

Uphill Driving

Use the low range (L) for uphill driving.

Due to its configuration, this vehicle has very good traction even while climbing, so much so that tip over is possible before traction is lost. For example, it is common to encounter terrain situations where the top of the hill has eroded to a point that the hill peak rises very sharply. This vehicle is not designed to negotiate such a condition. Take an alternate route.

It is also wise to know the terrain condition on the other side of the hill or bank. All too often there exists a sharp drop-off that is impossible to negotiate or descend.

If you feel that the slope is getting too steep to climb, apply brakes to immobilize vehicle. Put shift lever in reverse (R), and back down the hill, barely releasing brakes to remain at low speed. Do not attempt to turn around. Never coast down hill while vehicle is in neutral. Do not perform hard braking as it increases the risk of tipover.

Downhill Driving

This vehicle can climb steeper slopes than it can descend safely. Therefore, it is essential to assure that a safe route exists to descend a slope before you climb it.

Decelerating while negotiating a slippery downhill slope could “toboggan” the vehicle, causing it to slide. Maintain steady speed and/or accelerate slightly to regain control. Never slam brakes and lock the wheels.

Side Hilling

Whenever possible, side hilling (driving across a slope rather than up or down it) should be avoided. If necessary, do so with extreme caution. Side hilling on steep inclines could result in rollover. In addition, slippery or unfirm surfaces could result in uncontrollable side sliding. Avoid all objects or depressions that will intensify the raising of one side of the vehicle higher than the other, thus causing rollover. If you feel the vehicle start to rollover or slide sideways, steer downhill if possible.

⚠ WARNING

Be careful when loading and transporting liquid reservoirs. They can affect vehicle stability when side hilling by pulling downhill and increasing the risk of a roll over.

Drop-Offs

This vehicle is not designed to negotiate drop-offs. It will “bottom-out” and usually stop if either the front or rear wheels are driven over a drop-off. If the drop is sharp or deep, the vehicle will nose dive and tip over.

Avoid negotiating drop-offs. Reverse and select an alternate route.

Recreational, Group and Distance Riding

Respect the rights and limitations of others. Stay away from areas designated for other types of off road use. This includes snowmobile trails, equestrian trails, cross country ski trails, mountain bike trails, etc. Never assume there are no other users on the trail. Always stay to the right of the trail and do not zig zag to one side of the trail then the other. Be prepared to stop or pull off to the side if another trail user appears in front of you.

Join a local side-by-side vehicle club. It will provide you with a map and advice or inform you where you can ride. If a club does not exist in your area, help to start one. Group riding and club activities provide a pleasurable, social experience. Never use this vehicle with drugs or alcohol, or tired or ill.

Always keep a safe distance from other riders. Your judgment of speed, terrain conditions, weather, mechanical condition of your vehicle and the “trust in

judgment" you have in others around you will help you make a better choice of appropriate safe distance. This vehicle, like any other motorized vehicle, cannot stop "on a dime".

Before you ride, tell someone where you are planning to travel and your expected time of return.

Depending on the length of your ride, carry additional tools or emergency equipment. Find out where you can get additional gasoline. Be prepared for the possible conditions you may encounter. An emergency first aid kit should always be a consideration.

Environment

One of the benefits of this vehicle is that it can take you off the beaten path away from most communities. However, you should always respect nature and the rights of others to enjoy it. Do not ride in environmentally sensitive areas. Do not drive over forest crops or shrubs, nor cut down trees or take down fencing, nor spin your wheels and destroy the terrain. "Tread Lightly".

This vehicle can cause OHV wildfires if debris builds up near the exhaust or other engine hot spots and ignites then falls off into dry grass. Avoid riding in wet areas, through muskeg or tall grass, where debris can build up. Should you ride in those areas, inspect and remove all debris from your engine and hot spots. Refer to *vehicle care* for details.

Chasing wildlife is in many areas illegal. Wildlife can die of exhaustion after being chased by a motorized vehicle. If you encounter animals on the trail, stop and observe quietly and with caution. It will be one of the better memories of your life.

Observe the rule "what you take in, carry out". Do not litter. Do not start campfires unless you have permission to do so, and then only away from dry areas. The hazards you may create on the trail may cause injury to others or yourself, even at a later date.

Respect farm lands. Always obtain the permission of the landowner before riding on private land. Respect crops, farm animals and property lines.

Finally, do not pollute streams, lakes or rivers and do not modify the engine or exhaust system, or remove any of its components as it will alter the vehicle emissions.

MOVING LOADS AND DOING WORK

Working with Your Vehicle

Your vehicle can help you perform a number of different LIGHT tasks ranging from snow removal to pulling wood or carrying cargo. A variety of accessories are available from your authorized Can-Am Off-road dealer. To prevent possible injury, follow the instructions and warnings that accompany the accessory. Always respect the load limits of the vehicle. Overloading the vehicle can overstress the components and cause failure. Avoid overexerting yourself if you lift or pull heavy loads or manually push the vehicle.

⚠ WARNING
Mounted machinery must be lowered on the ground before leaving the tractor.

Carrying Loads

Any load carried on the vehicle will affect the handling, stability and braking distance of the vehicle. Do not exceed the load limits of the vehicle, including the weight of operator, passengers, cargo, accessories and trailer tongue weight.

Always be aware that the “load” may slide or fall off and cause an accident.

Must use low gear if total payload is greater than 390 kg (860 lb).

Maximum Load Limit of the Vehicle		
Californian models	612 kg (1349 lb)	Includes occupants, cargo, tongue weight and added accessories
Limited models	590 kg (1300 lb)	
Lone Star models	785 kg (1730 lb)	
Models under the NRMM compliance	680 kg (1499 lb)	
All other models	794 kg (1750 lb)	

The following is an example of suitable total vehicle load distribution:

Example of suitable loads Models with a 794 kg (1750 lb) load limit, adjust according to your model load limit.				
Operator and Passengers	Cargo Box Load	Accessories	Tongue Weight	Total Vehicle Load
340 kg (750 lb)	346 kg (762 lb)	40 kg (88 lb)	68 kg (150 lb)	794 kg (1750 lb)

To reduce the risk to lose control or the load carried, follow these recommendations.

Vehicle Settings When Carrying Load

When carrying heavy loads or passengers readjust suspension accordingly.

When carrying heavy loads in cargo box or pulling a trailer operate with the shift lever in L (low range).

⚠ WARNING

Must use LOW GEAR if total payload is greater than 390 kg (860 lb).

Loading the Cargo Box

NOTICE

When loading or unloading, do not exceed the maximum cargo capacity on tailgate. Always close tailgate before operating to reduce the risk of loss of load.

Load cargo as low as possible – a higher load can raise the vehicle's center of gravity, which can reduce stability. Position cargo toward the front and center of the cargo box and as evenly distributed as possible.

Secure the load to the tie down hooks inside cargo box. Use only the tie down hooks on the bottom of the cargo box; do not secure cargo to the cage or other part of the vehicle. If it is not properly secured, a load may slide or fall off, possibly striking occupants or bystanders; or it may shift during riding, affecting the handling of the vehicle.

Objects that are higher than the walls of the cargo bed may affect visibility for the driver and may act as projectiles in case of an accident. Loads that protrude sideways can get snagged or caught in bush, branches or other obstacles. Avoid covering and obstructing the brake lights with the cargo. Ensure no cargo protrudes outside the box and that cargo will not interfere with your visibility or control of the vehicle.

Do not overload cargo box.

Close tailgate before operating.

⚠ WARNING

Never operate the vehicle with an open tailgate.

Model	Maximum Cargo Load		
Californian models	Cargo box	272 kg (600 lb)	Evenly distributed and safely secured. Loaded as low as possible to reduce height of center of gravity.
All other models		454 kg (1,000 lb)	
All models	Tailgate	113 kg (250 lb)	Only while loading cargo into cargo box. Never operate with tailgate open.

Operating While Carrying a Load

Reduce your speed when carrying cargo and turn gradually. Avoid hills and rough terrain. Allow more distance for braking. This vehicle may require additional stopping distance if carrying heavy loads, especially on inclined surfaces.

Tilting the Cargo Box

The cargo box can be tilted to ease unloading. Use release handles on either side of cargo box.

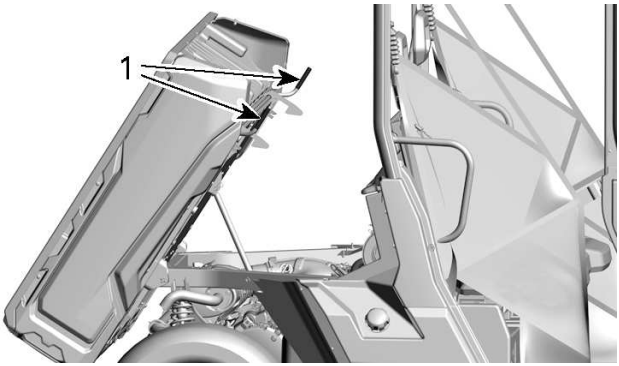

1. Release handles

NOTICE

Always turn off engine when tilting the cargo box.

⚠ WARNING

- **Always ensure no one is standing behind the cargo box before you actuate the release handle.**
- **The load weight may affect the operation of the cargo box tilting feature (tilting or lowering).**
- **Some accessories assembled on the cargo box may affect his behavior during the opening and closure. Always pay attention during this operation.**

Be very careful with the operation of the tailgate and the cargo box as the load may have moved during transport.

To lower the cargo box, simply push it down into place.

⚠ WARNING

- **Keep yourself and others clear of the cargo box and vehicle frame junction when lowering cargo box.**
- **Ensure to properly latch the cargo box and the tailgate before riding.**
- **Make sure you do not leave objects between lifted cargo box and vehicle frame to ensure proper latching of the cargo box when lowered.**

Hauling a Load

NOTICE

A BRP approved rear hitch must be properly installed on the vehicle for hauling trailers.

Never pull a load by attaching it to the cage or any other accessories; this can cause the vehicle to tip over. Use only the trailer hitch (if installed) or winch (if installed) to pull a load.

In an emergency situation, use the recovery hook to recover a stuck vehicle.

When pulling loads with a chain or cable, ensure that there is no slack before starting and maintain tension while pulling.

When pulling loads with a chain or cable, be sure to brake progressively. The inertia of the load could lead to an impact.

When hauling a load, respect the maximum hauling capacity. See *Pulling a Trailer* below.

⚠ WARNING

A slack in the chain or cable can cause it to break and snap back.

When pulling another vehicle, be sure that someone is controlling the pulled vehicle. They must brake and steer to prevent the vehicle from going out of control.

Before pulling loads with a winch, refer to the winch manufacturer’s instructions.

Reduce your speed when hauling a load and turn gradually. Avoid hills and rough terrain. Never attempt steep hills. Allow more distance for braking, especially on inclined surfaces and when a passenger is on board. Be careful not to skid or slide.

Pulling a Trailer

NOTICE

A BRP approved rear hitch must be properly installed on the vehicle for hauling trailers.

Riding this vehicle with a trailer substantially increases the risk of toppling, especially on inclined slopes. If a trailer is used behind the vehicle make sure that its hitch is compatible with the one on the vehicle. Make sure the trailer is horizontal with the vehicle. (In some instances a special extension may have to be installed on the vehicle hitch). Use security chains or cables to secure the trailer with the vehicle.

Reduce your speed when pulling a trailer and turn gradually. Avoid hills and rough terrain. Never attempt steep hills. Allow more distance for braking, especially on inclined surfaces and when a passenger is on board. Be careful not to skid or slide.

Improperly loading a trailer may cause loss of control.

Always make sure load is evenly distributed and safely secured on the trailer; an evenly balanced trailer is easier to control.

Always put the shift lever to L (low range) for hauling a trailer – in addition to providing more torque, operating in low range helps account for the increased load on the rear tires.

When stopped or parked, block the vehicle and trailer wheels from possible movement.

Use caution when disconnecting a loaded trailer; it or its load may topple on you or others.

When hauling a trailer, respect the maximum tongue weight and towing capacity indicated on the label affixed to the hitch.

Make sure there is at least some weight on the tongue.

IMPORTANT ON-PRODUCT LABELS (CANADA/ UNITED STATES)

Safety Hang Tag

This vehicle comes with a hang tag and labels containing important safety information.

Any person who rides this vehicle should read and understand this information before riding.

WARNING

THIS VEHICLE IS INTENDED FOR RECREATIONAL USE AND SECONDARY GENERAL UTILITY APPLICATIONS
NO OPERATOR UNDER AGE 16

TRAINING COURSES TO TEACH ROV DRIVING ARE AVAILABLE. FOR INFORMATION CONTACT YOUR DEALER.
Read the Operator's Guide and Safety Labels and Watch the Safety Video.
Follow All Instructions and Warnings.

CHECK WITH YOUR DEALER TO FIND OUT ABOUT STATE OR LOCAL LAWS REGARDING ROV OPERATION.

Improper Use of Off-Highway Vehicles Can Cause Severe Injury or Death

Be Prepared
- Fasten seat belts and make sure nets or doors are securely latched in place.
- Wear an approved helmet and protective gear.
- Each rider must be able to sit with back against seat, foot flat on the floor or on footrest, and hands on steering wheel or handholds. Stay completely inside the vehicle.

Drive Responsibly
Avoid loss of control and rollovers:
- Avoid abrupt maneuvers, sideways sliding, skidding or fishtailing, and never do donuts.
- Avoid hard acceleration when turning, even from a stop.
- Slow down before entering a turn.
- Plan for hills, rough terrain, ruts, and other changes in traction and terrain. Avoid paved surfaces.
- Avoid side hilling (riding across slopes).

Rollovers have caused severe injuries and death, even on flat, open areas.

Be Sure Riders Pay Attention and Plan Ahead
If you think or feel the vehicle may tip or roll, reduce your risk of injury :
- Keep a firm grip on the steering wheel or handholds and brace yourself.
- Do not put any part of your body outside of the vehicle for any reason.

Require Proper Use of Your Vehicle
– Do your part to prevent injuries:
- Do not allow careless or reckless driving.
- Make sure operators are 16 or older with a valid driver's license.
- Do not let people drive or ride after using alcohol or drugs.
- Do not allow operation on public roads (unless designated for off-highway vehicle access) – collisions with cars and trucks can occur.
- Do not exceed seating capacity: see information on back side of this card

DRIVER UNDER 16

THIS HANG TAG CAN'T BE REMOVED BEFORE SALE.

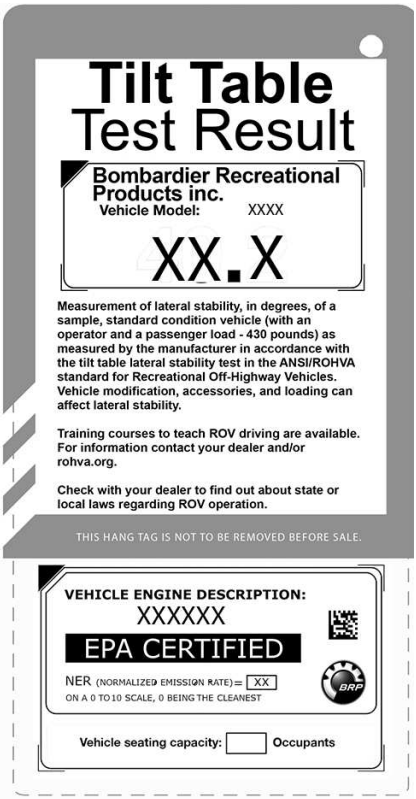

Tilt Table Test Result

Bombardier Recreational Products inc.
Vehicle Model: XXXX

XX.X

Measurement of lateral stability, in degrees, of a sample, standard condition vehicle (with an operator and a passenger load - 430 pounds) as measured by the manufacturer in accordance with the tilt table lateral stability test in the ANSI/ROHVA standard for Recreational Off-Highway Vehicles. Vehicle modification, accessories, and loading can affect lateral stability.

Training courses to teach ROV driving are available. For information contact your dealer and/or rohva.org.

Check with your dealer to find out about state or local laws regarding ROV operation.

THIS HANG TAG IS NOT TO BE REMOVED BEFORE SALE.

VEHICLE ENGINE DESCRIPTION:
XXXXXX

EPA CERTIFIED

NER (NORMALIZED EMISSION RATE) = XX
ON A 0 TO 10 SCALE, 0 BEING THE CLEANEST

BRP

Vehicle seating capacity: ☐ **Occupants**

Safety Labels

Read and understand all the safety labels on your vehicle.

These labels are affixed to the vehicle for the safety of the operator, passengers or bystanders.

The following labels are on your vehicle, and they should be considered permanent parts of the vehicle. They need to be clean and visible at all times. If missing or damaged, they need to be replaced. Safety labels are free of charge. See an authorized Can-Am Off-road dealer.

Upon replacement of parts that have warnings on them, make sure to order (free of charge) the applicable safety warnings if not already installed on the replacement part.

NOTE:
In the event of any discrepancy between this guide and the vehicle, the safety labels on the vehicle have precedence over the labels in this guide.

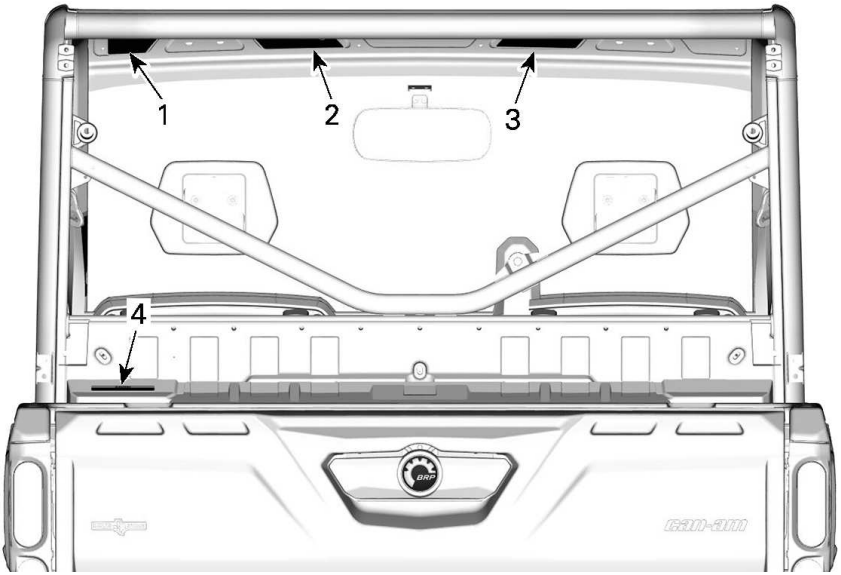

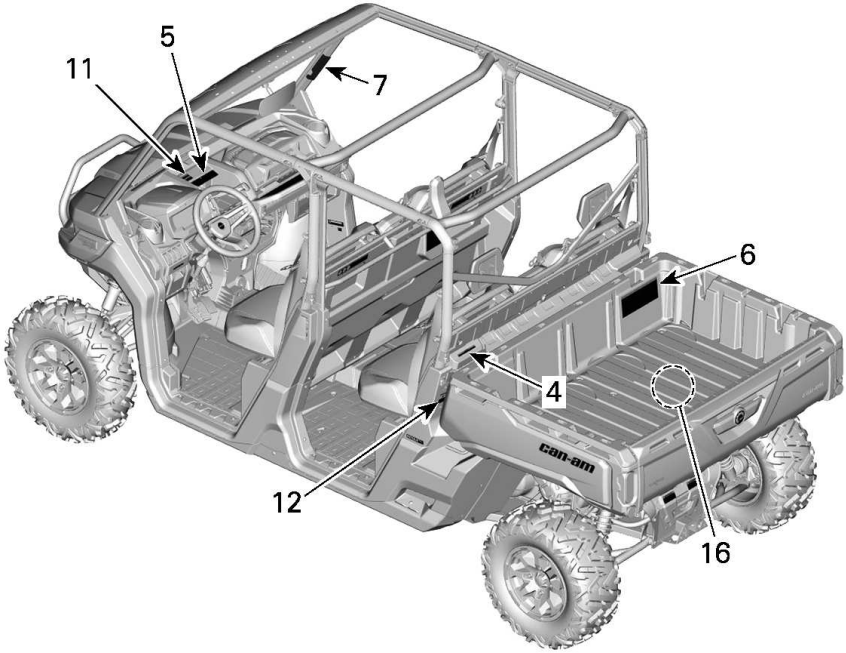
5
11
7
6
4
12
16

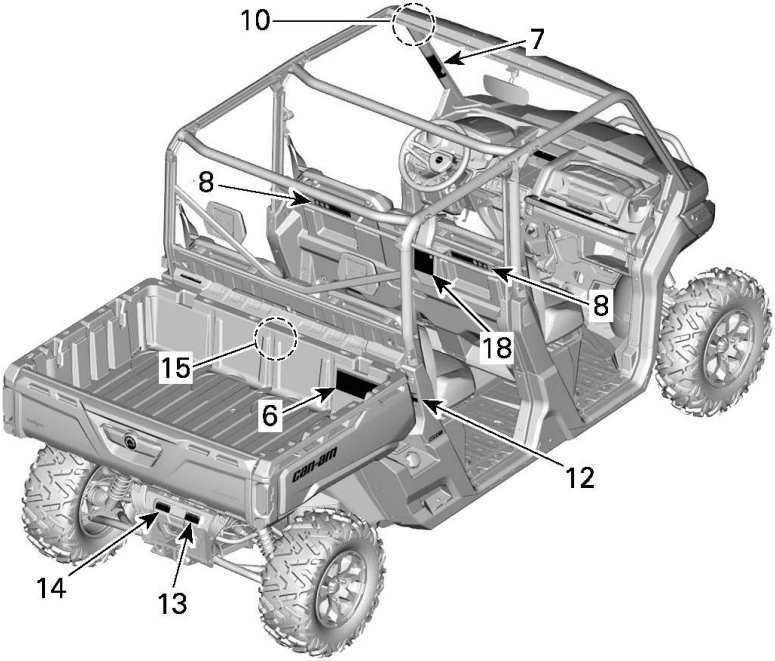
10
7
8
8
18
15
6
12
14
13

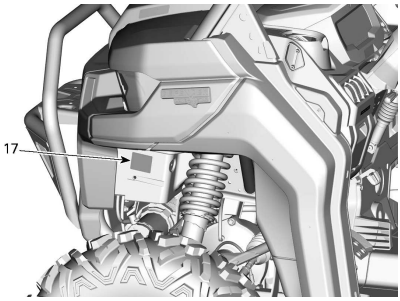

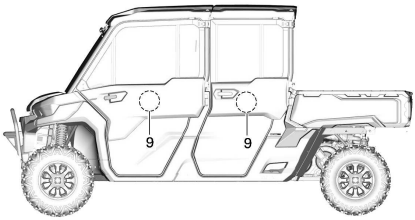

1. General warning
2. General operating warning
3. Passenger warning
4. Pulling a load using the cage
5. 2WD/4WD/Front Diff Lock selection
6. Tire pressure and maximum load
7. Rollover
8. Rear Passenger Rollover
9. Door warning
10. Vehicle transport and tow
11. Off-road usage
12. Cargo box pinch point
13. Pulling a trailer
14. Towing and tongue weight
15. Coolant hot
16. Exhaust
17. Winch installation
18. Rear Passenger Warning

General Operating Warning Label

Models Without CAB

Models With CAB

General Warning Label

Models Without CAB

Models With CAB

Passenger Warning Label

Models Without CAB

Models With CAB

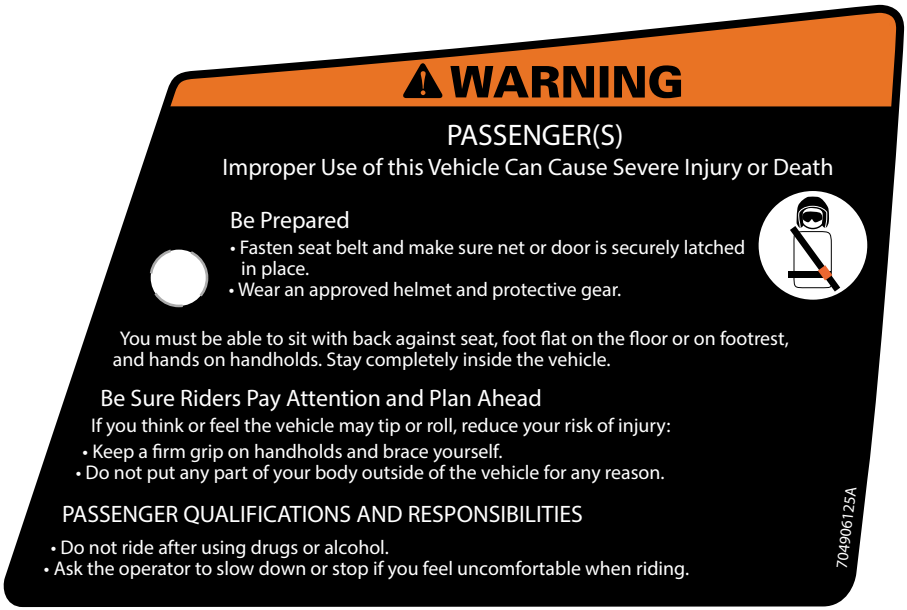

Rollover — Warning Labels

LH side	RH Side

Rear Passenger Rollover — Warning Labels

LH side

RH Side

2WD/4WD Selection — Warning Label

⚠ WARNING

P R N H L

Put the Shift Lever to PARK (P) before exiting vehicle.
The vehicle can roll if not in PARK.

Stop the vehicle and apply the Brake before using the Shift Lever, the 2WD/4WD Switch and the Rear Diff Lock Switch.

Must use Low Gear if total payload is greater than 390 kg (860 lb).

Total payload includes weight of operator, passenger, cargo, accessories and trailer tongue weight if applicable.

8126

Tire Pressure and Maximum Load — Warning Label

⚠ WARNING

NEVER carry passenger in cargo box or on gate.
NEVER place gasoline container inside cargo box when filling it. This can lead to an explosion.
NEVER exceed the vehicle load capacity (see table), including weight of operator, passenger, cargo, accessories and trailer tongue weight if applicable.
NEVER exceed REAR LOAD CAPACITY (Refer to label below), evenly distributed (including trailer tongue weight if applicable).
ALWAYS secure the load.

Improper tire pressure or overloading can cause loss of control. Loss of control can result in severe injury or death.
- An underinflated tire can come off the rim.

To reduce the risk of loss of control or loss of load:

When loading cargo:
- Position cargo towards front and center ans as low as possible.
- Latch tail gate.

When carrying a load:
- Reduce your speed and turn gradually.
- Avoid hills and rough terrain.
- Allow more distance to stop.

			3 OCCUPANTS		6 OCCUPANTS		
		PACKAGE	XMR	OTHERS	XMR	LONESTAR	OTHERS
		DOORS	NO	NO	NO	HALF	NO
	COLD TIRE PRESSURE	FRONT: kPa (psi)	97 (14)	97 (14)	152 (22)		
		REAR: kPa (psi)	179 (26)	124 (18)	165 (24)		
CALIFORNIA	MAX LOAD CAPACITY:	kg (lb)	545 (1200)		612 (1350)		
	MAXIMUM CARGO LOAD:	kg (lb)	272 (600)		272 (600)		
OTHERS	MAX LOAD CAPACITY:	kg (lb)	680 (1500)		739 (1630)	785 (1730)	794 (1750)
	MAXIMUM CARGO LOAD:	kg (lb)	454 (1000)		454 (1000)		

Refer to your Operator's Guide for more information about cargo box use.

8512

Pulling a Load Using the Cage – Warning Label

⚠ WARNING

NEVER attach to the cage to pull a load.This can cause the vehicle to tip over. Use only the trailer hitch to pull a load.

8188

Vehicle Transport and Tow– Warning Label

Door Warning Label - (Two windows doors)

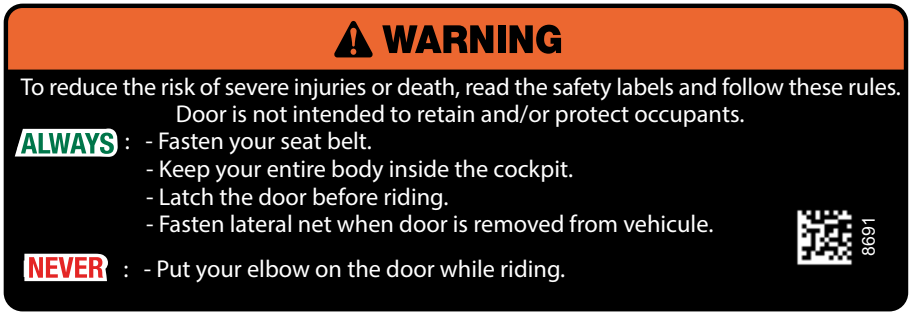

Door Warning Label - (Three windows doors)

⚠ WARNING

Do NOT put your arm outside of the vehicle, there is a risk of SEVERE INJURY.

LH Side	RH Side

Door Warning Label - (Half doors)

⚠ WARNING

Do NOT put your arm outside of the vehicle, there is a risk of SEVERE INJURY.

LH Side	RH Side

Rear Passenger – Warning Label

Off–Road Usage – Warning Label

Cargo Box Pinch Point - Warning Label

Towing and Tongue Weight - Warning Label

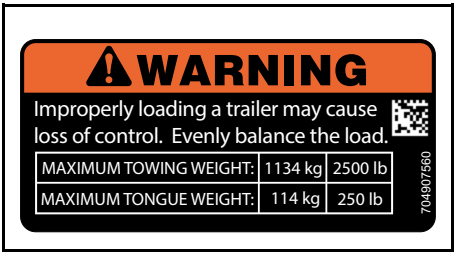

Pulling a Trailer – Warning Label

Winch Installation - Warning Label

⚠WARNING

Always use the battery post to ground the winch. Doing otherwise may induce an undesired power steering signal resulting in an unintended steering input. In certain circumstances, some unintended steering input could lead to a loss of vehicle control increasing the risk of a crash.

8273

Coolant Hot - Warning Label

⚠ WARNING

Do not open when HOT.

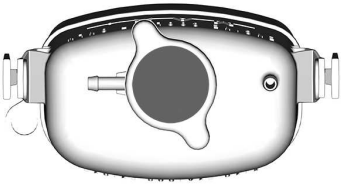

Exhaust — Hot Part Pictogram

⚠ CAUTION

Do not touch when hot.

Molded Safety Pictogram

Molded Tailgate Pictogram

⚠ WARNING

Never carry passengers in cargo box or on tailgate. Max weight on tailgate during loading is 113 kg (250 lb)

MAX

113 kg / 250 lb

Compliance HangTag

California Proposition 65 Warning - Hang Tag

Applicable for all models in Canada and United States of America or everywhere except Canada and United States of America when equivalent to a model certified to US EPA Standards.

⚠ **WARNING**. Operating, servicing and maintaining an off-road vehicle can expose you to chemicals including engine exhaust, carbon monoxide, phthalates, and lead, which are known to the State of California to cause cancer and birth defects or other reproductive harm.
To minimize exposure, avoid breathing exhaust, do not idle the engine except as necessary, service your vehicle in a well-ventilated area and wear gloves or wash your hands frequently when servicing your vehicle.

For more information go to www.P65Warnings.ca.gov/products/passenger-vehicle

704906872

IMPORTANT ON-PRODUCT LABELS (ALL COUNTRIES EXCEPT CANADA/UNITED STATES)

Safety Pictogram

Read and understand all the safety labels on your vehicle.

These labels are affixed to the vehicle for the safety of the operator, passengers or bystanders.

The following labels are on your vehicle, and they should be considered permanent parts of the vehicle. They need to be clean and visible at all times. If missing or damaged, they need to be replaced. Safety labels are free of charge. See an authorized Can-Am Off-road dealer.

Upon replacement of parts that have warnings on them, make sure to order (free of charge) the applicable safety warnings if not already installed on the replacement part.

NOTE:
In the event of any discrepancy between this guide and the vehicle, the safety labels on the vehicle have precedence over the labels in this guide.

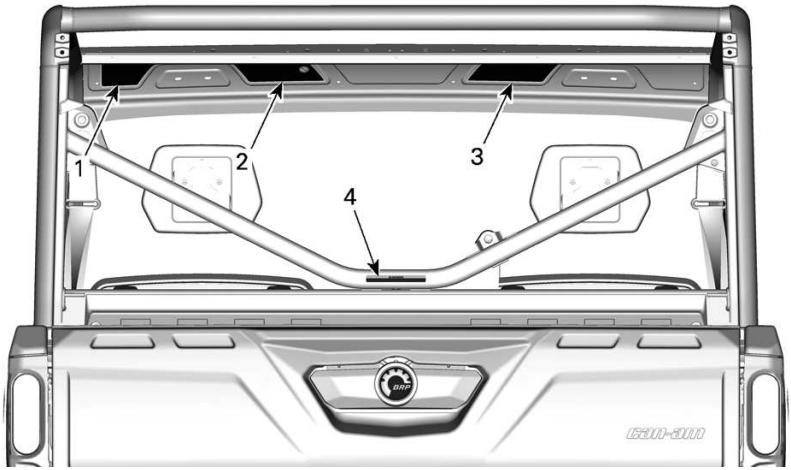

TYPICAL

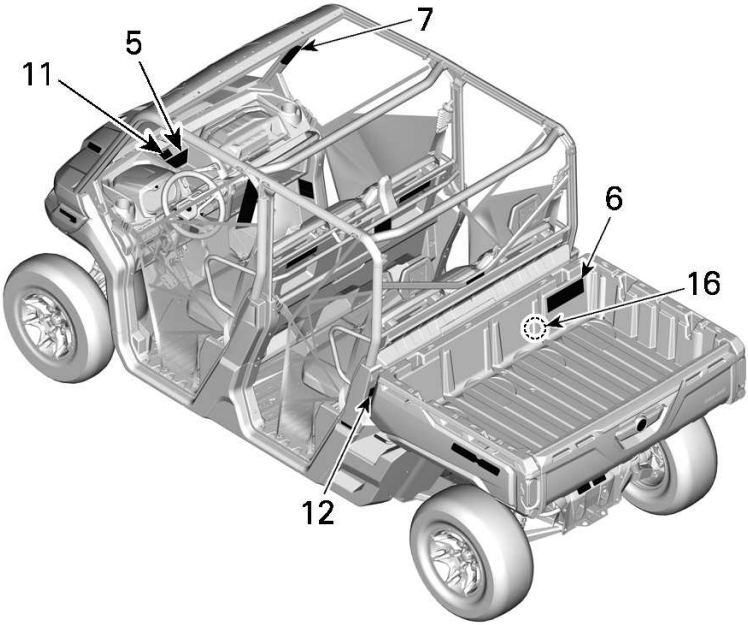

TYPICAL

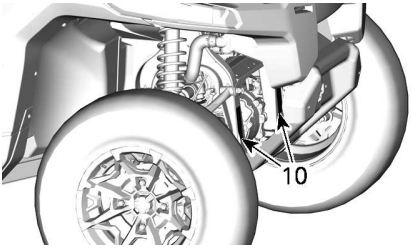

1. General warning
2. General operating warning
3. Passenger warning
4. Pulling a load using the cage
5. 2WD/4WD selection
6. Tire pressure and maximum load
7. Rollover
8. Rear Passenger Rollover
9. Rear Passenger Warning
10. Winch installation
11. Off-road usage
12. Cargo box pinch point
13. Pulling a trailer
14. Towing and tongue weight
15. Coolant hot
16. Exhaust

Operator Warning Label

⚠ WARNING

- **Read and understand all safety labels, locate and read operator's guide.**
- **Always wear an approved helmet and protective gear.**
- **Fasten seat belts and make sure net or door is securely latched in place.**
- **Always wear ear protection.**
- **Each rider must be able to sit with back against seat, feet flat on the floor or on footrest, and hands on steering wheel or handholds.**
- **If you think or feel the vehicle may tip or roll, reduce your risk of injury : Keep a firm grip on the steering wheel or handholds and brace yourself. Do not put any part of your body outside of the vehicle for any reason.**
- **Always stay completely inside the vehicle.**

General Operating Warning Label

⚠ WARNING

- **Make sure operators are 16 or older with a valid driver's license.**
- **Do not exceed seating capacity: 6 occupants.**
- **Do not let people drive or ride after using alcohol or drugs.**
- **Avoid loss of control and rollovers:**
  - **Avoid abrupt maneuvers, sideways sliding, skidding or fishtailing, and never do donuts.**
  - **Avoid hard acceleration when turning, even from a stop.**
  - **Slow down before entering a turn.**
  - **Plan for hills, rough terrain, ruts, and other changes in traction and terrain.**
  - **Avoid paved surfaces.**
  - **Avoid side hilling (riding across slopes).**
- **Rollovers have caused severe injuries and death, even on flat, open areas.**
- **Do not allow operation on public roads (unless designated for off--highway vehicle access) – collisions with cars and trucks can occur.**
- **Watch the safety video using the QR code link or visit Can-am web site before operation.**

Passenger Warning Pictogram

⚠ WARNING

- **Always wear an approved helmet and protective gear.**
- **Always wear ear protection.**
- **Fasten seat belts, and make sure net or door is securely latched in place.**
- **Each rider must be able to sit with back against seat, feet flat on the floor or on footrest, and hands on handholds.**
- **If you think or feel the vehicle may tip or roll, reduce your risk of injury:**
  - **Keep a firm grip on the steering wheel or handholds and brace yourself.**
  - **Do not put any part of your body outside of the vehicle for any reason.**
- **Always stay completely inside the vehicle.**
- **Do not let people drive or ride after using alcohol or drugs.**

Tire Pressure and Maximum Load – Warning Label

⚠ WARNING

- **Locate and read operator's guide. Improper tire pressure or overloading can cause loss of control, resulting in SEVERE INJURY or DEATH.**
- **Always maintain proper tire pressure as shown.**
- **NEVER exceed the vehicle load capacity, including weight of operator, passenger, cargo, accessories and trailer tongue weight if applicable.**
- **Do not overload cargo box.**
- **NEVER place gasoline container inside cargo box when filling it. This can lead to an explosion.**
- **NEVER carry passenger in cargo box or on tailgate.**

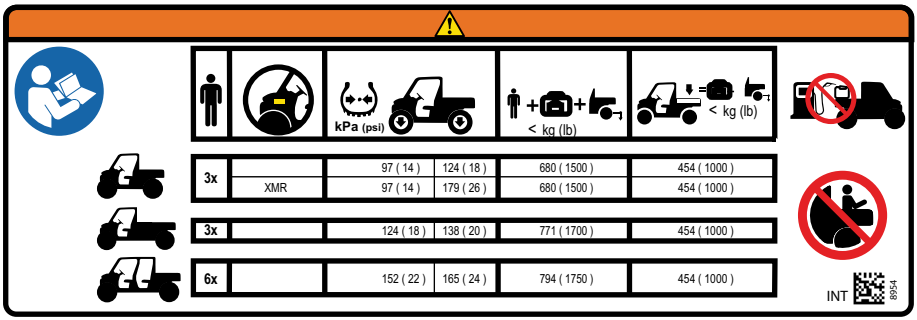

Rollover – Warning Labels

⚠ WARNING

- **Never try to stop a rollover using your arm or leg.**
- **Never hold the cage while riding.**
- **Fasten seat belts and make sure net or door is securely latched in place.**

LH side

RH Side

Rear Passenger Warning Pictogram

⚠ WARNING

- **Always wear an approved helmet and protective gear.**
- **Always wear ear protection.**
- **Fasten seat belts and nets.**
- **Each rider must be able to sit with back against seat, feet flat on the floor or on footrest, and hands on handholds.**
- **If you think or feel the vehicle may tip or roll, reduce your risk of injury:**
  - **Keep a firm grip on the steering wheel or handholds and brace yourself.**
  - **Do not put any part of your body outside of the vehicle for any reason.**
- **Always stay completely inside the vehicle.**
- **Do not let people drive or ride after using alcohol or drugs.**

2WD/4WD Selection – Warning Pictogram

⚠ WARNING

- **Stop the vehicle and apply the brake before using the shift lever and the 2WD/4WD switch.**
- **When the weight of occupant(s), cargo and tongue is above 390 kg (860 lb), set the shift lever to low gear range (L).**
- **Put the shift lever to PARK (P) before exiting vehicle. The vehicle can roll if not in PARK.**

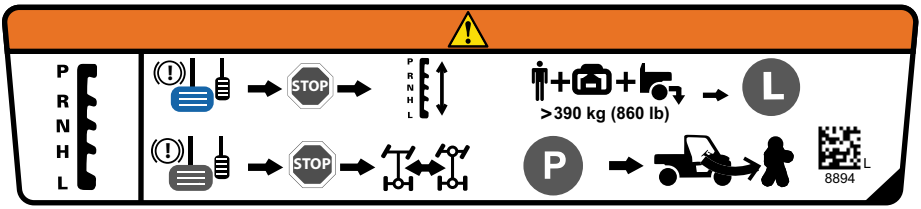

Towing and Tongue Weight - Warning Label

⚠ WARNING

- **MAXIMUM towing capacity: 1134 kg (2500 lb).**
- **MAXIMUM tongue weight: 114 kg (250 lb).**
- **When pulling a trailer, set the shift lever to low gear range (L).**
- **Reduce your speed and turn gradually.**
- **Avoid hills and rough terrain.**
- **Allow more distance to stop.**

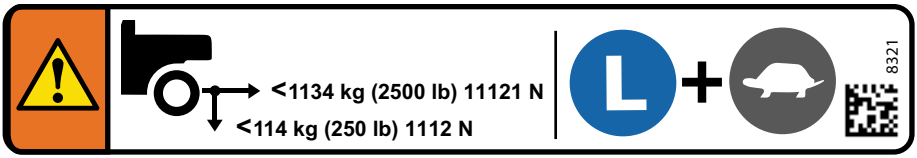

Cargo Box Pinch Point - Warning Label

⚠ WARNING

- **Pinch point. Keep clear when lowering cargo box.**

Pulling a Load Using the Cage – Warning Label

⚠ WARNING

- **NEVER attach to the cage to pull a load. This can cause the vehicle to tip over. Use only the trailer hitch or recovery hook to pull a load.**

Winch Installation - Warning Label

⚠ WARNING

- **Never use the frame near this location to ground any electrical component such as a winch.**
- **When in use, the electrical component may induce an undesired power steering signal resulting in an unintended steering input.**
- **In certain circumstances, some unintended steering input could lead to a loss of vehicle control increasing the risk of serious INJURY or DEATH.**

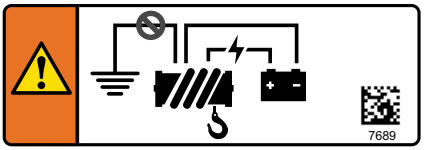

Coolant Hot - Warning Label

⚠ WARNING

Do not open when HOT.

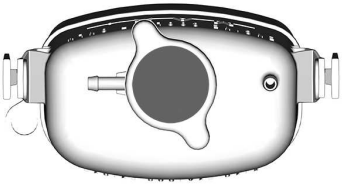

Cool Starting - Warning Label

This label is located in the front service compartment.

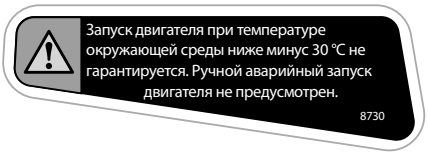

IN EURASIAN UNION ONLY

Exhaust – Hot Part Pictogram

⚠ CAUTION
Do not touch when hot.

Molded Safety Pictogram

Molded Tailgate Pictogram

⚠ WARNING

Never carry passengers in cargo box or on tailgate. Max weight on tailgate during loading is 113 kg (250 lb)

MAX

113 kg / 250 lb

REPORTING SAFETY DEFECTS

In Canada, if you believe that your vehicle has a defect which could cause a crash or could cause injury or death, you should immediately inform Transport Canada in addition to notifying Bombardier Recreational Products Inc.

If Transport Canada receives similar complaints, it may open an investigation, and if it finds that a safety defect exists in a group of vehicles, it may order a recall and remedy campaign. However, Transport Canada cannot become involved in any individual problems between you, your dealer or Bombardier Recreational Products Inc.

To contact Transport Canada:

819-994-3328 (Gatineau-Ottawa area or internationally)
Toll free : 1 800-333-0510 (in Canada)

Transport Canada - ASFAD
330 Sparks Street
Ottawa, ON
K1A 0N5

https://www.tc.gc.ca/recalls

This page is intentionally blank

VEHICLE INFORMATION

PRIMARY CONTROLS

It is important to know the location and operation of all controls, and to develop and practice smooth and coordinated use of them.

NOTE:
Some vehicle safety labels are not shown on illustrations. For information on vehicle safety labels, refer to *Important on-product labels*.

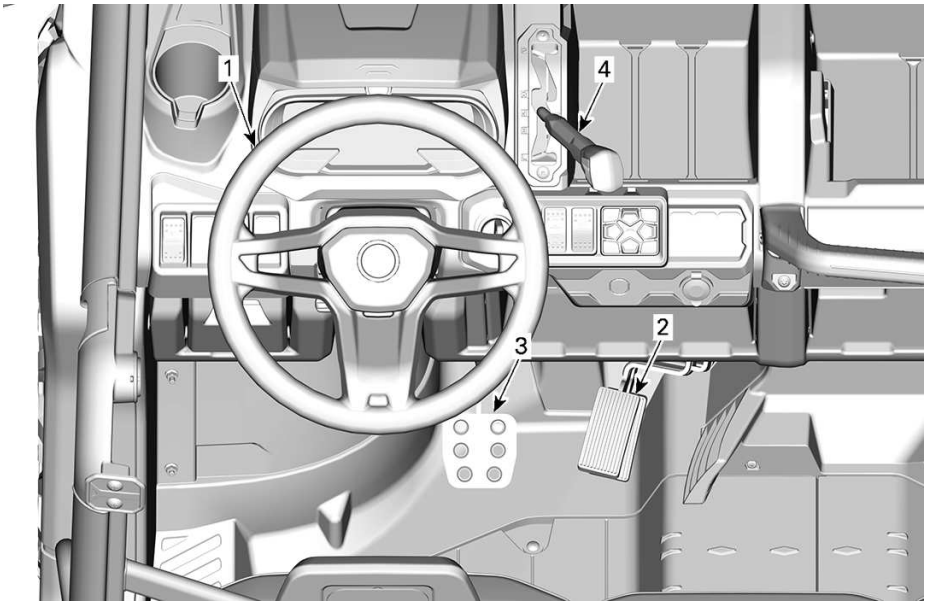

1. Steering wheel
2. Accelerator pedal
3. Brake pedal
4. Shifter

Steering Wheel

The steering wheel is located in front of the driver's seat.

The steering wheel steers the vehicle to the left or right.

Turn the steering wheel in the direction you want to go.

Grip the steering wheel with both hands, without having thumbs rolled around the steering wheel.

⚠ CAUTION

Under rough trail conditions or when crossing an obstacle, the steering wheel could suddenly jerk on one side, causing hand or wrist injuries if the thumbs are rolled around the steering wheel.

A dynamic power steering (DPS) reduces the effort to turn the steering wheel.

Accelerator Pedal

The accelerator pedal is located on the right side of the brake pedal.

The accelerator pedal controls the engine speed.

To increase or maintain vehicle speed, press on the accelerator pedal with your right foot.

To decrease vehicle speed, release the accelerator pedal.

The accelerator pedal is spring loaded and should return to rest position (idle) when not pressed.

Brake Pedal

The brake pedal is located on the left side of the accelerator pedal.

The brake pedal function is to slow down or stop the vehicle.

To decrease vehicle speed or to stop vehicle, press down the brake pedal with your right foot.

The brake pedal is spring loaded and should return to rest position when not pressed.

Shift Lever

The shift lever is located on the upper console to the right of steering wheel.

The shift lever is used to change the gearbox position.

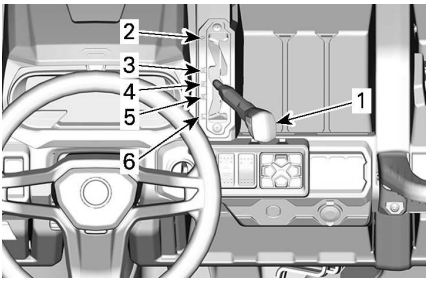

TYPICAL

1. *Shift lever*
2. *Park*
3. *Reverse*
4. *Neutral*
5. *High range (forward)*
6. *Low range (forward)*

The vehicle must be stopped and brakes applied prior to selecting any gear.

⚠ WARNING

This gearbox is not designed to shift while vehicle is moving.

Park

The park position locks the gearbox to help prevent vehicle movement.

⚠ WARNING

Always use the PARK (P) position when the vehicle is not in operation. The vehicle can roll if the shift lever is not set to P (PARK).

Reverse

The reverse position allows the vehicle to go backwards.

Depending upon your particular vehicle configuration, a back-up alarm may be equipped on the vehicle. It goes on automatically when the reverse gear is selected.

NOTE:
In reverse operation, the engine RPM is limited thus limiting the vehicle reverse speed.

⚠ WARNING

When driving downhill in reverse, gravity can increase the vehicle speed above safe reverse speed.

Neutral

The neutral position disengages the gearbox.

High Range (Forward)

This position selects the high speed range of the gearbox. It is the normal driving speed range. It allows the vehicle to reach its maximum speed.

Low Range (Forward)

This position selects the low speed range of the gearbox. It allows the vehicle to move slowly with maximum torque at the wheels.

NOTICE

Use the low speed range to pull a trailer, carry heavy cargo, go over obstacles or drive uphill and downhill.

SECONDARY CONTROLS

Some features may not apply to your model or could be optional.

Some vehicle safety labels are not shown on illustrations.

For information on vehicle safety labels, refer to *Important On-Product labels*.

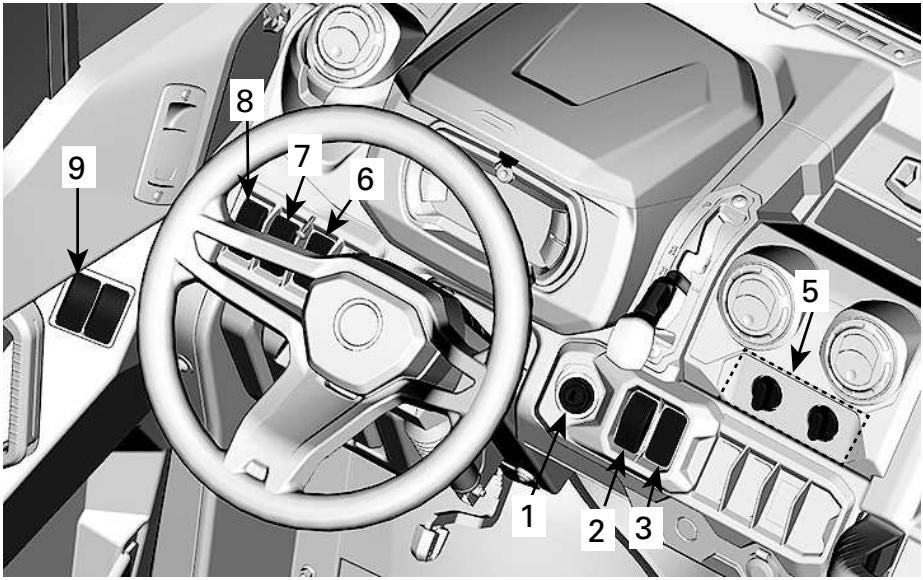

TYPICAL - CAB MODEL WITH HEATING SYSTEM SHOWN

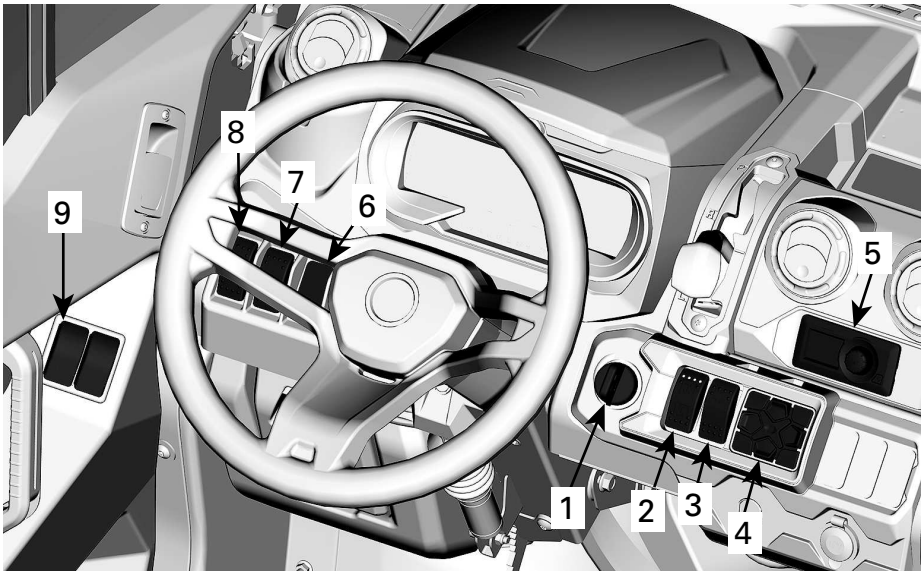

TYPICAL - CAB MODEL WITH HEATING AND A/C SHOWN

1. Ignition switch
2. 2WD/4WD Switch
3. Rear differential switch
4. Keypad (use with 7.6” digital display)
5. Climate control
6. Horn switch (on applicable models)
7. Winch switch
8. Headlight dimmer switch
9. Power window switches

Ignition Switch and Keys

The ignition switch is located on the upper console area.

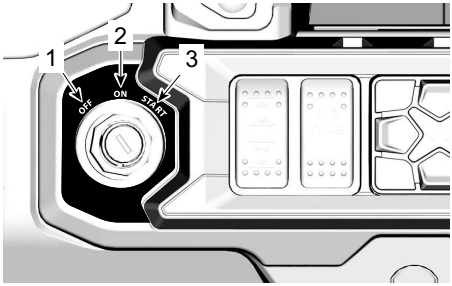

1. *OFF*
2. *ON*
3. *START*

OFF

The key can be inserted or removed in this position only.

In OFF position, the electrical system of the vehicle is disabled.

The engine is shut down by turning the ignition switch to OFF position.

ON

When the key is turned in this position, the electrical system of the vehicle is activated.

The gauge should wake-up.

The vehicle lights are turned on.

The engine can be started.

START

This position starts the engine.

NOTE:
If the ignition switch is left ON for more than 30 minutes, engine will not start unless ignition switch is turned OFF, then ON again.

Keys

Basic Key

The vehicle is delivered with 2 basic key.

Those 2 mechanical keys do not have speed or torque restrictions.

D.E.S.S. Key (Available as an option)

For all D.E.S.S. related option, see an authorized Can-Am Off-road dealer for information.

Digitally Encoded Security System (D.E.S.S.)

The ignition keys contain an electronic circuit that gives it a unique electronic serial number.

The D. E. S. S. system reads the key code and allows engine starting for keys it recognizes.

This vehicle can be operated using 3 different types of key programming:

– Work
– Normal
– Performance

Refer to your dealer for complete information.

NOTE:
Additional keys are available from your dealer as an accessory.

⚠ WARNING

Rollovers, tipovers, collisions and loss of control resulting in serious injury or death are possible with the performance or normal key. Using the normal key is not a substitute for the operator being prepared, qualified, and operating with care.

Performance Key

The performance key allows the user to access the full torque of the engine as well as the top speed of the vehicle.

This may be useful for riders who prefer crisper throttle response, and for environments where higher speeds and greater acceleration are appropriate. For example, in wide-open straight trails, operators may prefer the performance key.

Normal Key

The normal key limits the vehicle speed to 70 km/h (43 MPH) and 10% torque reduction.

Work key

The work key allows for usage of 100% of maximum engine torque but limits vehicle speed to 40 km/h (25 MPH).

⚠ WARNING

On steep downhills, the engine speed limiter may not prevent the vehicle from accelerating beyond this speed.

This key may be useful for riders who prefer more gradual acceleration, or for riding in environments where full speed and high acceleration are not desirable. For example, in narrow, winding trails, operators may prefer a normal key.

D.E.S.S. Flexibility

The D. E. S. S. of your vehicle can be programmed by your authorized Can--Am Off-road dealer to accept up to 8 different keys.

If you have more than one D. E. S. S. equipped your vehicle, each can be programmed by your authorized Can--Am Off-road dealer to accept the other vehicle D.E.S.S. keys.

2WD/4WD Switch

Models without Smart-Lok

The 2WD/4WD switch is located on the upper console.

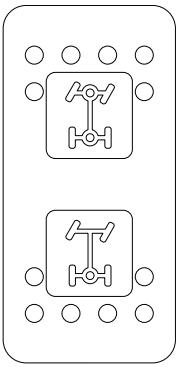

This switch selects 2 wheel drive, or 4 wheel drive mode when the vehicle is stopped.

NOTICE

The vehicle must be stopped to engage or disengage 2WD/4WD switch.
Mechanical damage may occur if switch is engaged or disengaged while driving.

The 4WD mode is engaged when the switch is pushed upwards.

The 2WD mode is engaged when the switch is pushed downwards. The vehicle is then rear wheel drive only.

Rear Differential Lock Switch

The rear differential lock switch is located on the upper console.

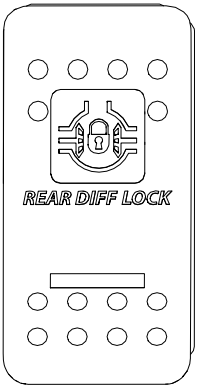

This switch enables locking of rear differential.

NOTICE

The vehicle must be stopped to engage or disengage the differential switch.
Mechanical damage may occur if switch is engaged or disengaged while driving.

The rear differential is locked when the switch is pushed upwards and unlocked when the switch is pushed downwards.

Keypad

The keypad is used to navigate through various menus and options when the *7.6" Digital Display* is installed.

The keypad is located on the upper console.

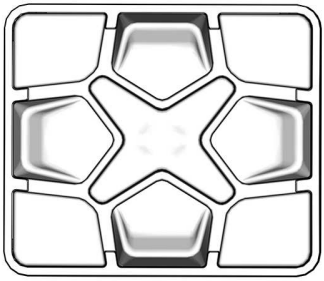

Climate Controls

CAB Models Only

The climate controls unit are located in center of the upper console.

They control the flow and the temperature of the air circulated in the vehicle.

Refer to *Climate Control System* in *EQUIPMENT (PAGE 82) EQUIPMENT* for operation instructions.

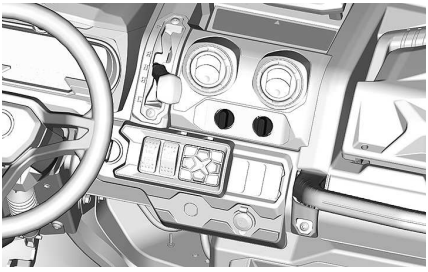

MODELS WITHOUT A/C

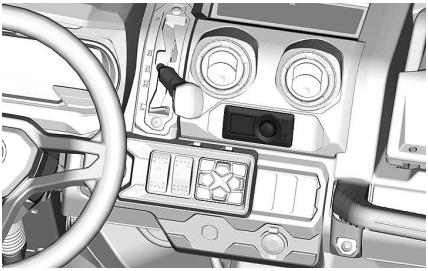

A/C EQUIPPED MODELS

NOTICE

The climate control module installed in the Limited models is not waterproof nor water resistant.

Horn Switch (On applicable models)

To activate the horn, push on the switch.

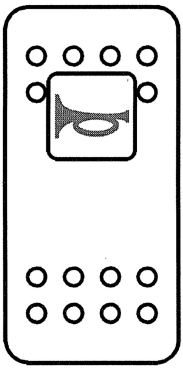

Winch Switch

The winch can be controlled from inside and outside the vehicle with the winch control switch located in the upper console.

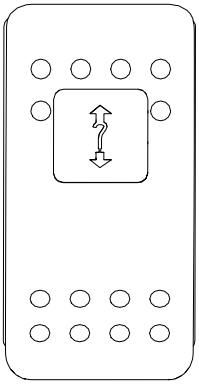

Refer to your *Winch Guide* included with your vehicle for proper winch operation.

Headlight Dimmer Switch

The headlight dimmer switch is located on the upper console.

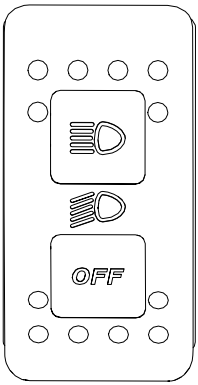

This switch is used to select either the headlights OFF position, low or high beams.

Power Window Switches

The power window switches are located on the door panel. Two switches on the driver side and one on the passenger side.

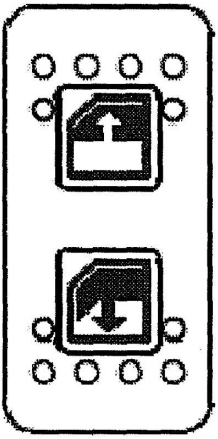

1. Press the switch to open the window.
2. Lift the switch to close the window.

Wiper / Windshield Washer Switch

The wiper / windshield washer switch is located overhead, to the left of the central mirror.

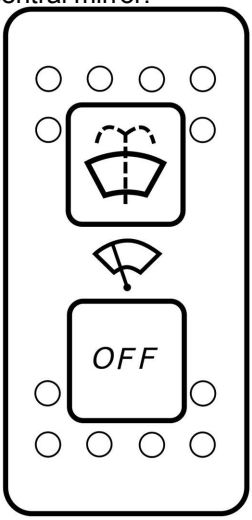

This switch is used to select either the OFF, wipe or wash-and-wipe positions.

Audio ON/OFF Switch

The audio switch is located at the front of the audio roof, to the left of the head unit.

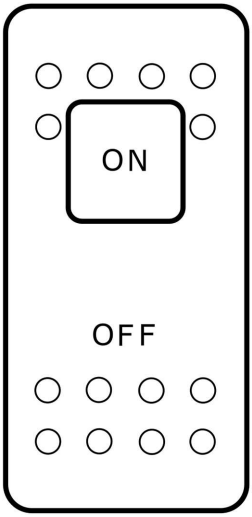

This switch is used to activate (ON) or deactivate (OFF) the audio roof.

EQUIPMENT

Some features may not apply to your model or could be optional.

Some on-product labels are not shown on illustrations.

For information concerning the safety labels, refer to *Important On-Product Labels*.

Tilt Steering

The steering wheel height is adjustable.

Adjust the steering wheel height to face your chest, not your head.

To adjust steering wheel height:

1. Unlock steering by pulling the tilt lever toward you.
2. Move steering wheel to the desired position.
3. Release tilt lever to lock steering wheel in position.

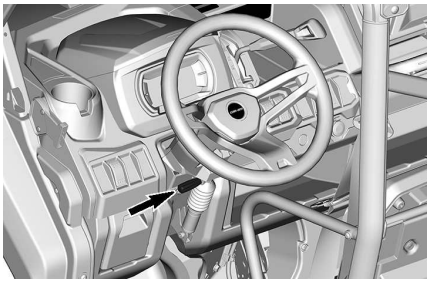

⚠ WARNING

Never adjust the steering wheel height while riding. You may lose control.

Cup Holders

CAB models

Two cup holders are located on the central console.

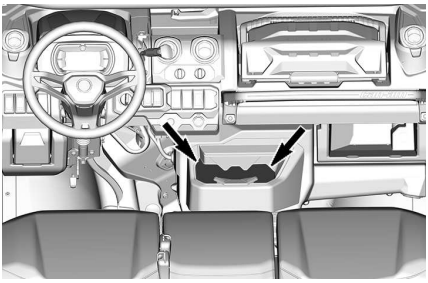

All except CAB models

Two cup holders are located on each side of the dash near the side nets attachment points.

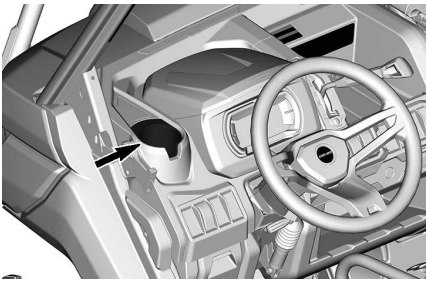

All models

Two additional cup holders are available on the back of the central passengers seat backrest.

To access them, lower the seat backrest.

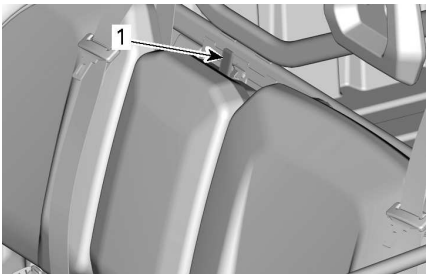

TYPICAL

1. Backrest clip locking mechanism

TYPICAL

1. *Central passenger backrest cup holder*

NOTE:
Do not use cup holders while riding in rough conditions.

Passengers Handhold

The passengers have access to a front handhold located in front of their seats.

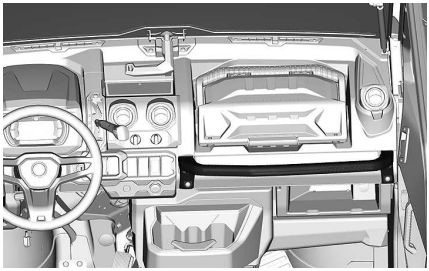

Adjust the seat position in order to get a solid and comfortable grip on the handholds. Refer to *Passenger's Seat* for adjustment procedure.

Holding the handhold helps the passengers brace against the movement of the vehicle and helps keep hands and body inside the cockpit in the event of a rollover.

⚠ WARNING

Never use any part of vehicle cage as handholds. Hands can be struck by objects outside the cockpit or crushed in a rollover.

Storage Compartments

The vehicle is equipped with storage compartments designed to carry light objects.

Multifunction Gauge Storage Compartment

A storage compartment is available above the multifunction gauge.

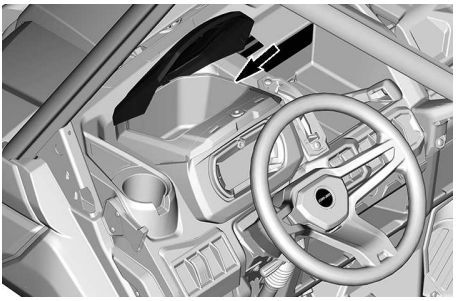

Driver Storage Compartment

A small storage compartment is available on the driver side.

Pull on handle to rotate it open.

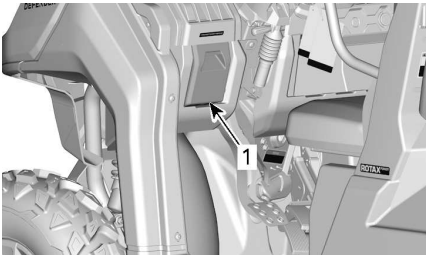

TYPICAL

1. *Driver storage compartment*

Removable Tool Box

A removable tool box is located on the upper console in front of the passenger's seat..

Opening the Tool Box Lid

⚠ WARNING

Before riding, always make sure tool box is secured to vehicle and lid is locked.

1. Push the lock downwards and lift the lid.

2. To close the lid, lower it and push the lock upwards.

Removing and Securing the Tool Box

⚠ WARNING

Before riding, always make sure tool box is secured to vehicle and lid is locked.

1. To remove the tool box from the vehicle, lift its transport handle.
2. To secure the tool box in place, position it carefully and lower the transport handle.

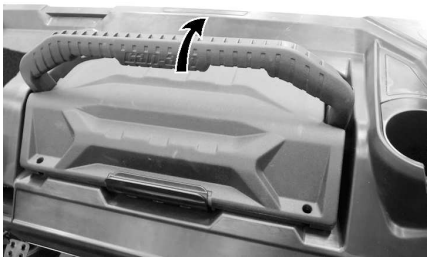

SECURING TOOL BOX IN PLACE

Under Seat Storage Box

A convenient removable under seat storage box is available.

TYPICAL

1. Under seat storage box

To remove under seat storage box, lift RH passenger seat and remove under seat storage box by pulling it upwards.

TYPICAL

NOTE:
When reinstalling under seat storage box, make sure to align it properly with seat tubes and floor emboss so it fits properly under the seat.

Open Storage Compartments

Multiple open storage compartments are available in the console.

⚠ WARNING

When riding vehicle, make sure no object stored in open storage compartments could cause harm in the event of a roll over.

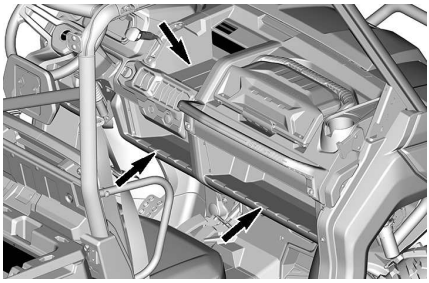

ALL EXCEPT BASE

Central Passenger Backrest Storage Area

When central passenger seat backrest is pulled down a storage area is available.

NOTE:
Always empty storage area before putting central passenger backrest up.

TYPICAL

1. *Central passenger backrest storage area*

Tool Kit

A tool kit with basic tools is provided. It is located in the front service center.

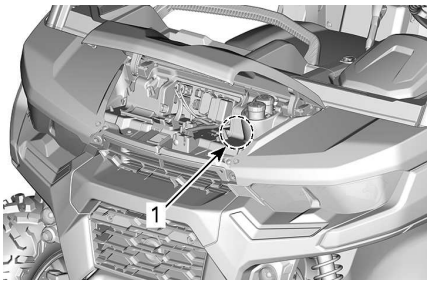

1. *Tool kit*

Footrests

The vehicle is equipped with driver and RH passenger footrests to allow firmly planting feet on vehicle floor, which helps to maintain proper body position while riding.

The footrests help minimize the risk of leg or foot injury.

Always wear appropriate footwear. See *Riding Gear*.

Side Nets

A side net is provided on each side of the cockpit to help arms, legs or shoulders stay inside the vehicle, thus reducing the risk of injuries. Side nets may also keep bushes or other debris out of the cockpit.

⚠ WARNING

Never operate the vehicle unless both side nets are in place and buckled.

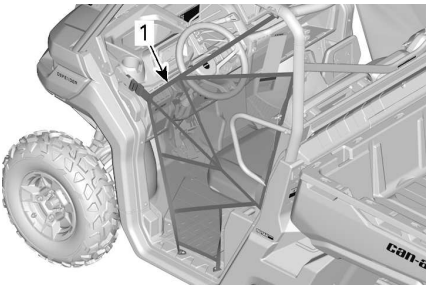

1. *Side net*

Side nets are adjustable and must be kept as tight as possible.

To adjust side nets proceed as follows:

1. Secure side net with buckle.
2. Pull on four adjustment straps to tighten.

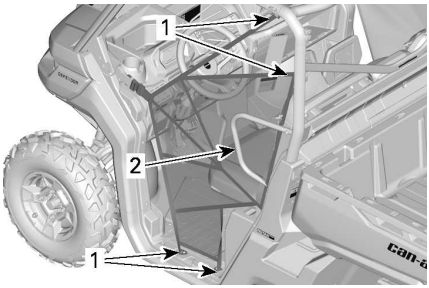

1. *Side net adjustment locations*
2. *Shoulder guard*

Shoulder Guards

The vehicle is equipped with shoulder guards to help restrain the entire body of driver and passengers inside vehicle.

Seat Belts

This vehicle is equipped with 3 points seat belts to help protect driver and passenger in the event of a collision, rollover, or tipover. The seat belts can help keep occupants stay in the passenger compartment.

⚠ WARNING

Wear seat belts properly at all times.
Seat belts reduce the risk of injury in case of a crash and help to keep limbs inside the cockpit during a rollover or any accidents.

If driver's seat belt is not fastened when:

- The ignition is turn ON
  - The seat belt indicator lamp will be turned ON.
  - The multifunction gauge will display the message: SEAT BELT.
- The engine is started and shift lever is moved out of PARK, vehicle speed will be limited to a maximum of approximately 20 km/h (12 MPH) on flat ground.

⚠ WARNING

The vehicle may reach higher or lower speed depending on inclines.

⚠ WARNING

There is no indicator light or message for the passengers seat belt. The driver is responsible for the passenger safety and should ensure the passenger buckles its seat belt.

Fastening and Adjusting the Seat Belt

The seat belt is equipped with a semi--cinching tab that lock the lap belt when the webbing is under tension.

TYPICAL

1. *Semi-cinching tab*

To fasten the seat belt, insert the latch plate into the buckle, then pull the belt to ensure it is properly fastened.

Adjust the seat belt tightly against your body by pulling the shoulder belt upwards.

TYPICAL

⚠ WARNING

Wear seat belt properly. Make sure it remains securely fastened and tightened against the body. Make sure it is not twisted or defective.

To release the seat belt, push on the red button on the seat belt buckle.

Driver's Seat

On applicable models, the driver's seat can be adjusted forward and backward.

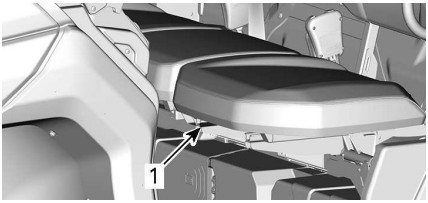

TYPICAL

1. *Adjustment lever*

To adjust seat, move the seat lever to unlock the seat. Release the lever to lock the seat into desired position.

⚠ WARNING

Never adjust the seat position while driving.

Passenger Seats

The passenger seats are not adjustable.

The central passenger seat backrest can be tilted forward for access to cup holders by releasing the latch located on top of the backrest.

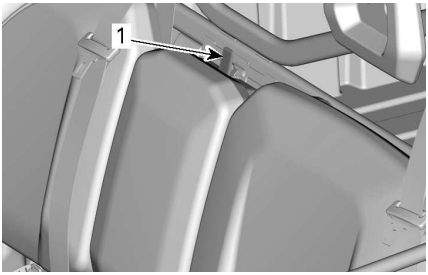

TYPICAL

1. *Backrest clip locking mechanism*

On applicable models, the seats can be lifted to allow access to removable under seat storage compartment.

To lift seat, pull on front of seat to un-clip it and lift until it "clips" in the upper position.

Fuel Reservoir Cap

The fuel reservoir cap is located on the right hand side of the vehicle cargo box release handle.

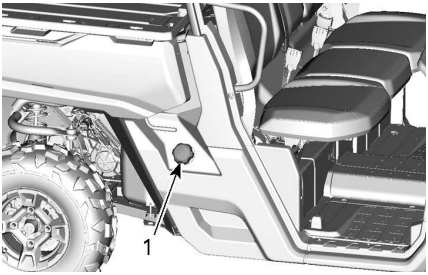

TYPICAL

1. *Fuel reservoir cap*

Refer to *Fuel* section for information on fueling procedure and fuel requirements.

Winch

⚠ WARNING

To avoid severe injury or death or important components damages.

- **Never use the winch cable/ rope to retain a vehicle during trailering.**
- **Never ride with the winch cable/rope attached to a load or another vehicle.**
- **Only use the winch to help a stuck vehicle (snow, mud, etc.).**
- **Always refer to the winch manufacturer's instruction before pulling loads.**

Refer to your winch guide included with your vehicle for proper winch operation.

The winch can be actuated inside the vehicle using the winch control switch on the upper console.

NOTICE

Using the winch intensively over a long period of time may discharge the battery.

Intensive use of the winch may cause the built-in circuit breakers to momentarily turn OFF. In such a case, wait a moment, then continue winching. the breakers automatically turn ON once they cooled down.

The following tips will help to reduce the risk of discharging the battery:

- Always unreel manually: Unlock the cable using the handle then pull on the hook strap to unreel.
- Let the vehicle run while winching. Do not stop vehicle immediately after winching to let battery recharge.
- Also, when winching for more than 30 seconds, it is recommended to increase engine RPM in the range of 3000 RPM to increase charging power to the battery.

⚠ WARNING

Make sure vehicle is in NEUTRAL (N) and before increasing engine RPM.

Cargo Box

The vehicle is equipped with a an inclinable cargo box. The cargo box may be used for various types of cargo.

⚠ WARNING

To reduce the risk of loss of control or loss of load, use the cargo box only in accordance with *Carrying Loads* in the *Safety Information* section.

Cargo Box Separations

Cargo box can be easily separated into smaller storage compartments to prevent cargo loads from mixing.

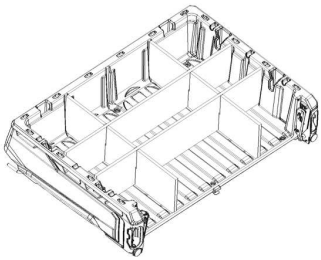

EXAMPLE OF CARGO BOX SEPARATIONS

Cargo Box Tilt

Cargo Box Tilt Release Handles (If equipped)

The latching mechanism of the cargo box can be actuated from either side of the vehicle through a release handle.

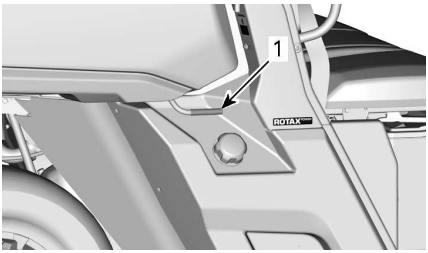

1. *Cargo box release handle*

Cargo Box Power-Tilt (If equipped)

The cargo box can be tilted with the control switch located in the upper control.

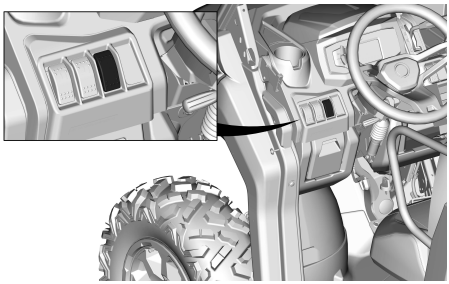

Anchoring Hooks

To provide anchoring point in order to secure cargo inside the cargo box, 4 anchoring hooks are located inside the cargo area.

NOTICE

Never lift vehicle using anchoring hooks.

Tailgate

The cargo box can be closed with a tailgate.

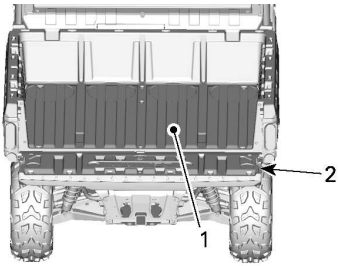

1. *Cargo box*
2. *Tailgate*

NOTICE

Do not exceed 113 kg (250 lb) of weight on the tailgate during loading or unloading. Always close tailgate before operating to reduce the risk of loss of load.

Removing the Tailgate

Open tailgate and remove retaining cables.

Position tailgate so as to remove it from pivot points.

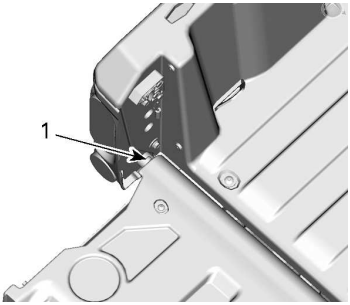

1. *Tailgate pivot point*

Trailer Hitch

The vehicle comes equipped with a 50.8 x 50.8 mm (2 x 2 in) standard receiver hitch.

For the proper usage of the hitch support, refer to *Moving Loads and Doing Work*.

⚠ WARNING

To reduce the risk of loss of control or loss of load, always respect the maximum hauling capacity.

12-Volt Power Outlets

Convenient for handheld spotlight or other portable equipment.

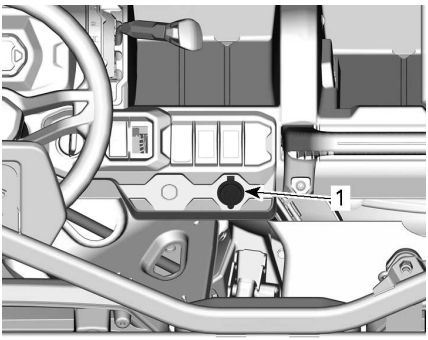

ALL MODELS

1. 12 V power outlets

Remove protective cap to use. Always reinstall it after use to protect against weather.

USB Power Outlet

Some models are equipped with a USB port used for charging.

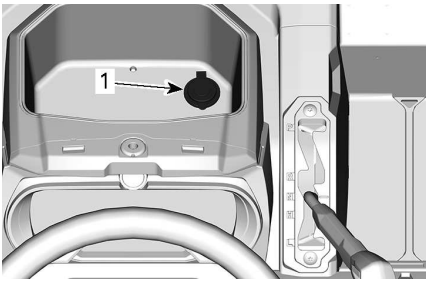

1. USB charging port

Rock Sliders

Aluminium rock sliders for additional lower body protection.

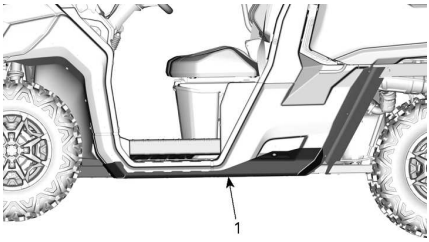

1. Rock slider

Front Bumper

Steel bumper for additional front body protection.

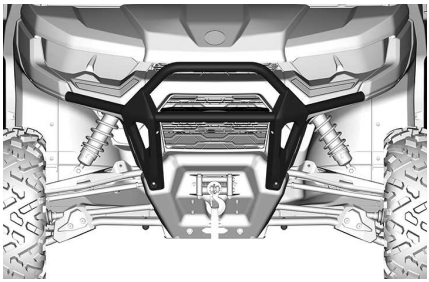

Brake Holding Mechanism

The brake holding mechanism lever is located on the LH side of the steering wheel, above the brake pedal.

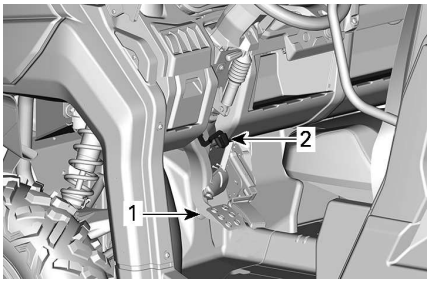

TYPICAL

1. Brake pedal
2. Brake holding mechanism lever

The brake holding mechanism function is to maintain brakes to all wheels while shift lever is set to Park.

To engage the brake holding mechanism, proceed as follow:

1. Immobilize vehicle,
2. Apply and hold the brakes,
3. Put shift lever in **Park**,
4. While holding the brakes, lift lever toward the steering wheel,
5. Remove foot from brake pedal, the pedal should stay lowered.

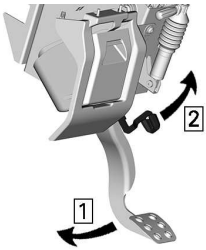

Step 1. Apply and hold brake pedal
Step 2. Lift lever

NOTE:
The brake holding mechanism lever can be set to several positions.

⚠ WARNING

When the brake holding mechanism is applied, make sure the vehicle stays securely in place. ALWAYS put the shift lever in PARK when using the brake holding mechanism.

To release the brake holding mechanism, simply apply and hold the brake pedal, put shift lever in gear then release brake pedal. When released it should return to the rest position.

Safe usage of the brake holding mechanism requires the shift lever to be set to the Park position. It is not recommended to use the brake holding mechanism on its own.

⚠ WARNING

Make sure brake holding mechanism is released before operating the vehicle. If the brake holding mechanism is left ON while riding, it may cause damage to the brake system and lead to loss of braking capacity and/or fire.

Full Doors With Electric Windows

Some vehicles come equipped with full doors and electric windows.

Doors can be removed from the vehicle. See an authorized Can-Am Off--road dealer for information.

⚠ WARNING

Always install safety nets and shoulder bars whenever removing full doors from vehicle. See an authorized Can-Am Off-road dealer for installation instructions.

Two-Window Doors

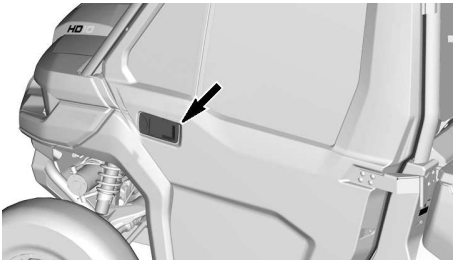

OUTER DOOR HANDLE

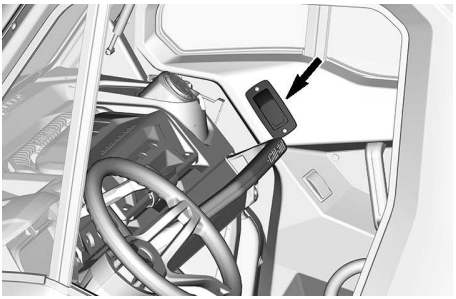

INNER DOOR HANDLE

Three-Window Doors

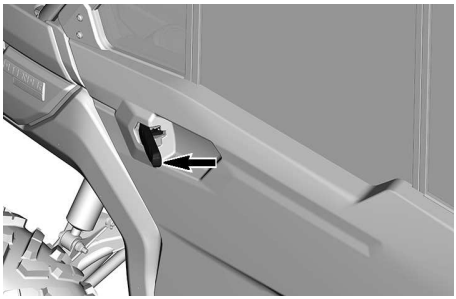

OUTER DOOR HANDLE

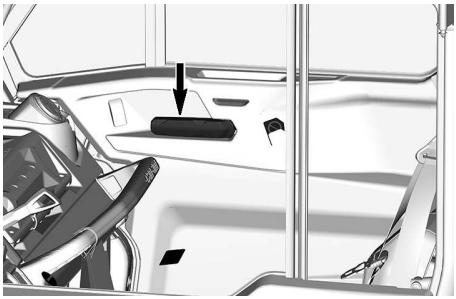

INNER DOOR HANDLE

Windshield with Wiper

Some vehicles are equipped with a full glass windshield and a wiper.

To activate wiper, press activation switch. The switch is located on the central panel at the top of the windshield.

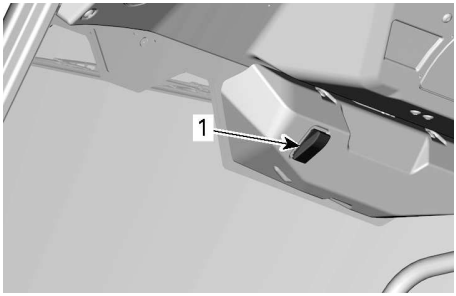

1. Wiper activation switch

To activate windshield washer, hold activation switch up.

Full glass windshield with wiper can be removed from vehicle. See an authorized Can-Am Off-road dealer for information.

Windshield Position

Windshield can be set to 3 different positions.

- Closed
- Partially opened (second position on the handle)
- Fully opened (handle is released)

NOTE:
When riding the vehicle with the windshield in one of the open position, adjust your speed to the terrain. The glass windshield is not as strong when not seated in its closed position.

To close windshield, pull on handle until it closes.

Filling up Windshield Washer

Open cargo box.

Lift service cover and remove windshield washer bottle cap.

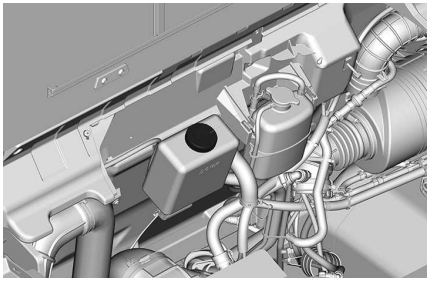

Fill windshield washer bottle.

Climate Control System

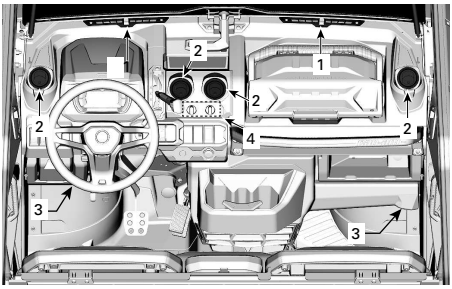

MODELS WITHOUT A/C

1. *Windshield air vents*
2. *Central air vents*
3. *Footwell air vents*
4. *Climate control*

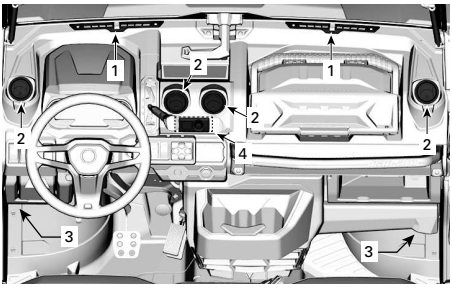

MODELS WITH A/C

1. *Windshield air vents*
2. *Central air vents*
3. *Footwell air vents*
4. *Climate control*

Windshield Air Vents

Located on the top of the dash, they allow distribute the air flow on the windshield.

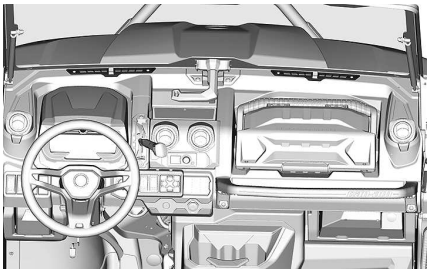

The air flow may be adjusted using the central knob.

– Push the knob toward the windshield to close the vent.
– Pull it to open the vent.

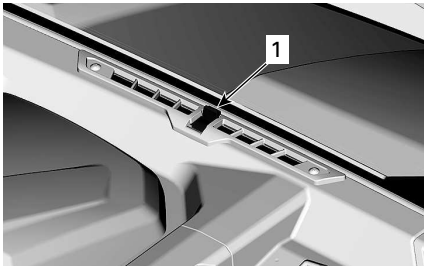

CLOSED POSITION SHOWN

1. *Central knob*

Console Air Vents

Located on the center of the console, they allow distribute the air flow inside the cockpit.

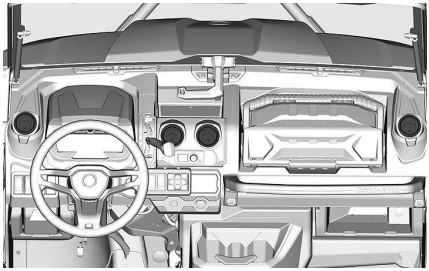

Push on the molded dot to open the vent.

Push on vent tabs to close.

Rotate the external ring of the vent to orient the air flow in the cockpit.

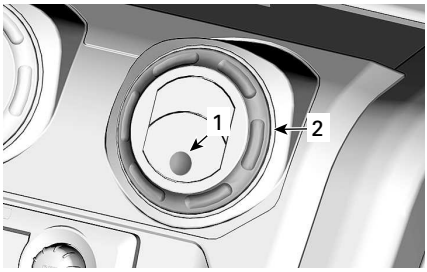

1. *Molded dot*
2. *External ring*

Footwell Air Vents

Located underneath the dash, each side of the vehicle, they allow distribute the air flow at the bottom of the cockpit.

Push on the molded dot to open the vent.

Push on vent tabs to close.

Climate Control - Without A/C

This vehicle is equipped with an heating system.

This system is controlled by two knobs.

– Fan speed control
– Temperature control

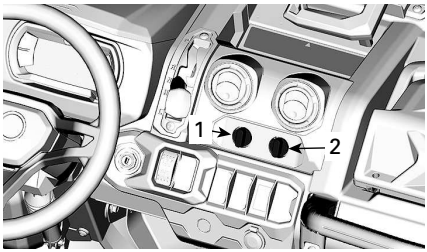

1. *Fan speed control*
2. *Temperature control*

Fan Speed Control

Controls the flow of air circulated in the vehicle.

Turn to select the desired fan speed or to switch it off.

NOTE:
If the fan is switched off, the windshield may fog up.

Temperature Control

Controls the temperature of the air circulated in the vehicle.

Turn to select the desired temperature.

Climate Control - With A/C

This vehicle is equipped with an heating/air conditioning system.

This system is controlled by a multifunction module. This module gives access to the following functions:

– Temperature
– Temperature mode
– Fan speed
– Settings

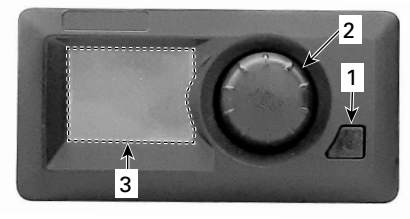

1. *Power switch*
2. *Selector knob*
3. *Display*

For an optimal efficiency of the system, the supply control of the outside air is determine automatically by the climate control module. No operator's action is required.

Temperature

To adjust the temperature, turn the selector knob to select the desired temperature.

The temperature can be set between 13 °C and 28 °C (56 °F and 82 °F) in 1 degree increments.

In position T ° MIN, the system switches to continuous cooling.

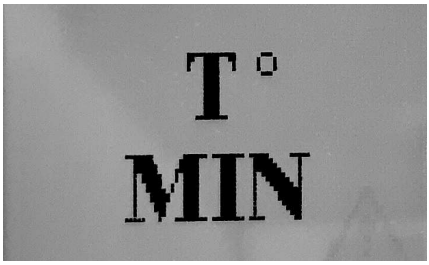

In T ° MAX, the system switches to continuous heating.

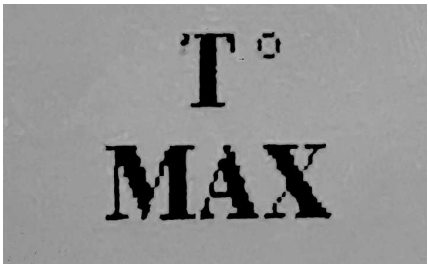

NOTE:
In either T ° MIN or T ° MAX position, the system can not regulate a stable temperature.

Temperature Mode

1. To select the temperature mode, press the selector knob until one of the following icon appear.

2. Turn the selector knob to change the mode.

NOTE:
After 5 seconds, the module saves your selection and returns automatically to the temperature display.

In AUTO mode, the system automatically adjusts to heat or cool the cockpit to obtain the selected temperature as quickly as possible by adjusting the fan speed automatically.

If an other fan speed is selected while in AUTO mode, the system will fall in cool or heat mode depending the ambient conditions.

Fan Speed

To adjust the fan speed, press the selector knob until the fan icon appears then turn the knob to select the desired speed.

3 settings are available for fan speed:

- LOW
- MED
- HIGH

NOTE:
After 5 seconds, the module saves your selection and returns automatically to the temperature display.

Setting

The following settings can be modified by the operator.

- Contrast (0% to 100%)
- Brightness (0% to 100%)
- Unit (°C or °F)

To modify a setting, press the selector knob 2 time to reach the Fan Speed page.

NOTE:
Each next action must be performed within 10 seconds, otherwise the module will come back to the temperature display.

Press and hold the power button while turning the selector knob clockwise for at least 3 clicks.

To change the **CONTRAST**: turn the selector knob until the desired level is reached.

To change the **BRIGHTNESS**: press the selector knob 1 time, then turn the knob until the desired level is reached.

To select **°C or °F**: press the selector knob 2 times, and turn the knob to change the unit.

Rear Deflector

Clear rear deflector to protect from back draft of dust or rain in harsh environments. Sliding quick mount for easy installation.

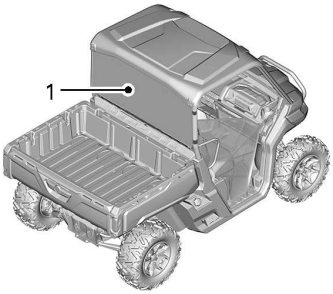

1. Rear deflector

Removing the Rear Deflector

To remove the rear deflector, slide clamp toward the unlock icon.

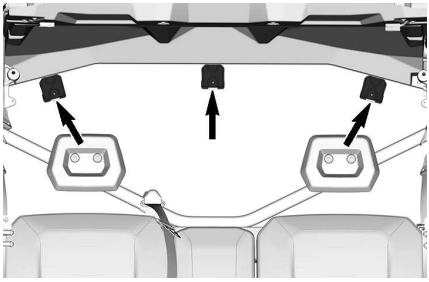

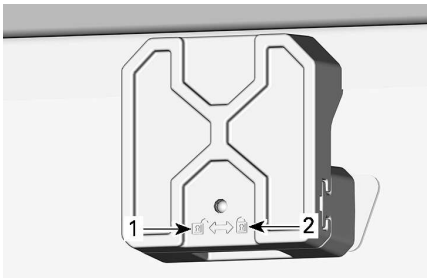

CLAMP

1. Unlock icon
2. Lock icon

Tilt toward the rear and lift.

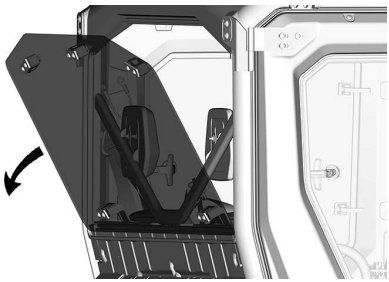

Audio System

⚠ CAUTION

Prolonged exposure to loud music can damage your hearing. Therefore, a 10-minute break is suggested for every 45 minutes of listening.

⚠ CAUTION

Do not manipulate the audio controller while operating the vehicle.

NOTICE

Extended use of electrical accessories without the engine running will drain the battery.

NOTICE

Do not use a pressure washer. Although the unit is sealed against most water or dirt intrusion, excessive pressure washing or complete submersion in water or snow is beyond the unit's design limits and the electronic components can be damaged. Such damage will not be covered under any warranty.

⚠ WARNING

This audio roof sound system is heavy and could change the vehicle's behavior while riding. Adjust your driving accordingly.

For more information about the audio system, refer to the Mediamaster® 50 Owner's Manual. This manual, along with the wireless remote controller, is located in the toolbox.

Replacing Audio-Related Fuses

Before replacing a burnt fuse, check for a short circuit or a faulty component on that circuit. Ensure that all connectors are properly seated and that no wires are damaged or broken.

Radio Main Power Fuse

1. Locate the radio main power fuse.

2. Check the fuse using a continuity tester.
3. If the fuse is burnt, replace it with one of the same rating.

NOTICE

Do not use a higher-rated fuse, as this can cause severe damage.

4. Re-install all of the removed parts

Amplifier Fuses

1. Remove the amplifier, refer to *Removing the Audio System Amplifier*.
2. Locate the fuses on the amplifier harness, under the foam wrapping.

3. Check the fuses using a continuity tester.

4. If a fuse is burnt, replace it with one of the same rating.

NOTICE

Do not use a higher-rated fuse, as this can cause severe damage.

Removing the Audio System Amplifier

NOTICE

If the audio amplifier is malfunctioning, check for a short circuit or a faulty component on the circuit before replacing the amplifier. Ensure that all connectors are properly connected and that no wires are damaged or broken.

1. Remove the six screws securing the amplifier mounting plate to the audio roof.

NOTICE

Be careful because the amplifier mounting plate will no longer be retained, and the amplifier will still be attached to it.

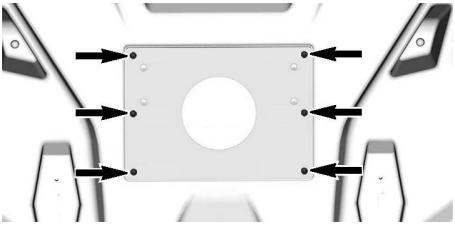

MOUNTING PLATE

2. Remove and keep the four M4 nuts and four M4 x 16 hex head screws that hold the amplifier to the mounting plate.

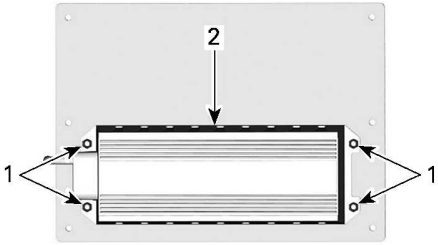

REAR OF MOUNTING PLATE

1. *M4 nuts*
2. *Amplifier*

3. Gently let the amplifier hang WITHOUT disconnecting any wires.

Installing the Audio System Amplifier

1. Secure the amplifier to the mounting plate using the screws and nuts previously removed. Tighten to the specified torque.

NOTICE

Use of a needle torque wrench is recommended.

Tightening Torque	
M4 x 16 hex head screws	1 N•m (9 lbf•in)

2. Transfer the wires from the old amplifier to the new one, taking care to disconnect and reconnect them ONE by ONE to the same connectors.
3. Secure the mounting plate to the audio roof. Tighten to the specified torque.

NOTICE

Use of a needle torque wrench is recommended.

Tightening Torque	
M4 x 16 hex head screws	1 N•m (9 lbf•in)

Head Unit Fuse

1. To replace a fuse inside the enclosure, remove the trim from around the head unit (located under the front roof).

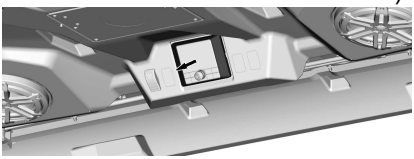

2. Remove and keep the four M4 x 12 screws that secure the head unit, as shown below.

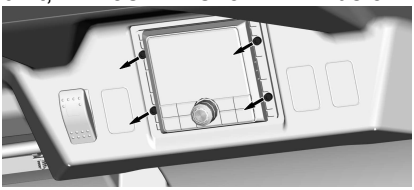

3. Pull the head unit out.

4. Then gently pull the harness out, making sure not to damage any wires or connections. Locate the fuse cover.

5. Remove the fuse cover and replace the blown fuse. Re-install all of the removed parts.

4.5” DIGITAL DISPLAY

Multifunction Display

General View

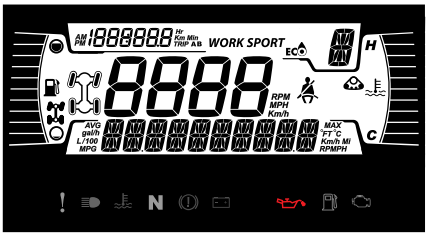

Lower Display

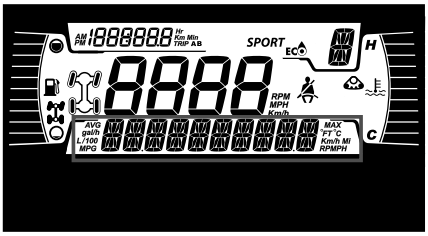

May display the following:

- RPM
- Speed statistics
- Engine Temperature
- Battery Voltage
- Settings
- Messages

Use LOWER button to change the displayed information.

Left Lateral Display

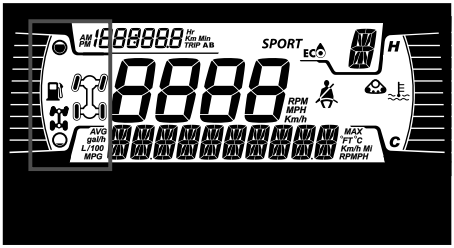

The left lateral display includes:

- Fuel level indicator
- 2X4 / 4X4 telltale
- Rear diff lock

Icon	Country
	For European community countries
	For all other countries

Right Lateral Display

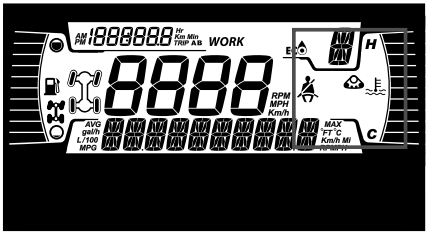

The right lateral display includes:

- Engine Temperature
- Track Kit Telltale
- Seat belt reminder

When a track kit is installed, a message will scroll in the lower display.

Central Display

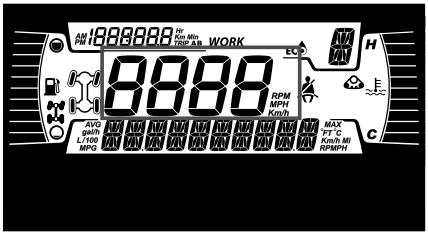

Display the vehicle speed in km/h or MPH.

Transmission Position Display

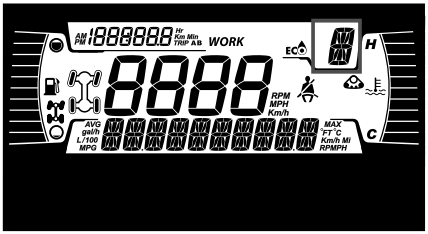

This display shows gear position of gearbox:

– P (Park)
– R (Reverse)
– N (Neutral)
– H (High Range)
– L (Low Range)
– – (Invalid Range)

MODE Display

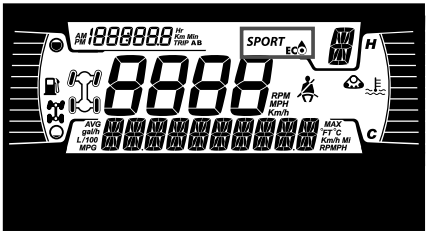

The MODE display indicates the selected mode of operation:

– ECO
– WORK

To change between modes, hold LOWER button and short press LOWER button to cycle through available modes.

Drive Mode	Message at Activation
WORK	WORK MODE
ECO	ECO MODE

Trip Display

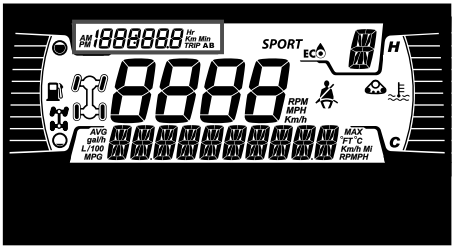

This display shows trip information:

– Cumulative distance odometer
– Trip A
– Trip B
– Vehicle hour meter
– Clock

Use UPPER button to change the displayed information.

Hold UPPER button to reset Trip A/B meters.

Warning Lamps and Indicators

The following indicator lamps will alert you to a vehicle condition that may become serious. Some lamps will illuminate when starting the vehicle to make sure they work. If any lamps remain on after starting the vehicle, refer to the respective system warning lamp for further information.

NOTE:
Some warning indicators appear in the display of the multifunction gauge and function the same as an indicator lamp but do not display when starting the vehicle.

Telltale Lights - Lower Bar

Warning and Telltale Lights	
!	ORANGE - Vehicle Malfunction
	BLUE - High Beam
	RED - The engine temperature is too high.
N	GREEN - Neutral
	RED - (Blinking) Accelerator pedal and the brake are activated simultaneously for a certain time (a torque limitation is active)
– +	RED - Low battery.
	RED - Low oil pressure (Normally ON at engine OFF)
	ORANGE - Low fuel level
	ORANGE - Check engine

Icons and Indicators - Multifunction Display

Icons and Indicators	
WORK	Denotes WORK mode is selected.
ECO	Denotes ECO mode is selected.

Icons and Indicators	
	When lit, seat belt not buckled with vehicle immobilized. Flashing when vehicle is moving.
	Track kit active (If Equipped)

Settings

The buttons to navigate through menus are located on the left side of the LCD display.

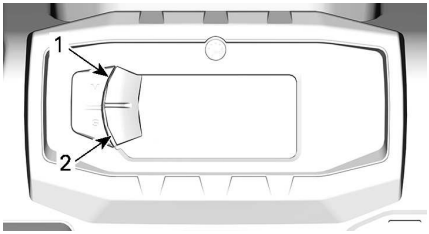

TYPICAL

1. *Upper button*
2. *Lower button*

Setup

Using LOWER button, select **SETTINGS** and hold to enter setting menu.

Maintenance Reset

NOTE:
Only when the maintenance icon is displayed.

Using LOWER button, select **RES MAINT** and hold to reset maintenance.

Fault Codes

Available only when at least one code is activated.

Using LOWER button, select **CODES** and hold to see actives fault codes.

Fault codes will be scrolled on the Lower Display.

Reset Stats

Using LOWER button, select **RESET STAT** and hold to reset.

Unit Selection

This multifunction gauge is factory preset in Imperial units but it is possible to change it to Metric units.

Using LOWER button, select **UNITS** and hold button to change units.

Setting Clock

All of the following action must be performed using the LOWER button.

1. Select **CLOCK** and hold to adjust clock.
2. Press the button to select clock display.
3. Push and hold the button for 1 second.
4. Press the button to select 12:00 AM PM or 24:00 time base.
5. Push and hold the button to acknowledge selection.
6. Press the button to change hours (hours flash).
7. Push and hold the button to acknowledge hour selection.
8. Press the button to switch to minutes (minutes flash).
9. Push and hold the button to acknowledge minutes selection.

Setting Language

The gauge display language can be changed.

Refer to an authorized Can-Am Off--road dealer for language availability and to setup the gauge to your preference.

Setting Brightness

The brightness of the LCD display can be adjusted.

Using LOWER button, select **BRIGHTNESS** and hold button to change brightness.

Using LOWER button, adjust brightness then push and hold the button to acknowledge selection.

7.6" DIGITAL DISPLAY (KEYPAD)

Basic Functions

Multifunction Gauge Description

⚠ WARNING

Do not adjust the display while riding, you could lose control.

General View

Lower Display

May display the following:

- RPM
- Speed statistics
- Engine Temperature
- Battery Voltage
- Settings
- Messages
- Active DPS mode (Maverick models only)
- CVT Belt Temperature (On applicable models)

The SPEED STAT display shows the maximum and the average speed. Hold MENU or OK button for 1 second to reset.

Left Lateral Display

The left lateral display includes:

- Fuel level indicator
- Tripmeter (A - B)
- Odometer
- Vehicle Hour meter
- DPS indicator

Right Lateral Display

The right lateral display includes:

- Engine Temperature
- Clock
- Speed indicator

The speed indicator in this display is activated when the central display shows information other than the speed. Otherwise it is blank.

Central Display

May display the following:

- RPM
- Vehicle speed

Transmission Position Display

This display shows gears position of gearbox:

- P (Park)

– R (Reverse)
– N (Neutral)
– H (High range)
– L (Low range)
– – (Invalid gear)

MODE Display

The MODE display indicates the selected mode of operation:

– WORK
– ECO

To change between modes, press DRIVE MODE button on keypad to cycle through available modes.

A message of the selected mode will be displayed on the lower display at activation and deactivation as follow:

Drive Mode	Message at Activation
WORK	WORK MODE
ECO	ECO MODE

Middle Right Display

The middle right display indicates the selected mode of operation:

– 2X4
– 4X4
– Active tracks

Icon	Country
	For European community countries
	For all other countries

Middle Left Display

The middle left lateral display includes:

– Seat belt reminder
– Maintenance reminder

Indicator Lamps

Warning and Telltale Lights

Warning and Telltale Lights	
	RED - The engine temperature is too high.
	RED - Low battery. (Normally ON at key ON engine OFF)
	RED - Low oil pressure
	ORANGE - Low fuel level
	ORANGE - Check engine
!	ORANGE - Vehicle Malfunction

Warning and Telltale Lights	
	RED - (Blinking) Accelerator pedal and the brake are activated simultaneously for a certain time (a torque limitation is active)
	BLUE - High Beam
N	GREEN - Neutral

Icons and Indicators

Icons and Indicators	
WORK	Denotes WORK mode is selected.
ECO	Denotes ECO mode is selected.
	When lit, seat belt not buckled with vehicle immobilized. Flashing when vehicle is moving.
	When lit, indicates that a maintenance is required. See your authorized Can-Am dealer or person of your own choosing for the maintenance.
	Track kit active (If Equipped)

Settings

Setup

Using MENU button on the keypad, select **SETTINGS** and hold to enter setting menu.

OK button can be pressed instead of holding MENU button.

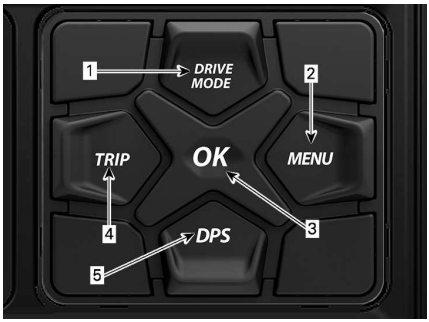

5 BUTTONS KEYPAD

1. *DRIVE MODE button*
2. *MENU button*
3. *OK button*
4. *TRIP button*
5. *DPS button*

Maintenance Reset

NOTE:
Only when the maintenance icon is displayed.

Using MENU button, select **RES MAINT** and hold to reset maintenance.

Fault Codes

Available only when at least one code is activated.

Using MENU button, select **CODES** and hold to see active fault codes.

Fault codes will be scrolled on the Lower Display.

Reset Stats

Using MENU button, select **RESET STAT** and hold to reset.

Unit Selection

This multifunction gauge is factory preset in Imperial units but it is possible to change it to Metric units.

Using MENU button, select **UNITS** and hold button to change units.

Speed/RPM

The speed and RPM display can be swapped.

Using MENU button, select **SPEED/ RPM** and hold button to invert speed and RPM display.

Setting Clock

All of the following action must be performed using the MENU button.

1. Select **CLOCK** and hold to change time.
2. Press the button to select clock display.
3. Push and hold the button for 1 second.
4. Press the button to select 12:00 AM PM or 24:00 time base.
5. Push and hold the button or OK button to acknowledge selection.
6. Press the button to change hours (hours flash).
7. Push and hold the button or OK button to acknowledge hour selection
8. Push the button to switch to minutes (minutes flash).
9. Push and hold the button to acknowledge minutes selection.

Setting Brightness

The brightness of the LCD display can be adjusted.

Using MENU button, select **BRIGHTNESS** and hold MENU button to select the brightness setting.

Using MENU button, adjust brightness then push and hold MENU button to acknowledge selection.

Setting Language

The gauge display language can be changed.

Refer to an authorized Can-Am Off--road dealer for language availability and to setup the gauge to your preference.

DPS Modes

The lower display can show which DPS mode is active. Refer to *Tune Your ride*.

FUEL

Fuel Requirements

NOTICE

Always use fresh gasoline. Gasoline will oxidize; the result is loss of octane, volatile compounds, and the production of gum and varnish deposits which can damage the fuel system.

Alcohol fuel blending varies by country and region. Your vehicle has been designed to operate using the recommended fuels, however, be aware of the following:

- Use of fuel containing alcohol above the percentage specified by government regulations is not recommended and can result in the following problems in the fuel system components:
  - Starting and operating difficulties.
  - Deterioration of rubber or plastic parts.
  - Corrosion of metal parts.
  - Damage to internal engine parts.
- Inspect frequently for the presence of fuel leaks or other fuel system abnormalities if you suspect the presence of alcohol in gasoline exceeds the current government regulations.
- Alcohol blended fuels attract and hold moisture which may lead to fuel phase separation and can result in engine performance problems or engine damage.

Recommended Fuel

The gasoline must have the following minimum octane requirements:

Regular unleaded gasoline with an AKI (R+M)/2 octane rating of 87, or an RON octane rating of 91

Use unleaded gasoline containing MAXIMUM 10% ethanol.

E10

NOTICE

Never experiment with other fuels. Engine or fuel system damages may occur with the use of an inadequate fuel.

NOTICE

Do NOT use fuel from fuel pumps labeled E85.

Use of fuel labeled E15 is prohibited by U.S. EPA Regulations.

Vehicle Fueling Procedure

⚠ WARNING

- **Fuel is flammable and explosive under certain conditions.**
- **Never use an open flame to check fuel level.**
- **Never smoke or allow flame or spark in vicinity.**
- **Always work in a well-ventilated area.**
- **Vehicle must be on a level surface to perform fueling.**

1. Place vehicle on a level surface.
2. Stop engine.

⚠ WARNING

Always stop engine before refueling.

3. Have occupants get out of vehicle.

⚠ WARNING

Do not allow anyone to remain in the vehicle while fueling. If there is a fire or explosion during fueling, a vehicle occupant could be unable to quickly leave the area.

4. Slowly unscrew the fuel reservoir cap counterclockwise to remove it.

⚠ WARNING

If a differential pressure condition is noticed (whistling sound heard when loosening fuel reservoir cap) have vehicle inspected and/or repaired before further operation.

5. Insert the spout into the filler neck.
6. Pour fuel slowly so that air can escape from the tank and prevent fuel flow back. Be careful not to spill fuel.
7. Stop filling when the fuel reaches the bottom of filler neck. **Do not overfill.**

⚠ WARNING

Never top up the fuel tank before placing the vehicle in a warm area. As temperature increases, fuel expands and may overflow.

8. Fully tighten fuel reservoir cap clockwise until you hear a clicking noise.

NOTICE

Always wipe off any fuel spillage from the vehicle.

BREAK-IN PERIOD

Operation During Break-In

A break-in period of 10 operating hours or 300 km (200 mi) is required for the vehicle.

Engine

During the break-in period:

- Avoid full throttle operation.
- Avoid pressing accelerator pedal more than 3/4 of the stroke.
- Avoid sustained accelerations.
- Avoid prolonged cruising speeds.
- Avoid engine overheating.

However, brief accelerations and speed variations contribute to a good break-in.

Brakes

⚠ WARNING

New brakes will not operate at their maximum efficiency until their break-in is completed. Braking performance may be reduced, so use extra caution.

Belt

A new belt requires a break in period of 50 km (30 mi).

During the break-in period:

- Avoid strong acceleration and deceleration.
- Avoid pulling a load.
- Avoid high speed cruising.

Starting the Engine

Press the brake pedal.

Insert key in ignition switch and turn to the ON position.

NOTE:
If shift lever is not set to PARK (P) or (N) NEUTRAL, the brake pedal must be pressed to allow engine starting.

Turn the key to the start position and hold until the engine starts.

NOTE:
Do not press the accelerator pedal. If the accelerator pedal is pressed at least 50%, the engine will not start.

Release the engine start position immediately when the engine has started.

NOTICE
If engine does not start after a few seconds, do not hold the start position more than 10 seconds. Refer to *Troubleshooting*.

Operating the Shift Lever

Apply brakes and select the desired shift lever position.

Release brakes.

NOTICE
When changing gear selection, always completely stop the vehicle and apply the brakes prior to shifting. Damage to the gearbox may occur.

Choosing the Correct Range (Low or High)

It is important to limit situations known to make the drive belt slip excessively. The main reason the drive belt will slip is if the gearbox is in high range when it should be in low range.

Pay attention to the following:

Low range

Low range should be used whenever:

- Pulling
- Pushing
- Hauling a load
- 4x4 applications
- Mud holes
- Water holes
- Crossing obstacles
- Climbing onto trailer
- Hill climbing

It is also recommended to use low range if driving for prolonged periods at speeds under 24 km/h (15 MPH).

Please refer to *Break-in Period* for drive belt break-in information.

High range

High is the default riding range.

Electronic Drive Belt Protection (if available and activated on your model)

Some vehicles have the electronic drive belt protection function activated.

Refer to your authorized Can-Am Off--road dealer for availability and possible activation.

This function is activated when riding at too slow speed for the **high range**, such as in the following situations:

- Pulling
- Pushing
- Hauling a load
- 4x4 applications
- Mud holes
- Water holes
- Crossing obstacles
- Climbing onto trailer
- Hill climbing

In the above mentioned situations the electronic drive belt protection will help protect the CVT drive belt from

being damaged by activating the engine torque limiter. The gauge will also scroll a LOW GEAR message, suggesting the operator to immobilize the vehicle and set to LOW GEAR.

Whenever the electronic drive belt protection is activated, you MUST shift in LOW range. Refer to *Operating the Shift Lever*.

Stopping the Engine and Parking the Vehicle

⚠ WARNING

Avoid parking on steep slope as the vehicle may roll away.

⚠ WARNING

Always put the vehicle in PARK when stopped or parked to prevent rolling.

⚠ WARNING

Avoid parking in places where hot parts can start a fire.

When stopped or parked always bring shift lever to park position. This is especially important when parking on a slope. On very steep inclines or if the vehicle is carrying a cargo, the wheels should be blocked using rocks or bricks.

Select the flattest terrain available for parking.

Release accelerator pedal and use brakes to completely stop the vehicle.

Set shift lever in PARK position.

Turn key in ignition switch to OFF position.

Remove key from ignition switch.

Tips for Maximizing Drive Belt Durability

Riding style and conditions have a direct impact on drive belt durability. Your vehicle features a CVT system design that is optimized to offer the best performance. The CVT and drive belt have successfully endured thousands of miles of durability tests. However, to maximize drive belt durability and to prevent premature failures, it is important that the operator understands the limits of a belt driven CVT system and adapts their riding style and speed accordingly.

If riding in any of the conditions listed below, BRP highly recommends not to constantly hold the throttle wide open (WOT) for more than five (5) minutes.

- High ambient temperatures (above 30 °C (86 °F)
- Heavy loads: Passengers / Heavy cargo
- Heavy drag: Soft sand / Hill climbing / Mud / Using a track kit.

After a few minutes at WOT, partially release the accelerator and allow the CVT to cool down.

For more tips for maximizing the drive belt durability, refer to *Choosing the Correct Range (Low or High)*.

NOTE:
Component failures resulting from these events are not covered by warranty.

Fuel Flooded Engine

If the engine does not start and it is fuel-flooded, the drowned mode can be activated to prevent fuel injection and to cut ignition while cranking. Proceed as follows:

1. Move shift lever in park position.
2. Turn the ignition key in ON position.
3. Press completely and HOLD accelerator pedal.
4. Turn the ignition key to the START position and hold in this position for 10 seconds.
5. Release the ignition key.
6. Release accelerator pedal completely.
7. Turn the ignition key to START position again to allow starting.

If it does not work:

1. Remove the spark plugs. Refer to *Spark Plugs* in *Maintenance Procedures* section.
2. Crank engine several times.
3. Install new spark plugs if possible or clean and dry spark plugs.

If engine does not start, see an authorized Can-Am Off-road dealer, a repair shop, or a person of your own choosing for maintenance, repair, or replacement.

Please refer to the *US EPA Emission-Related Warranty* contained herein for information about warranty claims.

What to do if Water is Suspected to be in the CVT

If water is present in the CVT, the engine will accelerate but the vehicle will remain still.

NOTICE

Stop the engine and drain the water to avoid damage to the CVT.

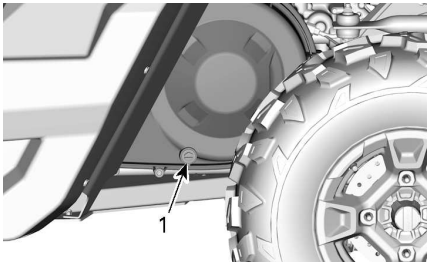

TYPICAL - LEFT SIDE OF VEHICLE UNDER CARGO BOX

1. CVT drain

See an authorized Can-Am dealer , a repair shop or person of your choosing to have the CVT inspected and cleaned.

What to do if Battery is Drained Out

The vehicle can be jump started by using the RED (+) cable to the battery positive pole and the BLACK (-) cable to the vehicle chassis.

NOTICE

Do not connect any electrical source to the steering column or components which are in contact with DPS.

What to Do if Vehicle Rolled Over

Abrupt maneuvers, sharp turns, side hilling or accident may cause vehicle to rollover.

Should the vehicle be rolled over, it will be necessary to have it transported to an authorized Can-Am Off--road dealer for inspection as soon as possible. **NEVER START THE ENGINE!**

Points to be verified, including but not limited to:

- All fluid levels
- Seat belts, including retractors, buckles and semi-cinching tabs
- Cage and its attachment points
- Steering system
- Suspension and its attachment points.

What to do if Vehicle is Submerged

Should the vehicle become immersed, it will be necessary to have it transported to an authorized Can-Am Off--road dealer as soon as possible.

NOTICE
Never start the engine as immersion of the vehicle can cause serious damage to the engine if the correct restart procedure is not followed.

Suspension Adjustment

Suspension adjustment and loading can have an effect on your vehicle handling and comfort.

Choice of suspension adjustments vary with driver's weight, personal preference, riding speed and field condition.

NOTE:
Factory settings are suitable for almost all conditions. Take into consideration that an increase in ground clearance can affect the handling of the vehicle.

Front Suspension Preload Factory Settings	
Model	Factory setting
All	Cam position 1 (soft)

Rear Suspension Preload Factory Settings	
Model	Factory setting
All	Cam position 1 (soft)

Spring Preload Adjustment

⚠ WARNING

The left and right shock adjustment on front or rear suspension must always be set to the same position.
Never adjust one shock only. Uneven adjustment can cause poor handling and loss of stability, which could lead to an accident.

Shorten the springs for a firmer ride and rough conditions.

Lengthen the springs for a softer ride and smooth conditions.

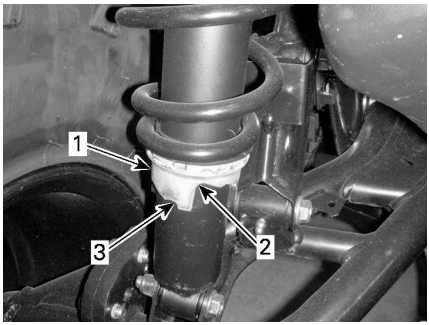

TYPICAL

1. *Adjustment cam*
2. *Softer adjustment*
3. *Firmer adjustment*

DPS Function (If equipped)

The Dynamic Power Steering (DPS) provides a computer controlled, variable power assist, achieved by an electric motor to optimize the amount of steering input required by the rider.

TRANSPORTING THE VEHICLE

When contacting a towing or transporting service, be sure to ask if they have a flatbed trailer, loading ramp or power ramp to safely lift the vehicle and tie-down straps. Ensure the vehicle is properly transported as specified in this section.

NOTICE

Do not tow this vehicle — towing can seriously damage the vehicle's drive system.

NOTICE

Avoid using chains to tie the vehicle — they may damage the surface finish or plastic components.

⚠ WARNING

To avoid severe injury or death or important components damages.

- **Never use the winch cable/ rope to retain a vehicle during trailering.**
- **Never ride with the winch cable/rope attached to a load or another vehicle.**
- **Only use the winch to help a stuck vehicle (snow, mud, etc.).**
- **Always refer to the winch manufacturer's instruction before pulling loads.**

⚠ WARNING

Make sure no loose objects are present inside vehicle during vehicle transportation.

⚠ WARNING

Always transport the vehicle facing forward to avoid damaging the windshield or other components. Parts may detach during transport.

⚠ WARNING

Before attempting to mount vehicle onto a platform or a trailer, make sure to respect the following safety precautions.

Safety Precautions	
Carrying equipment	The carrying item (platform or trailer or flat bed) must be of appropriate dimensions and capacity to safely support and transport the vehicle.
Hauling vehicle	Do not exceed vehicle hauling capacity and specifications. Ensure the trailer or platform is properly secured to the hauling vehicle hitch.
Visibility	Ensure you have a good visibility during the entire maneuver.
Terrain	The hauling vehicle and trailer must be on a leveled surface. Use wheel chocks on trailer and hauling vehicle to avoid any movement.
Ramps	Use ramps with proper rating and secure ramps to the trailer or platform. Avoid steep ramps.
Bystanders	Always make sure bystanders are not close to the vehicle or the trailering equipment while climbing up.

Using Vehicle Power to Climb Onto Trailering Equipment

When vehicle can climb on its own power, proceed as follows;

1. Wear protective gear.
2. Fasten seat belt.
3. Use low gear only (if equipped).
4. If vehicle has 4WD option, use it.
5. When driving remain seated at all times.
6. Ensure proper alignment on rails or platform.
7. Start from a sufficient distance from the trailer to align the vehicle in a straight line with the ramps. Never attempt to turn while getting closer to the ramp. Rear wheels might not be aligned once you get to the ramp and vehicle may fall off.
8. Slowly climb the front wheels onto the ramp to verify alignment.
9. Back off the vehicle, verify ramps are still secure, then proceed at proper speed.
10. Carefully drive vehicle onto platform or trailer. Use sufficient speed to climb without spinning or abruptly accelerating. Avoid acceleration while on ramps to prevent ramps movement.
11. If trailer is inclined towards front, simply let vehicle roll in without acceleration.
12. Once vehicle is climbed, put shift lever to Park. Apply brake locking mechanism (if equipped).

When vehicle cannot move on its own power, or in case overshooting is a risk or if any dangerous condition prevents for embarking on its own power, proceed using a winch;

Using a Winch to Pull Vehicle Onto Trailering Equipment

When vehicle cannot climb on its own power, proceed as follows;

⚠ WARNING

Have the help of an assistant. One person should be in vehicle to have access to vehicle steering, brakes and winch switch, while the other person controls the environment and safety of the maneuver.

⚠ WARNING

Ensure the winch hook can be safely attached to a proper anchoring point. Use proper rigging.

NOTE:
If vehicle can be started safely, let engine idle during winching to avoid draining the battery.

1. Place shift lever to NEUTRAL (N).
2. If the vehicle is equipped with a winch, use the winch to roll the vehicle on the platform.
3. If the vehicle is not equipped with a winch, proceed as follows:
   1. Attach strap to lower front bumper anchor.
   2. Attach the strap to the winch cable of the towing vehicle.
   3. Pull the vehicle on the flatbed trailer with the winch.
4. Put shift lever to Park. Apply brake locking mechanism (if equipped).

Securing Vehicle for Transport

⚠ WARNING

To avoid severe injury or death or important components damages.

- **Never use the winch cable/ rope to retain a vehicle during trailering.**
- **Never ride with the winch cable/rope attached to a load or another vehicle.**
- **Only use the winch to help a stuck vehicle (snow, mud, etc.).**
- **Always refer to the winch manufacturer's instruction before pulling loads.**

1. Remove the key from the vehicle.
2. At rear, secure the vehicle on both sides using a strap around the suspension arm as close to the wheel as possible.
3. At front, secure the vehicle on both sides using a strap around the upper suspension arm as close to the wheel as possible and away from the brake line.

1. Front upper suspension arm

⚠ WARNING

Ensure the brake hose is away from the strap.
A pinched brake hose may reduce the braking performance of the vehicle.

4. Strap the rear tires by using tire towing straps.
5. Firmly attach the rear suspension tie-down straps to both sides of the rear of the trailer with ratchets.
6. Ensure that both the front and rear wheels are firmly attached to the trailer.

Getting Vehicle Out of Trailer

⚠ WARNING

Vehicle may have moved during transport. Ensure vehicle is properly aligned with ramps before proceeding.

⚠ WARNING

Visibility will be greatly reduced when backing off from the trailer. Have the help of an assistant to ensure proper alignment and safe environment.

LIFTING AND SUPPORTING THE VEHICLE

Front of Vehicle

1. Place vehicle on a flat non slippery ground.
2. Ensure vehicle shift lever is set to PARK.
3. Install an hydraulic jack under the front skid plate.
4. Lift front of vehicle and install a jack stand on each side under frame section.

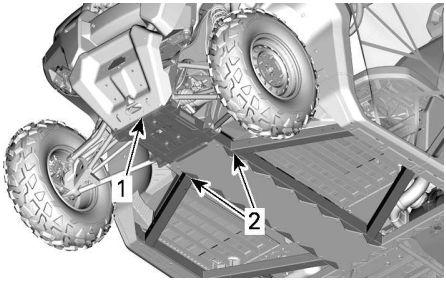

1. Front of vehicle
2. Frame section

5. Lower hydraulic lift and ensure vehicle is supported safely onto both jack stands.

Rear of Vehicle

1. Place vehicle on a flat non slippery ground.
2. Activate 4WD mode.
3. Ensure vehicle shift lever is set to PARK.
4. Install an hydraulic jack under the skid plate.
5. Lift rear of vehicle and install a jack stand on each side under frame section in front of rear wheel.

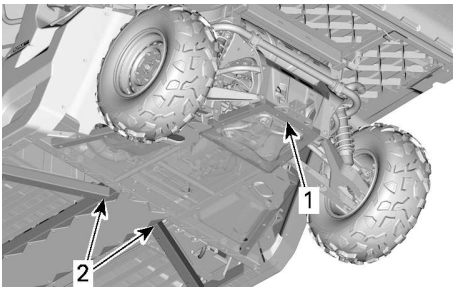

1. Lifting location under skid plate
2. Frame section to install jack stands

6. Lower hydraulic lift and ensure vehicle is supported safely onto both jack stands.

This page is intentionally blank

MAINTENANCE

MAINTENANCE SCHEDULE

Maintenance is very important to keep your vehicle in safe operating condition. The vehicle should be serviced as per the maintenance schedule.

Proper maintenance is the owner's responsibility. A warranty claim may be denied if, among other things, the owner or operator caused the problem through improper maintenance or use.

Perform periodic checks and follow the maintenance schedule. **The maintenance schedule does not exempt the pre-ride inspection**.

Verifying fault codes, as first maintenance step, is a good practice and is highly recommended.

⚠ WARNING
Failure to properly maintain the vehicle according to the maintenance schedule and procedures can make it unsafe to operate.

EPA Regulation - Canadian and USA Vehicles

A repair shop or person of the owner's choosing may maintain, replace, or repair emission control devices and systems. These instructions do not require components or service by BRP or authorized Can-Am Off-road dealers.

Although an authorized Can-Am Off-road dealer has an in-depth technical knowledge and tools to service your vehicle, the emission-related warranty is not conditioned on the use of an authorized Can-Am Off-road dealer or any other establishment with which BRP has a commercial relationship.

Proper maintenance is the owner's responsibility. A warranty claim may be denied if, among other things, the owner or operator caused the problem through improper maintenance or use.

For emission-related warranty claims, BRP is limiting the diagnosis and repair of emission-related parts to the authorized Can-Am Off-road dealers. For more information, please refer to the *US EPA Emission-Related Warranty* contained in the *Warranty* section.

You must follow the instructions for fuel requirements in the fueling section of this manual. Even if gasoline containing greater than ten volume percent ethanol is readily available, the US EPA issued a prohibition against the use of gasoline containing greater than 10 vol% ethanol that applies to this vehicle. The use of gasoline containing greater than 10 vol% ethanol with this engine may harm the emission control system.

Air Filter Maintenance Guideline

Air filter maintenance should be adjusted according to riding conditions.

Air filter maintenance must be increased in frequency when riding on snow, dry sand, dirt, gravel or similar conditions which have a high dust or particle dispersion.

Riding in a group in these conditions will require increasing the air filter maintenance frequency further.

NOTE:
Accessory filters and pre-filter are available for such conditions. Contact an authorized Can-Am off-road dealer for details.

Severe Duty Use

If your vehicle is used in the following conditions, refer to the *Severe Duty* section of the maintenance schedule.

- Repeated hauling of loads at more than 75% the maximum capacity.
  - The increase workload applied to the drive system accelerates the differentials, gearbox/transmission, and engine oil life. This reduces internal component longevity if not replaced more frequently.
- Driving at excessive speeds for prolonged amount of time.

Higher than the average utility or commercial use requires more frequent fluid and wear component replacement than trail, recreational, or occasional utility purposes.

Extreme Cold Condition

An engine that is frequently operated at or below an ambient temperature of -25 ° C (-13 °F) will require an increase in service and maintenance schedule.

Any combustion engine operated at these low ambient temperature will collect an increased amount of condensation at every startup/warm-up.

Since the engine is not reaching operating temperatures for extended periods of time, the oil is starting to be strongly diluted with water and gas residue (more water content).

An engine needs to reach operating temperature, in order to be able to evaporate condensate out of the oil.

If daily usage (work or leisure driving cycle) is similar to those mentioned below, BRP strongly recommends changing the oil at least once a month.

Parameters of an increase in service and maintenance schedule:

- Engine not reaching the proper operating temperature during normal daily usage
- Multiple starts and stops without reaching operating temperature
- Short idle periods
- Low RPM driving cycle in short distances without reaching operating temperature.

NOTE:
BRP strongly recommends the installation of a block heater to help warm up the liquids, this will also help to extend the oil lifetime.

Deep Mud / Water Use

Whether your vehicle is a X mr model or was accessorized for deep mud / water use, this type of usage requires more frequent maintenance and inspections to ensure debris has not infiltrated mechanical components.

If you regularly ride in deep mud or water, refer to the ***Deep Mud / Water*** section of the maintenance schedule.

After every ride, be sure to perform the ***Post Operation Care for Deep Mud / Water Environment*** .

Post Operation Care for Deep Mud / Water Environment

– Rinse the vehicle and its components with fresh water.
– Clean the CVT air filters.
– Drain the CVT compartment and clean if any water or mud is found.
– Inspect and clean engine air filters and engine air filter housing.
– Clean radiator.
– Visually inspect for any water accumulation in the vent hoses (fuel tank, gearbox, front differential and rear final drive). If there is water, bring the vehicle to your nearest authorized Can-Am off-road dealer for inspection and servicing of main components related to the vents.
– Clean front and rear shock absorbers to prevent seal from damage by dust or dirt.
– Clean drive shaft bellows and the propeller shaft yokes or boots.

Maintenance Schedule

Make sure to perform proper maintenance at recommended intervals as indicated in the tables.

The maintenance chart intervals are based on 3 factors:

– Calendar time
– Vehicle hours
– Odometer reading.

Take in account whichever comes first to determine the maintenance threshold.

Your driving habits determines the factors you shall adhere too. For example:

– Someone who uses their vehicle every other weekend trail riding with friends would most likely follow the **odometer reading** to determine the maintenance interval.
– Someone who uses their vehicle seldomly over the year or only on a few occasions (hunting, camping) would most likely follow the **calendar time** to determine the maintenance interval.
– Someone who uses their vehicle daily / weekly for long periods of time such as agricultural / work would most likely follow the **vehicle hours** to determine the maintenance interval.

IMPORTANT: The following tables show the appropriate maintenance application for the first 3 years. For subsequent years, repeat the same pattern alternatively.

Regular Maintenance Overview			
Calendar Years	Vehicle Hours	Odometer	Regular Duty
1	200	3000 km (2000 mi)	**A**
2	400	6000 km (4000 mi)	**A** and **B**
3	600	9000 km (6000 mi)	**A**

Severe Duty and Mud/Water Maintenance Overview			
Calendar Years	Vehicle Hours	Odometer	Severe Duty and Deep Mud / Water
0.5	100	1500 km (1000 mi)	**A+**
1	200	3000 km (2000 mi)	**A+** and **A**
1.5	300	4500 km (3000 mi)	**A+**
2	400	6000 km (4000 mi)	**A+** and **A** and **B**
2.5	500	7500 km (5000 mi)	**A+**
3	600	9000 km (60000 mi)	**A+** and **A**

REGULAR DUTY	A	B
A = Adjust **C = Clean** **I = Inspect** **L = Lubricate** **R = Replace** **T = Torque**	**Every year or 200 hours or 3000 km (2000 mi)**	**Every 2 years or 400 hours or 6000 km (4000 mi)**
Air and Fuel Delivery		
Engine air filter	**I, C**	
Fuel tank vent filter	**R**	
Canister vent pre-filter (CARB and EVAP models)		**R**
Fuel components (fuel cap, hoses, clamps and tank fixation) and function*		**I**
Fuel pump pressure		**I**
Body and Chassis		
Cage fasteners	**T**	
Seat belts retractors, buckles and semi-cinching	**I, C**	
Doors hinges	**L, T**	
Door latch	**L**	
Windshield hinges	**T**	
Engine and Cooling		
Engine oil and filter	**R**	
Valve clearance	**A** (V-twin engines)	**A** (Mono cyl. engines)
Coolant level and concentration	**I, A**	
Coolant	**R** Every 5 years or 12 000 km (8000 mi)	
Spark plugs		**R**
Exhaust and Emissions		
Exhaust components (gaskets, pipes and muffler) and function*	**I, C**	
Spark arrester	**C**	
HVAC		
Air filters	**I, C**	
HVAC components and function*	**I, C**	
Air conditioning compressor belt		**I, R**

REGULAR DUTY	A	B
A = Adjust **C = Clean** **I = Inspect** **L = Lubricate** **R = Replace** **T = Torque**	**Every year or 200 hours or 3000 km (2000 mi)**	**Every 2 years or 400 hours or 6000 km (4000 mi)**
Brake		
Brake components and function*	**I, C**	
Brake fluid	R Every 2 years	
Drive		
Gearbox oil	Replace at first 3000 km (2000 mi) and at 6000 km (4000 mi), then follow the regular schedule	
Gearbox oil	**I**	**R**
Drive components and function*	**I**	
Front differential oil	**I**	**R**
Rear final drive oil (Mono-cyl. engine)	**I**	**R**
Continuously Variable Transmission (CVT)		
CVT components and function*	**I, C, L**	
Electrical		
Various controls, switches, lights, module updates, fault codes, battery condition*	**I**	
Vehicle speed sensor (VSS)		**C**
Steering		
Steering components and function*	**I**	
Suspension		
Suspension components and function*	**I, L, T**	

*For an extensive list of maintenance actions to be performed, refer to your local dealership.

SEVERE DUTY	A+	A	B
A = Adjust **C = Clean** **I = Inspect** **L = Lubricate** **R = Replace** **T = Torque**	**Every 6 months or 100 hours or 1500 km (1000 mi)**	**Every year or 200 hours or 3000 km (2000 mi)**	**Every 2 years or 400 hours or 6000 km (4000 mi)**
Air and Fuel Delivery			
Engine air filter	**I, C**	**R**	
Fuel tank vent filter		**R**	
Canister vent pre-filter (CARB and EVAP models)			**R**
Fuel components (fuel cap, hoses, clamps and tank fixation) and function*			**I**
Fuel pump pressure			**I**
Body and Chassis			
Cage fasteners		**T**	
Seat belts retractors, buckles and semi-cinching		**I, C**	
Doors hinges	**L, T**		
Doors latch	**L**		
Windshield hinges	**T**		
Engine and Cooling			
Engine oil and filter	**R**		
Valve clearance		**A** (V-twin engines)	**A** (Mono cyl. engines)
Coolant level and concentration		**I,A**	
Coolant	**R** Every 5 years or 12 000 km (8000 mi)		
Spark plugs			**R**
Exhaust and Emissions			
Exhaust components (gaskets, pipes and muffler) and function*		**I, C**	
Spark arrester	**C**		
HVAC			
Air filters	**I, C**		
HVAC components and function*		**I, C**	
Air conditioning compressor belt			**I, R**

SEVERE DUTY	A+	A	B
A = Adjust **C = Clean** **I = Inspect** **L = Lubricate** **R = Replace** **T = Torque**	**Every 6 months or 100 hours or 1500 km (1000 mi)**	**Every year or 200 hours or 3000 km (2000 mi)**	**Every 2 years or 400 hours or 6000 km (4000 mi)**
Brake			
Brake components and function*		**I, C**	
Brake fluid	**R** Every 2 years		
Drive			
Gearbox oil	Replace at first 1500 km (1000 mi) and at 3000 km (2000 mi), then follow the regular schedule		
Gearbox oil		**R**	
Drive components and function*		**I**	
Front differential oil		**R**	
Rear final drive oil (Mono-cyl. engine)		**R**	
Continuously Variable Transmission (CVT)			
CVT components and function*		**I, C, L**	
Electrical			
Various controls, switches, lights, module updates, fault codes, battery condition*		**I**	
Vehicle speed sensor (VSS)			**C**
Steering			
Steering components and function*		**I**	
Suspension			
Suspension components and function*	**I, L**	**T**	

*For an extensive list of maintenance actions to be performed, refer to your local dealership.

DEEP MUD / WATER	A+	A	B
A = Adjust **C = Clean** **I = Inspect** **L = Lubricate** **R = Replace** **T = Torque**	**Every 6 months or 100 hours or 1500 km (1000 mi)**	**Every year or 200 hours or 3000 km (2000 mi)**	**Every 2 years or 400 hours or 6000 km (4000 mi)**
Air and Fuel Delivery			
Engine air filter	**I, C**		
Fuel tank vent filter		**R**	
Canister vent pre-filter (CARB and EVAP models)			**R**
Fuel components (fuel cap, hoses, clamps and tank fixation) and function*			**I**
Fuel pump pressure			**I**
Body and Chassis			
Cage fasteners		**T**	
Seat belts retractors, buckles and semi-cinching		**I, C**	
Door hinges		**L, T**	
Doors latch		**L**	
Windshield hinges		**T**	
Engine and Cooling			
Engine oil and filter	**I**	**R**	
Valve clearance		**A** (V-twin engines)	**A** (Mono cyl. engines)
Coolant level and concentration		**I, A**	
Coolant	**R** Every 5 years or 12 000 km (8000 mi)		
Spark plugs			**R**
Exhaust and Emissions			
Exhaust components (gaskets, pipes and muffler) and function*	**I,C**		
Spark arrester	**C**		
HVAC			
Air filters	**I, C**		
HVAC components and function*		**I, C**	
Air conditioning compressor belt	**I, R**		

DEEP MUD / WATER	A+	A	B
A = Adjust **C = Clean** **I = Inspect** **L = Lubricate** **R = Replace** **T = Torque**	**Every 6 months or 100 hours or 1500 km (1000 mi)**	**Every year or 200 hours or 3000 km (2000 mi)**	**Every 2 years or 400 hours or 6000 km (4000 mi)**
Brake			
Brake components and function*	**I,C**		
Brake fluid	**R** Every 2 years		
Drive			
Gearbox oil	Replace at first 1500 km (1000 mi) and at 3000 km (2000 mi), then follow the regular schedule		
Gearbox oil	**I**		**R**
Drive components and function*	**I**		
Front differential oil	**I**		**R**
Rear final drive oil (Mono-cyl. engine)	**I**		**R**
Continuously Variable Transmission (CVT)			
CVT components and function*		**I, C, L**	
Electrical			
Various controls, switches, lights, module updates, fault codes, battery condition*		**I**	
Vehicle speed sensor (VSS)			**C**
Steering			
Steering components and function*	**I**		
Suspension			
Suspension components and function*	**I, L**	**T**	

*For an extensive list of maintenance actions to be performed, refer to your local dealership.

Engine Air Filter

NOTICE

Never modify the air intake system. Otherwise, engine performance degradation or damage can occur. The engine is calibrated to operate specifically with these components.

Engine Air Filter Replacement Guideline

Engine air filter inspection and replacement frequency should be adjusted according to riding conditions as it is critical to ensure proper engine performance and life span.

Engine air filter inspection and replacement frequency must be increased for the following severe riding conditions:

- Riding on dry sand.
- Riding on dry dirt covered surfaces.
- Riding on dry gravel trails or similar conditions.
- Riding in areas with high concentration of seeds or crop husks.
- Riding in severe snow conditions.

NOTICE

When riding in dusty conditions or sand, the air box needs to be cleaned before every ride.

NOTE:
Riding in a group, under these conditions, increases the frequency of the air filter maintenance.

Removing the Engine Air Filter

Tilt the cargo box.

Unlatch air filter cover and remove air filter.

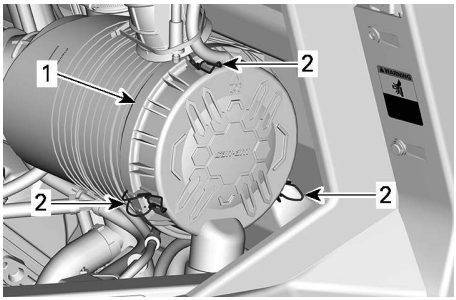

1. *Air filter cover*
2. *Latches*

The filter fits tightly over the outlet tube and there will be some initial resistance. Gently move the end of the filter back and forth to break the seal, then rotate while pulling straight out. Avoid knocking the filter against the housing.

Cleaning the Engine Air Filter

1. Inspect the filter for any signs of leaks. A streak of dust on the clean side of the filter is a telltale sign. Replace filter if there is any damages. Eliminate any source of air leaks before installing a new filter.
2. Clean engine air filter by tapping out heavy dust from paper element, this will allow dirt and dust to get out of the paper filter.

NOTICE

It is not recommended to blow compressed air on the paper element; this could damage the paper fibers and reduce its filtration ability when used in dusty environments. If engine air filter is too dirty and cannot be cleaned following the recommended procedure, it should be replaced.

3. Use a clean damp cloth to wipe both the filter sealing surface and the inside of the outlet tube. Ensure that the outlet tube sealing area is undamaged.

4. Inspect air filter housing for cleanliness.

Duckbill Valve Cleaning

Visually check and physically squeeze the duckbill valve.

NOTICE

Make sure the duckbill valve is flexible and not inverted, damaged or plugged.

Installing the Engine Air Filter

1. Insert the filter carefully.
2. Seat the filter by hand, making certain it is inserted completely into the air cleaner housing.
3. Apply pressure by hand at the outer rim of the filter, not the flexible center.
4. Inspect and carefully clean gasket in the groove of the cover. Replace if damaged.
5. Secure air filter cover with latches.

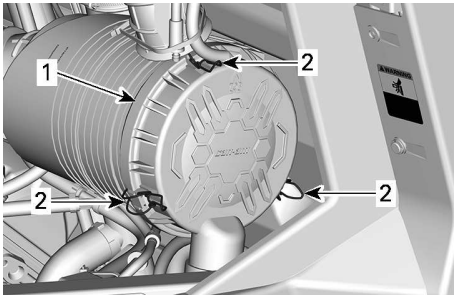

1. Air filter cover
2. Latches

CVT Air Filter

CVT Air Filter Replacement Guideline

CVT air filter inspection and replacement frequency should be adjusted according to riding conditions as it is critical to ensure proper engine performance and life span.

Under the following severe riding conditions, the inspection and replacement frequency must be increased:

– Riding on dry sand.
– Riding on dry dirt covered surfaces.
– Riding on dry gravel trails or similar conditions.
– Riding in muddy conditions.
– Riding in areas with high concentration of seeds or crop husks.
– Riding in severe snow conditions.

NOTICE

When riding in dusty conditions or sand, the air box needs to be cleaned before every ride.

NOTE:
Riding in a group, under these conditions, increases the frequency of the air filter maintenance.

Removing the CVT Air Filter

1. Tilt the cargo box.
2. Press the filter tabs to release it.

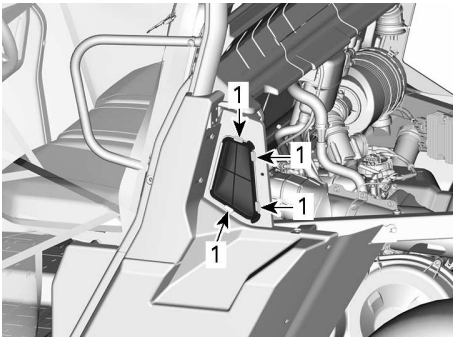

1. Press here

3. Remove the CVT air filter.

Inspecting and Cleaning the CVT Air Filter

1. Inspect filter and replace if damaged.
2. Clean filter using a solution of soft soap and water, then rinse.

3. Gently shake off excess water and allow filter to dry at room temperature.
4. Clean inside the CVT air inlet with a vacuum cleaner.

Installing the CVT Air Filter

1. Reinstall CVT air filter.
2. Lower and lock the cargo box.

Evaporative Emission System Pre-Filter (If Equipped)

Evaporative Emission System Pre-Filter Replacement

1. Tilt the cargo box.
2. Remove the hose clamps.
3. Remove the retaining screws.
4. Remove the pre-filter assembly.

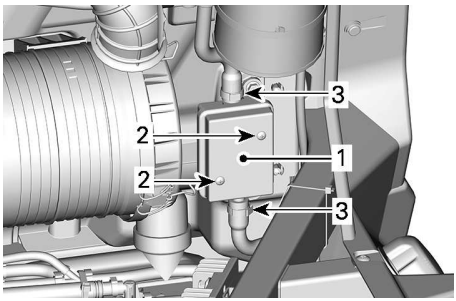

1. *Pre-Filter*
2. *Retaining screw*
3. *Clamps*

5. Install a new pre-filter assembly.

Tightening Torque	
Pre-filter retaining screw	2.5 ± 0.5 Nm (22 ± 4 lbf-in)

6. Secure hoses with clamps.
7. Install all other removed parts.

Engine Oil

Recommended Engine Oil

Rotax® engines were developed and validated using the XPS™ oil.

BRP recommends the use of its XPS engine oil or an equivalent at all time.

Damages caused by the use of an oil not suitable for the engine may not be covered by the BRP Limited Warranty.

1. XPS recommended engine oil

General purpose	XPS 4T 5W40 synthetic blend oil
Cold temperature	XPS 4T 0W40 synthetic oil
Warm temperature	XPS 4T 10W50 synthetic oil

If the recommended XPS engine oil is not available:

- Use a 4-stroke SAE engine oil meeting or exceeding the following lubricant industry specifications.
- Always check the API service label certification on the oil container, it must contain at least one of the indicated standards.
  - **API service classification SJ, SL, SM or SN**

Mono Cylinder Engines

Verifying the Engine Oil Level (Mono Cylinder)

NOTICE

Operating the engine with an improper level may severely damage engine.

NOTICE

Check the oil level when the engine is hot.

1. Start and let the engine run at idle for 60 seconds.
2. Stop engine.
3. Place vehicle on a level surface.
4. Clean around dipstick to avoid foreign particles falling down the tube.

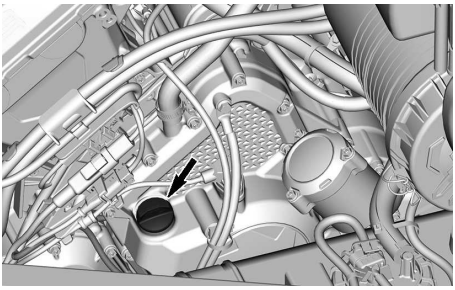

5. Unscrew dipstick then remove it and wipe clean.
6. Reinstall dipstick, screw in it completely.
7. Remove dipstick and check oil level. It should be near or equal to the upper mark.

1. MIN
2. MAX

If the level is between marks, reinstall the dipstick.

If the level is below the lower mark, add oil as follow:

– Place a funnel into the dipstick hole.
– Add a small amount of recommended oil and recheck oil level.
– Continue to add oil until the level reaches the upper mark.

NOTICE

Do not overfill. Wipe off any spillage.

Changing the Engine Oil

NOTICE

Engine oil and oil filter must be replaced at the same time.

Oil change and oil filter replacement should be done with a warm engine.

⚠ CAUTION

The engine oil can be very hot. Wait until engine oil is warm.

1. Place the vehicle on a level surface.
2. Clean the dipstick area.
3. Remove the dipstick.
4. Place a drain pan under the engine drain plug area.
5. Clean the drain plug area.
6. Unscrew drain plug and discard the gasket ring.

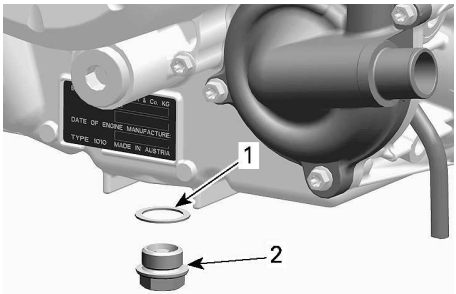

1. *Gasket ring (discard)*
2. *Drain plug*

7. Allow oil to drain completely from the crankcase.
8. Clean the drain plug.
9. Install a NEW gasket ring on the drain plug.

NOTICE

Never use the gasket ring a second time. Always replace by a new one.

10. Install and tighten drain plug to the recommended specification.

Tightening Torque	
Drain plug	30 ± 2 Nm (22 ± 1 lbf-ft)

11. Replace oil filter. Refer to *Oil Filter*.
12. Refill engine, refer to *Recommended Engine Oil*.

NOTE: For engine oil capacity, refer to *Technical Specifications*.

13. Start engine and let it idle for a 60 seconds.
14. Stop engine.
15. Check the oil level immediately, refer to *Verifying the Engine Oil Level*.
16. Refill as necessary.
17. Ensure oil filter and drain plug areas are not leaking.
18. Dispose oil and filter as per your local environmental regulations.

Twin Cylinders Engines

Verifying the Engine Oil Level (V-Twin)

NOTICE

Operating the engine with an improper level may severely damage engine.

NOTICE

Check the oil level when the engine is cold.

1. Place vehicle on a level surface.
2. Clean around dipstick to avoid foreign particles falling down the tube.

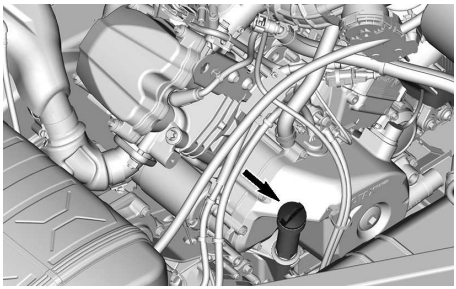

3. Unscrew dipstick then remove it and wipe clean.
4. Reinstall dipstick, screw in it completely.
5. Remove dipstick and check oil level. It should be near or equal to the upper mark.

1. *MIN*
2. *MAX*

If the level is between marks, reinstall the dipstick.

If the level is below the lower mark, add oil as follow:

- Place a funnel into the dipstick hole.
- Add a small amount of recommended oil and recheck oil level.
- Continue to add oil until the level reaches the upper mark.

NOTICE

Do not overfill. Wipe off any spillage.

Changing the Engine Oil

NOTICE

Engine oil and oil filter must be replaced at the same time.

Oil change and oil filter replacement should be done with a warm engine.

⚠ CAUTION

The engine oil can be very hot. Wait until engine oil is warm.

1. Place the vehicle on a level surface.
2. Clean the dipstick area.
3. Remove the dipstick.
4. Place a drain pan under the engine drain plug area.
5. Clean the drain plug area.
6. Unscrew drain plug and discard the gasket ring.

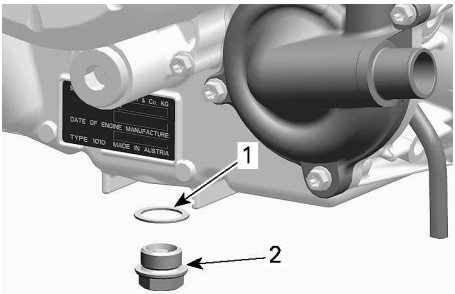

1. *Gasket ring (discard)*
2. *Drain plug*

7. Allow oil to drain completely from the crankcase.
8. Clean the magnetic drain plug from metal shavings and residue.

NOTE: Presence of debris gives an indication of internal engine damage.

9. Install a NEW gasket ring on the drain plug.

NOTICE

Never use the gasket ring a second time. Always replace by a new one.

10. Install and tighten drain plug to the recommended specification.

Tightening Torque	
Drain plug	30 ± 2 Nm (22 ± 1 lbf-ft)

11. Replace oil filter. Refer to *Oil Filter*.
12. Refill engine, refer to *Recommended Engine Oil*.

NOTE: For engine oil capacity, refer to *Technical Specifications*.

13. Start engine and let it idle for a 60 seconds.
14. Stop engine.
15. Check the oil level immediately, refer to *Verifying the Engine Oil Level*.
16. Refill as necessary.
17. Ensure oil filter and drain plug areas are not leaking.
18. Dispose oil and filter as per your local environmental regulations.

Oil Filter

Mono Cylinder Engines

Removing the Oil Filter

1. Clean oil filter area.
2. Remove the oil filter cover and the O-ring.

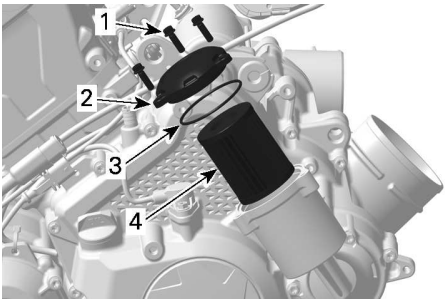

1. *Oil filter screw*
2. *Oil filter cover*
3. *O-ring*
4. *Oil filter*

3. Remove and discard oil filter.

Installing the Oil Filter

1. Check and clean the oil filter inlet and outlet area for dirt and other contaminations.

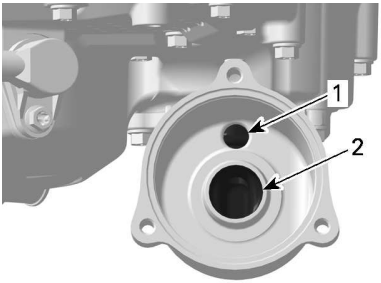

1. *Inlet bore from the oil pump to the oil filter*
2. *Outlet bore to the engine oil providing system*

2. Wet a NEW O-ring with engine oil and slip onto oil filter cover.
3. Install the new filter into the cover.
4. Apply engine oil to the seal on the open end of the oil filter.

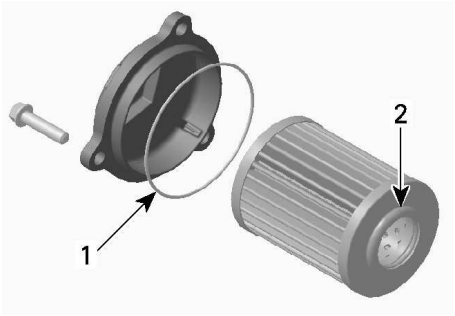

1. *Slightly oil*
2. *Slightly oil*

NOTICE
Pay attention to avoid pinching the O-ring during filter and cover installation.

5. Install the cover on the oil filter housing.
6. Tighten oil filter cover screws to specification.

Tightening Torque	
Oil filter cover screws	10 ± 1 Nm (89 ± 9 lbf-in)

7. Wipe off any oil spillage on engine.

Twin Cylinders Engines

Removing the Oil Filter

1. Remove the engine service cover.
2. Clean oil filter area.

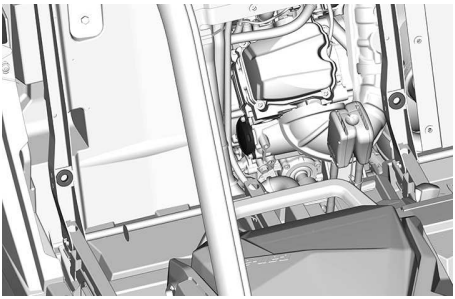

3. Remove oil filter cover.
4. Remove and discard oil filter.

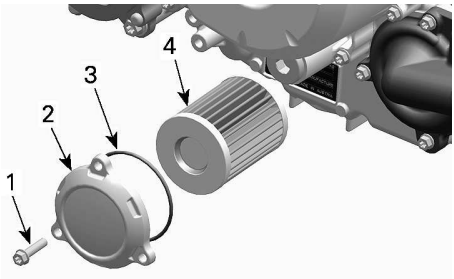

TYPICAL

1. *Oil filter screw*
2. *Oil filter cover*
3. *O-ring*
4. *Oil filter*

Installing the Oil Filter

1. Check and clean the oil filter inlet and outlet area for dirt and other contaminations.

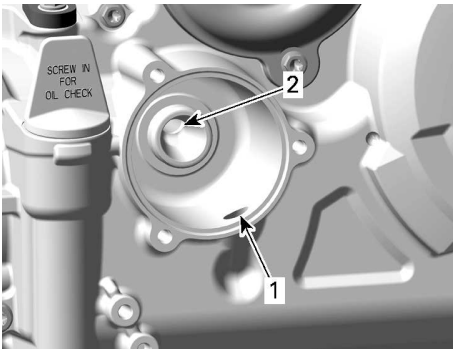

1. *Inlet bore from the oil pump to the oil filter*
2. *Outlet bore to the engine oil providing system*

2. Wet a NEW O-ring with engine oil and slip onto oil filter cover.
3. Install the new filter into the cover.
4. Apply engine oil to the seal on the open end of the oil filter.

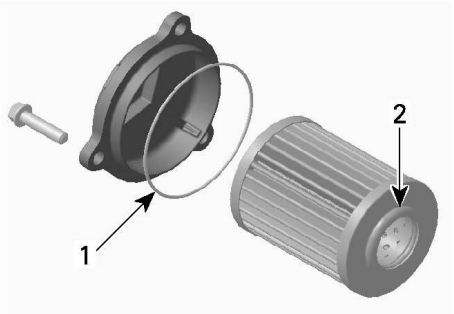

1. *Slightly oil*
2. *Slightly oil*

NOTICE
Pay attention to avoid pinching the O-ring during filter and cover installation.

5. Install the cover on the engine.
6. Tighten oil filter cover screws to recommended specification.

Tightening Torque	
Oil filter cover screws	10 ± 1 Nm (89 ± 9 lbf-in)

7. Wipe off any oil spillage on engine.

Radiator

Inspecting and Cleaning the Radiator

Periodically check the radiator area for cleanliness.

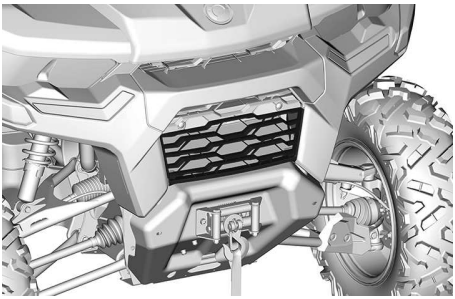

1. To access radiator, pull the lower part of the front grille and slide it down.
2. Inspect radiator and hoses for leaks or any damage.
3. Inspect radiating fins. They must be clean, free of mud, dirt, leaves and any other deposit that would prevent the radiator to cool properly.

   If available, use a garden hose to rinse the radiating fins.

⚠ CAUTION

Never clean radiator with your hands when it is hot. Let the radiator cool down before cleaning.

NOTICE

Be careful not to damage the radiating fins when cleaning. Do not use any object/tool that could damage the fins. When hosing, use low pressure only. Never use a HIGH PRESSURE washer.

4. To install the front grille, insert the upper tabs first and push bottom of grille in the front fascia.

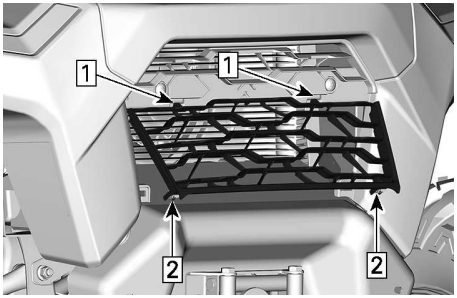

1. Insert upper tabs
2. Push and lock lower tabs in fascia

Engine Coolant

Recommended Engine Coolant

1. XPS recommended coolant

XPS Extended life pre-mixed coolant

Alternative, or if the XPS product is not available.

– Distilled water and antifreeze solution (50% distilled water, 50% antifreeze)

NOTICE

Always use ethylene-glycol antifreeze containing corrosion inhibitors specifically for internal combustion aluminum engines.

Verifying the Engine Coolant Level

NOTICE

Check coolant level with engine cold.

1. Place vehicle on a level surface.
2. Open the cargo box.
3. Remove the pressure cap

⚠ WARNING

In order to avoid potential burns, do not remove the pressure cap or loosen the coolant drain plug if the engine is hot.

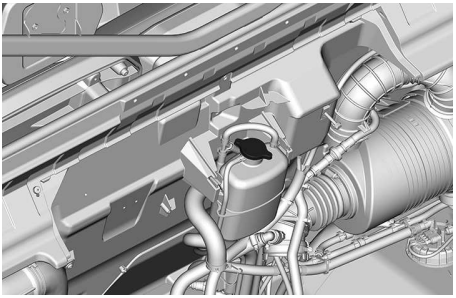

4. Ensure cooling system is full up to the Max line.

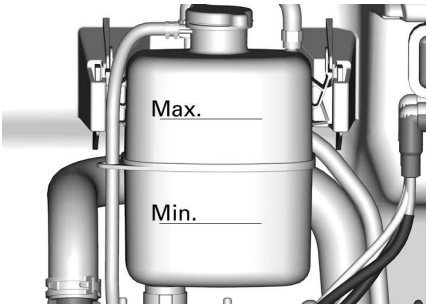

Adding Coolant

1. Remove the coolant tank pressure cap.
2. Using a funnel to avoid spillage, add coolant in system as necessary. **Do not overfill**.
3. Properly reinstall pressure cap on cooling tank.
4. Close the cargo box.

NOTE:
A cooling system that frequently requires addition of coolant is an indication of leaks or engine problems.

Replacing the Engine Coolant

⚠ WARNING

In order to avoid potential burns, do not remove the pressure cap or loosen the coolant drain plug if the engine is hot.

1. Remove the cooling system pressure cap.
2. Unscrew coolant drain plug partially to drain the coolant into a suitable container.

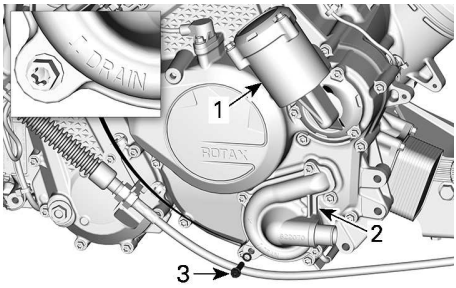

MONO CYLINDER ENGINE

1. *Oil filter housing*
2. *Water pump cover*
3. *Coolant drain plug*

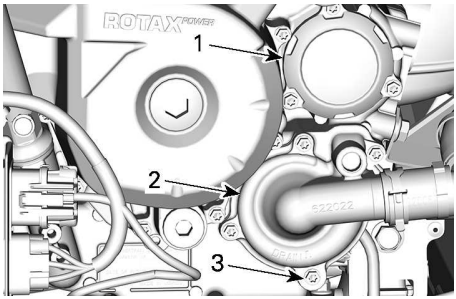

V-TWIN ENGINE

1. *Oil filter cover*
2. *Water pump cover*
3. *Coolant drain plug*

3. Disconnect the lower radiator hose from the water pump cover and drain the remaining coolant into a suitable container.
4. Tighten the coolant drain plug to specification.

Tightening Torque	
Coolant drain plug	10 ± 1 Nm (89 ± 9 lbf-in)

5. Reinstall radiator hose.
6. Fill cooling system with coolant, refer to *Bleeding the Cooling System* procedure.

Bleeding the Cooling System

1. **On models equipped with heater or HVAC:** Put the fan speed to

MAX and raise the temperature control to the maximum.
2. Remove the pressure cap.
3. Fill coolant system until it is full up to the Max line on the coolant tank.

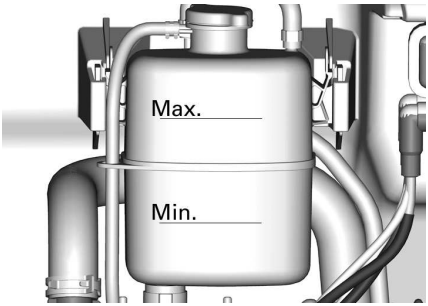

4. Install pressure cap.
5. Run engine at idle with the pressure cap **ON** until the cooling fan cycles on for a second time.
6. Stop the engine and let it cool down.

⚠ WARNING

In order to avoid potential burns, do not remove the pressure cap if the engine is hot.

7. When the engine is cool, remove pressure cap and add coolant if required.
8. Install pressure cap.
9. After the next ride, following this procedure, check coolant level. Add coolant as required. Refer to *Verifying the Engine Coolant Level.*

Heating/Air Conditioning Air Filter (if equipped)

NOTICE

The cleaning of the filters must be performed more often than recommended when riding in dusty conditions or sand.

Fresh Air Filter

Open hood to access fresh air filter.

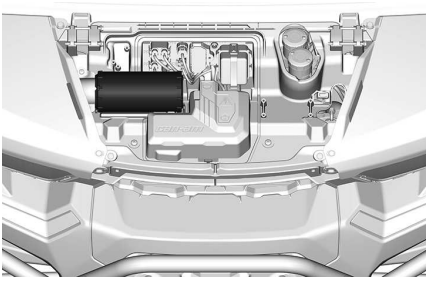

Lift and slide filter to remove.

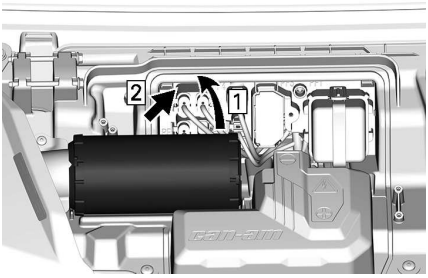

1. *Lift*
2. *Slide*

Inspect the filter for any signs of leaks. A streak of dust on the clean side of the filter is a telltale sign. Replace filter if there is any damages. Eliminate any source of air leaks before installing a new filter.

Clean air filter by tapping out heavy dust from paper element, this will allow dirt and dust to get out of the paper filter.

NOTICE

It is not recommended to blow compressed air on the paper element; this could damage the paper fibers and reduce its filtration ability when used in dusty environments. If air filter is too dirty and cannot be cleaned following the recommended procedure, it should be replaced.

Use a clean damp cloth to wipe both the filter sealing surface and the inside

of the outlet tube. Ensure that the outlet tube sealing area is undamaged.

The installation is the reverse of the removal procedure.

Cockpit Air filters

Cockpit air filters are located at the bottom of the center console. There are 3 filters:

– One at the front of the unit
– One on each side of the unit.

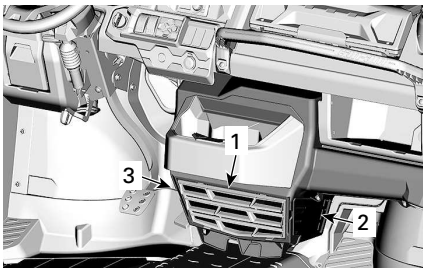

1. *Front cockpit air filter*
2. *Lateral cockpit air filter - passenger side*
3. *Lateral cockpit air filter - driver side*

Front Cockpit Air Filter

To remove this filter, lift the grille tabs and pull up.

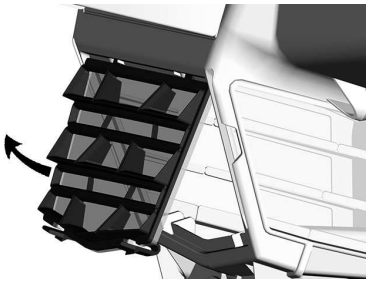

Clean air filter by washing it in lukewarm water with mild soap. Remove excess water and air dry before installation.

Before installing the filter, clean the inside of the heating/air conditioning unit and the evaporator coil using vacuum and a soft brush.

NOTICE

Be careful when brushing to avoid damaging the evaporator coil fins.

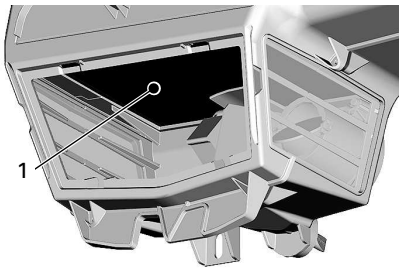

1. *Evaporator*

The installation is the reverse of the removal procedure.

Lateral Cockpit Air Filters

To remove these filters, grab the grille tab and pull.

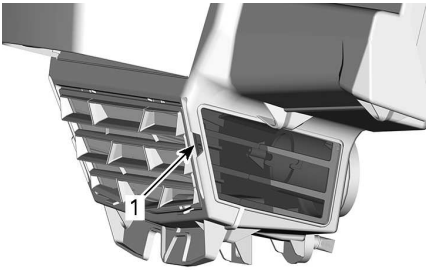

1. Grille tab

Clean air filters by washing them in lukewarm water with mild soap. Remove excess water and air dry before installation.

The installation is the reverse of the removal procedure.

Air Conditioning Compressor Belt

Visually inspect the compressor belt for wear.

Hairline cracks do not require the replacement of the belt, but must be monitored closely. Damage to the center of the belt will eventually require belt replacement, but when cracks extend to the edge of the belt, the belt failure is imminent.

The compressor belt tension verification and belt replacement should be performed by an authorized Can-Am Off-Road dealer according to the *Maintenance Schedule*.

Muffler and Spark Arrester

Inspecting and Cleaning the Muffler Spark Arrester

⚠ CAUTION

Never perform this operation immediately after the engine has been running as exhaust system is very hot.

1. Remove and discard the tail pipe retaining screws.

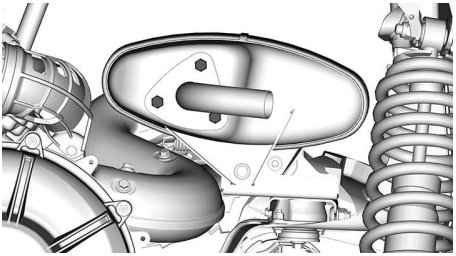

MONO CYLINDER ENGINE CONFIGURATION

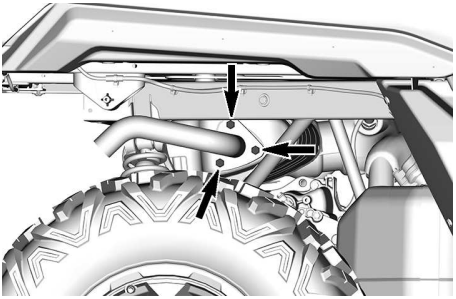

V-TWIN ENGINE CONFIGURATION

2. Remove exhaust tail pipe, gasket (discard) and spark arrester.

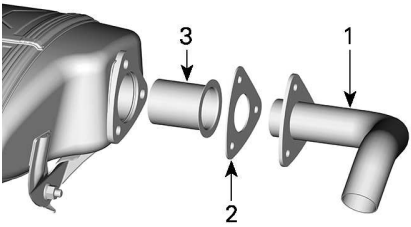

TYPICAL

1. *Tail pipe*
2. *Gasket (discard)*
3. *Spark arrester*

3. Remove carbon deposits from the spark arrester using a brush.

NOTICE
Use a metallic soft brush and be careful to avoid damaging spark arrester mesh.

4. Inspect mesh of spark arrester for any damage. Replace as required.
5. Inspect spark arrester chamber in muffler. Remove any debris as required.
6. Reinstall the muffler spark arrester in the reverse of the removal procedure. However pay attention to the following.

   Tighten to specification.

Tightening Torque	
Tail pipe retaining screw	32 ± 2 Nm (24 ± 1 lbf-ft)

Gearbox

Recommended Gearbox Oil

XPS Recommended Gearbox Oil
75W140 Synthetic gear oil
Alternative, or if not available
75W 140 API GL-5 Synthetic gear oil

NOTE:
The XPS oil is specially formulated to meet the lubrication requirements of this gearbox. BRP strongly recommends the use of its XPS oil. However, if the XPS synthetic gear oil is not available, use the following lubricant:

NOTICE
Do not use another type of oil when servicing.

Mono Cylinder Engines

Verifying the Gearbox Oil Level (Mono Cylinder)

1. Remove the gearbox oil level plug.

   The gearbox oil level plug is located behind the voltage/regulator.

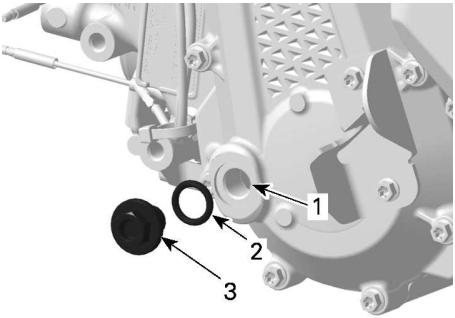

1. *Oil level hole*
2. *O-ring*
3. *Oil level plug*

2. Check oil level.

   The oil should be level with the bottom of the oil level hole.

NOTICE
Operating the gearbox with an improper oil level may severely damage gearbox.

3. Install the oil level plug with O-ring. Tighten plug as per specification.

Tightening Torque	
Oil level plug	5 ± 0.6 Nm (44 ± 5lbf-in)

Changing the Gearbox Oil

1. Start engine and operate vehicle to warm-up the gearbox oil.

NOTICE

Running engine at idle is not sufficient, vehicle transmission must be operated.

2. Position vehicle on a level surface.
3. Place a drain pan under the gearbox drain plug area.
4. Clean drain plug area.
5. Remove drain plug and sealing washer. Discard sealing washer.

⚠ CAUTION

The gearbox oil can be very hot.

6. Remove oil level plug and O-ring and allow oil to completely flow out of gearbox.

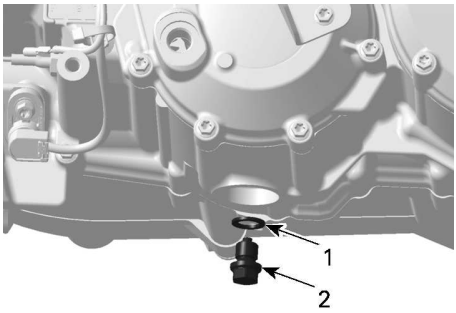

1. Drain plug
2. Seal ring

7. Clean drain plug, pay attention to any debris present on drain plug.

NOTICE

Presence of excessive debris provides an indication of a gearbox problem.

8. Reinstall drain plug with a NEW sealing washer.

Tightening Torque	
Drain plug	20 ± 2 Nm (15 ± 1 lbf-ft)

9. Remove the vehicle speed sensor (VSS).

10. Clean VSS using a clean rag.
11. Install the VSS and tighten screw to specification.

Tightening Torque	
VSS retaining screw	10 ± 1 Nm (89 ± 9 lbf-in)

12. Fill the gearbox through the oil level hole until the oil reaches the bottom of the oil level hole.

Capacity
0.5 l (0.53 qt (liq.,US))

13. Install the oil level plug with its O-ring. Tighten to specification.

Tightening Torque	
Oil level plug	5 ± 0.6 Nm (44 ± 5 lbf-in)

14. Wipe off any spillage.
15. Dispose gearbox oil as per your local environmental regulations.

Twin Cylinders Engines

Verifying the Gearbox Oil Level (V-Twin)

1. Place the vehicle on a level surface.
2. Select PARK position.
3. Clean dipstick area.
4. Remove the gearbox oil dipstick.

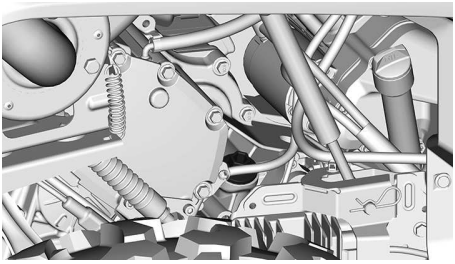

5. Wipe and reinstall the dipstick.
6. Remove dipstick again and check oil level. It should be near or equal to the upper mark.

1. MIN.
2. MAX.
3. Operating range

7. Add oil (if required):
   1. Place a funnel into the dipstick hole.
   2. Add a small amount of recommended oil.
   3. Recheck oil level often.
   4. Repeat the above procedures until oil level reaches the dipstick's upper mark.

NOTICE

Operating the gearbox with an improper oil level may severely damage gearbox.

NOTE:
Do not overfill. Wipe off any spillage.

8. Properly tighten oil dipstick.

Changing the Gearbox Oil

1. Place the vehicle on a level surface.
2. Place a drain pan underneath the oil drain plug area.

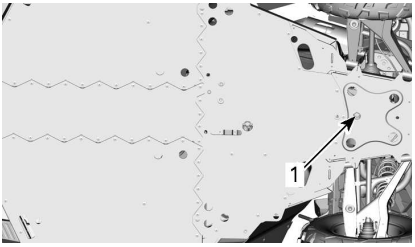

   1. Gearbox drain plug area
3. Clean the following areas.
   – Drain plug area
   – Vehicle speed sensor (VSS) area
   – Dipstick area.
4. Remove the dipstick.
5. Remove the drain plug.
6. Let oil completely drain from gearbox.
7. Clean drain plug from any metallic particles.
8. Install the drain plug.

Tightening Torque	
Drain plug	20 ± 2 Nm (15 ± 1 lbf-ft)

9. Remove the VSS and clean it with a clean rag.

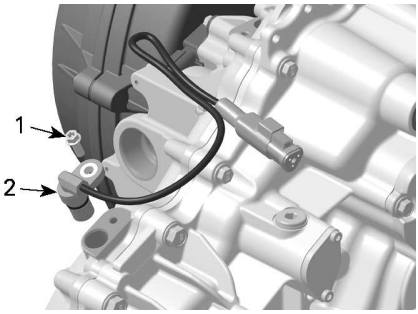

1. *VSS screw*
2. *VSS*

10. Refill gearbox.

NOTE: The oil should be level with the bottom of the oil level orifice.

NOTICE
Use ONLY the recommended type of oil.

11. Reinstall dipstick.
12. Lubricate the VSS O-ring.

Super Lube Grease

13. Install the VSS.

Tightening Torque	
VSS screw	10 ± 1 Nm (89 ± 9 lbf-in)

14. Wipe off any spillage.

Front Differential

Verifying the Front Differential Oil Level

1. Place the vehicle on a level surface.
2. Clean filler plug area prior to checking oil level.

   The drain plug is located on the right side of the front differential.

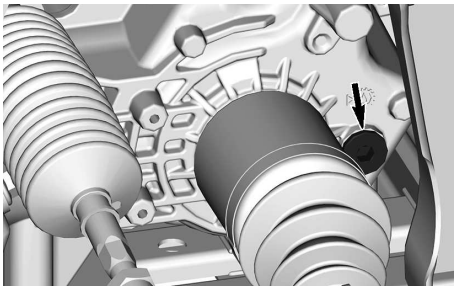

MONO CYLINDER ENGINE

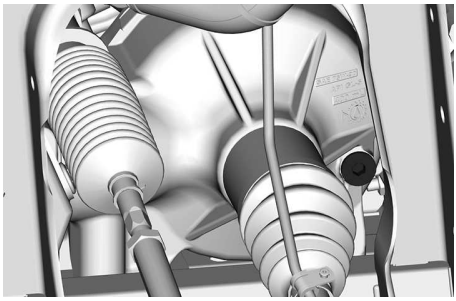

V-TWIN ENGINE

3. Remove the filler plug.
4. Check oil level. The oil should reach the lower edge.
5. Reinstall the filler plug.

Tightening Torque	
Filler plug	16.5 ± 2.5 Nm (146 ± 22 lbf-in)

Recommended Front Differential Oil

XPS Recommended Front Differential Oil
75W90 Synthetic gear oil
Alternative if XPS Product is not Available
75W90 (API GL-5) synthetic gear oil

The XPS oil is specially formulated to meet the lubrication requirements of this differential. BRP strongly recommends the use of its XPS oil.

NOTICE

Do not use another type of oil when servicing.

Changing the Front Differential Oil

1. Place vehicle on a level surface.
2. Set gearbox in park position.
3. From underneath the vehicle, clean the drain plug area.

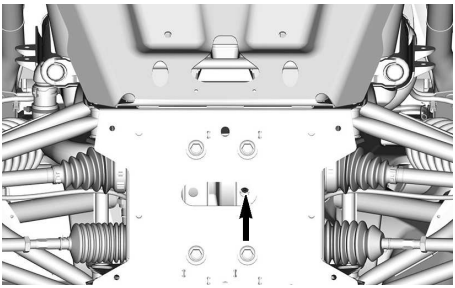

4. Place a drain pan under the rear differential.
5. Remove drain plug.
6. Unscrew filler plug.

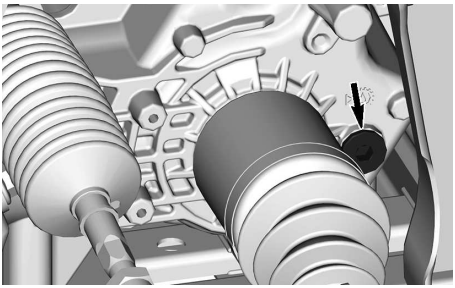

MONO CYLINDER ENGINE

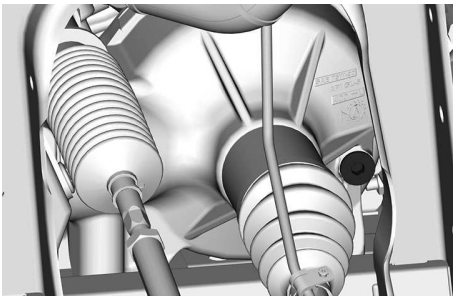

V-TWIN ENGINE

7. Let oil drip completely.
8. Install drain plug.

Tightening Torque	
Drain plug	2.5 ± 0.5 Nm (24 ± 4 lbf-in)

9. Refill differential with recommended oil for optimal performance.
10. For the differential oil capacity, refer to *Technical Specifications*.
11. Reinstall filler plug.

Tightening Torque	
Filler plug	16.5 ± 2.5 Nm (146 ± 22 lbf-in)

Rear Final Drive (Mono Cylinder Models Only)

Verifying the Rear Final Drive Oil Level

1. Place the vehicle on a level surface.
2. Remove the rear wheel on the right side of the vehicle.
3. Clean filler plug area prior to checking oil level.

   The filler plug is located behind the voltage/regulator.

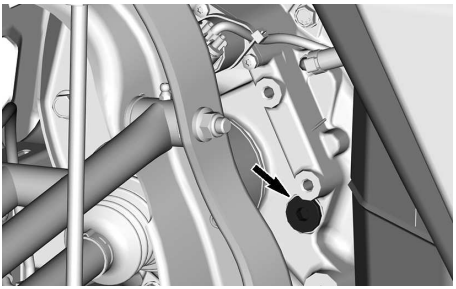

4. Remove the filler plug.
5. Check oil level. The oil should reach the lower edge.
6. Reinstall the filler plug.

Tightening Torque	
Filler plug	16.5 ± 2.5 Nm (146 ± 22 lbf-in)

Recommended Rear Final Drive Oil

XPS Recommended Final Drive Oil
75W90 Synthetic gear oil
Alternative if XPS Product is not Available
75W90 (API GL-5) synthetic gear oil

NOTE:
The XPS oil is specially formulated to meet the lubrication requirements of this gearbox. BRP strongly recommends the use of its XPS oil. However, if the XPS synthetic gear oil is not available, use the following lubricant:

NOTICE
Do not use another type of oil when servicing.

Changing the Rear Final Drive Oil

1. Place vehicle on a level surface.
2. Set gearbox in park position.
3. From underneath the vehicle, clean the drain plug area.

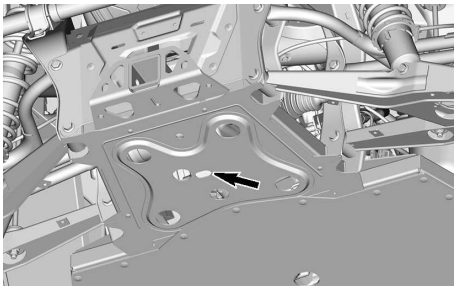

DRAIN PLUG ACCESS HOLE

4. Place a drain pan under the rear final drive.
5. Remove drain plug.
6. Unscrew filler plug.

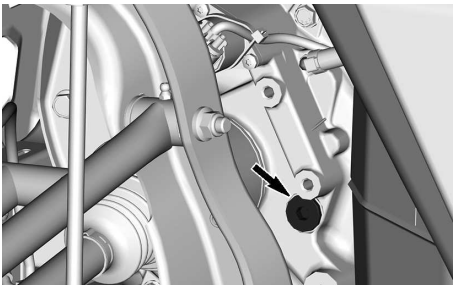

7. Let oil drip completely.
8. Install drain plug.

Tightening Torque	
Drain plug	2.5 ± 0.5 Nm (24 ± 4 lbf-in)

9. Refill final drive with recommended oil for optimal performance.
10. For the oil capacity, refer to *Technical Specifications*.
11. Reinstall filler plug.

Tightening Torque	
Filler plug	16.5 ± 2.5 Nm (146 ± 22 lbf-in)

CVT Cover

For a better understanding, some illustrations are taken with engine out of vehicle. To perform the following instructions, it is not necessary to remove engine.

⚠ WARNING

Never touch CVT while engine is running.
Never drive vehicle when CVT cover is removed.

⚠ CAUTION

Engine must be cool before cover is removed.

NOTICE

This CVT is lubrication free. Never lubricate any components except drive pulley bearing.

Accessing the CVT Cover

1. Tilt the cargo box.
2. Remove the LH rear deflector by removing the plastic rivets.

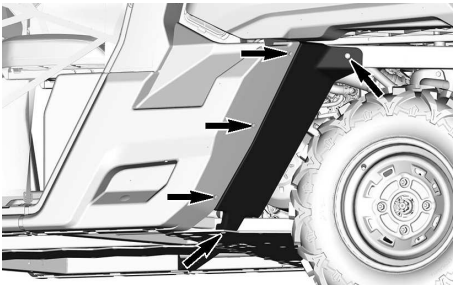

Removing the CVT Cover

1. Place the vehicle on a level surface.
2. Detach all CVT cooling ducts from the CVT cover.
3. Manually, remove all CVT cover retaining screws.

NOTICE

Do not use an impact tool to remove CVT cover screws.

NOTE:
Remove the center top screw last to support the cover during removal.

4. Remove the CVT cover and its gasket.

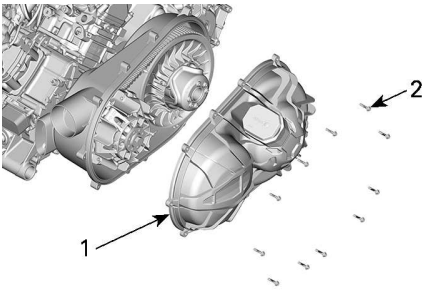

1. CVT cover
2. CVT cover screws

Installing the CVT Cover

1. Install the center top screw of first.
2. Tighten the CVT cover screws as per following sequence.

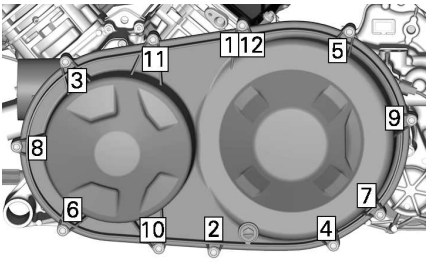

Tightening Torque	
CVT cover screws	7 ± 0.8 Nm (62 ± 7 lbf-in)

3. Reconnect all CVT cooling ducts.

Drive Belt

Removing the Drive Belt (Mono Cylinder Engine)

NOTICE

In case of a drive belt failure, the CVT, cover and air outlet must be cleaned.

Please refer to *Tips for Maximizing Drive Belt Durability* in *Basic Procedures* for some important information.

1. Remove the *CVT Cover*.
2. Install the puller/locking tool in the threaded hole of the driven pulley.

Puller/locking tool **(P/N 529036098)**	

3. Tighten to open the pulley.
4. To remove belt, slip the belt over the top edge of fixed sheave.

Removing the Drive Belt (Twin Cylinder Engine)

NOTICE

In case of a drive belt failure, the CVT, cover and air outlet must be cleaned.

Please refer to *Tips for Maximizing Drive Belt Durability* in *Basic Procedures* for some important information.

1. Remove the *CVT Cover*.
2. Install the adaptor in the threaded hole of the driven pulley.

Driven pulley adapter **(P/N 708200720)**	

3. Screw the puller/locking tool in the threaded hole of the adaptor.

Puller/locking tool **(P/N 529000088)**	

4. Tighten to open the pulley.

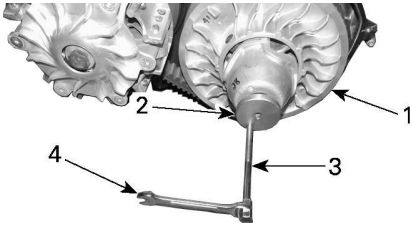

1. *Fixed sheave of driven pulley*
2. *Adaptor*
3. *Puller/locking tool*
4. *Wrench*

5. To remove belt, slip the belt over the top edge of fixed sheave, as shown.

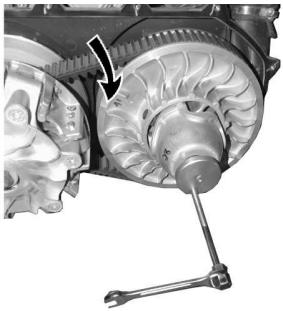

Installing the Drive Belt

For installation, reverse the removal procedure. Pay attention to following details.

The maximum drive belt life span is obtained when the drive belt has the proper rotation direction.

1. Install it so that the arrow printed on belt is pointing towards front of the vehicle, viewed from top.

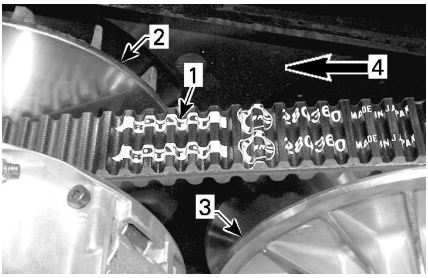

1. *Arrow printed on belt*
2. *Drive pulley (front)*
3. *Driven pulley (rear)*
4. *Rotation direction*

2. Turn the driven pulley until the lowest portion of the cogs on the external surface of the drive belt is even with the driven pulley edge.

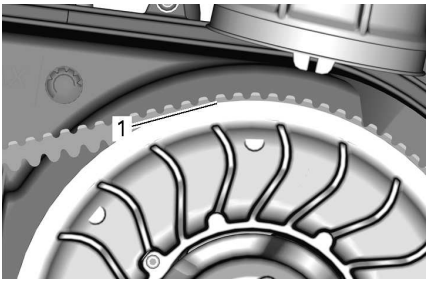

1. *Lowest portion of cogs even with driven pulley edge*

Drive and Driven Pulleys

Inspecting Drive and Driven Pulleys

This inspection must be performed by an authorized Can-Am Off-road dealer, repair shop, or person of your own choosing for maintenance, repair, or replacement.

Drive Pulley

Inspect the bushings and rollers of the sliding sheave of the drive pulley, replace worn parts.

Driven Pulley

Inspect the bushings of the cam and of the sliding sheave of the driven pulley, replace worn parts.

Inspect sliders on fixed sheave.

Spark Plugs

Removing the Spark Plug

1. Unplug spark plug cable.
2. Clean spark plug area with pressurized air before removing spark plug.
3. Unscrew spark plug completely using a spark plug socket, then remove it.

Installing the Spark Plugs

1. Prior to installation make sure that the contact surface of cylinder head and spark plug is free of grime.
2. Using a feeler gauge, set the spark plug gap.

Spark Plug Gap	
Mono cylinder	0.7 to 0.8 mm (.028 to .031 in)
Twin cylinders	0.8 to 0.9 mm (.031 to .035 in)

3. Coat spark plug threads with the following anti-seize lubricant.

Service Product
Cooper-based anti-seize lubricant

4. Screw spark plug into cylinder heads by hand and tighten with a torque wrench and a proper socket.

NOTICE
Do not overtighten spark plugs, engine damage can occur.

Tightening Torque	
Spark plug	11 Nm (97 lbf-in)

Battery

Battery Maintenance

NOTICE

Never charge a battery while installed in vehicle.

These vehicles are equipped with a VRLA battery (Valve Regulated Lead Acid). It is a maintenance-free type battery, there is no need to add water to adjust electrolyte level.

NOTICE

Never remove the battery sealing cap.

Removing the Battery

1. Remove under seat storage compartment if equipped.
2. Remove battery cover by unscrewing the two 1/4 turn fasteners.

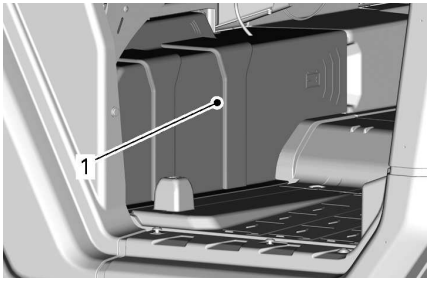

1. Battery cover

3. Disconnect BLACK (-) cable first then RED (+) cable.

NOTICE

Always respect this order for disassembly; disconnect BLACK (-) cable first.

4. Remove battery holder retaining screw(s).

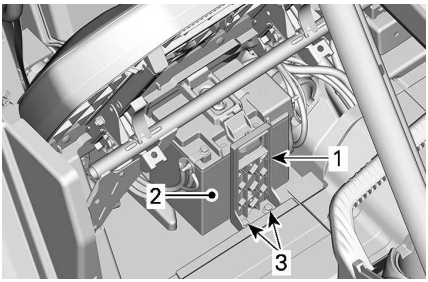

1. Battery holder
2. Battery
3. Battery holder retaining screw(s)

5. Remove battery holder.
6. Remove battery.

Installing the Battery

Battery installation is the reverse of the removal procedure.

NOTICE

Improper orientation of the battery cables (reverse polarity) will result in damage to the voltage regulator.

NOTICE

Always connect RED (+) cable first then BLACK (-) cable.

Fuses and Fusible Links

Fuse Replacement

If a fuse is burnt, replace it by one of the same rating.

NOTICE

Do not use a higher rated fuse as this can cause severe damage.

Fuse Box Location

The vehicle is equipped with multiple fuse boxes. Several are located inside

the front service center and another one under the right passenger seat, near the battery.

Two fuse links inside the electric harness complete the system protection.

An additional 50A fuse to protect the voltage regulator is located near the battery.

To open front service cover, pull on front edges of service cover to unlock mechanism

PULLING ON FRONT SERVICE COVER EDGE.

Lift service cover.

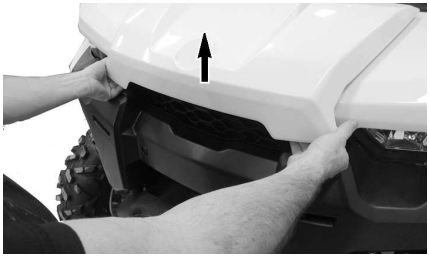

LIFTING FRONT SERVICE COVER EDGE.

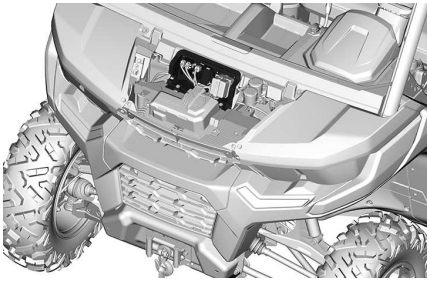

FUSE BOX SUPPORT

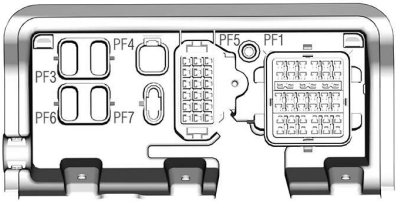

FUSE BOX SUPPORT

Remove the battery cover to access the rear secondary fuse box.

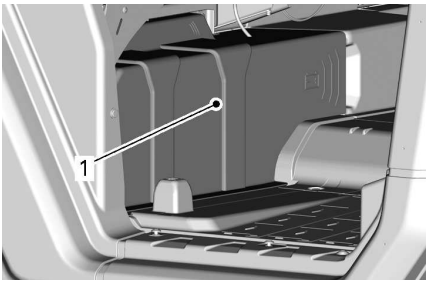

1. Battery cover

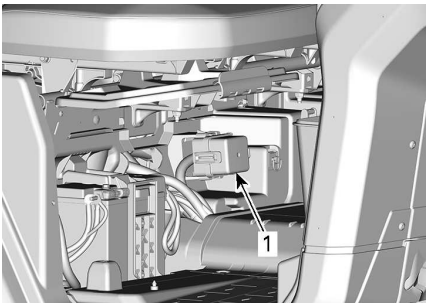

1. Rear secondary fuse box

Fuse Box Description

Fuses – Inside Front Service Center

Inside the front storage center, the fuse box number is molded in the support.

Inside Front Service Center		
No	**Description**	**Rating**
PF1	Master fuse box	—
PF3	DPS	40 A
PF4	Accessories	40 A
PF5	Air Conditioning (if equipped)	—
PF7	Smart-Lok™ (if equipped)	20 A

Master Fuse Box (PF1)– Inside Front Service Center

CAB Models		
No	**Description**	**Rating**
F11	Headlamps	20 A
F12	DC1/DC3/ 12V accessory outlet 1	10 A
F14	12 V Accessory outlet 2	10 A
F16	Tail lamps	10 A
F18	Power-tilt bed (if equipped)	20 A
R3	ECM/ Accessory 12V	—
R8	Brake lights	—

CAB Models		
No	**Description**	**Rating**
R9	Accessory post 12V/ outlet 2	—
R10	A/C clutch	—

All Other Models		
No	**Description**	**Rating**
F11	Headlamps	20 A
F12	DC1/DC3/ 12V accessory outlet 1	10 A
F14	12 V Accessory outlet 2	10 A
F16	Tail lamps	10 A
F17	Heater (if equipped)	5A
F18	Power-tilt bed (if equipped)	20 A
R3	ECM/ Accessory 12V	—
R8	Brake lights	—
R9	Accessory post 12V/ outlet 2	—

Secondary Fuse Box (PF2)– Under passenger seat

Secondary Fuse Box (Under passenger seat)		
No	**Descrip tion**	**Rating**
F4	Cluster/ relays	10 A
F5	Ignition/ injection/ fuel pump	10 A
F6	Engine Control Module (ECM)	10 A
F7	Wheel drive actuator	10 A
F8	Ignition switch Clock	10 A
F9	Cooling fan	25 A
F18	Oxygen sensor Emission control	10 A
F28	Rear outlet	10 A
R1	Cooling fan	—
R2	Main	—

Fuse Links

Fuse link	Descrip tion	Rating
1	Main	18 awg
2	Accessory post	14 awg

Regulator Fuse

No	Descrip tion	Rating
—	Regulator	50 A

Lights

Headlight Bulb Replacement

NOTICE

Never touch glass portion of a halogen bulb with bare fingers, it shortens its operating life. If glass is touched, clean it with isopropyl alcohol which will not leave a film on the bulb.

Unplug connector from bulb.

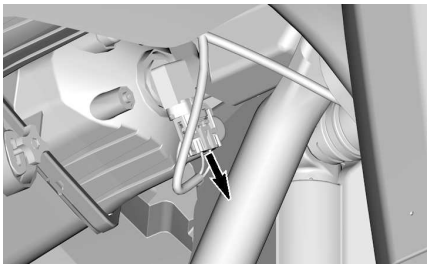

TYPICAL

Rotate bulb.

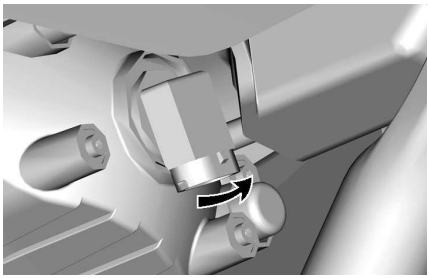

TYPICAL

Pull out bulb.

Properly reinstall removed parts in the reverse order of their removal.

Validate headlights operation.

Headlight Beam Aiming

Turn adjustment screw to adjust beam height to your convenience.

NOTE:
Adjust headlights evenly.

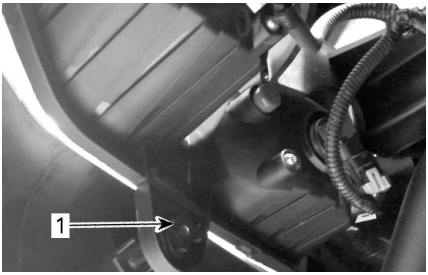

1. Adjustment screw

Taillight Bulbs Replacement

The taillights are built with LEDs (light emitting diode) and this technology proved to be reliable. In the unlikely event they do not work, have them checked by an authorized Can-Am dealer, a repair shop or person of your choosing.

Drive Shaft Bellow and Protector

Inspecting Drive Shaft Bellows and Protector

1. Visually inspect drive shaft protectors and bellows condition.
2. Check protectors for damage or rubbing against shafts.
3. Check bellows for cracks, tears, leaking grease, etc.
4. Repair or replace damaged parts as necessary.

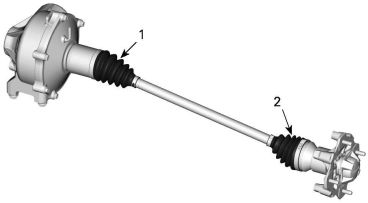

1. Drive shaft bellow - differential side
2. Drive shaft bellow - wheel side

Wheel Bearing

Inspecting a Wheel Bearing

1. Lift and support vehicle. Refer to *Lifting and Supporting the Vehicle*.
2. Push and pull the wheels from the upper edge to feel the play.
3. See an authorized Can-Am Off--road dealer, a repair shop or a person of your choosing if there is excessive play.

TYPICAL

Wheels and Tires

Removing a Wheel

1. Place the vehicle on a level surface.
2. Place shift lever on PARK position.
3. Loosen the wheel lug nuts.
4. Lift and support vehicle. Refer to *Lifting and Supporting Vehicle* section
5. Remove lug nuts and wheel.

Installing a Wheel

1. Inspect studs threads and lug nuts. Replace if needed.
2. Install the wheel.

NOTE: The tires are unidirectional and their rotation must be kept in a specific direction for proper operation.

3. Install all lug nuts by hand.

NOTICE

Always use the recommended wheel lug nuts for the type of wheel. Using a different lug nut could cause damages to the rim or studs.

4. Tighten wheel lug nuts in accordance with the following illustration.

Tightening Torque	
Wheel lug nuts	100 ± 10 Nm (74 ± 7 lbf-ft)

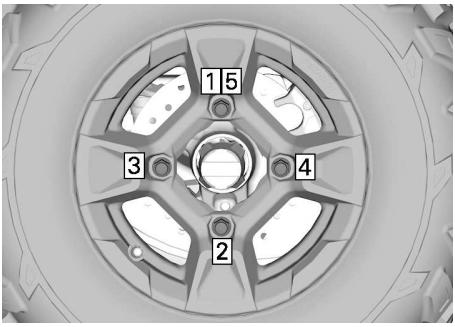

TIGHTENING SEQUENCE

Tire Pressure

⚠ WARNING

Tire pressure greatly affects vehicle handling and stability. Insufficient pressure may cause tire to deflate and rotate on wheel. Overpressure may burst the tire. Always follow recommended pressure.
NEVER set tire pressure below minimum. It could cause the tire to dislodge from the rim.

Check pressure when tires are **cold** before using the vehicle. Tire pressure changes with temperature and altitude. Recheck pressure if one of these conditions has changed.

Refer to the *Tires Pressure and Maximum Load Label* on your vehicle for applicable pressure.

NOTE:
Although the tires are specifically designed for off-road use, a flat may still occur. Therefore, it is recommended to carry a tire gauge, tire pump and a repair kit.

Tire Inspection

Check tire for damage and wear. Replace if necessary.

⚠ WARNING

Do not rotate tires. The front and rear tires have a different size. The left and right tires have different unidirectional tread patterns.

Tire Replacement

Tire replacement should be performed by an authorized Can-Am Off-road dealer, a repair shop or a person of your choosing.

⚠ WARNING

Replace tires only with the same type and size as original tires. For unidirectional tread pattern, ensure that the tires are installed in the correct direction of rotation. Tires should be replaced, by an experienced person, in accordance with tire industry standards and tools.

Suspensions

Lubricating the Front Suspension

Lubricate front arms and stabilizer bar bushings (if equipped).

XPS synthetic suspension grease

There are two grease fittings on each arm oriented upwards.

There is one grease fitting on each stabilizer bar pivot bushing.

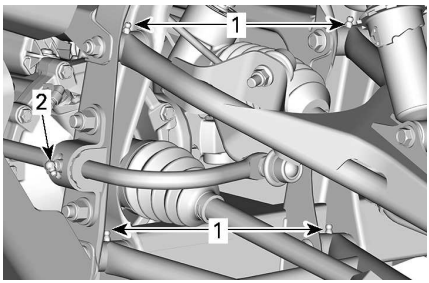

1. *A-arm grease fittings*
2. *Stabilizer bar bushings grease fittings (if equipped)*

Lubricating the Rear Suspension

Lubricate rear suspension arms (two grease fittings on each arm) and rear stabilizer bar bushing.

XPS synthetic suspension grease

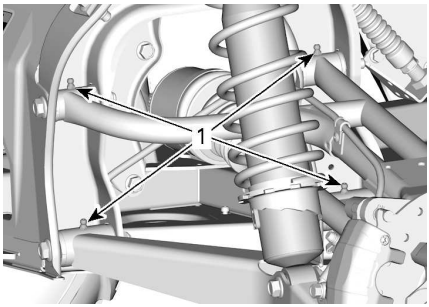

TYPICAL

1. *Rear suspension arm grease fittings*

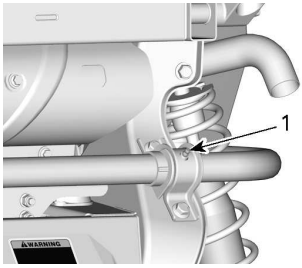

TYPICAL

1. *Rear stabilizer bar bushing grease fitting*

Suspension Inspection

See an authorized Can-Am Off-road dealer, a repair shop or person of your choosing if any problem is detected.

Shock Absorbers

Inspect shock absorber for leaks, bump stop wear out or other damages. Verify fasteners are still well tightened.

Front Suspension Arms

Check suspension arms for cracks, bending or other damages.

Rear Suspension Arms

Check suspension arms for distortion, cracks or bending.

Brakes

Brake Fluid Reservoir Level Verification

With vehicle on a level surface, check brake fluid in reservoir for proper level. Brake fluid level should be between MIN. and MAX. marks.

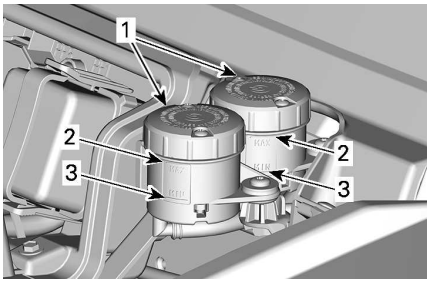

1. *Brake fluid reservoirs*
2. *MAX*
3. *MIN*

NOTE:
A low level may indicate leaks or worn brake pads.

Adding Brake Fluid

1. Clean both reservoir covers and the surrounding area.
2. Add enough new brake fluid to increase the level near the MAX mark.

NOTICE

Do not overfill.

⚠ WARNING

Ensure diaphragm is pushed back inside the cover before installing it.

Recommended Brake Fluid

Always use brake fluid meeting the specification DOT 4 only.

NOTICE

To avoid serious damage to the braking system, do not use fluids other than the recommended one, nor mix different fluids for topping up.

Inspecting Brake System

The brake inspection, maintenance and repair should be performed by an authorized Can-Am dealer, a repair shop or person of your choosing.

However, verify the following between visits to your dealer:

– Brake fluid level
– Brake system for fluid leaks
– Brake pad wear
– Brake cleanliness

⚠ WARNING

The brake fluid replacement or brake system maintenance and repairs should be performed by an authorized Can-Am dealer.

Seat Belts

Cleaning Seat Belt

To clean dirt and debris from the seat belts, sponge the straps with mild soap and water.

⚠ WARNING

To avoid damaging the seat belt components, never use a pressure washer to clean them.

NOTICE

Do not use bleach, dye, or household detergents.

Doors

Lubricating Door Latch Mechanism

1. Lubricate door latch mechanisms (lock and hinges) periodically using a silicone based lubricant.

NOTICE
Never apply any type of grease on door lock mechanism.

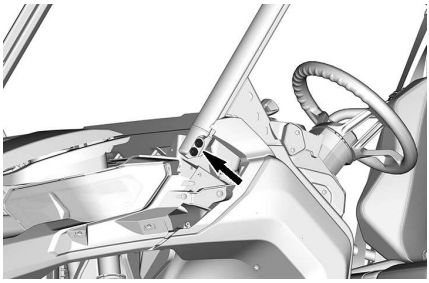

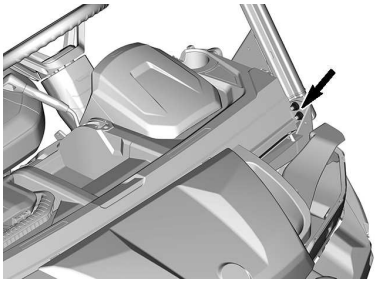

Cage

Cage Fasteners

Remove trim to get access to the fasteners.

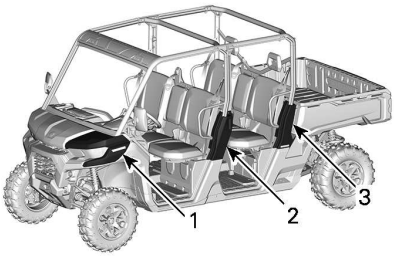

TYPICAL

1. *Front fender*
2. *Middle cage trim*
3. *Side cage cover*

Tighten cage fasteners to specification periodically.

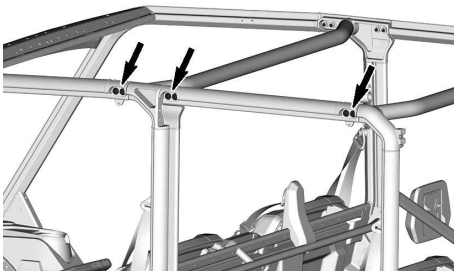

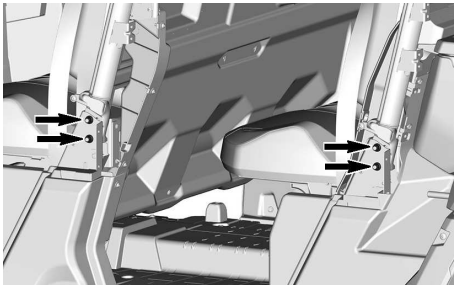

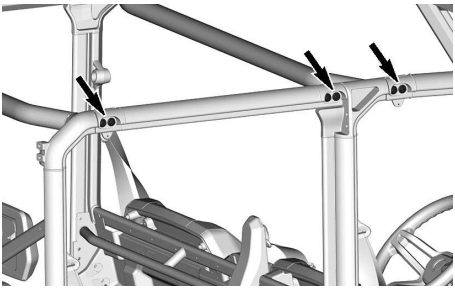

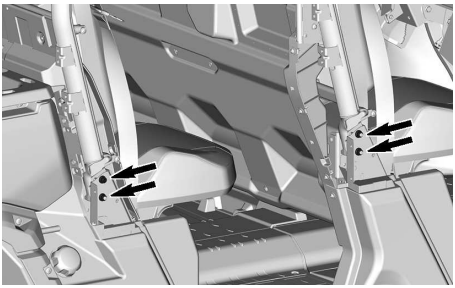

Tightening Torque	
Cage fasteners	67.5 ± 2.5 Nm (50 ± 2 lbf-ft)

Post-Operation Care

When vehicle is used in salt-water environment rinsing the vehicle with fresh water is necessary to preserve vehicle and its components.

Metallic parts lubrication is highly recommended.

This must be performed at the end of each operating day.

Use anti-corrosive lubricant or an equivalent.

Service Product
Lubricant and anti-corrosive

When vehicle is operated in muddy conditions, rinsing the vehicle is recommended to preserve vehicle and its components.

Vehicle Cleaning and Protection

NOTICE

Never use a high pressure washer to clean the vehicle. USE LOW PRESSURE ONLY (like a garden hose).
High pressure can cause damage to electrical or mechanical components.

Pay attention to certain areas where mud or debris can accumulate and potentially cause wear, interferences or promote corrosion.

This list includes but is not limited to:

- Around exhaust system and between muffler and muffler cover
- Under and around the fuel tank
- Radiator
- Shock absorbers
- Around front and rear differentials
- Around and underneath engine and gearbox
- Inside wheels
- On top of skid plates.

Painted parts which are damaged should be properly repainted to prevent rust.

When required, wash the body with warm water and soap (only use mild detergent). Apply non-abrasive wax.

NOTICE

Never clean plastic parts with strong detergent, degreasing agent, paint thinner, acetone, etc.

Protect the vehicle with a cover to prevent dust accumulation during storage.

NOTICE

The vehicle has to be stored in a cool and dry place and covered with an opaque tarpaulin. This will prevent sun rays and grime from affecting plastic components and vehicle finish.

STORAGE AND PRESEASON PREPARATION

When a vehicle is not in use for more than 4 months, proper storage is a necessity.

If the vehicle is to be remain inactive for more than 21 days, disconnect the BLACK (-) cable of the battery.

The use of a low amperage trickle charger is recommended to keep battery fully charged.

Before using your vehicle after storage, a preparation is required.

See an authorized Can-Am Off-road dealer, a repair shop, or a person of your own choosing to have your vehicle prepared properly.

This page is intentionally blank

TECHNICAL INFORMATION

VEHICLE IDENTIFICATION

The main components of your vehicle (engine and frame) are identified by different serial numbers. It may sometimes become necessary to locate these numbers for warranty purposes or to trace your vehicle in the event of loss. These numbers are required by the authorized Can-Am Off-road dealer to complete warranty claims properly. We strongly recommend that you take note of all the serial numbers on your vehicle and supply them to your insurance company.

Vehicle Identification Number

TYPICAL - VIN LABEL

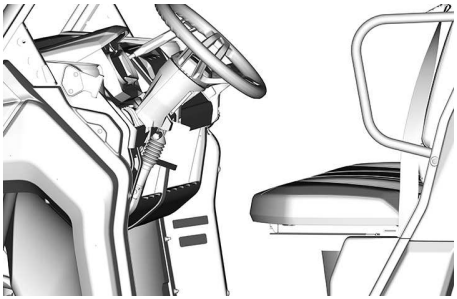

TYPICAL - VIN LABEL LOCATION

Engine Identification Number (EIN)

Mono Cylinder Engine

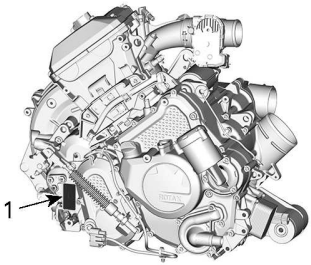

TYPICAL

1. *EIN (Engine Identification Number)*

Twin Cylinder Engine

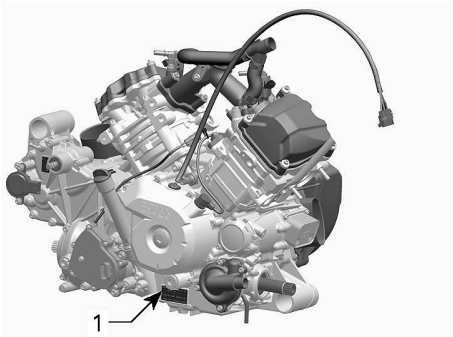

TYPICAL

1. *EIN (Engine Identification Number)*

Technical Information Hang Tag

North American Models

NOTICE

Remember to always return your key to OFF position for a complete electrical shutdown.

Leaving the key in ACC position will drain the battery and the vehicle may not restart.

THIS HANG TAG CANNOT BE REMOVED BEFORE SALE.

AVIS

Ne pas oublier de toujours remettre votre clé en position OFF afin d'assurer un arrêt complet du système électrique.

Laisser la clé en position ACC peut décharger la batterie et empêcher le véhicule de démarrer.

Ne pas retirer cette étiquette avant la vente.

Models Outside North America

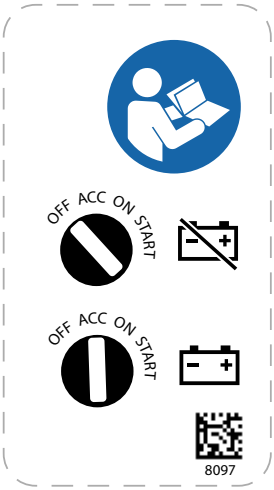

Technical Information Label

Middle Seat Opening Pictogram

This pictogram is located near the locking tab of the middle seat.

HVAC Information Label

This decal is located on the inner side of the front service cover.

READ THE REPAIR MANUAL BEFORE SERVICING

Type of refrigerant: R-134A
Refrigerant filling capacity: 520 g (18 oz)
Oil type: PAG
Safety Standards for Motor Vehicle Refrigerant Vapor Compressions Systems: SAE J639

Air Filter Maintenance Label

North American Models

AIR FILTER MAINTENANCE
MAINTENANCE MUST BE PERFOMED AS SPECIFIED IN THE OPERATOR'S GUIDE. AIR FILTER MAINTENANCE SHOULD INCREASE IN FREQUENCY IN MORE SEVERE (DUSTY) CONDITIONS.

ENTRETIEN DU FILTRE À AIR
L'ENTRETIEN DOIT ÊTRE EFFECTUÉ TEL QUE SPÉCIFIÉ DANS LE GUIDE DU CONDUCTEUR.ENTRETENIR LE FILTRE À AIR PLUS SOUVENT DANS DES CONDITIONS PLUS EXTRÊMES (MILIEUX POUSSIÉREUX). 707800373

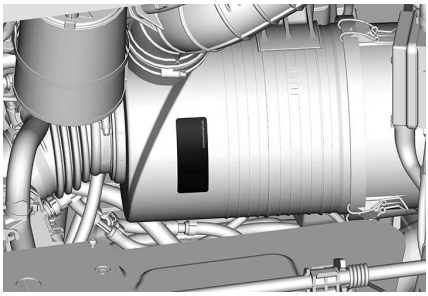

Models Outside North America

NOTICE

To replace the air filter, refer to the operator's guide for the procedure.

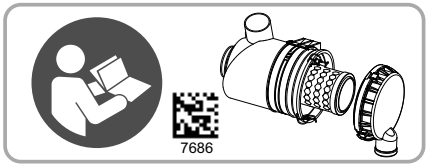

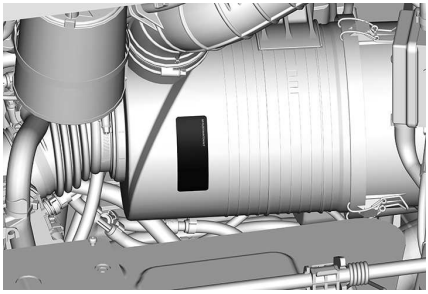

Compliance Label

Regulation (EU) 2016/1628 Applicable for Non-Road Mobile Machineries

Vehicles who comply to Regulation (EU) 2016/1628 (NRMM) are identified on the engine valve cover as well as on the vehicle, near the VIN label.

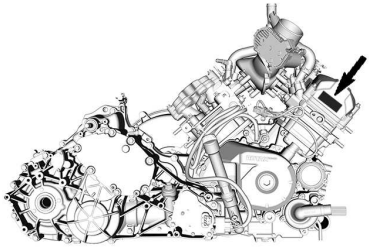

TYPICAL

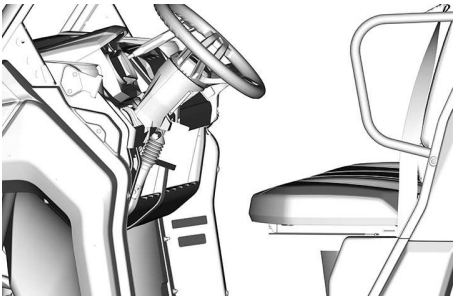

Rotax	NRSC G1 CO2 g/kWh:	XXXX
	#	MXXXXXXX
	Production date:	MM-YYYY
	Family type:	XXXXXX
8639	e13	AT1/P V-####

TYPICAL - NRMM IDENTIFICATION LABEL

NOTE:
Tampering with the engine or its components voids the EU type-approval of that particular engine.

EPA Label

This label is located inside the cockpit, on the LH panel under the dash.

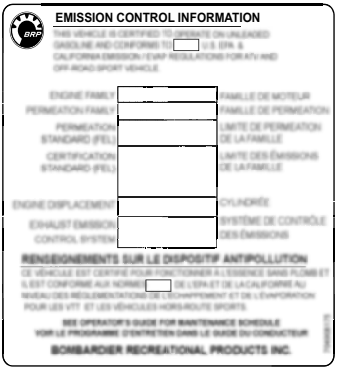

WHEN APPLICABLE

Ethanol Compliance Pictogram

This label is always located near the fuel cap.

ROHVA Compliance Label

This label is located inside the cockpit, on the longitudinal cage tube, above the driver seat.

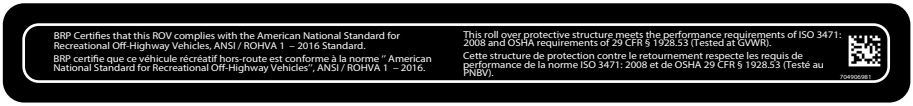

EVAPORATIVE EMISSION CONTROL SYSTEM

California Models with Evaporative Emission Control System

Beginning with the 2018 model-year vehicles, some California models are certified to meet the CARB (California Air Resources Board) TP-933. These models are equipped with an evaporative emission control system consisting of a low permeation fuel tank (LPFT), low permeation fuel lines (LPFL) and an actively purged carbon canister.

The following statement is required by the CCR (California Code of Regulation): An add-on or modified part must be compliant with applicable ARB evaporative emission control standards. A violation of this requirement is punishable by civil and/or criminal punishment.

NOISE EMISSION CONTROL SYSTEM REGULATION

USA and Canada Only

Tampering with Noise Control System Is Prohibited!

U. S. Federal law and Canadian provincial laws may prohibit the following acts or the causing there of:

1. The removal or rendering inoperative by any person other than for purposes of maintenance, repair or replacement of any device or element of design incorporated into any new vehicle for the purpose of noise control prior to its sale or delivery to the ultimate purchaser or while it is in use or
2. The use of the vehicle after such device or element of design has been removed or rendered inoperative by any person.

Among those Acts Presumed to Constitute Tampering Are the Acts Listed Below:

1. Removal or alteration or the puncturing of the muffler or any engine component which conducts removal of engine exhaust gases.
2. Removal or alteration or the puncturing of any part of the intake system.
3. Replacing any moving parts of the vehicle or parts of the exhaust or intake system, with parts other than those specified by the manufacturer.
4. Lack of proper maintenance.

NOISE EMISSION AND VIBRATION VALUES (MACHINERY DIRECTIVE 2006/42/EC COMPLIANCE MODELS)

Noise emission and vibration values are measured in accordance with Machinery Directive 2006/42/EC on a paved surface, at neutral or without belt.

ENGINE		HD9	HD10
Noise	Sound Pressure Level (L_{pA})	66 dB (A) (Uncertainty (K_{pA}) 3dB)	82 dB (A) (Uncertainty (K_{pA}) 3dB)
	Sound Power Level (L_{wA})	Not Applicable	96 dB (A) (Uncertainty (K_{wA}) 3dB)
Vibra tion	Hand-arm system	Less than 2.5 m/s^2	
	Whole body at seat	Less than 0.5 m/s^2	

565 de la Montagne Street
Valcourt (Québec) J0E 2L0
Canada

www.brp.com

ADVENTURE BY DESIGN

EU Declaration of Conformity

Authorized Representative: BRP Europe N.V., Skaldenstraat 125, Gent, Belgium, 9042

This declaration of conformity is issued under the sole responsibility of the manufacturer.

The undersigned, representing the manufacturer, hereby declares that model year **2022 Side by Side Vehicles** marked with the CE mark and a 17-character vehicle identification number (VIN) structured as **3JBxxxxxxNxxxxxxx** under commercial names **Can-Am Traxter**, **Can-Am Maverick Sport** and **Can-Am Maverick** comply with all the relevant provisions of the following Directives and Regulations:

Machinery (MD) Directive 2006/42/EC as amended up to and including Regulation (EU) 2019/1243	ISO 12100:2010 & EN 16990:2020
Non-Road Mobile Machinery (NRMM) Regulation (EU) 2016/1628 on gaseous pollutants as amended up to and including Regulation (EU) 2020/1040	Category ATS, Stage V emission limits
Electromagnetic Compatibility (EMC) Directive 2014/30/EU as amended up to and including Regulation (EU) 2018/1139	CISPR 12:2007/A1:2009 & IEC 61000-6-1:2016 or UN R10.04 or later version
Battery Directive 2006/66/EC as amended up to and including Directive (EU) 2018/849 and, Regulation (EU) 1103/2010 on battery capacity labelling	EN 50342-7:2015
Radio Equipment (RED) Directive 2014/53/EU as amended up to and including Regulation (EU) 2018/1139 (If fitted with radio frequency (RF) D.E.S.S. key)	Art. 3.1a: IEC 62368-1:2014 Art. 3.1b: CISPR 25:2016 & ISO 11452-2:2004 Art. 3.2: ETSI EN 300 330 V2.1.1:2017

Luc Bouchard, Eng.
Director, Product Development, Can-Am SSV
Bombardier Recreational Products Inc.

Valcourt, QC, Canada

March 5, 2021

ski-doo LYNX SEA-DOO EVINRUDE ROTAX can-am

565 de la Montagne Street
Valcourt (Québec) J0E 2L0
Canada

www.brp.com

BRP ADVENTURE BY DESIGN

UK Declaration of Conformity

Authorized Representative: BRP Recreational Products UK Ltd.,
Castle Chambers, 43 Castle Street, Liverpool, L2 9SH

This declaration of conformity is issued under the sole responsibility of the manufacturer.

The undersigned, representing the manufacturer, hereby declares that model year **2022 Side by Side Vehicles** marked with the UK CA mark and a 17-character vehicle identification number (VIN) structured as **3JBxxxxxxNxxxxxxx** under commercial names **Can-Am Traxter**, **Can-Am Maverick Sport** and **Can-Am Maverick** comply with all the relevant provisions of the following Statutory Instruments :

Supply of Machinery (Safety) Regulations 2008, UK SI 2008/1597 as amended up to and including SI 2020/1112	ISO 12100:2010 & EN 16990:2020
Non-Road Mobile Machinery (Type-Approval and Emission of Gaseous and Particulate Pollutants) Regulations 2018, UK SI 2018/764 as amended up to and including SI 2020/1393	Category ATS, Stage V emission limits
Electromagnetic Compatibility Regulations 2016, UK SI 2016/1091 as amended up to and including SI 2020/1112	CISPR 12:2007/A1:2009 & IEC 61000-6-1:2016 or UN R10.04 or later version
Batteries and Accumulators (Placing on the Market) Regulations 2008, UK SI 2008/2164 as amended up to and including UK SI 2020/904	EN 50342-7:2015
Radio Equipment Regulations 2017, UK SI 2017/1206 as amended up to and including SI 2020/1112 (If fitted with radio frequency (RF) D.E.S.S. key)	Art. 3.1a: IEC 62368-1:2014 Art. 3.1b: CISPR 25:2016 & ISO 11452-2:2004 Art. 3.2: ETSI EN 300 330 V2.1.1:2017

Luc Bouchard, Eng.
Director, Product Development, Can-Am SSV
Bombardier Recreational Products Inc.

Valcourt, QC, Canada

March 5, 2021

ski-doo LYNX SEA-DOO EVINRUDE ROTAX can-am

EAC DECLARATION OF CONFORMITY

Left blank for Eurasian Conformity

mark where applicable

This page is intentionally blank

TECHNICAL SPECIFICATIONS

TECHNICAL SPECIFICATIONS

Engine		
Engine type	HD7	ROTAX® Mono cylinder. 4-stroke, Double Over Head Camshaft (DOHC), liquid cooled
	HD9 HD10	ROTAX Twin cylinder. 4-stroke, Single Over Head Camshaft (SOHC), liquid cooled
Number of cylinders	HD7	1
	HD9 HD10	2
Number of valves	HD7	4 valves (mechanical adjustment)
	HD9 HD10	8 valves (mechanical adjustment)
Intake valve clearance	HD7	0.11 mm to 0.19 mm (.0043 in to .0074 in)
	HD9 HD10	0.08 to 0.12 mm (.0031 to .0047 in)
Exhaust valve clearance	HD7	0.31 mm to 0.39 mm (.0122 in to .0153 in)
	HD9 HD10	0.13 to 0.17 mm (.0051 to .0067 in)
Bore	HD7	97 mm (3.82 in)
	HD9 HD10	91 mm (3.58 in)
Stroke	HD7	88 mm (3.46 in)
	HD9 HD10	75 mm (2.95 in)
Displacement	HD7	650 cm^3 (39.7 in^3)
	HD9 HD10	976 cm^3 (59.56 in^3)

Engine	
Exhaust system	Spark arrestor approved by USDA Forest Service Catalyst on NRMM models
Air filter	Synthetic paper filter

Lubrication System			
Type			Wet sump
Oil filter			Replaceable cartridge oil filter (paper type)
Engine oil	Capacity	HD7	2.7 l (2.85 qt (liq.,US))
		HD9 HD10 (models without HVAC)	2 l (2.1 qt (liq.,US))
		HD9 HD10 (models with HVAC)	2.1 l (2.22 qt (liq.,US))
	Recommended XPS oil	General purpose	XPS 5W40 Synthetic blend oil
		Cold temperature	XPS 0W40 Synthetic oil
		Warm temperature	XPS 10W50 Synthetic oil
	Alternate oil if XPS products are not available		If not available, use a 5W40 or 10W50 motor oil that meets the requirements for API service classification SJ, SL, SM or SN. Refer to *Recommended Engine Oil*

Cooling System			
Coolant	Recommended XPS coolant		Extended life pre-mixed coolant
	Alternate oil if XPS products is not available		Ethyl glycol / water mix (50%/50%). or coolant specifically designed for aluminum engines
	Capacity	HD7	6.3 l (1.66 gal (liq.,US))
		HD9 HD10 (models without heather or HVAC)	6.8 l (1.80 gal (liq.,US))
		HD9 HD10 (models with heather or HVAC)	7.5 l (1.98 gal (liq.,US))

Transmission		
Type		CVT (Continuously Variable Transmission)
Engagement	HD7	1950 ± 100 RPM
	HD9 HD10	2000 ± 100 RPM

Gearbox			
Type			Dual range (HI-LO) with PARK, neutral and reverse
Gearbox oil	Capacity	HD7	0.5 l (0.53 qt (liq.,US))
		HD9 HD10	1.25 l (1.321 qt (liq.,US))
	Recommended XPS gearbox oil		XPS 75W140 Synthetic gear oil

Gearbox		
	Alternate oil if XPS products is not available	75W 140 API GL-5

Electrical System			
Magneto generator output		HVAC models	850 W @ 6000 RPM
		All other models	650 W @ 6000 RPM
Ignition system type			IDI (Inductive Discharge Ignition)
Spark plug	Quantity	HD7	1
		HD9 HD10	2
	Make and type	HD7	NGK LMAR8A-8
		HD9 HD10	NGK LMAR8C-9
	Gap	HD7	0.7 to 0.8 mm (.028 to .031 in)
		HD9 HD10	0.8 to 0.9 mm (.031 to .035 in)
Battery	Type		Maintenance free —SLA (Sealed Lead Acid)
	Voltage		12 volts
	Nominal rating	Base DPS	18 A•h
		All other models	30 A•h
	Power starter output		0.75 kW
Headlight			4 x 35W (H8)
Taillight			LED
Signature lights		Limited Lone Star	LED
Fuses			Refer to *Fuses* in the *Maintenance* section

Fuel System			
Fuel delivery			Electronic fuel injection (EFI) with iTC
Throttle body		HD7	46 mm with ETA
		HD9 HD10	54 mm with ETA
Fuel pump			Electric (in fuel tank)
Idle speed			1350 ± 100 RPM (1500 ± 100 RPM when HVAC is ON)
Fuel	Type		Regular unleaded gasoline
	Minimum Octane rating	North America	87 AKI (R+M)/2
		Outside North America	91 RON
Fuel tank capacity			± 40 l (10.6 gal (liq.,US))
Fuel remaining when low fuel light turns ON			± 8.5 l (2.2 gal (liq.,US))

Drive System			
Drive system type			Selectable 2WD/4WD
Front differential oil	Capacity		400 ml (14 fl oz (US))
	Recommended XPS differential oil		XPS 75W90 Synthetic gear oil
	Alternate oil if XPS products is not available		Synthetic gear oil 75W90 API GL-5
Front drive			Selectable 2WD / 4WD with Visco-Lok auto-locking front differential, spiral gears
Front drive ratio			3.6:1
Rear drive			Lockable differential
Rear drive ratio		HD7	3.6:1

Drive System		
	HD9 HD10	3.43:1
CV joint grease		XPS CV joint grease
Spline's propeller shaft grease (grease applied to spline connections)		XPS Propeller shaft grease or equivalent

Steering	
Type	Rack and pinion
Steering wheel	Adjustable tilt steering

Front Suspension		
Suspension type	DPS HD10 XT HD10	Arched double suspension arms
	Lone Star CAB Limited	Double arched suspension arms with stabilizer bar
	All other models	Double suspension arms
Suspension travel	DPS HD10 XT HD10	279 mm (11 in)
	All other models	254 mm (10 in)
Shock absorber	Quantity	2
	Type	Gas charged
Preload adjustment		5 positions cam

Rear Suspension		
Suspension type	DPS HD10 XT HD10 Limited Lone Star CAB	Double arched TTA with stabilizer bar
	All other models	Double TTA with stabilizer bar

Rear Suspension		
Suspension travel	DPS HD10 XT HD10	279 mm (11 in)
	All other models	254 mm (10 in)
Shock absorber	Quantity	2
	Type	Gas charged
Preload adjustment		5 positions cam

Brakes		
Front brake	Qty	2
	Type	220 mm (8.7 in) ventilated brake disc with hydraulic twin-pistons calipers
Rear brake	Qty	2
	Type	220 mm (8.7 in) ventilated brake disc with hydraulic twin-pistons caliper
Brake fluid	Type	DOT 4
	Capacity	Approximately 310 ml (10.5 fl oz (US))
Caliper		Floating
Brake pad material		Metallic
Minimum brake pad thickness		0.5 mm (.02 in)
Minimum brake disc thickness		4 mm (.157 in)
Maximum brake disc warpage		0.2 mm (.01 in)

Tires			
Pressure			Recommended tire inflation pressure is found on the Tire Label. Refer to appropriate *Important On-Product Labels* section for its location.
Tire size	Front	Lone Star Lone Star CAB	711 x 229 x 356 mm (28 x 9 x 14 in)
		All other	686 x 229 x 356 mm (27 x 9 x 14 in)
	Rear	Lone Star Lone Star CAB	711 x 279 x 356 mm (28 x 11 x 14 in)
		All other	686 x 279 x 356 mm (27 x 11 x 14 in)
Minimum tire thread depth			3 mm (.118 in)

Wheels		
Type		Cast aluminum
Rim size	Front	35.6 x 18 cm (14 x 7 in)
	Rear	35.6 x 20.3 cm (14 x 8.5 in)
Wheel lug nuts torque		100 ± 10 Nm (74 ± 7 lbf-ft)
Wheel Offset	Front	41.2 mm (1.6 in)
	Rear	51 mm (2 in)

Chassis	
Cage type	Profiled tube section, high strength steel, ISO 3471 certified

Dimensions			
Overall length		Limited XT	402.2 cm (158.3 in)
		Lone Star CAB	403.7 cm (158.9 in)
		All other models	388 cm (152.7 in)
Overall width		Limited Lone Star CAB	165.1 cm (65 in)
		DPS HD10 XT HD10	162.5 cm (64 in)
		All other models	161.2 cm (63.5 in)
Overall height		Limited	201.7 cm (79.4 in)
		Lone Star CAB	204.7 cm (80.6 in)
		DPS HD10	196.5 cm (77.4 in)
		XT HD10	203 cm (79.9 in)
		All other models	192.6 cm (75.8 in)
Wheelbase			294.5 cm (116.3 in)
Wheel track	Front	Limited Lone Star CAB	146.9 cm (57.8 in)
		All other models	138 cm (54.3 in)
	Rear	Limited Lone Star CAB	139 cm (54.7 in)
		All other models	132.3 cm (52 in)

Dimensions		
Ground clearance	Limited Lone Star CAB	30.5 cm (12 in)
	DPS HD10 XT HD10	31.8 cm (12.5 in)
	All other models	28 cm (11 in)

Loading Capacity and Weight		
Dry weight	Base HD7	775.6 kg (1710 lb)
	BASE HD9	787 kg (1735 lb)
	DPS HD9	803 kg (1771 lb)
	DPS HD10	795.3 kg (1753 lb)
	Limited	1063.4 kg (2344 lb)
	Lone Star	866.6 kg (1910 lb)
	Lone Star CAB	1089.3 kg (2402 lb)
	XT HD9	862.7 kg (1902 lb)
	XT HD10	854.8 kg (1885 lb)
Weight distribution (front/rear)	Limited Lone Star CAB	47/53
	XT	44/56
	All other models	42/58
Cargo box capacity	Californian models	272 kg (600 lb)

Loading Capacity and Weight		
	All other models	454 kg (1,000 lb)
Tailgate capacity		113 kg (250 lb)
Total vehicle load allowed (including driver, passengers, all other loads and added accessories)	Californian models	612 kg (1349 lb)
	Limited	590 kg (1300 lb)
	Lone Star	785 kg (1730 lb)
	Lone Star CAB	545 kg (1202 lb)
	Models under the NRMM compliance	680 kg (1499 lb)
	All other models	794 kg (1750 lb)
Gross vehicle weight rating	Base HD7	1612 kg (3553 lb)
	BASE HD9	1623 kg (3579 lb)
	DPS HD9	1639 kg (3614 lb)
	DPS HD10	1631 kg (3597 lb)
	Limited	1696 kg (3738 lb)
	Lone Star CAB	1677 kg (3696 lb)
	XT HD9	1699 kg (3745 lb)
	XT HD10	1691 kg (3728 lb)
Towing capacity		1 134 kg (2,500 lb)

Loading Capacity and Weight	
Tongue capacity	114 kg (250 lb)
Receiver Hitch	50.8 x 50.8 mm (2 x 2 in)

This page is intentionally blank

TROUBLESHOOTING

TROUBLESHOOTING GUIDELINES

CVT Belt Is Slipping

1. Water has entered in the CVT.

– *Refer to Special Procedures.*

"–" Is Displayed On the Gearbox Position Display

1. Shift lever is between 2 positions.

– *Properly position the shift lever in the desired position.*

2. Shift lever is not properly adjusted.

– *Contact an authorized Can-Am Off-road dealer.*

3. Electrical communication error.

– *Contact an authorized Can-Am Off-road dealer.*

Engine Does Not Turn

1. D.E.S.S. key is not installed on D.E.S.S. post.

– *Securely install key to D.E.S.S. post.*

2. D.E.S.S. key not recognized is displayed in the multifunction gauge.

– *Clean D.E.S.S. key. If message still displayed after cleaning, see an authorized Can-Am Off-road dealer.*

3. Shift lever is not set on PARK.

– *Set shift lever to either in PARK or press the brake pedal.*

4. Burnt fuse.

– *Check fuses.*

5. Weak battery or loose connections.

– *Check charging system fuse.*
– *Check fault message in cluster.*
– *Check battery connections and terminals condition.*
– *Have the battery checked by an authorized Can-Am Off-road dealer.*

6. Defective engine start button.

– *Contact an authorized Can-Am Off-road dealer.*

7. Defective starter solenoid.

– *Contact an authorized Can-Am Off-road dealer.*

Engine Turns Over But Fails To Start

1. Flooded engine

– *Active the drowned mode to start the engine. Refer to Flooded Engine in Special Procedures section.*

2. No fuel to the engine (spark plug dry when removed).

– *Check fuel tank level.*
– *Check fuel pump fuse.*
– *Obstructed fuel pump pre-filter or fuel pump failure.*

See an authorized Can-Am Off-road dealer, a repair shop, or a person of your own choosing for maintenance, repair, or replacement.

Please refer to the US EPA Emission-Related Warranty contained herein for information about warranty claims.

3. Spark plug/ignition (no spark).

– *Check ignition fuse.*
– *Remove spark plug then reconnect to ignition coil.*
– *Start engine with spark plug grounded to the engine away from spark plug hole. If no spark appears, replace spark plug.*

If trouble persists, see an authorized Can-Am Off-road dealer, a repair shop, or a person of your own choosing for maintenance, repair, or replacement.

Please refer to the US EPA Emission-Related Warranty contained herein for information about warranty claims.

Engine Lacks Acceleration or Power

1. Seat belt not buckled properly. Check cluster message.

– *Buckle up seat belt.*

2. Fouled or damaged spark plug.

– *Replace spark plugs.*

3. Engine air filter plugged or dirty.

– *Check air filter and replace if necessary.*
– *Check deposits in engine air filter housing.*

4. Water in CVT

– *Drain water from CVT. Refer to Special Procedures section.*

5. CVT dirty or worn-out.

– *Contact an authorized Can-Am Off-road dealer.*

6. Lack of fuel

– *Dirty or clogged fuel pump pre-filter. See an authorized Can-Am Off-road dealer, a repair shop, or a person of your own choosing for maintenance, repair, or replacement. Please refer to the US EPA Emission-Related Warranty contained herein for information about warranty claims.*

7. Engine is in Torque Limitation mode (if equipped).

– *Engine torque is gradually limited for protection when coolant temperature is too high. Check multifunction gauge display for engine temperature.*
– *Let engine cool down.*

8. Engine is in limp home mode.

– *Multifunction gauge CHECK ENGINE indicator lamp is on and display shows LIMP HOME. See an authorized Can-Am Off-road dealer, a repair shop, or a person of your own choosing for maintenance, repair, or replacement. Please refer to the US EPA Emission-Related Warranty contained herein for information about warranty claims.*

Engine Overheats

1. Low coolant level in cooling system.

– *Check coolant level and refill. See Maintenance Procedures. Seek service from an authorized Can-Am Off-road dealer, a repair shop, or a person of your own choosing for maintenance, repair, or replacement. Please refer to the US EPA Emission-related warranty contained herein for information about warranty claims.*

2. Cooling fan is not working.

– *Ensure cooling fan is not jammed and working properly.*
– *Check fan fuse. See Fuses and Fusible Links in the Maintenance Procedures.*

3. Dirty radiators fins.

– *Check and clean radiator fins. See Maintenance Procedures.*

Engine Misfire

1. Fouled/damaged/worn spark plug.

– *Replace spark plugs as required.*

2. Water in fuel.

– *Drain fuel system and refill with fresh fuel.*

The RPM Increases But the Vehicle Does Not Move

1. Water in the CVT.

– *Drain water from CVT. See Special Procedures section.*

2. CVT dirty or worn-out or belt failure.

– *Contact an authorized Can-Am Off-road dealer.*

Partial or No Response From the Accelerator Pedal - Check Engine Is ON and PPS Fault Message Is Displayed

1. Partial failure of the accelerator pedal sensors (PPS).

– *Contact an authorized Can-Am Off-road dealer.*

2. Total failure of the accelerator pedal sensors (PPS).

– *Contact an authorized Can-Am Off-road dealer.*

AUDIO SYSTEM – TROUBLESHOOTINGA

Unit Does Not Turn On

1. Faulty fuse.

– *Remove the fuse and check with a continuity meter. Replace if necessary.*

2. Poor connection integrity.

– *Check “Ground” and “+12VDC” connections for pinched wires; ensure tight connections.*

System Will Not Power On

1. Blown fuse

– *Remove amplifier and check amplifier fuses.*
– *Remove head unit and check head unit fuse.*

2. Bad connection to battery posts

– *Inspect radio main power fuse.*
– *Check connections in vehicle.*

Amps Not Turning On

1. Poor connection integrity

– *Check “Amp Turn-On” connections for pinched wires; ensure tight connections.*

No Audio Will Play

1. RCA cables are not connected

– *Remove head unit and make sure RCA cables are fully seated. If necessary, secure with duct tape.*
– *Remove amplifier and make sure all connectors are fully seated.*

2. Amplifier main harness is not fully connected

– *Remove amplifier and verify that amplifier harness is fully seated.*

No Sound or Low Sound from a Specific Zone or All Zones

1. Mute or Pause is on

– *Press “Play” or “Pause”, or press and hold the VOL/SEL knob from the Audio Zone Levels screen to verify that Mute is not on.*

2. Volume or zone level is turned down or disabled

– *Check Audio Zone Levels screen or Audio Zone Setup menu settings.*

Speakers Are Malfunctioning

1. RCA cables are improperly connected

– *Remove head unit (refer to instruction sheet) and make sure RCA cables are fully seated. If necessary, secure with duct tape.*
– *Remove speaker and make sure connectors are fully seated. If necessary, pinch connectors with pliers to make them tighter.*

2. Speaker is defective.

– *Replace speaker. Contact an authorized Can-Am Off-road dealer.*

Volume Knob Malfunctioning

1. Bad head unit

– *Replace head unit. Contact an authorized Can-Am Off-road dealer.*

DIGITAL DISPLAY MESSAGES

If an abnormal engine condition occurs, the following messages can be combined with a pilot lamp.

Message	Description
D.E.S.S. KEY NOT RECOGNIZED	D.E.S.S. key requires cleaning. If message still displayed after cleaning, See an authorized Can-Am Off-road dealer.
BAD KEY	Indicates that you have used the wrong D.E.S.S. key, use the proper key for this vehicle.
CHECK ENGINE	All active or previously activated faults that require attention. No engine limitation engaged.
LIMP HOME	Critical faults requiring diagnostic as soon as possible. An engine limitation is engaged and/or the engine behavior is modified.
TPS FAULT	Throttle body fault, generally followed by a Limp Home message.
BRAKE SWITCH FAULT	Brake signal fault.
CHECK DPS	Check engine pilot light on. Indicates that the DPS (Dynamic Power Steering) does not work properly. See an authorized Can-Am Off-road dealer.
PPS FAULT	Faulty Pedal Position Sensor(s) (PPS). See an authorized Can-Am Off-road dealer.
FUEL SENSOR FAULT	When the fuel sender resistor value is out of range the digital display module will detect it and display the message.
CHECK SMART-LOK	Check engine pilot light on. Indicates that the Smart-Lok does not work properly. See an authorized Can-Am Off-road dealer.

This page is intentionally blank

WARRANTY

BRP LIMITED WARRANTY USA AND CANADA: 2022 CAN-AM® SSV

1) SCOPE OF THE LIMITED WARRANTY

Bombardier Recreational Products Inc. (“BRP”) warrants its 2022 Can-Am side--by-side vehicles (“SSV”) sold by authorized Can-Am SSV dealers (as hereinafter defined) in the United States of America (“USA”) and in Canada from defects in material or workmanship for the period and under the conditions described below. This limited warranty will become null and void if:

1. The SSV was used for racing or any other competitive activity, at any point, even by a previous owner; or
2. The SSV has been altered or modified in such a way so as to adversely affect its operation, performance or durability, or has been altered or modified to change its intended use.

Non-factory installed parts and accessories are not covered under this limited warranty. Please refer to the applicable parts and accessories limited warranty text.

2) LIMITATIONS OF LIABILITY

THIS WARRANTY IS EXPRESSLY GIVEN AND ACCEPTED IN LIEU OF ANY AND ALL OTHER WARRANTIES, EXPRESSED OR IMPLIED, INCLUDING WITHOUT LIMITATION ANY WARRANTY OF MERCHANTABILITY OR FITNESS FOR A PARTICULAR PURPOSE. TO THE EXTENT THAT THEY CANNOT BE DISCLAIMED, THE IMPLIED WARRANTIES ARE LIMITED IN DURATION TO THE LIFE OF THE EXPRESS WARRANTY. INCIDENTAL AND CONSEQUENTIAL DAMAGES ARE EXCLUDED FROM COVERAGE UNDER THIS WARRANTY. SOME STATES/PROVINCES DO NOT ALLOW FOR THE DISCLAIMERS, LIMITATIONS AND EXCLUSIONS IDENTIFIED ABOVE, AS A RESULT, THEY MAY NOT APPLY TO YOU. THIS WARRANTY GIVES YOU SPECIFIC RIGHTS, AND YOU MAY ALSO HAVE OTHER LEGAL RIGHTS WHICH MAY VARY FROM STATE TO STATE, OR PROVINCE TO PROVINCE.

Neither the distributor, any BRP dealer nor any other person has been authorized to make any affirmation, representation or warranty regarding the product, other than those contained in this limited warranty, and if made, shall not be enforceable against BRP. BRP reserves the right to modify this limited warranty at any time, being understood that such modification will not alter the warranty conditions applicable to the products sold while this warranty is in effect.

3) EXCLUSIONS – ARE NOT WARRANTED

The following are not warranted under any circumstances:

- Normal wear and tear;
- Routine maintenance items, tune ups, adjustments;
- Damage caused by failure to provide proper maintenance and/or storage, as described in the Operator's Guide;
- Damage resulting from removal of parts, improper repairs, service, maintenance, modifications or use of parts not manufactured or approved by BRP or resulting from repairs done by a person that is not an authorized servicing Can-Am SSV dealer;

- Damage caused by abuse, abnormal use, neglect or operation of the product in a manner inconsistent with the recommended operation described in the Can-Am SSV Operator's Guide;
- Damage resulting from accident, submersion, fire, theft, vandalism or any act of God;
- Operation with fuels, oils or lubricants which are not suitable for use with the product (see the Operator's Guide);
- Damages from rust, corrosion or exposure to the elements;
- Damage resulting from water or snow ingestion;
- Incidental or consequential damages, or damages of any kind including without limitation towing, storage, telephone, rental, taxi, inconvenience, insurance coverage, loan payments, loss of time, loss of income.

4) Warranty Coverage Period

This limited warranty will be in effect from (1) the date of delivery to the first retail consumer or (2) the date the product is first put into use, whichever occurs first and for the following period:

- Twelve (12) CONSECUTIVE MONTHS, for private use, commercial use or governmental use owners.
- For emission-related components; please also refer to the *US EPA EMISSION- RELATED WARRANTY* contained herein
- For evaporative emission-related components of California models equipped with evaporative emission control system produced by BRP for sale in the State of California that are originally sold to a resident or subsequently warranty registered to a resident in the State of California, please also refer to the *California Evaporative Emission Control Warranty Statement* contained herein.

The repair or replacement of parts or the performance of service under this warranty does not extend the life of this warranty beyond its original expiration date.

5) CONDITIONS TO HAVE WARRANTY COVERAGE

This warranty coverage is available **only** if **each** of the following conditions has been fulfilled:

- The 2022 Can-Am SSV must be purchased as new and unused by its first owner from a Can-Am SSV dealer authorized to distribute Can-Am SSV's in the country in which the sale occurred ("Can-Am SSV dealer");
- The BRP specified pre-delivery inspection process must be completed and documented and signed by the purchaser;
- The 2022 Can-Am SSV must have undergone proper registration by an authorized Can-Am SSV dealer;
- The 2022 Can-Am SSV must be purchased in the country in which the purchaser resides;
- Routine maintenance outlined in the Operator's Guide must be timely performed in order to maintain warranty coverage. BRP reserves the right to make warranty coverage contingent upon proof of proper maintenance.

BRP will not honor this limited warranty to any private use owner or commercial use owner if one of the preceding conditions has not been met. Such limitations are necessary in order to allow BRP to preserve both the safety of its products, and also that of its consumers and the general public.

6) WHAT TO DO TO OBTAIN WARRANTY COVERAGE

The customer must cease using the SSV upon the appearance of an anomaly. The customer must notify a servicing BRP dealer within three (3) days of the appearance of a defect, and provide it with reasonable access to the product and reasonable opportunity to repair it. The customer must also present to the authorized BRP dealer, proof of purchase of the product and must sign the repair/work order prior to starting the repair in order to validate the warranty repair. All parts replaced under this limited warranty become the property of BRP.

7) WHAT BRP WILL DO

BRP’s obligations under this warranty are limited to, at its sole discretion, repairing parts found defective under normal use, maintenance and service, or replacing such parts with new genuine Can-Am SSV parts without charge for parts and labor, at any authorized BRP dealer during the warranty coverage period under the conditions described herein. BRP's responsibility is limited to making the required repairs or replacements of parts. No claim of breach of warranty shall be cause for cancellation or rescission of the sale of the SSV to the owner.

In the event that service is required outside of the country of original sale, the owner will bear responsibility for any additional charges due to local practices and conditions, such as, but not limited to, freight, insurance, taxes, license fees, import duties, and any and all other financial charges, including those levied by governments, states, territories and their respective agencies.

BRP reserves the right to improve or modify products from time to time without assuming any obligation to modify products previously manufactured.

8) ADDITIONAL SUPPLIER WARRANTIES

A GPS receiver may be supplied by BRP as standard equipment on certain 2022 Can-Am SSV. The GPS receiver is covered under BRP’s limited warranty policy. Additional warranty coverage if offered by the GPS receiver “supplier” that is longer than BRP's limited warranty is to be dealt by the dealer or consumer directly with the GPS receiver “supplier”.

9) TRANSFER

If the ownership of a product is transferred during the warranty coverage period, this limited warranty, subject to its terms and conditions, shall also be transferred and be valid for the remaining coverage period provided BRP or an authorized Can-Am SSV Distributor/Dealer receives a proof that the former owner agreed to the transfer of ownership, in addition to the co-ordinates of the new owner.

10) CONSUMER ASSISTANCE

In the event of a controversy or a dispute in connection with this limited warranty, BRP suggests that you try to resolve the issue at the dealership level. We recommend discussing the issue with the authorized dealer's service manager or owner.

If the matter still remains unresolved, contact BRP by filling out the customer contact form at www.brp.com or contact BRP by mail at one of the addresses listed under the *Contact Us* in *Customer Information*.

US EPA EMISSION - RELATED WARRANTY

Bombardier Recreational Products Inc. (“BRP”) warrants to the ultimate purchaser and each subsequent purchaser that this new vehicle, including all parts of its exhaust emission control system and its evaporative emission control system, meets two conditions:

1. It is designed, built, and equipped so it conforms at the time of sale to the ultimate purchaser with the requirements of 40 CFR 1051 and 40 CFR 1060.
2. It is free from defects in materials and workmanship that may keep it from meeting the requirements of 40 CFR 1051 and 40 CFR 1060.

Where a warrantable condition exists, BRP will repair or replace, as it elects, any part or component with a defect in materials or workmanship that would increase the engine’s emissions of any regulated pollutant within the stated warranty period at no cost to the owner, including expenses related to diagnosing and repairing or replacing emission-related parts. All defective parts replaced under this warranty become the property of BRP.

For all emission-related warranty claims, BRP is limiting the diagnosis and repair of emission-related parts to the authorized Can-Am dealers, unless for emergency repairs as required by item 2 of the following list.

As a certifying manufacturer, BRP will not deny emission-related warranty claims based on any of the following:

1. Maintenance or other service BRP or BRP's authorized facilities performed.
2. Engine/equipment repair work that an operator performed to correct an unsafe, emergency condition attributable to BRP as long as the operator tries to restore the engine/equipment to its proper configuration as soon as possible.
3. Any action or inaction by the operator unrelated to the warranty claim.
4. Maintenance that was performed more frequently than BRP specify.
5. Anything that is BRP fault or responsibility.
6. The use of any fuel that is commonly available where the equipment operates unless BRP written maintenance instructions state that this fuel would harm the equipment’s emission control system and operators can readily find the proper fuel. See maintenance information section and fuel requirements of fueling section.

Emission-Related Warranty Period

The emission-related warranty is valid for the following period whichever comes

	HOURS	MONTHS	KILOMETERS
Exhaust emission-related components	500	30	5000
Evaporative emission-related components	N/A	24	N/A

Components Covered

The emission-related warranty covers all components whose failure would increase an engine’s emissions of any regulated pollutant, including the following listed components:

1. For exhaust emissions, emission-related components include any engine parts related to the following systems:
   - Air-induction system
   - Fuel system
   - Ignition system
   - Exhaust gas recirculation systems.
2. The following parts are also considered emission-related components for exhaust emissions:
   - After treatment devices
   - Crankcase ventilation valves
   - Sensors
   - Electronic control units.
3. The following parts are considered emission-related components for evaporative emissions:
   - Fuel tank
   - Fuel cap
   - Fuel line
   - Fuel line fittings
   - Clamps*
   - Pressure relief valves*
   - Control valves*
   - Control solenoids*
   - Electronic controls*
   - Vacuum control diaphragms*
   - Control cables*
   - Control linkages*
   - Purge valves
   - Vapor hoses
   - Liquid/vapor separator
   - Carbon canister
   - Canister mounting brackets
   - Carburetor purge port connector.

NOTE: *As related to the evaporative emission control system.

4. Emission-related components also include any other part whose only purpose is to reduce emissions or whose failure will increase emissions without significantly degrading engine/equipment performance.

Limited Applicability

As a certifying manufacturer, BRP may deny emission-related warranty claims for failures that have been caused by the owner's or operator's improper maintenance or use, by accidents for which the manufacturer has no responsibility, or by acts of God. For example, an emission-related warranty claim need not be honored for failures that have been directly caused by the operator's abuse of the engine/equipment or the operator's use of the engine/equipment in a manner for which it was not designed and are not attributable to the manufacturer in anyway.

If you have any question regarding your warranty rights and responsibility or for the name and location of the nearest authorized BRP dealer, you should contact BRP by filling out the customer contact form at **www.brp.com** or contact BRP by mail at one of the addresses listed under the CONTACT US section of this guide, or call at 1-888-272-9222.

CALIFORNIA EVAPORATIVE EMISSIONS CONTROL WARRANTY STATEMENT

The warranty periods begin on the date the new Off-Highway Recreational Vehicle (“OHRV”) is delivered to an ultimate purchaser.

Bombardier Recreational Products Inc. (“BRP”) warrants to the ultimate purchaser and each subsequent purchaser that the OHRV is:

1. Designed, built, and equipped so as to conform, at the time of sale, with all applicable laws, rules and regulations; and
2. Free from defects in materials and workmanship that may cause the failure of a warranted part. All replacement parts must be identical in all material respects to that part as described in BRP’s Executive Order of Certification application.

The warranty on emissions-related parts function as follows:

1. Repair or replacement of any warranted part must be performed at no charge to the OHRV owner, at a warranty station, except in the case of a temporary repair when a warranted part or a warranty station is not reasonably available to the OHRV owner. In the event a temporary repair is permitted, repairs may be performed at any available service establishment, or by the owner, using any replacement part. BRP must reimburse the owner for his or her expenses including diagnostic charges for such temporary repair or replacement, not to exceed BRP's suggested retail price for all warranted parts replaced and labor charges based on BRP's recommended time allowance for the warranty repair and the geographically appropriate hourly labor rate.
2. The lack of availability of warranted parts or the incompleteness of repairs within a reasonable time period, not to exceed 30 days from the time the OHRV is initially presented to the warranty station for repair, will qualify the need for a temporary repair.
3. Any warranted part which is not scheduled for replacement as part of maintenance in the written instructions must be warranted for the warranty period defined below. If any such part fails during the warranty period, it must be repaired or replaced by BRP. Any such part repaired or replaced under warranty must be fully warranted.
4. Any warranted part which is scheduled only for regular inspection in the written instructions must be warranted for the warranty period defined below. A statement in such written instructions to the effect of “repair or replace as necessary” does not reduce the period of warranty coverage. Any such part repaired or replaced under warranty is warranted for the remaining warranty period.
5. Any warranted part which is scheduled for replacement as part of maintenance in the written instructions is warranted for the period of time prior to the first scheduled replacement point for that part. If the part fails before the first scheduled replacement point, the part will be repaired or replaced by BRP. Any such part repaired or replaced under warranty is warranted for the remainder of the period prior to the first scheduled replacement point for the part.
6. Warranty services or repairs are provided at all manufacturer dealerships that are owned by the manufacturer or franchised to service the subject OHRVs.
7. The OHRV owner will not be charged for diagnostic labor which leads to the determination that a warranted part is, in fact, defective, provided that such diagnostic work is performed at a warranty station.

8. BRP is liable for damages to other vehicle components proximately caused by a failure, under warranty, of any warranted part.
9. Any replacement part designated by BRP may be used in warranty repairs provided without charge to the OHRV owner. Such use will not reduce the warranty obligations of BRP, except that BRP will not be liable for repair or replacement of any replacement part which is not a warranted part.
10. Any add-on or modified part exempted by the Air Resources Board from the prohibitions of section 27156 of the California Vehicle Code may be used on an OHRV. Such use, in and of itself, will not be grounds for disallowing a warranty claim. BRP is not liable to warrant failures of warranted parts caused by the use of an add-on or modified part (s) unless such part (s) are also warranted.

Conditions and exclusions:

– BRP may deny you warranty coverage if your OHRV or a part has failed directly due to abuse, neglect, improper maintenance or unapproved modifications.

Your Warranty Rights And Obligations

The California Air Resources Board is pleased to explain the evaporative emissions control system warranty on your 2022 Off-Road Sport Vehicle. In California, new off-highway recreational vehicles must be designed, built, and equipped to meet the State's stringent anti-smog standards. BRP must warrant the evaporative emissions control system on your Off-Road Sport Vehicle for the periods of time listed below provided there has been no abuse, neglect, improper maintenance, or unapproved modification of your Off-Road Sport Vehicle.

Your evaporative emissions control system may include parts such as the carburetor or fuel-injection system, fuel tank, fuel hoses, carbon canister, and engine computer. Also included may be hoses, belts, connectors and other evaporative emissions-related assemblies. Where a warrantable condition exists, Bombardier Recreational Products Inc. will repair your Off-Road Sport Vehicle at no cost to you including diagnosis, parts and labor.

OHRV Manufacturer's Warranty Coverage

The warranty period for this OHRV is 60 months, or 5000 miles, or 500 hours, whichever comes first.

Parts covered:

1. Canister Mounting Bracket(s)
2. Carbon Canister
3. Purge Port Connector
4. Clamp(s)*
5. Electronic Control*
6. Fuel Cap
7. Filler Neck
8. Filler Neck Hose
9. Fuel Line(s)
10. Fuel Line Fitting(s)
11. Fuel Tank
12. Pressure Relief Valve(s)*

13. Purge Valve(s)
14. Check Valve(s)*
15. Vapor Hose(s)
16. Flow Reducer
17. Filter(s)*
18. All other parts not listed that may affect the evaporative emissions control system

NOTE: *As related to the evaporative emission control system.

If any evaporative emissions-related part on your Off-Road Sport Vehicle is defective the part will be repaired or replaced by Bombardier Recreational Products Inc.

Owner's Warranty Responsibilities

As the Off-Road Sport Vehicle owner you are responsible for the performance of the required maintenance listed in your owner's manual. Bombardier Recreational Products Inc. recommends that you retain all receipts covering maintenance on your Off-Road Sport Vehicle, but Bombardier Recreational Products Inc. cannot deny warranty solely for the lack of receipts or for failure to ensure the performance of a scheduled maintenance.

As an owner you are responsible for presenting your Off-Road Sport Vehicle to a Bombardier Recreational Products Inc. dealer as soon as a problem exists. The warranty repairs should be completed in a reasonable time, not to exceed 30 days.

As an Off-Road Sport Vehicle owner, you should also be aware that Bombardier Recreational Products Inc. may deny you warranty coverage if your Off-Road Sport Vehicle or a part has failed due to abuse, neglect, improper maintenance or unapproved modifications.

If you have any questions regarding your warranty rights and responsibilities, you should contact:

– Bombardier Recreational Products Inc. at 1-888-272-9222, or
– The California Air Resources Board at 9528 Telstar Avenue, El Monte, CA 91731.

BRP INTERNATIONAL LIMITED WARRANTY: 2022 CAN-AM® SSV

1) SCOPE OF THE LIMITED WARRANTY

Bombardier Recreational Products Inc. (“BRP”) warrants its 2022 Can-Am SSV sold by Can-Am SSV distributors or dealers authorized by BRP to distribute Can-Am SSVs ("Can-Am SSV Distributor/Dealer") outside of the fifty United States, Canada, member states of the European Economic Area (which is comprised of the member states of the European Union plus the United Kingdom, Norway, Iceland and Liechtenstein) (“EEA”), member states of the Commonwealth of the Independent States (including Ukraine and Turkmenistan) (“CIS”) and Turkey, from defects in material or workmanship for the period and under the conditions described below.

Non-factory installed parts and accessories are not covered under this limited warranty. Please refer to the applicable parts and accessories limited warranty text.

This limited warranty will become null and void if:

1. The SSV was used for racing or any other competitive activity, at any point, even by a previous owner; or
2. The SSV has been altered or modified in such a way so as to adversely affect its operation, performance or durability, or has been altered or modified to change its intended use.

2) LIMITATIONS OF LIABILITY

TO THE EXTENT PERMITTED BY LAW, THIS WARRANTY IS EXPRESSLY GIVEN AND ACCEPTED IN LIEU OF ANY AND ALL OTHER WARRANTIES, EXPRESSED OR IMPLIED, INCLUDING WITHOUT LIMITATION ANY WARRANTY OF MERCHANTABILITY OR FITNESS FOR A PARTICULAR PURPOSE. TO THE EXTENT THAT THEY CANNOT BE DISCLAIMED, THE IMPLIED WARRANTIES ARE LIMITED IN DURATION TO THE LIFE OF THE EXPRESS WARRANTY. INCIDENTAL AND CONSEQUENTIAL DAMAGES ARE EXCLUDED FROM COVERAGE UNDER THIS WARRANTY. SOME JURISDICTIONS DO NOT ALLOW FOR THE DISCLAIMERS, LIMITATIONS AND EXCLUSIONS IDENTIFIED ABOVE, AS A RESULT, THEY MAY NOT APPLY TO YOU. THIS WARRANTY GIVES YOU SPECIFIC RIGHTS, AND YOU MAY ALSO HAVE OTHER LEGAL RIGHTS WHICH MAY VARY FROM COUNTRY TO COUNTRY. (FOR PRODUCTS PURCHASED IN AUSTRALIA SEE CLAUSE 4 BELOW).

Neither the Can-Am SSV Distributor/Dealer nor any other person has been authorized to make any affirmation, representation or warranty regarding the product, other than those contained in this limited warranty, and if made, shall not be enforceable against BRP.

BRP reserves the right to modify this warranty at any time, being understood that such modification will not alter the warranty conditions applicable to the products sold while this warranty is in effect.

3) EXCLUSIONS ARE NOT WARRANTED

The following are not warranted under this limited warranty under any circumstances:

- Normal wear and tear;
- Routine maintenance items, tune ups, adjustments (parts and labor);
- Damage caused by negligence or failure to provide proper maintenance and/ or storage, as described in the Operator's Guide;
- Damage resulting from removal of parts, improper repairs, service, maintenance, modifications or use of parts not manufactured or approved by BRP or resulting from repairs done by a person that is not an authorized servicing Can-Am SSV Distributor/Dealer;
- Damage caused by abuse, abnormal use, neglect or operation of the product in a manner inconsistent with the recommended operation described in the Operator’s Guide;
- Damage resulting from accident, submersion, fire, theft, vandalism or any act of God;
- Operation with fuels, oils or lubricants which are not suitable for use with the product (see the Operator’s Guide);
- Damage resulting from rust, corrosion or exposure to the elements;
- Damage resulting from water or snow ingestion;
- Incidental or consequential damages, or damages of any kind including without limitation towing, transportation expenses, storage, telephone, rental, taxi, inconvenience, insurance coverage, loan payments, loss of time, loss of income or time missed for downtime experience due to service work.

The following list includes, without limitation, items that are considered wear items and that are not covered under BRP's limited warranty unless failure is a direct result of a defect in material or workmanship:

- Batteries
- Brake pads
- Brake disks and drums
- Clutch plates / pads
- Clutch sliders
- Clutch springs
- Clutch replaceable bushings
- Drive belts
- Filters
- Finished and unfinished surfaces
- Fuses
- Light bulbs / sealed
- Lubricants
- Spark plugs
- Suspension bushings
- Suspension slider shoes
- Suspension springs
- Tires

4) Warranty Coverage Period

This warranty will be in effect from:

1. The date of delivery to the first retail consumer, or
2. The date the product is first put into use,

whichever occurs first and for a period of:

- SIX (6) CONSECUTIVE MONTHS for private use or commercial use.

In AUSTRALIA and NEW-ZEALAND only, this warranty will be in effect from:

1. The date of delivery to the first retail consumer, or
2. The date the product is first put into use,

whichever occurs first and for a period of:

– TWENTY-FOUR (24) CONSECUTIVE MONTHS, or
– A total use of FIFTEEN THOUSAND (15 000) kilometers,

whichever occurs first, for private use or commercial use.

The repair or replacement of parts or the performance of service under this warranty does not extend the life of this warranty beyond its original expiration date.

FOR PRODUCTS SOLD IN AUSTRALIA ONLY

Nothing in these Warranty terms and conditions should be taken to exclude, restrict or modify the application of any condition, warranty, guarantee, right or remedy conferred or implied under the Competition and Consumer Act 2010 (Cth), including the Australian Consumer Law or any other law, where to do so would contravene that law, or cause any part of these terms and conditions to be void. The benefits given to you under this limited warranty hereto are in addition to other rights and remedies that you have under Australian law.

Our goods come with guarantees that cannot be excluded under the Australian Consumer Law. You are entitled to a replacement or refund for a major failure and for compensation for any other reasonably foreseeable loss or damage. You are also entitled to have the goods repaired or replaced if the goods fail to be of acceptable quality and the failure does not amount to a major failure.

5) CONDITIONS TO HAVE WARRANTY COVERAGE

This warranty coverage is available **only** if **each** of the following conditions has been fulfilled:

– The 2022 Can-Am SSV must be purchased as new and unused by its first owner from a Can-Am SSV Distributor/Dealer authorized to distribute Can--Am SSVs in the country in which the sale occurred;
– The BRP specified pre-delivery inspection process must be completed and documented;
– The product must have undergone proper registration by an authorized Can--Am SSV Distributor/Dealer;
– The 2022 Can-Am SSV must be purchased in the country or union of countries in which the purchaser resides; and
– Routine maintenance outlined in the Operator’s Guide must be timely performed in order to maintain warranty coverage. BRP reserves the right to make warranty coverage contingent upon proof of proper maintenance.

BRP will not honor this limited warranty to any private use owner or commercial use owner if one of the preceding conditions has not been met. Such limitations are necessary in order to allow BRP to preserve both the safety of its products, and also that of its consumers and the general public.

6) WHAT TO DO TO OBTAIN WARRANTY COVERAGE

The customer must cease using the SSV upon the appearance of an anomaly. The customer must notify a servicing Can-Am SSV Distributor/Dealer within two (2) days of the appearance of a defect, and provide it with reasonable access to the product and reasonable opportunity to repair it. The customer must also present to the authorized Can-Am SSV Distributor/Dealer proof of purchase of the product and must sign the repair/work order prior to starting the repair in order to validate the warranty repair. All parts replaced under this limited warranty become the property of BRP.

Note that the notification period is subject to the applicable national or local legislation in customer's country.

7) WHAT BRP WILL DO

To the extent permitted by law, BRP’s obligations under this warranty are limited to, at its sole discretion, repairing parts found defective under normal use, maintenance and service; or replacing such parts with new genuine Can-Am SSV parts without charge for parts and labour, at any authorized Can-Am SSV Distributor/ Dealer during the warranty coverage period under the conditions described herein. BRP's responsibility is limited to making the required repairs or replacements of parts. No claim of breach of warranty shall be cause for cancellation or rescission of the sale of the Can-Am SSV to the owner. You may have other legal rights which may vary from country to country.

In the event that service is required outside of the country of original sale, the owner will bear responsibility for any additional charges due to local practices and conditions, such as, but not limited to, freight, insurance, taxes, license fees, import duties, and any and all other financial charges, including those levied by governments, states, territories and their respective agencies.

BRP reserves the right to improve or modify products from time to time without assuming any obligation to modify products previously manufactured.

8) TRANSFER

If the ownership of a product is transferred during the warranty coverage period, this limited warranty, subject to its terms and conditions, shall also be transferred and be valid for the remaining coverage period provided BRP or an authorized Can-Am SSV Distributor/Dealer receives a proof that the former owner agreed to the transfer of ownership, in addition to the coordinates of the new owner.

9) CONSUMER ASSISTANCE

In the event of a controversy or a dispute in connection with this limited warranty, BRP suggests that you try to resolve the issue at the Can-Am SSV Distributor/ Dealer level. We recommend discussing the issue with the authorized Can-Am SSV Distributor/Dealer's service manager or owner.

If the matter still remains unresolved, contact BRP by filling out the customer contact form at www.brp.com or contact BRP by mail at one of the addresses listed under the *Contact Us* section of this guide.

BRP LIMITED WARRANTY FOR THE EUROPEAN ECONOMIC AREA, THE COMMONWEALTH OF THE INDEPENDENT STATES AND TURKEY: 2022 CAN-AM® SSV

1) SCOPE OF THE LIMITED WARRANTY

Bombardier Recreational Products Inc. (“BRP”) warrants its 2022 Can-Am SSVs sold by Can-Am SSV distributors or dealers authorized by BRP to distribute Can-Am SSVs (“Can-Am SSV Distributor/Dealer”) in member states of the European Economic Area (which is comprised of the member states of the European Union plus the United Kingdom, Norway, Iceland and Liechtenstein) (“EEA”), in member states of the Commonwealth of the Independent States (including Ukraine and Turkmenistan) (“CIS”) and Turkey from defects in material or workmanship for the period and under the conditions described below.

Non-factory installed parts and accessories are not covered under this limited warranty. Please refer to the applicable parts and accessories limited warranty text.

This limited warranty will become null and void if:

1. The SSV was used for racing or any other competitive activity, at any point, even by a previous owner; or
2. The SSV has been altered or modified in such a way so as to adversely affect its operation, performance or durability, or has been altered or modified to change its intended use.

2) LIMITATIONS OF LIABILITY

TO THE EXTENT PERMITTED BY LAW, THIS WARRANTY IS EXPRESSLY GIVEN AND ACCEPTED IN LIEU OF ANY AND ALL OTHER WARRANTIES, EXPRESSED OR IMPLIED, INCLUDING WITHOUT LIMITATION ANY WARRANTY OF MERCHANTABILITY OR FITNESS FOR A PARTICULAR PURPOSE. TO THE EXTENT THAT THEY CANNOT BE DISCLAIMED, THE IMPLIED WARRANTIES ARE LIMITED IN DURATION TO THE LIFE OF THE EXPRESS WARRANTY. INCIDENTAL AND CONSEQUENTIAL DAMAGES ARE EXCLUDED FROM COVERAGE UNDER THIS WARRANTY. SOME JURISDICTIONS DO NOT ALLOW FOR THE DISCLAIMERS, LIMITATIONS AND EXCLUSIONS IDENTIFIED ABOVE, AS A RESULT, THEY MAY NOT APPLY TO YOU. THIS WARRANTY GIVES YOU SPECIFIC RIGHTS, AND YOU MAY ALSO HAVE OTHER LEGAL RIGHTS WHICH MAY VARY FROM COUNTRY TO COUNTRY.

Neither the Can-Am SSV Distributor/Dealer nor any other person has been authorized to make any affirmation, representation or warranty regarding the product, other than those contained in this limited warranty, and if made, shall not be enforceable against BRP.

BRP reserves the right to modify this warranty at any time, being understood that such modification will not alter the warranty conditions applicable to the products sold while this warranty is in effect.

3) EXCLUSIONS – ARE NOT WARRANTED

The following are not warranted under this limited warranty under any circumstances:

- Normal wear and tear;
- Routine maintenance items, tune ups, adjustments (parts and labor);
- Damage caused by negligence or failure to provide proper maintenance and/or storage, as described in the Operator's Guide;
- Damage resulting from removal of parts, improper repairs, service, maintenance, modifications or use of parts not manufactured or approved by BRP or resulting from repairs done by a person that is not an authorized servicing Can-Am SSV Distributor/Dealer;
- Damage caused by abuse, abnormal use, neglect or operation of the product in a manner inconsistent with the recommended operation described in the Operator’s Guide;
- Damage resulting from accident, submersion, fire, snow or water ingestion, theft, vandalism or any act of God;
- Operation with fuels, oils or lubricants which are not suitable for use with the product (see the Operator’s Guide);
- Damage resulting from rust, corrosion or exposure to the elements;
- Incidental or consequential damages, or damages of any kind including without limitation towing, transportation expenses, storage, telephone, rental, taxi, inconvenience, insurance coverage, loan payments, loss of time, loss of income or time missed for downtime experience due to service work.

The following list includes, without limitation, items that are considered wear items and that are not covered under BRP's limited warranty unless failure is a direct result of a defect in material or workmanship:

- Batteries
- Brake pads
- Brake disks and drums
- Clutch plates / pads
- Clutch sliders
- Clutch springs
- Clutch replaceable bushings
- Drive belts
- Filters
- Finished and unfinished surfaces
- Fuses
- Light bulbs / sealed
- Lubricants
- Spark plugs
- Suspension bushings
- Suspension slider shoes
- Suspension springs
- Tires

4) WARRANTY COVERAGE PERIOD

This warranty will be in effect from (1) the date of delivery to the first retail consumer or (2) the date the product is first put into use, whichever occurs first and for a period of:

– TWENTY-FOUR (24) CONSECUTIVE MONTHS for private use.
– SIX (6) CONSECUTIVE MONTHS for commercial use or rental use.

The product is used commercially when it is used in connection with any work or employment that generates income during any part of the warranty period. The product is also used commercially when, at any point during the warranty period, it is licensed for commercial use.

The repair or replacement of parts or the performance of service under this warranty does not extend the life of this warranty beyond its original expiration date.

Note that the duration and any other modalities of the warranty coverage are subject to the applicable national or local legislation in your country.

5) CONDITIONS TO HAVE WARRANTY COVERAGE

This warranty coverage is available **only** if **each** of the following conditions has been fulfilled:

– The 2022 Can-Am SSV must be purchased as new and unused by its first owner from a Can-Am SSV Distributor/Dealer authorized to distribute Can--Am SSVs in the country in which the sale occurred;
– The BRP specified pre-delivery inspection process must be completed and documented;
– The product must have undergone proper registration by an authorized Can--Am SSV Distributor/Dealer;
– The 2022 Can-Am SSV must be purchased in the country or union of countries in which the purchaser resides; and
– Routine maintenance outlined in the Operator’s Guide must be timely performed in order to maintain warranty coverage. BRP reserves the right to make warranty coverage contingent upon proof of proper maintenance.

BRP will not honor this limited warranty to any private use owner or commercial use owner if one of the preceding conditions has not been met. Such limitations are necessary in order to allow BRP to preserve both the safety of its products, and also that of its consumers and the general public.

6) WHAT TO DO TO OBTAIN WARRANTY COVERAGE

The customer must cease using the SSV upon the appearance of an anomaly. The customer must notify a servicing Can-Am SSV Distributor/Dealer within two (2) months of the appearance of a defect and provide it with reasonable access to the product and reasonable opportunity to repair it. The customer must also present to the authorized Can-Am SSV Distributor/Dealer, proof of purchase of the product and must sign the repair/work order prior to starting the repair in order to validate the warranty repair. All parts replaced under this limited warranty become the property of BRP.

Note that the notification period is subject to the applicable national or local legislation in your country.

7) WHAT BRP WILL DO

To the extent permitted by law, BRP’s obligations under this warranty are limited to, at its sole discretion, repairing parts found defective under normal use,

maintenance and service, or replacing such parts with new genuine Can-Am SSV parts without charge for parts and labor, at any authorized Can-Am SSV Distributor/ Dealer during the warranty coverage period under the conditions described herein. BRP's responsibility is limited to making the required repairs or replacements of parts. No claim of breach of warranty shall be cause for cancellation or rescission of the sale of the Can-Am SSV to the owner. You may have other legal rights which may vary from country to country.

In the event that service is required outside of the EEA, the owner will bear responsibility for any additional charges due to local practices and conditions, such as, but not limited to, freight, insurance, taxes, license fees, import duties, and any and all other financial charges, including those levied by governments, states, territories and their respective agencies.

BRP reserves the right to improve or modify products from time to time without assuming any obligation to modify products previously manufactured.

8) TRANSFER

If the ownership of a product is transferred during the warranty coverage period, this warranty shall also be transferred and be valid for the remaining coverage period provided BRP or an authorized Can-Am SSV Distributor/Dealer receives a proof that the former owner agreed to the transfer of ownership, in addition to the co-ordinates of the new owner.

9) CONSUMER ASSISTANCE

In the event of a controversy or a dispute in connection with this limited warranty, BRP suggests that you try to resolve the issue at the Can-Am SSV Distributor/ Dealer level. We recommend discussing the issue with the authorized Can-Am SSV Distributor/Dealer's service manager or owner.

If the matter still remains unresolved, contact BRP by filling out the customer contact form at www.brp.com or contact BRP by mail at one of the addresses listed under the *Contact Us* section of this guide.

ADDITIONAL TERMS AND CONDITIONS FOR FRANCE ONLY

The following terms and conditions are applicable to products sold in France only:

The seller shall deliver goods that are complying with the contract and shall be responsible for defects existing upon delivery. The seller shall also be responsible for defects resulting from packaging, assembling instructions or the installation when it is its responsibility per the contract or if accomplished under its responsibility. To be compliant with the contract, the good shall:

1. Be fit for normal use for goods similar thereto and, if applicable:
   - Correspond to the description provided by the seller and have the qualities presented to the buyer though sample or model;
   - Have the qualities that a buyer may legitimately expect considering the public declarations of the seller, the manufacturer of its representative, including in advertising or labeling; or
2. Have the characteristics mutually agreed upon as between the parties or be fit for the specific use intended by the buyer and brought to the attention of the seller and which accepted.

The action for failure to comply is prescribed after two years after delivery of the goods. The seller is responsible for the warranty for hidden defects of the goods sold if such hidden defects are rendering the good unfit for the intended use, or if they diminish its use in such a way that the buyer would not have acquired the good or would have given a lesser price, had he known. The action for such hidden defects shall be taken by the buyer within 2 years of the discovery of the defect.

MAINTENANCE RECORDS

Send photocopy of maintenance record to BRP if needed.

Pre-delivery	
Serial number: _____ Mileage / km: _____ Hours: _____ Date: _____ Dealer no: _____ Notes: _____	Signature/Print:
Refer to vehicle Pre-Delivery Bulletin for detailed installation procedures	

FIRST inspection	
Mileage / km: _____ Hours: _____ Date: _____ Dealer no: _____ Notes: _____	Signature/Print:
For maintenance schedule refer to Maintenance Information section of this operator's guide	

Service	
Mileage / km: _____ Hours: _____ Date: _____ Dealer no: _____ Notes: _____	Signature/Print:
For maintenance schedule refer to Maintenance Information section of this operator's guide	

Service	
Mileage / km:	Signature/Print:
Hours:	
Date:	
Dealer no:	
Notes:	
For maintenance schedule refer to Maintenance Information section of this operator's guide	

Service	
Mileage / km:	Signature/Print:
Hours:	
Date:	
Dealer no:	
Notes:	
For maintenance schedule refer to Maintenance Information section of this operator's guide	

Service	
Mileage / km:	Signature/Print:
Hours:	
Date:	
Dealer no:	
Notes:	
For maintenance schedule refer to Maintenance Information section of this operator's guide	

Service	
Mileage / km: _____ Hours: _____ Date: _____ Dealer no: _____ Notes: _____	Signature/Print:
For maintenance schedule refer to Maintenance Information section of this operator's guide	

Service	
Mileage / km: _____ Hours: _____ Date: _____ Dealer no: _____ Notes: _____	Signature/Print:
For maintenance schedule refer to Maintenance Information section of this operator's guide	

Service	
Mileage / km: _____ Hours: _____ Date: _____ Dealer no: _____ Notes: _____	Signature/Print:
For maintenance schedule refer to Maintenance Information section of this operator's guide	

Service	
Mileage / km:	Signature/Print:
Hours:	
Date:	
Dealer no:	
Notes:	
For maintenance schedule refer to Maintenance Information section of this operator's guide	

Service	
Mileage / km:	Signature/Print:
Hours:	
Date:	
Dealer no:	
Notes:	
For maintenance schedule refer to Maintenance Information section of this operator's guide	

Service	
Mileage / km:	Signature/Print:
Hours:	
Date:	
Dealer no:	
Notes:	
For maintenance schedule refer to Maintenance Information section of this operator's guide	

Service	
Mileage / km: _____ Hours: _____ Date: _____ Dealer no: _____ Notes: _____	Signature/Print:
For maintenance schedule refer to Maintenance Information section of this operator's guide	

Service	
Mileage / km: _____ Hours: _____ Date: _____ Dealer no: _____ Notes: _____	Signature/Print:
For maintenance schedule refer to Maintenance Information section of this operator's guide	

Service	
Mileage / km: _____ Hours: _____ Date: _____ Dealer no: _____ Notes: _____	Signature/Print:
For maintenance schedule refer to Maintenance Information section of this operator's guide	

CUSTOMER INFORMATION

PRIVACY INFORMATION

The protection of your personal information is a priority for BRP. Our data privacy practices are described in our Privacy Policy, which you can review at any time. https://brp.com/en/privacy-policy.html

BRP wishes to inform you that, for your safety, your personal information can be used for security and warranty related purposes. Furthermore, BRP and its affiliates may use your personal information to distribute marketing and promotional information about BRP and related products. We do this with your consent (where required by applicable law) or in accordance with any other applicable legal basis.

To exercise your rights provided under data privacy laws, such as your right to access or correct your data, or to be removed from the addressee-list for direct marketing, please contact BRP.

CHANGE OF ADDRESS AND OWNERSHIP

If your address has changed or if you are the new owner of the vehicle, be sure to notify BRP.

In case of change of ownership, please join a proof that the former owner agreed to the transfer.

Notifying BRP, even after the expiration of the limited warranty, is very important as it enables BRP to reach the vehicle owner if necessary, like when safety recalls are initiated. It is the owner's responsibility to notify BRP.

STOLEN UNITS: If your personal vehicle is stolen, you should notify BRP or an authorized Can-Am dealer. We will ask you to provide your name, address, phone number, the vehicle identification number and the date it was stolen.

CHANGE OF ADDRESS ❑ CHANGE OF OWNERSHIP ❑

VEHICLE IDENTIFICATION NUMBER

Model Number Vehicle Identification Number (V.I.N.)

OLD ADDRESS OR PREVIOUS OWNER:

NAME

NO. STREET APT

CITY STATE/PROVINCE ZIP/POSTAL CODE

COUNTRY TELEPHONE

NEW ADDRESS OR NEW OWNER:

NAME

NO. STREET APT

CITY STATE/PROVINCE ZIP/POSTAL CODE

COUNTRY TELEPHONE

E-MAIL ADDRESS

CHANGE OF ADDRESS ❑ CHANGE OF OWNERSHIP ❑

VEHICLE IDENTIFICATION NUMBER

Model Number Vehicle Identification Number (V.I.N.)

OLD ADDRESS OR PREVIOUS OWNER:

NAME

NO. STREET APT

CITY STATE/PROVINCE ZIP/POSTAL CODE

COUNTRY TELEPHONE

NEW ADDRESS OR NEW OWNER:

NAME

NO. STREET APT

CITY STATE/PROVINCE ZIP/POSTAL CODE

COUNTRY TELEPHONE

E-MAIL ADDRESS

This page is intentionally blank

CHANGE OF ADDRESS ❑ CHANGE OF OWNERSHIP ❑

VEHICLE IDENTIFICATION NUMBER

Model Number Vehicle Identification Number (V.I.N.)

OLD ADDRESS OR PREVIOUS OWNER:

NAME

NO. STREET APT

CITY STATE/PROVINCE ZIP/POSTAL CODE

COUNTRY TELEPHONE

NEW ADDRESS OR NEW OWNER:

NAME

NO. STREET APT

CITY STATE/PROVINCE ZIP/POSTAL CODE

COUNTRY TELEPHONE

E-MAIL ADDRESS

CHANGE OF ADDRESS ❑ CHANGE OF OWNERSHIP ❑

VEHICLE IDENTIFICATION NUMBER

Model Number Vehicle Identification Number (V.I.N.)

OLD ADDRESS OR PREVIOUS OWNER:

NAME

NO. STREET APT

CITY STATE/PROVINCE ZIP/POSTAL CODE

COUNTRY TELEPHONE

NEW ADDRESS OR NEW OWNER:

NAME

NO. STREET APT

CITY STATE/PROVINCE ZIP/POSTAL CODE

COUNTRY TELEPHONE

E-MAIL ADDRESS

This page is intentionally blank

NOTE:

NOTE:

NOTE:

NOTE:

NOTE:

NOTE:

NOTE:

NOTE:

Model No. _____

VEHICLE
IDENTIFICATION NUMBER (V.I.N.) _____

ENGINE
IDENTIFICATION NUMBER (E.I.N.) _____

Owner: _____
NAME

_____
No. STREET APT

_____
CITY STATE/PROVINCE ZIP/POSTAL CODE

Purchase Date _____ | _____ | _____ | _____ | _____
YEAR MONTH DAY

Warranty Expiry Date _____ | _____ | _____ | _____ | _____
YEAR MONTH DAY

To be completed by the dealer at the time of the sale.

DEALER IMPRINT AREA

⚠ WARNING

TO REDUCE RISK OF SERIOUS INJURY OR DEATH,

- Read this operator's guide and safety labels
- Watch the safety video.

BE PREPARED

- Fasten seat belts and make sure nets and/or doors are securely latched in place.
- Wear an approved helmet and protective gear.
- Each rider must be able to sit with back against seat, foot flat on the floor or on footrest, and hands on steering wheel or handholds. Stay completely inside the vehicle.

DRIVE RESPONSIBLY

- Avoid loss of control and rollovers.
- Avoid abrupt maneuvers, sideways sliding, skidding or fishtailing and never do donuts.
- Avoid hard acceleration when turning, even from a stop.
- Slow down before entering a turn.
- Plan for hills, rough terrain, ruts and other changes in traction and terrain.
- Avoid paved surfaces.
- Avoid side hilling (riding across slopes).

BE QUALIFIED AND RESPONSIBLE

- Do not allow careless or reckless driving.
- Driver must be at least 16 years old with a valid driver's license.
- Do not operate after using drugs or alcohol.
- Do not allow operation on public roads (unless designated for off-highway vehicle access) – collisions with cars and trucks can occur.
- Do not exceed vehicle seating capacity.

219002234